DISCOVERY MIDDLE SCHOOL STORM SHELTER ADDITION

LIBERTY PUBLIC SCHOOLS

800 Midjay Dr,
Liberty, MO 64068

CONFORMED CONSTRUCTION DOCUMENTS

INDEX OF DRAWINGS

GENERAL
G000 COVER SHEET
G010 CODE INFORMATION
G101 CODE SITE PLAN/OVERALL CODE PLAN
G102 ENLARGED CODE PLAN - STORM SHELTER PLAN

DEMOLITION - CIVIL
DC101 DEMOLITION PLAN

DEMOLITION - ARCHITECTURE
DA101 DEMOLITION FLOOR PLAN - OVERALL - LEVEL 1

DEMOLITION - ELECTRICAL
DE101A DEMOLITION LIGHTING PLAN - LEVEL 1 - AREA A

ARCHITECTURAL SITE
AS101 ARCHITECTURAL SITE PLAN
AS201 SITE DETAILS

CIVIL
C100 CIVIL INFORMATION SHEET
C101 OVERALL SITE PLAN
C102 EXISTING CONDITIONS PLAN
C103 UTILITY PLAN
C104 PAVING PLAN
C105 GRADING PLAN
C106 EROSION CONTROL PLAN
C200 DETAILS

LANDSCAPE
L100 LANDSCAPE PLAN

ARCHITECTURE
A001 GENERAL ARCHITECTURAL INFORMATION
A002 SLAB, PRECAST, & CMU JOINTS
A101 FLOOR PLAN - LEVEL 1 - OVERALL
A101A FLOOR PLAN - LEVEL 1 - AREA A
A121A REFLECTED CEILING PLAN - LEVEL 1 - AREA A
A121B REFLECTED CEILING PLAN - LEVEL 1 - AREA B
A121C REFLECTED CEILING PLAN - LEVEL 1 - AREA C
A121D REFLECTED CEILING PLAN - LEVEL 1 - AREA D
A141 ROOF PLAN
A142 ROOF DETAILS
A201 EXTERIOR ELEVATIONS - OVERALL
A301 BUILDING SECTIONS
A331 WALL SECTIONS - MULTIPURPOSE
A332 WALL SECTIONS - MULTIPURPOSE & CONNECTION
A333 WALL SECTIONS - CONNECTION & ENTRY
A335 WALL SECTIONS - SUPPORT
A361 EXTERIOR DETAILS
A362 EXTERIOR DETAILS
A363 EXTERIOR DETAILS
A371 EXTERIOR DETAILS
A372 EXTERIOR DETAILS
A411 VERTICAL CIRCULATION & ENLARGED PLANS
A412 VERTICAL CIRCULATION & ENLARGED PLANS
A501 DOOR SCHEDULE, DOOR TYPES, FRAME TYPES & DETAILS
A502 DOOR & WINDOW DETAILS
A601A FINISH FLOOR PLAN - LEVEL 1 - AREA A
A621 INTERIOR ELEVATIONS
A622 INTERIOR ELEVATIONS
A623 INTERIOR ELEVATIONS
A661 INTERIOR DETAILS
A662 INTERIOR DETAILS
A681 MATERIAL FINISH LEGEND & FINISH SCHEDULE
A701A SIGNAGE & ENVIRONMENTAL GRAPHICS FLOOR PLAN – AREA A - LEVEL 1
A711 SIGNAGE & ENVIRONMENTAL GRAPHICS SCHEDULES
A720 SIGNAGE & ENVIRONMENTAL GRAPHICS EXTERIOR ELEVATIONS & DETAILS

STRUCTURAL
S001 GENERAL NOTES
S002 SCHEDULES
S003 CMU DETAILS
S100 FOUNDATION PLAN
S101 LOW ROOF FRAMING PLAN
S102 HIGH ROOF FRAMING PLAN
S200 FOUNDATION SECTIONS
S201 FOUNDATION SECTIONS
S202 FOUNDATION SECTIONS
S203 FOUNDATION SECTIONS
S300 TYPICAL FRAMING DETAILS
S301 ROOF FRAMING SECTIONS
S302 FRAMING SECTIONS
S303 FRAMING SECTIONS
S500 STORM SHELTER DETAILS

MECHANICAL/ELECTRICAL
ME101 MECHANICAL AND ELECTRICAL SYMBOLS AND ABBREVIATIONS
ME212 OVERALL MECHANICAL AND ELECTRICAL ROOF PLAN
ME212A MECHANICAL AND ELECTRICAL ROOF PLAN - AREA A
ME301 MECHANICAL AND ELECTRICAL SCHEDULES
ME302 MECHANICAL AND ELECTRICAL SCHEDULES
ME401 MECHANICAL AND ELECTRICAL DETAILS
ME402 MECHANICAL AND ELECTRICAL DETAILS
ME403 MECHANICAL AND ELECTRICAL DETAILS

MECHANICAL
M101A HVAC PLAN - LEVEL 1 & MEZZANINE - AREA A
M301 HVAC CONTROL DIAGRAMS

PLUMBING
P100A UNDERSLAB PLUMBING PLAN - LEVEL 1 - AREA A
P101 OVERALL PLUMBING PLAN - LEVEL 1
P101A PLUMBING PLAN - LEVEL 1 & MEZZANINE - AREA A
P301 PLUMBING RISER DIAGRAMS

ELECTRICAL
E101 OVERALL LIGHTING PLAN - LEVEL 1
E101A LIGHTING PLAN - LEVEL 1 & MEZZANINE - AREA A
E201 OVERALL POWER PLAN - LEVEL 1
E201A POWER PLAN - LEVEL 1 & MEZZANINE - AREA A
E301 ELECTRICAL ONE-LINE DIAGRAM
E302 ELECTRICAL SCHEDULES AND DETAILS
E303 ELECTRICAL SCHEDULES AND DETAILS
E304 ELECTRICAL SCHEDULES AND DETAILS

TECHNOLOGY
AV001 AV GENERAL NOTES AND LEGENDS
AV101A AV FLOOR PLAN - LEVEL 1 - AREA A
AV121A AV REFLECTED CEILING PLAN - LEVEL 1 - AREA A
AV301 AV BUILDING SECTIONS
AV501 AV EQUIPMENT MOUNTING DETAILS
AV502 AV RACK AND CONNECTION PANEL DETAILS
AV601 AV ONE-LINE DIAGRAM

FIRE PROTECTION
FP101 OVERALL FIRE PROTECTION PLAN - LEVEL 1

THEATRICAL
TH002 THEATRICAL DEVICES
TH003 THEATRICAL DEVICES - DETAILS AND SCHEDULES
TH100 RIGGING PLAN
TH101 RIGGING SCHEDULE
TH102 PIPE AND DRAPE LAYOUT
TH110 THEATRICAL RISER DIAGRAM
TH111 THEATRICAL LIGHTING AND CONTROL LEVEL 1 DEVICES
TH112 THEATRICAL LIGHTING AND CONTROL LEVEL 2 DEVICES
TH130 THEATRICAL SECTIONS AND ELEVATIONS

ALTERNATES

ALTERNATE 1:

BASE BID: NO WORK
ALTERNATE : ALTERNATE INCLUDES ALL LABOR, MATERIALS, EQUIPMENT AND APPURTENENANCES NECESSARY TO REPLACE ALL EXISTING CEILING TILE (GRIDS TO REMAIN). REFER TO SHEETS DA101 AND REFLECTED CEILING PLANS.

VICINITY MAP

DESIGN TEAM

ARCHITECT:
Hollis + Miller Architects
1828 Walnut Street Ste 922
Kansas City, MO 64108
CONTACT: Kyle LaBarre
PHONE: 816.442.7700
FAX: 816.599.2545

CONSTRUCTION MANAGER:
Newkirk Novak Construction Partners
11200 W 79th Street
Lenexa, KS 66214
CONTACT: Brandon Stanley
PHONE: 913.312.9535

CIVIL ENGINEER:
MKEC Engineering, Inc
11827 W. 112th Street, Suite 200
Overland Park, KS 66210
CONTACT: Brian Hill/Braden Taylor
PHONE: 913.317.9390
FAX: 913.317.9385

STRUCTURAL ENGINEER:
Bob D. Campbell & Co.
4338 Belleview Ave.
Kansas City, MO 64111
CONTACT: Wayne Davis
PHONE: 816.531.4144

MECH/ELECT ENGINEER:
Smith & Boucher Engineers
25618 W. 103rd St.
Olathe, KS 66061
CONTACT: Ryan Diediker
PHONE: 913.345.2127
FAX: 913.345.0617

GEOTECHNICAL ENGINEER:
Kruger Technologies, Inc.
8721 Melrose Drive
Lenexa, KS 66214
CONTACT: Dylan Kruger
PHONE: 913.498.1114
FAX: 913.498.1116

THEATRICAL CONSULTANT:
Peerbolte Creative
109 E. Pine St.
Warrensburg, MO 64093-0754
CONTACT: Shannon Johnson
PHONE: 660.429.1383

AV/ACOUSTICS CONSULTANT:
Avant Acoustics
14827 West 95th St.
Lenexa, KS 66215
CONTACT: John Hodgson
PHONE: 913.888.9111

hollis + miller architects®
we design the future®
1828 Walnut Street Suite 922
Kansas City, MO 64108
t 816.442.7700
115 Wilcox Street Suite 210
Castle Rock, CO 80104
t 720.949.1689
HOLLISANDMILLER.COM
Hollis + Miller Architects
Missouri State Certificate of Authority
Architecture # 000161
Structure # 2006031333

Bob D Campbell
Structural Engineer
State Certificate of Authority #000442
4338 Belleview Ave
Kansas City, MO 64111
816.531.4144 phone

Smith & Boucher, Inc.
Mechanical, Electrical, & Plumbing
State Certificate of Authority #EGC000178
25618 W 103rd Street
Olathe, KS 66061
913.345.2127 phone

MKEC Engineering, Inc.
Civil Engineer
State Certificate of Authority
Engineering #2001009364
Landscaping #2006027139
Surveying #2006027138
11827 W 112th Street, Suite 200
Overland Park, KS 66210
913.317.9390 phone

Peerbolte Creative
Theatrical Consultant
109 E Pine St.
Warrensburg, MO 64093-0752
660.429.1383 phone

Avant Acoustics
AV/Acoustics Consultant
14827 West 95th St.
Lenexa, KS 66215
913.888.9111 phone

Discovery Middle School Storm Shelter Addition
Liberty Public Schools
800 Midjay Dr, Liberty, MO 64068

CONFORMED CONSTRUCTION DOCUMENTS

REVISIONS:

#	Description	Date

STATE OF MISSOURI
KEVIN E. NELSON
A-2019015618
ARCHITECT

OCTOBER 11, 2023

Kevin E. Nelson
A-2019015618

"The Professional Architects seal affixed to this sheet applies only to the material and items shown on this sheet. All drawings, instruments or other documents not exhibiting this seal shall not be considered prepared by the architect and the architect expressly disclaims any and all responsibility for such plan, drawings, or documents not exhibiting this seal."

JOB NO: 23018
DRAWN BY: ES
CHECKED BY: JB
DATE: 10.11.2023

G000

COVER SHEET

Please consider the environment before printing this.
10/11/2023 3:53:46 PM

BLDG 4 - EXISTING - NO WORK

BUILDING INFORMATION

OCCUPANCY CLASSIFICATION:	Educational, Group E (305.1)
CONSTRUCTION TYPE:	II-B (602.2, Non-combustible, non-protected)
BUILDING HEIGHT:	
Allowable Height (Table 504.3):	75' above grade plane
Building Height:	20'
Allowable Stories (Table 504.4):	3 stories above grade plane
Building Stories:	1
BUILDING AREA:	
Sprinkler qualifier (Table 506.2):	S1: Building one story max. above grade plane with automatic sprinkler system
Allowable Area	58,000 sq ft
Building Area	49,487 sq ft
OCCUPANCY SEPARATION:	No separation requirement (Table 508.4)
INCIDENTAL USE SEPARATION:	No separation requirement (509.3)
FIRE RESISTANCE RATINGS:	(Per Table 601, 602)
Primary Structural Frame:	0-Hour fire-resistance rating
Exterior Bearing Walls:	0-Hour fire-resistance rating
Interior Bearing Walls:	0-Hour fire-resistance rating
Exterior Nonbearing Walls:	0-Hour fire-resistance rating
Interior Nonbearing Walls:	0-Hour fire-resistance rating
Floor Construction / Secondary Members:	0-Hour fire-resistance rating
Roof Construction / Secondary Members:	0-Hour fire-resistance rating
Fire Walls	No fire walls
Fire Barriers	Existing: 2-Hour shafts, exit enclosures and passageway walls (Section 707) 90 Minute door with 90 Minute glazing, 100 or 1,296 sq in max (Table 716.1(2)) No Windows Permitted except those meeting ASTM E119 or UL 263 (Table 716.1(3))
Fire Partitions	No fire partitions
Smoke Barriers / Partitions	Existing: 1-Hour rated wall assembly (709) 20 Minute door with 20 Minute Glazing (Table 716.1(2)) 45 Minute Glazing at door sidelights and transoms (Table 716.1(2)) 45 Minute Fire Windows (Table 716.1(3))
Shafts	No shaft enclosures

BLDG 4 - EXISTING - NO WORK

EGRESS COMPONENTS

NUMBER OF EXITS:	2 per space greater than 49 occupants (Table 1006.2.1) 3 per space with load 501 to 1,000; 4 per space over 1,000
DEAD-END CORRIDORS:	50' Max. with automatic sprinkler system in groups B, E, F, I-1, M, R-1, R-2, R-4, S, U (1020.4, Exception 2)
COMMON PATH OF TRAVEL:	75' (Table 1006.2.1)
TRAVEL DISTANCE TO EXIT:	250' Maximum for A, E, F-1, I-1, M, R, S-1 with sprinkler (Table 1017.2)
CORRIDOR CONSTRUCTION:	0-hour fire rating in A, B, E, F, I-2, I-4, M, S, U occupancies with sprinkler (1020.1)
CORRIDOR WIDTH:	44" minimum corridor width (Table 1020.2) 72" minimum for Group E corridor with required capacity of 100 or more (Table 1020.2)
MEANS OF EGRESS CAPACITY:	0.2" for stairways (1005.3.1) / 0.15" for doors / other (1005.3.2) (sprinklered bldg)

BLDG 4 - EXISTING - NO WORK

FIRE SAFETY FEATURES

SPRINKLER:	Automatic sprinkler system provided throughout Sprinkler installed per NFPA 13 (903.3.1.1)
FIRE ALARM SIGNALING:	Existing System
EMERGENCY LIGHTING / POWER:	Existing System
SMOKE CONTROL SYSTEM:	Existing System

BLDG 4 - EXISTING - NO WORK

PLUMBING FIXTURES

Water Closets (Male):	E: 1 per 50
Water Closets (Female):	E: 1 per 50
Lavatories (Male):	E: 1 per 50
Lavatories (Female):	E: 1 per 50
Drinking Fountains:	E: 1 per 50
Service Sink:	1 Service Sink

BLDG 3 - EXISTING - NO WORK

BUILDING INFORMATION

OCCUPANCY CLASSIFICATION:	Assembly, Group E (303.5)
CONSTRUCTION TYPE:	II-B (602.2, Non-combustible, non-protected) (Previous Construction Type: N-II. N-II equivalent to II-B)
BUILDING HEIGHT:	
Allowable Height (Table 504.3):	75' above grade plane
Building Height:	20'
Allowable Stories (Table 504.4):	3 stories above grade plane
Building Stories:	1
BUILDING AREA:	
Sprinkler qualifier (Table 506.2):	S1: Building one story max. above grade plane with automatic sprinkler system
Allowable Area	58,000 sq ft
Building Area	27,423 sq ft
OCCUPANCY SEPARATION:	No separation requirement (Table 508.4)
INCIDENTAL USE SEPARATION:	No separation requirement (509.3)
FIRE RESISTANCE RATINGS:	(Per Table 601, 602)
Primary Structural Frame:	0-Hour fire-resistance rating
Exterior Bearing Walls:	0-Hour fire-resistance rating
Interior Bearing Walls:	0-Hour fire-resistance rating
Exterior Nonbearing Walls:	0-Hour fire-resistance rating
Interior Nonbearing Walls:	0-Hour fire-resistance rating
Floor Construction / Secondary Members:	0-Hour fire-resistance rating
Roof Construction / Secondary Members:	0-Hour fire-resistance rating
Fire Walls	No fire walls
Fire Barriers	Existing: 2-Hour shafts, exit enclosures and passageway walls (Section 707) 90 Minute door with 90 Minute glazing, 100 or 1,296 sq in max (Table 716.1(2)) No Windows Permitted except those meeting ASTM E119 or UL 263 (Table 716.1(3))
Fire Partitions	No fire partitions
Smoke Barriers / Partitions	Existing: 1-Hour rated wall assembly (709) 20 Minute door with 20 Minute Glazing (Table 716.1(2)) 45 Minute Glazing at door sidelights and transoms (Table 716.1(2)) 45 Minute Fire Windows (Table 716.1(3))
Shafts	No shaft enclosures

BLDG 3 - EXISTING - NO WORK

EGRESS COMPONENTS

NUMBER OF EXITS:	2 per space greater than 49 occupants (Table 1006.2.1) 3 per space with load 501 to 1,000; 4 per space over 1,000
DEAD-END CORRIDORS:	50' Max. with automatic sprinkler system in groups B, E, F, I-1, M, R-1, R-2, R-4, S, U (1020.4, Exception 2)
COMMON PATH OF TRAVEL:	75' (Table 1006.2.1)
TRAVEL DISTANCE TO EXIT:	250' Maximum for A, E, F-1, I-1, M, R, S-1 with sprinkler (Table 1017.2)
CORRIDOR CONSTRUCTION:	0-hour fire rating in A, B, E, F, I-2, I-4, M, S, U occupancies with sprinkler (1020.1)
CORRIDOR WIDTH:	44" minimum corridor width (Table 1020.2) 72" minimum for Group E corridor with required capacity of 100 or more (Table 1020.2)
MEANS OF EGRESS CAPACITY:	0.2" for stairways (1005.3.1) / 0.15" for doors / other (1005.3.2) (sprinklered bldg)

BLDG 3 - EXISTING - NO WORK

FIRE SAFETY FEATURES

SPRINKLER:	Automatic sprinkler system provided throughout Sprinkler installed per NFPA 13 (903.3.1.1)
FIRE ALARM SIGNALING:	Existing System
EMERGENCY LIGHTING / POWER:	Existing System
SMOKE CONTROL SYSTEM:	Existing System

BLDG 3 - EXISTING - NO WORK

PLUMBING FIXTURES

Water Closets (Male):	E: 1 per 50
Water Closets (Female):	E: 1 per 50
Lavatories (Male):	E: 1 per 50
Lavatories (Female):	E: 1 per 50
Drinking Fountains:	E: 1 per 50
Service Sink:	1 Service Sink

BLDG 2 - ADDITION TO EXISTING STRUCTURE

BUILDING INFORMATION

OCCUPANCY CLASSIFICATION:	Assembly, Group A-4 (303.5)
CONSTRUCTION TYPE:	II-A (602.2, Non-combustible, non-protected) Connection addition to existing building
BUILDING HEIGHT:	
Allowable Height (Table 504.3):	75' above grade plane
Building Height:	65'
Allowable Stories (Table 504.4):	3 stories above grade plane
Building Stories:	1
BUILDING AREA:	
Sprinkler qualifier (Table 506.2):	S1: Building one story max. above grade plane with automatic sprinkler system
Allowable Area	43,890 sq ft
Building Area	Existing: 39,724 + New: 2,186 = Total: 41,910 sq ft
OCCUPANCY SEPARATION:	No separation requirement (Table 508.4)
INCIDENTAL USE SEPARATION:	No separation requirement (509.3)
FIRE RESISTANCE RATINGS:	(Per Table 601, 602)
Primary Structural Frame:	0-Hour fire-resistance rating
Exterior Bearing Walls:	0-Hour fire-resistance rating
Interior Bearing Walls:	0-Hour fire-resistance rating
Exterior Nonbearing Walls:	0-Hour fire-resistance rating
Interior Nonbearing Walls:	0-Hour fire-resistance rating
Floor Construction / Secondary Members:	0-Hour fire-resistance rating
Roof Construction / Secondary Members:	0-Hour fire-resistance rating
Fire Walls	No fire walls
Fire Barriers	Existing: 2-Hour shafts, exit enclosures and passageway walls (Section 707) 90 Minute door with 90 Minute glazing, 100 or 1,296 sq in max (Table 716.1(2)) No Windows Permitted except those meeting ASTM E119 or UL 263 (Table 716.1(3))
Fire Partitions	No fire partitions
Smoke Barriers / Partitions	No smoke barriers / partitions
Shafts	No shaft enclosures

BLDG 2 - ADDITION TO EXISTING STRUCTURE

EGRESS COMPONENTS

NUMBER OF EXITS:	2 per space greater than 49 occupants (Table 1006.2.1) 3 per space with load 501 to 1,000; 4 per space over 1,000
DEAD-END CORRIDORS:	50' Max. with automatic sprinkler system in groups B, E, F, I-1, M, R-1, R-2, R-4, S, U (1020.4, Exception 2)
COMMON PATH OF TRAVEL:	75' (Table 1006.2.1)
TRAVEL DISTANCE TO EXIT:	250' Maximum for A, E, F-1, I-1, M, R, S-1 with sprinkler (Table 1017.2)
CORRIDOR CONSTRUCTION:	0-hour fire rating in A, B, E, F, I-2, I-4, M, S, U occupancies with sprinkler (1020.1)
CORRIDOR WIDTH:	44" minimum corridor width (Table 1020.2)
MEANS OF EGRESS CAPACITY:	0.2" for stairways (1005.3.1) / 0.15" for doors / other (1005.3.2) (sprinklered bldg)

BLDG 2 - ADDITION TO EXISTING STRUCTURE

FIRE SAFETY FEATURES

SPRINKLER:	Automatic sprinkler system provided throughout Sprinkler installed per NFPA 13 (903.3.1.1)
FIRE ALARM SIGNALING:	Existing System
EMERGENCY LIGHTING / POWER:	Existing System
SMOKE CONTROL SYSTEM:	Existing System

BLDG 2 - ADDITION TO EXISTING STRUCTURE

PLUMBING FIXTURES

Water Closets (Male):	A-4: 1 per 125
Water Closets (Female):	A-4: 1 per 65
Lavatories (Male):	A-4: 1 per 200
Lavatories (Female):	A-4: 1 per 200
Drinking Fountains:	A-4: 1 per 500
Service Sink:	1 Service Sink

BLDG 2 - ADDITION TO EXISTING STRUCTURE

BUILDING AREA CALCULATIONS

506.2 . Allowable Area Determination: Equation 5-2 . .

Aa = [At + (NS x If)] x Sa where:
Aa = Allowable area (square feet, typ.)
At = Tabular allowable area factor (per sprinkler qualifier) in accordance with Table 506.2 At = 38000
NS = Tabular allowable area factor per Table 506.2 (regardless of whether building is sprinklered) NS = 9500
If = Area factor increase due to frontage(percent) per Section 506.3 If = 0.62
Sa = Actual number of stories above grade plane: not to exeed 3 (4 if building is fully sprinklered). Sa = 1

Aa = 43890 sq ft

506.3 . Frontage Increase: Per Equation 5-5: . .

If = [F/P – 0.25] W/30 where:
If = Area increase due to frontage
F = Building perimeter that fronts a public way or open space having 20 feet open minimum width F = 541
P = Perimeter of entire building (feet) P = 624
W = Width of public way of open space (feet) – min. 20' to be allowed, use 30' max. W = 30

If = 0.62

BLDG 1 - ADDITION

BUILDING INFORMATION

OCCUPANCY CLASSIFICATION:	Assembly, Group A-4 (303.5)
CONSTRUCTION TYPE:	II-B (602.2, Non-combustible, non-protected) Addition to existing structure
BUILDING HEIGHT:	
Allowable Height (Table 504.3):	75' above grade plane
Building Height:	35'
Allowable Stories (Table 504.4):	3 stories above grade plane
Building Stories:	1
BUILDING AREA:	
Sprinkler qualifier (Table 506.2):	S1: Building one story max. above grade plane with automatic sprinkler system
Allowable Area	45,125
Building Area	8,938
OCCUPANCY SEPARATION:	No separation requirement (Table 508.4)
INCIDENTAL USE SEPARATION:	No separation requirement (509.3)
FIRE RESISTANCE RATINGS:	(Per Table 601, 602)
Primary Structural Frame:	0-Hour fire-resistance rating
Exterior Bearing Walls:	0-Hour fire-resistance rating
Interior Bearing Walls:	0-Hour fire-resistance rating
Exterior Nonbearing Walls:	0-Hour fire-resistance rating
Interior Nonbearing Walls:	0-Hour fire-resistance rating
Floor Construction / Secondary Members:	0-Hour fire-resistance rating
Roof Construction / Secondary Members:	0-Hour fire-resistance rating
Fire Walls	2-Hour (Table 706.4) 90 Minute door with 90 Minute glazing (Table 716.1(2)) No Windows Permitted except those meeting ASTM E119 or UL 263 (Table 716.1(3))
Fire Barriers	No fire barriers
Fire Partitions	No fire partitions
Smoke Barriers / Partitions	No smoke barriers / partitions
Shafts	No shaft enclosures

BLDG 1 - ADDITION

EGRESS COMPONENTS

NUMBER OF EXITS:	2 per space greater than 49 occupants (Table 1006.2.1) 3 per space with load 501 to 1,000; 4 per space over 1,000
DEAD-END CORRIDORS:	50' Max. with automatic sprinkler system in groups B, E, F, I-1, M, R-1, R-2, R-4, S, U (1020.4, Exception 2)
COMMON PATH OF TRAVEL:	75' (Table 1006.2.1)
TRAVEL DISTANCE TO EXIT:	250' Maximum for A, E, F-1, I-1, M, R, S-1 with sprinkler (Table 1017.2)
CORRIDOR CONSTRUCTION:	0-hour fire rating in A, B, E, F, I-2, I-4, M, S, U occupancies with sprinkler (1020.1)
CORRIDOR WIDTH:	44" minimum corridor width (Table 1020.2)
MEANS OF EGRESS CAPACITY:	0.2" for stairways (1005.3.1) / 0.15" for doors / other (1005.3.2) (sprinklered bldg)

BLDG 1 - ADDITION

FIRE SAFETY FEATURES

SPRINKLER:	Automatic sprinkler system provided throughout Sprinkler installed per NFPA 13 (903.3.1.1)
FIRE ALARM SIGNALING:	
EMERGENCY LIGHTING / POWER:	
SMOKE CONTROL SYSTEM:	

BLDG 1 - ADDITION

PLUMBING FIXTURES

Water Closets (Male):	A-4: 1 per 125
Water Closets (Female):	A-4: 1 per 65
Lavatories (Male):	A-4: 1 per 200
Lavatories (Female):	A-4: 1 per 200
Drinking Fountains:	A-4: 1 per 500
Service Sink:	1 Service Sink

BLDG 1 - ADDITION

BUILDING AREA CALCULATIONS

506.2 . Allowable Area Determination: Equation 5-2 . .

Aa = [At + (NS x If)] x Sa where:
Aa = Allowable area (square feet, typ.)
At = Tabular allowable area factor (per sprinkler qualifier) in accordance with Table 506.2 At = 38000
NS = Tabular allowable area factor per Table 506.2 (regardless of whether building is sprinklered) NS = 9500
If = Area factor increase due to frontage(percent) per Section 506.3 If = 0.75
Sa = Actual number of stories above grade plane: not to exeed 3 (4 if building is fully sprinklered). Sa = 1

Aa = 45125 sq ft

506.3 . Frontage Increase: Per Equation 5-5: . .

If = [F/P – 0.25] W/30 where:
If = Area increase due to frontage
F = Building perimeter that fronts a public way or open space having 20 feet open minimum width F = 2027
P = Perimeter of entire building (feet) P = 2027
W = Width of public way of open space (feet) – min. 20' to be allowed, use 30' max. W = 30

If = 0.75

PROJECT INFORMATION

PROJECT NUMBER	23018
PROJECT NAME	Discovery Middle School Addition
OWNER	Liberty School District 800 Midjay Dr Liberty, MO 64068
AUTHORITY HAVING JURISDICTION	City of Liberty, MO Planning & Development 101 E. Kansas Street Liberty, MO 64068
RESPONDING FIRE SERVICE	City of Liberty Fire Department
ANTICIPATED OCCUPANCY	April/May , 2025
ADOPTED CODES AND ORDINANCES	2018 International Building Code 2018 International Existing Building Code 2017 National Electric Code (NFPA 70) 2018 International Mechanical Code 2018 International Plumbing Code 2012 International Energy Conservation Code 2009 ICC A117.1 Accessible and Usable Buildings and Facilities 2016 ASME A17.1 Safety Code for Elevators and Escalators 2014 ICC 500 Standard on Design and Construction of Storm Shelters Amendments

CODE INFORMATION

hollis + miller architects

we design the future®

1828 Walnut Street Suite 922
Kansas City, MO 64108
t 816.442.7700

115 Wilcox Street Suite 210
Castle Rock, CO 80104
t 720.949.1689

HOLLISANDMILLER.COM

Hollis + Miller Architects
Missouri State Certificate of Authority
Architecture # 0000161
Structure # 2006031333

Bob D Campbell
Structural Engineer
State Certificate of Authority #000442
4338 Belleview Ave
Kansas City, MO 64111
816.531.4144 phone

Smith & Boucher, Inc.
Mechanical, Electrical, & Plumbing
State Certificate of Authority #EGC000178
25618 W 103rd Street
Olathe, KS 66061
913.345.2127 phone

MKEC Engineering, Inc.
Civil Engineer
State Certificate of Authority
Engineering #2001009364
Landscaping #2006027139
Surveying #2006027138
11827 W 112th Street, Suite 200
Overland Park, KS 66210
913.317.9390 phone

Peerbolte Creative
Theatrical Consultant
109 E Pine St.
Warrensburg, MO 64093-0752
660.429.1383 phone

Avant Acoustics
AV/Acoustics Consultant
14827 West 95th St.
Lenexa, KS 66215
913.888.9111 phone

Discovery Middle School Storm Shelter Addition
Liberty Public Schools
800 Midjay Dr, Liberty, MO 64068

CONFORMED CONSTRUCTION DOCUMENTS

REVISIONS:

#	Description	Date

STATE OF MISSOURI
KEVIN E. NELSON
A-2019015618
ARCHITECT

OCTOBER 11, 2023

Kevin E. Nelson
A-2019015618

"The Professional Architects seal affixed to this sheet applies only to the material and items shown on this sheet. All drawings, instruments or other documents not exhibiting this seal shall not be considered prepared by this architect, and this architect expressly disclaims any and all responsibility for such plan, drawings, or documents not exhibiting this seal."

JOB NO: 23018
DRAWN BY: KL
CHECKED BY: JB
DATE: 10.11.2023

G010

Please consider the environment before printing this.

10/11/2023 3:53:48 PM

Code BLDG 1 Occupant Load Table

Rm No	Room Name	Function of Space	Area (SF)	Occupant Load Factor	Space Occupancy Load
A103	Multipurpose	Assembly With Fixed Seats	5805 SF	0 SF	491
A107	Mechanical	Accessory Storage Areas, Mechanical Equipment Room	112 SF	300 SF	1
A108	Platform	Stages and Platforms	1742 SF	15 SF	117
Total Building Occupant Load			7659 SF		609

Code BLDG 2 Occupant Load Table

Rm No	Room Name	Function of Space	Area (SF)	Occupant Load Factor	Space Occupant Load
A111	AV/Elec	Accessory Storage Areas, Mechanical Equipment Room	165 SF	300 SF	1
A112	Storage	Accessory Storage Areas, Mechanical Equipment Room	537 SF	300 SF	2
Level 1					3
A200	Mezzanine Storage	Accessory Storage Areas, Mechanical Equipment Room	757 SF	300 SF	3
Level 2					3
Total Building Occupant Load					6

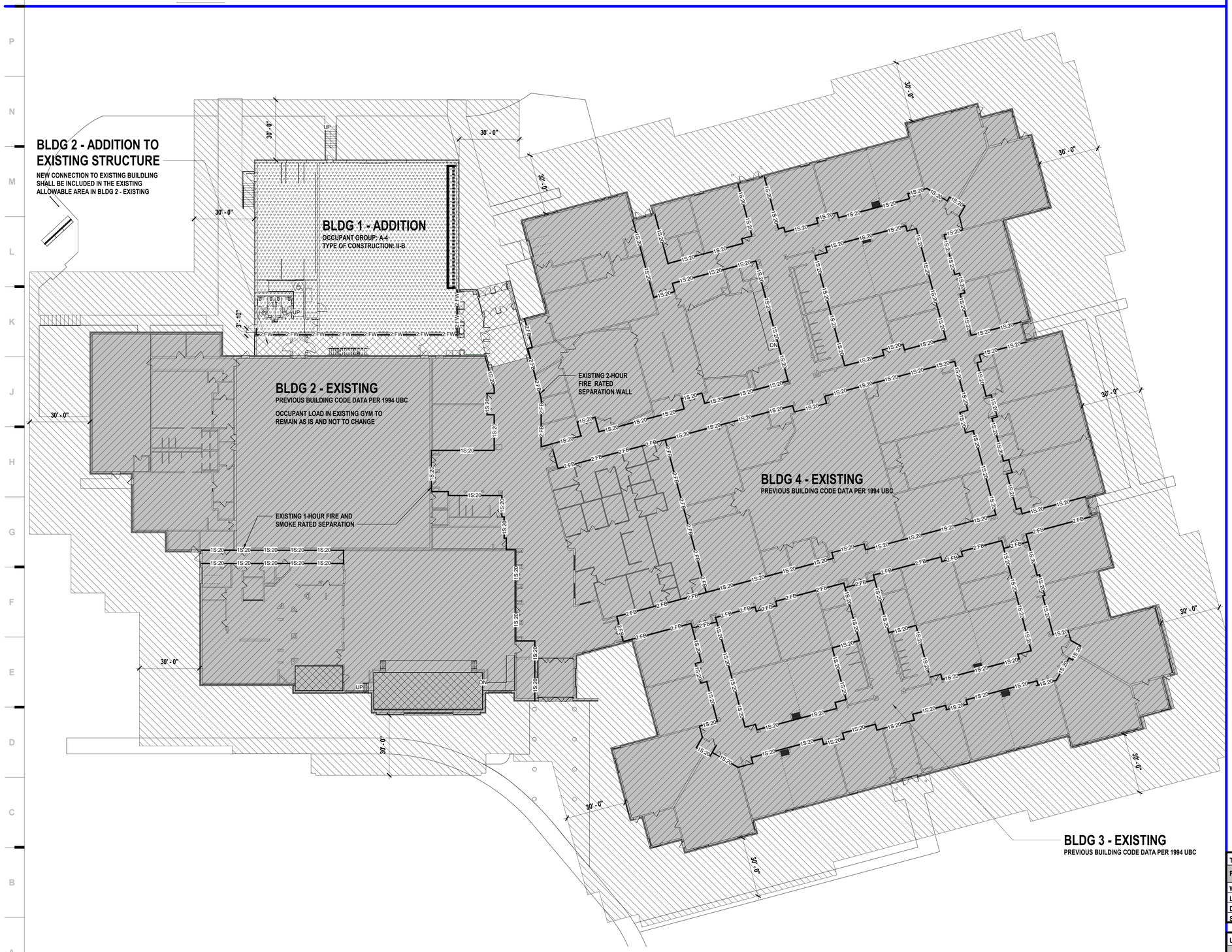

CODE LEGEND

1:20 — 1 HOUR FIRE PARTITION W/ 20 MIN DOORS

1:45 — 1 HOUR FIRE BARRIER W/ 45 MIN. DOORS

2:FB — 2 HOUR FIRE BARRIER W/ 90 MIN DOORS

2:FW — 2 HOUR FIRE WALL W/ 90 MIN DOORS

1S:20 — EXISTING CONDITION

NEW ADDITION - HIGH WIND AREA SPRINKLERED

NEW ADDITION SPRINKLERED

EXISTING BUILDING - NO WORK SPRINKLERED

EXISTING BUILDING - ALTERATION LEVEL 1
ALTERATIONS DO NOT INVOLVE SPACE RECONFIGURATION

FRONTAGE AREA

FH — FIRE HYDRANT

FDC — FIRE DEPARTMENT CONNECTION

FACP — FIRE ALARM CONTROL PANEL

FDA — FIRE DEPARTMENT ACCESS (KNOX BOX)

FE — FIRE EXTINGUISHER:
ON BRACKET: MOUNT HANDLE 48" MAX AFF
IN CABINET: BOTTOM OF CABINET 32" AFF

EXIT COMPONENT

123 / 345 — CAPACITY / ACTUAL OCCUPANT LOAD

123 — OCCUPANT COUNT @ ROOM EXIT

456 — OCCUPANT SUM

131' - 6" — TRAVEL DISTANCE

Total Facility Fixture Counts of the Existing Building							
Fixture	Required			Provided			
	Male	Female	Total	Total	Male	Female	Gender Neutral
Water Closets	17	24	41	50	23	27	8
Lavatories	12	13	25	25	12	13	8
Drinking Fountains			10	12			
Service Sinks			1	3			

Urinal Substitutions				
Occupancy Group	Percentage Allowed	Required Water Closets	Permitted Substitutions	Substitutions Applied
Assembly / Education	67% of required	17	11	0
All other occupancies	50% of required	0	0	0

A1 | Scale 1" = 20'-0" | Overall - Code Plan - Level 1 - DMS

20' 10' 0' 20'

PROJECT NORTH TRUE NORTH

hollis + miller architects®
we design the future®
1828 Walnut Street Suite 922
Kansas City, MO 64108
t 816.442.7700
115 Wilcox Street Suite 210
Castle Rock, CO 80104
t 720.949.1689
HOLLISANDMILLER.COM
Hollis + Miller Architects
Missouri State Certificate of Authority
Architecture # 000161
Structure # 2006031333

Bob D Campbell
Structural Engineer
State Certificate of Authority #000442
4338 Belleview Ave
Kansas City, MO 64111
816.531.4144 phone

Smith & Boucher, Inc.
Mechanical, Electrical, & Plumbing
State Certificate of Authority #EGC000178
25618 W 103rd Street
Olathe, KS 66061
913.345.2127 phone

MKEC Engineering, Inc.
Civil Engineer
State Certificate of Authority
Engineering #2001009364
Landscaping #2006027139
Surveying #2006027138
11827 W 112th Street, Suite 200
Overland Park, KS 66210
913.317.9390 phone

Peerbolte Creative
Theatrical Consultant
109 E Pine St.
Warrensburg, MO 64093-0752
660.429.1383 phone

Avant Acoustics
AV/Acoustics Consultant
14827 West 95th St.
Lenexa, KS 66215
913.888.9111 phone

Discovery Middle School Storm Shelter Addition

Liberty Public Schools

800 Midjay Dr, Liberty, MO 64068

CONFORMED CONSTRUCTION DOCUMENTS

REVISIONS:

#	Description	Date

STATE OF MISSOURI
KEVIN E. NELSON
A-2019015618
ARCHITECT

OCTOBER 11, 2023

Kevin E. Nelson
A-2019015618

The Professional Architects seal affixed to this sheet applies only to the material and items shown on this sheet. All drawings, instruments or other documents not exhibiting this seal shall not be considered prepared by this architect, and this architect expressly disclaims any and all responsibility for such plan, drawings, or documents not exhibiting this seal.

JOB NO: 23018
DRAWN BY: KL
CHECKED BY: JB
DATE: 10.11.2023

G101

CODE SITE PLAN/OVERALL CODE PLAN

10/11/2023 3:53:56 PM

Please consider the environment before printing this.

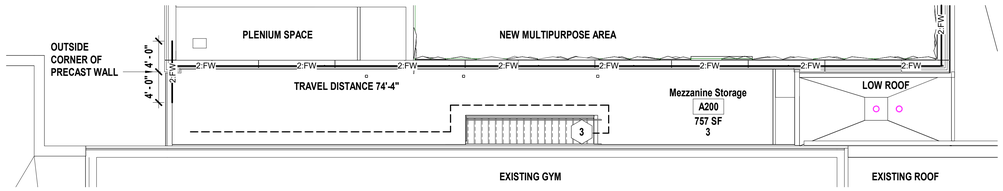

N1 Scale 1/8" = 1'-0" Enlarged Code Plan - Level 2 - DMS

8' 4' 0' 8' PROJECT NORTH TRUE NORTH

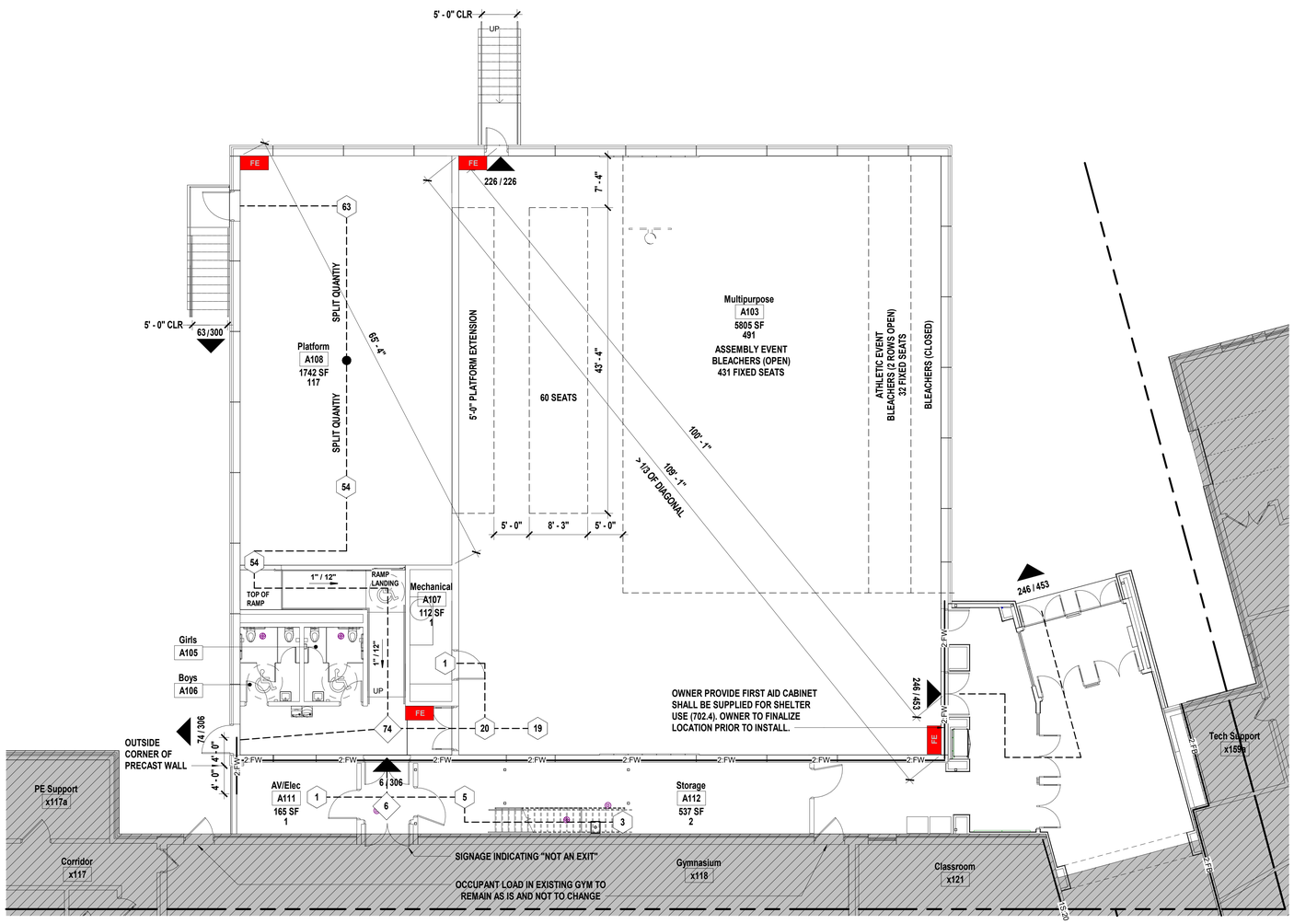

A1 Scale 1/8" = 1'-0" Enlarged Code Plan - Level 1 - DMS

8' 4' 0' 8' PROJECT NORTH TRUE NORTH

STORM SHELTER OCCUPANT LOAD

USABLE SPACES WITHIN SHELTER:

GROSS AREA OF USABLE SPACES:	8938 SF
USABLE FLOOR AREA OF SHELTER:	8488 SF

USABLE SPACE IS BASED UPON ACTUAL NET AREA PER 501.1.2.2

STANDING OR SEATED OCCUPANTS:	1758
WHEELCHAIR SPACES	9
TOTAL OCCUPANCY OF SHELTER:	1767

VENTILATION AREA

TOTAL OCCUPANCY OF SHELTER:	1767
VENTING AREA PER OCCUPANT:	6 SQ IN (TABLE 702.1.1)
MINIMUM VENTING AREA REQUIRED:	10602 SQ IN

REQUIRED SANITATION FACILITIES

TOILET FACILITIES:	REQUIRED: 4	PROVIDED: 4
HANDWASHING FACILITIES:	REQUIRED: 2	PROVIDED: 2

GYMNASIUM OCCUPANT LOAD

ASSEMBLY

ASSEMBLY EVENT		
BLEACHERS	FIXED ' at 18"/occ	431
TEMPORARY SEATING	420 sf at 7 sf/occ	60
TEMPORARY STAGE	0 sf at 15 sf/occ	0
TOTAL ASSEMBLY OCCUPANTS:		491
ATHLETIC EVENT		
BLEACHERS	FIXED ' at 18"/occ	60
GYM FLOOR	3205 sf at 50sf/occ	65
TOTAL ATHLETIC OCCUPANTS:		125

CODE LEGEND

1:20 — 1 HOUR FIRE PARTITION W/ 20 MIN DOORS

1:45 — 1 HOUR FIRE BARRIER W/ 45 MIN. DOORS

2:FB — 2 HOUR FIRE BARRIER W/ 90 MIN DOORS

2:FW — 2 HOUR FIRE WALL W/ 90 MIN DOORS

1S:20 — EXISTING CONDITION

NEW ADDITION - HIGH WIND AREA SPRINKLERED

NEW ADDITION SPRINKLERED

EXISTING BUILDING - NO WORK SPRINKLERED

EXISTING BUILDING - ALTERATION LEVEL 1 ALTERATIONS DO NOT INVOLVE SPACE RECONFIGURATION

FRONTAGE AREA

FH — FIRE HYDRANT

FDC — FIRE DEPARTMENT CONNECTION

FACP — FIRE ALARM CONTROL PANEL

FDA — FIRE DEPARTMENT ACCESS (KNOX BOX)

FE — FIRE EXTINGUISHER: ON BRACKET: MOUNT HANDLE 48" MAX AFF IN CABINET: BOTTOM OF CABINET 32" AFF

EXIT COMPONENT

123 / 345 — CAPACITY / ACTUAL OCCUPANT LOAD

123 — OCCUPANT COUNT @ ROOM EXIT

456 — OCCUPANT SUM

131' - 6" — TRAVEL DISTANCE

Code BLDG 1 Occupant Load Table

Rm No	Room Name	Function of Space	Area (SF)	Occupant Load Factor	Space Occupancy Load
A103	Multipurpose	Assembly With Fixed Seats	5805 SF	0 SF	491
A107	Mechanical	Accessory Storage Areas, Mechanical Equipment Room	112 SF	300 SF	1
A108	Platform	Stages and Platforms	1742 SF	15 SF	117
Total Building Occupant Load			7659 SF		609

Code BLDG 2 Occupant Load Table

Rm No	Room Name	Function of Space	Area (SF)	Occupant Load Factor	Space Occupant Load
A111	AV/Elec	Accessory Storage Areas, Mechanical Equipment Room	165 SF	300 SF	1
A112	Storage	Accessory Storage Areas, Mechanical Equipment Room	537 SF	300 SF	2
Level 1					3
A200	Mezzanine Storage	Accessory Storage Areas, Mechanical Equipment Room	757 SF	300 SF	3
Level 2					3
Total Building Occupant Load					6

KEY PLAN

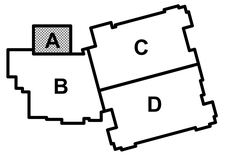

hollis + miller architects®

we design the future®

1828 Walnut Street Suite 922
Kansas City, MO 64108
t 816.442.7700

115 Wilcox Street Suite 210
Castle Rock, CO 80104
t 720.949.1689

HOLLISANDMILLER.COM

Hollis + Miller Architects
Missouri State Certificate of Authority
Architecture # 000161
Structure # 2006031333

Bob D Campbell
Structural Engineer
State Certificate of Authority #000442
4338 Belleview Ave
Kansas City, MO 64111
816.531.4144 phone

Smith & Boucher, Inc.
Mechanical, Electrical, & Plumbing
State Certificate of Authority #EGC000178
25618 W 103rd Street
Olathe, KS 66061
913.345.2127 phone

MKEC Engineering, Inc.
Civil Engineer
State Certificate of Authority
Engineering #2001009364
Landscaping #2006027139
Surveying #2006027138
11827 W 112th Street, Suite 200
Overland Park, KS 66210
913.317.9390 phone

Peerbolte Creative
Theatrical Consultant
109 E Pine St.
Warrensburg, MO 64093-0752
660.429.1383 phone

Avant Acoustics
AV/Acoustics Consultant
14827 West 95th St.
Lenexa, KS 66215
913.888.9111 phone

Discovery Middle School Storm Shelter Addition

Liberty Public Schools

800 Midjay Dr, Liberty, MO 64068

CONFORMED CONSTRUCTION DOCUMENTS

REVISIONS:

#	Description	Date
1	Addendum 01	09/14/2023
2	Addendum 05	10/06/2023

STATE OF MISSOURI — KEVIN E. NELSON — A-2019015618 — ARCHITECT

OCTOBER 11, 2023

Kevin E. Nelson
A-2019015618

The Professional Architects seal affixed to this sheet applies only to the material and items shown on this sheet. All other information on this sheet is supplied by others and is not the responsibility of the architect. Hollis + Miller Architects and the architect expressly disclaims any and all responsibility for such plan, drawings, or documents not exhibiting this seal.

JOB NO: 23018
DRAWN BY: KL
CHECKED BY: JB
DATE: 10.11.2023

G102

ENLARGED CODE PLAN - STORM SHELTER PLAN

Please consider the environment before printing this.

10/11/2023 3:53:59 PM

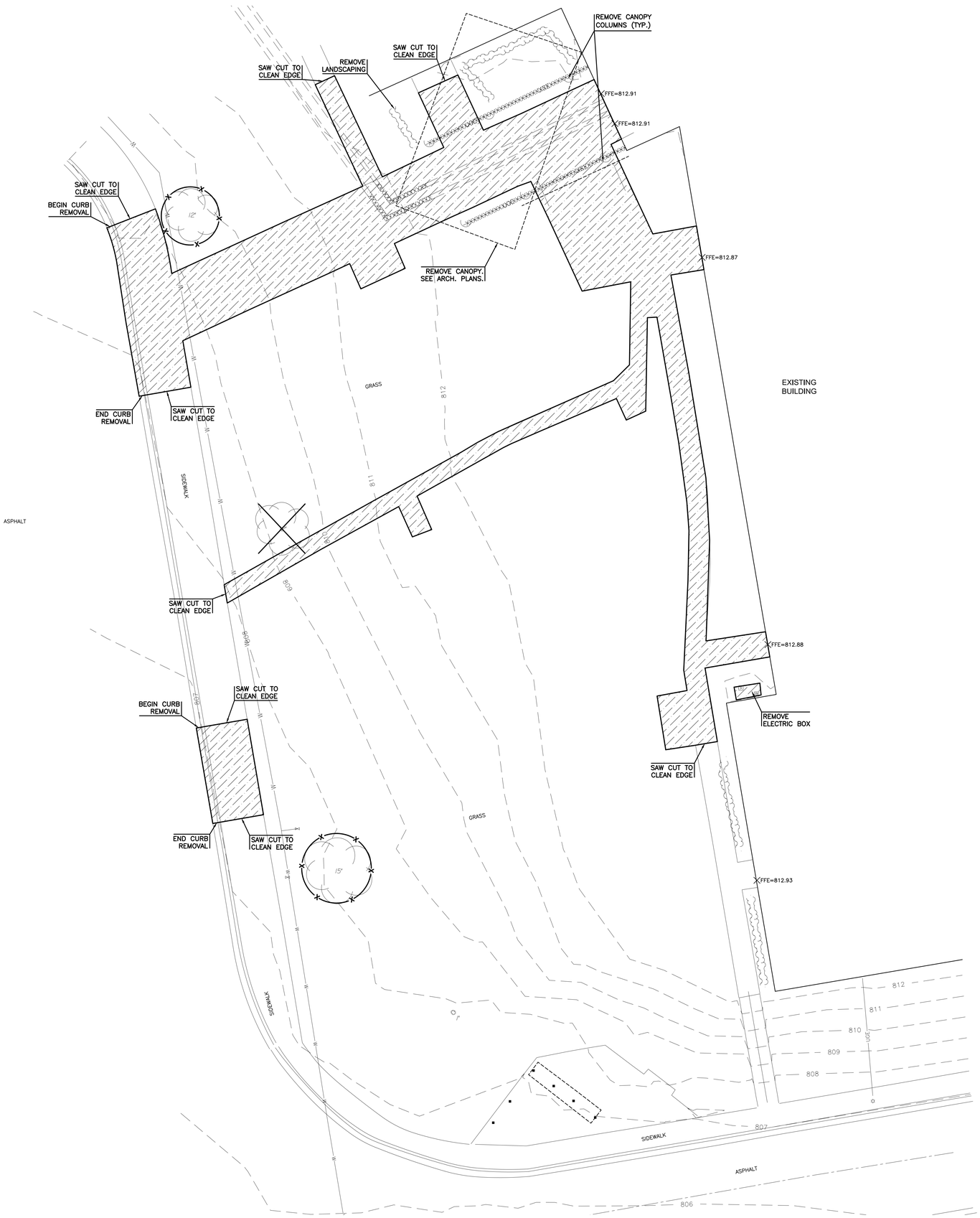

DEMOLITION NOTES:

1. CONTRACTOR SHALL BE RESPONSIBLE TO REPAIR AND REPLACE EXISTING CONCRETE SIDEWALKS, CURB & GUTTER, AND ANY EXISTING PAVEMENT DAMAGED DURING CONSTRUCTION.
2. EXCAVATED MATERIAL THAT IS NOT IMMEDIATELY LOADED AND HAULED OFF SITE SHALL BE STOCKPILED ON SITE. CONTRACTOR SHALL PROVIDE AND MAINTAIN THE APPROPRIATE BMP (COMPOST SOCK, GRAVEL FILTER BAGS, WADDLES, SILT FENCE, ETC.) AROUND STOCKPILE AREA TO PROTECT ADJACENT INLETS OR AREAS, ETC., UNTIL SUCH TIME THAT STOCKPILE IS REMOVED.
3. CONTRACTOR SHALL OBTAIN ALL PERMITS NECESSARY PRIOR TO THE START OF CONSTRUCTION, INCLUDING BUT NOT LIMITED TO, RIGHT-OF-WAY, HAULING, AND LAND DISTURBANCE PERMITS WITH THE APPROPRIATE LOCAL JURISDICTION.
4. CONTRACTOR SHALL DISPOSE OF ALL DEMOLITION ITEMS APPROPRIATELY PER LOCAL AND STATE REQUIREMENTS.

DEMOLITION LEGEND

- PAVEMENT REMOVAL
- TREE REMOVAL
- UTILITY REMOVAL
- TREE PROTECTION

SCALE: 1"=10'

0 10 20

MKEC
11827 W. 112th Street, Suite 200
Overland Park, KS 66210
913 317 9390
Engineering No. 2001009364
Landscape No. 2006027139
Surveying No. 2006027138

hollis+miller architects
we design the future
1828 Walnut Street Suite 922
Kansas City, MO 64108
t 816.442.7700
115 Wilcox Street Suite 210
Castle Rock, CO 80104
t 720.949.1689
HOLLISANDMILLER.COM

Hollis + Miller Architects
Missouri State Certificate of Authority
Architecture # 0000161
Structure # 2006031333

MKEC Engineering, Inc.
Civil Engineering / Landscape Architecture
State Certificate of Authority #:
Engineering: 2001009364
Landscaping: 2006027139
Surveying: 2006027138
11827 W. 112th St, Ste 200
Overland Park, KS 66210
913.317.9390 phone

Smith & Boucher Engineers
Mech/Elect/Plumb Engineer
State Certificate of Authority #EGC-0001787
25501 W. Valley Parkway, Ste 200
Olathe, KS 66061
913.345.2127 phone

Bob D Campbell
Structural Engineer
State Certificate of Authority #000442
4338 Belleview Ave
Kansas City, MO 64111
816.531.4144 phone

Discovery Middle School Storm Shelter Addition

Liberty Public Schools

800 Midjay Dr, Liberty, MO 64068

Conformed Construction Documents

REVISIONS:

#	Description	Date

STATE OF MISSOURI
BRADEN L. TAYLOR
NUMBER PE-2021001896
PROFESSIONAL ENGINEER
10.11.23

BRADEN L. TAYLOR, P.E.
LISC. #2021001896

The Professional Engineers seal affixed to this sheet applies only to the material and tasks shown on this sheet. All other sheets in this set of drawings or specifications are not considered to be the work product of the engineer, and the engineer expressly disclaims any and all responsibility for such plan, drawings, or documents not sealed by the seal.

JOB NO: 23018
DRAWN BY: SEK
CHECKED BY: BLT
DATE: 10.11.2023

DC101

DEMOLITION PLAN

Please consider the environment before printing this.

P:\PROJECTS\2023\2302010293_LIBERTY_DISCOVER MS GYM ADDITION\00 230293 CAD\SHTS\05 CIVIL\C03\230293-03-DB10-C0.DWG

OWNER TO REMOVE ANY/WALL SCHOOL ITEMS FROM DISPLAY CASE PRIOR TO START OF DEMO/CONSTRUCTION.

VENDING MACHINES TO BE RELOCATED IN NEW ADDITION. RE: A8/A411

N1	Scale	Existing Vestibule - Right - For Refernece Only
	Not to Scale	

RELOCATE EXISTING WALL DEVICES PER OWNER PREFERENCE. PRIOR TO REINSTALL COORDINATE FINAL LOCATION WITH OWNER, ARCHITECT, AND MEP ENGINEER.

REMOVE EXISTING MECH. UNIT. RE: MEP DRAWINGS OF EXTENT.

N5	Scale	Existing Vestibule - Left - For Refernece Only
	Not to Scale	

REMOVE EXISTING CANOPY. RE: ARCHITECTURE AND STRUCTURAL DRAWINGS OF EXTENT.

REMOVE EXISTING CONDUIT AND EXTERIOR LIGHT. RE: MEP DRAWINGS OF EXTENT.

RE: CIVIL DRAWINGS FOR EXTENT OF SITE DEMO.

N9	Scale	Existing Exterior Canopy To Be Demo'd - For Refernece Only
	Not to Scale	

REMOVE PORTION OF EXISTING BRICK. RE: ARCHITECTURE AND STRUCTURAL DRAWINGS OF EXTENT.

REMOVE PORTION OF EXISTING CMU/BRICK WALL. RE: ARCHITECTURE AND STRUCTURAL DRAWINGS OF EXTENT.

RE: MEP DRAWINGS OF EXTENT.

N13	Scale	Existing Exterior Gym Wall - For Refernece Only
	Not to Scale	

A1	Scale	Overall Demolition Floor Plan - Level 1
	1" = 20'-0"	

20' 10' 0' 20'

PROJECT NORTH

TRUE NORTH

DEMOLITION NOTES

FLOORS & BASE

1. REMOVE EXISTING PORCELAIN TILE AND BASE INCLUDING ADHESIVE. SALVAGE FOR OWNER TO TO REPLACE MISMATCH TILES IN BUILDING. PREPARE SLAB FOR NEW FLOORING.
2. REMOVE EXISTING CONCRETE SLAB AS REQUIRED FOR NEW CONSTRUCTION. SAW CUT CONCRETE PRIOR TO REMOVAL. DO NOT SAW CUT INTO EXISTING FOUNDATIONS OR OTHER STRUCTURAL MEMBERS.
3. REMOVE EXISTING CONCRETE SLAB AS REQUIRED FOR UNDER SLAB MECHANICAL, ELECTRICAL AND PLUMBING WORK. SAW CUT CONCRETE PRIOR TO REMOVAL. DO NOT SAW CUT INTO EXISTING FOUNDATIONS OR OTHER STRUCTURAL MEMBERS. COORDINATE WITH MEP SHEETS FOR NEW WORK AND CAPPING OF ABANDONED SERVICES

WALLS

1. REMOVE ALL/PORTION OF EXISTING CMU/BRICK WALL. COORDINATE EXTENTS OF REMOVAL WITH NEW CONSTRUCTION AND REMOVAL/REROUTING OF CONDUIT, WIRING, SWITCHES AND DUCTWORK. SALVAGE BRICK FOR REUSE AS MAY BE REQUIRED.
2. REMOVE ALL/PORTION OF EXISTING CMU WALL. COORDINATE EXTENTS OF REMOVAL WITH NEW CONSTRUCTION AND REMOVAL/REROUTING OF CONDUIT, WIRING, SWITCHES AND DUCTWORK WITH MEP DRAWINGS.
3. REMOVE EXISTING ALUMINUM OR HOLLOW METAL FRAME, DOOR AND ALL RELATED HARDWARE. RELINQUISH TO OWNER.
4. PREP EXISTING DOOR AND FRAME FOR NEW PAINT AND NEW HARDWARE.

CEILINGS

1. REMOVE EXISTING LAY-IN ACOUSTICAL TILE AND SUSPENSION SYSTEM. EXISTING HANGER WIRE MAY BE REUSED FOR NEW SUSPENSION SYSTEM.
2. REMOVE EXISTING SOFFITS AND ALL EXISTING FRAMING.
3. REMOVE EXISTING GYPSUM BOARD CEILINGS AND SUSPENSION SYSTEM. EXISTING HANGER WIRE MAY BE REUSED FOR NEW SUSPENSION SYSTEM

DEMOLITION LEGEND

ALTERNATE 1: EXISTING LAY-IN ACOUSTICAL TILE & SUSPENSION SYSTEM TO BE REMOVED. EXISTING HANGER WIRE MAY BE REUSED FOR NEW SUSPENSION SYSTEM.

GENERAL DEMOLITION NOTES

1. DEMOLITION INCLUDES THE REMOVAL OF EXISTING CONSTRUCTION WHICH CONFLICTS WITH WORK TO BE BUILT/INSTALLED IN NEW CONSTRUCTION. TRANSITIONS BETWEEN DEMOLITION AND EXISTING TO REMAIN TO BE CAREFULLY COORDINATED
2. DASHED LINES INDICATE EXISTING CONSTRUCTION TO BE DEMOLISHED/REMOVED
3. HALF-TONE SHADING INDICATES EXISTING CONSTRUCTION TO REMAIN
4. EVERY DETAIL OF THE DEMOLITION WORK MAY NOT BE COVERED ON THESE DRAWINGS, BUT THE DEMOLITION CONTRACTOR SHALL COORDINATE WITH THE GC/CM TO ENSURE ALL REQUIRED ITEMS ARE REMOVED IN ORDER FOR NEW WORK TO BE COMPLETED
5. IN AREAS SCHEDULED FOR DEMOLITION, ALL ACCESSORIES ATTACHED TO THE CEILINGS, FLOOR AND WALLS ARE TO BE REMOVED, INCLUDING BRACKETS, SCREWS, SIGNAGE, SURFACE MOUNTED ELECTRICAL AND TECHNOLOGY; REMOVE ALL WINDOW COVERINGS; MINI-BLINDS, ROLLER SHADES AND ALL BRACKETS
6. THE OWNER WILL IDENTIFY ALL ITEMS TO BE SALVAGED PRIOR DEMOLITION STARTING. CONTRACTOR SHALL SALVAGE AND TURN OVER TO THE OWNER ALL EQUIPMENT IDENTIFIED. ALL REMAINING ITEMS SHALL BE REMOVED BY THE DEMOLITION CONTRACTOR
7. DO NOT DISTURB SOIL UNDER EXISTING FOOTINGS AND/OR FLOOR SLABS NOTED TO REMAIN
8. COORDINATE THE REMOVAL OF ALL/PORTIONS OF LOAD BEARING ELEMENTS WITH THE STRUCTURAL ENGINEER PRIOR TO REMOVAL. PROVIDE TEMPORARY SHORING AS REQUIRED
9. REFER TO MEP DEMOLITION SHEETS FOR EXISTING MECHANICAL, ELECTRICAL AND PLUMBING TO BE REMOVED

hollis + miller architects

we design the future®

1828 Walnut Street Suite 922
Kansas City, MO 64108
t 816.442.7700

115 Wilcox Street Suite 210
Castle Rock, CO 80104
t 720.949.1689

HOLLISANDMILLER.COM

Hollis + Miller Architects
Missouri State Certificate of Authority
Architecture # 000161
Structure # 2006031333

Bob D Campbell
Structural Engineer
State Certificate of Authority #000442
4338 Belleview Ave
Kansas City, MO 64111
816.531.4144 phone

Smith & Boucher, Inc.
Mechanical, Electrical, & Plumbing
State Certificate of Authority #EGC000178
25618 W 103rd Street
Olathe, KS 66061
913.345.2127 phone

MKEC Engineering, Inc.
Civil Engineer
State Certificate of Authority
Engineering #2001009364
Landscaping #2006027139
Surveying #2006027138
11827 W 112th Street, Suite 200
Overland Park, KS 66210
913.317.9390 phone

Peerbolte Creative
Theatrical Consultant
109 E Pine St.
Warrensburg, MO 64093-0752
660.429.1383 phone

Avant Acoustics
AV/Acoustics Consultant
14827 West 95th St.
Lenexa, KS 66215
913.888.9111 phone

Discovery Middle School Storm Shelter Addition

Liberty Public Schools

800 Midjay Dr, Liberty, MO 64068

CONFORMED CONSTRUCTION DOCUMENTS

REVISIONS:

#	Description	Date

STATE OF MISSOURI
KEVIN E. NELSON
A-2019015618
ARCHITECT

OCTOBER 11, 2023

Kevin E. Nelson
A-2019015618

The Professional Architects seal affixed to this sheet applies only to the material and items shown on this sheet. All other information on this sheet is not part of the Professional Architects area of responsibility for such plan, drawings, or documents and this architect expressly disclaims any and all responsibility for such plan, drawings, or documents not exhibiting this seal.

JOB NO: 23018
DRAWN BY: KL
CHECKED BY: JB
DATE: 10.11.2023

DA101

DEMOLITION FLOOR PLAN - OVERALL - LEVEL 1

10/11/2023 3:54:13 PM

Please consider the environment before printing this.

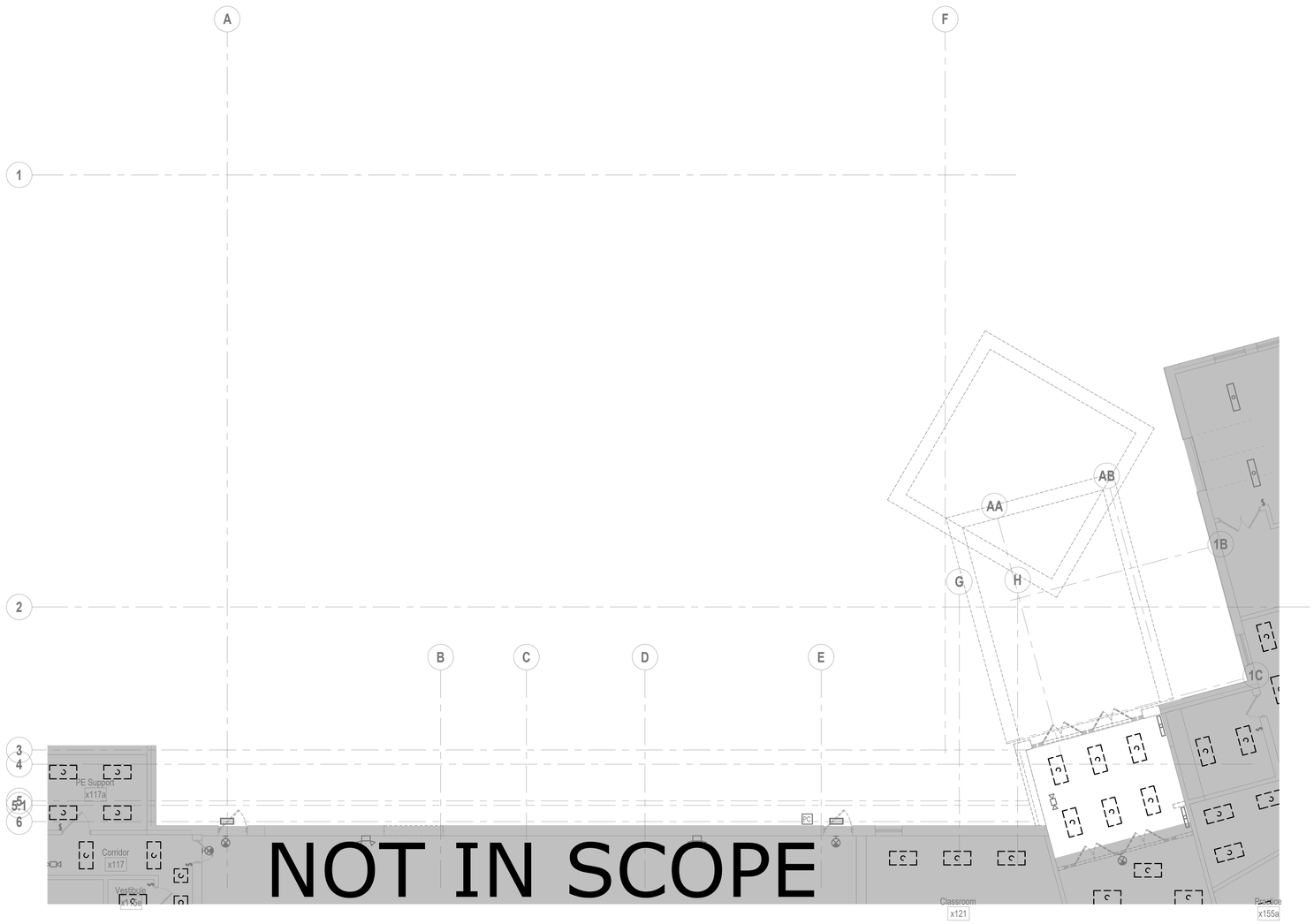

SHEET KEYNOTE LEGEND

GENERAL NOTES:

1. THE EXISTING CONDITIONS INDICATED ON THE DRAWINGS ARE TAKEN FROM THE BEST INFORMATION AVAILABLE AND FROM VISUAL SITE INSPECTIONS AND ARE NOT TO BE CONSTRUED AS "AS-BUILT" CONDITIONS. THE INFORMATION IS SHOWN TO HELP ESTABLISH THE EXTENT OF THE NEW WORK. VERIFY ALL ACTUAL EXISTING CONDITIONS AT THE PROJECT SITE AND PERFORM THE WORK AS REQUIRED TO MEET THE EXISTING CONDITIONS AND THE EXTENT OF THE WORK INDICATED.
2. DASHED LINES INDICATED MECHANICAL OR ELECTRICAL FIXTURES, DEVICES OR EQUIPMENT THAT SHALL BE REMOVED. SOLID LINES REPRESENT EXITING EQUIPMENT OR MATERIAL TO REMAIN, EXCEPT WHERE OTHERWISE INDICATED.
3. DISCONNECT AND REMOVE ALL CIRCUITRY, DISCONNECTS, CONTROLLERS AND CONDUIT THAT BECOMES UNNECESSARY AS A RESULT OF THE REMOVAL OF FIXTURES, DEVICES OR EQUIPMENT INDICATED TO BE REMOVED. LABEL ALL CIRCUIT BREAKERS IN EXISTING PANELBOARDS NO LONGER IN USE AS SPARE. CAP ALL UNUSED CONDUIT AND WIRING BEYOND THE FLOOR LINE OR WALL LINE TO FACILITATE RESTORATION OF FINISH.
4. VERIFY AND RESTORE CONTINUITY OF ALL EXISTING CIRCUITRY INDICATED TO REMAIN IN USE. WHERE REMOVAL OF EXISTING WIRING INTERRUPTS ELECTRICAL CONTINUITY OF CIRCUITS WHICH ARE TO REMAIN, FURNISH AND INSTALL ALL REQUIRED CIRCUITRY, CONDUIT, JUNCTION BOXES, ETC. TO INSURE CONTINUED ELECTRICAL CONTINUITY.
5. RELOCATE AND RECONNECT ANY MECHANICAL EQUIPMENT AND ANY ELECTRIC FIXTURES, DEVICES OR EQUIPMENT THAT MUST BE RELOCATED IN ORDER TO ACCOMPLISH THE REVISIONS INDICATED ON THE DRAWINGS OR INDICATED IN THE SPECIFICATIONS OR TO MEET NEC CODE REQUIRED CLEARANCES.
6. ELECTRIC CONTRACTOR TO FURNISH AND INSTALL BLANK JUNCTION BOX COVERS ON ALL EXISTING JUNCTION BOXES WITHIN THE CONSTRUCTION AREA.

PLAN NOTES:

1. DEMO EXTERIOR MOUNTED TRANSFORMER AND PANEL, DEMO BACK CONDUIT AND CAP AS NEEDED TO POUR NEW SLAB OVER THE TOP.
2. DEMO EXTERIOR MOUNTED LIGHT FIXTURE, REPAIR LIGHT CIRCUIT AS NEEDED TO MAINTAIN EXISTING TO REMAIN EXTERIOR LIGHTS ON CIRCUIT.
3. DEMO ALL LIGHTS, POWER AND LOW VOLTAGE DEVICES ASSOCIATED WITH DEMO'D VESTIBULE AND EXTERIOR AWNING. REPAIR ALL CIRCUITS WITH EXISTING TO REMAIN ITEMS TO MAINTAIN ALL EXISTING DEVICES. SALVAGE AND TURN OVER TO OWNER ALL CARD READER, CAMERA AND LOW VOLTAGE DEVICES.

hollis + miller architects

we design the future

1828 Walnut Street Suite 922
Kansas City, MO 64108
t 816.442.7700

115 Wilcox Street Suite 210
Castle Rock, CO 80104
t 720.949.1689

HOLLISANDMILLER.COM

Hollis + Miller Architects
Missouri State Certificate of Authority
Architecture # 0000161
Structure # 2006031333

Bob D Campbell
Structural Engineer
State Certificate of Authority #000442
4338 Belleview Ave
Kansas City, MO 64111
816.531.4144 phone

Smith & Boucher, Inc.
Mechanical, Electrical, & Plumbing
State Certificate of Authority #EGC000178
25618 W 103rd Street
Olathe, KS 66061
913.345.2127 phone

MKEC Engineering, Inc.
Civil Engineer
State Certificate of Authority
Engineering #2001009364
Landscaping #2006027139
Surveying #2006027138
11827 W 112th Street, Suite 200
Overland Park, KS 66210
913.317.9390 phone

Peerbolte Creative
Theatrical Consultant
109 E Pine St.
Warrensburg, MO 64093-0752
660.429.1383 phone

Avant Acoustics
AV/Acoustics Consultant
14827 West 95th St.
Lenexa, KS 66215
913.888.9111 phone

Discovery Middle School Storm Shelter Addition

Liberty School District

800 Midjay Dr, Liberty, MO 64068

Conformed Construction Documents

REVISIONS:

#	Description	Date

smith & boucher engineers
25618 west 103rd St olathe, ks 66061
phone 913.345.2127 fax 913.345.0617
project number 2314702

STATE OF MISSOURI
RYAN JEROD DIEDIKER
NUMBER
REGISTERED PROFESSIONAL ENGINEER
10/11/23

The Professional Architects seal affixed to this sheet applies only to the material and items shown on this sheet. All drawings, instruments or other documents not exhibiting the seal shall not be considered prepared by this architect, and this architect expressly disclaims any and all responsibility for such plan, drawings, or documents not exhibiting the seal.

JOB NO: 23018
DRAWN BY: Author
CHECKED BY: Checker
DATE: 10.11.2023

DE101A

A1 Scale 1/8" = 1'-0"

DEMOLITION LIGHTING PLAN - LEVEL 1 - AREA A

8' 4' 0' 8'

PROJECT NORTH TRUE NORTH

Please consider the environment before printing this.

10/11/2023 12:10:24 PM

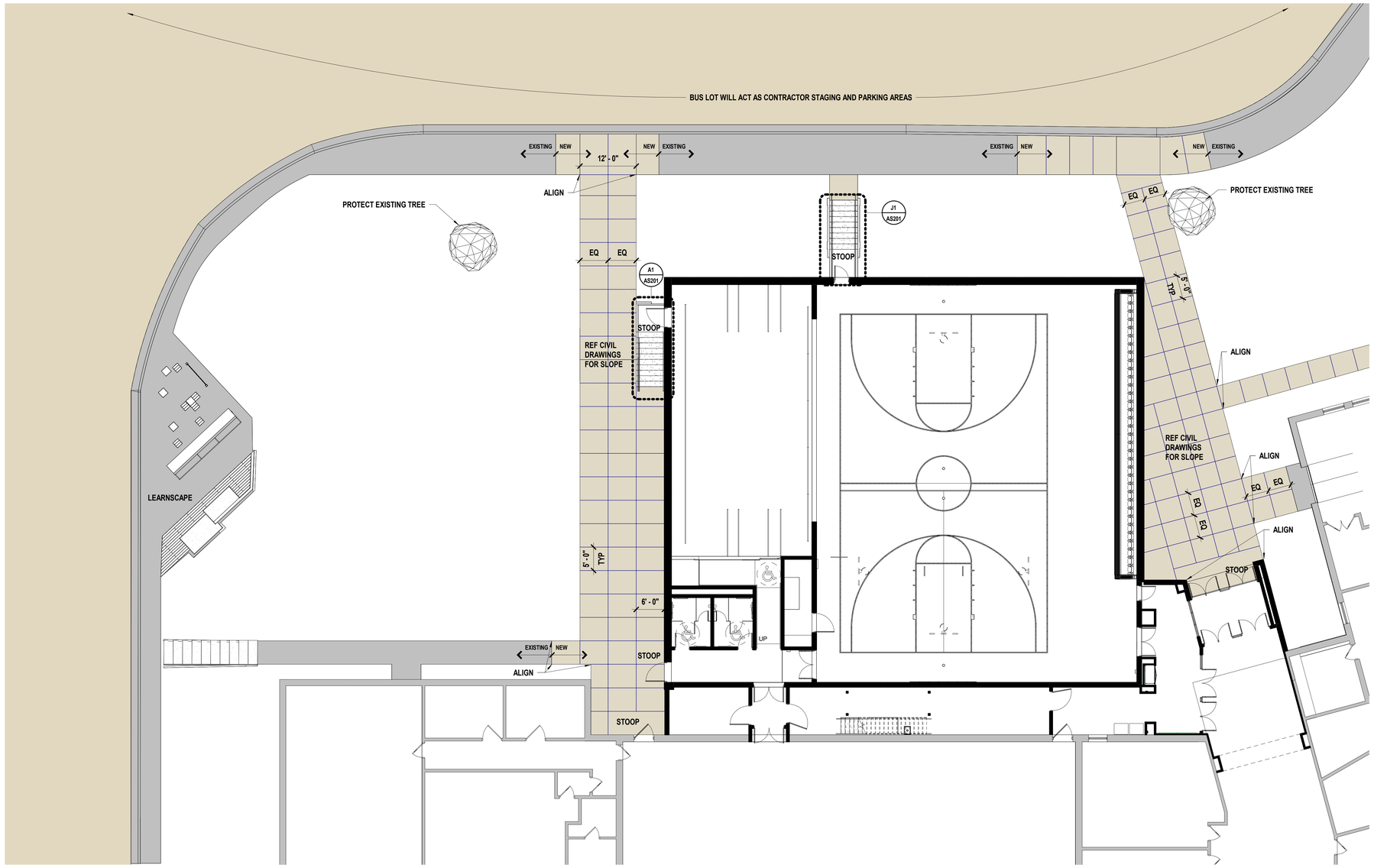

SHEET KEYNOTE LEGEND

A1 | Scale 1" = 10'-0" | Overall Architectural Site Plan

10' 5' 0' 10'

PROJECT NORTH

TRUE NORTH

hollis + miller architects

we design the future®

1828 Walnut Street Suite 922
Kansas City, MO 64108
t 816.442.7700

115 Wilcox Street Suite 210
Castle Rock, CO 80104
t 720.949.1689

HOLLISANDMILLER.COM

Hollis + Miller Architects
Missouri State Certificate of Authority
Architecture # 0000161
Structure # 2006031333

Bob D Campbell
Structural Engineer
State Certificate of Authority #000442
4338 Belleview Ave
Kansas City, MO 64111
816.531.4144 phone

Smith & Boucher, Inc.
Mechanical, Electrical, & Plumbing
State Certificate of Authority #EGC000178
25618 W 103rd Street
Olathe, KS 66061
913.345.2127 phone

MKEC Engineering, Inc.
Civil Engineer
State Certificate of Authority
Engineering #2001009364
Landscaping #2006027139
Surveying #2006027138
11827 W 112th Street, Suite 200
Overland Park, KS 66210
913.317.9390 phone

Peerbolte Creative
Theatrical Consultant
109 E Pine St.
Warrensburg, MO 64093-0752
660.429.1383 phone

Avant Acoustics
AV/Acoustics Consultant
14827 West 95th St.
Lenexa, KS 66215
913.888.9111 phone

Discovery Middle School Storm Shelter Addition

Liberty Public Schools

800 Midjay Dr, Liberty, MO 64068

CONFORMED CONSTRUCTION DOCUMENTS

REVISIONS:

#	Description	Date

STATE OF MISSOURI
KEVIN E. NELSON
A-2019015618
ARCHITECT

OCTOBER 11, 2023

Kevin E. Nelson
A-2019015618

The Professional Architects seal affixed to this sheet applies only to the material and items shown on this sheet. All drawings, instruments or other documents not exhibiting this seal shall not be considered prepared by this architect, and this architect expressly disclaims any and all responsibility for such plan, drawings, or documents not exhibiting this seal.

JOB NO: 23018
DRAWN BY: LB
CHECKED BY: JB
DATE: 10.11.2023

AS101

ARCHITECTURAL SITE PLAN

Please consider the environment before printing this.

10/11/2023 3:54:16 PM

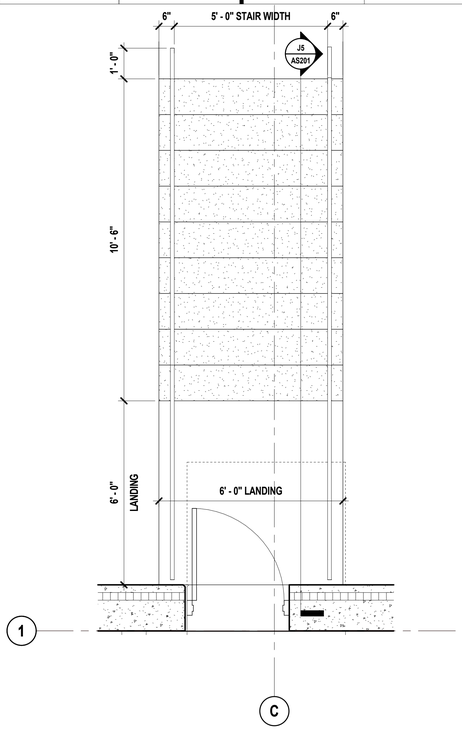

J1 Scale 1/2" = 1'-0" — Enlarged Plan - Site - Multipurpose A103 - Stair

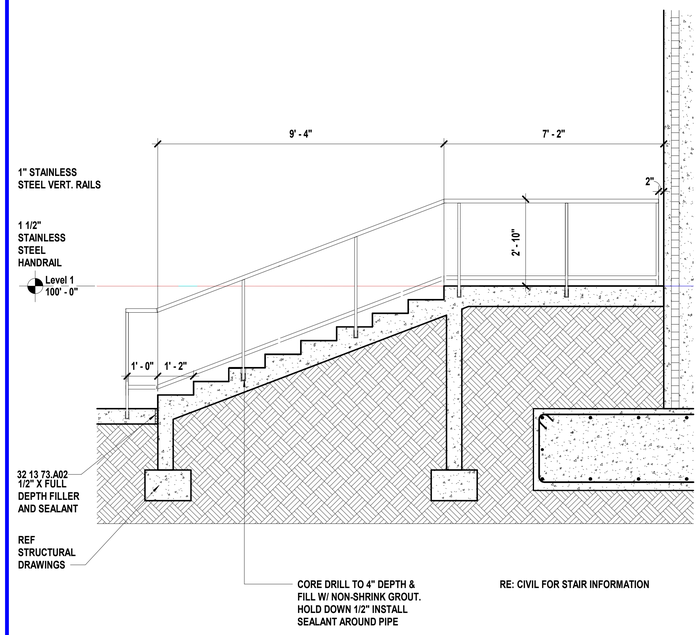

J5 Scale 1/2" = 1'-0" — Stair Section - Site - Multipurpose A103 - E

SHEET KEYNOTE LEGEND

05 52 13.A03	STAINLESS STEEL PIPE AND TUBE RAILINGS
32 13 73.A02	JOINT BACKER/FILLER MATERIAL

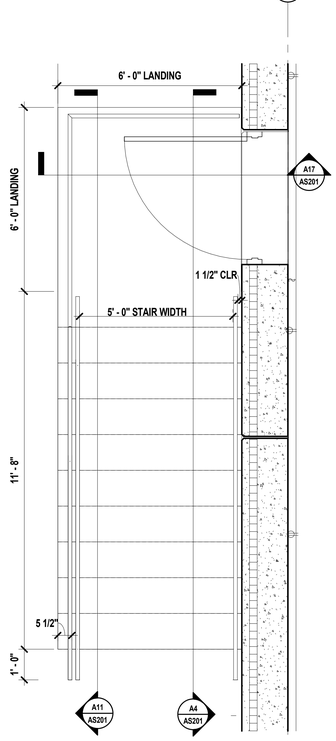

A1 Scale 1/2" = 1'-0" — Enlarged Plan - Site - Stage A108 - Stair

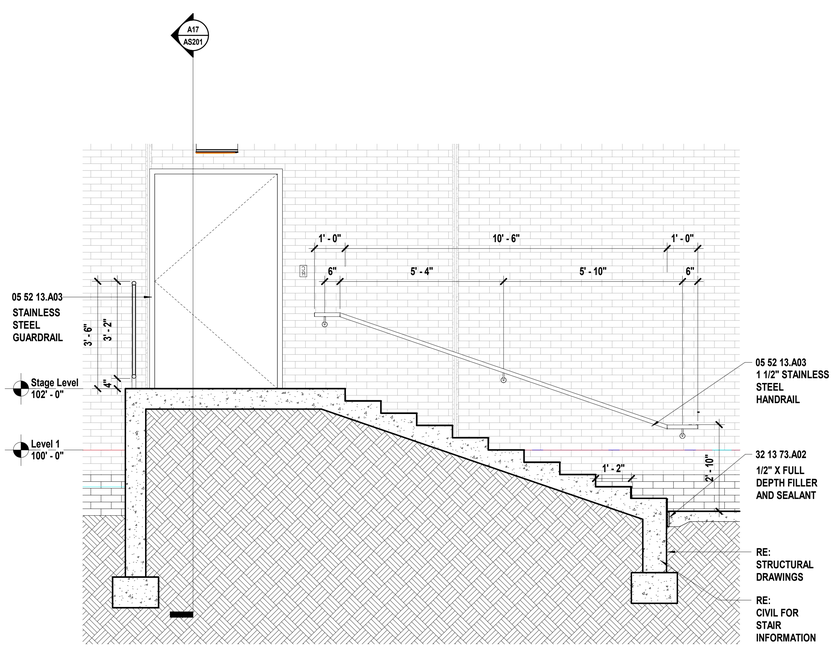

A4 Scale 1/2" = 1'-0" — Stair Section - Site - Stage A108 - E

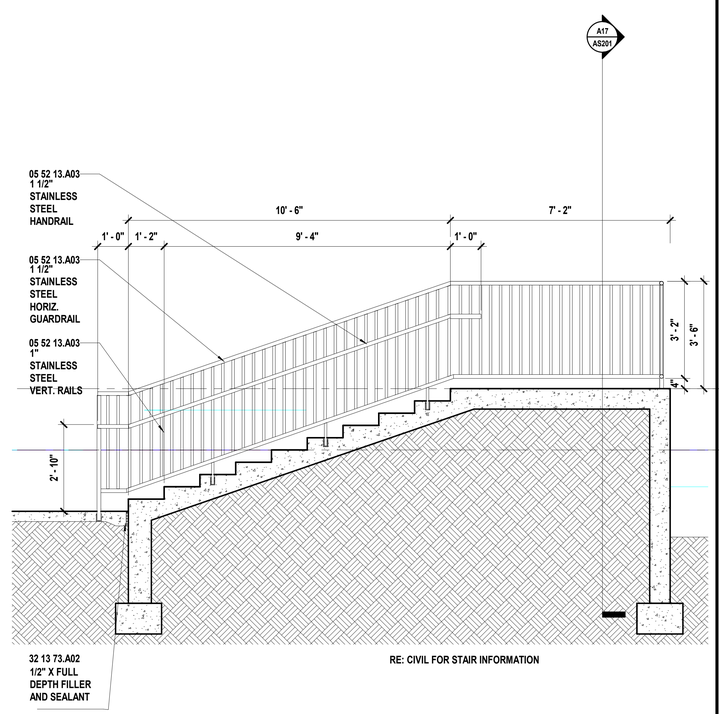

A11 Scale 1/2" = 1'-0" — Stair Section - Site - Stage A108 - W

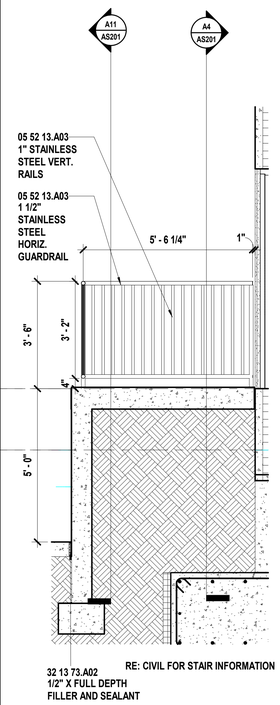

A17 Scale 1/2" = 1'-0" — Stair Section - A108 -Guardrail - N

hollis+miller architects®
we design the future®
1828 Walnut Street Suite 922
Kansas City, MO 64108
t 816.442.7700
115 Wilcox Street Suite 210
Castle Rock, CO 80104
t 720.949.1689
HOLLISANDMILLER.COM
Hollis + Miller Architects
Missouri State Certificate of Authority
Architecture # 0000161
Structure # 2006031333

Bob D Campbell
Structural Engineer
State Certificate of Authority #000442
4338 Belleview Ave
Kansas City, MO 64111
816.531.4144 phone

Smith & Boucher, Inc.
Mechanical, Electrical, & Plumbing
State Certificate of Authority #EGC000178
25618 W 103rd Street
Olathe, KS 66061
913.345.2127 phone

MKEC Engineering, Inc.
Civil Engineer
State Certificate of Authority
Engineering #2001009364
Landscaping #2006027139
Surveying #2006027138
11827 W 112th Street, Suite 200
Overland Park, KS 66210
913.317.9390 phone

Peerbolte Creative
Theatrical Consultant
109 E Pine St.
Warrensburg, MO 64093-0752
660.429.1383 phone

Avant Acoustics
AV/Acoustics Consultant
14827 West 95th St.
Lenexa, KS 66215
913.888.9111 phone

Discovery Middle School Storm Shelter Addition

Liberty Public Schools

800 Midjay Dr, Liberty, MO 64068

CONFORMED CONSTRUCTION DOCUMENTS

REVISIONS:

#	Description	Date

STATE OF MISSOURI — KEVIN E. NELSON — A-2019015618 — ARCHITECT

OCTOBER 11, 2023

Kevin E. Nelson
A-2019015618

The Professional Architects seal affixed to this sheet applies only to the material and items shown on this sheet. All other information on this sheet is provided for the convenience of the Owner and Contractor. The Owner and Contractor and the architect expressly disclaims any and all responsibility for such plan, drawings, or documents not exhibiting the seal.

JOB NO: 23018
DRAWN BY: LB
CHECKED BY: JB
DATE: 10.11.2023

AS201

SITE DETAILS

10/11/2023 3:54:19 PM
Please consider the environment before printing this.

LEGEND

- 6IN – TREE AND DIAMETER
- 3IN – TREE AND DIAMETER
- 18" – TREE STUMP AND DIAMETER
- SN – SIGN
- BUSH
- MAIL BOX
- POLE
- GATE
- POST / BOLLARD
- FLAG POLE
- X X – FENCE
- EDGE OF TREES
- TR – TELEPHONE RISER
- UGT – UNDERGROUND TELEPHONE LINE
- OHT – OVERHEAD TELEPHONE LINE
- TV – CABLE TV RISER
- FO – FIBER OPTICS INDICATOR SIGN
- TV – UNDERGROUND CABLE TV LINE
- FOC – UNDERGROUND FIBER OPTIC CABLE
- PP – POWER POLE AND DEADMAN
- LIGHT POLE
- E – ELECTRIC TRANSFORMER
- SCHOOL ZONE SIGNAL LIGHT
- TC – TRAFFIC CONTROL BOX
- TRAFFIC SIGNAL LIGHT POLE
- UGE – UNDERGROUND ELECTRIC LINE
- OHE – OVERHEAD ELECTRIC LINE
- GAS METER
- GV – GAS VALVE
- G – GAS LINE
- SANITARY SEWER MANHOLE
- CO – CLEANOUT
- SS – SANITARY SEWER LINE
- INLET
- S – STORM WATER MANHOLE
- ROOF DRAIN
- GRATE INLET
- EXISTING STORM SEWER PIPE
- PROPOSED STORM SEWER PIPE
- SW – ROOF DRAIN LINE
- PD – PERFORATE DRAIN PIPE
- FIRE HYDRANT
- WV – WATER VALVE
- WM – WATER METER
- MW – MONITORING WELL
- WV – WATER METER VAULT
- WATER SPIGOT
- W – WATER LINE
- FP – FIRE PROTECTION LINE
- IC – IRRIGATION CONTROL VALVE
- 805 – EXISTING MAJOR CONTOUR
- 806 – EXISTING MINOR CONTOUR

GENERAL NOTES:

1. THE CONTRACTOR, **PRIOR TO** ANY EXCAVATION OR NEW CONSTRUCTION, SHALL HAVE UTILITIES FIELD LOCATED BY THE APPROPRIATE UTILITY COMPANY AND/OR CITY/COUNTY DEPARTMENT.
2. EXISTING UTILITIES AND THEIR LOCATION, AS SHOWN ON THESE PLANS, REPRESENTS THE BEST INFORMATION AVAILABLE TO THE ENGINEER. LOCATION INFORMATION HAS BEEN OBTAINED FROM THE VARIOUS UTILITY COMPANIES AND IS EITHER FROM COMPANY RECORD DRAWINGS OR COMPANY PROVIDED FIELD LOCATIONS. HOWEVER, ALL UTILITIES ACTUALLY EXISTING MAY NOT BE SHOWN. THE CONTRACTOR IS RESPONSIBLE FOR FIELD LOCATING ALL UTILITIES WHETHER THESE UTILITIES ARE SHOWN ON THE PLANS, NOT SHOWN ON THE PLANS, OR SHOWN INCORRECTLY. UTILITIES DAMAGED THROUGH THE FAILURE OF THE CONTRACTOR TO OBTAIN THE LOCATION OF THOSE UTILITIES SHALL BE REPAIRED OR REPLACED BY THE CONTRACTOR AT HIS EXPENSE. THE CONTRACTOR SHALL, PRIOR TO ANY EXCAVATION OR NEW CONSTRUCTION, HAVE ALL UTILITIES FIELD LOCATED BY THE APPROPRIATE UTILITY COMPANY, CITY OR COUNTY DEPARTMENT, OR ONE-CALL SERVICE.
3. THE SITE PLAN IS BASED ON A SURVEY OF THE SITE. CONDITIONS OF THE SITE AT THE TIME OF CONSTRUCTION MAY VARY FROM THE SURVEYED CONDITIONS. CONTRACTOR TO VERIFY EXISTING SITE CONDITIONS PRIOR TO CONSTRUCTION.
4. ALL MANHOLES, CATCH BASINS, UTILITY VALVES AND METER PITS SHALL BE ADJUSTED OR REBUILT TO GRADE AS REQUIRED.
5. NO CHANGES TO THE APPROVED CONSTRUCTION PLANS WILL BE PERMITTED WITHOUT PRIOR APPROVAL OF THE DESIGN ENGINEER.
6. THE CONTRACTOR SHALL BE RESPONSIBLE FOR PRESERVING PROPERTY PINS. THE CONTRACTOR WILL BE REQUIRED TO RE-ESTABLISH ANY PROPERTY PINS WHICH ARE DAMAGED OR DESTROYED BY HIS CONSTRUCTION OPERATIONS. SUCH PINS SHALL BE RE-ESTABLISHED BY A LICENSED LAND SURVEYOR IN ACCORDANCE WITH STATE LAWS.
7. CONTRACTOR TO HAVE REGISTERED LAND SURVEYOR RESET SECTION CORNER MONUMENT IF DISTURBED DURING CONSTRUCTION.
8. THE CONTRACTOR IS RESPONSIBLE FOR VERIFYING ALL QUANTITIES, DIMENSIONS, AND PLAN SCALES AND SHALL IMMEDIATELY NOTIFY THE OWNER/ENGINEER/ARCHITECT OF ANY SUCH DISCREPANCIES. ALL QUANTITIES, DIMENSIONS, AND PLAN SCALES PROVIDED ARE FOR GENERAL INFORMATION PURPOSES ONLY. THE CONTRACTOR IS RESPONSIBLE FOR DETERMINING ALL QUANTITIES NECESSARY FOR THE COMPLETION OF THE WORK AS DESCRIBED IN THE CONSTRUCTION DOCUMENTS. THE CONTRACTOR SHALL BE RESPONSIBLE TO PROVIDE THE WORK DESCRIBED IN THE CONSTRUCTION DOCUMENTS IRRESPECTIVE OF THE QUANTITIES, DIMENSIONS, AND PLAN SCALES NOTED, NOT NOTED, OR NOTED INCORRECTLY.
9. ANY CURB, GUTTER, SIDEWALKS, AND PAVING THAT IS DAMAGED IN EXCESS OF THE CONSTRUCTION SHOWN IN THIS PLAN SET SHALL BE REPLACED AT THE CONTRACTORS EXPENSE.
10. ALL REMOVALS SHALL BE REMOVED FROM THE SITE AND DISPOSED OF PER APPLICABLE STANDARDS (UNLESS OTHERWISE NOTED).
11. THE PAVEMENT SECTIONS SHOWN IN THESE PLANS ARE PROVIDED IN ACCORDANCE WITH THE RECOMMENDATIONS PRESENTED IN THE GEOTECHNICAL REPORT PREPARED FOR THE PROJECT UNDER THE TITLE "REPORT OF GEOTECHNICAL EXPLORATION DISCOVERY MIDDLE SCHOOL STORM SHELTER ADDITION" PREPARED BY KRUGER TECHNOLOGIES, INC. DATED JUNE 23, 2023. CONSEQUENTLY, THE ENGINEER WHOSE SEAL APPEARS ON THESE PLANS IS NOT RESPONSIBLE FOR THE DURABILITY OR SUITABILITY OF THE PAVEMENT SECTIONS SHOWN.
12. THE CONTRACTOR SHALL BE RESPONSIBLE FOR PROVIDING TRAFFIC CONTROL WHEN WORKING WITHIN THE PUBLIC RIGHT-OF-WAY. ALL SUCH TRAFFIC CONTROL SHALL BE IN ACCORDANCE WITH THE LATEST EDITION OF THE "MANUAL ON UNIFORM TRAFFIC CONTROL" AND/OR LOCAL JURISDICTION SPECIFICATIONS. THE CONTRACTOR IS RESPONSIBLE FOR MAINTAINING ALL TRAFFIC CONTROL DEVICES. THE CONTRACTOR SHALL ENSURE ALL TRAFFIC CONTROL DEVICES ARE CLEAN, PROPERLY VISIBLE, OPERATING CORRECTLY, AND LOCATED PROPERLY. THE CONTRACTOR SHALL IMMEDIATELY REPLACE ANY DAMAGED, DEFACED, OR INOPERABLE, OR MISSING TRAFFIC CONTROL DEVICES.
13. THE CONTRACTOR IS TO PROVIDE PERMANENT SEEDING, FERTILIZING, MULCHING OR SODDING OF ALL DISTURBED AREAS. THIS WORK TO BE DONE IN ACCORDANCE WITH THE CONTRACT DOCUMENTS.
14. ALL SITE WORK FOR THIS PROJECT IS CONSIDERED "UNCLASSIFIED." THE TERM "UNCLASSIFIED" EXCAVATION SHALL BE DEFINED AS MEANING THE SITE CONTRACTOR BEARS THE ENTIRE RISK OF THE SOIL QUANTITIES AND/OR TYPES (E.G. ROCK, CLAY, PEAT, SILT, SHALE, ETC.) ENCOUNTERED ABOVE THE BOTTOM OF REQUIRED EXCAVATIONS AND OVER-EXCAVATED / TREATED SOILS AREAS. ABOVE THE BOTTOM OF REQUIRED EXCAVATIONS, THE SITE CONTRACTOR SHALL BEAR THE ENTIRE COST OF SUCH ADDITIONAL WORK IN THE EVENT IT BECOMES NECESSARY FOR UNSUITABLE SOILS TO BE HANDLED, REMOVED FROM THE SITE, OR FOR SUITABLE FILL MATERIAL TO BE IMPORTED TO THE SITE. THIS DEFINITION OF "UNCLASSIFIED" SUPERSEDES ANY CONTRARY DEFINITIONS OR STATEMENTS WHICH MAY BE CONTAINED IN THE SPECIFICATIONS, PLANS, OR OTHER CONTRACT DOCUMENTS. THE UNCLASSIFIED SITE SHALL INCLUDE ALL WORK ABOVE THE BOTTOM OF REQUIRED EXCAVATIONS AND/OR REQUIRED SOIL REMEDIATION/REPLACEMENT.
15. REFER TO ARCHITECTURAL PLANS FOR ALL BUILDING DIMENSIONS AND LAYOUT. BUILDING SHALL NOT BE STAKED FROM CIVIL DRAWINGS.
16. PROPOSED CONTOURS SHOWN ON THESE PLANS ARE FINAL SURFACE CONTOURS. THE CONTRACTOR SHALL BE RESPONSIBLE FOR MAKING ADJUSTMENTS FOR PAVEMENT THICKNESS, SUBGRADE THICKNESS, TOPSOIL, REMOVALS, ETC.

MKEC
11627 W. 112th Street, Suite 200
Overland Park, KS 66210
913 317 9390
Engineering No. 2001009364
Landscape No. 2006027139
Surveying No. 2006027138

hollis+miller architects
we design the future™
1828 Walnut Street Suite 922
Kansas City, MO 64108
t 816.442.7700
115 Wilcox Street Suite 210
Castle Rock, CO 80104
t 720.949.1689
HOLLISANDMILLER.COM
Hollis + Miller Architects
Missouri State Certificate of Authority
Architecture # 0000161
Structure # 2006031333

MKEC Engineering, Inc.
Civil Engineering / Landscape Architecture
State Certificate of Authority #:
Engineering: 2001009364
Landscaping: 2006027139
Surveying: 2006027138
11827 W. 112th St, Ste 200
Overland Park, KS 66210
913.317.9390 phone

Smith & Boucher Engineers
Mech/Elect/Plumb Engineer
State Certificate of Authority #EGC-0001787
25501 W. Valley Parkway, Ste 200
Olathe, KS 66061
913.345.2127 phone

Bob D Campbell
Structural Engineer
State Certificate of Authority #000442
4338 Belleview Ave
Kansas City, MO 64111
816.531.4144 phone

Discovery Middle School Storm Shelter Addition

Liberty Public Schools

800 Midjay Dr, Liberty, MO 64068

Conformed Construction Documents

REVISIONS:

#	Description	Date

STATE OF MISSOURI
BRADEN L. TAYLOR
NUMBER PE-2021001896
PROFESSIONAL ENGINEER
10.11.23

BRADEN L. TAYLOR, P.E.
LISC. #2021001896

The Professional Engineers seal affixed to this sheet applies only to the material and tasks shown on this sheet. All other sheets in this set of plans and specifications are not applicable to this sheet unless specifically noted by the engineer. And the engineer expressly disclaims any and all responsibility for such plans, drawings, or documents not exhibiting the seal.

JOB NO: 23018
DRAWN BY: SEK
CHECKED BY: BLT
DATE: 10.11.2023

C100

CIVIL INFORMATION SHEET

Please consider the environment before printing this.

P:\PROJECTS\2023\2302010293_LIBERTY_DISCOVER MS GYM ADDITION\00 230293 CAD\SHTS\05 CIVIL\005\230293-05-0200-C0.DWG

N

SCALE: 1"=40'
0 40 80

MKEC
11827 W. 112th Street, Suite 200
Overland Park, KS 66210
9 1 3 . 3 1 7 . 9 3 9 0
Engineering No. 2001009364
Landscape No. 2006027139
Surveying No. 2006027138

hollis+miller architects
we design the future™
1828 Walnut Street Suite 922
Kansas City, MO 64108
t 816.442.7700
115 Wilcox Street Suite 210
Castle Rock, CO 80104
t 720.949.1689
HOLLISANDMILLER.COM

Hollis + Miller Architects
Missouri State Certificate of Authority
Architecture # 0000161
Structure # 2006031333

MKEC Engineering, Inc.
Civil Engineering / Landscape Architecture
State Certificate of Authority #:
Engineering: 2001009364
Landscaping: 2006027139
Surveying: 2006027138
11827 W. 112th St, Ste 200
Overland Park, KS 66210
913.317.9390 phone

Smith & Boucher Engineers
Mech/Elect/Plumb Engineer
State Certificate of Authority #EGC-0001787
25501 W. Valley Parkway, Ste 200
Olathe, KS 66061
913.345.2127 phone

Bob D Campbell
Structural Engineer
State Certificate of Authority #000442
4338 Belleview Ave
Kansas City, MO 64111
816.531.4144 phone

Discovery Middle School Storm Shelter Addition

Liberty Public Schools

800 Midjay Dr, Liberty, MO 64068

Conformed Construction Documents

REVISIONS:

#	Description	Date

STATE OF MISSOURI
BRADEN L. TAYLOR
NUMBER PE-2021001896
10.11.23
PROFESSIONAL ENGINEER

BRADEN L. TAYLOR, P.E.
LISC. #2021001896

The Professional Engineer was efforts to the design contained on this sheet and items shown on this sheet, not drawings, instruments or other documents not sealing this seal shall not be considered prepared by this engineer, and the engineer expressly disclaims any responsibility for such plan, drawings, or documents not sealing this seal.

JOB NO: 23018
DRAWN BY: SEK
CHECKED BY: BLT
DATE: 10.11.2023

C101

OVERALL SITE PLAN

P:\PROJECTS\2023\230207023_LIBERTY_LPS\COVER MS GYM ADDITION\00 23023 CAD\SHTS\05 CIVIL\C05\230293-05-5210-C0.DWG
Please consider the environment before printing this.

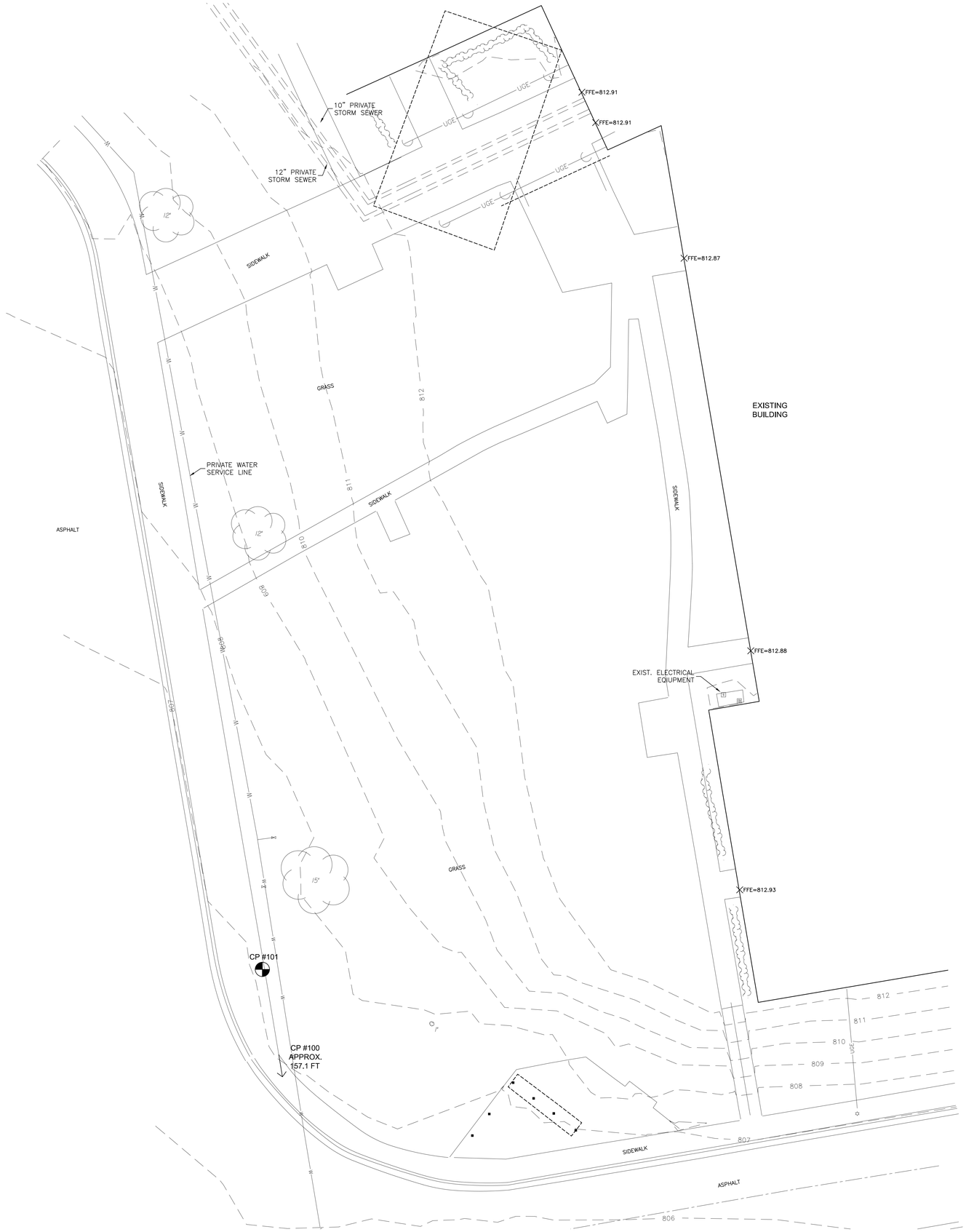

CONTROL POINTS & BENCHMARKS

CP #100 +CUT IN SIDEWALK SOUTH VALLEY SCHOOL.
N=1113587.746, E=2798967.311, ELEV.=806.21

CP #101 +CUT IN SIDEWALK DISCOVERY SCHOOL.
N=1113761.874, E=2798938.106,
ELEV.=807.04

DATUM:
THE HORIZONTAL DATUM IS BASED ON THE MISSOURI COORDINATE SYSTEM OF 1983, NAD83(2011), WEST ZONE. COORDINATES SHOWN ARE STATE PLANE VALUES IN US FEET.

ALL ELEVATIONS SHOWN ARE BASED ON THE NAVD 88 VERTICAL DATUM, GEOID 18 IN US FEET.

NOTE:
ALL CONTROL POINTS SHOWN HAVE ELEVATIONS ESTABLISHED USING STANDARD SURVEYING PROCEDURES AND CAN BE USED AS TEMPORARY BENCHMARKS. WHEN USING A CONTROL POINT AS A TEMPORARY BENCHMARK, IT IS RECOMMENDED THAT CROSS-CHECKS BE MADE TO OTHER CONTROL POINTS OR BENCHMARKS TO CONFIRM ELEVATIONS PRIOR TO USE.

SEE PLAN FOR LOCATIONS.

N

SCALE: 1"=10'
0 10 20

MKEC
11827 W. 112th Street, Suite 200
Overland Park, KS 66210
9 1 3 3 1 7 3 9 3 0
Engineering No. 2001009364
Landscape No. 2006027139
Surveying No. 2006027138

hollis+miller architects
we design the future
1828 Walnut Street Suite 922
Kansas City, MO 64108
t 816.442.7700
115 Wilcox Street Suite 210
Castle Rock, CO 80104
t 720.949.1689
HOLLISANDMILLER.COM

Hollis + Miller Architects
Missouri State Certificate of Authority
Architecture # 0000161
Structure # 2006031333

MKEC Engineering, Inc.
Civil Engineering / Landscape Architecture
State Certificate of Authority #:
Engineering: 2001009364
Landscaping: 2006027139
Surveying: 2006027138
11827 W. 112th St, Ste 200
Overland Park, KS 66210
913.317.9390 phone

Smith & Boucher Engineers
Mech/Elect/Plumb Engineer
State Certificate of Authority #EGC-0001787
25501 W. Valley Parkway, Ste 200
Olathe, KS 66061
913.345.2127 phone

Bob D Campbell
Structural Engineer
State Certificate of Authority #000442
4338 Belleview Ave
Kansas City, MO 64111
816.531.4144 phone

Discovery Middle School Storm Shelter Addition

Liberty Public Schools

800 Midjay Dr, Liberty, MO 64068

Conformed Construction Documents

REVISIONS:

#	Description	Date

STATE OF MISSOURI
BRADEN L. TAYLOR
NUMBER PE-2021001896
10.11.23
PROFESSIONAL ENGINEER

BRADEN L. TAYLOR, P.E.
LISC. #2021001896

The Professional Engineer has efforts to the client agency or the entities and items shown on this sheet, All drawings, instruments or other documents not containing this seal shall not be considered prepared by this engineer, and the engineer expressly disclaims any responsibility for such plan, drawings, or documents not containing this seal.

JOB NO: 23018
DRAWN BY: SEK
CHECKED BY: BLT
DATE: 10.11.2023

C102

EXISTING CONDITIONS PLAN

P:\PROJECTS\2023\23020293_LIBERTY_DISCOVER MS GYM ADDITION\00 23020293 CAD\SHTS\05 CIVIL\CD5\C230293-05-0600-C0.DWG
Please consider the environment before printing this.

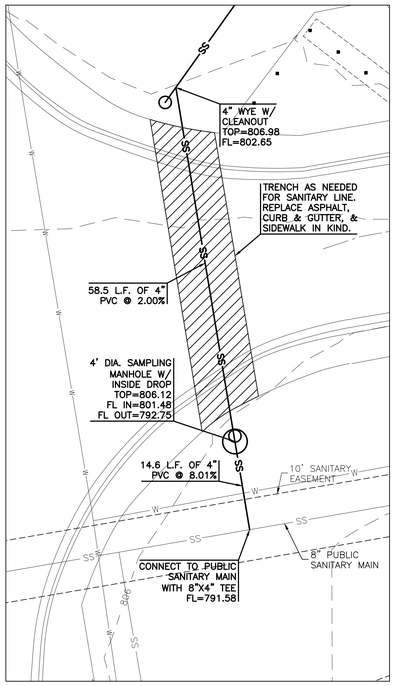

DETAIL 1

SCALE: 1"=10'

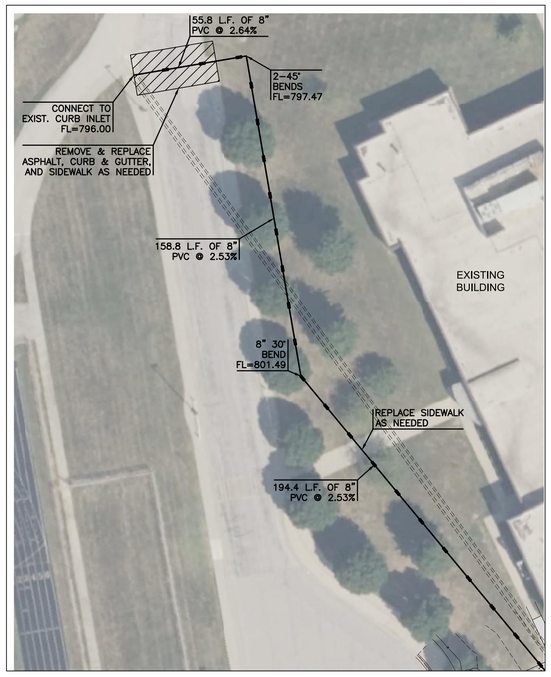

DETAIL 2

SCALE: 1"=30'

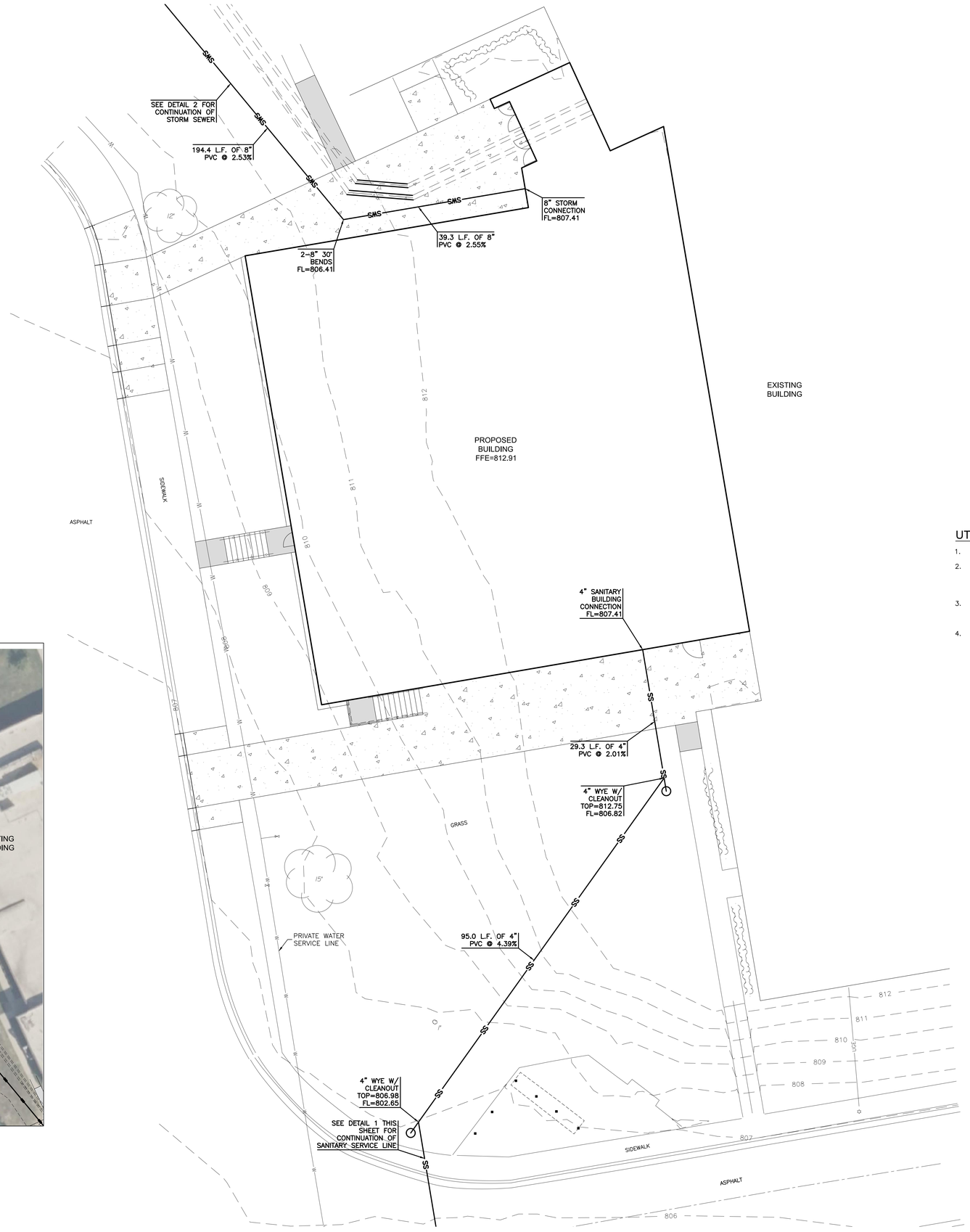

UTILITY NOTES:

1. SEE SHEET C200 FOR UTILITY DETAILS.
2. HDPE STORM PIPE SHALL BE CORRUGATED DUAL WALL HDPE WITH SMOOTH INTERIOR AND SOIL-TIGHT JOINTS. RCP STORM PIPE SHALL BE CLASS III, WALL B WITH GASKETED JOINTS CONFORMING TO ASTM C76. O-RING GASKETS SHALL CONFORM TO ASTM C361 AND ASTM C443.
3. SANITARY SEWER PIPE SHALL BE ASTM D3034, SDR 26 PVC PIPE WITH BELL ENDS AND GASKETED JOINTS. GASKETS SHALL COMPLY WITH ASTM F477.
4. ROOF DRAINS/DOWNSPOUTS SHALL BE CONNECTED TO STORM TRUNK LINE WITH PRE-MANUFACTURED WYE MATCHING PIPE MATERIAL AND JOINT TYPE. IN LIEU OF WYE, AN INSERTA-TEE CONNECTION CAN BE USED WITH HDPE PIPE.

SCALE: 1"=10'

MKEC
11827 W. 112th Street, Suite 200
Overland Park, KS 66210
913 317 9390
Engineering No. 2001009364
Landscape No. 2006027139
Surveying No. 2006027138

hollis+miller architects
we design the future
1828 Walnut Street Suite 922
Kansas City, MO 64108
t 816.442.7700
115 Wilcox Street Suite 210
Castle Rock, CO 80104
t 720.949.1689
HOLLISANDMILLER.COM

Hollis + Miller Architects
Missouri State Certificate of Authority
Architecture # 0000161
Structure # 2006031333

MKEC Engineering, Inc.
Civil Engineering / Landscape Architecture
State Certificate of Authority #:
Engineering: 2001009364
Landscaping: 2006027139
Surveying: 2006027138
11827 W. 112th St, Ste 200
Overland Park, KS 66210
913.317.9390 phone

Smith & Boucher Engineers
Mech/Elect/Plumb Engineer
State Certificate of Authority #EGC-0001787
25501 W. Valley Parkway, Ste 200
Olathe, KS 66061
913.345.2127 phone

Bob D Campbell
Structural Engineer
State Certificate of Authority #000442
4338 Belleview Ave
Kansas City, MO 64111
816.531.4144 phone

Conformed Construction Documents

Discovery Middle School Storm Shelter Addition

Liberty Public Schools

800 Midjay Dr, Liberty, MO 64068

REVISIONS:

#	Description	Date

STATE OF MISSOURI
BRADEN L. TAYLOR
NUMBER PE-2021001896
PROFESSIONAL ENGINEER
10.11.23

BRADEN L. TAYLOR, P.E.
LISC. #2021001896

The Professional Engineers and affiliates to this sheet agree only to the material and data shown on this sheet. All drawings, specifications or other documents or information to be used shall not be reproduced and shall be returned to the engineer, and the engineer expressly disclaims any responsibility for such plan, drawings, or documents not exhibiting this seal.

JOB NO: 23018
DRAWN BY: SEK
CHECKED BY: BLT
DATE: 10.11.2023

C103

UTILITY PLAN

Please consider the environment before printing this.

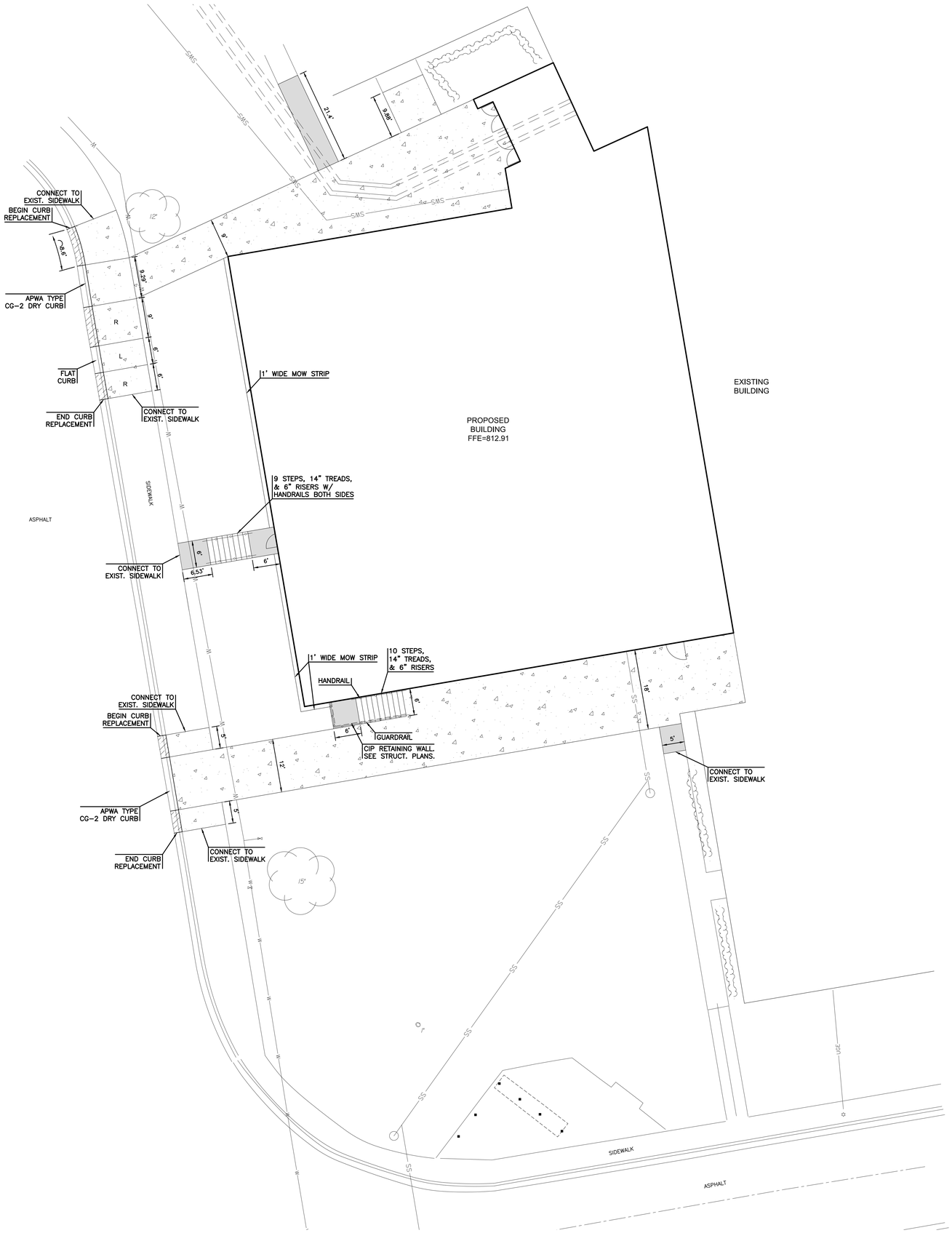

PAVING NOTES:

1. SEE SHEET C200 FOR PAVEMENT DETAILS.
2. ALL DIMENSIONS ARE TO BACK OF CURB.
3. PORTLAND CEMENT CONCRETE SHALL CONFORM WITH THE KANSAS CITY METRO MATERIALS BOARD MINIMUM 4000 PSI GRANITE MIX (KCMMB 4K).
4. ALL SIDEWALKS SHALL BE 4" UN-REINFORCED CONCRETE.
5. SIDEWALK RAMPS ON PRIVATE PROPERTY DO NOT REQUIRE 2' WIDE DETECTABLE WARNING STRIPS (TRUNCATED DOMES).
6. COMPACTED SUBGRADE AND AGGREGATE BASE UNDER PAVEMENTS SHALL EXTEND A MINIMUM OF 2' BEYOND THE EDGE OF PAVEMENT OR BACK OF CURB, WHICHEVER IS APPLICABLE.
7. ALL CURBS SHALL BE CG-1 UNLESS OTHERWISE NOTED.
8. 5' WIDE SIDEWALKS SHALL HAVE A MAXIMUM OF 5' CONTRACTION JOINT SPACING. 6' WIDE SIDEWALKS SHALL HAVE A MAXIMUM CONTRACTION JOINT SPACING OF 6'. 8' WIDE SIDEWALKS SHALL HAVE A MAXIMUM 4' CONTRACTION JOINT SPACING WITH A LONGITUDINAL CONTRACTION JOINT DOWN THE MIDDLE OF THE SIDEWALK.
9. CONTRACTOR SHALL BE RESPONSIBLE FOR REQUIRED TRAFFIC CONTROL NECESSARY ON SURROUNDING STREETS FOR CONSTRUCTION. TRAFFIC CONTROL SHALL COMPLY WITH THE LATEST EDITION OF MUTCD AND CITY SPECIFICATIONS.

PAVING LEGEND

- 4" CONCRETE SIDEWALK
- 6" CONCRETE SECTION
- CURB TRANSITION
- R – RAMP
- L – LANDING

MKEC
11827 W. 112th Street, Suite 200
Overland Park, KS 66210
913 317 9390
Engineering No. 2001009364
Landscape No. 2006027139
Surveying No. 2006027138

hollis+miller architects
we design the future
1828 Walnut Street Suite 922
Kansas City, MO 64108
t 816.442.7700
115 Wilcox Street Suite 210
Castle Rock, CO 80104
t 720.949.1689
HOLLISANDMILLER.COM
Hollis + Miller Architects
Missouri State Certificate of Authority
Architecture # 0000161
Structure # 2006031333

MKEC Engineering, Inc.
Civil Engineering / Landscape Architecture
State Certificate of Authority #:
Engineering: 2001009364
Landscaping: 2006027139
Surveying: 2006027138
11827 W. 112th St, Ste 200
Overland Park, KS 66210
913.317.9390 phone

Smith & Boucher Engineers
Mech/Elect/Plumb Engineer
State Certificate of Authority #EGC-0001787
25501 W. Valley Parkway, Ste 200
Olathe, KS 66061
913.345.2127 phone

Bob D Campbell
Structural Engineer
State Certificate of Authority #000442
4338 Belleview Ave
Kansas City, MO 64111
816.531.4144 phone

Discovery Middle School Storm Shelter Addition

Liberty Public Schools

800 Midjay Dr, Liberty, MO 64068

Conformed Construction Documents

REVISIONS:

#	Description	Date

STATE OF MISSOURI
BRADEN L. TAYLOR
NUMBER PE-2021001896
PROFESSIONAL ENGINEER
10.11.23

BRADEN L. TAYLOR, P.E.
LISC. #2021001896

The Professional Engineers seal affixed to this sheet applies only to the material and items shown on this sheet. All other sheets in this set of drawings are not valid without the seal of the responsible Professional Engineer. As an engineer, you the engineer expressly disclaim any and all responsibility for such plan, drawings, or documents not exhibiting the seal.

JOB NO: 23018
DRAWN BY: SEK
CHECKED BY: BLT
DATE: 10.11.2023

C104

PAVING PLAN

P:\PROJECTS\2023\230201023 93_LIBERTY_DISCOVER MS GYM ADDITION\Dir 230293 CAD\SHTS\05 CIVIL\C05\230293-05-3200-C0.DWG
Please consider the environment before printing this.

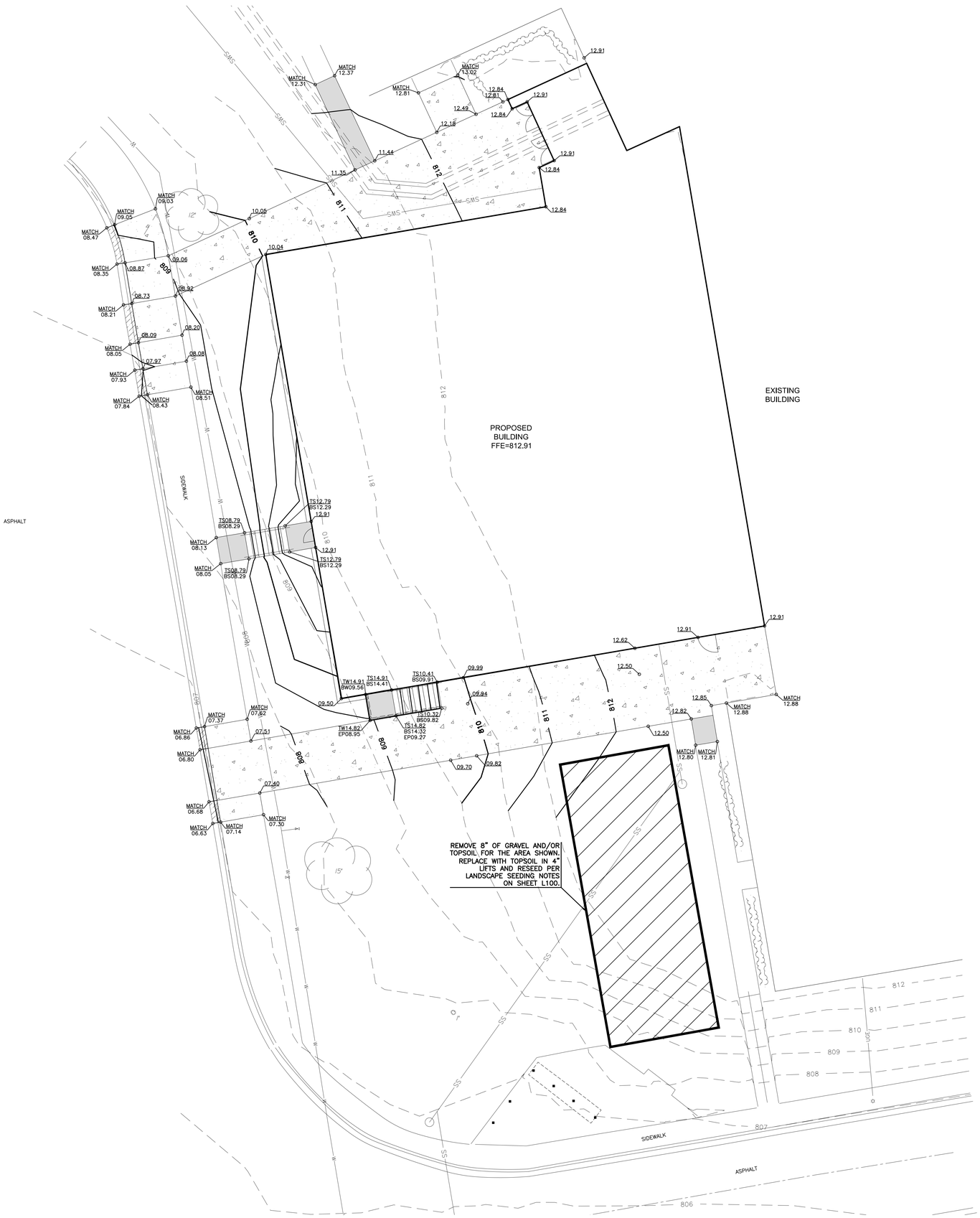

GRADING NOTES:

1. ALL SPOT ELEVATIONS REPRESENT FINISHED GRADE.
2. ALL CURB SPOT ELEVATIONS ARE TOP OF CURB UNLESS OTHERWISE NOTED.
3. SATISFACTORY SOIL AND FILL MATERIAL SHALL BE PROVIDED PER THE GEOTECHNICAL REPORT. SEE GEOTECHNICAL REPORT FOR MAXIMUM FILL LIFT THICKNESS.
4. CLEAR AND GRUB IMPROVEMENT AREA. REMOVE ALL ORGANIC AND TOPSOIL MATERIAL REGARDLESS OF SIZE AND DEPTH. ALL CLEARED AND EXCESS MATERIAL SHALL BECOME CONTRACTORS PROPERTY AND SHALL BE REMOVED FROM THE PROJECT SITE.
5. THE CONTRACTOR SHALL BE RESPONSIBLE TO DETERMINE EARTHWORK QUANTITIES. ALL IMPORT AND EXPORT OF SOIL MATERIAL SHALL BE THE RESPONSIBILITY OF THE CONTRACTOR AT HIS EXPENSE.
6. NOTIFY TESTING AGENCY WHEN EXCAVATIONS HAVE REACHED REQUIRED SUBGRADE. SUBGRADE SHALL BE PREPARED AND COMPACTED PER THE GEOTECHNICAL REPORT.
7. IF GEOTECHNICAL ENGINEER DETERMINES THAT UNSATISFACTORY SOIL IS PRESENT, CONTINUE EXCAVATION AND REPLACE WITH COMPACTED BACKFILL OR FILL MATERIAL AS DIRECTED.
8. PREPARE LOW VOLUME CHANGE LAYER BELOW BUILDING SLAB PER GEOTECHNICAL REPORT. LVC LAYER TO EXTEND A MINIMUM OF FIVE(5) FEET OUTSIDE OF THE BUILDING FOOTPRINT. LVC MATERIALS AND PREPARATION SHALL BE PER THE GEOTECHNICAL REPORT.
9. SEE EARTH WORK SPECIFICATIONS FOR COMPACTION & PROOF-ROLLING REQUIREMENTS.
10. RECONSTRUCT SUBGRADES DAMAGED BY FREEZING TEMPERATURE, FROST, RAIN, ACCUMULATED WATER, OR CONSTRUCTION ACTIVITIES, WITHOUT ADDITIONAL COMPENSATION.
11. COMPACTED SUBGRADE AND AGGREGATE BASE UNDER PAVEMENTS SHALL EXTEND A MINIMUM OF 2' BEYOND THE EDGE OF PAVEMENT OR BACK OF CURB, WHICHEVER IS APPLICABLE.
12. ALL EXCESS SOIL AND WASTE MATERIAL SHALL BECOME THE CONTRACTORS PROPERTY AND SHALL BE REMOVED FROM THE SITE.
13. ALL DISTURBED AREAS SHALL BE SODDED UNLESS NOTED OTHERWISE.

GRADING LEGEND

810	– PROPOSED MAJOR CONTOUR
811	– PROPOSED MINOR CONTOUR
00.00	– FINISH GRADE
TW00.00 / BW00.00	– TOP OF WALL / – FINISH GRADE AT BOTTOM OF WALL
TS00.00 / BS00.00	– TOP OF STEP / – BOTTOM OF STEP
TW00.00 / EP00.00	– TOP OF WALL / – FINISH GRADE AT EDGE OF PAVEMENT

N

SCALE: 1"=10'
0 10 20

MKEC
11827 W. 112th Street, Suite 200
Overland Park, KS 66210
913 317 9390
Engineering No. 2001009364
Landscape No. 2006027139
Surveying No. 2006027138

hollis+miller architects
we design the future™
1828 Walnut Street Suite 922
Kansas City, MO 64108
t 816.442.7700
115 Wilcox Street Suite 210
Castle Rock, CO 80104
t 720.949.1689
HOLLISANDMILLER.COM
Hollis + Miller Architects
Missouri State Certificate of Authority
Architecture # 0000161
Structure # 2006031333

MKEC Engineering, Inc.
Civil Engineering / Landscape Architecture
State Certificate of Authority #:
Engineering: 2001009364
Landscaping: 2006027139
Surveying: 2006027138
11827 W. 112th St, Ste 200
Overland Park, KS 66210
913.317.9390 phone

Smith & Boucher Engineers
Mech/Elect/Plumb Engineer
State Certificate of Authority #EGC-0001787
25501 W. Valley Parkway, Ste 200
Olathe, KS 66061
913.345.2127 phone

Bob D Campbell
Structural Engineer
State Certificate of Authority #000442
4338 Belleview Ave
Kansas City, MO 64111
816.531.4144 phone

Discovery Middle School Storm Shelter Addition

Liberty Public Schools

800 Midjay Dr, Liberty, MO 64068

Conformed Construction Documents

REVISIONS:

#	Description	Date

STATE OF MISSOURI
BRADEN L. TAYLOR
NUMBER PE-2021001896
10.11.23
PROFESSIONAL ENGINEER

BRADEN L. TAYLOR, P.E.
LISC. #2021001896

The Professional Engineer seal affixed to this cover page applies to the material and items shown on this sheet. All drawings, instruments or other documents not containing this seal shall not be considered prepared by this engineer, and the engineer expressly disclaims any responsibility for such plan, drawings, or documents not containing his seal.

JOB NO: 23018
DRAWN BY: SEK
CHECKED BY: BLT
DATE: 10.11.2023

C105

GRADING PLAN

Please consider the environment before printing this.

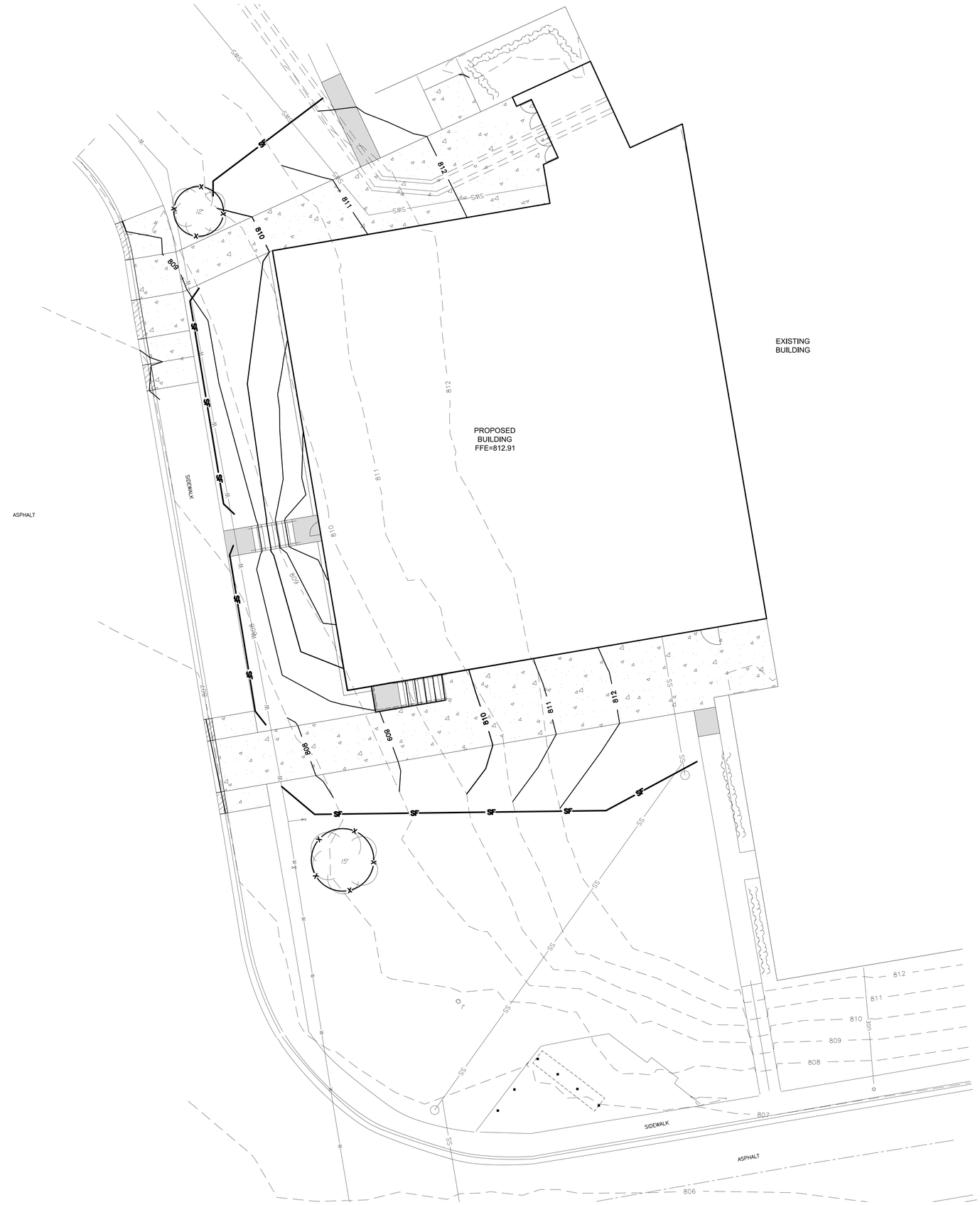

EROSION CONTROL NOTES:

1. THE CONTRACTOR SHALL SEED, MULCH, OR OTHERWISE STABILIZE ANY DISTURBED AREA WHERE THE LAND DISTURBANCE ACTIVITY HAS CEASED FOR MORE THAN 14 DAYS. INITIAL STABILIZATION ACTIVITIES SHALL BE COMPLETED WITHIN 14 DAYS AFTER SOIL DISTURBING ACTIVITIES HAVE CEASED. ALL SEEDING ACTIVITY SHALL INCLUDE MULCHING OR EQUIVALENT SOIL STABILIZING BMP MEASURE OF THE DISTURBED AREA. THE CONTRACTOR SHALL PERFORM INSPECTIONS OF EROSION AND SEDIMENT CONTROL MEASURES AT LEAST ONCE PER WEEK AND WHENEVER A RAINFALL TOTAL OF 0.5 INCHES OR GREATER IS OBSERVED BASED ON A SINGLE MONITORING EVENT, OR BASED ON THE CUMULATIVE TOTAL OF TWO CONSECUTIVE MONITORING EVENTS WHEN THE RAINFALL TOTAL OF THE FIRST MONITORING EVENT IS LESS THAN 0.5 INCHES. THE CONTRACTOR SHALL MAINTAIN AN INSPECTION LOG INCLUDING THE INSPECTOR'S NAME, DATE OF INSPECTION, OBSERVATIONS AS TO THE EFFECTIVENESS OF THE EROSION AND SEDIMENT CONTROL MEASURES, ACTIONS NECESSARY TO CORRECT DEFICIENCIES, WHEN DEFICIENCIES ARE CORRECTED, AND THE SIGNATURE OF THE PERSON PERFORMING THE INSPECTION. CONTRACTOR SHALL ADD EROSION CONTROL MEASURES AS NECESSARY TO CONTROL SEDIMENT RUNOFF FROM THE SITE, ADDITIONAL MEASURES SHALL BE AT THE CONTRACTORS EXPENSE.
2. CONCRETE WASH OR RINSE WATER FROM CONCRETE MIXING EQUIPMENT, TOOLS AND/OR READY-MIX TRUCKS, TOOLS, ETC. MAY NOT BE DISCHARGED INTO OR BE ALLOWED TO RUN DIRECTLY INTO ANY EXISTING WATER BODY OR STORM INLET. ONE OR MORE LOCATIONS FOR CONCRETE WASH OUT WILL BE DESIGNATED ON SITE, SUCH THAT DISCHARGES DURING CONCRETE WASHOUT WILL BE CONTAINED IN A SMALL AREA WHERE WASTE CONCRETE CAN SOLIDIFY IN PLACE AND EXCESS WATER EVAPORATED OR INFILTRATED INTO THE GROUND.
3. CHEMICALS OR MATERIALS CAPABLE OF CAUSING POLLUTION MAY ONLY BE STORED ONSITE IN THEIR ORIGINAL CONTAINER. MATERIALS STORED OUTSIDE MUST BE IN CLOSED AND SEALED WATER-PROOF CONTAINERS AND LOCATED OUTSIDE OF DRAINAGE WAYS OR AREAS SUBJECT TO FLOODING. LOCKS AND OTHER MEANS TO PREVENT OR REDUCE VANDALISM SHALL BE USED. SPILLS WILL BE REPORTED AS REQUIRED BY LAW AND IMMEDIATE ACTIONS TAKEN TO CONTAIN THEM.
4. SEE SHEET C200 FOR EROSION CONTROL DETAILS.
5. CONTRACTOR TO KEEP ALL SEDIMENT FROM EXISTING OR PROPOSED PAVEMENT.
6. CONTRACTOR TO COMPLY WITH ALL APPLICABLE REQUIREMENTS OF CITY, STATE, AND FEDERAL REGULATIONS FOR EROSION CONTROL.
7. ALL DISTURBED AREAS SHALL BE PERMANENTLY STABILIZED SOD UPON COMPLETION OF PROJECT, UNLESS NOTED OTHERWISE. REFER TO FESCUE TURF NOTES FOR INSTALLATION INSTRUCTIONS.

EROSION CONTROL LEGEND

SF — SILT FENCE

X — TREE PROTECTION

N

SCALE: 1"=10'

0 10 20

MKEC
11827 W. 112th Street, Suite 200
Overland Park, KS 66210
913 317 9390
Engineering No. 2001009364
Landscape No. 2006027139
Surveying No. 2006027138

hollis+miller architects
we design the future
1828 Walnut Street Suite 922
Kansas City, MO 64108
t 816.442.7700
115 Wilcox Street Suite 210
Castle Rock, CO 80104
t 720.949.1689
HOLLISANDMILLER.COM

Hollis + Miller Architects
Missouri State Certificate of Authority
Architecture # 0000161
Structure # 2006031333

MKEC Engineering, Inc.
Civil Engineering / Landscape Architecture
State Certificate of Authority #:
Engineering: 2001009364
Landscaping: 2006027139
Surveying: 2006027138
11827 W. 112th St, Ste 200
Overland Park, KS 66210
913.317.9390 phone

Smith & Boucher Engineers
Mech/Elect/Plumb Engineer
State Certificate of Authority #EGC-0001787
25501 W. Valley Parkway, Ste 200
Olathe, KS 66061
913.345.2127 phone

Bob D Campbell
Structural Engineer
State Certificate of Authority #000442
4338 Belleview Ave
Kansas City, MO 64111
816.531.4144 phone

Discovery Middle School Storm Shelter Addition
Liberty Public Schools
800 Midjay Dr, Liberty, MO 64068

Conformed Construction Documents

REVISIONS:

#	Description	Date

STATE OF MISSOURI
BRADEN L. TAYLOR
NUMBER PE-2021001896
PROFESSIONAL ENGINEER
10.11.23

BRADEN L. TAYLOR, P.E.
LISC. #2021001896

The Professional Engineers seal affixed to this sheet applies only to the material and items shown on this sheet. All drawings, instruments or other data identified as work product and not to be sealed are prepared by the undersigned for the exclusive use and benefit of the undersigned's employer and client. Any other use, including reuse by any third party, is prohibited without the express written consent of the undersigned engineer. Any reproduction of such plan, drawings, or documents not exhibiting the seal.

JOB NO: 23018
DRAWN BY: SEK
CHECKED BY: BLT
DATE: 10.11.2023

C106

EROSION CONTROL PLAN

P:\PROJECTS\2023\23020\10293_LIBERTY_DISCOVER MS GYM ADDITION\DWG 230293 CAD\SHTS\05 CIVIL\C106\230293-05-6205-C0.DWG

Please consider the environment before printing this.

INSIDE DROP MANHOLE CONNECTION DETAIL

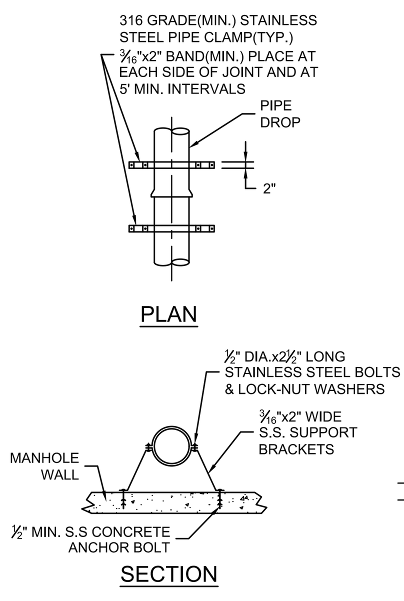

PIPE SUPPORT DETAIL
N.T.S.

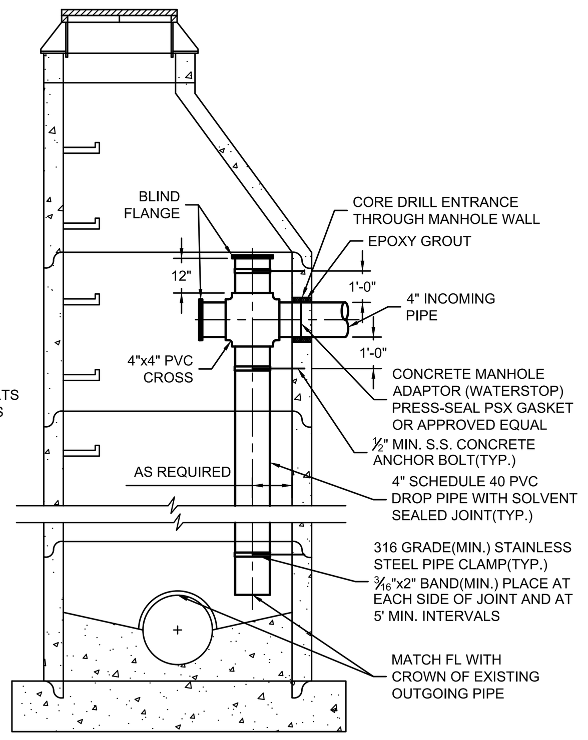

SCALE: NTS

6" CONCRETE SECTION

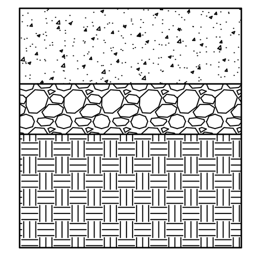

- 6" CONCRETE
- 4" GRAVEL (ASTM C33 SIZE NO. 57)
- 9" COMPACTED SUBGRADE (95% STD. DENSITY)

SIDEWALK DETAIL

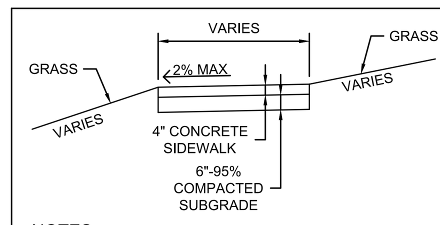

NOTES:
1. 1/2" PREMOLDED EXPANSION JOINT MATERIAL SHALL BE PLACED AT POINTS OF CURVATURE, CURB RETURNS, CURB INLETS, AND AT 250' CENTERS.

SCALE: NTS

SIDEWALK ADJACENT TO CURB

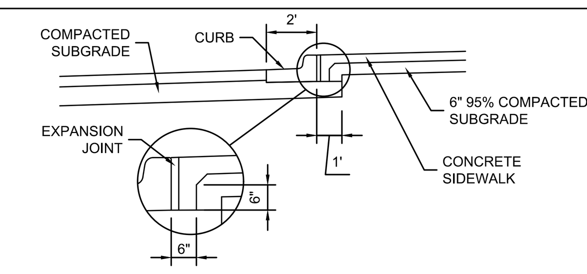

SCALE: NTS

SIDEWALK ADJACENT TO FOUNDATION

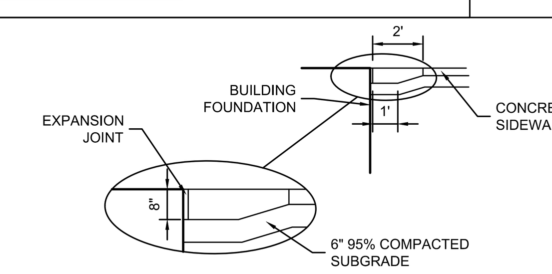

SCALE: NTS

JOINT DETAILS

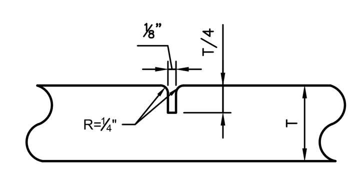

CONTRACTION JOINT

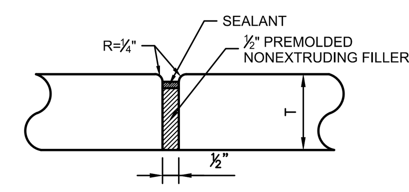

ISOLATION JOINT

NOTES:
1. CONTRACTION JOINTS SHALL BE CONSTRUCTED WITH A GROOVING TOOL (HAND TOOLED).

NOTE:
1. ISOLATION JOINTS JOINTS SHALL BE PLACED WHERE NEW CONCRETE ABUTS EXISTING CONCRETE AND IN AREAS WHERE CONCRETE ABUTS BUILDINGS.

SCALE: NTS

TREE PROTECTION DETAIL

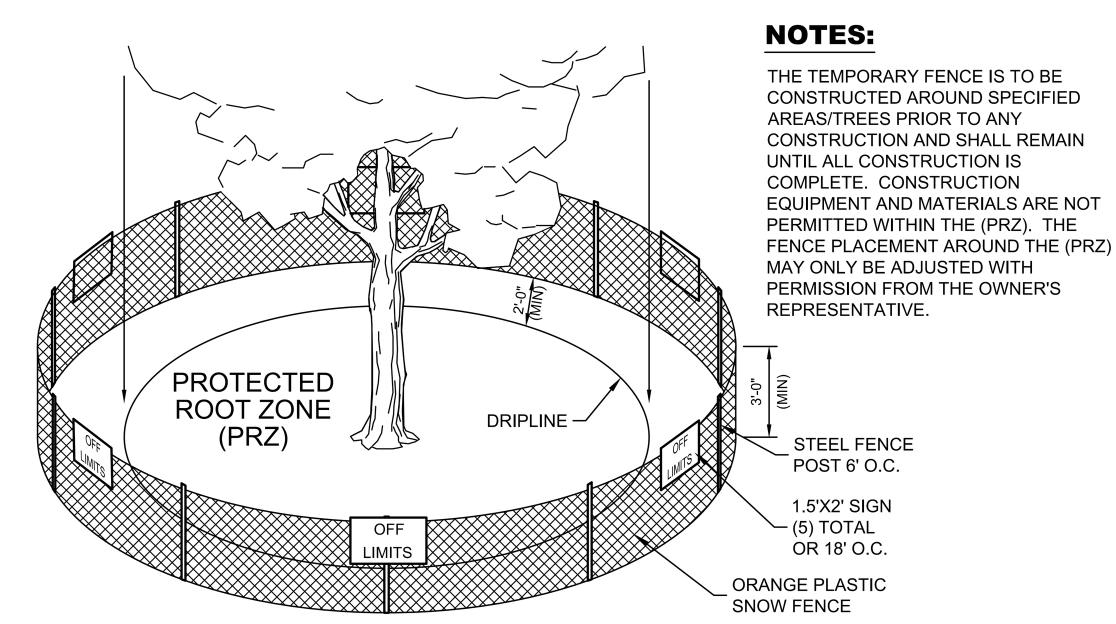

NOTES:

THE TEMPORARY FENCE IS TO BE CONSTRUCTED AROUND SPECIFIED AREAS/TREES PRIOR TO ANY CONSTRUCTION AND SHALL REMAIN UNTIL ALL CONSTRUCTION IS COMPLETE. CONSTRUCTION EQUIPMENT AND MATERIALS ARE NOT PERMITTED WITHIN THE (PRZ). THE FENCE PLACEMENT AROUND THE (PRZ) MAY ONLY BE ADJUSTED WITH PERMISSION FROM THE OWNER'S REPRESENTATIVE.

SCALE: NTS

MOW STRIP

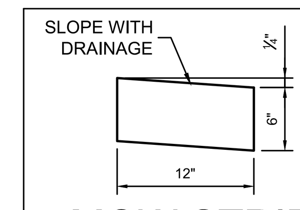

SCALE: NTS

FLAT CURB

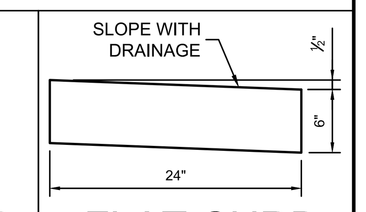

SCALE: NTS

MKEC

11827 W. 112th Street, Suite 200
Overland Park, KS 66210
913.317.9390
Engineering No. 2001009364
Landscape No. 2006027139
Surveying No. 2006027138

hollis + miller architects®

we design the future®

1828 Walnut Street Suite 922
Kansas City, MO 64108
T 816.442.7700

115 Wilcox Street Suite 210
Castle Rock, CO 80104
T 720.949.1689

HOLLISANDMILLER.COM

Hollis + Miller Architects
Missouri State Certificate of Authority
Architecture # 0000161
Structure # 2006031333

MKEC Engineering, Inc.
Civil Engineering / Landscape Architecture
State Certificate of Authority #:
Engineering: 2001009364
Landscaping: 2006027139
Surveying: 2006027138
11827 W. 112th St, Ste 200
Overland Park, KS 66210
913.317.9390 phone

Smith & Boucher Engineers
Mech/Elect/Plumb Engineer
State Certificate of Authority #EGC-0001787
25501 W. Valley Parkway, Ste 200
Olathe, KS 66061
913.345.2127 phone

Bob D Campbell
Structural Engineer
State Certificate of Authority #000442
4338 Belleview Ave
Kansas City, MO 64111
816.531.4144 phone

HANDRAIL EMBEDMENT DETAIL

HANDRAIL NOTES:
1. ALL TUBING MATERIAL SHALL BE STAINLESS STEEL PIPE.
2. PIPE AND TUBING MATERIAL TO BE ASTM A 269 TYPE 304 OR TYPE 316.
3. FULL WELDED JOINTS TO BE USED.
4. CORE–DRILL HOLES SHALL BE 5" DEEP AND 3/4 INCH LARGER THAN OD OF POST.
5. HOLD GROUT DOWN FROM ADJACENT CONCRETE 1/2 INCH TO ALLOW FOR SEALANT.

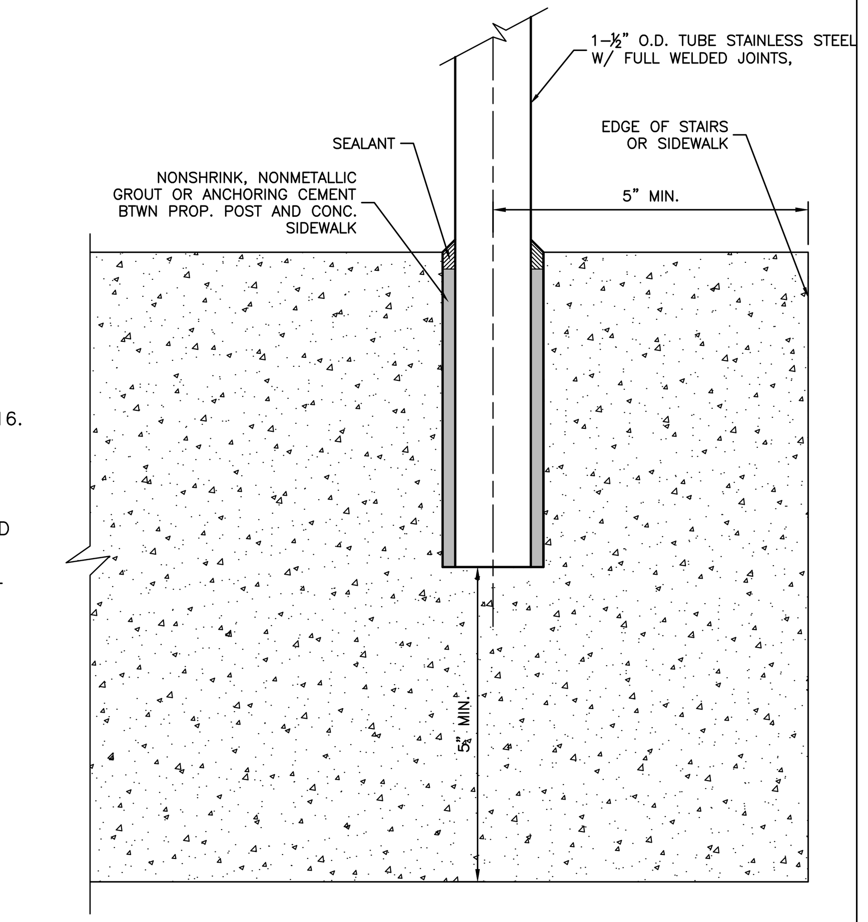

SCALE: NTS

TRENCHING DETAILS

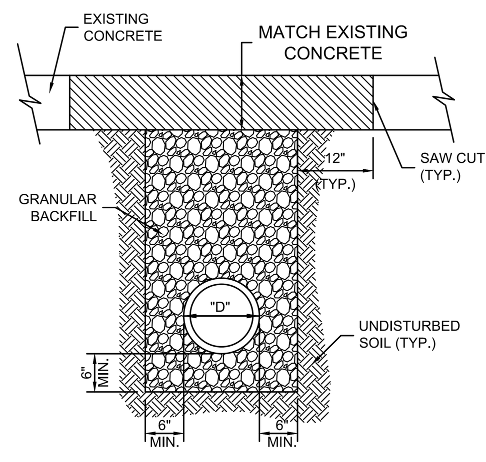

WITHIN EXISTING CONC. PAVED AREAS

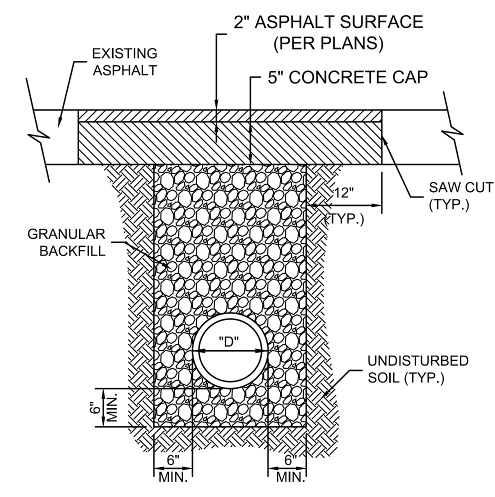

WITHIN EXISTING ASPH. PAVED AREAS

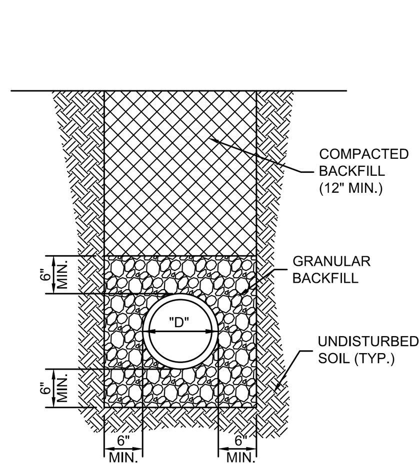

OUTSIDE OF PAVED AREAS

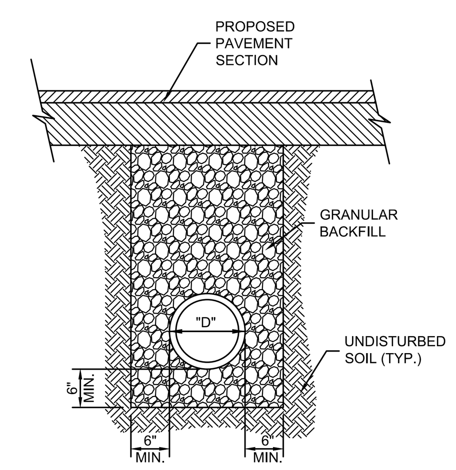

WITHIN PROPOSED PAVED AREAS

NOTES:
1. ALL PIPE SYSTEMS SHALL BE INSTALLED IN ACCORDANCE WITH ASTM D2321, "STANDARD PRACTICE FOR UNDERGROUND INSTALLATION OF THERMOPLASTIC PIPE FOR SEWERS AND OTHER GRAVITY FLOW APPLICATIONS", LATEST ADDITION.
2. GRANULAR FILL SHALL BE 1/2" CLEAN ROCK, PLACED IN 6" LIFTS AND COMPACTED BY SLICING WITH A SHOVEL.
3. FILL SHALL BE FINELY DIVIDED, JOB EXCAVATED MATERIAL FREE OF DEBRIS, ORGANIC MATERIAL, AND STONES, AND COMPACTED.
4. BACKFILL TO BE COMPACTED TO 90% OF STANDARD DENSITY OUTSIDE OF PAVED AREAS.

SCALE: NTS

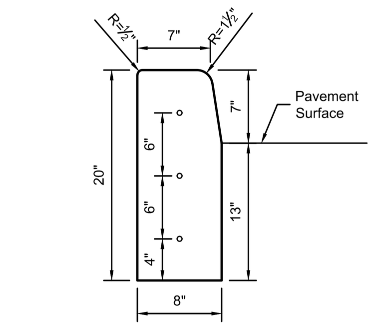

STRAIGHT CURB
(TYPE C-1)

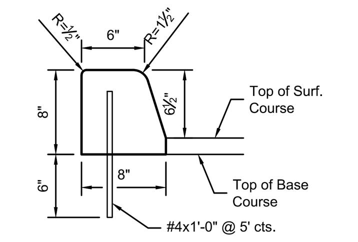

DOWELLED CURB
(TYPE DC)

GENERAL NOTES:
1. 3/4" Isolation Joints with 5/8" dia. x 2' smooth dowels shall be placed at radius points and at 150' intervals. These dowel bars shall be greased and wrapped on one end with expansion tubes.
2. 1" deep Contraction Joints shall be installed at approximately 10' intervals. these joints shall pass across the entire curb section.
3. Fix dowel bars with bar supports.
4. Depth of curb shall be a minimum of 8" through the handicap access ramp.
5. Concrete shall conform to Standard Specifications Section 2208.2.B.
6. Asphaltic concrete surface course shall conform to Standard Specification Section 2205.2.

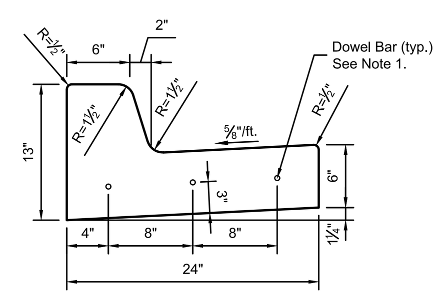

STRAIGHT BACK CURB & GUTTER
(TYPE CG-1)

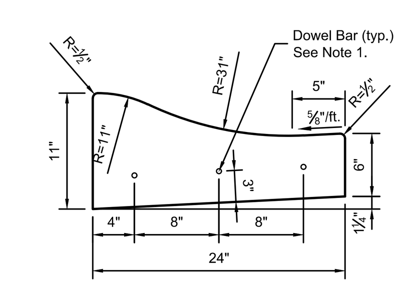

ROLL BACK CURB & GUTTER
(TYPE CG-2)

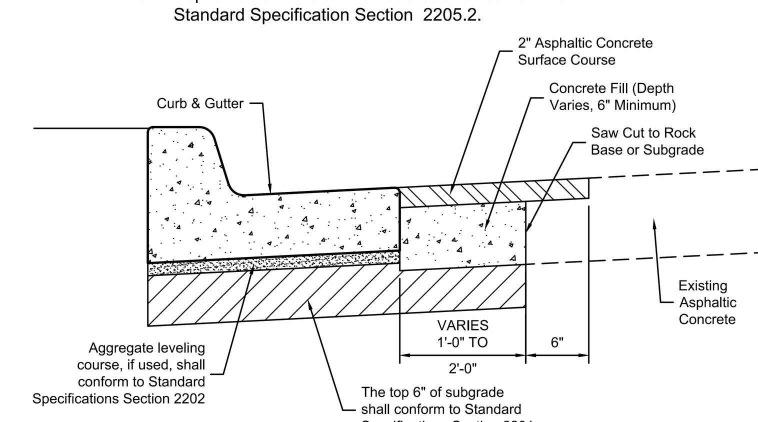

CURB REPLACEMENT DETAIL

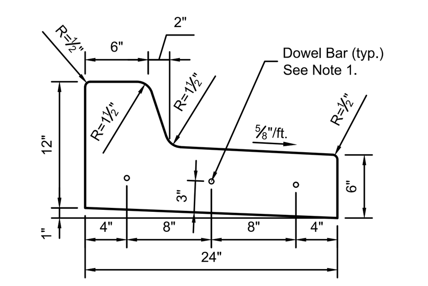

STRAIGHT BACK DRY CURB & GUTTER
(TYPE CG-1 DRY)

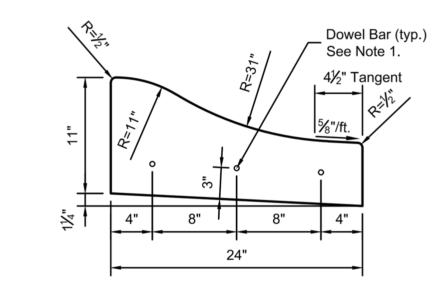

ROLL BACK DRY CURB & GUTTER
(TYPE CG-2 DRY)

AMERICAN PUBLIC WORKS ASSOCIATION (APWA) KANSAS CITY METROPOLITAN CHAPTER	
CURB DETAILS	STANDARD DRAWING NUMBER C - 1 ADOPTED: MAY 23, 2001

SANITARY SERVICE CONNECTION

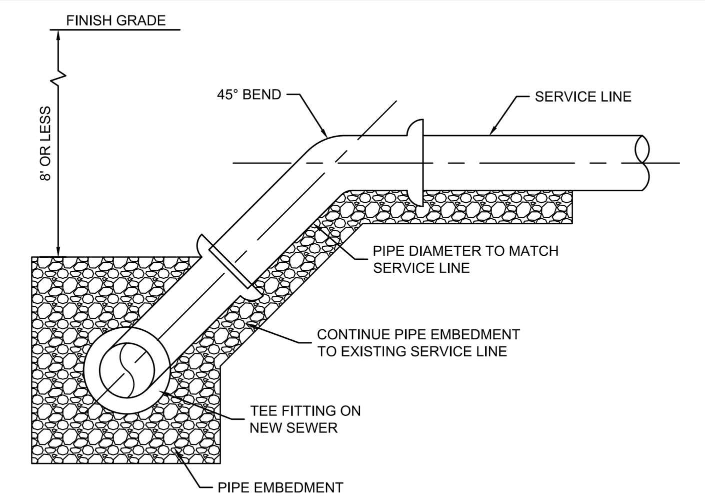

SCALE: NTS

SANITARY TEE/WYE W/ CLEANOUT DETAIL

NOTES:
1. SET CLEANOUT FRAMES AND COVERS IN PAVEMENT AREAS IN A CAST-IN-PLACE-CONCRETE BLOCK, 18 BY 18 BY 12 INCHES DEEP WITH 12 INCHES OF TREATED 95% COMPACTED SUBGRADE BELOW CONCRETE. SET WITH TOP FLUSH WITH SURROUNDING PAVEMENT.
2. WHEN CLEANOUT IS INSTALLED IN CONJUNCTION WITH BENDS, THE CLEANOUT SHALL BE INSTALLED UPSTREAM OF THE BENDS.

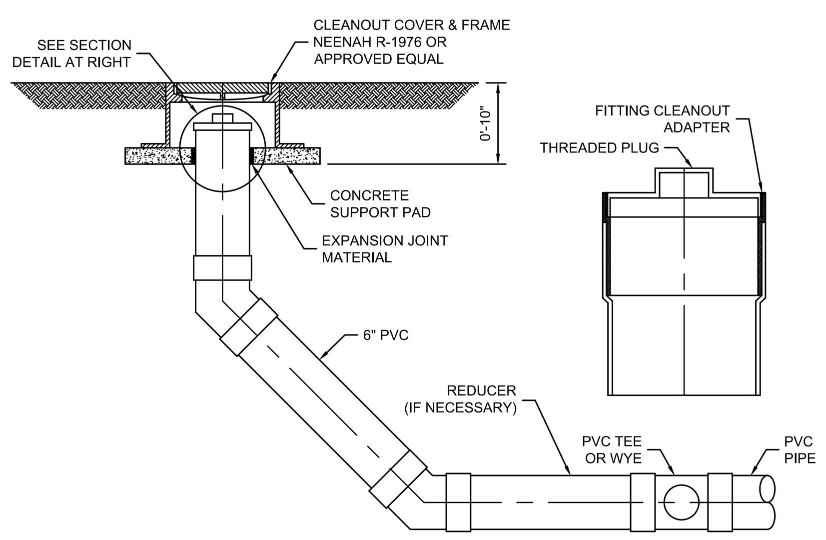

SCALE: NTS

STAIR SECTION

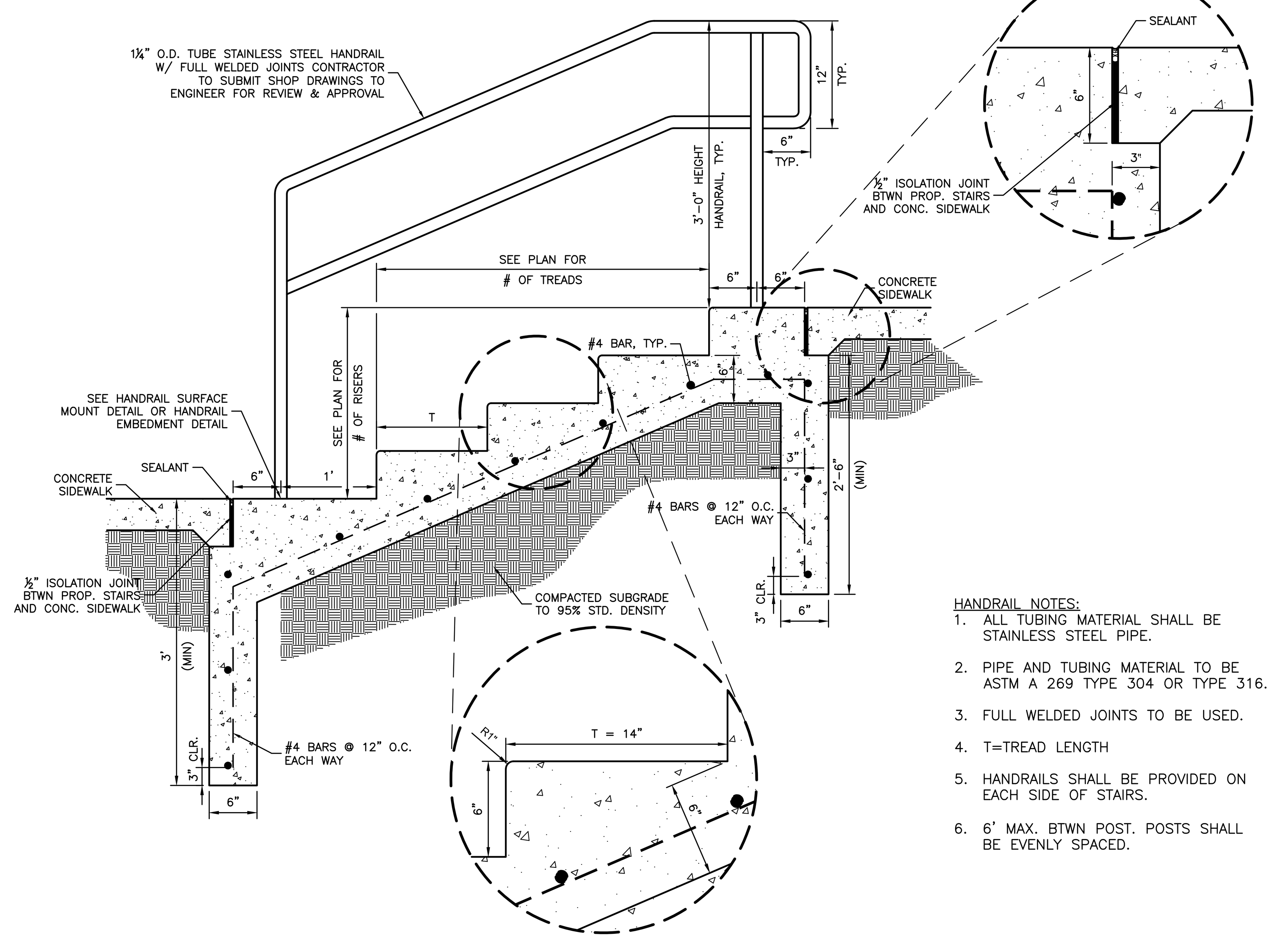

HANDRAIL NOTES:
1. ALL TUBING MATERIAL SHALL BE STAINLESS STEEL PIPE.
2. PIPE AND TUBING MATERIAL TO BE ASTM A 269 TYPE 304 OR TYPE 316.
3. FULL WELDED JOINTS TO BE USED.
4. T=TREAD LENGTH
5. HANDRAILS SHALL BE PROVIDED ON EACH SIDE OF STAIRS.
6. 6' MAX. BTWN POST. POSTS SHALL BE EVENLY SPACED.

SCALE: NTS

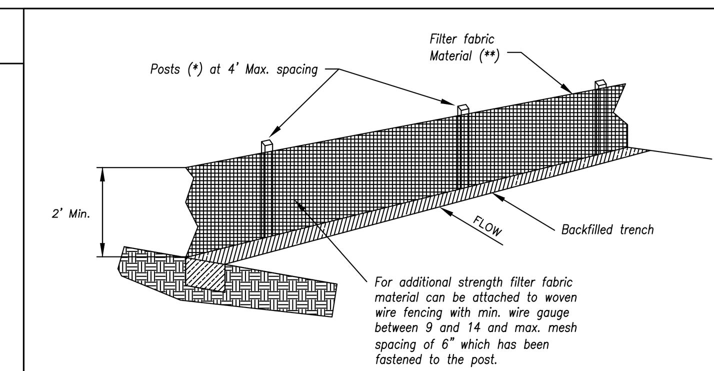

(*) POSTS
– MIN. LENGTH 4'
– HARDWOOD 1 3/16" x 1 3/16"
– NO.2 SOUTHERN PINE 2 5/8" x 2 5/8"
– STEEL 1.33 LB/FT

(**) – Geotextile Fabric shall meet the requirements of AASHTO M288

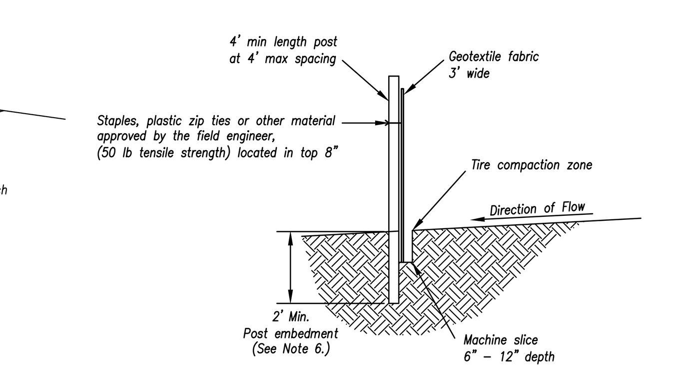

SILT FENCE DETAILS
Not to Scale

Notes:
1. In order to contain water, the ends of the silt fence must be turned uphill (Figure A).
2. Long perimeter runs of silt fence must be limited to 100'. Runs should be broken up into several smaller segments to minimize water concentrations (Figure A).
3. Long slopes should be broken up with intermediate rows of silt fence to slow runoff velocities.
4. Attach fabric to upstream side of post.
5. Install posts a minimum of 2' into the ground.
6. Trenching will only be allowed for small or difficult installation, where slicing machine cannot be reasonably used.

Maintenance:
1. Remove and dispose of sediment deposits when the deposit approaches 1/3 the height of silt fence.
2. Repair as necessary to maintain function and structure.

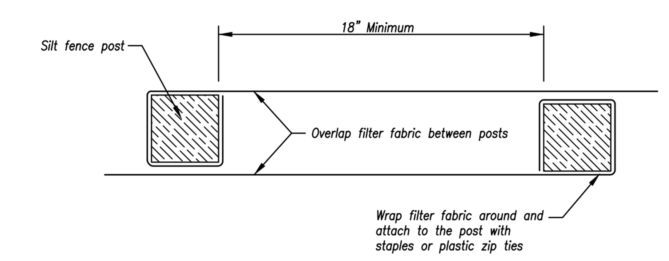

JOINING FENCE SECTIONS
Not to Scale

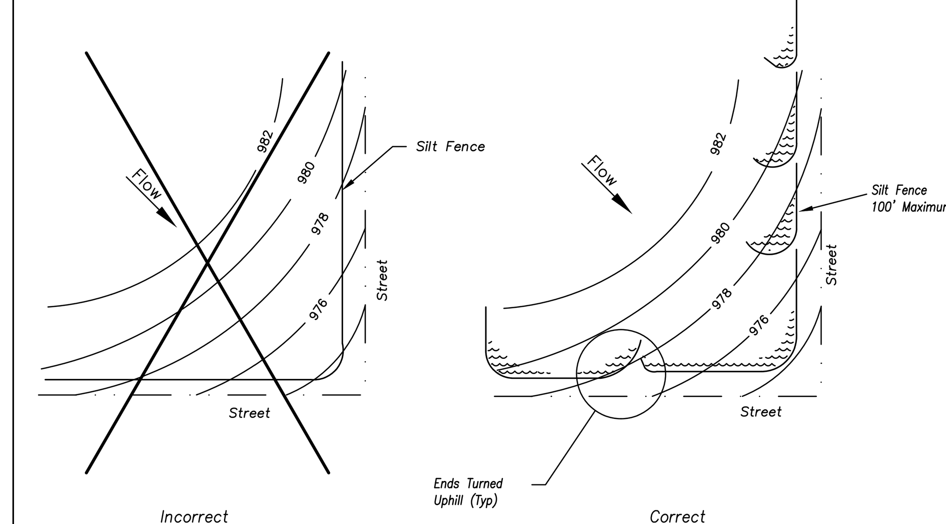

Figure A

SILT FENCE LAYOUT
Not to Scale

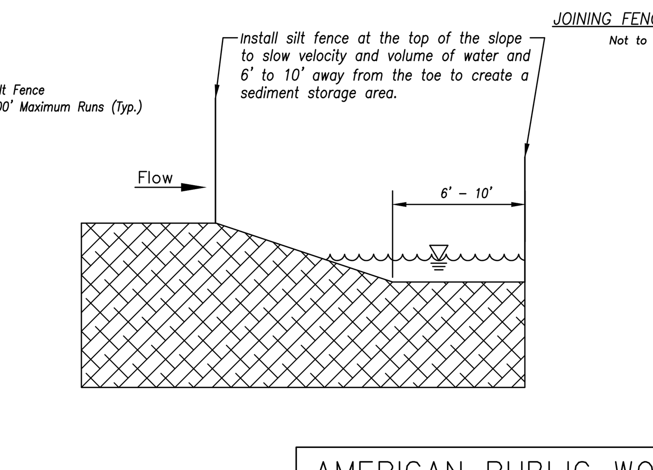

Modified from 2015 Overland Park Standard Details for Erosion and Sediment Control.

AMERICAN PUBLIC WORKS ASSOCIATION	
APWA Kansas City Metro Chapter – AMERICAN PUBLIC WORKS ASSOCIATION	KANSAS CITY METRO CHAPTER
SILT FENCE	STANDARD DRAWING NUMBER ESC-03 ADOPTED: 10/24/2016

Discovery Middle School Storm Shelter Addition
Liberty Public Schools
800 Midjay Dr, Liberty, MO 64068

Conformed Construction Documents

REVISIONS:

#	Description	Date

STATE OF MISSOURI – BRADEN L. TAYLOR – NUMBER PE-2021001896 – PROFESSIONAL ENGINEER – 10.11.23

BRADEN L. TAYLOR, P.E.
LISC. #2021001896

The Professional Engineers seal affixed to this sheet applies only to the material and items shown on this sheet. All drawings, instruments or other documents not exhibiting this seal shall not be considered prepared by this engineer, and this engineer expressly disclaims any and all responsibility for such plan, drawings, or documents not exhibiting this seal.

JOB NO: 23018
DRAWN BY: SEK
CHECKED BY: BLT
DATE: 10.11.2023

C200

DETAILS

Please consider the environment before printing this.

P:\PROJECTS\2023\2302010293_LIBERTY_DISCOVER MS GYM ADDITION\00 230293 CAD\SHTS\05 CIVIL\CDS\230293-05-0300-CD.DWG

GENERAL LANDSCAPE NOTES

1. THE LANDSCAPE CONTRACTOR SHOULD READ ALL LANDSCAPE PLANS, SPECIFICATIONS AND VISIT THE PROJECT SITE TO BECOME FAMILIAR WITH THE EXISTING CONDITIONS PRIOR TO BIDDING THIS PROJECT. IF A DISCREPANCY BETWEEN PLANT QUANTITIES SHOWN ON PLANS AND WITHIN THE PLANT SCHEDULE EXIST THE PLANS QUANTITIES SHALL BE USED. PLANT SCHEDULE QUANTITIES FOR INFORMATION ONLY.
2. ANY AND ALL QUESTIONS CONCERNING THE LANDSCAPE PLANS AND SPECIFICATIONS SHALL BE DIRECTED TO THE OWNER AND / OR MKEC LANDSCAPE ARCHITECT AT 913-317-9390.
3. THE LANDSCAPE CONTRACTOR IS TO VERIFY THE LOCATION OF ALL UNDERGROUND UTILITIES (INCLUDING THOSE INDICATED ON THE PLAN) PRIOR TO INSTALLATION OF PLANT MATERIAL.
4. THE LANDSCAPE CONTRACTOR SHALL BE RESPONSIBLE FOR WATERING, MULCHING, AND OTHER REQUIREMENTS OF PLANT MATERIALS WHILE THEY ARE TEMPORARILY STORED ON OR OFF SITE.
5. THE LANDSCAPE CONTRACTOR SHALL COORDINATE LAYOUT OF PLANTING BEDS, PLANT MASSING, STAKED LOCATION OF TREES AND INSTALLATION OF PLANT MATERIAL WITH OWNER PRIOR TO COMMENCEMENT OF WORK.
6. ALL PLANT MATERIAL (EXCEPT SHADE TREES) IS DELINEATED AT MATURE SIZE OF PLANT MATERIAL. SHADE TREES ARE DELINEATED AT 85% OF ACTUAL MATURE SIZE.
7. ALL PLANT MATERIALS MEET THE AMERICAN STANDARD FOR NURSERY STOCK (ANSI Z60.1-1996) PER THE AMERICAN ASSOCIATION OF NURSERYMEN.
8. PER OWNER'S DIRECTION, THE LANDSCAPE ARCHITECT RESERVES THE RIGHT TO INSPECT ALL PLANT MATERIAL AT THE NURSERY, PRIOR TO DIGGING.
9. AREAS DENOTED AS 'FESCUE TURF' ARE TO RECEIVE SOD OR SEED AS FOLLOWS:
   - SOD & SEED: FESCUE TURF. SUBMIT SPECIES TO LANDSCAPE ARCHITECT FOR REVIEW.
   - FERTILIZER: HAVE SOIL TESTED TO OBTAIN RECOMMENDED SOIL AMENDMENTS FOR THE GRASSES LISTED. REPORT RECOMMENDATIONS TO THE LANDSCAPE ARCHITECT FOR APPROVAL BEFORE ANY APPLICATION OF FERTILIZER IS MADE.
10. CONDUCT PLANTING UNDER FAVORABLE WEATHER CONDITIONS DURING EITHER THE SPRING PLANTING SEASON, MARCH 1ST TO JUNE 1ST, OR THE FALL PLANTING SEASON, SEPTEMBER 30TH UNTIL FREEZING OF THE GROUND. DURING THE FALL PLANTING SEASON, CONIFEROUS MATERIAL PLANTING SHALL BE CONDUCTED AUGUST 15TH TO OCTOBER 1ST. DEVIATION FROM THE ABOVE PLANTING DATES WILL ONLY BE PERMITTED WITH APPROVAL IN WRITING BY THE LANDSCAPE ARCHITECT.
11. THE PLANTING SOIL MIXTURE FOR ALL TREE PLANTINGS SHALL INCLUDE SOIL EXCAVATED FROM THE HOLE. RATIO: 50% VIRGIN SOIL + 50% AMENDED TOP SOIL.
12. ROOT STIMULATOR SHALL BE APPLIED TO ALL PLANT MATERIALS WITH THE EXCEPTION OF LAWN AREAS. APPLY AS PER THE MANUFACTURERS RECOMMENDATIONS.
13. THE LANDSCAPE CONTRACTOR SHALL RESTORE FINISH GRADES IN ALL PLANTING AREAS (PER GRADING PLANS) WHICH MAY HAVE BEEN DISTURBED DURING PLANTING OPERATIONS.
14. ALL TREE SAUCERS AND PLANTING BEDS ARE TO BE MULCHED WITH A MINIMUM OF 4" DOUBLE-GROUND OAK MULCH (COLOR DIED); COLOR TO BE 'JAVA BROWN'. ALL PLANTING BEDS SHALL HAVE WEED BARRIER MAT BELOW MULCH LAYER AND CONTRACTOR TO SUBMIT WEED BARRIER PRODUCT TO LANDSCAPE ARCHITECT FOR REVIEW. WHERE PLANTING BEDS ARE ADJACENT TO WALKS AND CURBS THE SOIL LEVEL SHALL BE 4" LOWER TO ALLOW FOR MULCH LAYER. WHERE SOD IS INDICATED, ITS THICKNESS SHALL ALSO BE ACCOUNTED FOR SO THAT THE SOIL SURFACE IN THE SOD IS ½" BELOW THE HARDSCAPE SURFACE.
15. ALL PLANTING BEDS SHALL BE TREATED WITH A PRE-EMERGENT HERBICIDE SUCH AS TREFLAN OR EQUAL. APPLY AS PER MANUFACTURER'S RECOMMENDATION. THE PRE-EMERGENT SHALL NOT BE APPLIED UNTIL AFTER ALL PLANTING WITHIN THESE AREAS IS COMPLETE, BUT BEFORE THESE AREAS ARE MULCHED. DO NOT DISTURB AREAS AFTER APPLICATION. WATER AS DIRECTED.
16. MULCH, STAKES, GUY WIRE, PRE-EMERGENT HERBICIDES, ETC. SHALL BE SUBSIDIARY TO INDIVIDUAL PLANTS.
17. LANDSCAPE EDGING: ALL PLANTING BEDS ABUTTING LAWN AREAS SHALL BE EDGED WITH BLACK STEEL EDGING $\frac{3}{16}$" X 4" X 12' WITH 12" STAKES.
18. ALL SLOPES THAT EXCEED A 3:1 GRADE SHALL BE PROTECTED WITH AN EROSION CONTROL BLANKET - NORTH AMERICAN GREEN S150. INSTALL AS PER THE MANUFACTURER'S RECOMMENDATIONS.
19. LABEL EACH TREE AND SHRUB WITH A SECURELY ATTACHED, WATERPROOF TAG BEARING LEGIBLE DESIGNATION OF BOTH BOTANICAL AND COMMON NAME. LABEL EACH ORNAMENTAL GRASS, GROUNDCOVER, PERENNIAL AND ANNUAL WITH THE LABEL PROVIDED BY THE ORIGINAL GROWER OF THE PLANT. LABELS SHALL NOT BE REMOVED UNTIL AFTER PROVISIONAL ACCEPTANCE BY THE LANDSCAPE ARCHITECT.
20. STAKES AND GUYING SHALL BE REMOVED AT THE END OF ONE FULL GROWING SEASON.
21. ALL PLANTING BEDS SHALL BE OVER EXCAVATED TO A DEPTH OF 2'. ALL AREAS DENOTED WITH SOD (LAWN AREAS) SHALL HAVE A 6" MINIMUM TOPSOIL LAYER. TOPSOIL SHALL BE LAID IN 3" LIFTS. IN AREAS WHERE CONSTRUCTION GRADING HAS NOT OCCURED AND THE VIRGIN GRADE YET EXIST, THE TOPSOIL LAYER MAY NOT BE REQUIRED BASED ON THE DECISION OF THE LANDSCAPE ARCHITECT.
22. TOPSOIL SHALL BE FERTILE NATURAL TOPSOIL, TYPICAL OF THE LOCALITY, FOLLOWING MAJOR GRADING OPERATIONS THE FINAL 8" LIFT SHALL BE HIGH QUALITY TOPSOIL. SOIL SHALL BE OBTAINED FROM WELL DRAINED AREAS. STOCKPILED TOPSOIL MAY BE USED. IT SHALL BE WITHOUT ADMIXTURE OF SUBSOIL OR SLAG AND SHALL BE FREE OF STONES, LUMPS, STICKS, PLANTS OR THEIR ROOTS, TOXIC SUBSTANCES OR OTHER EXTRANEOUS MATTER THAT MAY BE HARMFUL TO PLANT GROWTH OR WOULD INTERFERE WITH FUTURE MAINTENANCE. TOPSOIL PH RANGE SHALL BE 5.5 TO 7.0.
23. THERE SHALL BE NO ADDITIONS, DELETIONS OR SUBSTITUTION OF PLANT MATERIAL SPECIES WITHOUT THE WRITTEN APPROVAL BY THE OWNER AND / OR MKEC LANDSCAPE ARCHITECT. ANY SUBSTITUTION WHICH HAS NOT BEEN APPROVED SHALL BE REMOVED AND IMMEDIATELY REPLACED WITH THE CORRECT PLANT AT LANDSCAPE CONTRACTOR'S EXPENSE.
24. IN THE CONDITION WHERE THE PLANT MATERIAL HAS BEEN SUPPLIED BY THE OWNER THROUGH A PLANT PROCUREMENT PROGRAM WITH A MYKE PRO 2 YEAR WARRANTY, THE LANDSCAPE CONTRACTOR'S WARRANTY OF PLANT MATERIAL SHALL BEGIN FROM THE TIME OF HANDLING PLANT MATERIAL AT TIME OF DELIVERY THROUGH INSTALLATION AND END AFTER THE SUBSTANTIAL COMPLETION AND FINAL PUNCH-LIST APPROVAL BY LANDSCAPE ARCHITECT.
25. THE LANDSCAPE CONTRACTOR WILL BE RESPONSIBLE FOR THE COLLECTION, REMOVAL, AND PROPER DISPOSAL OF ANY AND ALL DEBRIS GENERATED DURING THE INSTALLATION OF THE LANDSCAPE CONSTRUCTION.
26. COORDINATE WITH THE OWNER AND GENERAL CONTRACTOR FOR SLEEVE LOCATIONS AND TIMING OF SLEEVE INSTALLATION. ALL SLEEVING REQUIRED UNDER HARDSCAPE SURFACES FOR THE IRRIGATION SYSTEM SHALL BE THE RESPONSIBILITY OF THE IRRIGATION CONTRACTOR.
27. THE CONTRACTOR SHALL FURNISH TOPSOIL; TOPSOIL MUST BE APPROVED BY THE LANDSCAPE ARCHITECT. REFER TO SPECIFICATIONS FOR TOPSOIL REQUIREMENTS.
28. THE CONTRACTOR SHALL SUPPLY ALL PLANTING SOIL MIX.
29. ALL LANDSCAPE AREAS SHALL BE IRRIGATED BY A TEMPORARY IRRIGATION SYSTEM AND SHALL BE THE CONTRACTOR'S RESPONSIBILITY TO MONITOR INSTALLED PLANT MATERIAL FOR A MINIMUM OF 60 DAYS. TO ESTABLISH PLANT MATERIALS, WATER FROM SOURCES AND KEEP LAWN UNIFORMLY MOIST TO A DEPTH OF 4 INCHES. WATER LAWN AT A MINIMUM RATE OF (1) ONE INCHES PER WEEK OR AS NECESSARY TO PROVIDE A HEALTHY GREEN APPEARANCE. INSTALLATION, MAINTENANCE, AND MONITORING OF THE TEMPORARY IRRIGATION SYSTEM WILL BE THE SOLE RESPONSIBILITY OF THE CONTRACTOR FOR THE FIRST 60 DAYS.
30. ALL TOP SOIL AND PLANTING BED SOIL MIX SHALL BE APPROVED BY OWNER'S REPRESENTATIVES PRIOR TO INSTALLATION OF ANY SOD, SEED, PLANT MATERIALS AND MULCH.
33. THE TYPICAL PLANTING SOIL MIX FOR ALL PLANTING BEDS (SHRUBS, ORNAMENTAL GRASS AND PERENNIAL BED AREAS) SHALL CONSIST OF THE FOLLOWING MAKE-UP UNLESS OTHERWISE INDICATED IN THESE PLANS:
   - 80% TOPSOIL AS SPECIFIED
   - 20% PREPARED ADDITIVES (BY VOLUME AS FOLLOWS):
     - 2 PARTS HUMAS AND/OR PEAT
     - 1 PART STERILIZED COW MANURE
     - 1 PART SHREDDED PINE BARK (BARK PIECES BETWEEN $\frac{1}{2}$"AND 1-$\frac{1}{2}$" IN LENGTH/DIAMETER.
   - COMMERCIAL FERTILIZER AS RECOMMENDED BY SOIL REPORT.
   - LIME AS RECOMMENDED BY SOIL REPORT.

P:\PROJECTS\2023\2302010293_LIBERTY_DISCOVER MS GYM ADDITION\00 230293 CAD\SHTS\05 CIVIL\CDS\230293-05-7200-CD.DWG

FESCUE TURF INSTALLATION

1. INSTALL FESCUE TURF SOD AND SEED AS SHOWN ON PLANS AND PER NOTES BELOW. SEE IRRIGATION NOTES THIS SHEET.
2. SUBMITTALS SHALL INCLUDE: PRODUCT DATA: FOR EACH TYPE OF PRODUCT INDICATED, CERTIFICATION OF SOD AS KANSAS STATE FESCUE TRIAL MIX, PRODUCT CERTIFICATES: FOR SOIL AMENDMENTS AND FERTILIZERS, SIGNED BY PRODUCT MANUFACTURER, MATERIAL TEST REPORTS: FOR EXISTING SURFACE SOIL AND IMPORTED TOPSOIL, AND PLANTING SCHEDULE: INDICATING ANTICIPATED PLANTING DATES FOR SOD INSTALLATION.
3. INSTALLER QUALIFICATIONS: A QUALIFIED LANDSCAPE INSTALLER WHOSE WORK HAS RESULTED IN SUCCESSFUL LAWN ESTABLISHMENT.
4. INSTALLER'S FIELD SUPERVISION: REQUIRE INSTALLER TO MAINTAIN AN EXPERIENCED FULL-TIME SUPERVISOR ON PROJECT SITE WHEN PLANTING IS IN PROGRESS.
5. REPORT SUITABILITY OF TOPSOIL FOR LAWN GROWTH. STATE RECOMMENDED QUANTITIES OF NITROGEN, PHOSPHORUS, AND POTASH NUTRIENTS AND SOIL AMENDMENTS TO BE ADDED TO PRODUCE SATISFACTORY TOPSOIL.
6. DELIVERY, STORAGE, AND HANDLING FOR SOD: HARVEST, DELIVER, STORE, AND HANDLE SOD ACCORDING TO REQUIREMENTS IN TPI'S "SPECIFICATIONS FOR TURFGRASS SOD MATERIALS" AND "SPECIFICATIONS FOR TURFGRASS SOD TRANSPLANTING AND INSTALLATION" IN ITS "GUIDELINE SPECIFICATIONS TO TURFGRASS SODDING."
7. LAWN MAINTENANCE: BEGIN MAINTENANCE IMMEDIATELY AFTER EACH AREA IS PLANTED AND CONTINUE UNTIL ACCEPTABLE LAWN IS ESTABLISHED, BUT FOR NOT LESS THAN 60 DAYS FROM DATE OF SUBSTANTIAL COMPLETION. MAINTAIN AND ESTABLISH LAWN BY WATERING, FERTILIZING, WEEDING, REPLANTING, AND OTHER OPERATIONS. ROLL, REGRADE, AND REPLANT BARE OR ERODED AREAS TO PRODUCE A UNIFORMLY SMOOTH LAWN. WATERING: PROVIDE AND MAINTAIN TEMPORARY IRRIGATION SYSTEM FOR A MINIMUM OF 60 DAYS (SEE NOTES ON PREVIOUS LANDSCAPE PAGE) TO CONVEY WATER FROM SOURCES AND TO KEEP LAWN UNIFORMLY MOIST TO A DEPTH OF 4 INCHES.
8. WATER LAWN AT A MINIMUM RATE OF 1 INCH PER WEEK OR AS NECESSARY TO PROVIDE A HEALTHY GREEN APPEARANCE. A DEEP ROOT SYSTEM IS DESIRED THEREFORE DO NOT WATER LAWNS AFTER ESTABLISHMENT MORE THAN EVERY OTHER DAY.
9. TURFGRASS SPECIES: SOD OF GRASS SPECIES AS FOLLOWS, WITH NOT LESS THAN 95 PERCENT GERMINATION, NOT LESS THAN 85 PERCENT PURE SEED, AND NOT MORE THAN 0.5 PERCENT WEED SEED: MOST CURRENT AVAILABLE KANSAS STATE FESCUE TRIAL MIX, RATED IN TOP 1/3 OF VARIETIES TESTED FOR VISUAL APPEARANCE AVERAGE THROUGHOUT THE YEAR OR APPROVED EQUAL.
10. TOPSOIL: ASTM D 5268, PH RANGE OF 5.5 TO 7, A MINIMUM OF 4 PERCENT ORGANIC MATERIAL CONTENT; FREE OF STONES 1 INCH OR LARGER IN ANY DIMENSION AND OTHER EXTRANEOUS MATERIALS HARMFUL TO PLANT GROWTH.
11. TOPSOIL SOURCE: REUSE SURFACE SOIL STOCKPILED ON-SITE. VERIFY SUITABILITY OF STOCKPILED SURFACE SOIL TO PRODUCE TOPSOIL. CLEAN SURFACE SOIL OF ROOTS, PLANTS, SOD, STONES, CLAY LUMPS, AND OTHER EXTRANEOUS MATERIALS HARMFUL TO PLANT GROWTH. SUPPLEMENT WITH IMPORTED OR MANUFACTURED TOPSOIL FROM OFF-SITE SOURCES WHEN QUANTITIES ARE INSUFFICIENT. OBTAIN TOPSOIL DISPLACED FROM NATURALLY WELL-DRAINED CONSTRUCTION OR MINING SITES WHERE TOPSOIL OCCURS AT LEAST 4 INCHES DEEP; DO NOT OBTAIN FROM BOGS OR MARSHES. TOPSOIL TO BE PLACED IN AN 8" LIFT IN ALL PLANTING BED AREAS. CONTRACTOR TO OBTAIN WRITTEN APPROVAL FROM OWNER'S REPRESENTATIVES PRIOR TO SOD INSTALLATION FOLLOWING PLACEMENT OF TOPSOIL.
12. AMEND SOIL AS NECESSARY TO MEET TOPSOIL REQUIREMENTS OF ASTM D 5268.
13. EXAMINE AREAS TO RECEIVE LAWNS AND GRASS FOR COMPLIANCE WITH REQUIREMENTS AND OTHER CONDITIONS AFFECTING PERFORMANCE. PROCEED WITH INSTALLATION ONLY AFTER UNSATISFACTORY CONDITIONS HAVE BEEN CORRECTED.
14. PROTECT STRUCTURES, UTILITIES, SIDEWALKS, PAVEMENTS, AND OTHER FACILITIES, TREES, SHRUBS, AND PLANTINGS FROM DAMAGE CAUSED BY PLANTING OPERATIONS. PROVIDE EROSION-CONTROL MEASURES TO PREVENT EROSION OR DISPLACEMENT OF SOILS AND DISCHARGE OF SOIL-BEARING WATER RUNOFF OR AIRBORNE DUST TO ADJACENT PROPERTIES AND WALKWAYS. ELIMINATE COMPETING GRASS VEGETATION IN ALL AREAS TO BE IMPROVED WITH "ROUNDUP" OR AN APPROVED EQUAL ACCORDING TO THE MANUFACTURER'S RECOMMENDATIONS. SEVERAL APPLICATIONS MAY BE NECESSARY. WORK TO REMOVE COMPETING VEGETATION, SHALL BEGIN SEVERAL MONTHS BEFORE SODDING OPERATIONS COMMENCE.
15. LIMIT SOD SUBGRADE PREPARATION TO AREAS TO BE PLANTED THE SAME OR FOLLOWING DAY. NEWLY GRADED AREAS: LOOSEN SUBGRADE TO A MINIMUM DEPTH OF 6 INCHES. REMOVE STONES LARGER THAN 1 INCH IN ANY DIMENSION AND STICKS, ROOTS, RUBBISH, AND OTHER EXTRANEOUS MATTER AND LEGALLY DISPOSE OF THEM OFF OWNER'S PROPERTY.APPLY FERTILIZER DIRECTLY TO SUBGRADE BEFORE LOOSENING. SPREAD TOPSOIL IF NECESSARY, APPLY SOIL AMENDMENTS AND FERTILIZER ON SURFACE, AND THOROUGHLY BLEND.
16. LEGALLY DISPOSE OF WASTE MATERIAL, INCLUDING GRASS, VEGETATION AND TURF OFF OWNER'S PROPERTY.
17. PRIOR TO LAYING SOD THE CONTRACTOR SHALL DEMONSTRATE TO THE OWNER AND LANDSCAPE ARCHITECT THAT WATER IS AVAILABLE AND IN A WORKING ORDER TO ADEQUATELY COVER ALL SODDED AREAS. THE LANDSCAPE CONTRACTOR MUST COORDINATE WITH THE GENERAL CONTRACTOR AND OWNER, TO CONNECT TO BUILDING HOSE BIBS OR OTHER MEANS PRIOR TO SOD INSTALLATION. LAY SOD WITHIN 24 HOURS OF HARVESTING. DO NOT LAY SOD IF DORMANT OR IF GROUND IS FROZEN OR MUDDY.
18. LAY SOD TO FORM A SOLID MASS WITH TIGHTLY FITTED JOINTS. BUTT ENDS AND SIDES OF SOD; DO NOT STRETCH OR OVERLAP. STAGGER SOD STRIPS OR PADS TO OFFSET JOINTS IN ADJACENT COURSES. AVOID DAMAGE TO SUBGRADE OR SOD DURING INSTALLATION. TAMP AND ROLL LIGHTLY TO ENSURE CONTACT WITH SUBGRADE, ELIMINATE AIR POCKETS, AND FORM A SMOOTH SURFACE. WORK SIFTED SOIL OR FINE SAND INTO MINOR CRACKS BETWEEN PIECES OF SOD; REMOVE EXCESS TO AVOID SMOTHERING SOD AND ADJACENT GRASS. DO NOT ALLOW EDGES OF SOD TO TURN UP WHEN INSTALLING.
19. LAY SOD ACROSS ANGLE OF SLOPES EXCEEDING 1:3.
20. ANCHOR SOD ON SLOPES EXCEEDING 1:6 WITH WOOD PEGS OR STEEL STAPLES SPACED AS RECOMMENDED BY SOD MANUFACTURER BUT NOT LESS THAN 2 ANCHORS PER SOD STRIP TO PREVENT SLIPPAGE.
21. SATURATE SOD WITH FINE WATER SPRAY WITHIN TWO HOURS OF PLANTING. DURING FIRST WEEK, WATER DAILY OR MORE FREQUENTLY AS NECESSARY TO MAINTAIN MOIST SOIL TO A MINIMUM DEPTH OF 1-1/2 INCHES BELOW SOD.
22. INSTALL SEEDED LAWNS AT RATES PER INSTALLATION RECOMMENDATIONS BASED ON SEED TYPE AND MANUFACTURER INSTRUCTIONS. INSTALL STRAW MULCH AND BLADE IN TO PROVIDE EROSION CONTROL.
23. REESTABLISH LAWNS THAT DO NOT COMPLY WITH REQUIREMENTS AND CONTINUE MAINTENANCE UNTIL LAWNS ARE SATISFACTORY. SATISFACTORY SODDED AND SEEDED LAWN: WITHIN 60 DAYS AND AT END OF MAINTENANCE PERIOD, A HEALTHY, UNIFORM, CLOSE STAND OF GRASS HAS BEEN ESTABLISHED, FREE OF WEEDS AND SURFACE IRREGULARITIES, WITH COVERAGE EXCEEDING (90 PERCENT OVER ANY 10 SQ. FT. AND BARE SPOTS NOT EXCEEDING 5 BY 5 INCHES).
24. PROMPTLY REMOVE SOIL AND DEBRIS CREATED BY LAWN WORK FROM PAVED AREAS. CLEAN WHEELS OF VEHICLES BEFORE LEAVING SITE TO AVOID TRACKING SOIL ONTO ROADS, WALKS, OR OTHER PAVED AREAS. ERECT BARRICADES AND WARNING SIGNS AS REQUIRED TO PROTECT NEWLY PLANTED AREAS FROM TRAFFIC. MAINTAIN BARRICADES THROUGHOUT MAINTENANCE PERIOD AND REMOVE AFTER LAWN IS ESTABLISHED. REMOVE EROSION CONTROL MEASURES AFTER GRASS ESTABLISHMENT PERIOD.

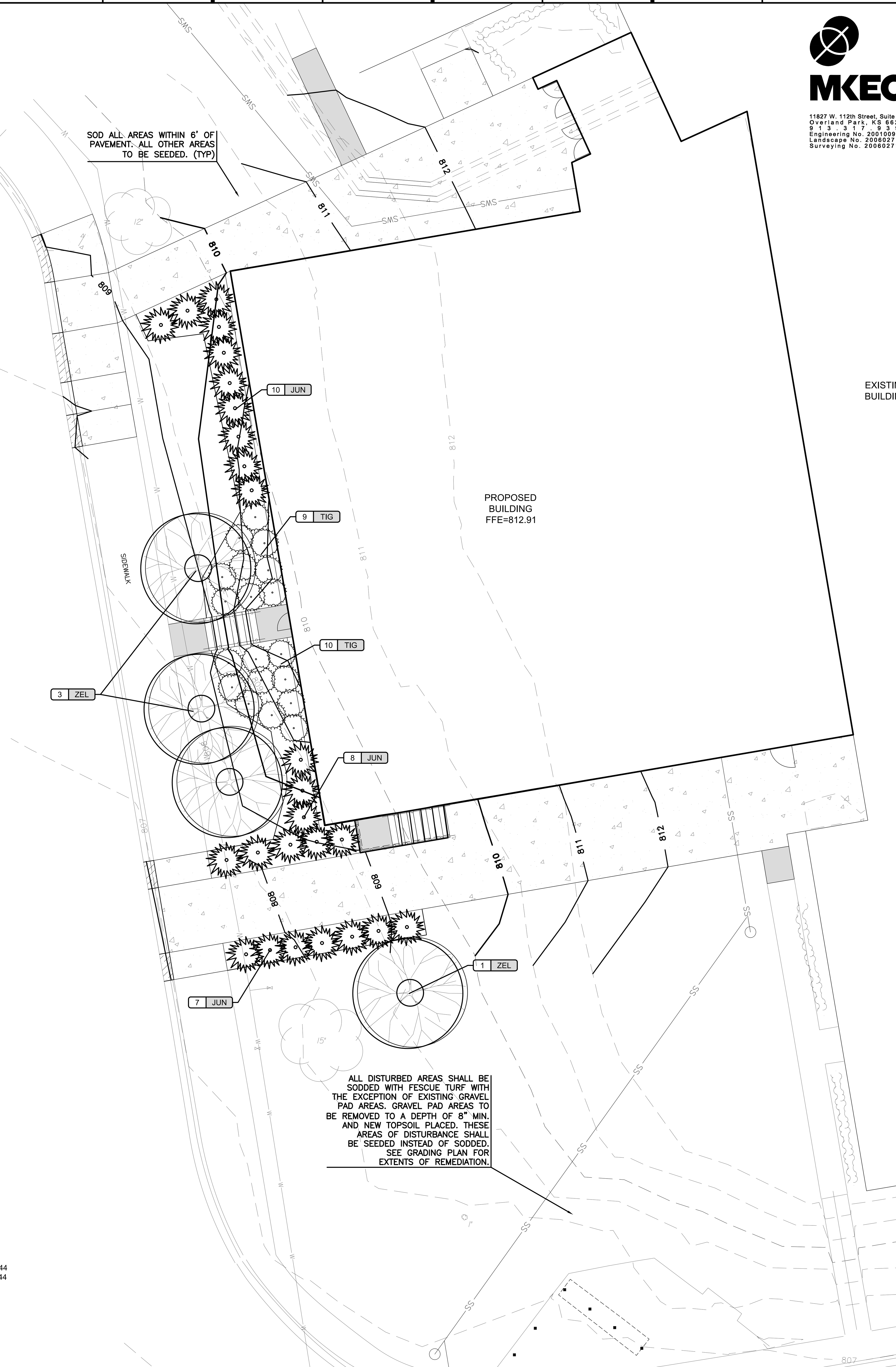

SOD INSTALLATION NOTE:
1. FINISH GRADES SHALL BE ACCURATE.
2. CULTIVATE ENTIRE AREA TO A MINIMUM 6" DEPTH. EXCEPTIONS TO AREAS MAY BE MADE IF TREE ROOTS ARE ENCOUNTERED WITHIN THE DRIPLINE OF EXISTING TREES. HAND RAKE SMOOTH.
3. ADD ADDITIVES (AS PER SOIL TEXT RECOMMENDATIONS) AND TILL INTO SOIL.
4. LAY AND ROLL SOD. WATER THOROUGHLY.

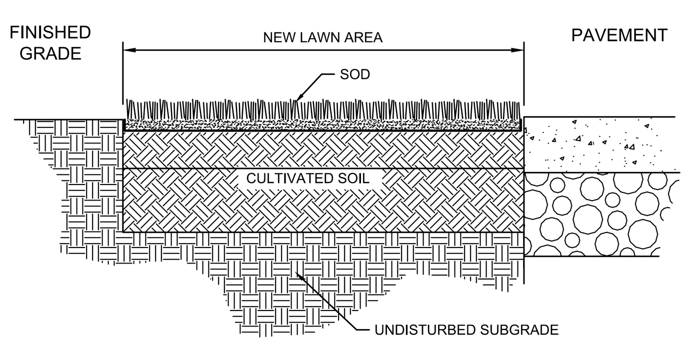

SOD INSTALLATION
N.T.S.

NOTE:
BALL OF PLANT TO BE KEPT MOIST AND PROTECTED FROM DAMAGE PRIOR TO PLANTING. ADD ROOT STIMULATOR TO SURFACE IMMEDIATELY AFTER PLANTING AS PER THE MANUFACTURER'S RECOMMENDATIONS. PLANTING DEPTH OF ROOTBALL SHALL BE EQUAL TO ITS ORIGINAL PLANTING DEPTH AT NURSERY. DO NOT OVER TIGHTEN GUYS.

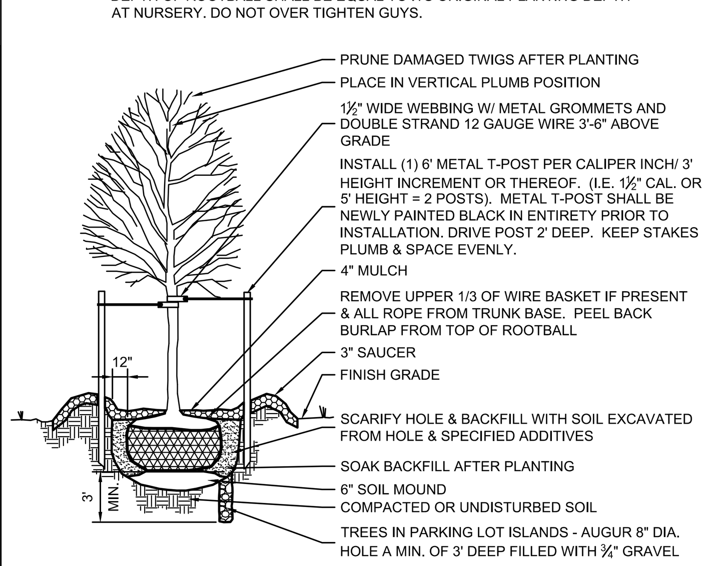

DECIDUOUS TREE PLANTING
N.T.S.

NOTE:
BALL OF PLANT TO BE KEPT MOIST AND PROTECTED FROM DAMAGE PRIOR TO PLANTING. ADD ROOT STIMULATOR TO SURFACE IMMEDIATELY AFTER PLANTING AS PER THE MANUFACTURER'S RECOMMENDATIONS. PLANTING DEPTH OF ROOTBALL SHALL BE EQUAL TO ITS ORIGINAL PLANTING DEPTH AT NURSERY. DO NOT OVER TIGHTEN GUYS.

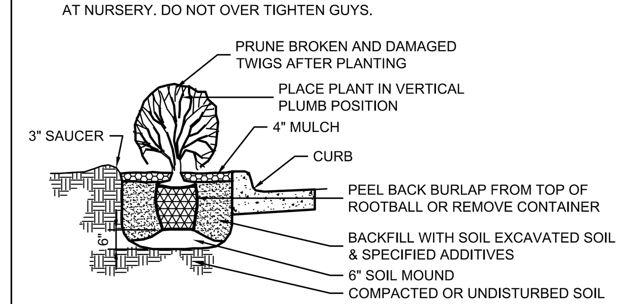

SHRUB PLANTING ADJACENT TO CURB
N.T.S.

CITY LANDSCAPE REQUIREMENT INFORMATION:

1. PER CITY OF LIBERTY UNIFIED DEVELOPMENT CODE 30-97.4, 4 LARGE TREES AND 44 SHRUBS ARE REQUIRED FOR THE 10,450 S.F. BUILDING ADDITION. 4 LARGE TREES 44 SHRUBS ARE INCLUDED IN THE LANDSCAPE PLAN.

PLANT SCHEDULE

KEY	QTY	COMMON NAME	BOTANICAL NAME	SIZE & METHOD OF HANDLING
TREES				
ZEL	4	MUSASHINO ZELKOVA	ZELKOVA SERRATA 'MUSASHINO'	2.0" CAL, 12' MIN. HT.
SHRUBS				
JUN	25	SEA GREEN JUNIPER	JUNIPERUS CHINENSIS 'SEA GREEN'	3 GAL.
TIG	19	TIGER EYE SUMAC	RHUS TYPHINA 'TIGER EYES'	3 GALLON
GROUND COVER				
TURF	N/A	FESCUE TURF GRASS	SEE LAWN NOTES	SOD/SEED

N

SCALE: 1"=10'
0 10 20

MKEC
11827 W. 112th Street, Suite 200
Overland Park, KS 66210
913.317.9390
Engineering No. 2001009364
Landscape No. 2006027139
Surveying No. 2006027138

hollis + miller architects®
we design the future®
1828 Walnut Street Suite 922
Kansas City, MO 64108
T 816.442.7700
115 Wilcox Street Suite 210
Castle Rock, CO 80104
T 720.949.1689
HOLLISANDMILLER.COM

Hollis + Miller Architects
Missouri State Certificate of Authority
Architecture # 0000161
Structure # 2006031333

MKEC Engineering, Inc.
Civil Engineering / Landscape Architecture
State Certificate of Authority #:
Engineering: 2001009364
Landscaping: 2006027139
Surveying: 2006027138
11827 W. 112th St, Ste 200
Overland Park, KS 66210
913.317.9390 phone

Smith & Boucher Engineers
Mech/Elect/Plumb Engineer
State Certificate of Authority #EGC-0001787
25501 W. Valley Parkway, Ste 200
Olathe, KS 66061
913.345.2127 phone

Bob D Campbell
Structural Engineer
State Certificate of Authority #000442
4338 Belleview Ave
Kansas City, MO 64111
816.531.4144 phone

Discovery Middle School Storm Shelter Addition
Liberty Public Schools
800 Midjay Dr, Liberty, MO 64068

Conformed Construction Documents

REVISIONS:

#	Description	Date

STATE OF MISSOURI – BRIAN HOCHSTEIN – NUMBER LA-2010013958 – LANDSCAPE ARCHITECT
10.11.2023

BRIAN J. HOCHSTEIN, L.A.
LISC. #2010013958

The Professional Engineers seal affixed to this sheet applies only to the material and items shown on this sheet. All drawings, instruments or other documents not exhibiting this seal shall not be considered prepared by this engineer, and this engineer expressly disclaims any and all responsibility for such plan, drawings, or documents not exhibiting this seal.

JOB NO: 23018
DRAWN BY: BJH
CHECKED BY: BJH
DATE: 10.11.2023

L100

LANDSCAPE PLAN

Please consider the environment before printing this.

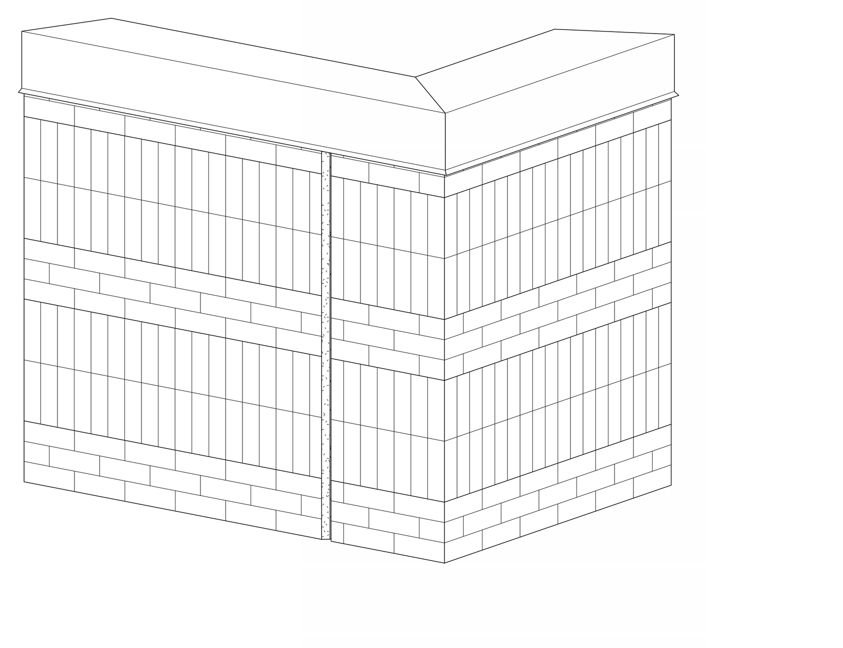

M5 — Scale: No Scale — 3D Precast Mockup

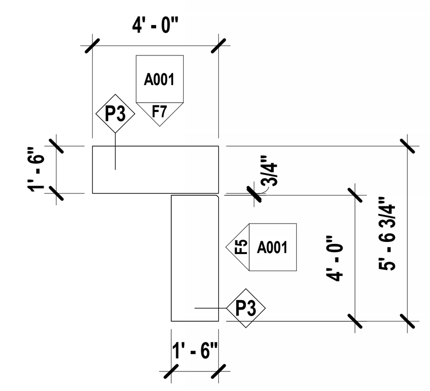

J5 — Scale: 1/4" = 1'-0" — Enlarged Plan - Precast Mockup

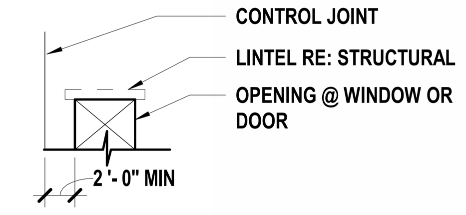

NOTE: CONTROL JOINT FOR CMU OPENINGS W/ STEEL OR BOND BEAM LINTELS. LOCATE CONTROL JOINTS @ 20'-0" MAX SPACING UNLESS SHOWN OTHERWISE ON PLANS.

CMU CONTROL JOINT @ OPENINGS

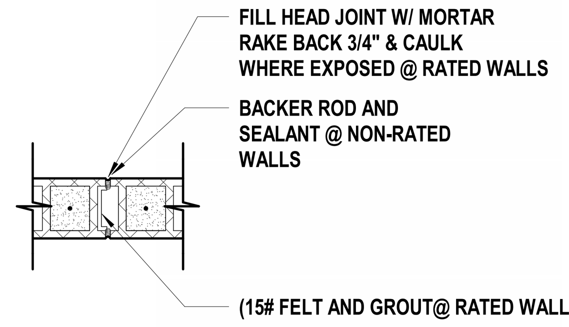

CMU WALL CONTROL JOINT

NOTE: INTERRUPT JOINT REINFORCING @ CONTROL JOINTS

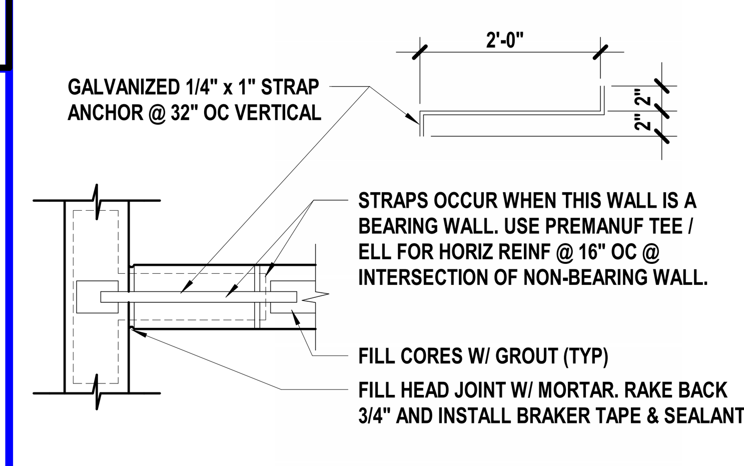

CMU WALL INTERSECTIONS

NOTE: INTERRUPT JOINT REINFORCING @ WALL INTERSECTIONS

J9 — Scale: 1 : 1 — Control Joint Legend - CMU Only

SYMBOL LEGEND

BRICK (in section)	Classroom A101 — RM NAME / RM NUMBER
CONCRETE MASONRY UNIT - CMU (in section)	A123 — DOOR NUMBER
CONCRETE (in section)	A — WALL TYPE
GYP BD (in section)	A — FRAME TYPE
PLYWOOD (in section)	1 — GLASS TYPE
RIGID INSUL & EIFS (in section)	A10 / A500 — SECTION CUT LINE
BATT INSUL (in section)	ELEVATION SYMBOL (A1, N1, A601, E1, J1) — ELEV NUMBER / SHEET NUMBER
ACOUSTICAL TILE (in section)	A9 / A120 — ENLARGED DETAIL
STUCCO (in section)	Joist Bearing 100'-0" — DATUM MARKER
SOIL	AREA "A" / AREA "B"
SAND	MATERIAL JOINT
CONTINUOUS LUMBER	BUILDING EXPANSION JOINT
BLOCKING/SHIM	
FINISH LUMBER/ HARDWOOD	
STEEL OR METAL	

SHEET KEYNOTES

03 41 00.A01	PRECAST STRUCTURAL CONCRETE
03 41 00.A11	INSULATION
04 20 00.A01	CONCRETE MASONRY UNITS
05 31 00.A01	ROOF DECK
05 40 00.A01	COLD-FORMED METAL FRAMING
06 16 00.A02	FIRE-RETARDANT TREATED PLYWOOD
06 16 00.A04	GLASS-MAT GYPSUM WALL SHEATHING
07 21 00.A08	UNFACED GLASS FIBER BLANKET INSULATION
07 25 00.A02	SELF-ADHERING WEATHER BARRIERS
07 27 26.A01	VAPOR RETARDING FLUID-APPLIED AIR BARRIER
07 42 13.A03	CONCEALED FASTENER METAL WALL PANELS
07 44 00.A01	CONCRETE-FACED RIGID INSULATION
07 48 00.A01	RAINSCREEN FURRING SYSTEM
07 48 00.A02	RAINSCREEN FURRING SYSTEM INSULATION
07 84 13.A01	FIRESTOPPING
07 84 46.A01	FIRE RESISTIVE JOINT SYSTEM
09 21 16.A01	NON-STRUCTURAL FRAMING
09 29 00.A02	GYPSUM BOARD - TYPE X
09 29 00.A05	ABUSE/IMPACT-RESISTANT GYPSUM BOARD
09 29 00.A06	MOLD AND MOISTURE RESISTANT GYPSUM BOARD

ABBREVIATIONS

A	
ACT	acoustical
ADJ	adjustable/adjacent
AFF	above finish floor
ALUM	aluminum
ALT	alternate
ANOD	anodized
APPROX	approximate(ly)
ARCH	architect(ural)
B	
BLDG	building
BLKG	blocking
BM	beam
BOT	bottom of
BRG	bearing
BRKT	bracket
BTM	bottom
BSMT	basement
BTWN	between
C	
CAB	cabinet
CC	center to center
CEM	cement(itious)
CG	corner guard
CJ	control joint
CLG	ceiling
CLR	clear(ance)
CM	contruction manager
CMU	concrete masonry unit
COL	column
CONC	concrete
CONST	construction
CONT	continuous
CTR	center
CY	cubic yard(s)
D	
DF	drinking fountain
DIA	diameter
DIM	dimension(s)
DN	down
DS	downspout
DTL	detail
DWG	drawing
E	
E	east
EA	each
EF	each face
EIFS	exterior insulation finish system
EJ	expansion joint
ELEC	electrical
ELEV	elevation
EQ	equal
EQUIP	equipment
ETR	existing to remain
EW	each way
EXIST	existing
EXP	expansion
EXT	exterior
F	
FA	fire alarm
FD	floor drain
FND	foundation
FE	fire extinguisher
FEC	fire extinguisher cabinet
FF	finish floor
FH	fire hose
FIN	finish(ed)
FIXT	fixture
FLR	floor
FLEX	flexible
FOM	face of masonry
FOPC	face of precast
FOS	face of stud
FT (')	foot
FTG	footing
FV	field verify
G	
GA	gauge
GALV	galvanized
GC	general contractor
GEN	general
GL	glass
GR	grade
GYP	gypsum
GYP BD	gypsum board
H	
HC	handicapped
HD	head
HDWD	hardwood
HDWR	hardware
HM	hollow metal
HORIZ	horizontal
HR	hour
HT	height
HVAC	heating, ventilation & air conditioning
I	
ID	inside diameter
IN (")	inch(es)
INDIV	individual
INFO	information
INSUL	insulation
INT	interior
J	
JST	joist
JT	joint
K	
KIT	kitchen
L	
LKR	locker
LT	light
M	
MAS	masonry
MATL	material
MAX	maximum
MB	markerboard
MECH	mechanical
MEP	mechanical/electrical/plumbing
MFR	manufacturer
MIN	minimum
MISC	miscellaneous
MO	masonry opening
MTD	mounted
MTG HT	mounting height
MTL	metal
MULL	mullion
N	
N	north
NIC	not in contract
NO (#)	number
NOM	nominal
NRC	noise reduction coefficient
NTS	not to scale
O	
OC	on center
OD	outside diameter
OTS	open to structure
OPNG	opening
OPP	opposite
P	
PAR	parallel
PCP	portland cement plaster
PERP	perpendicular
PL	property line
PLBG	plumbing
PLYWD	plywood
PNL	panel
PR	pair
PREFAB	prefabricated
PTD	painted
PVC	polyvinyl chloride
R	
RAD	radius
RD	roof drain
RE:	refer to
REINF	reinforcing (ed)
REV	reversed
REQ'D	required
RFG	roofing
S	
S	south
SCHED	schedule
SECT	section
SF	square foot
SHT	sheet
SHWR	shower
SIM	similar
SPEC	specification
SQ	square
SSTL	stainless steel
STC	sound transmission coeficient
STD	standard
STL	steel
STRUCT	structure(al)
SUSP	suspend(ed)
SY	square yard
SYM	symmetrical
T	
T&B	top & bottom
T&G	tongue & groove
TO	top of
TOC	top of curb
TOM	top of masonry
TOS	top of slab/steel
TOW	top of wall
TS	tube steel
TYP	typical
U	
UNO	unless noted otherwise
V	
VERT	vertical
VTR	vent thru roof
W	
W	west
WD	wood
WDO	window
W/	with
W/O	without
Y	
YD	yard
SYMBOLS	
/	per (or by)
&	and
@	at
[	channel
¢	centerline
Ø	diameter/round
±	plus/minu

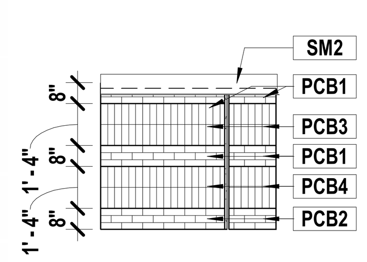

F5 — Scale: 1/4" = 1'-0" — Mockup 1

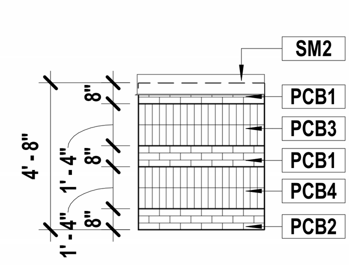

F7 — Scale: 1/4" = 1'-0" — Mockup 2

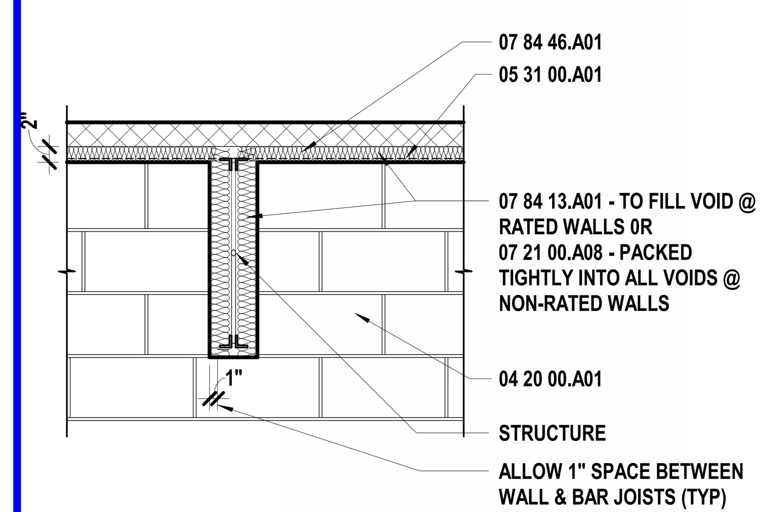

F9 — Scale: 3/4" = 1'-0" — Structural Joist Pentration @ Rated & Non-Rated Walls

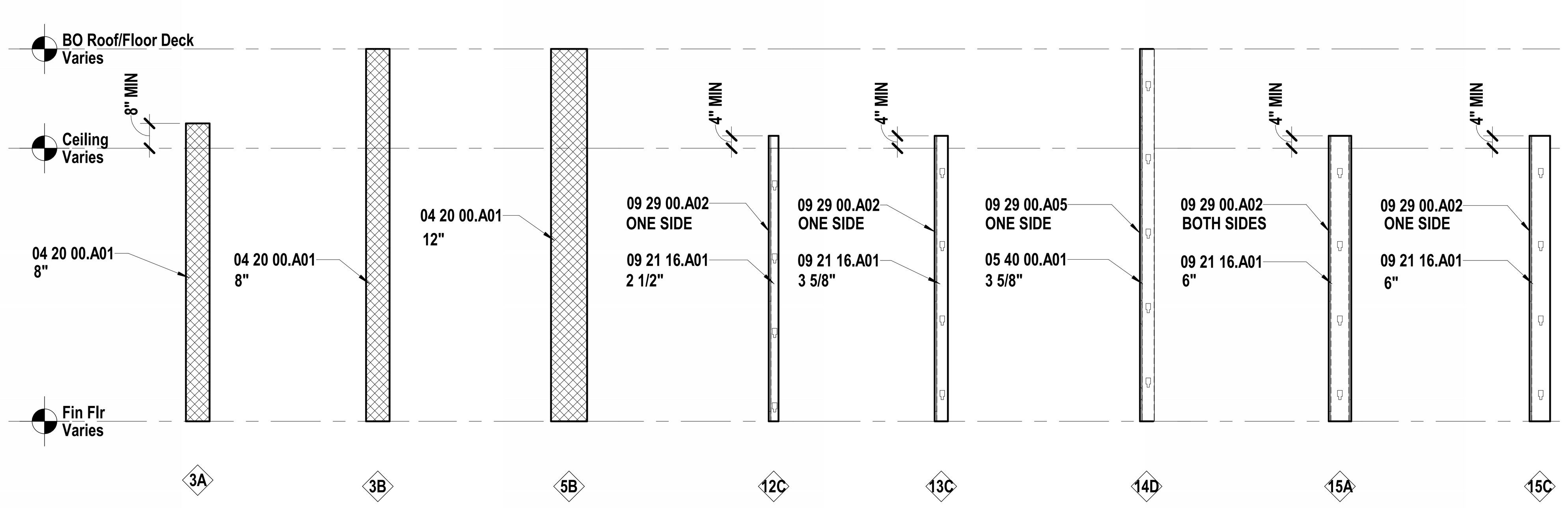

A1 — Scale: 3/8" = 1'-0" — Interior Wall Types

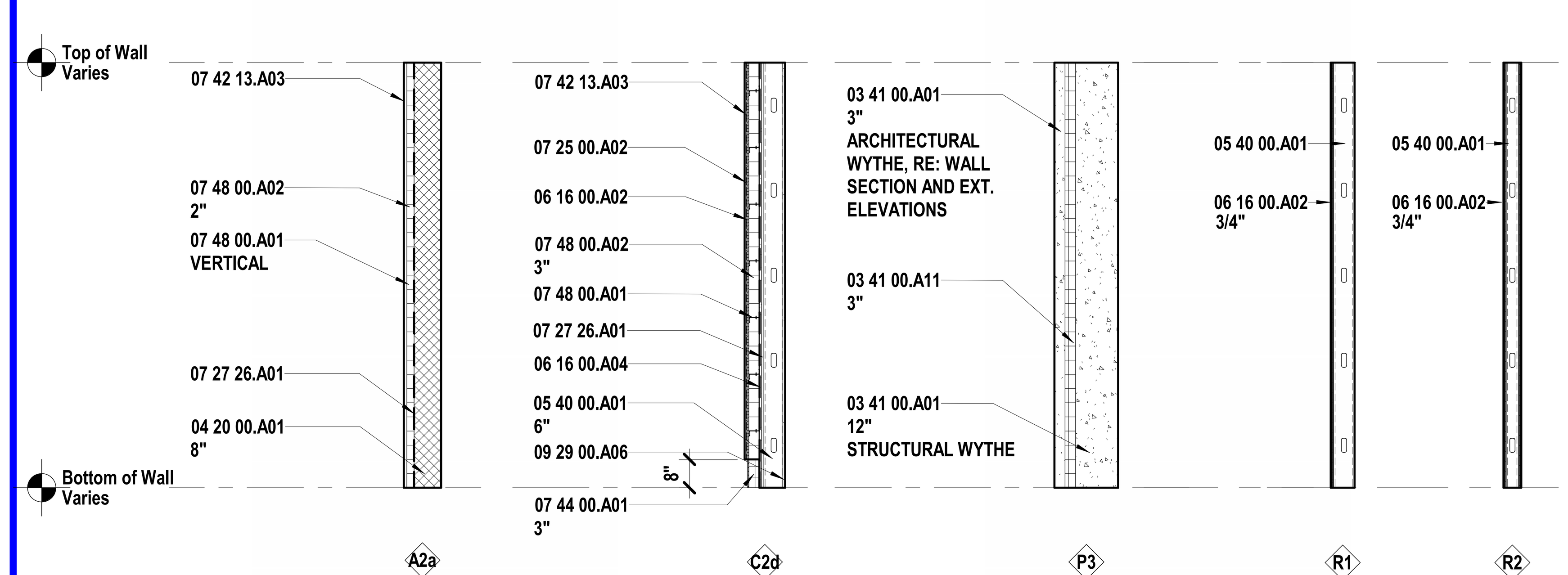

A9 — Scale: 3/8" = 1'-0" — Exterior Wall Types

hollis + miller architects®

we design the future®

1828 Walnut Street Suite 922
Kansas City, MO 64108
T 816.442.7700

115 Wilcox Street Suite 210
Castle Rock, CO 80104
T 720.949.1689

HOLLISANDMILLER.COM

Hollis + Miller Architects
Missouri State Certificate of Authority
Architecture # 0000161
Structure # 2006031333

Bob D Campbell
Structural Engineer
State Certificate of Authority #000442
4338 Belleview Ave
Kansas City, MO 64111
816.531.4144 phone

Smith & Boucher, Inc.
Mechanical, Electrical, & Plumbing
State Certificate of Authority #EGC000178
25618 W 103rd Street
Olathe, KS 66061
913.345.2127 phone

MKEC Engineering, Inc.
Civil Engineer
State Certificate of Authority
Engineering #2001009364
Landscaping #2006027139
Surveying #2006027138
11827 W 112th Street, Suite 200
Overland Park, KS 66210
913.317.9390 phone

Peerbolte Creative
Theatrical Consultant
109 E Pine St.
Warrensburg, MO 64093-0752
660.429.1383 phone

Avant Acoustics
AV/Acoustics Consultant
14827 West 95th St.
Lenexa, KS 66215
913.888.9111 phone

Discovery Middle School Storm Shelter Addition
Liberty Public Schools
800 Midjay Dr, Liberty, MO 64068

CONFORMED CONSTRUCTION DOCUMENTS

REVISIONS:

#	Description	Date

OCTOBER 11, 2023

Kevin E. Nelson
A-2019015618

The Professional Architects seal affixed to this sheet applies only to the material and items shown on this sheet. All drawings, instruments or other documents not exhibiting this seal shall not be considered prepared by this architect, and this architect expressly disclaims any and all responsibility for such plan, drawings, or documents not exhibiting this seal.

JOB NO: 23018
DRAWN BY: ES
CHECKED BY: JB
DATE: 10.11.2023

A001

GENERAL ARCHITECTURAL INFORMATION

Please consider the environment before printing this.

10/11/2023 3:54:24 PM

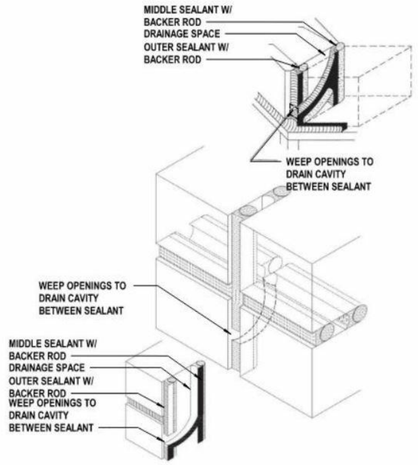

M1 Scale 1/4" = 1'-0" — Typical Two Stage Exterior Precast Expansion Joint

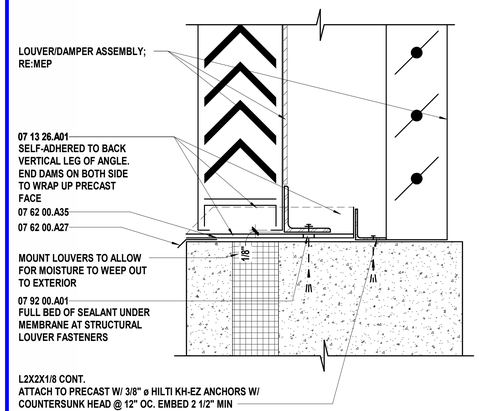

M5 Scale 3" = 1'-0" — High Wind Detail - Exterior Wall Louver - High

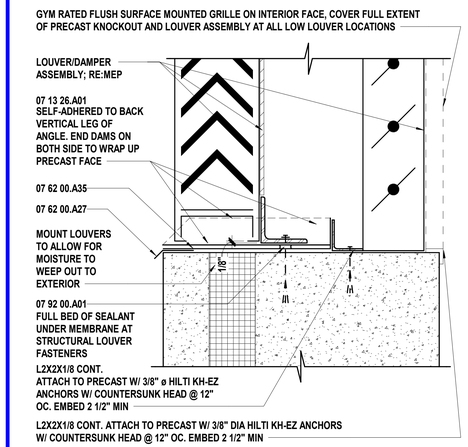

M9 Scale 3" = 1'-0" — High Wind Detail - Exterior Wall Louver - Low

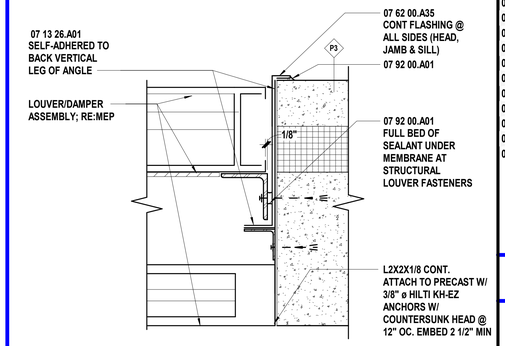

M13 Scale 3" = 1'-0" — High Wind Detail - Exterior Wall Louver Jamb - High

SHEET KEYNOTE LEGEND

07 13 26.A01	SELF ADHERING SHEET WATERPROOFING
07 14 16.A01	COLD FLUID-APPLIED WATERPROOFING
07 14 16.A03	REINFORCING FABRIC
07 14 16.A04	WATERPROOFING FILLER
07 14 16.A06	MOLDED SHEET DRAINAGE PANELS
07 21 00.A17	MINERAL WOOL
07 62 00.A27	DRIP EDGES
07 62 00.A35	PRE-FINISHED MISC METAL FLASHING
07 84 46.A01	FIRE RESISTIVE JOINT SYSTEM
07 92 00.A01	SEALANT
07 92 00.A02	SEALANT W/BACKER ROD
07 95 00.A23	PRE-FORMED CELLULAR FOAM SECONDARY SEAL

CONTROL JOINT LEGEND

- PRECAST JOINT
- MATERIAL JOINT
- 2" BUILDING EXPANSION JOINT

hollis+miller architects®
we design the future®
1828 Walnut Street Suite 922
Kansas City, MO 64108
t 816.442.7700
115 Wilcox Street Suite 210
Castle Rock, CO 80104
t 720.949.1689
HOLLISANDMILLER.COM
Hollis + Miller Architects
Missouri State Certificate of Authority
Architecture # 000161
Structure # 2006031333

Bob D Campbell
Structural Engineer
State Certificate of Authority #000442
4338 Belleview Ave
Kansas City, MO 64111
816.531.4144 phone

Smith & Boucher, Inc.
Mechanical, Electrical, & Plumbing
State Certificate of Authority #EGC000178
25618 W 103rd Street
Olathe, KS 66061
913.345.2127 phone

MKEC Engineering, Inc.
Civil Engineer
State Certificate of Authority
Engineering #2001009364
Landscaping #2006027139
Surveying #2006027138
11827 W 112th Street, Suite 200
Overland Park, KS 66210
913.317.9390 phone

Peerbolte Creative
Theatrical Consultant
109 E Pine St.
Warrensburg, MO 64093-0752
660.429.1383 phone

Avant Acoustics
AV/Acoustics Consultant
14827 West 95th St.
Lenexa, KS 66215
913.888.9111 phone

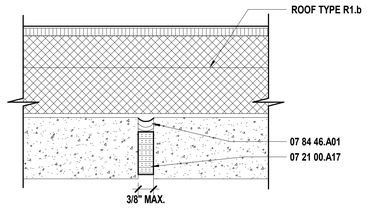

J1 Scale 3" = 1'-0" — Roof Detail - @ Double Tee Expansion Joint

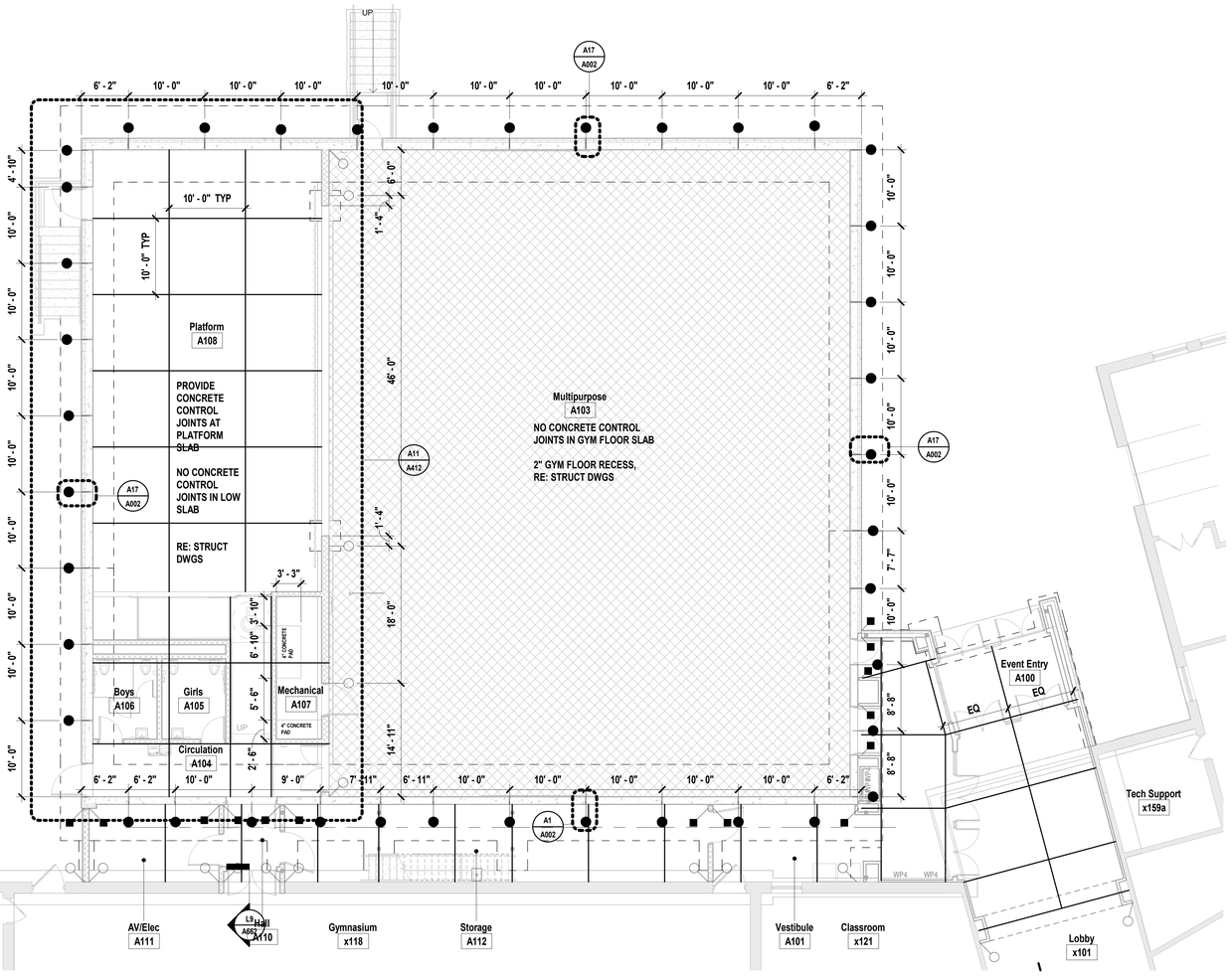

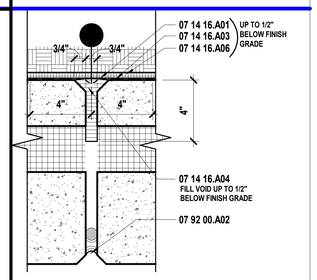

J17 Scale 3" = 1'-0" — P3 Precast Panel Joint Below Grade

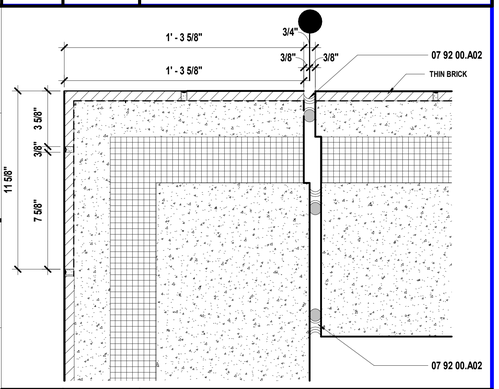

E1 Scale 3" = 1'-0" — Precast Outside Corner Joint @ Thin Brick

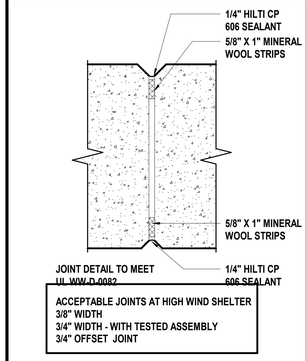

E17 Scale 3" = 1'-0" — Precast Joint - Interior 2 Hr rated

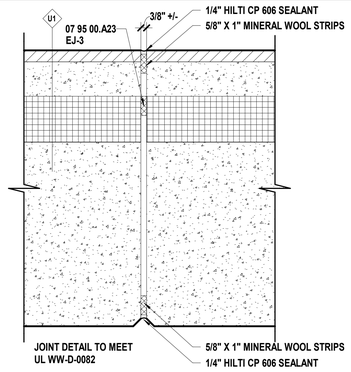

A1 Scale 3" = 1'-0" — High Wind Detail - Precast Joint - 2 Hr Rated

A5 Scale 1/8" = 1'-0" — Area A Joints

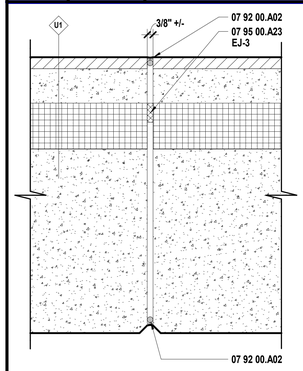

A17 Scale 3" = 1'-0" — P3 Precast Joint - no rating

Discovery Middle School Storm Shelter Addition

Liberty Public Schools

800 Midjay Dr, Liberty, MO 64068

CONFORMED CONSTRUCTION DOCUMENTS

REVISIONS:

#	Description	Date

STATE OF MISSOURI — KEVIN E. NELSON — A-2019015618 — ARCHITECT

OCTOBER 11, 2023

Kevin E. Nelson
A-2019015618

The Professional Architects seal affixed to this sheet applies only to the material and items shown on this sheet. All other information shown on this sheet is provided for coordination purposes only. Reproduction of this sheet without the seal and this architect expressly disclaims any and all responsibility for such plan, drawings, or documents not exhibiting the seal.

JOB NO: 23018
DRAWN BY: LB
CHECKED BY: JB
DATE: 10.11.2023

A002

SLAB, PRECAST, & CMU JOINTS

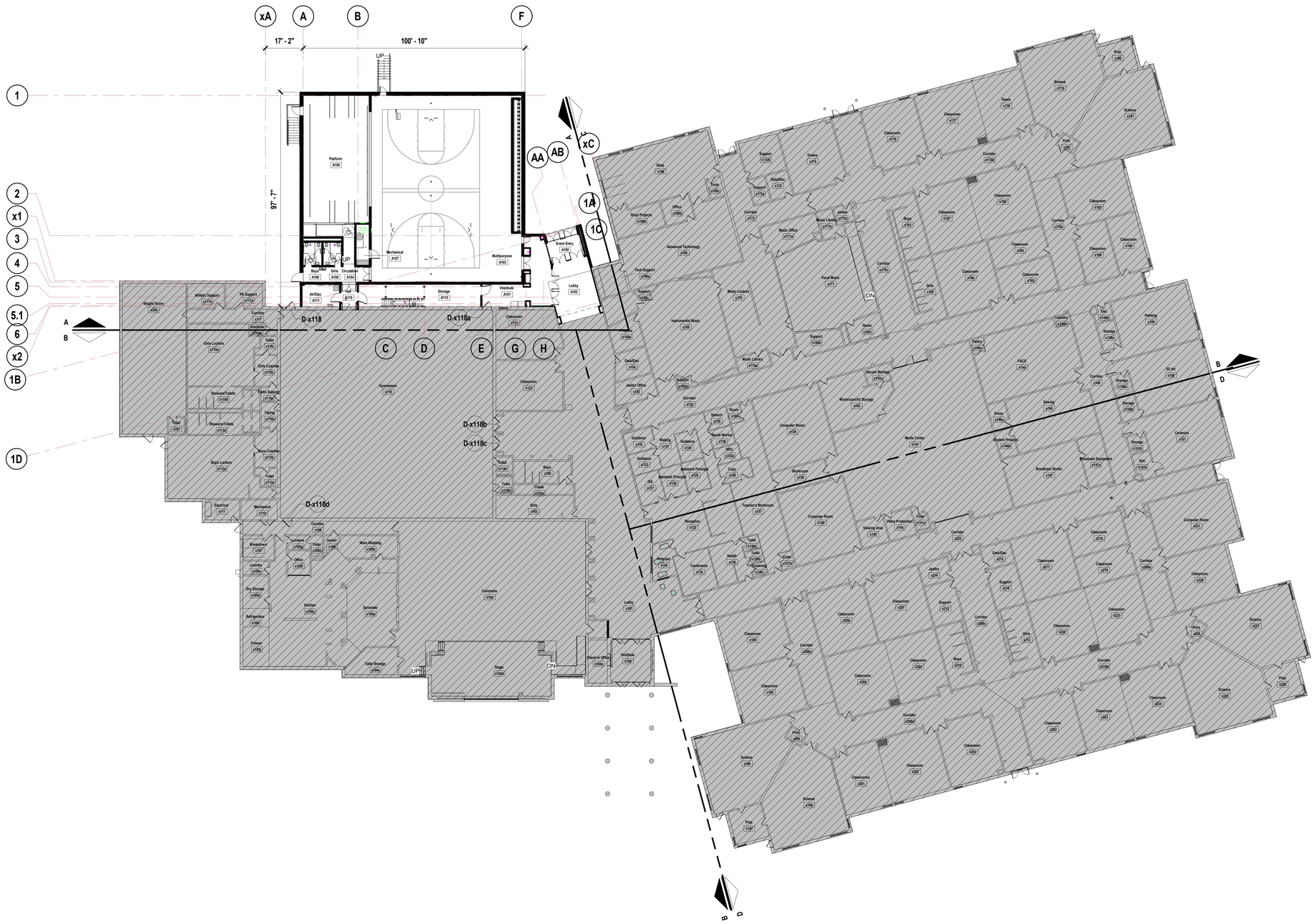

SHEET KEYNOTE LEGEND

SHEET NOTES

1. REFER TO SHEET G000 FOR SHEET INDEX
2. DO NOT SCALE THIS DRAWING
3. INTERIOR DIMENSIONS ARE TO THE FOLLOWING, UNLESS NOTED OTHERWISE:
   A. TO FACE OF STUD
   B. TO FACE OF MASONRY UNIT
   C. TO FACE OF DOOR AND WINDOW ROUGH OPENINGS
4. EXTERIOR DIMENSIONS ARE TO THE FOLLOWING, UNLESS NOTED OTHERWISE:
   A. TO FACE OF STUD
   B. TO FACE OF MASONRY UNIT
   C. TO FACE OF PRECAST
5. COORDINATE LOCATIONS WHERE BACKING IS REQUIRED FOR WALL HUNG CASEWORK, MARKERBOARDS, WALL HUNG ACCESSORIES AND TECHNOLOGY
6. COORDINATE FINISHES TO REMAIN WITH DEMOLITION SHEET

hollis + miller architects®

we design the future®

1828 Walnut Street Suite 922
Kansas City, MO 64108
t 816.442.7700

115 Wilcox Street Suite 210
Castle Rock, CO 80104
t 720.949.1689

HOLLISANDMILLER.COM

Hollis + Miller Architects
Missouri State Certificate of Authority
Architecture # 000161
Structure # 2006031333

Bob D Campbell
Structural Engineer
State Certificate of Authority #000442
4338 Belleview Ave
Kansas City, MO 64111
816.531.4144 phone

Smith & Boucher, Inc.
Mechanical, Electrical, & Plumbing
State Certificate of Authority #EGC000178
25618 W 103rd Street
Olathe, KS 66061
913.345.2127 phone

MKEC Engineering, Inc.
Civil Engineer
State Certificate of Authority
Engineering #2001009364
Landscaping #2006027139
Surveying #2006027138
11827 W 112th Street, Suite 200
Overland Park, KS 66210
913.317.9390 phone

Peerbolte Creative
Theatrical Consultant
109 E Pine St.
Warrensburg, MO 64093-0752
660.429.1383 phone

Avant Acoustics
AV/Acoustics Consultant
14827 West 95th St.
Lenexa, KS 66215
913.888.9111 phone

Discovery Middle School Storm Shelter Addition

Liberty Public Schools

800 Midjay Dr, Liberty, MO 64068

CONFORMED CONSTRUCTION DOCUMENTS

REVISIONS:

#	Description	Date
1	Addendum 01	09/14/2023

STATE OF MISSOURI
KEVIN E. NELSON
A-2019015618
ARCHITECT

OCTOBER 11, 2023

Kevin E. Nelson
A-2019015618

The Professional Architects seal affixed to this sheet applies only to the material and items shown on this sheet. All other information shown on this sheet is provided for coordination purposes only. Contractors, subcontractors, and suppliers and this architect expressly disclaims any and all responsibility for such plan, drawings, or documents not satisfying the seal.

JOB NO: 23018
DRAWN BY: LB
CHECKED BY: JB
DATE: 10.11.2023

A101

A1 | Scale 1" = 20'-0" | Overall Floor Plan - Level 1

20' 10' 0' 20'

PROJECT NORTH

TRUE NORTH

FLOOR PLAN - LEVEL 1 - OVERALL

Please consider the environment before printing this.

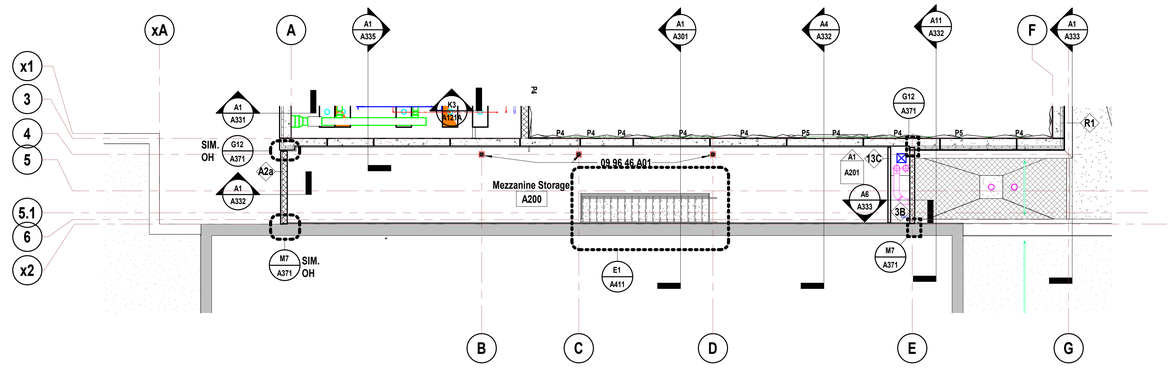

N1 | Scale 1/8" = 1'-0" | Floor Plan - Mezzanine Level- Area A

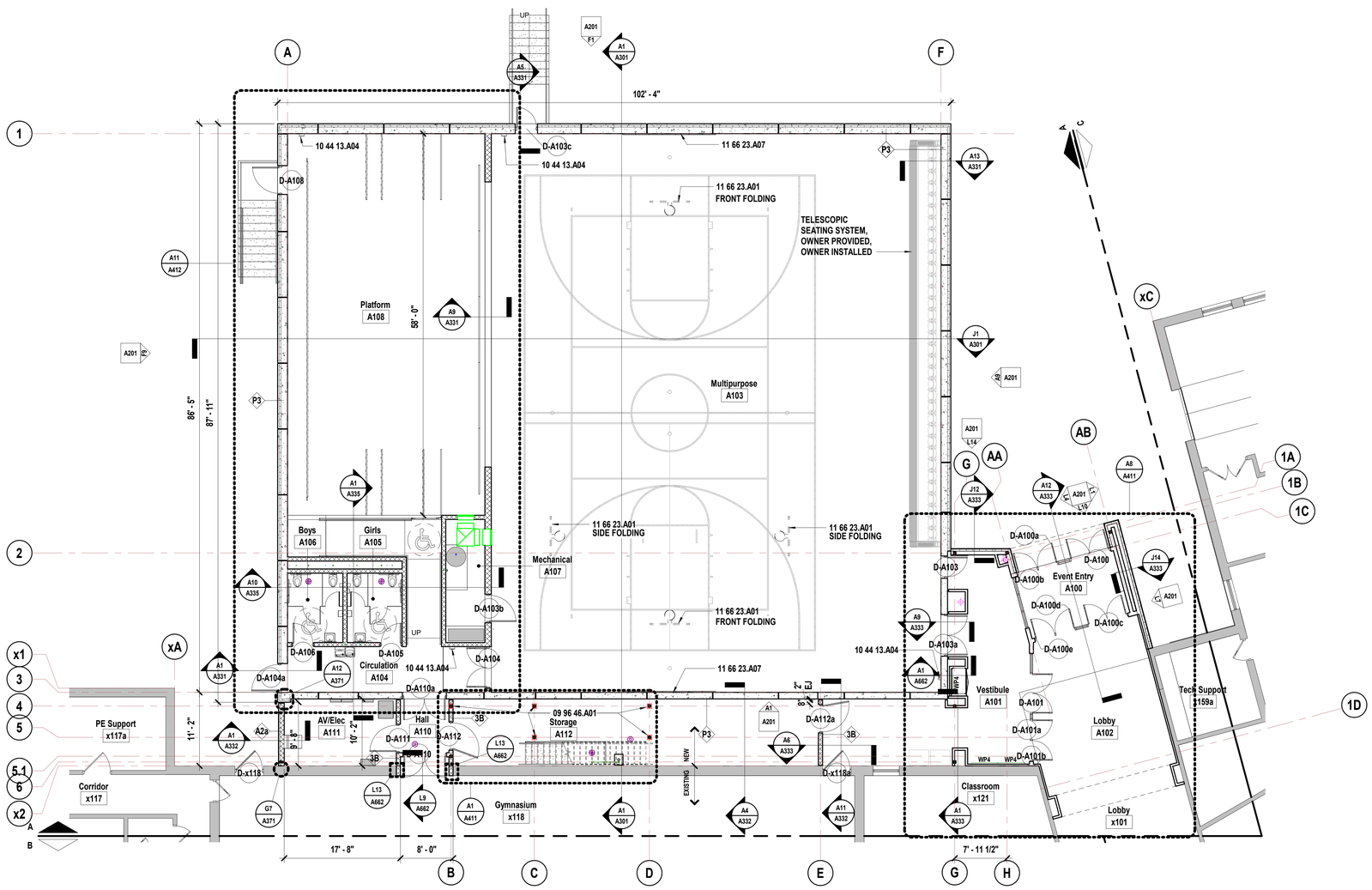

A1 | Scale 1/8" = 1'-0" | Floor Plan - Level 1 - Area A

8' 4' 0' 8'

PROJECT NORTH TRUE NORTH

SHEET KEYNOTE LEGEND

09 96 46.A01	INTUMESCENT PAINT
10 44 13.A04	SURFACE MOUNTED STEEL CABINET
11 66 23.A01	OVERHEAD BACKBOARD SUPPORTS
11 66 23.A07	WALL SAFETY PADS

SHEET NOTES

1. REFER TO SHEET G000 FOR SHEET INDEX
2. DO NOT SCALE THIS DRAWING
3. INTERIOR DIMENSIONS ARE TO THE FOLLOWING, UNLESS NOTED OTHERWISE:
   A. TO FACE OF STUD
   B. TO FACE OF MASONRY UNIT
   C. TO FACE OF DOOR AND WINDOW ROUGH OPENINGS
4. EXTERIOR DIMENSIONS ARE TO THE FOLLOWING, UNLESS NOTED OTHERWISE:
   A. TO FACE OF STUD
   B. TO FACE OF MASONRY UNIT
   C. TO FACE OF PRECAST
5. COORDINATE LOCATIONS WHERE BACKING IS REQUIRED FOR WALL HUNG CASEWORK, MARKERBOARDS, WALL HUNG ACCESSORIES AND TECHNOLOGY
6. COORDINATE FINISHES TO REMAIN WITH DEMOLITION SHEET

KEY PLAN

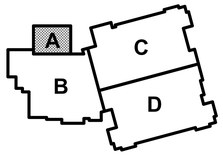

hollis + miller architects®

we design the future®

1828 Walnut Street Suite 922
Kansas City, MO 64108
t 816.442.7700

115 Wilcox Street Suite 210
Castle Rock, CO 80104
t 720.949.1689

HOLLISANDMILLER.COM

Hollis + Miller Architects
Missouri State Certificate of Authority
Architecture # 0000161
Structure # 2006031333

Bob D Campbell
Structural Engineer
State Certificate of Authority #000442
4338 Belleview Ave
Kansas City, MO 64111
816.531.4144 phone

Smith & Boucher, Inc.
Mechanical, Electrical, & Plumbing
State Certificate of Authority #EGC000178
25618 W 103rd Street
Olathe, KS 66061
913.345.2127 phone

MKEC Engineering, Inc.
Civil Engineer
State Certificate of Authority
Engineering #2001009364
Landscaping #2006027139
Surveying #2006027138
11827 W 112th Street, Suite 200
Overland Park, KS 66210
913.317.9390 phone

Peerbolte Creative
Theatrical Consultant
109 E Pine St.
Warrensburg, MO 64093-0752
660.429.1383 phone

Avant Acoustics
AV/Acoustics Consultant
14827 West 95th St.
Lenexa, KS 66215
913.888.9111 phone

Discovery Middle School Storm Shelter Addition

Liberty Public Schools

800 Midjay Dr, Liberty, MO 64068

CONFORMED CONSTRUCTION DOCUMENTS

REVISIONS:

#	Description	Date
1	Addendum 01	09/14/2023
2	Addendum 04	09/29/2023
3	Addendum 05	10/06/2023

STATE OF MISSOURI
KEVIN E. NELSON
A-2019015618
ARCHITECT

OCTOBER 11, 2023

Kevin E. Nelson
A-2019015618

The Professional Architects seal affixed to this sheet applies only to the material and items shown on this sheet. All drawings, instruments or other documents not exhibiting this seal shall not be considered prepared by this architect, and this architect expressly disclaims any and all responsibility for such plan, drawings, or documents not exhibiting this seal.

JOB NO: 23018
DRAWN BY: LB
CHECKED BY: JB
DATE: 10.11.2023

A101A

FLOOR PLAN - LEVEL 1 - AREA A

Please consider the environment before printing this.

10/11/2023 3:54:58 PM

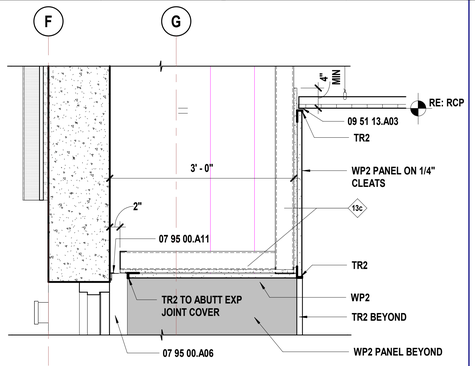

N1	Scale 1" = 1'-0"	Ceiling Detail - Multipurpose Entry

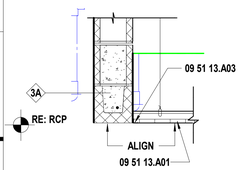

K1	Scale 1" = 1'-0"	Ceiling Detail - Circulation Ramp

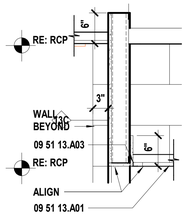

K3	Scale 1" = 1'-0"	Ceiling Detail - High/Low Ceiling

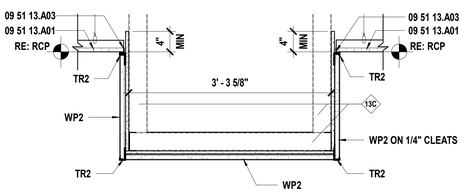

F1	Scale 1" = 1'-0"	Ceiling Detail - Lobby A102

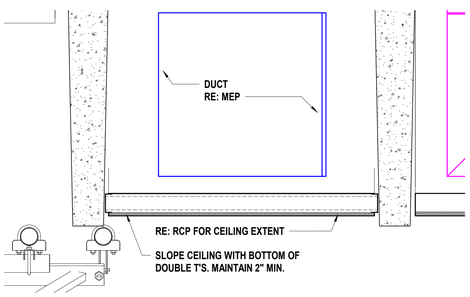

A1	Scale 1" = 1'-0"	Ceiling Detail -

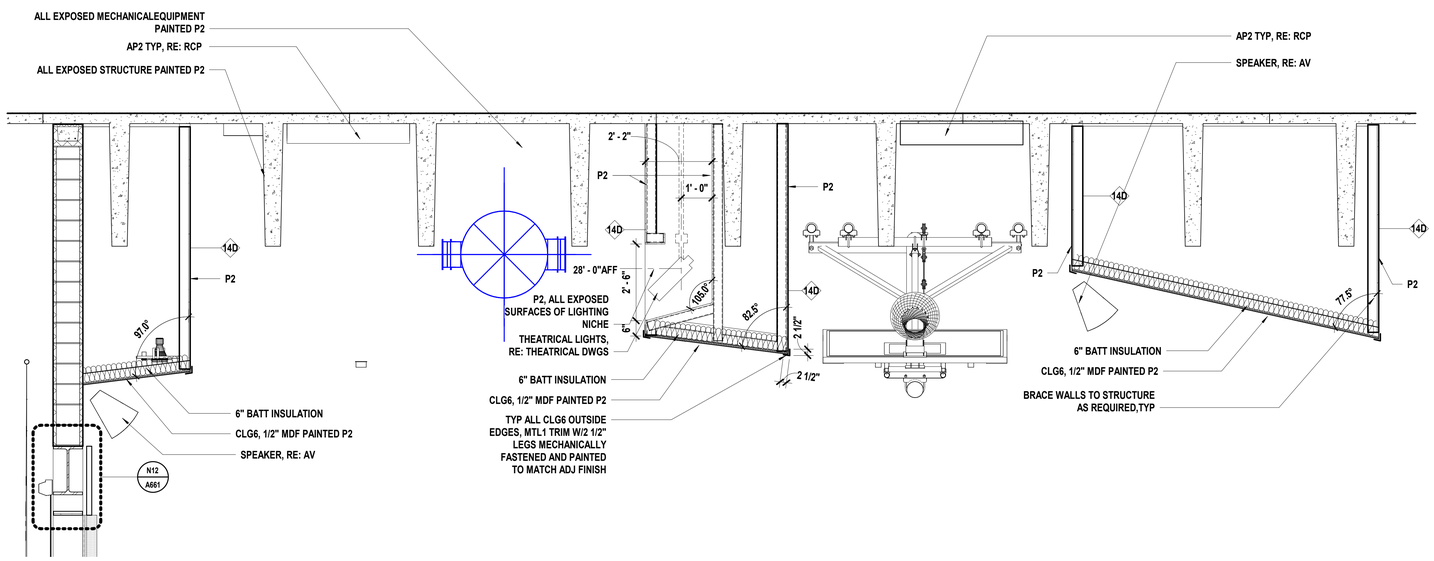

L5	Scale 1/2" = 1'-0"	Ceiling Detail - CLG6 @ Stage Lights

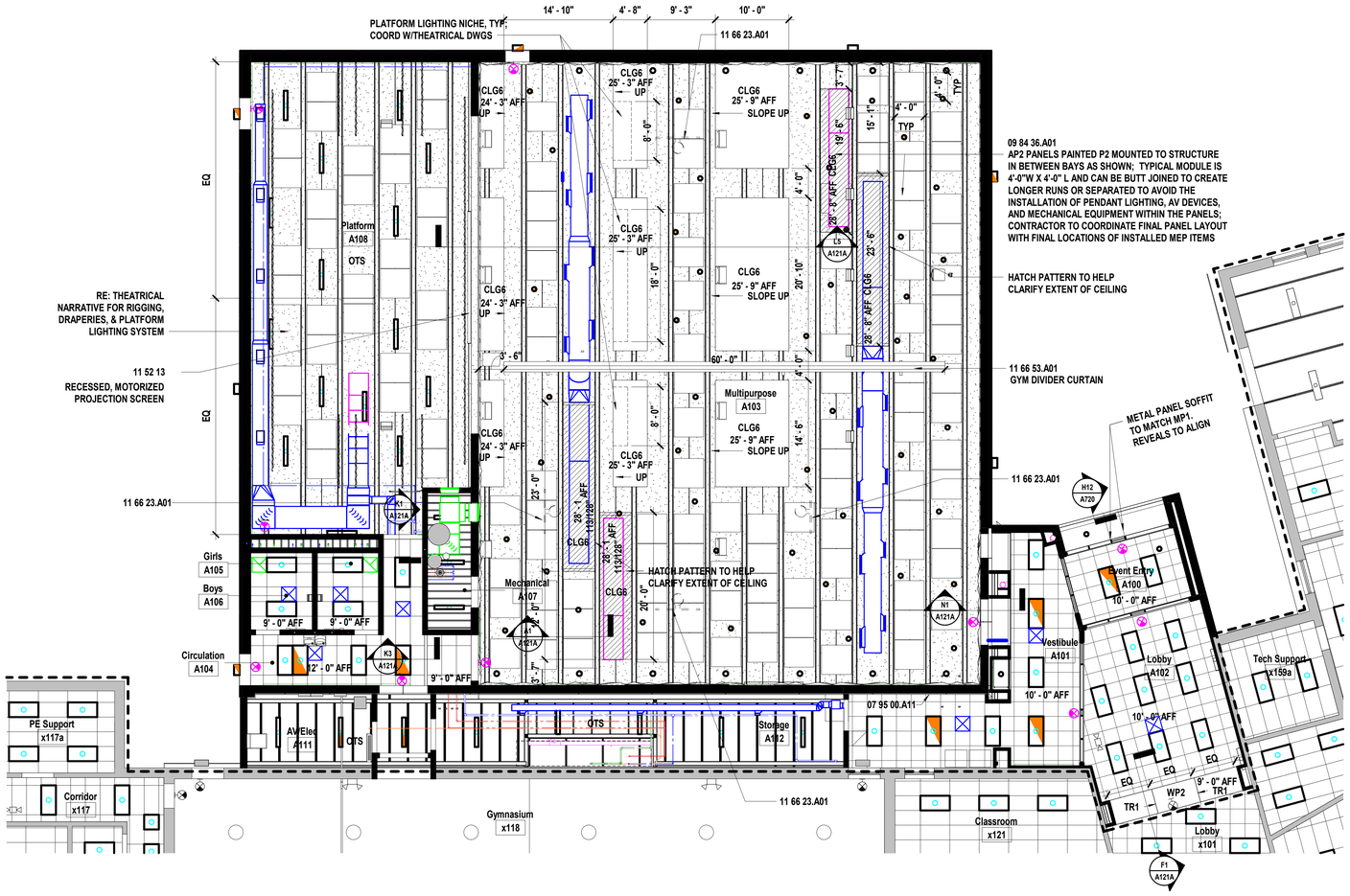

A5	Scale 1/8" = 1'-0"	Reflected Ceiling Plan - Level 1 - Area A

SHEET KEYNOTE LEGEND

07 95 00.A06	WALL-TO-WALL JOINT SYSTEM
07 95 00.A11	CEILING-TO-WALL JOINT SYSTEM
09 51 13.A01	ACOUSTICAL CEILING PANELS
09 51 13.A03	EDGE MOLDINGS AND TRIM
09 84 36.A01	SOUND-ABSORBING CEILING PANELS
11 52 13	PROJECTION SCREENS
11 66 23.A01	OVERHEAD BACKBOARD SUPPORTS
11 66 53.A01	GYMNASIUM DIVIDER CURTAIN ASSEMBLY

SHEET MATERIAL FINISH LEGEND

ID	MATERIAL	COLOR/FINISH
CLG1	Ceiling	White
CLG2	Ceiling	White
CLG3	Ceiling	White
CLG4	Ceiling	White
CLG5	Ceiling	White
CLG6	Ceiling	P2
HP1	High Performance Coating	SW 7011 Natural Choice
HP2	High Performance Coating	SW 6076 Cyberspace
HP3	High Performance Coating	SW 9170 Acier
MTL1	Metal Trim Piece	P2
P1	Paint	SW 7011 Natural Choice
P2	Paint	SW 7076 Cyberspace
P3	Paint	SW 9170 Acier
P4	Paint	SW 6966 Blueblood
P5	Paint	SW 6524 Commodore
P6	Paint	SW 7018 Dovetail
P7	Paint	SW 6967 Frank Blue
P8	Paint	SW 6811 Honorable Blue
TR1	Millwork Trim	
TR2	Millwork Trim	

SHEET NOTES

ALTERNATE NO.1 SCOPE WITHIN BOUNDARY LINE

ALTERNATE NO.1
ALL EXISTING ROOMS TO RECEIVE NEW ACOUSTICAL CEILING TILE (ACT) TO REPLACE EXISTING. EXISTING GRIDS TO REMAIN.

1. CLASSROOMS, STORAGE ROOMS, OFFICES, LOCKER ROOMS, SUPPORT SPACES TO RECEIVE **CLG1** (24x48) OR **CLG2** (24x24) TO MATCH EXISTING GRID SIZE

2. LOBBIES, RECEPTION, PUBLIC CIRCULATION, CLASSROOM CORRIDORS, VESTIBULES, MEDIA CENTER, & COMMONS TO RECIEVE **CLG3**

3. KITCHEN, CAFETERIA, RESTROOMS, SHOWERS & OTHER WET SPACES TO RECEIVE **CLG4** (24x48) OR **CLG5** (24x24) TO MATCH EXISTING GRID SIZE

KEY PLAN

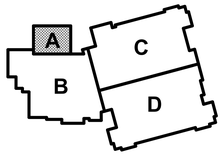

hollis + miller architects®
we design the future®
1828 Walnut Street Suite 922
Kansas City, MO 64108
t 816.442.7700
115 Wilcox Street Suite 210
Castle Rock, CO 80104
t 720.949.1689
HOLLISANDMILLER.COM
Hollis + Miller Architects
Missouri State Certificate of Authority
Architecture # 0000161
Structure # 2006031333

Bob D Campbell
Structural Engineer
State Certificate of Authority #000442
4338 Belleview Ave
Kansas City, MO 64111
816.531.4144 phone

Smith & Boucher, Inc.
Mechanical, Electrical, & Plumbing
State Certificate of Authority #EGC000178
25618 W 103rd Street
Olathe, KS 66061
913.345.2127 phone

MKEC Engineering, Inc.
Civil Engineer
State Certificate of Authority
Engineering #2001009364
Landscaping #2006027139
Surveying #2006027138
11827 W 112th Street, Suite 200
Overland Park, KS 66210
913.317.9390 phone

Peerbolte Creative
Theatrical Consultant
109 E Pine St.
Warrensburg, MO 64093-0752
660.429.1383 phone

Avant Acoustics
AV/Acoustics Consultant
14827 West 95th St.
Lenexa, KS 66215
913.888.9111 phone

Discovery Middle School Storm Shelter Addition

Liberty Public Schools

800 Midjay Dr, Liberty, MO 64068

CONFORMED CONSTRUCTION DOCUMENTS

REVISIONS:

#	Description	Date
1	Addendum 04	09/29/2023
2	Addendum 05	10/06/2023

STATE OF MISSOURI
KEVIN E. NELSON
A-2019015618
ARCHITECT
OCTOBER 11, 2023
Kevin E. Nelson
A-2019015618

The Professional Architects seal affixed to this sheet applies only to the material and items shown on this sheet. All other information on this sheet is supplied by others and is not the responsibility of the Professional Architect. Reuse of this and the architect expressly disclaims any and all responsibility for such plan, drawings, or documents not exhibiting this seal.

JOB NO: 23018
DRAWN BY: ES
CHECKED BY: JB
DATE: 10.11.2023

A121A

REFLECTED CEILING PLAN - LEVEL 1 - AREA A

Please consider the environment before printing this.
10/11/2023 3:55:09 PM

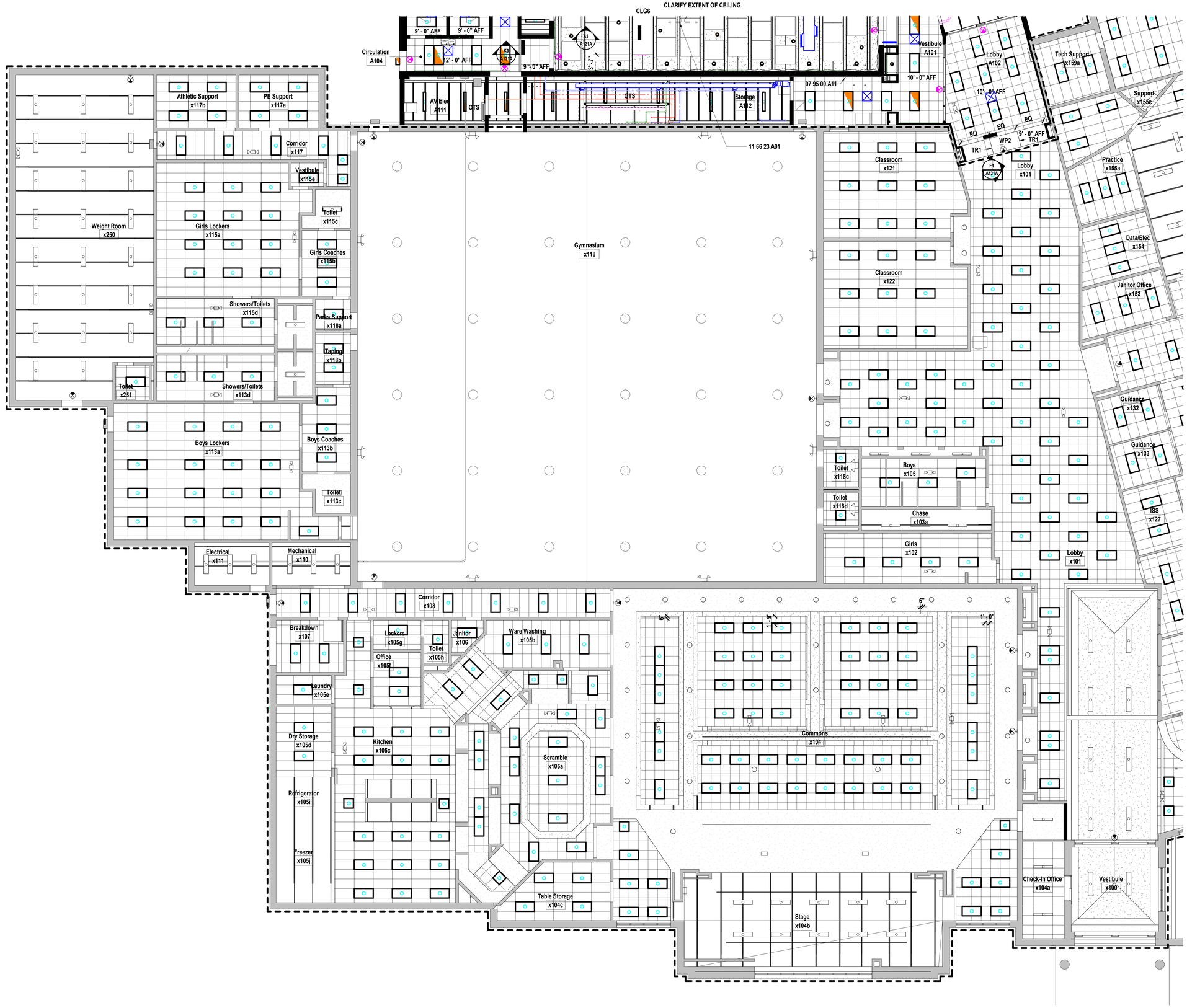

SHEET KEYNOTE LEGEND

07 95 00.A11	CEILING-TO-WALL JOINT SYSTEM
11 66 23.A01	OVERHEAD BACKBOARD SUPPORTS

SHEET MATERIAL FINISH LEGEND

ID	MATERIAL	COLOR/FINISH
CLG1	Ceiling	White
CLG2	Ceiling	White
CLG3	Ceiling	White
CLG4	Ceiling	White
CLG5	Ceiling	White
CLG6	Ceiling	P2
HP1	High Performance Coating	SW 7011 Natural Choice
HP2	High Performance Coating	SW 6076 Cyberspace
HP3	High Performance Coating	SW 9170 Acier
MTL1	Metal Trim Piece	P2
P1	Paint	SW 7011 Natural Choice
P2	Paint	SW 7076 Cyberspace
P3	Paint	SW 9170 Acier
P4	Paint	SW 6966 Blueblood
P5	Paint	SW 6524 Commodore
P6	Paint	SW 7018 Dovetail
P7	Paint	SW 6967 Frank Blue
P8	Paint	SW 6811 Honorable Blue
TR1	Millwork Trim	
TR2	Millwork Trim	

SHEET NOTES

ALTERNATE NO.1 SCOPE WITHIN BOUNDARY LINE

ALTERNATE NO.1
ALL EXISTING ROOMS TO RECEIVE NEW ACOUSTICAL CEILING TILE (ACT) TO REPLACE EXISTING. EXISTING GRIDS TO REMAIN.

1. CLASSROOMS, STORAGE ROOMS, OFFICES, LOCKER ROOMS, SUPPORT SPACES TO RECEIVE **CLG1** (24x48) OR **CLG2** (24x24) TO MATCH EXISTING GRID SIZE

2. LOBBIES, RECEPTION, PUBLIC CIRCULATION, CLASSROOM CORRIDORS, VESTIBULES, MEDIA CENTER, & COMMONS TO RECIEVE **CLG3**

3. KITCHEN, CAFETERIA, RESTROOMS, SHOWERS & OTHER WET SPACES TO RECEIVE **CLG4** (24x48) OR **CLG5** (24x24) TO MATCH EXISTING GRID SIZE

KEY PLAN

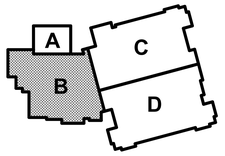

hollis + miller architects®
we design the future®
1828 Walnut Street Suite 922
Kansas City, MO 64108
t 816.442.7700
115 Wilcox Street Suite 210
Castle Rock, CO 80104
t 720.949.1689
HOLLISANDMILLER.COM
Hollis + Miller Architects
Missouri State Certificate of Authority
Architecture # 0000161
Structure # 2006031333

Bob D Campbell
Structural Engineer
State Certificate of Authority #000442
4338 Belleview Ave
Kansas City, MO 64111
816.531.4144 phone

Smith & Boucher, Inc.
Mechanical, Electrical, & Plumbing
State Certificate of Authority #EGC000178
25618 W 103rd Street
Olathe, KS 66061
913.345.2127 phone

MKEC Engineering, Inc.
Civil Engineer
State Certificate of Authority
Engineering #2001009364
Landscaping #2006027139
Surveying #2006027138
11827 W 112th Street, Suite 200
Overland Park, KS 66210
913.317.9390 phone

Peerbolte Creative
Theatrical Consultant
109 E Pine St.
Warrensburg, MO 64093-0752
660.429.1383 phone

Avant Acoustics
AV/Acoustics Consultant
14827 West 95th St.
Lenexa, KS 66215
913.888.9111 phone

Discovery Middle School Storm Shelter Addition

Liberty Public Schools

800 Midjay Dr, Liberty, MO 64068

CONFORMED CONSTRUCTION DOCUMENTS

REVISIONS:

#	Description	Date

STATE OF MISSOURI
KEVIN E. NELSON
A-2019015618
ARCHITECT

OCTOBER 11, 2023

Kevin E. Nelson
A-2019015618

The Professional Architects seal affixed to this sheet applies only to the material and items shown on this sheet. All drawings, instruments or other documents not exhibiting this seal shall not be considered prepared by this architect, and this architect expressly disclaims any and all responsibility for such plan, drawings, or documents not exhibiting this seal.

JOB NO: 23018
DRAWN BY: ES
CHECKED BY: JB
DATE: 10.11.2023

A121B

A1 | Scale 1/8" = 1'-0" | Reflected Ceiling Plan - Level 1 - Area B

8' 4' 0' 8'

PROJECT NORTH TRUE NORTH

REFLECTED CEILING PLAN - LEVEL 1 - AREA B

Please consider the environment before printing this.
10/11/2023 3:56:14 PM

C1 | Scale 1/8" = 1'-0" | Reflected Ceiling Plan - Level 1 - Area C

8' 4' 0' 8'

PROJECT NORTH TRUE NORTH

SHEET NOTES

ALTERNATE NO.1 SCOPE WITHIN BOUNDARY LINE

ALTERNATE NO.1
ALL EXISTING ROOMS TO RECEIVE NEW ACOUSTICAL CEILING TILE (ACT) TO REPLACE EXISTING. EXISTING GRIDS TO REMAIN.

1. CLASSROOMS, STORAGE ROOMS, OFFICES, LOCKER ROOMS, SUPPORT SPACES TO RECEIVE **CLG1** (24x48) OR **CLG2** (24x24) TO MATCH EXISTING GRID SIZE

2. LOBBIES, RECEPTION, PUBLIC CIRCULATION, CLASSROOM CORRIDORS, VESTIBULES, MEDIA CENTER, & COMMONS TO RECIEVE **CLG3**

3. KITCHEN, CAFETERIA, RESTROOMS, SHOWERS & OTHER WET SPACES TO RECEIVE **CLG4** (24x48) OR **CLG5** (24x24) TO MATCH EXISTING GRID SIZE

SHEET KEYNOTES LEGEND

KEY PLAN

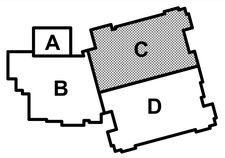

hollis + miller architects®
we design the future®
1828 Walnut Street Suite 922
Kansas City, MO 64108
t 816.442.7700
115 Wilcox Street Suite 210
Castle Rock, CO 80104
t 720.949.1689
HOLLISANDMILLER.COM

Hollis + Miller Architects
Missouri State Certificate of Authority
Architecture # 0000161
Structure # 2006031333

Bob D Campbell
Structural Engineer
State Certificate of Authority #000442
4338 Belleview Ave
Kansas City, MO 64111
816.531.4144 phone

Smith & Boucher, Inc.
Mechanical, Electrical, & Plumbing
State Certificate of Authority #EGC000178
25618 W 103rd Street
Olathe, KS 66061
913.345.2127 phone

MKEC Engineering, Inc.
Civil Engineer
State Certificate of Authority
Engineering #2001009364
Landscaping #2006027139
Surveying #2006027138
11827 W 112th Street, Suite 200
Overland Park, KS 66210
913.317.9390 phone

Peerbolte Creative
Theatrical Consultant
109 E Pine St.
Warrensburg, MO 64093-0752
660.429.1383 phone

Avant Acoustics
AV/Acoustics Consultant
14827 West 95th St.
Lenexa, KS 66215
913.888.9111 phone

Discovery Middle School Storm Shelter Addition

Liberty Public Schools

800 Midjay Dr, Liberty, MO 64068

CONFORMED CONSTRUCTION DOCUMENTS

REVISIONS:

#	Description	Date

STATE OF MISSOURI
KEVIN E. NELSON
A-2019015618
ARCHITECT

OCTOBER 11, 2023

Kevin E. Nelson
A-2019015618

The Professional Architects seal affixed to this sheet applies only to the material and items shown on this sheet. All other information, specifications, and materials on other sheets in this set are not covered by this professional seal and the architect expressly disclaims any and all responsibility for such plan, drawings, or documents not sealing this seal.

JOB NO: 23018
DRAWN BY: ES
CHECKED BY: JB
DATE: 10.11.2023

A121C

REFLECTED CEILING PLAN - LEVEL 1 - AREA C

Please consider the environment before printing this.

10/11/2023 3:55:18 PM

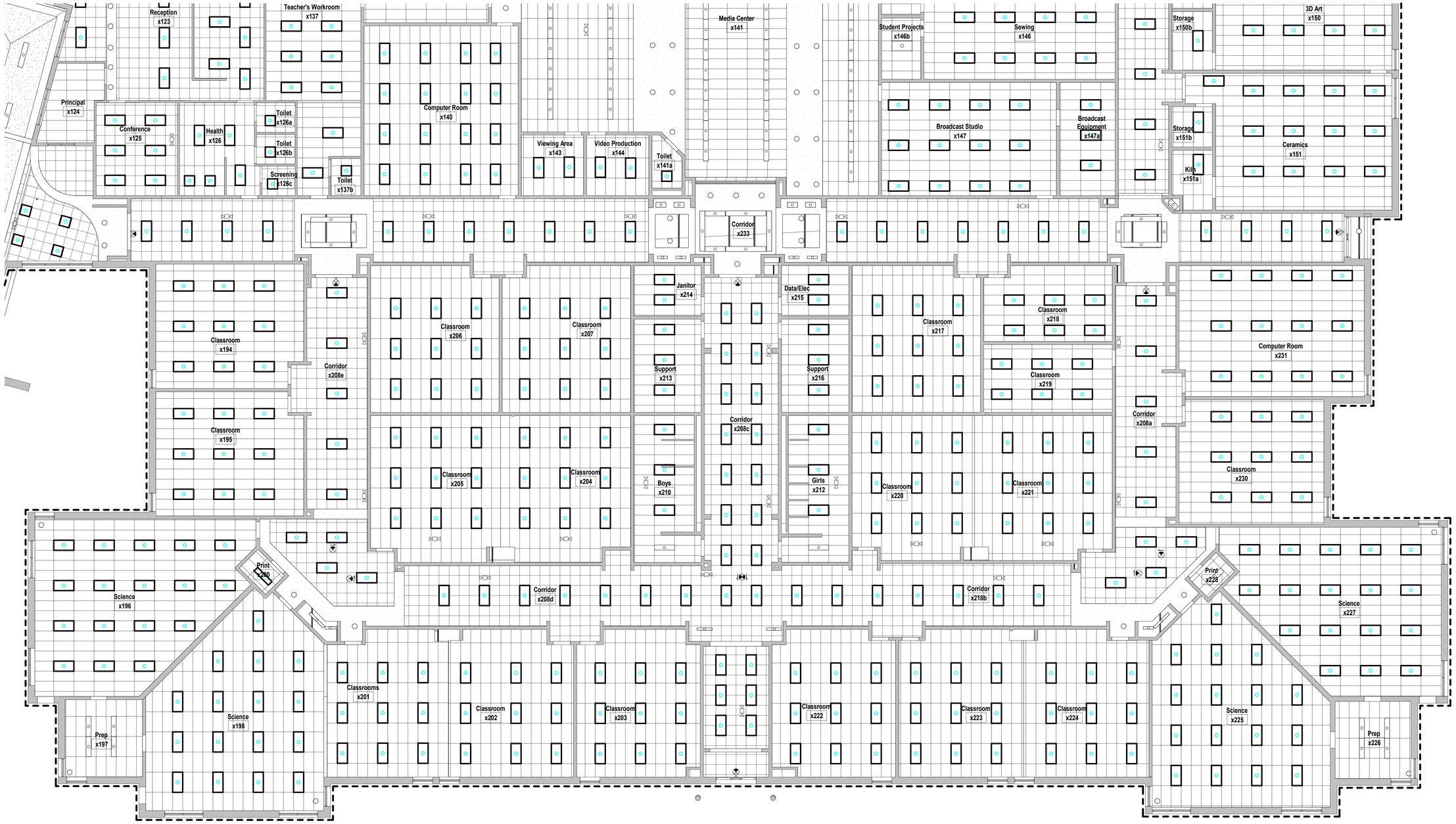

C1	Scale 1/8" = 1'-0"	Reflected Ceiling Plan - Level 1 - Area D

8' 4' 0' 8'

PROJECT NORTH TRUE NORTH

SHEET NOTES

ALTERNATE NO.1 SCOPE WITHIN BOUNDARY LINE

ALTERNATE NO.1
ALL EXISTING ROOMS TO RECEIVE NEW ACOUSTICAL CEILING TILE (ACT) TO REPLACE EXISTING. EXISTING GRIDS TO REMAIN.

1. CLASSROOMS, STORAGE ROOMS, OFFICES, LOCKER ROOMS, SUPPORT SPACES TO RECEIVE **CLG1** (24x48) OR **CLG2** (24x24) TO MATCH EXISTING GRID SIZE

2. LOBBIES, RECEPTION, PUBLIC CIRCULATION, CLASSROOM CORRIDORS, VESTIBULES, MEDIA CENTER, & COMMONS TO RECIEVE **CLG3**

3. KITCHEN, CAFETERIA, RESTROOMS, SHOWERS & OTHER WET SPACES TO RECEIVE **CLG4** (24x48) OR **CLG5** (24x24) TO MATCH EXISTING GRID SIZE

SHEET KEYNOTES LEGEND

KEY PLAN

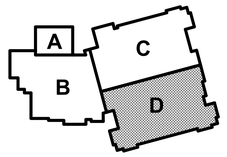

hollis + miller architects®

we design the future®

1828 Walnut Street Suite 922
Kansas City, MO 64108
t 816.442.7700

115 Wilcox Street Suite 210
Castle Rock, CO 80104
t 720.949.1689

HOLLISANDMILLER.COM

Hollis + Miller Architects
Missouri State Certificate of Authority
Architecture # 0000161
Structure # 2006031333

Bob D Campbell
Structural Engineer
State Certificate of Authority #000442
4338 Belleview Ave
Kansas City, MO 64111
816.531.4144 phone

Smith & Boucher, Inc.
Mechanical, Electrical, & Plumbing
State Certificate of Authority #EGC000178
25618 W 103rd Street
Olathe, KS 66061
913.345.2127 phone

MKEC Engineering, Inc.
Civil Engineer
State Certificate of Authority
Engineering #2001009364
Landscaping #2006027139
Surveying #2006027138
11827 W 112th Street, Suite 200
Overland Park, KS 66210
913.317.9390 phone

Peerbolte Creative
Theatrical Consultant
109 E Pine St.
Warrensburg, MO 64093-0752
660.429.1383 phone

Avant Acoustics
AV/Acoustics Consultant
14827 West 95th St.
Lenexa, KS 66215
913.888.9111 phone

Discovery Middle School Storm Shelter Addition

Liberty Public Schools

800 Midjay Dr, Liberty, MO 64068

CONFORMED CONSTRUCTION DOCUMENTS

REVISIONS:

#	Description	Date

STATE OF MISSOURI
KEVIN E. NELSON
A-2019015618
ARCHITECT

OCTOBER 11, 2023

Kevin E. Nelson
A-2019015618

The Professional Architects seal affixed to this sheet applies only to the material and items shown on this sheet. All other information on this sheet is supplied by others and is not the responsibility of the Professional Architect. The Architect and the architect expressly disclaims any and all responsibility for such plan, drawings, or documents not satisfying the seal.

JOB NO: 23018
DRAWN BY: ES
CHECKED BY: JB
DATE: 10.11.2023

A121D

REFLECTED CEILING PLAN - LEVEL 1 - AREA D

Please consider the environment before printing this.

10/11/2023 3:55:22 PM

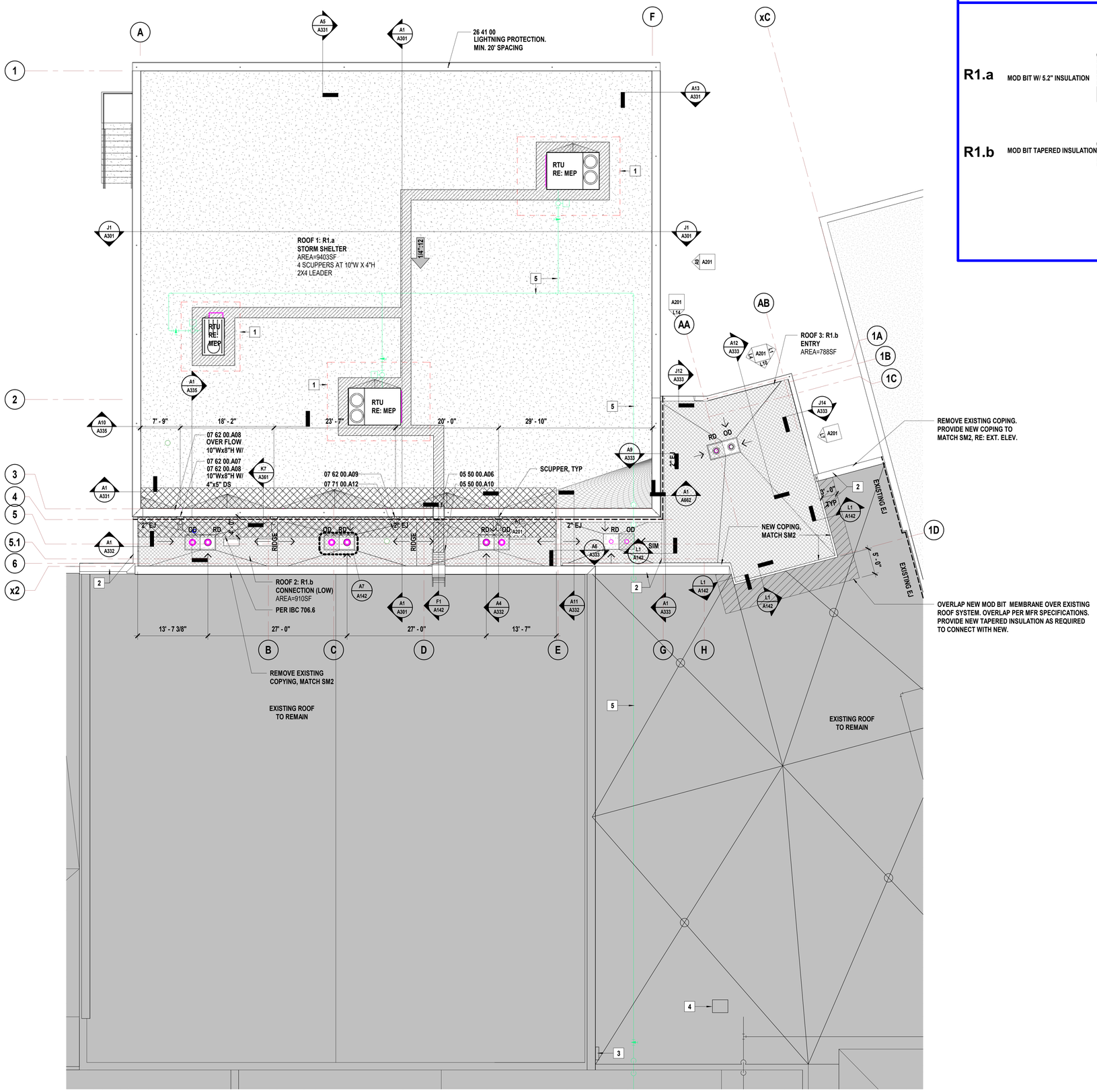

ROOF TYPE LEGEND

R1.a MOD BIT W/ 5.2" INSULATION

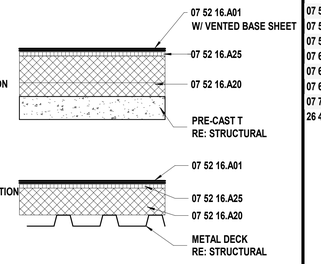

R1.b MOD BIT TAPERED INSULATION

SHEET KEYNOTE LEGEND

05 50 00.A06	METAL LADDER
05 50 00.A10	SHIP'S LADDER WITH PLATFORM RETURN
07 52 16.A01	MODIFIED BITUMINOUS ROOFING SYSTEM
07 52 16.A20	ROOF INSULATION
07 52 16.A25	COVERBOARD
07 62 00.A07	DOWNSPOUTS
07 62 00.A08	SCUPPERS
07 62 00.A09	CONDUCTOR HEADS
07 71 00.A12	SPLASH PANS
26 41 00	

ROOF PLAN LEGEND

- SLOPED STRUCTURE RE: STRUCTURAL FOR ROOF BEARING HEIGHTS/SLOPE
- SLOPE PROVIDED BY TAPERED INSULATION OVER FLAT STRUCTURE @ SLOPE INDICATED
- TAPERED INSULATION CRICKET
- ROOF MEMBRANE 07 52 16.A01
- WALKWAY PADS 07 52 16.A16
- EXISTING ROOF AREA
- BUILDING EXPANSION JOINTS PATH. REFER TO SPECIFIC DETAILS FOR MORE INFORMATION.

SHEET NOTES

1. REFER TO PLUMBING DRAWINGS FOR ROOF DRAIN DETAILS
2. REFER TO MECHANICAL DRAWINGS FOR ROOF MOUNTED EQUIPMENT AND CURBS
3. REFER TO PLUMBING DRAWINGS FOR EXPOSED GAS PIPING AND SUPPORTS

KEYNOTES

1. UNIT MOUNTED SCREEN. MFR TO PROVIDE FULL COLOR RANGE IN SUBMITAL. FINAL COLOR TO BE SELECTED BY ARCHITECT
   RE: MEP FOR MORE INFORMATION
2. NEW T.O.W. TO ALIGN WITH EXISTING T.O.W. COPING TO MATCH. SM2
3. EXISTING ROOF LADDER TO EXISTING GYM ROOF TO REMAIN
4. EXISTING ROOF ACCESS TO REMAIN
5. GAS LINE, RE: MEP

KEY PLAN

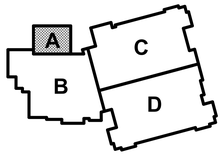

hollis + miller architects®
we design the future®
1828 Walnut Street Suite 922
Kansas City, MO 64108
t 816.442.7700
115 Wilcox Street Suite 210
Castle Rock, CO 80104
t 720.949.1689
HOLLISANDMILLER.COM
Hollis + Miller Architects
Missouri State Certificate of Authority
Architecture # 000161
Structure # 2006031333

Bob D Campbell
Structural Engineer
State Certificate of Authority #000442
4338 Belleview Ave
Kansas City, MO 64111
816.531.4144 phone

Smith & Boucher, Inc.
Mechanical, Electrical, & Plumbing
State Certificate of Authority #EGC000178
25618 W 103rd Street
Olathe, KS 66061
913.345.2127 phone

MKEC Engineering, Inc.
Civil Engineer
State Certificate of Authority
Engineering #2001009364
Landscaping #2006027139
Surveying #2006027138
11827 W 112th Street, Suite 200
Overland Park, KS 66210
913.317.9390 phone

Peerbolte Creative
Theatrical Consultant
109 E Pine St.
Warrensburg, MO 64093-0752
660.429.1383 phone

Avant Acoustics
AV/Acoustics Consultant
14827 West 95th St.
Lenexa, KS 66215
913.888.9111 phone

Discovery Middle School Storm Shelter Addition

Liberty Public Schools

800 Midjay Dr, Liberty, MO 64068

CONFORMED CONSTRUCTION DOCUMENTS

REVISIONS:

#	Description	Date
1	Addendum 04	09/29/2023
2	Addendum 05	10/06/2023

STATE OF MISSOURI
KEVIN E. NELSON
A-2019015618
ARCHITECT

OCTOBER 11, 2023

Kevin E. Nelson
A-2019015618

The Professional Architects seal affixed to this sheet applies only to the material and items shown on this sheet. All drawings, instruments or other documents not exhibiting this seal shall not be considered prepared by this architect, and this architect expressly disclaims any and all responsibility for such plan, drawings, or documents not exhibiting this seal.

JOB NO: 23018
DRAWN BY: KL
CHECKED BY: JB
DATE: 10.11.2023

A141

ROOF PLAN

A1 | Scale 1/8" = 1'-0" | Roof Plan

8' 4' 0' 8'

PROJECT NORTH TRUE NORTH

10/11/2023 3:55:25 PM

Please consider the environment before printing this.

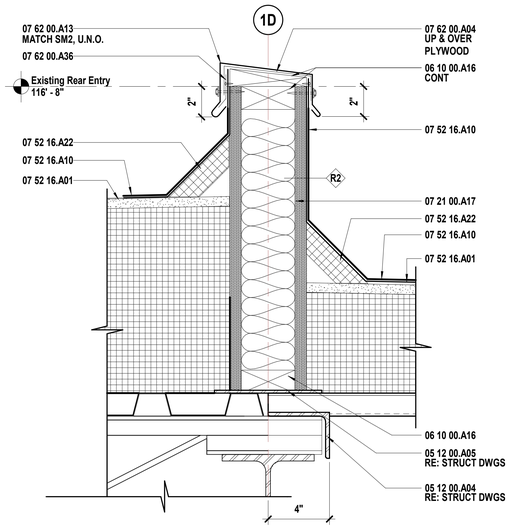

L1 Scale 3" = 1'-0" — Roof Detail - Area A - Entry / Lobby - Connection to Existing

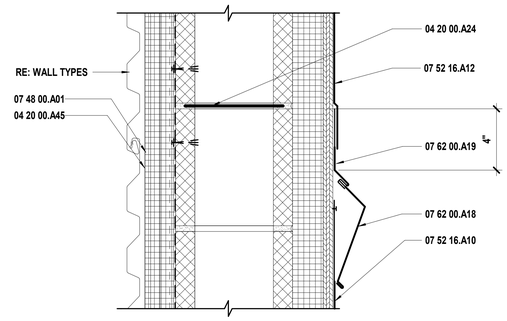

N7 Scale 3" = 1'-0" — Wall Flashing @ Parapets Greater Than 24" High

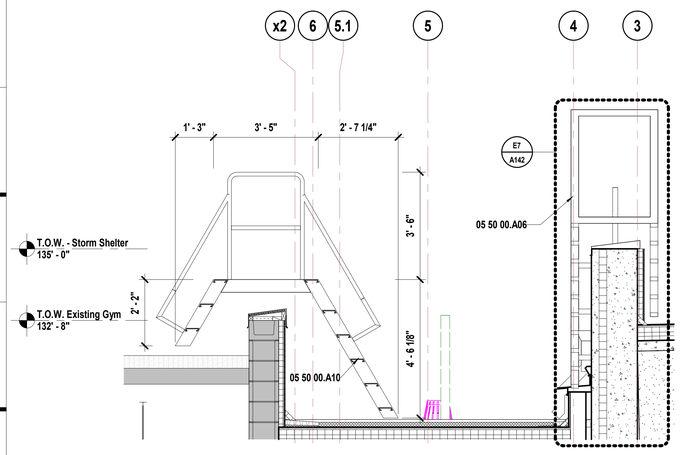

F1 Scale 1/2" = 1'-0" — Ships Laddar on Roof - Existing to New Connection and Ladder

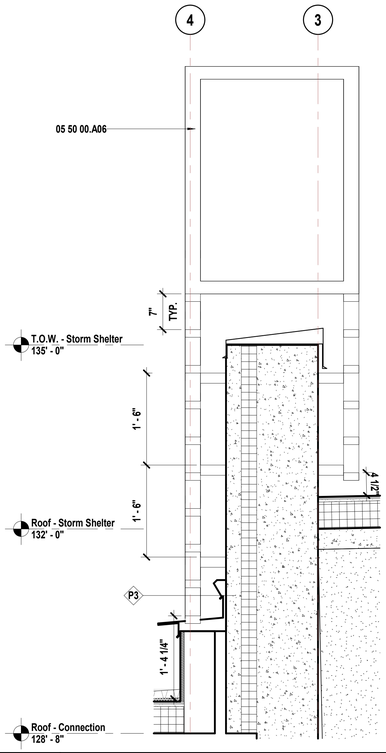

E7 Scale 1" = 1'-0" — Roof Detail - Ladder to Precast Roof

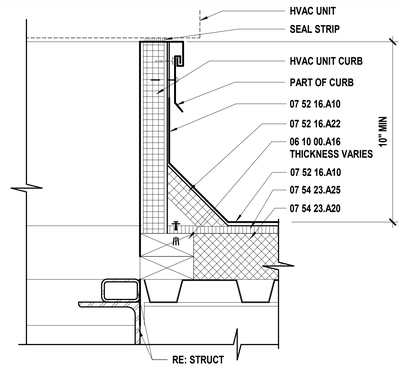

E12 Scale 3" = 1'-0" — Premanufactured Curb @ Mod-Bit Roof

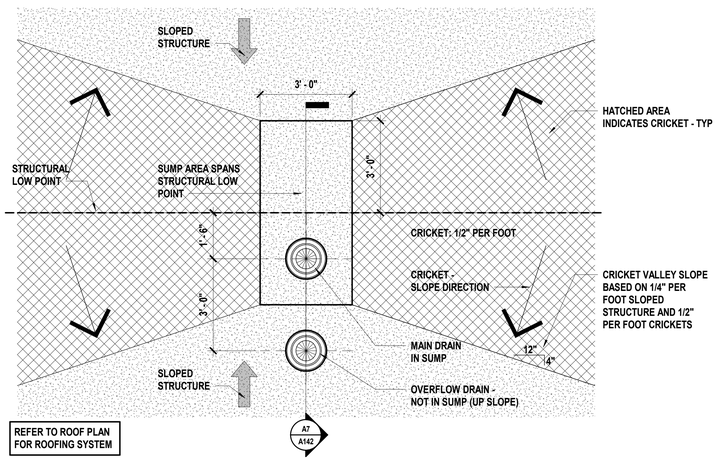

A1 Scale 1/2" = 1'-0" — Roof Drain Layout @ a Valley

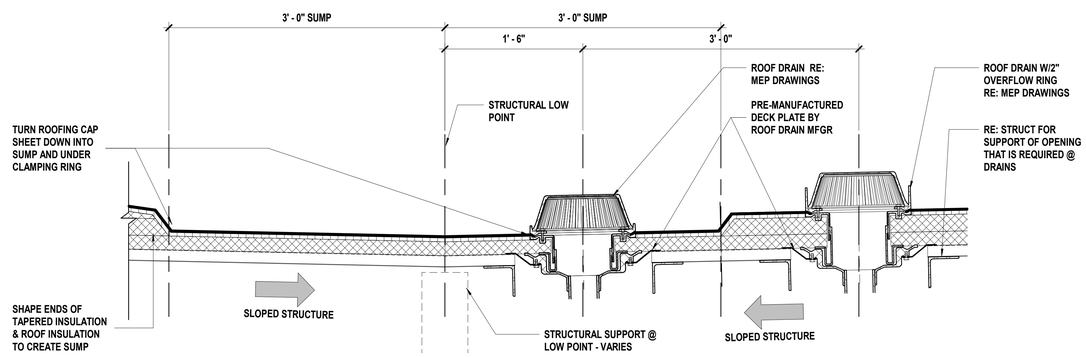

A7 Scale 1 1/2" = 1'-0" — Roof Drain & Overflow

SHEET KEYNOTE LEGEND

04 20 00.A24	MASONRY JOINT REINFORCEMENT
04 20 00.A45	CAVITY WALL INSULATION
05 12 00.A04	ANGLE
05 12 00.A05	PLATE AND BAR
05 50 00.A06	METAL LADDER
05 50 00.A10	SHIP'S LADDER WITH PLATFORM RETURN
06 10 00.A16	FIRE-RETARDANT TREATED WOOD BLOCKING & NAILERS
07 21 00.A17	MINERAL WOOL
07 48 00.A01	RAINSCREEN FURRING SYSTEM
07 52 16.A01	MODIFIED BITUMINOUS ROOFING SYSTEM
07 52 16.A10	BASE FLASHING
07 52 16.A12	VERTICAL WALL FLASHING (EPDM)
07 52 16.A22	INSULATION CANT STRIPS
07 54 23.A20	ROOF INSULATION
07 54 23.A25	COVERBOARD
07 62 00.A04	FLEXIBLE MEMBRANE CLOSURE
07 62 00.A13	COPING
07 62 00.A18	COUNTER FLASHING
07 62 00.A19	COUNTER FLASHING RECEIVER
07 62 00.A36	CLEAT

hollis + miller architects®
we design the future®
1828 Walnut Street Suite 922
Kansas City, MO 64108
t 816.442.7700
115 Wilcox Street Suite 210
Castle Rock, CO 80104
t 720.949.1689
HOLLISANDMILLER.COM
Hollis + Miller Architects
Missouri State Certificate of Authority
Architecture # 0000161
Structure # 2006031333

Bob D Campbell
Structural Engineer
State Certificate of Authority #000442
4338 Belleview Ave
Kansas City, MO 64111
816.531.4144 phone

Smith & Boucher, Inc.
Mechanical, Electrical, & Plumbing
State Certificate of Authority #EGC000178
25618 W 103rd Street
Olathe, KS 66061
913.345.2127 phone

MKEC Engineering, Inc.
Civil Engineer
State Certificate of Authority
Engineering #2001009364
Landscaping #2006027139
Surveying #2006027138
11827 W 112th Street, Suite 200
Overland Park, KS 66210
913.317.9390 phone

Peerbolte Creative
Theatrical Consultant
109 E Pine St.
Warrensburg, MO 64093-0752
660.429.1383 phone

Avant Acoustics
AV/Acoustics Consultant
14827 West 95th St.
Lenexa, KS 66215
913.888.9111 phone

Discovery Middle School Storm Shelter Addition
Liberty Public Schools
800 Midjay Dr, Liberty, MO 64068

CONFORMED CONSTRUCTION DOCUMENTS

REVISIONS:

#	Description	Date

STATE OF MISSOURI — KEVIN E. NELSON — A-2019015618 — ARCHITECT

OCTOBER 11, 2023

Kevin E. Nelson
A-2019015618

The Professional Architects seal affixed to this sheet applies only to the material and items shown on this sheet. All other information shown on this sheet is provided for reference only and is not intended to be part of the work of this project and the architect expressly disclaims any and all responsibility for such plan, drawings, or documents not sealing this seal.

JOB NO: 23018
DRAWN BY: KL
CHECKED BY: JB
DATE: 10.11.2023

A142

ROOF DETAILS

10/11/2023 3:55:28 PM

Please consider the environment before printing this.

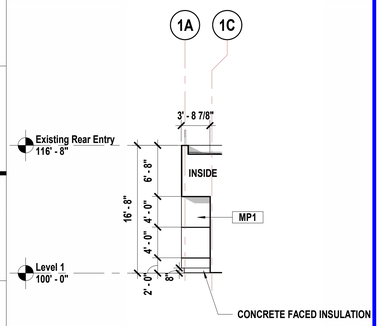

L1 Scale 1/8" = 1'-0" — Exterior Elevation - Event Entry A100 - Doorway E

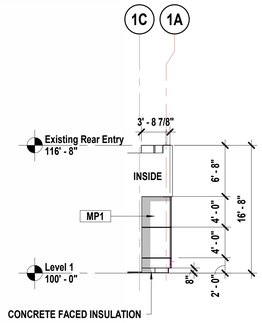

L4 Scale 1/8" = 1'-0" — Exterior Elevation - Event Entry A100 - Doorway W

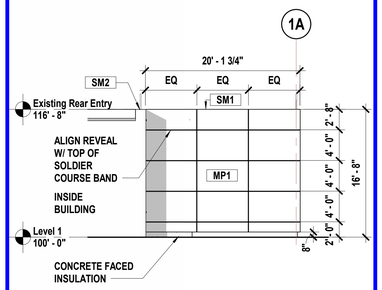

L7 Scale 1/8" = 1'-0" — Exterior Elevation - Event Entry A100 - E

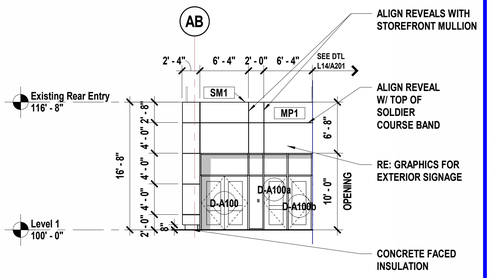

L10 Scale 1/8" = 1'-0" — Exterior Elevation - Event Entry A100 -N

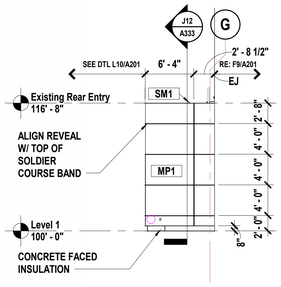

L14 Scale 1/8" = 1'-0" — Exterior Elevation - Event Entry A100 - NE

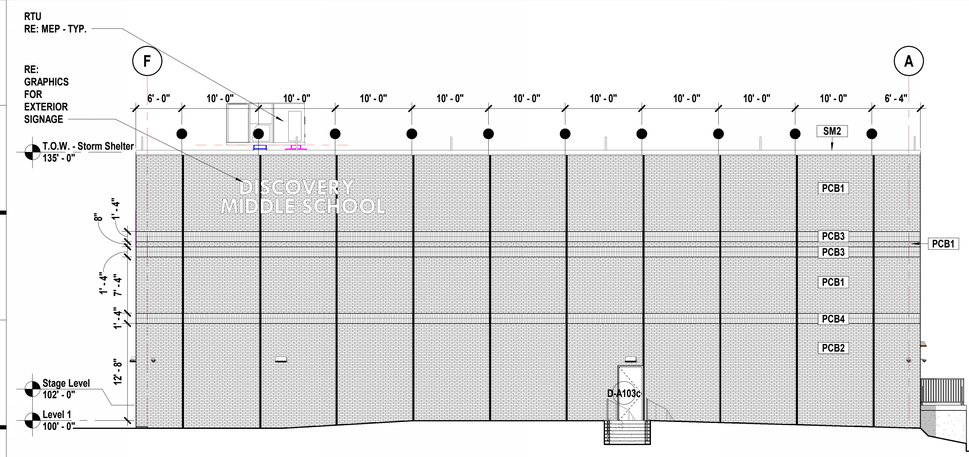

F1 Scale 1/8" = 1'-0" — Exterior Elevation - Multipurpose A103 - N

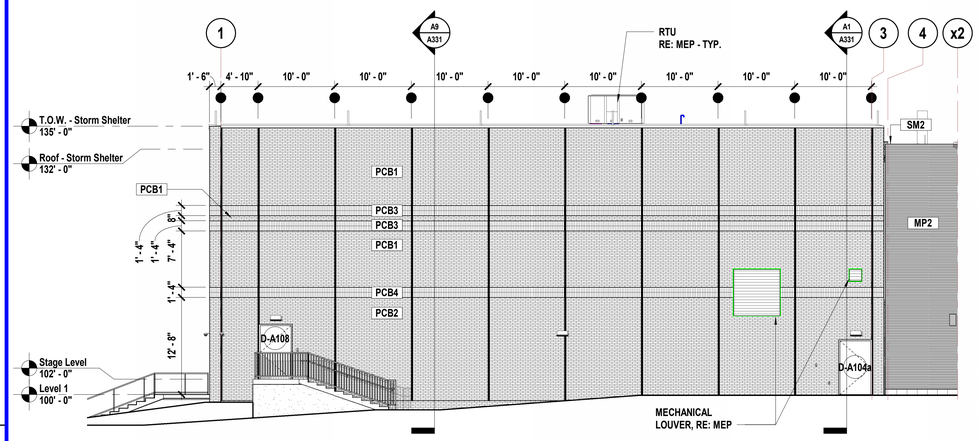

F9 Scale 1/8" = 1'-0" — Exterior Elevation - Multipurpose A103 - W

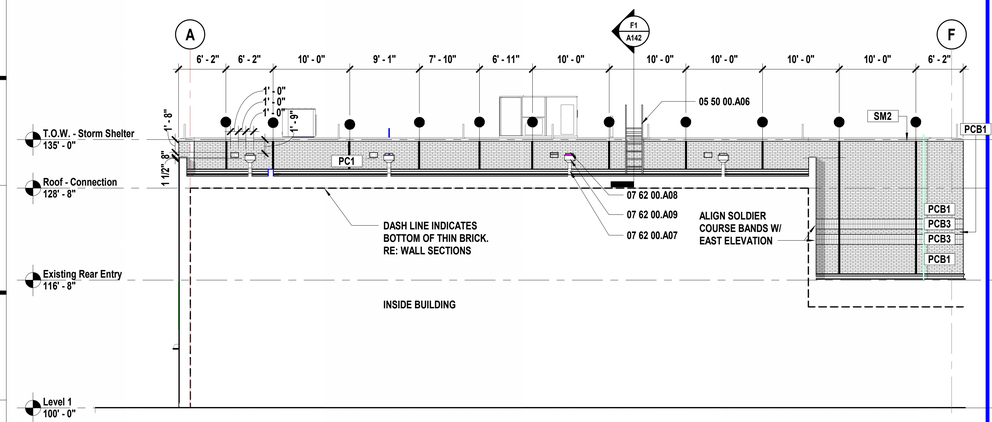

A1 Scale 1/8" = 1'-0" — Exterior Elevation - Multipurpose A103 - S

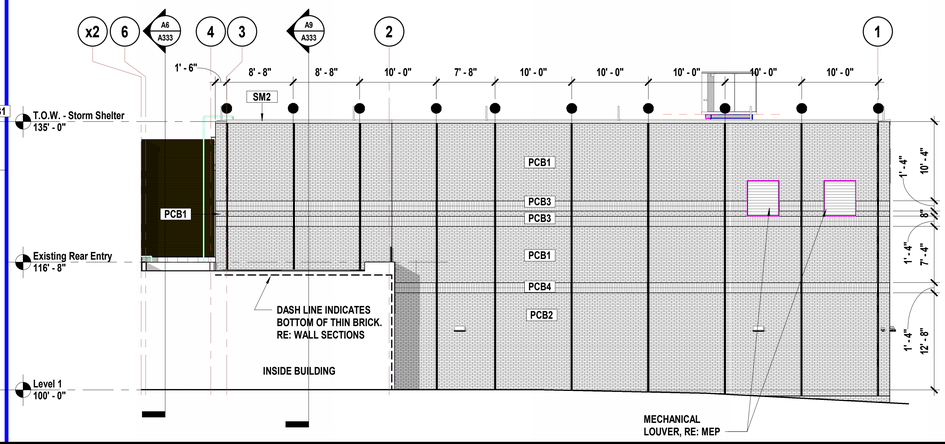

A9 Scale 1/8" = 1'-0" — Exterior Elevation - Multipurpose A103 - E

SHEET KEYNOTE LEGEND

03 41 00.A03	BRICK-FACED PRECAST STRUCTURAL CONCRETE
05 50 00.A06	METAL LADDER
07 42 13.A03	CONCEALED FASTENER METAL WALL PANELS
07 42 43.A01	METAL-FACED COMPOSITE MATERIAL WALL PANELS
07 62 00.A07	DOWNSPOUTS
07 62 00.A08	SCUPPERS
07 62 00.A09	CONDUCTOR HEADS
07 62 00.A13	COPING

EXTERIOR MATERIAL LEGEND

PCB1 = PRECAST W/ THIN BRICK - BLEND 1
03 41 00.A03 **BRICK-FACED PRECAST STRUCTURAL CONCRETE**
BOD: METROBRICK
COLOR: 45% 350 MAINSTREET - FLASHED
25% 310 MAINSTREET - RED
30% 458 BROWNSTONE - FLASHED
SIZE/ PATTERN: MODULAR SIZE, RUNNING BOND

PCB2 = PRECAST W/ THIN BRICK
03 41 00.A03 **BRICK-FACED PRECAST STRUCTURAL CONCRETE**
BOD: SUMMERVILLE
COLOR: 19 - NEW AMSTERDAM
SIZE/ PATTERN: MODULAR SIZE, RUNNING BOND

PCB3 = PRECAST W/ THIN BRICK - BLEND 1
03 41 00.A03 **BRICK-FACED PRECAST STRUCTURAL CONCRETE**
BOD: METROBRICK
COLOR: 45% 350 MAINSTREET - FLASHED
25% 310 MAINSTREET - RED
30% 458 BROWNSTONE - FLASHED
SIZE/ PATTERN: MODULAR SIZE, SOLDIER COURSE

PCB4 = PRECAST W/ THIN BRICK
03 41 00.A03 **BRICK-FACED PRECAST STRUCTURAL CONCRETE**
BOD: SUMMERVILLE
COLOR: 19 - NEW AMSTERDAM
SIZE/ PATTERN: MODULAR SIZE, SOLDIER COURSE

MP1 = METAL PANEL TYPE 1
07 42 43.A01 **METAL-FACED COMPOSITE MATERIAL WALL PANELS**
BOD: CITADEL - ENVELOPE 2000 REVEAL (RV)
COLOR: SERIES G: PREMIUM KYNAR 500 - REGAL BLUE
SIZE/ PATTERN: FLAT ACM W/EXTRUSIONS

MP2 = METAL PANEL TYPE 2
07 42 13.A03 **CONCEALED FASTENER METAL WALL PANELS**
BOD: CENTRIA CS-660
COLOR: SAGE BROWN
SIZE/ PATTERN: HORIZONTAL

SM1 = SHEET METAL TYPE 1
07 62 00.A13 **COPING**
BOD: N/A
COLOR: MATCH MP1 = METAL PANEL TYPE 1
SIZE/ PATTERN: PER DETAILS

SM2 = SHEET METAL TYPE 2
07 62 00.A13 **COPING**
BOD: N/A
COLOR: DARK BRONZE (MATCH EXISTING COPING)
SIZE/ PATTERN: PER DETAILS

SHEET NOTES

1. REFER TO SHEET G000 FOR SHEET INDEX
2. DO NOT SCALE THIS DRAWING
3. WALL MOUNTED LIGHT FIXTURES, LAMBS TONGUES AND OTHER MEP ITEMS ARE SHOWN FOR PLACEMENT ONLY

hollis + miller architects®
we design the future®
1828 Walnut Street Suite 922
Kansas City, MO 64108
t 816.442.7700
115 Wilcox Street Suite 210
Castle Rock, CO 80104
t 720.949.1689
HOLLISANDMILLER.COM
Hollis + Miller Architects
Missouri State Certificate of Authority
Architecture # 000161
Structure # 2006031333

Bob D Campbell
Structural Engineer
State Certificate of Authority #000442
4338 Belleview Ave
Kansas City, MO 64111
816.531.4144 phone

Smith & Boucher, Inc.
Mechanical, Electrical, & Plumbing
State Certificate of Authority #EGC000178
25618 W 103rd Street
Olathe, KS 66061
913.345.2127 phone

MKEC Engineering, Inc.
Civil Engineer
State Certificate of Authority
Engineering #2001009364
Landscaping #2006027139
Surveying #2006027138
11827 W 112th Street, Suite 200
Overland Park, KS 66210
913.317.9390 phone

Peerbolte Creative
Theatrical Consultant
109 E Pine St.
Warrensburg, MO 64093-0752
660.429.1383 phone

Avant Acoustics
AV/Acoustics Consultant
14827 West 95th St.
Lenexa, KS 66215
913.888.9111 phone

Discovery Middle School Storm Shelter Addition
Liberty Public Schools
800 Midjay Dr, Liberty, MO 64068

CONFORMED CONSTRUCTION DOCUMENTS

REVISIONS:

#	Description	Date
1	Addendum 01	09/14/2023

STATE OF MISSOURI
KEVIN E. NELSON
A-2019015618
ARCHITECT
OCTOBER 11, 2023
Kevin E. Nelson
A-2019015618

The Professional Architects seal affixed to this sheet applies only to the material and items shown on this sheet. All other information shown on this sheet is provided by others unless otherwise specifically identified by the architect, and the architect expressly disclaims any and all responsibility for such plan, drawings, or documents not exhibiting the seal.

JOB NO: 23018
DRAWN BY: LB
CHECKED BY: JB
DATE: 10.11.2023

A201

10/11/2023 3:56:50 PM

EXTERIOR ELEVATIONS - OVERALL

Please consider the environment before printing this.

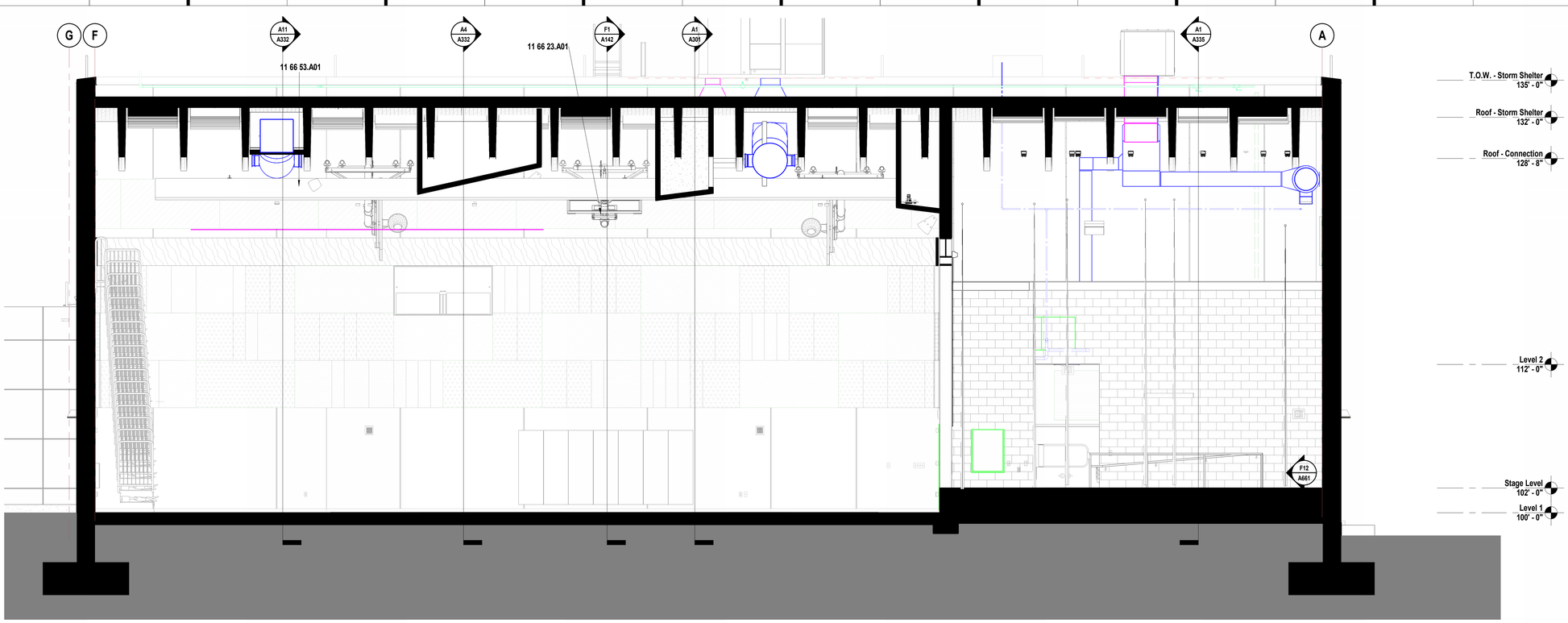

J1 Scale 1/4" = 1'-0" Section - Multipurpose A103 - East West

A1 Scale 1/4" = 1'-0" Section - Multipurpose A103 - North South

SHEET KEYNOTE LEGEND

11 66 23.A01	OVERHEAD BACKBOARD SUPPORTS
11 66 53.A01	GYMNASIUM DIVIDER CURTAIN ASSEMBLY

SHEET NOTES

1. REFER TO SHEET G000 FOR SHEET INDEX
2. DO NOT SCALE THIS DRAWING
3. REFER TO INTERIOR ELEVATIONS, FOR PLACEMENT OF ALL WALL MOUNTED ITEMS
4. WALL MOUNTED LIGHT FIXTURES, GRILLES AND OTHER MEP ITEMS ARE SHOWN FOR PLACEMENT ONLY

hollis + miller architects

we design the future

1828 Walnut Street Suite 922
Kansas City, MO 64108
t 816.442.7700

115 Wilcox Street Suite 210
Castle Rock, CO 80104
t 720.949.1689

HOLLISANDMILLER.COM

Hollis + Miller Architects
Missouri State Certificate of Authority
Architecture # 0000161
Structure # 2006031333

Bob D Campbell
Structural Engineer
State Certificate of Authority #000442
4338 Belleview Ave
Kansas City, MO 64111
816.531.4144 phone

Smith & Boucher, Inc.
Mechanical, Electrical, & Plumbing
State Certificate of Authority #EGC000178
25618 W 103rd Street
Olathe, KS 66061
913.345.2127 phone

MKEC Engineering, Inc.
Civil Engineer
State Certificate of Authority
Engineering #2001009364
Landscaping #2006027139
Surveying #2006027138
11827 W 112th Street, Suite 200
Overland Park, KS 66210
913.317.9390 phone

Peerbolte Creative
Theatrical Consultant
109 E Pine St.
Warrensburg, MO 64093-0752
660.429.1383 phone

Avant Acoustics
AV/Acoustics Consultant
14827 West 95th St.
Lenexa, KS 66215
913.888.9111 phone

Discovery Middle School Storm Shelter Addition
Liberty Public Schools
800 Midjay Dr, Liberty, MO 64068

CONFORMED CONSTRUCTION DOCUMENTS

REVISIONS:

#	Description	Date

STATE OF MISSOURI
KEVIN E. NELSON
A-2019015618
ARCHITECT

OCTOBER 11, 2023

Kevin E. Nelson
A-2019015618

The Professional Architects seal affixed to this sheet applies only to the material and items shown on this sheet. All other information, specifications, and materials on other sheets in this set are not reviewed or sealed by the architect, and the architect expressly disclaims any and all responsibility for such plan, drawings, or documents not exhibiting the seal.

JOB NO: 23018
DRAWN BY: KL
CHECKED BY: JB
DATE: 10.11.2023

A301

BUILDING SECTIONS

Please consider the environment before printing this.

10/11/2023 3:57:10 PM

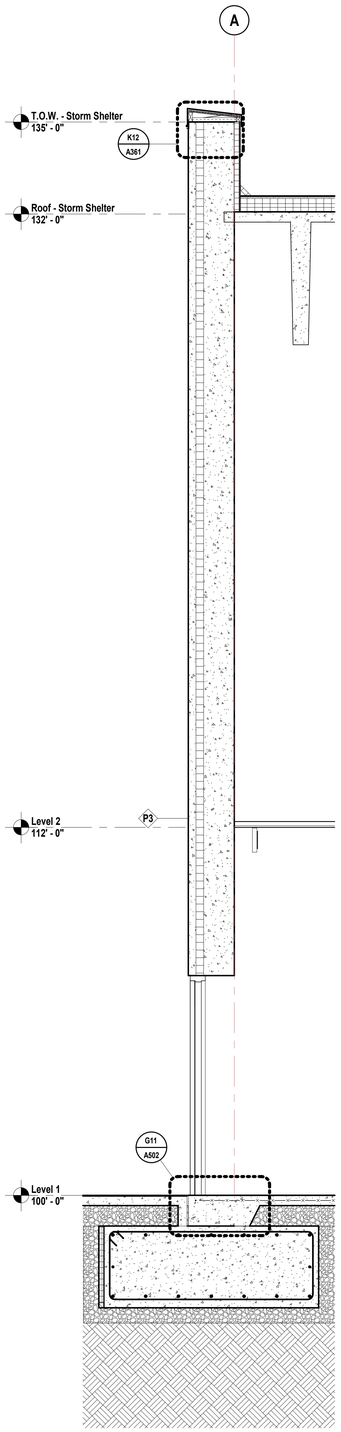

A1 Scale 1/2" = 1'-0" Wall Section - Area A - Multipurpose A103 - W

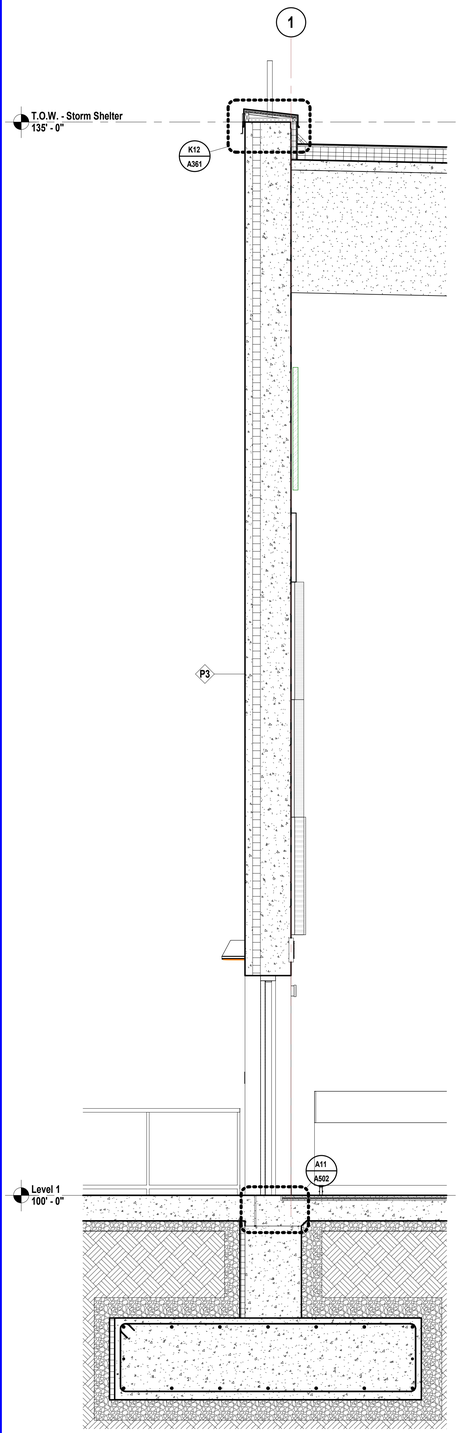

A5 Scale 1/2" = 1'-0" Wall Section - Area A - Multipurpose A103 - N

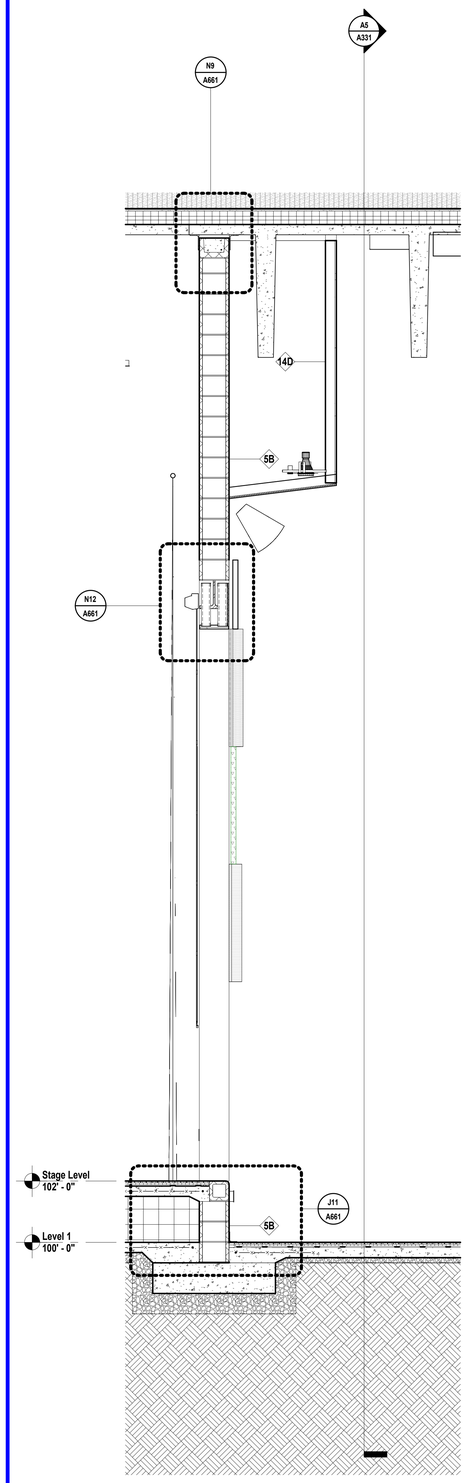

A9 Scale 1/2" = 1'-0" Wall Section - Area A - Stage A108 - E

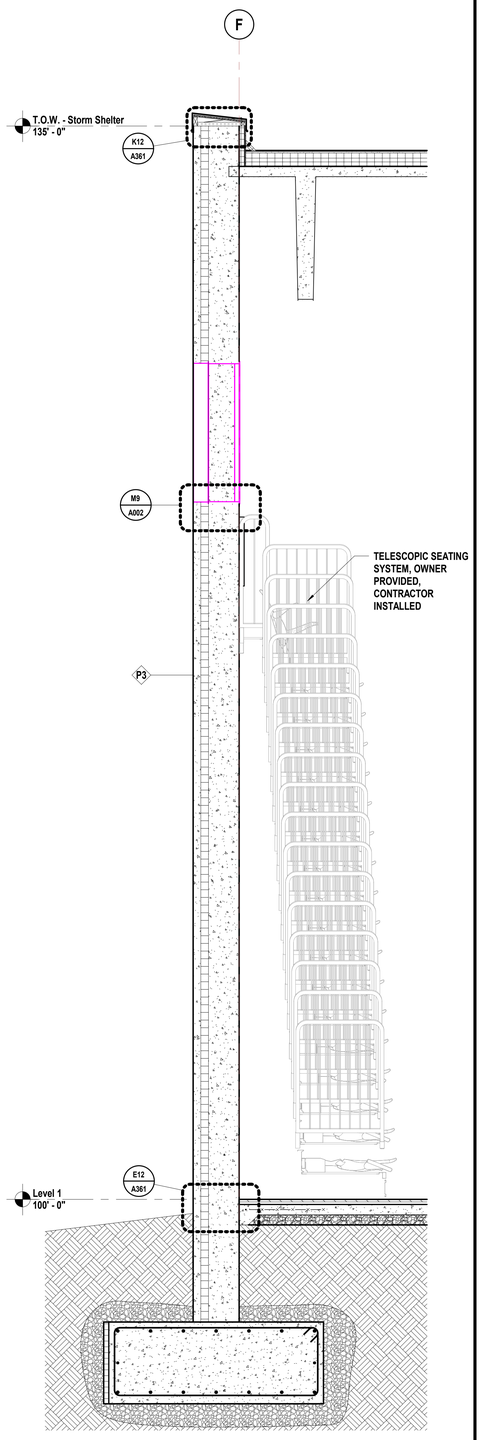

A13 Scale 1/2" = 1'-0" Wall Section - Area A - Multipurpose A103- E

SHEET KEYNOTE LEGEND

hollis + miller architects®

we design the future®

1828 Walnut Street Suite 922
Kansas City, MO 64108
t 816.442.7700

115 Wilcox Street Suite 210
Castle Rock, CO 80104
t 720.949.1689

HOLLISANDMILLER.COM

Hollis + Miller Architects
Missouri State Certificate of Authority
Architecture # 000161
Structure # 2006031333

Bob D Campbell
Structural Engineer
State Certificate of Authority #000442
4338 Belleview Ave
Kansas City, MO 64111
816.531.4144 phone

Smith & Boucher, Inc.
Mechanical, Electrical, & Plumbing
State Certificate of Authority #EGC000178
25618 W 103rd Street
Olathe, KS 66061
913.345.2127 phone

MKEC Engineering, Inc.
Civil Engineer
State Certificate of Authority
Engineering #2001009364
Landscaping #2006027139
Surveying #2006027138
11827 W 112th Street, Suite 200
Overland Park, KS 66210
913.317.9390 phone

Peerbolte Creative
Theatrical Consultant
109 E Pine St.
Warrensburg, MO 64093-0752
660.429.1383 phone

Avant Acoustics
AV/Acoustics Consultant
14827 West 95th St.
Lenexa, KS 66215
913.888.9111 phone

Discovery Middle School Storm Shelter Addition
Liberty Public Schools
800 Midjay Dr, Liberty, MO 64068

CONFORMED CONSTRUCTION DOCUMENTS

REVISIONS:

#	Description	Date

STATE OF MISSOURI
KEVIN E. NELSON
A-2019015618
ARCHITECT

OCTOBER 11, 2023

Kevin E. Nelson
A-2019015618

The Professional Architects seal affixed to this sheet applies only to the material and items shown on this sheet. All drawings, instruments or other documents not exhibiting this seal shall not be considered prepared by this architect, and this architect expressly disclaims any and all responsibility for such plan, drawings, or documents not exhibiting this seal.

JOB NO: 23018
DRAWN BY: KL
CHECKED BY: JB
DATE: 10.11.2023

A331

WALL SECTIONS - MULTIPURPOSE

10/11/2023 3:57:26 PM

Please consider the environment before printing this.

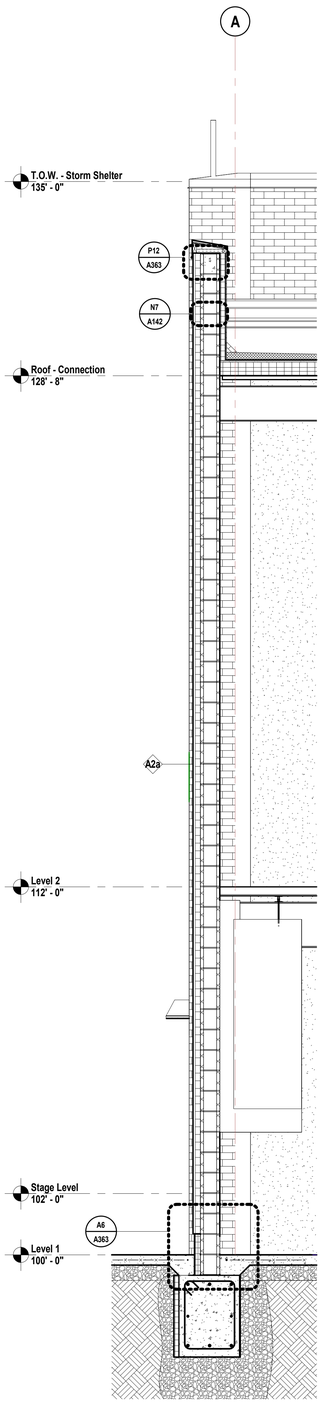

A1 Scale 1/2" = 1'-0" — Wall Section - Area A - Connection - Plan West Wall

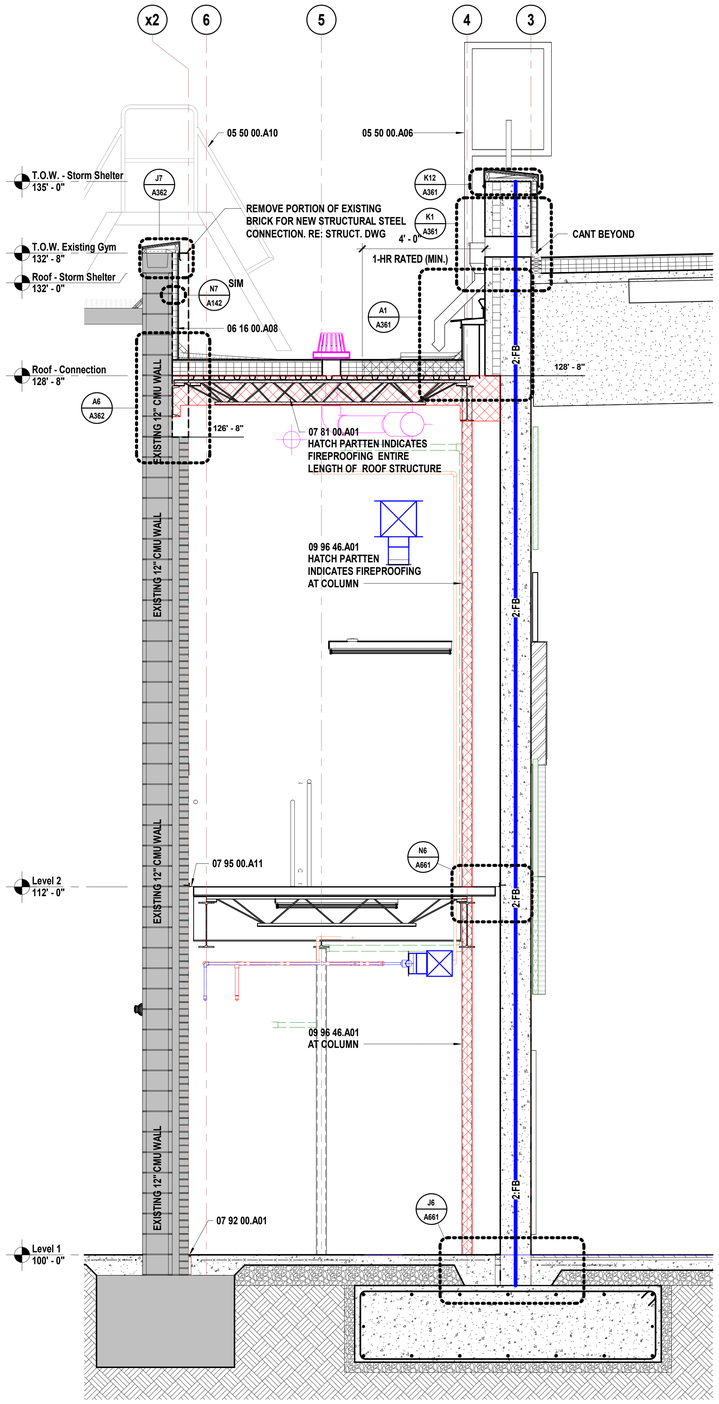

A4 Scale 1/2" = 1'-0" — Wall Section - Area A - Connection/Existing - Plan South Wall

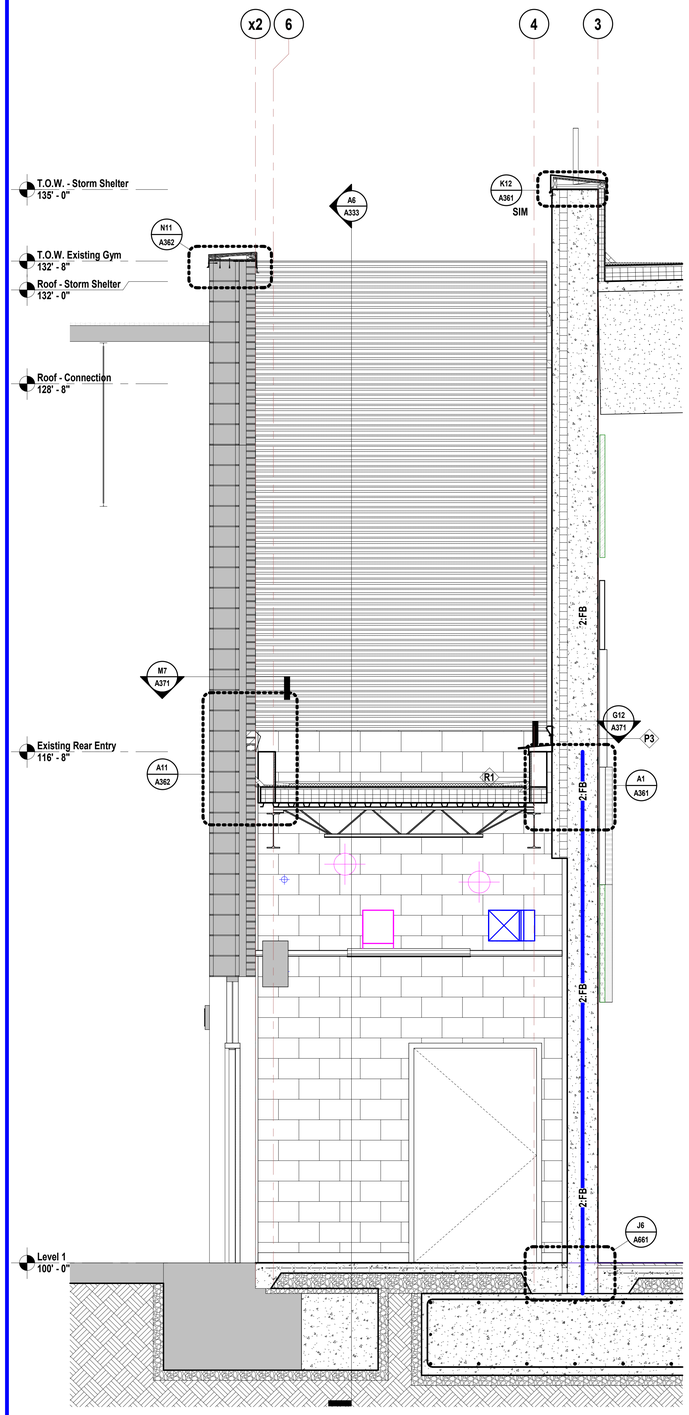

A11 Scale 1/2" = 1'-0" — Wall Section - Area A - Lobby/Existing - Plan South Wall

SHEET KEYNOTE LEGEND

05 50 00.A06	METAL LADDER
05 50 00.A10	SHIP'S LADDER WITH PLATFORM RETURN
06 16 00.A08	COMPOSITE INSULATED ROOF SHEATHING
07 81 00.A01	FIREPROOFING
07 92 00.A01	SEALANT
07 95 00.A11	CEILING-TO-WALL JOINT SYSTEM
09 96 46.A01	INTUMESCENT PAINT

hollis + miller architects

we design the future

1828 Walnut Street Suite 922
Kansas City, MO 64108
t 816.442.7700

115 Wilcox Street Suite 210
Castle Rock, CO 80104
t 720.949.1689

HOLLISANDMILLER.COM

Hollis + Miller Architects
Missouri State Certificate of Authority
Architecture # 0000161
Structure # 2006031333

Bob D Campbell
Structural Engineer
State Certificate of Authority #000442
4338 Belleview Ave
Kansas City, MO 64111
816.531.4144 phone

Smith & Boucher, Inc.
Mechanical, Electrical, & Plumbing
State Certificate of Authority #EGC000178
25618 W 103rd Street
Olathe, KS 66061
913.345.2127 phone

MKEC Engineering, Inc.
Civil Engineer
State Certificate of Authority
Engineering #2001009364
Landscaping #2006027139
Surveying #2006027138
11827 W 112th Street, Suite 200
Overland Park, KS 66210
913.317.9390 phone

Peerbolte Creative
Theatrical Consultant
109 E Pine St.
Warrensburg, MO 64093-0752
660.429.1383 phone

Avant Acoustics
AV/Acoustics Consultant
14827 West 95th St.
Lenexa, KS 66215
913.888.9111 phone

Discovery Middle School Storm Shelter Addition

Liberty Public Schools

800 Midjay Dr, Liberty, MO 64068

CONFORMED CONSTRUCTION DOCUMENTS

REVISIONS:

#	Description	Date
1	Addendum 05	10/06/2023

STATE OF MISSOURI
KEVIN E. NELSON
A-2019015618
ARCHITECT

OCTOBER 11, 2023

Kevin E. Nelson
A-2019015618

The Professional Architects seal affixed to this sheet applies only to the material and items shown on this sheet. All other information shown on this sheet is provided for the convenience of the Owner and Contractor. The Owner and the architect expressly disclaim any and all responsibility for such plan, drawings, or documents not exhibiting the seal.

JOB NO: 23018
DRAWN BY: KL
CHECKED BY: JB
DATE: 10.11.2023

A332

WALL SECTIONS - MULTIPURPOSE & CONNECTION

Please consider the environment before printing this.

10/11/2023 3:57:23 PM

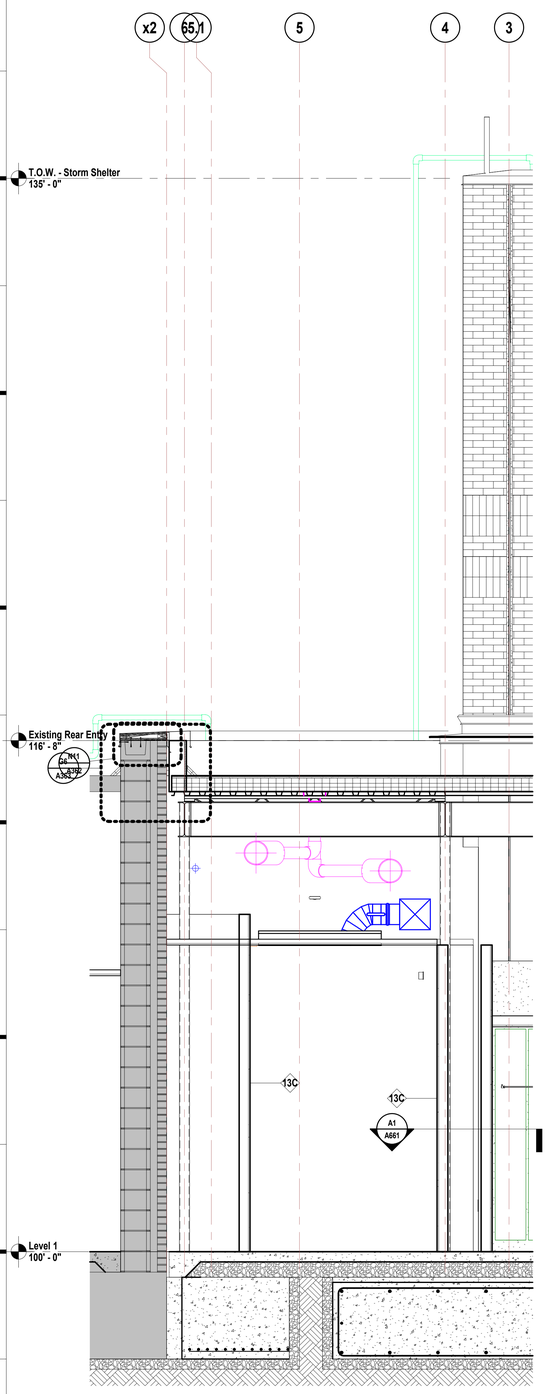

A1 Scale 1/2" = 1'-0" — Wall Section - Area A - Lobby/Existing - S

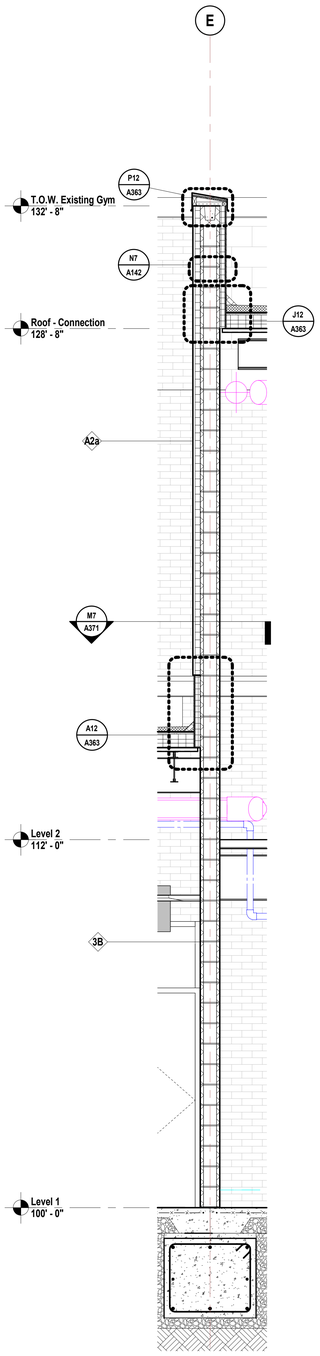

A6 Scale 1/2" = 1'-0" — Wall Section - Area A - Lobby/Existing - E/S

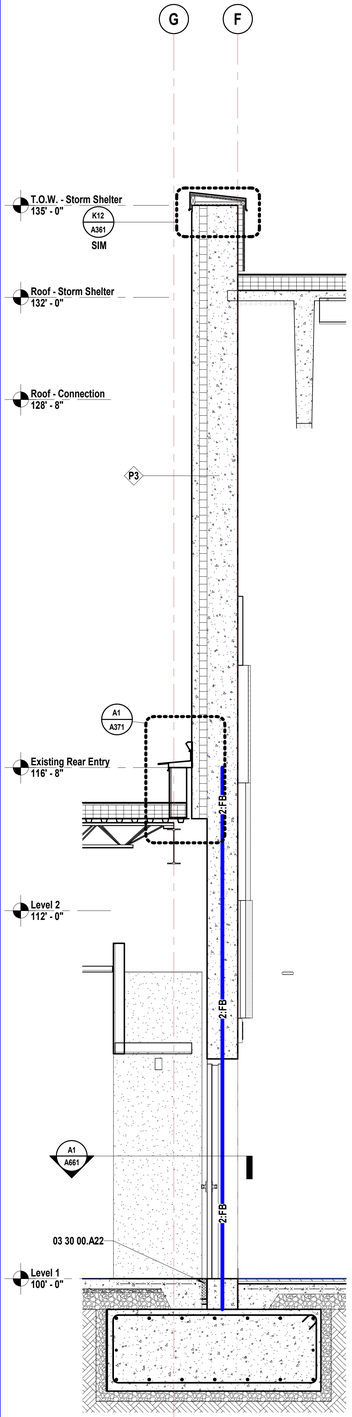

A9 Scale 1/2" = 1'-0" — Wall Section - Area A - Entry to Multipurpose

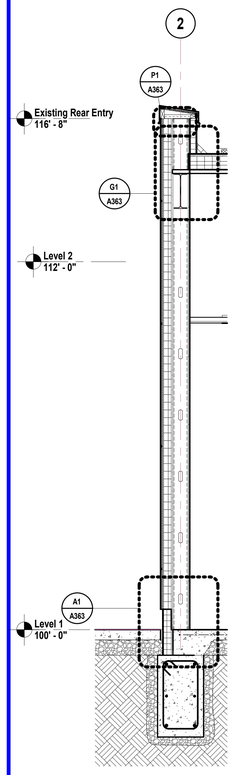

J12 Scale 1/2" = 1'-0" — Sectionn - Entry - E

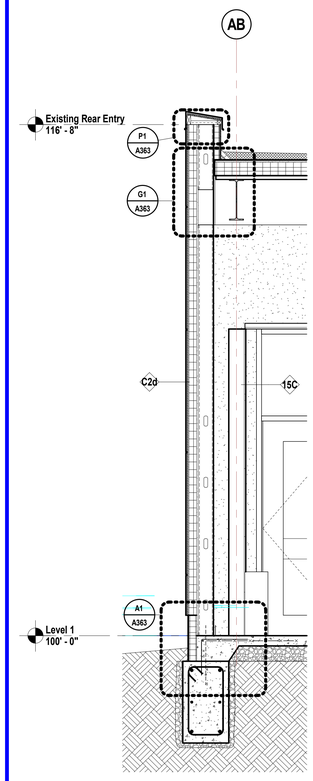

J14 Scale 1/2" = 1'-0" — Wall Section - Area A - Entry A100 - E

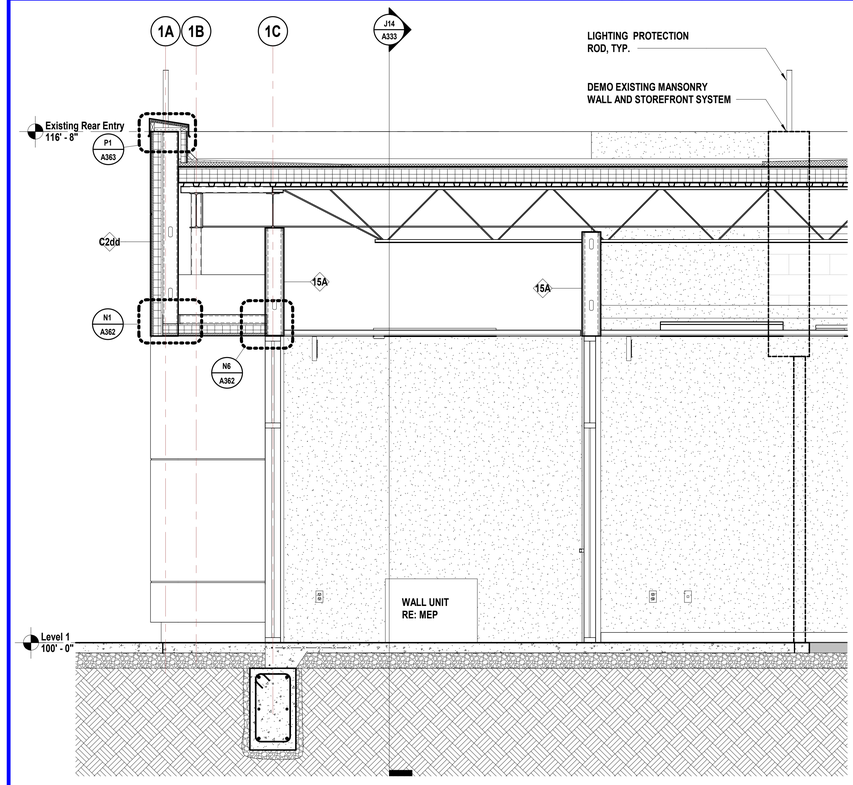

A12 Scale 1/2" = 1'-0" — Wall Section - Area A - Entry- N

SHEET KEYNOTE LEGEND

03 30 00.A22 EXPANSION/ISOLATION JOINT

hollis + miller architects

we design the future®

1828 Walnut Street Suite 922
Kansas City, MO 64108
t 816.442.7700

115 Wilcox Street Suite 210
Castle Rock, CO 80104
t 720.949.1689

HOLLISANDMILLER.COM

Hollis + Miller Architects
Missouri State Certificate of Authority
Architecture # 0000161
Structure # 2006031333

Bob D Campbell
Structural Engineer
State Certificate of Authority #000442
4338 Belleview Ave
Kansas City, MO 64111
816.531.4144 phone

Smith & Boucher, Inc.
Mechanical, Electrical, & Plumbing
State Certificate of Authority #ESC000178
25618 W 103rd Street
Olathe, KS 66061
913.345.2127 phone

MKEC Engineering, Inc.
Civil Engineer
State Certificate of Authority
Engineering #2001009364
Landscaping #2006027139
Surveying #2006027138
11827 W 112th Street, Suite 200
Overland Park, KS 66210
913.317.9390 phone

Peerbolte Creative
Theatrical Consultant
109 E Pine St.
Warrensburg, MO 64093-0752
660.429.1383 phone

Avant Acoustics
AV/Acoustics Consultant
14827 West 95th St.
Lenexa, KS 66215
913.888.9111 phone

CONFORMED CONSTRUCTION DOCUMENTS

Discovery Middle School Storm Shelter Addition
Liberty Public Schools
800 Midjay Dr, Liberty, MO 64068

REVISIONS:

#	Description	Date

STATE OF MISSOURI
KEVIN E. NELSON
A-2019015618
ARCHITECT

OCTOBER 11, 2023

Kevin E. Nelson
A-2019015618

The Professional Architects seal affixed to this sheet applies only to the material and items shown on this sheet. All other documents, materials and information shown on this sheet are not intended to be part of the work of the architect and the architect expressly disclaims any and all responsibility for such plan, drawings, or documents not exhibiting the seal.

JOB NO: 23018
DRAWN BY: KL
CHECKED BY: JB
DATE: 10.11.2023

A333

WALL SECTIONS - CONNECTION & ENTRY

Please consider the environment before printing this.

SHEET NOTES

1. REFER TO SHEET G000 FOR SHEET INDEX
2. DO NOT SCALE THIS DRAWING
3. REFER TO INTERIOR ELEVATIONS, FOR PLACEMENT OF ALL WALL MOUNTED ITEMS
4. WALL MOUNTED LIGHT FIXTURES, GRILLES AND OTHER MEP ITEMS ARE SHOWN FOR PLACEMENT ONLY

SHEET KEYNOTE LEGEND

06 16 00.A20	STRUCTURAL CONCRETE PANEL
07 21 00.A08	UNFACED GLASS FIBER BLANKET INSULATION
10 21 13.A01	TOILET COMPARTMENTS
31 20 00.A13	GEOFOAM

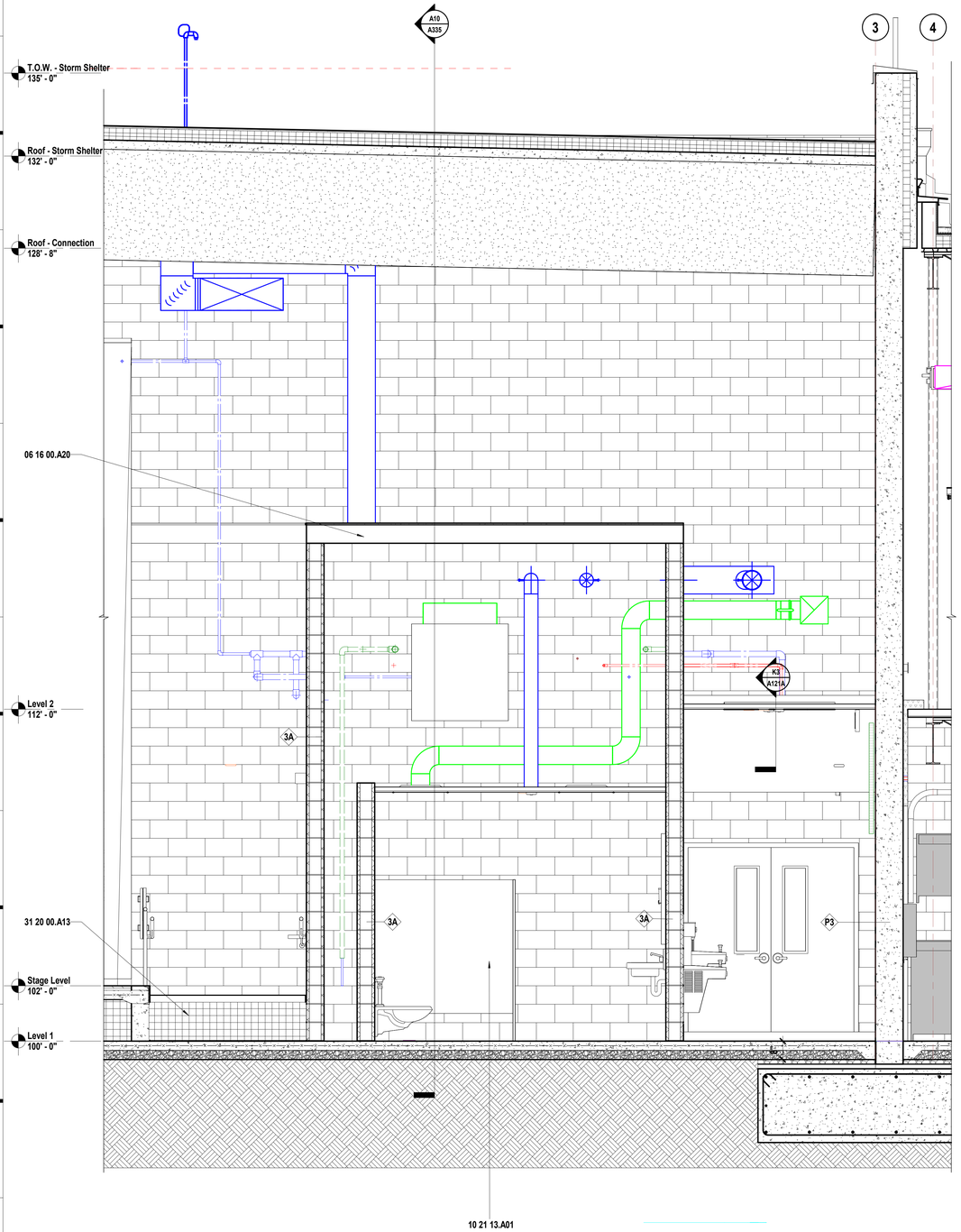

A1 Scale 1/2" = 1'-0" — Section - Area A - Cap Over Mechanical and RRs - N/S

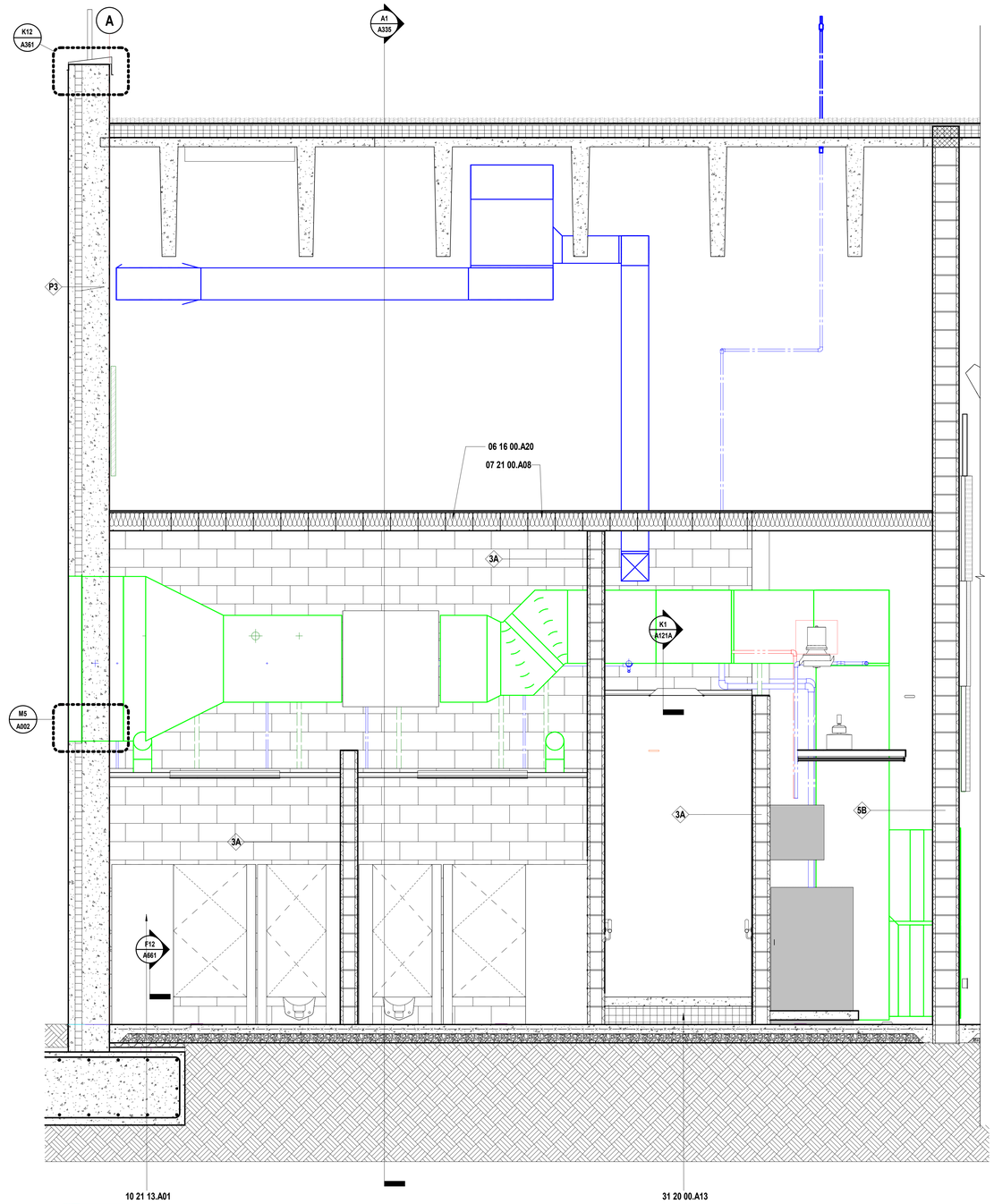

A10 Scale 1/2" = 1'-0" — Section - Area A - Cap Over Mechanical and RRs - E/W

hollis + miller architects®
we design the future®
1828 Walnut Street Suite 922
Kansas City, MO 64108
t 816.442.7700
115 Wilcox Street Suite 210
Castle Rock, CO 80104
t 720.949.1689
HOLLISANDMILLER.COM
Hollis + Miller Architects
Missouri State Certificate of Authority
Architecture # 0000161
Structure # 2006031333

Bob D Campbell
Structural Engineer
State Certificate of Authority #000442
4338 Belleview Ave
Kansas City, MO 64111
816.531.4144 phone

Smith & Boucher, Inc.
Mechanical, Electrical, & Plumbing
State Certificate of Authority #EGC000178
25618 W 103rd Street
Olathe, KS 66061
913.345.2127 phone

MKEC Engineering, Inc.
Civil Engineer
State Certificate of Authority
Engineering #2001009364
Landscaping #2006027139
Surveying #2006027138
11827 W 112th Street, Suite 200
Overland Park, KS 66210
913.317.9390 phone

Peerbolte Creative
Theatrical Consultant
109 E Pine St.
Warrensburg, MO 64093-0752
660.429.1383 phone

Avant Acoustics
AV/Acoustics Consultant
14827 West 95th St.
Lenexa, KS 66215
913.888.9111 phone

Discovery Middle School Storm Shelter Addition

Liberty Public Schools

800 Midjay Dr, Liberty, MO 64068

CONFORMED CONSTRUCTION DOCUMENTS

REVISIONS:

#	Description	Date

STATE OF MISSOURI — KEVIN E. NELSON — A-2019015618 — ARCHITECT

OCTOBER 11, 2023

Kevin E. Nelson
A-2019015618

*The Professional Architects seal affixed to this sheet applies only to the material and items shown on this sheet. All drawings, instruments or other documents not exhibiting this seal shall not be considered prepared by this architect, and this architect expressly disclaims any and all responsibility for such plan, drawings, or documents not exhibiting this seal.

JOB NO: 23018
DRAWN BY: KL
CHECKED BY: JB
DATE: 10.11.2023

A335

WALL SECTIONS - SUPPORT

Please consider the environment before printing this.
10/11/2023 3:57:38 PM

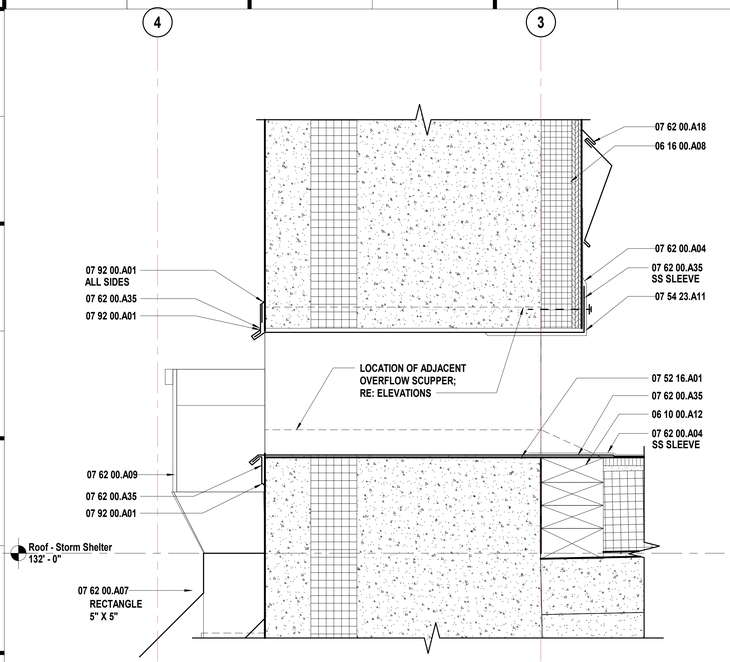

K1 Scale 3" = 1'-0" — Roof Detail - Scupper at Precast Wall

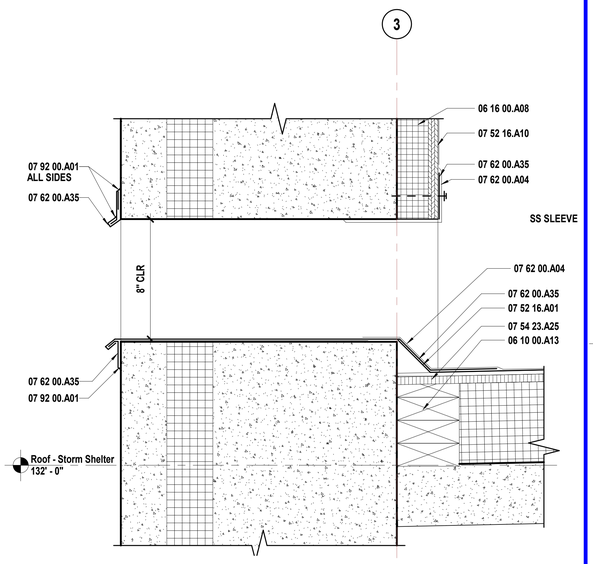

K7 Scale 3" = 1'-0" — Roof Detail - Overflow Scupper at Precast Wall

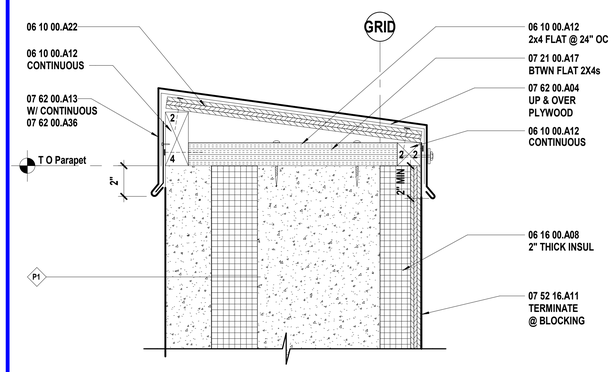

K12 Scale 3" = 1'-0" — Exterior Detail - Wall Type P1 Coping @ Parapet 24" High & Lower Modified Bitumen Roofing

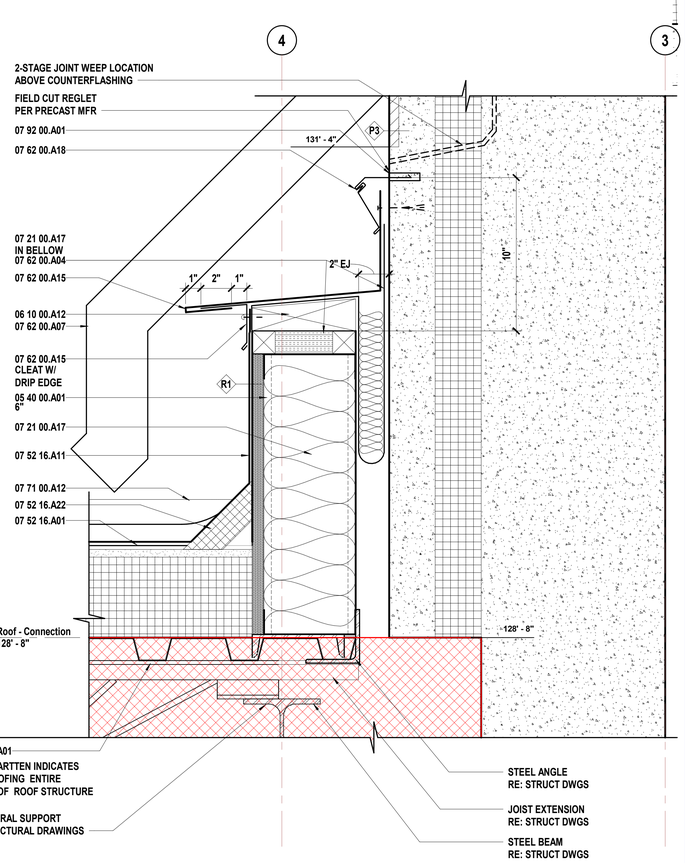

A1 Scale 3" = 1'-0" — Roof Detail - Expansion Joint at Connection Roof and Precast Panel

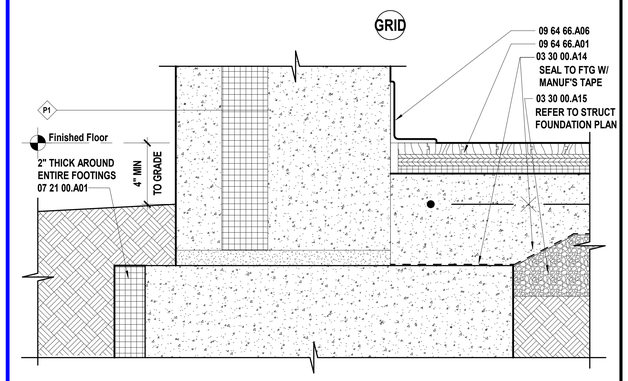

E12 Scale 3" = 1'-0" — Exterior Detail - Wall Type P1 Base of Wall - Wood Floor

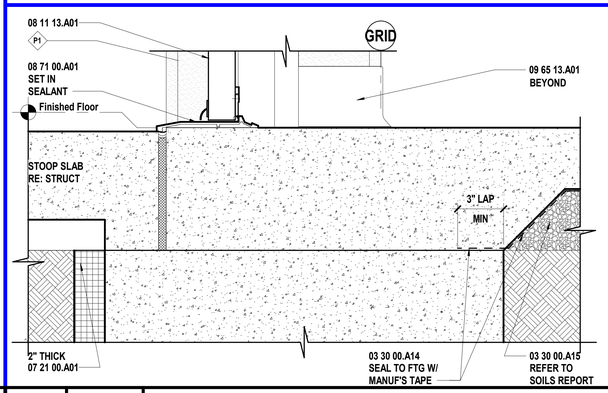

A7 Scale 3" = 1'-0" — Exterior Detail - Wall Type P1 HM Door Sill @ Concrete Floor

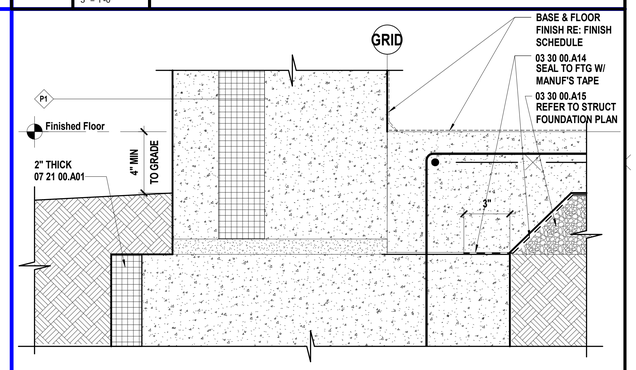

A12 Scale 3" = 1'-0" — Exterior Detail - Wall Type P1 Base of Wall - Concrete Floor

SHEET KEYNOTE LEGEND

03 30 00.A14	VAPOR RETARDERS
03 30 00.A15	GRANULAR DRAINAGE FILL
05 40 00.A01	COLD-FORMED METAL FRAMING
06 10 00.A12	PRESERVATIVE TREATED WOOD BLOCKING/NAILERS
06 10 00.A13	WOOD BLOCKING/NAILERS
06 10 00.A22	PRESERVATIVE TREATED PLYWOOD BLOCKING
06 16 00.A08	COMPOSITE INSULATED ROOF SHEATHING
07 21 00.A01	EXTRUDED POLYSTYRENE BOARD INSULATION
07 21 00.A17	MINERAL WOOL
07 52 16.A01	MODIFIED BITUMINOUS ROOFING SYSTEM
07 52 16.A10	BASE FLASHING
07 52 16.A11	VERTICAL WALL FLASHING (MODIFIED BITUMINOUS)
07 52 16.A22	INSULATION CANT STRIPS
07 54 23.A11	VERTICAL WALL FLASHING
07 54 23.A25	COVERBOARD
07 62 00.A04	FLEXIBLE MEMBRANE CLOSURE
07 62 00.A07	DOWNSPOUTS
07 62 00.A09	CONDUCTOR HEADS
07 62 00.A13	COPING
07 62 00.A15	ROOF TO WALL EXPANSION JOINT COVER
07 62 00.A18	COUNTER FLASHING
07 62 00.A35	PRE-FINISHED MISC METAL FLASHING
07 62 00.A36	CLEAT
07 71 00.A12	SPLASH PANS
07 81 00.A01	FIREPROOFING
07 92 00.A01	SEALANT
08 11 13.A01	HOLLOW METAL DOOR - HEAVY DUTY
08 71 00.A01	THRESHOLDS
09 64 66.A01	WOOD ATHLETIC FLOOR
09 64 66.A06	RESILIENT WALL BASE (VENTED)
09 65 13.A01	RESILIENT BASE

hollis+miller architects®
we design the future®
1828 Walnut Street Suite 922
Kansas City, MO 64108
t 816.442.7700
115 Wilcox Street Suite 210
Castle Rock, CO 80104
t 720.949.1689
HOLLISANDMILLER.COM
Hollis + Miller Architects
Missouri State Certificate of Authority
Architecture # 000161
Structure # 2006031333

Bob D Campbell
Structural Engineer
State Certificate of Authority #000442
4338 Belleview Ave
Kansas City, MO 64111
816.531.4144 phone

Smith & Boucher, Inc.
Mechanical, Electrical, & Plumbing
State Certificate of Authority #EGC000178
25618 W 103rd Street
Olathe, KS 66061
913.345.2127 phone

MKEC Engineering, Inc.
Civil Engineer
State Certificate of Authority
Engineering #2001009364
Landscaping #2006027139
Surveying #2006027138
11827 W 112th Street, Suite 200
Overland Park, KS 66210
913.317.9390 phone

Peerbolte Creative
Theatrical Consultant
109 E Pine St.
Warrensburg, MO 64093-0752
660.429.1383 phone

Avant Acoustics
AV/Acoustics Consultant
14827 West 95th St.
Lenexa, KS 66215
913.888.9111 phone

Discovery Middle School Storm Shelter Addition

Liberty Public Schools

800 Midjay Dr, Liberty, MO 64068

CONFORMED CONSTRUCTION DOCUMENTS

REVISIONS:

#	Description	Date

STATE OF MISSOURI — KEVIN E. NELSON — A-2019015618 — ARCHITECT

OCTOBER 11, 2023

Kevin E. Nelson
A-2019015618

The Professional Architects seal affixed to this sheet applies only to the material and items shown on this sheet. All other information, specifications, and materials on other sheets in this set are not reviewed or sealed by the architect, and this architect expressly disclaims any and all responsibility for such plan, drawings, or documents not exhibiting the seal.

JOB NO: 23018
DRAWN BY: KL
CHECKED BY: JB
DATE: 10.11.2023

A361

EXTERIOR DETAILS

Please consider the environment before printing this.
10/11/2023 3:57:40 PM

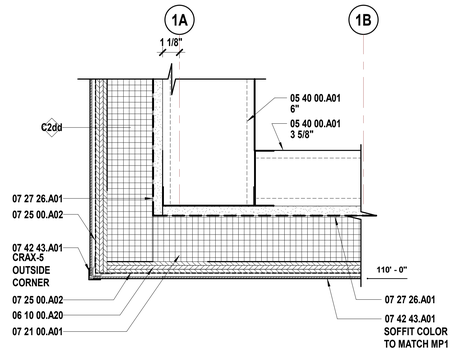

N1 Scale 3" = 1'-0" — Section Detail - Area A - Entry A100 - Soffit

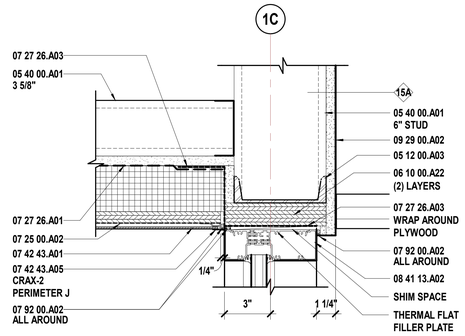

N6 Scale 3" = 1'-0" — Section Detail - Area A - Entry A100 - Soffit @ Storefront Head

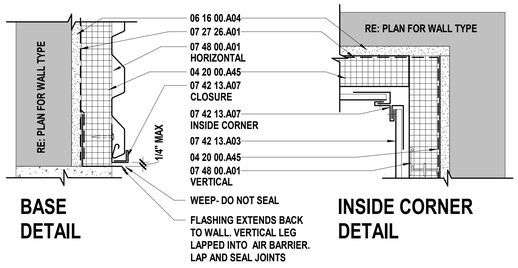

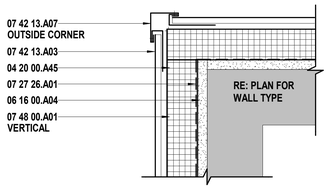

G1 Scale 3" = 1'-0" — Metal Panel - Centria - MP2

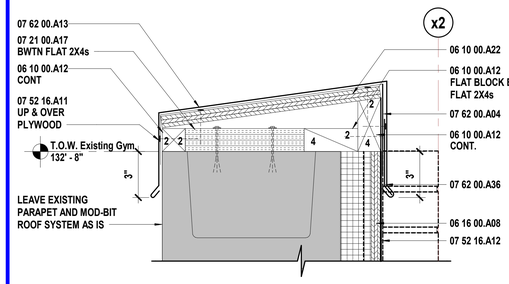

J7 Scale 3" = 1'-0" — Section Detail - Area A - Storage A200 - Parapet Connection to Existing Gym

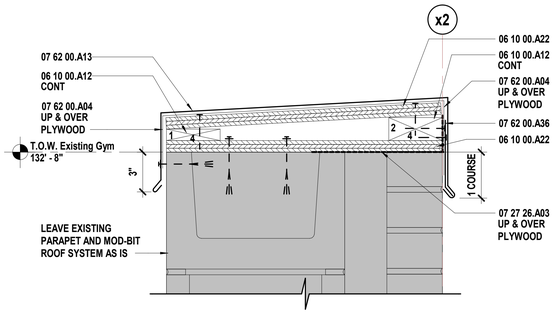

N11 Scale 3" = 1'-0" — Section Detail - Area A - Vestibule A101 - New Brick @ Existing Parapet

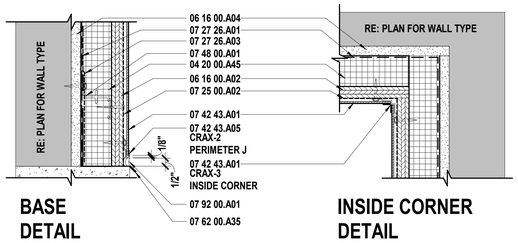

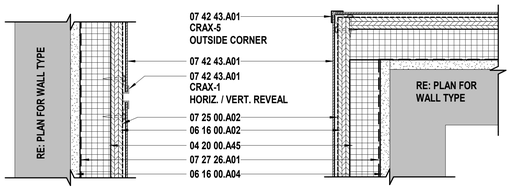

A1 Scale 3" = 1'-0" — Metal Panel - Citadel - MP1

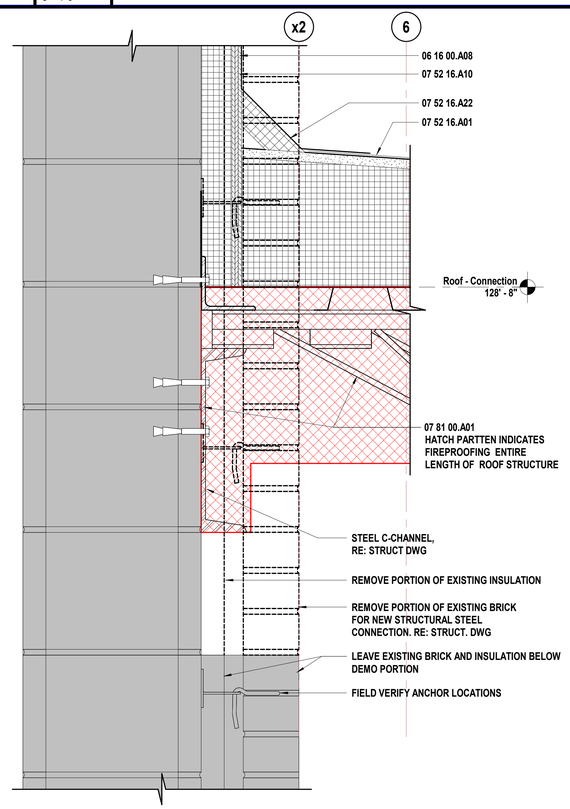

A6 Scale 3" = 1'-0" — Section Detail - Area A - Storage A200 - Roof Connection to Existing Gym

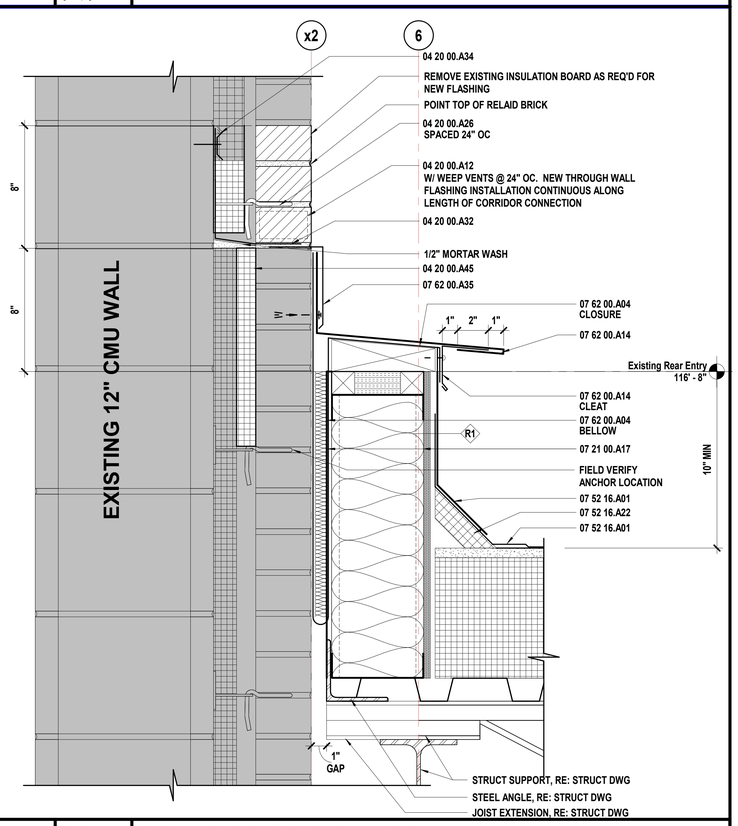

A11 Scale 3" = 1'-0" — Roof ConnectionDetail @ Existing Masonry Wall

SHEET KEYNOTE LEGEND

04 20 00.A12	FACE BRICK
04 20 00.A26	ADJUSTABLE MASONRY VENEER ANCHORS
04 20 00.A32	EMBEDDED FLEXIBLE FLASHING
04 20 00.A34	FLASHING TERMINATION BARS
04 20 00.A45	CAVITY WALL INSULATION
05 12 00.A03	CHANNEL
05 40 00.A01	COLD-FORMED METAL FRAMING
06 10 00.A12	PRESERVATIVE TREATED WOOD BLOCKING/NAILERS
06 10 00.A20	FIRE-RETARDANT TREATED PLYWOOD BLOCKING AND BACKING PANELS
06 10 00.A22	PRESERVATIVE TREATED PLYWOOD BLOCKING
06 16 00.A02	FIRE-RETARDANT TREATED PLYWOOD
06 16 00.A04	GLASS-MAT GYPSUM WALL SHEATHING
06 16 00.A08	COMPOSITE INSULATED ROOF SHEATHING
07 21 00.A01	EXTRUDED POLYSTYRENE BOARD INSULATION
07 21 00.A17	MINERAL WOOL
07 25 00.A02	SELF-ADHERING WEATHER BARRIERS
07 27 26.A01	VAPOR RETARDING FLUID-APPLIED AIR BARRIER
07 27 26.A03	TRANSITION MEMBRANE
07 42 13.A03	CONCEALED FASTENER METAL WALL PANELS
07 42 13.A07	FLASHING AND TRIM
07 42 43.A01	METAL-FACED COMPOSITE MATERIAL WALL PANELS
07 42 43.A05	TRIM
07 48 00.A01	RAINSCREEN FURRING SYSTEM
07 52 16.A01	MODIFIED BITUMINOUS ROOFING SYSTEM
07 52 16.A10	BASE FLASHING
07 52 16.A11	VERTICAL WALL FLASHING (MODIFIED BITUMINOUS)
07 52 16.A12	VERTICAL WALL FLASHING (EPDM)
07 52 16.A22	INSULATION CANT STRIPS
07 62 00.A04	FLEXIBLE MEMBRANE CLOSURE
07 62 00.A13	COPING
07 62 00.A14	ROOF TO ROOF EXPANSION JOINT COVER
07 62 00.A35	PRE-FINISHED MISC METAL FLASHING
07 62 00.A36	CLEAT
07 81 00.A01	FIREPROOFING
07 92 00.A01	SEALANT
07 92 00.A02	SEALANT W/BACKER ROD
08 41 13.A02	THERMAL BROKEN STOREFRONT FRAMING (6")
09 29 00.A02	GYPSUM BOARD - TYPE X

hollis + miller architects®
we design the future®
1828 Walnut Street Suite 922
Kansas City, MO 64108
t 816.442.7700
115 Wilcox Street Suite 210
Castle Rock, CO 80104
t 720.949.1689
HOLLISANDMILLER.COM
Hollis + Miller Architects
Missouri State Certificate of Authority
Architecture # 000161
Structure # 2006031333

Bob D Campbell
Structural Engineer
State Certificate of Authority #000442
4338 Belleview Ave
Kansas City, MO 64111
816.531.4144 phone

Smith & Boucher, Inc.
Mechanical, Electrical, & Plumbing
State Certificate of Authority #EGC000178
25618 W 103rd Street
Olathe, KS 66061
913.345.2127 phone

MKEC Engineering, Inc.
Civil Engineer
State Certificate of Authority
Engineering #2001009364
Landscaping #2006027139
Surveying #2006027138
11827 W 112th Street, Suite 200
Overland Park, KS 66210
913.317.9390 phone

Peerbolte Creative
Theatrical Consultant
109 E Pine St.
Warrensburg, MO 64093-0752
660.429.1383 phone

Avant Acoustics
AV/Acoustics Consultant
14827 West 95th St.
Lenexa, KS 66215
913.888.9111 phone

Discovery Middle School Storm Shelter Addition
Liberty Public Schools
800 Midjay Dr, Liberty, MO 64068

CONFORMED CONSTRUCTION DOCUMENTS

REVISIONS:

#	Description	Date

STATE OF MISSOURI
KEVIN E. NELSON
A-2019015618
ARCHITECT

OCTOBER 11, 2023

Kevin E. Nelson
A-2019015618

"The Professional Architects seal affixed to this sheet applies only to the material and items shown on this sheet. All drawings, instruments or other documents not exhibiting this seal shall not be considered prepared by this architect, and this architect expressly disclaims any and all responsibility for such plan, drawings, or documents not exhibiting this seal."

JOB NO: 23018
DRAWN BY: KL
CHECKED BY: JB
DATE: 10.11.2023

A362

EXTERIOR DETAILS

10/11/2023 3:57:44 PM

Please consider the environment before printing this.

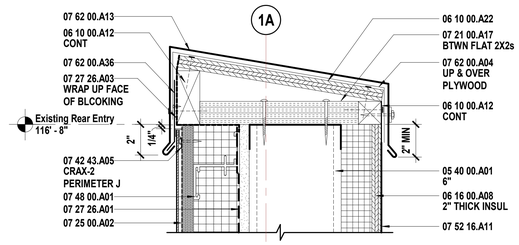

P1 Scale 3" = 1'-0" — Section Detail - Area A - Entry Parapet

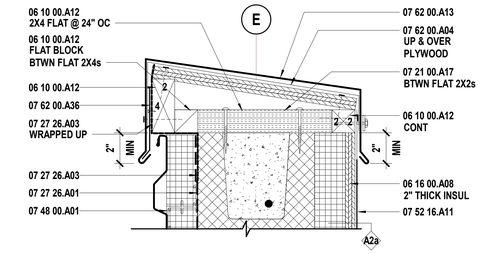

P12 Scale 3" = 1'-0" — Section Detail - Area A - Storage A112 / Vestibule A101 - Parapet

SHEET KEYNOTE LEGEND

03 30 00.A14	VAPOR RETARDERS
03 30 00.A15	GRANULAR DRAINAGE FILL
04 20 00.A34	FLASHING TERMINATION BARS
05 12 00.A04	ANGLE
05 40 00.A01	COLD-FORMED METAL FRAMING
05 40 00.A07	MISCELLANEOUS FRAMING/FURRING
05 40 00.A08	ISOLATION STRIP MEMBRANE
06 10 00.A12	PRESERVATIVE TREATED WOOD BLOCKING/NAILERS
06 10 00.A22	PRESERVATIVE TREATED PLYWOOD BLOCKING
06 16 00.A08	COMPOSITE INSULATED ROOF SHEATHING
07 13 26.A02	TERMINATION BAR
07 13 26.A08	MOISTURE BARRIER
07 21 00.A01	EXTRUDED POLYSTYRENE BOARD INSULATION
07 21 00.A17	MINERAL WOOL
07 25 00.A02	SELF-ADHERING WEATHER BARRIERS
07 27 26.A01	VAPOR RETARDING FLUID-APPLIED AIR BARRIER
07 27 26.A03	TRANSITION MEMBRANE
07 42 13.A07	FLASHING AND TRIM
07 42 43.A05	TRIM
07 44 00.A01	CONCRETE-FACED RIGID INSULATION
07 48 00.A01	RAINSCREEN FURRING SYSTEM
07 52 16.A01	MODIFIED BITUMINOUS ROOFING SYSTEM
07 52 16.A10	BASE FLASHING
07 52 16.A11	VERTICAL WALL FLASHING (MODIFIED BITUMINOUS)
07 52 16.A22	INSULATION CANT STRIPS
07 62 00.A04	FLEXIBLE MEMBRANE CLOSURE
07 62 00.A13	COPING
07 62 00.A18	COUNTER FLASHING
07 62 00.A35	PRE-FINISHED MISC METAL FLASHING
07 62 00.A36	CLEAT
07 92 00.A01	SEALANT
09 65 13.A01	RESILIENT BASE

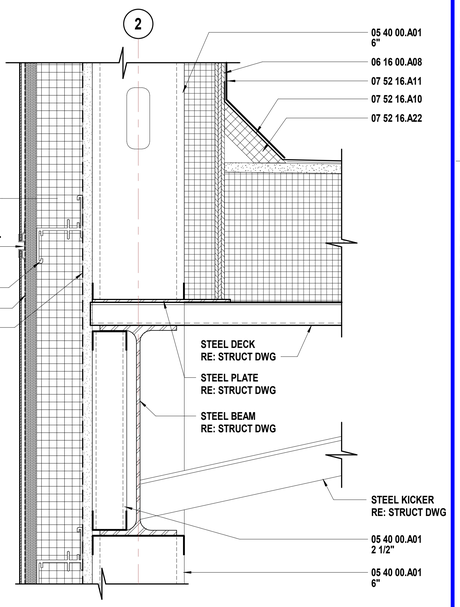

G1 Scale 3" = 1'-0" — Wall Section - Area A - Entry - E

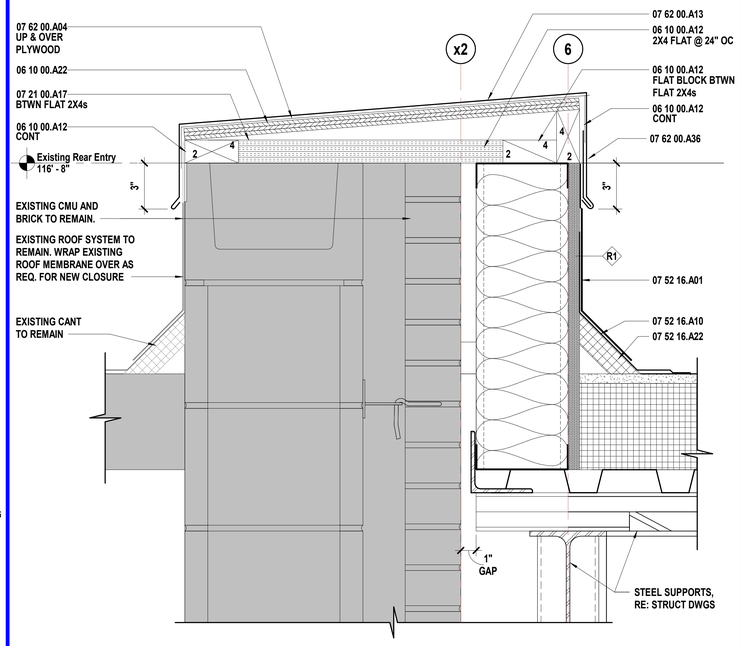

G6 Scale 3" = 1'-0" — Exterior Detail - Coping at Existing Wall

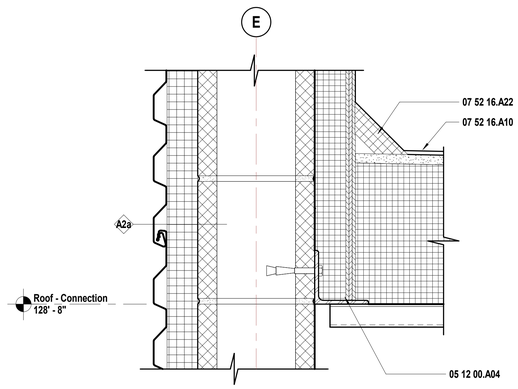

J12 Scale 3" = 1'-0" — Wall Section - Area A - Lobby/Existing - Plan South E/S

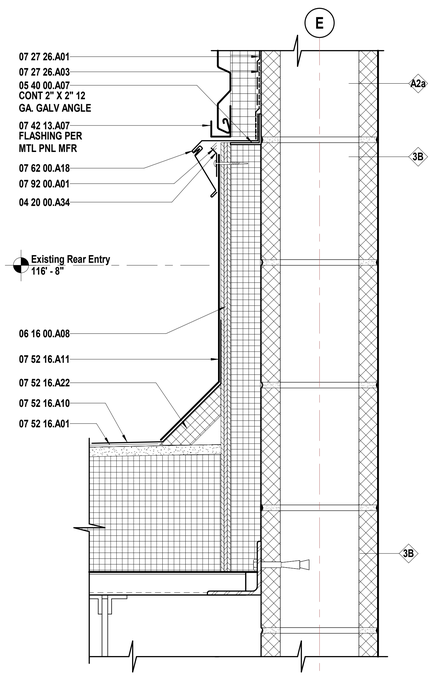

A12 Scale 3" = 1'-0" — Section DetailDetail - Area A - Storage A200 - N

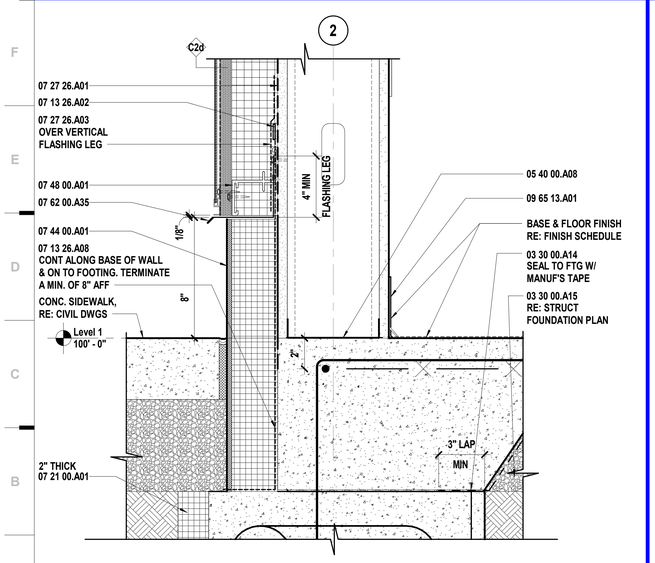

A1 Scale 3" = 1'-0" — Wall Section - Area A - Entry at Footing - E

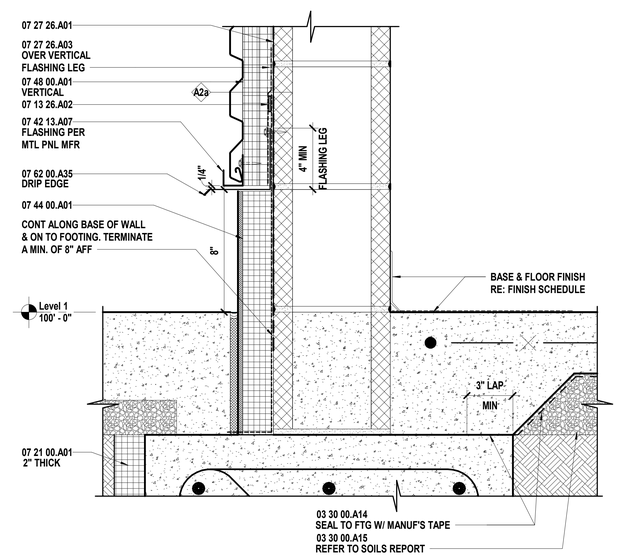

A6 Scale 3" = 1'-0" — Section Detail - Area A - AV/Elec A111 - Footing

hollis + miller architects®
we design the future®
1828 Walnut Street Suite 922
Kansas City, MO 64108
t 816.442.7700
115 Wilcox Street Suite 210
Castle Rock, CO 80104
t 720.949.1689
HOLLISANDMILLER.COM
Hollis + Miller Architects
Missouri State Certificate of Authority
Architecture # 000161
Structure # 2006031333

Bob D Campbell
Structural Engineer
State Certificate of Authority #000442
4338 Belleview Ave
Kansas City, MO 64111
816.531.4144 phone

Smith & Boucher, Inc.
Mechanical, Electrical, & Plumbing
State Certificate of Authority #EGC000178
25618 W 103rd Street
Olathe, KS 66061
913.345.2127 phone

MKEC Engineering, Inc.
Civil Engineer
State Certificate of Authority
Engineering #2001009364
Landscaping #2006027139
Surveying #2006027138
11827 W 112th Street, Suite 200
Overland Park, KS 66210
913.317.9390 phone

Peerbolte Creative
Theatrical Consultant
109 E Pine St.
Warrensburg, MO 64093-0752
660.429.1383 phone

Avant Acoustics
AV/Acoustics Consultant
14827 West 95th St.
Lenexa, KS 66215
913.888.9111 phone

Discovery Middle School Storm Shelter Addition

Liberty Public Schools

800 Midjay Dr, Liberty, MO 64068

CONFORMED CONSTRUCTION DOCUMENTS

REVISIONS:

#	Description	Date

Kevin E. Nelson
A-2019015618

The Professional Architects seal affixed to this cover sheet applies to the material and items shown on this sheet. All drawings, instruments or other documents not exhibiting this seal shall not be considered prepared by this architect, and this architect expressly disclaims any and all responsibility for such plan, drawings, or documents not exhibiting this seal.

JOB NO: 23018
DRAWN BY: KL
CHECKED BY: JB
DATE: 10.11.2023

A363

EXTERIOR DETAILS

10/11/2023 3:57:47 PM
Please consider the environment before printing this.

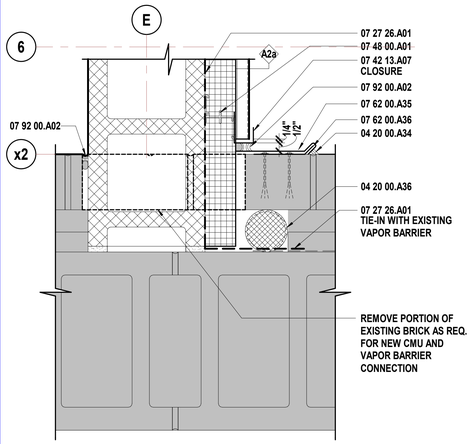

M7 Scale 3" = 1'-0" Plan Detail - Area A - Storage A200 - S

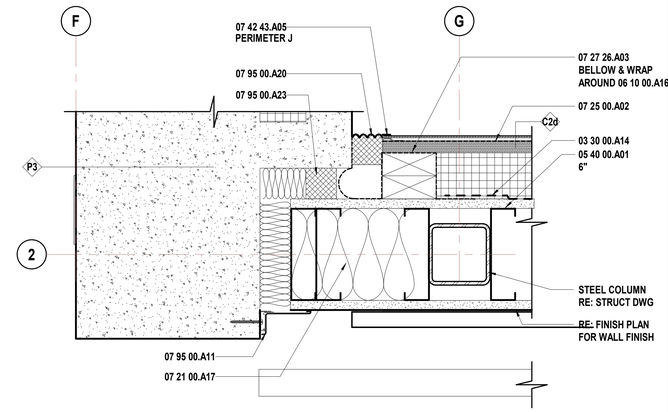

M11 Scale 3" = 1'-0" Plan Detail - Area A - Vestibule A101 Connection to Existing - W

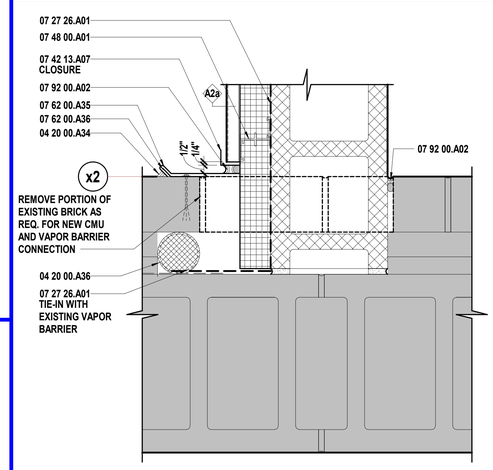

G7 Scale 3" = 1'-0" Plan Detail - Area A - AV/Elec A111 - Connection to Existing - W

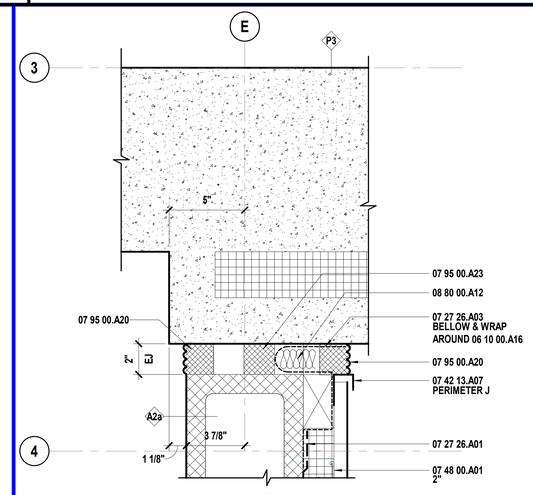

G12 Scale 3" = 1'-0" Plan Detail - Area A - Storage A200 - Connection to Multipurpose - N

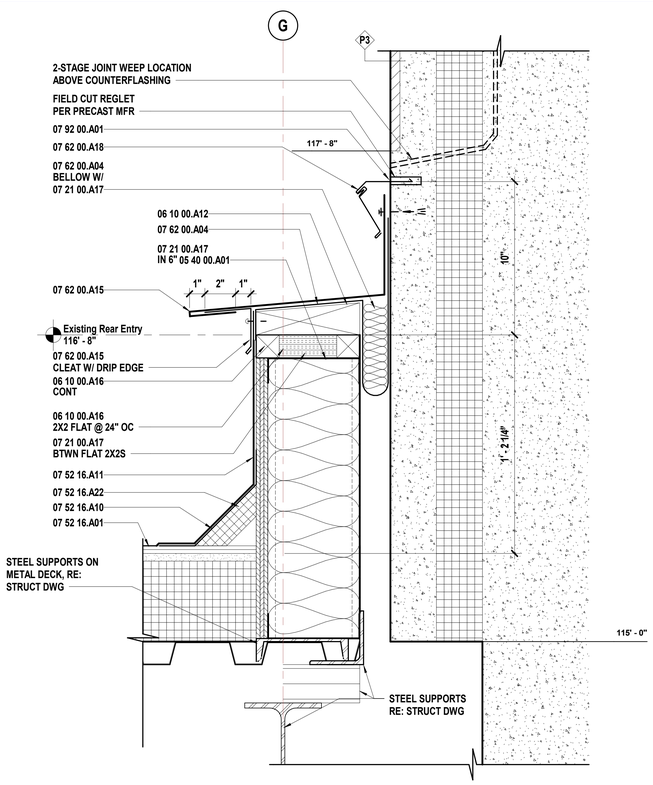

A1 Scale 3" = 1'-0" Wall Section - Area A - Entry to Multipurpose at Roof

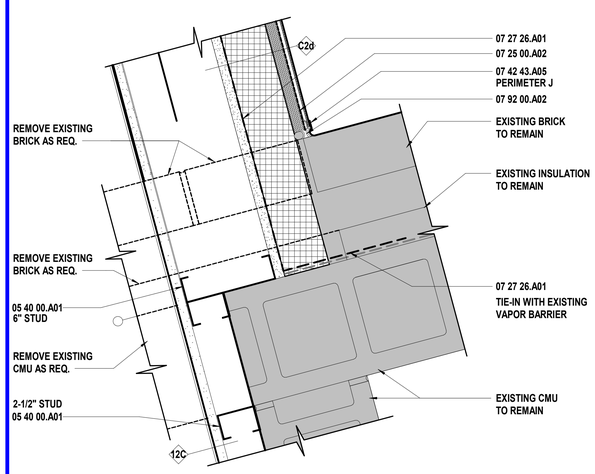

A7 Scale 3" = 1'-0" Plan Detail - Area A - Lobby A102 - Connection to Existing

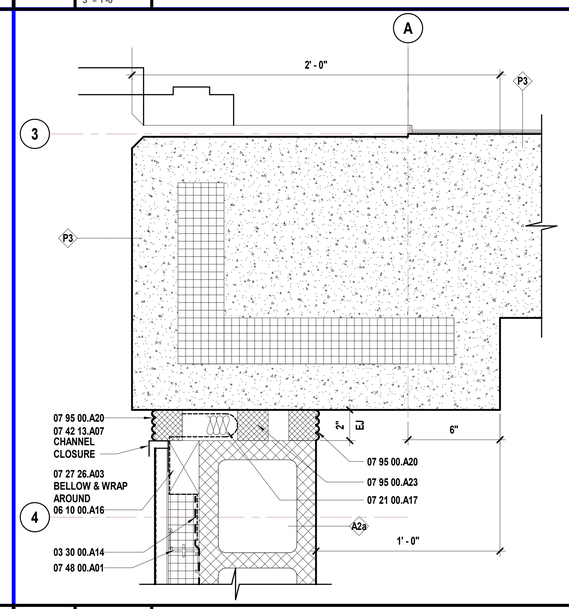

A12 Scale 3" = 1'-0" Plan Detail - Area A - AV/Elec A111 - Connection to Multipurpose - W

SHEET KEYNOTE LEGEND

03 30 00.A14	VAPOR RETARDERS
04 20 00.A34	FLASHING TERMINATION BARS
04 20 00.A36	TUBULAR COMPRESSIBLE FILLERS
05 40 00.A01	COLD-FORMED METAL FRAMING
06 10 00.A12	PRESERVATIVE TREATED WOOD BLOCKING/NAILERS
06 10 00.A16	FIRE-RETARDANT TREATED WOOD BLOCKING & NAILERS
07 21 00.A17	MINERAL WOOL
07 25 00.A02	SELF-ADHERING WEATHER BARRIERS
07 27 26.A01	VAPOR RETARDING FLUID-APPLIED AIR BARRIER
07 27 26.A03	TRANSITION MEMBRANE
07 42 13.A07	FLASHING AND TRIM
07 42 43.A05	TRIM
07 48 00.A01	RAINSCREEN FURRING SYSTEM
07 52 16.A01	MODIFIED BITUMINOUS ROOFING SYSTEM
07 52 16.A10	BASE FLASHING
07 52 16.A11	VERTICAL WALL FLASHING (MODIFIED BITUMINOUS)
07 52 16.A22	INSULATION CANT STRIPS
07 62 00.A04	FLEXIBLE MEMBRANE CLOSURE
07 62 00.A15	ROOF TO WALL EXPANSION JOINT COVER
07 62 00.A18	COUNTER FLASHING
07 62 00.A35	PRE-FINISHED MISC METAL FLASHING
07 62 00.A36	CLEAT
07 92 00.A01	SEALANT
07 92 00.A02	SEALANT W/BACKER ROD
07 95 00.A11	CEILING-TO-WALL JOINT SYSTEM
07 95 00.A20	EXTERIOR PRE-FORMED CELLULAR FOAM
07 95 00.A23	PRE-FORMED CELLULAR FOAM SECONDARY SEAL
08 80 00.A12	3/8" CLEAR FULLY-TEMPERED MONOLITHIC FLOAT GLASS

hollis + miller architects®

we design the future®

1828 Walnut Street Suite 922
Kansas City, MO 64108
t 816.442.7700

115 Wilcox Street Suite 210
Castle Rock, CO 80104
t 720.949.1689

HOLLISANDMILLER.COM

Hollis + Miller Architects
Missouri State Certificate of Authority
Architecture # 000161
Structure # 2006031333

Bob D Campbell
Structural Engineer
State Certificate of Authority #000442
4338 Belleview Ave
Kansas City, MO 64111
816.531.4144 phone

Smith & Boucher, Inc.
Mechanical, Electrical, & Plumbing
State Certificate of Authority #EGC000178
25618 W 103rd Street
Olathe, KS 66061
913.345.2127 phone

MKEC Engineering, Inc.
Civil Engineer
State Certificate of Authority
Engineering #2001009364
Landscaping #2006027139
Surveying #2006027138
11827 W 112th Street, Suite 200
Overland Park, KS 66210
913.317.9390 phone

Peerbolte Creative
Theatrical Consultant
109 E Pine St.
Warrensburg, MO 64093-0752
660.429.1383 phone

Avant Acoustics
AV/Acoustics Consultant
14827 West 95th St.
Lenexa, KS 66215
913.888.9111 phone

Discovery Middle School Storm Shelter Addition

Liberty Public Schools

800 Midjay Dr, Liberty, MO 64068

CONFORMED CONSTRUCTION DOCUMENTS

REVISIONS:

#	Description	Date
1	Addendum 01	09/14/2023

STATE OF MISSOURI
KEVIN E. NELSON
A-2019015618
ARCHITECT

OCTOBER 11, 2023

Kevin E. Nelson
A-2019015618

The Professional Architects seal affixed to this sheet applies only to the material and items shown on this sheet. All other information shown on this sheet is provided by others unless otherwise specifically identified by the architect and the architect expressly disclaims any and all responsibility for such plan, drawings, or documents not exhibiting the seal.

JOB NO: 23018
DRAWN BY: KL
CHECKED BY: JB
DATE: 10.11.2023

A371

EXTERIOR DETAILS

Please consider the environment before printing this.

10/11/2023 3:57:50 PM

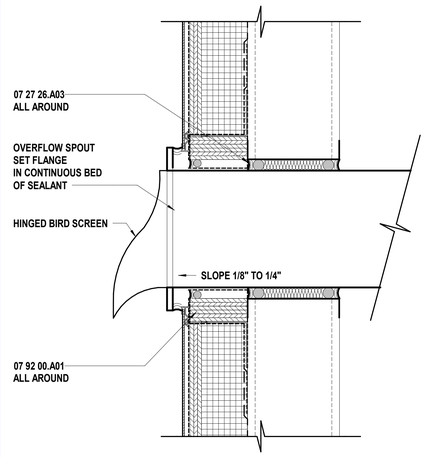

L9 | Scale 3" = 1'-0" | Pitcher Overflow Spout - Brick & Metal Stud

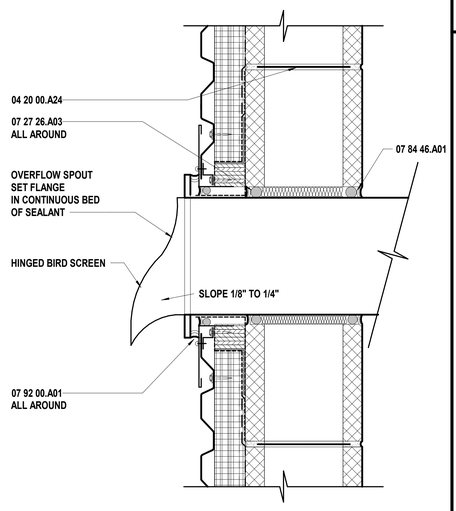

L13 | Scale 3" = 1'-0" | Pitcher Overflow Spout - Brick & CMU

SHEET KEYNOTE LEGEND

04 20 00.A24	MASONRY JOINT REINFORCEMENT
05 40 00.A01	COLD-FORMED METAL FRAMING
06 10 00.A22	PRESERVATIVE TREATED PLYWOOD BLOCKING
07 25 00.A02	SELF-ADHERING WEATHER BARRIERS
07 27 26.A01	VAPOR RETARDING FLUID-APPLIED AIR BARRIER
07 27 26.A03	TRANSITION MEMBRANE
07 42 43.A05	TRIM
07 84 46.A01	FIRE RESISTIVE JOINT SYSTEM
07 92 00.A01	SEALANT
07 92 00.A02	SEALANT W/BACKER ROD
08 41 13.A01	THERMAL BROKEN STOREFRONT FRAMING (4.5")
08 41 13.A02	THERMAL BROKEN STOREFRONT FRAMING (6")
10 26 00.A03	CORNER GUARDS

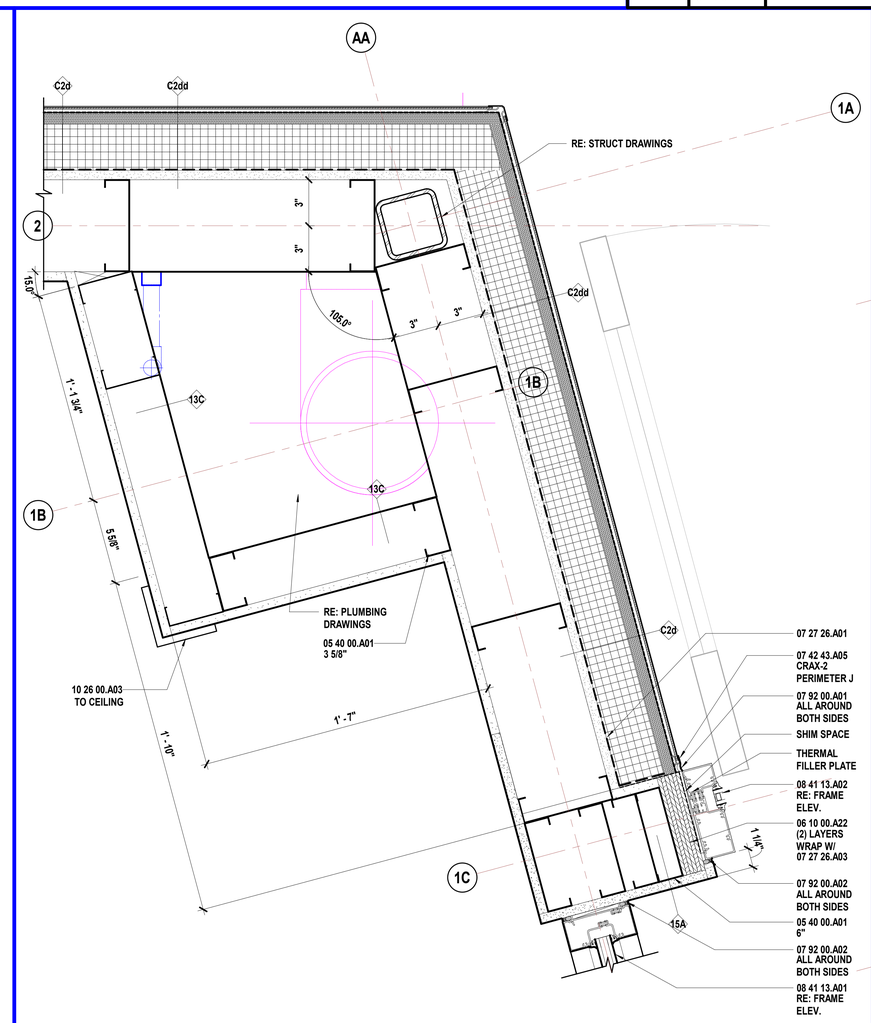

A4 | Scale 3" = 1'-0" | Plan Detail - Area A - Vestibule A101 - N

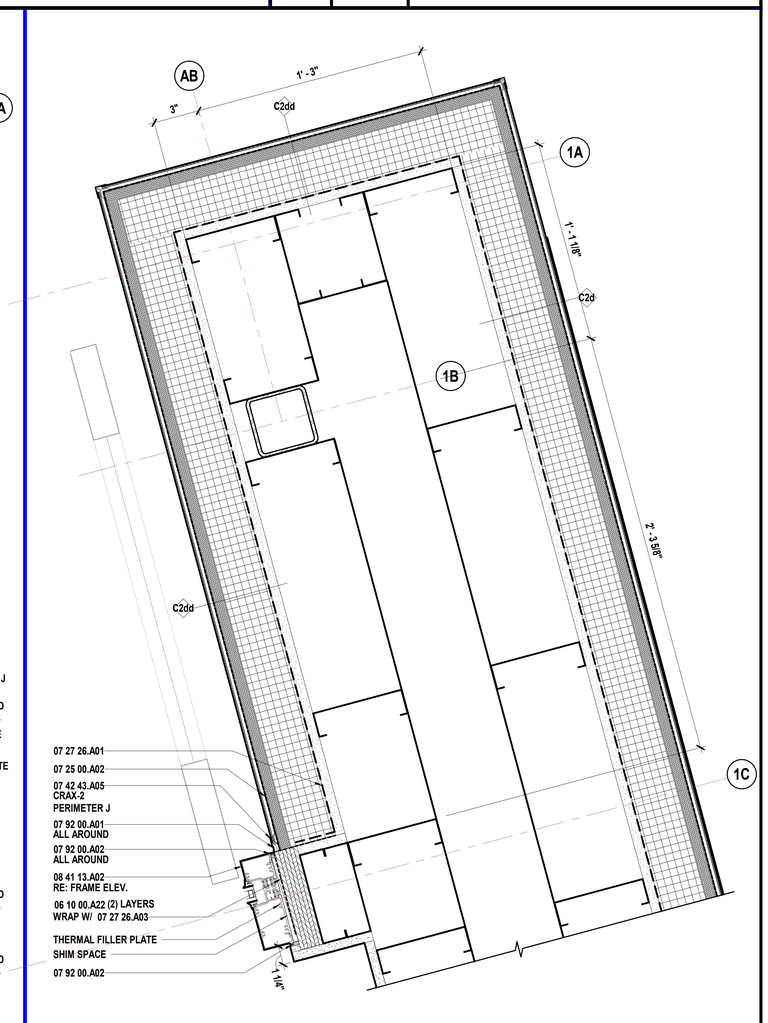

A11 | Scale 3" = 1'-0" | Plan Detail - Area A - Entry A100 - E

hollis + miller architects
we design the future
1828 Walnut Street Suite 922
Kansas City, MO 64108
t 816.442.7700
115 Wilcox Street Suite 210
Castle Rock, CO 80104
t 720.949.1689
HOLLISANDMILLER.COM

Hollis + Miller Architects
Missouri State Certificate of Authority
Architecture # 000161
Structure # 2006031333

Bob D Campbell
Structural Engineer
State Certificate of Authority #000442
4338 Belleview Ave
Kansas City, MO 64111
816.531.4144 phone

Smith & Boucher, Inc.
Mechanical, Electrical, & Plumbing
State Certificate of Authority #EGC000178
25618 W 103rd Street
Olathe, KS 66061
913.345.2127 phone

MKEC Engineering, Inc.
Civil Engineer
State Certificate of Authority
Engineering #2001009364
Landscaping #2006027139
Surveying #2006027138
11827 W 112th Street, Suite 200
Overland Park, KS 66210
913.317.9390 phone

Peerbolte Creative
Theatrical Consultant
109 E Pine St.
Warrensburg, MO 64093-0752
660.429.1383 phone

Avant Acoustics
AV/Acoustics Consultant
14827 West 95th St.
Lenexa, KS 66215
913.888.9111 phone

Discovery Middle School Storm Shelter Addition

Liberty Public Schools

800 Midjay Dr, Liberty, MO 64068

CONFORMED CONSTRUCTION DOCUMENTS

REVISIONS:

#	Description	Date

STATE OF MISSOURI
KEVIN E. NELSON
A-2019015618
ARCHITECT

OCTOBER 11, 2023

Kevin E. Nelson
A-2019015618

The Professional Architects seal affixed to this sheet applies only to the material and items shown on this sheet. All other information shown on this sheet is provided for the convenience of the Owner and Contractor. Hollis + Miller and this architect expressly disclaims any and all responsibility for such plan, drawings, or documents not exhibiting the seal.

JOB NO: 23018
DRAWN BY: KL
CHECKED BY: JB
DATE: 10.11.2023

A372

EXTERIOR DETAILS

10/11/2023 3:57:53 PM
Please consider the environment before printing this.

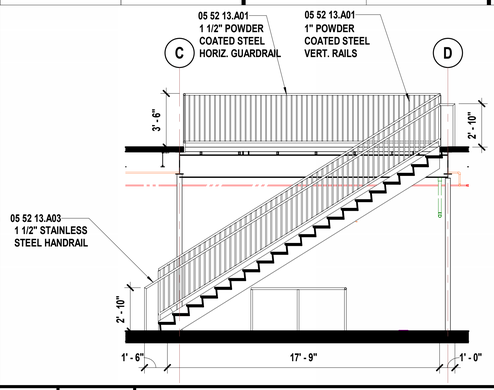

N1 Scale 1/4" = 1'-0" — Stair Section - Area A - Storage A112 to Mezzanine Storage A200 - N

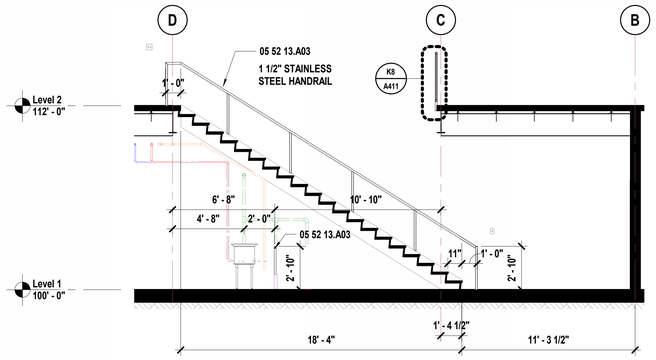

J1 Scale 1/4" = 1'-0" — Stair Section - Area A - Storage A112 to Mezzanine Storage A200 - S

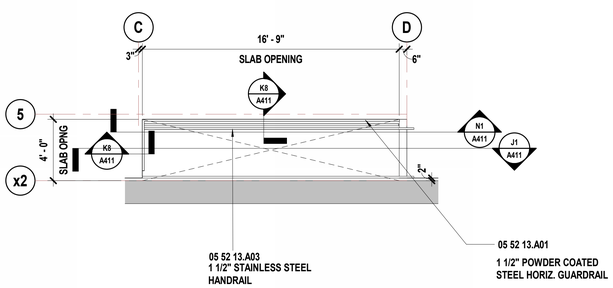

E1 Scale 1/4" = 1'-0" — Floor Plan - Mezzanine Level- Area A Opening — TRUE NORTH — 4' 2' 0' 4'

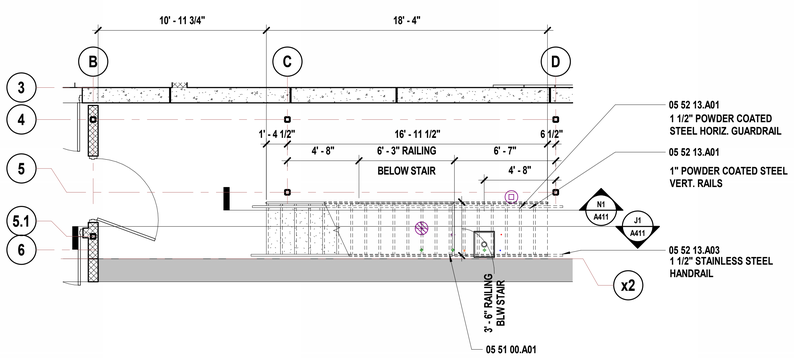

A1 Scale 1/4" = 1'-0" — Stair Plan - Area A - Storage A112 — TRUE NORTH — 4' 2' 0' 4'

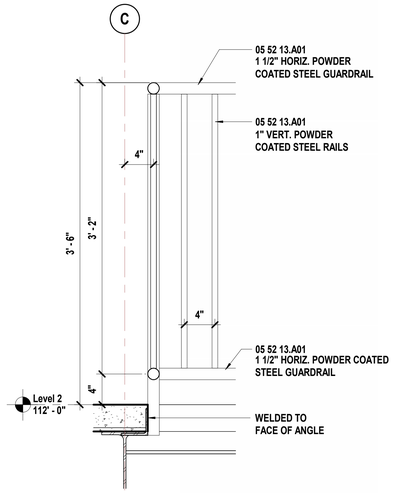

K8 Scale 1 1/2" = 1'-0" — Section Detail - Area A - Storage A112 - Guardrail

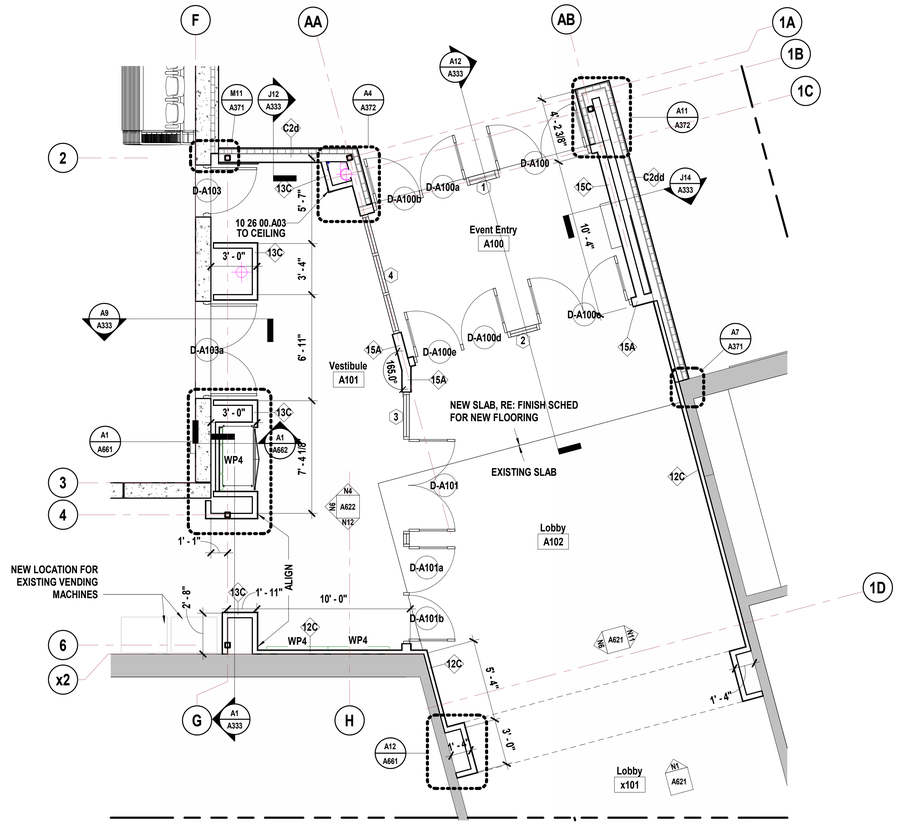

A8 Scale 1/4" = 1'-0" — Floor Plan - Level 1 - Area A - Event Entry A100 & Vestibule A101 — TRUE NORTH — 4' 2' 0' 4'

SHEET KEYNOTE LEGEND

05 51 00.A01	PREASSEMBLED STEEL STAIRS
05 52 13.A01	STEEL PIPE AND TUBE RAILINGS
05 52 13.A03	STAINLESS STEEL PIPE AND TUBE RAILINGS
10 26 00.A03	CORNER GUARDS

SHEET NOTES

1. DO NOT SCALE THIS DRAWING

hollis + miller architects®

we design the future®

1828 Walnut Street Suite 922
Kansas City, MO 64108
t 816.442.7700

115 Wilcox Street Suite 210
Castle Rock, CO 80104
t 720.949.1689

HOLLISANDMILLER.COM

Hollis + Miller Architects
Missouri State Certificate of Authority
Architecture # 0000161
Structure # 2006031333

Bob D Campbell
Structural Engineer
State Certificate of Authority #000442
4338 Belleview Ave
Kansas City, MO 64111
816.531.4144 phone

Smith & Boucher, Inc.
Mechanical, Electrical, & Plumbing
State Certificate of Authority #EGC000178
25618 W 103rd Street
Olathe, KS 66061
913.345.2127 phone

MKEC Engineering, Inc.
Civil Engineer
State Certificate of Authority
Engineering #2001009364
Landscaping #2006027139
Surveying #2006027138
11827 W 112th Street, Suite 200
Overland Park, KS 66210
913.317.9390 phone

Peerbolte Creative
Theatrical Consultant
109 E Pine St.
Warrensburg, MO 64093-0752
660.429.1383 phone

Avant Acoustics
AV/Acoustics Consultant
14827 West 95th St.
Lenexa, KS 66215
913.888.9111 phone

Discovery Middle School Storm Shelter Addition
Liberty Public Schools
800 Midjay Dr, Liberty, MO 64068

CONFORMED CONSTRUCTION DOCUMENTS

REVISIONS:

#	Description	Date
1	Addendum 01	09/14/2023

STATE OF MISSOURI — KEVIN E. NELSON — A-2019015618 — ARCHITECT

OCTOBER 11, 2023

Kevin E. Nelson
A-2019015618

The Professional Architects seal affixed to this sheet applies only to the material and items shown on this sheet. All drawings, instruments or other documents not exhibiting this seal shall not be considered prepared by this architect, and this architect expressly disclaims any and all responsibility for such plan, drawings, or documents not exhibiting this seal.

JOB NO: 23018
DRAWN BY: LB
CHECKED BY: JB
DATE: 10.11.2023

A411

VERTICAL CIRCULATION & ENLARGED PLANS

Please consider the environment before printing this.

10/11/2023 3:57:58 PM

FIXTURE AND ACCESSORY MOUNTING HEIGHTS

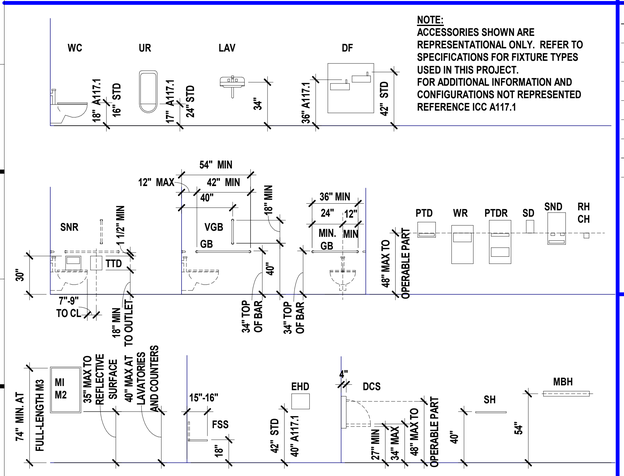

NOTE:
ACCESSORIES SHOWN ARE REPRESENTATIONAL ONLY. REFER TO SPECIFICATIONS FOR FIXTURE TYPES USED IN THIS PROJECT.
FOR ADDITIONAL INFORMATION AND CONFIGURATIONS NOT REPRESENTED REFERENCE ICC A117.1

TOILET, BATH AND LAUNDRY ACCESSORY LEGEND

TAG	ACCESSORY	KEYNOTE	RESPONSIBILITY
TTD	TOILET TISSUE DISPENSER	10 28 00.A01	OFCI
PTD	PAPER TOWEL DISPENSER	10 28 00.A02	OFCI
SD	SOAP DISPENSER	10 28 00.A05	OFCI
GB	GRAB BARS	10 28 00.A06	CFCI
VGB	VERTICAL GRAB BAR	10 28 00.A06	CFCI
SNR	SANITARY NAPKIN RECEPTOR	10 28 00.A08	CFCI
MI	MIRROR - SINGLE	10 28 00.A10	CFCI
CH	COAT HOOK	10 28 00.A15	CFCI

NOTES: TAGS ABOVE WITH A "C" PREFIX (IE CGB) DENOTE CHILD MOUNTING HEIGHTS
CF = CONTRACTOR FURNISH
CI = CONTRACTOR INSTALL
OF = OWNER FURNISH
OI = OWNER INSTALL

SHEET KEYNOTE LEGEND

05 12 00.A04	ANGLE
05 52 13.A03	STAINLESS STEEL PIPE AND TUBE RAILINGS
05 52 13.A10	GATE
10 21 13.A01	TOILET COMPARTMENTS
31 20 00.A13	GEOFOAM

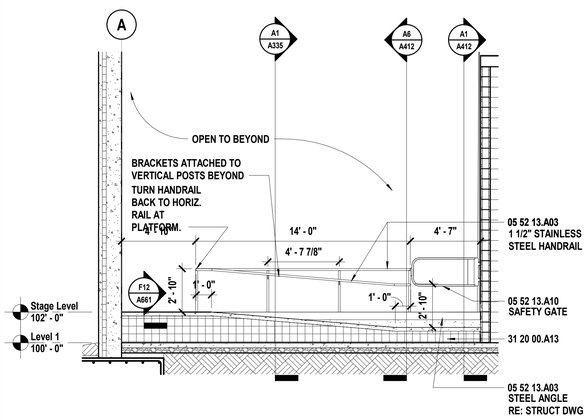

F1 Scale 1/4" = 1'-0" Ramp Section - Circulation A104 to Platform A108 - N

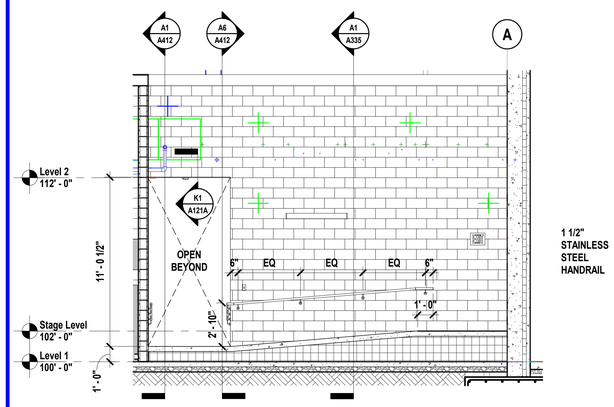

F6 Scale 1/4" = 1'-0" Ramp Section - Circulation A104 to Platform A108 - S

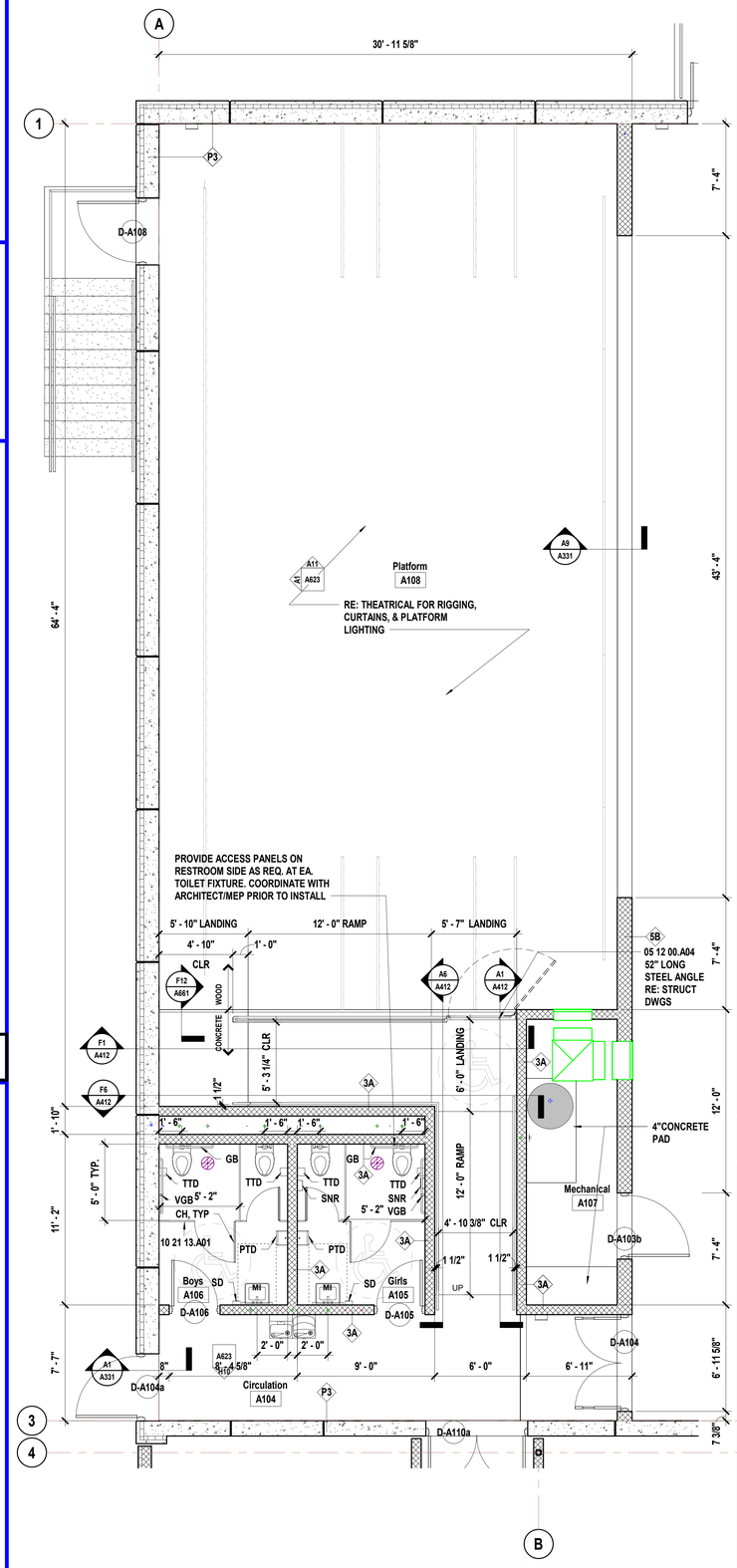

A11 Scale 1/4" = 1'-0" Enlarged Floor Plan - Platform A108

PROJECT NORTH TRUE NORTH

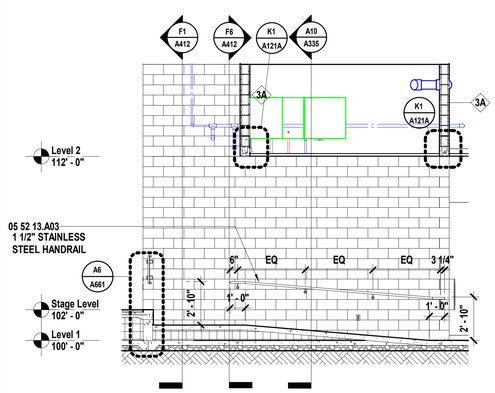

A1 Scale 1/4" = 1'-0" Ramp Section - Circulation A104 to Platform A108- E

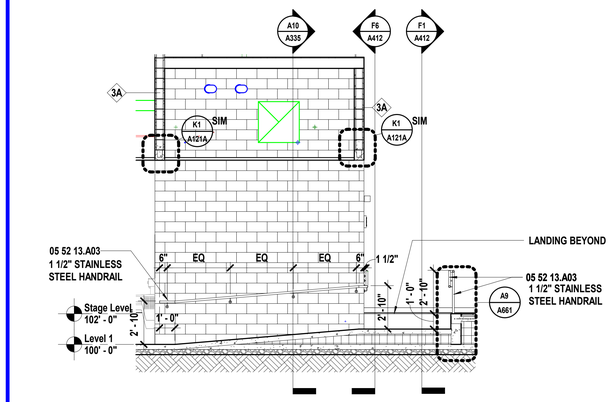

A6 Scale 1/4" = 1'-0" Ramp Section - Circulation A104 to Platform A108 - W

SHEET NOTES

1. REFER TO SHEET G000 FOR SHEET INDEX
2. DO NOT SCALE THIS DRAWING
3. INTERIOR DIMENSIONS ARE TO THE FOLLOWING, UNLESS NOTED OTHERWISE:
   A. TO FACE OF STUD
   B. TO FACE OF MASONRY UNIT
   C. TO FACE OF DOOR AND WINDOW ROUGH OPENINGS
4. REFER TO INTERIOR ELEVATIONS, THIS SHEET, FOR PLACEMENT OF ALL WALL MOUNTED/RECESSED ITEMS
5. COORDINATE LOCATIONS WHERE BACKING REQUIRED FOR TOILET ACCESSORIES

KEY PLAN

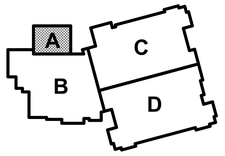

hollis + miller architects
we design the future
1828 Walnut Street Suite 922
Kansas City, MO 64108
t 816.442.7700
115 Wilcox Street Suite 210
Castle Rock, CO 80104
t 720.949.1689
HOLLISANDMILLER.COM
Hollis + Miller Architects
Missouri State Certificate of Authority
Architecture # 0000161
Structure # 2006031333

Bob D Campbell
Structural Engineer
State Certificate of Authority #000442
4338 Belleview Ave
Kansas City, MO 64111
816.531.4144 phone

Smith & Boucher, Inc.
Mechanical, Electrical, & Plumbing
State Certificate of Authority #EGC000178
25618 W 103rd Street
Olathe, KS 66061
913.345.2127 phone

MKEC Engineering, Inc.
Civil Engineer
State Certificate of Authority
Engineering #2001009364
Landscaping #2006027139
Surveying #2006027138
11827 W 112th Street, Suite 200
Overland Park, KS 66210
913.317.9390 phone

Peerbolte Creative
Theatrical Consultant
109 E Pine St.
Warrensburg, MO 64093-0752
660.429.1383 phone

Avant Acoustics
AV/Acoustics Consultant
14827 West 95th St.
Lenexa, KS 66215
913.888.9111 phone

Discovery Middle School Storm Shelter Addition

Liberty Public Schools

800 Midjay Dr, Liberty, MO 64068

CONFORMED CONSTRUCTION DOCUMENTS

REVISIONS:

#	Description	Date

STATE OF MISSOURI
KEVIN E. NELSON
A-2019015618
ARCHITECT

OCTOBER 11, 2023

Kevin E. Nelson
A-2019015618

The Professional Architects seal affixed to this cover sheet and to the material and items shown on this sheet, all drawings, instruments or other documents not exhibiting this seal shall not be considered prepared by this architect, and this architect expressly disclaims any and all responsibility for such plan, drawings, or documents not exhibiting this seal.

JOB NO: 23018
DRAWN BY: LB
CHECKED BY: JB
DATE: 10.11.2023

A412

VERTICAL CIRCULATION & ENLARGED PLANS

Please consider the environment before printing this.
10/11/2023 3:58:06 PM

DOOR SCHEDULE

DOOR				Frame		All DETAILS on A501 UNO					
Number	Size	Type	Glass	Type	Material	Head	Strike	Hinge	Thresh	Fire Rating	Remarks
D-A100	PR 3'-0" x 7'-0" x 1 3/4"	E9	31	1	ALUM	RE: FRAME ELEV	RE: FRAME ELEV	RE: FRAME ELEV	--	--	REMOVBALE CENTER MULLION
D-A100a	3'-0" x 7'-0" x 1 3/4"	E9	31	1	ALUM	RE: FRAME ELEV	RE: FRAME ELEV	RE: FRAME ELEV	--	--	FIXED CENTER MULLION
D-A100b	3'-0" x 7'-0" x 1 3/4"	E9	31	1	ALUM	RE: FRAME ELEV	RE: FRAME ELEV	RE: FRAME ELEV	--	--	FIXED CENTER MULLION, CR, CALL BOX, ADA CONTROL
D-A100c	PR 3'-0" x 7'-0" x 1 3/4"	E9	21	2	ALUM	RE: FRAME ELEV	RE: FRAME ELEV	RE: FRAME ELEV	--	--	REMOVBALE CENTER MULLION
D-A100d	3'-0" x 7'-0" x 1 3/4"	E9	21	2	ALUM	RE: FRAME ELEV	RE: FRAME ELEV	RE: FRAME ELEV	--	--	FIXED CENTER MULLION
D-A100e	3'-0" x 7'-0" x 1 3/4"	E9	21	2	ALUM	RE: FRAME ELEV	RE: FRAME ELEV	RE: FRAME ELEV	--	--	FIXED CENTER MULLION
D-A101	PR 3'-0" x 7'-0" x 1 3/4"	E9	21	3	ALUM	RE: FRAME ELEV	RE: FRAME ELEV	RE: FRAME ELEV	--	--	REMOVBALE CENTER MULLION
D-A101a	3'-0" x 7'-0" x 1 3/4"	E9	21	3	ALUM	RE: FRAME ELEV	RE: FRAME ELEV	RE: FRAME ELEV	--	--	FIXED CENTER MULLION
D-A101b	3'-0" x 7'-0" x 1 3/4"	E9	21	3	ALUM	RE: FRAME ELEV	RE: FRAME ELEV	RE: FRAME ELEV	--	--	FIXED CENTER MULLION
D-A103	3'-0" x 7'-0" x 1 3/4"	F1	--	A	HM	A14/A501	A14/A501	A11/A501	--	90MIN	
D-A103a	PR 3'-0" x 7'-0" x 1 3/4"	F1	--	A	HM	A14/A501	--	A14/A503	--	90MIN	
D-A103b	4'-0" x 7'-0" x 1 3/4"	A3	--	A	HM	A7/A501	A3/A501	A3/A501	--	--	
D-A103c	3'-0" x 7'-0" x 1 3/4"	F1	--	A	HM	F14/A501	F11/A501	F11/A501	--	--	
D-A104	PR 3'-0" x 7'-0" x 1 3/4"	B3	--	A	HM	A7/A501	--	A1/A501 & A3/A501	--	--	
D-A104a	4'-0" x 7'-0" x 1 3/4"	F1	--	A	HM	F14/A501	F11/A501	F11/A501	--	90MIN	
D-A105	3'-0" x 7'-0" x 1 3/4"	A3	--	A	HM	A7/A501	A3/A501	A5/A501	--	--	
D-A106	3'-0" x 7'-0" x 1 3/4"	A3	--	A	HM	A7/A501	A3/A501	A3/A501	--	--	
D-A108	4'-0" x 7'-0" x 1 3/4"	F1	--	A	HM	F14/A501	F11/A501	F11/A501	--	--	
D-A110	PR 3'-2" x 7'-0" x 1 3/4"	A3	--	A	HM	A7/A501	A3/A501	A3/A501	--		SINAGE INDICATING "NOT AN EXIT"
D-A110a	PR 3'-2" x 7'-0" x 1 3/4"	F1	--	A	HM	A14/A501	--	A14/A503	--	90MIN	HIGH WIND, FIRE HOLD OPEN, THUMB TURN INSIDE
D-A111	4'-0" x 7'-0" x 1 3/4"	A3	--	A	HM	A7/A501	A3/A501	A3/A501	--	--	
D-A112	4'-0" x 7'-0" x 1 3/4"	A3	--	A	HM	A7/A501	A3/A501	A3/A501	--	--	
D-A112a	4'-0" x 7'-0" x 1 3/4"	A3	--	A	HM	A7/A501	A3/A501	A3/A501	--		
D-x118	4'-0" x 7'-0" x 1 3/4"	--	--	--	HM	--	--	--	--	--	EXISTING DOOR & FRAME TO REMAIN, PNT
D-x118a	4'-0" x 7'-0" x 1 3/4"	--	--	--	HM	--	--	--	--	--	EXISTING DOOR & FRAME TO REMAIN, PNT
D-x118b	PR 3'-0" x 7'-0" x 1 3/4"	--	--	--	HM	--	--	--	--	--	EXISTING DOOR & FRAME TO REMAIN, REMOVE MAGLOCK
D-x118c	PR 3'-0" x 7'-0" x 1 3/4"	--	--	--	HM	--	--	--	--	--	EXISTING DOOR & FRAME TO REMAIN, REMOVE MAGLOCK
D-x118d	4'-0" x 7'-0" x 1 3/4"	--	--	--	HM	--	--	--	--	--	EXISTING DOOR & FRAME TO REMAIN, REMOVE MAGLOCK

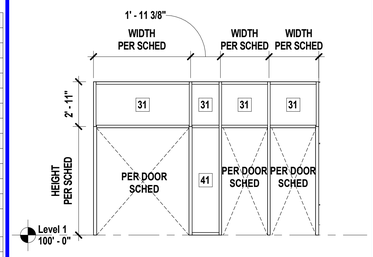

1 08 41 13.A02
6"

N10 Scale 1/4" = 1'-0" — Exterior Window Frame

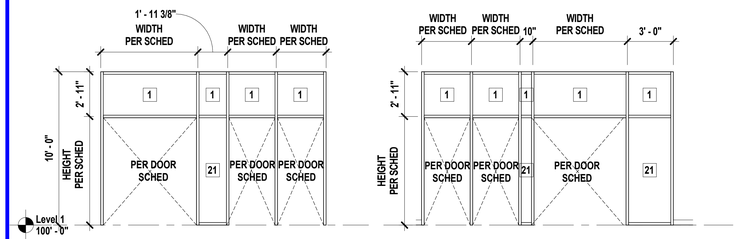

2 08 41 13.A06
4"

3 08 41 13.A06
4"

N13 Scale 1/4" = 1'-0" — Interior Window Frame

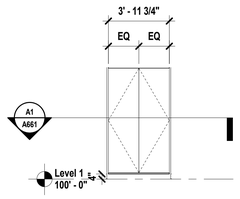

K10 Scale 1/4" = 1'-0" — Display Case

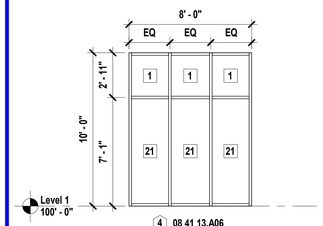

4 08 41 13.A06
4"

K14 Scale 1/4" = 1'-0" — Interior Window Frame by Gym

SHEET KEYNOTE LEGEND

06 10 00.A19	PLYWOOD BLOCKING AND BACKING PANELS
07 62 00.A27	DRIP EDGES
07 84 46.A01	FIRE RESISTIVE JOINT SYSTEM
07 92 00.A01	SEALANT
07 92 00.A02	SEALANT W/BACKER ROD
08 11 13.A21	HOLLOW METAL DOOR – HIGH WIND DOOR ASSEMBLY
08 11 13.A31	HOLLOW METAL FRAME
08 41 13.A02	THERMAL BROKEN STOREFRONT FRAMING (6")
08 41 13.A06	NON-THERMAL BROKEN STOREFRONT FRAMING (4.5")
09 21 16.A01	NON-STRUCTURAL FRAMING
09 29 00.A11	GYPSUM BOARD TRIM

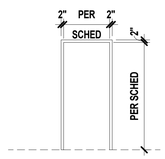

A
08 11 13.A31

G1 Scale 1/4" = 1'-0" — Hollow Metal Frame Types

TYPE A DOORS - FLUSH

A3 - HOLLOW METAL (NON-INSULATED, HEAVY DUTY) 08 11 13.A01

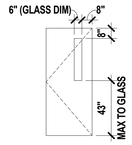

TYPE B DOORS - NARROW LITE

B3 - HOLLOW METAL (NON-INSULATED, HEAVY DUTY) 08 11 13.A01

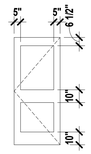

TYPE E DOORS - FULL LITE WITH MID-RAIL

E9 – ALUMINUM (STANDARD) 08 41 13.A11
E10 – ALUMINUM (HEAVY DUTY) 08 41 13. A12

F1
TYPE F DOORS - HIGH WIND ASSEMBLIES

F1 – HOLLOW METAL (HIGH WIND DOOR ASSEMBLY – NO LITE) 08 11 13.A21

G3 Scale 1/4" = 1'-0" — Door Types

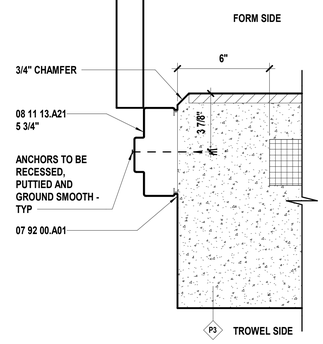

F11 Scale 3" = 1'-0" — Exterior Detail - HM Door Frame @ Precast Jamb

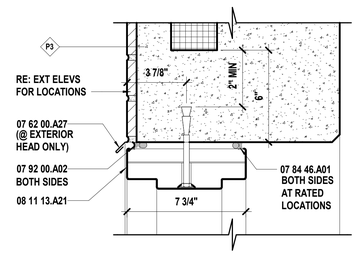

F14 Scale 3" = 1'-0" — Exterior Detail - HM Door Frame @ Precast Head

GLASS LEGEND

GLASS TYPE = 1

FULLY-TEMPERED MONOLITHIC FLOAT GLASS

12 08 80 00.A12 3/8" CLEAR FULLY-TEMPERED MONOLITHIC FLOAT GLASS

LAMINATED GLASS

21 08 80 00.A21 CLEAR LAMINATED GLASS

INSULATING GLASS

31 08 80 00.A31 LOW-E CLEAR INSULATED GLASS

INSULATING FULL-TEMPERED GLASS

41 08 80 00.A41 LOW-E CLEAR INSULATED FULLY-TEMPERED GLASS

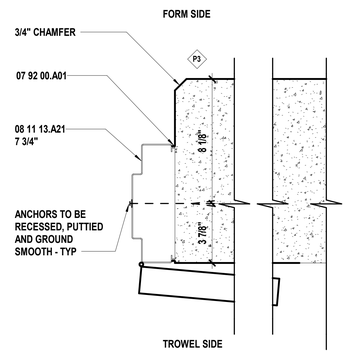

A14 Scale 3" = 1'-0" — Interior Detail - HM Door Frame - 175° Swing

DOOR TYPE NOTES

1. REFER TO DOOR SCHEDULE FOR OVERALL DOOR DIMENSIONS
2. DIMENSIONS ASSOCIATED WITH VISION LITES ARE TO THE OUTSIDE OF THE VISION LITE FRAME UNLESS NOTED OTHERWISE
3. REFER TO DOOR SCHEDULE TO DETERMINE WHICH DOORS ARE REQUIRED TO BE FIRE RATED
4. REFER TO DOOR SCHEDULE FOR GLASS TYPES IN DOORS

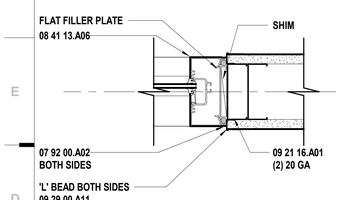

D1 Scale 3" = 1'-0" — Storefront Jamb @ Stud Wall (Interior)

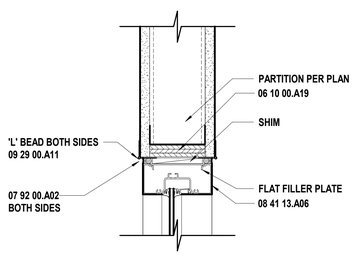

D4 Scale 3" = 1'-0" — Storefront Head @ Stud Wall (Interior)

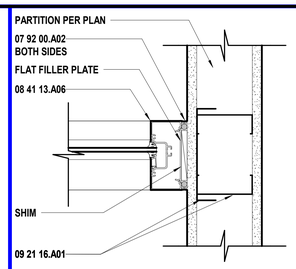

D8 Scale 3" = 1'-0" — Storefront Jamb Along Stud Wall (Interior)

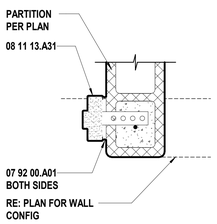

A1 Scale 1 1/2" = 1'-0" — HM Jamb @ CMU

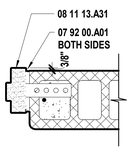

A3 Scale 1 1/2" = 1'-0" — HM Jamb @ CMU

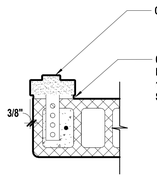

A5 Scale 1 1/2" = 1'-0" — HM Jamb @ CMU

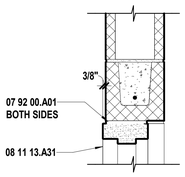

A7 Scale 1 1/2" = 1'-0" — HM Head @ CMU

DOOR SCHEDULE, DOOR TYPES, FRAME TYPES & DETAILS

hollis + miller architects
we design the future
1828 Walnut Street Suite 922
Kansas City, MO 64108
t 816.442.7700
115 Wilcox Street Suite 210
Castle Rock, CO 80104
t 720.949.1689
HOLLISANDMILLER.COM
Hollis + Miller Architects
Missouri State Certificate of Authority
Architecture # 000161
Structure # 2006031333

Bob D Campbell
Structural Engineer
State Certificate of Authority #000442
4338 Belleview Ave
Kansas City, MO 64111
816.531.4144 phone

Smith & Boucher, Inc.
Mechanical, Electrical, & Plumbing
State Certificate of Authority #EGC000178
25618 W 103rd Street
Olathe, KS 66061
913.345.2127 phone

MKEC Engineering, Inc.
Civil Engineer
State Certificate of Authority
Engineering #2001009364
Landscaping #2006027139
Surveying #2006027138
11827 W 112th Street, Suite 200
Overland Park, KS 66210
913.317.9390 phone

Peerbolte Creative
Theatrical Consultant
109 E Pine St.
Warrensburg, MO 64093-0752
660.429.1383 phone

Avant Acoustics
AV/Acoustics Consultant
14827 West 95th St.
Lenexa, KS 66215
913.888.9111 phone

Discovery Middle School Storm Shelter Addition
Liberty Public Schools
800 Midjay Dr, Liberty, MO 64068

CONFORMED CONSTRUCTION DOCUMENTS

REVISIONS:

#	Description	Date
1	Addendum 01	09/14/2023
2	Addendum 04	09/29/2023

STATE OF MISSOURI
KEVIN E. NELSON
A-2019015618
ARCHITECT
OCTOBER 11, 2023
Kevin E. Nelson
A-2019015618

The Professional Architects seal affixed to this sheet applies only to the material and items shown on this sheet. All drawings, instruments or other documents not exhibiting this seal shall not be considered prepared by this architect, and this architect expressly disclaims any and all responsibility for such plan, drawings, or documents not exhibiting this seal.

JOB NO: 23018
DRAWN BY: KL
CHECKED BY: JB
DATE: 10.11.2023

A501

10/11/2023 3:56:09 PM

Please consider the environment before printing this.

SHEET KEYNOTE LEGEND

03 30 00.A14	VAPOR RETARDERS
03 30 00.A15	GRANULAR DRAINAGE FILL
07 21 00.A01	EXTRUDED POLYSTYRENE BOARD INSULATION
08 11 13.A01	HOLLOW METAL DOOR - HEAVY DUTY
08 71 00.A01	THRESHOLDS
09 64 66.A01	WOOD ATHLETIC FLOOR
09 64 66.A06	RESILIENT WALL BASE (VENTED)

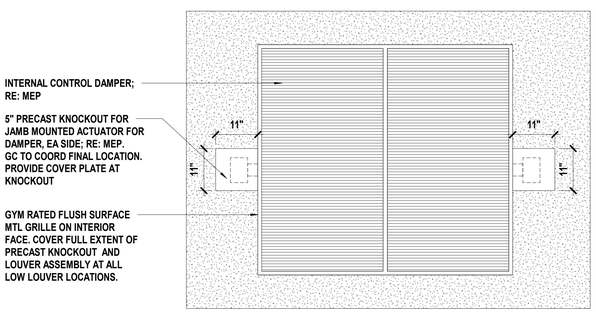

A1 Scale 3/4" = 1'-0" — High Wind Detail - Exterior Wall Louver - Interior Elevation

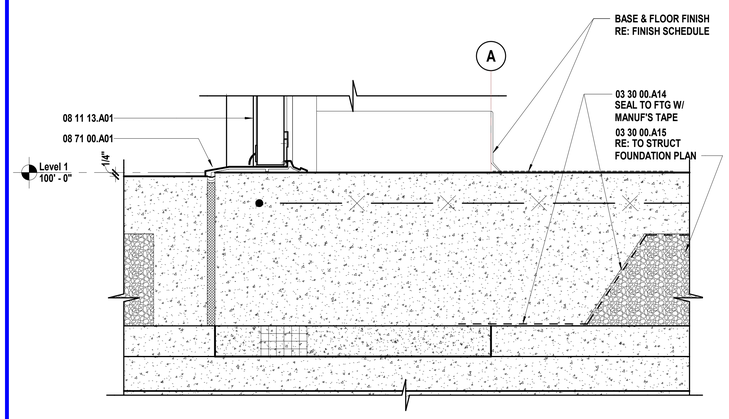

G11 Scale 3" = 1'-0" — Threshold Detail - HM Door Sill at Precast Door

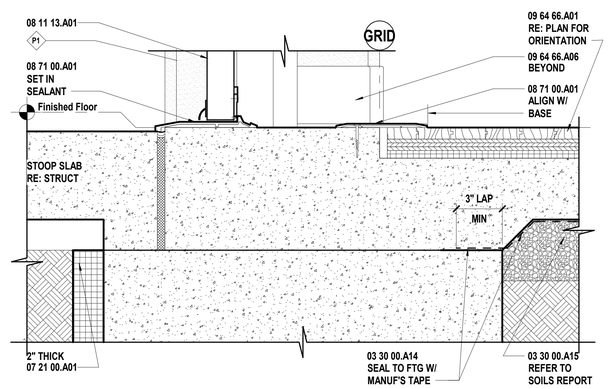

A11 Scale 3" = 1'-0" — Threshold Detail - Threshold HM Door Sill @ Wood Floor

hollis + miller architects®

we design the future®

1828 Walnut Street Suite 922
Kansas City, MO 64108
t 816.442.7700

115 Wilcox Street Suite 210
Castle Rock, CO 80104
t 720.949.1689

HOLLISANDMILLER.COM

Hollis + Miller Architects
Missouri State Certificate of Authority
Architecture # 0000161
Structure # 2006031333

Bob D Campbell
Structural Engineer
State Certificate of Authority #000442
4338 Belleview Ave
Kansas City, MO 64111
816.531.4144 phone

Smith & Boucher, Inc.
Mechanical, Electrical, & Plumbing
State Certificate of Authority #EGC000178
25618 W 103rd Street
Olathe, KS 66061
913.345.2127 phone

MKEC Engineering, Inc.
Civil Engineer
State Certificate of Authority
Engineering #2001009364
Landscaping #2006027139
Surveying #2006027138
11827 W 112th Street, Suite 200
Overland Park, KS 66210
913.317.9390 phone

Peerbolte Creative
Theatrical Consultant
109 E Pine St.
Warrensburg, MO 64093-0752
660.429.1383 phone

Avant Acoustics
AV/Acoustics Consultant
14827 West 95th St.
Lenexa, KS 66215
913.888.9111 phone

Discovery Middle School Storm Shelter Addition
Liberty Public Schools
800 Midjay Dr, Liberty, MO 64068

CONFORMED CONSTRUCTION DOCUMENTS

REVISIONS:

#	Description	Date

STATE OF MISSOURI — KEVIN E. NELSON — A-2019015618 — ARCHITECT

OCTOBER 11, 2023

Kevin E. Nelson
A-2019015618

The Professional Architects seal affixed to this sheet applies only to the material and items shown on this sheet. All drawings, instruments or other documents not exhibiting this seal shall not be considered prepared by this architect, and this architect expressly disclaims any and all responsibility for such plan, drawings, or documents not exhibiting this seal.

JOB NO: 23018
DRAWN BY: KL
CHECKED BY: JB
DATE: 10.11.2023

A502

DOOR & WINDOW DETAILS

Please consider the environment before printing this.

10/11/2023 3:56:11 PM

SHEET KEYNOTE LEGEND

03 30 00.A14	VAPOR RETARDERS
09 65 13.A06	RESILIENT MOLDING ACCESSORY
11 66 23.A05	VOLLEYBALL FLOOR SLEEVES

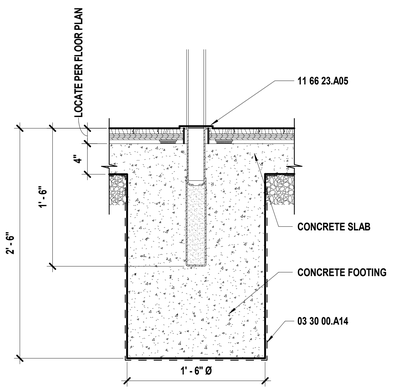

A1 Scale 1 1/2" = 1'-0" — Volleyball Floor Sleeve

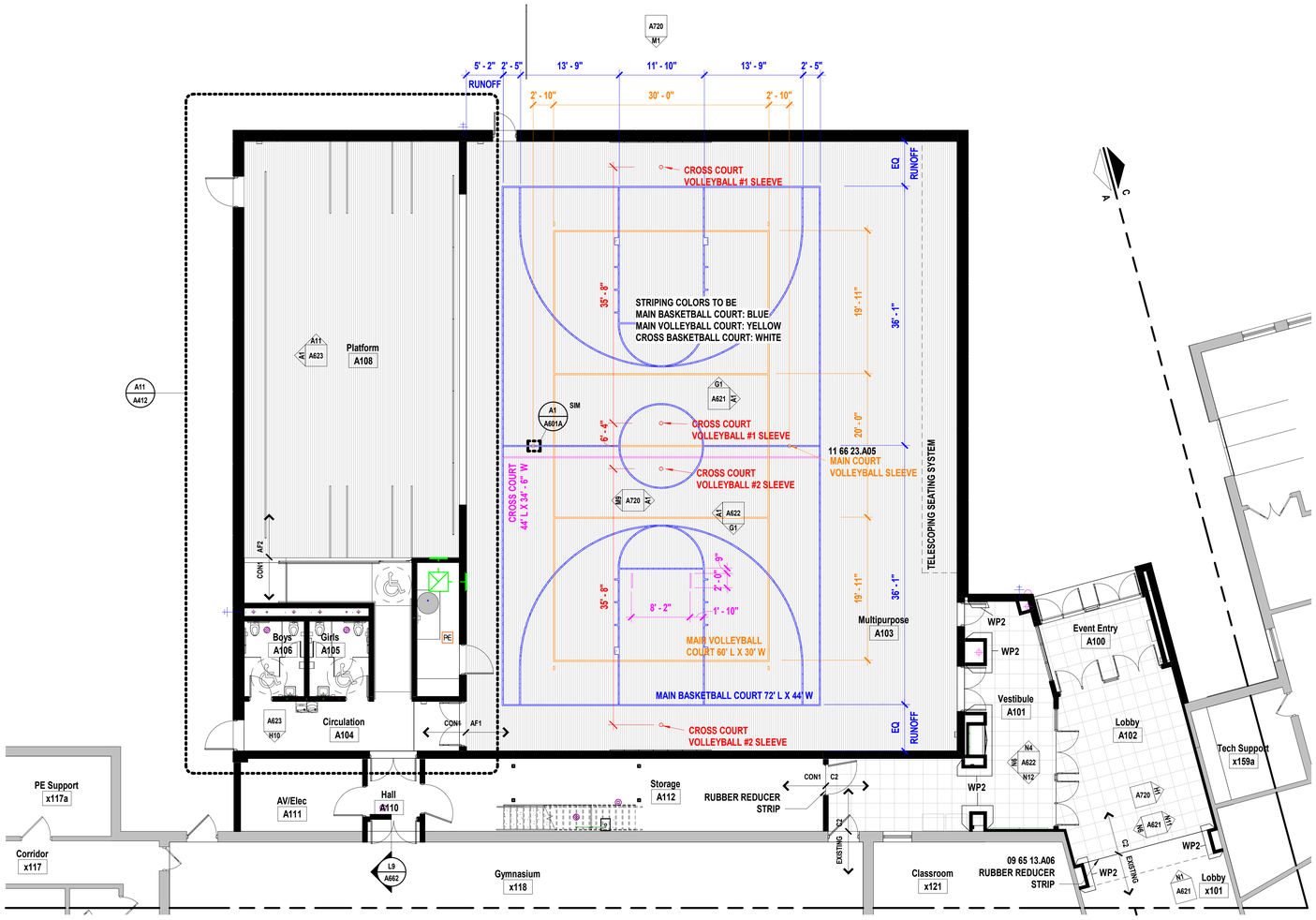

A6 Scale 1/8" = 1'-0" — Area A Court Markings

20' 10' 0' 20'

PROJECT NORTH TRUE NORTH

SHEET NOTES

1. REFER TO SHEET G000 FOR SHEET INDEX
2. FINISH FLOOR PATTERNS TO BE CENTERED IN EACH ROOM UNO
3. CORNER GUARD LOCATIONS ARE INDICATED BY SYMBOL AND ARE TO BE FULL HEIGHT FROM TOP OF BASE
4. COORDINATE FLOORING INSTALLATION WITH CASEWORK TO ENSURE FLOORING EXTENDS UNDER CABINET TOE SPACES AND OPEN KNEE/APPLIANCE SPACES
5. ALL CLOSETS AND ALCOVES WITHOUT SEPARATE ROOM NUMBERS TO HAVE SAME FLOORING AND PATTERNS AS THE LARGER, IDENTIFIED ROOM
6. NOT ALL FLOORING MATERIALS SHOWN ON FINISH PLANS, REFER TO FINISH SCHEDULE FOR MATERIALS IN LOCATIONS NOT SHOWN
7. PATTERNS SHOWN THIS SHEET SHOULD REFLECT PATTERN OF MATERIAL MODULE

KEY PLAN

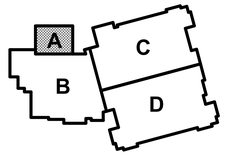

hollis + miller architects®

we design the future®

1828 Walnut Street Suite 922
Kansas City, MO 64108
t 816.442.7700

115 Wilcox Street Suite 210
Castle Rock, CO 80104
t 720.949.1689

HOLLISANDMILLER.COM

Hollis + Miller Architects
Missouri State Certificate of Authority
Architecture # 0000161
Structure # 2006031333

Bob D Campbell
Structural Engineer
State Certificate of Authority #000442
4338 Belleview Ave
Kansas City, MO 64111
816.531.4144 phone

Smith & Boucher, Inc.
Mechanical, Electrical, & Plumbing
State Certificate of Authority #EGC000178
25618 W 103rd Street
Olathe, KS 66061
913.345.2127 phone

MKEC Engineering, Inc.
Civil Engineer
State Certificate of Authority
Engineering #2001009364
Landscaping #2006027139
Surveying #2006027138
11827 W 112th Street, Suite 200
Overland Park, KS 66210
913.317.9390 phone

Peerbolte Creative
Theatrical Consultant
109 E Pine St.
Warrensburg, MO 64093-0752
660.429.1383 phone

Avant Acoustics
AV/Acoustics Consultant
14827 West 95th St.
Lenexa, KS 66215
913.888.9111 phone

Discovery Middle School Storm Shelter Addition

Liberty Public Schools

800 Midjay Dr, Liberty, MO 64068

CONFORMED CONSTRUCTION DOCUMENTS

REVISIONS:

#	Description	Date

STATE OF MISSOURI — KEVIN E. NELSON — A-2019015618 — ARCHITECT

OCTOBER 11, 2023

Kevin E. Nelson
A-2019015618

The Professional Architects seal affixed to this sheet applies only to the material and items shown on this sheet. All other information on this sheet is supplemental to the Contract Documents and shall not supersede or modify the Contract Documents and this architect expressly disclaims any and all responsibility for such plan, drawings, or documents not exhibiting the seal.

JOB NO: 23018
DRAWN BY: ES
CHECKED BY: JB
DATE: 10.11.2023

A601A

FINISH FLOOR PLAN - LEVEL 1 - AREA A

10/11/2023 3:58:14 PM

Please consider the environment before printing this.

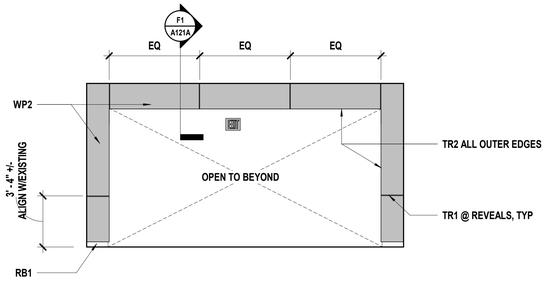

N1 Scale 1/4" = 1'-0" Interior Elevation - Lobby A102 - Entry

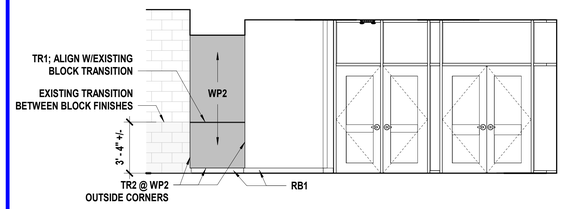

N6 Scale 1/4" = 1'-0" Interior Elevation - Lobby A102 - W

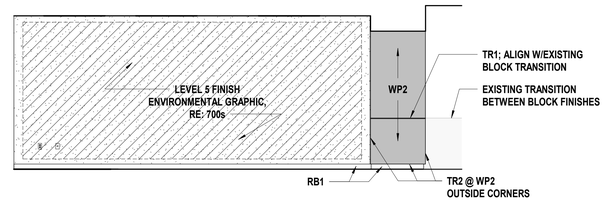

N11 Scale 1/4" = 1'-0" Interior Elevation - Lobby A102 - E

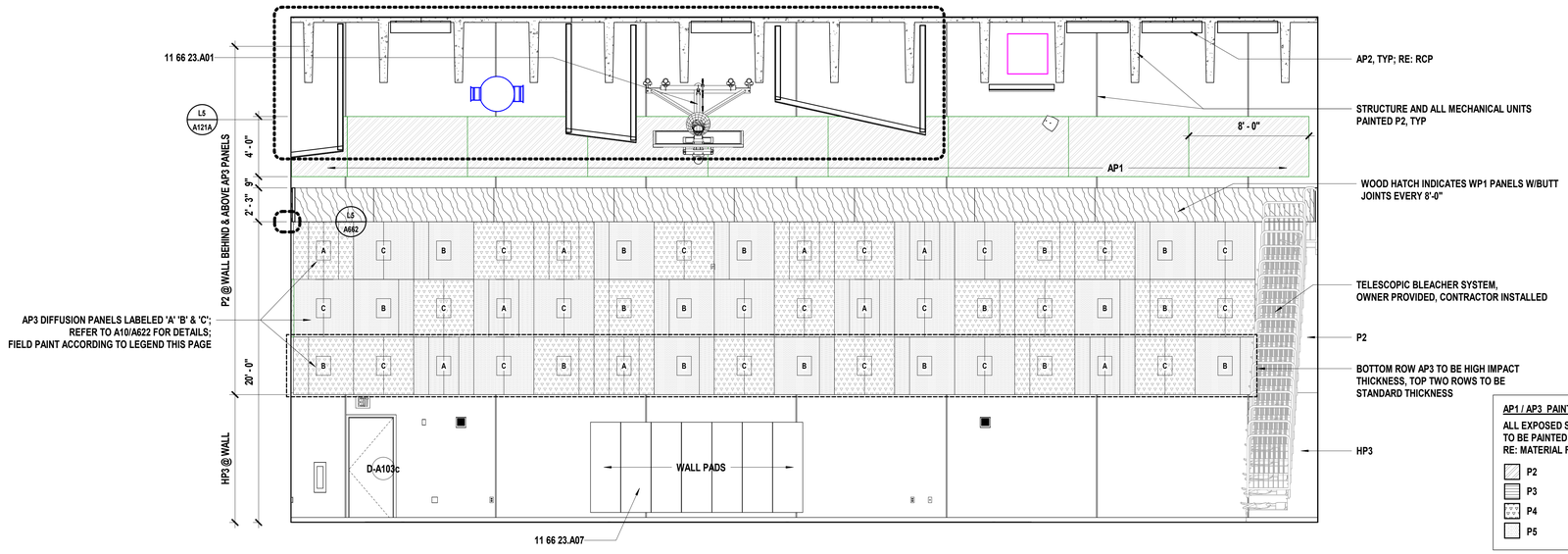

AP1 / AP3 PAINT LEGEND

ALL EXPOSED SURFACES
TO BE PAINTED AS DESIGNATED
RE: MATERIAL FINISH LEGEND

- P2
- P3
- P4
- P5

G1 Scale 1/4" = 1'-0" Interior Elevation - Multipurpose A103 - Plan North

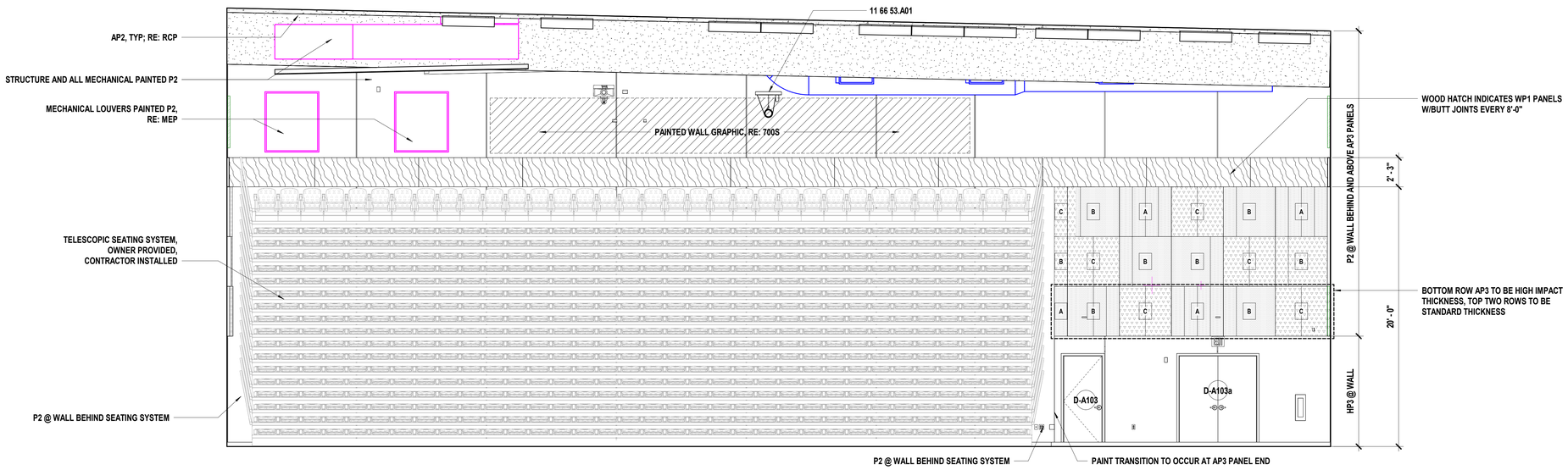

A1 Scale 1/4" = 1'-0" Interior Elevation - Multipurpose A103 - Plan East

SHEET KEYNOTE LEGEND

11 66 23.A01	OVERHEAD BACKBOARD SUPPORTS
11 66 23.A07	WALL SAFETY PADS
11 66 53.A01	GYMNASIUM DIVIDER CURTAIN ASSEMBLY

SHEET MATERIAL FINISH LEGEND

ID	MATERIAL	COLOR/FINISH
AP1	Acoustical Wall Panels	Re: Elevations
AP2	Acoustical Ceiling Panels	P2
AP3	Acoustical Panels	Varies; Re: elevations
HP1	High Performance Coating	SW 7011 Natural Choice
HP2	High Performance Coating	SW 6076 Cyberspace
HP3	High Performance Coating	SW 9170 Acier
MTL1	Metal Trim Piece	P2
P1	Paint	SW 7011 Natural Choice
P2	Paint	SW 7076 Cyberspace
P3	Paint	SW 9170 Acier
P4	Paint	SW 6966 Blueblood
P5	Paint	SW 6524 Commodore
P6	Paint	SW 7018 Dovetail
P7	Paint	SW 6967 Frank Blue
P8	Paint	SW 6811 Honorable Blue
RB1	Resilient Base & Accessories	Black
RB2	Resilient Base & Accessories	Black
TR1	Millwork Trim	
TR2	Millwork Trim	
WP1	Wall Paneling	Walnut Heights 7965K-12; Softgrain finish
WP2	Wall Paneling	Royal Blue SB009; Suede finish
WP3	Wall Paneling	Navy Blue SB007; Suede finish
WP4	Fabric Wrapped Wall Panel	Osprey 2693-804

SHEET NOTES

1. REFER TO SHEET G000 FOR SHEET INDEX
2. COORDINATE LOCATIONS WHERE BACKING REQUIRED FOR WALL HUNG CASEWORK, MARKERBOARDS, AND TECHNOLOGY
3. COLOR/MATERIAL TRANSITIONS ARE NOTED WHEN THEY DO NOT OCCUR AT INSIDE CORNERS
4. REFER TO MEP SHEETS FOR LOCATION DIAGRAM OF SWITCHES, THERMOSTATS, FIRE ALARM STROBES TO BE MOUNTED ADJACENT TO ENTRY DOORS OR AT OUTSIDE CORNERS WITHIN ROOMS
5. COORDINATE WITH ELECTRICAL SHEETS FOR HEIGHT OF OUTLETS A.F.F. AND/OR ABOVE COUNTERTOPS
6. COORDINATE WITH MECHANICAL SHEETS FOR LOCATIONS OF WALL MOUNTED GRILLES AND REGISTERS
7. ALL EXPOSED SURFACES TO RECEIVE PLASTIC LAMINATE
8. ALL BACKSPLASH MATERIAL TO MATCH COUNTERTOP MATERIAL, UNO
9. PROVIDE 4" BACKSPLASH, UNO
10. PROVIDE 1" OVERHANG AT ALL COUNTERTOPS, UNO
11. PROVIDE ONE 2" DIAMETER GROMMET PER 30 INCH OF KNEE-SPACE - RECEPTION COUNTERS AND OTHER LOCATIONS – COORDINATE EXACT LOCATION WITH OWNER
12. REFER TO PLUMBING DRAWINGS FOR LOCATIONS OF SINKS AND OTHER PLUMBING FIXTURES LOCATED WITHIN CASEWORK
13. ALL BASE CABINETS ARE TO BE 24" DEEP, UNO
14. ALL UPPER CABINETS ARE TO BE 16" DEEP, UNO
15. ALL TALL STORAGE AND WARDROBE CABINETS ARE TO BE 24" DEEP, UNO
16. ALL SCIENCE AND NURSE CASEWORK TO HAVE LOCKS
17. FILE DRAWERS TO HAVE LOCKS
18. ALL WARDROBE CABINETS TO HAVE LOCKS
19. COORDINATE DOOR CONTROL BUTTON LOCATION AT RECEPTION DESK WITH OWNER
20. PROVIDE WOOD CLEAT AT BACK AND SIDE WALLS OF ALL COUNTERTOPS WITH NO BASE CABINET BELOW

hollis+miller architects
we design the future
1828 Walnut Street Suite 922
Kansas City, MO 64108
t 816.442.7700
115 Wilcox Street Suite 210
Castle Rock, CO 80104
t 720.949.1689
HOLLISANDMILLER.COM
Hollis + Miller Architects
Missouri State Certificate of Authority
Architecture # 0000161
Structure # 2006031333

Bob D Campbell
Structural Engineer
State Certificate of Authority #000442
4338 Belleview Ave
Kansas City, MO 64111
816.531.4144 phone

Smith & Boucher, Inc.
Mechanical, Electrical, & Plumbing
State Certificate of Authority #EGC000178
25618 W 103rd Street
Olathe, KS 66061
913.345.2127 phone

MKEC Engineering, Inc.
Civil Engineer
State Certificate of Authority
Engineering #2001009364
Landscaping #2006027139
Surveying #2006027138
11827 W 112th Street, Suite 200
Overland Park, KS 66210
913.317.9390 phone

Peerbolte Creative
Theatrical Consultant
109 E Pine St.
Warrensburg, MO 64093-0752
660.429.1383 phone

Avant Acoustics
AV/Acoustics Consultant
14827 West 95th St.
Lenexa, KS 66215
913.888.9111 phone

Discovery Middle School Storm Shelter Addition
Liberty Public Schools
800 Midjay Dr, Liberty, MO 64068

CONFORMED CONSTRUCTION DOCUMENTS

REVISIONS:

#	Description	Date

STATE OF MISSOURI
KEVIN E. NELSON
A-2019015618
ARCHITECT
OCTOBER 11, 2023
Kevin E. Nelson
A-2019015618

The Professional Architects seal affixed to this sheet applies only to the material and items shown on this sheet. All drawings, instruments or other documents not exhibiting this seal shall not be considered prepared by this architect, and this architect expressly disclaims any and all responsibility for such plan, drawings, or documents not exhibiting this seal.

JOB NO: 23018
DRAWN BY: ES
CHECKED BY: JB
DATE: 10.11.2023

A621

INTERIOR ELEVATIONS

10/11/2023 3:59:06 PM

Please consider the environment before printing this.

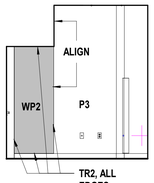

N4 Scale 1/4" = 1'-0" — Interior Elevation - Vest 101 - N

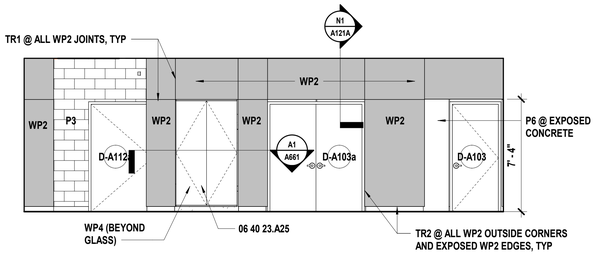

N6 Scale 1/4" = 1'-0" — Interior Elevation - Vestibule A101 - W

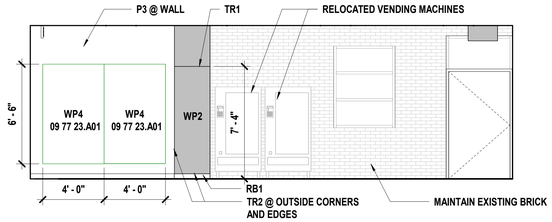

N12 Scale 1/4" = 1'-0" — Interior Elevation - Vestibule A101 - S

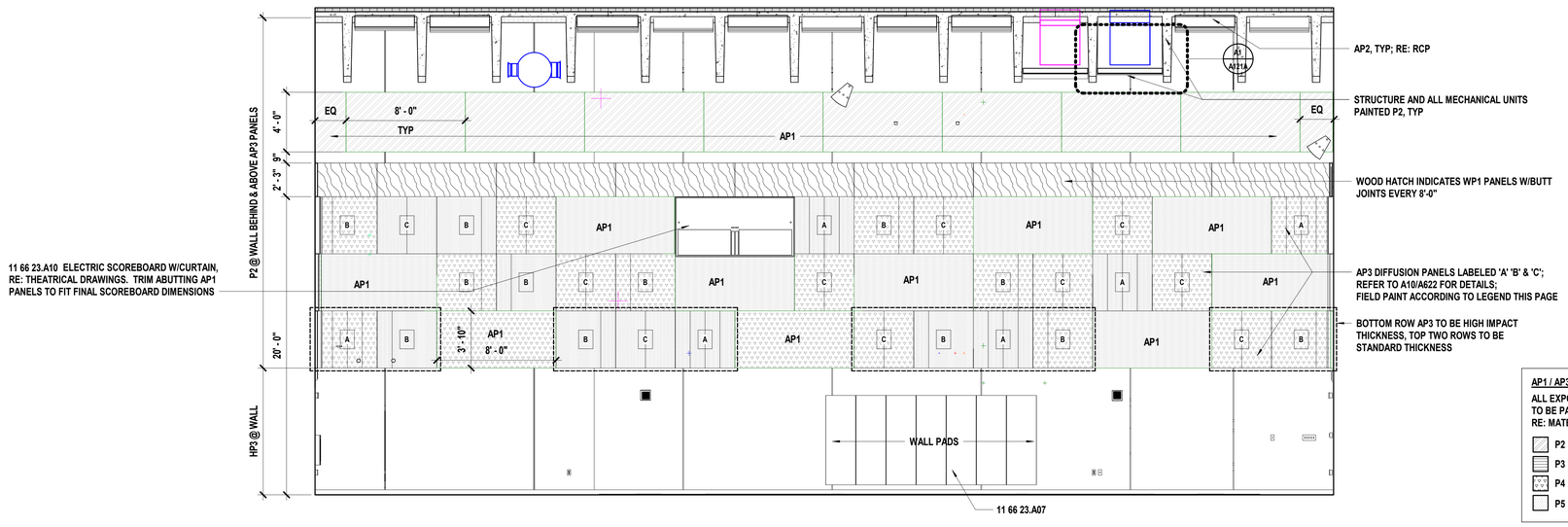

AP1 / AP3 PAINT LEGEND

ALL EXPOSED SURFACES TO BE PAINTED AS DESIGNATED RE: MATERIAL FINISH LEGEND

- P2
- P3
- P4
- P5

G1 Scale 1/4" = 1'-0" — Interior Elevation - Multipurpose A103 -S

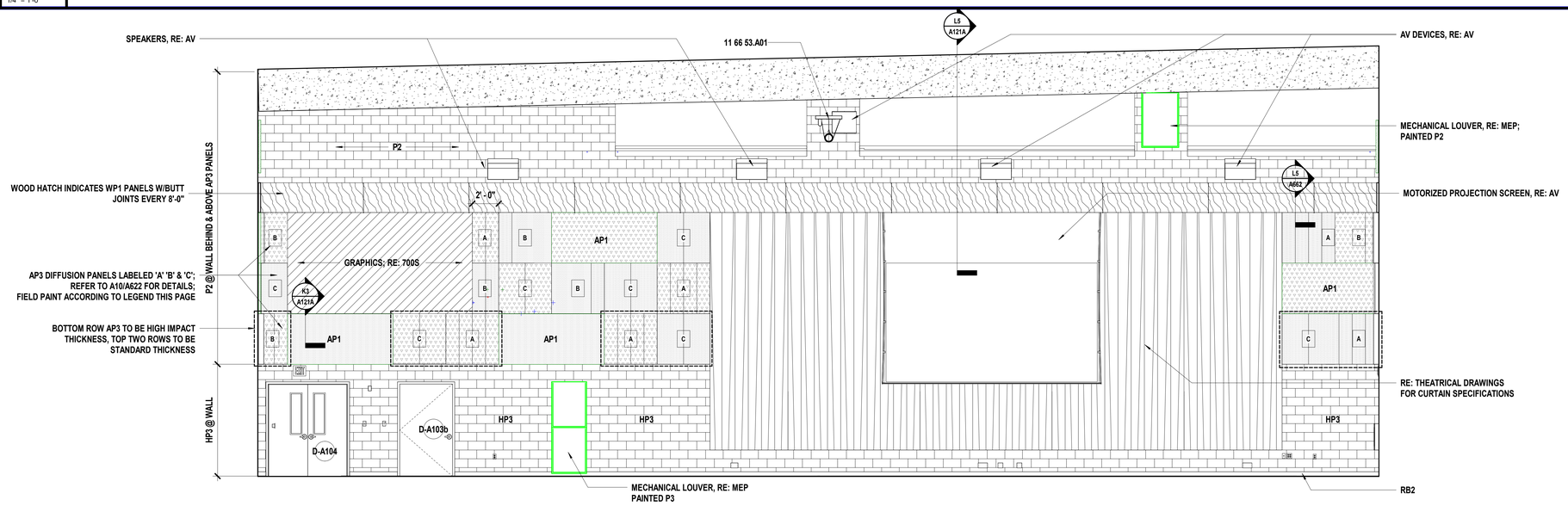

A1 Scale 1/4" = 1'-0" — Interior Elevation - Multipurpose A103 - Plan W

SHEET KEYNOTE LEGEND

06 40 23.A25	SWINGING DISPLAY CASE DOOR SYSTEM
09 77 23.A01	FABRIC-WRAPPED PANELS
11 66 23.A07	WALL SAFETY PADS
11 66 23.A10	SCOREBOARD
11 66 53.A01	GYMNASIUM DIVIDER CURTAIN ASSEMBLY

SHEET MATERIAL FINISH LEGEND

ID	MATERIAL	COLOR/FINISH
CLG1	Ceiling	White
CLG2	Ceiling	White
CLG3	Ceiling	White
CLG4	Ceiling	White
CLG5	Ceiling	White
CLG6	Ceiling	P2
HP1	High Performance Coating	SW 7011 Natural Choice
HP2	High Performance Coating	SW 6076 Cyberspace
HP3	High Performance Coating	SW 9170 Acier
MTL1	Metal Trim Piece	P2
P1	Paint	SW 7011 Natural Choice
P2	Paint	SW 7076 Cyberspace
P3	Paint	SW 9170 Acier
P4	Paint	SW 6966 Blueblood
P5	Paint	SW 6524 Commodore
P6	Paint	SW 7018 Dovetail
P7	Paint	SW 6967 Frank Blue
P8	Paint	SW 6811 Honorable Blue
TR1	Millwork Trim	
TR2	Millwork Trim	

SHEET NOTES

1. REFER TO SHEET G000 FOR SHEET INDEX
2. COORDINATE LOCATIONS WHERE BACKING REQUIRED FOR WALL HUNG CASEWORK, MARKERBOARDS, AND TECHNOLOGY
3. COLOR/MATERIAL TRANSITIONS ARE NOTED WHEN THEY DO NOT OCCUR AT INSIDE CORNERS
4. REFER TO MEP SHEETS FOR LOCATION DIAGRAM OF SWITCHES, THERMOSTATS, FIRE ALARM STROBES TO BE MOUNTED ADJACENT TO ENTRY DOORS OR AT OUTSIDE CORNERS WITHIN ROOMS
5. COORDINATE WITH ELECTRICAL SHEETS FOR HEIGHT OF OUTLETS A.F.F. AND/OR ABOVE COUNTERTOPS
6. COORDINATE WITH MECHANICAL SHEETS FOR LOCATIONS OF WALL MOUNTED GRILLES AND REGISTERS
7. ALL EXPOSED SURFACES TO RECEIVE PLASTIC LAMINATE
8. ALL BACKSPLASH MATERIAL TO MATCH COUNTERTOP MATERIAL, UNO
9. PROVIDE 4" BACKSPLASH, UNO
10. PROVIDE 1" OVERHANG AT ALL COUNTERTOPS, UNO
11. PROVIDE ONE 2" DIAMETER GROMMET PER 30 INCH OF KNEE-SPACE - RECEPTION COUNTERS AND OTHER LOCATIONS – COORDINATE EXACT LOCATION WITH OWNER
12. REFER TO PLUMBING DRAWINGS FOR LOCATIONS OF SINKS AND OTHER PLUMBING FIXTURES LOCATED WITHIN CASEWORK
13. ALL BASE CABINETS ARE TO BE 24" DEEP, UNO
14. ALL UPPER CABINETS ARE TO BE 16" DEEP, UNO
15. ALL TALL STORAGE AND WARDROBE CABINETS ARE TO BE 24" DEEP, UNO
16. ALL SCIENCE AND NURSE CASEWORK TO HAVE LOCKS
17. FILE DRAWERS TO HAVE LOCKS
18. ALL WARDROBE CABINETS TO HAVE LOCKS
19. COORDINATE DOOR CONTROL BUTTON LOCATION AT RECEPTION DESK WITH OWNER
20. PROVIDE WOOD CLEAT AT BACK AND SIDE WALLS OF ALL COUNTERTOPS WITH NO BASE CABINET BELOW

hollis + miller architects®
we design the future®
1828 Walnut Street Suite 922
Kansas City, MO 64108
t 816.442.7700
115 Wilcox Street Suite 210
Castle Rock, CO 80104
t 720.949.1689
HOLLISANDMILLER.COM
Hollis + Miller Architects
Missouri State Certificate of Authority
Architecture # 0000161
Structure # 2006031333

Bob D Campbell
Structural Engineer
State Certificate of Authority #000442
4338 Belleview Ave
Kansas City, MO 64111
816.531.4144 phone

Smith & Boucher, Inc.
Mechanical, Electrical, & Plumbing
State Certificate of Authority #EGC000178
25618 W 103rd Street
Olathe, KS 66061
913.345.2127 phone

MKEC Engineering, Inc.
Civil Engineer
State Certificate of Authority
Engineering #2001009364
Landscaping #2006027139
Surveying #2006027138
11827 W 112th Street, Suite 200
Overland Park, KS 66210
913.317.9390 phone

Peerbolte Creative
Theatrical Consultant
109 E Pine St.
Warrensburg, MO 64093-0752
660.429.1383 phone

Avant Acoustics
AV/Acoustics Consultant
14827 West 95th St.
Lenexa, KS 66215
913.888.9111 phone

Discovery Middle School Storm Shelter Addition

Liberty Public Schools

800 Midjay Dr, Liberty, MO 64068

CONFORMED CONSTRUCTION DOCUMENTS

REVISIONS:

#	Description	Date
1	Addendum 01	09/14/2023
2	Addendum 04	09/29/2023

STATE OF MISSOURI — KEVIN E. NELSON — A-2019015618 — ARCHITECT

OCTOBER 11, 2023

Kevin E. Nelson
A-2019015618

The Professional Architects seal affixed to this sheet applies only to the material and items shown on this sheet. All other information shown on this sheet is provided for informational purposes only and is not part of the Contract Documents and the architect expressly disclaims any and all responsibility for such plan, drawings, or documents not exhibiting this seal.

JOB NO: 23018
DRAWN BY: ES
CHECKED BY: JB
DATE: 10.11.2023

A622

INTERIOR ELEVATIONS

Please consider the environment before printing this.
10/11/2023 3:59:16 PM

SHEET KEYNOTE LEGEND

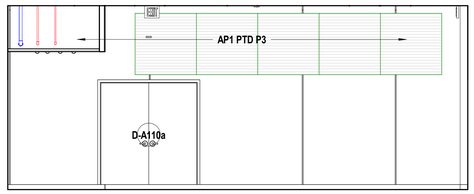

AP1 / AP3 PAINT LEGEND

ALL EXPOSED SURFACES TO BE PAINTED AS DESIGNATED RE: MATERIAL FINISH LEGEND

- P2
- P3
- P4
- P5

H10 Scale 1/4" = 1'-0" — Interior Elevation - Circ A104 - S

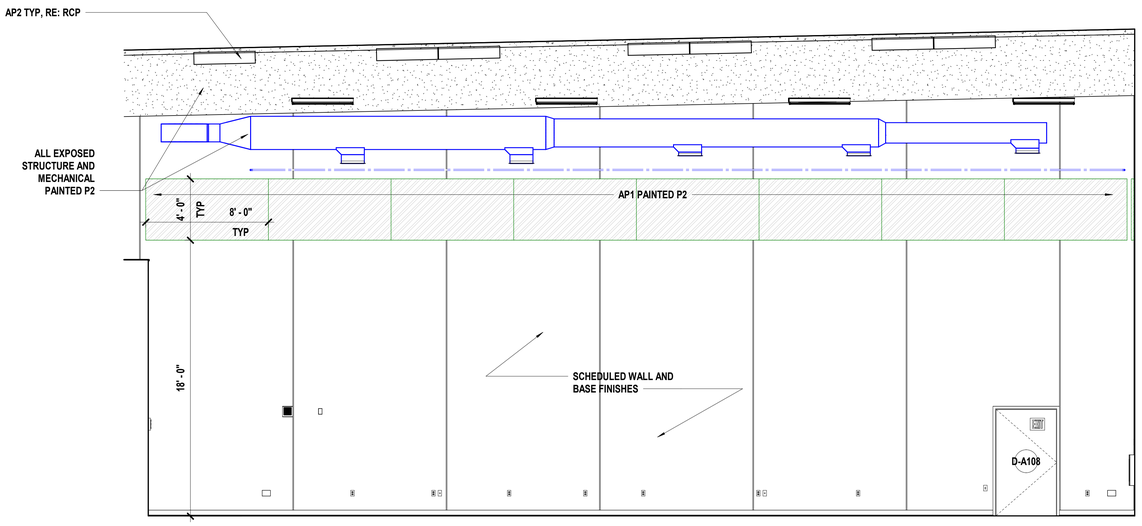

A1 Scale 1/4" = 1'-0" — Interior Elevation - Platform A108 - W

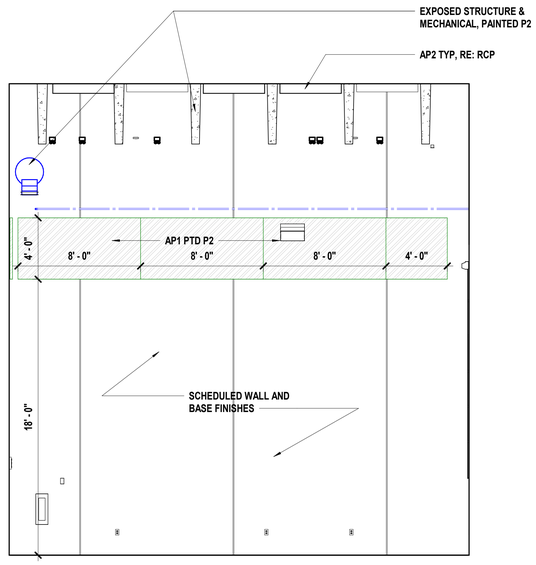

A11 Scale 1/4" = 1'-0" — Interior Elevation - Platform A108 - N

hollis + miller architects®

we design the future®

1828 Walnut Street Suite 922
Kansas City, MO 64108
t 816.442.7700

115 Wilcox Street Suite 210
Castle Rock, CO 80104
t 720.949.1689

HOLLISANDMILLER.COM

Hollis + Miller Architects
Missouri State Certificate of Authority
Architecture # 0000161
Structure # 2006031333

Bob D Campbell
Structural Engineer
State Certificate of Authority #000442
4338 Belleview Ave
Kansas City, MO 64111
816.531.4144 phone

Smith & Boucher, Inc.
Mechanical, Electrical, & Plumbing
State Certificate of Authority #EGC000178
25618 W 103rd Street
Olathe, KS 66061
913.345.2127 phone

MKEC Engineering, Inc.
Civil Engineer
State Certificate of Authority
Engineering #2001009364
Landscaping #2006027139
Surveying #2006027138
11827 W 112th Street, Suite 200
Overland Park, KS 66210
913.317.9390 phone

Peerbolte Creative
Theatrical Consultant
109 E Pine St.
Warrensburg, MO 64093-0752
660.429.1383 phone

Avant Acoustics
AV/Acoustics Consultant
14827 West 95th St.
Lenexa, KS 66215
913.888.9111 phone

Discovery Middle School Storm Shelter Addition
Liberty Public Schools
800 Midjay Dr, Liberty, MO 64068

CONFORMED CONSTRUCTION DOCUMENTS

REVISIONS:

#	Description	Date

STATE OF MISSOURI — KEVIN E. NELSON — A-2019015618 — ARCHITECT

OCTOBER 11, 2023

Kevin E. Nelson
A-2019015618

The Professional Architects seal affixed to this sheet applies only to the material and items shown on this sheet. All drawings, instruments or other documents not exhibiting this seal shall not be considered prepared by this architect, and this architect expressly disclaims any and all responsibility for such plan, drawings, or documents not exhibiting this seal.

JOB NO: 23018
DRAWN BY: ES
CHECKED BY: JB
DATE: 10.11.2023

A623

INTERIOR ELEVATIONS

Please consider the environment before printing this.

10/11/2023 3:59:18 PM

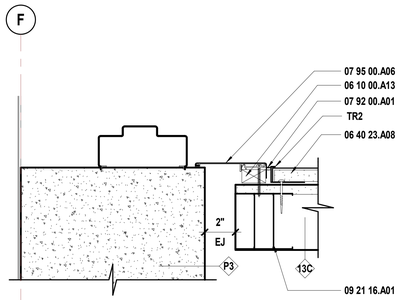

L1 Scale 3" = 1'-0" — Plan Detail - Expansion Joint at Vestibule A101 Corner

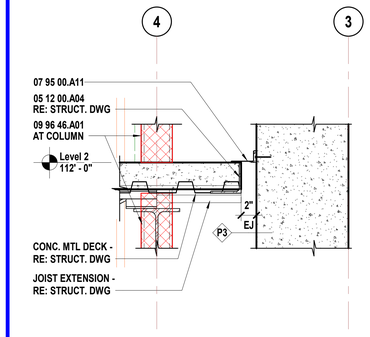

N6 Scale 1 1/2" = 1'-0" — Section Detail - Area A - Storage to Multipurpose @ Level 2

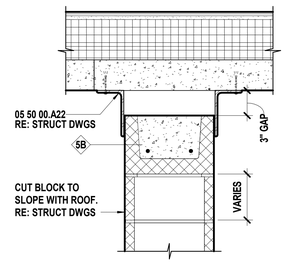

N9 Scale 1 1/2" = 1'-0" — Section Detail - Area A - Platform A108 - Top of Proscenium Wall

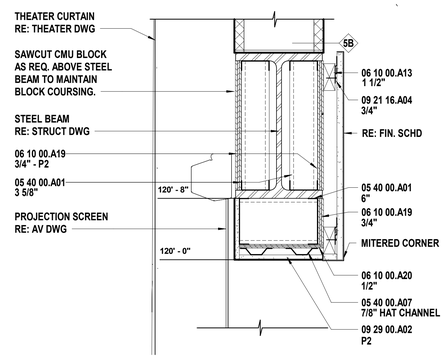

N12 Scale 1 1/2" = 1'-0" — Section Detail - Area A - Platform A108 - Proscenium Head

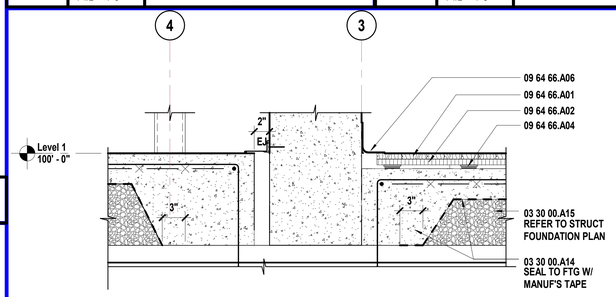

J6 Scale 1 1/2" = 1'-0" — Section Detail - Area A - Storage to Multipurpose @ Level 1

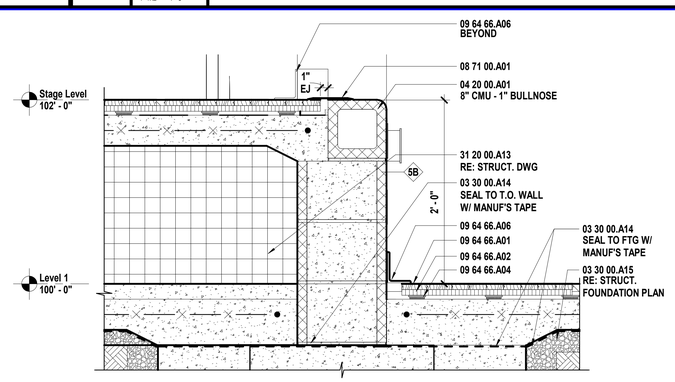

J11 Scale 1 1/2" = 1'-0" — Section Detail - Area A - Platform A108 - Proscenium Sill

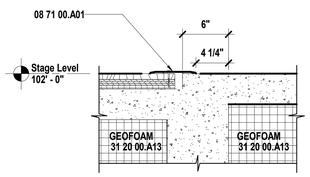

F12 Scale 1 1/2" = 1'-0" — Interior Detail - Platform and Ramp Threshold

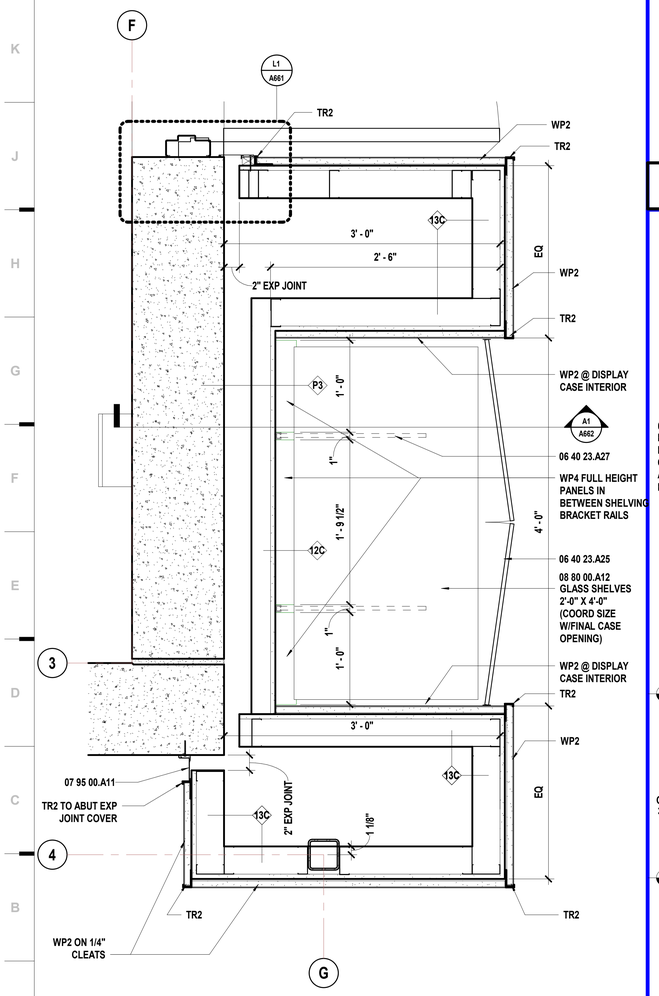

A1 Scale 1 1/2" = 1'-0" — Section Detail - Area A - Vestibule A101 - Corner

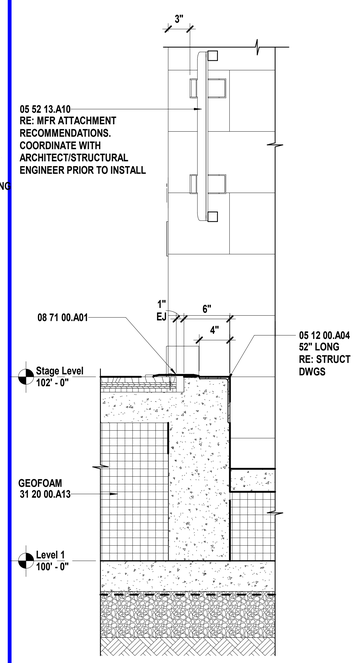

A6 Scale 1 1/2" = 1'-0" — Section Detail - Circulation A104 to Platform A108 Railing E

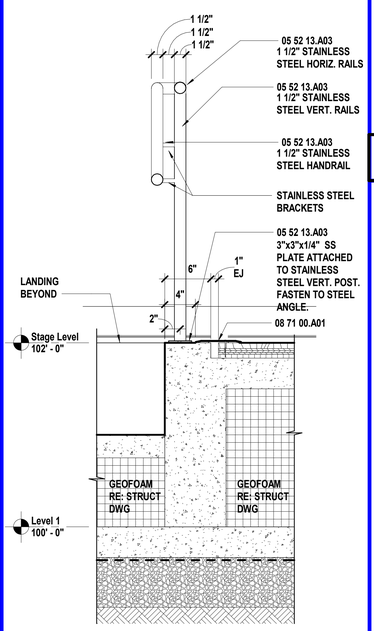

A9 Scale 1 1/2" = 1'-0" — Section Detail - Circulation A104 to Platform A108 - W

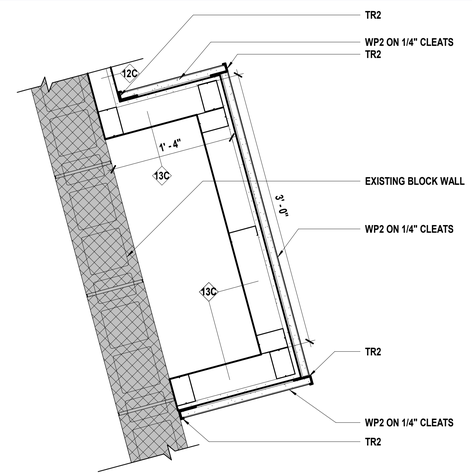

A12 Scale 1 1/2" = 1'-0" — Plan Detail - Area A - Lobby A102 - Plan West

SHEET KEYNOTE LEGEND

03 30 00.A14	VAPOR RETARDERS
03 30 00.A15	GRANULAR DRAINAGE FILL
04 20 00.A01	CONCRETE MASONRY UNITS
05 12 00.A04	ANGLE
05 40 00.A01	COLD-FORMED METAL FRAMING
05 40 00.A07	MISCELLANEOUS FRAMING/FURRING
05 50 00.A22	LOOSE STEEL LINTEL
05 52 13.A03	STAINLESS STEEL PIPE AND TUBE RAILINGS
05 52 13.A10	GATE
06 10 00.A13	WOOD BLOCKING/NAILERS
06 10 00.A19	PLYWOOD BLOCKING AND BACKING PANELS
06 10 00.A20	FIRE-RETARDANT TREATED PLYWOOD BLOCKING AND BACKING PANELS
06 40 23.A08	PLASTIC LAMINATE-CLAD PANELS
06 40 23.A25	SWINGING DISPLAY CASE DOOR SYSTEM
06 40 23.A27	DISPLAY CASE SHELVING SYSTEM
07 92 00.A01	SEALANT
07 95 00.A06	WALL-TO-WALL JOINT SYSTEM
07 95 00.A11	CEILING-TO-WALL JOINT SYSTEM
08 71 00.A01	THRESHOLDS
08 80 00.A12	3/8" CLEAR FULLY-TEMPERED MONOLITHIC FLOAT GLASS
09 21 16.A01	NON-STRUCTURAL FRAMING
09 21 16.A04	Z-SHAPED FURRING
09 29 00.A02	GYPSUM BOARD - TYPE X
09 64 66.A01	WOOD ATHLETIC FLOOR
09 64 66.A02	UNDERLAYMENT
09 64 66.A04	RESILIENT PADS
09 64 66.A06	RESILIENT WALL BASE (VENTED)
09 96 46.A01	INTUMESCENT PAINT
31 20 00.A13	GEOFOAM

hollis + miller architects®
we design the future®
1828 Walnut Street Suite 922
Kansas City, MO 64108
t 816.442.7700
115 Wilcox Street Suite 210
Castle Rock, CO 80104
t 720.949.1689
HOLLISANDMILLER.COM
Hollis + Miller Architects
Missouri State Certificate of Authority
Architecture # 000161
Structure # 2006031333

Bob D Campbell
Structural Engineer
State Certificate of Authority #000442
4338 Belleview Ave
Kansas City, MO 64111
816.531.4144 phone

Smith & Boucher, Inc.
Mechanical, Electrical, & Plumbing
State Certificate of Authority #EGC000178
25618 W 103rd Street
Olathe, KS 66061
913.345.2127 phone

MKEC Engineering, Inc.
Civil Engineer
State Certificate of Authority
Engineering #2001009364
Landscaping #2006027139
Surveying #2006027138
11827 W 112th Street, Suite 200
Overland Park, KS 66210
913.317.9390 phone

Peerbolte Creative
Theatrical Consultant
109 E Pine St.
Warrensburg, MO 64093-0752
660.429.1383 phone

Avant Acoustics
AV/Acoustics Consultant
14827 West 95th St.
Lenexa, KS 66215
913.888.9111 phone

Discovery Middle School Storm Shelter Addition

Liberty Public Schools

800 Midjay Dr, Liberty, MO 64068

CONFORMED CONSTRUCTION DOCUMENTS

REVISIONS:

#	Description	Date
1	Addendum 01	09/14/2023
2	Addendum 04	09/29/2023

STATE OF MISSOURI — KEVIN E. NELSON — A-2019015618 — ARCHITECT

OCTOBER 11, 2023

Kevin E. Nelson
A-2019015618

The Professional Architects seal affixed to this sheet applies only to the material and items shown on this sheet. All other information shown on this sheet is provided as a service to the Owner and Contractor by the Architect. The Architect and this architect expressly disclaims any and all responsibility for such plan, drawings, or documents not exhibiting the seal.

JOB NO: 23018
DRAWN BY: ES
CHECKED BY: JB
DATE: 10.11.2023

A661

INTERIOR DETAILS

10/11/2023 3:59:26 PM

Please consider the environment before printing this.

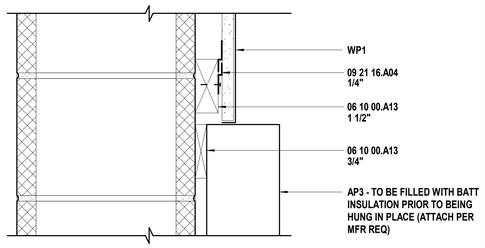

L5 Scale 3" = 1'-0" — Interior Section - GFRG Panel and Wall Panel Detail

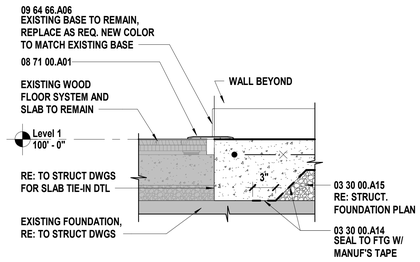

L9 Scale 1 1/2" = 1'-0" — Interior Detail - Threhold from Existing Gym to New Connection Area

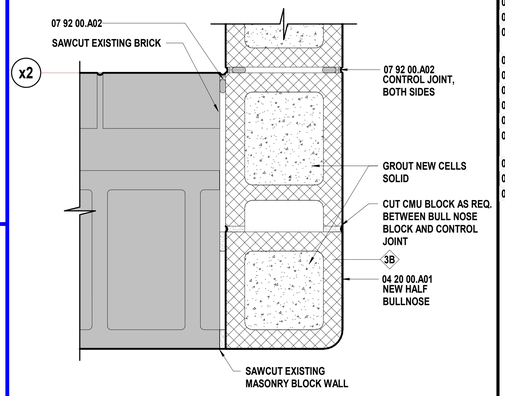

L13 Scale 3" = 1'-0" — Interior Detail - Retrofit Jamb Opening at CMU

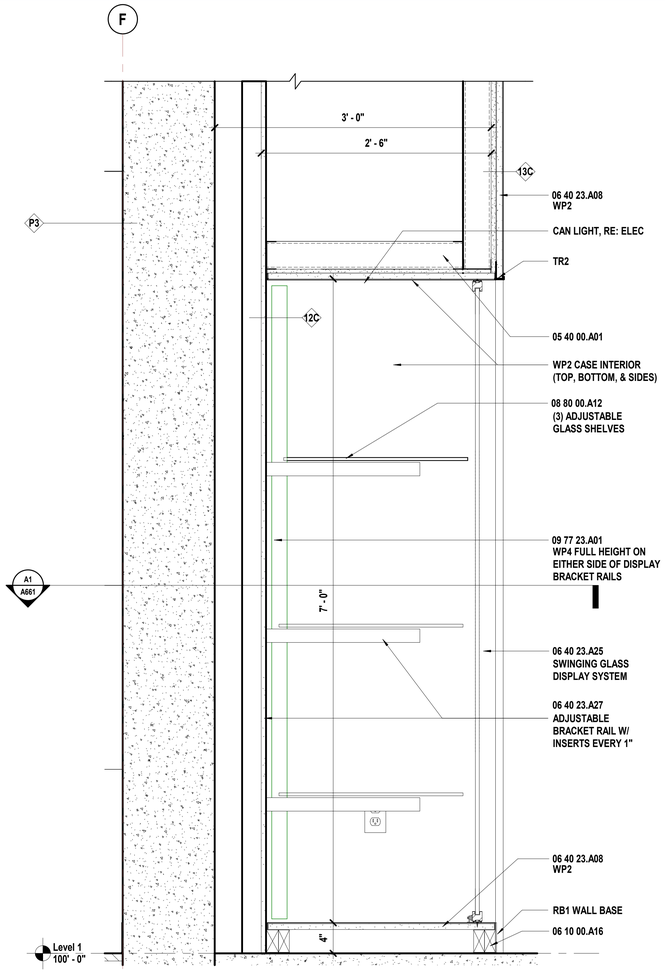

A1 Scale 1 1/2" = 1'-0" — Interior Detail Section - Display Case

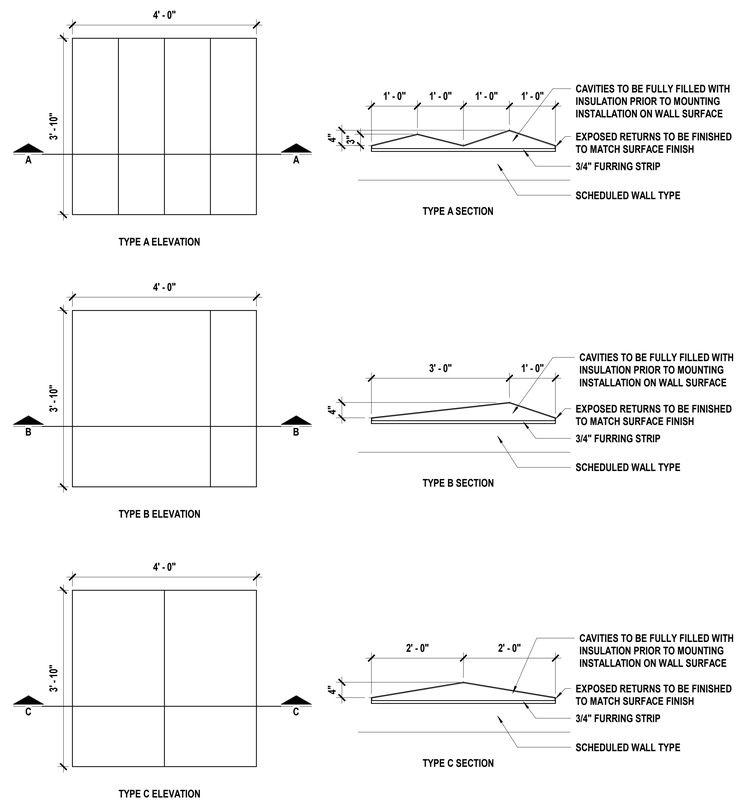

GENERAL NOTES
AP3 PANELS TO BE MECHANICALLY FASTENED TO 3/4" HORIZONTAL FURRING STRIPS @ EVERY 18" OR AS REQ'D BY MANUFACTURER;
FASTENER LOCATIONS TO BE FILLED AND PRIMED PRIOR TO PAINTED FINISH;
PANELS TO BE FIELD PAINTED ACCORDING TO PAINT LEGEND FOUND ON INTERIOR ELEVATIONS;
ALL EXPOSED PANELS TO HAVE FULLY FINISHED AND PAINTED RETURNS;
PANELS TO BE BUTT-JOINED WITH V-GROOVE EDGES AND CAULK

A10 Scale 3/4" = 1'-0" — AP3 - GFRG Panel Details

SHEET KEYNOTE LEGEND

03 30 00.A14	VAPOR RETARDERS
03 30 00.A15	GRANULAR DRAINAGE FILL
04 20 00.A01	CONCRETE MASONRY UNITS
05 40 00.A01	COLD-FORMED METAL FRAMING
06 10 00.A13	WOOD BLOCKING/NAILERS
06 10 00.A16	FIRE-RETARDANT TREATED WOOD BLOCKING & NAILERS
06 40 23.A08	PLASTIC LAMINATE-CLAD PANELS
06 40 23.A25	SWINGING DISPLAY CASE DOOR SYSTEM
06 40 23.A27	DISPLAY CASE SHELVING SYSTEM
07 92 00.A02	SEALANT W/BACKER ROD
08 71 00.A01	THRESHOLDS
08 80 00.A12	3/8" CLEAR FULLY-TEMPERED MONOLITHIC FLOAT GLASS
09 21 16.A04	Z-SHAPED FURRING
09 64 66.A06	RESILIENT WALL BASE (VENTED)
09 77 23.A01	FABRIC-WRAPPED PANELS

hollis+miller architects®
we design the future®
1828 Walnut Street Suite 922
Kansas City, MO 64108
t 816.442.7700
115 Wilcox Street Suite 210
Castle Rock, CO 80104
t 720.949.1689
HOLLISANDMILLER.COM
Hollis + Miller Architects
Missouri State Certificate of Authority
Architecture # 000161
Structure # 2006031333

Bob D Campbell
Structural Engineer
State Certificate of Authority #000442
4338 Belleview Ave
Kansas City, MO 64111
816.531.4144 phone

Smith & Boucher, Inc.
Mechanical, Electrical, & Plumbing
State Certificate of Authority #EGC000178
25618 W 103rd Street
Olathe, KS 66061
913.345.2127 phone

MKEC Engineering, Inc.
Civil Engineer
State Certificate of Authority
Engineering #2001009364
Landscaping #2006027139
Surveying #2006027138
11827 W 112th Street, Suite 200
Overland Park, KS 66210
913.317.9390 phone

Peerbolte Creative
Theatrical Consultant
109 E Pine St.
Warrensburg, MO 64093-0752
660.429.1383 phone

Avant Acoustics
AV/Acoustics Consultant
14827 West 95th St.
Lenexa, KS 66215
913.888.9111 phone

Discovery Middle School Storm Shelter Addition

Liberty Public Schools

800 Midjay Dr, Liberty, MO 64068

CONFORMED CONSTRUCTION DOCUMENTS

REVISIONS:

#	Description	Date
1	Addendum 01	09/14/2023
2	Addendum 04	09/29/2023

Kevin E. Nelson
A-2019015618

The Professional Architects seal affixed to this sheet applies only to the material and items shown on this sheet. All other information shown on this sheet is provided for coordination purposes only. Reproduction of this sheet in whole or in part and this architect expressly disclaims any and all responsibility for such plan, drawings, or documents not sealing this seal.

JOB NO: 23018
DRAWN BY: ES
CHECKED BY: JB
DATE: 10.11.2023

A662

INTERIOR DETAILS

Please consider the environment before printing this.

10/11/2023 3:59:28 PM

MATERIAL FINISH LEGEND

MATERIAL	ID	KEYNOTE	MANUFACTURER	STYLE/MODEL NO	COLOR/FINISH	COMMENTS
Athletic Flooring (Wood)	AF1	09 64 66.A01	Robbins Wood Court Flooring	Northern Hard Maple		Re: Specifcation for full flooring system
Hardboard Stage Flooring	AF2	09 64 66.A12	DPI Decorative Panels International	1/4" Tempered Premium Hardboard	Black	Re: Specifcation for full flooring system
Acoustical Wall Panels	AP1	09 84 33.A01	Armstrong	Tectum Finale Wall Panels	Re: Elevations	
Acoustical Ceiling Panels	AP2	09 84 36.A01	Armstrong	Tectum Finale Ceiling Panels	P2	Re: RCP for sizes and location
Acoustical Panels	AP3	09 84 33.A15	Formglas	GFRG diffusion panels; custom shapes and sizes	Varies; Re: elevations	Re: Specification and details for additional information
Carpet	C2	09 68 13.A01	Interface	Step Repeat; SR899	Iron 104940	Quarter-turn installation
Ceiling	CLG1	09 51 13.A01	Armstrong	Fine Fissured High NRC #1755, Square Lay-in, 24 x 48 x 7/8"	White	Classrooms
Ceiling	CLG2	09 51 13.A01	Armstrong	Fine Fissured High NRC #1754, Square Lay-in, 24 x 24 x 7/8"	White	Classrooms
Ceiling	CLG3	09 51 13.A01	Armstrong	Ultima Square Lay-in Fine Texture #1910, 24 x 24 x 3/4"	White	Lobby, Corridors
Ceiling	CLG4	09 51 13.A01	Armstrong	Kitchen Zone Sqaure Lay-in #672, 24 x 48 x 5/8"	White	
Ceiling	CLG5	09 51 13.A01	Armstrong	Kitchen Zone Sqaure Lay-in #673, 24 x 24 x 5/8"	White	
Ceiling	CLG6	06 40 23.A05	Re: Specification	1/2" Painted MDF Panels w/6" batt insulation on structural metal studs	P2	Multipurpose Room, Re: Ceiling Details
Concrete Finish	CON1	03 30 00.A01	Re: Specification	Sealed Concrete		
High Performance Coating	HP1	09 96 00	Sherwin Williams		SW 7011 Natural Choice	
High Performance Coating	HP2	09 96 00	Sherwin Williams		SW 6076 Cyberspace	
High Performance Coating	HP3	09 96 00	Sherwin Williams		SW 9170 Acier	
Metal Trim Piece	MTL1	06 40 23.A24	Re: Specification	Edge protection for CLG6 edges, Re: Specification	P2	
Paint	P1	09 90 00	Sherwin Williams		SW 7011 Natural Choice	
Paint	P2	09 90 00	Sherwin Williams		SW 7076 Cyberspace	
Paint	P3	09 90 00	Sherwin Williams		SW 9170 Acier	
Paint	P4	09 90 00	Sherwin Williams		SW 6966 Blueblood	DMS Blue 1
Paint	P5	09 90 00	Sherwin Williams		SW 6524 Commodore	DMS Blue 2
Paint	P6	09 90 00	Sherwin Williams		SW 7018 Dovetail	
Paint	P7	09 90 00	Sherwin Williams		SW 6967 Frank Blue	SVMS Blue 1
Paint	P8	09 90 00	Sherwin Williams		SW 6811 Honorable Blue	SVMS Blue 2
Resilient Base & Accessories	RB1	09 65 13.A01	Tarkett Johnsonite	4" Base	Black	
Resilient Base & Accessories	RB2	09 94 66.A06	Tarkett Johnsonite	4" Base (Vented Cove)	Black	
Millwork Trim	TR1	06 40 23.A24	Fry Reglet	Millwork Channel with Return Key		
Millwork Trim	TR2	06 40 23.A24	Fry Reglet	Millwork L Angle with Return Key		
Wall Paneling	WP1	06 40 23.A08	Wilsonart	Plastic Laminate Clad Paneling	Walnut Heights 7965K-12; Softgrain finish	
Wall Paneling	WP2	06 40 23.A08	Pionite	Plastic Laminate Clad Paneling	Royal Blue SB009; Suede finish	DMS
Wall Paneling	WP3	06 40 23.A08	Pionite	Plastic Laminate Clad Paneling	Navy Blue SB007; Suede finish	SVMS
Fabric Wrapped Wall Panel	WP4	09 77 23.A01	Designtex	"Rocket"	Osprey 2693-804	

ROOM FINISH SCHEDULE

ROOM		FLOOR		WALLS				CEILING	
NO	Name	Finish	Base	North	East	South	West	Finish	Finish Remarks
A100	Event Entry	C2	RB1	P3	P3	P3	P3	CLG3	
A101	Vestibule	C2	RB1	P3	P3	P3	WP2	CLG3	
A102	Lobby	C2	RB1	P3	RE A700s	P3	P3	CLG3	
A103	Multipurpose	AF1	RB2	RE: ELEV	RE: ELEV	RE: ELEV	RE: ELEV	CLG6	AP2 PANELS, STRUCTURE & EXPOSED MECHANICAL PAINTED P2
A104	Circulation	CON1	RB1	HP3	HP3	HP3	HP3	CLG1	
A105	Girls	CON1	RB1	HP1	HP1	HP1	HP1	CLG1	
A106	Boys	CON1	RB1	HP1	HP1	HP1	HP1	CLG1	
A107	Mechanical	CON1	RB1	P1	P1	P1	P1	--	
A108	Platform	AF2	RB2	P2	P2	P2	P2	P2	AP2 PANELS, STRUCTURE & EXPOSED MECHANICAL PAINTED P2
A110	Hall	CON1	RB1	P1	P1	--	P1	CLG1	
A111	AV/Elec	CON1	RB1	P1	P1	--	P1	--	
A112	Storage	CON1	RB1	P1	P1	--	P1	--	
A200	Mezzanine Storage	CON1	RB1	P1	P1	--	P1	--	

GENERAL FINISH NOTES

1. REFER TO FINISH FLOOR PLANS, REFLECTED CEILING PLANS, ELEVATIONS, AND DETAILS FOR EXTENT OF MULTIPLE FINISHES.
2. DO NOT PAINT NATURAL OR MANUFACTURED STONE, BRICK, GLAZED BLOCK OR ANY OTHER PREFINISHED MATERIALS.
3. DO NOT PAINT ALUMINUM OR OTHER NON-FERROUS METALS THAT ARE PREFINISHED.
4. MATCH VERTICAL FINISH OF ALL INTERIOR GYPSUM BOARD SOFFITS TO HORIZONTAL FINISH AS NOTED ON RCP OR ROOM FINISH SCHEDULE, UNO.
5. PAINT ALL EXPOSED CEILINGS DESIGNATED AS 'OTS' AS INDICATED ON ROOM FINISH SCHEDULE. PAINTING INCLUDES, BUT IS NOT LIMITED TO: EXPOSED STRUCTURE, JOISTS, METAL DECKING, EXISTING TECTUM PANELS, DUCTWORK AND MECHANICAL EQUIPMENT.
6. PAINT ALL EXPOSED STEEL, UNO.
7. PAINT ALL INTERIOR HOLLOW METAL DOORS AND FRAMES COLOR **P6**, UNO.
8. PAINT OR FINISH THE FOLLOWING ITEMS TO MATCH ADJACENT PAINT OR FINISH:
   a. ELECTRICAL PANELS IN FINISHED ROOMS
   b. GRILLES, LOUVERS ETC. PRIMED OR SPECIFIED TO BE PAINTED
   c. UNFINISHED SPEAKER OUTLET GRILLES
   d. VISIBLE PORTIONS OF DUCTWORK AND MECH EQUIPMENT BEHIND VENTS, GRILLES AND DIFFUSERS

hollis + miller architects

we design the future

1828 Walnut Street Suite 922
Kansas City, MO 64108
t 816.442.7700

115 Wilcox Street Suite 210
Castle Rock, CO 80104
t 720.949.1689

HOLLISANDMILLER.COM

Hollis + Miller Architects
Missouri State Certificate of Authority
Architecture # 0000161
Structure # 2006031333

Bob D Campbell
Structural Engineer
State Certificate of Authority #000442
4338 Belleview Ave
Kansas City, MO 64111
816.531.4144 phone

Smith & Boucher, Inc.
Mechanical, Electrical, & Plumbing
State Certificate of Authority #EGC000178
25618 W 103rd Street
Olathe, KS 66061
913.345.2127 phone

MKEC Engineering, Inc.
Civil Engineer
State Certificate of Authority
Engineering #2001009364
Landscaping #2006027139
Surveying #2006027138
11827 W 112th Street, Suite 200
Overland Park, KS 66210
913.317.9390 phone

Peerbolte Creative
Theatrical Consultant
109 E Pine St.
Warrensburg, MO 64093-0752
660.429.1383 phone

Avant Acoustics
AV/Acoustics Consultant
14827 West 95th St.
Lenexa, KS 66215
913.888.9111 phone

Discovery Middle School Storm Shelter Addition
Liberty Public Schools
800 Midjay Dr, Liberty, MO 64068

CONFORMED CONSTRUCTION DOCUMENTS

REVISIONS:

#	Description	Date

STATE OF MISSOURI
KEVIN E. NELSON
A-2019015618
ARCHITECT

OCTOBER 11, 2023

Kevin E. Nelson
A-2019015618

The Professional Architects seal affixed to this sheet applies only to the material and items shown on this sheet. All drawings, instruments or other documents not exhibiting this seal shall not be considered prepared by this architect, and this architect expressly disclaims any and all responsibility for such plan, drawings, or documents not exhibiting this seal.

JOB NO: 23018
DRAWN BY: ES
CHECKED BY: JB
DATE: 10.11.2023

A681

10/11/2023 3:59:30 PM

MATERIAL FINISH LEGEND & FINISH SCHEDULE

Please consider the environment before printing this.

A1	Scale	Level 1
	1/8" = 1'-0"	

SHEET GENERAL NOTES

THESE GENERAL NOTES ARE SUPPLEMENTAL TO THE PROJECT MANUAL

- CONTRACTOR TO REVIEW THE DRAWINGS (INCLUDING BUT NOT LIMITED TO ARCHITECTURAL, MECHANICAL, STRUCTURAL, SITE, AND ELECTRICAL DRAWINGS) AND FIELD VERIFY SITE CONDITIONS TO CONFIRM SIZES AND LOCATIONS OF SIGNAGE AND ANY SIGNAGE-RELATED ELEMENTS.
- ANY DISCREPANCIES AND/OR CONFLICTS SHALL BE REPORTED TO THE ARCHITECT IN WRITING BEFORE PROCEEDING WITH FABRICATION OR ORDERING OF MATERIALS.
- REFER TO FINAL ART FOR ADDITIONAL INSTRUCTIONS AND INFORMATION ON NON-PRINTING LAYERS.
- PRE-INSTALL COORDINATION MEETING IS MANDATORY.
- CONTRACTOR SHALL SUBMIT FULLY-DETAILED WORKING (SHOP) DRAWINGS OF ALL SIGNS AND GRAPHICS CONTAINED IN THIS PACKAGE TO THE ARCHITECT. DRAWINGS SHALL BE REVIEWED AND HAVE SIGNED APPROVAL PRIOR TO FABRICATION OR ORDERING OF MATERIALS. REFER TO PROJECT MANUAL.
- ALL SIGNS ARE TO BE FABRICATED FROM MATERIALS SPECIFIED UNLESS OTHERWISE APPROVED IN WRITING BY CLIENT AND ARCHITECT.
- CONTRACTOR IS RESPONSIBLE FOR DETERMINING PROPER MOUNTING, FASTENING AND ANCHORING METHODS FOR ALL SIGNS UNLESS NOTED OTHERWISE. DETERMINATION TO ACCOUNT FOR SURFACE MATERIAL SIGN IS BEING MOUNTED TO. SEE ALSO SECTION 10 14 00 OF THE SPECIFICATIONS.
- DRAWINGS CONTAINED IN THIS PACKAGE ARE FOR AESTHETIC AND FUNCTIONAL DESIGN, ONLY. NO INSTRUCTIONS FOR STRUCTURAL APPROPRIATENESS HAVE BEEN MADE. IT IS THE RESPONSIBILITY OF THE FABRICATOR TO ENSURE THAT ALL ELEMENTS ARE FABRICATED FOR A STABLE AND DURABLE INSTALLATION WHILE ADHERING TO THE AESTHETIC DETAILS INDICATED.
- ALL FASTENERS ARE TO BE CONCEALED UNLESS NOTED OTHERWISE. ANY VISIBLE FASTENERS TO BE COUNTER-SUNK AND PAINTED TO MATCH ADJACENT MATERIAL, UNLESS NOTED OTHERWISE.
- ALL TEXT SHOWN IS FOR REFERENCE ONLY, UNLESS NOTED OTHERWISE. SIGNAGE CONTRACTOR TO CONFIRM MESSAGE SCHEDULE WITH ARCHITECT FOR EXACT TEXT ON EACH SIGN.
- LAY OUT EACH SIGN MESSAGE FOR APPROVAL PER SPECIFICATION SECTION 10 14 23.
- ALL GRAPHICS SHOWN ARE PLACEHOLDER IMAGES.
- CONTRACTOR TO COORDINATE BLOCKING NEEDS WITH ARCHITECT AND CONSTRUCTION MANAGER.
- PROVIDE ACCESSIBLE PANELS TO ALL TRANSFORMERS, FINAL LOCATION OF TRANSFORMERS TO BE APPROVED BY ARCHITECT.
- FOR SIGNS WITH ILLUMINATION, ALLOW FOR 10 (TEN) FEET OF CABLE PER SIGN FOR CONNECTION TO ELECTRICAL JUNCTION BOX.
- PROVIDE APPROPRIATE CHEMICAL BOND BREAK BETWEEN ALL DISSIMILAR METALS (INCLUDING BETWEEN SIGN PARTS OR BETWEEN SIGNS AND MOUNTING SUBSTRATE).
- CONTRACTOR TO VERIFY ALL EXISTING FINISHES AND NOTIFY ARCHITECT OF ANY DISCREPANCIES BEFORE PERFORMING ANY WORK.

hollis + miller architects

we design the future

1828 Walnut Street Suite 922
Kansas City, MO 64108
t 816.442.7700

115 Wilcox Street Suite 210
Castle Rock, CO 80104
t 720.949.1689

HOLLISANDMILLER.COM

Hollis + Miller Architects
Missouri State Certificate of Authority
Architecture # 000161
Structure # 2006031333

Bob D Campbell
Structural Engineer
State Certificate of Authority #000442
4338 Belleview Ave
Kansas City, MO 64111
816.531.4144 phone

Smith & Boucher, Inc.
Mechanical, Electrical, & Plumbing
State Certificate of Authority #EGC000178
25618 W 103rd Street
Olathe, KS 66061
913.345.2127 phone

MKEC Engineering, Inc.
Civil Engineer
State Certificate of Authority
Engineering #2001009364
Landscaping #2006027139
Surveying #2006027138
11827 W 112th Street, Suite 200
Overland Park, KS 66210
913.317.9390 phone

Peerbolte Creative
Theatrical Consultant
109 E Pine St.
Warrensburg, MO 64093-0752
660.429.1383 phone

Avant Acoustics
AV/Acoustics Consultant
14827 West 95th St.
Lenexa, KS 66215
913.888.9111 phone

Discovery Middle School Storm Shelter Addition
Liberty Public Schools
800 Midjay Dr, Liberty, MO 64068

CONFORMED CONSTRUCTION DOCUMENTS

REVISIONS:

#	Description	Date

STATE OF MISSOURI
KEVIN E. NELSON
A-2019015618
ARCHITECT

OCTOBER 11, 2023

Kevin E. Nelson
A-2019015618

The Professional Architects seal affixed to this sheet applies only to the material and items shown on this sheet. All drawings, instruments or other documents not exhibiting this seal shall not be considered prepared by this architect, and this architect expressly disclaims any and all responsibility for such plan, drawings, or documents not exhibiting this seal.

JOB NO: 23018
DRAWN BY: MM
CHECKED BY: JCC
DATE: 10.11.2023

A701A

SIGNAGE & ENVIRONMENTAL GRAPHICS FLOOR PLAN – AREA A - LEVEL 1

Please consider the environment before printing this.

10/11/2023 3:09:32 PM

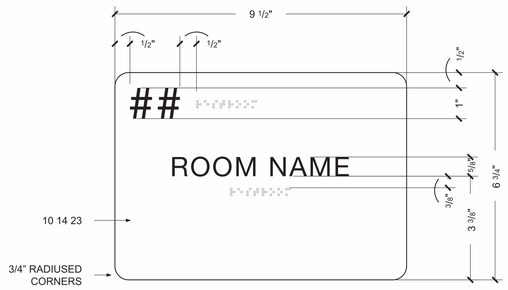

P1	Scale 6" = 1'-0"	ID01 - Permanent Room ID - Number & Name

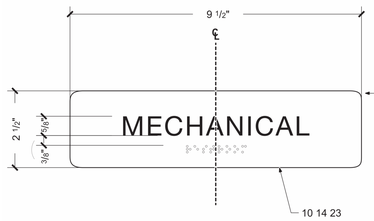

L1	Scale 6" = 1'-0"	ID02 - Permanent Room ID - Name Only

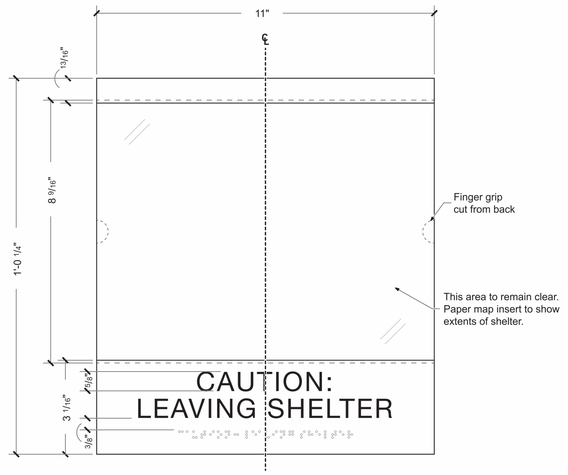

Center of sign mounted 60" above finish floor

E1	Scale 6" = 1'-0"	ID04 - Shelter Design Information

L6	Scale 6" = 1'-0"	ID03 - CAUTION LEAVING SHELTER

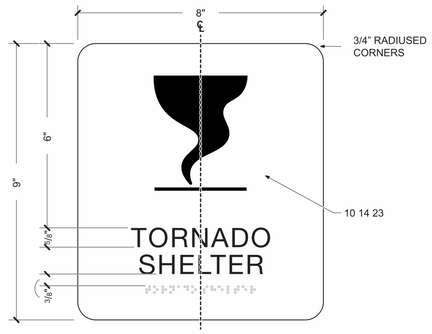

E6	Scale 6" = 1'-0"	ID05 - TORNADO SHELTER

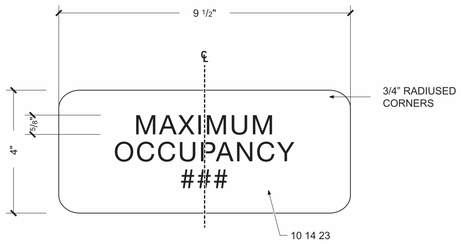

E14	Scale 6" = 1'-0"	ID07 - Maximum Occupancy

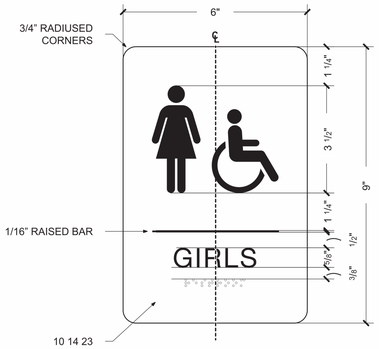

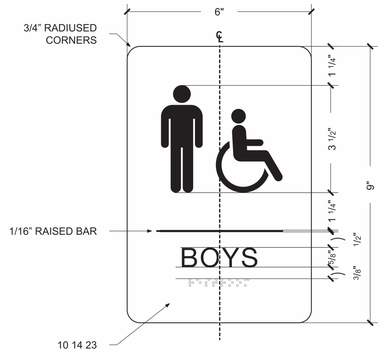

E10	Scale 6" = 1'-0"	ID06 - RESTROOMS

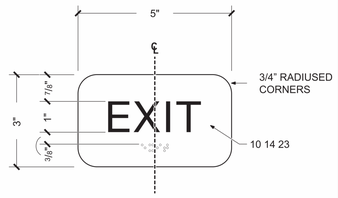

H14	Scale 6" = 1'-0"	ID08 - EXIT

ADA & Code Signage Schedule

Sign #	Sign Type	# On Sign	Message On Sign	# on Drawing	Name on Drawing
001	ID08	-	EXIT		
002	ID08	-	EXIT		
003	ID01		MULTIPURPOSE ROOM		
004	ID01		MULTIPURPOSE ROOM		
005	ID05	-	TORNADO SHELTER		
006	ID04	-	CAUTION LEAVING SHELTER		
007	ID07	-	MAXIMUM OCCUPANCY 491		
008	ID03	-	TORNADO SHELTER		
009	ID08	-	EXIT		
010	ID08	-	EXIT		
011	ID07	-	MAXIMUM OCCUPANCY 117		
012	ID02	-	MECHANICAL		
013	ID04	-	CAUTION LEAVING SHELTER		
014	ID06	-	GIRLS		
015	ID06	-	BOYS		
016	ID08	-	EXIT		
017	ID01	-	ELECTRICAL		
018	ID01	-	STORAGE		
019	ID01		MULTIPURPOSE ROOM		
020	ID05	-	TORNADO SHELTER		
022	ID01		MULTIPURPOSE ROOM		
023	ID02	-	STORAGE		

Environmental Graphics Schedule

Sign #	Sign Type	Keynote	Description	Comments
EGD.03	S01	09 72 53.A01	VESTIBULE WALLCOVERING	
EGD.04	S02	10 14 00.61	"DISCOVERY MIDDLE SCHOOL" PAINT	
EGD.05	S03	10 14 00.61	"BLUE JAYS" "MASCOT" PAINT	
EGD.01	X01	10 14 00.31	"DISCOVERY MIDDLE SCHOOL" FLAT CUT	
EGD.02	X02	10 14 00.31 & 10 14 00.A62	"MASCOT" FLAT CUT & PAINTED	

SHEET KEYNOTE LEGEND

10 14 23 - ADA CODE SIGNAGE

ARTWORK TO BE SUPPLIED BY ARCHITECT

ALL DIMENSIONS AND MOUNTING CONDITIONS MUST BE VERIFIED IN THE FIELD PRIOR TO FINAL ARTWORK RELEASE

ALL ATTACHMENTS TO BE CONCEALED UNO. PROVIDE BLOCKING AS REQUIRED FOR SECURE ANCHORAGE. SEE ARCHITECTURAL WALL FOR CONSTRUCTION

PROJECT PICTOGRAMS

hollis + miller architects

we design the future

1828 Walnut Street Suite 922
Kansas City, MO 64108
t 816.442.7700

115 Wilcox Street Suite 210
Castle Rock, CO 80104
t 720.949.1689

HOLLISANDMILLER.COM

Hollis + Miller Architects
Missouri State Certificate of Authority
Architecture # 0000161
Structure # 2006031333

Bob D Campbell
Structural Engineer
State Certificate of Authority #000442
4338 Belleview Ave
Kansas City, MO 64111
816.531.4144 phone

Smith & Boucher, Inc.
Mechanical, Electrical, & Plumbing
State Certificate of Authority #EGC000178
25618 W 103rd Street
Olathe, KS 66061
913.345.2127 phone

MKEC Engineering, Inc.
Civil Engineer
State Certificate of Authority
Engineering #2001009364
Landscaping #2006027139
Surveying #2006027138
11827 W 112th Street, Suite 200
Overland Park, KS 66210
913.317.9390 phone

Peerbolte Creative
Theatrical Consultant
109 E Pine St.
Warrensburg, MO 64093-0752
660.429.1383 phone

Avant Acoustics
AV/Acoustics Consultant
14827 West 95th St.
Lenexa, KS 66215
913.888.9111 phone

Discovery Middle School Storm Shelter Addition
Liberty Public Schools
800 Midjay Dr, Liberty, MO 64068

CONFORMED CONSTRUCTION DOCUMENTS

REVISIONS:

#	Description	Date

OCTOBER 11, 2023

Kevin E. Nelson
A-2019015618

The Professional Architects seal affixed to this sheet applies only to the material and items shown on this sheet. All other information shown on this sheet is provided for coordination purposes only. Reproduction of this sheet in whole or in part and the architect expressly disclaims any and all responsibility for such plan, drawings, or documents not exhibiting this seal.

JOB NO: 23018
DRAWN BY: MM
CHECKED BY: JCC
DATE: 10.11.2023

A711

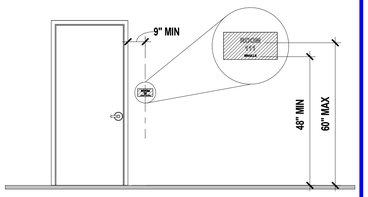

MOUNT ON LATCH SIDE OF DOOR

DIMENSIONS GO TO THE BOTTOM OF TACTILE COMMUNICATION ELEMENTS

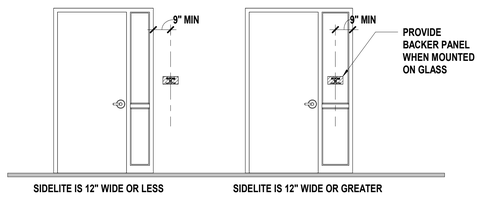

REFER TO "ELEVATION A" FOR SIGNAGE MOUNTING HEIGHTS

REFER TO "ELEVATION A" FOR SIGNAGE MOUNTING HEIGHTS

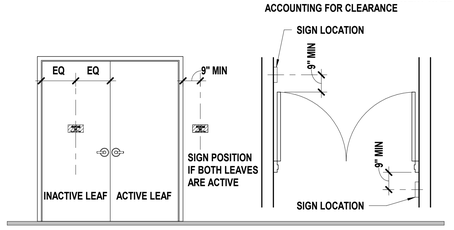

REFER TO "ELEVATION A" FOR SIGNAGE MOUNTING HEIGHTS

SIGNAGE & ENVIRONMENTAL GRAPHICS SCHEDULES

Please consider the environment before printing this.

10/11/2023 3:59:42 PM

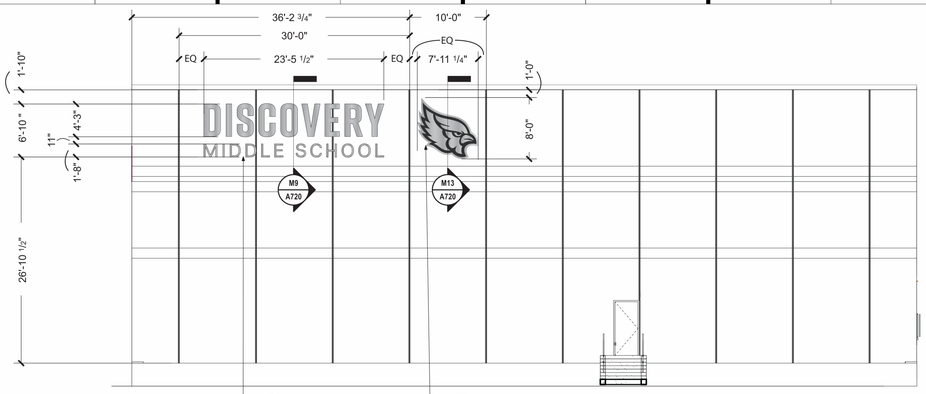

X01
10 14 00.A31
Aluminum
All sides painted to match
Matthews Paint 41342SP
Brushed Aluminum.
Satin finish

X02
10 14 00.A31 & 10 14 00.A62
Aluminum
All sides painted to match
Matthews Paint 41342SP
Brushed Aluminum.
Outline of Blue jay painted to match SW 7076 Cyberspace.
Satin finish

M1	Scale 1/8" = 1'-0"	X01 - Precast Sign

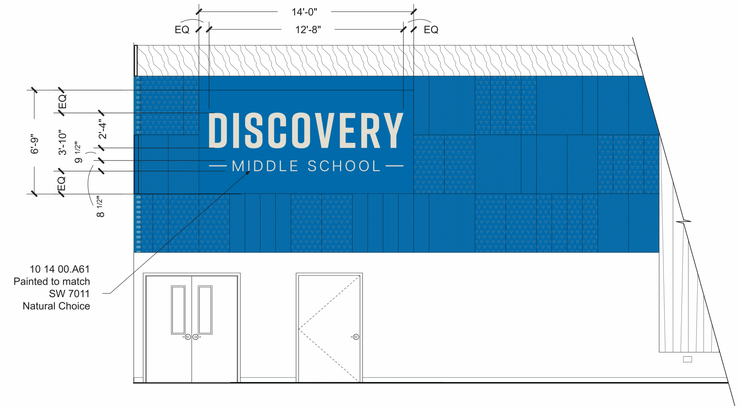

10 14 00.A61
Painted to match
SW 7011
Natural Choice

M9	Scale 1/4" = 1'-0"	S02 - Gym

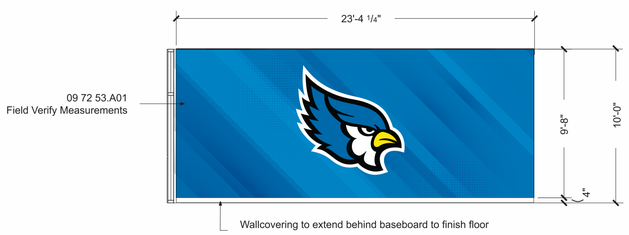

09 72 53.A01
Field Verify Measurements

Wallcovering to extend behind baseboard to finish floor

H1	Scale 1/4" = 1'-0"	S01 - Vestibule

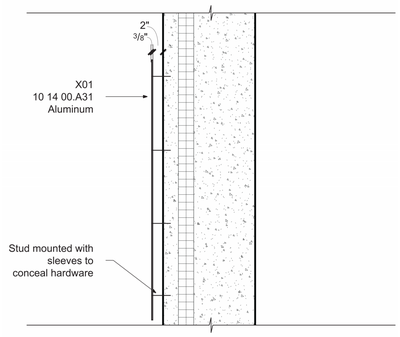

X01
10 14 00.A31
Aluminum

Stud mounted with
sleeves to
conceal hardware

H7	Scale 1' =1'0"	X01 - Section

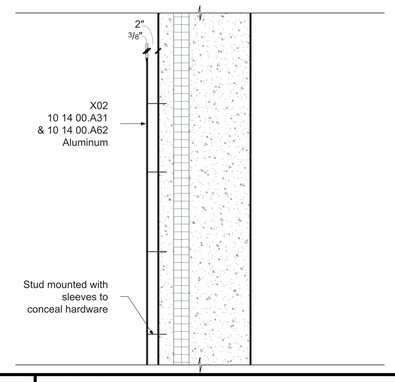

X02
10 14 00.A31
& 10 14 00.A62
Aluminum

Stud mounted with
sleeves to
conceal hardware

H12	Scale 1" = 1'-0"	X02 - Section

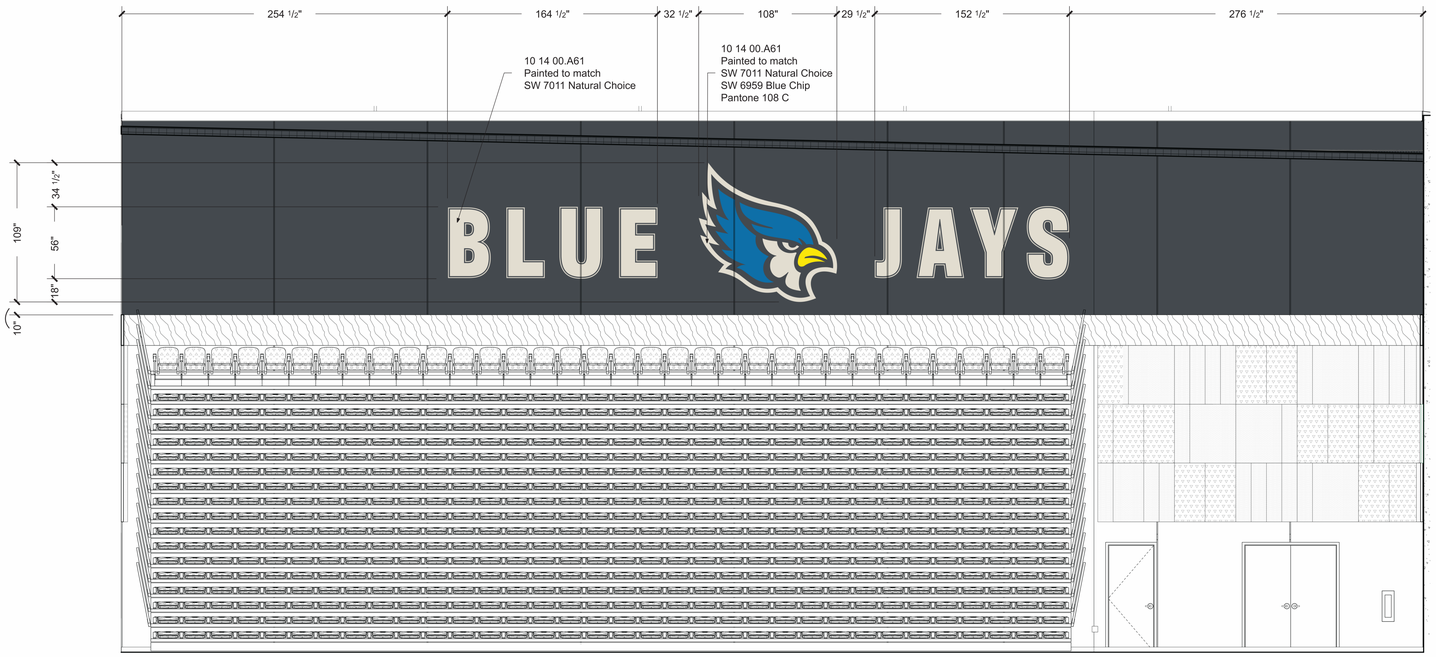

A1	Scale 1/4" = 1'-0"	S03 - Gym

SHEET KEYNOTE LEGEND

09 72 53.A01 - WALLCOVERING
10 14 00.A31 - CUSTOM FLAT CUT
10 14 00.A61 - HIGH EPOXY PAINT
10 14 00.A62 - EXTERIOR PAINT

ARTWORK TO BE SUPPLIED BY ARCHITECT

ALL DIMENSIONS AND MOUNTING CONDITIONS MUST BE VERIFIED IN THE FIELD PRIOR TO FINAL ARTWORK RELEASE

ALL ATTACHMENTS TO BE CONCEALED UNO. PROVIDE BLOCKING AS REQUIRED FOR SECURE ANCHORAGE. SEE ARCHITECTURAL WALL FOR CONSTRUCTION

hollis + miller architects

we design the future®

1828 Walnut Street Suite 922
Kansas City, MO 64108
t 816.442.7700

115 Wilcox Street Suite 210
Castle Rock, CO 80104
t 720.949.1689

HOLLISANDMILLER.COM

Hollis + Miller Architects
Missouri State Certificate of Authority
Architecture # 0000161
Structure # 2006031333

Bob D Campbell
Structural Engineer
State Certificate of Authority #000442
4338 Belleview Ave
Kansas City, MO 64111
816.531.4144 phone

Smith & Boucher, Inc.
Mechanical, Electrical, & Plumbing
State Certificate of Authority #EGC000178
25618 W 103rd Street
Olathe, KS 66061
913.345.2127 phone

MKEC Engineering, Inc.
Civil Engineer
State Certificate of Authority
Engineering #2001009364
Landscaping #2006027139
Surveying #2006027138
11827 W 112th Street, Suite 200
Overland Park, KS 66210
913.317.9390 phone

Peerbolte Creative
Theatrical Consultant
109 E Pine St.
Warrensburg, MO 64093-0752
660.429.1383 phone

Avant Acoustics
AV/Acoustics Consultant
14827 West 95th St.
Lenexa, KS 66215
913.888.9111 phone

Discovery Middle School Storm Shelter Addition
Liberty Public Schools
800 Midjay Dr, Liberty, MO 64068

CONFORMED CONSTRUCTION DOCUMENTS

REVISIONS:

#	Description	Date
1	Addendum 01	09/14/2023

STATE OF MISSOURI
KEVIN E. NELSON
A-2019015618
ARCHITECT

OCTOBER 11, 2023

Kevin E. Nelson
A-2019015618

"The Professional Architects seal affixed to the sheet applies only to the material and items shown on this sheet. All drawings, instruments or other documents not exhibiting this seal shall not be considered prepared by this architect, and this architect expressly disclaims any and all responsibility for such plan, drawings, or documents not exhibiting this seal."

JOB NO: 23018
DRAWN BY: MM
CHECKED BY: JCC
DATE: 10.11.2023

A720

SIGNAGE & ENVIRONMENTAL GRAPHICS EXTERIOR ELEVATIONS & DETAILS

Please consider the environment before printing this.

10/11/2023 3:59:55 PM

GENERAL NOTES - STRUCTURAL

1. General Information

A. The contractor shall verify dimensions and conditions before construction and notify the engineer of any discrepancies, inconsistencies, or difficulties affecting the work before proceeding.
B. The contractor shall coordinate all disciplines, verifying size and location of all openings, whether shown on structural drawings or not, as called for on architectural, mechanical, or electrical drawings. In the case of work in an existing building the contractor shall scan existing structure to locate all rebar in the area of the new core/opening using ground penetrating radar and notify the engineer of record for review prior to coring/cutting. Conflicts, inconsistencies, or other difficulties affecting structural work shall be called to the architect or engineer's attention for direction before proceeding.
C. All design and construction work for this project shall conform to the requirements of the following governing design codes:
   1. International Building Code (IBC 2018) as amended by the city of Liberty, MO
   2. Minimum Design Loads for Buildings and Other Structures (ASCE7-6)
   3. Specification for Structural Steel Buildings (AISC 360-10)
      Member Design Basis is Allowable Stress Design (ASD)
      Connection Design Basis is Allowable Stress Design (ASD)
   4. Structural Welding Code (AWS D1.3-98)
   5. Building Code Requirements for Structural Concrete (ACI 318-14)
   6. Building Code Requirements for Masonry Structures (ACI 530-11/TMS 402-11)
   7. North American Specification for the Design of Cold-Formed Steel Structural Members (AISI S100-07/S1-1)
D. These drawings are for this specific project and no other use is authorized.

2. Structural Load Design Criteria

A. Floor Live = 100psf (An allowance of 15psf has been made for partitions as a uniformly distributed live load where the live load stated above is 80psf or less) Floor Collateral Dead = 55psf
B. Roof Live = 30psf; Roof Dead = 20psf
C. Snow: Pg = 20psf, Pf =14psf, Is = 1.0, Ce = 1.0, Ct = 1.0, Drift per ASCE/SEI 7
D. Lateral Loads:
   1.) Wind: V = 115 mph, Exposure B
   Occupancy [Risk] Category II, Iw=1.0 GCpi=+/-0.18
   Design wind pressures to be used for the design of exterior component and cladding materials on the designated zones of wall and roof surfaces shall be per section 30.7 and Table 30.7-2 of ASCE/SEI 7. Tabulated pressures shall be multiplied by effective area reduction factors, exposure adjustment factors, and topographic factors where applicable
   2.) Seismic: Ss = 0.094, S1 = 0.069
   Occupancy [Risk] Category II, Ie=1.0,
   Site Classification C; Sds = 0.082; Sd1 = 0.069
   Seismic Design Category B
   Basic Seismic Force-resisting System:
   Oridinary Reinforced Masonry Shear Walls
   Equivalent Lateral Force Procedure
   R = 2; Omega = 2½; Cd=1¾
E. This project is designed to resist the most critical effects resulting from the load combinations of section 1605.3 of the International Building Code.

3. Concrete

A. All concrete for foundations (walls, grade beams, footings and piers) shall develop minimum ultimate compressive design strength of 3500 psi in 28 days, but not less than 500 pounds of cement shall be used per cubic yard of concrete regardless of strengths obtained, not over 6 gallons of water per 100 pounds of cement and not over 4 inches of slump.
B. All concrete for interior flatwork (without floor covering) shall develop minimum ultimate compressive design strength of 4000 psi in 28 days, but not less than 525 pounds of cement shall be used per cubic yard of concrete regardless of strengths obtained, not over 5.75 gallons of water per 100 pounds of cement and not over 4 inches of slump. Concrete mix shop drawing shall contain testing data proving concrete design mix shrinkage is less than 0.034% at 28 days when tested according to ASTM C157 (air drying method only).
C. All concrete for interior flatwork (with floor covering) shall develop minimum ultimate compressive design strength of 4000 psi in 28 days, but not less than 540 pounds of cement shall be used per cubic yard of concrete regardless of strengths obtained, not over 5.40 gallons of water per 100 pounds of cement and not over 4 inches of slump. Concrete mix shop drawing shall contain testing data proving concrete design mix shrinkage is less than 0.034% at 28 days when tested according to ASTM C157 (air drying method only).
D. All concrete for exterior flatwork shall have a minimum design compressive strength of 4500 psi in 28 days, with not less than 560 pounds of cement per cubic yard of concrete, not over 5 gallons of water per 100 pounds of cement, with 6% +/- 1% air entrainment, and a maximum of 4 inches of slump.
E. All concrete for columns shall develop a minimum ultimate compressive design strength of 4000 psi in 28 days, but not less than 560 pounds of cement shall be used per cubic yard of concrete regardless of strengths obtained, not over 5 gallons of water per 100 pounds of cement and not over 4 inches of slump.
F. The preceding minimum mix requirements may have water-reducing admixtures conforming to ASTM C494 added to the mix at manufacturer's dosage rates for improved workability.
G. The preceding minimum mix requirements may have up to 15% maximum of the cement content replaced with an approved ASTM C618 Class C fly ash, provided the total minimum cementitious content is not reduced.
H. The use of fly ash is NOT permitted.
I. Combined aggregate (coarse plus fine) for all concrete shall be well graded from coarsest to finest with no more than 18 percent and not less than 8 percent retained on an individual sieve, except that less than 8 percent may be retained on coarsest sieve and on No. 50 and finer sieves. Submit this gradation report with the concrete mix design shop drawings.
J. All interior concrete slabs on grade shall be placed over 15 mil, Class A Vapor Barrier per ASTM E1745 with less than 0.01 perms, tested after mandatory conditioning. All joints shall be lapped and sealed per manufacturer's recommendations. All penetrations, as well as damaged vapor barrier material shall also be sealed per manufacturer's recommendation prior to concrete placement. Install barrier per manufacturer recommended details at all discontinuous edges (at interior columns, exterior edge of slab, etc.) to ensure terms of warranty are followed. The vapor barrier shall be placed over free-draining granular material as prescribed by the project soils report.
K. All concrete is reinforced concrete unless specifically called out as unreinforced. Reinforce all concrete not otherwise shown with same steel as in similar sections or areas. Any details not shown shall be detailed per ACI 315 and meet requirements of ACI 318, current editions.
L. Control joints in dirt formed slab to be as shown on plans. Where not shown, limit controlled areas to not more than 144 square feet, or 12 feet on any side. Slab panel side ratio shall not exceed 1 1/2 to 1.
M. Contractor shall verify that all concrete inserts, reinforcing and embedded items are correctly located and rigidly secured prior to concrete placement.
N. Construction joints in beams, slabs, and grade beams shall occur at midspan (middle third) unless noted otherwise. Provide 2 x 4 horizontal keys at construction joints for shear transfer.
O. No aluminum items shall be embedded in any concrete.

4. Reinforcing Steel

A. All reinforcing steel shall conform to the requirements of ASTM A615 or A706 grade 60 steel. Welded plain wire fabric shall be supplied in sheets and conform to the requirements of ASTM A185.
B. Clear coverage of concrete over reinforcing steel shall be as follows:
   1. Concrete placed against earth: 3"
   2. Formed concrete against earth: 2"
   3. Slabs: 1"
   4. Beams or Columns: 1-1/2"
   5. Other 2"
   All coverage shall be nominal bar diameter minimum.
C. All dowels shall be the same size and spacing as adjoining main bars (splice lap 48 bar diameters or 24" minimum unless noted otherwise).
D. At corners of all walls, beams, and grade beams supply corner bars (minimum 2'-0" in each direction or 48 bar diameters) in outside face of wall, matching size and spacing of horizontal bars. Where there are no vertical bars in outside face of wall, supply 3 - #4 vertical support bars for corner bars.
E. Bars marked continuous and all vertical steel shall be lapped 48 bar diameters (2'-0" minimum) at splices and embedments, unless shown otherwise. Splice top bars near midspan and splice bottom bars over supports, unless noted otherwise.
F. At all holes in concrete walls and slabs, add 2 - #5 bars (opening dimension plus 96 diameters long) at each of four sides and add 2 - #5 x 5'-0" diagonally at each of four corners of hole. Openings in 8" thick walls are reinforced similar, but with 1 - # 5 instead of 2 - #5, respectively.
G. Unless otherwise covered on architectural plans or specifications, vertical control joints in concrete wall shall be spaced at a maximum of 20'-0" on center and coordinated with the architect. Every other horizontal wall reinforcing bar shall be discontinuous at control joints except heavy top and bottom bars unless noted otherwise. Provide base seal waterstop style number 772 (by Greenstreak Inc. or approved equal) on dirt face side of wall at all walls below grade.
H. Accessories shall be as specified in latest edition of the ACI Detailing Handbook and the concrete Reinforcing Steel Institute Design Handbook. Maximum accessory spacing shall be 4'-0" on center, and all accessories on exposed surfaces are to have plastic coated feet.
I. All slabs and stairs not shown otherwise shall be 6" thick with #4 bars at 12" on center each way. All exterior porches and stoops not otherwise detailed may be constructed in any standard manner, solid or hollow, but must be reinforced with #4 bars at 12" on center each way minimum. Porches shall be doweled to adjacent walls or grade beams with #4 bars at 12" on center, hooked or embedded 48 diameters into both members. Slope porches 1/8" per foot for drainage unless noted otherwise.

5. Structural Steel

A. All structural steel beams and columns shall be ASTM A992, grade 50 steel and all miscellaneous steel shall be ASTM A36 grade steel (except at moment connections where plates shall be ASTM A572, grade 50). Hollow Structural Sections (HSS) shall be ASTM A500, grade C. Fabrication and erection shall be in accordance with AISC 303-05 "Code of Standard Practice for Steel Buildings and Bridges" in the 13th Edition of the AISC Steel Construction Manual.
B. All welding shall conform to the recommendations of the AWS.
C. All exterior steel and connections, and brick relief angles shall be hot-dip galvanized.
D. All bolts not otherwise specified shall be 3/4" diameter high strength (ASTM A325-N). All bolts shall be fully pretensioned. All beam connections shall be designed per the AISC Manual of Steel Construction "Framed Beam Connections" for the indicated reactions or at least 0.4 x beam total shear capacity, Vn/Omega, shown in the maximum total uniform load tables, whichever is greater; and, shall account for eccentricity when the bolt line is more than 2" from the center of the support. All connections must be two bolt minimum. Additional connection elements may not be specifically shown in the conceptual details in this set but may be required by the final connection design, such as stiffener plates, doubler plates, supplement/reinforcing plates or other connection material. Connection design and shop drawing preparation shall be completed under the direct supervision of a professional engineer licensed in the state the project is located and shop drawings and connection calculations shall bear his/her seal.
E. All anchor bolts shall be 3/4" diameter, ASTM F1554, Grade 36 unless noted otherwise. Washers of minimum size and thickness for the given anchor diameter in Table 14-2 of the AISC Steel Construction Manual shall be provided at every column anchor bolt. Washers shall have a standard size hole for the anchor bolt. At braced frames washers shall be welded all around to the column base plate with 3/16" fillet weld.
F. Design, fabrication and erection of all open-web bar joists shall comply with the recommendations of the Steel Joist Institute (SJI). Joists shall be designed to support loads given in the standard load tables of SJI Specs and Tables plus an additional point load of 200 lbs. on the top or bottom chord at any location without additional web reinforcing.
G. All K-series joists shall bear 2-1/2" minimum on structural steel beams and be welded to the beams with 1 1/2" of 1/8" fillet weld each side (minimum).
H. All K-series joists bearing on masonry walls shall have 6" x 3/8" x 6" bearing plates set in bond beams. Bearing plates shall be located not more than 1/2" from the face of the wall on the bearing side. Joists shall bear 4" minimum on bearing plates and be welded to beams or bearing plates with 2-1/2" of 1/8" fillet weld each side (minimum).
I. Steel joists shall be designed for 20psf net uplift resulting from wind loading as measured 12ft. from a building corner, 15psf net uplift as measured 8ft. from the building edge, and 10psf otherwise.
J. All openings in steel joist roof to have 3x3x1/4 angle frame set between joists. Support mechanical equipment with 4x4x5/16 angles laid between joists framed to 4x4x5/16 angles (length equals mechanical unit dimension plus distance each end to next panel point) laid parallel to and welded to top and/or bottom cord of joists to distribute load to joist panel points.
K. All steel joists shall have a midspan camber approximately equal to that recommended by the Steel Joist Institute Specifications.
L. Design and installation of steel decking shall comply with the recommendations of the Steel Deck Institute (SDI). All decking shall be galvanized unless noted otherwise.

6. Post Installed Anchors

A. Post-installed anchors shall be used only where specified on the drawings unless approved in writing by the engineer of record. See drawings for anchor diameter, spacing and embedment. Performance values of the anchors shall be obtained for specified products using appropriate design procedures and/or standards as required by the governing building code. Anchors installed in concrete shall have an ICC-ES Evaluation Service Report. Special inspection is required for all post installed anchors. The contractor shall coordinate an on-site meeting with the post installed anchor manufacturer field representative to educate the construction team on the anchor installation guidelines and requirements.
B. Mechanical anchors used in cracked and uncracked concrete shall have been tested and qualified for use in accordance with ACI 355.2 and ICC-ES AC193. All anchors shall be installed per the anchor manufacturer's written instructions.
C. Adhesive anchors used in cracked and uncracked concrete shall have been tested and qualified for use in accordance with ICC-ES AC308. All anchors shall be installed per the anchor manufacturer's written instructions.
D. Mechanical anchors used in solid grouted masonry shall have been tested and qualified for use in accordance with ICC-ES AC01. All anchors shall be installed per the anchor manufacturer's written instructions.
E. Adhesive anchors used in solid grouted masonry shall have been tested and qualified for use in accordance with ICC-ES AC58. All anchors shall be installed per the anchor manufacturer's written instructions.
F. Anchors used in hollow concrete masonry shall have been tested and qualified in accordance with ICC-ES AC106 or ICC-ES AC58 as appropriate. All anchors shall be installed per the anchor manufacturer's written instructions with appropriate screen tubes used for adhesives.

7. Foundations

A. The soil investigation was prepared by Kruger Technologies, Inc., the report number is 223109G and the telephone number is 913-498-1114.
B. Spread footings, grade beams, and retaining walls are designed to bear on engineered fill or undisturbed soil capable of safely sustaining 2,000 psf.
C. Retaining walls are designed for an active lateral load of 40pcf equivalent fluid pressure.
D. Contractor shall provide for dewatering at excavations from either surface water or seepage.
E. All foundation excavations shall be inspected by a qualified soil engineer, approved by the architect and/or structural engineer, prior to placement of steel or concrete. This inspection shall be at the owner's expense.
F. All concrete in the structural portion retaining the backfill shall have attained its design strength prior to being backfilled.
G. Moisture content in soils beneath building locations should not be allowed to change after footing excavations and after grading for slabs on grade are completed. If subgrade materials become desiccated or softened by water or other conditions, recompact materials to the density and water content specified for engineered fill. Do not place concrete on frozen ground.

8. Concrete Masonry Units

A. Concrete block used in exterior walls or load bearing walls shall meet the requirements of ASTM C90 and have a minimum net compressive strength of 2650 psi and laid up using type N mortar such that f'm equals 2000 psi. Mortar shall be volume proportion based cement lime mortar. Proportioning shall be completed by box measure. Any block in contact with earth shall be normal weight units, laid using type "S" mortar and grouted solid.
B. The contractor shall provide adequate temporary bracing for all masonry walls during construction.
C. All concrete block shall have 9 gage (or larger) horizontal joint reinforcing (ladder or truss) per architectural drawings and specifications (16" maximum vertical spacing).
D. Cavity wall construction shall be reinforced as designed for specific concrete block used. The horizontal joint reinforcing shall be of the ladder or truss style per specification and continuous between brick and block, as prescribed by the architectural drawings.
E. Concrete block shall be reinforced as follows in 6", 8", 10", and 12" walls:
   1. Vertical reinforcing shall be a minimum of 1 - #4 bar in 6" and 8" walls and 2 - #4 bars in 10" and 12" walls at 4'-0" on center, at each corner, at each door and window jamb, each side of control joints and in the end void of each length of wall. Lap splices for masonry vertical reinforcing shall be 48 bar diameters, 24" minimum.
   2. Horizontal reinforcing:
      A. Horizontal joint reinforcing as noted above.
      B. Continuous horizontal bars shall be included per section or detail in bond beam or optional running bond beam where noted. Where bond beams are continuous at corners of walls, supply corner bars matching size of horizontal bars (minimum 2'-0" or 40 bar diameters in each direction).
F. Grout, where noted above, shall have a minimum design ultimate compressive strength of 2500 psi at 28 day test and 3/8" maximum aggregate size.
G. Non-load bearing concrete block walls shall be isolated from adjacent structural elements with vertical 3/8" control joints and at the top of the wall with 1" air space or compressible material and support per architectural detail.
H. Unless otherwise covered on architectural plans or specifications, vertical control joints in masonry construction shall be 3/8" wide, full height of wall. Joints shall be spaced at a maximum of 24'-0" on center and coordinated with the architect. All horizontal joint reinforcing shall be discontinuous at control joints in masonry. All bond beam horizontal reinforcing shall be continuous through control joints.
I. Lintels over all openings up to 8'-0" wide in new and existing masonry walls not otherwise covered shall be one 6x3 1/2x5/16 angle for each 4" width of masonry. All exterior lintels to be galvanized.
J. Walls shall be anchored top and bottom by dowels matching wall vertical reinforcing(unless noted otherwise) from floor slab bottom and bracing angles at the top, per details on the drawings.

9. Light Gage Metal Structural Framing

A. All load bearing, light gage structural studs, track, and bridging shall be of the type, size, gage, and spacing as shown on the plans, minimum.
B. All materials shall be 33,000 psi minimum yield, except studs of 16 gage or heavier shall have a minimum yield of 50,000 psi.
C. All properties, fabrication, and erection shall be in accordance with latest editions of the AISI "Specifications for the Design of Cold-Formed Structural Members."
D. All framing components shall be cut squarely or at an angle to fit squarely against abutting members. Splicing of axially loaded members is not permitted. Members shall be held firmly in place until properly fastened. Attachments of similar components shall be by welding, screw attachment, or bolting. Wire tying of components is not permitted.
E. Tracks shall be securely anchored to floor and overhead members. Special anchorage requirements required for wind bracing shall be as shown on the plans.
F. Prior to fabrication and/or erection, the contractor shall submit shop drawings complete with detail of erection, fabrication, attachments, anchorages, lintels, etc., for review by the architect/engineer.
G. Shipment, handling, and erection of trusses shall be by experience, qualified persons and shall be performed in a manner so as not to endanger life or property. Apparent truss damage shall be reported to the truss manufacturer for evaluation prior to erection.Cutting or alteration of trusses is not permitted without written authorization from the truss manufacturer. Contractor shall coordinate truss layout for openings and penetrations required by other trades including for plumbing, HVAC, electrical, roof access hatches, chases, etc.

10. Precast Concrete Members

A. The contractor/supplier is responsible for the design of all the precast members and connection between them and other structural members. Submit design calculations, sealed by an engineer licensed in the state of the project location, for review by the architect/engineer of record.
B. All precast members are to be designed in accordance with ACI 318-14, 2018 IBC and other applicable codes, standards (see specs) and design criteria shown on design documents.
C. Precast concrete members shall conform to the 2018 IBC for the required fire ratings (refer to architects documents).
D. All wall panels should be designed for building wind loads, seismic loads, gravity loads, and transmit these loads to the foundation through properly designed connections.
E. Provide blockouts and openings for mechanical/electrical equipment. Refer to mechanical/electrical documents.
F. Shop drawings shall be complete and shall include a layout plan, fabrication details, estimated camber, connection and anchorage details and member identification marks. Identification marks shall appear on manufactured units to facilitate correct field placement.
G. Precast supplier shall design all components to meet the requirements of the ICC500-2014 code.

11. Deferred Submittal and Shop Drawing

A. Bob D. Campbell and Company, Inc. will review the General Contractor's (GC) shop drawings and related submittals (as indicated below) with respect to the ability of the detailed work, when complete, to be a properly functioning integral element of the overall structural system designed by Bob D. Campbell and Company, Inc.
B. Deferred submittals shall be submitted to the architect of record for review who shall forward to the building official for review and approval. Design calculations for deferred sub mittals shall be submitted at the same time as the shop drawings for review. Design calculations shall be prepared and sealed by a Professional Engineer licensed in the state of the project. The deferred submittal items shall not be installed until the deferred submittal documents have been approved by the building official.
C. Prior to submittal of a shop drawing or any related material to Bob D. Campbell and Company, Inc., the GC shall:
   1. Review each submission for conformance with the means, methods, techniques, sequences and operations of construction and safety precautions and programs incidental thereto, all of which are the sole responsibility of the GC.
   2. Review and approve each submission.
   3. Stamp each submission as approved.
D. Bob D. Campbell and Company, Inc. shall assume that no submission comprises a variation unless the GC advises Bob D. Campbell and Company, Inc. with written documentation.
E. Bob D. Campbell and Company, Inc. shall review shop drawings and related materials with comments provided that each submission has met the above requirements. Bob D. Campbell and Company, Inc. shall return without comment unrequired material or submissions without GC approval stamp.
F. Shop drawings and related material (if any) required are indicated below.
   Should Bob D. Campbell and Company, Inc. require more than ten (10) working days to perform the review, Bob D. Campbell and Company, Inc. shall so notify the GC.
   1. Concrete mix designs and material certificates including admixtures and compounds applied to the concrete after placement.
   2. Reinforcing steel shop drawings including erection drawings and bending details.Bar list will not be reviewed for correct quantities.
   3. Elevations of all reinforced concrete masonry walls at a scale no smaller than 3/8" = 1'-0" showing all required reinforcing.
   4. Grout mix designs (for CMU).
   5. Construction and control joint plans and/or elevations.
   6. Structural steel shop drawings including erection drawings and piece details. Include joist, decking and connector submittals. Include miscellaneous framing specified on the structural drawings, but do not submit framing specified on non-structural drawings for Bob D. Campbell and Company, Inc. review.
   7. Deferred Submittal: Structural steel joists
   8. Deferred Submittal: Railings and guardrails
   9. Deferred Submittal: Metal stair framing
   10. Deferred Submittal: Exterior cold-formed metal framing shop drawings and design calculations
   11. Deferred Submittal: Exterior curtain wall
   12. Deferred Submittal: Structural steel connection design calculations submitted concurrently with structural steel shop drawings.
   13. Miscellaneous anchors shown on the structural drawings.
   14. Deferred Submittal: Precast concrete shop drawings including erection drawings and connection details.
   15. Deferred Submittal: Precast concrete design calculations.

12. Statement of Structural Special Inspections

A. The structural design for this project is based on completion of special inspections during construction in accordance with section 1704 of the International Building Code. The owner shall employ one or more qualified special inspectors to provide the required special inspections.
B. The special inspector shall furnish inspection reports to the building official, owner, architect and structural engineer, and any other designated person.
C. All discrepancies shall be brought to the immediate attention of the contractor for correction, then, if uncorrected, to the proper design authority, building official and structural engineer.
D. The special inspector shall submit a final signed report stating that the work requiring special inspection was, to the best of the inspector's knowledge, in conformance with the approved plans and specifications and the applicable workmanship provisions of the building code.
E. The following inspections and tests are required with the frequency (continuous or periodic) as defined within the referenced section or standard listed below. The General Contractor shall provide notification to the inspector when items requiring inspection are ready to be inspected and provide access for those inspections.
   1. Shop Fabrication – structural steel and steel bar joist per Section 1704.2.5 unless AISC certified shop
   2. Shop Fabrication – precast concrete per Section 1704.2.5 unless PC certified shop
   3. Steel Construction per Section 1705.2 and the quality assurance requirements of AISC 341 Chapter J (as referenced by AISC 360)
   4. Cold-Formed Steel Deck per Section 1705.2.2 and the quality assurance requirements of SDI QA/QC.
   5. Cold-formed steel trusses spanning 60 feet or greater per Section 1705.2.2.2
   6. Concrete Construction per Section 1705.3 and Table 1705.3
      a. Reinforcing Steel Placement
      b. Reinforcing Steel Welding
      c. Cast in Place Anchors
      d. Post Installed Anchors
      e. Design Mix Verification
      f. Concrete Sampling and Testing
      g. Concrete Placement
      h. Concrete Curing
      i. Erection of Precast
      j. Formwork Shape, Location and Dimensions
   7. Masonry Construction per Section 1705.4 and the quality assurance requirements of TMS 602 Level 2
   8. Verification of Soils per Table 1705.6

13. Copyright and Disclaimer

A. All drawings in the structural set (S-series drawings) are the copyrighted work of Bob D. Campbell and company, Inc. These drawings may not be photographed, traced, or copies in any manner without the written permission of Bob D. Campbell and Company, Inc. Exception: Original drawings may be printed for distribution to the owner, architect, and general contractor for coordination, bidding, and construction. Subcontractors may not reproduce these drawings for any purpose or in any manner.
B. I, Wayne E. Davis, P.E., registered engineer and a representative of Bob D. Campbell and Company, Inc., do hereby accept professional responsibility as required by the professional registration laws of this state for the structural design drawings consisting of S-series drawings. I hereby disclaim responsibility for all other drawings in the construction document package, they being the responsibility of other design professionals whose seals and signed statements may appear elsewhere in the construction document package.

STRUCTURAL ABBREVIATIONS

@	AT
&	AND
Ø	ROUND, DIAMETER
ADTL	ADDITIONAL
AFF	ABOVE FINISHED FLOOR
ALT	ALTERNATE
ARCH	ARCHITECTURAL
BLDG	BUILDING
B/	BOTTOM OF
BM	BEAM
BOTT	BOTTOM
BRG	BEARING
C	CAMBER
CD-#	CONCRETE DECK TYPE
CJ	CONSTRUCTION/CONTROL JOINT
CJP	COMPLETE JOINT PENETRATION
CL	CENTERLINE
CMU	CONCRETE MASONRY UNIT
COL	COLUMN
CONC	CONCRETE
CONN	CONNECTION
CONT	CONTINUOUS
COORD	COORDINATE
COV, CVR	COVER
DBL	DOUBLE
DET	DETAIL
DIA	DIAMETER
DIM	DIMENSION
DL	DEAD LOAD
DWG	DRAWING
EA	EACH
EF	EACH FACE
EJ	EXPANSION JOINT
EL, ELEV	ELEVATION
EMBED	EMBEDMENT, EMBEDDED
ENGR	ENGINEER
EOD	EDGE OF DECK
EOR	ENGINEER OF RECORD
EOS	EDGE OF SLAB
EQ	EQUAL
EQUIP	EQUIPMENT
EW	EACH WAY
EXP	EXPANSION
EXT	EXTERIOR
EXTG, EXIST	EXISTING
FD-#	FLOOR DECK TYPE
FDN	FOUNDATION
FF	FAR FACE
FIN	FINISH
FLR	FLOOR
FS	FAR SIDE
FTG	FOOTING
FV	FIELD VERIFY
GA	GAGE
GALV	GALVANIZE(D)
GEN	GENERAL
GR	GRADE
HORIZ	HORIZONTAL
HSS	HOLLOW STRUCTURAL SECTION
IF	INSIDE FACE
INFO	INFORMATION
INT	INTERIOR
JST	JOIST
JT	JOINT
K	KIPS (1000 LBS)
KSF	KIPS PER SQUARE FOOT
KSI	KIPS PER SQUARE INCH
LBS, #	POUNDS
Ld	DEVELOPMENT LENGTH
LL	LIVE LOAD
LLH	LONG LEG HORIZONTAL
LLV	LONG LEG VERTICAL
LONG	LONGITUDINAL
LSLT	LONG-SLOTTED HOLE TRANSVERSE
LTWT	LIGHTWEIGHT
M	MOMENT FORCE
MAX	MAXIMUM
MECH	MECHANICAL
MFGR	MANUFACTURER
MIN	MINIMUM
MISC	MISCELLANEOUS
MSRY	MASONRY
MTL	METAL
NF	NEAR FACE
NS	NEAR SIDE
NTS	NOT TO SCALE
NW	NORMAL WEIGHT
OC	ON CENTER
OF	OUTSIDE FACE
OPNG	OPENING
OPP	OPPOSITE
OVS	OVERSIZED HOLE
P	AXIAL FORCE
PAF	POWDER ACTUATED FASTENER
PC	PRECAST
PCF	POUNDS PER CUBIC FOOT
PEMB	PRE-ENGINEERED METAL BUILDING
PERP	PERPENDICULAR
PL	PLATE
PLF	POUNDS PER LINEAR FOOT
PJP	PARTIAL JOINT PENETRATION
PSF	POUNDS PER SQUARE FOOT
PSI	POUNDS PER SQUARE INCH
QTY	QUANTITY
RAD	RADIUS
RD-#	ROOF DECK TYPE
REF	REFERENCE
REINF	REINFORCEMENT
REQD	REQUIRED
REV	REVISION
RLL	ROOF LIVE LOAD
RTU	ROOF TOP UNIT
SC	SLIP CRITICAL
SCHED	SCHEDULE(D)
SECT	SECTION
SHT	SHEET
SIM	SIMILAR
SJ	SAW JOINT
SL	SNOW LOAD
SOG	SLAB-ON-GRADE
SOG-#	SLAB-ON-GRADE TYPE
SPCG	SPACING
SPEC	SPECIFICATION
SPRT	SUPPORT
SQ	SQUARE
SS	STAINLESS STEEL
SSLT	SHORT-SLOTTED HOLE TRANSVERSE
STD	STANDARD
STIFF	STIFFENER
STIR	STIRRUP
STL	STEEL
STRUCT	STRUCTURE, STRUCTURAL
T/	TOP OF
THRU	THROUGH
TOS	TOP OF STEEL, TOP OF SLAB
TRANS	TRANSVERSE
TYP	TYPICAL
UNO	UNLESS NOTED OTHERWISE
V	SHEAR FORCE
VERT	VERTICAL
W/	WITH
W/0	WITHOUT
WF	WIDE FLANGE
WL	WIND LOAD
WP	WORK POINT
WWF	WELDED WIRE FABRIC

LEGEND:

...... SPAN DIRECTION OF DECK

BP-1 ...... 3/8"x7"x7" BEARING PLATE WITH (2) ½"ØX6" STUDS

NCD-1 ...... 3½" CONCRETE SLAB REINFORCED W/ 6x6-W2.1xW2.1 WWF ON 0.6"x26ga GALVANIZED FORM DECK (3 SPAN CONTINUOUS)

RD-1 ...... 1½", 22ga GALVANIZED WIDE RIB ROOF DECK (3 SPAN CONTINUOUS) ATTACH TO STRUCTURE TO DEVELOP 325plf DIAPHRAGM SHEAR (ASD LOAD).

...... 8"x16" CMU COLUMN REINF. W/ (2) #5 VERT. WITH EQUAL DOWELS TO FOOTING & #2 TIES @ 8"o.c. GROUT SOLID WITH 3,000PSI GROUT

4.0 ...... FOOTING MARK - SEE SCHEDULE ON SHEET S002.

1 HSS4x4x3/8 ....COLUMN SIZE
BASE PLATE MARK - SEE SCHEDULE ON SHEET S002

C= ...... INDICATES AMOUNT OF UPWARD INDUCED CAMBER AT BEAM MID-SPAN

LEVEL BEAM DESIGNATION: W14x22 — STEEL BEAM SIZE; T 117'-6" — TOP OF BEAM ELEVATION

SLOPING BEAM DESIGNATION: W14x22 — STEEL BEAM SIZE; T 133'-0" T 132'-5" — TOP OF BEAM ELEVATION EACH END

hollis + miller architects®
we design the future®
1828 Walnut Street Suite 922
Kansas City, MO 64108
T 816.442.7700
115 Wilcox Street Suite 210
Castle Rock, CO 80104
T 720.949.1689
HOLLISANDMILLER.COM

Hollis + Miller Architects
Missouri State Certificate of Authority
Architecture # 0000161
Structure # 2006031333

Bob D Campbell
Structural Engineer
State Certificate of Authority #000442
4338 Belleview Ave
Kansas City, MO 64111
816.531.4144 phone

Smith & Boucher, Inc.
Mechanical, Electrical, & Plumbing
State Certificate of Authority #EGC000178
25618 W 103rd Street
Olathe, KS 66061
913.345.2127 phone

MKEC Engineering, Inc.
Civil Engineer
State Certificate of Authority
Engineering #2001009364
Landscaping #2006027139
Surveying #2006027138
11827 W 112th Street, Suite 200
Overland Park, KS 66210
913.317.9390 phone

Peerbolte Creative
Theatrical Consultant
109 E Pine St.
Warrensburg, MO 64093-0752
660.429.1383 phone

Discovery Middle School Storm Shelter Addition
Liberty School District
800 Midjay Dr, Liberty, MO 64068

Conformed Construction Documnets

REVISIONS:

#	Description	Date

STATE OF MISSOURI WAYNE E. DAVIS NUMBER E-20010... PROFESSIONAL ENGINEER 10/11/23

The Professional Architects seal affixed to this sheet applies only to the material and items shown on this sheet. All drawings, instruments or other documents not exhibiting this seal shall not be considered prepared by this architect, and this architect expressly disclaims any and all responsibility for such plan, drawings, or documents not exhibiting this seal.

JOB NO: 23018
DRAWN BY: TAJ
CHECKED BY: WED
DATE: 10.11.2023

S001

GENERAL NOTES

Please consider the environment before printing this.
10/11/2023 7:48:39 AM

COLUMN BASE PLATE SCHEDULE

TYPE	COLUMN	BASE PLATE (lxBxN)	SHAPE	ANCHOR RODS	EMBEDMENT
1	PER PLAN	3/4"x10"x10"	A	(4) 3/4"ø	9"
2	PER PLAN	3/4"x8"x10"	B	(4) 3/4"ø	9"
3	PER PLAN	3/4"x6"x8" EA. WAY	C	(4) 3/4"ø	9"

NOTES:

1. SEE PLAN FOR ORIENTATION OF COLUMNS.
2. PROVIDE PLATE WASHER & EMBEDDED PLATE PER SCHEDULE @ ALL ANCHOR BOLTS.
3. U.N.O. ALL THREADED ROD A.B's SHALL BE F1554 (36ksi) MATERIAL.

BASE PLATE SHAPE (NOT TO SCALE)

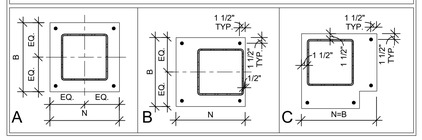

EXTERIOR METAL STUD SCHEDULE

FLOOR	TYP. STUD SIZE & SPACING	
1st	6", 16ga @ 16"o.c. (1 5/8" FLANGE)	

NOTE:
1. STUDS NOTED ABOVE ARE MINIMUM SIZE REQUIRED.
2. STUDS SUPPLIER SHALL DESIGN WALL FRAMING COMPONENTS AND ALL CONNECTIONS. SUBMIT SEALED SHOP DRAWINGS AND CALCULATIONS FOR REVIEW.

Structural Foundation Schedule

NOTE:
1.) EXTERIOR FOOTINGS OR FOOTING AT GRADE BEAM SHALL MATCH GRADE BEAM DEPTH AND BE PLACED WITH GRADE BEAM. PROVIDE SPECIFIED REBAR TOP AND BOTTOM WITH 4 STANDEES TO SUPPORT MATS.
2.) PROVIDE REINFORCING PER SCHEDULE EACH WAY IN TOP OF FTG. AT ALL MOMENT FRAME AND BRACED BAY COLUMNS.
3.) CENTER FOOTINGS ON COLUMNS AND/OR WALL CENTER LINES PER PLAN UNLESS NOTED OTHERWISE (U.N.O.).

Type Mark	Length	Width	Footing Thickness	Bottom Bars	Quantity (E.W. Bott)	
4.0	4'-0"	4'-0"	1'-0"	Rebar : # 4	8	
4.0A	4'-0"	4'-0"	2'-8"	Rebar : # 4	8	

COLUMN BASE PLATE AND ANCHOR-ROD CRITERIA

ANCHOR-ROD DIAMETER.	MAX. BASE PLATE HOLE DIAMETER.	MIN. PLATE WASHER SIZE.	MIN. PLATE WASHER THICKNESS	EMBEDDED ANCHOR PLATE SIZE
3/4"	1 5/16"	2"	1/4"	1/2"x2 1/2"x2 1/2"
7/8"	1 9/16"	2 1/2"	5/16"	1/2"x2 1/2"x2 1/2"
1"	1 7/8"	3"	3/8"	5/8"x3"x3"
1 1/4"	2 1/8"	3 1/2"	1/2"	5/8"x3 1/2"x3 1/2"
1 1/2"	2 3/8"	4"	1/2"	5/8"x3 1/2"x3 1/2"
1 3/4"	2 7/8"	4 1/2"	5/8"	3/4"x3 1/2"x3 1/2"
2"	3 1/4"	5"	3/4"	3/4"x3 1/2"x3 1/2"
2 1/2"	3 3/4"	5 1/2"	7/8"	3/4"x3 1/2"x3 1/2"

NOTES:
1. HOLE SIZES PROVIDED ARE BASED ON ANCHOR ROD SIZE AND CORRELEATE WITH ACI 117 (ACI, 2010)
2. CIRCULAR OR SQUARE WASHERS MEETING THE WASHER SIZE ARE ACCEPTABLE.
3. HOLE IN PLATE WASHER SHALL BE 1/16" LARGER THAN ANCHOR DIAMETER.

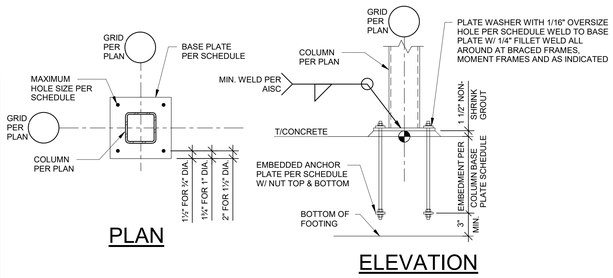

1 TYPICAL BASE PLATE DETAIL

3/4" = 1'-0"

ASCE 7-16 BASIC LOAD CASE 1.0W COMPONENT AND CLADDING WIND PRESSURE DIAGRAM NOTES:

1. REFER TO GENERAL NOTES FOR WIND LOAD DESIGN CRITERIA.
2. POSITIVE LOADS ACT IN A PERPENDICULAR DIRECTION TOWARDS THE SURFACE. NEGATIVE LOADS ACT IN PERPENDICULAR DIRECTION AWAY FROM THE SURFACE.
3. WIND LOADS CALCULATED ARE BASED ON THE PROVISIONS OF ASCE 7. VALUES SHOWN ARE DETERMINED ASSUMING AS ENCLOSED BUILDING WITH AN INTERNAL PRESSURE COEFFICIENT = +/- 0.18 AND A Kd FACTOR = 0.85. LOADS SHOWN ARE FROM UNFACTORED BASIC LOAD CASE
4. LINEAR INTERPOLATION IS PERMITTED FOR TRIBUTARY AREAS BETWEEN VALUES GIVEN.
5. "a" SHALL BE THE LESSER OF 10 PERCENT OF THE LEAST HORIZONTAL DIMENSION OR 0.4x"h", BUT NOT LESS THAN 4 PERCENT OF THE LEAST HORIZONTAL DIMENSION OR 3 FT.
6. FIGURES SHOWN ARE ILLUSTRATIVE ONLY AND ARE NOT INTENDED TO DEPICT THE ACTUAL STRUCTURE DIMENSIONS.
7. ALL DESIGNERS USINGING THIS WIND LOAD DIAGRAM MUST INDEPENDENTLY VERIFY THE DESIGN PRESSURES BASED ON THE APPLICABLE BUILDING CODE.
8. ROOF PRESSURES ARE FOR FLAT ROOF ONLY. WIND LOADS FOR THE DESIGN OF SLOPED ROOFS (WITH ANGLES GREATER THAN 10 DEGREES) SHALL BE OBTAINED USING THE PROVISIONS OF ASCE 7-16.
9. PARAPETS SHALL BE DESIGNED FOR COMPONENTS AND CLADDING LOADS PER ASCE 7 SECTION 6.5.12.4.4. IF A PARAPET 3'-0" OR HIGHER OCCURS AROUND THE PERIMETER OF THE ROOF, ZONE 3 MAY BE TREATED AS ZONE 2 FOR ROOF PRESSURE AND SUCTION.

BUILDING ISOMETRIC VIEW

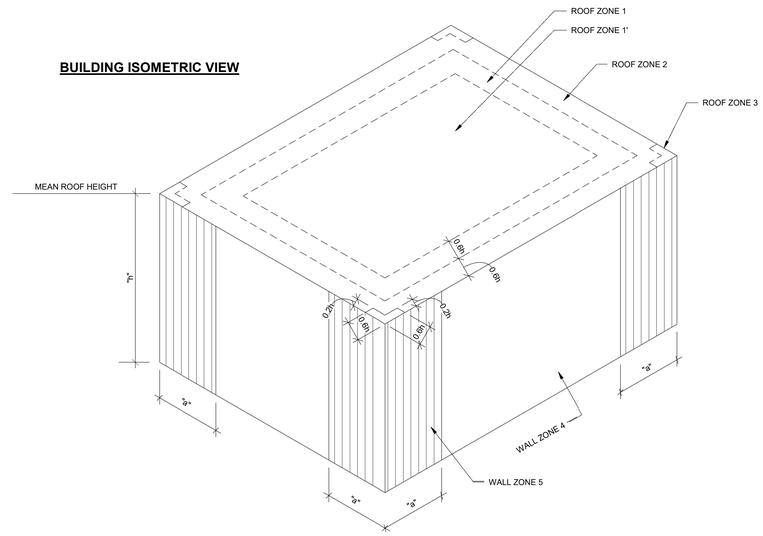

FLAT ROOF (SLOPE LESS THAN 3 DEGREES) BUILDING COMPONENT AND CLADDING DESIGN WIND PRESSURES (+) AND SUCTION (-) (PSF)														
EFFECTIVE AREA (SQ. FT.)	10		20		50		100		200		500		1000	
ZONE 1	-54.9	14.0	-52.0	12.6	-46.1	11.7	-43.2	11.1	-40.3	11.1	-34.4	11.1	-34.4	11.1
ZONE 1'	-31.5	14.0	-31.5	12.6	-31.5	11.7	-31.5	11.1	-27.1	11.1	-21.3	11.1	-16.9	11.1
ZONE 2	-72.4	14.0	-68.0	12.6	-62.2	11.7	-57.8	11.1	-52.0	11.1	-46.1	11.1	-46.1	11.1
ZONE 3	-98.7	14.0	-89.9	12.6	-76.8	11.7	-68.0	11.1	-57.8	11.1	-46.1	11.1	-46.1	11.1
ZONE 4	-34.2	31.5	-32.8	30.2	-31.3	28.1	-28.9	26.8	-28.4	25.7	-26.3	23.6	-26.3	23.6
ZONE 5	-42.0	31.5	-39.4	30.2	-35.5	28.1	-32.8	26.8	-30.2	25.7	-26.3	23.6	-26.3	23.6

3 BUILDING COMPONENTS & CLADDING WIND LOADS DIAGRAM

1/8" = 1'-0"

hollis+miller architects
we design the future
1828 Walnut Street Suite 922
Kansas City, MO 64108
t 816.442.7700
115 Wilcox Street Suite 210
Castle Rock, CO 80104
t 720.949.1689
HOLLISANDMILLER.COM
Hollis + Miller Architects
Missouri State Certificate of Authority
Architecture # 000161
Structure # 2006031333

Bob D Campbell
Structural Engineer
State Certificate of Authority #000442
4338 Belleview Ave
Kansas City, MO 64111
816.531.4144 phone

Smith & Boucher, Inc.
Mechanical, Electrical, & Plumbing
State Certificate of Authority #EGC000178
25618 W 103rd Street
Olathe, KS 66061
913.345.2127 phone

MKEC Engineering, Inc.
Civil Engineer
State Certificate of Authority
Engineering #2001009364
Landscaping #2006027139
Surveying #2006027138
11827 W 112th Street, Suite 200
Overland Park, KS 66210
913.317.9390 phone

Peerbolte Creative
Theatrical Consultant
109 E Pine St.
Warrensburg, MO 64093-0752
660.429.1383 phone

Discovery Middle School Storm Shelter Addition
Liberty School District
800 Midjay Dr, Liberty, MO 64068

Conformed Construction Documnets

REVISIONS:

#	Description	Date

The Professional Architect's seal affixed to this sheet applies only to the material and items shown on this sheet. All drawings, instruments or other documents not exhibiting this seal shall not be considered prepared by this architect, and this architect expressly disclaims any and all responsibility for such plan, drawings, or documents not exhibiting this seal.

JOB NO: 23018
DRAWN BY: TAJ
CHECKED BY: WED
DATE: 10.11.2023

S002

SCHEDULES

10/11/2023 7:48:40 AM

Please consider the environment before printing this.

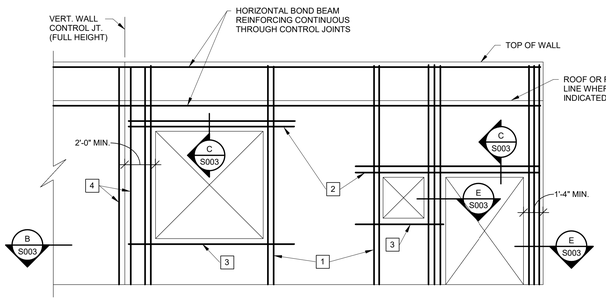

TYPICAL CMU WALL REINFORCING AT OPENINGS

LEGEND:

1. FULL HEIGHT VERTICAL BARS AS JAMB REINFORCING IN FIRST 2 CELLS ADJACENT TO OPENING. REINFORCE EACH CELL WITH SIZE & QUANTITY OF BAR TO MATCH WALL REINFORCING (1 BAR TYPICAL IN 8" WALLS AND 2 BARS TYPICAL IN 12" WALLS).
2. LINTEL REINFORCING PER SECTION C. EXTEND 2'-0" PAST EDGE OF OPENING ON EACH SIDE (TYPICAL).
3. 2-#5 CONTINUOUS HORIZONTAL BARS AS SILL REINFORCING IN 8" COURSE BELOW OPENING (U.N.O.). EXTEND 2'-0" PAST EDGE OF OPENING ON EACH SIDE (TYPICAL).
4. FULL HEIGHT VERTICAL BARS PER MASONRY VERTICAL REINFORCING SCHEDULE LOCATED IN END CELL AT EACH SIDE OF VERTICAL WALL CONTROL JOINTS.

GENERAL CRITERIA: (SECTION A CONTINUED):

1. VERTICAL REINFORCING BARS SHALL BE DOWELED TO FOUNDATION WITH A DOWEL OF MATCHING SIZE AND SPACING.
2. CONTRACTOR SHALL COORDINATE AND VERIFY OPENINGS IN MASONRY WALLS. OPENINGS SHALL BE DETAILED ON REINFORCING STEEL SHOP DRAWING ELEVATIONS.
3. VERTICAL CONTROL JOINTS IN MASONRY WALLS SHALL BE 3/8" WIDE, FULL HEIGHT OF WALL. JOINTS SHALL BE SPACED AT A MAXIMUM OF 24'-0" ON CENTER AND NOT LESS THAN 2'-0" FROM THE EDGE OF ANY OPENING. ALL HORIZONTAL JOINT REINFORCING SHALL BE DISCONTINUOUS AT CONTROL JOINTS. ALL BOND BEAM HORIZONTAL REINFORCING SHALL BE CONTINUOUS THROUGH CONTROL JOINTS. CONTRACTOR SHALL COORDINATE AND VERIFY ALL CONTROL JOINT LOCATIONS.

MASONRY VERTICAL REINFORCING SCHEDULE
FOR LOAD BEARING MASONRY (CMU) WALLS

WALL THICKNESS	LOCATION	VERTICAL REINF. (IN GROUTED CELLS)	SPACING
8"	ALL 8" WALLS (U.N.O.)	1- #5	32"oc
12"	ALL 12" WALLS (U.N.O.)	2- #5	16"oc

NOTES:
1. IN ADDITION TO SPACING SHOWN IN SCHEDULE, VERTICAL REINFORCING SHALL BE PROVIDED IN GROUTED CELLS AT THE FOLLOWING LOCATIONS
   A.) IN THE FIRST 2 CELLS ADJACENT TO EACH OPENING
   B.) IN THE END CELLS ON EACH SIDE OF VERTICAL CONTROL JOINTS
   C.) IN THE END CELLS OF EACH LENGTH OF WALL
   D.) AT EACH CORNER OF WALLS
2. ALL MASONRY VOIDS AND BOND BEAMS TO BE GROUTED SHALL BE FREE OF DEBRIS AND MORTAR DROPPINGS PRIOR TO GROUTING. ANY MASONRY w/ DROPPINGS OR DEBRIS OBSERVED IN VOIDS SHALL BE REJECTED.

A CMU WALL ELEVATION
1 1/2" = 1'-0"

NOTE: REINFORCING SHALL BE PLACED IN POSITIONEERS PRIOR TO GROUTING.

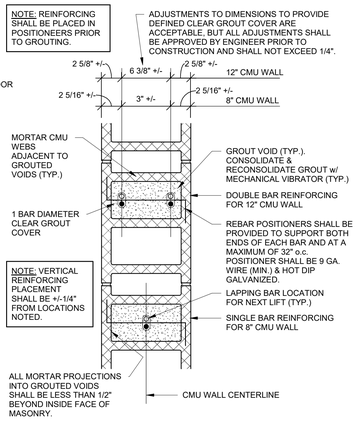

NOTE: VERTICAL REINFORCING PLACEMENT SHALL BE +/-1/4" FROM LOCATIONS NOTED.

NOTE: ALL MASONRY VOIDS AND BOND BEAMS TO BE GROUTED SHALL BE FREE OF DEBRIS AND MORTAR DROPPINGS PRIOR TO GROUTING. ANY MASONRY w/ DROPPINGS OR DEBRIS OBSERVED IN VOIDS SHALL BE REJECTED.

TYPICAL REBAR POSITIONING DETAIL

B SECTION
1 1/2" = 1'-0"

TYPICAL MASONRY REINFORCING NOTE:

ALL INTERIOR & EXTERIOR MASONRY WALLS SHOWN ON ARCHITECTURAL AND STRUCTURAL DRAWINGS ARE TO BE REINFORCED HORIZONTALLY WITH BOND BEAMS (2 - #5 BOTTOM) AT BOTTOM COURSE, TOP COURSE, JOIST BEARING ELEVATION AND AT 8'-0" MAXIMUM O.C. AND VERTICALLY AS INDICATED ON DRAWINGS. THESE WALLS ARE TO BE ANCHORED TOP AND BOTTOM TO THE FOUNDATION, FLOOR, OR ROOF PER TYPICAL DETAILS. THE VERTICAL REINFORCING IS CONTINUOUS (IN 6'-6" MAXIMUM LENGTHS, LAPPED 2'-6" MINIMUM). FILL BLOCK CELLS AND BOND BEAMS WITH 2,500psi GROUT. RE: DETAILS "A" THROUGH "E" ON THIS SHEET.

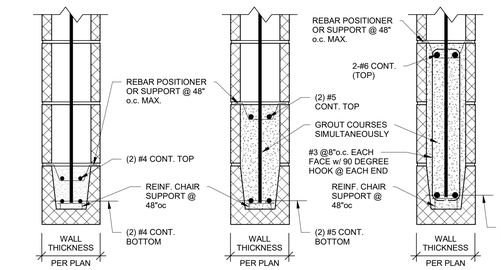

OPENINGS UP TO 4'-0" | OPENINGS 4'-0" TO 7'-4" | OPENINGS 7'-4" TO 12'-0"

TYPICAL LINTELS AT ALL CMU WALLS (U.N.O.)

C SECTION
1 1/2" = 1'-0"

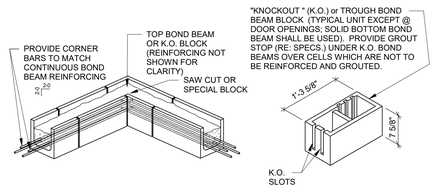

TYPICAL BOND BEAM DETAIL AT CORNER OF CMU WALL

D DETAIL
3/4" = 1'-0"

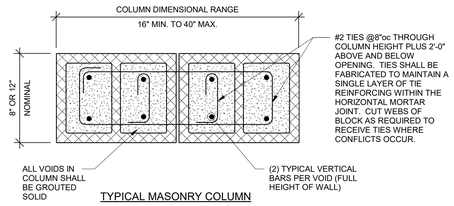

TYPICAL MASONRY COLUMN

E SECTION
1 1/2" = 1'-0"

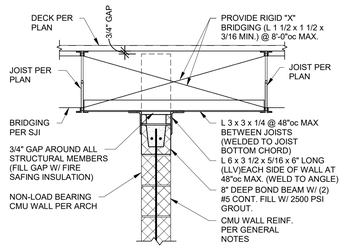

WALL PARALLEL TO JOIST

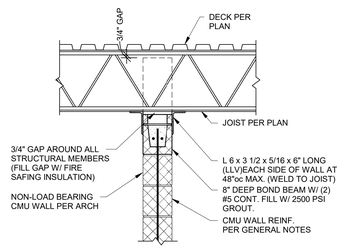

WALL PERPENDICULAR TO JOIST

TYPICAL BRACING DETAILS FOR NON-LOAD-BEARING CMU WALLS THAT EXTEND TO DECK
(REFER TO ARCHITECTURAL DRAWINGS FOR LOCATION)

1 SECTION
3/4" = 1'-0"

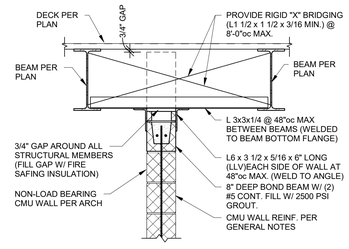

WALL PARALLEL TO JOIST

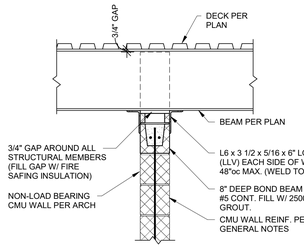

WALL PERPENDICULAR TO JOIST

TYPICAL BRACING DETAILS FOR NON-LOAD-BEARING CMU WALLS THAT EXTEND TO DECK
(REFER TO ARCHITECTURAL DRAWINGS FOR LOCATION)

2 SECTION
3/4" = 1'-0"

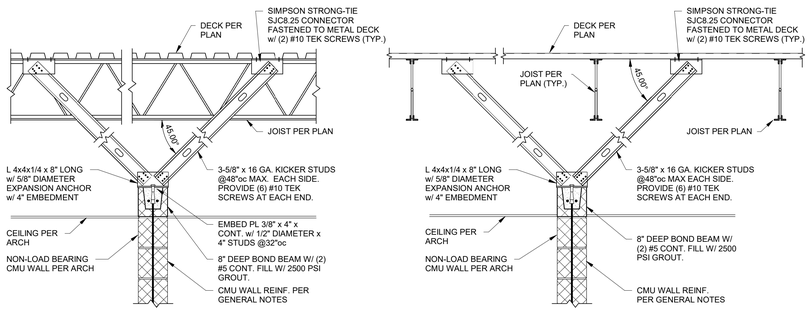

TYPICAL BRACING DETAILS FOR NON-LOAD-BEARING CMU WALLS THAT DO NOT EXTEND TO DECK
(REFER TO ARCHITECTURAL DRAWINGS FOR LOCATION)

3 SECTION
3/4" = 1'-0"

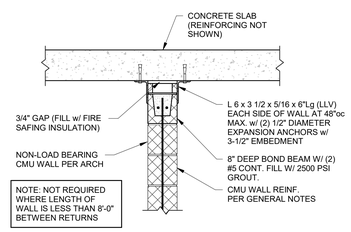

NOTE: NOT REQUIRED WHERE LENGTH OF WALL IS LESS THAN 8'-0" BETWEEN RETURNS

TYPICAL TOP OF CMU WALL BRACING BELOW CONCRETE SLAB

4 SECTION
3/4" = 1'-0"

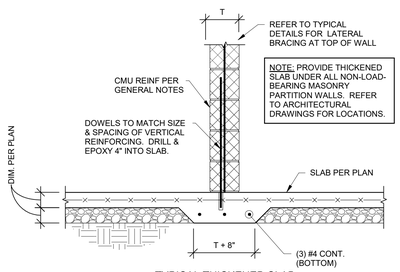

NOTE: PROVIDE THICKENED SLAB UNDER ALL NON-LOAD-BEARING MASONRY PARTITION WALLS. REFER TO ARCHITECTURAL DRAWINGS FOR LOCATIONS.

TYPICAL THICKENED SLAB
(UNDER NON-LOAD-BEARING MASONRY)

5 SECTION
3/4" = 1'-0"

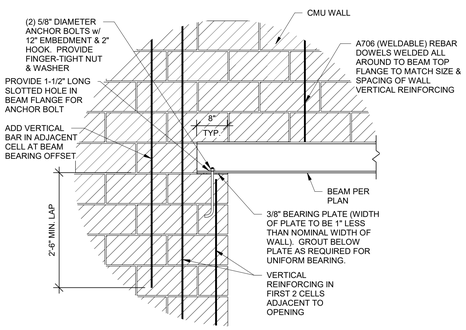

TYPICAL STEEL LINTEL DETAIL AT CMU WALL

6 SECTION
3/4" = 1'-0"

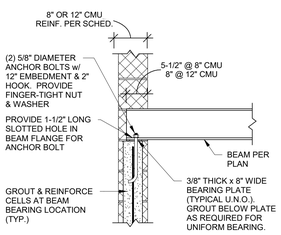

TYPICAL WIDE FLANGE BEAM BEARING ON CMU (U.N.O.)

7 SECTION
3/4" = 1'-0"

hollis + miller architects
we design the future
1828 Walnut Street Suite 922
Kansas City, MO 64108
t 816.442.7700
115 Wilcox Street Suite 210
Castle Rock, CO 80104
t 720.949.1689
HOLLISANDMILLER.COM
Hollis + Miller Architects
Missouri State Certificate of Authority
Architecture # 0000161
Structure # 2006031333

Bob D Campbell
Structural Engineer
State Certificate of Authority #000442
4338 Belleview Ave
Kansas City, MO 64111
816.531.4144 phone

Smith & Boucher, Inc.
Mechanical, Electrical, & Plumbing
State Certificate of Authority #EGC000178
25618 W 103rd Street
Olathe, KS 66061
913.345.2127 phone

MKEC Engineering, Inc.
Civil Engineer
State Certificate of Authority
Engineering #2001009364
Landscaping #2006027139
Surveying #2006027138
11827 W 112th Street, Suite 200
Overland Park, KS 66210
913.317.9390 phone

Peerbolte Creative
Theatrical Consultant
109 E Pine St.
Warrensburg, MO 64093-0752
660.429.1383 phone

Discovery Middle School Storm Shelter Addition
Liberty School District
800 Midjay Dr, Liberty, MO 64068

Conformed Construction Documnets

REVISIONS:

#	Description	Date

The Professional Architects seal affixed to this sheet applies only to the material and items shown on this sheet. All other information on this sheet is supplied by others and is not the responsibility of the Professional Architect. Hollis + Miller and this architect expressly disclaims any and all responsibility for such plan, drawings, or documents not exhibiting this seal.

JOB NO: 23018
DRAWN BY: TAJ
CHECKED BY: WED
DATE: 10.11.2023

S003

CMU DETAILS

10/11/2023 7:48:42 AM

Please consider the environment before printing this.

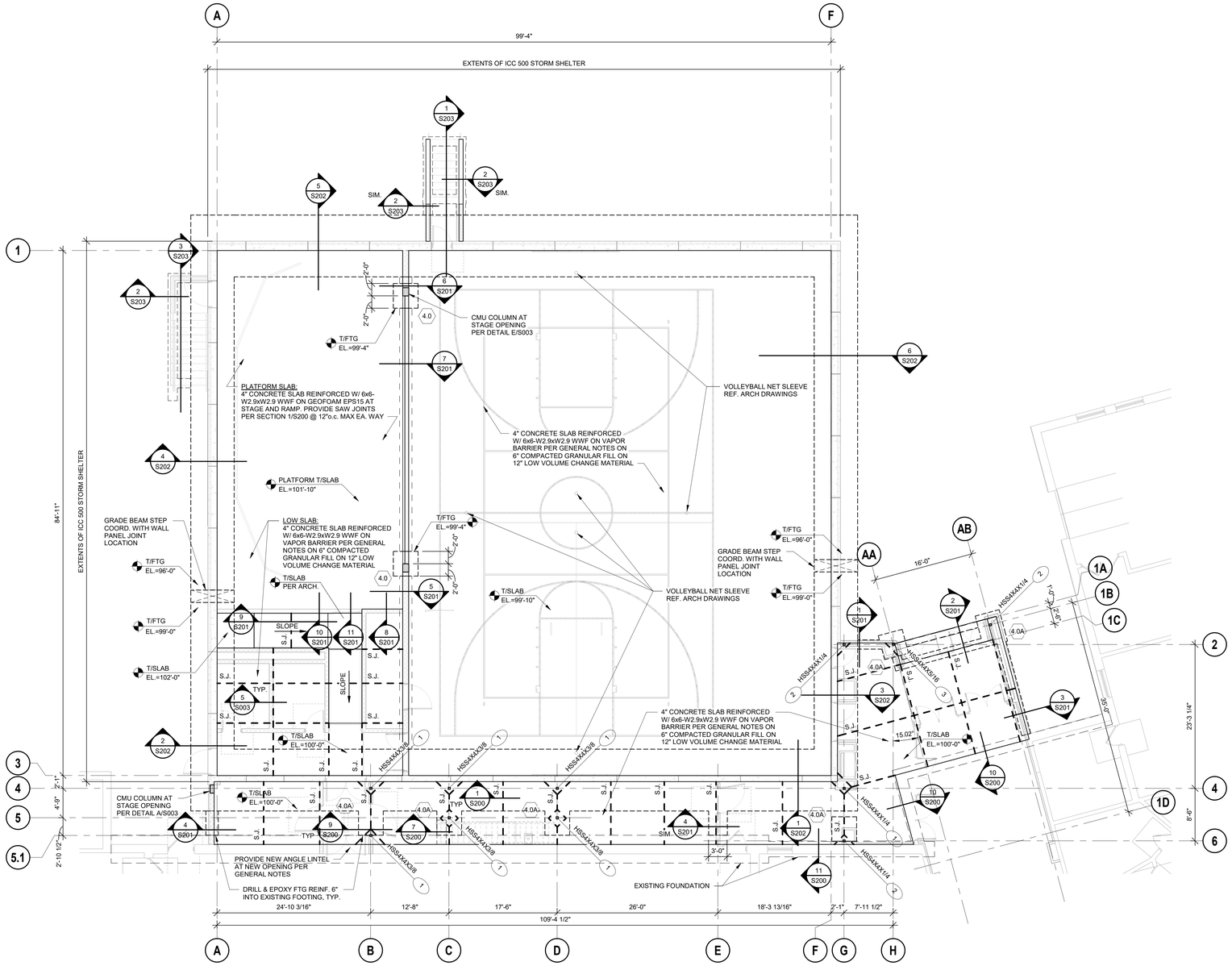

1 FOUNDATION PLAN

1/8" = 1'-0"

NOTES:
1. REFER TO GENERAL NOTES AND LEGEND ON SHEET S001.

PROJECT NORTH TRUE NORTH

KEY PLAN

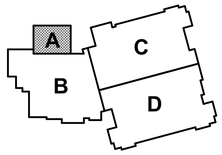

hollis + miller architects®

we design the future®

1828 Walnut Street Suite 922
Kansas City, MO 64108
t 816.442.7700

115 Wilcox Street Suite 210
Castle Rock, CO 80104
t 720.949.1689

HOLLISANDMILLER.COM

Hollis + Miller Architects
Missouri State Certificate of Authority
Architecture # 0000161
Structure # 2006031333

Bob D Campbell
Structural Engineer
State Certificate of Authority #000442
4338 Belleview Ave
Kansas City, MO 64111
816.531.4144 phone

Smith & Boucher, Inc.
Mechanical, Electrical, & Plumbing
State Certificate of Authority #EGC000178
25618 W 103rd Street
Olathe, KS 66061
913.345.2127 phone

MKEC Engineering, Inc.
Civil Engineer
State Certificate of Authority
Engineering #2001009364
Landscaping #2006027139
Surveying #2006027138
11827 W 112th Street, Suite 200
Overland Park, KS 66210
913.317.9390 phone

Peerbolte Creative
Theatrical Consultant
109 E Pine St.
Warrensburg, MO 64093-0752
660.429.1383 phone

Discovery Middle School Storm Shelter Addition
Liberty School District
800 Midjay Dr, Liberty, MO 64068

Conformed Construction Documnets

REVISIONS:

#	Description	Date
1	Addendum 04	09/29/2023

The Professional Architects seal affixed to this sheet applies only to the material and items shown on this sheet. All drawings, instruments or other documents not exhibiting this seal shall not be considered prepared by the architect, and the architect expressly disclaims any and all responsibility for such plan, drawings, or documents not exhibiting this seal.

JOB NO: 23018
DRAWN BY: TAJ
CHECKED BY: WED
DATE: 10.11.2023

S100

FOUNDATION PLAN

10/11/2023 7:48:45 AM

Please consider the environment before printing this.

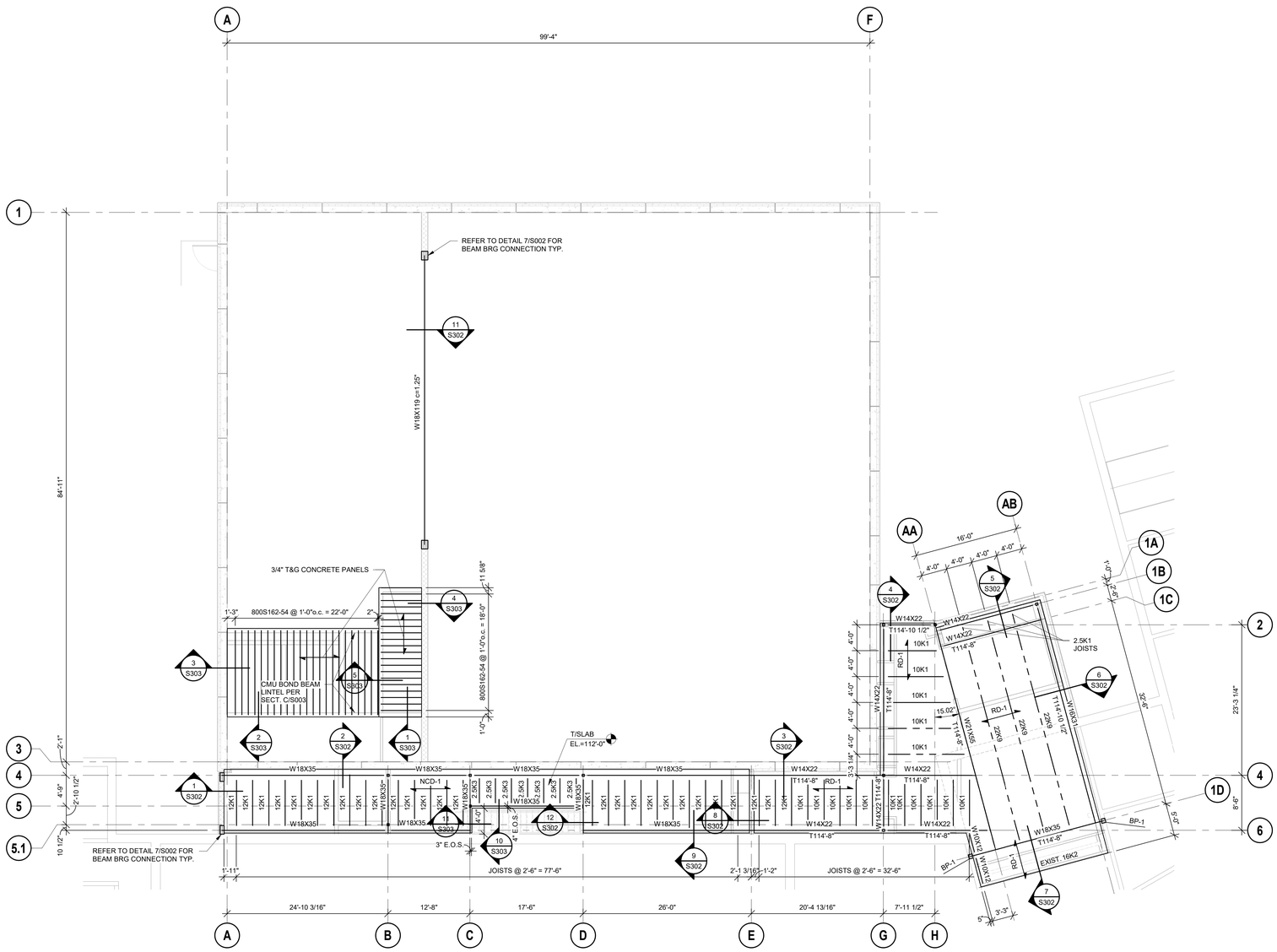

1 LEVEL 2/LOW ROOF FRAMING PLAN

1/8" = 1'-0"

NOTES:
1. REFER TO GENERAL NOTES AND LEGEND ON SHEET S001

PROJECT NORTH

TRUE NORTH

KEY PLAN

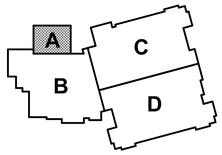

hollis + miller architects®

we design the future®

1828 Walnut Street Suite 922
Kansas City, MO 64108
t 816.442.7700

115 Wilcox Street Suite 210
Castle Rock, CO 80104
t 720.949.1689

HOLLISANDMILLER.COM

Hollis + Miller Architects
Missouri State Certificate of Authority
Architecture # 0000161
Structure # 2006031333

Bob D Campbell
Structural Engineer
State Certificate of Authority #000442
4338 Belleview Ave
Kansas City, MO 64111
816.531.4144 phone

Smith & Boucher, Inc.
Mechanical, Electrical, & Plumbing
State Certificate of Authority #EGC000178
25618 W 103rd Street
Olathe, KS 66061
913.345.2127 phone

MKEC Engineering, Inc.
Civil Engineer
State Certificate of Authority
Engineering #2001009364
Landscaping #2006027139
Surveying #2006027138
11827 W 112th Street, Suite 200
Overland Park, KS 66210
913.317.9390 phone

Peerbolte Creative
Theatrical Consultant
109 E Pine St.
Warrensburg, MO 64093-0752
660.429.1363 phone

Discovery Middle School Storm Shelter Addition

Liberty School District

800 Midjay Dr, Liberty, MO 64068

Conformed Construction Documnets

REVISIONS:

#	Description	Date

The Professional Architects seal affixed to this sheet applies only to the material and items shown on this sheet. All other information on this sheet is provided as a courtesy to the Owner and Contractor. Hollis + Miller Architects, LLC and this architect expressly disclaims any and all responsibility for such plan, drawings, or documents not exhibiting this seal.

JOB NO: 23018
DRAWN BY: TAJ
CHECKED BY: WED
DATE: 10.11.2023

S101

LOW ROOF FRAMING PLAN

Please consider the environment before printing this.

10/11/2023 7:48:47 AM

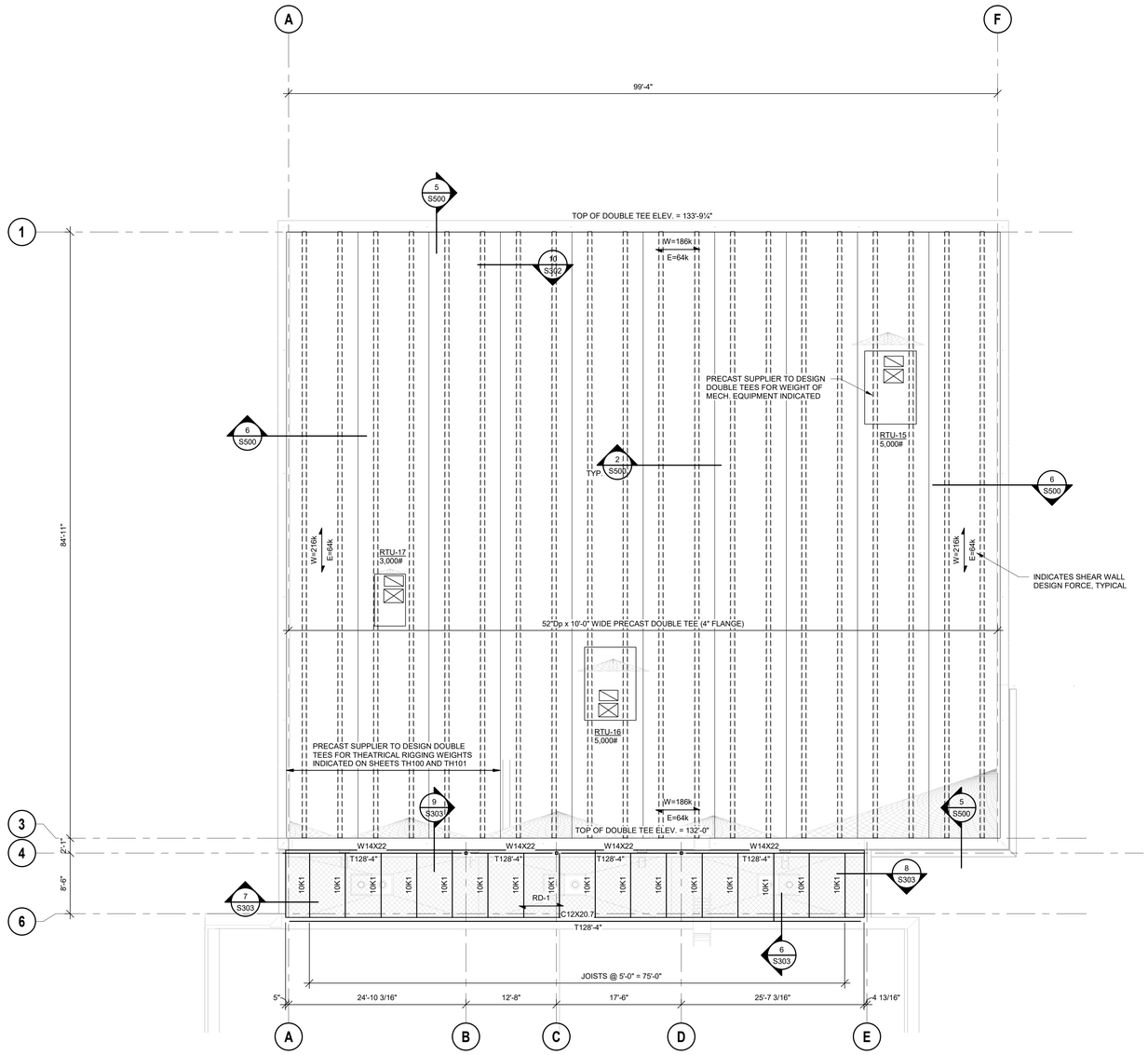

1 ROOF FRAMING PLAN

1/8" = 1'-0"

NOTES:
1. REFER TO GENERAL NOTES AND LEGEND ON SHEET S001

hollis + miller architects®

we design the future®

1828 Walnut Street Suite 922
Kansas City, MO 64108
t 816.442.7700

115 Wilcox Street Suite 210
Castle Rock, CO 80104
t 720.949.1689

HOLLISANDMILLER.COM

Hollis + Miller Architects
Missouri State Certificate of Authority
Architecture # 0000161
Structure # 2006031333

Bob D Campbell
Structural Engineer
State Certificate of Authority #000442
4338 Belleview Ave
Kansas City, MO 64111
816.531.4144 phone

Smith & Boucher, Inc.
Mechanical, Electrical, & Plumbing
State Certificate of Authority #EGC000178
25618 W 103rd Street
Olathe, KS 66061
913.345.2127 phone

MKEC Engineering, Inc.
Civil Engineer
State Certificate of Authority
Engineering #2001009364
Landscaping #2006027139
Surveying #2006027138
11827 W 112th Street, Suite 200
Overland Park, KS 66210
913.317.9390 phone

Peerbolte Creative
Theatrical Consultant
109 E Pine St.
Warrensburg, MO 64093-0752
660.429.1383 phone

Discovery Middle School Storm Shelter Addition
Liberty School District
800 Midjay Dr, Liberty, MO 64068

Conformed Construction Documnets

REVISIONS:

#	Description	Date
1	Addendum 04	09/29/2023

The Professional Architects seal affixed to this sheet applies only to the material and items shown on this sheet. All other documents, specifications, and sheets bearing the seal of the Professional Architects are not to be used as a whole and this architect expressly disclaims any and all responsibility for such plan, drawings, or documents not exhibiting the seal.

JOB NO: 23018
DRAWN BY: TAJ
CHECKED BY: WED
DATE: 10.11.2023

S102

KEY PLAN

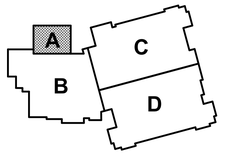

PROJECT NORTH
TRUE NORTH

HIGH ROOF FRAMING PLAN

Please consider the environment before printing this.

10/11/2023 7:48:49 AM

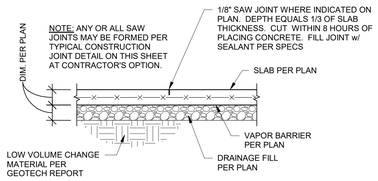

TYPICAL SAW JOINT
NOTED "SJ" ON PLAN

1 SECTION
3/4" = 1'-0"

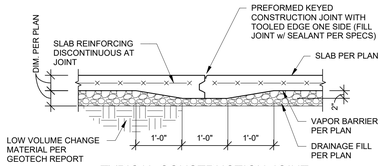

TYPICAL CONSTRUCTION JOINT
NOTED "CJ" ON PLAN

2 SECTION
3/4" = 1'-0"

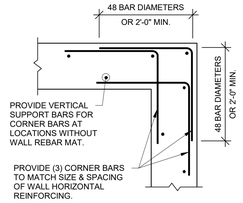

TYPICAL CORNER BARS AT
CONCRETE WALLS & FOUNDATIONS

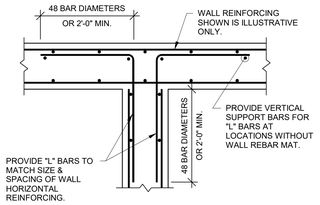

TYPICAL T-INTERSECTION REINFORCING
AT CONCRETE WALLS & FOUNDATIONS

3 TYPICAL INTERSECTING CONCRETE WALL REINFORCING
3/4" = 1'-0"

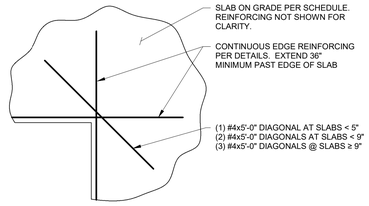

TYPICAL SLAB ON GRADE RE-ENTRANT CORNER BARS

4 DETAIL
1/2" = 1'-0"

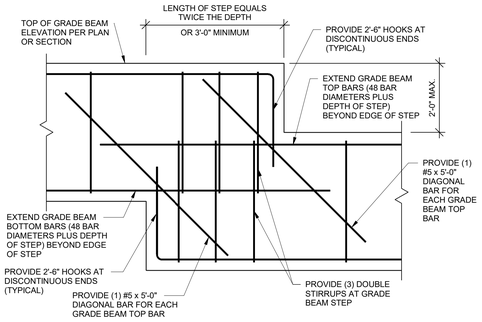

5 TYPICAL GRADE BEAM STEP
3/4" = 1'-0"

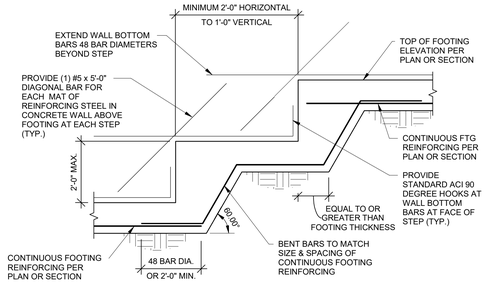

6 TYPICAL FOOTING STEP
1/2" = 1'-0"

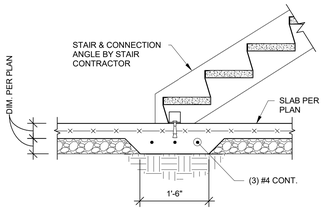

TYPICAL THICKENED SLAB AT BASE OF STAIR

7 SECTION
3/4" = 1'-0"

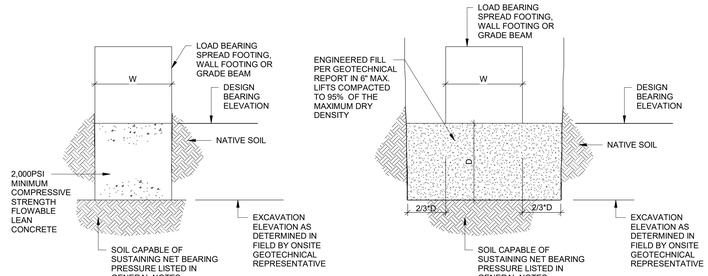

8 OVEREXCAVATION DETAIL
3/4" = 1'-0"

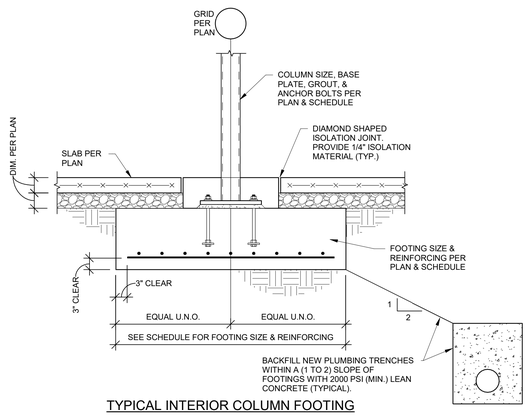

TYPICAL INTERIOR COLUMN FOOTING

9 SECTION
3/4" = 1'-0"

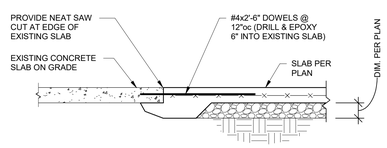

TYPICAL AT NEW-TO-EXISTING SLAB ON GRADE

10 SECTION
3/4" = 1'-0"

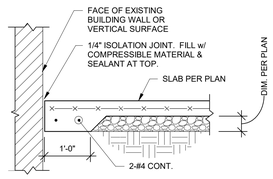

TYPICAL SLAB EDGE DETAIL AGAINST EXISTING
BUILDING WALL OR VERTICAL SURFACE

11 SECTION
3/4" = 1'-0"

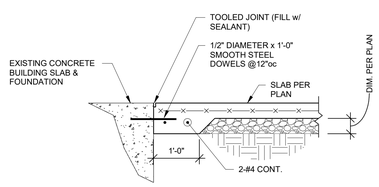

TYPICAL SLAB EDGE DETAIL AT EXISTING
BUILDING SLAB THRESHOLD

12 SECTION
3/4" = 1'-0"

hollis + miller architects
we design the future
1828 Walnut Street Suite 922
Kansas City, MO 64108
t 816.442.7700
115 Wilcox Street Suite 210
Castle Rock, CO 80104
t 720.949.1689
HOLLISANDMILLER.COM
Hollis + Miller Architects
Missouri State Certificate of Authority
Architecture # 000161
Structure # 2006031333

Bob D Campbell
Structural Engineer
State Certificate of Authority #000442
4338 Belleview Ave
Kansas City, MO 64111
816.531.4144 phone

Smith & Boucher, Inc.
Mechanical, Electrical, & Plumbing
State Certificate of Authority #EGC000178
25618 W 103rd Street
Olathe, KS 66061
913.345.2127 phone

MKEC Engineering, Inc.
Civil Engineer
State Certificate of Authority
Engineering #2001009364
Landscaping #2006027139
Surveying #2006027138
11827 W 112th Street, Suite 200
Overland Park, KS 66210
913.317.9390 phone

Peerbolte Creative
Theatrical Consultant
109 E Pine St.
Warrensburg, MO 64093-0752
660.429.1363 phone

Discovery Middle School Storm Shelter Addition
Liberty School District
800 Midjay Dr, Liberty, MO 64068

Conformed Construction Documnets

REVISIONS:

#	Description	Date

The Professional Architects seal affixed to this sheet applies only to the material and items shown on this sheet. All drawings, instruments or other documents not exhibiting this seal shall not be considered prepared by this architect, and this architect expressly disclaims any and all responsibility for such plan, drawings, or documents not exhibiting this seal.

JOB NO: 23018
DRAWN BY: TAJ
CHECKED BY: WED
DATE: 10.11.2023

S200

FOUNDATION SECTIONS

Please consider the environment before printing this.
10/11/2023 7:48:51 AM

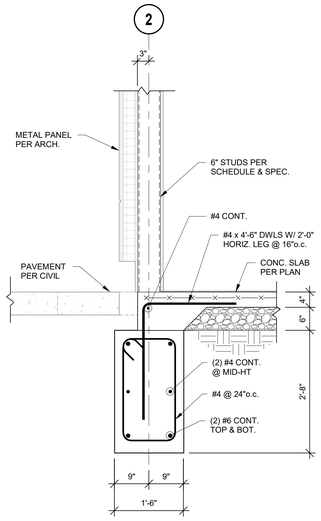

1 SECTION
3/4" = 1'-0"

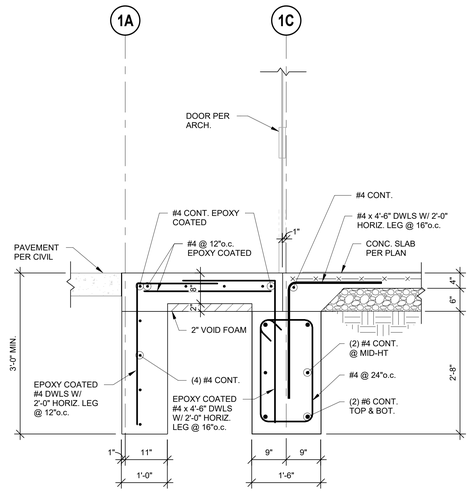

2 SECTION
3/4" = 1'-0"

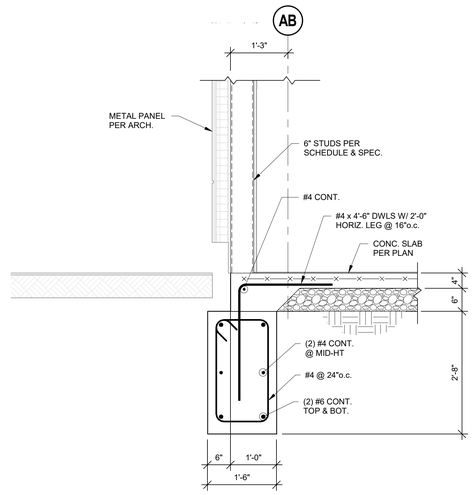

3 SECTION
3/4" = 1'-0"

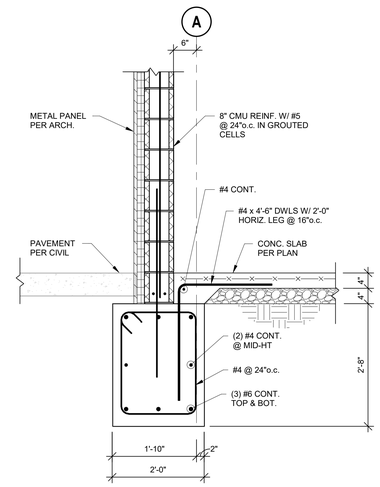

4 SECTION
3/4" = 1'-0"

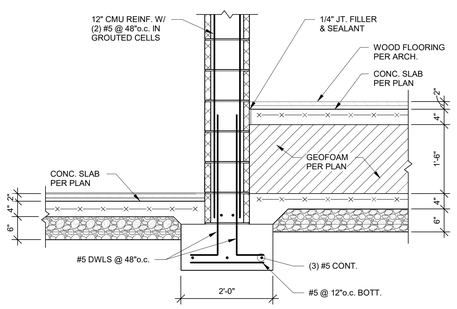

5 SECTION
3/4" = 1'-0"

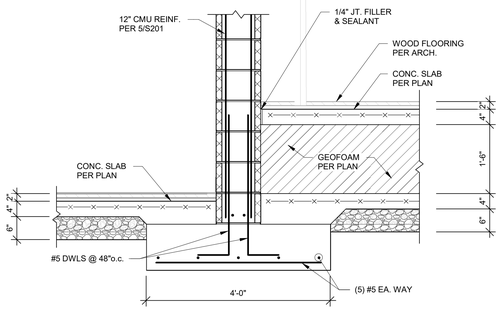

6 SECTION
3/4" = 1'-0"

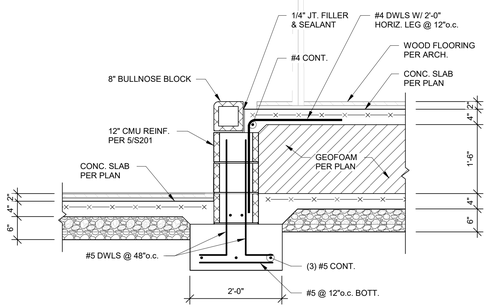

7 SECTION
3/4" = 1'-0"

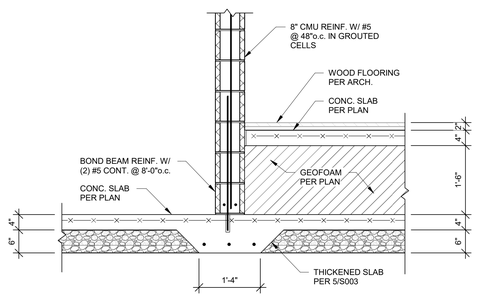

8 SECTION
3/4" = 1'-0"

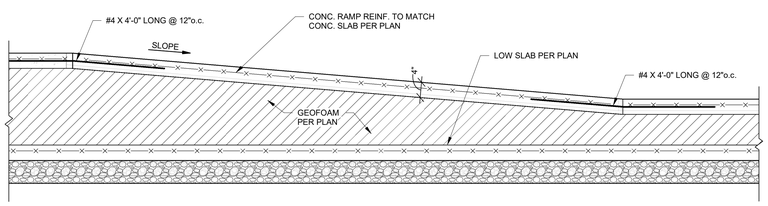

9 SECTION
3/4" = 1'-0"

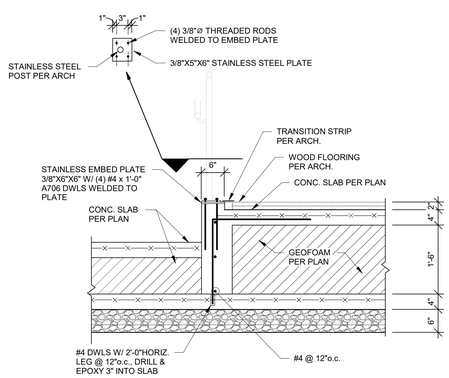

10 SECTION
3/4" = 1'-0"

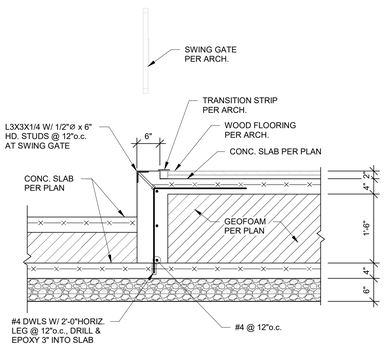

11 SECTION
3/4" = 1'-0"

hollis+miller architects®

we design the future®

1828 Walnut Street Suite 922
Kansas City, MO 64108
t 816.442.7700

115 Wilcox Street Suite 210
Castle Rock, CO 80104
t 720.949.1689

HOLLISANDMILLER.COM

Hollis + Miller Architects
Missouri State Certificate of Authority
Architecture # 0000161
Structure # 2006031333

Bob D Campbell
Structural Engineer
State Certificate of Authority #000442
4338 Belleview Ave
Kansas City, MO 64111
816.531.4144 phone

Smith & Boucher, Inc.
Mechanical, Electrical, & Plumbing
State Certificate of Authority #EGC000178
25618 W 103rd Street
Olathe, KS 66061
913.345.2127 phone

MKEC Engineering, Inc.
Civil Engineer
State Certificate of Authority
Engineering #2001009364
Landscaping #2006027139
Surveying #2006027138
11827 W 112th Street, Suite 200
Overland Park, KS 66210
913.317.9390 phone

Peerbolte Creative
Theatrical Consultant
109 E Pine St.
Warrensburg, MO 64093-0752
660.429.1363 phone

Discovery Middle School Storm Shelter Addition

Liberty School District

800 Midjay Dr, Liberty, MO 64068

Conformed Construction Documnets

REVISIONS:

#	Description	Date

The Professional Architects seal affixed to this sheet applies only to the material and items shown on this sheet. All drawings, instruments or other documents not exhibiting this seal shall not be considered prepared by the architect, and the architect expressly disclaims any and all responsibility for such plan, drawings, or documents not exhibiting this seal.

JOB NO: 23018
DRAWN BY: TAJ
CHECKED BY: WED
DATE: 10.11.2023

S201

FOUNDATION SECTIONS

10/11/2023 7:48:54 AM

Please consider the environment before printing this.

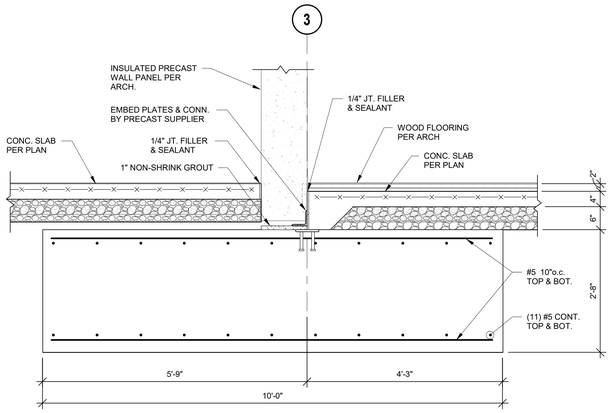

1 SECTION
3/4" = 1'-0"

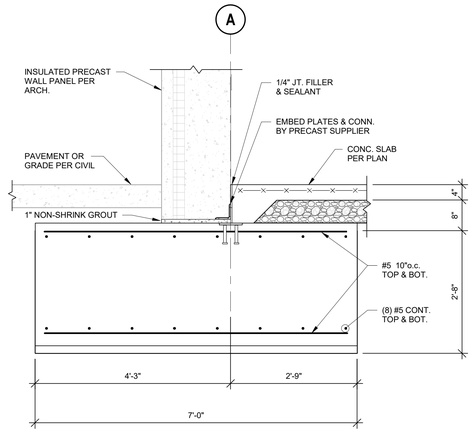

2 SECTION
3/4" = 1'-0"

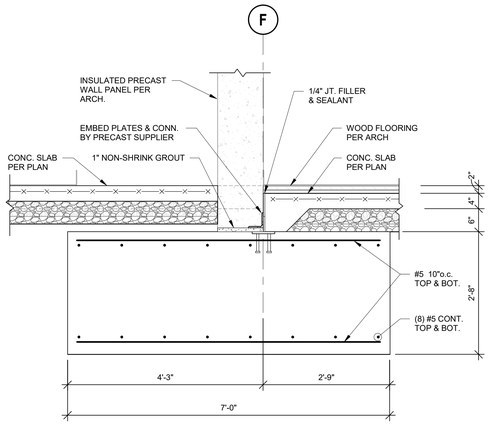

3 SECTION
3/4" = 1'-0"

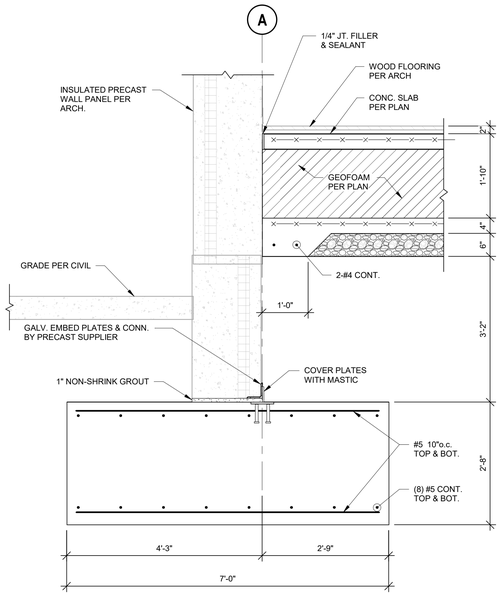

4 SECTION
3/4" = 1'-0"

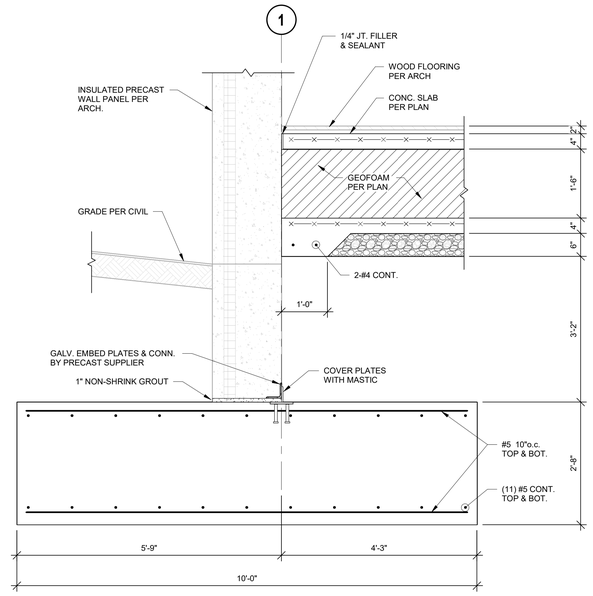

5 SECTION
3/4" = 1'-0"

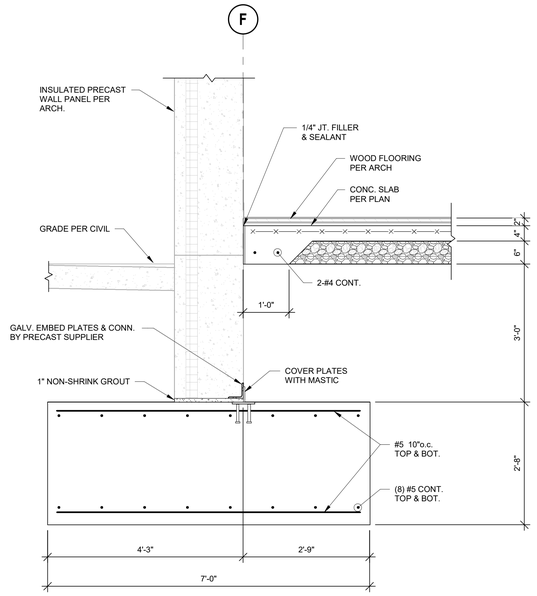

6 SECTION
3/4" = 1'-0"

hollis + miller architects®

we design the future®

1828 Walnut Street Suite 922
Kansas City, MO 64108
t 816.442.7700

115 Wilcox Street Suite 210
Castle Rock, CO 80104
t 720.949.1689

HOLLISANDMILLER.COM

Hollis + Miller Architects
Missouri State Certificate of Authority
Architecture # 000161
Structure # 2006031333

Bob D Campbell
Structural Engineer
State Certificate of Authority #000442
4338 Belleview Ave
Kansas City, MO 64111
816.531.4144 phone

Smith & Boucher, Inc.
Mechanical, Electrical, & Plumbing
State Certificate of Authority #EGC000178
25618 W 103rd Street
Olathe, KS 66061
913.345.2127 phone

MKEC Engineering, Inc.
Civil Engineer
State Certificate of Authority
Engineering #2001009364
Landscaping #2006027139
Surveying #2006027138
11827 W 112th Street, Suite 200
Overland Park, KS 66210
913.317.9390 phone

Peerbolte Creative
Theatrical Consultant
109 E Pine St.
Warrensburg, MO 64093-0752
660.429.1363 phone

Discovery Middle School Storm Shelter Addition

Liberty School District

800 Midjay Dr, Liberty, MO 64068

Conformed Construction Documnets

REVISIONS:

#	Description	Date

The Professional Architects seal affixed to this sheet applies only to the material and items shown on this sheet. All other information shown on this sheet is provided for the convenience of the Owner and Contractor. The Owner and the architect expressly disclaims any and all responsibility for such plan, drawings, or documents not exhibiting this seal.

JOB NO: 23018
DRAWN BY: TAJ
CHECKED BY: WED
DATE: 10.11.2023

S202

FOUNDATION SECTIONS

Please consider the environment before printing this.

10/11/2023 7:48:57 AM

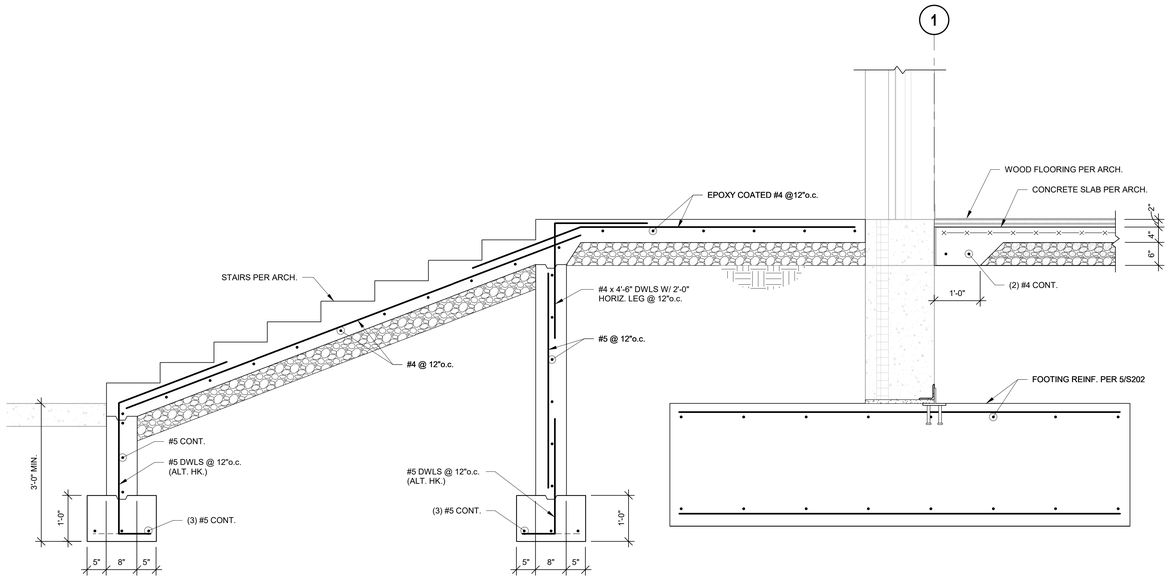

1 SECTION
3/4" = 1'-0"

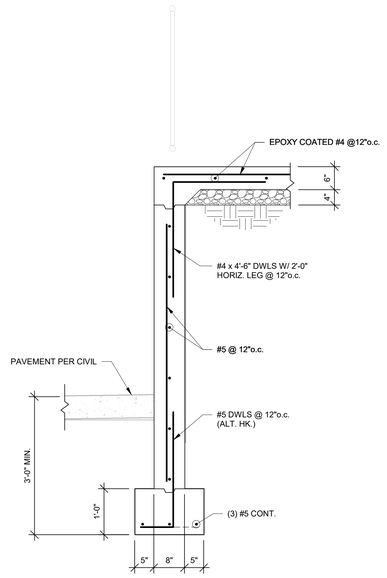

2 SECTION
3/4" = 1'-0"

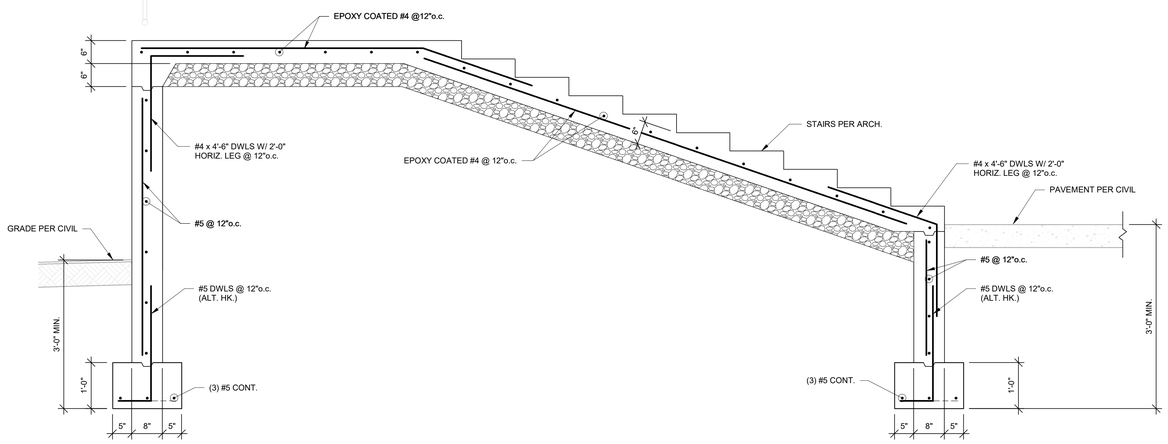

3 SECTION
3/4" = 1'-0"

hollis + miller architects®

we design the future®

1828 Walnut Street Suite 922
Kansas City, MO 64108
t 816.442.7700

115 Wilcox Street Suite 210
Castle Rock, CO 80104
t 720.949.1689

HOLLISANDMILLER.COM

Hollis + Miller Architects
Missouri State Certificate of Authority
Architecture # 000161
Structure # 2006031333

Bob D Campbell
Structural Engineer
State Certificate of Authority #000442
4338 Belleview Ave
Kansas City, MO 64111
816.531.4144 phone

Smith & Boucher, Inc.
Mechanical, Electrical, & Plumbing
State Certificate of Authority #EGC000178
25618 W 103rd Street
Olathe, KS 66061
913.345.2127 phone

MKEC Engineering, Inc.
Civil Engineer
State Certificate of Authority
Engineering #2001009364
Landscaping #2006027139
Surveying #2006027138
11827 W 112th Street, Suite 200
Overland Park, KS 66210
913.317.9390 phone

Peerbolte Creative
Theatrical Consultant
109 E Pine St.
Warrensburg, MO 64093-0752
660.429.1363 phone

Discovery Middle School Storm Shelter Addition
Liberty School District
800 Midjay Dr, Liberty, MO 64068

Conformed Construction Documnets

REVISIONS:

#	Description	Date

*The Professional Architects seal affixed to this sheet applies only to the material and items shown on this sheet. All drawings, instruments or other documents not exhibiting this seal shall not be considered prepared by this architect, and this architect expressly disclaims any and all responsibility for such plan, drawings, or documents not exhibiting the seal.

JOB NO: 23018
DRAWN BY: TAJ
CHECKED BY: WED
DATE: 10.11.2023

S203

FOUNDATION SECTIONS

Please consider the environment before printing this.

10/11/2023 7:48:59 AM

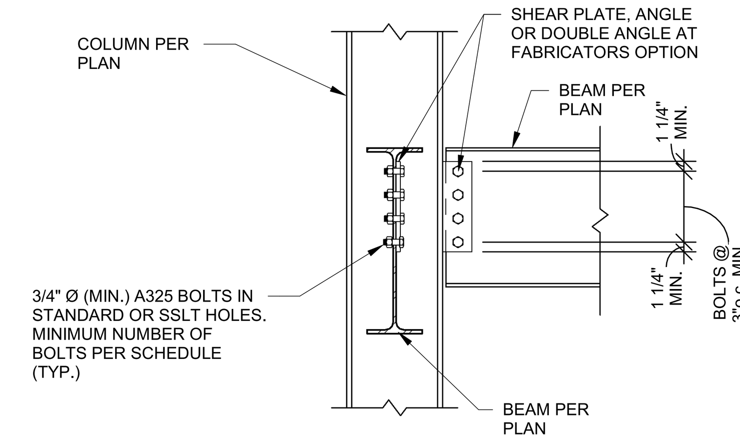

TYPICAL BEAM TO COLUMN SHEAR CONNECTION

1 DETAIL
3/4" = 1'-0"

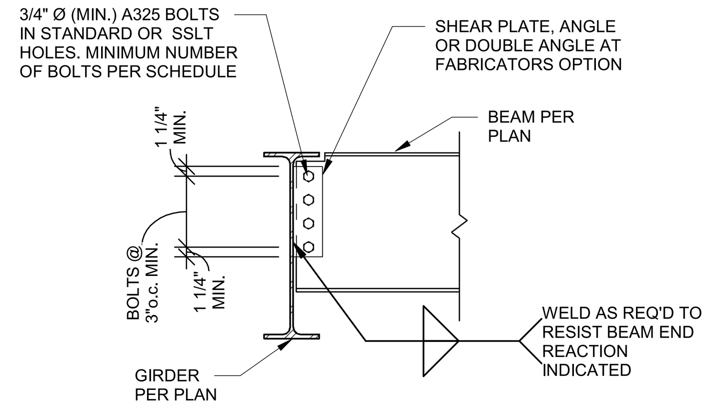

TYPICAL BEAM TO GIRDER CONNECTION

2 DETAIL
3/4" = 1'-0"

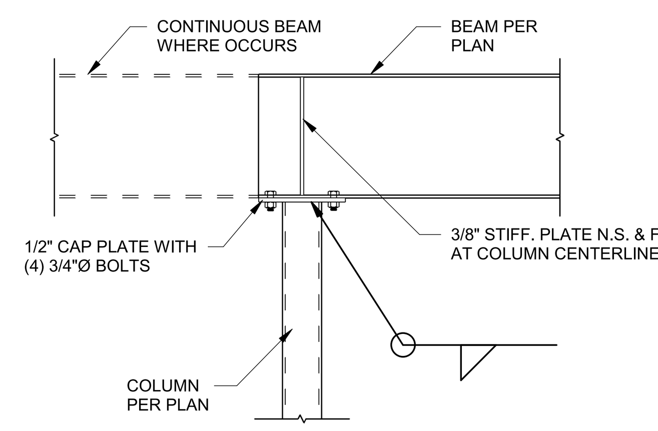

TYPICAL BEAM TO COLUMN CONNECTION

3 DETAIL
3/4" = 1'-0"

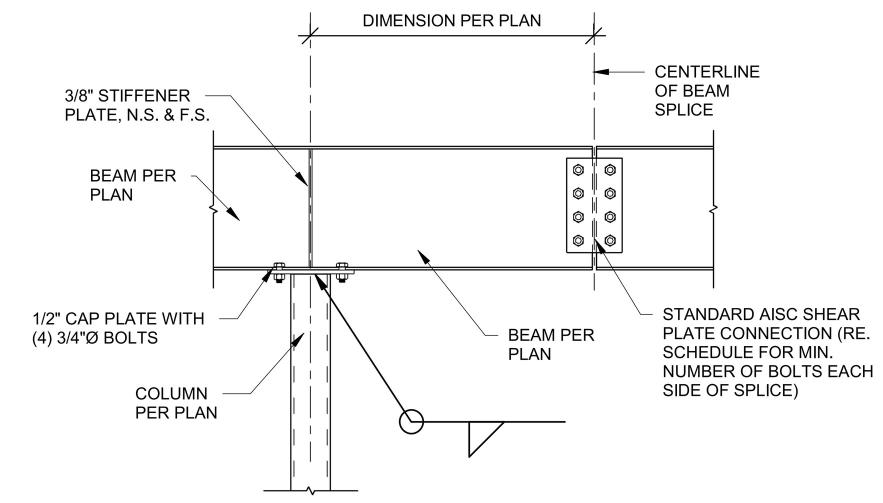

TYPICAL BEAM SPLICE

4 DETAIL
3/4" = 1'-0"

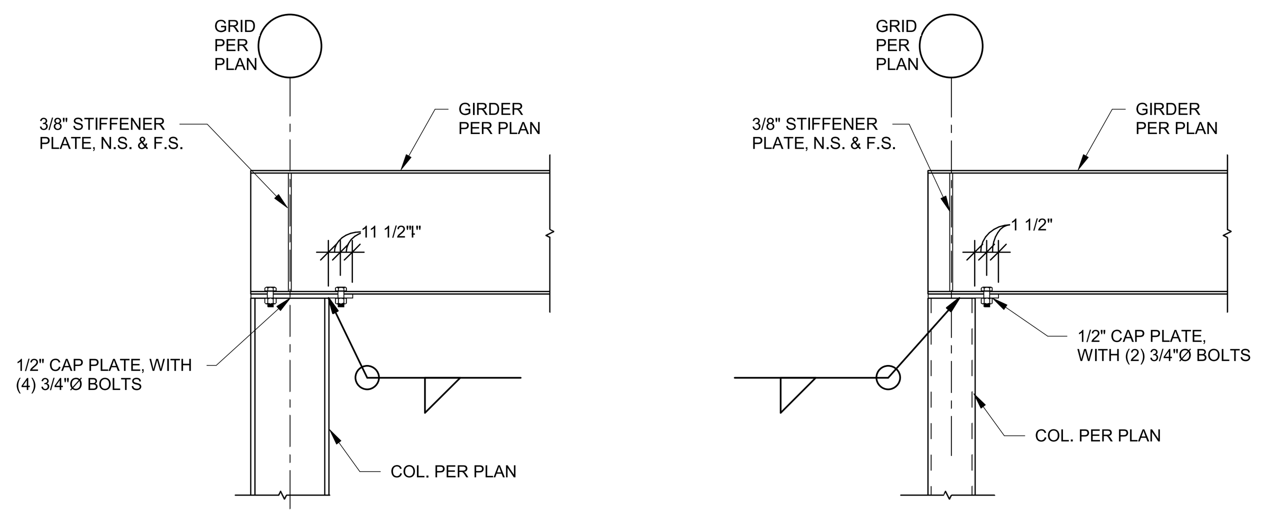

TYPICAL ROOF BEAM TO COLUMN CONNECTION AT EXTERIOR WALL

5 SECTION
3/4" = 1'-0"

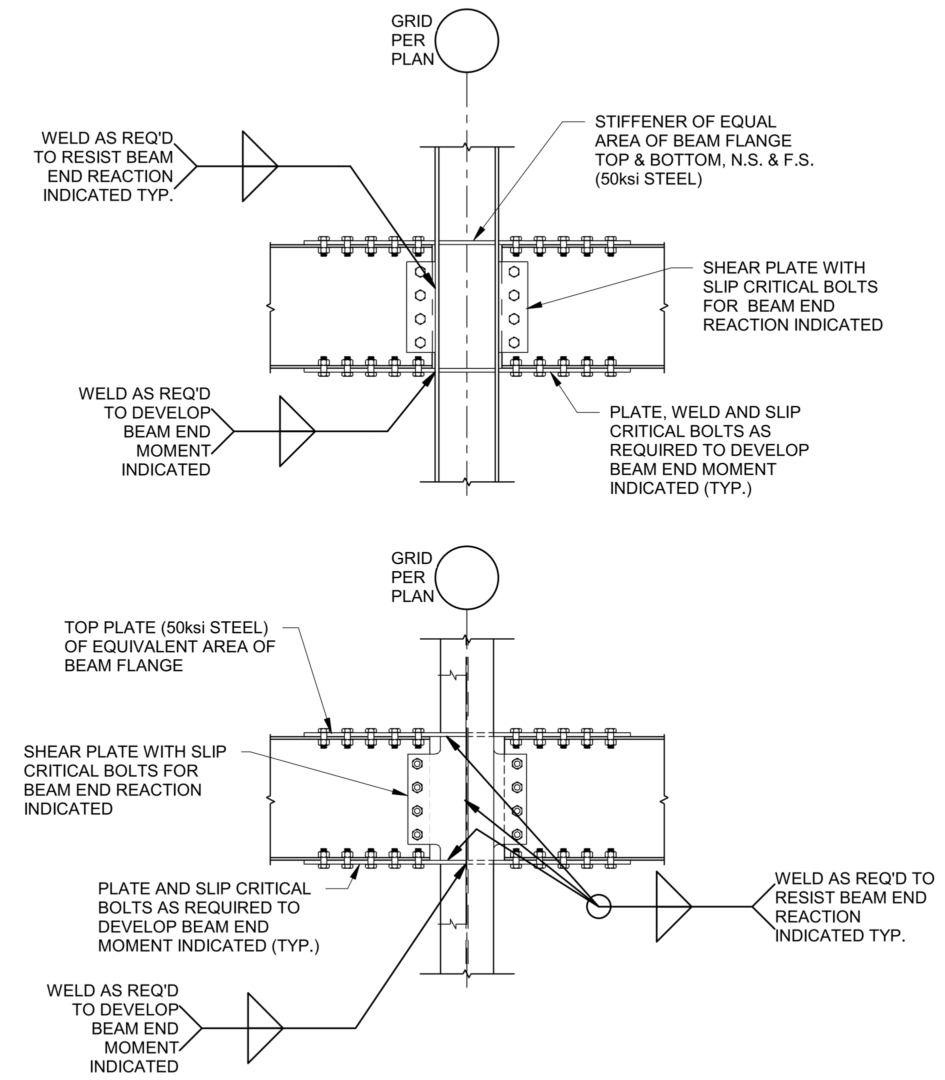

TYP. BEAM TO WIDE FLANGE COL. MOMENT CONNECTIONS

NOTE: FLANGE PLATES MAY BE FULL PENETRATION WELDED TO COLUMN AT CONTRACTORS OPTION

6 SECTION
3/4" = 1'-0"

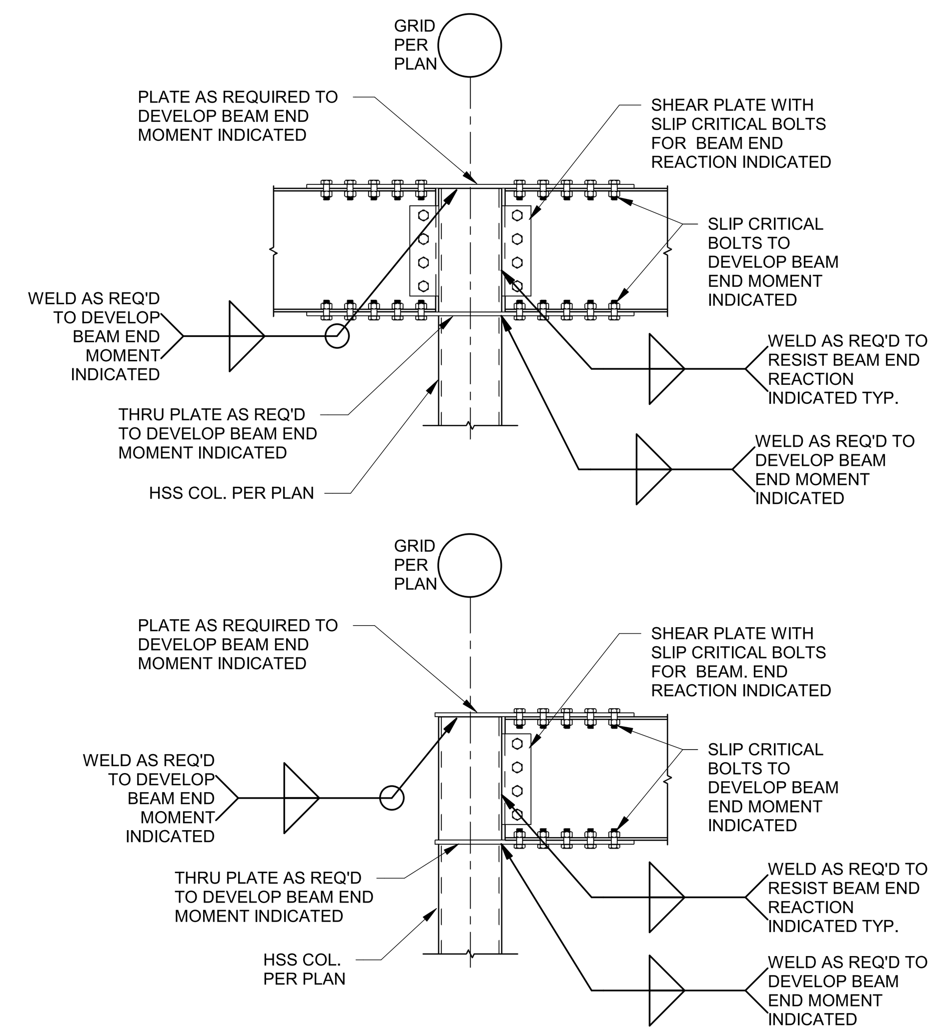

TYPICAL BEAM TO HSS COLUMN MOMENT CONNECTIONS

7 SECTION
3/4" = 1'-0"

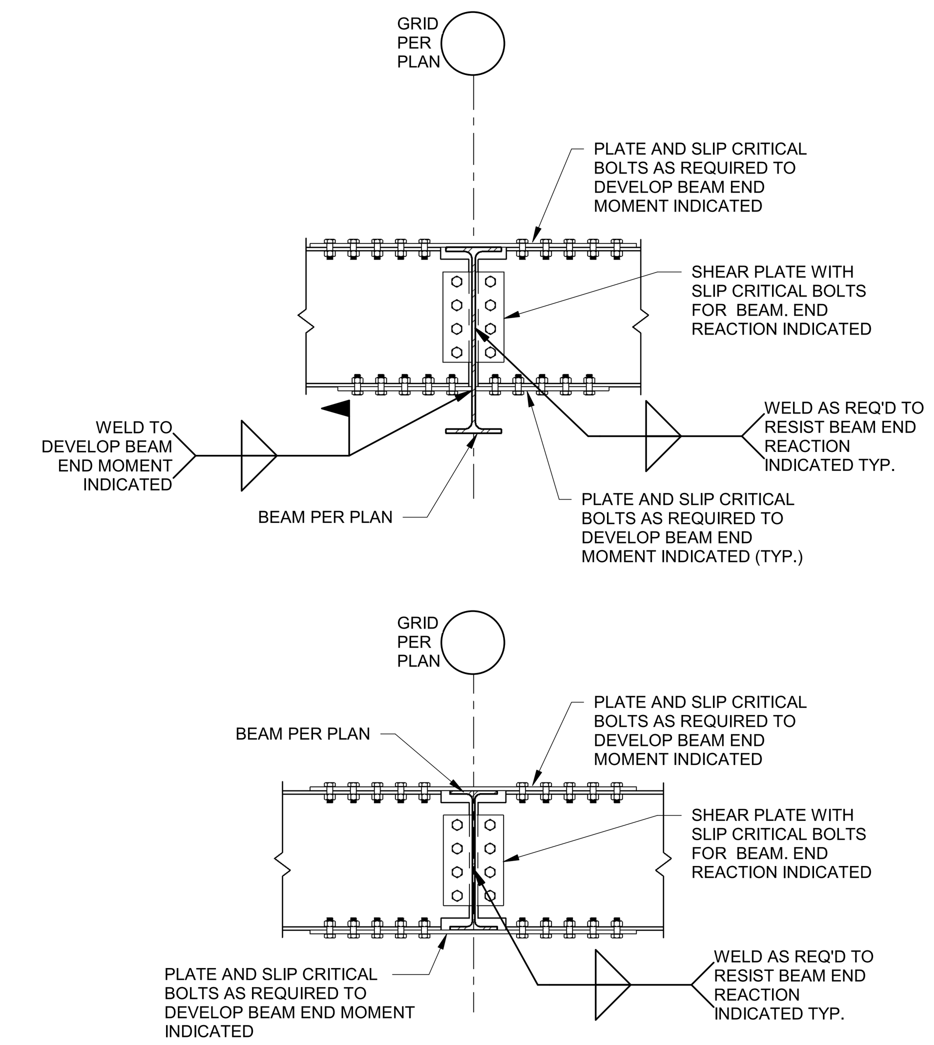

TYP. BEAM TO BEAM MOMENT CONNECTIONS

8 SECTION
3/4" = 1'-0"

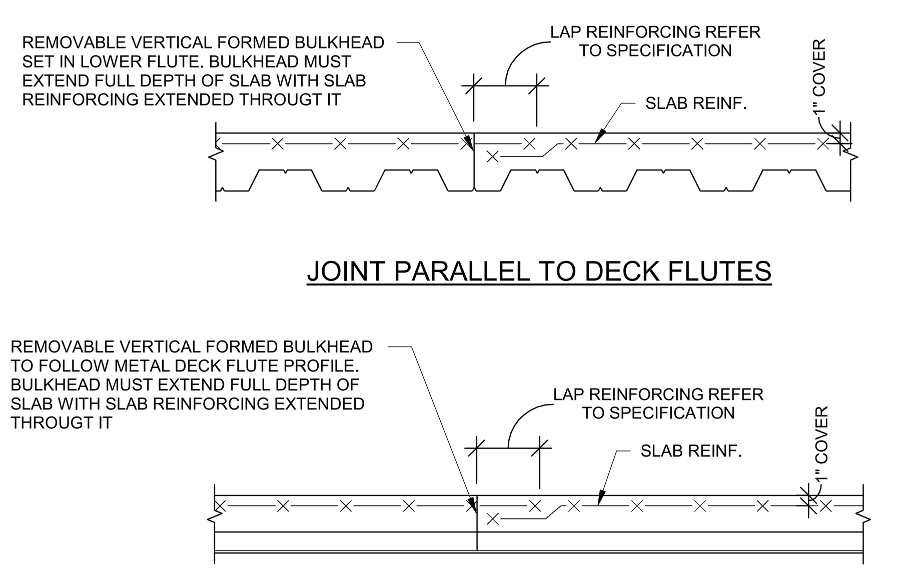

NOTES:
1. CONSTRUCTION JOINTS PARRALLEL TO DECK FLUTES SHALL BE LOCATED NO CLOSER THAN 5'-0" FROM CENTERLINE OF THE NEAREST GIRDER.
2. CONSTRUCTION JOINTS PERPENDICULAR TO DECK FLUTES SHALL BE LOCATED AT MID-SPAN OF THE METAL DECK SPAN.
3. AT CONTRACTOR'S OPTION, PREFORMED PERMENENT METAL SHEAR KEY FOLLOWING CONTOUR OF METAL DECK FLUTES MAY BE USED WITH SLAB REINFORCEMENT STOPPING EACH SIDE AND #3 DOWELS x 2'-0" CENTERED AT 18"o.c.

TYPICAL SLAB ON METAL DECK CONSTRUCTION JOINT

9 SECTION
1" = 1'-0"

BEAM SHEAR CONNECTION SCHEDULE

BEAM SIZE	MINIMUM ROWS OF BOLTS	END REACTION (kips)(U.N.O.)
W8,C8	2	16
W10,C10	2	16
W12,C12	2	16
W14	3	24
W16, C15	3	32
W18	4	60
W21	5	65
W24	6	70
W27	7	80
W30	8	95
W33	9	115
W36	9	125
W40	10	130

STEEL CONNECTION NOTES:
1. REFER TO GENERAL NOTES ON SHEET S001.
2. CONNECTIONS SHOWN IN THESE DETAILS ARE MINIMUM REQUIREMENTS.
3. FABRICATOR SHALL BE RESPONSIBLE FOR THE ENGINEERING, DESIGNING, AND DETAILING OF EACH CONNECTION FOR LOADS SHOWN ON THE DRAWINGS IN ACCORDANCE WITH THE SPECIFICATIONS AND THE STRUCTURAL GENERAL NOTES.
4. SUGGESTED CONNECTION DETAILS ARE SHOWN. FINAL CONNECTION CONFIGURATION AND DESIGN SHALL BE COMPLETED BY THE CONNECTION ENGINEER. CONNECTION DESIGN SHALL INCLUDE COLUMN OR BEAM CONTINUITY PLATES, WEB STIFFENERS, AND/OR DOUBLER PLATES AS REQUIRED FOR THE FORCES INDICATED.
5. FABRICATOR MAY OPT TO USE OTHER AISC APPROVED CONNECTIONS IN LIEU OF THESE SHOWN HEREIN TO MEET END REACTION REQUIREMENTS (i.e. DOUBLE ANGLE CONNECTION).
6. CONNECTION DETAILING SHALL COMPLY WITH THE STANDARD DETAILS SHOWN IN THE LATEST EDITION OF THE AISC MANUAL OF STEEL CONSTRUCTION.
7. ALL BOLTS SHALL BE 3/4" Ø ASTM A325 MINIMUM.
8. ALL BOLTS SHALL BE SPACED AT 3"o.c. MINIMUM.
9. ALL BOLTS SHALL HAVE HEAVY HEX NUTS.
10. ALL BOLTS SHALL BE FULLY PRE-TENSIONED.
11. BOLT SPACING AND EDGE DISTANCES SHALL BE ADJUSTED PER AISC MANUAL FOR BOLTS LARGER THAN 3/4" DIAMETER.
12. CLIP ANGLES MAY BE SHOP WELDED TO BEAM WEB PER AISC.
13. FOR BEAMS WITH AXIAL LOADS PER DRAWINGS, BOLTS AND CONNECTIONS SHALL BE SLIP-CRITICAL PER AISC GUIDELINES. INCREASE NUMBER OF BOLTS AND/OR PROVIDE EXTENDED SHEAR PLATE CONNECTION W/ AN ADDITIONAL COLUMN OF BOLTS TO ACCOMODATE COMBINED FORCES.
14. PROVIDE ASTM A490 BOLTS IF REQUIRED TO MEET END REACTION LOAD REQUIREMENTS.
15. REFER TO BRACING ELEVATIONS FOR BRACE FORCES. REFER TO PLANS FOR ADDITIONAL BEAM AXIAL FORCES. BRACE AND BEAM FORCES INDICATED ARE UNFACTORED (ASD) LOADS AND SHALL BE CONSIDERED CONCURRENT W/ BEAM SHEAR DESIGN FORCES LISTED IN THE BEAM SHEAR CONNECTION SCHEDULE.
16. COORDINATE BRACED FRAME CONNECTION W/ ARCHITECTURAL WALLS AS REQUIRED TO AVOID CONFLICT OR EXPOSURE OUTSIDE OF WALL OR FINISH.
17. ALL END REACTIONS INDICATED ARE UNFACTORED (ASD) LOADS.

hollis + miller architects®
we design the future®
1828 Walnut Street Suite 922
Kansas City, MO 64108
T 816.442.7700
115 Wilcox Street Suite 210
Castle Rock, CO 80104
T 720.949.1689
HOLLISANDMILLER.COM
Hollis + Miller Architects
Missouri State Certificate of Authority
Architecture # 0000161
Structure # 2006031333

Bob D Campbell
Structural Engineer
State Certificate of Authority #000442
4338 Belleview Ave
Kansas City, MO 64111
816.531.4144 phone

Smith & Boucher, Inc.
Mechanical, Electrical, & Plumbing
State Certificate of Authority #EGC000178
25618 W 103rd Street
Olathe, KS 66061
913.345.2127 phone

MKEC Engineering, Inc.
Civil Engineer
State Certificate of Authority
Engineering #2001009364
Landscaping #2006027139
Surveying #2006027138
11827 W 112th Street, Suite 200
Overland Park, KS 66210
913.317.9390 phone

Peerbolte Creative
Theatrical Consultant
109 E Pine St.
Warrensburg, MO 64093-0752
660.429.1383 phone

Discovery Middle School Storm Shelter Addition
Liberty School District
800 Midjay Dr, Liberty, MO 64068

Conformed Construction Documnets

REVISIONS:

#	Description	Date

STATE OF MISSOURI WAYNE E. DAVID BOWER ... 10/11/23

The Professional Architects seal affixed to this sheet applies only to the material and items shown on this sheet. All drawings, instruments or other documents not exhibiting this seal shall not be considered prepared by this architect, and this architect expressly disclaims any and all responsibility for such plan, drawings, or documents not exhibiting this seal.

JOB NO: 23018
DRAWN BY: TAJ
CHECKED BY: WED
DATE: 10.11.2023

S300

TYPICAL FRAMING DETAILS

Please consider the environment before printing this.
10/11/2023 7:49:01 AM

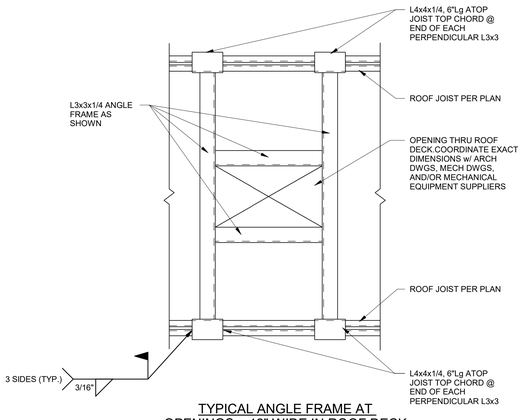

TYPICAL ANGLE FRAME AT OPENINGS > 12" WIDE IN ROOF DECK

1 DETAIL
1" = 1'-0"

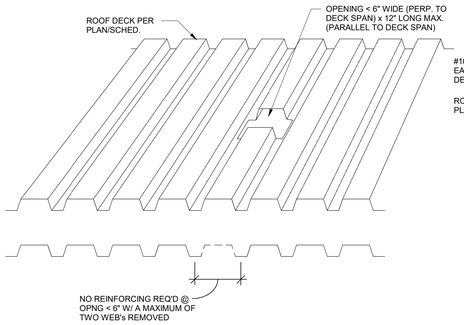

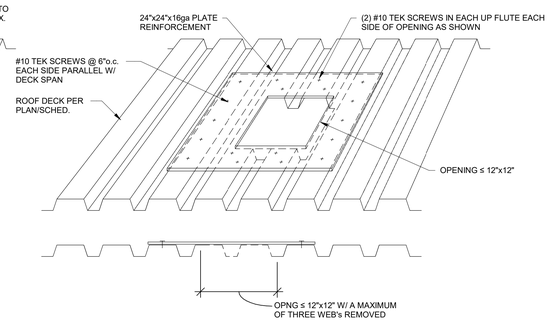

TYPICAL DECK REINFORCING AT SMALL OPENINGS IN ROOF DECK

1A DETAIL
1 1/2" = 1'-0"

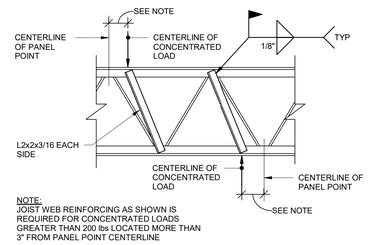

TYPICAL JOIST REINFORCING DETAIL

2 SECTION
3/4" = 1'-0"

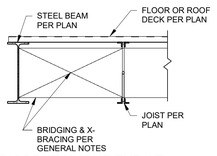

DISCONTINUOUS END AT STEEL BEAM

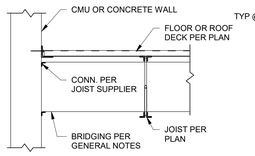

DISCONTINUOUS END AT CMU/CONCRETE WALL

3 JOIST BRIDGING DETAIL
3/4" = 1'-0"

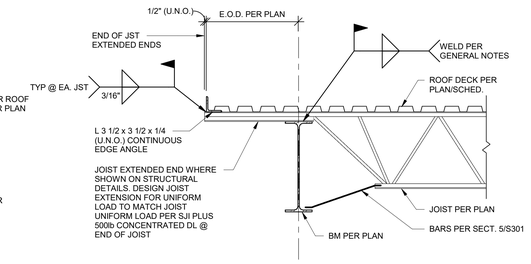

TYPICAL JOIST BEARING AT EXTERIOR BEAM

4 SECTION
3/4" = 1'-0"

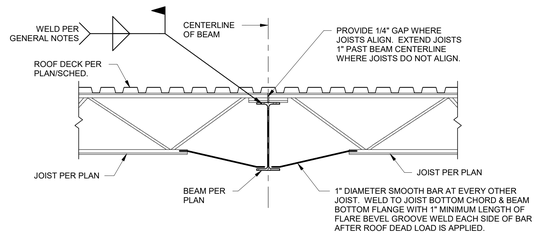

TYPICAL JOIST BEARING AT INTERIOR BEAM

5 SECTION
3/4" = 1'-0"

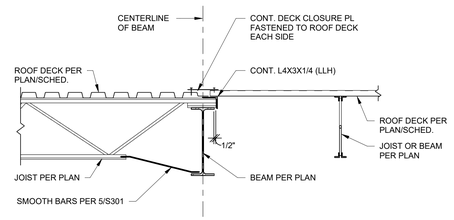

TYPICAL INTERIOR ROOF BEAM AT JOIST ORIENTATION TRANSITION

6 SECTION
3/4" = 1'-0"

NOTE:
WELDED SPLICE PLATE ON HORIZONTAL LEG AS SHOWN IS NOT REQ'D WHERE SPLICE OCCURS ATOP CONTINUOUS BEAM

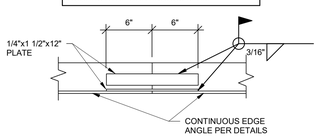

TYPICAL ROOF DECK ANGLE SPLICE

7 SECTION
1 1/2" = 1'-0"

hollis + miller architects
we design the future
1828 Walnut Street Suite 922
Kansas City, MO 64108
t 816.442.7700
115 Wilcox Street Suite 210
Castle Rock, CO 80104
t 720.949.1689
HOLLISANDMILLER.COM
Hollis + Miller Architects
Missouri State Certificate of Authority
Architecture # 000161
Structure # 2006031333

Bob D Campbell
Structural Engineer
State Certificate of Authority #000442
4338 Belleview Ave
Kansas City, MO 64111
816.531.4144 phone

Smith & Boucher, Inc.
Mechanical, Electrical, & Plumbing
State Certificate of Authority #EGC000178
25618 W 103rd Street
Olathe, KS 66061
913.345.2127 phone

MKEC Engineering, Inc.
Civil Engineer
State Certificate of Authority
Engineering #2001009364
Landscaping #2006027139
Surveying #2006027138
11827 W 112th Street, Suite 200
Overland Park, KS 66210
913.317.9390 phone

Peerbolte Creative
Theatrical Consultant
109 E Pine St.
Warrensburg, MO 64093-0752
660.429.1383 phone

Discovery Middle School Storm Shelter Addition
Liberty School District
800 Midjay Dr, Liberty, MO 64068

Conformed Construction Documnets

REVISIONS:

#	Description	Date

The Professional Architects seal affixed to this sheet applies only to the material and items shown on this sheet. All other material and items shown on other sheets in this set are not covered by the seal affixed to this sheet. The Architect and the architect expressly disclaims any and all responsibility for such plan, drawings, or documents not exhibiting the seal.

JOB NO: 23018
DRAWN BY: TAJ
CHECKED BY: WED
DATE: 10.11.2023

S301

ROOF FRAMING SECTIONS

Please consider the environment before printing this.
10/11/2023 7:49:02 AM

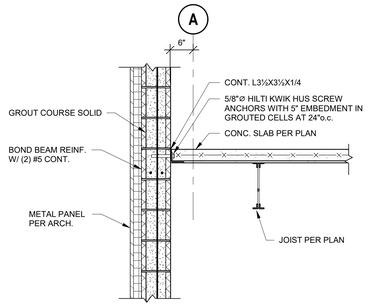

1 SECTION
3/4" = 1'-0"

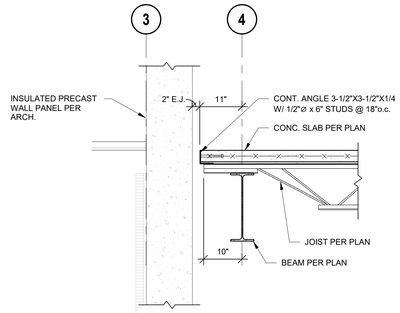

2 SECTION
3/4" = 1'-0"

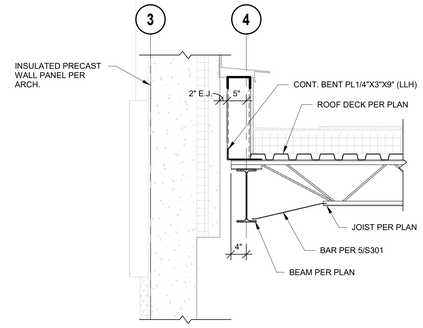

3 SECTION
3/4" = 1'-0"

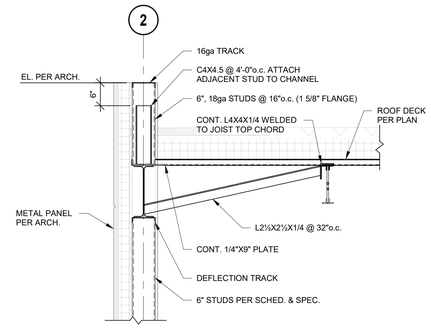

4 SECTION
3/4" = 1'-0"

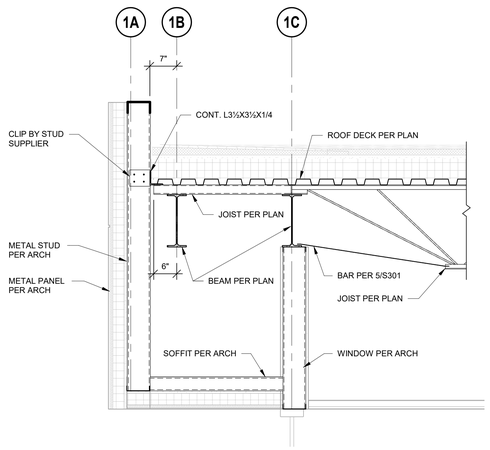

5 SECTION
3/4" = 1'-0"

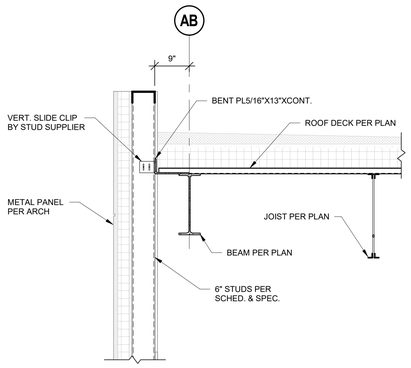

6 SECTION
3/4" = 1'-0"

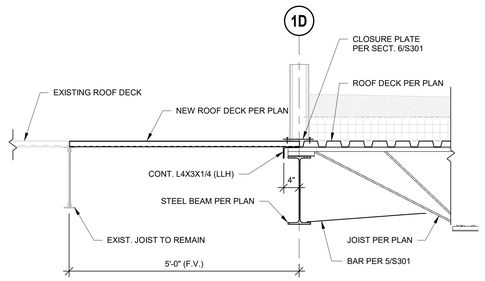

7 SECTION
3/4" = 1'-0"

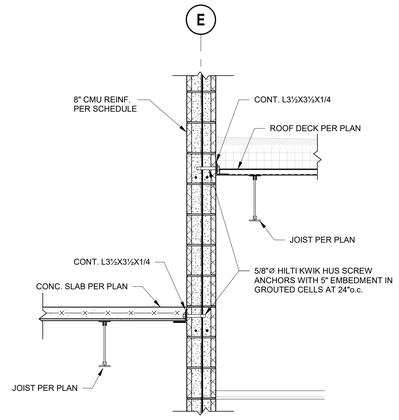

8 SECTION
3/4" = 1'-0"

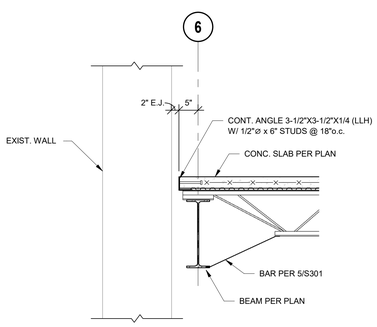

9 SECTION
3/4" = 1'-0"

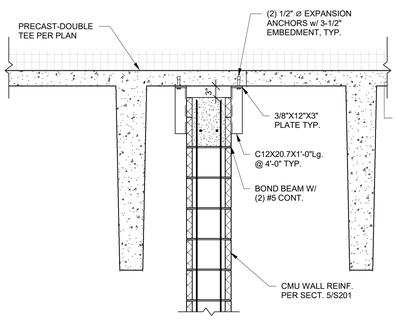

10 SECTION
3/4" = 1'-0"

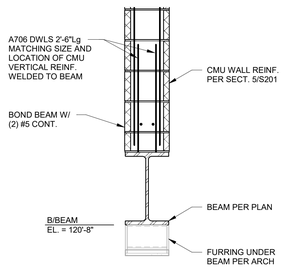

11 SECTION
3/4" = 1'-0"

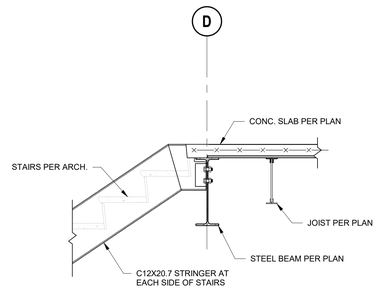

12 SECTION
3/4" = 1'-0"

hollis + miller architects®
we design the future®
1828 Walnut Street Suite 922
Kansas City, MO 64108
t 816.442.7700
115 Wilcox Street Suite 210
Castle Rock, CO 80104
t 720.949.1689
HOLLISANDMILLER.COM
Hollis + Miller Architects
Missouri State Certificate of Authority
Architecture # 000161
Structure # 2006031333

Bob D Campbell
Structural Engineer
State Certificate of Authority #000442
4338 Belleview Ave
Kansas City, MO 64111
816.531.4144 phone

Smith & Boucher, Inc.
Mechanical, Electrical, & Plumbing
State Certificate of Authority #EGC000178
25618 W 103rd Street
Olathe, KS 66061
913.345.2127 phone

MKEC Engineering, Inc.
Civil Engineer
State Certificate of Authority
Engineering #2001009364
Landscaping #2006027139
Surveying #2006027138
11827 W 112th Street, Suite 200
Overland Park, KS 66210
913.317.9390 phone

Peerbolte Creative
Theatrical Consultant
109 E Pine St.
Warrensburg, MO 64093-0752
660.429.1363 phone

Discovery Middle School Storm Shelter Addition
Liberty School District
800 Midjay Dr, Liberty, MO 64068

Conformed Construction Documnets

REVISIONS:

#	Description	Date

The Professional Architects seal affixed to this sheet applies only to the material and items shown on this sheet. All other information shown on this sheet is provided by others and the Professional Architect assumes no responsibility for such data, and this architect expressly disclaims any and all responsibility for such plan, drawings, or documents not exhibiting this seal.

JOB NO: 23018
DRAWN BY: TAJ
CHECKED BY: WED
DATE: 10.11.2023

S302

FRAMING SECTIONS

Please consider the environment before printing this.

10/11/2023 7:49:07 AM

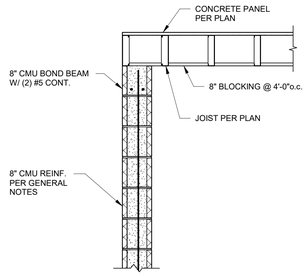

1 SECTION
3/4" = 1'-0"

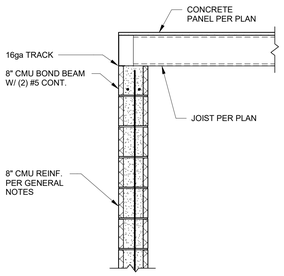

2 SECTION
3/4" = 1'-0"

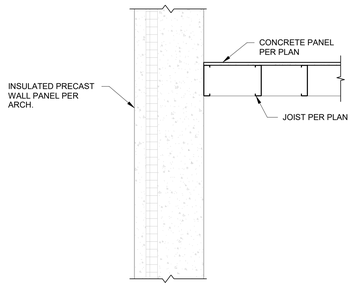

3 SECTION
3/4" = 1'-0"

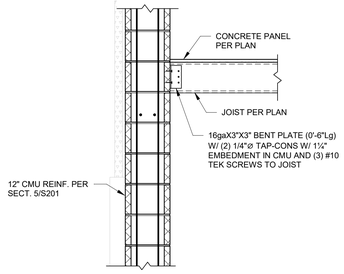

4 SECTION
3/4" = 1'-0"

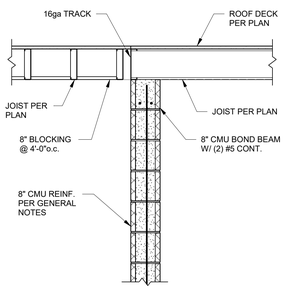

5 SECTION
3/4" = 1'-0"

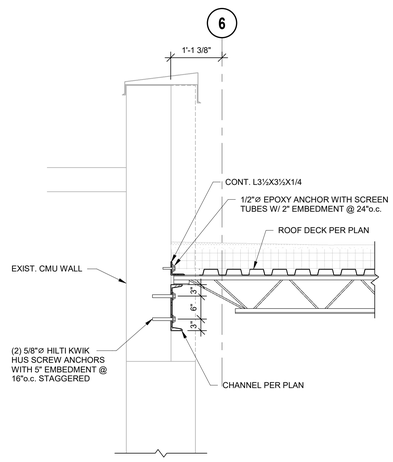

6 SECTION
3/4" = 1'-0"

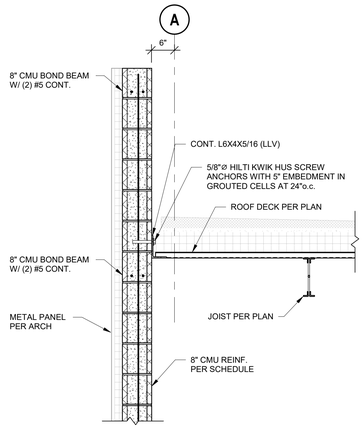

7 SECTION
3/4" = 1'-0"

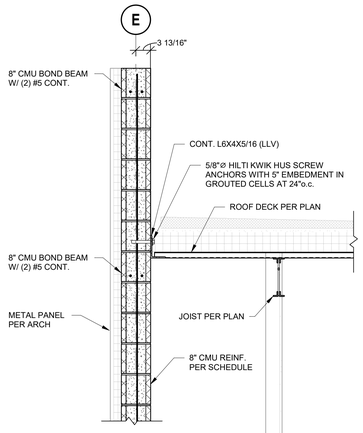

8 SECTION
3/4" = 1'-0"

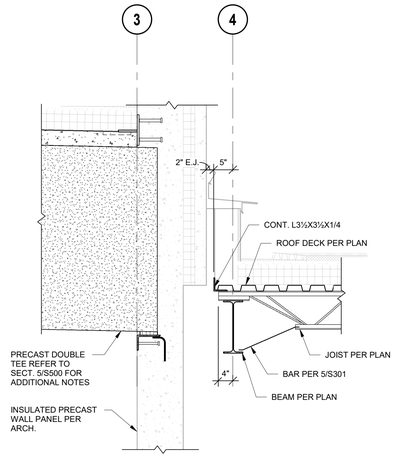

9 SECTION
3/4" = 1'-0"

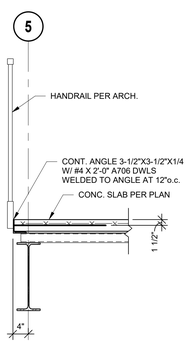

10 SECTION
3/4" = 1'-0"

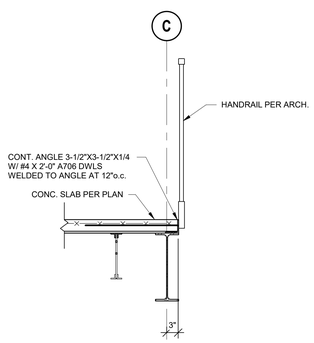

11 SECTION
3/4" = 1'-0"

hollis + miller architects
we design the future
1828 Walnut Street Suite 922
Kansas City, MO 64108
t 816.442.7700
115 Wilcox Street Suite 210
Castle Rock, CO 80104
t 720.949.1689
HOLLISANDMILLER.COM
Hollis + Miller Architects
Missouri State Certificate of Authority
Architecture # 000161
Structure # 2006031333

Bob D Campbell
Structural Engineer
State Certificate of Authority #000442
4338 Belleview Ave
Kansas City, MO 64111
816.531.4144 phone

Smith & Boucher, Inc.
Mechanical, Electrical, & Plumbing
State Certificate of Authority #EGC000178
25618 W 103rd Street
Olathe, KS 66061
913.345.2127 phone

MKEC Engineering, Inc.
Civil Engineer
State Certificate of Authority
Engineering #2001009364
Landscaping #2006027139
Surveying #2006027138
11827 W 112th Street, Suite 200
Overland Park, KS 66210
913.317.9390 phone

Peerbolte Creative
Theatrical Consultant
109 E Pine St.
Warrensburg, MO 64093-0752
660.429.1363 phone

Discovery Middle School Storm Shelter Addition

Liberty School District

800 Midjay Dr, Liberty, MO 64068

Conformed Construction Documnets

REVISIONS:

#	Description	Date

The Professional Architects seal affixed to this sheet applies only to the material and items shown on this sheet. All other documents, plans, specifications, reports or other materials issued with this sheet are not sealed by the architect and the architect expressly disclaims any and all responsibility for such plan, drawings, or documents not exhibiting the seal.

JOB NO: 23018
DRAWN BY: TAJ
CHECKED BY: WED
DATE: 10.11.2023

S303

FRAMING SECTIONS

10/11/2023 7:49:11 AM

Please consider the environment before printing this.

GENERAL NOTES - STRUCTURAL - ICC 500-2014 STORM SHELTER

1. Design Information

A. Type of Shelter: Community Tornado
B. Design and construction for all components of the storm shelter areas of this projection shall conform to the provision of the ICC/NSSA Standard for the Design and Construction of Storm Shelters, ICC 500-2014 as referenced by the 2018 IBC, and the governing design codes listed in the main structural general notes.
   a. Floor Live = 100 psf
   b. Roof Live = 100 psf
   c. Snow: Refer to main structural general notes
   d. Wind:
      • Design Wind Speed, V = 250 mph
         1. Missile Impact Speed Requirement:
            A. Vertical Surfaces: 100 mph
            B. Horizontal Surfaces: 67 mph
      • Risk Category: III
      • Importance Factor, Iw = 1.0
      • Exposure Cateogry: C
      • Internal Pressure Coefficient, GCpi = +/- 0.55
      • Topographic Factor, Kzt = 1.0
      • Directionality Factor, Kd = 1.0
      • Design wind pressures to be used for the design of exterior component and cladding material on the designated zones of wall and roof surfaces shall be per ASCE 7-16. Tabulated pressures shall be multiplied by effective area reduction factors, exposure adjustment factors, and topographic factors where applicable.
   e. Seismic:
      • S_s = X..XXXg; S_1 = X.XXXg
      • Occupancy [Risk] Category III
      • Importance Factor: I_e = 1.25
      • Site Classification C
      • S_{DS} = 0.088g; S_{D1} = X.XXXg
      • Seismic Design Category B
      • Basic Seismic Force-resisting System: Ordinary Precast Concrete Shear Walls
      • Equivalent Lateral Force Procedure
      • R = X; Omega = X; C_d = X
   f. Rainfall Intensity: i = 3.6in/hr
      Design rainfall intensity is based on the 100-year hourly rainfall rate indicated in IBC-2018 Figure 1611.1.
   g. Soil bearing: Refer to main structural general notes
C. This project is designed to resist the most critical effects resulting from the load combinations of ASCE 7-16
D. The shelter has not been constructed within an area susceptible of flooding.
E. Duct, pipe and conduit openings in walls and roofs shall be protected with Cyclone Shrouds by RPH Advanced Building Solutions or equal or FEMA rated louvers. Re: Mechanical Specification.
F. Shelding by adjacent building has not been considered.
G. Structure has been designed to withstand missile impacted.
H. Lay down, rollover and collapse hazards have been considered.
I. Roof/walls assemblies have been designed to withstand missile impact loads and wind pressure criteria.
J. Storm shelter has bean designed to transfer all forces from loading outlined in Chapter 3 of ICC 500-2014 to the foundations.
K. Storm shelter has been designed to risist all design wind pressures in accordance with section 304 of ICC 500-2014.
L. Concrete slab on grade has not been used to resist lateral loads.

2. Statement of Structural Special Inspections

A. The structural design for this project is based on completion of special inspections during construction in accordance with section 1704 of the International Building Code and section 106 of ICC-500 2014. The owner shall employ one or more qualified special inspectors to provide the required special inspections.
B. The special inspector shall furnish inspection reports to the building official, owner, architect and structural engineer, and any other designated person.
C. All discrepancies shall be brought to the immediate attention of the contractor for correction, then, if uncorrected, to the proper design authority, building official and structural engineer.
D. The special inspector shall submit a final signed report stating that the work requiring special inspection was, to the best of the inspector's knowledge, in conformance with the approved plans and specifications and the applicable workmanship provisions of the building code.
E. The following inspections and tests are required with the frequency (continuous or periodic) as defined within the referenced section or standard listed below. The General Contractor shall provide notification to the inspector when items requiring inspection are ready to be inspected and provide access for those inspections.
   1. Shop Fabrication – precast concrete per Section 1704.2.5 and ICC-500 section 106.2.1 unless PCI certified shop
   2. Concrete Construction per Section 1705.3 and Table 1705.3
      a. Reinforcing Steel Placement [Periodic]
      b. Reinforcing Steel Welding [Periodic]
      c. Cast in Place Anchors [Periodic]
      d. Post Installed Anchors
         • Adhesive Anchors [Continuous]
         • Mechanical Anchors [Periodic]
      e. Design Mix Verification [Periodic]
      f. Concrete Sampling and Testing [Periodic]
      g. Concrete Placement [Periodic]
      h. Concrete Curing [Continuous]
      i. Prestressed Concrete Stressing and Grouting [Periodic]
      j. Erection of Precast [Periodic]
      k. Verification of In-situ Concrete Strength Prior to Stressing Post-Tensioned Concrete [Periodic]
      l. Formwork Shape, Location and Dimensions [Periodic]
   3. Verification of Soils per Table 1705.6
      A. Verify use of proper material, densities, and lift thicknesses during placement and compaction of compacted fill [Continuous]
      B. All other required soil inspections [Periodic]
   4. Inspections and Tests of Cast-In-Place Deep Foundation per Table 1705.8 [Continous]
   5. Verification of wind-resisting components:
      A. Verify roof covering, roof deck, and roof framing connections are in accordance with the construction documents [Periodic]
      B. Verify exterior wall coverings and wall connections to roof and floor diaphragms and framing are in accordance with the construction documents [Periodic]
F. Structural Observations:
   A. Owner shall employ a registered design professional to conduct visual observations of the construction of the structural system for general conformance to the approved construction documents at significant constructioni stages and at completion of the construction of the structural system. Structural observation does not relieve any other inspection requirements.

3. ICC 500 Contractor Responsibility

A. Per ICC 500-2014, section 107.3, each contractor responsible for the construction fabrication, or installation of any component listed in ICC 500 section 107.3.1 shall submit a written stement of responsibility to the authority having jurisdiction, the responsible design professional, and the owner prior to the commencement of work on the system or component. The contractor's statement of responsibility shall contain:
   a. Acknowledgement of awareness of the special requirements contained in the quality assurance plan.
   b. Acknowledgement that control will be exercised to obtain compliance with the construction documents.
   c. Procedures for exercising control within the contractor's organization, the method and frequency, and the distribution of reports.
   d. Identification and qualifications of the person excercising such control and their position in the organization.

EXCEPTION: A written statement of responsibility shall not be required for the fabrication of storm shelter components that have been inspected and labeled by an approved agency as meeting the requirements of the applicable code and the ICC 500-2014 standards.

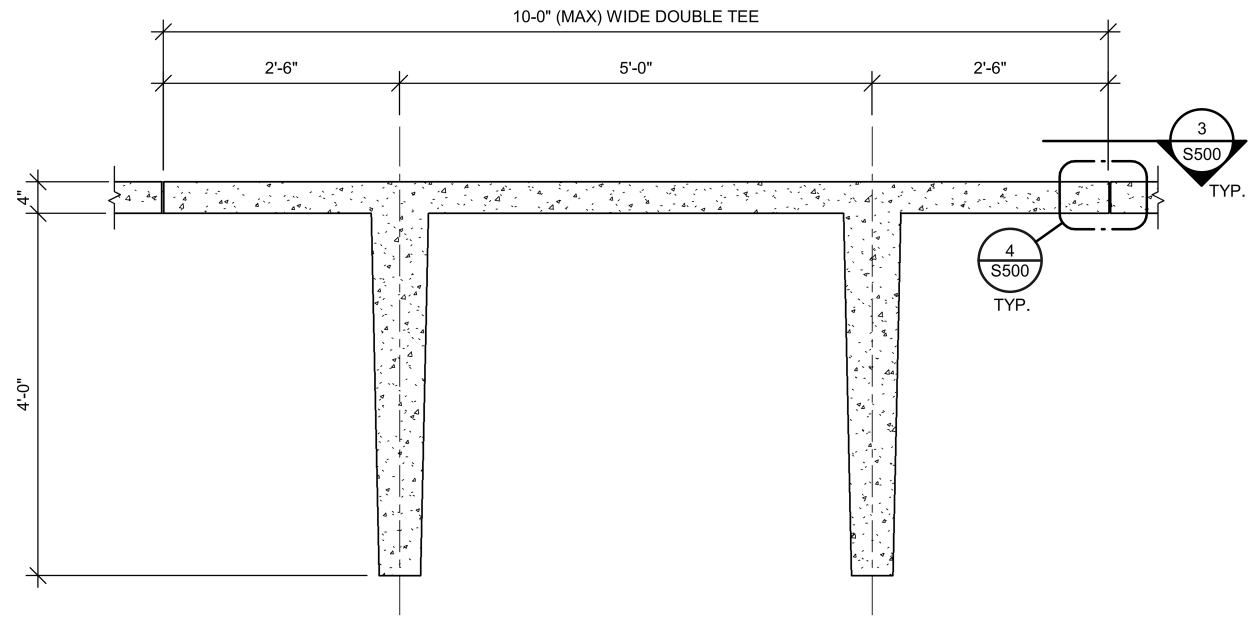

2 SECTION
3/4" = 1'-0"

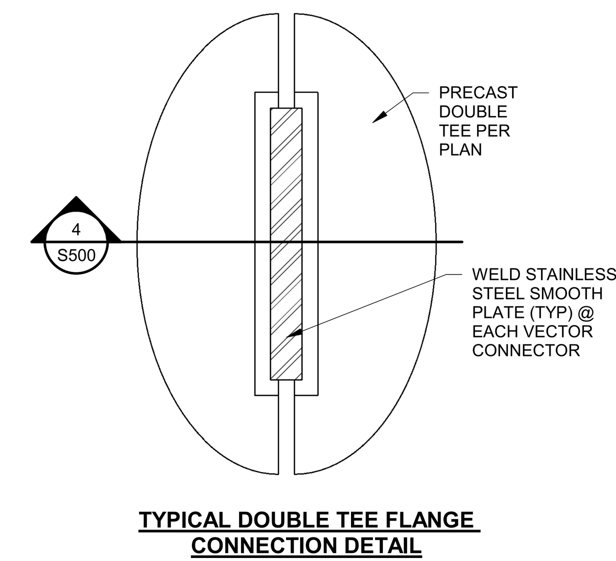

3 DETAIL
1 1/2" = 1'-0"

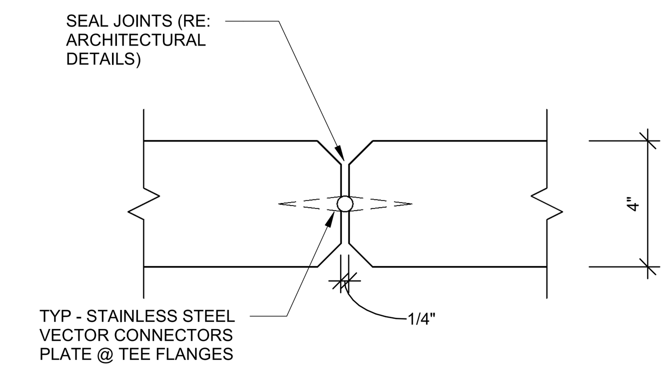

4 SECTION
3" = 1'-0"

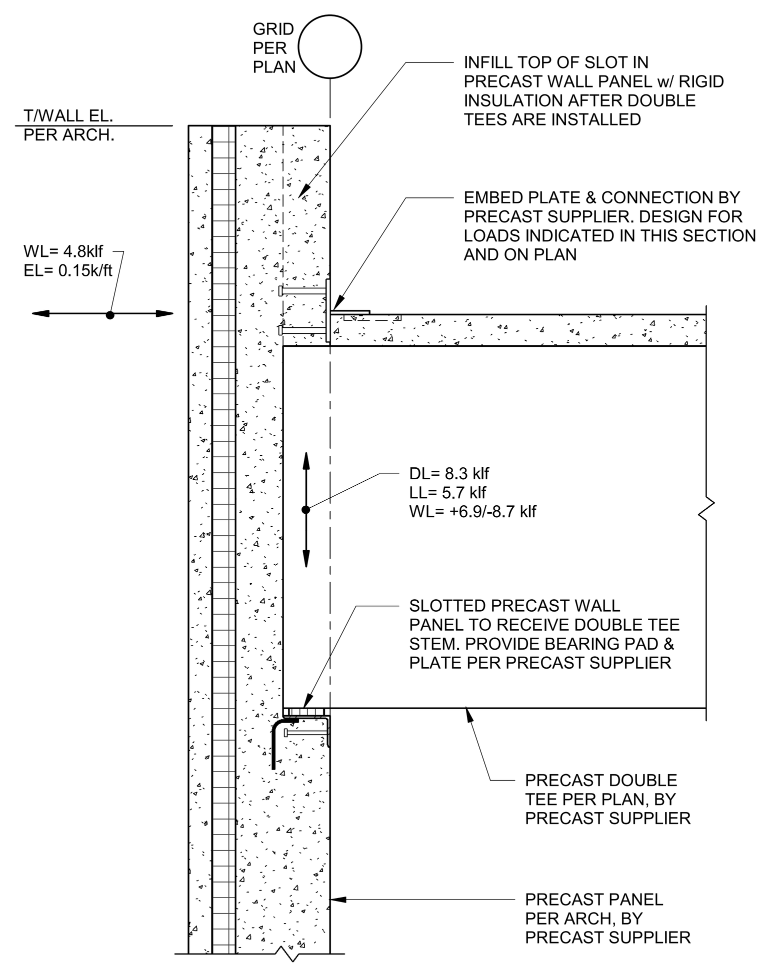

5 SECTION
3/4" = 1'-0"

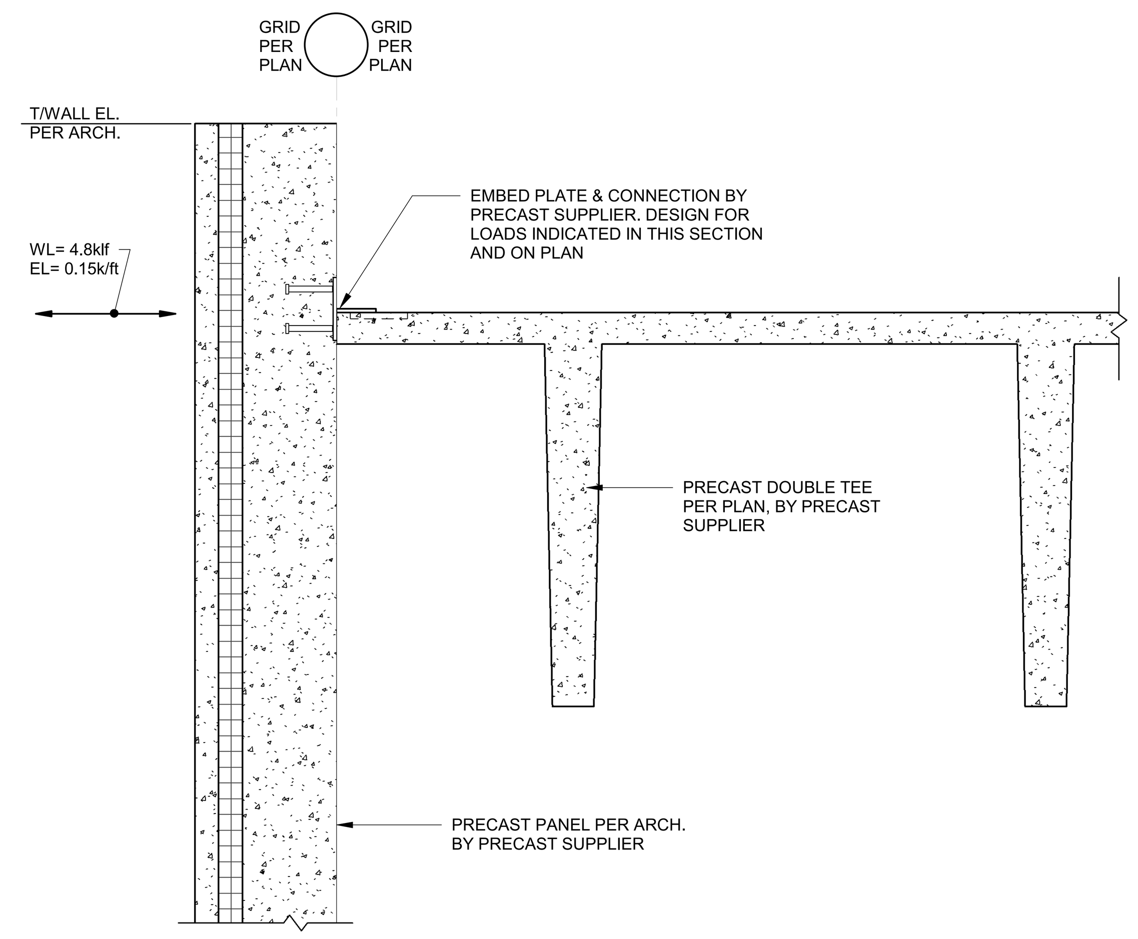

6 SECTION
3/4" = 1'-0"

IMPACT RESISTANCE OF CONCRETE WALL ASSEMBILES

Test results from a number of investigations (Twisdale and Dunn, 1981) suggest that 6-inch-thick reinforced concrete walls are needed to stop a 15-pound wood 2x4 test missile impacting at 100 mph without threshold spalling. TTU research indicates that a 6-inch reinforced concrete wall (Figure B8-16, illustrations [a] and [b]) can resist this test missile). Reinforced concrete walls constructed with insulating concrete forms (ICFs) with a uniform concrete section at least 4 inches thick (Figure B8-21, illustration [b]) can also provide sufficient protection.

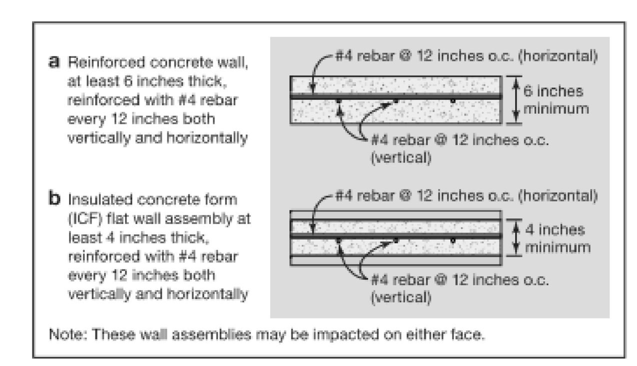

Figure B8-16. Reinforced concrete wall [a] and reinforced concrete "flat" wall constructed with ICFs [b]

IMPACT RESISTANCE OF CONCRETE ROOF ASSEMBILES

The TTU research also shows that a 4-inch-thick reinforced concrete roof slab on removable forms or on steel decking is able to resist a 15-pound wood 2x4 test missile impacting at 67 mph (the free-falling missile impact speed given in Tables B3-3 through B3-5). For more detail on wall and roof assemblies that have passed the tornado missile impact test, see "Wall Sections that Passed Previous Missile Impact Tests" on the safe room website at https://www.fema.gov/emergency-managers/risk-management/safe-rooms/resources.

hollis + miller architects®
we design the future®
1828 Walnut Street Suite 922
Kansas City, MO 64108
T 816.442.7700
115 Wilcox Street Suite 210
Castle Rock, CO 80104
T 720.949.1689
HOLLISANDMILLER.COM

Hollis + Miller Architects
Missouri State Certificate of Authority
Architecture # 0000161
Structure # 2006031333

Bob D Campbell
Structural Engineer
State Certificate of Authority #000442
4338 Belleview Ave
Kansas City, MO 64111
816.531.4144 phone

Smith & Boucher, Inc.
Mechanical, Electrical, & Plumbing
State Certificate of Authority #EGC000178
25618 W 103rd Street
Olathe, KS 66061
913.345.2127 phone

MKEC Engineering, Inc.
Civil Engineer
State Certificate of Authority
Engineering #2001009364
Landscaping #2006027139
Surveying #2006027138
11827 W 112th Street, Suite 200
Overland Park, KS 66210
913.317.9390 phone

Peerbolte Creative
Theatrical Consultant
109 E Pine St.
Warrensburg, MO 64093-0752
660.429.1383 phone

Discovery Middle School Storm Shelter Addition
Liberty School District
800 Midjay Dr, Liberty, MO 64068

Conformed Construction Documnets

REVISIONS:

#	Description	Date

The Professional Architects seal affixed to this sheet applies only to the material and items shown on this sheet. All drawings, instruments or other documents not exhibiting this seal shall not be considered prepared by this architect, and this architect expressly disclaims any and all responsibility for such plan, drawings, or documents not exhibiting this seal.

JOB NO: 23018
DRAWN BY: TAJ
CHECKED BY: WED
DATE: 10.11.2023

S500

STORM SHELTER DETAILS

Please consider the environment before printing this.

10/11/2023 7:49:12 AM

MECHANICAL AND ELECTRICAL SYMBOLS AND ABBREVIATIONS

"SOME SYMBOLS AND ABBREVIATIONS ON THIS LEGEND MAY NOT BE USED. REFER TO FLOOR PLANS FOR ALL SYMBOLS AND ABBREVIATIONS."

CONDUIT AND WIRE

- ARROWS INDICATE CONDUIT AND WIRE HOME RUN(S) TO PANEL WITH 2-#12 AWG CONDUCTORS UNLESS NOTED OR OTHERWISE REQUIRED.
- CONDUIT RUN CONCEALED IN WALL OR ABOVE CEILING.
- CONDUIT RUN UNDERGROUND OR CONCEALED IN FLOOR SLAB.
- T — TELEPHONE CONDUIT
- LV — LOW VOLTAGE CONDUIT AND WIRING

LIGHTING

- BATTERY OPERATED EMERGENCY LIGHT (WALL MOUNTED)
- BATTERY OPERATED EMERGENCY LIGHT (CEILING MOUNTED)
- SURFACE/RECESSED LIGHT FIXTURE
- FLUORESCENT LIGHT FIXTURE
- FLUORESCENT STRIP FIXTURE
- SHADING DENOTES EMERGENCY FIXTURE
- POLE MOUNTED LIGHT FIXTURE
- EXIT LIGHT - DOUBLE FACE - ARROWS AS SHOWN
- EXIT LIGHT - SINGLE FACE - ARROWS AS SHOWN
- $ $3 $4 $K $LV $ — LIGHTING SWITCHES-SINGLE POLE, 3-WAY, 4-WAY, KEY, LOW VOLTAGE, PILOT LIGHT
- $D — DIMMER WITH SINGLE POLE SWITCH
- $D3 — DIMMER WITH THREE WAY SWITCH (WATTAGE NOTED)
- $M — WALL MOUNTED MOTION SENSOR
- (A) — CEILING MOUNTED MOTION SENSOR (LETTER DENOTES TYPE)
- SWITCH AND DUPLEX RECEPTACLE
- DENOTES A WALL MOUNTED FIXTURE

WIRING DEVICES

- DUPLEX RECEPTACLE.
- LINE THRU DEVICE INDICATES ABOVE COUNTER
- IG — DUPLEX RECEPTACLE WITH ISOLATED GROUND (SINGLE AND FOURPLEX SIMILAR)
- S — DUPLEX RECEPTACLE - TOP HALF SWITCHED - BOTTOM HALF TO HAVE POWER AT ALL TIMES
- EM — DUPLEX RECEPTACLE ON EMERGENCY POWER (SINGLE AND FOURPLEX SIMILAR)
- FOURPLEX RECEPTACLE
- SINGLE RECEPTACLE
- CEILING MOUNTED RECEPTACLE
- MULTI-SERVICE FLOOR BOX
- DIVIDED POWER POLE
- FLOOR BOX W/DUPLEX RECEPTACLE
- SPECIAL RECEPTACLE W/NEMA CONFIGURATION AS NOTED
- CLOCK RECEPTACLE
- MULTI-OUTLET ASSEMBLY

COMMUNICATIONS

- TELEPHONE OUTLET
- LINE THRU DEVICE INDICATES ABOVE COUNTER
- DATA OUTLET
- TELEPHONE/DATA OUTLET
- FLOOR BOX WITH COMMUNICATIONS OUTLET
- TV — TELEVISION ANTENNA OUTLET
- TELEPHONE CABINET OR PLYWOOD BOARD

SECURITY

- CLOSED CIRCUIT TV CAMERA
- CR — CARD READER
- DL — DOOR LOCK
- M — SECURITY MONITOR
- WT — WATCH TOUR
- EDL — ELECTRIC DOOR LOCK
- S — MOTION SENSOR - SECURITY
- S — MOTION SENSOR (WALL MOUNTED) - SECURITY

PUBLIC ADDRESS

- M — MICROPHONE OUTLET
- S H — SPEAKER. ('H' DENOTES HORN TYPE)
- V — SPEAKER VOLUME CONTROL
- SPEAKER CONDUIT AND WIRING
- PA — PUBLIC ADDRESS AMPLIFIER AND CABINET
- BUZZER
- B — BELL
- I — INTERCOM OUTLET
- I M — INTERCOM OUTLET - MASTER
- C D — CLOCK SYSTEM RECEPTACLE WITH SINGLE FACE ('D' DENOTES DOUBLE FACE)

POWER DEVICE AND CONTROLS

- T — THERMOSTAT
- DISCONNECT SWITCH. 30A-3P, NON-FUSED EXCEPT AS NOTED
- MANUAL MOTOR STARTER
- MAGNETIC MOTOR STARTER
- COMBINATION MOTOR STARTER AND DISCONNECT SWITCH
- MOTOR
- PANELBOARD (SEE ONE-LINE)
- DISTRIBUTION PANELBOARD
- CONTACTOR
- AUTOMATIC TRANSFER SWITCH
- PC — PHOTOCELL
- J — JUNCTION BOX
- PUSHBUTTON
- T — TRANSFORMER

FIRE ALARM

- F — MANUAL PULL STATION
- PE D — PHOTOELECTRIC DETECTOR ('D' DENOTES IN DUCT) ('B' DENOTES BEAM-TYPE) ('R' DENOTES IN RETURN AIR PLENUM)
- ION U D — IONIZATION DETECTOR ('D' DENOTES IN DUCT) ('P' DENOTES PLENUM-TYPE)
- INF D — INFRARED DETECTOR ('D' DENOTES IN DUCT)
- H 190 D — THERMODETECTOR ('D' DENOTES IN DUCT) FIXED TEMPERATURE AS NOTED
- DH — DOOR HOLDER
- C — CHIME
- F — BELL
- FL — FIRE ALARM STROBE LIGHT
- F L — FIRE ALARM SPEAKER - ARROWS DENOTE PROJECTORS IF ANY. ('L' DENOTES COMBINATION SPEAKER AND VISUAL FIRE LIGHT)
- L — FIRE HORN. ('L' DENOTES COMBINATION HORN AND VISUAL FIRE LIGHT)
- RL — REMOTE ALARM LAMP
- PI — POST INDICATOR SWITCH
- FS — FLOW SWITCH
- GS — GATE SWITCH
- F — FIREMAN'S PHONE JACK

FIRE PROTECTION

- FP — FIRE PROTECTION PIPING
- FHC — FIRE HOSE CABINET
- FDV — FIRE DEPARTMENT VALVE
- UPRIGHT SPRINKLER HEAD
- PENDENT SPRINKLER
- RECESSED SPRINKLER
- RECESSED SPRINKLER WITH CLOSURE PLATE
- SIDEWALL SPRINKLER.
- DOUBLE CHECK DETECTOR BACKFLOW PREVENTER
- FIRE PROTECTION SIAMESE CONNECTION
- FIRE PROTECTION SIDEWALK SIAMESE CONNECTION
- POST INDICATOR VALVE

MEDICAL GAS

- VAC — MEDICAL VACUUM
- OX — OXYGEN
- NO — NITROUS OXIDE
- MA — MEDICAL COMPRESSED AIR
- N — NITROGEN
- X — OXYGEN OUTLET
- V — VACUUM OUTLET
- A — MEDICAL AIR OUTLET
- NO — NITROUS OXIDE OUTLET
- N — NITROGEN OUTLET

HVAC

- CWS — CHILLED WATER SUPPLY
- CWR — CHILLED WATER RETURN
- CHWS — CHILLED/HOT WATER SUPPLY
- CHWR — CHILLED/HOT WATER RETURN
- HWS — HEATING HOT WATER SUPPLY
- HWR — HEATING HOT WATER RETURN
- CTS — COOLING TOWER SUPPLY
- CTR — COOLING TOWER RETURN
- STM — LOW PRESSURE STEAM
- RTN — LOW PRESSURE CONDENSATE RETURN
- STM-50 — HIGH PRESSURE STEAM - NO'S GIVE GAUGE PRESSURE IN P.S.I.
- RTN-50 — HIGH PRESSURE RETURN - NO'S GIVE GAUGE PRESSURE IN P.S.I.
- RD — REFRIGERANT DISCHARGE
- RL — REFRIGERANT LIQUID
- RS — REFRIGERANT SUCTION
- FOS — FUEL OIL SUPPLY
- FOR — FUEL OIL RETURN
- A — COMPRESSED AIR
- D — DRAIN (CONDENSATE)
- T S — THERMOSTAT - ('S' DENOTES SENSOR)
- H S — HUMIDISTAT - ('S' DENOTES SENSOR)
- TH — THERMOSTAT/HUMIDITY SENSOR
- CO2 — CARBON DIOXIDE SENSOR
- THC — THERMOSTAT/HUMIDITY SENSOR/CO2 SENSOR
- HUMIDIFIER
- SUPPLY AIR FLOW INDICATOR
- RETURN AND EXHAUST AIR FLOW INDICATOR
- SUPPLY DIFFUSER
- SUPPLY STRIP DIFFUSER
- RETURN GRILLE OR EXHAUST REGISTER

HOSPITAL

- N — NURSE CALL CONDUIT AND WIRING
- M — MONITOR CONDUIT AND WIRING
- NMS — NURSE CALL MASTER STATION
- N — NURSE CALL BEDSIDE STATION - SINGLE PATIENT
- N2 — NURSE CALL BEDSIDE STATION - DOUBLE PATIENT
- E P — EMERGENCY PUSHBUTTON STATION ('P' DENOTES PULL CORD)
- DS — DUTY STATION
- SS — STAFF STATION
- B — DOME LIGHT - CEILING MOUNTED ('B' DENOTES WITH BUZZER)
- B — DOME LIGHT - WALL MOUNTED ('B' DENOTES WITH BUZZER)
- Z — ZONE DOME LIGHT
- B — CODE BLUE PUSHBUTTON

PLUMBING

- DOMESTIC COLD WATER
- DOMESTIC HOT WATER
- RECIRCULATING DOMESTIC HOT WATER
- TW — DOMESTIC TEMPERED WATER
- + — SOFT DOMESTIC COLD WATER
- ++ — SOFT DOMESTIC HOT WATER
- +++ — SOFT RECIRCULATING HOT WATER
- SAN — SOIL OR WASTE ABOVE GRADE OR FLOOR
- SAN — SOIL OR WASTE BELOW GRADE OR FLOOR
- ST — STORM ABOVE GRADE OR FLOOR
- ST — STORM BELOW GRADE OR FLOOR
- ST/O — STORM OVERFLOW ABOVE GRADE OR FLOOR
- ST/O — STORM OVERFLOW BELOW GRADE OR FLOOR
- V — PLUMBING VENT
- G — GAS (NATURAL)
- LP — LIQUIFIED PETROLEUM
- PD — PUMP DISCHARGE
- HB — HOSE BIBB
- WH — WALL HYDRANT
- WCO — WALL CLEAN OUT
- CO — CLEAN OUT
- FCO — FLOOR CLEAN OUT
- FLOOR DRAIN, AREA DRAIN, FLOOR SINK
- RD ORD — ROOF DRAIN, OVERFLOW ROOF DRAIN
- SHOWER HEAD.
- REDUCED PRESSURE BACKFLOW PREVENTER
- P # — PLUMBING VENT RISER CALL-OUT NUMBER

GENERAL

- 1 — MECHANICAL NOTE REFERENCE
- 2 — ELECTRICAL NOTE REFERENCE
- 3 — DEMOLITION NOTE REFERENCE
- 4 — REVISION NOTE REFERENCE
- CONNECT TO EXISTING WORK
- I / MI — DETAIL REFERENCE - NO./SHEET NO.
- A / M1 — SECTION CUT - SECTION/SHEET NO.

PIPING

- ELBOW DOWN
- ELBOW UP
- TEE UP
- TEE DOWN
- CAP
- UNION
- REDUCER (OR INCREASER)
- PIPE FLEX
- STRAINER
- R — RISE IN PIPING
- D — DROP IN PIPING
- GUIDE
- ANCHOR
- PRESSURE GAUGE WITH GAUGE COCK
- T — TEMPERATURE GAUGE
- FLOW INDICATOR
- THERMOMETER.
- SITE GLASS
- EXPANSION JOINT
- FD — FILTER-DRIER
- DRIP ASSEMBLY
- BASKET STRAINER
- SHUTOFF VALVE
- SHUTOFF VALVE IN RISER
- BALANCING VALVE
- CALIBRATED BALANCING VALVE
- RELIEF VALVE
- TEST PLUG
- TRIPLE DUTY VALVE
- CHECK VALVE.
- AUTOMATIC CONTROL VALVE (2-WAY)
- AUTOMATIC CONTROL VALVE (3-WAY)
- AUTO FLOW CONTROL VALVE
- S — SOLENOID VALVE
- P — PRESSURE REDUCING VALVE

DUCTWORK

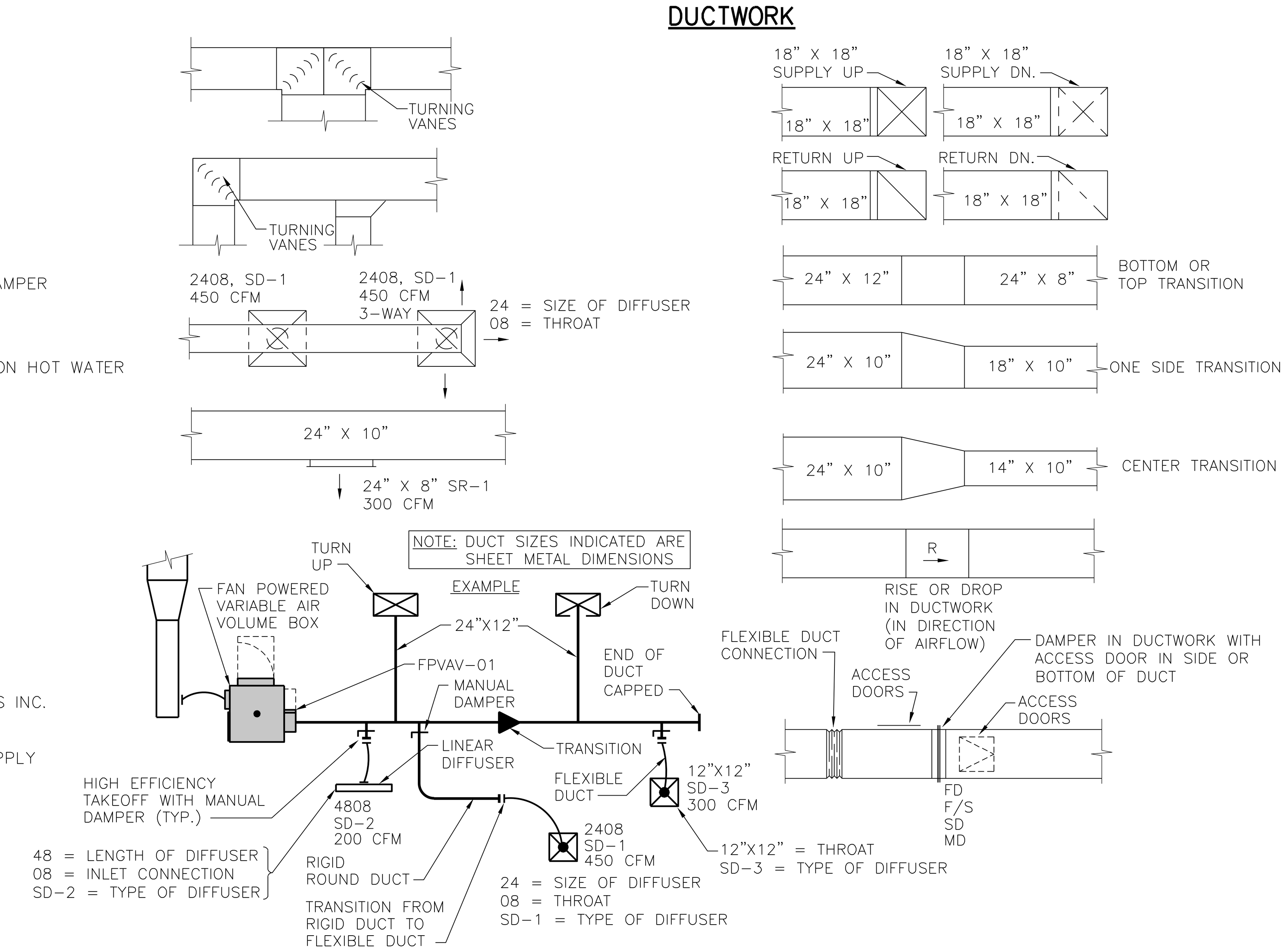

ABBREVIATIONS

A	AMPS, AIR (COMPRESSED)
A/C	AIR CONDITIONING
AD	AREA DRAIN, ACCESS DOOR
AFC	ABOVE FINISH CEILING
AFG	ABOVE FINISH GRADE
AHU	AIR HANDLING UNIT
AFF	ABOVE FINISHED FLOOR
BD	BACKDRAFT DAMPER, BLOWDOWN
BFP	BACKFLOW PREVENTER
BKR	BREAKER
BOD	BOTTOM OF DUCT
BOP	BOTTOM OF PIPE
BOS	BOTTOM OF STRUCTURE
BTU	BRITISH THERMAL UNIT
C	CONDUIT
CATV	CABLE TELEVISION SYSTEM
CB	CIRCUIT BREAKER
CCTV	CLOSED CIRCUIT TELEVISION
CFM	CUBIC FEET PER MINUTE
CHWR	CHILLED/HOT WATER RETURN
CHWS	CHILLED/HOT WATER SUPPLY
CKT	CIRCUIT
CO	CLEANOUT, CARBON MONOXIDE
CO2	CARBON DIOXIDE
CTR	COOLING TOWER RETURN
CTS	COOLING TOWER SUPPLY
CU	COPPER, CONDENSING UNIT
CUH	CABINET UNIT HEATER
CW	DOMESTIC COLD WATER
CWR	CHILLED WATER RETURN
CWS	CHILLED WATER SUPPLY
DDC	DIRECT DIGITAL CONTROL
DD	DECK DRAIN
DN	DOWN
DX	DIRECT EXPANSION
EA	EXHAUST AIR
EAT	ENTERING AIR TEMPERATURE
EC	ELECTRICAL CONTRACTOR, EMPTY CONDUIT
EF	EXHAUST FAN
EM	INDICATES EMERGENCY CIRCUIT
EPO	EMERGENCY POWER OFF
ER	EXHAUST REGISTER
ETR	EXISTING TO REMAIN
EWB	ENTERING WET BULB
EWC	ELECTRIC WATER COOLER
EWH	ELECTRIC WATER HEATER, ELEC. WALL HTR.
EXH	EXHAUST
F/S	COMBINATION FIRE AND SMOKE DAMPER
FACP	FIRE ALARM CONTROL PANEL
FAACP	FIRE ALARM ANNUNCIATOR CONTROL PANEL
FCO	FLOOR CLEANOUT
FCU	FAN COIL UNIT
FD	FIRE DAMPER, FLOOR DRAIN
FLA	FULL LOAD AMPS
FLR	FLOOR
FOR	FUEL OIL RETURN
FOS	FUEL OIL SUPPLY
FP	FIRE PROTECTION
FPB	FAN POWERED TERMINAL UNIT
FPVAV	FAN POWERED TERMINAL UNIT
FS	FLOOR SINK
G	GAS (NATURAL), GROUND
GCO	GRADE CLEANOUT
GFI/GFCI	GROUND FAULT CIRCUIT INTERRUPTER
GND	GROUND
GPM	GALLONS PER MINUTE
HB	HOSE BIBB
HOA	HAND OFF AUTOMATIC
HTG	HEATING
HTR	HEATER
HVU	HEATING AND VENTILATING UNIT
HW	DOMESTIC HOT WATER
HWR	HOT WATER RETURN
HWS	HOT WATER SUPPLY
IE	INVERT ELEVATION
IG	ISOLATED GROUND
KCMIL	1000 CIRCULAR MILS
KV	KILOVOLT
KVA	KILOVOLT AMPS
KW	KILOWATT
KWH	KILOWATT HOUR
LAT	LEAVING AIR TEMPERATURE
LDB	LEAVING DRY BULB
LP	LIQUIFIED PETROLEUM
LRA	LOCKED ROTOR AMPS
LV	LOW VOLTAGE
LWB	LEAVING WET BULB
LWT	LEAVING WATER TEMPERATURE
MA	MEDICAL AIR
MAU	MAKE UP AIR UNIT
MBH	1000 BTU PER HOUR
MC	MECHANICAL CONTRACTOR
MCA	MINIMUM CIRCUIT AMPACITY
MCC	MOTOR CONTROL CENTER
MD	MOTORIZED DAMPER
MDP	MAIN DISTRIBUTION PANEL
MFR	MANUFACTURER
MH	MANHOLE
MLO	MAIN LUGS ONLY
MTD	MOUNTED
MU	MAKE UP
MUAF	MAKE UP AIR FAN
MV	MIXING VALVE
N	NITROGEN
N/A	NOT APPLICABLE
N/C	NORMALLY CLOSED
N/O	NORMALLY OPEN
NF	INDICATES NON-FUSED DEVICE
NIC	NOT IN CONTRACT
NL	NIGHT LIGHT
NO	NITROUS OXIDE
OA	OUTSIDE AIR
ORD	OVERFLOW ROOF DRAIN
OX	OXYGEN
PD	PUMP DISCHARGE
PH	PHASE
PIV	POST INDICATOR VALVE
PNL	PANEL
PRV	PRESSURE REDUCING VALVE
QTY	QUANTITY
RA	RETURN AIR
RD	ROOF DRAIN
REV	REVISION
RG	RETURN GRILLE
RH	RELATIVE HUMIDITY
RHW	DOMESTIC RECIRCULATION HOT WATER
RL	REFRIGERANT LIQUID
RLA	RUNNING LOAD AMPS
RPM	REVOLUTIONS PER MINUTE
RS	REFRIGERANT SUCTION
RTN	LOW PRESSURE CONDENSATE RETURN
RTU	ROOF TOP UNIT
SA	SUPPLY AIR
SAN	SANITARY
SD	SUPPLY DIFFUSER, SMOKE DAMPER
SDCW	SOFT DOMESTIC COLD WATER
SDHW	SOFT DOMESTIC HOT WATER
SDRHW	SOFT DOMESTIC RECIRCULATION HOT WATER
SF	SQUARE FEET
SP	STATIC PRESSURE
SR	SUPPLY REGISTER
ST	STORM
ST/O	STORM OVERFLOW
STM	LOW PRESSURE STEAM
SWBD	SWITCHBOARD
TSTAT	THERMOSTAT
TU	TERMINAL UNIT
TW	TEMPERED WATER
UH	UNIT HEATER
UL	UNDERWRITERS LABORATORIES INC.
UNO	UNLESS NOTED OTHERWISE
UPS	UNINTERRUPTIBLE POWER SUPPLY
V	VENT PIPE
VAC	MEDICAL VACUUM
VAV	VARIABLE AIR VOLUME
VD	VOLUME DAMPER
VTR	VENT THROUGH ROOF
W	WIRE, WATT(S)
W/	WITH
W/O	WITHOUT
WB	WET BULB
WCO	WALL CLEANOUT
WH	WALL HYDRANT
WP	WEATHERPROOF
XFMR	TRANSFORMER
XP	EXPLOSION PROOF

hollis + miller architects®
we design the future®
1828 Walnut Street Suite 922
Kansas City, MO 64108
T 816.442.7700
115 Wilcox Street Suite 210
Castle Rock, CO 80104
T 720.949.1689
HOLLISANDMILLER.COM
Hollis + Miller Architects
Missouri State Certificate of Authority
Architecture # 0000161
Structure # 2006031333

Bob D Campbell
Structural Engineer
State Certificate of Authority #000442
4338 Bellview Ave.
Kansas City, MO 64111
816.531.4144 phone

Smith & Boucher Inc.
Mechanical, Electrical & Plumbing
State Certificate of Authority #EGC000178
25618 W 103rd Street
Olathe, KS 66061
913.345.2127 phone

MKEC Engineering, Inc.
Civil Engineer
State Certificate of Authority #
Engineering: 2001009364
Landscaping: 2006027139
Surveying: 2006027138
11827 W 112th Street, Suite 200
Overland Park, KS 66210
913.317.9390 phone

Peerbolte Creative
Theatrical Consultant
109 E Pine St.
Warrensburg, MO 64093-0752
660.429.1383 phone

Avant Acoustics
AV/Acoustics Consultant
14827 West 95th St.
Lenexa, KS 66215
913.888.9111 phone

Discovery Middle School Storm Shelter Addition
Liberty School District
800 Midjay Dr, Liberty, MO 64068

Conformed Construction Documents

REVISIONS:

#	Description	Date

STATE OF MISSOURI — RYAN JEROD DIEDIKER — NUMBER PE-2015006511 — REGISTERED PROFESSIONAL ENGINEER — 10/11/23

The Professional Architects seal affixed to this sheet applies only to the material and items shown on this sheet. All drawings, instruments or other documents not exhibiting this seal shall not be considered prepared by this architect, and this architect expressly disclaims any and all responsibility for such plan, drawings, or documents not exhibiting this seal.

JOB NO: 23018
DRAWN BY: SBI
CHECKED BY: RJD
DATE: 10.11.2023

smith & boucher engineers
25618 west 103rd St olathe, ks 66061
phone 913.345.2127 fax 913.345.0617
project number 2314702

ME101

MECHANICAL AND ELECTRICAL - SYMBOLS AND ABBREVIATIONS

Please consider the environment before printing this.

PROJECT NAME: 2314702 Liberty SD 2023 Discovery MS Gym Addition & LED Lighting
AUTOCAD FILE LOCATION \ NAME: X:\23\23147\2314702\Drawings\01-2314702_ME101.dwg
LAST CORRECTION BY • DATE • TIME: Bootyc Wednesday, October 11, 2023 9:42:47 AM
PLOTTED BY • DATE • TIME: Booty Charles Wednesday, October 11, 2023 9:43:28 AM

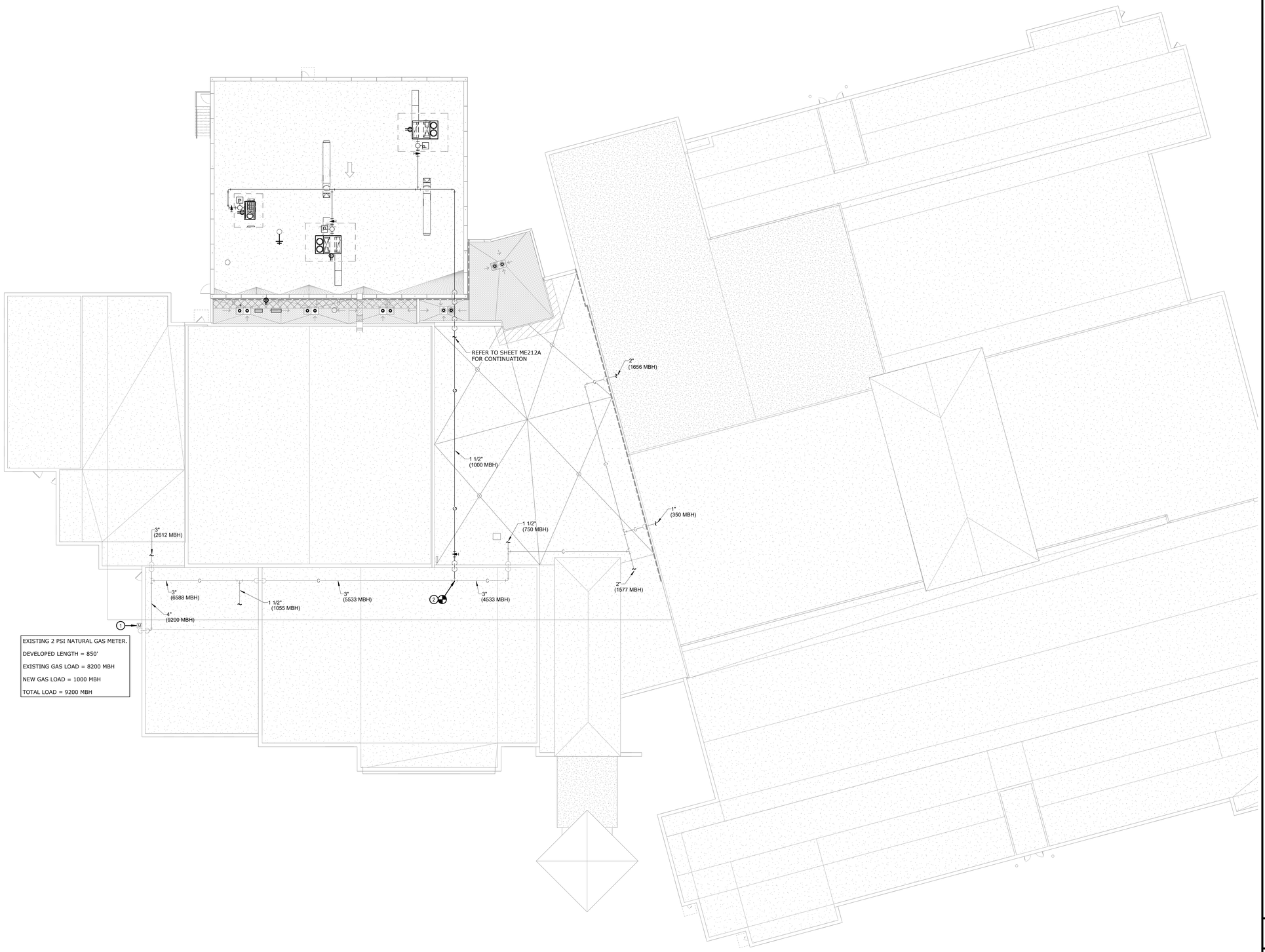

SHEET KEYNOTE LEGEND

GENERAL NOTES:

1. REFER TO ME212A FOR GENERAL NOTES.

MECHANICAL PLAN NOTES:

1. EXISTING 2 PSI NATURAL GAS METER AND 4" UP ALONG EXTERIOR WALL TO ROOF TO REMAIN.
2. CONNECT NEW 2 PSI BRANCH LINE TO EXISTING 3" NATURAL GAS MAIN. PROVIDE SHUT-OFF VALVE AT NEW CONNECTION.

hollis + miller architects®

we design the future®

1828 Walnut Street Suite 922
Kansas City, MO 64108
t 816.442.7700

115 Wilcox Street Suite 210
Castle Rock, CO 80104
t 720.949.1689

HOLLISANDMILLER.COM

Hollis + Miller Architects
Missouri State Certificate of Authority
Architecture # 0000161
Structure # 2006031333

Bob D Campbell
Structural Engineer
State Certificate of Authority #000442
4338 Belleview Ave
Kansas City, MO 64111
816.531.4144 phone

Smith & Boucher, Inc.
Mechanical, Electrical, & Plumbing
State Certificate of Authority #EGC000178
25618 W 103rd Street
Olathe, KS 66061
913.345.2127 phone

MKEC Engineering, Inc.
Civil Engineer
State Certificate of Authority
Engineering #2001009364
Landscaping #2006027139
Surveying #2006027138
11827 W 112th Street, Suite 200
Overland Park, KS 66210
913.317.9390 phone

Peerbolte Creative
Theatrical Consultant
109 E Pine St.
Warrensburg, MO 64093-0752
660.429.1383 phone

Avant Acoustics
AV/Acoustics Consultant
14827 West 95th St.
Lenexa, KS 66215
913.888.9111 phone

Discovery Middle School Storm Shelter Addition

Liberty School District

800 Midjay Dr, Liberty, MO 64068

Conformed Construction Documents

REVISIONS:

#	Description	Date

STATE OF MISSOURI
RYAN JEROD DIEDIKER
NUMBER A-2015006711
REGISTERED PROFESSIONAL ENGINEER
10/11/23

smith & boucher engineers
25618 west 103rd St olathe, ks 66061
phone 913.345.2127 fax 913.345.0617
project number 2314702

KEY PLAN

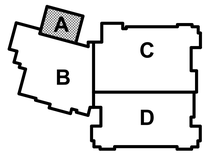

"The Professional Architects seal affixed to this sheet applies only to the material and items shown on this sheet. All drawings, instruments or other documents not exhibiting the seal shall not be considered prepared by this architect, and this architect expressly disclaims any and all responsibility for such plan, drawings, or documents not exhibiting the seal."

JOB NO: 23018
DRAWN BY: SBI
CHECKED BY: RJD
DATE: 10.11.2023

ME212

A1 | Scale 1/16" = 1'-0" | MECHANICAL AND ELECTRICAL ROOF PLAN

16' 8' 0' 16'

PROJECT NORTH

TRUE NORTH

OVERALL MECHANICAL AND ELECTRICAL ROOF PLAN

Please consider the environment before printing this.

10/11/2023 12:11:42 PM

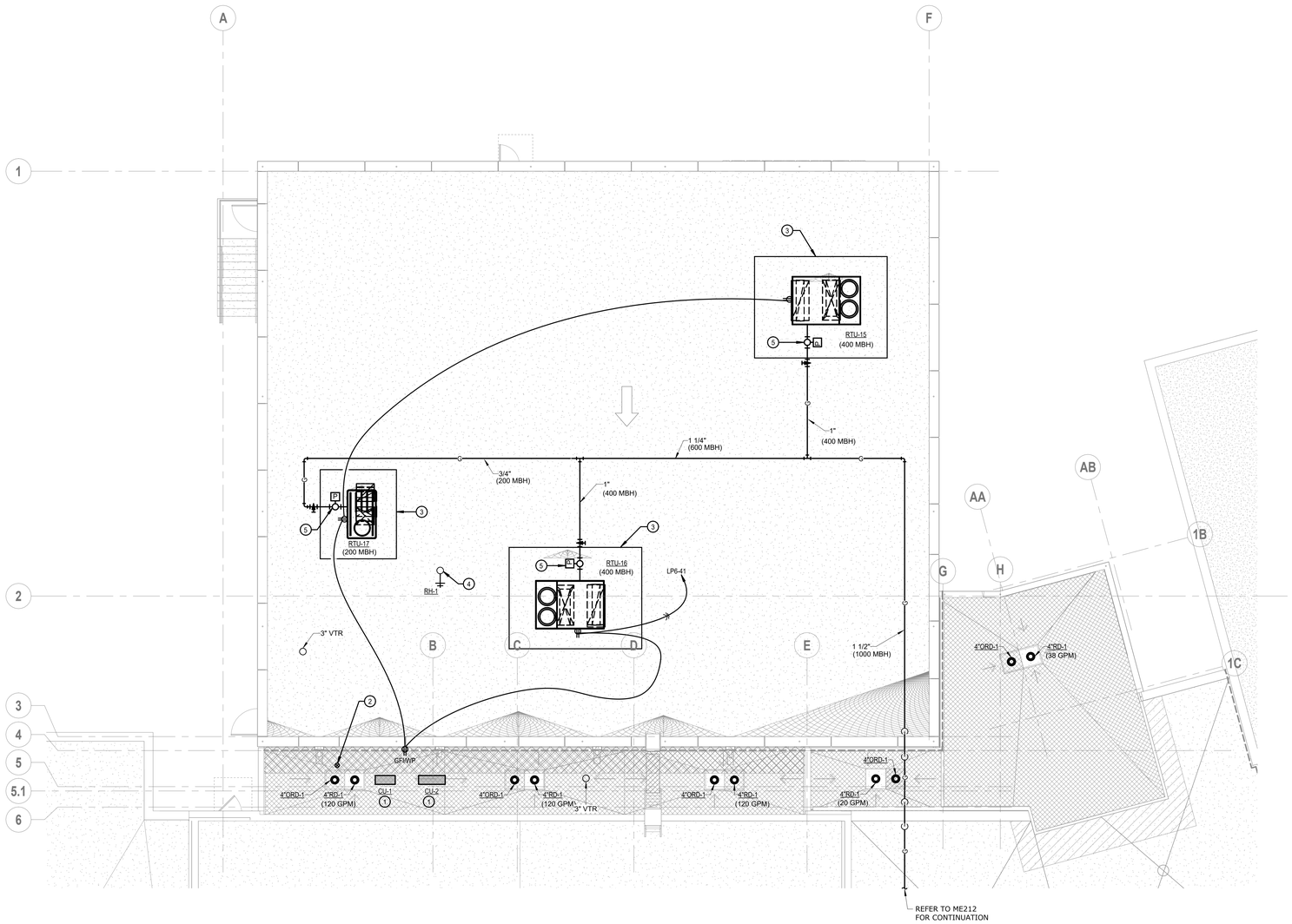

SHEET KEYNOTE LEGEND

GENERAL NOTES:

1. INFORMATION SHOWN ON THE DRAWINGS IS INTENDED TO CONVEY SCOPE AND IS ARRANGED FOR DRAWING CLARITY. IT IS NOT TO BE TAKEN AS AN AS-BUILT CONDITION. THE SYSTEM INSTALLATION SHALL BE COORDINATED WITH STRUCTURE AND ALL OTHER TRADES TO PROVIDE FOR A COMPLETE AND WORKING SYSTEM.
2. CAREFULLY COORDINATE ROUTING OF SERVICES WITH STRUCTURE AS WELL AS ALL OTHER TRADES TO MAINTAIN EQUIPMENT CLEARANCES.
3. COORDINATE INSTALLATION AND PENETRATIONS OF ALL NEW SERVICES WITH STRUCTURAL PRIOR TO CUTTING.
4. EXTEND ALL CONDENSATE DRAINS TO NEAREST ROOF DRAIN.
5. PAINT ALL PVC PIPING ON ROOF TO PROVIDE FOR UV PROTECTION. PAINT HORIZONTAL PIPING WHITE. PAINT VERTICAL PIPING COLOR AS DIRECTED BY ARCHITECT.
6. ALL SERVICES SHOWN HALF TONE ARE EXISTING.

MECHANICAL PLAN NOTES:

1. PROVIDE REFRIGERATION LINESETS THROUGH THE ROOF BETWEEN THE INDOOR UNIT AND OUTDOOR CONDENSING UNIT. REFER TO THE MANUFACTURER'S REQUIREMENTS FOR PIPE SIZES AND QUANTITY.
2. 8" DIAMETER OUTSIDE AIR DUCT THROUGH THE ROOF. TERMINATE VIA GOOSENECK WITH BIRD SCREEN OVER DUCT OPENING.
3. PROVIDE CURB-MOUNTED ROOFTOP UNIT SCREEN.
4. 3/4" COLD WATER DOWN THROUGH ROOF.
5. PROVIDE 2 PSI TO 11" W.C. PRESSURE REGULATOR RATED FOR THE RTU NAMEPLATE GAS LOAD.

hollis + miller architects

we design the future

1828 Walnut Street Suite 922
Kansas City, MO 64108
t 816.442.7700

115 Wilcox Street Suite 210
Castle Rock, CO 80104
t 720.949.1689

HOLLISANDMILLER.COM

Hollis + Miller Architects
Missouri State Certificate of Authority
Architecture # 000161
Structure # 2006031333

Bob D Campbell
Structural Engineer
State Certificate of Authority #000442
4338 Belleview Ave
Kansas City, MO 64111
816.531.4144 phone

Smith & Boucher, Inc.
Mechanical, Electrical, & Plumbing
State Certificate of Authority #EGC000178
25618 W 103rd Street
Olathe, KS 66061
913.345.2127 phone

MKEC Engineering, Inc.
Civil Engineer
State Certificate of Authority
Engineering #2001009364
Landscaping #2006027139
Surveying #2006027138
11827 W 112th Street, Suite 200
Overland Park, KS 66210
913.317.9390 phone

Peerbolte Creative
Theatrical Consultant
109 E Pine St.
Warrensburg, MO 64093-0752
660.429.1383 phone

Avant Acoustics
AV/Acoustics Consultant
14827 West 95th St.
Lenexa, KS 66215
913.888.9111 phone

Discovery Middle School Storm Shelter Addition

Liberty School District

800 Midjay Dr, Liberty, MO 64068

Conformed Construction Documents

REVISIONS:

#	Description	Date
5	ADDENDUM 05	10-06-2023

smith & boucher engineers
25618 west 103rd St olathe, ks 66061
phone 913.345.2127 fax 913.345.0617
project number 2314702

STATE OF MISSOURI
RYAN JEROD DIEDIKER
NUMBER
REGISTERED PROFESSIONAL ENGINEER
10/11/23

The Professional Architects seal affixed to this sheet applies only to the material and items shown on this sheet. All drawings, instruments or other documents not exhibiting the seal shall not be considered prepared by this architect, and this architect expressly disclaims any and all responsibility for such plan, drawings, or documents not exhibiting the seal.

KEY PLAN

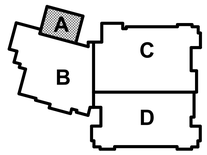

JOB NO: 23018
DRAWN BY: SBI
CHECKED BY: RJD
DATE: 10.11.2023

ME212A

A1 | Scale 1/8" = 1'-0" | MECHANICAL AND ELECTRICAL ROOF PLAN - AREA A

8' 4' 0' 8'

PROJECT NORTH

TRUE NORTH

MECHANICAL AND ELECTRICAL ROOF PLAN - AREA A

Please consider the environment before printing this.

10/11/2023 12:11:47 PM

DOMESTIC WATER HEATER - ELEC

DESIGNATION		EWH-5
UNIT DATA	MANUFACTURER	A.O. SMITH
	MODEL	DEL-20S
	CAPACITY (GALLONS)	20
	RECOVERY @ 100°F RISE (GPH)	19
	OUTLET TEMP. (°F)	140
	ELEMENTS (NO.)	1
	TOTAL INPUT (KW)	4.5
	VOLTS/PHASE	277/1
ELEC./CONTROL	PANEL & CIRCUIT	HP6-3
	WIRE & CONDUIT	(2)#10,#10G,1/2"C
	OVERCURRENT DEVICE	25A-1P CB
	DISCONNECT	30A-1P NF
REFERENCE DRAWING/DETAIL		P101A
REMARKS		--

DRAIN SCHEDULE

MARK	MANUFACTURER/ MODEL	DESCRIPTION
FD-1	ZURN Z415S	CAST IRON DRAIN WITH ADJUSTABLE TOP AND 6" NICKEL BRASS STRAINER WITH VANDAL RESISTANT SCREWS.
RD-1	ZURN ZZC100NH	CAST IRON ROOF DRAIN WITH CAST IRON DOME STRAINER, ADJUSTABLE ROOF FLANGE AND VANDAL RESISTANT SCREWS.
ORD-1	ZURN ZZC100NHW2	CAST IRON ROOF DRAIN WITH CAST IRON DOME STRAINER, ADJUSTABLE ROOF FLANGE AND VANDAL RESISTANT SCREWS
DSN-1	ZURN ZZARB199NH	CAST BRONZE DOWNSPOUT NOZZLE WITH NO-HUB OUTLET AND FLANGE TO SECURE NOZZLE TO WALL

NOTES:
1: PROVIDE FLOOR DRAIN WITH SURE SEAL TRAP SEALER OR EQUAL.

PUMP SCHEDULE

DESIGNATION		HWCP-5
UNIT DATA	MANUFACTURER	BELL & GOSSETT
	LOCATION	MECH
	MODEL NO.	NBF-36
	SERVICE	DOM. HOT WATER
	PUMP TYPE	IN-LINE
	GPM	5
	PUMP HEAD (FT.)	25
	MOTOR HORSEPOWER	1/6
	MOTOR RPM	1725
	VOLTAGE/PHASE	120/1
ELEC./CONTROL DATA	PANEL & CIRCUIT	LP6-43
	WIRE & CONDUIT	(2)#12,#12G.,1/2"C.
	OVERCURRENT DEVICE	15A-1P CB
	DISCONNECT	NOTE 1
	STARTER	--
	COMBINATION STARTER	--
	CONTROL	AQUASTAT
REFERENCE DRAWING/DETAIL		P101A
REMARKS		NOTE 1

NOTES
1: PROVIDE MOTOR RATED TOGGLE SWITCH AT PUMP.

PLUMBING DRAWDOWN TANK SCHEDULE

DESIGNATION		ST-1
	LOCATION	STORAGE
	SERVICE	DOMESTIC WATER
	MANUFACTURER	WESSELS
	MODEL. NO.	FX 300V
UNIT DATA	PRECHARGE PRESSURE (PSIG)	40
	MAX. PRESSURE (PSIG)	60
	TANK TOTAL VOLUME (GAL)	80
	USEABLE VOLUME (GAL)	65
	HEIGHT (IN.)	55
	DIAMETER (IN.)	25
	WEIGHT (LB)	200
REFERENCE DRAWING/DETAIL		P101A
REMARKS		--

PLUMBING FIXTURE SCHEDULE

MARK	MFGR./ MODEL	DESCRIPTION	FITTINGS MANUFACTURER/MODEL	FITTINGS DESCRIPTION	NOTE	CW	HW	SAN	VENT
EWC-1	ELKAY LZSTL8WSLK	ADA COMPLIANT TWO STATION WALL MOUNT WATER COOLER WITH BOTTLE FILLING STATION AND BARRIER FREE ACCESS. STAINLESS STEEL BASIN. FLEXI-GUARD SAFETY BUBBLER. HERMETICALLY-SEALED COMPRESSOR.	--	--	1	1/2"	--	1-1/2"	1-1/2"
L-1	SLOAN SS-3103	ADA COMPLIANT WALL HUNG LAVATORY: WHITE VITREOUS CHINA, WITH SPLASHBACK AND FRONT OVERFLOW. SINGLE HOLE CENTERSET FAUCET.	CHICAGO FAUCETS 116.599.AB.1	ADA COMPLIANT BATTERY OPERATED DUAL BEAM INFRARED SENSOR, CHROME PLATED DIE CAST METAL HAND WASHING FAUCET. METAL GRID DRAIN ASSEMBLY. 0.5GPM FLOW RATE.	1,2,3,4,5	1/2"	1/2"	2"	2"
			WATTS MINIMIXING 2297321	POINT OF USE THERMOSTATIC MIXING VALVE. CHROME FINISH. 1/2" FITTINGS. WALL MOUNTING PLATE.					
RH-1	HOEPTNER 2131RE	FREEZE-PROOF ROOF HYDRANT WITH RECESSED DRAIN RESERVOIR. NO DRAIN REQUIRED. NO WINTERIZATION REQUIRED.	---	---	---	3/4"	---	---	---
S-1	MUSTEE 15F	UTILITY SINK: FLOOR-MOUNTED, SINGLE COMPARTMENT, THERMOPLASTIC OR POLYPROPYLENE TUB. (2) FAUCET HOLES ON 4" CENTERS. STEEL LEGS.	CHICAGO FAUCETS 895	DECK MOUNTED GOOSENECK FAUCET WITH VANDAL PROOF WRISTBLADE HANDLES. 4" FIXED CENTERS, 5" RIGID/SWING GOOSENECK SPOUT. 2.2GPM FLOW RATE.	3,4,5	1/2"	1/2"	2"	2"
			WATTS MINIMIXING 2297321	POINT OF USE THERMOSTATIC MIXING VALVE. CHROME FINISH. 1/2" FITTINGS. WALL MOUNTING PLATE.					
			STRIEM SIDEKICK	BELOW SINK PLASTER TRAP WITH POLYCARBONATE PERFORATED BASKET. BASKET SHALL BE INSTALLED FOR MAINTENANCE ACCESS. BASKET SHALL BE CLEAR TO ALLOW VISIBILITY INTO THE UNIT.					
WC-1	SLOAN ST-2459	ADA COMPLIANT WATER CLOSET: WHITE VITREOUS CHINA, ELONGATED BOWL, WALL MOUNTED, FLUSH VALVE BOWL WITH TOP SPUD AND FLAT BOLT COVERS. 1.6 GALLON SIPHON JET FLUSHING ACTION.	SLOAN REGAL 111 SFSM-1.6	ADA COMPLIANT, EXPOSED WATER CLOSET BATTERY OPERATED ELECTRONIC FLUSH VALVE, CHROME PLATED METAL, WITH, 1" I.P.S. SCREWDRIVER BAK-CHEK ANGLE STOP WITH PROTECTIVE CAP, ADJUSTABLE TAILPIECE, VACUUM BREAKER FLUSH CONNECTION AND SPUD COUPLING FOR 1 1/2" TOP SPUD, 1.6 GALLON FLUSH. PROVIDE WALL AND SPUD FLANGES.	---	1"	---	4"	2"
	WADE	PROVIDE CARRIER AS REQUIRED TO SUIT APPLICATION FOR MOUNTING IN CHASE. MOUNT TOP OF WATER CLOSET AT 18" AFF.							
	CHURCH 9500C	SEAT: SOLID PLASTIC, OPEN FRONT, WHITE, ELONGATED BOWL, INTEGRAL BUMPERS, EXTERNAL CHECK HINGES WITH STAINLESS STEEL POSTS.							
WC-2	SLOAN ST-2459	WATER CLOSET: WHITE VITREOUS CHINA, ELONGATED BOWL, WALL MOUNTED, FLUSH VALVE BOWL WITH TOP SPUD AND FLAT BOLT COVERS. 1.6 GALLON SIPHON JET FLUSHING ACTION.	SLOAN REGAL 111 SFSM-1.6	EXPOSED WATER CLOSET BATTERY OPERATED ELECTRONIC FLUSH VALVE, CHROME PLATED METAL, WITH, 1" I.P.S. SCREWDRIVER BAK-CHEK ANGLE STOP WITH PROTECTIVE CAP, ADJUSTABLE TAILPIECE, VACUUM BREAKER FLUSH CONNECTION AND SPUD COUPLING FOR 1 1/2" TOP SPUD, 1.6 GALLON FLUSH. PROVIDE WALL AND SPUD FLANGES.	---	1"	---	4"	2"
	WADE	PROVIDE CARRIER AS REQUIRED TO SUIT APPLICATION FOR MOUNTING IN CHASE.							
	CHURCH 9500C	SEAT: SOLID PLASTIC, OPEN FRONT, WHITE, ELONGATED BOWL, INTEGRAL BUMPERS, EXTERNAL CHECK HINGES WITH STAINLESS STEEL POSTS.							
WH-1	J.R. SMITH 5509QT	NON-FREEZE HYDRANT WITH INTEGRAL VACUUM BREAKER.	--	--	--	1/2"	--	--	--

NOTES:
1: PROVIDE CHROME PLATED BRASS TAILPIECE AND GRID DRAIN.
2: PROVIDE CHROME PLATED BRASS P-TRAP.
3: PROVIDE LOOSE KEY STOPS AND FLEXIBLE RISERS.
4: INSULATE EXPOSED TAILPIECE, P-TRAP, AND WATER RISERS.
5: PROVIDE WITH ALL MOUNTING HARDWARE AS REQUIRED. FIXTURE STUDS AND NUTS SHALL BE STAINLESS STEEL.

PIPE INSULATION SCHEDULE - PLUMBING

SERVICE	PIPE SIZE	INSULATION	NOTES
DOMESTIC COLD WATER	1/2" - 1-1/4"	1/2" FIBERGLASS, ASJ	1,2,3,4
	1-1/2" AND LARGER	1" FIBERGLASS, ASJ	
DOMESTIC HOT WATER	1/2" - 1-1/4"	1" FIBERGLASS, ASJ	1,2,3
RECIRCULATING HOT WATER	1-1/2" AND LARGER	1-1/2" FIBERGLASS, ASJ	
EXPOSED FIXTURE WASTETRAPS AND DOMESTIC HOT WATER AT HANDICAPPED ACCESSIBLE SINKS AND LAVATORIES	ALL	TRUBRO LAV AGUARD MOLDED PROTECTIVE PIPE COVER OVER 1/2" FIBERGLASS INSULATION	

NOTES:
1: FOR ALL PIPING 2-1/2" AND LARGER, PROVIDE CALCIUM SILICATE INSERTS AT ALL HANGERS AND SUPPORT LOCATIONS.
2: ALL INSULATION SHALL HAVE A MAXIMUM OF 25 FLAME SPREAD/50 SMOKE DEVELOPMENT RATING.
3: ELBOW AND FITTING INSULATION SHALL BE OF SAME THICKNESS AS ADJACENT STRAIGHT PIPE INSULATION.
4: FITTING INSULATION TO HAVE ASJ OR SUPPLEMENTAL VAPOR BARRIER SEALED TO ADJACENT PIPE INSULATION.

LOUVER SCHEDULE

PLAN MARK	SERVICE	TYPE	MANUFACTURER	MODEL NUMBER	MATERIAL	AIRFLOW (CFM)	MAX VELOCITY (FPM)	MAX PRESSURE DROP (W.G.)	MINIMUM FREE AREA (SF)	FREE AREA PERCENTAGE	LOUVER HEIGHT (FT)	LOUVER WIDTH (FT)	REMARKS
L-1	SHELTER	OA	RUSKIN	XP-500-WD	ALUMINUM	4450	1000	0.1	5.1	25%	4	4.5	1, 2, 3, 4, 5
L-2	SHELTER	OA	RUSKIN	XP-500-WD	ALUMINUM	4450	1000	0.1	5.1	25%	4	4.5	1, 2, 3, 4, 5
L-3	SHELTER	EA	RUSKIN	XP-500-WD	ALUMINUM	8900	1000	0.1	10.2	25%	6	6	1, 2, 3, 4, 5
L-4	SHELTER	EA	RUSKIN	XP-500-WD	ALUMINUM	300	1000	0.1	0.4	25%	1.5	1.5	1, 2, 3, 4, 5
L-5	RTU-15	SA	RUSKIN	XP500	ALUMINUM	8000	1100	0.3	7.3	50%	6	2.67	3, 6
L-6	RTU-15	RA	RUSKIN	XP500	ALUMINUM	8000	1100	0.3	7.3	50%	6	2.67	3, 6
L-7	RTU-16	SA	RUSKIN	XP500	ALUMINUM	8000	1100	0.3	7.3	50%	6	2.67	3, 6
L-8	RTU-16	RA	RUSKIN	XP500	ALUMINUM	8000	1100	0.3	7.3	50%	6	2.67	3, 6
L-9	RTU-17	SA	RUSKIN	XP500	ALUMINUM	3500	1100	0.3	3.2	50%	2.67	2.67	3, 6
L-10	RTU-17	RA	RUSKIN	XP500	ALUMINUM	3500	1100	0.3	3.2	50%	2.67	2.67	3, 6

NOTES:
1: 1100 FPM BEGINNING POINT OF WATER PENETRATION.
2: PROVIDE WITH BIRD AND INSECT SCREEN.
3: PROVIDE MOTORIZED DAMPER AND ACTUATOR WITH TRANSFORMER.
4: ICC500 RATING AND WIND-DRIVEN RAIN RATING WITH OUT OF WALL MOUNTING. COORDINATE EXACT MOUNTING DETAIL TO BE FLUSH WITH EXTERIOR SURFACE.
5: FINISH COLOR SHALL BE SELECTED BY ARCHITECT.
6: ICC500 RATING WITH OUT OF WALL MOUNTING. COORDINATE EXACT MOUNTING DETAIL TO BE FLUSH WITH EXTERIOR SURFACE.

HVAC PIPE INSULATION SCHEDULE

SERVICE	PIPE SIZE	INSULATION	NOTES
CONDENSATE DRAIN	1/2" - 2"	1/2" FIBERGLASS, ASJ	1,2,3,4
	2-1/2" AND LARGER	1" FIBERGLASS, ASJ	
REFRIGERANT SUCTION	ALL	1/2"FLEXIBLE CLOSED CELL ELASTOMERIC, UV PAINT OUTDOORS	2,3
REFRIGERANT HOT GAS			

NOTES:
1: FOR ALL PIPING 2-1/2" AND LARGER, PROVIDE CALCIUM SILICATE OR CELLULAR GLASS INSERTS AT ALL HANGERS AND SUPPORT LOCATIONS.
2: ALL INSULATION SHALL HAVE A MAXIMUM OF 25 FLAME SPREAD/50 SMOKE DEVELOPMENT RATING.
3: ELBOW AND FITTING INSULATION SHALL BE OF SAME THICKNESS AS ADJACENT STRAIGHT PIPE INSULATION.
4: FITTING INSULATION TO HAVE ASJ OR SUPPLEMENTAL VAPOR BARRIER SEALED TO ADJACENT PIPE INSULATION.

DUCTWORK SCHEDULE

SERVICE	DUCT SHAPE	SMACNA REQUIREMENTS CLASSIFICATION	SEAL CLASS	LEAKAGE CLASS	OTHER REQUIREMENTS
SUPPLY AIR DUCTS (LOW PRESSURE)	RECTANGULAR	2" WG POSITIVE	B	12	1", 3LB DENSITY LINER
	(EXPOSED AND CONCEALED)				PAINTABLE WHERE EXPOSED
	ROUND	2" WG POSITIVE	B	3	INSULATED - SEE SCHEDULE
	(CONCEALED)				
	ROUND	4" WG POSITIVE	B	3	PAINTABLE WHERE EXPOSED
	(EXPOSED)	SPIRAL SEAM			
RETURN AIR DUCTS	RECTANGULAR	2" WG NEGATIVE	B	12	1", 3LB DENSITY LINER
	(EXPOSED AND CONCEALED)				PAINTABLE WHERE EXPOSED
TRANSFER AIR DUCTS	RECTANGULAR	2" WG NEGATIVE	B	12	1/2", 3LB DENSITY LINER
					PAINTABLE WHERE EXPOSED
GENERAL EXHAUST DUCTS TO THE INLET OF THE FAN	RECTANGULAR	2" WG NEGATIVE	B	12	
	(EXPOSED AND CONCEALED)				PAINTABLE WHERE EXPOSED
	ROUND	4" WG NEGATIVE	A	3	
	(EXPOSED)	SPIRAL SEAM			PAINTABLE WHERE EXPOSED

NOTES:
1: SEE DUCTWORK INSULATION SCHEDULE FOR REQUIREMENTS ON DUCT INSULATION

DUCTWORK INSULATION SCHEDULE

SERVICE	INSULATION
CONCEALED DUCTWORK AS FOLLOWS:	1-1/2", 1.5 LB. RIGID FIBERGLASS BLANKET, VAPOR BARRIER FACED,
ALL ROUND SUPPLY AIR AND UNLINED BRANCH TAKE-OFFS FOR ROUND DUCTS	WITH HEAVY DUTY FOIL-SCRIM-KRAFT FACING.
AND IN-LINE TRANSITIONS.	
EXHAUST AIR BETWEEN ISOLATION DAMPER AND PENTRATION OF BUILDING EXTERIOR	

NOTES:
1: SEE DUCTWORK SCHEDULE FOR ITEMS THAT ARE TO BE LINED.
2: EXPOSED, LOW PRESSURE, ROUND AND FLAT OVAL SUPPLY AIR DUCTWORK IS NOT INSULATED.

AIR CONDITIONING UNIT SCHEDULE

INDOOR UNIT			
DESIGNATION		AC-1	AC-2
UNIT DATA	MANUFACTURER	MITSUBISHI	MITSUBISHI
	TYPE	WALL	DUCTED
	MODEL	PKA-A18LA	PEAD-A36AA8
	CFM	455	1080
	OSA CFM	-	30
	TOTAL COOLING CAP (MBH) @ 95 DEG	18	36
	SEER/EER AT AHRI	19.8 / 10.7	19.1 / 10.0
	TOTAL HEATING CAP (MBH) @ 47 DEG	-	36.0
	TOTAL HEATING CAP (MBH) @ 17 DEG	-	22.0
	HSPF AT AHRI	-	10.8
ELEC DATA	MCA	1	1
	VOLTAGE/PHASE	208/1	208/1
	PANEL AND CIRCUIT	NOTE 1	NOTE 1
	WIRE AND CONDUIT	(2)#10,#10G,1/2"C	(2)#8,#10,3/4"C
	OVERCURRENT DEVICE	NOTE 1	NOTE 1
	DISCONNECT	30A-2P NF	30A-2P NF
REFERENCE DRAWING/DETAIL		M101A	M101A
REMARKS		NOTE 3, 4	NOTE 3, 4
OUTDOOR UNIT			
DESIGNATION		CU-1	CU-2
UNIT DATA	MANUFACTURER	MITSUBISHI	MITSUBISHI
	MODEL NO.	PUY-A18NKA7	PUZ-A36NKA7
	AMBIENT AIR TEMP (DEG F.)	95	95
ELEC DATA	MCA	11	25
	MOCP	28	31
	VOLTAGE/PHASE	208/1	208/1
	PANEL AND CIRCUIT	LP6-44,46	LP6-48,50
	WIRE AND CONDUIT	(2)#10,#10G,1/2"C	(2)#8,#10,3/4"C
	OVERCURRENT DEVICE	25A-2P CB	30A-2P CB
	DISCONNECT	30A-2P NEMA 3R	60A-2P NEMA 3R
REFERENCE DRAWING/DETAIL		ME231A	ME231A
REMARKS		NOTE 2	-

NOTES:
1: INDOOR UNIT CIRCUITED THROUGH OUTDOOR UNIT.
2: PROVIDE WIND BAFFLE FOR LOW AMBIENT OPERATION.
3: PROVIDE PROGRAMMABLE, WALL-MOUNTED CONTROLLER.
4: PROVIDE CONDENSATE PUMP.

FAN SCHEDULE

DESIGNATION		EF-19	EF-20
FAN TYPE		INLINE	INLINE
SERVICE		STORM SHELTER	RESTROOMS
MANUFACTURER		GREENHECK	GREENHECK
MODEL		SQ-27-M2	SQ-98-VG
UNIT DATA	CFM	8900	300
	STATIC PRESSURE	1.0	0.5
	FAN RPM	860	1312
	BRAKE HORSEPOWER	2.8	0.09
	MOTOR HORSEPOWER	3	0.25
	VOLTAGE/PHASE	460/3	115/1
	DRIVE	DIRECT	DIRECT
ELEC/CONTROL	PANEL & CIRCUIT	INV-1,3,5	LP-41
	WIRE & CONDUIT	(3)#12,#12G,1/2"C	(2)#12,#12,1/2"C
	OVERCURRENT DEVICE	20A-3P CB	15A-1P CB
	DISCONNECT	30A-3P NF	20A-2P NF
	COMBINATION STARTER	VFD	--
	CONTROL	M301	M301
REFERENCE DRAWING/DETAIL		M101A	M101A
REMARKS		NOTE 1, 2	NOTE 1

NOTES:
1: PROVIDE 18" ROOF CURB, BIRD SCREEN, AND BACKDRAFT DAMPER.
1: PROVIDE BIRD SCREEN AND BACKDRAFT DAMPER.
2: PROVIDE VARIABLE FREQUENCY DRIVE (VFD).

UNIT HEATER SCHEDULE - ELEC

DESIGNATION		ECUH-1
HEATER TYPE		HORIZONTAL
LOCATION		VESTIBULE
MOUNTING		SEMI-RECESSED
MANUFACTURER		RAYWALL
MODEL		T33D05
UNIT DATA	CFM	250
	FAN DRIVE	DIRECT
	HEATER KW	5.0
	AMPS	19
	VOLTAGE/PHASE	277/1
ELEC./CTRL. DATA	PANEL & CIRCUIT	HP6-6
	WIRE & CONDUIT	(2)#10,#10G,1/2"C
	OVERCURRENT DEVICE	25A-1P CB
	DISCONNECT	30A-1P NF
	CONTROL	
REFERENCE DRAWING/DETAIL		M101A
REMARKS		NOTE 1

NOTES:
1: FURNISH WITH INTEGRAL THERMOSTAT.

GRILLE, REGISTER & DIFFUSER SCHEDULE

PLAN MARK	MANUFACTURER MODEL NUMBER	SERVICE	MOUNT TYPE	VOLUME DAMPER	MATERIAL	COLOR	REMARKS
SD-1	TITUS TMS	SUPPLY	LAY-IN	NO	STEEL	WHITE	NOTE 1
SD-2	TITUS 300RL	SUPPLY	DUCT	YES	STEEL	NOTE 2	NOTE 1, 3
SD-3	TITUS US-DL	SUPPLY	SPIRAL DUCT	YES	STEEL	NOTE 2	NOTE 1
RG-1	TITUS 350RL	RETURN	LAY-IN	NO	STEEL	WHITE	NOTE 1, 4
RG-2	TITUS 350RL	RETURN	DUCT/WALL	NO	STEEL	NOTE 2	NOTE 1, 4
EG-1	TITUS 350RL	EXHAUST	LAY-IN	YES	STEEL	WHITE	NOTE 1, 4
EG-2	TITUS 350RL	EXHAUST	DUCT/WALL	YES	STEEL	NOTE 2	NOTE 1, 4

NOTES:
1: REFER TO THE PLANS FOR FACE SIZE AND DUCT CONNECTION SIZE.
2: FINISH COLOR SHALL BE SELECTED BY ARCHITECT.
3: PROVIDE ADJUSTIBLE DOUBLE DEFLECTION BLADES WITH FRONT BLADES PARALLEL TO LONG DIMENSION AND NO SCREW HOLES.
4: PROVIDE SINGLE DEFLECTION BLADES PARALLEL TO THE LONG DIMENSION AND NO SCREW HOLES.

hollis + miller architects®
we design the future®
1828 Walnut Street Suite 922
Kansas City, MO 64108
T 816.442.7700
115 Wilcox Street Suite 210
Castle Rock, CO 80104
T 720.949.1689
HOLLISANDMILLER.COM

Hollis + Miller Architects
Missouri State Certificate of Authority
Architecture # 0000161
Structure # 2006031333

Bob D Campbell
Structural Engineer
State Certificate of Authority #000442
4338 Bellview Ave.
Kansas City, MO 64111
816.531.4144 phone

Smith & Boucher Inc.
Mechanical, Electrical & Plumbing
State Certificate of Authority #EGC000178
25618 W 103rd Street
Olathe, KS 66061
913.345.2127 phone

MKEC Engineering, Inc.
Civil Engineer
State Certificate of Authority #
Engineering: 2001009364
Landscaping: 2006027139
Surveying: 2006027138
11827 W 112th Street, Suite 200
Overland Park, KS 66210
913.317.9390 phone

Peerbolte Creative
Theatrical Consultant
109 E Pine St.
Warrensburg, MO 64093-0752
660.429.1383 phone

Avant Acoustics
AV/Acoustics Consultant
14827 West 95th St.
Lenexa, KS 66215
913.888.9111 phone

Discovery Middle School Storm Shelter Addition
Liberty School District
800 Midjay Dr, Liberty, MO 64068

Conformed Construction Documents

REVISIONS:

#	Description	Date
5	ADDENDUM 05	10-06-2023

STATE OF MISSOURI
RYAN JEROD DIEDIKER
NUMBER PE-2015006511
REGISTERED PROFESSIONAL ENGINEER
10/11/23

The Professional Architects seal affixed to this sheet applies only to the material and items shown on this sheet. All drawings, instruments or other documents not exhibiting this seal shall not be considered prepared by this architect, and this architect expressly disclaims any and all responsibility for such plan, drawings, or documents not exhibiting this seal.

JOB NO: 23018
DRAWN BY: SBI
CHECKED BY: RJD
DATE: 10.11.2023

smith & boucher engineers
25618 west 103rd St olathe, ks 66061
phone 913.345.2127 fax 913.345.0617
project number 2314702

ME301

MECHANICAL AND ELECTRICAL - SCHEDULES

Please consider the environment before printing this.

PROJECT NAME: 2314702 Liberty SD 2023 Discovery MS Gym Addition & LED Lighting
AUTOCAD FILE LOCATION \ NAME: X:\23\23147\2314702\Drawings\01-2314702_ME301.dwg
LAST CORRECTION BY ◆ DATE ◆ TIME: Bootyc Wednesday, October 11, 2023 9:15:48 AM
PLOTTED BY ◆ DATE ◆ TIME: Booty Charles Wednesday, October 11, 2023 9:43:42 AM

DUCT SILENCER

DESIGNATION		DS-1	DS-2	DS-3	DS-4	DS-5	DS-6
UNIT	MANUFACTURER	PRICE	PRICE	PRICE	PRICE	PRICE	IAC
	MODEL NO.	RLX96/7D	RLX72/7C	RLX96/7D	RLX72/7C	RLX36/7C	LFL
	ASSOCIATED EQUIPMENT	RTU-15	RTU-15	RTU-16	RTU-16	RTU-17	RTU-17
	AIRFLOW TYPE	SUPPLY	RETURN	SUPPLY	RETURN	SUPPLY	RETURN
	SILENCER WIDTH (IN)	46	46	46	46	36	36
	SILENCER HEIGHT (IN)	14	14	14	14	14	14
	SILENCER LENGTH (IN)	96	72	96	72	36	36
	CFM	8000	8000	8000	8000	3500	3500
	SILENCER FACE VELOCITY (FPM)	1790	1790	1790	1790	1000	1000
	EQUIVALENT DIAMETER (IN)	29	29	29	29	24	24
	MINIMUM INSTALLED STRAIGHT DUCT UPSTREAM OF SILENCER	90	90	90	90	48	48
	MINIMUM INSTALLED STRAIGHT DUCT DOWNSTREAM OF SILENCER	24	0	24	0	12	0
	INSTALLED PRESSURE DROP (IN. W.C.)	0.25	0.25	0.25	0.25	0.08	0.13
INSERTION LOSS (DB) AT +/-1000 FPM FACE VELOCITY	63 HZ	11	8	11	8	5	6
	125 HZ	18	14	18	14	7	10
	250 HZ	32	24	32	24	13	16
	500 HZ	46	36	46	36	20	24
	1 KHZ	40	31	40	31	16	21
	2 KHZ	29	21	29	21	13	16
	4 KHZ	20	14	20	14	11	13
	8 KHZ	14	11	14	11	9	10
SELF-NOISE POWER LEVEL (DB) AT +/-1000 FACE VELOCITY (4 SF FA)	63 HZ	53	44	53	44	34	34
	125 HZ	36	36	36	36	20	27
	250 HZ	38	39	38	39	18	31
	500 HZ	43	42	43	42	28	37
	1 KHZ	44	41	44	41	27	35
	2 KHZ	42	42	42	42	21	32
	4 KHZ	37	35	37	35	10	21
	8 KHZ	30	28	30	28	10	15
REFERENCE DRAWING/DETAIL		M101A	M101A	M101A	M101A	M101A	M101A
REMARKS		NOTE 1	NOTE 1	NOTE 1	NOTE 1	NOTE 1	NOTE 1

NOTES:
1: CONTRACTOR SHALL BE RESPONSIBLE FOR ENSURING THAT THE MINIMUM LENGTHS OF STRAIGHT DUCT BEFORE AND AFTER DUCT SILENCERS ARE MET AS A MINIMUM REQUIREMENT OF INSTALLATION. THESE LENGTHS MUST BE ACHIEVED TO ENSURE THAT THE INSTALLED PRESSURE DROP OF THE DUCT SILENCER MEETS DESIGN ALLOWANCES AS SCHEDULED. ALTERNATE MANUFACTURERS MUST MEET THE STATED DIMENSIONS AND PERFORMANCE CRITERIA, NO EXCEPTIONS WILL BE ALLOWED.

2: INSTALL PER MANUFACTURER'S RECOMMENDATIONS.

ROOFTOP UNIT SCHEDULE - DX COOLING / GAS HEATING

DESIGNATION		RTU-15	RTU-16	RTU-17
UNIT DATA	MANUFACTURER	TRANE	TRANE	TRANE
	MODEL NUMBER	YHJ300A4S0H	YHJ300A4S0H	YHJ120A4S0M
	NOMINAL TONS	25	25	10
	UNIT WEIGHT (LBS.)	4715	4715	2665
	AREA SERVED	GYM	GYM	STAGE
SUPPLY FAN	SUPPLY AIRFLOW (CFM)	8,000	8,000	3,500
	OUTSIDE AIRFLOW (CFM)	2,400	2,400	1,050
	MINIMUM CO2 OUTSIDE AIRFLOW (CFM)	675	675	200
	EXTERNAL STATIC PRESSURE (IN.W.C.)	1.45	1.45	1.4
	BRAKE HORSEPOWER	2 @ 2.3 BHP	2 @ 2.3 BHP	2.59
	MOTOR HORSEPOWER	2 @ 3 HP	2 @ 3 HP	4.6
	VFD	-	-	-
DX COOLING COIL	AMBIENT AIR (DB)	105	105	105
	ENT. AIR (DB/WB)	81.7 / 66.6	81.7 / 66.6	81.7 / 68.2
	LVG. AIR (DB/WB)	56.9 / 56.1	56.9 / 56.1	58.4 / 57.6
	TOTAL COOLING CAPACITY (MBH)	253.4	253.4	115.8
	SENSIBLE COOLING CAPACITY (MBH)	197.3	197.3	87.2
	MINIMUM E.E.R. @ ARI	10.6	10.6	11.4
	REFRIGERANT	R410A	R410A	R410A
	NUMBER OF COMPRESSORS	2	2	2
	STAGES OF COOLING	2	2	2
GAS HEAT	MINIMUM HEATING AIRFLOW (CFM)	8000	8000	3500
	ENT. AIR (DB)	50.7	50.7	50.7
	LVG. AIR (DB)	87.5	87.5	92.7
	HEATING INPUT (MBH)	400	400	200
	HEATING OUTPUT (MBH)	324	324	162
	STAGES / MODULATION	MOD	MOD	MOD
FILTERS	TYPE	2" PLEATED	2" PLEATED	2" PLEATED
	MERV RATING	MERV 13	MERV 13	MERV 13
	MAX FACE VELOCITY (FPM)	500	500	500
ELECT./CONT.	VOLTAGE/PHASE	460/3	460/3	460/3
	SCCR (kAIC)	35	35	35
	MCA	60	60	30
	MOCP	80	80	40
	PANEL & CIRCUIT	HP6-25,27,29	HP6-19,21,23	HP6-13,15,17
	WIRE & CONDUIT	(3)#3,#8G,1-1/4"C	(3)#3,#8G,1-1/4"C	(3)#8,#10G,3/4"C
	OVERCURRENT DEVICE	80A-3P CB	80A-3P CB	40A-3P CB
	DISCONNECT	INTEGRAL	INTEGRAL	INTEGRAL
OPTIONS	CONTROL	NOTE 1	NOTE 1	NOTE 1
	ECONOMIZER	ENTHALPY	ENTHALPY	ENTHALPY
	SMOKE DETECTOR	NOTE 2	NOTE 2	NOTE 2
	RECEPTACLE	NOTE 3	NOTE 3	NOTE 3
	ROOF CURB	NOTE 4	NOTE 4	NOTE 4
	RELIEF	NOTE 6	NOTE 6	NOTE 6
	HOT GAS REHEAT	NOTE 7	NOTE 7	NOTE 7
DUCTED DISCHARGE (dB)	63 HZ	87	87	86
	125 HZ	96	96	93
	250 HZ	84	84	82
	500 HZ	76	76	75
	1 KHZ	71	71	71
	2 KHZ	67	67	67
	4 KHZ	68	68	67
	8 KHZ	66	66	68
DUCTED INLET (dB)	63 HZ	82	82	82
	125 HZ	86	86	79
	250 HZ	80	80	76
	500 HZ	80	80	64
	1 KHZ	77	77	62
	2 KHZ	73	73	60
	4 KHZ	70	70	60
	8 KHZ	66	66	59
REFERENCE DRAWING/DETAIL		ME231A	ME231A	ME231A
REMARKS		NOTE 5, 8	NOTE 5, 8	NOTE 5, 8

NOTES:
1: PROVIDE MANUFACTURER CONTROLLER WITH COMMUNICATION CARD SUITABLE FOR CONNECTION TO THE EXISTING BAS - JOHNSON CONTROLS METASYS.
2: SYSTEM DUCT MOUNTED SMOKE DETECTOR IN RETURN DUCT, PROVIDED BY FIRE ALARM CONTRACTOR. CONNECT TO RTU FOR SHUTDOWN AS REQUIRED.
3: FURNISH WITH MANUFACTURER PROVIDED NON-POWERED RECEPTACLE.
4: PROVIDE 24" TALL. VIBRATION ISOLATION ROOF CURB TO ALLOW FOR DUCT TRANSITIONS WITHIN THE CURB AND ABOVE THE ROOF. PROVIDE CURB-MOUNTED EQUIPMENT SCREEN BY CURBS-PLUS OR EQUAL. COORDINATE SCREEN FINISH COLOR WITH ARCHITECT.
5: PROVIDE HAIL GUARDS ON CONDENSER COILS.
6: PROVIDE BAROMETRIC RELIEF.
7: PROVIDE MODULATING HOT GAS REHEAT FOR DEHUMIDIFICATION.
8: UNIT NUMBERING SHALL CONTINUE FROM EXISTING BUILDING RTU DESIGNATIONS. THE DESIGNATIONS SHOWN ON THESE CONSTRUCTION DRAWINGS ARE FOR COORDINATION PURPOSES ONLY. COORDINATE WITH THE SCHOOL DISTRICT FOR EXACT RTU DESIGNATIONS.

hollis+miller architects
we design the future
1828 Walnut Street Suite 922
Kansas City, MO 64108
t 816.442.7700
115 Wilcox Street Suite 210
Castle Rock, CO 80104
t 720.949.1689
HOLLISANDMILLER.COM
Hollis + Miller Architects
Missouri State Certificate of Authority
Architecture # 0000161
Structure # 2006031333

Bob D Campbell
Structural Engineer
State Certificate of Authority #000442
4338 Bellview Ave.
Kansas City, MO 64111
816.531.4144 phone

Smith & Boucher Inc.
Mechanical, Electrical & Plumbing
State Certificate of Authority #EGC000178
25618 W 103rd Street
Olathe, KS 66061
913.345.2127 phone

MKEC Engineering, Inc.
Civil Engineer
State Certificate of Authority #
Engineering: 2001009364
Landscaping: 2006027139
Surveying: 2006027138
11827 W 112th Street, Suite 200
Overland Park, KS 66210
913.317.9390 phone

Peerbolte Creative
Theatrical Consultant
109 E Pine St.
Warrensburg, MO 64093-0752
660.429.1383 phone

Avant Acoustics
AV/Acoustics Consultant
14827 West 95th St.
Lenexa, KS 66215
913.888.9111 phone

Discovery Middle School Storm Shelter Addition
Liberty School District
800 Midjay Dr, Liberty, MO 64068

Conformed Construction Documents

REVISIONS:

#	Description	Date

STATE OF MISSOURI
RYAN JEROD DIEDIKER
NUMBER A-2015006
REGISTERED PROFESSIONAL ENGINEER
10/11/23

The Professional Architects seal affixed to this sheet applies only to the material and items shown on this sheet. All drawings, instruments or other documents not exhibiting this seal shall not be considered prepared by this architect, and this architect expressly disclaims any and all responsibility for such plan, drawings, or documents not exhibiting this seal.

JOB NO: 23018
DRAWN BY: SBI
CHECKED BY: RJD
DATE: 10.11.2023

ME302

smith & boucher engineers
25618 west 103rd St olathe, ks 66061
phone 913.345.2127 fax 913.345.0617
project number 2314702

MECHANICAL AND ELECTRICAL - SCHEDULES

Please consider the environment before printing this.

PROJECT NAME:
AUTOCAD FILE LOCATION \ NAME:
LAST CORRECTION BY ◆ DATE ◆ TIME:
PLOTTED BY ◆ DATE ◆ TIME:
2314702 (dwg) SB 2023 Discovery MS Gym Addition & LED Lighting
X:\23\23147\23147002\Drawings\01 - 23147002_ME302.dwg
Bcolyc Wednesday, October 11, 2023 9:16:33 AM
Bcolyc Wednesday, October 11, 2023 9:43:53 AM

System No.W-J-1127
September 07, 2004
F Rating - 2 Hr
T Rating - 1/4 Hr

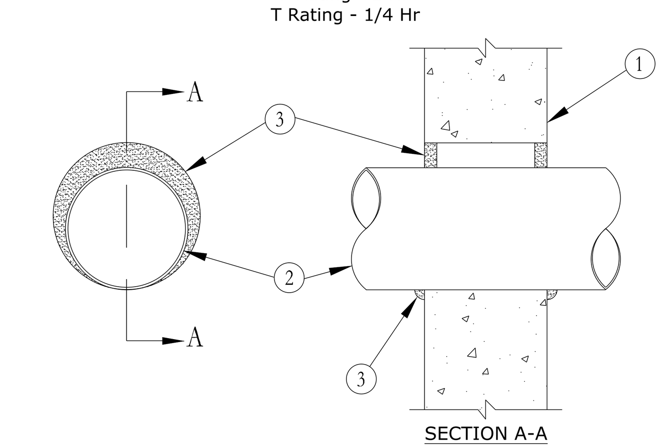

1. Wall Assembly - Min 6 in. (152 mm) thick reinforced lightweight or normal weight (100-150 pcf or 1600-2400 kg/m3) concrete wall. Wall may also be constructed of any UL Classified **Concrete Blocks***. Max diam of opening is 10-1/2 in. (267 mm).

See **Concrete Blocks** (CAZT) category in the Fire Resistance Directory for names of manufacturers.

2. Through Penetrants - One metallic pipe, conduit, tubing or flexible metal pipe installed concentrically or eccentrically within opening. Annular space between penetrant and periphery of opening to be min 0 in. (point contact) to max 1-7/8 in. (0 mm to max 48 mm) Penetrant to be rigidly supported on both sides of wall. The following types and sizes of penetrants may be used:

A. **Steel Pipe** - Nom 8 in. (203 mm) diam (or smaller) Schedule 5 (or heavier) steel pipe.
B. **Iron Pipe** - Nom 8 in. (203 mm) diam (or smaller) cast or ductile iron pipe.
C. **Conduit** - Nom 4 in. (102 mm) diam (or smaller) steel electrical metallic tubing (EMT) or nom 6 in. (152 mm) rigid steel conduit.
D. **Copper Tubing** - Nom 4 in. (102 mm) diam (or smaller) Type L (or heavier) copper tubing.
E. **Copper Pipe** - Nom 4 in. (102 mm) diam (or smaller) Regular (or heavier) copper pipe.
F. **Through Penetrating Product* - Flexible Metal Piping** - The following types of steel flexible metal gas piping may be used:

1. Nom 2 in. (51 mm) diam (or smaller) steel flexible metal gas piping. Plastic covering on piping may or may not be removed on both sides of floor or wall assembly.

OMEGA FLEX INC.

2. Nom 1 in. (25 mm) diam (or smaller) steel flexible metal gas piping. Plastic covering on piping may or may not be removed on both sides of floor or wall assembly.

TITEFLEX CORP, A BUNDY CO.

3. Nom 1 in. (25 mm) diam (or smaller) steel flexible metal gas piping. Plastic covering on piping may or may not be removed on both sides of floor or wall assembly.

WARD MFG INC.

3. Fill,Void or Cavity Material* - Caulk or Sealant - Min 5/8 in. (16 mm) thickness of caulk or sealant applied within annulus, flush with both surfaces of wall. Min 1/4 in. (6 mm) diam bead of caulk applied to penetrant/wall interface at point contact location on both sides of wall.

3M COMPANY - CP 25WB+, IC 15WB caulk or FB-3000 WT sealant.

*Bearing the UL Classification Marking

This material was extracted by 3M Fire Protection Products from the 2004 edition of the UL Fire Resistance Directory

System No.W-L-7051
September 07, 2004
F Rating - 1 and 2 Hr (See Item 1)
T Rating - 3/4 and 2 Hr (See Item 1)

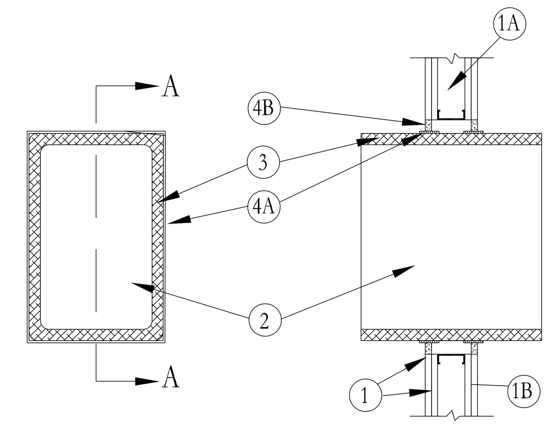

1. Wall Assembly - The 1 and 2 hr fire rated gypsum wallboard/stud wall assembly shall be constructed of the materials and in the manner specified in the individual U400 Series Wall and Partition Designs in the UL Fire Resistance Directory and shall include the following construction features.

A. **Studs** - Wall framing shall consist of min 3-1/2 in. (89 mm) wide steel studs spaced a max 2 (610 mm) OC. Additional min 3-1/2 in. (89 mm) wide steel studs shall be used to completely frame the opening.
B. **Gypsum Board*** - Thickness, type, number of layers and fasteners as specified in the individual Wall and Partition Design. Max size of opening is 35 in. by 29 in. (889 mm by 737 mm) opening.

The hourly F Rating of the firestop system is equal to the hourly fire rating of the wall assembly in which it is installed.
The hourly T Rating is 3/4 and 2 Hr for 1 and 2 Hr rated assemblies, respectively.The hourly T Rating is 3/4 and 2 Hr for 1 and 2 Hr rated assemblies, respectively.

2. Steel Air Duct - Nom 30 in. by 24 in. (762 mm by 610 mm) min 24 gauge (or heavier) galv steel air duct to be installed either concentrically or eccentrically within the opening. Duct to be rigidly supported on both sides of wall assembly.

3. Duct Insulation* - Nom 1-1/2 in. (38 mm) thick glass fiber blanket insulation jacketed on the outside with foil-scrim-kraft facing. Longitudinal and transverse joints sealed with foil-scrim kraft tape. A nominal 1 in. (25 mm) annular space shall be maintained between the insulated duct and the periphery of the opening.

See **Batts and Blankets** (BKNV) category in the Building Materials Directory for names of manufacturers. Any batts and blankets material meeting the above specifications and bearing the UL Classification Marking with a Flame Spread Index of 25 or less and a Smoke Developed Index of 50 or less may be used.

4. Firestop System - The firestop system shall consist of the following:

A. **Wrap Strip** - One layer of nom 1/8 in. (3.2 mm) thick intumescent material supplied in 2 in. (51 mm) wide strips tightly wrapped around duct insulation and held in place with 2 in. (51 mm) wide min 3 mil foil tape. Wrap strip slid into annulus on both sides of wall such that wrap strips extend approx 1/2 in. (13 mm) beyond both surfaces of wall. Exposed portion of wrap strip to be completely covered with min 3 mil foil tape.

3M COMPANY - Ultra GS

B. **Fill,Void or Cavity Material* - Caulk or Sealant** - Min 5/8 in. (16 mm) thickness of fill material applied within annulus, flush with both surfaces of wall assembly.

3M COMPANY - CP-25 WB+, IC 15WB caulk or FB-3000 WT sealant

*Bearing the UL Classification Mark

This material was extracted by 3M Fire Protection Products from the 2004 edition of the UL Fire Resistance Directory

SYSTEM NO. C-AJ-5041
F RATING - 2 HR
T RATINGS - 1 AND 2 HR (SEE ITEMS 3 AND 3A)

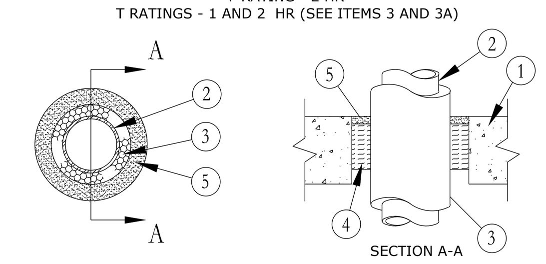

1. **Floor or Wall Assembly** - Min 4-1/2 in. thick reinforced lightweight or normal weight (100-150 pcf) concrete. Wall may also be constructed of any UL Classified Concrete Blocks *. Max diam of opening is 32 in. See Concrete Blocks (CAZT) category in the Fire Resistance Directory for names of manufacturers.

2. **Through Penetrants** - One metallic pipe, conduit or tubing to be installed either concentrically or eccentrically within the firestop system. Pipe, conduit or tubing to be rigidly supported on both sides of floor or wall assembly. The following types and sizes of metallic pipes, conduits or tubing may be used:

A. **Steel Pipe** - Nom 24 in. diam (or smaller) Schedule 10 (or heavier) steel pipe.

B. **Conduit** - Nom 4 in. diam (or smaller) electrical metallic tubing or steel conduit.

C. **Copper Tubing** - Nom 6 in. diam (or smaller) Type L (or heavier) copper tubing.

D. **Copper Pipe** - Nom 6 in. diam (or smaller) Regular (or heavier) copper pipe.

3. **Pipe Covering Materials*** - Used in conjunction with Item 4. Nom 3 in. thick unfaced mineral fiber pipe insulation sized to the outside diam of pipe or tube. Pipe insulation secured with min 8 AWG steel wire spaced max 12 in. OC. An annular space of min 1/2 in. to max 1-1/2 in. is required within the firestop system. When mineral wool pipe covering is used, the T Rating is 2 hr.

OWENS CORNING HT INC, DIV OF OWENS CORNING - High Temperature Pipe Insulation 1200, High Temperature Pipe Insulation BWT or High Temperature Pipe Insulation Thermaloc

3A. **Pipe Covering*** - Used as an alternate to Items 3 and 4. Nom 1 in. thick hollow cylindrical heavy density (min 3.5 pcf) glass fiber units jacketed on the outside with an all service jacket. Longitudinal joints tightly butted and sealed with metal fasteners or factory applied self-sealing lap tape. Transverse joints secured with metal fasteners or with butt tape supplied with the product. An annular space of min 1/2 in. to max 1-1/2 in. is required within the firestop system. When glass fiber pipe covering is used, the T Rating is 1 hr.
See Pipe and Equipment Covering - Materials (BRGU) category in the Building Materials Directory for names of manufacturers. Any pipe covering material meeting the above specification and bearing the UL Classification Marking with a Flame Spread Index of 25 or less and a Smoke Developed Index of 50 or less may be used.

4. **Sheathing Material (Not shown)** - Optionally, used in conjunction with Item 3. Foil-scrim-kraft or all service jacket material shall be wrapped around the outer circumference of the pipe covering material (Item 3) with the kraft side exposed. Longitudinal joints sealed with metal fasteners. See Sheathing Materials (BVDV) category in the Building Materials Directory for names of Manufacturers. Any sheathing material meeting the above specifications and bearing the UL Classification Marking with a Flame Spread Index of 25 or less and a Smoke Developed Index of 50 or less may be used.

5. **Packing Material** - Min 3 in. thickness of min 4 pcf mineral wool batt insulation firmly packed into opening as a permanent form. Packing material to be recessed from top surface of floor or from both surfaces of wall as required to accommodate the required thickness of fill material.

6. **Fill,Void or Cavity Material*** - Sealant - Min 1/2 in. thickness of fill material applied within annulus, flush with top surface of floor or with both surfaces of wall.

MINNESOTA MINING & MFG CO - Type FB-2000 or FB-2000+ .

*Bearing the UL Classification Marking

This material was extracted by 3M Fire Protection Products from the 2002 edition of the UL Fire Resistance Directory

System No.W-J-5013
September 08, 2004
F Ratings - 1 and 2 Hr (See Item 4)
T Ratings - 1 and 1-1/2 Hr (See Item 4)

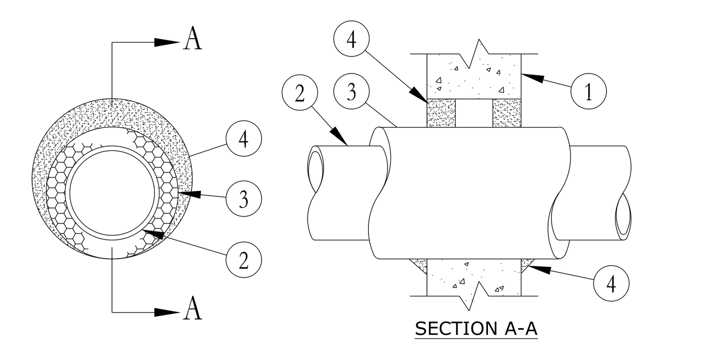

1. Wall Assembly - Min 4-1/2 in. thick lightweight or normal weight (100-150 pcf) concrete. Wall may also be constructed of any UL Classified **Concrete Blocks***. Max diam of opening is 8-1/2 in.

See **Concrete Blocks** (CAZT) category in the Fire Resistance Directory for names of manufacturers.

2. Through Penetrants - One metallic pipe or tubing installed either concentrically or eccentrically within the firestop system. Pipe, conduit or tubing to be rigidly supported on both sides of wall assembly. The following types and sizes of metallic pipes, conduits or tubing may be used:

A. **Steel Pipe** - Nom 4 in. diam (or smaller) Schedule 10 (or heavier) steel pipe.
B. **Copper Tubing** - Nom 4 in. diam (or smaller) Type L (or heavier) copper tubing.
C. **Copper Pipe** - Nom 4 in. diam (or smaller) Regular (or heavier) copper pipe.

3. Pipe Covering* - Nom 1-1/2 in. thick hollow cylindrical heavy density glass fiber units jacketed on the outside with an all service jacket. Longitudinal joints sealed with metal fasteners or factory-applied SSL tape. Transverse joints secured with metal fasteners or with butt tape supplied with the product. The annular space between the insulated pipe and the edge of the through opening shall be min zero in. (continuous point contact) to max 1-1/4 in.

See **Pipe and Equipment Covering - Materials*** (BRGU) category in the Building Materials Directory for names of manufacturers. Any pipe covering material meeting the above specifications and bearing the UL Classification Marking with a Flame Spread Index of 25 or less and a Smoke Developed Index of 50 or less may be used.

4. Fill,Void or Cavity Materials* - Caulk or Sealant - Min thickness of 5/8 in. and 1-1/4 in. of caulk, sealant or putty for 1 and 2 hr rated wall assemblies, respectively, applied within annulus between pipe covering and periphery of the opening, flush with both surfaces of wall assembly. A min 1/2 in. diam bead of caulk shall be applied to the pipe covering/wall interface at the point contact location on both sides of wall.
The hourly F and T Ratings of the firestop system are 1 hr when installed in 1 hr fire rated wall assemblies.
The hourly F Rating of the firestop system is 2 hr when installed in 2 hr fire rated wall assemblies. When installed in 2 hr fire rated wall assemblies, T Rating is 1 hr when copper tube is used and 1-1/2 hr when steel pipe is used.

3M COMPANY - CP 25WB+ caulk or FB-3000 WT sealant

5. Packing Material (Optional) - Mineral wool or fiberglass insulation or polyethylene backer rod firmly packed into opening as a permanent form. Packing material to be recessed from both surfaces of wall as required to accommodate the required thickness of caulk fill material.

*Bearing the UL Classification Marking

This material was extracted by 3M Fire Protection Products from the 2004 edition of the UL Fire Resistance Directory

System No.W-L-5009
September 07, 2004
(Formerly System No. 566)
F Rating - 2 Hr
T Rating - 1/2 Hr
L Rating At Ambient - less than 1 CFM/sq ft
L Rating At 400 F - less than 1 CFM/sq ft

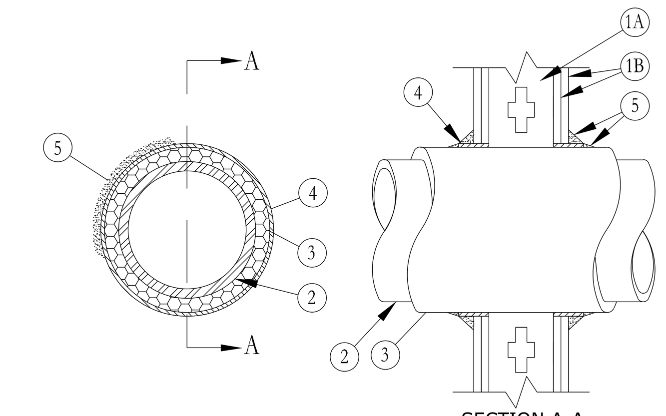

1. Wall Assembly - The fire-rated gypsum wallboard/stud wall assembly shall be constructed of the materials and in the manner described in the individual U300 or U400 Series Wall and Partition Design in the UL Fire Resistance Directory and shall include the following construction features:

A. **Studs** - Wall framing may consist of either wood studs or steel channel studs. Wood studs to consist of nom 2 in. by 4 in. (51 mm by 102 mm) lumber spaced 16 in. (406 mm) OC. Steel studs to be min 3 5/8 in. (92 mm) wide and spaced max 24 in. (610 mm) OC.
B. **Gypsum Board*** - Two layers of nom 5/8 in. (16 mm) thick gypsum wallboard, as specified in the individual Wall and Partition Design. Diam of opening cut in gypsum wallboard layers on each side of wall assembly (concentric with pipe, Item 2) to be 1/2 in. to 3/4 in. (13 mm to 19 mm) larger than outside diam of pipe insulation (Item 3) such that, when installed, a 1/4 in. to 3/8 in. (6 mm to 10 mm annular space will be present between the pipe insulation and the gypsum wallboard around the entire circumference of the opening. Max diam of opening is 4 in. (102 mm).

2. Copper Pipe - Nom 2 in. (51 mm) diam (or smaller) Type L (or heavier) copper pipe. A max of one pipe is permitted in the firestop system. Pipe to be installed near center of stud cavity width and is to be rigidly supported on both sides of wall assembly.

3. Pipe Insulation - Plastic# - Nom 5/8 in. (16 mm) thick acrylonitrile butadiene/polyvinyl chlori (AB/PVC) flexible foam supplied in the form of tubes with skin. Pipe insulation to be sized to outside diam of copper pipe.

See **Plastics** (QMFZ2) category in the Recognized Component Directory for names of manufacturers. Any Recognized Component pipe insulation material meeting the above specifications and having a UL94 Flammability Classification of 94-5VA may be used.

4. Fill,Void or Cavity Materials* - Wrap Strip - Nom 1/4 in. (6 mm) thick intumescent elastomeric material faced on one side with aluminum foil, supplied in 2 in. (51 mm) wide strips. Nom 2 in (51 mm wide strip tightly wrapped around pipe insulation (foil side out) with seam butted. Wrap strip layer securely bound with steel wire or aluminum foil tape and slid into annular space approx 1-1/4 in. (32 mm) such that approx 3/4 in. (19 mm) of the wrap strip width protrudes from the wall surface. Wrap strip installed symmetrically on both sides of wall.

3M COMPANY - FS-195+

5. Fill,Void or Cavity Materials* - Caulk or Sealant - Min 1/4 in. (6 mm) diam continuous bead applied to leading edge of wrap strip layer (Item 4) prior to insertion of wrap strip layer into annular space. After insertion of wrap strip layer in annular space, a nom 1/4 in. (6 mm) diam continuous bead is to be applied to the wrap strip/wall interface and to the exposed edge of the wrap strip layer approx 3/4 in. (19 mm) from the wall surface.

3M COMPANY - CP-25 WB+, IC 15WB, FireDam-150+ caulk or FB-3000 WT sealant

#Bearing the UL Recognized Component Marking.
*Bearing the UL Classification Marking

This material was extracted by 3M Fire Protection Products from the 2004 edition of the UL Fire Resistance Directory

FIRE STOPPING DETAILS

NO SCALE

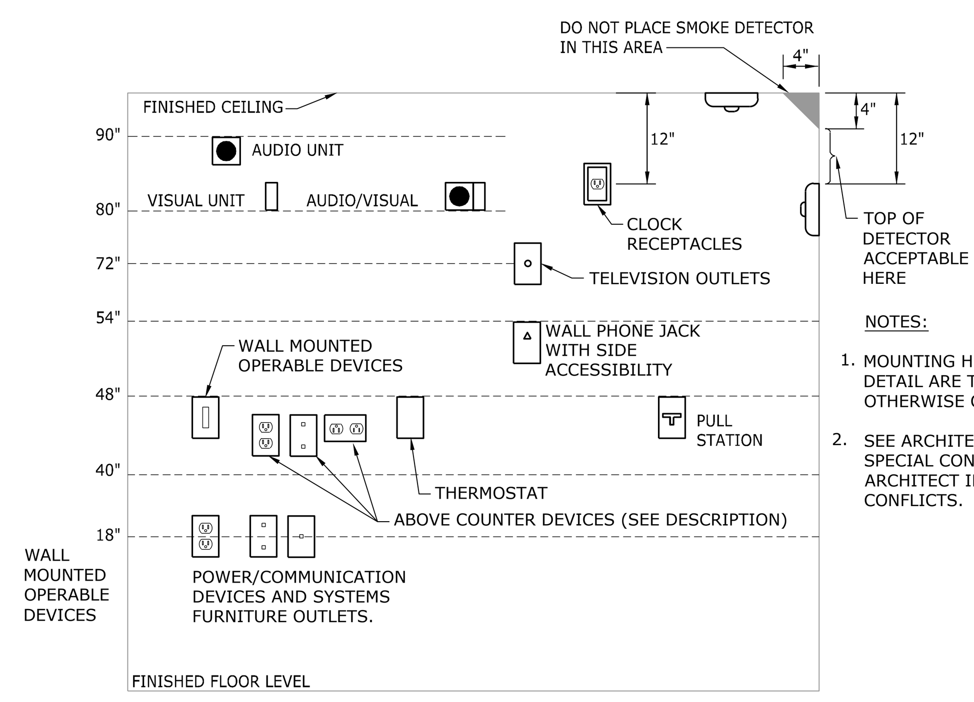

NOTES:

1. MOUNTING HEIGHTS SHOWN IN THIS DETAIL ARE TYPICAL UNLESS SHOWN OTHERWISE ON THE PLANS.
2. SEE ARCHITECTURAL ELEVATIONS FOR SPECIAL CONDITIONS. NOTIFY ARCHITECT IMMEDIATELY OF ANY CONFLICTS.

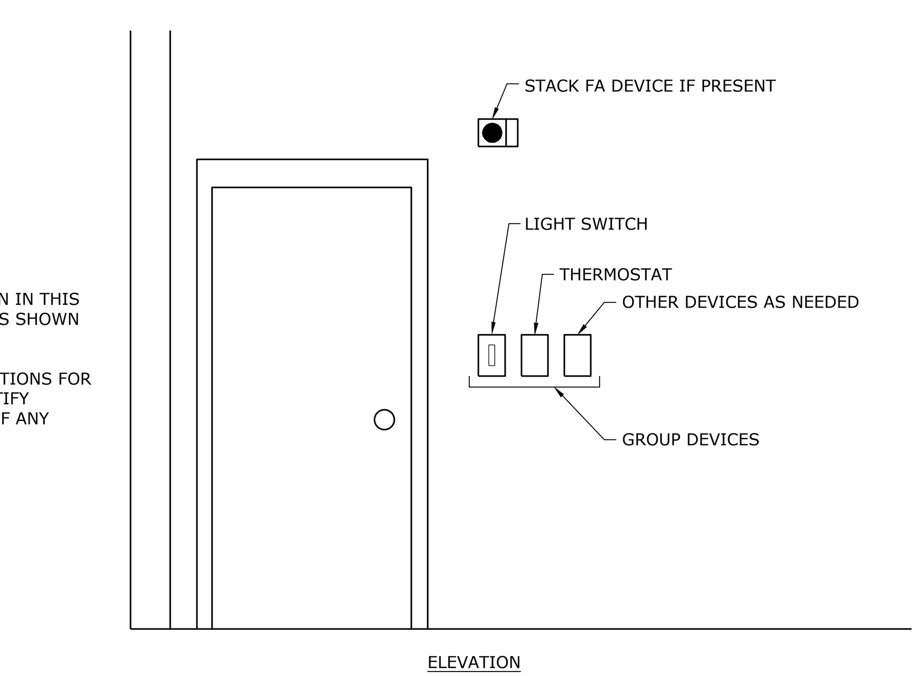

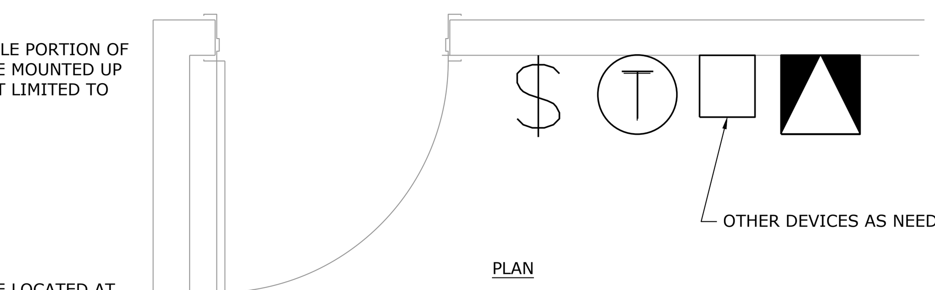

VISUAL UNIT (FIRE ALARM NOTIFICATION DEVICES) DEVICE 80" ABOVE HIGHEST FLOOR LEVEL OR 6" BELOW CEILING WHICH EVER IS LOWER (ADA 2010). BOTTOM OF DEVICE 80" AFF (NFPA).

AUDIO UNIT (FIRE ALARM NOTIFICATION DEVICE) TOP OF UNIT AT LEAST 90" AFF OR 6" BELOW CEILING WHICH EVER IS LOWER (NFPA).

AUDIO/VISUAL UNIT (FIRE ALARM NOTIFICATION DEVICE) LOCATION DETERMINED BY VISUAL UNIT REQUIREMENTS (NFPA).

PULL STATION (FIRE ALARM ACTIVATION DEVICE) HIGHEST OPERABLE PART SHALL NOT BE MORE THAN 48" ABOVE THE FLOOR (FRONT APPROACH) ADA 2010. OPERABLE PART (T-HANDLE) SHALL BE NOT LESS THAN 42" AFF (NFPA).

WALL MOUNTED OPERABLE DEVICES

OPERABLE DEVICES SHALL BE LOCATED 48" AFF. TO THE TOP OF OPERABLE PORTION OF DEVICE. WALL MOUNTED TELEPHONES WITH SIDE ACCESSIBILITY MAY BE MOUNTED UP TO 54" AFF. WALL MOUNTED OPERABLE DEVICES INCLUDE, BUT ARE NOT LIMITED TO THE FOLLOWING:
ADJUSTABLE THERMOSTATS OR C02 SENSORS
LIGHTING SWITCHES/DIMMERS/CONTROLS
PUSH BUTTONS
OTHER CONTROL OR "CALL" DEVICES

POWER/COMMUNICATION DEVICES:

OUTLETS SHALL BE LOCATED 18" AFF TO THE TOP OF THE BOX.
*ABOVE COUNTER DEVICES (PLAN DESIGNATION) SHALL BE LOCATED AT 48" TO THE TOP OF THE BOX, MOUNTED VERTICALLY UNLESS ABOVE CASEWORK. WHEN ABOVE CASEWORK LOCATE THESE DEVICES AT 2" ABOVE BACKSPLASH OF COUNTER TOP MEASURED TO THE BOTTOM OF DEVICE. VERIFY W/ ARCHITECTURAL DETAILS.

*FOR GENERAL MOUNTING REFERENCE ONLY, REFER TO PLANS FOR ALL DEVICE LOCATIONS AND QUANTITIES

WALL MOUNTED DEVICES: MOUNTING HEIGHTS

NO SCALE

System No.W-L-1001
September 07, 2004
(Formerly System No. 147)
F Ratings - 1, 2, 3 and 4 Hr (See Items 2 and 3)
T Ratings - 0, 1, 2, 3, and 4 Hr (See Item 3)
L Rating At Ambient - less than 1 CFM/sq ft
L Rating At 400 F - less than 1 CFM/sq ft

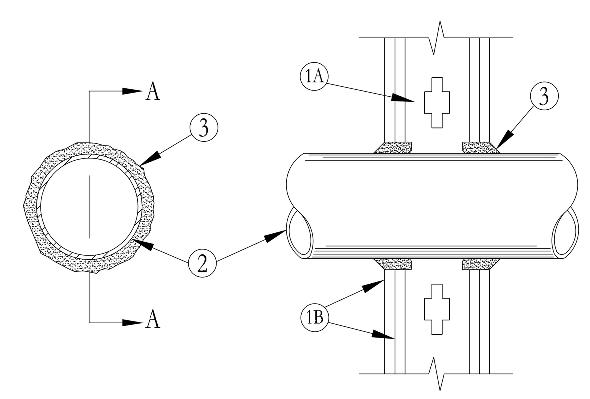

1. **Wall Assembly** - The 1, 2, 3 or 4 hr fire-rated gypsum wallboard/stud wall assembly shall be constructed of the materials and in the manner described in the individual U300 or U400 Series Wall or Partition Designs in the UL Fire Resistance Directory and shall include the following construction features:

A. **Studs** - Wall framing may consist of either wood studs (max 2 h fire rated assemblies) or steel channel studs. Wood studs to consist of nom 2 by 4 in. lumber spaced 16 in. OC with nom 2 by 4 in. lumber end plates and cross braces. Steel studs to be min 3-5/8 in. wide by 1-3/8 in. deep channels spaced max 24 in. OC.
B. **Gypsum Board*** - Nom 1/2 or 5/8 in. thick, 4 ft. wide with square or tapered edges. The gypsum wallboard type, thickness, number of layers, fastener type and sheet orientation shall be as specified in the individual U300 or U400 Series Design in the UL Fire Resistance Directory. Max diam of opening is 26 in.

2. **Through Penetrant** - One metallic pipe, conduit or tubing installed either concentrically or eccentrically within the firestop system. The annular space between pipe, conduit or tubing and periphery of opening shall be min of 0 in. (point contact) to max 2 in. Pipe, conduit or tubing to be rigidly supported on both sides of wall assembly. The following types and sizes of metallic pipes, conduits or tubing may be used:

A. **Steel Pipe** - Nom 24 in. diam (or smaller) Schedule 10 (or heavier) steel pipe.
B. **Iron Pipe** - Nom 24 in. diam (or smaller) service weight (or heavier) cast iron soil pipe, nom 12 in diam (or smaller) or Class 50 (or heavier) ductile iron pressure pipe.
C. **Conduit** - Nom 6 in. diam (or smaller) steel conduit or nom 4 in diam (or smaller) steel electrical metallic tubing
D. **Copper Tubing** - Nom 6 in. diam (or smaller) Type L (or heavier) copper tubing
E. **Copper Pipe** - Nom 6 in. diam (or smaller) Regular (or heavier) copper pipe.
F. **Through Penetrating Product* - Flexible Metal Piping** - The following types of steel flexible metal gas piping may be used:

1. Nom 2 in. diam (or smaller) steel flexible metal gas piping. Plastic covering on piping may or may not be removed on both sides of floor or wall assembly.
OMEGA FLEX INC

2. Nom 1 in. diam (or smaller) steel flexible metal gas piping. Plastic covering on piping may or may not be removed on both sides of floor or wall assembly.
TITEFLEX CORP,
A BUNDY CO

3. Nom 1 in. diam (or smaller) steel flexible metal gas piping. Plastic covering on piping may or may not be removed on both sides of floor or wall assembly.
WARD MFG INC

3. **Fill,Void or Cavity Material* - Caulk or Sealant** - Min 5/8. 1-1/4,1-7/8 and 2-1/2 in. thickness of caulk or sealant for 1, 2, 3 and 4 hr rated assemblies, respectively, applied within annulus, flush with both surfaces of wall. Min 1/4 in. diam bead of caulk or sealant applied to gypsum board/penetrant interface at point contact location on both sides of wall. The hourly F Rating of the firestop system is dependent upon the hourly fire rating of the wall assembly in which it is installed, as shown in the following table. The hourly T Rating of the firestop system is dependent upon the type or size of the pipe or conduit and the hourly fire rating of the wall assembly in which it is installed, as tabulated below:

Max Pipe or Conduit Diam in.	F Rating Hr	T Rating Hr
1	1 or 2	0+, 1 or 2
1	3 or 4	3 or 4
4	1 or 2	0
6	3 or 4	0
12	1 or 2	0

+When copper pipe is used, T Rating is 0 hr.

3M COMPANY - CP 25WB+ caulk or FB-3000 WT sealant,

*Bearing the UL Classification Marking

This material was extracted by 3M Fire Protection Products from the 2004 edition of the UL Fire Resistance Directory

System No. C-AJ-5001
Sepember 03, 2004
(Formerly System No. 91)
F Ratings - 1-1/2, 2 and 3 Hr (See Item 4)
T Ratings - 0, 1/2, 3/4 and 1 Hr (See Items 1A and 4)
L Rating At Ambient - 2 CFM per sq ft
L Rating At 400 F - less than 1 CFM per sq ft

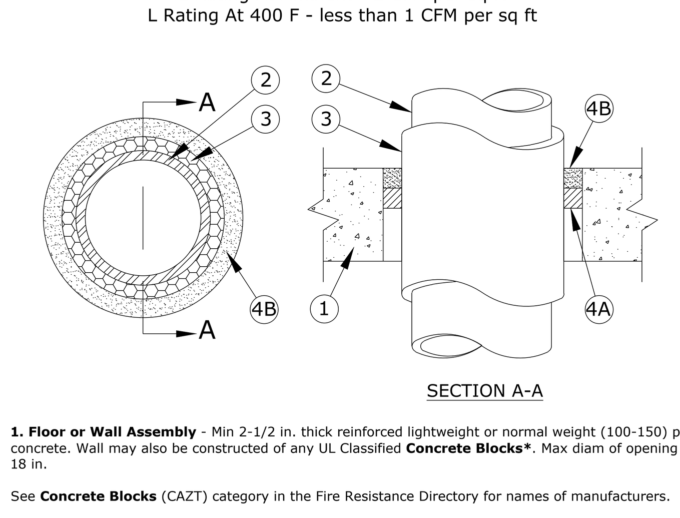

1. Floor or Wall Assembly - Min 2-1/2 in. thick reinforced lightweight or normal weight (100-150) pcf concrete. Wall may also be constructed of any UL Classified **Concrete Blocks***. Max diam of opening is 18 in.

See **Concrete Blocks** (CAZT) category in the Fire Resistance Directory for names of manufacturers.

1A. Steel Sleeve (Optional, not shown) - Nom 10 in. (or smaller) Schedule 10 (or heavier) steel sleeve cast or grouted into floor or wall assembly. Sleeve may extend a max of 2 in. above top of floor or beyond either surface of wall.

T Rating is 0 Hr when sleeve is used.

2. Through Penetrant - Nom 4 in. diam (or smaller) Type L (or heavier) copper pipe, nom 12 in. diam (or smaller) service weight (or heavier) cast iron soil pipe, nom 12 in. diam (or smaller) Class 50 (or heavier) ductile iron pressure pipe or nom 12 in. diam (or smaller) Schedule 10 (or heavier) steel pipe centered in the opening and rigidly supported on both sides of the floor or wall assembly.

3. Pipe Covering* - Nom 1/2 to 2 in. thick hollow cylindrical heavy density glass fiber units jacketed on the outside with an all service jacket. Longitudinal joints sealed with metal fasteners or factory-applied self sealing lap tape. Transverse joints secured with metal fasteners or with butt strip tape supplied with the product.

See **Pipe and Equipment Covering - Materials*** (BRGU) category in Building Materials Directory for names of manufacturers. Any pipe covering material meeting the above specifications and bearing the UL Classification Marking with a Flame Spread Index of 25 or less and a Smoke Developed Index of 50 or less may be used.

4. Firestop System - The details of the firestop system shall be as follows:

A. **Packing Material** - Min 1 in. thickness of firmly packed mineral wool batt insulation used as a permanent form. Packing material to be recessed from top surface of floor or sleeve or from both surfaces of wall as required to accommodate the required thickness of caulk fill material (Item B).
B. **Fill,Void or Cavity Material* - Caulk or sealant** - Applied to fill the annular space flush with the top surface of the floor or sleeve or flush with both surfaces of wall. When nom pipe covering thickness is 2 in., min thickness of caulk or sealant fill material is 2 in. When nom pipe covering thickness is 1-1/2 in. or less, min thickness of caulk or sealant fill material is 1 in.

The hourly F and T Ratings of the firestop system are dependent upon the thickness of the floor or wall, the size of pipe, the thickness of pipe covering material and the size of the annular space (between the pipe covering material and the edge of the circular through opening), as shown in the following table:

Min Floor or Wall Thkns in.	Max Pipe Diam in.	Nom Pipe Covering Thkns in.	Annular Space in.	F Rating Hr	T Rating Hr
2-1/2	4	1 or 1-1/2	1/2 to 2-3/8	2	1
4-1/2	4	2	1/4 to 3-5/8	2	1-1/2
2-1/2	12	1	1/2 to 1-1/2	2	1/2
4-1/2	12	1	1/2 to 2-3/8	3	1
2-1/2	12	1/2	1/2 to 2-3/8	2	0

3M COMPANY - CP 25WB+ caulk or FB-3000 WT sealant.

*Bearing the UL Classification Marking

This material was extracted by 3M Fire Protection Products from the 2004 edition of the UL Fire Resistance Directory

SYSTEM NO C-AJ-1014
(FORMERLY SYSTEM NO. 133)
F RATING--2 HR
T RATING--0 HR
L RATING AT AMBIENT--LESS THAN 1 CFM/sq ft (SEE ITEM 4)
L RATING AT 400° F--LESS THAN 1 CFM/sq ft (SEE ITEM 4)

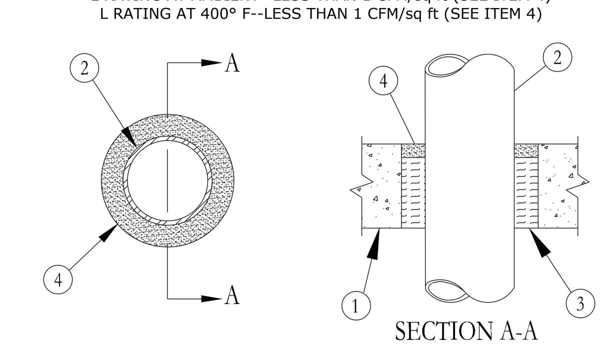

1. **Floor or Wall Assembly** - Min 3-1/4 in. thick reinforced lightweight or normal weight (100-150 pcf) concrete. Wall may also be constructed of any UL Classified Concrete Blocks*. Max diam of circular opening is 6 in.

See **Concrete Blocks (CAZT)** category in the Fire Resistance Directory for names of manufacturers.

2. **Through Penetrants** - One metallic pipe or conduit to be centered within the firestop system. A nom annular space of 3/4 in. is required within the firestop system. Pipe or conduit to be rigidly supported on both sides of floor or wall assembly. The following types and sizes of metallic pipes or conduits may be used:

A. **Steel Pipe** - Nom 4 in. diam (or smaller) Schedule 10 (or heavier) steel pipe.

B. **Conduit** - Nom 4 in. diam (or smaller) steel electrical metallic tubing or steel conduit.

3. **Packing Material** - Min 4 pcf mineral wool batt insulation firmly packed into opening as a permanent form. Packing material to be recessed from top surface of floor or from both surfaces of wall as require to accommodate the required thickness of fill material. Min thickness of packing material in floors and walls to be 2-3/4 in. and 2-1/4 in., respectively.

4. **Fill,Void or Cavity Material*** - **Sealant** - Min 1/2 in. thickness of fill material applied within annulus, flush with top surface of floor or with both surfaces of wall. As an alternate, the permanent forming material (Item 3) may be omitted if the fill material thickness is increased to a min 1-1/2 in.

MINNESOTA MINING & MFG CO - Types FB-2000 or FB-2000+.
(Note: L Ratings apply only when FB-2000+ is used.)

*Bearing the UL Classification Marking

This material was extracted by 3M Fire Protection Products from the 2002 edition of the UL Fire Resistance Directory

FIRE STOPPING DETAILS

NO SCALE

hollis + miller architects®
we design the future®
1828 Walnut Street Suite 922
Kansas City, MO 64108
T 816.442.7700
115 Wilcox Street Suite 210
Castle Rock, CO 80104
T 720.949.1689
HOLLISANDMILLER.COM

Hollis + Miller Architects
Missouri State Certificate of Authority
Architecture # 0000161
Structure # 2006031333

Bob D Campbell
Structural Engineer
State Certificate of Authority #000442
4338 Bellview Ave.
Kansas City, MO 64111
816.531.4144 phone

Smith & Boucher Inc.
Mechanical, Electrical & Plumbing
State Certificate of Authority #EGC000178
25618 W 103rd Street
Olathe, KS 66061
913.345.2127 phone

MKEC Engineering, Inc.
Civil Engineer
State Certificate of Authority #
Engineering: 2001009364
Landscaping: 2006027139
Surveying: 2006027138
11827 W 112th Street, Suite 200
Overland Park, KS 66210
913.317.9390 phone

Peerbolte Creative
Theatrical Consultant
109 E Pine St.
Warrensburg, MO 64093-0752
660.429.1383 phone

Avant Acoustics
AV/Acoustics Consultant
14827 West 95th St.
Lenexa, KS 66215
913.888.9111 phone

Discovery Middle School Storm Shelter Addition
Liberty School District
800 Midjay Dr, Liberty, MO 64068

Conformed Construction Documents

REVISIONS:

#	Description	Date

STATE OF MISSOURI
RYAN JEROD DIEDIKER
NUMBER PE-2015006511
REGISTERED PROFESSIONAL ENGINEER
10/11/23

The Professional Architects seal affixed to this sheet applies only to the material and items shown on this sheet. All drawings, instruments or other documents not exhibiting this seal shall not be considered prepared by this architect, and this architect expressly disclaims any and all responsibility for such plan, drawings, or documents not exhibiting this seal.

JOB NO: 23018
DRAWN BY: SBI
CHECKED BY: RJD
DATE: 10.11.2023

smith & boucher engineers
25618 west 103rd St olathe, ks 66061
phone 913.345.2127 fax 913.345.0617
project number 2314702

ME401

MECHANICAL AND ELECTRICAL - DETAILS

Please consider the environment before printing this.

PROJECT NAME: 2314702 Liberty SD 2023 Discovery MS Gym Addition & LED Lighting
AUTOCAD FILE LOCATION \ NAME: X:\23\23147\2314702\Drawings\01-2314702_ME401.dwg
LAST CORRECTION BY ◆ DATE ◆ TIME: Bootyc Wednesday, October 11, 2023 9:16:56 AM
PLOTTED BY ◆ DATE ◆ TIME: Booty Charles Wednesday, October 11, 2023 9:44:04 AM

NUMBERED NOTES:

1. QUICKSLING STAND, SECURE TO ROOF DECK.

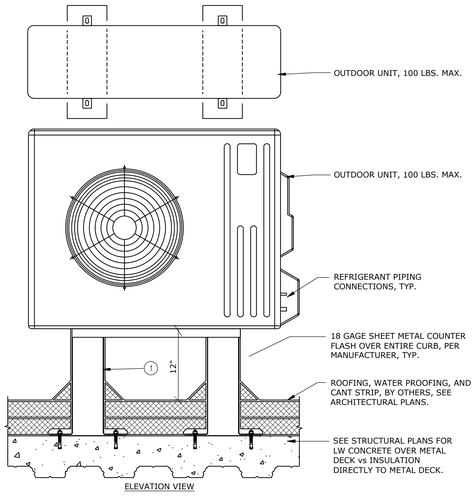

OUTDOOR SPLIT SYSTEM MOUNTING DETAIL
NOT TO SCALE

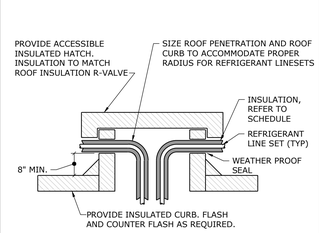

REFRIGERANT PIPING ROOF PENETRATION DETAIL
NOT TO SCALE

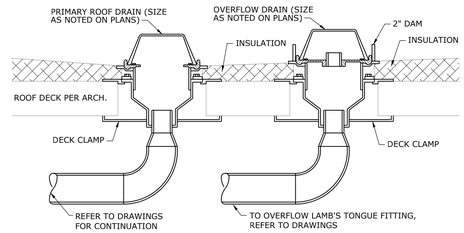

ROOF DRAIN WITH OVERFLOW
NOT TO SCALE

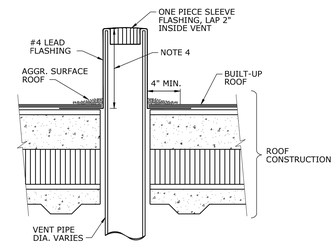

NOTES:
1. MAX. SIZE OF ROOF OPENING 1" LARGER THAN OUTSIDE DIA. OF VENT PIPE.
2. VENT PIPE SHALL NOT BE INSTALLED WITHIN 5'-0" OF ROOF VALLEYS OR 2'-0" FROM ANY VERTICAL SURFACE.
3. VENT PIPE SHALL TERMINATE NOT LESS THAN 10'-0" FROM ANY AIR INTAKE OR VENT SHAFT.
4. MINIMUM HEIGHT TO BE SET ABOVE EXPECTED SNOW ACCUMULATION BUT NO LOWER THAN 8".

SECTION THRU PLUMBING VENT
NOT TO SCALE

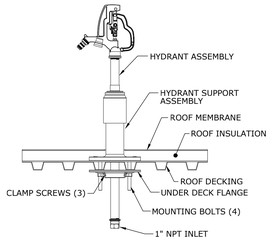

ROOF HYDRANT DETAIL
NOT TO SCALE

PIPE SUPPORT SPACING:
- 1-1/2" PIPE AND SMALLER - 6 FOOT SPACING.
- 2" PIPE AND LARGER - 10 FOOT SPACING.

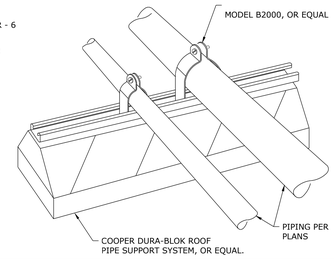

ROOF PIPING SUPPORT DETAIL
NOT TO SCALE

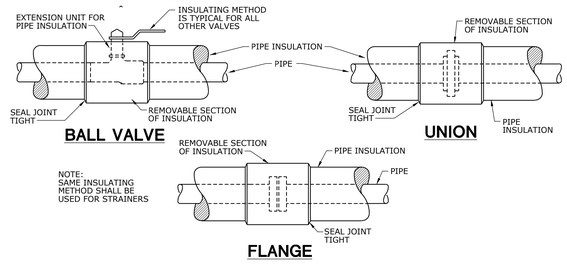

PIPE INSULATION DETAILS
NOT TO SCALE

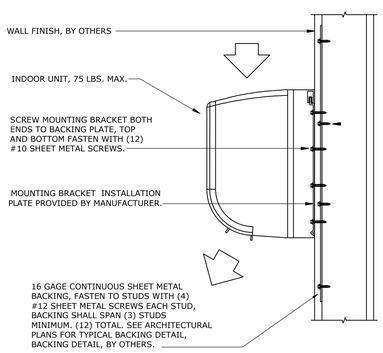

NOTES:

SEE MANUFACTURER'S INSTALLATION INSTRUCTIONS FOR COMPLETE MOUNTING DETAILS.

INDOOR SPLIT SYSTEM MOUNTING DETAIL
NOT TO SCALE

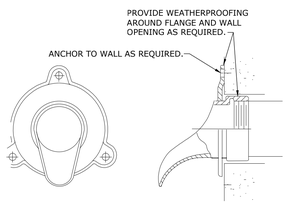

* REFER TO ARCHITECTURAL ELEVATIONS FOR MOUNTING HEIGHTS.

DOWNSPOUT NOZZLE DETAIL
NOT TO SCALE AKA – LAMB'S TONGUE

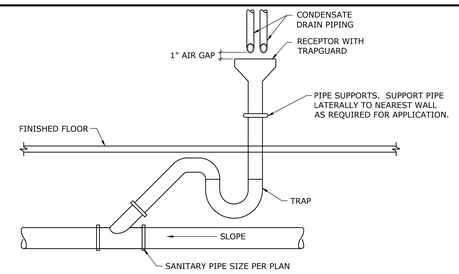

INDIRECT CONNECTION TO SANITARY DETAIL
NOT TO SCALE

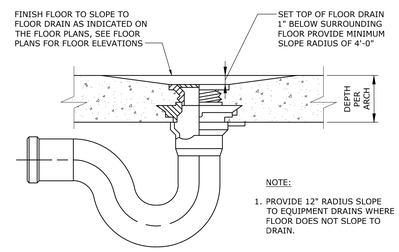

NOTE:
1. PROVIDE 12" RADIUS SLOPE TO EQUIPMENT DRAINS WHERE FLOOR DOES NOT SLOPE TO DRAIN.

FLOOR DRAIN WITH SWEEP
NOT TO SCALE

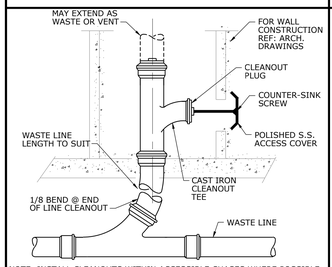

NOTE: INSTALL CLEANOUTS WITHIN ACCESSIBLE CHASES WHERE POSSIBLE

WALL CLEANOUT
NOT TO SCALE

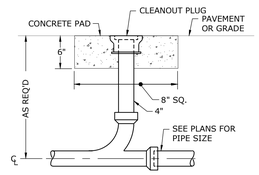

GRADE CLEANOUT DETAIL
NOT TO SCALE

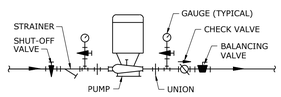

IN-LINE PUMP DETAIL
NOT TO SCALE

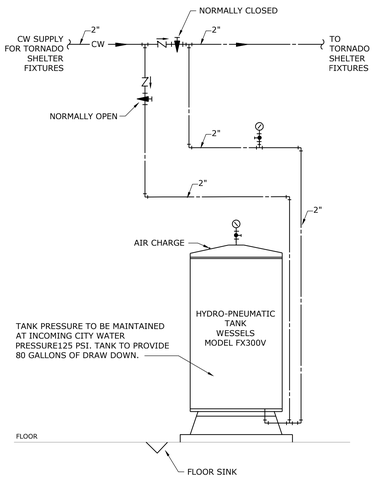

TORNADO SHELTER WATER SUPPLY SYSTEM DETAIL
NOT TO SCALE

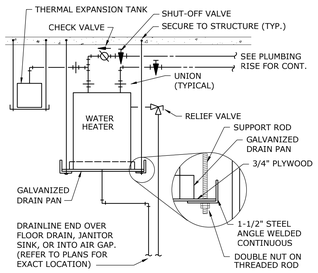

SUSPENDED WATER HEATER DETAIL
NOT TO SCALE

hollis + miller architects
we design the future
1828 Walnut Street Suite 922
Kansas City, MO 64108
t 816.442.7700
115 Wilcox Street Suite 210
Castle Rock, CO 80104
t 720.949.1685
HOLLISANDMILLER.COM

Hollis + Miller Architects
Missouri State Certificate of Authority
Architecture # 0000161
Structure # 2006031333

Bob D Campbell
Structural Engineer
State Certificate of Authority #000442
4338 Bellview Ave.
Kansas City, MO 64111
816.531.4144 phone

Smith & Boucher Inc.
Mechanical, Electrical & Plumbing
State Certificate of Authority #EGC000178
25618 W 103rd Street
Olathe, KS 66061
913.345.2127 phone

MKEC Engineering, Inc.
Civil Engineer
State Certificate of Authority #
Engineering: 2001009364
Landscaping: 2006027139
Surveying: 2006027138
11827 W 112th Street, Suite 200
Overland Park, KS 66210
913.317.9390 phone

Peerbolte Creative
Theatrical Consultant
109 E Pine St.
Warrensburg, MO 64093-0752
660.429.1383 phone

Avant Acoustics
AV/Acoustics Consultant
14827 West 95th St.
Lenexa, KS 66215
913.888.9111 phone

Discovery Middle School Storm Shelter Addition
Liberty School District
800 Midjay Dr, Liberty, MO 64068

Conformed Construction Documents

REVISIONS:

#	Description	Date

STATE OF MISSOURI
RYAN JEROD DIEDIKER
NUMBER A-2015006411
PROFESSIONAL ENGINEER
10/11/23

The Professional Architects and affiliated to this sheet applies only to the material and items shown on this sheet. All drawings, instruments or other documents not exhibiting this seal shall not be considered prepared by this architect, and this architect expressly disclaims any and all responsibility for such plan, drawings, or documents not exhibiting this seal.

JOB NO: 23018
DRAWN BY: SBI
CHECKED BY: RJD
DATE: 10.11.2023

smith & boucher engineers
25618 west 103rd St olathe, ks 66061
phone 913.345.2127 fax 913.345.0617
project number 2314702

ME402

MECHANICAL AND ELECTRICAL - DETAILS

Please consider the environment before printing this.

2314702 Liberty SD 2023 Driveway MS Gym Addition & LED Lighting
X:\23\2314702\Drawings\01-2314702_ME402.dwg
Booty Charles Wednesday, October 11, 2023 9:17:19 AM
Wednesday, October 11, 2023 9:44:16 AM
PROJECT NAME:
AUTOCAD FILE LOCATION \ NAME:
LAST CORRECTION BY◆DATE◆TIME:
PLOTTED BY◆DATE◆TIME:

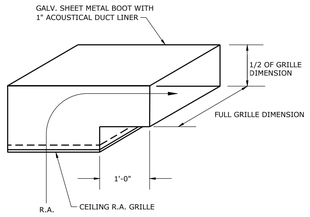

RETURN AIR BOOT DETAIL
NOT TO SCALE

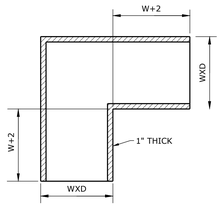

AIR TRANSFER BOOT DETAIL
NOT TO SCALE

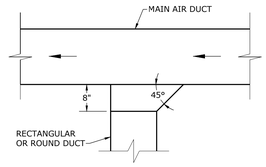

TYPICAL BRANCH DUCT TAKEOFF
NOT TO SCALE

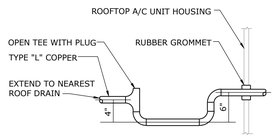

RTU-COND. DRAIN P-TRAP
NOT TO SCALE

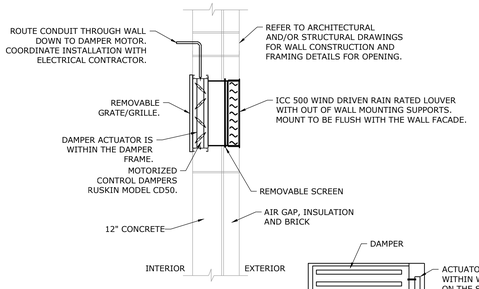

TORNADO SHELTER LOUVER ASSEMBLY
SIDE VIEW

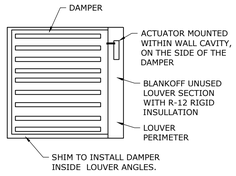

TORNADO SHELTER LOUVER ASSEMBLY
FRONT VIEW

NOTES:

1. REFER TO MANUFACTURER'S INSTALLATION DETAILS FOR INFORMATION ON LOUVER SPECIFICATIONS.
2. SEAL ALL JOINTS AND SEAMS OF PLENUM AND DUCT TO PROVIDE WATER TIGHT CONSTRUCTION.
3. PROVIDE WEEP HOLES TO ALLOW FOR PROPER DRAINAGE.
4. DAMPER OPERATION: IN THE EVEN OF A TORNADO, UPON A MANUAL INPUT VIA LOCAL SWITCH, THE DAMPER SHALL BE OPENED TO PROVIDE VENTILATION AIR TO THE SPACE ONLY AFTER THE TORNADO HAS PASSED.
5. PROVIDE STAND ALONE CONTROL SYSTEM WITHIN ICC 500 STORM SHELTER WITH 2 HOUR BATTERY BACK UP FOR ICC 500 CONTROL DAMPER AND ASSOCIATED EQUIPMENT.
6. INSTALL MOTORIZED DAMPER ACTUATOR MOTOR IN THE AIR STREAM.

TORNADO SHELTER VENTILATION DETAIL
NOT TO SCALE

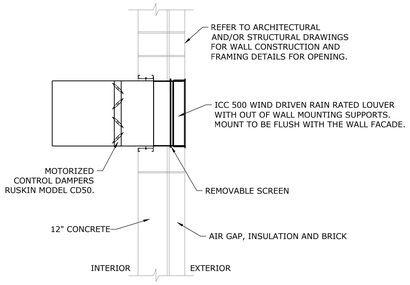

TORNADO SHELTER LOUVER ASSEMBLY

NOTES:

1. REFER TO MANUFACTURER'S INSTALLATION DETAILS FOR INFORMATION ON LOUVER SPECIFICATIONS.
2. SEAL ALL JOINTS AND SEAMS OF PLENUM AND DUCT TO PROVIDE WATER TIGHT CONSTRUCTION.
3. PROVIDE WEEP HOLES TO ALLOW FOR PROPER DRAINAGE.
4. DAMPER OPERATION: IN THE EVEN OF A TORNADO, UPON A MANUAL INPUT VIA LOCAL SWITCH, THE DAMPER SHALL BE OPENED TO PROVIDE VENTILATION AIR TO THE SPACE ONLY AFTER THE TORNADO HAS PASSED.
5. PROVIDE STAND ALONE CONTROL SYSTEM WITHIN ICC 500 STORM SHELTER WITH 2 HOUR BATTERY BACK UP FOR ICC 500 CONTROL DAMPER AND ASSOCIATED EQUIPMENT.

TORNADO SHELTER VENTILATION DETAIL
NOT TO SCALE

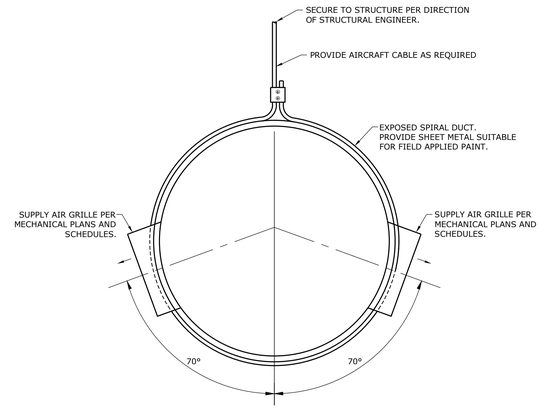

EXPOSED ROUND DUCT WITH ANGLED DIFFUSERS
NOT TO SCALE

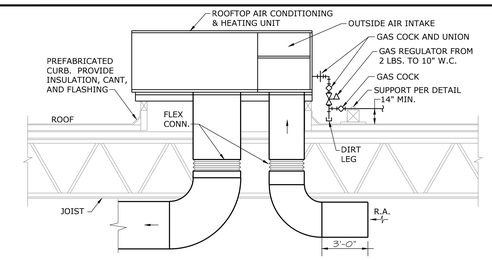

ROOFTOP UNIT DETAIL
NOT TO SCALE

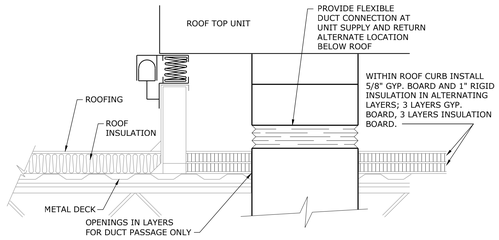

SECTION THRU ROOF CURB
NOT TO SCALE

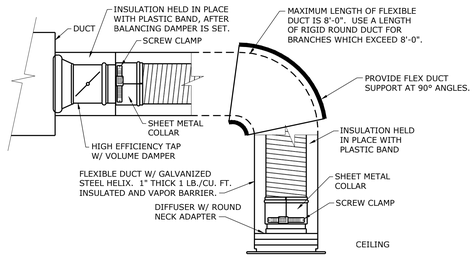

FLEXIBLE BRANCH DUCT DETAIL
NOT TO SCALE

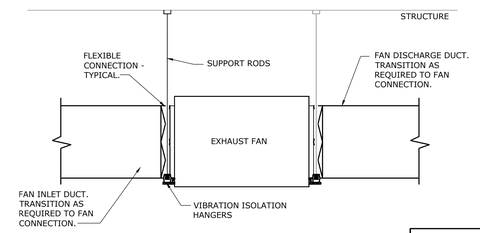

IN-LINE EXHAUST FAN DETAIL
NOT TO SCALE

smith & boucher engineers
25618 west 103rd St olathe, ks 66061
phone 913.345.2127 fax 913.345.0617
project number 2314702

hollis + miller architects
we design the future
1828 Walnut Street Suite 922
Kansas City, MO 64108
t 816.442.7700
115 Wilcox Street Suite 210
Castle Rock, CO 80104
t 720.949.1689
HOLLISANDMILLER.COM
Hollis + Miller Architects
Missouri State Certificate of Authority
Architecture # 0000161
Structure # 2006031333

Bob D Campbell
Structural Engineer
State Certificate of Authority #000442
4338 Bellview Ave.
Kansas City, MO 64111
816.531.4144 phone

Smith & Boucher Inc.
Mechanical, Electrical & Plumbing
State Certificate of Authority #EGC000178
25618 W 103rd Street
Olathe, KS 66061
913.345.2127 phone

MKEC Engineering, Inc.
Civil Engineer
State Certificate of Authority #
Engineering: 2001009364
Landscaping: 2006027139
Surveying: 2006027138
11827 W 112th Street, Suite 200
Overland Park, KS 66210
913.317.9390 phone

Peerbolte Creative
Theatrical Consultant
109 E Pine St.
Warrensburg, MO 64093-0752
660.429.1383 phone

Avant Acoustics
AV/Acoustics Consultant
14827 West 95th St.
Lenexa, KS 66215
913.888.9111 phone

Discovery Middle School Storm Shelter Addition
Liberty School District
800 Midjay Dr, Liberty, MO 64068

Conformed Construction Documents

REVISIONS:

#	Description	Date

STATE OF MISSOURI
RYAN JEROD DIEDIKER
NUMBER A-2015006611
PROFESSIONAL ENGINEER
10/11/23

"The Professional Architects seal affixed to this sheet applies only to the material and items shown on this sheet. All shop/ship, instruments or other documents not exhibiting this seal shall not be considered prepared by this architect, and this architect expressly disclaims any and all responsibility for such plan, drawings, or documents not exhibiting this seal."

JOB NO: 23018
DRAWN BY: SBI
CHECKED BY: RJD
DATE: 10.11.2023

ME403

Please consider the environment before printing this.

PROJECT NAME: 2314702 Olathe, SD 2023 Elementary MS Gym Addition & LED Lighting
AUTOCAD FILE LOCATION \\ NAME: X:\23\2314702\Drawing\01 - 2314702_ME403.dwg
LAST CORRECTION BY ◆ DATE ◆ TIME: Booty: Wednesday, October 11, 2023 9:17:46 AM
PLOTTED BY ◆ DATE ◆ TIME: Booty Charles Wednesday, October 11, 2023 9:44:29 AM

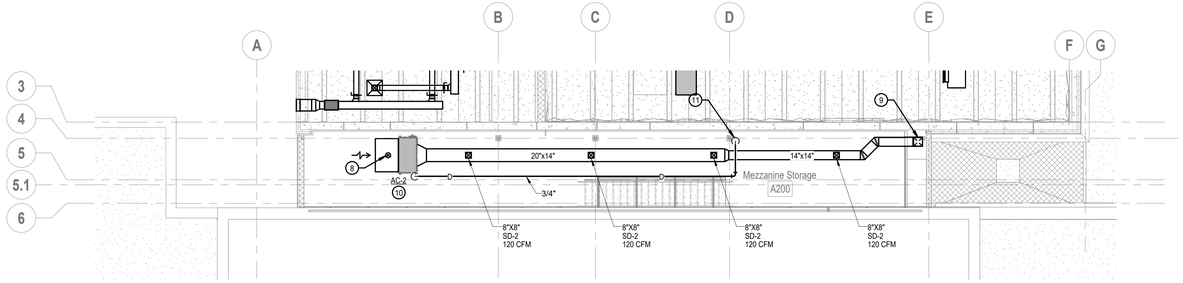

N1 Scale 1/8" = 1'-0" HVAC PLAN - MEZZANINE - AREA A

8' 4' 0' 8'

PROJECT NORTH TRUE NORTH

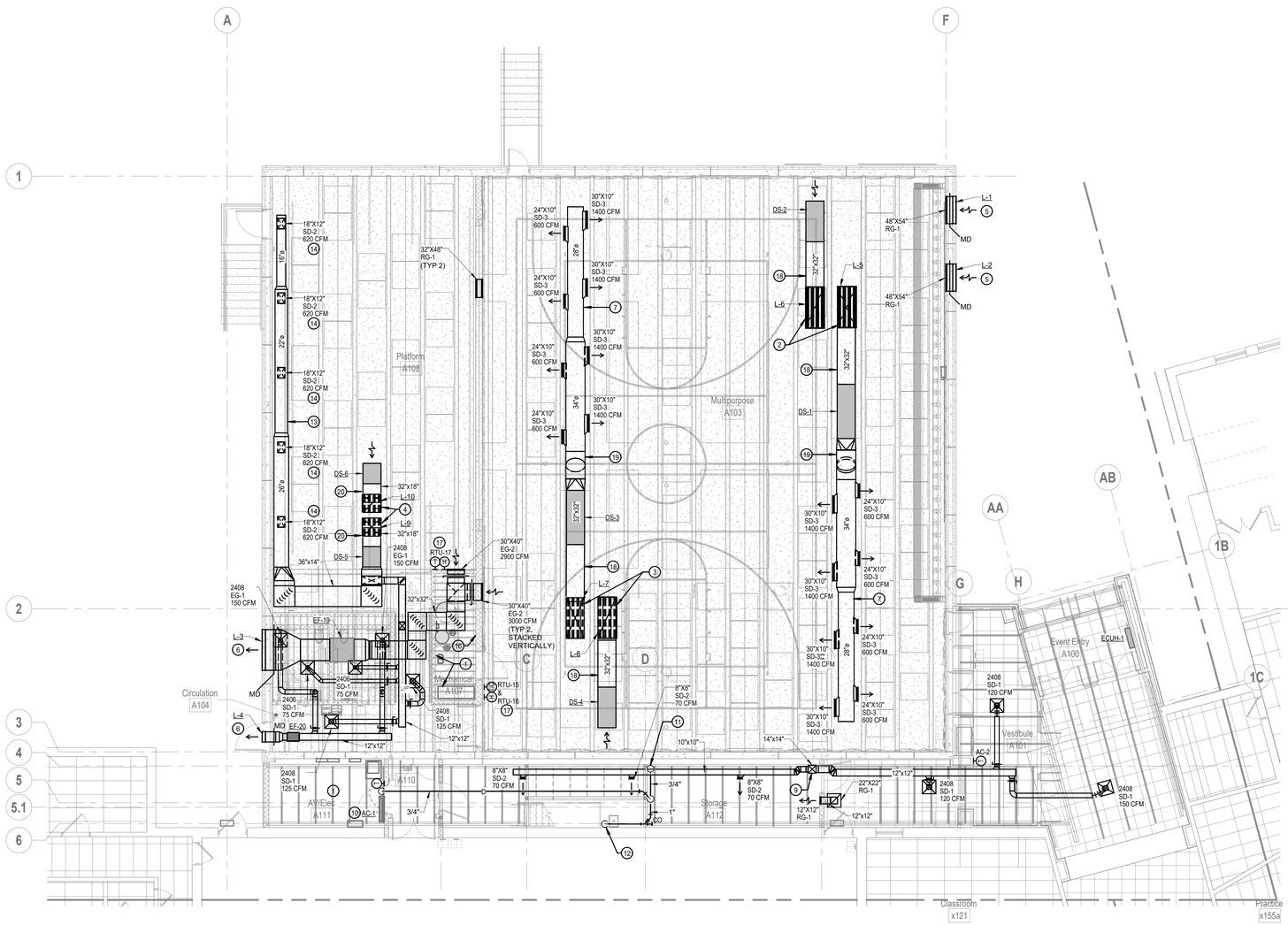

A1 Scale 1/8" = 1'-0" HVAC PLAN - LEVEL 1 - AREA A

8' 4' 0' 8'

PROJECT NORTH TRUE NORTH

SHEET KEYNOTE LEGEND

GENERAL NOTES:

1. INFORMATION SHOWN ON THE DRAWINGS IS INTENDED TO CONVEY SCOPE AND IS ARRANGED FOR DRAWING CLARITY. IT IS NOT TO BE TAKEN AS AN AS-BUILT CONDITION. THE SYSTEM INSTALLATION SHALL BE COORDINATED WITH STRUCTURE, CEILINGS, WALLS, AND ALL OTHER TRADES TO PROVIDE FOR A COMPLETE AND WORKING SYSTEM.
2. ALL DUCTWORK IS SHOWN DIAGRAMMATICALLY AND DOES NOT INCLUDE ALL OFFSETS, DROPS, AND RISES. CAREFULLY COORDINATE DUCT AND PIPE ROUTING WITH STRUCTURE AS WELL AS ALL OTHER TRADES TO MAINTAIN EQUIPMENT CLEARANCES, EQUIPMENT ACCESSIBILITY, DESIRED CEILING HEIGHTS, AND AESTHETICS. THE CONTRACTOR SHALL INCLUDE ANY NEEDED OFFSETS AND CHANGES OF DIRECTION IN THE BID PRICING.
3. COORDINATE ALL DUCT PENETRATIONS WITH STRUCTURAL PRIOR TO CUTTING FLOORS OR BEARING WALLS.
4. WALL MOUNTED DEVICES SUCH AS THERMOSTATS, TEMPERATURE SENSORS, HUMIDITY SENSORS, AND PRESSURE SENSORS ARE SHOWN ON PLANS FOR CLAIRTY AND GENERAL REFERENCE OF LOCATIONS. LOCATIONS SHOW ARE NOT TO BE CONSIDERED THE EXACT MOUNTING LOCATION. COORDINATE THE INSTALLATION OF ALL WALL MOUNTED DEVICES WITH THE ARCHITECTURAL ELEVATIONS AND OTHER TRADES WALL MOUNTED DEVICES. GROUP THE INSTALLATION OF ALL THE DEVICES TO THE EXTENT POSSIBLE AND LOCATED DEVICES SUCH THAT THEY DO NOT CONFLICT WITH MILL WORK, TELEVISIONS, FURNITURE, TEACHING BOARDS, AND OTHER SIMILAR OBSTRUCTIONS.
5. PROVIDE FIRESTOPPING AT PENETRATIONS OF ALL RATED WALLS. REFER TO CODE PLANS FOR LOCATIONS OF RATED WALLS.
6. FURNISH ALL EXPOSED DUCTWORK IN FINSHED SPACES WITH PAINTABLE FINISH. PROVIDE A TRIM FLANGE AT WALL PENETRATIONS OF EXPOSED DUCTWORK, FINISH BY ARCHITECT.
7. DUCT SIZES SHOWN ARE SHEET METAL DIMENSIONS. WHERE DUCT LINER IS REQUIRED, DUCT SIZES ARE NOT REQUIRED TO BE INCREASED TO ACCOUNT FOR LINER.
8. ALL SERVICES SHOWN WITH HALF TONE LINE WEIGHT ARE EXISTING.

PLAN NOTES:

1. DO NOT ROUTE DUCTWORK OR PIPING OVER ELECTRICAL PANELS AND EQUIPMENT.
2. PROVIDE 72"x32" SUPPLY AND RETURN DUCTS THROUGH ROOF TO RTU-15. PROVIDE ICC 500 RATED LOUVER AT EACH ROOF PENETRATION. PROVIDE TRANSITION TO FULL-SIZE UNIT CONNECTIONS WITHIN THE CURB.
3. PROVIDE 72"x32" SUPPLY AND RETURN DUCTS THROUGH ROOF TO RTU-16. PROVIDE ICC 500 RATED LOUVER AT EACH ROOF PENETRATION. PROVIDE TRANSITION TO FULL-SIZE UNIT CONNECTIONS WITHIN THE CURB.
4. PROVIDE 32"x32" SUPPLY AND RETURN DUCTS THROUGH ROOF TO RTU-17. PROVIDE ICC 500 RATED LOUVER AT EACH ROOF PENETRATION. PROVIDE TRANSITION TO FULL-SIZE UNIT CONNECTIONS WITHIN THE CURB.
5. ICC 500 AND WIND-DRIVEN RAIN INTAKE LOUVER ASSEMBLY. REFER TO SCHEDULE AND DETAIL. REFER TO ARCHITECTURAL DRAWINGS FOR ELEVATION.
6. ICC 500 AND WIND-DRIVEN RAIN EXHAUST LOUVER ASSEMBLY. REFER TO SCHEDULE AND DETAIL. REFER TO ARCHITECTURAL DRAWINGS FOR ELEVATION.
7. SLOPE DUCT WITH STRUCTURE.
8. 8" DIAMETER OUTSIDE AIR DUCT UP THROUGH ROOF.
9. 14"X14" SUPPLY DUCT BETWEEN MEZZANINE AND FIRST FLOOR. ROUTE WITHIN CHASE.
10. PROVIDE REFRIGERATION LINESETS THROUGH THE ROOF BETWEEN THE INDOOR UNIT AND OUTDOOR CONDENSING UNIT. REFER TO THE MANUFACTURER'S REQUIREMENTS FOR PIPE SIZES AND QUANTITY.
11. ROUTE 3/4" CONDENSATE DRAIN BETWEEN MEZZANINE AND FIRST FLOOR.
12. ROUTE 1" CONDENSATE DRAIN UNDER THE STAIRS AND DOWN ALONG THE FACE OF THE WALL AND DISCHARGE OVER THE HUB DRAIN WITH AIR GAP.
13. COORDINATE DUCT ROUTING WITH STAGE EQUIPMENT.
14. MOUNT REGISTER ON THE BOTTOM OF THE DUCT AND POSITION THE DEFLECTION BLADES TO DIRECT THE AIRFLOW TOWARDS THE EXTERIOR WALL AND AWAY FROM THE CURTAINS.
15. NOT USED.
16. PROVIDE STORM SHELTER VENTILATION SWITCH AND SIGNAGE THAT INDICATES SWITCH WILL ACTIVATE SYSTEM TO PROVIDE EMERGENCY VENTILATION IN THE EVENT OF A TORNADO. REFER TO M301.
17. PROVIDE GYM-RATED, LOCKABLE COVER/CAGE OVER SENSORS.
18. INSTALL DUCTWORK TIGHT TO STRUCTURE WITHIN THE CONCRETE TEES. PROVIDE 7'-6" OF STRAIGHT DUCT BETWEEN THE ELBOW AND DUCT SILENCER.
19. TRANSITION DUCT DOWN SO AIR DEVICES CAN BE INSTALLED BELOW THE CONCRETE TEES. INSTALL REGISTERS AT AN ANGLE PER THE EXPOSED ROUND DUCT WITH ANGLED DIFFUSERS DETAIL.
20. INSTALL DUCTWORK TIGHT TO STRUCTURE WITHIN THE CONCRETE TEES. PROVIDE 3'-0" OF STRAIGHT DUCT BETWEEN THE ELBOW AND DUCT SILENCER.

smith & boucher engineers
25618 west 103rd St olathe, ks 66061
phone 913.345.2127 fax 913.345.0617
project number 2314702

KEY PLAN

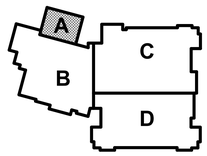

hollis + miller architects
we design the future
1828 Walnut Street Suite 922
Kansas City, MO 64108
t 816.442.7700
115 Wilcox Street Suite 210
Castle Rock, CO 80104
t 720.949.1689
HOLLISANDMILLER.COM
Hollis + Miller Architects
Missouri State Certificate of Authority
Architecture # 0000161
Structure # 2006031333

Bob D Campbell
Structural Engineer
State Certificate of Authority #000442
4338 Belleview Ave
Kansas City, MO 64111
816.531.4144 phone

Smith & Boucher, Inc.
Mechanical, Electrical, & Plumbing
State Certificate of Authority #EGC000178
25618 W 103rd Street
Olathe, KS 66061
913.345.2127 phone

MKEC Engineering, Inc.
Civil Engineer
State Certificate of Authority
Engineering #2001009364
Landscaping #2006027139
Surveying #2006027138
11827 W 112th Street, Suite 200
Overland Park, KS 66210
913.317.9390 phone

Peerbolte Creative
Theatrical Consultant
109 E Pine St.
Warrensburg, MO 64093-0752
660.429.1383 phone

Avant Acoustics
AV/Acoustics Consultant
14827 West 95th St.
Lenexa, KS 66215
913.888.9111 phone

Discovery Middle School Storm Shelter Addition

Liberty School District

800 Midjay Dr, Liberty, MO 64068

Conformed Construction Documents

REVISIONS:

#	Description	Date
4	ADDENDUM 04	09-29-2023
5	ADDENDUM 05	10-06-2023

STATE OF MISSOURI
RYAN JEROD DIEDIKER
NUMBER A-2015006
REGISTERED PROFESSIONAL ENGINEER
10/11/23

"The Professional Architects seal affixed to this sheet applies only to the material and items shown on this sheet. All drawings, instruments or other documents not exhibiting the seal shall not be considered prepared by this architect, and this architect expressly disclaims any and all responsibility for such plan, drawings, or documents not exhibiting this seal."

JOB NO: 23018
DRAWN BY: SBI
CHECKED BY: RJD
DATE: 10.11.2023

M101A

HVAC PLAN - LEVEL 1 & MEZZANINE - AREA A

Please consider the environment before printing this.

10/11/2023 12:11:34 PM

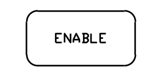

THE BMS SHALL PROVIDE ON/OFF CONTROL FOR EXTERIOR LIGHTING VIA A TIME-OF-DAY SCHEDULE AND PHOTOCELL INPUT.

THE BMS WILL ENERGIZE THE LIGHTING CONTACTORS. REFER TO ELECTRICAL DRAWINGS FOR LIGHTING CONTACTOR SCHEDULE AND LOCATIONS.

EXTERIOR LIGHTING
NO SCALE

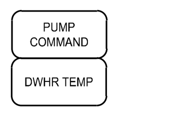

PROVIDE SCHEDULING AND ENABLE/DISABLE CONTROL FOR DOMESTIC HOT WATER RECIRCULATING PUMPS

REFER TO PLUMBING DRAWINGS FOR QUANTITIES OF PUMPS.

DOMESTIC WATER PUMPS
NO SCALE

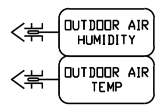

SENSORS MOUNTED ON THE NORTH SIDE OF THE BUILDING SHALL CONTINUALLY BROADCAST OUTSIDE AIR TEMPERATURE AND HUMIDITY ON THE NETWORK AS GLOBAL INFORMATION. OUTSIDE AIR TEMPERATURE AND HUMIDITY SHALL BE DISPLAYED ON ALL SYSTEM GRAPHICS.

OUTSIDE AIR CONDITIONS
NO SCALE

GENERAL:
IT ROOM UNITS WILL BE PROVIDED WITH FACTORY CONTROL PACKAGE.

PROVIDE SPACE TEMPERATURE SENSOR AND GENERATE ALARM IN THE EVENT THE SPACE DEVIATES MORE THAN 5°F (ADJ.) FROM SET POINT (75°F ADJ.)

PROVIDE WATER SENSOR IN CONDENSATE OVERFLOW PAN AND GENERATE AN ALARM IN THE EVENT WATER IS PRESENT.

IT ROOM UNIT SEQUENCE
NO SCALE

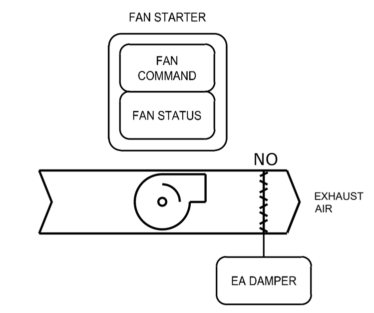

DURING OCCUPIED HOURS, THE EXHAUST FANS SHALL OPERATE. SHOULD THE EF FAIL TO RUN, THE BMS WILL ANNUNCIATE AN ALARM AT THE OPERATOR WORKSTATION.

APPLICABLE EQUIPMENT:
EF-20

REST ROOM EXHAUST FANS
NO SCALE

CONTROL CONTRACTOR IS RESPONSIBLE TO PROVIDE ALL REQUIRED 120/1 POWER TO CONTROL PANELS.

CONTROL PANEL POWER
NO SCALE

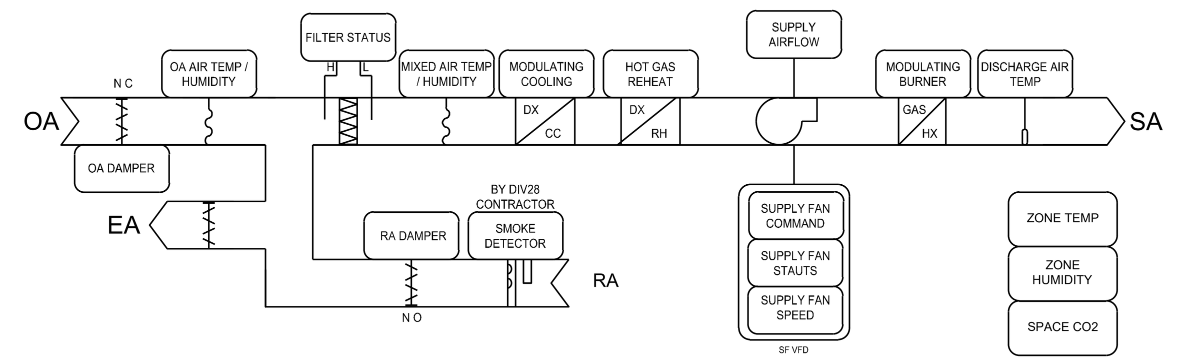

THE UNITS SHALL BE FURNISHED WITH A WIRING STRIP FOR CONTROLS BY CONTROLS CONTRACTOR. ROOFTOP UNIT MANUFACTURER TO FACTORY INSTALL ALL CONTROLS COMPONENTS AS PROVIDED BY CONTROLS CONTRACTOR.

SCHEDULING:
THE UNIT SHALL RUN ACCORDING TO A USER DEFINABLE TIME SCHEDULE IN THE FOLLOWING MODES:
- OCCUPIED MODE: THE UNIT SHALL MAINTAIN 75°F (ADJ.) COOLING SETPOINT, 70°F (ADJ.) HEATING SETPOINT.
- UNOCCUPIED MODE: THE UNIT SHALL MAINTAIN 85°F (ADJ.) COOLING SETPOINT, 55°F (ADJ.) HEATING SETPOINT.
- ALARMS SHALL BE PROVIDED AS FOLLOWS: HIGH ZONE TEMP: IF THE ZONE TEMPERATURE IS GREATER THAN THE COOLING SETPOINT BY A USER DEFINABLE AMOUNT (ADJ.) LOW ZONE TEMP: IF THE ZONE TEMPERATURE IS LESS THAN THE HEATING SETPOINT BY A USER DEFINABLE AMOUNT (ADJ.).

SETPOINT ADJUST:
THE OCCUPANT SHALL BE ABLE TO ADJUST THE ZONE TEMPERATURE HEATING AND COOLING SETPOINTS AT THE ZONE SENSOR BY AN OFFSET OF +/-2°F (ADJ.).

OCCUPIED MODE:
THE SUPPLY FAN SHALL RUN ANYTIME THE UNIT IS IN OCCUPIED MODE. THE SUPPLY FAN SHALL MODULATE TO MAINTAIN THERMOSTAT SET POINT (ADJ.).

SUPPLY AIR CONTROL:

THE COOLING SUPPLY AIR TEMPERATURE SET POINT SHALL BE 55°F (ADJ.). ON A CALL FOR COOLING, THE COOLING SHALL MODULATE/STAGE TO MAINTAIN THE SUPPLY AIR TEMPERATURE AT SET POINT. THE HEATING SUPPLY AIR TEMPERATURE SET POINT SHALL BE 90°F (ADJ.). ON A CALL FOR HEATING, THE HEATING SHALL MODULATE/STAGE TO MAINTAIN THE SUPPLY AIR TEMPERATURE AT SET POINT.

SUPPLY AIR TEMPERATURE RESET:
ONCE THE UNIT HAS REACHED THE MINIMUM AIRFLOW SETTING, THE SUPPLY AIR TEMPERATURE MAY BE RAISED IN 5°F (ADJ.) INCREMENTS TO A MAXIMUM VALUE OF 65°F (ADJ.)

DEHUMIDIFICATION / HOT GAS REHEAT (AS SCHEDULED):
WHEN THE RETURN AIR HUMIDITY IS ABOVE THE SET POINT OF 60% RH (ADJ.) THE COOLING/DEHUMIDIFICATION MODE IS ENABLED. DISCHARGE AIR TEMPERATURE SHALL BE REDUCED TO 55°F (ADJ) UNTIL RETURN AIR HUMIDITY DROPS TO SETPOINT. HOT GAS REHEAT SHALL BE USED TO REHEAT AIR TO MEET SUPPLY AIR SETPOINT.

MORNING WARM-UP MODE AND COOL-DOWN MODES:
WHEN THE UNIT TRANSITIONS FROM THE UNOCCUPIED MODE TO OCCUPIED MODE, MORNING WARM-UP OR COOL-DOWN SHALL BE ACTIVATED. THE UNIT SHALL USE AN OPTIMAL START ALGORITHM FOR MORNING START-UP. THIS ALGORITHM SHALL MINIMIZE THE UNOCCUPIED WARM-UP OR COOL-DOWN PERIOD WHILE STILL ACHIEVING COMFORT CONDITIONS BY THE START OF SCHEDULED OCCUPIED PERIOD. DURING MORNING WARM-UP THE SUPPLY FAN SHALL BE TURNED ON, THE OUTSIDE AIR DAMPER SHALL REMAIN CLOSED, THE COOLING DISABLED, AND THE HEATING SHALL MODULATE/STAGE TO REACH SETPOINT. DURING MORNING COOL DOWN THE SUPPLY FAN SHALL BE TURNED ON, THE OUTSIDE AIR DAMPER SHALL REMAIN CLOSED, THE HEATING SHALL BE DISABLED, AND THE COOLING SHALL MODULATE/STAGE TO REACH SETPOINT.

UNOCCUPIED MODE:
WHEN THE UNIT IS IN UNOCCUPIED MODE ACCORDING TO THE SCHEDULE, THE OUTSIDE AIR DAMPER IS CLOSED, THE RETURN AIR DAMPER IS OPEN AND THE UNIT IS OFF. UPON A REQUEST FOR COOLING TO MAINTAIN UNOCCUPIED COOLING OR HEATING TEMPERATURE SET POINT OR ACTIVATION OF USER OVERRIDE, ACTIVATE THE UNIT SUPPLY FAN. IF UNIT IS STARTED TO MAINTAIN UNOCCUPIED SETPOINT THE OUTSIDE AIR DAMPERS SHALL REMAIN CLOSED. IF UNIT IS STARTED IN RESPONSE TO USER OVERRIDE THE MINIMUM OUTSIDE AIRFLOW SHALL BE PROVIDED.

UNOCCUPIED OVERRIDE:
A TIMED LOCAL OVERRIDE CONTROL SHALL ALLOW AN OCCUPANT TO OVERRIDE THE SCHEDULE AND PLACE THE UNIT INTO AN OCCUPIED MODE TO PROVIDE REQUIRED VENTILATION FOR 2 HOURS (ADJ.). AT THE EXPIRATION OF THIS TIME, CONTROL OF THE UNIT SHALL AUTOMATICALLY RETURN TO THE SCHEDULE.

ECONOMIZER MODE:
THE CONTROLLER SHALL MEASURE THE OUTDOOR AIR ENTHALPY AND ENABLE ECONOMIZER WHEN OUTDOOR ENTHALPY IS BELOW RETURN AIR ENTHALPY. UNIT TO MODULATE THE OUTSIDE AIR DAMPER TO MAINTAIN THE SUPPLY AIR TEMPERATURE SETPOINT. THE OUTSIDE AIR DAMPERS SHALL MAINTAIN THE MINIMUM OUTDOOR AIR FLOW WHENEVER OCCUPIED.

OUTSIDE AIR VENTILATION:
THE OUTSIDE AIR DAMPERS SHALL MAINTAIN A MINIMUM POSITION (ADJ.) DURING BUILDING OCCUPIED HOURS OR WHEN USER OVERRIDE IS ACTIVATED. DAMPER SHALL BE CLOSED WHENEVER UNIT IS IN UNOCCUPIED MODE. VENTILATION AIRFLOW SHALL BE MAINTAINED AT SCHEDULED VALUES FOR THE WHOLE RANGE OF THE VAV UNIT'S FAN AIRFLOW RANGE.

DEMAND CONTROL VENTILATION (AS SCHEDULED):

OUTDOOR AIR SHALL BE MAINTAINED AT SCHEDULED MINIMUM FLOW. IF CO2 SENSOR READS GREATER THAN 1500PPM THE OUTSIDE AIR DAMPER SHALL OPEN TO DELIVER THE SCHEDULED MAXIMUM OUTDOOR AIRFLOW RATE. THE OUTDOOR AIRFLOW SHALL RETURN TO MINIMUM AIRFLOW ONCE ROOM CO2 LEVELS HAVE BEEN AT SETPOINT OR LESS FOR A PERIOD OF 15 MINUTES (ADJ).

SHUTDOWN:
WHEN THE UNIT IS SHUTDOWN BY EITHER A STOP COMMAND OR SYSTEM SAFETY THE UNIT SHALL BE SET AS FOLLOWS: FANS SHALL BE OFF, FAN VFDS SHALL BE COMMANDED TO 0%, OUTSIDE AIR AND EXHAUST DAMPERS SHALL CLOSE, RETURN AIR DAMPER SHALL OPEN, HEATING SHALL BE DISABLED, COOLING SHALL BE DISABLED

SMOKE DETECTION SHUTDOWN:
THE UNIT SHALL SHUT DOWN AND GENERATE AN ALARM UPON RECEIVING A SMOKE DETECTOR STATUS.

FILTER PRESSURE:

SHALL RAISE MAINTENANCE ALARM.

***REFER TO THE RTU SCHEDULE FOR ADDITIONAL INFORMATION AND SCHEDULED VALUES

APPLICABLE EQUIPMENT:
RTU-15, RTU-16, RTU-17

SZVAV ROOFTOP CONTROL DIAGRAM
NTS

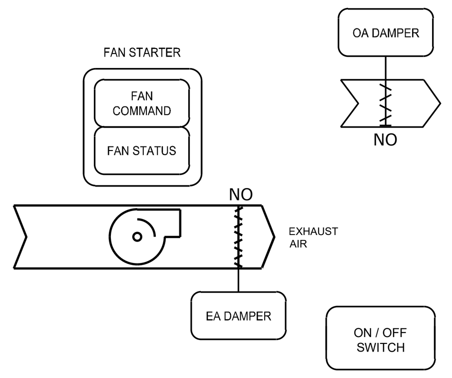

PROVIDE ON/OFF EMERGENCY VENTILATION SWITCH.

PROVIDE SIGNAGE THAT INDICATES SWITCH WILL ACIVATE SYSTEM TO PROVIDE FOR EMERGENCY VENTILATION IN THE EVENT OF A TORNADO.

SWITCH SHALL OPEN THE MOTORIZED DAMPERS ON LOUVERS L-1, L-2, AND L-3 AND ACTIVATE THE VENTILATION FAN.

BMS SHALL SIGNAL THE LOCKER ROOM AND WEIGHT ROOM RTU TO BE DISABLED IN THE EVENT THIS IS ACTIVATED.

SYSTEM SHALL BE PROVIDED BATTERY BACKUP POWER FOR A MINIMUM 2-HOUR DURATION. REFER TO ELECTRICAL DRAWINGS FOR UPS AND CIRCUITING.

APPLICABLE EQUIPMENT:
EF-19

STORM SHELTER VENTILATION SYSTEM
NO SCALE

BUILDING MANAGEMENT SYSTEM:

THE BMS SYSTEM SHALL INCLUDE A FLOOR PLAN MAP OF THE BUILDING AND GRAPHICAL DISPLAY OF EACH SYSTEM INDICATED. FLOOR PLAN SHALL BE COLOR CODED TO DISPLAY WHETHER ZONES ARE HOT OR COLD RELATIVE TO SET POINT. IT SHALL HAVE REMOTE ACCESS CAPABILITIES.

SPACE THERMOSTATS SHALL BE PROVIDED WITH SLIDERS.THE BMS SHALL HAVE THE ABILITY TO LOCK OUT THERMOSTAT CONTROL.

TEMPERATURE SENSORS SHALL BE PROVIDED IN AREA ACCESSIBLE TO THE PUBLIC.

ALL ZONE SET POINTS SHALL HAVE THE ABILITY FOR LIMITS TO BE SET THROUGH THE BMS. BMS INITIAL SET UP SHALL LIMIT LOCAL THERMOSTAT ADJUSTMENTS TO +/-3 °F (ADJ.)

THE BMS SHALL BE ABLE TO REMOTELY ADJUST SET POINTS AND OCCUPANCY SCHEDULES FOR ALL EQUIPMENT. GRAPHICS SHALL DISPLAY ALL AHU'S AND TERMINAL UNITS AND INCLUDE AIR FLOW, TEMPERATURE, STAGING AND ALARM INFORMATION.

THE BMS SHALL HAVE THE CAPABILITY TO EMAIL AND PAGE ALARMS AS CHOSEN BY THE OWNER TO NOTIFY OF EQUIPMENT FAILURE.

PROVIDE INITIAL SCHEDULING. COORDINATE WITH STAFF TO SET UP OCCUPIED / UNOCCUPIED SCHEDULES.

PROVIDE FOR 4 DIFFERENT EVENT SCHEDULING PRE-BUILT OVERRIDES WITH USER ADJUSTIBLE NAMING.

GENERAL BMS REQUIREMENTS
NO SCALE

smith & boucher engineers
25618 west 103rd St olathe, ks 66061
phone 913.345.2127 fax 913.345.0617
project number 2314702

hollis + miller architects
we design the future
1828 Walnut Street Suite 922
Kansas City, MO 64108
T 816.442.7700
115 Wilcox Street Suite 210
Castle Rock, CO 80104
T 720.949.1689
HOLLISANDMILLER.COM
Hollis + Miller Architects
Missouri State Certificate of Authority
Architecture # 0000161
Structure # 2006031333

Bob D Campbell
Structural Engineer
State Certificate of Authority #000442
4338 Bellview Ave.
Kansas City, MO 64111
816.531.4144 phone

Smith & Boucher Inc.
Mechanical, Electrical & Plumbing
State Certificate of Authority #EGC000178
25618 W 103rd Street
Olathe, KS 66061
913.345.2127 phone

MKEC Engineering, Inc.
Civil Engineer
State Certificate of Authority #
Engineering: 2001009364
Landscaping: 2006027139
Surveying: 2006027138
11827 W 112th Street, Suite 200
Overland Park, KS 66210
913.317.9390 phone

Peerbolte Creative
Theatrical Consultant
109 E Pine St.
Warrensburg, MO 64093-0752
660.429.1383 phone

Avant Acoustics
AV/Acoustics Consultant
14827 West 95th St.
Lenexa, KS 66215
913.888.9111 phone

Discovery Middle School Storm Shelter Addition
Liberty School District
800 Midjay Dr, Liberty, MO 64068

Conformed Construction Documents

REVISIONS:

#	Description	Date

STATE OF MISSOURI
RYAN JEROD DIEDIKER
NUMBER PE-2015006511
REGISTERED PROFESSIONAL ENGINEER
10/11/23

The Professional Architects seal affixed to this sheet applies only to the material and items shown on this sheet. All drawings, instruments or other documents not exhibiting this seal shall not be considered prepared by this architect, and this architect expressly disclaims any and all responsibility for such plan, drawings, or documents not exhibiting this seal.

JOB NO: 23018
DRAWN BY: SBI
CHECKED BY: RJD
DATE: 10.11.2023

M301

HVAC CONTROL DIAGRAMS

PROJECT NAME: 2314702 Liberty SD 2023 Discovery MS Gym Addition & LED Lighting
AUTOCAD FILE LOCATION \ NAME: X:\23\23147\2314702\Drawings\04-2314702_M301.dwg
LAST CORRECTION BY ◆ DATE ◆ TIME: Bootyc Wednesday, October 11, 2023 9:18:04 AM
PLOTTED BY ◆ DATE ◆ TIME: Booty Charles Wednesday, October 11, 2023 9:44:40 AM

Please consider the environment before printing this.

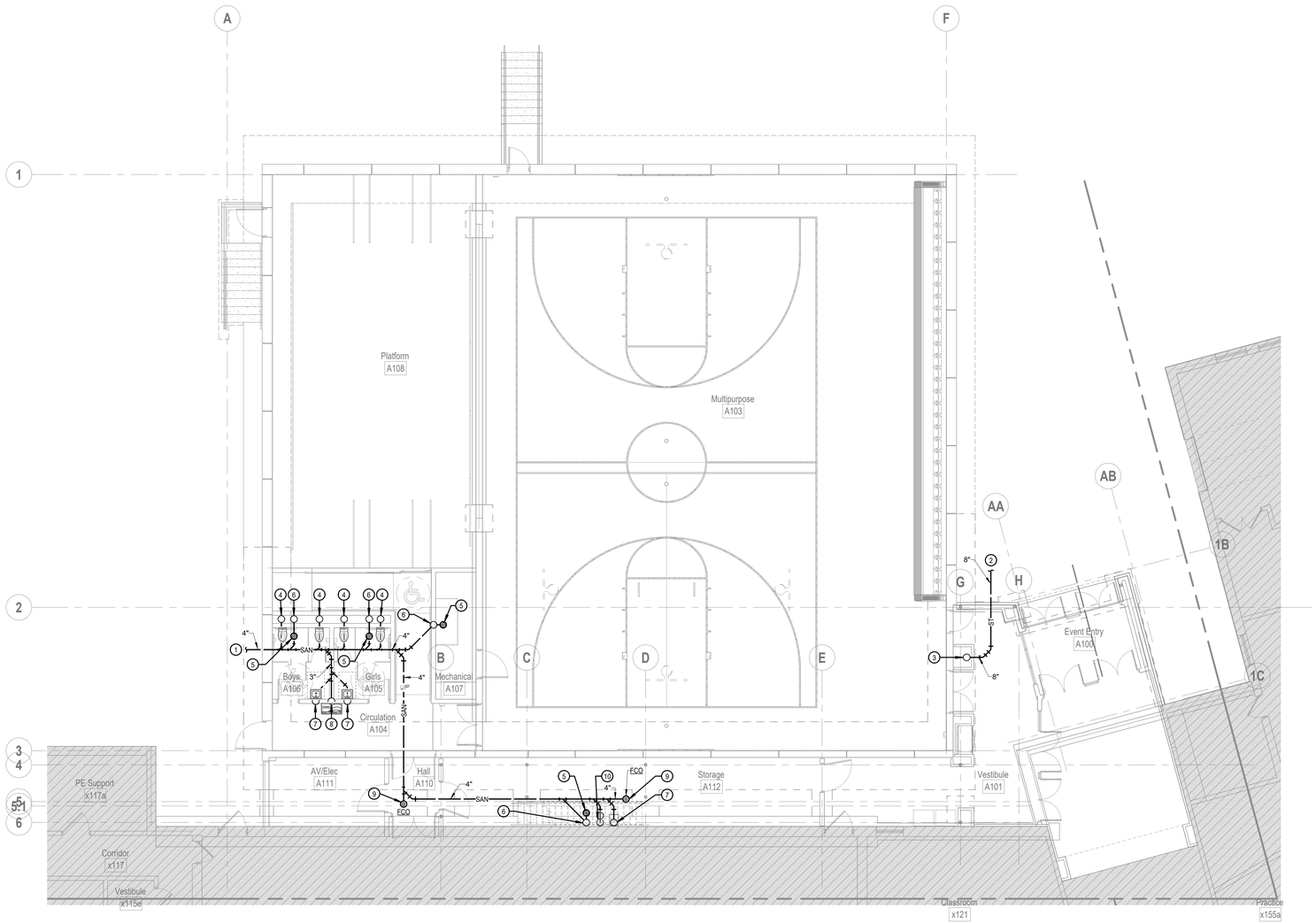

SHEET KEYNOTE LEGEND

GENERAL NOTES:

1. REFER TO P101 FOR GENERAL NOTES.

PLAN NOTES:

1. 4" SANITARY SEWER EXIT LOCATION. ROUTE BELOW STRUCTURAL FOOTING. APPROXIMATE FLOWLINE 66" BELOW FINISHED FLOOR. COORDINATE EXACT LOCATION AND DEPTH WITH SITE UTILITIES CONTRACTOR PRIOR TO INSTALLATION. REFER TO CIVIL DRAWINGS FOR CONTINUATION.
2. 8" STORM SEWER EXIT LOCATION. ROUTE BELOW STRUCTURAL FOOTING. APPROXIMATE FLOWLINE 63" BELOW FINISHED FLOOR. COORDINATE EXACT LOCATION AND DEPTH WITH SITE UTILITIES CONTRACTOR PRIOR TO INSTALLATION. REFER TO CIVIL DRAWINGS FOR CONTINUATION.
3. 8" STORM UP IN CHASE.
4. 4" SANITARY UP TO WATER CLOSET.
5. 2" SANITARY UP TO FLOOR DRAIN.
6. 2" SANITARY UP TO 1-1/2" VENT.
7. 2" SANITARY UP TO LAVATORY/SINK.
8. 2" SANITARY UP TO DRINKING FOUNTAIN.
9. 4" SANITARY UP TO FLOOR CLEANOUT.
10. 2" SANITARY UP TO HUB DRAIN.

hollis + miller architects®

we design the future®

1828 Walnut Street Suite 922
Kansas City, MO 64108
t 816.442.7700

115 Wilcox Street Suite 210
Castle Rock, CO 80104
t 720.949.1689

HOLLISANDMILLER.COM

Hollis + Miller Architects
Missouri State Certificate of Authority
Architecture # 0000161
Structure # 2006031333

Bob D Campbell
Structural Engineer
State Certificate of Authority #000442
4338 Belleview Ave
Kansas City, MO 64111
816.531.4144 phone

Smith & Boucher, Inc.
Mechanical, Electrical, & Plumbing
State Certificate of Authority #EGC000178
25618 W 103rd Street
Olathe, KS 66061
913.345.2127 phone

MKEC Engineering, Inc.
Civil Engineer
State Certificate of Authority
Engineering #2001009364
Landscaping #2006027139
Surveying #2006027138
11827 W 112th Street, Suite 200
Overland Park, KS 66210
913.317.9390 phone

Peerbolte Creative
Theatrical Consultant
109 E Pine St.
Warrensburg, MO 64093-0752
660.429.1383 phone

Avant Acoustics
AV/Acoustics Consultant
14827 West 95th St.
Lenexa, KS 66215
913.888.9111 phone

Discovery Middle School Storm Shelter Addition

Liberty School District

800 Midjay Dr, Liberty, MO 64068

Conformed Construction Documents

REVISIONS:

#	Description	Date

STATE OF MISSOURI
RYAN JEROD DIEDIKER
NUMBER A-2015006711
REGISTERED PROFESSIONAL ENGINEER
10/11/23

smith & boucher engineers
25618 west 103rd St olathe, ks 66061
phone 913.345.2127 fax 913.345.0617
project number 2314702

The Professional Architects seal affixed to this sheet applies only to the material and items shown on this sheet. All drawings, instruments or other documents not exhibiting the seal shall not be considered prepared by this architect, and this architect expressly disclaims any and all responsibility for such plan, drawings, or documents not exhibiting the seal.

KEY PLAN

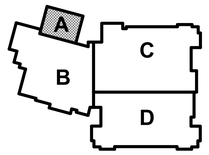

JOB NO: 23018
DRAWN BY: SBI
CHECKED BY: RJD
DATE: 10.11.2023

P100A

A1 | Scale 1/8" = 1'-0" | UNDERSLAB PLUMBING PLAN - LEVEL 1 - AREA A

8' 4' 0' 8'

PROJECT NORTH

TRUE NORTH

UNDERSLAB PLUMBING PLAN - LEVEL 1 - AREA A

Please consider the environment before printing this.

10/11/2023 12:11:51 PM

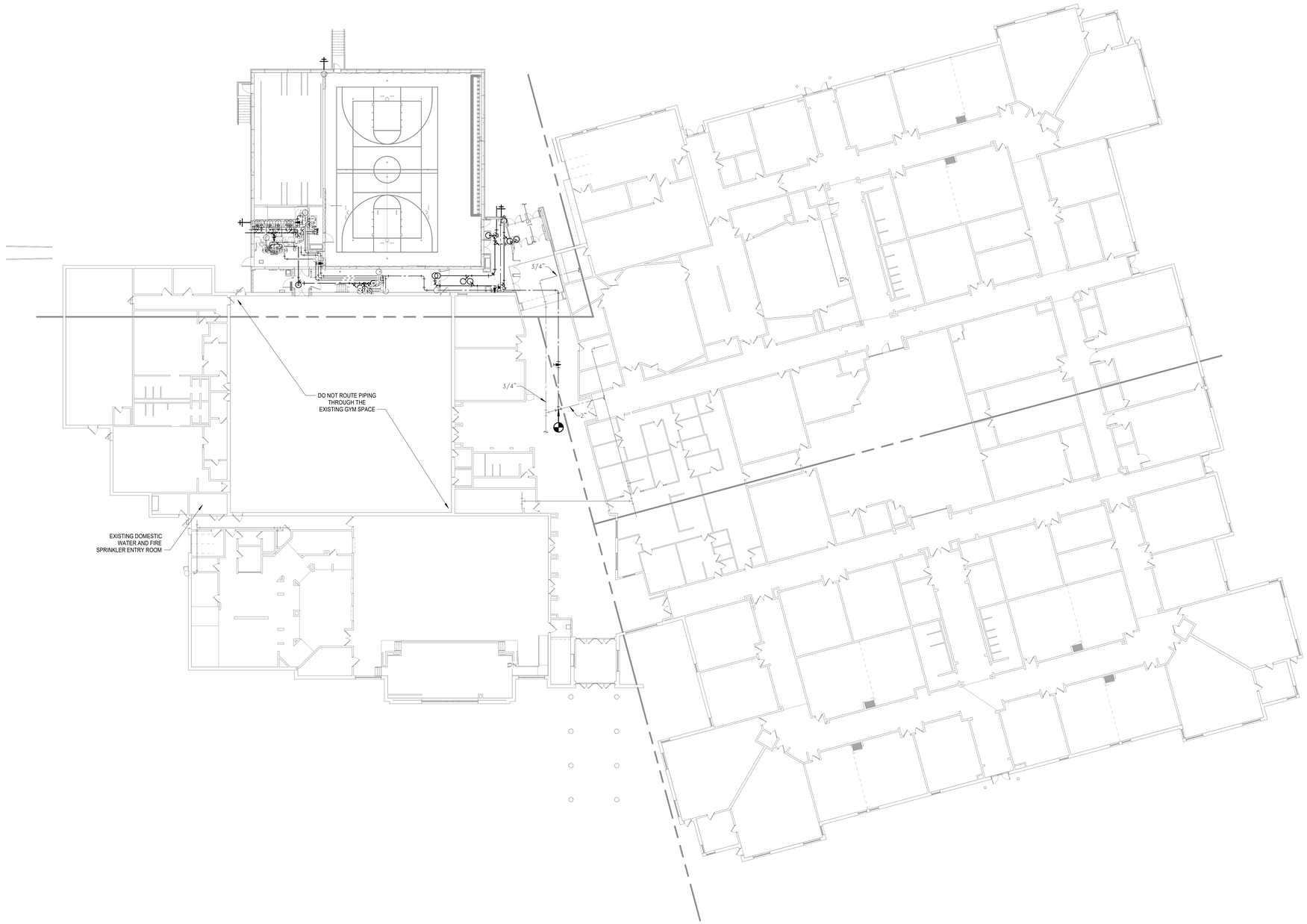

SHEET KEYNOTE LEGEND

GENERAL NOTES:

1. INFORMATION SHOWN ON THE DRAWINGS IS INTENDED TO CONVEY SCOPE AND IS ARRANGED FOR DRAWING CLARITY. IT IS NOT TO BE TAKEN AS AN AS-BUILT CONDITION. THE SYSTEM INSTALLATION SHALL BE COORDINATED WITH STRUCTURE, CEILINGS, WALLS, AND ALL OTHER TRADES TO PROVIDE FOR A COMPLETE AND WORKING SYSTEM.
2. CAREFULLY COORDINATE PIPE ROUTING WITH NEW AND EXISTING STRUCTURE AS WELL AS ALL OTHER TRADES TO MAINTAIN EQUIPMENT CLEARANCES AND DESIRED CEILING HEIGHTS.
3. COORDINATE ALL PIPING PENETRATIONS WITH STRUCTURAL PRIOR TO CORE DRILLING.
4. WASTE PIPING SHALL BE SLOPED AT 1/8" PER FOOT FOR 3" AND LARGER PIPING AND ¼" PER FOOT FOR 2" AND SMALLER PIPING.
5. STORM PIPING SHALL BE SLOPED AT 1/8" PER FOOT.
6. PROVIDE WASTE AND STORM CLEANOUTS AS REQUIRED PER CODE AND SPECIFICATIONS. MORE CLEANOUTS MAY BE REQUIRED THAN AS SHOWN ON PLANS.
7. PROVIDE SHUT OFF VALVES ABOVE ACCESSIBLE CEILING OR OTHER ACCESSIBLE LOCATION FOR ALL BRANCH PIPING AND INDIVIDUAL CONNECTIONS TO PLUMBING FIXTURES. WHERE STOPS ARE PROVIDED FOR INDIVIDUAL FIXTURES SHUT OFF VALVES ARE ALSO REQUIRED AT THE BRANCH CONNECTION. PLUMBING STOPS ARE NOT CONSIDERED A SUBSTITUE FOR SHUT OFF VALVES.
8. AVOID ROUTING ANY PIPING THROUGH IT ROOMS OR ELECTRIC ROOMS. IN THE EVENT IT IS ABSOLUTELY NECESSARY, COORDINATE THE EXACT LOCATION SUCH THAT IT IS NOT DIRECTLY ABOVE ANY PANELS OR EQUIPMENT.
9. REFER TO RISER DIAGRAM FOR ADDITIONAL PLUMBING INFORMATION.
10. PROVIDE FIRESTOPPING AT PENETRATIONS OF ALL RATED WALLS. REFER TO CODE PLANS FOR LOCATIONS OF RATED WALLS.
11. ALL HOT WATER RECIRC BALANCE DEVICES SHALL BE 1 GPM CIRCUIT SETTERS UNLESS OTHERWISE NOTED.
12. PROVIDE WATER HAMMER ARRESTORS PER THE REQUIREMENTS OF THE SPECIFICATIONS AND PDI-WH201 FOR ALL FAST ACTING VALVES (FLUSH VALVES, SOLENOID FAUCETS, ETC).
13. PROVIDE ICC 500 PIPING SHROUD FOR ALL PENETRATIONS OF SHELTER 3" AND LARGER.

hollis + miller architects

we design the future

1828 Walnut Street Suite 922
Kansas City, MO 64108
t 816.442.7700

115 Wilcox Street Suite 210
Castle Rock, CO 80104
t 720.949.1689

HOLLISANDMILLER.COM

Hollis + Miller Architects
Missouri State Certificate of Authority
Architecture # 000161
Structure # 2006031333

Bob D Campbell
Structural Engineer
State Certificate of Authority #000442
4338 Belleview Ave
Kansas City, MO 64111
816.531.4144 phone

Smith & Boucher, Inc.
Mechanical, Electrical, & Plumbing
State Certificate of Authority #EGC000178
25618 W 103rd Street
Olathe, KS 66061
913.345.2127 phone

MKEC Engineering, Inc.
Civil Engineer
State Certificate of Authority
Engineering #2001009364
Landscaping #2006027139
Surveying #2006027138
11827 W 112th Street, Suite 200
Overland Park, KS 66210
913.317.9390 phone

Peerbolte Creative
Theatrical Consultant
109 E Pine St.
Warrensburg, MO 64093-0752
660.429.1383 phone

Avant Acoustics
AV/Acoustics Consultant
14827 West 95th St.
Lenexa, KS 66215
913.888.9111 phone

Discovery Middle School Storm Shelter Addition

Liberty School District

800 Midjay Dr, Liberty, MO 64068

Conformed Construction Documents

REVISIONS:

#	Description	Date

STATE OF MISSOURI
RYAN JEROD DIEDIKER
NUMBER A-2015006511
REGISTERED PROFESSIONAL ENGINEER
10/11/23

smith & boucher engineers
25618 west 103rd St olathe, ks 66061
phone 913.345.2127 fax 913.345.0617
project number 2314702

The Professional Architects seal affixed to this sheet applies only to the material and items shown on this sheet. All other information on this sheet is provided by the Professional Architect's consultants and subcontractors, and the architect expressly disclaims any and all responsibility for such plan, drawings, or documents not exhibiting the seal.

KEY PLAN

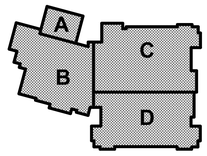

JOB NO: 23018
DRAWN BY: SBI
CHECKED BY: RJD
DATE: 10.11.2023

P101

A1 | Scale 1" = 20'-0" | OVERALL PLUMBING PLAN - LEVEL 1

20' 10' 0' 20'

PROJECT NORTH

TRUE NORTH

OVERALL PLUMBING PLAN - LEVEL 1

Please consider the environment before printing this.

10/11/2023 12:11:57 PM

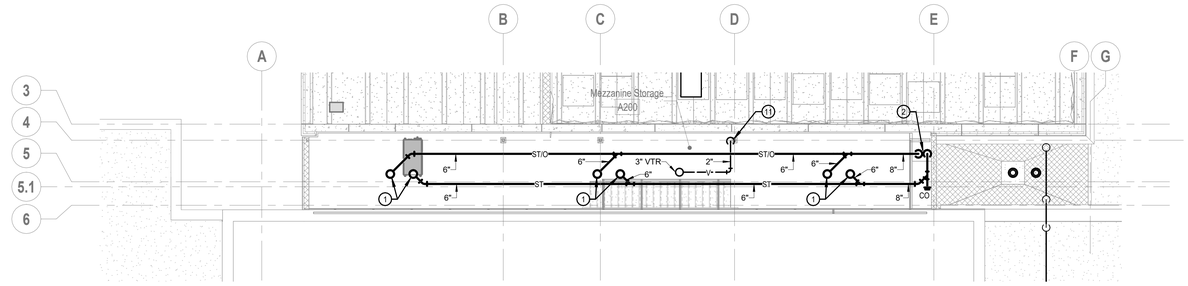

H1 Scale 1/8" = 1'-0" OVERALL PLUMBING PLAN - MEZZANINE

8' 4' 0' 8' PROJECT NORTH TRUE NORTH

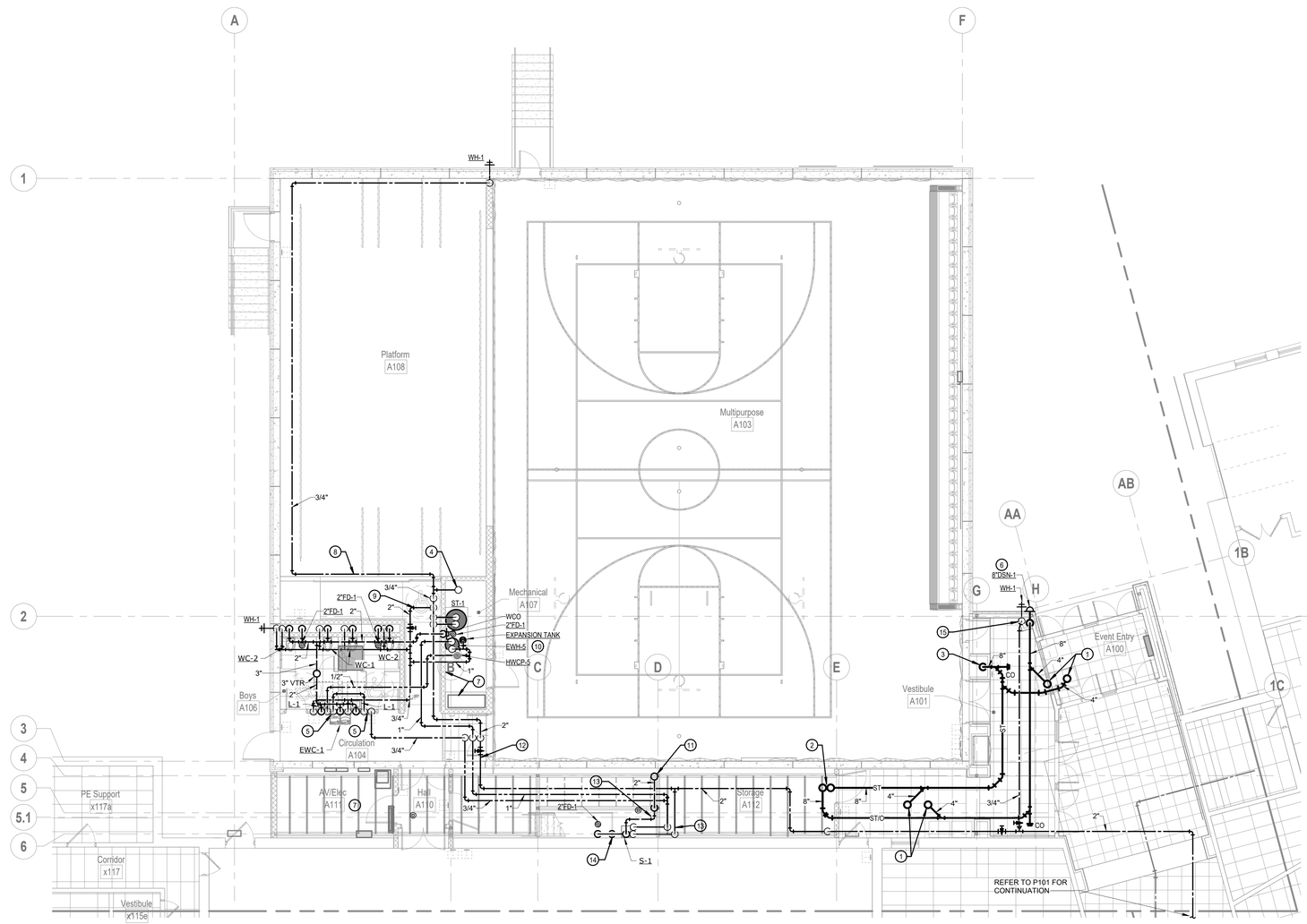

A1 Scale 1/8" = 1'-0" PLUMBING PLAN - LEVEL 1 - AREA A

8' 4' 0' 8' PROJECT NORTH TRUE NORTH

SHEET KEYNOTE LEGEND

GENERAL NOTES:

1. REFER TO P101 FOR GENERAL NOTES.

PLAN NOTES:

1. 4" STORM AND 4" STORM OVERFLOW UP TO ROOF DRAIN.
2. 8" STORM AND 8" STORM OVERFLOW BETWEEN MEZZANINE AND FIRST FLOOR. ROUTE WITHIN CHASE.
3. 8" STORM DOWN WITHIN CHASE AND THROUGH FLOOR.
4. 3/4" COLD WATER UP TO ROOF HYDRANT.
5. ROUTE HOT WATER PIPING DOWN IN WALL AND WITHIN 6" OF HOT WATER CONNECTION.
6. 8" STORM OVERFLOW DOWN TO DOWNSPOUT NOZZLE MOUNTED AT 24" ABOVE FINISHED GRADE.
7. DO NOT ROUTE PIPING OVER ELECTRICAL AND AV PANELBOARDS AND EQUIPMENT.
8. ROUTE PIPING IN STAGE TIGHT TO THE BOTTOM OF STRUCTURE.
9. PIPING SHOWN OFFSET FOR CLARITY. ROUTE PIPING ABOVE THE CEILING FOR ALL PIPING LOCATED OUTSIDE OF THE MECHANICAL ROOM. REFER TO THE PLUMBING RISER DIAGRAMS AND DETAILS FOR ADDITIONAL INFORMATION.
10. SUSPEND THE WATER HEATER AND EXPANSION TANK ABOVE THE STORAGE TANK, WHICH IS SHOWN OFFSET FOR CLARITY. REFER TO THE PLUMBING RISER DIAGRAMS AND DETAILS FOR ADDITIONAL INFORMATION.
11. 2" VENT BETWEEN MEZZANINE AND FIRST FLOOR.
12. ROUTE PIPING DOWN AT LOWER CEILING AND UNDER THE STRUCTURAL BEAM BELOW THE MEZZANINE.
13. ROUTE PIPING BELOW THE STAIRS.
14. PROVIDE HUB DRAIN UNDER THE SINK FOR CONDENSATE FROM INDOOR SPLIT SYSTEMS.
15. ROUTE 8" STORM OVERFLOW AND 3/4" COLD WATER DOWN WITHIN THE WALL/CHASE. PIPING SHOWN OFFSET FOR CLARITY.

hollis + miller architects

we design the future

1828 Walnut Street Suite 922
Kansas City, MO 64108
t 816.442.7700

115 Wilcox Street Suite 210
Castle Rock, CO 80104
t 720.949.1689

HOLLISANDMILLER.COM

Hollis + Miller Architects
Missouri State Certificate of Authority
Architecture # 0000161
Structure # 2006031333

Bob D Campbell
Structural Engineer
State Certificate of Authority #000442
4338 Belleview Ave
Kansas City, MO 64111
816.531.4144 phone

Smith & Boucher, Inc.
Mechanical, Electrical, & Plumbing
State Certificate of Authority #EGC000178
25618 W 103rd Street
Olathe, KS 66061
913.345.2127 phone

MKEC Engineering, Inc.
Civil Engineer
State Certificate of Authority
Engineering #2001009364
Landscaping #2006027139
Surveying #2006027138
11827 W 112th Street, Suite 200
Overland Park, KS 66210
913.317.9390 phone

Peerbolte Creative
Theatrical Consultant
109 E Pine St.
Warrensburg, MO 64093-0752
660.429.1383 phone

Avant Acoustics
AV/Acoustics Consultant
14827 West 95th St.
Lenexa, KS 66215
913.888.9111 phone

Discovery Middle School Storm Shelter Addition

Liberty School District

800 Midjay Dr, Liberty, MO 64068

Conformed Construction Documents

REVISIONS:

#	Description	Date

smith & boucher engineers
25618 west 103rd St olathe, ks 66061
phone 913.345.2127 fax 913.345.0617
project number 2314702

STATE OF MISSOURI RYAN JEROD DIEDIKER NUMBER A-2015006411 REGISTERED PROFESSIONAL ENGINEER 10/11/23

The Professional Architects seal affixed to this sheet applies only to the material and items shown on this sheet. All drawings, instruments or other documents not exhibiting the seal shall not be considered prepared by this architect, and this architect expressly disclaims any and all responsibility for such plan, drawings, or documents not exhibiting the seal.

KEY PLAN

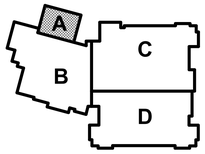

JOB NO: 23018
DRAWN BY: SBI
CHECKED BY: RJD
DATE: 10.11.2023

P101A

PLUMBING PLAN - LEVEL 1 & MEZZANINE - AREA A

Please consider the environment before printing this.

10/11/2023 12:12:05 PM

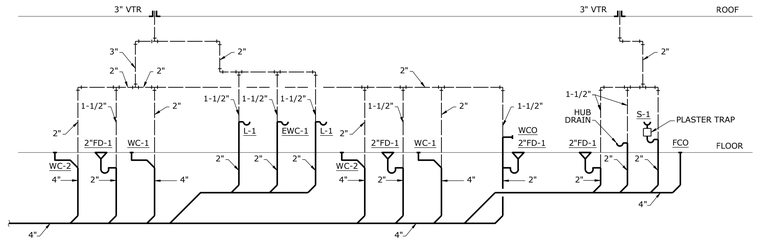

WASTE & VENT RISER DIAGRAM

SCALE: NONE

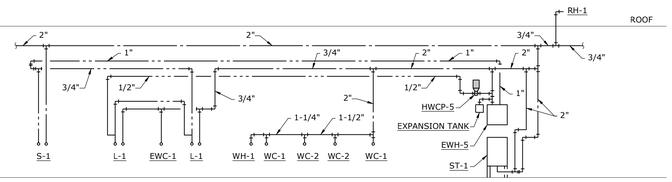

DOMESTIC WATER RISER DIAGRAM

SCALE: NONE

hollis + miller architects®

we design the future®

1828 Walnut Street Suite 922
Kansas City, MO 64108
t 816.442.7700

115 Wilcox Street Suite 210
Castle Rock, CO 80104
t 720.949.1689

HOLLISANDMILLER.COM

Hollis + Miller Architects
Missouri State Certificate of Authority
Architecture # 0000161
Structure # 2006031333

Bob D Campbell
Structural Engineer
State Certificate of Authority #000442
4338 Bellview Ave.
Kansas City, MO 64111
816.531.4144 phone

Smith & Boucher Inc.
Mechanical, Electrical & Plumbing
State Certificate of Authority #EGC000178
25618 W 103rd Street
Olathe, KS 66061
913.345.2127 phone

MKEC Engineering, Inc.
Civil Engineer
State Certificate of Authority #
Engineering: 2001009364
Landscaping: 2006027139
Surveying: 2006027138
11827 W 112th Street, Suite 200
Overland Park, KS 66210
913.317.9390 phone

Peerbolte Creative
Theatrical Consultant
109 E Pine St.
Warrensburg, MO 64093-0752
660.429.1383 phone

Avant Acoustics
AV/Acoustics Consultant
14827 West 95th St.
Lenexa, KS 66215
913.888.9111 phone

Discovery Middle School Storm Shelter Addition

Liberty School District

800 Midjay Dr, Liberty, MO 64068

Conformed Construction Documents

REVISIONS:

#	Description	Date

STATE OF MISSOURI
RYAN JEROD DIEDIKER
NUMBER A-2015008741
REGISTERED PROFESSIONAL ENGINEER
10/11/23

The Professional Architects seal affixed to this sheet applies only to the material and items shown on this sheet. All drawings, instruments or other documents not exhibiting this seal shall not be considered prepared by this architect, and this architect expressly disclaims any and all responsibility for such plan, drawings, or documents not exhibiting this seal.

JOB NO: 23018
DRAWN BY: SBI
CHECKED BY: RJD
DATE: 10.11.2023

P301

PLUMBING RISER DIAGRAMS

smith & boucher engineers
25618 west 103rd St olathe, ks 66061
phone 913.345.2127 fax 913.345.0617
project number 2314702

Please consider the environment before printing this.

PROJECT NAME: 2314702 Liberty SD 2023 Bonney MS Gym Addition & LED Lighting
AUTOCAD FILE LOCATION \ \ NAME: X:\23\2314\2314702\Drawings\04-2314702_P301.dwg
LAST CORRECTION: BY ◆ DATE ◆ TIME: Bootyc Wednesday, October 11, 2023 9:18:35 AM
PLOTTED BY ◆ DATE ◆ TIME: Booty Charles Wednesday, October 11, 2023 9:44:52 AM

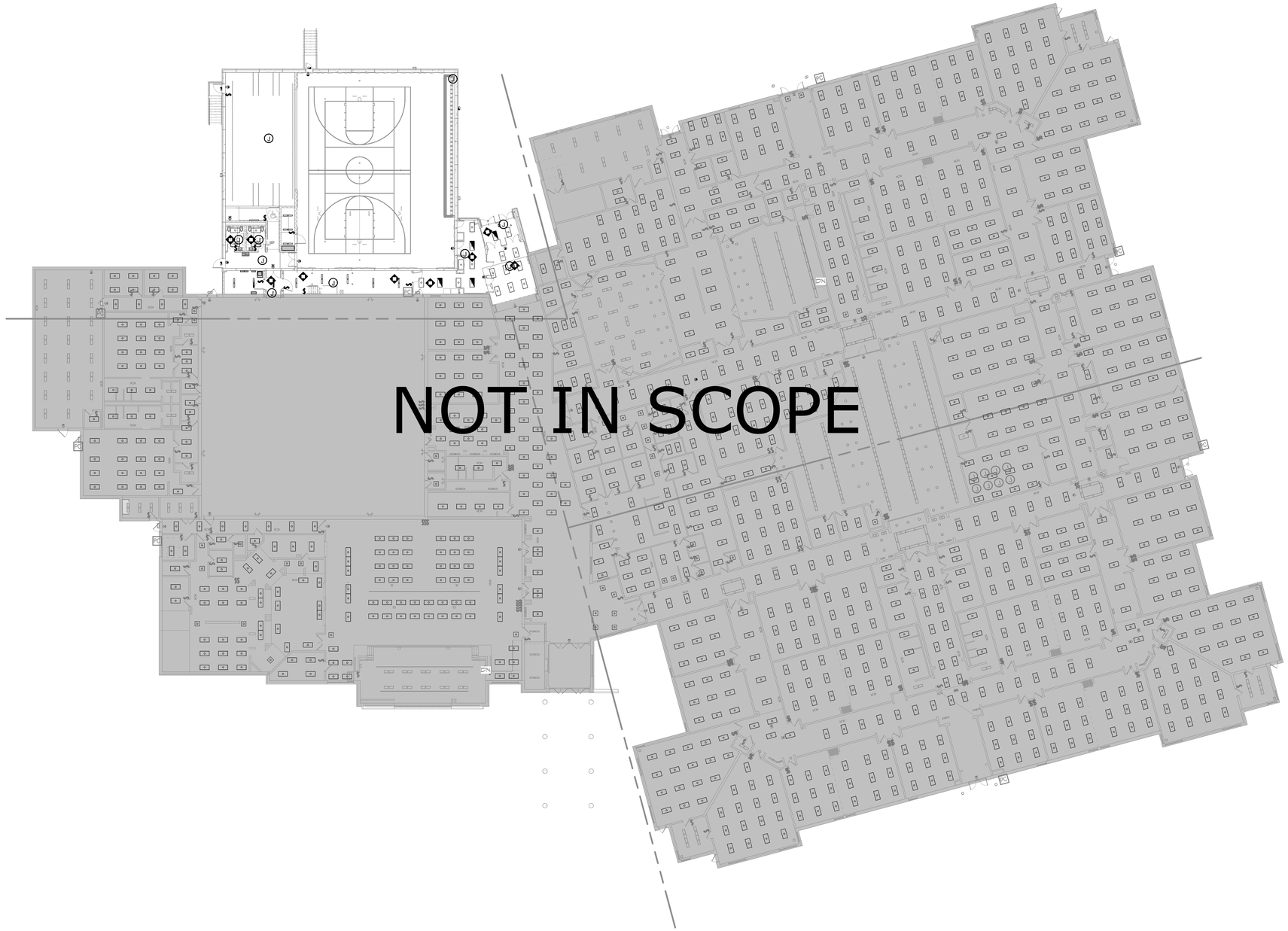

A1 | Scale 1" = 20'-0" | OVERALL LIGHTING - LEVEL 1

20' 10' 0' 20'

PROJECT NORTH

TRUE NORTH

SHEET KEYNOTE LEGEND

hollis architects® miller

we design the future®

1828 Walnut Street Suite 922
Kansas City, MO 64108
t 816.442.7700

115 Wilcox Street Suite 210
Castle Rock, CO 80104
t 720.949.1689

HOLLISANDMILLER.COM

Hollis + Miller Architects
Missouri State Certificate of Authority
Architecture # 0000161
Structure # 2006031333

Bob D Campbell
Structural Engineer
State Certificate of Authority #000442
4338 Belleview Ave
Kansas City, MO 64111
816.531.4144 phone

Smith & Boucher, Inc.
Mechanical, Electrical, & Plumbing
State Certificate of Authority #EGC000178
25618 W 103rd Street
Olathe, KS 66061
913.345.2127 phone

MKEC Engineering, Inc.
Civil Engineer
State Certificate of Authority
Engineering #2001009364
Landscaping #2006027139
Surveying #2006027138
11827 W 112th Street, Suite 200
Overland Park, KS 66210
913.317.9390 phone

Peerbolte Creative
Theatrical Consultant
109 E Pine St.
Warrensburg, MO 64093-0752
660.429.1383 phone

Avant Acoustics
AV/Acoustics Consultant
14827 West 95th St.
Lenexa, KS 66215
913.888.9111 phone

Discovery Middle School Storm Shelter Addition

Liberty School District

800 Midjay Dr, Liberty, MO 64068

Conformed Construction Documents

REVISIONS:

#	Description	Date

smith & boucher engineers
25618 west 103rd St olathe, ks 66061
phone 913.345.2127 fax 913.345.0617
project number 2314702

STATE OF MISSOURI
RYAN JEROD DIEDIKER
NUMBER PE-2015006511
REGISTERED PROFESSIONAL ENGINEER
10/11/23

The Professional Architects seal affixed to this sheet applies only to the material and items shown on this sheet. All drawings, instruments or other documents not exhibiting this seal shall not be considered prepared by the architect, and the architect expressly disclaims any and all responsibility for such plan, drawings, or documents not exhibiting this seal.

KEY PLAN

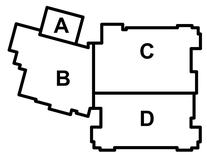

JOB NO: 23018
DRAWN BY: SBI
CHECKED BY: RJD
DATE: 10.11.2023

E101

OVERALL LIGHTING PLAN - LEVEL 1

Please consider the environment before printing this.

10/11/2023 12:10:42 PM

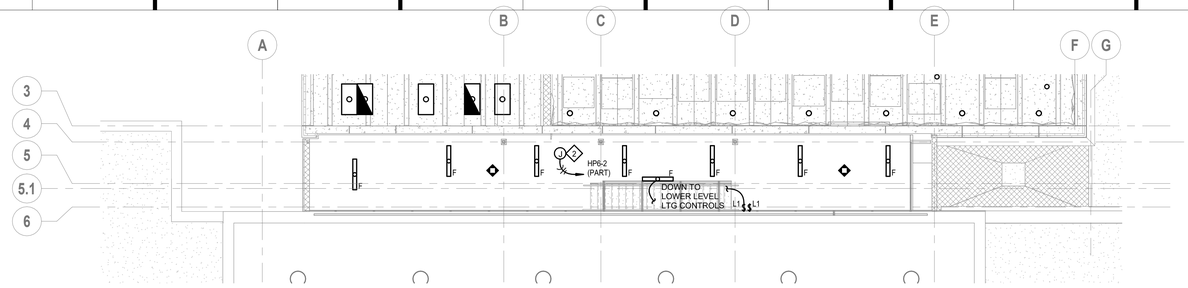

H1 | Scale 1/8" = 1'-0" | LIGHTING PLAN - MEZZANINE - AREA A

8' 4' 0' 8' PROJECT NORTH TRUE NORTH

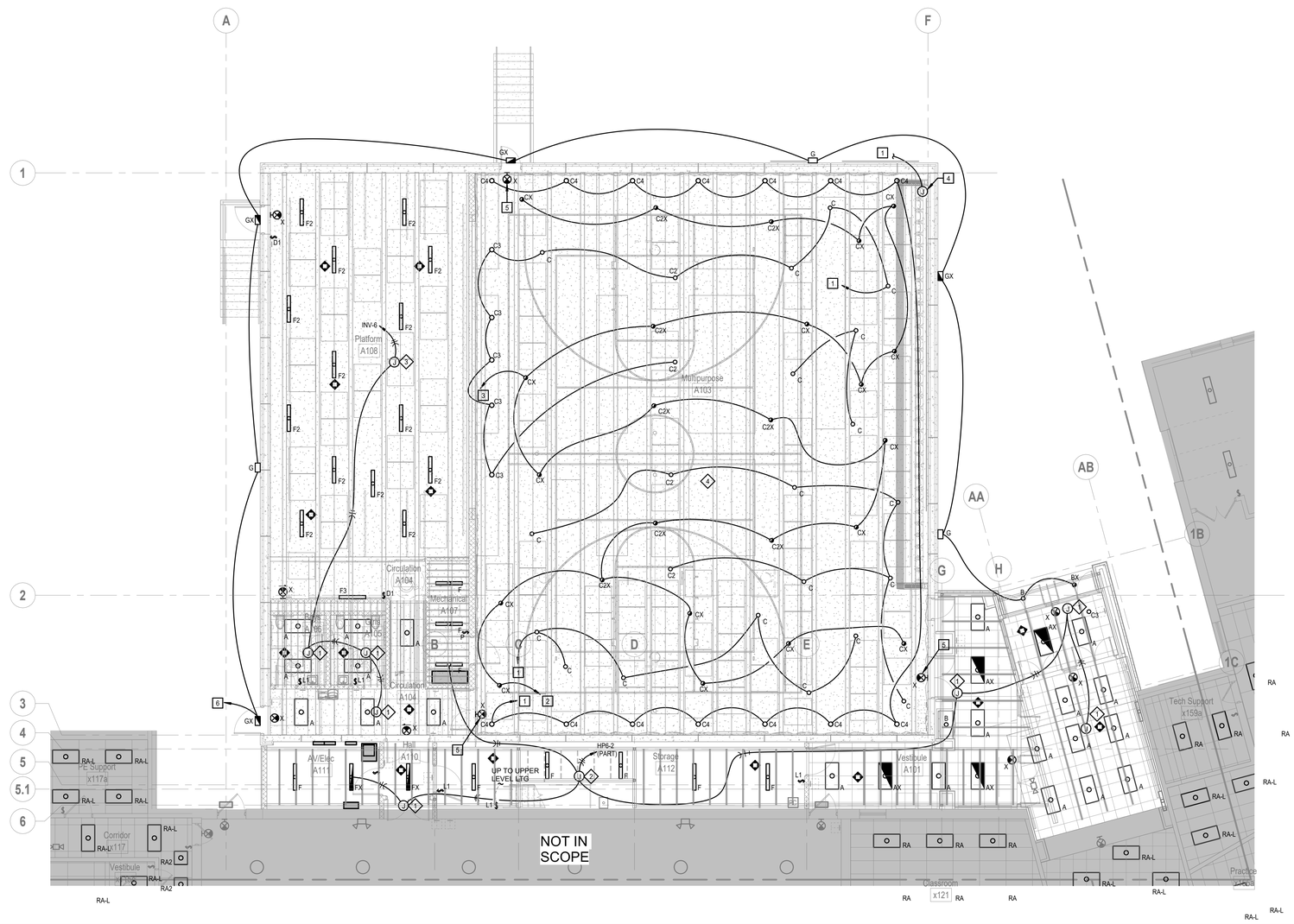

A1 | Scale 1/8" = 1'-0" | LIGHTING PLAN - LEVEL 1 - AREA A

8' 4' 0' 8' PROJECT NORTH TRUE NORTH

SHEET KEYNOTE LEGEND

GENERAL NOTES:

1. REFER TO E100 FOR GENERAL NOTES.

PLAN NOTES:

1. CIRCUIT THRU RELAY IN THEATRICAL LIGHTING CONTROL PANEL. REFER TO THEATRICAL PLANS.
2. CIRCUIT THROUGH EMERGENCY TRANSFER DEVICE AHEAD OF CIRCUIT FROM THEATRICAL RELAY PANEL. PROVIDE 277:120 1.5KVA TRANSFORMER MOUNTED ON WALL IN MECH A107 TO TRANSFORM 277V CIRCUIT FROM INVERTER TO 120V FEED FOR EMERGENCY TRANSFER DEVICE, CIRCUIT TO INV-2 CIRCUIT.
3. CIRCUIT THROUGH EMERGENCY TRANSFER DEVICE AHEAD OF CIRCUIT FROM THEATRICAL RELAY PANEL. PROVIDE 277:120 1.5KVA TRANSFORMER MOUNTED ON WALL IN MECH A107 TO TRANSFORM 277V CIRCUIT FROM INVERTER TO 120V FEED FOR EMERGENCY TRANSFER DEVICE, CIRCUIT TO INV-4 CIRCUIT.
4. POWER FOR INTERNAL BLEACHER AISLE LIGHTING, COORDINATE WITH BLEACHER SHOP DRAWINGS. PROVIDE 20A-1P TOGGLE SWITCH FOR LOCAL DISCONNECT, MOUNT NEAR DISCONNECTS OF BLEACHER MOTOR POWER.
5. PROVIDE WIRE GUARD OVER EXIT SIGN.
6. CIRCUIT EXTERIOR LIGHTING BACK TO MAIN ELECTRICAL ROOM AND PROVIDE NEW CONTACTOR CONNECTED TO EXISTING CONTACTOR TIME CLOCK VIA BMS. CIRCUIT WITH (2)#10,#10G,1/2"C

hollis+miller architects
we design the future®
1828 Walnut Street Suite 922
Kansas City, MO 64108
t 816.442.7700
115 Wilcox Street Suite 210
Castle Rock, CO 80104
t 720.949.1689
HOLLISANDMILLER.COM

Hollis + Miller Architects
Missouri State Certificate of Authority
Architecture # 000161
Structure # 2006031333

Bob D Campbell
Structural Engineer
State Certificate of Authority #000442
4338 Belleview Ave
Kansas City, MO 64111
816.531.4144 phone

Smith & Boucher, Inc.
Mechanical, Electrical, & Plumbing
State Certificate of Authority #EGC000178
25618 W 103rd Street
Olathe, KS 66061
913.345.2127 phone

MKEC Engineering, Inc.
Civil Engineer
State Certificate of Authority
Engineering #2001009364
Landscaping #2006027139
Surveying #2006027138
11827 W 112th Street, Suite 200
Overland Park, KS 66210
913.317.9390 phone

Peerbolte Creative
Theatrical Consultant
109 E Pine St.
Warrensburg, MO 64093-0752
660.429.1383 phone

Avant Acoustics
AV/Acoustics Consultant
14827 West 95th St.
Lenexa, KS 66215
913.888.9111 phone

Discovery Middle School Storm Shelter Addition

Liberty School District

800 Midjay Dr, Liberty, MO 64068

Conformed Construction Documents

REVISIONS:

#	Description	Date
5	ADDENDUM 05	10-06-2023

smith & boucher engineers
25618 west 103rd St olathe, ks 66061
phone 913.345.2127 fax 913.345.0617
project number 2314702

The Professional Architects seal affixed to this sheet applies only to the material and items shown on this sheet. All drawings, instruments or other documents not exhibiting the seal shall not be considered prepared by the architect, and this architect expressly disclaims any and all responsibility for such plan, drawings, or documents not exhibiting the seal.

KEY PLAN

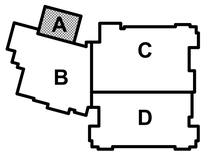

JOB NO: 23018
DRAWN BY: SBI
CHECKED BY: RJD
DATE: 10.11.2023

E101A

LIGHTING PLAN - LEVEL 1 & MEZZANINE - AREA A

Please consider the environment before printing this.
10/11/2023 12:10:51 PM

SHEET KEYNOTE LEGEND

hollis + miller architects®

we design the future®

1828 Walnut Street Suite 922
Kansas City, MO 64108
t 816.442.7700

115 Wilcox Street Suite 210
Castle Rock, CO 80104
t 720.949.1689

HOLLISANDMILLER.COM

Hollis + Miller Architects
Missouri State Certificate of Authority
Architecture # 0000161
Structure # 2006031333

Bob D Campbell
Structural Engineer
State Certificate of Authority #000442
4338 Belleview Ave
Kansas City, MO 64111
816.531.4144 phone

Smith & Boucher, Inc.
Mechanical, Electrical, & Plumbing
State Certificate of Authority #EGC000178
25618 W 103rd Street
Olathe, KS 66061
913.345.2127 phone

MKEC Engineering, Inc.
Civil Engineer
State Certificate of Authority
Engineering #2001009364
Landscaping #2006027139
Surveying #2006027138
11827 W 112th Street, Suite 200
Overland Park, KS 66210
913.317.9390 phone

Peerbolte Creative
Theatrical Consultant
109 E Pine St.
Warrensburg, MO 64093-0752
660.429.1383 phone

Avant Acoustics
AV/Acoustics Consultant
14827 West 95th St.
Lenexa, KS 66215
913.888.9111 phone

Discovery Middle School Storm Shelter Addition

Liberty School District

800 Midjay Dr, Liberty, MO 64068

Conformed Construction Documents

REVISIONS:

#	Description	Date

STATE OF MISSOURI
RYAN JEROD DIEDIKER
NUMBER A-2015006511
REGISTERED PROFESSIONAL ENGINEER
10/11/23

smith & boucher engineers
25618 west 103rd St olathe, ks 66061
phone 913.345.2127 fax 913.345.0617
project number 2314702

The Professional Architects seal affixed to this sheet applies only to the material and items shown on this sheet. All other material and items shown on other sheets in this set are not the responsibility of the architect whose seal is affixed and the architect expressly declares any and all responsibility for such plan, drawings, or documents not exhibiting the seal.

KEY PLAN

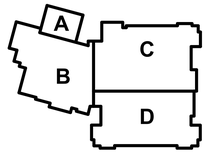

JOB NO: 23018
DRAWN BY: SBI
CHECKED BY: RJD
DATE: 10.11.2023

E201

A1 | Scale 1" = 20'-0" | OVERALL POWER PLAN - LEVEL 1

20' 10' 0' 20'

PROJECT NORTH

TRUE NORTH

OVERALL POWER PLAN - LEVEL 1

Please consider the environment before printing this.

10/11/2023 12:11:13 PM

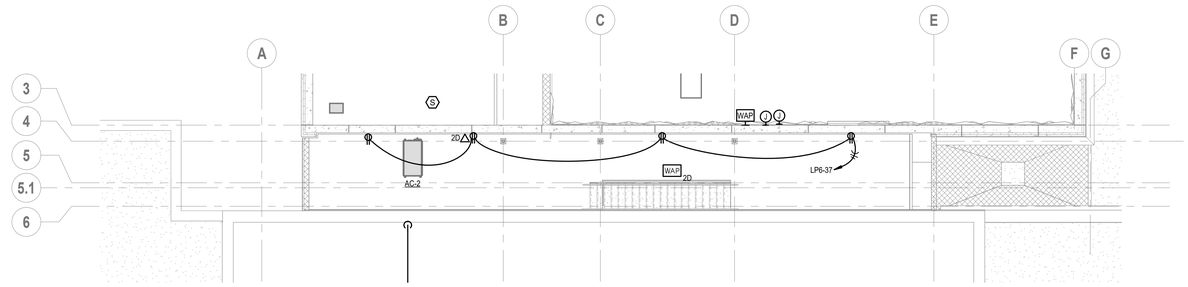

N1 | Scale 1/8" = 1'-0" | POWER PLAN - MEZZANINE - AREA A

8' 4' 0' 8'

PROJECT NORTH

TRUE NORTH

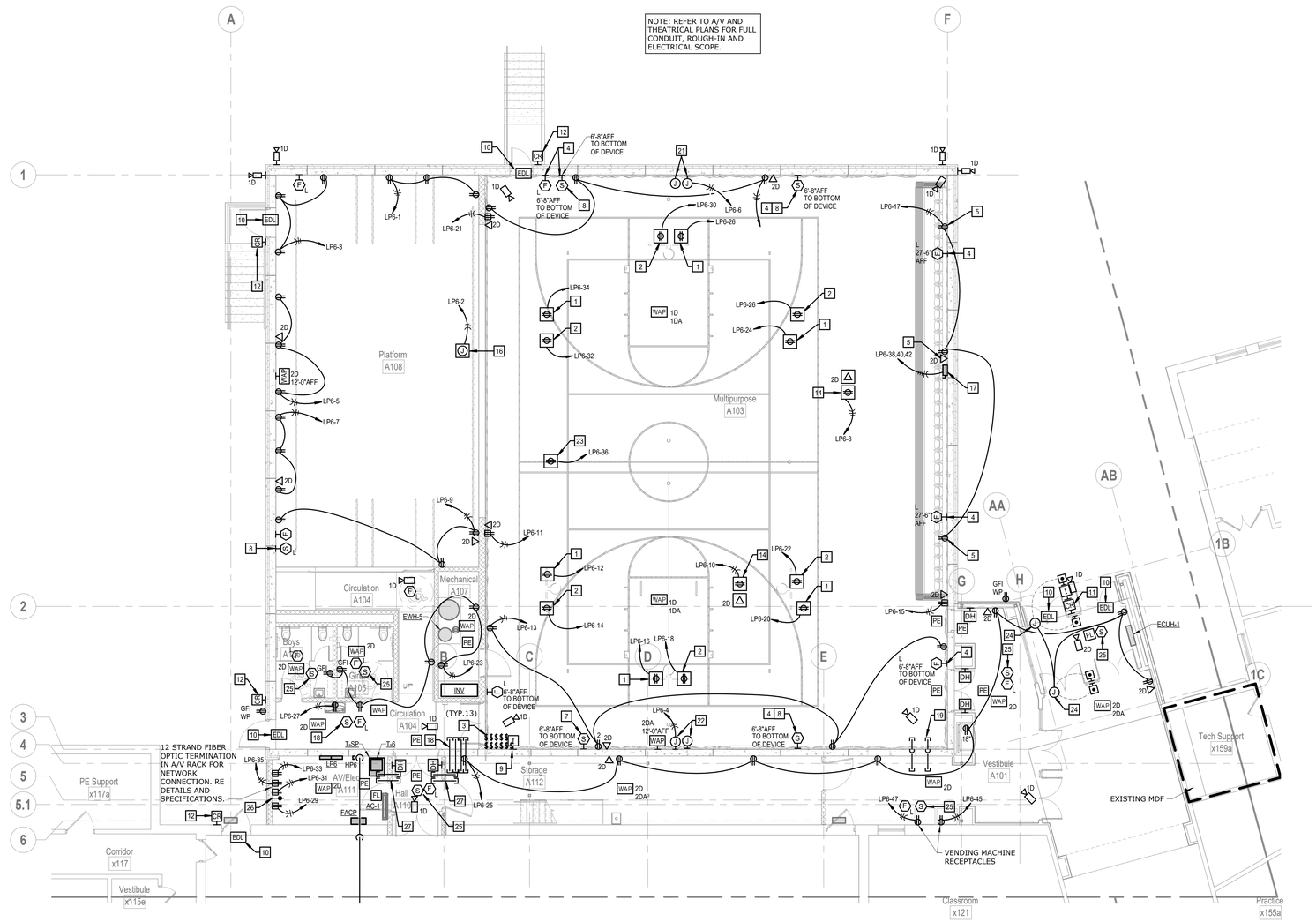

A1 | Scale 1/8" = 1'-0" | POWER PLAN - LEVEL 1 - AREA A

8' 4' 0' 8'

PROJECT NORTH

TRUE NORTH

SHEET KEYNOTE LEGEND

GENERAL NOTES:

1. REFER TO E200 FOR GENERAL NOTES.

PLAN NOTES:

1. RECEPTACLE AND POWER FOR RETRACTABLE GOAL WINCH. CIRCUIT THROUGH KEYED LIMIT SWITCH ON WALL. COORDINATE EXACT ELECTRICAL REQUIREMENTS WITH GYM EQUIPMENT SHOP DRAWINGS PRIOR TO INSTALLATION.
2. RECEPTACLE AND POWER FOR RETRACTABLE ELECTRIC GOAL HEIGHT ADJUSTER. CIRCUIT KEYED LIMIT SWITCH ON WALL. COORDINATE EXACT ELECTRICAL REQUIREMENTS WITH GYM EQUIPMENT SHOP DRAWINGS PRIOR TO INSTALLATION.
3. KEYED LIMIT SWITCH FOR GYM EQUIPMENT MOTORS, COORDINATE WITH BASKETBALL SHOP DRAWINGS PRIOR TO INSTALLATION.
4. PROVIDE WIREGUARD OVER DEVICE.
5. DEVICE MOUNTED ABOVE TOP ROW OF BLEACHERS. COORDINATE WITH ARCHITECTURAL ELEVATIONS PRIOR TO ROUGH-IN.
6. 8" RECESSED TWO-WAY CEILING SPEAKER FOR INTERCOM/PUBLIC ADDRESS SYSTEM. ROUTE CABLING BACK TO MAIN HEAD END AND COORDINATE WITH EXISTING SYSTEM.
7. WALL MOUNTED 5W TWO-WAY LOUD SPEAKER FOR INTERCOM/PUBLIC ADDRESS SYSTEM. ROUTE CABLING BACK TO MAIN HEAD END AND COORDINATE WITH EXISTING SYSTEM.
8. WALL MOUNTED 5W ONE-WAY SPEAKER FOR INTERCOM/PUBLIC ADDRESS SYSTEM. ROUTE CABLING BACK TO MAIN HEAD END AND COORDINATE WITH EXISTING SYSTEM.
9. PROVIDE INTERCOM PUSHBUTTON AND ALL CABLING BACK TO HEAD END UNIT AND SPEAKER FOR COMPLETE WORKING SYSTEM. COORDINATE EXACT LOCATION WITH OWNER PRIOR TO ROUGH-IN.
10. ELECTRIC DOOR LOCK LOCATION, PROVIDE CONTROL CABLING PER SPECIFICATIONS, ROUTE BACK TO DOOR CONTROL HEAD END PANEL. COORDINATE EXACT REQUIREMENTS WITH OWNER AND ARCHITECT.
11. CARD READER MOUNTED IN MULLION AT 48" AFF, COORDINATE PATHWAY WITH DOOR HARDWARE PROVIDER.
12. CARD READER MOUNTED AT 48" AFF, COORDINATE PATHWAY WITH DOOR HARDWARE PROVIDER.
13. NOT USED.
14. DECK MOUNTED CEILING RECEPTACLE FOR PENDANT MOUNTED PROJECTOR IN GYM CEILING. COORDINATE EXACT LOCATION WITH AV DRAWINGS.
15. NOT USED.
16. POWER FOR PROJECTION SCREEN. COORDINATE LOCATION AND ALL REQUIREMENTS WITH PROVIDED PROJECTOR SCREEN. COORDINATE WITH AV DRAWINGS.
17. RETRACTABLE BLEACHER POWER. PROVIDE 30A-3P NF BLEACHER SAFETY SWITCH. CIRCUIT WITH (4)#10,#10G, 1/2"C. COORDINATE EXACT ELECTRICAL REQUIREMENTS WITH BLEACHER SHOP DRAWINGS PRIOR TO ROUGH-IN
18. (8) 2" CONDUIT SLEEVES THRU THE WALL ABOVE THE CEILING FOR LOW VOLTAGE CABLING.
19. (2) 2" CONDUIT SLEEVES STUBBED IN CORRIDOR PLENUM SPACE AND ROUTED IN THE WALL STUBBED UP TIGHT TO GYM ROOF DECK FOR LOW VOLTAGE CABLING.
20. (1) 2" CONDUIT SLEEVE THRU THE WALL ABOVE THE CEILING FOR LOW VOLTAGE CABLING.
21. PROVIDE POWER AND LOW VOLTAGE ROUGH-IN FOR FUTURE SCORE BOARD. PROVIDE WITH (2) BACK BOXES AND (3) 1-1/2" CONDUITS STUBBED TIGHT TO DECK. COORDINATE PLACEMENT OF BOXES WITH ARHCITECT/OWNER PRIOR TO ROUGH-IN.
22. PROVIDE POWER AND LOW VOTLAGE FOR SCORE BOARD. PROVIDE WITH (2) BACK BOXES AND (3) 1-1/2" CONDUITS STUBBED TIGHT TO DECK. CONTINUE ONE CONDUIT BACK TO AV LOCATION FOR CONTROL OF SCOREBOARD, COORDINATE WITH AV PLANS. COORDINATE ROUGH-IN HEIGHT WITH ARCHITECTURAL ELEVATIONS AND SCOREBOARD SHOP DRAWINGS.
23. RECEPTACLE AND POWER FOR RETRACTABLE DIVIDER CURTAIN. CIRCUIT THROUGH GYM EQUIPMENT CONTACTOR PANEL. COORDINATE EXACT ELECTRICAL REQUIREMENTS WITH GYM EQUIPMENT SHOP DRAWINGS PRIOR TO INSTALLATION.
24. POWER AND MULLION MOUNTED PUSH BUTTON CONTROL FOR MOTORIZED ACCESSIBLE DOOR. COORDINATE EXACT REQUIREMENTS AND LOCATION WITH DOOR HARWARE PROVIDER. PROVIDE 6-PAIR CABLE PER DISTRICT STANDARDS BACK TO ACCESS CONTROL CABINET FOR INTEGRATION WITH ACCESS CONTROLS.
25. 8" RECESSED ONE-WAY CEILING SPEAKER FOR INTERCOM/PUBLIC ADDRESS SYSTEM. ROUTE CABLING BACK TO MAIN HEAD END AND COORDINATE WITH EXISTING SYSTEM.
26. GROUND BUS BAR CONNECTED TO SERVICE MAIN GROUND. REFER TO DETAILS.
27. (2) 4" CONDUIT SLEEVES THRU THE WALL TIGHT TO CEILING DECK FOR LOW VOLTAGE CABLING

hollis + miller architects

we design the future®

1828 Walnut Street Suite 922
Kansas City, MO 64108
t 816.442.7700

115 Wilcox Street Suite 210
Castle Rock, CO 80104
t 720.949.1689

HOLLISANDMILLER.COM

Hollis + Miller Architects
Missouri State Certificate of Authority
Architecture # 000161
Structure # 2006031333

Bob D Campbell
Structural Engineer
State Certificate of Authority #000442
4338 Belleview Ave
Kansas City, MO 64111
816.531.4144 phone

Smith & Boucher, Inc.
Mechanical, Electrical, & Plumbing
State Certificate of Authority #EGC000178
25618 W 103rd Street
Olathe, KS 66061
913.345.2127 phone

MKEC Engineering, Inc.
Civil Engineer
State Certificate of Authority
Engineering #2001009364
Landscaping #2006027139
Surveying #2006027138
11827 W 112th Street, Suite 200
Overland Park, KS 66210
913.317.9390 phone

Peerbolte Creative
Theatrical Consultant
109 E Pine St.
Warrensburg, MO 64093-0752
660.429.1383 phone

Avant Acoustics
AV/Acoustics Consultant
14827 West 95th St.
Lenexa, KS 66215
913.888.9111 phone

Discovery Middle School Storm Shelter Addition

Liberty School District

800 Midjay Dr, Liberty, MO 64068

Conformed Construction Documents

REVISIONS:

#	Description	Date
1	ADDENDUM #1	09-14-2023

smith & boucher engineers
25618 west 103rd St olathe, ks 66061
phone 913.345.2127 fax 913.345.0617
project number 2314702

The Professional Architects seal affixed to this sheet applies only to the material and items shown on this sheet. All drawings, instruments or other documents not exhibiting the seal shall not be considered prepared by this architect, and this architect expressly disclaims any and all responsibility for such plan, drawings, or documents not exhibiting the seal.

KEY PLAN

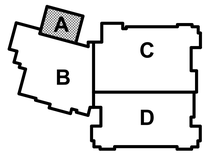

JOB NO: 23018
DRAWN BY: SBI
CHECKED BY: RJD
DATE: 10.11.2023

E201A

POWER PLAN - LEVEL 1 & MEZZANINE - AREA A

10/11/2023 12:11:20 PM

Please consider the environment before printing this.

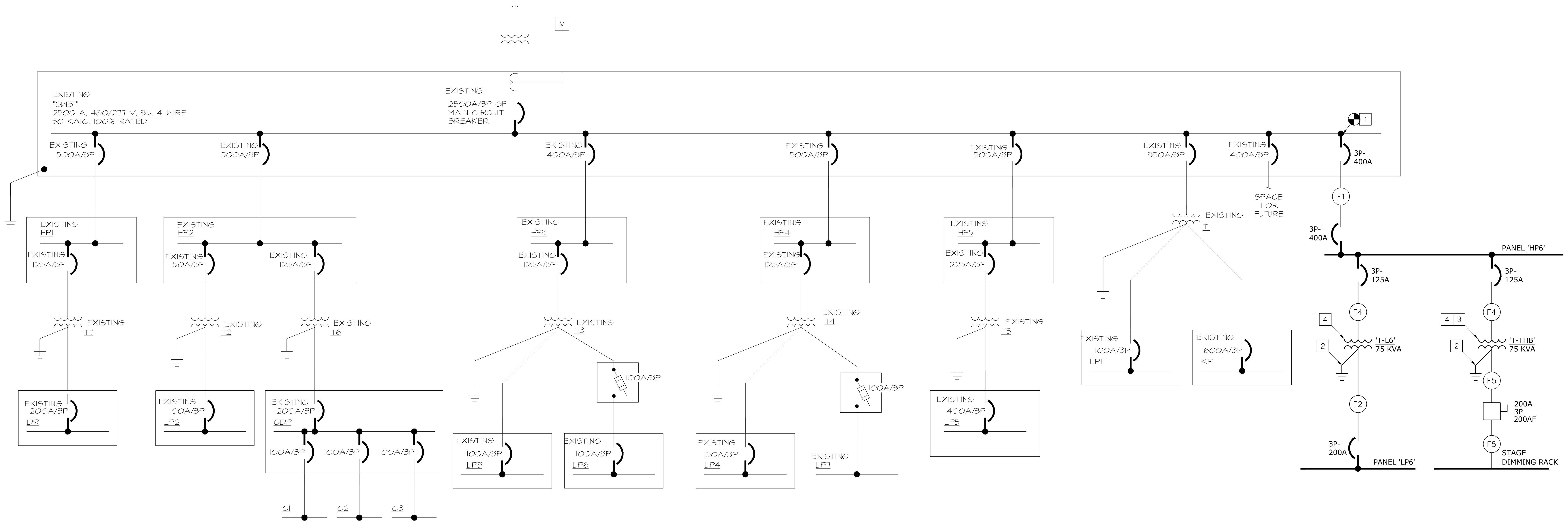

MIDDLE SCHOOL ADDITION ELECTRIC ONE LINE DIAGRAM

NOT TO SCALE

FEEDER SCHEDULE

NO.	CONDUCTORS AND CONDUIT	MATERIAL
F1	2 SETS OF (4)#300, #1/0G., 2-1/2"C.	AA
F2	(4)#250, #2G., 2-1/2"C.	CU
F3	(3)#4, #8G., 1"C.	CU
F4	(3)#1 #6G, 1-1/4"C.	CU
F5	(5)#250, #2G, 3"C.	CU
F6	(5)#350, #4G, 4"C.	CU

CU = COPPER CONDUCTORS
AA = ALUMINUM ALLOY 8000 SERIES CONDUCTORS

PLAN NOTES:

1. FURNISH AND INSTALL NEW 3P-600A CIRCUIT BREAKER WITHIN THE EXISTING A SWITCHBOARD LOCATED IN THE MAIN ELECTRICAL ROOM FOR THE BUILDING.
2. REFER TO 'TYPICAL TRANSFORMER GROUNDING' DIAGRAM ON THIS SHEET FOR TRANSFORMER GROUNDING REQUIREMENTS/SIZE.
3. PROVIDE TYPE K13 RATED TRANSFORMER.
4. PROVIDE TYPE C, D, OR E NEOPRENE VIBRATION ISOLATORS DEPENDING ON MOUNTING CONDITIONS AND WITH MINIMUM STAT DEFLECTION OF 0.15IN. PROVIDE SPRING VIBRATION ISOLATORS WHERE SUSPENDED FROM STRUCTURE WITH MINIMUM STAT DEFLECTION OF .5IN. ALL ELECTRICAL CONNECTIONS TO THE EQUIPMENT SHALL BE MADE WITH LONG LENGTHS OF FLEXIBLE CONDUIT, CONNECTIONS MUST BE LOCATED SO AS TO PREVENT RIGID CONDUIT CONNECTIONS BETWEEN RESILIENTLY MOUNTED EQUIPMENT AND THE BUILDING STRUCTURE. COORDINATE WITH ACOUSTICAL SPECIFICATIONS.

PANEL LP6

MAIN BUS AMPS: 200 A — **AIC:** 10,000 A
MAIN BREAKER: 200 A — **SECTIONS:** 1 - 72 SPACE — EQUIPMENT GROUND BUS
VOLTAGE: 208Y/120 V — **MOUNTING:** SURFACE
PHASES/WIRES: 3 PH / 4 W — **ENCLOSURE TYPE:** NEMA 1 — SERVICE ENTRANCE

CIRCUIT DESCRIPTION	POLES	AMPS	CKT NO	CKT NO	AMPS	POLES	CIRCUIT DESCRIPTION
REC - STAGE GENERAL #1	1	20	1	2	20	1	STAGE PROJECTOR SCREEN
REC - STAGE GENERAL #2	1	20	3	4	20	1	SCORE BOARD #1
REC - STAGE GENERAL #3	1	20	5	6	20	1	SCORE BOARD #2
REC - STAGE GENERAL #4	1	20	7	8	20	1	REC - MULTIPURPOSE PROJECTOR #1
REC - STAGE GENERAL #5	1	20	9	10	20	1	REC - MULTIPURPOSE PROJECTOR #2
REC - MULTIPURPOSE GENERAL #1	1	20	11	12	20	1	REC - MULTIPRPSE GOAL WINCH #1
REC - MULTIPURPOSE GENERAL #2	1	20	13	14	20	1	REC - MULTIPRPSE GOAL WINCH #2
REC - MULTIPURPOSE GENERAL #2	1	20	15	16	20	1	REC - MULTIPRPSE GOAL WINCH #3
REC - MULTIPURPOSE GENERAL #3	1	20	17	18	20	1	REC - MULTIPRPSE GOAL WINCH #4
REC - MULTIPURPOSE GENERAL #3	1	20	19	20	20	1	REC - MULTIPRPSE GOAL WINCH #5
REC - MULTIPURPOSE GENERAL #4	1	20	21	22	20	1	REC - MULTIPRPSE GOAL WINCH #6
REC - MECH , RR, CIRC	1	20	23	24	20	1	REC - MULTIPRPSE GOAL WINCH #7
REC - VEST, STORAGE	1	20	25	26	20	1	REC - MULTIPRPSE GOAL WINCH #8
REC - EWC	1	20 GFI	27	28	20	1	REC - MULTIPRPSE GOAL WINCH #9
REC - AV ELEC RACK #1	1	20	29	30	20	1	REC - MULTIPRPSE GOAL WINCH #10
REC - AV ELEC RACK #2	1	20	31	32	20	1	REC - MULTIPRPSE GOAL WINCH #11
REC - AV ELEC RACK #3	1	20	33	34	20	1	REC - MULTIPRPSE GOAL WINCH #12
REC - AV ELEC RACK #4	1	20	35	36	20	1	REC - MULTIPURPOSE DIVIDER WINCH
REC - STORAGE 2ND FLR	1	20	37	38	20	3	MULTIPURPOSE BLEACHERS
REC - MULTIPUPOSE ROOF	1	20	39	40			
EF-20	1	15	41	42			
HWCP-5	1	15	43	44	30	2	AC-1
REC - VENDING #1	1	20 GFI	45	46			
REC - VENDING #2	1	20 GFI	47	48	30	2	AC-2
SPARE	1	20	49	50			
SPARE	1	20	51	52	20	1	SPARE
SPARE	1	20	53	54	20	1	SPARE
SPARE	1	20	55	56	20	1	SPARE
SPARE	1	20	57	58	20	1	SPARE
SPARE	1	20	59	60	20	1	SPARE
SPARE	1	20	61	62	20	1	SPARE
SPARE	1	20	63	64	20	1	SPARE
SPARE	1	20	65	66	20	1	SPARE
SPARE	1	20	67	68	20	1	SPARE
SPARE	1	20	69	70	20	1	SPARE
SPARE	1	20	71	72	20	1	SPARE

GFI - GROUND FAULT BREAKER

PANEL HP6

MAIN BUS AMPS: 400 A — **AIC:** 42,000 A
MAIN BREAKER: 400 A — **SECTIONS:** 1 - 42 SPACE — EQUIPMENT GROUND BUS
VOLTAGE: 480Y/277 V — **MOUNTING:** SURFACE
PHASES/WIRES: 3 PH / 4 W — **ENCLOSURE TYPE:** NEMA 1 — SERVICE ENTRANCE

CIRCUIT DESCRIPTION	POLES	AMPS	CKT NO	CKT NO	AMPS	POLES	CIRCUIT DESCRIPTION
SPARE	1	20	1	2	20	1	LTG- STORAGE, VESTIBULE, ELEC
SPARE	1	20	3	4	25	1	EWH-5
SPARE	1	20	5	6	25	2	ECUH-1
INV-1	3	20	7	8	20	1	SPARE
			9	10	20	1	SPARE
			11	12	20	1	SPARE
RTU-17	3	40	13	14	20	1	SPARE
			15	16	20	1	SPARE
			17	18	20	1	SPARE
RTU-16	3	80	19	20			PREPARED SPACE
			21	22			PREPARED SPACE
			23	24			PREPARED SPACE
RTU-15	3	80	25	26			PREPARED SPACE
			27	28			PREPARED SPACE
			29	30			PREPARED SPACE
LP6	3	125	31	32			PREPARED SPACE
			33	34			PREPARED SPACE
			35	36			PREPARED SPACE
THEATER PANEL RP1	3	125	37	38			PREPARED SPACE
			39	40			PREPARED SPACE
			41	42			PREPARED SPACE

INVERTER INV-1

RATED KVA: 12.5 — **AIC:** 42,000 A
VOLTAGE: 480Y/277 V — **MOUNTING:** 2" HOUSE KEEPING PAD
PHASES/WIRES: 3 PH / 4 W — **ENCLOSURE TYPE:** INDOOR

CIRCUIT DESCRIPTION	POLES	AMPS	LOAD	CKT NO	CKT NO	LOAD	AMPS	POLES	CIRCUIT DESCRIPTION
EF-19	3	20	1,332	1	2	1,231	20	1	SHELTER EM LTG #1
			1,332	3	4	984	20	1	SHELTER EM LTG #2
			1,332	5	6	984	20	1	SHELTER EM LTG #3
SPARE	1	20		7	8	100	20	1	SHELTER DAMPERS
SPARE	1	20		9	10		20	1	SPARE
	1			11	12			1	
SUBTOTAL	-	-	3,995	-	-	3,299	-	-	SUBTOTAL

NOTE: SIZE FOR 120MIN RUN TIME PER IECC SHELTER REQUIREMENTS.
UL 924 RATED. EQUIVALENT TO EVENLITE OR APPROVED EQUAL.

MOTORS	(CONNECTED)= 4,095	(DEMAND)=	5,094 VA	(FACTORS)=	1.25 MAX 1.00 ALL OTHERS
RECEPTACLES	(CONNECTED)=	(DEMAND)=	VA	(FACTORS)=	1.00 0-10KVA 0.50 >10 KVA
LIGHTING	(CONNECTED)= 3,199	(DEMAND)=	3,999 VA	(FACTORS)=	1.25
HEATING	(CONNECTED)=	(DEMAND)=	VA	(FACTORS)=	1.25
COOLING	(CONNECTED)=	(DEMAND)=	VA	(FACTORS)=	1.00
KITCHEN	(CONNECTED)=	(DEMAND)=	VA	(FACTORS)=	0.65
OTHER	(CONNECTED)=	(DEMAND)=	VA	(FACTORS)=	1.00
TOTAL	(CONNECTED)= 7,294	(DEMAND)=	9,093 VA	11.9 AMPS	TOTAL MAXIMUM DEMAND

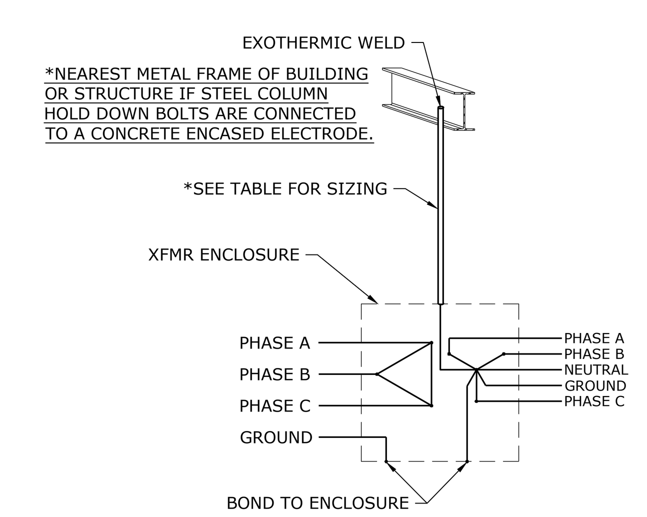

TRANSFORMER SIZE	(*)
15 KVA OR SMALLER	#8 CU IN 1/2" C.
30, 45 KVA	#6 CU IN 1/2" C.
75 KVA	#2 CU IN 1/2" C.
112.5, 150 KVA	#1/0 CU IN 3/4" C.
225 KVA	#2/0 CU IN 3/4" C.
300, 500 KVA	#3/0 CU IN 1" C.

TYPICAL TRANSFORMER GROUNDING

NOT TO SCALE

hollis + miller architects®
we design the future®
1828 Walnut Street Suite 922
Kansas City, MO 64108
T 816.442.7700
115 Wilcox Street Suite 210
Castle Rock, CO 80104
T 720.949.1689
HOLLISANDMILLER.COM
Hollis + Miller Architects
Missouri State Certificate of Authority
Architecture # 0000161
Structure # 2006031333

Bob D Campbell
Structural Engineer
State Certificate of Authority #000442
4338 Bellview Ave.
Kansas City, MO 64111
816.531.4144 phone

Smith & Boucher Inc.
Mechanical, Electrical & Plumbing
State Certificate of Authority #EGC000178
25618 W 103rd Street
Olathe, KS 66061
913.345.2127 phone

MKEC Engineering, Inc.
Civil Engineer
State Certificate of Authority #
Engineering: 2001009364
Landscaping: 2006027139
Surveying: 2006027138
11827 W 112th Street, Suite 200
Overland Park, KS 66210
913.317.9390 phone

Peerbolte Creative
Theatrical Consultant
109 E Pine St.
Warrensburg, MO 64093-0752
660.429.1383 phone

Avant Acoustics
AV/Acoustics Consultant
14827 West 95th St.
Lenexa, KS 66215
913.888.9111 phone

Discovery Middle School Storm Shelter Addition
Liberty School District
800 Midjay Dr, Liberty, MO 64068

Conformed Construction Documents

REVISIONS:

#	Description	Date
3	ADDENDUM #3	09-26-23

STATE OF MISSOURI — RYAN JEROD DIEDIKER — NUMBER PE-2015006511 — REGISTERED PROFESSIONAL ENGINEER — 10/11/23

The Professional Architects seal affixed to this sheet applies only to the material and items shown on this sheet. All drawings, instruments or other documents not exhibiting this seal shall not be considered prepared by this architect, and this architect expressly disclaims any and all responsibility for such plan, drawings, or documents not exhibiting this seal.

JOB NO: 23018
DRAWN BY: SBI
CHECKED BY: RJD
DATE: 10.11.2023

smith & boucher engineers
25618 west 103rd St olathe, ks 66061
phone 913.345.2127 fax 913.345.0617
project number 2314702

E301

ELECTRICAL - ONE LINE DIAGRAMS

PROJECT NAME: 2314702 Liberty SD 2023 Discovery MS Gym Addition & LED Lighting
AUTOCAD FILE LOCATION \ NAME: X:\23\23147\2314702\Drawings\06-2314702_E301.dwg
LAST CORRECTION BY • DATE • TIME: Bootyc Wednesday, October 11, 2023 9:19:44 AM
PLOTTED BY • DATE • TIME: Booty Charles Wednesday, October 11, 2023 9:45:03 AM

Please consider the environment before printing this.

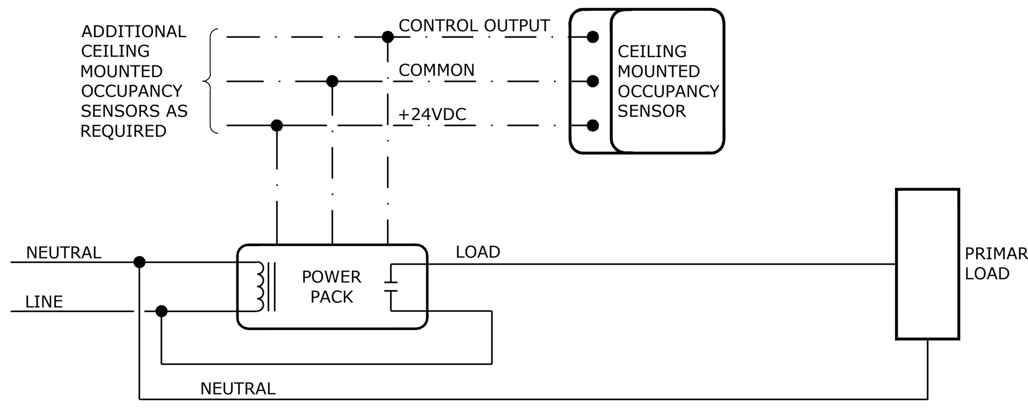

LOW VOLTAGE OCCUPANCY SENSOR WIRING DIAGRAM WITH AUTOMATIC ON OPERATION

NOT TO SCALE

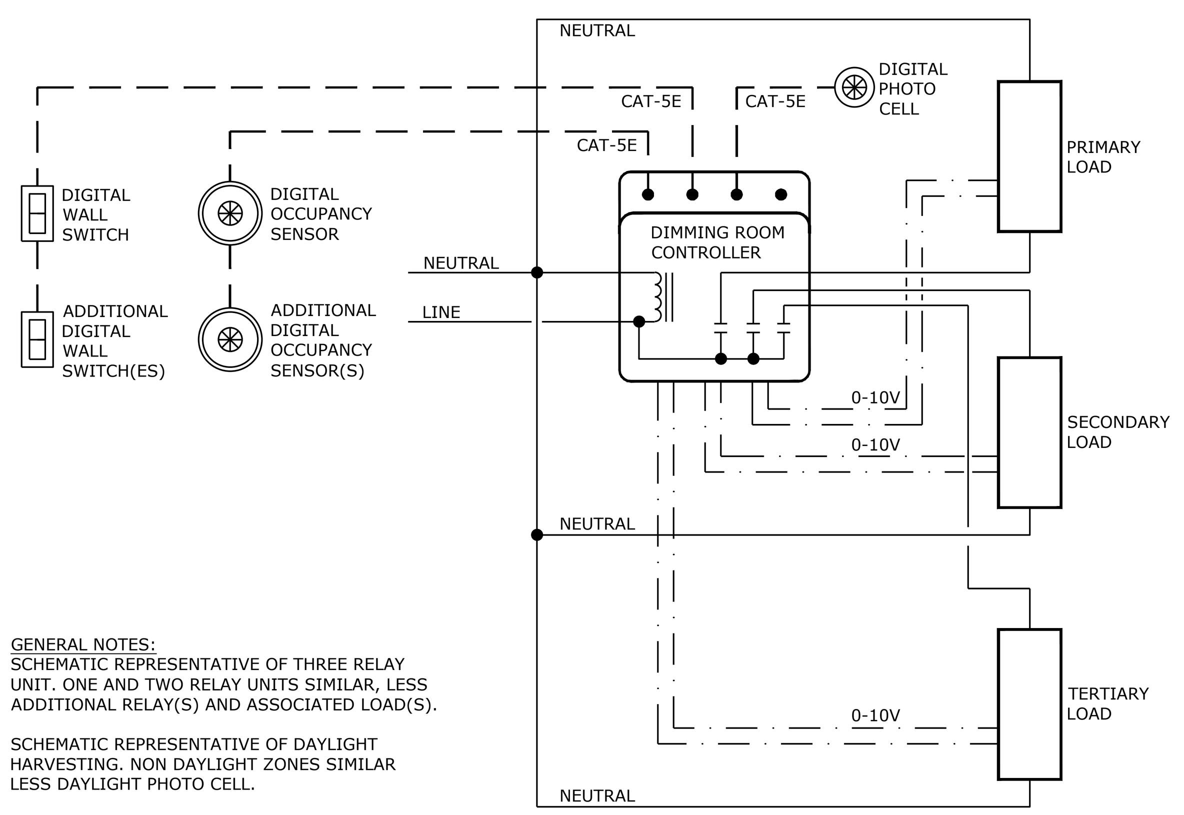

GENERAL NOTES:
SCHEMATIC REPRESENTATIVE OF THREE RELAY UNIT. ONE AND TWO RELAY UNITS SIMILAR, LESS ADDITIONAL RELAY(S) AND ASSOCIATED LOAD(S).

SCHEMATIC REPRESENTATIVE OF DAYLIGHT HARVESTING. NON DAYLIGHT ZONES SIMILAR LESS DAYLIGHT PHOTO CELL.

DIGITAL ROOM CONTROLLER WIRING DIAGRAM

NOT TO SCALE

LIGHTING CONTROL REQUIREMENTS & DESCRIPTIONS - PER SPACE TYPE

TYPE	LIGHTING CONTROL REQUIREMENTS FOR SPACE
1	CONTROL METHOD: OCCUPANCY ON - OCCUPANCY OFF: POWER PACKS/CONTROLLERS: -LOCAL DEVICES IN ACCESSIBLE LOCATIONS AS REQUIRED TO ACHIEVE CONTROL METHOD INDICATED. OCCUPANCY SENSOR(S): -TYPE AND MINIMUM QUANTITY NOTED ON PLANS, MODELS/SETTINGS AS NEEDED TO PROVIDE SMALL MOTION COVERAGE IN ENTIRE ROOM. -SET TIME DELAYS FOR SHUT-OFF AT 30 MINUTES.
2	CONTROL METHOD: MANUAL ON - OCCUPANCY OFF - MANUAL ON/OFF CONTROLS: POWER PACKS/CONTROLLERS: -LOCAL DEVICES IN ACCESSIBLE LOCATIONS AS REQUIRED TO ACHIEVE CONTROL METHOD INDICATED. OCCUPANCY SENSOR(S): -TYPE, LOCATION(S), AND MINIMUM QUANTITY NOTED ON PLANS. MODELS/SETTINGS AS NEEDED TO PROVIDE SMALL MOTION COVERAGE IN ENTIRE ROOM. -SET TIME DELAYS FOR SHUT-OFF AT 30 MINUTES. ON/OFF ZONE SWITCHES: -LOCATION(S) AND QUANTITIES SHOWN ON FLOOR PLANS. -ZONE QUANTITIES FOR EACH SWITCH LOCATION DENOTED ON FLOOR PLANS. -ZONE DESIGNATIONS ARE DENOTED FOR EACH SWITCH WHEN DIFFERENT ZONES ARE CONTROLLED FROM DIFFERENT SWITCHES WITHIN THE SAME ROOM. -ZONES ARE DENOTED ON EACH ASSOCIATED LIGHT FIXTURE WHEN MULTIPLE ZONES ARE PRESENT WITHIN ROOM, USING LOWER CASE LETTERS AS FOLLOWS: "a", "b", ETC. -ON AND OFF CONTROL FOR EACH ZONE, WITH EITHER SEPARATE BUTTONS OR SINGLE BUTTON ROCKER STYLE. NOT TOGGLE STYLE.
3	CONTROL METHOD: MANUAL ON - OCCUPANCY OFF - MANUAL DIMMING CONTROLS: POWER PACKS/CONTROLLERS: -LOCAL DEVICES IN ACCESSIBLE LOCATIONS AS REQUIRED TO ACHIEVE CONTROL METHOD INDICATED. OCCUPANCY SENSOR(S): -TYPE, LOCATION, AND MINIMUM QUANTITY NOTED ON PLANS. MODELS/SETTINGS AS NEEDED TO PROVIDE SMALL MOTION COVERAGE IN ENTIRE ROOM. -SET TIME DELAYS FOR SHUT-OFF AT 30 MINUTES. DIMMABLE ZONE SWITCHES: -LOCATION(S) AND QUANTITIES SHOWN ON FLOOR PLANS. -ZONE QUANTITIES FOR EACH SWITCH LOCATION DENOTED ON FLOOR PLANS. -ZONE DESIGNATIONS ARE DENOTED FOR EACH DIMMER LOCATION WHEN DIFFERENT ZONES ARE CONTROLLED FROM DIFFERENT DIMMERS WITHIN THE SAME ROOM. -ZONES ARE DENOTED ON EACH ASSOCIATED LIGHT FIXTURE WHEN MULTIPLE ZONES ARE PRESENT WITHIN ROOM, USING LOWER CASE LETTERS AS FOLLOWS: "a", "b", ETC. -ON AND OFF CONTROL FOR EACH ZONE, WITH EITHER SEPARATE BUTTONS OR SINGLE BUTTON ROCKER STYLE. NOT TOGGLE STYLE. -RAISE AND LOWER CONTROL FOR EACH ZONE, WITH EITHER SEPARATE BUTTONS OR SINGLE BUTTON ROCKER STYLE. NOT SLIDER STYLE. AUTOMATIC DAYLIGHT HARVESTING PHOTOCELL(S), WHEN SHOWN ON PLANS: -AUTOMATICALLY RAISE/LOWER LIGHTING OUTPUT OF EACH LIGHTING ZONE, EITHER FULLY ARE PARTIALLY, WITHIN EACH DAYLIGHT ZONE(S) NOTED ON FLOOR PLANS. -DEDICATED CLOSED LOOP PHOTOCELL FOR EACH ROOM WITH DAYLIGHT ZONE(S).
4	CONTROL METHOD: CONTROL VIA DMX FROM THEATRICAL PANEL: REFER TO THEATRICAL PLANS

GENERAL NOTES:
NOTE 1: WHERE NOTED ABOVE, SCHEDULED BUILDING HOURS OF OPERATION ARE AS FOLLOWS: 6:30 AM TO 6:30 PM.
NOTE 2: CONTRACTOR MUST INCLUDE SHOP DRAWINGS WITH LIGHTING CONTROLS SUBMITTAL SHOWING WIRING SCHEMATICS/DIAGRAMS OVERLAYED ON FLOOR PLANS FOR EACH ROOM.
NOTE 3: ALL WALL MOUNTED LIGHTING CONTROLS MUST HAVE MATCHING FINISHES TO THOSE LISTED IN SPECIFICATION SECTION 262726 - WIRING DEVICES.
NOTE 4: PROVIDE A DIGITAL LIGHTING CONTROL SYSTEM FROM A MANUFACTURER LISTED IN SPECIFICATION SECTION 260923 - LIGHTING CONTROL DEVICES. WIRELESS SYSTEMS ARE NOT PERMITTED.
NOTE 5: CONTRACTOR TO MODIFY OCCUPANCY SENSOR LOCATIONS, AND/OR INCREASE QUANTITIES, AS REQUIRED BASED ON COVERAGE CAPABILITIES OF SUBMITTED PRODUCTS.
NOTE 6: CONTRACTOR MUST COORDINATE WITH LIGHT FIXTURE SCHEDULE, AND MOST IMPORTANTLY THE LIGHT FIXTURE SUBMITTAL, TO VERIFY DIMMING TYPE NEEDED FOR EACH RELAY/CONTROLLER.
NOTE 7: PROGRAM DAYLIGHT HARVESTING SETPOINTS AT NIGHT WITH ALL LIGHT FIXTURES AT FULL LIGHT OUTPUT. PHOTOCELL TO DIM LIGHTING BASED ON THIS SETPOINT IN A CLOSED LOOP SYSTEM.
NOTE 8: CONTRACTOR TO MODIFY PHOTOCELL LOCATIONS AS REQUIRED BASED ON SUBMITTED PRODUCTS.

OCCUPANCY CONTROL DEVICE SCHEDULE

SYMBOL	DESCRIPTION	DETECTION TYPE	SETTINGS (TYPICAL)	MANUFACTURER/MODEL	NOTES
$\$_P$	WALL MOUNTED SWITCH/OCCUPANCY SENSOR LINE VOLTAGE - SINGLE RELAY	PASSIVE INFRARED	ON: MANUAL OFF: 30 MINUTE DELAY	WATTSTOPPER CS-50	1,2
$\$_{PD}$	WALL MOUNTED SWITCH/OCCUPANCY SENSOR LINE VOLTAGE - SINGLE RELAY - WITH DIMMING	DUAL TECHNOLOGY	ON: MANUAL OFF: 30 MINUTE DELAY	WATTSTOPPER DW-311	1,2
$\$_{TS}$	WALL MOUNTED DIGITAL TIMER SWITCH LINE VOLTAGE - SINGLE RELAY	NONE	ON: MANUAL OFF: 2 HOUR DELAY TIME SCROLL: UP WARNING FLASH/SOUND: ON/ON	WATTSTOPPER TS-400	1,2
$\$_{L\#}$	WALL MOUNTED LIGHTING SYSTEM ON/OFF SWITCH # INDICATES QUANTITY OF ZONES CONTROLLED AT EACH LOCATION	-	-	PER SUBMITTAL	1,2
$\$_{D\#}$	WALL MOUNTED LIGHTING SYSTEM DIMMER SWITCH # INDICATES QUANTITY OF ZONES CONTROLLED AT EACH LOCATION	-	-	PER SUBMITTAL	1,2
◆	CEILING MOUNTED LIGHTING SYSTEM OCCUPANCY SENSOR	PASSIVE INFRARED	-	PER SUBMITTAL	1,3,4
◆DT	CEILING MOUNTED LIGHTING SYSTEM OCCUPANCY SENSOR	DUAL TECHNOLOGY	-	PER SUBMITTAL	1,3,4

NOTE 1: THE MANUFACTURERS AND MODELS LISTED ARE THE BASIS OF DESIGN, ALL PRODUCT SUBSTITUTIONS SUBMITTED MUST BE APPROVED AS EQUAL. REFER TO DRAWINGS FOR QUANTITIES.
NOTE 2: ALL WALL MOUNTED LIGHTING CONTROLS MUST HAVE MATCHING FINISHES TO THOSE LISTED IN SPECIFICATION SECTION 262726 - WIRING DEVICES.
NOTE 3: OCCUPANCY SENSOR LOCATIONS SHOWN ON FLOOR PLANS ARE GENERIC, CONTRACTOR TO MODIFY LOCATIONS AS REQUIRED BASED COVERAGE CAPABILITIES OF SUBMITTED PRODUCTS.
NOTE 4: MODIFY LOCATIONS OF CEILING MOUNTED OCCUPANCY SENSORS AS REQUIRED SO THAT NO OCCUPANCY SENSOR IS WITHIN 4'-0" OF AN HVAC SUPPLY DIFFUSER.

LIGHT FIXTURE SCHEDULE

TYPE	DESCRIPTION	MOUNTING	LAMP	VOLTS	MANUFACTURER	V-A
A	2'x4' RECESSED BACK LIT FLAT PANEL. INTEGRAL 0-10V DIMMING DRIVER. ADJUSTABLE LUMEN OUTPUT ON FIXTURE	RECESSED GRID	LED 4900 LUMENS (DELIVERED) 3500K 80 CRI	UNV	WILLIAMS SERIES BP GE CURRENT LPL LITHONIA CPX SIGNIFY FLUX PANEL OR PRE-BID APPROVED EQUAL	50
B	4" OPEN APERTURE LED DOWNLIGHT WITH SEMI-SPECULAR LOW IRIDESCENT REFLECTOR, INTEGRAL DRIVER, PAINTED WHITE TRIM FLANGE. PROVIDE WITH 0-10V DIMMING DRIVER UL LISTED FOR WET LOCATIONS, HIGH AMBIENT TEMP.	RECESSED	LED 1,000 LUMENS (DELIVERED) 3500K 80 CRI	UNV	PATHWAY LIGHTING SERIES 4LB79V W LITHONIA LDN4 LIGHTOLIER SERIES LYTEPROFILE INTENSE SD4DR HE WILLIAMS 4DR	15
C	8" ROUND X 17" TALL, HARD STEM MOUNTED CYLINDER. 60 DEG DISTRIBUTION. FADE TO BLACK DMX DIMMING DRIVER. BLACK FINISH. FACE OF FIXTURE TO BE FLUSH WITH BOTTOM OF STRUCTURE.	PENDANT	LED 7,300 LUMENS (DELIVERED) 3500K 90 CRI	UNV	TIMES SQUARE CELESTE METEOR ATRIA 6 OR PRE-BID APPROVED EQUAL	82
C2	SAME AS TYPE 'C' EXCEPT WITH 33 DEG DISTRIBUTION.	PENDANT	LED 7,700 LUMENS (DELIVERED) 3500K 90 CRI	UNV	TIMES SQUARE CELESTE METEOR ATRIA 6 OR PRE-BID APPROVED EQUAL	82
C3	SAME AS TYPE 'C' EXCEPT RECESSED AND FLANGED CAN LIGHT. PROVIDE WITH SLOPED CEILING ADAPTER. BLACK FLANGE FINISH, CONFIRM WITH ARCHITECT.	PENDANT	LED 8,000 LUMENS (DELIVERED) 3500K 90 CRI	UNV	METOER REV 6 GOTHAM EVO 6 OR PRE-BID APPROVED EQUAL	82
C4	SAME AS TYPE 'C' EXCEPT WITH 40 DEG DISTIBUTION AND WITH RGB COLOR CHANGING OUTPUT	PENDANT	LED 90 CRI	UNV	METOER ATRIA 4 TIMES SQUARE CELESTRE COLOR MIX OR PRE-BID APPROVED EQUAL	35
F	4'-0" LED STRIP LIGHT WITH WIRE GUARD. SQUARE LENS. INTEGRAL DRIVER. WHITE FINISH. 0-10V DIMMING DRIVER.	CHAIN HANG TO 8'-0" AFF UNLESS NOTED	LED 3,000 LUMENS (DELIVERED) 3500K	UNV	WILLIAMS 75 SERIES LITHONIA Z SERIES DAY-BRITE FLUX STREAM STRIP COLUMBIA CSL OR PRE-BID APPROVED EQUAL	33
F2	SAME AS TYPE 'F' EXCEPT WITH LUMEN PACKAGE AS NOTED. NO WIRE GUARD. AIR CRAFT CABLE MOUNT. BLACK FINISH.	PEDANT	LED 8,000 LUMENS (DELIVERED) 3500K	UNV	WILLIAMS 75 SERIES LITHONIA Z SERIES DAY-BRITE FLUX STREAM STRIP COLUMBIA CSL OR PRE-BID APPROVED EQUAL	57
F3	SAME AS TYPE 'F' EXCEPT WALL MOUNTED. NO WIRE GUARD. BLACK FINISH.	WALL AT 8'-0"	LED 3,000 LUMENS (DELIVERED) 3500K	UNV	WILLIAMS 75 SERIES LITHONIA Z SERIES DAY-BRITE FLUX STREAM STRIP COLUMBIA CSL OR PRE-BID APPROVED EQUAL	33
G	LED EXTERIOR WEDGE TYPE WALL PACK, TYPE 3 DISTRIBUTION. COORDINATE FINISH AND MOUNTING HEIGHT WITH ARCHITECT.	WALL	LED 3,200 LUMEN (DELIVERED) 4000K 70 CRI	277	LITHONIA WEDGE2 GARDCO GWS OR PRE-BID APPROVED EQUAL	32
X	EDGE LIT EXIT SIGN RED LETTERING. ALUMINUM TRIM. PROVIDE ARROWS AS NOTED ON DRAWINGS, AND SINGLE OR DOUBLE SIDED AS NEEDED AND SHOWN ON DRAWINGS. PROVIDE TOP, BACK, OR SIDE MOUNT HARDWARE AS REQUIRED BY ARCHITECTURAL CONDITIONS. BATTERY CAPABLE OF 90 MINUTES OF EMERGENCY OPERATION.	SURFACE	LED	UNV	DUAL LITE LES SERIES LITHONIA EDGE LIT EXIT EVENLITE TEX EMERGI-LITE TOTAL EDGE OR PRE-BID APPROVED EQUAL	5

NOTE: PROVIDE FIXTURES DESIGNATED WITH AN X ON PLAN WITH 1200 LUMEN (OR MAX FIXTURE OUTPUT) MINIMUM 90MINUTE EMERGENCY BATTERY BACKUP UNLESS WHERE PROVIDED WITH INVERTER, REFER TO PLANS.

hollis + miller architects®
we design the future®
1828 Walnut Street Suite 922
Kansas City, MO 64108
T 816.442.7700
115 Wilcox Street Suite 210
Castle Rock, CO 80104
T 720.949.1689
HOLLISANDMILLER.COM
Hollis + Miller Architects
Missouri State Certificate of Authority
Architecture # 0000161
Structure # 2006031333

Bob D Campbell
Structural Engineer
State Certificate of Authority #000442
4338 Bellview Ave.
Kansas City, MO 64111
816.531.4144 phone

Smith & Boucher Inc.
Mechanical, Electrical & Plumbing
State Certificate of Authority #EGC000178
25618 W 103rd Street
Olathe, KS 66061
913.345.2127 phone

MKEC Engineering, Inc.
Civil Engineer
State Certificate of Authority #
Engineering: 2001009364
Landscaping: 2006027139
Surveying: 2006027138
11827 W 112th Street, Suite 200
Overland Park, KS 66210
913.317.9390 phone

Peerbolte Creative
Theatrical Consultant
109 E Pine St.
Warrensburg, MO 64093-0752
660.429.1383 phone

Avant Acoustics
AV/Acoustics Consultant
14827 West 95th St.
Lenexa, KS 66215
913.888.9111 phone

Discovery Middle School Storm Shelter Addition
Liberty School District
800 Midjay Dr, Liberty, MO 64068

Conformed Construction Documents

REVISIONS:

#	Description	Date
5	ADDENDUM 05	10-06-2023

STATE OF MISSOURI
RYAN JEROD DIEDIKER
NUMBER PE-2015006511
REGISTERED PROFESSIONAL ENGINEER
10/11/23

The Professional Architects seal affixed to this sheet applies only to the material and items shown on this sheet. All drawings, instruments or other documents not exhibiting this seal shall not be considered prepared by this architect, and this architect expressly disclaims any and all responsibility for such plan, drawings, or documents not exhibiting this seal.

JOB NO: 23018
DRAWN BY: SBI
CHECKED BY: RJD
DATE: 10.11.2023

smith & boucher engineers
25618 west 103rd St olathe, ks 66061
phone 913.345.2127 fax 913.345.0617
project number 2314702

E302

ELECTRICAL -SCHEDULES AND DETAILS

Please consider the environment before printing this.

PROJECT NAME: 2314702 Liberty SD 2023 Discovery MS Gym Addition & LED Lighting
AUTOCAD FILE LOCATION \ NAME: X:\23\23147\2314702\Drawings\06-2314702_E302.dwg
LAST CORRECTION BY ◆ DATE ◆ TIME: Bootyc Wednesday, October 11, 2023 9:20:53 AM
PLOTTED BY ◆ DATE ◆ TIME: Booty Charles Wednesday, October 11, 2023 9:45:13 AM

System No. W-L-3256
F Ratings - 1 and 2 Hr (See Item 1)
T Ratings - 1, 1-1/4 and 1-3/4 Hr (See Item 2)
L Rating At Ambient - Less Than 1 or 1.4 CFM
(See Item 3)
L Rating At 400 F - Less Than 1 or 1.4 CFM
(See Item 3)

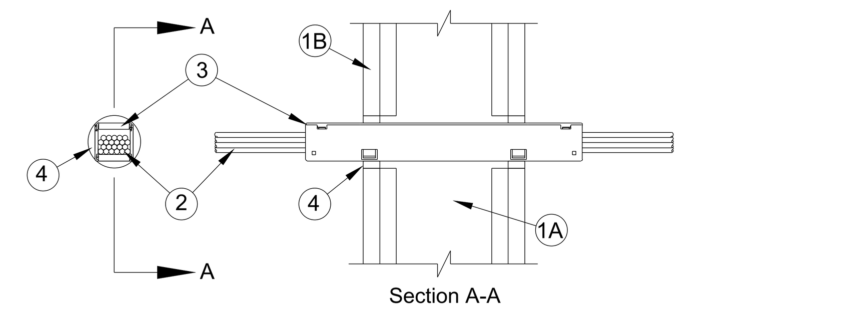

1. Wall Assembly - The 1 or 2 hr fire-rated gypsum board/stud wall assembly shall be constructed of the materials and in the manner described within the individual U300, U400 or V400 Series Wall or Partition Designs in the UL Fire Resistance Directory and shall incorporate the following construction features:
   A. Studs - Wall framing shall consist of either wood studs or steel channel studs. Wood studs to consist of nom 2 by 4 in. (51 by 102 mm) lumber spaced max 16 in. (406 mm) OC. Steel studs to be min 3-1/2 in. (89 mm) wide and spaced max 24 in. (610 mm) OC.
   B. Gypsum Board* - Thickness, type, number of layers and fasteners as specified in the individual Wall and Partition Design. Opening in gypsum board to accommodate firestop device to be max 3 in. (76 mm) wide by max 2-1/2 in. (64 mm) high. or nom 2 in. (51 mm) diameter. The hourly F Rating of the firestop system is dependent upon the hourly rating of the wall in which it is installed.

2. Cables - Within the loading area for each firestop device module, the cables may represent a 0 to 100 percent visual fill. Cable fill to be distributed at a uniform height across the width of the firestop device module. Cables to be rigidly supported on both sides of the wall assembly. Any combination of the following types of cables may be used:
   A. Max four pair No. 22 AWG (or smaller) copper conductor data cable with polyvinyl chloride (PVC) or plenum rated jacketing and insulation.
   B. Max RG/U coaxial cable with fluorinated ethylene insulation and jacketing.
   C. Fiber optic cable with polyvinyl chloride (PVC) or polyethylene (PE) jacket and insulation having a max diam of 1/4 in. (6 mm).
   The T Rating is 1 hr and 1-3/4 hr in 1 hr and 2 hr rated walls, respectively, when no cables are installed in firestop device. The T Rating is 1 hr and 1-1/4 hr in 1 hr and 2 hr rated walls, respectively, when cables are installed in firestop device.
   The L Rating for the empty firestop device is less than 1.4 cfm at ambient and at 400F. When Item 3A is used, the L Rating with 100 percent visual fill of cable is less than 1 CFM at ambient and at 400F.

3. Firestop Device* - Firestop device consists of a 1.4 by 1.4 by 10-1/2 in. (36 by 36 by 267 mm) long galv steel tube with an intumescent material lining. Firestop device to be installed in accordance with the accompanying installation instructions. Prior to installation within wall, lid removed from device to capture grouped cables. After wall such that lid is on top and ends project an equal distance from the `approximate' centerline of the wall assembly. The space between the device and the periphery of the opening shall be min 0 in. (0 mm, point contact) to max 1/2 in. (13 mm).
   SPECIFIED TECHNOLOGIES INC - EZ PATH Series 22 Fire Rated Pathway

4. Fill, Void or Cavity Material* - Sealant - Min 5/8 in. (16 mm) thickness of sealant to be applied in annular space between firestop device and periphery of opening on each side of wall assembly. Nom 3/8 in. (10 mm) diam bead of fill material applied at the point contact location between the firestop device and gypsum board wall on both sides of the wall assembly.
   SPECIFIED TECHNOLOGIES INC - SpecSeal 100, 101, 102, 105, 120 or 129 Sealant, SpecSeal LCI Sealant, SpecSeal LC150 Sealant, Pensil 300 Sealant or SpecSeal Series SIL300 Sealant
   *Bearing the UL Classification Mark

TELECOMMUNICATIONS CABLING AT FIRE WALL PENETRATIONS
NOT TO SCALE

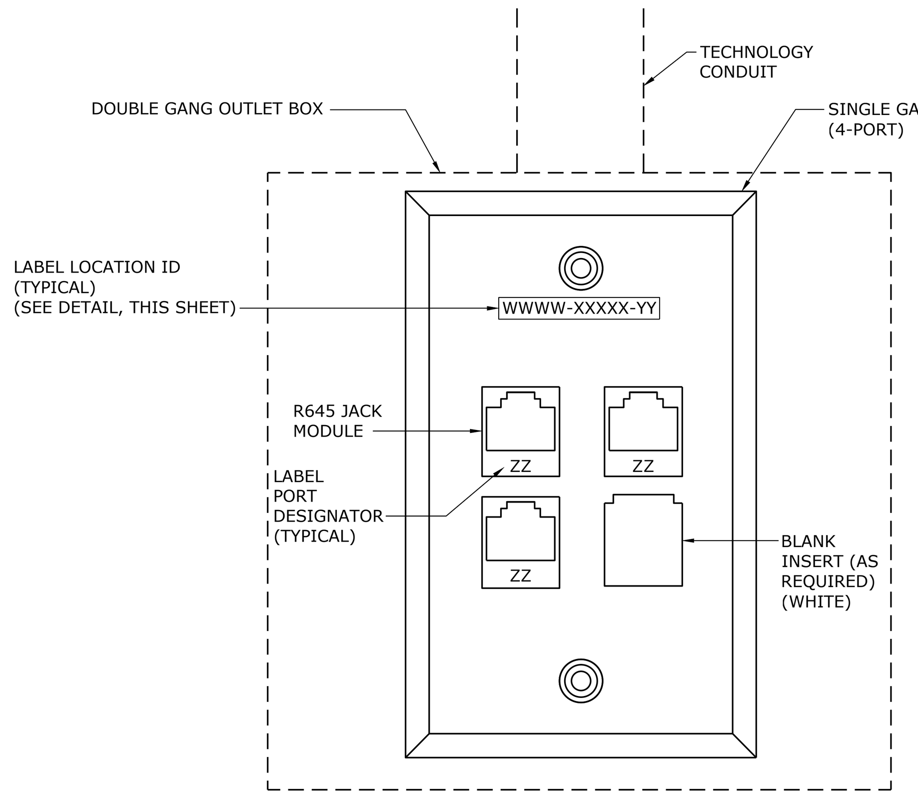

*FILL FACEPLATE WITH OUTLET CONNECTORS STARTING AT THE TOP LEFT POSITION THEN LEFT-TO-RIGHT, TOP-TO-BOTTOM. REMAINING OPENINGS SHALL BE FITTED WITH BLANK INSERTS.

WALL MOUNTED PHONE/DATA OUTLET
NO SCALE

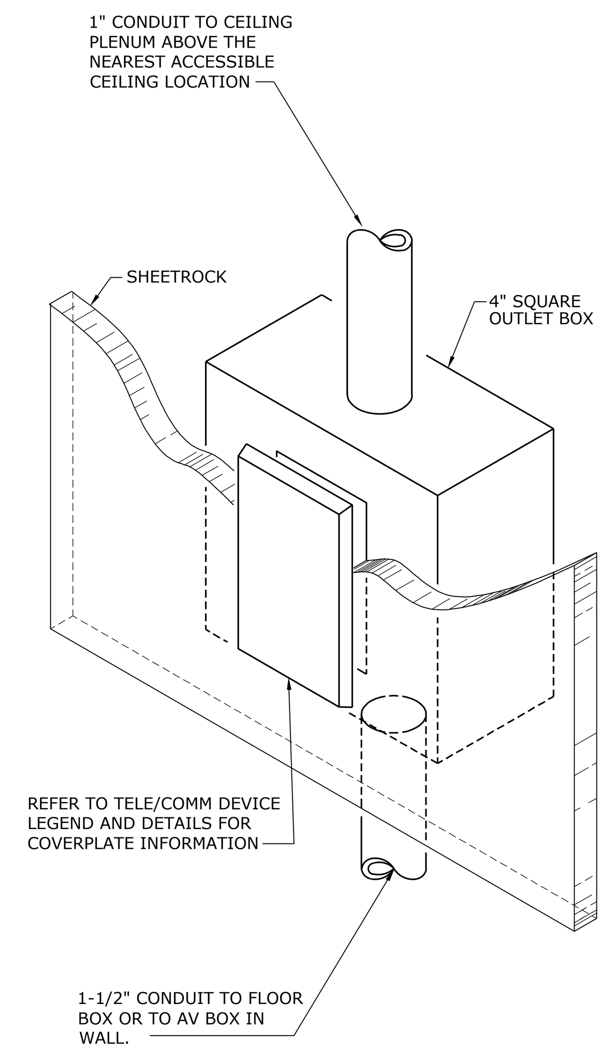

TV OUTLET DETAIL
NOT TO SCALE

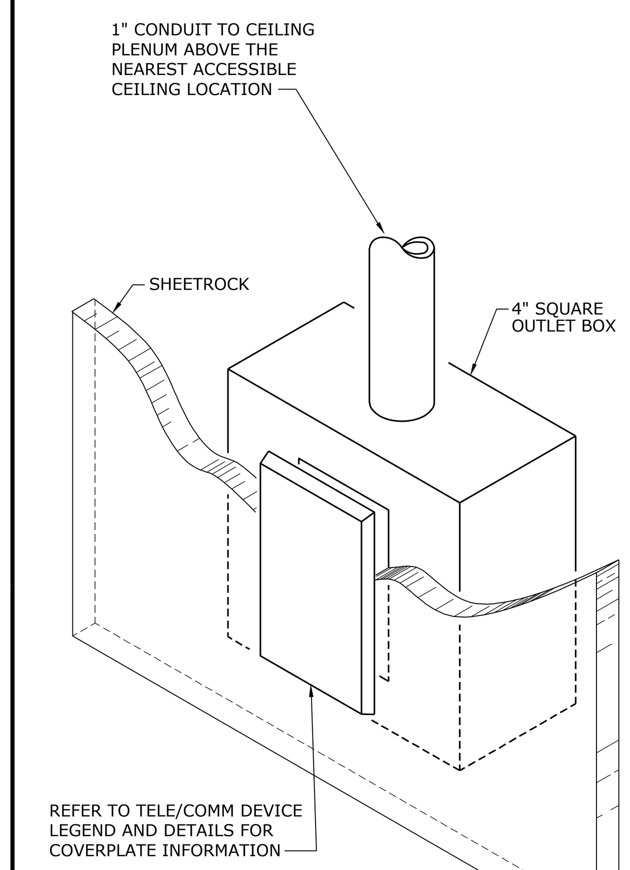

TELE/DATA OUTLET ROUGH-IN DETAIL
NOT TO SCALE

GROUND BUS ASSEMBLY:

1/4" X 2" X 20" COPPER GROUND BAR WITH (12) 5/16" PAIRS AND (3) 7/16" PAIRS ON 1-1/8" CENTERS.

1-3/8" STAND-OFF INSULATORS WITH 3/8: 16 HARDWARE.

GALVANIZED MOUNTING BRACKETS, 14 GAUGE.

GROUND BUS ASSEMBLY AS MANUFACTURED BY EMI OR EQUAL.

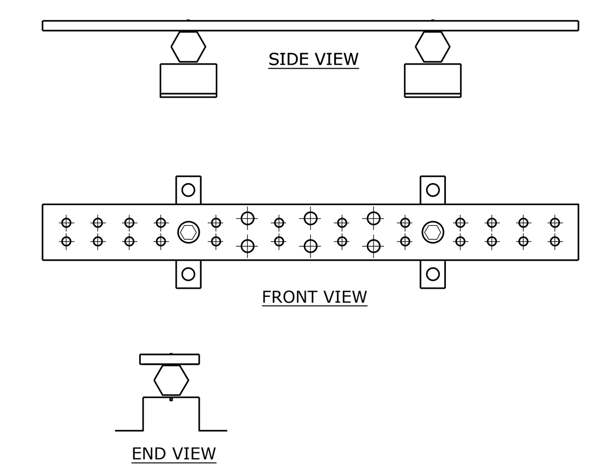

GROUND BUS - REMOTE CLOSETS
NOT TO SCALE

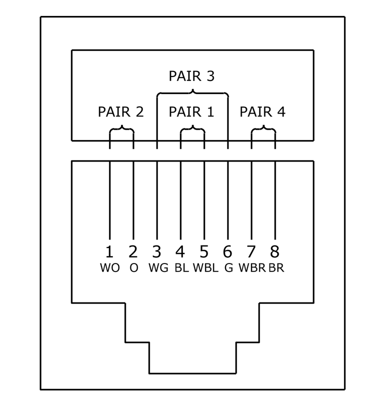

EIGHT POSITION JACK PIN/PAIR ASSIGNMENTS ANSI/TIA/EIA T568B
NOT TO SCALE

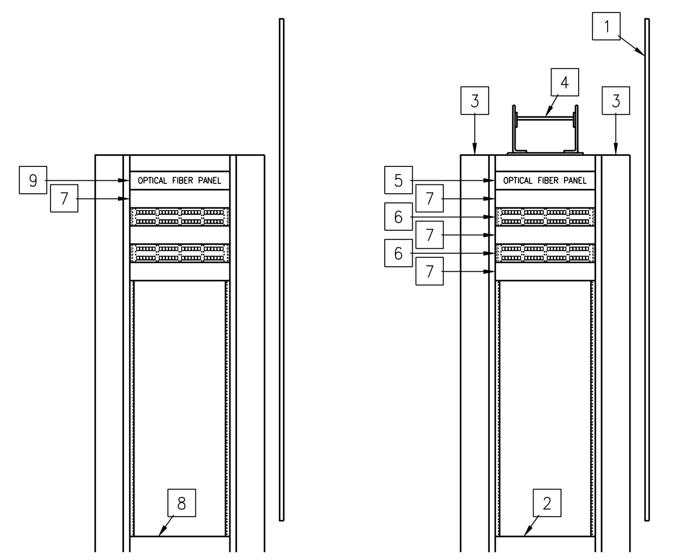

ENLARGED PLAN NOTES:

1. EXISTING TELECOMMUNICATIONS BACKBOARD.
2. EXISTING TELECOMMUNICATIONS TWO-POST RACK.
3. EXISTING VERTICAL CABLE MANAGER.
4. EXISTING LADDER RACK. INSTALL LADDER RACK FROM RACK TO ADJACENT WALL, ORIENTED AS SHOWN IN DETAIL.
5. EXISTING OPTICAL FIBER PATCH PANEL.
6. NEW 48-PORT CATEGORY 6 PATCH PANEL, QUANTITY AS REQUIRED.
7. HORIZONTAL CABLE MANAGER (TYP.) QUANTITY AS REQUIRED.
8. A/V RACK, RE A/V PLANS AND SPECIFICATIONS.
9. FIBER OPTIC ADAPTER PANEL FOR FIBER BACKBONE CABLING TERMINATION.

CABLING RACK ELEVATION
NO SCALE

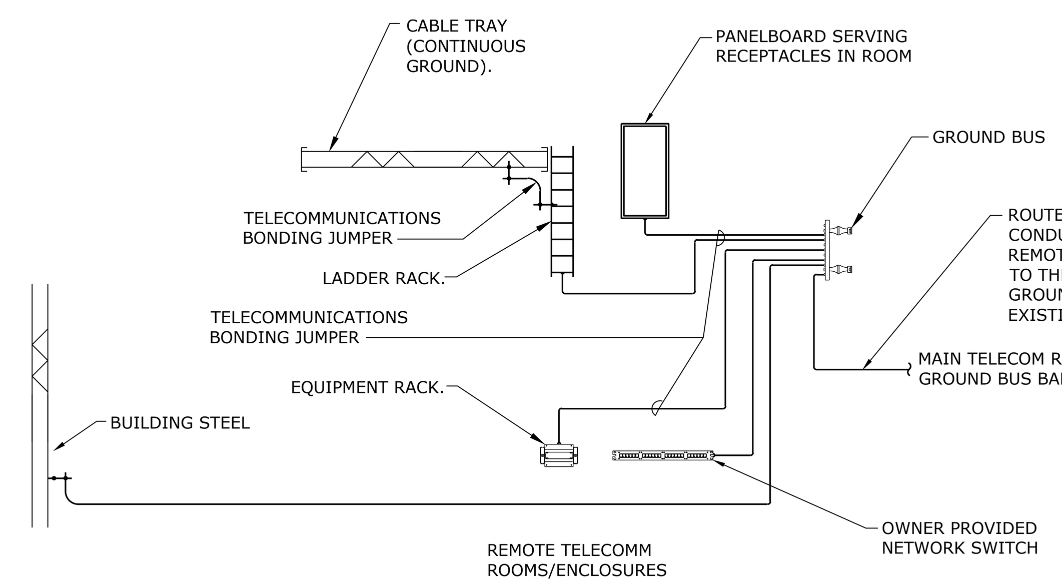

NOTE:

1. ALL CONDUCTORS IN THIS GROUNDING RISER SHALL BE #6 AWG COPPER CONDUCTORS (GREEN) UNLESS NOTED OTHERWISE.

COMMUNICATIONS GROUNDING RISER DIAGRAM
NO SCALE

TELECOMMUNCATION DEVICE SCHEDULE

SYMBOL	DESCRIPTION (NOTE 1)
▽ #D #DA	WALL MOUNTED DATA OUTLET (#D) DATA CAT6 JACKS AS NOTED ON PLANS (#DA) DATA CAT6A JACKS AS NOTED ON PLANS
WAP #D #DA	WIRELESS ACCESS POINT DATA OUTLET (#D) DATA CAT6 JACKS AS NOTED ON PLANS (#DA) DATA CAT6A JACKS AS NOTED ON PLANS
TV #D #DA	DATA OUTLET FOR TV (#D) DATA CAT6 JACKS AS NOTED ON PLANS (#DA) DATA CAT6A JACKS AS NOTED ON PLANS
◪ #D #DA	DATA OUTLET FOR IN FLOOR BOX/POKE THRU (#D) DATA CAT6 JACKS AS NOTED ON PLANS (#DA) DATA CAT6A JACKS AS NOTED ON PLANS
(camera) #D #DA	SECURITY CAMERA DATA OUTLET (#D) DATA CAT6 JACKS AS NOTED ON PLANS (#DA) DATA CAT6A JACKS AS NOTED ON PLANS

NOTES:
1. ALL CABLING ROUTED DIRECTLY TO TELECOMMUNICATIONS ROOM UNLESS SPECIFICALLY NOTED OTHERWISE. REFER TO FLOOR PLANS FOR ADDITIONAL INFORMATION.

2. REFER TO SPECIFICATIONS FOR FURTHER CABLING AND TERMINATION DETAILS.

TYPICAL LABELING SCHEME (FOR HORIZONTAL COMPONENTS)

W – YY – ZZ

COMMUNICATIONS ROOM DESIGNATION (SINGLE LETTER), PROVIDED BY SCHOOL DISTRICT

PANEL# (01, 02, 03, ETC.)

2-DIGIT PORT # (01, 02, 03, ETC.)

W - IDENTIFIES THE DATA ROOM LETTER FROM WHICH THE OUTLET IS SERVED FROM

YY - IDENTIFIES THE OUTLET LOCATION. BEGIN LABELING WITH 01 IN EACH ROOM AT THE NORTHWEST CORNER INCREMENTING BY 05 EVERY OUTLET IN A CLOCKWISE MANNER

ZZ- - IDENTIFIES THE INDIVIDUAL OUTLET AND CABLE. BEGIN LABELING WITH 01 IN THE TOP LEFT CORNER OF FACE PLATE AT THE WORK AREA AND INCREMENT BY ONE FOR EVERY PORT OPENING FROM LEFT TO RIGHT AND TOP TO BOTTOM.

TYPICAL "CLOSET TO WORK AREA" RISER DIAGRAM / COLOR MATRIX

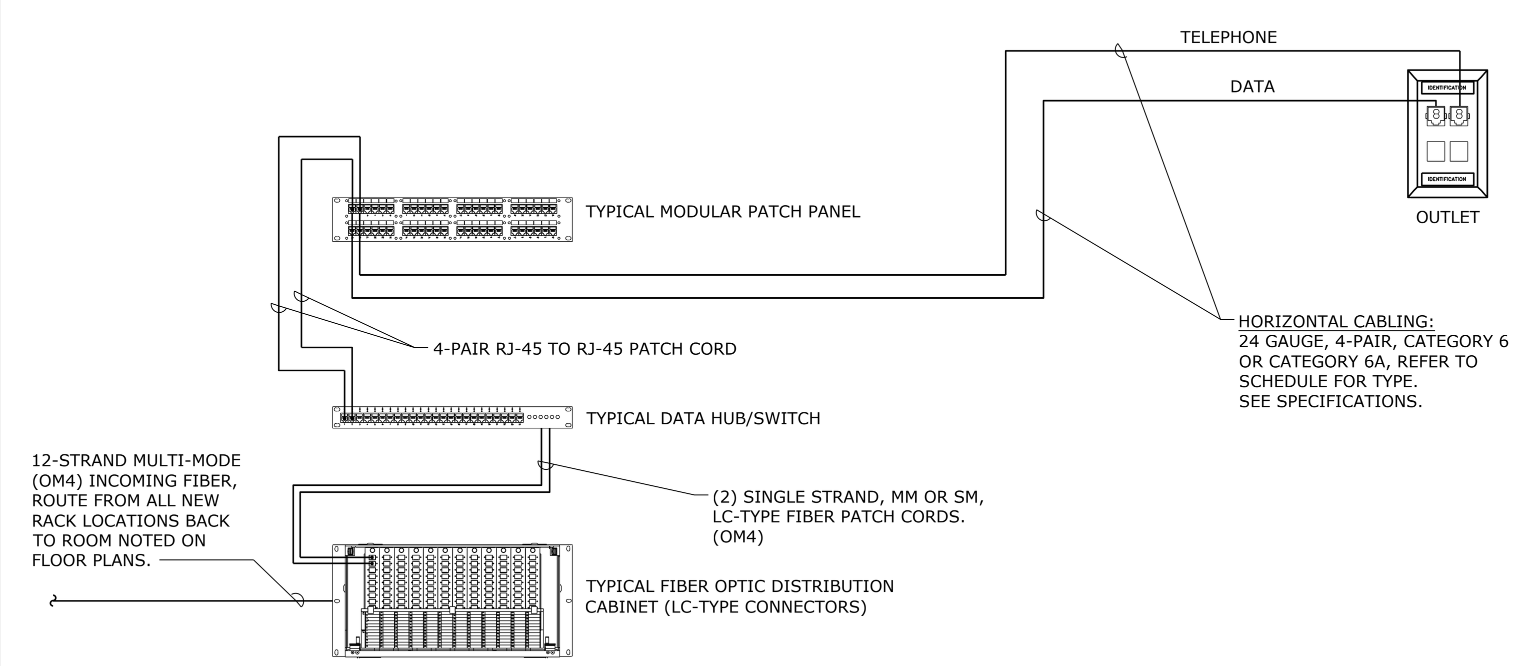

DESCRIPTION:	SYMBOL	HORIZONTAL CABLE	JACK TYPE	JACK COLOR
DATA	▽	REFER TO SPECS	RJ-45 (8P8C - UNKEYED)	REFER TO SPECS
VOICE	▼	REFER TO SPECS	RJ-45 (8P8C - UNKEYED)	REFER TO SPECS

TELECOMMUNICATIONS INSTALLATION NOTES:

1. THE COMPLETE INSTALLATION SHALL BE IN ACCORDANCE WITH THE A.D.A.A.G. (AMERICANS WITH DISABILITIES ACT ACCESSIBILITY GUIDELINES)
2. CONCEAL ALL CONDUIT IN WALLS, PARTITIONS, ABOVE CEILING, AND IN FLOOR SLAB, ETC. UNLESS OTHERWISE INDICATED ON THE PLANS OR IN THE SPECIFICATIONS. CONDUIT IN MECHANICAL ROOMS, AND STORAGE ROOMS WITHOUT CEILINGS MAY BE EXPOSED ON BUILDING STRUCTURE.
3. BOXES LOCATED ON OPPOSITE SIDES OF NON-RATED WALLS SHALL BE OFFSET A MINIMUM OF 6" HORIZONTALLY. BOXES ON OPPOSITE SIDES OF FIRE RATED WALLS SHALL BE OFFSET A MINIMUM OF 24" HORIZONTALLY. "THRU-THE-WALL" BOXES SHALL NOT BE ALLOWED WITHOUT PRIOR WRITTEN APPROVAL OF THE ARCHITECT/ENGINEER.
4. FLUSH MOUNT ALL TELECOMMUNICATION OUTLETS TO MATCH RECEPTACLE HEIGHTS. EXCEPT WHERE OTHERWISE NOTED. OUTLETS MAY BE SURFACE MOUNTED WHEN CONDUIT IS SPECIFIED EXPOSED.
5. CONTRACTOR SHALL VERIFY ALL FURNITURE, MODULAR FURNITURE AND EQUIPMENT LOCATIONS WITH ARCHITECTURAL PLANS, ELEVATIONS AND REVIEWED SHOP DRAWINGS. PRIOR TO MAKING THE ACTUAL TELECOMMUNICATIONS INSTALLATION THIS CONTRACTOR SHALL ADJUST OUTLETS OR CONNECTION LOCATIONS TO ACCOMMODATE FURNITURE AND/OR EQUIPMENT.
6. TELECOMMUNICATIONS EQUIPMENT SHALL BE MOUNTED TO ALLOW ACCESS TO ELECTRICAL AND MECHANICAL EQUIPMENT. ALL MOUNTING OF TELECOMMUNICATION DEVICES ON EQUIPMENT SUPPLIED BY ANOTHER CONTRACTOR SHALL BE APPROVED IN ADVANCE BY THE OTHER CONTRACTOR.
7. CONTRACTOR SHALL BE RESPONSIBLE FOR ALL OPENINGS REQUIRED IN WALLS. ALL OPENINGS SHALL BE REPAIRED TO MATCH EXISTING BY A QUALIFIED CONTRACTOR AT THE EXPENSE OF THIS CONTRACTOR. ALL CONDUITS THROUGH WALLS SHALL BE GROUTED OR SEALED INTO OPENINGS.
8. ALL MATERIALS USED TO SEAL PENETRATIONS OF FIRE RATED WALLS AND FLOORS SHALL BE TESTED AND CERTIFIED AS A SYSTEM PER ASTM E814 STANDARDS FOR FIRE TESTS OF THROUGH-PENETRATION FIRESTOPS.

smith & boucher engineers
25618 west 103rd St olathe, ks 66061
phone 913.345.2127 fax 913.345.0617
project number 2314702

hollis + miller architects
we design the future
1828 Walnut Street Suite 922
Kansas City, MO 64108
T 816.442.7700
115 Wilcox Street Suite 210
Castle Rock, CO 80104
T 720.949.1689
HOLLISANDMILLER.COM
Hollis + Miller Architects
Missouri State Certificate of Authority
Architecture # 0000161
Structure # 2006031333

Bob D Campbell
Structural Engineer
State Certificate of Authority #000442
4338 Bellview Ave.
Kansas City, MO 64111
816.531.4144 phone

Smith & Boucher Inc.
Mechanical, Electrical & Plumbing
State Certificate of Authority #EGC000178
25618 W 103rd Street
Olathe, KS 66061
913.345.2127 phone

MKEC Engineering, Inc.
Civil Engineer
State Certificate of Authority #
Engineering: 2001009364
Landscaping: 2006027139
Surveying: 2006027138
11827 W 112th Street, Suite 200
Overland Park, KS 66210
913.317.9390 phone

Peerbolte Creative
Theatrical Consultant
109 E Pine St.
Warrensburg, MO 64093-0752
660.429.1383 phone

Avant Acoustics
AV/Acoustics Consultant
14827 West 95th St.
Lenexa, KS 66215
913.888.9111 phone

Discovery Middle School Storm Shelter Addition
Liberty School District
800 Midjay Dr, Liberty, MO 64068

Conformed Construction Documents

REVISIONS:

#	Description	Date

STATE OF MISSOURI – RYAN JEROD DIEDIKER – NUMBER PE-2015006511 – REGISTERED PROFESSIONAL ENGINEER – 10/11/23

The Professional Architects seal affixed to this sheet applies only to the material and items shown on this sheet. All drawings, instruments or other documents not exhibiting this seal shall not be considered prepared by this architect, and this architect expressly disclaims any and all responsibility for such plan, drawings, or documents not exhibiting this seal.

JOB NO: 23018
DRAWN BY: SBI
CHECKED BY: RJD
DATE: 10.11.2023

E303

ELECTRICAL -SCHEDULES AND DETAILS

Please consider the environment before printing this.

PROJECT NAME: 2314702 Liberty SD 2023 Discovery MS Gym Addition & LED Lighting
AUTOCAD FILE LOCATION \ NAME: X:\23\23147\2314702\Drawings\06-2314702_E303.dwg
LAST CORRECTION BY • DATE • TIME: Bootyc Wednesday, October 11, 2023 9:21:41 AM
PLOTTED BY • DATE • TIME: Booty Charles Wednesday, October 11, 2023 9:45:25 AM

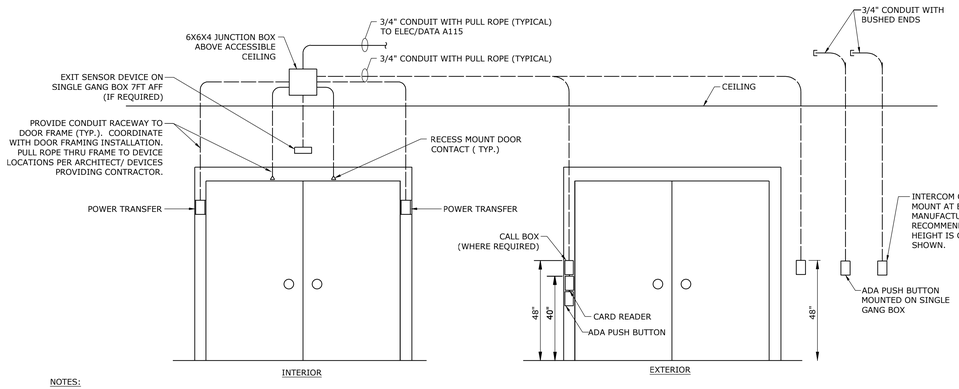

NOTES:

1. COORDINATE EXACT REQUIRMENTS OF DOOR ACCESS SYSTEM WITH SECURITY CONTRACTOR PRIOR TO ROUGH-IN.
2. ALL CONDUIT SHALL HAVE BUSHINGS ON BOTH ENDS TO PREVENT DAMAGE TO CABLE.
3. DOOR DEVICES AND CABLING BY SECURITY CONTRCTOR - REFER TO ACCESS CONTROL AND SECURITY EQUIPMENT LIST.

SECURITY DOOR ROUGH-IN - DOUBLE DOOR DETAIL

NOT TO SCALE (SYMBOL CR)

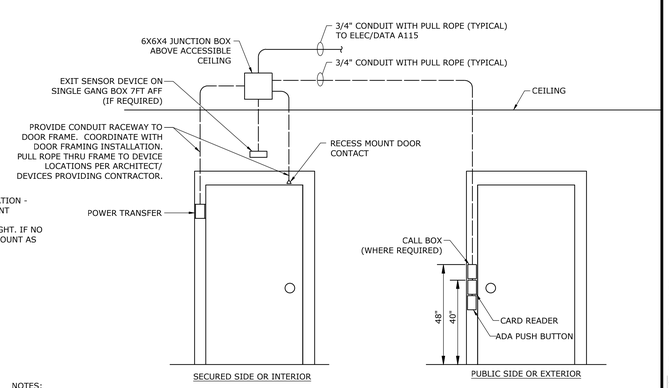

NOTES:

1. COORDINATE EXACT REQUIRMENTS OF DOOR ACCESS SYSTEM WITH SECURITY CONTRACTOR PRIOR TO ROUGH-IN.
2. ALL CONDUIT SHALL HAVE BUSHINGS ON BOTH ENDS TO PREVENT DAMAGE TO CABLE.
3. DOOR DEVICES AND CABLING BY SECURITY CONTRCTOR - REFER TO ACCESS CONTROL AND SECURITY EQUIPMENT LIST.

SECURITY DOOR ROUGH-IN - SINGLE DOOR DETAIL

NOT TO SCALE (SYMBOL CR)

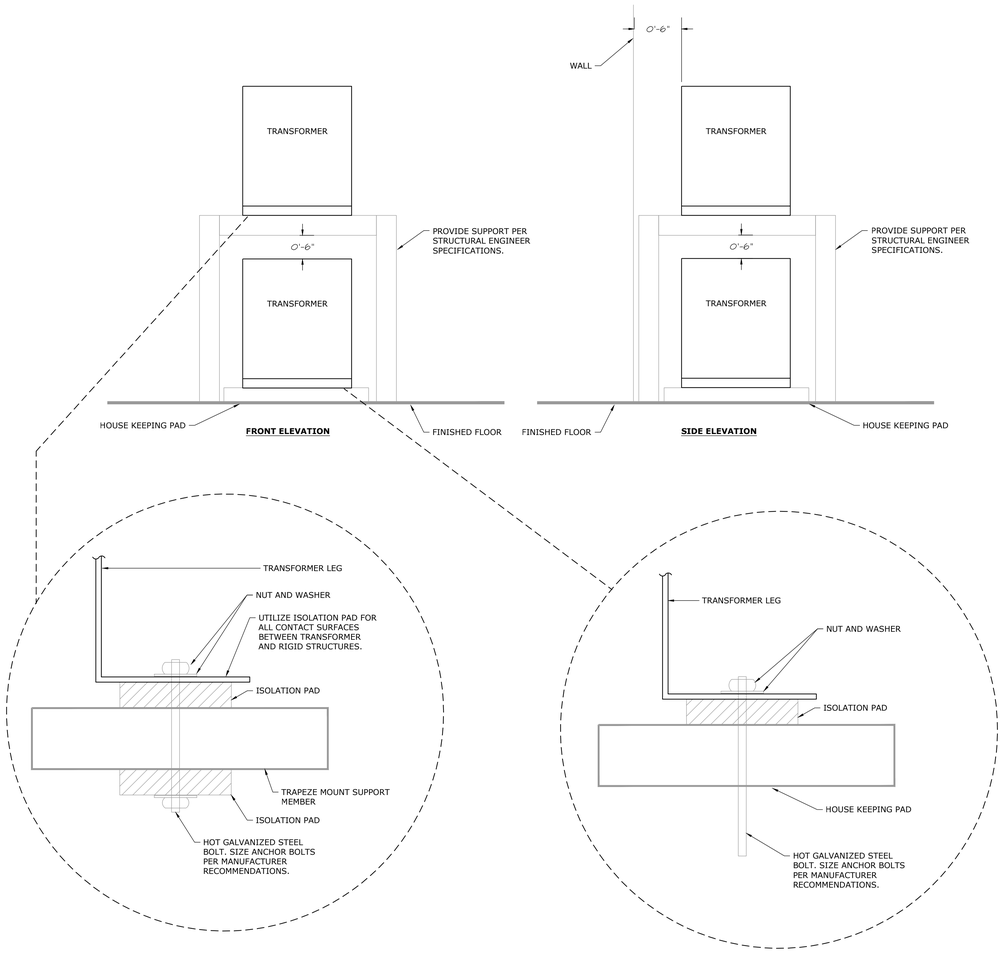

STACKED TRANSFORMER MOUNTING DETAIL

NOT TO SCALE

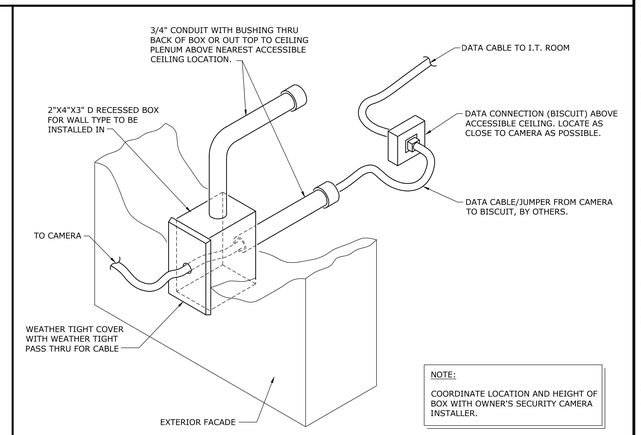

NOTE:

COORDINATE LOCATION AND HEIGHT OF BOX WITH OWNER'S SECURITY CAMERA INSTALLER.

SECURITY POE CAMERA OUTLET DETAIL

NOT TO SCALE

hollis + miller architects

we design the future

1828 Walnut Street Suite 922
Kansas City, MO 64108
t 816.442.7700

115 Wilcox Street Suite 210
Castle Rock, CO 80104
t 720.949.1689

HOLLISANDMILLER.COM

Hollis + Miller Architects
Missouri State Certificate of Authority
Architecture # 0000161
Structure # 2006031333

Bob D Campbell
Structural Engineer
State Certificate of Authority #000442
4338 Bellview Ave.
Kansas City, MO 64111
816.531.4144 phone

Smith & Boucher Inc.
Mechanical, Electrical & Plumbing
State Certificate of Authority #EGC000178
25618 W 103rd Street
Olathe, KS 66061
913.345.2127 phone

MKEC Engineering, Inc.
Civil Engineer
State Certificate of Authority #
Engineering: 2001009364
Landscaping: 2006027139
Surveying: 2006027138
11827 W 112th Street, Suite 200
Overland Park, KS 66210
913.317.9390 phone

Peerbolte Creative
Theatrical Consultant
109 E Pine St.
Warrensburg, MO 64093-0752
660.429 1383 phone

Avant Acoustics
AV/Acoustics Consultant
14827 West 95th St.
Lenexa, KS 66215
913.888.9111 phone

Discovery Middle School Storm Shelter Addition
Liberty School District
800 Midjay Dr, Liberty, MO 64068

Conformed Construction Documents

REVISIONS:

#	Description	Date

The Professional Architects seal affixed to this sheet applies only to the material and items shown on this sheet. All other information on this sheet is not to be considered as part of the Professional Architects work product. The Architect and the architect expressly disclaims any and all responsibility for such plan, drawings, or documents not exhibiting this seal.

JOB NO: 23018
DRAWN BY: SBI
CHECKED BY: RJD
DATE: 10.11.2023

smith & boucher engineers
25618 west 103rd St olathe, ks 66061
phone 913.345.2127 fax 913.345.0617
project number 2314702

E304

ELECTRICAL -SCHEDULES AND DETAILS

Please consider the environment before printing this.

PROJECT NAME: 2314702 Liberty SD 2023 Discovery MS Gym Addition & ES Lighting
AUTOCAD FILE LOCATION \\ NAME: X:\23\23147\2314702\Drawings\06-2314702_E304.dwg
LAST CORRECTION BY ◆ DATE ◆ TIME: Booby Wednesday, October 11, 2023 9:22:03 AM
PLOTTED BY ◆ DATE ◆ NAME: Booby Chorles Wednesday, October 11, 2023 9:45:35 AM

ONE-LINE DIAGRAM SYMBOL LEGEND

SYMBOL	DESCRIPTION
DA	DISTRIBUTION AMPLIFIER.
STM	STEREO-TO-MONO AUDIO COMBINER.
V P	LOUDSPEAKER VOLUME CONTROL (P=PRIORITY OVERRIDE RELAY)
8W 1	LOUDSPEAKER EACH WITH LOUDSPEAKER LINE MATCHING TRANSFORMER IF SHOWN, WITH CONNECTIONS AS NOTED. REFER TO PLANS FOR QUANTITIES. LOUDSPEAKER TYPE (X) INDICATED WITHIN SYMBOL. WHERE MULTIPLE POWER TAP VALUES ARE SHOWN FOR LINE MATCHING TRANSFORMERS IN A GIVEN LOUDSPEAKER CIRCUIT, REFER TO PLANS FOR SPECIFIC LOCATIONS.
PWR	POWER AMPLIFIER, TYPE AND DETAILS AS INDICATED ON THE DRAWINGS.
600/600	AUDIO LINE MATCHING OR BRIDGING TRANSFORMER WITH RATED IMPEDANCE AS NOTED.
	SCREW TERMINAL ON BARRIER STRIP. INSTALLED IN TERMINATION CABINETS UNLESS NOTED OTHERWISE.
G	LOW VOLTAGE LIGHT EMITTING DIODE, COLOR AS INDICATED BY LETTER: G = GREEN Y = YELLOW R = RED
	LOOSE CABLE, LENGTH AS INDICATED.
	FEMALE XLR RECEPTACLE OR CABLE CONNECTOR; 3 PINS UNLESS SUBSCRIPT INDICATES OTHERWISE.
	MALE XLR RECEPTACLE OR CABLE CONNECTOR; 3 PINS UNLESS SUBSCRIPT INDICATES OTHERWISE.
1/8"	PHONE JACK, SIZE AS INDICATED ON THE DRAWINGS.
1/4"	PHONE PLUG, SIZE AS INDICATED ON THE DRAWINGS.
	RCA PHONO JACK.
	RCA PHONO PLUG.
	BNC JACK.
	BNC PLUG.
	FEMALE HD-15 CONNECTOR.
	FEMALE HDMI CONNECTOR.
	MALE HD-15 CONNECTOR.
	MALE HDMI CONNECTOR.
	FEMALE SPEAKON CONNECTOR.
	MALE SPEAKON CONNECTOR.
	FEMALE RJ45 CONNECTOR.
	MALE RJ45 CONNECTOR.
	FEMALE ETHERCON CONNECTOR.
	MALE ETHERCON CONNECTOR.
	FEMALE USB CONNECTOR.
	MALE USB CONNECTOR.
	RJ45 PATCH PANEL CONNECTION.
	AC POWER CORD.
	ANTENNA.
	CONTINUATION OF EQUIPMENT OR LOUDSPEAKER CIRCUITS. REFER TO DRAWINGS FOR QUANTITIES.
X X	CONNECTION DESIGNATOR. CIRCUIT CONTINUED ON DIFFERENT SHEET OR AT OTHER DIAGRAM LOCATION. SHEET NUMBER WHERE CIRCUIT IS CONTINUED.
"LABELS"	SLANTED TEXT IN QUOTES INDICATES EQUIPMENT LABELS.

ONE-LINE DIAGRAM WIRE LEGEND

SYMBOL	DESCRIPTION
XXX	WIRES FOR AUDIO, VIDEO, OR RADIO FREQUENCY SIGNALS OVER COPPER CABLING. CABLE OR SIGNAL TYPE AS INDICATED.
XXX	WIRES FOR NETWORK OR CONTROL SIGNALS OVER COPPER CABLING. CABLE OR SIGNAL TYPE AS INDICATED.
XXX	WIRES FOR SIGNALS OVER FIBER CABLES. CABLE OR SIGNAL TYPE AS INDICATED.

CONDUIT, BOXES, AND ENCLOSURES GENERAL NOTES

1. THE CONDUIT SYSTEM AND ALL BOXES AND ENCLOSURES INDICATED ON THESE DRAWINGS SHALL BE FURNISHED AND INSTALLED UNDER THE DIVISION 26 SPECFICATIONS.
2. ALL CIRCUITS SHALL BE INSTALLED WITHIN CONDUIT, UNLESS NOTED OTHERWISE. CONTRACTOR SHALL INSTALL CONDUIT AS SHOWN, WITH JUNCTION BOXES, FITTINGS, ETC. AS REQUIRED BETWEEN TERMINATION LOCATIONS.
3. VERIFY LOCATIONS AND TYPES OF ALL EXISTING CONDUIT AND BOXES (IF ANY) PRIOR TO STARTING WORK.
4. COORDINATE ALL WORK WITH ARCHITECTURAL, ELECTRICAL, AND TECHNOLOGY PLANS.
5. CONDUIT SHALL BE MINIMUM 0.75-INCH DIAMETER. MEASURED PULL STRING SHALL BE FURNISHED, INSTALLED, AND SECURED IN ALL CONDUIT RACEWAYS.
6. CONDUIT FOR MICROPHONE LEVEL CIRCUITS (M) SHALL BE CONSTRUCTED OF FERROUS METAL (EMT OR RIGID).
7. CONDUIT SHALL NOT EXCEED 100 LINEAR FEET OR THE EQUIVALENT OF THREE 90 DEGREE BENDS BETWEEN JUNCTION BOXES.
8. CONTRACTOR INSTALLING CONDUIT SYSTEM SHALL FURNISH AND INSTALL BLANK COVERS ON ALL BOXES INSTALLED BUT NOT USED FOR SYSTEM CONNECTIONS.
9. CONDUIT ROUTING AND LOCATION OF CONNECTION BOXES SHALL BE PER ELECTRICAL SPECIFICATIONS.
10. SYSTEM AC POWER CIRCUITS SHALL BE TWO WIRE (EACH WITH ITS OWN NEUTRAL CONDUCTOR) AND SHALL BE ROUTED TO EQUIPMENT RACKS AS REQUIRED.
11. ALL CONDUIT INFRASTRUCTURE SHOWN ON THESE DRAWINGS IS TO BE PART OF THE BASE BID.
12. ALL DIMENSIONAL NOTES ARE EXPRESSED BY H (HEIGHT), W (WIDTH), AND D (DEPTH), IN INCHES.
13. MOUNT WALL BOXES AT 18" AFF TO MATCH ELECTRICAL WALL MOUNTED BOXES, UNLESS OTHERWISE NOTED.
14. BOXES INDICATED TO BE WALL MOUNTED AT 48" AFF SHALL BE MOUNTED TO MATCH OTHER ELECTRICAL SWITCHES AND CONTROL PLATES.
15. PRIMARY FUNCTION IS NOTED FOR EACH BOX. BOXES MAY HAVE MULTIPLE SUB-FUNCTIONS.
16. ALL MOUNTING HEIGHTS ARE TO THE CENTER OF THE BOX.

CONDUIT LEGEND

SYMBOL	DESCRIPTION
CONDUIT SIZE / CIRCUIT FUNCTION X.XX" XXX	EXPOSED CONDUIT.
CONDUIT SIZE / CIRCUIT FUNCTION X.XX" XXX	CONDUIT CONCEALED IN WALL, CEILING, OR FLOOR.
	CABLE CONCEALED IN WALL, CEILING, OR FLOOR. USE PLENUM-RATED CABLING WHERE INSTALLED IN RETURN-AIR PLENUMS.
	CONDUIT STUBBED OUT ABOVE ACCESSIBLE PORTION OF CEILING OR OPEN CEILING AREA. NEATLY TERMINATE CONDUIT WITH INSULATED BUSHING. WHERE STUB PENETRATES A NOISE CONTROL WALL OR PLENUM BARRIER, ELECTRICAL CONTRACTOR SHALL SEAL AROUND CONDUIT AT PENETRATION AND SYSTEMS CONTRACTOR SHALL SEAL OPEN END OF CONDUIT WITH DUX SEAL OR EQUIVALENT COMPLIANT SEALANT AFTER INSTALLATION OF CABLE.
	CONDUIT STUBBED OUT ABOVE CABLE TRAY IN ACCESS FLOOR. TERMINATE CONDUIT WITH INSULATED BUSHING. WHERE STUB PENETRATES A NOISE CONTROL WALL OR PLENUM BARRIER, ELECTRICAL CONTRACTOR SHALL SEAL AROUND CONDUIT AT PENETRATION AND SYSTEMS CONTRACTOR SHALL SEAL OPEN END OF CONDUIT WITH DUX SEAL OR EQUIVALENT COMPLIANT SEALANT AFTER INSTALLATION OF CABLE.
	CONDUIT LANDED TO EQUIPMENT RACK. INSULATE EQUIPMENT RACK FROM METALLIC CONDUIT USING A PLASTIC BUSHING OR CONNECTOR.
	CABLE TRAY, SIZE AND TYPE AS NOTED ON THE DRAWINGS.
BOX TYPE/DEVICE NAME → "XXXX" NUMBER OF GANGS → XG MOUNTING HEIGHT → X-XX" AFF CONNECTIONS → XXX EMPTY CIRCLE INDICATES EXISTING BOX. TRIANGLES INDICATE SURFACE MOUNTED	STANDARD GANG WALL BOX, MINIMUM 2-1/8" INCHES DEEP, FLUSH MOUNTED UNLESS OTHERWISE INDICATED. FOR SINGLE/DOUBLE GANG, INSTALL 4-INCH SQUARE BOX WITH APPROPRIATE DEVICE COVER TO PROVIDE REQUIRED OPENINGS AND WITH DEPTH TO MATCH WALL FINISH THICKNESS. SURFACE MOUNTED GANG BOXES TO BE INTENDED FOR SURFACE MOUNTING, SIZED TO MATCH GANG COVER PLATE SIZES SO THAT CONNECTION PLATE EDGES DO NOT OVERHANG BOX SIDES. FLUSH-STYLE BOXES INSTALLED IN SURFACE MOUNTED CONDITIONS ARE NOT ALLOWED.
BOX TYPE/DEVICE NAME → "XXXX" BOX SIZE → X"xX"xX" MOUNTING HEIGHT → X-XX" AFF CONNECTIONS → XXX EMPTY SQUARE INDICATES EXISTING BOX. TRIANGLES INDICATE SURFACE MOUNTED	WALL BOX, 8" H x 8" W x 4" D, OR SIZE AND TYPE AS INDICATED ON THE DRAWINGS, FLUSH MOUNTED UNLESS OTHERWISE INDICATED.
BOX TYPE/DEVICE NAME → "XXXX" NUMBER OF GANGS → XG MOUNTING HEIGHT → X-XX" AFF CONNECTIONS → XXX EMPTY CIRCLE INDICATES EXISTING BOX. TRIANGLES INDICATE SURFACE MOUNTED	STANDARD GANG CEILING BOX, MINIMUM 2-1/8" INCHES DEEP, FLUSH MOUNTED UNLESS OTHERWISE INDICATED. FOR SINGLE/DOUBLE GANG, INSTALL 4-INCH SQUARE BOX WITH APPROPRIATE DEVICE COVER TO PROVIDE REQUIRED OPENINGS AND WITH DEPTH TO MATCH CEILING FINISH THICKNESS.
BOX TYPE/DEVICE NAME → "XXXX" BOX SIZE → X"xX"xX" MOUNTING HEIGHT → X-XX" AFF CONNECTIONS → XXX EMPTY SQUARE INDICATES EXISTING BOX. TRIANGLES INDICATE SURFACE MOUNTED	LARGE CEILING BOX, 8" x 8" x 4" UNLESS OTHERWISE INDICATED, SURFACE MOUNTED UNLESS OTHERWISE INDICATED.

TYPE/ FUNCTIONS

A	ANTENNA CIRCUIT.
AC	AC POWER CIRCUIT.
AV	AUDIO-VISUAL CIRCUIT.
IC	INTERCOM CIRCUIT.
M	MICROPHONE CIRCUIT.
NS	AMBIENT NOISE SENSOR CIRCUIT.
L	LINE CIRCUIT.
N	NETWORK CIRCUIT.
PB	PULLBOX.
R	CONTROL CIRCUIT.
S	SPEAKER CIRCUIT.
TV	TELEVISION CIRCUIT.
VC	VOLUME CONTROL CIRCUIT.

AV EQUIPMENT GENERAL NOTES

1. ALL AV EQUIPMENT SHOWN ON THE DRAWINGS IS TO BE PART OF THE BASE BID, UNLESS SPECIFICALLY NOTED AS PART OF AN ALTERNATE.
2. THIS FACILITY IS A NEW ADDITION TO AN EXISTING STRUCTURE. COORDINATE MOUNTING CONDITIONS WITH OTHER TRADES.
3. COORDINATE ALL WORK WITH ARCHITECTURAL, ELECTRICAL, AND TECHNOLOGY PLANS.
4. ALL DIMENSIONAL NOTES ARE EXPRESSED BY H (HEIGHT), W (WIDTH), AND D (DEPTH), IN INCHES.
5. MOUNTING HEIGHTS SHOWN ARE TO THE BOTTOM EDGE OF THE EQUIPMENT.

AV EQUIPMENT LEGEND

SYMBOL	DESCRIPTION
XX" W X XX" H	MOTORIZED PROJECTION SCREEN, FLUSH MOUNTED IN CEILING.
	VIDEO PROJECTOR, TYPE AS INDICATED ON THE DRAWINGS.
XX" AFF.	VIDEO CAMERA, MOUNTED TO WALL OR CEILING IN LOCATIONS SHOWN ON THE DRAWINGS.
	WIRELESS HEARING ASSISTANCE SYSTEM ANTENNA.
	WIRELESS MICROPHONE ANTENNA.

ABBREVIATIONS

AC	AC POWER.
ACP	ACOUSTICAL CEILING PANEL.
ACT	ACOUSTICAL CEILING TILE.
AFC	ABOVE FINISHED CEILING. INDICATES DIMENSION ABOVE CEILING PANEL.
AFF	ABOVE FINISHED FLOOR. INDICATES DIMENSION ABOVE FLOOR SURFACE.
AFILS	AUDIO FREQUENCY INDUCTION LOOP SYSTEM.
AP	ACCESS POINT.
AV	AUDIO-VISUAL.
B	BLANK COVER FOR FUTURE USE.
BP	BLANK PANEL.
C	CONDUIT, DIAMETER EXPRESSED IN INCHES.
DAN	DIGITAL AUDIO NETWORK.
FACP	FIRE ALARM CONTROL PANEL.
FO	FIBER OPTIC.
FP	FLAT PANEL.
HAS	HEARING ASSISTANCE SYSTEM.
GWB	GYPSUM WALL BOARD.
MCP	METAL CEILING PANEL.
MM	MULTI-MODE (FIBER).
NS	AMBIENT NOISE SENSOR.
PA	PUBLIC ADDRESS SYSTEM/PAGING.
PACS	PAGING ANNOUNCEMENT CONTROL SYSTEM.
PB	PULLBOX.
RF	RADIO FREQUENCY.
SM	SINGLE-MODE (FIBER).
STP	SHIELDED TWISTED PAIR.
TBD	TO BE DETERMINED. CONTRACTOR TO FIELD VERIFY.
TC	TERMINATION CABINET.
TELCO	TELEPHONE UTILITY COMPANY.
TP	TOUCHPANEL.
TV	TELEVISION.
UTP	UNSHIELDED TWISTED PAIR.
VP	VENT PANEL.
VPD	VISUAL PAGING DISPLAY.
XFMR	TRANSFORMER.

NOTATIONAL SYMBOLS

SYMBOL	DESCRIPTION
X (triangle)	REVISION NUMBER, UPWARD TRIANGLE. REFER TO REVISION LIST ON SHEET WHERE REFERENCE OCCURS FOR REVISION DATE.
X (hexagon)	SHEET KEY NOTE, HEXAGON. REFER TO SPECIFIC NOTES ON SHEET WHERE REFERENCE OCCURS.

hollis + miller architects®

we design the future®

1828 Walnut Street Suite 922
Kansas City, MO 64108
T 816.442.7700

115 Wilcox Street Suite 210
Castle Rock, CO 80104
T 720.949.1689

HOLLISANDMILLER.COM

Hollis + Miller Architects
Missouri State Certificate of Authority
Architecture # 0000161
Structure # 2006031333

Bob D Campbell
Structural Engineer
State Certificate of Authority #000442
4338 Belleview Ave
Kansas City, MO 64111
816.531.4144 phone

Smith & Boucher, Inc.
Mechanical, Electrical, & Plumbing
State Certificate of Authority #EGC000178
25618 W 103rd Street
Olathe, KS 66061
913.345.2127 phone

MKEC Engineering, Inc.
Civil Engineer
State Certificate of Authority
Engineering #2001009364
Landscaping #2006027139
Surveying #2006027138
11827 W 112th Street, Suite 200
Overland Park, KS 66210
913.317.9390 phone

Peerbolte Creative
Theatrical Consultant
109 E Pine St.
Warrensburg, MO 64093-0752
660.429.1383 phone

Avant Acoustics
AV/Acoustics Consultant
14827 West 95th St.
Lenexa, KS 66215
913.888.9111 phone

Discovery Middle School Storm Shelter Addition
Liberty School District
800 Midjay Dr, Liberty, MO 64068

Conformed Construction Documents

REVISIONS:

#	Description	Date

The Professional Architects seal affixed to this sheet applies only to the material and items shown on this sheet. All drawings, instruments or other documents not exhibiting this seal shall not be considered prepared by this architect, and this architect expressly disclaims any and all responsibility for such plan, drawings, or documents not exhibiting this seal.

JOB NO: 23018
DRAWN BY: DJW
CHECKED BY: JMH
DATE: 10.11.2023

AV001

AV GENERAL NOTES AND LEGENDS

Please consider the environment before printing this.

10/11/2023 11:48:21 AM

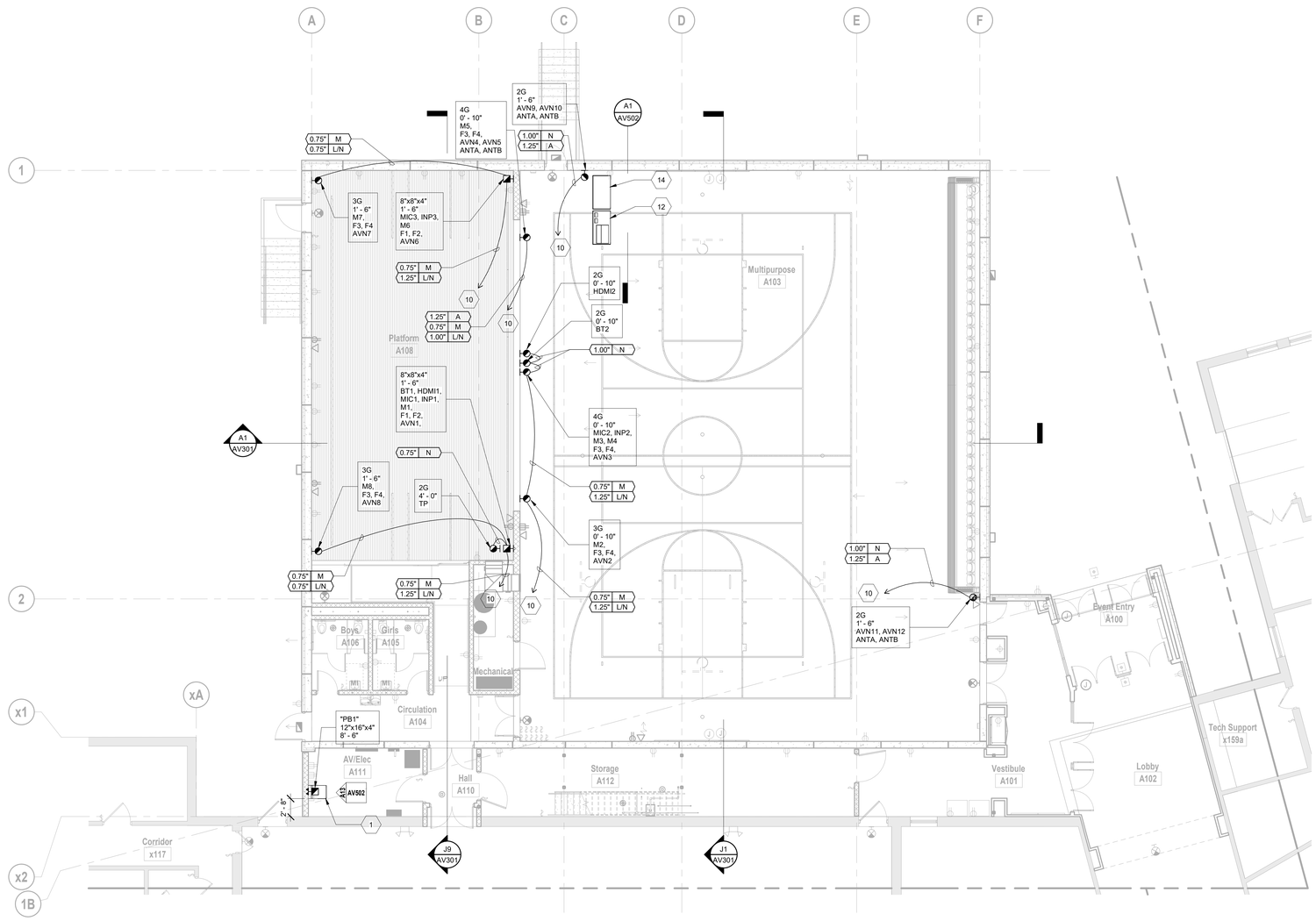

SHEET KEYNOTE LEGEND

1	FLOORSTANDING SWINGOUT EQUIPMENT RACK.
2	COORDINATE EXACT LOUDSPEAKER POSITION WITH DIVIDER CURTAIN.
3	SHOTGUN RECORDING MIC INSTALLED IN LIGHTING POCKET, FACING THE STAGE. COORDINATE EXACT LOCATION WITH ARCHITECTURAL AND LIGHTING CONDITIONS. RE: DETAIL A7/AV501.
4	ANTENNAS INSTALLED IN NON-METALLIC CEILING BOX, NOMINAL 13"X15" SIZE. COORDINATE EXACT SIZE WITH EXACT ANTENNA PROVIDED. STAHLIN CLASSIC SERIES, INTEGRA ENCLOSURES, OR EQUIVALENT.
5	TYPE 1 TWO-WAY LOUDSPEAKER HUNG FROM CEILING STRUCTURE ABOVE. PROVIDE BLOCKING BEHIND GYPSUM BOARD SURFACE FOR MOUNTING. SUBFRAMING AT ROOF DECK AND MOUNTING HARDWARE AS REQUIRED. PAINT ALL EXPOSED MOUNTING HARDWARE TO MATCH CEILING. INSTALL 1-GANG JUNCTION BOX ABOVE WITH GROMMETED PLATE FOR CABLING. RE: DETAIL H1/AV501.
6	TYPE 2 TWO-WAY LOUDSPEAKER HUNG FROM CEILING STRUCTURE ABOVE. PROVIDE UNISTRUT SUBFRAMING AT ROOF DECK AND MOUNTING HARDWARE AS REQUIRED. PAINT ALL EXPOSED MOUNTING HARDWARE TO MATCH CEILING. INSTALL 1-GANG JUNCTION BOX ABOVE WITH GROMMETED PLATE FOR CABLING. RE: DETAIL H9/AV501.
7	SUB-BASS LOUDSPEAKER HUNG FROM ROOF STRUCTURE ABOVE, TYPE AS INDICATED ON ONE-LINE DIAGRAMS. COORDINATE EXACT LOCATION WITH DIVIDER CURTAIN AND CEILING. PROVIDE UNISTRUT SUBFRAMING AT ROOF DECK AND MOUNTING HARDWARE AS REQUIRED. PAINT ALL EXPOSED MOUNTING HARDWARE TO MATCH CEILING. INSTALL 1-GANG JUNCTION BOX ABOVE WITH GROMMETED PLATE FOR CABLING.
8	MOTORIZED PROJECTION SCREEN (16:9 ASPECT RATIO, 220" DIAGONAL). RE: DETAIL A1/AV501.
9	VIDEO PROJECTOR (OWNER FURNISHED CONTRACTOR INSTALLED), MOUNTED FROM ROOF STRUCTURE ABOVE WITH VIBRATION ISOLATION MOUNT AND PROTECTIVE CAGE. RE: DETAIL A12/AV501.
10	CONDUIT TO "PB1" ABOVE EQUIPMENT RACK IN AV A111.
11	VIDEO CAMERA MOUNTED FROM ROOF STRUCTURE ABOVE WITH VIBRATION ISOLATION MOUNT. RE: DETAIL A12/AV501.
12	PORTABLE AUDIO CART ON CASTERS. RE: DETAIL A1, J1/AV502.
13	PROJECTION SCREEN BLACK DROP. CONFIRM WITH FIELD CONDITIONS. RE: DETAIL A1/AV501.
14	PORTABLE LIGHTING CART ON CASTERS. RE: DETAIL A1, J1/AV502.

hollis + miller architects

we design the future®

1828 Walnut Street Suite 922
Kansas City, MO 64108
t 816.442.7700

115 Wilcox Street Suite 210
Castle Rock, CO 80104
t 720.949.1689

HOLLISANDMILLER.COM

Hollis + Miller Architects
Missouri State Certificate of Authority
Architecture # 000161
Structure # 2006031333

Bob D Campbell
Structural Engineer
State Certificate of Authority #000442
4338 Belleview Ave
Kansas City, MO 64111
816.531.4144 phone

Smith & Boucher, Inc.
Mechanical, Electrical, & Plumbing
State Certificate of Authority #EGC000178
25618 W 103rd Street
Olathe, KS 66061
913.345.2127 phone

MKEC Engineering, Inc.
Civil Engineer
State Certificate of Authority
Engineering #2001009364
Landscaping #2006027139
Surveying #2006027138
11827 W 112th Street, Suite 200
Overland Park, KS 66210
913.317.9390 phone

Peerbolte Creative
Theatrical Consultant
109 E Pine St.
Warrensburg, MO 64093-0752
660.429.1383 phone

Avant Acoustics
AV/Acoustics Consultant
14827 West 95th St.
Lenexa, KS 66215
913.888.9111 phone

Discovery Middle School Storm Shelter Addition

Liberty School District

800 Midjay Dr, Liberty, MO 64068

Conformed Construction Documents

REVISIONS:

#	Description	Date

The Professional Architects seal affixed to this sheet applies only to the material and items shown on this sheet. All other documents, specifications, and materials issued by this architectural firm are instruments of service of this firm and this architect expressly disclaims any and all responsibility for such plan, drawings, or documents not exhibiting this seal.

JOB NO: 23018
DRAWN BY: DJW
CHECKED BY: JMH
DATE: 10.11.2023

KEY PLAN

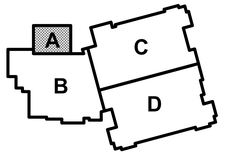

AV101A

A1 | Scale 1/8" = 1'-0" | AV Floor Plan - Level 1 - Area A

20' 10' 0' 20'

PROJECT NORTH

TRUE NORTH

AV FLOOR PLAN - LEVEL 1 - AREA A

Please consider the environment before printing this.

10/11/2023 11:48:44 AM

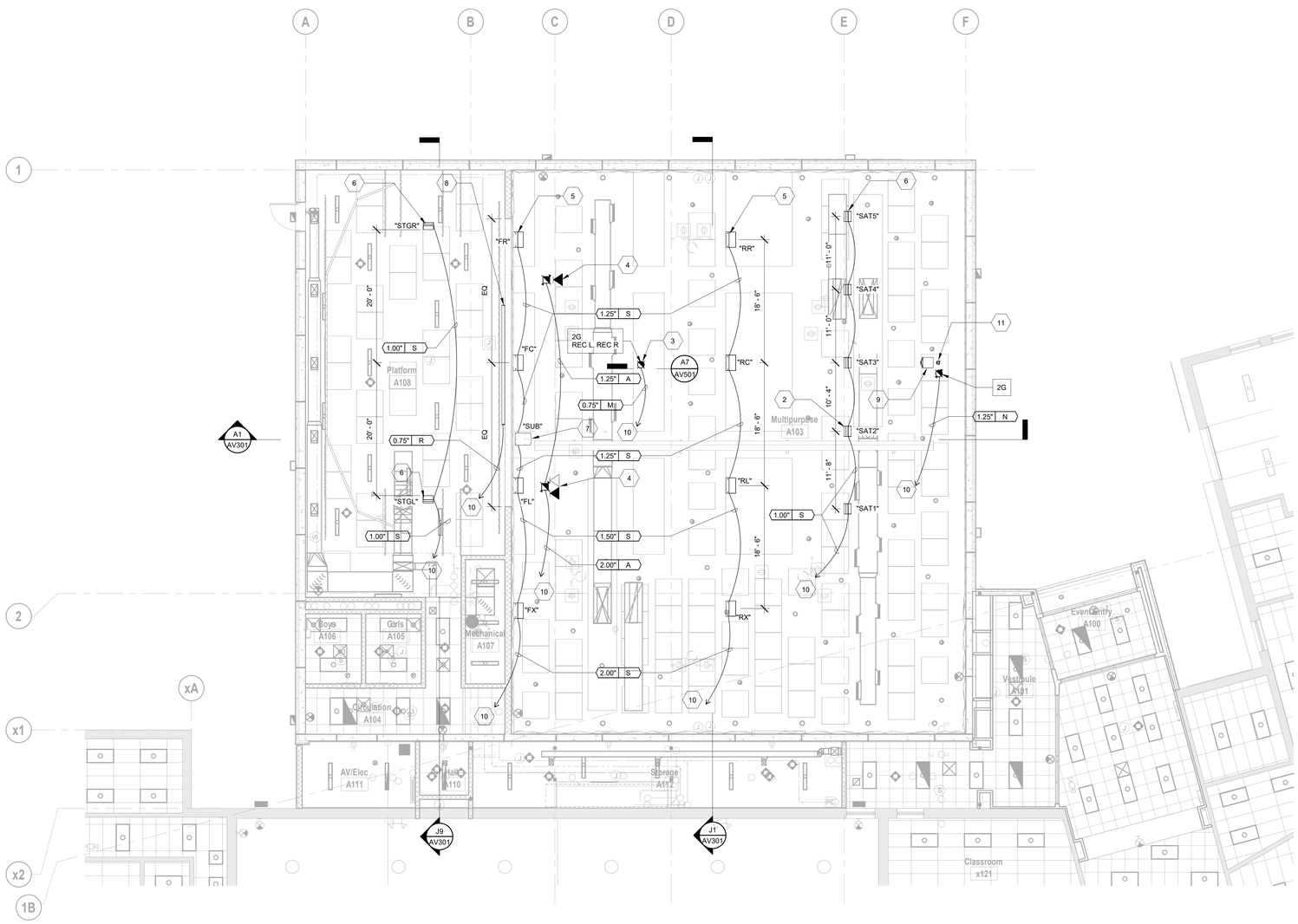

SHEET KEYNOTE LEGEND

1	FLOORSTANDING SWINGOUT EQUIPMENT RACK.
2	COORDINATE EXACT LOUDSPEAKER POSITION WITH DIVIDER CURTAIN.
3	SHOTGUN RECORDING MIC INSTALLED IN LIGHTING POCKET, FACING THE STAGE. COORDINATE EXACT LOCATION WITH ARCHITECTURAL AND LIGHTING CONDITIONS. RE: DETAIL A7/AV501.
4	ANTENNAS INSTALLED IN NON-METALLIC CEILING BOX, NOMINAL 13"X15" SIZE. COORDINATE EXACT SIZE WITH EXACT ANTENNA PROVIDED. STAHLIN CLASSIC SERIES, INTEGRA ENCLOSURES, OR EQUIVALENT.
5	TYPE 1 TWO-WAY LOUDSPEAKER HUNG FROM CEILING STRUCTURE ABOVE. PROVIDE BLOCKING BEHIND GYPSUM BOARD SURFACE FOR MOUNTING. SUBFRAMING AT ROOF DECK AND MOUNTING HARDWARE AS REQUIRED. PAINT ALL EXPOSED MOUNTING HARDWARE TO MATCH CEILING. INSTALL 1-GANG JUNCTION BOX ABOVE WITH GROMMETED PLATE FOR CABLING. RE: DETAIL H1/AV501.
6	TYPE 2 TWO-WAY LOUDSPEAKER HUNG FROM CEILING STRUCTURE ABOVE. PROVIDE UNISTRUT SUBFRAMING AT ROOF DECK AND MOUNTING HARDWARE AS REQUIRED. PAINT ALL EXPOSED MOUNTING HARDWARE TO MATCH CEILING. INSTALL 1-GANG JUNCTION BOX ABOVE WITH GROMMETED PLATE FOR CABLING. RE: DETAIL H9/AV501.
7	SUB-BASS LOUDSPEAKER HUNG FROM ROOF STRUCTURE ABOVE, TYPE AS INDICATED ON ONE-LINE DIAGRAMS. COORDINATE EXACT LOCATION WITH DIVIDER CURTAIN AND CEILING. PROVIDE UNISTRUT SUBFRAMING AT ROOF DECK AND MOUNTING HARDWARE AS REQUIRED. PAINT ALL EXPOSED MOUNTING HARDWARE TO MATCH CEILING. INSTALL 1-GANG JUNCTION BOX ABOVE WITH GROMMETED PLATE FOR CABLING.
8	MOTORIZED PROJECTION SCREEN (16:9 ASPECT RATIO, 220" DIAGONAL). RE: DETAIL A1/AV501.
9	VIDEO PROJECTOR (OWNER FURNISHED CONTRACTOR INSTALLED), MOUNTED FROM ROOF STRUCTURE ABOVE WITH VIBRATION ISOLATION MOUNT AND PROTECTIVE CAGE. RE: DETAIL A12/AV501.
10	CONDUIT TO "PB1" ABOVE EQUIPMENT RACK IN AV A111.
11	VIDEO CAMERA MOUNTED FROM ROOF STRUCTURE ABOVE WITH VIBRATION ISOLATION MOUNT. RE: DETAIL A12/AV501.
12	PORTABLE AUDIO CART ON CASTERS. RE: DETAIL A1, J1/AV502.
13	PROJECTION SCREEN BLACK DROP. CONFIRM WITH FIELD CONDITIONS. RE: DETAIL A1/AV501.
14	PORTABLE LIGHTING CART ON CASTERS. RE: DETAIL A1, J1/AV502.

hollis + miller architects®

we design the future®

1828 Walnut Street Suite 922
Kansas City, MO 64108
t 816.442.7700

115 Wilcox Street Suite 210
Castle Rock, CO 80104
t 720.949.1689

HOLLISANDMILLER.COM

Hollis + Miller Architects
Missouri State Certificate of Authority
Architecture # 000161
Structure # 2006031333

Bob D Campbell
Structural Engineer
State Certificate of Authority #000442
4338 Belleview Ave
Kansas City, MO 64111
816.531.4144 phone

Smith & Boucher, Inc.
Mechanical, Electrical, & Plumbing
State Certificate of Authority #EGC000178
25618 W 103rd Street
Olathe, KS 66061
913.345.2127 phone

MKEC Engineering, Inc.
Civil Engineer
State Certificate of Authority
Engineering #2001009364
Landscaping #2006027139
Surveying #2006027138
11827 W 112th Street, Suite 200
Overland Park, KS 66210
913.317.9390 phone

Peerbolte Creative
Theatrical Consultant
109 E Pine St.
Warrensburg, MO 64093-0752
660.429.1383 phone

Avant Acoustics
AV/Acoustics Consultant
14827 West 95th St.
Lenexa, KS 66215
913.888.9111 phone

Discovery Middle School Storm Shelter Addition

Liberty School District

800 Midjay Dr, Liberty, MO 64068

Conformed Construction Documents

REVISIONS:

#	Description	Date

The Professional Architects seal affixed to this sheet applies only to the material and items shown on this sheet. All other documents, specifications, and materials bearing the Professional Architects seal affixed to any other sheet in this set and this architect expressly disclaims any and all responsibility for such plan, drawings, or documents not exhibiting this seal.

KEY PLAN

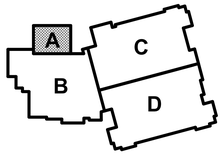

JOB NO: 23018
DRAWN BY: DJW
CHECKED BY: JMH
DATE: 10.11.2023

AV121A

A1 | Scale 1/8" = 1'-0" | AV Reflected Ceiling Plan - Level 1 - Area A

20' 10' 0' 20'

PROJECT NORTH

TRUE NORTH

AV REFLECTED CEILING PLAN - LEVEL 1 - AREA A

Please consider the environment before printing this.

10/11/2023 11:48:57 AM

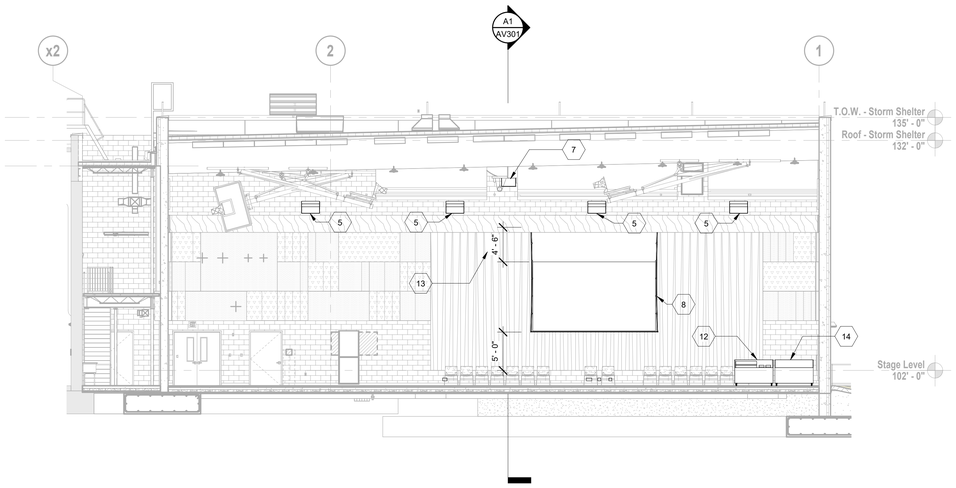

J1 Scale 1/8" = 1'-0" AV Building Section - N-S

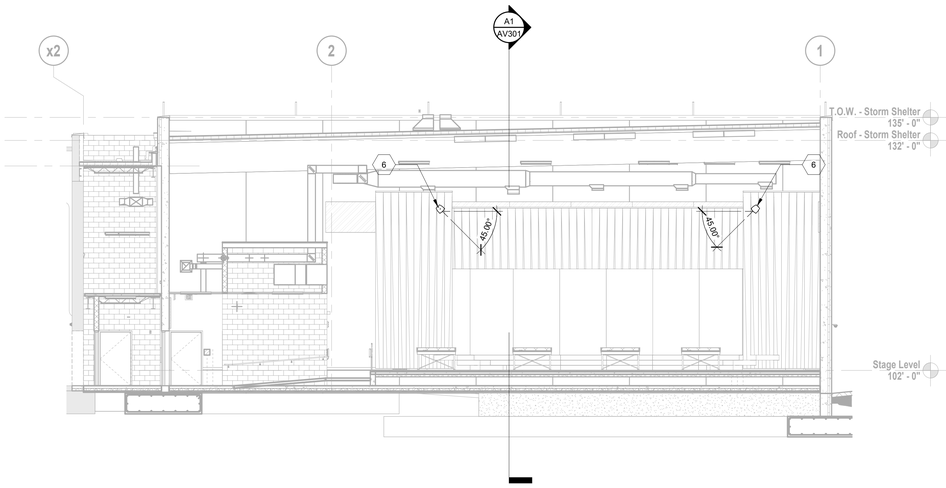

J9 Scale 1/8" = 1'-0" AV Building Section - N-S On Stage

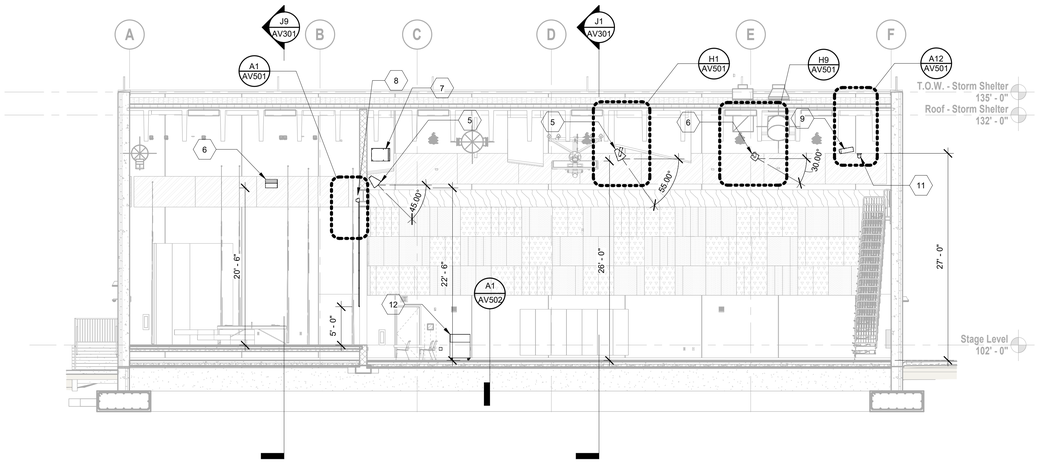

A1 Scale 1/8" = 1'-0" AV Building Section - E-W

SHEET KEYNOTE LEGEND

1	FLOORSTANDING SWINGOUT EQUIPMENT RACK.
2	COORDINATE EXACT LOUDSPEAKER POSITION WITH DIVIDER CURTAIN.
3	SHOTGUN RECORDING MIC INSTALLED IN LIGHTING POCKET, FACING THE STAGE. COORDINATE EXACT LOCATION WITH ARCHITECTURAL AND LIGHTING CONDITIONS. RE: DETAIL A7/AV501.
4	ANTENNAS INSTALLED IN NON-METALLIC CEILING BOX, NOMINAL 13"X15" SIZE. COORDINATE EXACT SIZE WITH EXACT ANTENNA PROVIDED. STAHLIN CLASSIC SERIES, INTEGRA ENCLOSURES, OR EQUIVALENT.
5	TYPE 1 TWO-WAY LOUDSPEAKER HUNG FROM CEILING STRUCTURE ABOVE. PROVIDE BLOCKING BEHIND GYPSUM BOARD SURFACE FOR MOUNTING. SUBFRAMING AT ROOF DECK AND MOUNTING HARDWARE AS REQUIRED. PAINT ALL EXPOSED MOUNTING HARDWARE TO MATCH CEILING. INSTALL 1-GANG JUNCTION BOX ABOVE WITH GROMMETED PLATE FOR CABLING. RE: DETAIL H1/AV501.
6	TYPE 2 TWO-WAY LOUDSPEAKER HUNG FROM CEILING STRUCTURE ABOVE. PROVIDE UNISTRUT SUBFRAMING AT ROOF DECK AND MOUNTING HARDWARE AS REQUIRED. PAINT ALL EXPOSED MOUNTING HARDWARE TO MATCH CEILING. INSTALL 1-GANG JUNCTION BOX ABOVE WITH GROMMETED PLATE FOR CABLING. RE: DETAIL H9/AV501.
7	SUB-BASS LOUDSPEAKER HUNG FROM ROOF STRUCTURE ABOVE, TYPE AS INDICATED ON ONE-LINE DIAGRAMS. COORDINATE EXACT LOCATION WITH DIVIDER CURTAIN AND CEILING. PROVIDE UNISTRUT SUBFRAMING AT ROOF DECK AND MOUNTING HARDWARE AS REQUIRED. PAINT ALL EXPOSED MOUNTING HARDWARE TO MATCH CEILING. INSTALL 1-GANG JUNCTION BOX ABOVE WITH GROMMETED PLATE FOR CABLING.
8	MOTORIZED PROJECTION SCREEN (16:9 ASPECT RATIO, 220" DIAGONAL). RE: DETAIL A1/AV501.
9	VIDEO PROJECTOR (OWNER FURNISHED CONTRACTOR INSTALLED), MOUNTED FROM ROOF STRUCTURE ABOVE WITH VIBRATION ISOLATION MOUNT AND PROTECTIVE CAGE. RE: DETAIL A12/AV501.
10	CONDUIT TO "PB1" ABOVE EQUIPMENT RACK IN AV A111.
11	VIDEO CAMERA MOUNTED FROM ROOF STRUCTURE ABOVE WITH VIBRATION ISOLATION MOUNT. RE: DETAIL A12/AV501.
12	PORTABLE AUDIO CART ON CASTERS. RE: DETAIL A1, J1/AV502.
13	PROJECTION SCREEN BLACK DROP. CONFIRM WITH FIELD CONDITIONS. RE: DETAIL A1/AV501.
14	PORTABLE LIGHTING CART ON CASTERS. RE: DETAIL A1, J1/AV502.

hollis + miller architects

we design the future®

1828 Walnut Street Suite 922
Kansas City, MO 64108
t 816.442.7700

115 Wilcox Street Suite 210
Castle Rock, CO 80104
t 720.949.1689

HOLLISANDMILLER.COM

Hollis + Miller Architects
Missouri State Certificate of Authority
Architecture # 000161
Structure # 2006031333

Bob D Campbell
Structural Engineer
State Certificate of Authority #000442
4338 Belleview Ave
Kansas City, MO 64111
816.531.4144 phone

Smith & Boucher, Inc.
Mechanical, Electrical, & Plumbing
State Certificate of Authority #EGC000178
25618 W 103rd Street
Olathe, KS 66061
913.345.2127 phone

MKEC Engineering, Inc.
Civil Engineer
State Certificate of Authority
Engineering #2001009364
Landscaping #2006027139
Surveying #2006027138
11827 W 112th Street, Suite 200
Overland Park, KS 66210
913.317.9390 phone

Peerbolte Creative
Theatrical Consultant
109 E Pine St.
Warrensburg, MO 64093-0752
660.429.1383 phone

Avant Acoustics
AV/Acoustics Consultant
14827 West 99th St.
Lenexa, KS 66215
913.888.9111 phone

Discovery Middle School Storm Shelter Addition

Liberty School District

800 Midjay Dr, Liberty, MO 64068

Conformed Construction Documents

REVISIONS:

#	Description	Date

"The Professional Architects seal affixed to this sheet applies only to the material and items shown on this sheet. All other professional and trade seals affixed to the drawing this sheet are for the material and items shown on the sheet(s) and this architect expressly disclaims any and all responsibility for such plan, drawings, or documents not exhibiting this seal.

JOB NO: 23018
DRAWN BY: DJW
CHECKED BY: JMH
DATE: 10.11.2023

AV301

AV BUILDING SECTIONS

Please consider the environment before printing this.

10/11/2023 11:50:03 AM

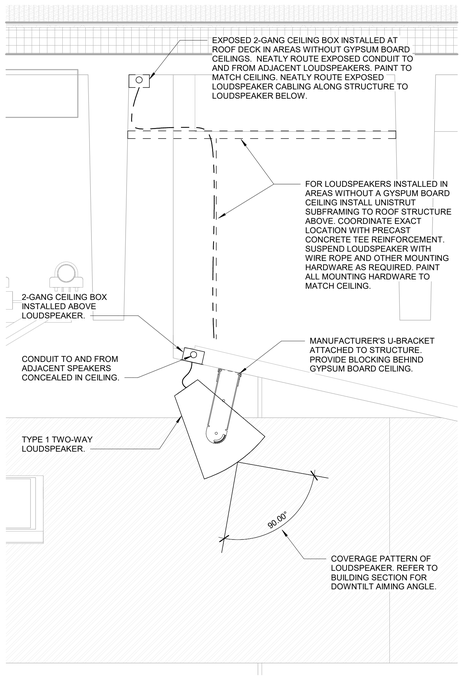

H1	Scale 1" = 1'-0"	Type 1 Loudspeaker Mounting Detail

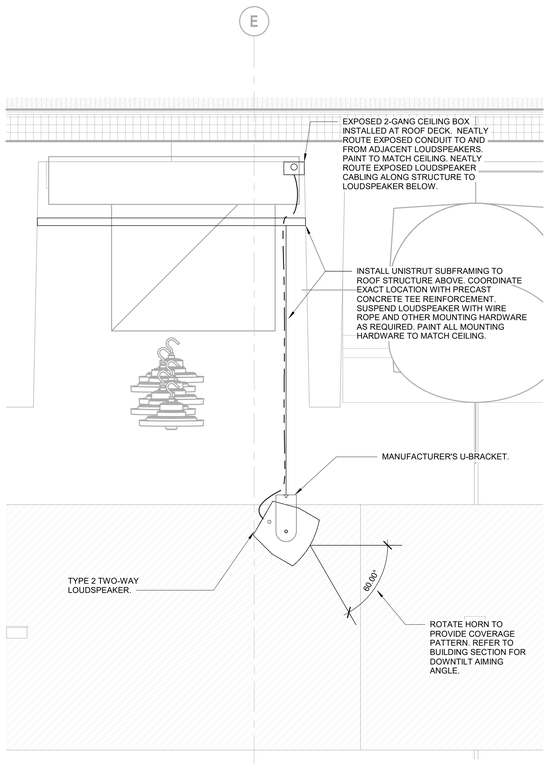

H9	Scale 1" = 1'-0"	Type 2 Loudspeaker Mounting Detail

GENERAL EQUIPMENT MOUNTING NOTES

1. STRUCTURAL DETAILS, STRUCTURAL MEMBER TYPES, SIZES, AND ATTACHMENT METHODS ARE SHOWN FOR CONCEPT ONLY. ATTENTION IS CALLED TO THE SPECIFICATIONS FOR ADDITIONAL REQUIREMENTS REGARDING APPROVAL OF THE EXACT DETAILS TO BE USED.
2. INSTALL LOUDSPEAKERS SO THERE ARE NO OBSTRUCTIONS TO EACH LOUDSPEAKER'S RATED COVERAGE PATTERN.
3. LOUDSPEAKERS ARE DRAWN TO APPROXIMATE DIMENSIONS. VERIFY EXACT DIMENSIONS REQUIRED FOR LOUDSPEAKERS FURNISHED.
4. PROVIDE ACCESS TO LOUDSPEAKERS DURING INSTALLATION, TESTING, AND EQUALIZATION ACTIVITIES. REORIENT LOUDSPEAKERS, IF SO REQUESTED BY ACOUSTICAL CONSULTANT, DURING SYSTEM TESTING AND EQUALIZATION ACTIVITIES.
5. PAINT ALL LOUDSPEAKERS (UNLESS AN ENCLOSURE COLOR IS SPECIFIED OTHERWISE) AND MOUNTING HARDWARE TWO COATS OF SATIN ENAMEL, COLOR AS SELECTED BY THE ARCHITECT. USE PRIMER PER MANUFACTURER RECOMMENDATIONS. DO NOT PAINT CONES OF LOW FREQUENCY LOUDSPEAKERS OR DIAPHRAGMS OF HIGH FREQUENCY DRIVERS.

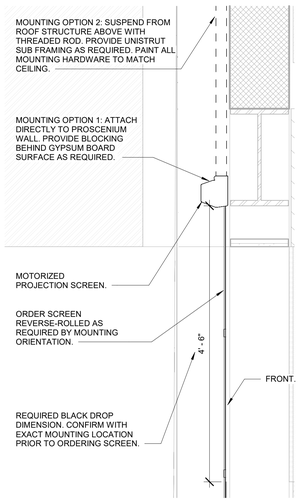

A1	Scale 1" = 1'-0"	Projection Screen Mounting Detail

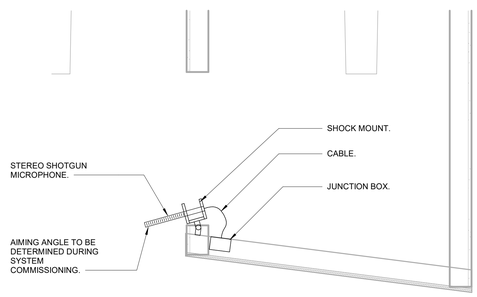

A7	Scale 1" = 1'-0"	Recording Mic Mounting Detail

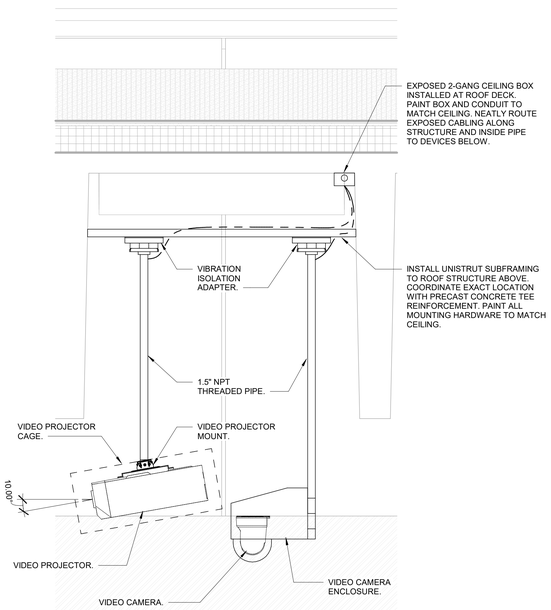

A12	Scale 1" = 1'-0"	Projector and Camera Mounting Details

hollis + miller architects
we design the future®
1828 Walnut Street Suite 922
Kansas City, MO 64108
t 816.442.7700
115 Wilcox Street Suite 210
Castle Rock, CO 80104
t 720.949.1689
HOLLISANDMILLER.COM
Hollis + Miller Architects
Missouri State Certificate of Authority
Architecture # 000161
Structure # 2006031333

Bob D Campbell
Structural Engineer
State Certificate of Authority #000442
4338 Belleview Ave
Kansas City, MO 64111
816.531.4144 phone

Smith & Boucher, Inc.
Mechanical, Electrical, & Plumbing
State Certificate of Authority #EGC000178
25618 W 103rd Street
Olathe, KS 66061
913.345.2127 phone

MKEC Engineering, Inc.
Civil Engineer
State Certificate of Authority
Engineering #2001009364
Landscaping #2006027139
Surveying #2006027138
11827 W 112th Street, Suite 200
Overland Park, KS 66210
913.317.9390 phone

Peerbolte Creative
Theatrical Consultant
109 E Pine St.
Warrensburg, MO 64093-0752
660.429.1383 phone

Avant Acoustics
AV/Acoustics Consultant
14827 West 95th St.
Lenexa, KS 66215
913.888.9111 phone

Discovery Middle School Storm Shelter Addition
Liberty School District
800 Midjay Dr, Liberty, MO 64068

Conformed Construction Documents

REVISIONS:

#	Description	Date

"The Professional Architects seal affixed to this sheet applies only to the material and items shown on this sheet. All drawings, instruments or other documents not exhibiting this seal shall not be considered prepared by this architect, and this architect expressly disclaims any and all responsibility for such plan, drawings, or documents not exhibiting this seal."

JOB NO: 23018
DRAWN BY: DJW
CHECKED BY: JMH
DATE: 10.11.2023

AV501

AV EQUIPMENT MOUNTING DETAILS

Please consider the environment before printing this.
10/11/2023 11:50:20 AM

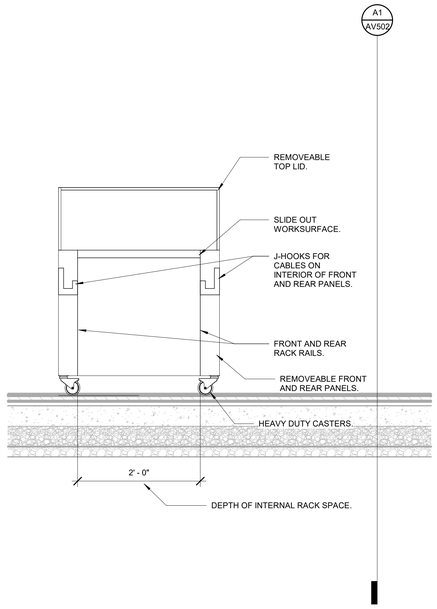

J1 | Scale 1" = 1'-0" | Audio Cart Section Detail

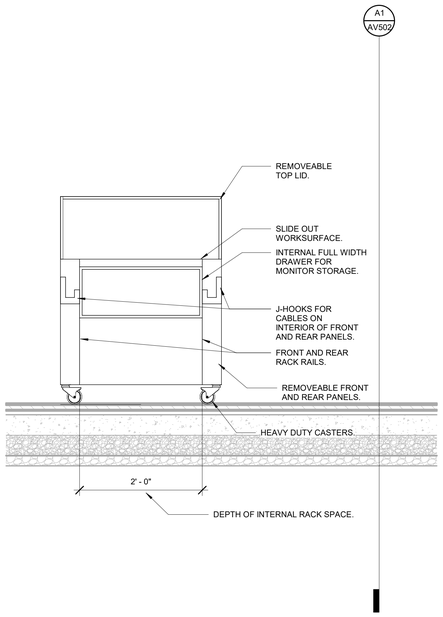

J7 | Scale 1" = 1'-0" | Lighting Cart Section Detail

GENERAL CONNECTION PANEL NOTES

1. ALL CONNECTION PANELS SHALL HAVE COUNTERSUNK SCREW HOLES AND PHILLIPS COUNTERSUNK OR OVAL-HEAD SCREWS FINISHED TO MATCH PANEL. ALL LETTERING SHALL BE ENGRAVED AND FILLED DIRECTLY ON THE PANEL, REGARDLESS OF PANEL COLOR, ALL PANEL MOUNTED CONNECTORS SHOULD MATCH THE FINISH COLOR OF THE PANEL WHEREVER POSSIBLE.
2. ALL STANDARD SIZED RACK PANELS USED TO MOUNT CONTROLS OR CONNECTORS SHALL HAVE FORMED EDGES, WITH ALL LETTERING ENGRAVED AND FILLED DIRECTLY ON THE PANEL.
3. VERIFY ALL DIMENSIONS AND SPACING FOR PANEL-MOUNTED COMPONENTS AND ENGRAVING. UNLESS NOTED OTHERWISE, ENGRAVED TEXT SHALL BE 3/16-INCH HIGH. SPACING BETWEEN PANEL-MOUNTED COMPONENTS SHALL BE SUFFICIENT TO ENABLE FRONT CABLE CONNECTIONS TO BE MADE EASILY.
4. CONNECTION PANEL LAYOUTS SHALL BE ACCORDING TO FUNCTION WITH ALL CONNECTIONS OF ONE TYPE LOCATED TOGETHER. LABELS SHALL BE LOCATED ABOVE THE CORRESPONDING CONNECTOR OR COMPONENT.
5. CONNECTION PANEL LAYOUTS SHOWN ARE FOR CONCEPT ONLY. REFER TO PLANS FOR ALL CONNECTION PANELS AND CONNECTIONS. SUBMIT A SHOP DRAWING FOR EACH CONNECTION PANEL WITH ALL CONNECTIONS, DEVICES, LABELS, COLORS AND SIZES CLEARLY INDICATED.
6. UNLESS NOTED OTHERWISE, STANDARD GANG CONNECTION PANELS SHALL BE SIERRA STAINLESS STEEL WALL PLATES, OR COLOR AS SELECTED BY ARCHITECT.
7. UNLESS NOTED OTHERWISE, NEMA SIZE CONNECTION PANELS SHALL BE CLEAR ANODIZED BRUSHED ALUMINUM, OR COLOR AS SELECTED BY ARCHITECT
   A. 12-INCHES OR SMALLER: 1/8-INCH THICK.
   B. LARGER THAN 12-INCHES: 3/16-INCH THICK.
   C. FIELD-VERIFY MOUNTING CONDITIONS FOR EACH BOX. FLUSH MOUNTED PLATES SHALL HAVE A MINIMUM 1/2-INCH FLANGE ON ALL SIDES.

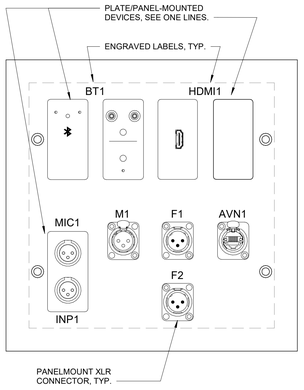

M13 | Scale 6" = 1'-0" | Stage Connection Plate Detail

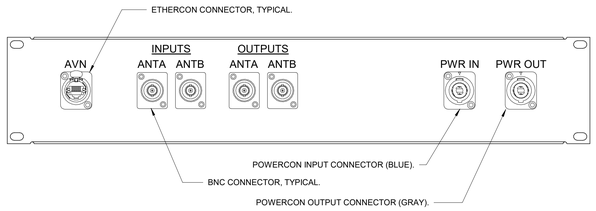

J13 | Scale 6" = 1'-0" | Audio Cart Connection Panel Detail

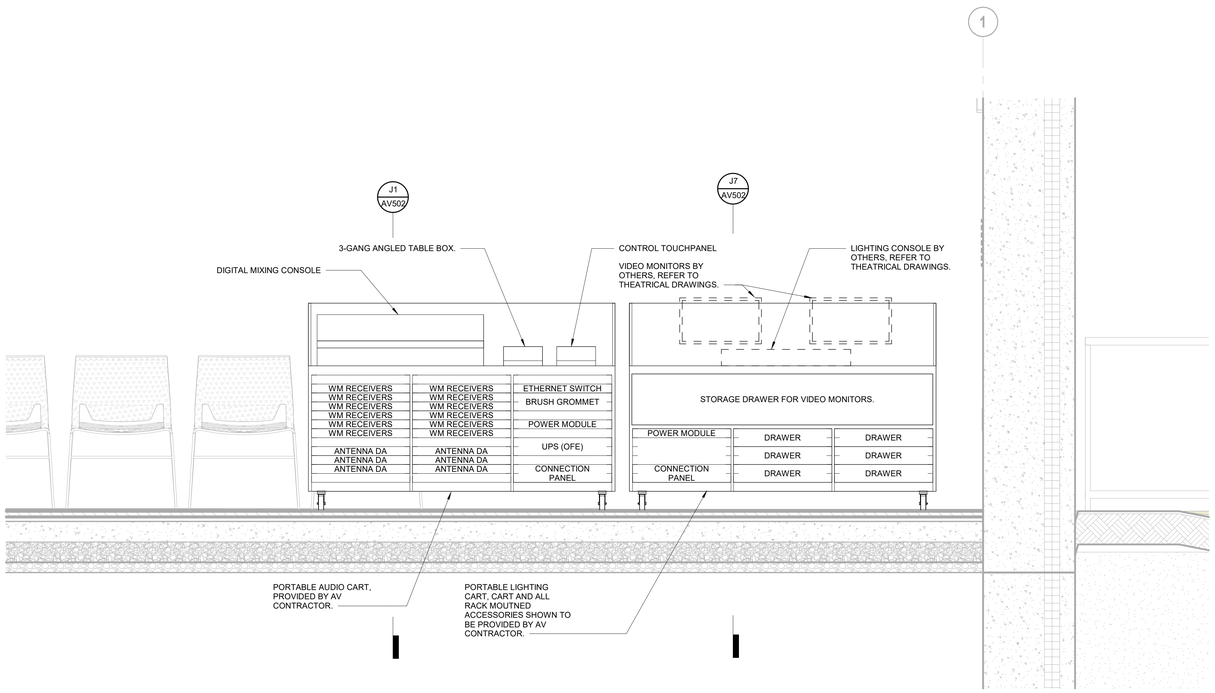

A1 | Scale 1" = 1'-0" | Portable Carts Front Elevation

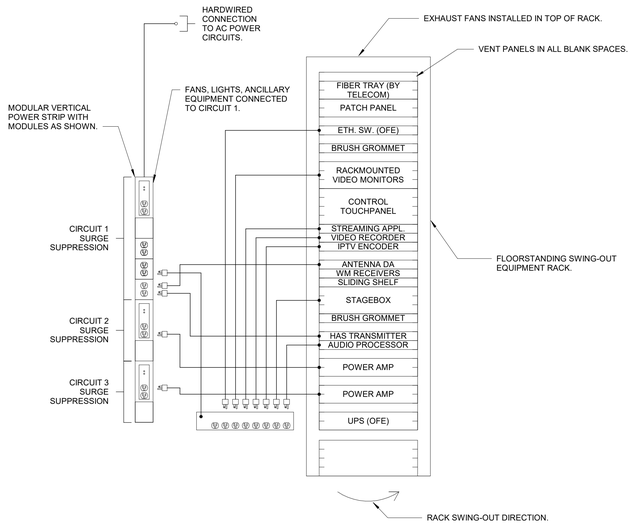

A13 | Scale 1" = 1'-0" | Equipment Rack Elevation

hollis + miller architects®

we design the future®

1828 Walnut Street Suite 922
Kansas City, MO 64108
t 816.442.7700

115 Wilcox Street Suite 210
Castle Rock, CO 80104
t 720.949.1689

HOLLISANDMILLER.COM

Hollis + Miller Architects
Missouri State Certificate of Authority
Architecture # 000161
Structure # 2006031333

Bob D Campbell
Structural Engineer
State Certificate of Authority #000442
4338 Belleview Ave
Kansas City, MO 64111
816.531.4144 phone

Smith & Boucher, Inc.
Mechanical, Electrical, & Plumbing
State Certificate of Authority #EGC000178
25618 W 103rd Street
Olathe, KS 66061
913.345.2127 phone

MKEC Engineering, Inc.
Civil Engineer
State Certificate of Authority
Engineering #2001009364
Landscaping #2006027139
Surveying #2006027138
11827 W 112th Street, Suite 200
Overland Park, KS 66210
913.317.9390 phone

Peerbolte Creative
Theatrical Consultant
109 E Pine St.
Warrensburg, MO 64093-0752
660.429.1383 phone

Avant Acoustics
AV/Acoustics Consultant
14827 West 95th St.
Lenexa, KS 66215
913.888.9111 phone

Discovery Middle School Storm Shelter Addition
Liberty School District
800 Midjay Dr, Liberty, MO 64068

Conformed Construction Documents

REVISIONS:

#	Description	Date

"The Professional Architects seal affixed to this sheet applies only to the material and items shown on this sheet. All other material and items affixed to the drawing set are not to be considered part of the Architect's work product, and the architect expressly disclaims any and all responsibility for such plan, drawings, or documents not exhibiting this seal.

JOB NO: 23018
DRAWN BY: DJW
CHECKED BY: JMH
DATE: 10.11.2023

AV502

AV RACK AND CONNECTION PANEL DETAILS

Please consider the environment before printing this.

10/11/2023 11:50:29 AM

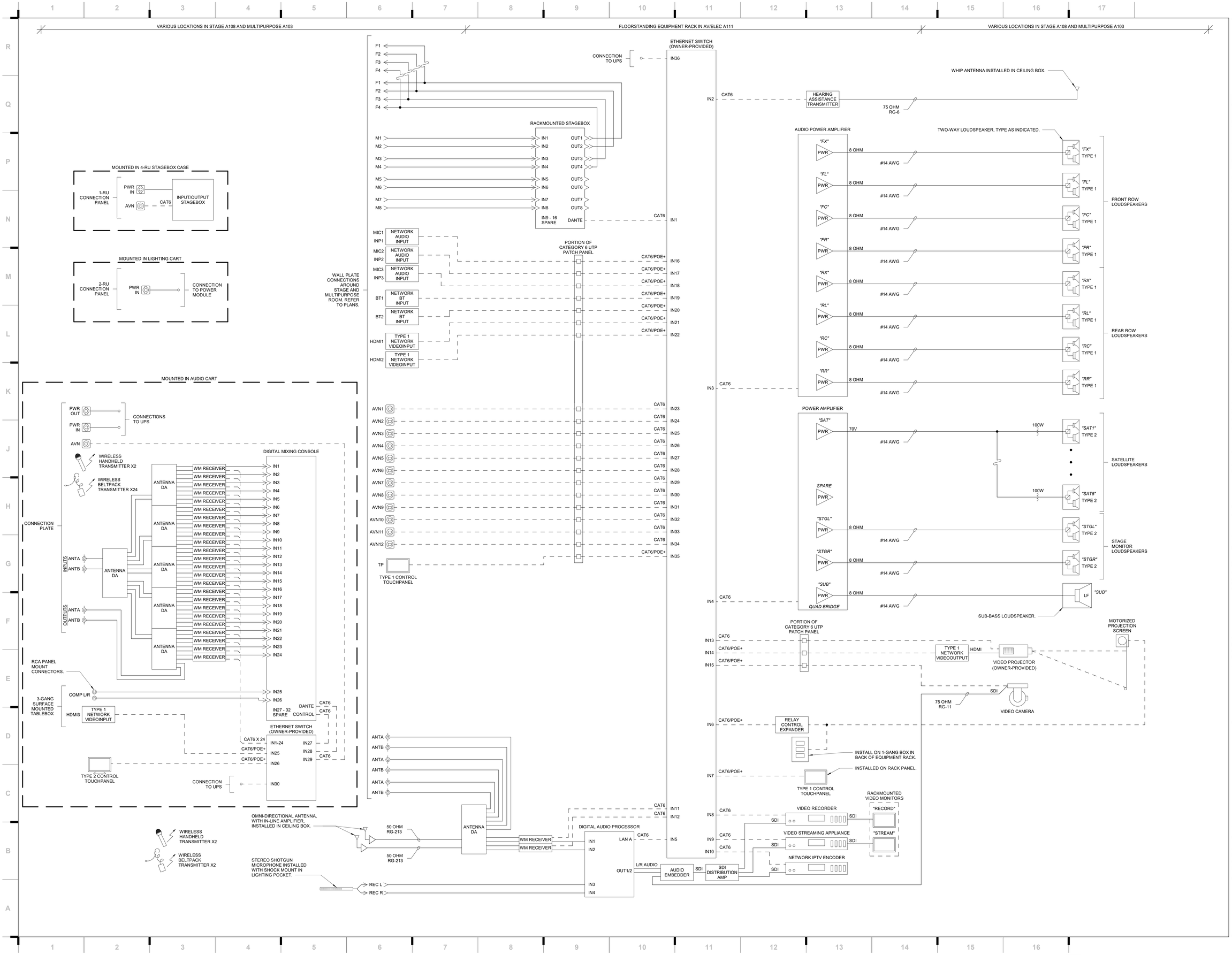

hollis + miller architects

we design the future®

1828 Walnut Street Suite 922
Kansas City, MO 64108
t 816.442.7700

115 Wilcox Street Suite 210
Castle Rock, CO 80104
t 720.949.1689

HOLLISANDMILLER.COM

Hollis + Miller Architects
Missouri State Certificate of Authority
Architecture # 000161
Structure # 2006031333

Bob D Campbell
Structural Engineer
State Certificate of Authority #000442
4338 Belleview Ave
Kansas City, MO 64111
816.531.4144 phone

Smith & Boucher, Inc.
Mechanical, Electrical, & Plumbing
State Certificate of Authority #EGC000178
25618 W 103rd Street
Olathe, KS 66061
913.345.2127 phone

MKEC Engineering, Inc.
Civil Engineer
State Certificate of Authority
Engineering #2001009364
Landscaping #2006027139
Surveying #2006027138
11827 W 112th Street, Suite 200
Overland Park, KS 66210
913.317.9390 phone

Peerbolte Creative
Theatrical Consultant
109 E Pine St.
Warrensburg, MO 64093-0752
660.429.1383 phone

Avant Acoustics
AV/Acoustics Consultant
14827 West 95th St.
Lenexa, KS 66215
913.888.9111 phone

Discovery Middle School Storm Shelter Addition

Liberty School District

800 Midjay Dr, Liberty, MO 64068

Conformed Construction Documents

REVISIONS:

#	Description	Date

The Professional Architects seal affixed to this sheet applies only to the material and items shown on this sheet. All drawings, instruments or other documents not exhibiting this seal shall not be considered prepared by this architect, and this architect expressly disclaims any and all responsibility for such plan, drawings, or documents not exhibiting this seal.

JOB NO: 23018
DRAWN BY: DJW
CHECKED BY: JMH
DATE: 10.11.2023

AV601

AV ONE-LINE DIAGRAM

Please consider the environment before printing this.

10/11/2023 11:50:38 AM

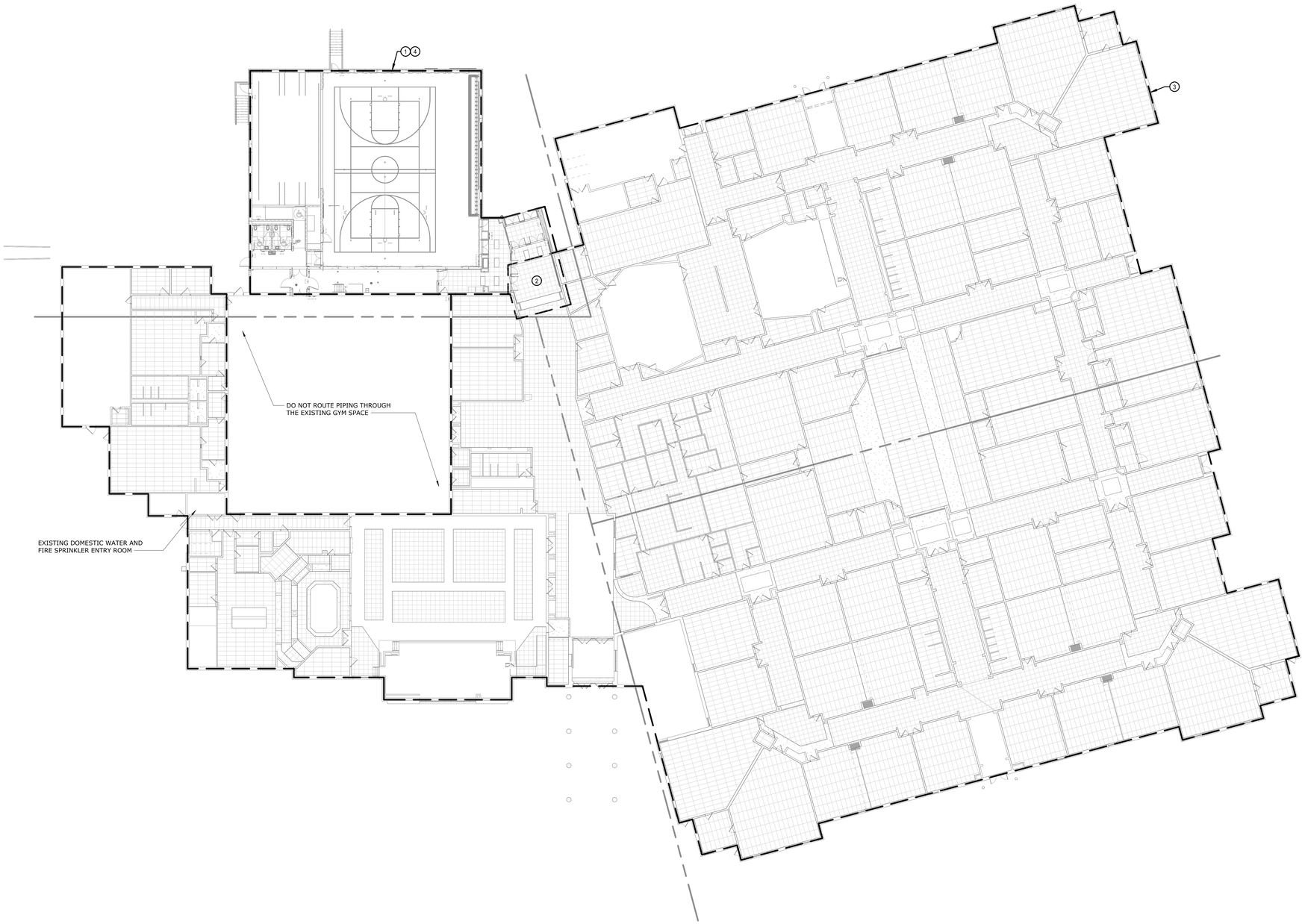

A1 | Scale 1" = 20'-0" | OVERALL FIRE PROTECTION PLAN - LEVEL 1

20' 10' 0' 20'

PROJECT NORTH

TRUE NORTH

SHEET KEYNOTE LEGEND

GENERAL NOTES:

1. PROVIDE NFPA 13 COMPLIANT SPRINKLER SYSTEM FOR THE ADDITION.
2. CAREFULLY COORDINATE ALL SPRINKLER HEAD TYPES, COLOR, AND EXPOSED PIPING LOCATIONS WITH ARCHITECT FOR DESIRED AESTHETICS OF THE SPACES PRIOR TO INSTALLATION.
   a. REFER TO ARCHITECTURAL RCP LAYOUT FOR CEILING TYPES AND SPACES OPEN TO STRUCTURE.
   b. GYP. CEILINGS REQUIRE CONCEALED HEADS WITH COVER. WHITE COLOR FOR WHITE CEILINGS. PROVIDE CUSTOM COLOR BY ARCHITECT.
   c. WOOD AND OTHER SPECIALTY CEILINGS SHALL USE CONCEALED HEADS WITH CUSTOM FINISH BY ARCHITECT.
   d. ACT CEILINGS PROVIDE SEMI-RECESSED PENDANT HEADS.
3. REFER TO SPECIFICATIONS FOR ADDITIONAL INFORMATION.
4. CAREFULLY COORDINATE PIPE ROUTING WITH STRUCTURE AS WELL AS ALL OTHER TRADES TO MAINTAIN EQUIPMENT CLEARANCES AND DESIRED CEILING HEIGHTS.
5. COORDINATE ALL PIPING PENETRATIONS WITH STRUCTURAL PRIOR TO CORE DRILLING.
6. PROVIDE FIRESTOPPING AT PENETRATIONS OF ALL RATED WALLS. REFER TO CODE PLANS FOR LOCATIONS OF RATED WALLS.
7. PROVIDE ICC 500 PROTECTION SHROUD FOR ALL PENTRATIONS OF THE ICC 500 SHELTER WALLS.

PLAN NOTES:

1. PROVIDE SPRINKLER SYSTEM FOR BUILDING ADDITION PER NFPA 13 REQUIREMENTS. PROVIDE ALL NECESSARY ACCESSORIES AND REQUIREMENTS FOR NEW ZONE. CONNECT TO THE EXISTING FIRE PROTECTION SYSTEM.
2. MODIFY THE EXISTING SPRINKLER SYSTEM AS REQUIRED TO ACCOMMODATE ROOM AND CEILING CHANGES.
3. EXISTING CEILINGS ARE BEING REPLACED. UNINSTALL THE EXISTING CEILING-MOUNTED SPRINKLER HEADS AND REINSTALL IN NEW CEILINGS. MODIFY THE EXISTING SPRINKLER SYSTEM AS REQUIRED TO ACCOMMODATE ROOM AND CEILING CHANGES.
4. COORDINATE ALL PIPE ROUTING AND SPRINKLER LOCATIONS WITH ARCHITECT AND THEATRICAL COMPONENETS.

hollis + miller architects®

we design the future®

1828 Walnut Street Suite 922
Kansas City, MO 64108
t 816.442.7700

115 Wilcox Street Suite 210
Castle Rock, CO 80104
t 720.949.1689

HOLLISANDMILLER.COM

Hollis + Miller Architects
Missouri State Certificate of Authority
Architecture # 000161
Structure # 2006031333

Bob D Campbell
Structural Engineer
State Certificate of Authority #000442
4338 Belleview Ave
Kansas City, MO 64111
816.531.4144 phone

Smith & Boucher, Inc.
Mechanical, Electrical, & Plumbing
State Certificate of Authority #EGC000178
25618 W 103rd Street
Olathe, KS 66061
913.345.2127 phone

MKEC Engineering, Inc.
Civil Engineer
State Certificate of Authority
Engineering #2001009364
Landscaping #2006027139
Surveying #2006027138
11827 W 112th Street, Suite 200
Overland Park, KS 66210
913.317.9390 phone

Peerbolte Creative
Theatrical Consultant
109 E Pine St.
Warrensburg, MO 64093-0752
660.429.1383 phone

Avant Acoustics
AV/Acoustics Consultant
14827 West 95th St.
Lenexa, KS 66215
913.888.9111 phone

Discovery Middle School Storm Shelter Addition

Liberty School District

800 Midjay Dr, Liberty, MO 64068

Conformed Construction Documents

REVISIONS:

#	Description	Date

STATE OF MISSOURI
RYAN JEROD DIEDIKER
NUMBER A-2015006511
REGISTERED PROFESSIONAL ENGINEER
10/11/23

smith & boucher engineers
25618 west 103rd St olathe, ks 66061
phone 913.345.2127 fax 913.345.0617
project number 2314702

The Professional Architects seal affixed to this sheet applies only to the material and items shown on this sheet. All other material and items shown on other sheets in this set are not the responsibility of the architect whose seal is affixed and this architect expressly declares any and all responsibility for such plan, drawings, or documents not exhibiting the seal.

KEY PLAN

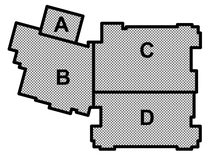

JOB NO: 23018
DRAWN BY: SBI
CHECKED BY: RJD
DATE: 10.11.2023

FP101

OVERALL FIRE PROTECTION PLAN - LEVEL 1

Please consider the environment before printing this.

10/11/2023 12:11:26 PM

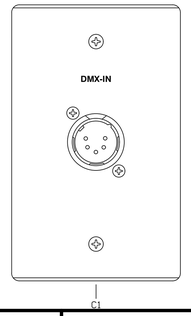

DMX-IN SINGLE GANG BACK BOX				
DEVICE DESIGNATION-	LOCATION	MOUNTING METHOD	C1 TYPE	C 1 LABELS 1ST LINE
DI-1	REAR HOUSE LEFT	FLUSH	M 5-PIN XLR	DMX-IN
DI-2	HOUSE RIGHT	FLUSH	M 5-PIN XLR	DMX-IN
DI-3	PLATFORM LEFT	FLUSH	M 5-PIN XLR	DMX-IN
DI-4	PROSCENIUM WALL	FLUSH	M 5-PIN XLR	DMX-IN

LAMICOID LABEL SHALL BE ATTACHED BELOW THE CONNECTOR. ONE LAMICOID SHALL BE EVENLY SPACED BELOW ALL CONNECTORS REQUIRING THE LAMICOID

N1 Scale 1" = 1" — DI-# DMX IN

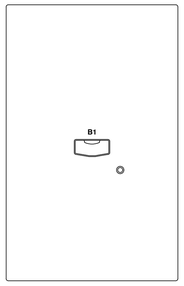

E - SINGLE BUTTON ENTRY STATION SINGLE GANG BACK BOX - DEEP					
ID #	DEVICE LOCATION	MOUNTING METHOD	WIRE TYPE	WIRING METHOD	LABELS B1
E-1	HOUSE RIGHT	FLUSH	BELDEN 8471	ANY	ENTRY
E-2	REAR OF PLATFORM LEFT	FLUSH	BELDEN 8471	ANY	ENTRY
E-3	HOUSE LEFT	FLUSH	BELDEN 8471	ANY	ENTRY

WIRING METHODS REFER TO HOME RUN, STAR, DAISY CHAIN, BUS, ETC

N10 Scale 1" = 1" — E1= # SINGLE BUTTON ENTRY STATION

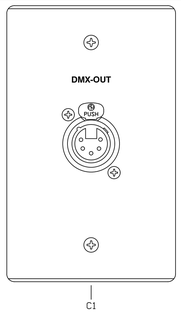

DMX-OUT SINGLE GANG BACK BOX				
DEVICE DESIGNATION-	LOCATION	MOUNTING METHOD	C1 TYPE	C 1 LABELS 1ST LINE
DO-1	PLATFORM LEFT WING	FLUSH	F 5-PIN XLR	DMX-OUT
DO-2	UPPLATFORM CENTER	FLUSH	F 5-PIN XLR	DMX-OUT
DO-3	PLATFORM RGHT WING	FLUSH	F 5-PIN XLR	DMX-OUT
DO-4	HOUSE LEFT PROSCENIUM	FLUSH	F 5-PIN XLR	DMX-OUT

LAMICOID LABEL SHALL BE ATTACHED BELOW THE CONNECTOR. ONE LAMICOID SHALL BE EVENLY SPACED BELOW ALL CONNECTORS REQUIRING THE LAMICOID

K1 Scale 1" = 1" — DO-# DMX OUT

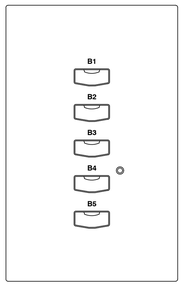

5P - 5 BUTTON PRESET STATION SINGLE GANG BACK BOX									
ID #	DEVICE LOCATION	MOUNTING METHOD	WIRE TYPE	WIRING METHOD	LABELS B1	B2	B3	B4	B5
5P-1	REAR OF HOUSE LEFT	FLUSH	BELDEN 8471	ANY	PRESET 1	PRESET 2	PRESET 3	PRESET 4	OFF
5P-2	UPPLATFORM RIGHT	FLUSH	BELDEN 8471	ANY	PRESET 1	PRESET 2	PRESET 3	PRESET 4	OFF

WIRING METHODS REFER TO HOME RUN, STAR, DAISY CHAIN, BUS, ETC

K10 Scale 1" = 1" — 5P-# FIVE BUTTON ENTRY STATION

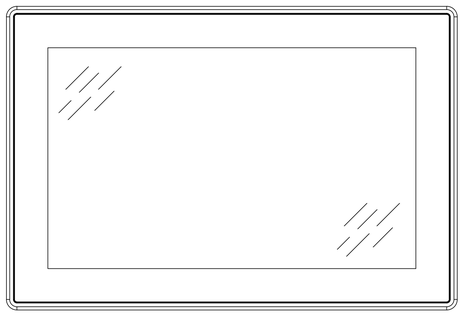

LCD MANUFACTURER SUPPLIED BACK BOX					
DEVICE DESIGNATION -	LOCATION	MOUNTING METHOD	WIRE TYPE	WIRING METHOD	LABELS B1
LED-1	PLATFORM RIGHT	FLUSH	BELDEN 1583a	HOMERUN	-

WIRING METHODS REFER TO HOME RUN, STAR, DAISY CHAIN, BUS, ETC

D1 Scale 1" = 1" — LCD CONTROL PANEL

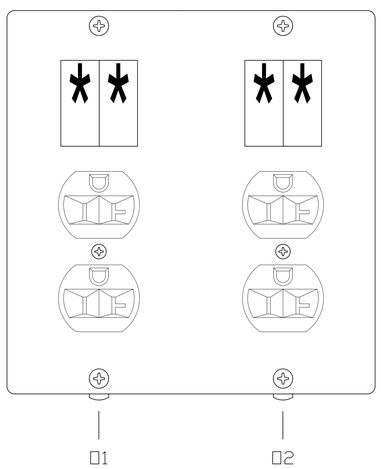

OUTLET BOX 2-CIRCUIT										
ID #	DEVICE LOCATION	MOUNTING METHOD	O1 TYPE	O1 LENGTH	O1 LABEL TYPE	LABEL	O2 TYPE	O3 LENGTH	O2LABEL TYPE	LABEL
OB-3	HOUSE LEFT PROSCENIUM WALL	FLUSH WALL	DUPLEX PBG-EDISON	FLUSH	VINYL STICKER	R28	DUPLEX PBG-EDISON	FLUSH	VINYL STICKER	R29

A1 Scale 1" = 1" — TWO OUTLET BOX

SHEET KEYNOTE LEGEND

hollis + miller architects®
we design the future®
1828 Walnut Street Suite 922
Kansas City, MO 64108
t 816.442.7700
115 Wilcox Street Suite 210
Castle Rock, CO 80104
t 720.949.1689
HOLLISANDMILLER.COM
Hollis + Miller Architects
Missouri State Certificate of Authority
Architecture # 0000161
Structure # 2006031333

Bob D Campbell
Structural Engineer
State Certificate of Authority #000442
4338 Belleview Ave
Kansas City, MO 64111
816.531.4144 phone

Smith & Boucher, Inc.
Mechanical, Electrical, & Plumbing
State Certificate of Authority #EGC000178
25618 W 103rd Street
Olathe, KS 66061
913.345.2127 phone

MKEC Engineering, Inc.
Civil Engineer
State Certificate of Authority
Engineering #2001009364
Landscaping #2006027139
Surveying #2006027138
11827 W 112th Street, Suite 200
Overland Park, KS 66210
913.317.9390 phone

Peerbolte Creative
Theatrical Consultant
109 E Pine St.
Warrensburg, MO 64093-0752
660.429.1383 phone

Avant Acoustics
AV/Acoustics Consultant
14827 West 95th St.
Lenexa, KS 66215
913.888.9111 phone

Discovery Middle School Storm Shelter Addition
Liberty Public Schools
800 Midjay Dr, Liberty, MO 64068

Conformed Construction Documents

REVISIONS:

#	Description	Date
1	Addendum 01	09/14/2023
2	Addendum 04	09/28/2023

The Professional Architects seal affixed to this sheet applies only to the material and items shown on the sheet. All drawings, instruments or other documents not exhibiting this seal shall not be considered prepared by this architect, and this architect expressly disclaims any and all responsibility for such plan, drawings, or documents not exhibiting this seal.

JOB NO: 23018
DRAWN BY: SCJ
CHECKED BY: SCJ
DATE: 10.11.2023

PEERBOLTE CREATIVE
109 E PINE STREET
PO BOX 754
WARRENSBURG MO, 64093
PHONE (660)429-1383
FAX (660)429-3666
www.peerbolte.com

NOTE: STRUCTURAL AND ELECTRICAL DRAWINGS ARE FURNISHED BY PEERBOLTE CREATIVE FOR REFERENCE ONLY. PC IS NOT LICENSED TO PERFORM ANY ENGINEERING FOR STRUCTURAL OR ELECTRICAL POWER.

KEY PLAN

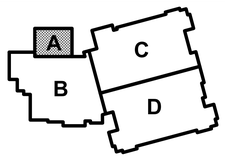

TH002

THEATRICAL DEVICES

Please consider the environment before printing this.

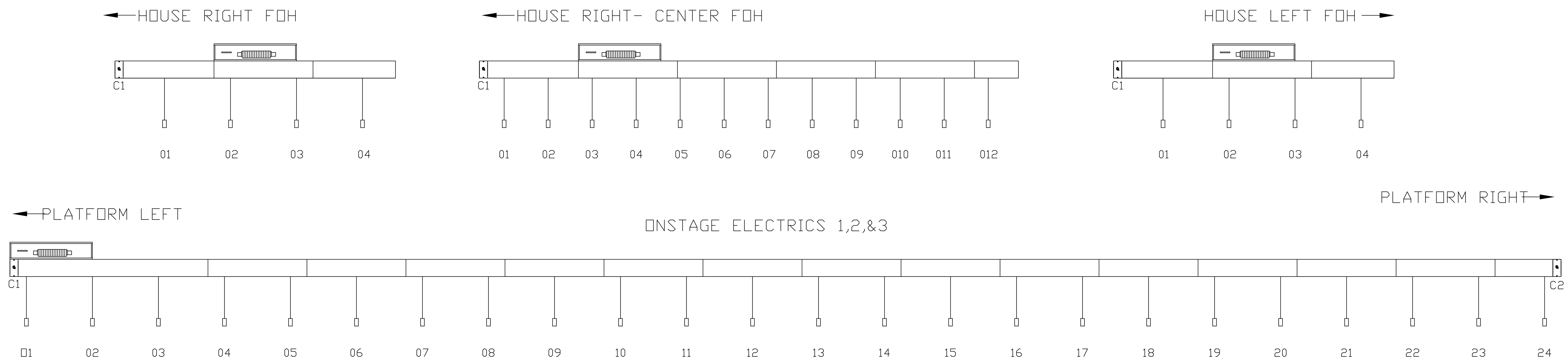

8' CONNECTOR STRIP
2 RELAY CIRCUITS, 4 EDISON PIGTAILS, 1 DMX OUT

ID #	DEVICE LOCATION	MOUNTING METHOD	BRACKET TYPE	CABLE MANGEMENT	TERMINAL STRIP LOCATION
E1	HOUSE LEFT FOH ELECTRIC	SINGLE BATTEN BRACKET	ETC TYPE 21/27	TRADITIONAL	5' FROM SR END

C1 TYPE	C1 - WIRE TYPE	C1-WIRING METHOD	C1 LABELS - ENGRAVED AND FILLED 1ST LINE	2ND LINE	3RD LINE	LAMICOID
DMX	BELDEN 9729	HOME RUN	DMX-OUT	-	-	Y

OUTLET	TYPE	LENGTH	LABEL TYPE	LABEL
O1	20 AMP EDISON	FLUSH	VINYL STICKER	R01
O2	20 AMP EDISON		VINYL STICKER	R02
O3	20 AMP EDISON		VINYL STICKER	R01
O4	20 AMP EDISON		VINYL STICKER	R02

16' CONNECTOR STRIP
3 RELAY CIRCUITS, 12 EDISON PIGTAILS, 1DMX OUT

ID #	DEVICE LOCATION	MOUNTING METHOD	BRACKET TYPE	CABLE MANGEMENT	TERMINAL STRIP LOCATION
E2	HOUSE CENTER FOH ELECTRIC	SINGLE BATTEN BRACKET	ETC TYPE 21/27	TRADITIONAL	5' FROM SR END

C1 TYPE	C1 - WIRE TYPE	C1-WIRING METHOD	C1 LABELS - ENGRAVED AND FILLED 1ST LINE	2ND LINE	3RD LINE	LAMICOID
DMX	BELDEN 9729	HOME RUN	DMX-OUT	-	-	Y

OUTLET	TYPE	LENGTH	LABEL TYPE	LABEL
O1	20 AMP EDISON	FLUSH	VINYL STICKER	R03
O2	20 AMP EDISON		VINYL STICKER	R04
O3	20 AMP EDISON		VINYL STICKER	R05
O4	20 AMP EDISON		VINYL STICKER	R03
O5	20 AMP EDISON		VINYL STICKER	R04
O6	20 AMP EDISON		VINYL STICKER	R05
O7	20 AMP EDISON		VINYL STICKER	R03
O8	20 AMP EDISON		VINYL STICKER	R04
O9	20 AMP EDISON		VINYL STICKER	R05
O10	20 AMP EDISON		VINYL STICKER	R03
O11	20 AMP EDISON		VINYL STICKER	R4
O12	20 AMP EDISON		VINYL STICKER	R05

8' CONNECTOR STRIP
2 RELAY CIRCUITS, 4 EDISON PIGTAILS, 1 DMX OUT

ID #	DEVICE LOCATION	MOUNTING METHOD	BRACKET TYPE	CABLE MANGEMENT	TERMINAL STRIP LOCATION
E3	HOUSE RIGHT FOH ELECTRIC	SINGLE BATTEN BRACKET	ETC TYPE 21/27	TRADITIONAL	5' FROM SR END

C1 TYPE	C1 - WIRE TYPE	C1-WIRING METHOD	C1 LABELS - ENGRAVED AND FILLED 1ST LINE	2ND LINE	3RD LINE	LAMICOID
DMX	BELDEN 9729	HOME RUN	DMX-OUT	-	-	Y

OUTLET	TYPE	LENGTH	LABEL TYPE	LABEL
O1	20 AMP EDISON	FLUSH	VINYL STICKER	R06
O2	20 AMP EDISON		VINYL STICKER	R07
O3	20 AMP EDISON		VINYL STICKER	R06
O4	20 AMP EDISON		VINYL STICKER	R07

47' CONNECTOR STRIP
5 RELAY CIRCUITS, 1 WORK LIGHT CIRCUIT, 24 EDISON PIGTAILS, 2 DMX OUT

ID #	DEVICE LOCATION	MOUNTING METHOD	BRACKET TYPE	CABLE MANGEMENT	TERMINAL STRIP LOCATION
E4	FIRST ELECTRIC	SINGLE BATTEN BRACKET	ETC TYPE 21/27	TRADITIONAL	5' FROM SR END

CONNECTOR	TYPE	WIRE TYPE	WIRING METHOD	LABELS - ENGRAVED AND FILLED 1ST LINE	2ND LINE	3RD LINE	LAMICOID
C1	DMX	BELDEN 9729	HOME RUN	DMX-OUT	-	-	Y
C2	DMX	BELDEN 9729	HOME RUN	DMX-OUT	-	-	Y

OUTLET	TYPE	LENGTH	LABEL TYPE	LABEL
O1	20 AMP EDISON	FLUSH	VINYL STICKER	R08
O2	20 AMP EDISON		VINYL STICKER	R09
O3	20 AMP EDISON		VINYL STICKER	R10
O4	20 AMP EDISON		VINYL STICKER	WL25
O5	20 AMP EDISON		VINYL STICKER	R11
O6	20 AMP EDISON		VINYL STICKER	R12
O7	20 AMP EDISON		VINYL STICKER	R08
O8	20 AMP EDISON		VINYL STICKER	R09
O9	20 AMP EDISON		VINYL STICKER	WL 25
O10	20 AMP EDISON		VINYL STICKER	R10
O11	20 AMP EDISON		VINYL STICKER	R11
O12	20 AMP EDISON		VINYL STICKER	R12
O13	20 AMP EDISON		VINYL STICKER	R08
O14	20 AMP EDISON		VINYL STICKER	R09
O15	20 AMP EDISON		VINYL STICKER	R10
O16	20 AMP EDISON		VINYL STICKER	WL 25
O17	20 AMP EDISON		VINYL STICKER	R11
O18	20 AMP EDISON		VINYL STICKER	R12
O19	20 AMP EDISON		VINYL STICKER	R08
O20	20 AMP EDISON		VINYL STICKER	R09
O21	20 AMP EDISON		VINYL STICKER	WL25
O22	20 AMP EDISON		VINYL STICKER	R10
O23	20 AMP EDISON		VINYL STICKER	R11
O24	20 AMP EDISON		VINYL STICKER	R12

47' CONNECTOR STRIP
5 RELAY CIRCUITS, 1 WORK LIGHT CIRCUIT, 24 EDISON PIGTAILS, 2 DMX OUT

ID #	DEVICE LOCATION	MOUNTING METHOD	BRACKET TYPE	CABLE MANGEMENT	TERMINAL STRIP LOCATION
E5	SECOND ELECTRIC	SINGLE BATTEN BRACKET	ETC TYPE 21/27	TRADITIONAL	5' FROM SR END

CONNECTOR	TYPE	WIRE TYPE	WIRING METHOD	LABELS - ENGRAVED AND FILLED 1ST LINE	2ND LINE	3RD LINE	LAMICOID
C1	DMX	BELDEN 9729	HOME RUN	DMX-OUT	-	-	Y
C2	DMX	BELDEN 9729	HOME RUN	DMX-OUT	-	-	Y

OUTLET	TYPE	LENGTH	LABEL TYPE	LABEL
O1	20 AMP EDISON	FLUSH	VINYL STICKER	R13
O2	20 AMP EDISON		VINYL STICKER	R14
O3	20 AMP EDISON		VINYL STICKER	R15
O4	20 AMP EDISON		VINYL STICKER	WL26
O5	20 AMP EDISON		VINYL STICKER	R16
O6	20 AMP EDISON		VINYL STICKER	R17
O7	20 AMP EDISON		VINYL STICKER	R13
O8	20 AMP EDISON		VINYL STICKER	R14
O9	20 AMP EDISON		VINYL STICKER	WL 26
O10	20 AMP EDISON		VINYL STICKER	R15
O11	20 AMP EDISON		VINYL STICKER	R16
O12	20 AMP EDISON		VINYL STICKER	R17
O13	20 AMP EDISON		VINYL STICKER	R13
O14	20 AMP EDISON		VINYL STICKER	R14
O15	20 AMP EDISON		VINYL STICKER	R15
O16	20 AMP EDISON		VINYL STICKER	WL 26
O17	20 AMP EDISON		VINYL STICKER	R16
O18	20 AMP EDISON		VINYL STICKER	R17
O19	20 AMP EDISON		VINYL STICKER	R13
O20	20 AMP EDISON		VINYL STICKER	R14
O21	20 AMP EDISON		VINYL STICKER	WL26
O22	20 AMP EDISON		VINYL STICKER	R15
O23	20 AMP EDISON		VINYL STICKER	R16
O24	20 AMP EDISON		VINYL STICKER	R17

47' CONNECTOR STRIP
5 RELAY CIRCUITS, 1 WORK LIGHT CIRCUIT, 24 EDISON PIGTAILS, 2 DMX OUT

ID #	DEVICE LOCATION	MOUNTING METHOD	BRACKET TYPE	CABLE MANGEMENT	TERMINAL STRIP LOCATION
E6	THIRD ELECTRIC	SINGLE BATTEN BRACKET	ETC TYPE 21/27	TRADITIONAL	5' FROM SR END

CONNECTOR	TYPE	WIRE TYPE	WIRING METHOD	LABELS - ENGRAVED AND FILLED 1ST LINE	2ND LINE	3RD LINE	LAMICOID
C1	DMX	BELDEN 9729	HOME RUN	DMX-OUT	-	-	Y
C1	DMX	BELDEN 9729	HOME RUN	DMX-OUT	-	-	Y

OUTLET	TYPE	LENGTH	LABEL TYPE	LABEL
O1	20 AMP EDISON	FLUSH	VINYL STICKER	R18
O2	20 AMP EDISON		VINYL STICKER	R19
O3	20 AMP EDISON		VINYL STICKER	R20
O4	20 AMP EDISON		VINYL STICKER	WL27
O5	20 AMP EDISON		VINYL STICKER	R21
O6	20 AMP EDISON		VINYL STICKER	R22
O7	20 AMP EDISON		VINYL STICKER	R18
O8	20 AMP EDISON		VINYL STICKER	R19
O9	20 AMP EDISON		VINYL STICKER	WL 27
O10	20 AMP EDISON		VINYL STICKER	R20
O11	20 AMP EDISON		VINYL STICKER	R21
O12	20 AMP EDISON		VINYL STICKER	R22
O13	20 AMP EDISON		VINYL STICKER	R18
O14	20 AMP EDISON		VINYL STICKER	R19
O15	20 AMP EDISON		VINYL STICKER	R20
O16	20 AMP EDISON		VINYL STICKER	WL 27
O17	20 AMP EDISON		VINYL STICKER	R21
O18	20 AMP EDISON		VINYL STICKER	R22
O19	20 AMP EDISON		VINYL STICKER	R18
O20	20 AMP EDISON		VINYL STICKER	R19
O21	20 AMP EDISON		VINYL STICKER	WL27
O22	20 AMP EDISON		VINYL STICKER	R20
O23	20 AMP EDISON		VINYL STICKER	R21
O24	20 AMP EDISON		VINYL STICKER	R22

F1 Scale: NO SCALE — THEATRICAL DISTRIBUTION

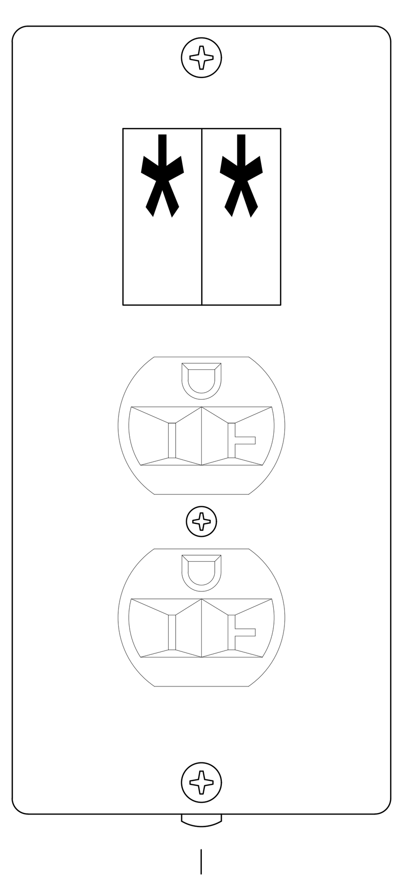

OUTLET BOX
1-CIRCUIT

ID #	DEVICE LOCATION	MOUNTING METHOD	O1 TYPE	O1 LENGTH	O1 LABEL TYPE	LABEL
OB-1	PLATFORM LEFT	FLUSH WALL	DUPLEX PBG-EDISON	FLUSH	VINYL STICKER	R23
OB-2	PLATFORM RIGHT	FLUSH WALL	DUPLEX PBG-EDISON	FLUSH	VINYL STICKER	R24

A1 Scale: 1" = 1" — OB1# - OUTLET BOX

PEERBOLTE CREATIVE LLC
THEATRICAL PLANNING AND DESIGN
109 E PINE STREET
PO BOX 754
WARRENSBURG MO, 64093
PHONE (660)429-1383
FAX (660)429-3666
www.peerbolte.com

NOTE: STRUCTURAL AND ELECTRICAL DRAWINGS ARE FURNISHED BY PEERBOLTE CREATIVE FOR REFERENCE ONLY. PC IS NOT LICENSED TO PERFORM ANY ENGINEERING FOR STRUCTURAL OR ELECTRICAL POWER.

SHEET KEYNOTE LEGEND

KEY PLAN

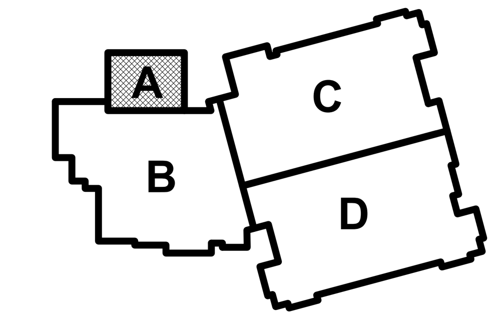

hollis + miller architects
we design the future
1828 Walnut Street Suite 922
Kansas City, MO 64108
T 816.442.7700
115 Wilcox Street Suite 210
Castle Rock, CO 80104
T 720.949.1689
HOLLISANDMILLER.COM
Hollis + Miller Architects
Missouri State Certificate of Authority
Architecture # 0000161
Structure # 2006031333

Bob D Campbell
Structural Engineer
State Certificate of Authority #000442
4338 Belleview Ave
Kansas City, MO 64111
816.531.4144 phone

Smith & Boucher, Inc.
Mechanical, Electrical, & Plumbing
State Certificate of Authority #EGC000178
25618 W 103rd Street
Olathe, KS 66061
913.345.2127 phone

MKEC Engineering, Inc.
Civil Engineer
State Certificate of Authority
Engineering #2001009364
Landscaping #2006027139
Surveying #2006027138
11827 W 112th Street, Suite 200
Overland Park, KS 66210
913.317.9390 phone

Peerbolte Creative
Theatrical Consultant
109 E Pine St.
Warrensburg, MO 64093-0752
660.429.1383 phone

Avant Acoustics
AV/Acoustics Consultant
14827 West 95th St.
Lenexa, KS 66215
913.888.9111 phone

Discovery Middle School Storm Shelter Addition
Liberty Public Schools
800 Midjay Dr, Liberty, MO 64068

Conformed Construction Documents

REVISIONS:

#	Description	Date
1	Addendum 01	09/14/2023
2	Addendum 04	09/28/2023

The Professional Architects seal affixed to this sheet applies only to the material and items shown on this sheet. All drawings, instruments or other documents not exhibiting this seal shall not be considered prepared by this architect, and this architect expressly disclaims any and all responsibility for such plan, drawings, or documents not exhibiting this seal.

JOB NO: 23018
DRAWN BY: SCJ
CHECKED BY: SCJ
DATE: 10.11.2023

TH003

THEATRICAL DEVICES - DETAILS AND SCHEDULES

Please consider the environment before printing this.

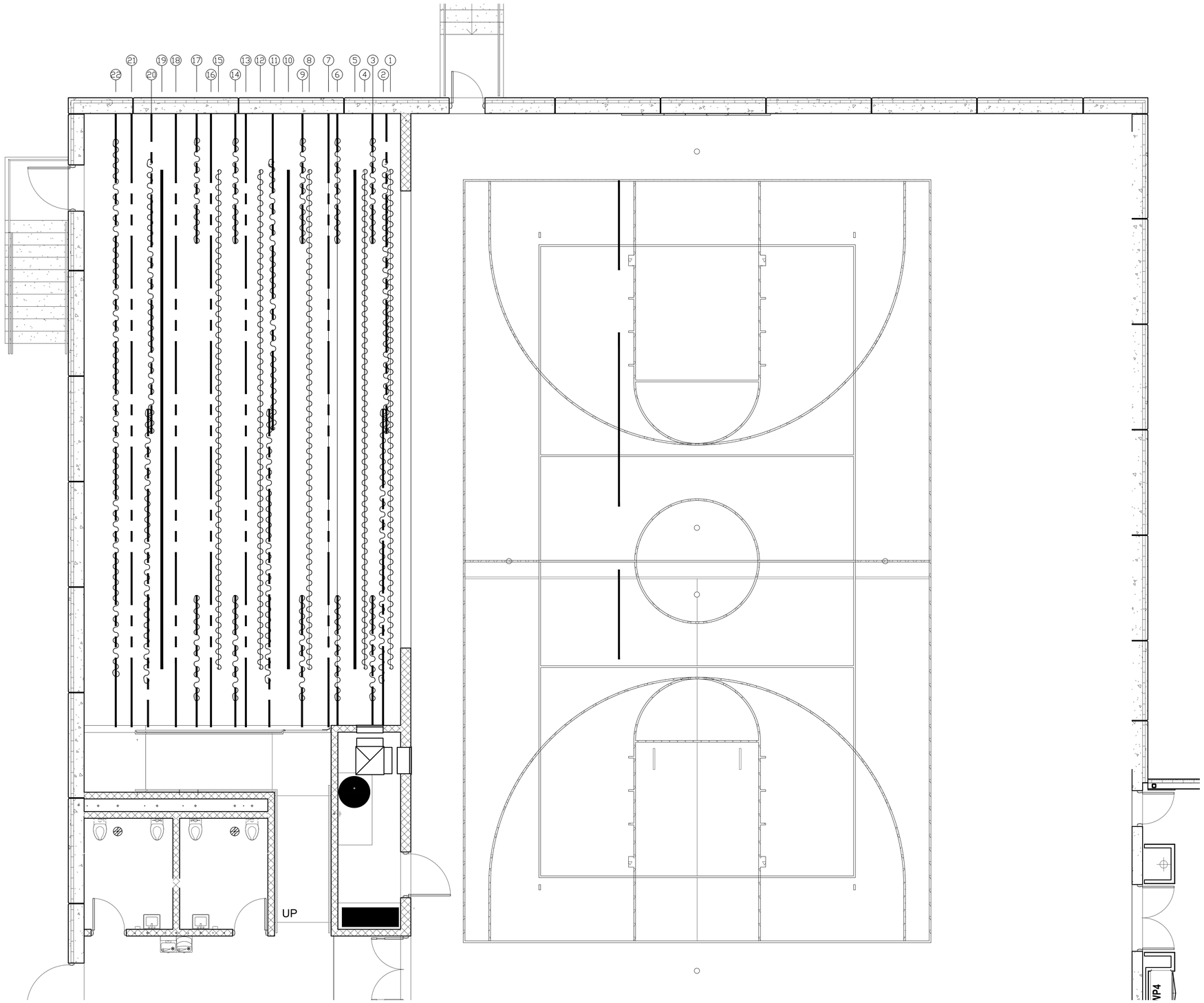

SHEET KEYNOTE LEGEND

hollis + miller architects®

we design the future®

1828 Walnut Street Suite 922
Kansas City, MO 64108
t 816.442.7700

115 Wilcox Street Suite 210
Castle Rock, CO 80104
t 720.949.1689

HOLLISANDMILLER.COM

Hollis + Miller Architects
Missouri State Certificate of Authority
Architecture # 0000161
Structure # 2006031333

Bob D Campbell
Structural Engineer
State Certificate of Authority #000442
4338 Belleview Ave
Kansas City, MO 64111
816.531.4144 phone

Smith & Boucher, Inc.
Mechanical, Electrical, & Plumbing
State Certificate of Authority #EGC000178
25618 W 103rd Street
Olathe, KS 66061
913.345.2127 phone

MKEC Engineering, Inc.
Civil Engineer
State Certificate of Authority
Engineering #2001009364
Landscaping #2006027139
Surveying #2006027138
11827 W 112th Street, Suite 200
Overland Park, KS 66210
913.317.9390 phone

Peerbolte Creative
Theatrical Consultant
109 E Pine St.
Warrensburg, MO 64093-0752
660.429.1383 phone

Avant Acoustics
AV/Acoustics Consultant
14827 West 95th St.
Lenexa, KS 66215
913.888.9111 phone

Discovery Middle School Storm Shelter Addition

Liberty Public Schools

800 Midjay Dr, Liberty, MO 64068

Conformed Construction Documents

REVISIONS:

#	Description	Date
1	Addendum 01	09/14/2023
2	Addendum 04	09/28/2023

PEERBOLTE CREATIVE

109 E PINE STREET
PO BOX 754
WARRENSBURG MO, 64093

PHONE (660)429-1383
FAX (660)429-3666
www.peerbolte.com

NOTE: STRUCTURAL AND ELECTRICAL DRAWINGS ARE PROVIDED BY PEERBOLTE CREATIVE FOR REFERENCE ONLY. WE ARE NOT QUALIFIED TO PERFORM ANY ENGINEERING FOR STRUCTURAL OR ELECTRICAL POWER.

KEY PLAN

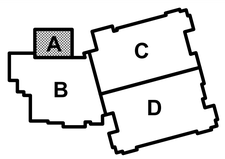

The Professional Architects seal affixed to this sheet applies only to the material and items shown on this sheet. All Sheets associated title and authorship block are part of the material and items shown on this sheet, and this architect expressly disclaims any and all responsibility for such plan, drawings, or documents not exhibiting this seal.

JOB NO: 23018
DRAWN BY: SCJ
CHECKED BY: SCJ
DATE: 10.11.2023

TH100

A1	Scale 1/4" = 1'-0"	RIGGING PLAN

RIGGING PLAN

Please consider the environment before printing this.

IDEN #	DIST. FROM DATUM	LINE SET DESCRIPTION	CURTAIN WIDTH	CURTAIN HEIGHT	CURTAIN FULLNESS	CURTAIN FABRIC	CURTAIN COLOR	LOW TRIM AFF*	TRACK # OR BATTEN LENGTH	DIST FROM CENTER LINE	TRACK OPERATION	STACKING	NOTES	HANGING	ESTIMATED LOAD
1	12"	MAIN VALANCE	47'4"	2'10"	75%	22 OZ ENCORE	TBD	17'1"^	47'4" PIPE BATTEN	–	TIED TO BATTEN	–	DEAD HUNG	DEAD HUNG	300#
2	1'8"	GRAND DRAPE	26'0"(2)	21'0"	75%	22 OZ ENCORE	TBD	3/4"	(1)30'4" (1) 30'0" #280 TRACK	–	ENDLESS LINE PLATFORM RIGHT	BI–PARTING	4 CHAINS 8'AFF TWO 36" BAGS	DEAD HUNG	1,200#
3	2'8"	1ST LEG	10'0"	22'0"	50%	15 oz	BLACK	3/4"	(2)12'4" #280 TRACK	–	ENDLESS LINE OFF PLATFORM	ONE–WAY	4 CHAINS 8'AFF TWO 24" BAGS	DEAD HUNG	300#
4	3'5"	1ST BORDER	47'4"	6'0"	50%	15 OZ	BLACK	17'1"	47'4" PIPE BATTEN	–	TIED TO BATTEN	–	DEAD HUNG	DEAD HUNG	300#
5	5'4"	1ST ELECTRIC	–	–	–	–	–	21'1"	47'4" PIPE BATTEN	–	–	–	–	DEAD HUNG	1000#
6	6'0"	2ND LEG	10'(2)	23'(2)	50%	15 OZ	BLACK	3/4"	(2)12'4" #280 TRACK	–	ENDLESS LINE OFF PLATFORM	ONE–WAY	4 CHAINS 8'AFF TWO 24" BAGS	DEAD HUNG	300#
7	6'10"	SCENERY TRACK	–	–	–	–	–	21'0"	58'2" 280 TRACK	–	WALK ALONG	–	4 SCENERY CARRIERS	DEAD HUNG	1000#
8	8'8"	2ND BORDER	47'4"	6'0"	50%	15 OZ	BLACK	18'0""	47'4" PIPE BATTEN	–	TIED TO BATTEN	–	–	DEAD HUNG	300#
9	9'4"	3RD LEG	10'(2)	23'(2)	50%	15 OZ	TBD	3/4"	(1)12'4" (1) 12'6" #280 TRACK	–	ENDLESS LINE OFF PLATFORM	ONE–WAY	4 CHAINS 8'AFF TWO 24" BAGS	DEAD HUNG	300#
10	10'8"	2ND ELECTRIC	–	–	–	–	–	21'0"^	47'4" PIPE BATTEN	–	–	–	DEAD HUNG	DEAD HUNG	1,500#
11	12'0"	MID TRAVELLER	26'0"(2)	22'0"	50%	15 OZ	BLACK	3/4"	(1)30'2" (1) 30'0" #280 TRACK	–	ENDLESS LINE OFF PLATFORM	BI–PARTING	4 CHAINS 8'AFF TWO 36" BAGS	DEAD HUNG	1,000#
12	13'4"	3RD BORDER	47'4"	5'0"	50%	15-OZ	BLACK	18'0""	47'4" PIPE BATTEN	–	TIED TO BATTEN	–	–	DEAD HUNG	300#
13	14'8"	SCENERY TRACK	–	–	–	–	–	21'0"^	58'2" 280 TRACK	–	WALK ALONG	–	4 SCENERY CARRIERS	DEAD HUNG	1000#
14	15'8"	4TH LEG	10'(2)	23'(2)	50%	15-OZ	TBD	3/4"	(1)12'4" (1) 12'6" #280 TRACK	–	ENDLESS LINE OFF PLATFORM	ONE–WAY	4 CHAINS 8'AFF TWO 24" BAGS	DEAD HUNG	300#
15	17'4"	4TH BORDER	47'4"	6'0"	50%	15 OZ	BLACK	17'0""	47'4" PIPE BATTEN	–	TIED TO BATTEN	–	–	DEAD HUNG	300#
16	18'0"	SCENERY TRACK	–	–	–	–	–	23'0"^	58'2" 280 TRACK	–	WALK ALONG	–	4 SCENERY CARRIERS	DEAD HUNG	1000#
17	19'4"	5TH LEG	10'(2)	23'(2)	50%	15-OZ	TBD	3/4"	(1)12'4" (1) 12'6" #280 TRACK	–	ENDLESS LINE OFF PLATFORM	ONE WAY	4 CHAINS 8'AFF TWO 24" BAGS	DEAD HUNG	300#
18	21'4"	SCENERY TRACK	–	–	–	–	–	23'0"^	58'2" 280 TRACK	–	WALK ALONG	–	4 SCENERY CARRIERS	DEAD HUNG	1000#
19	22'8"	3RD ELECTRIC	–	–	–	–	–	23'0"^	47'4" PIPE BATTEN	–	–	–	–	DEAD HUNG	1,500#
20	24'0"	UPPLATFORM TRAVLER	26'0"(2)	22'0"	50%	15 OZ	BLACK	3/4"	(1)30'2" (1) 30'0" #280 TRACK	–	ENDLESS LINE PLATFORM RIGHT	BI–PARTING	4 CHAINS 8'AFF TWO 36" BAGS	DEAD HUNG	1,000#
21	25'6"	SCENERY TRACK	–	–"	–	–	–	23'0"^	58'2" TRACK	–	–	WALK ALONG	4 SCENERY CARRIERS	DEAD HUNG	1000#
22	27'0"	CYC	51'0"	22'0"	0%	–	GREY	3/4"	58'2" TRACK	–	ENDLESS LINE PLATFORM LEFT	ONE–WAY	2 CHAINS 8'AFF ONE 36" BAG	DEAD HUNG	500#
SCOREBOARD CURTAIN															
1	TBD	SCOREBOARD	4'6"	5'0"	0%	BANJO	TBD	15'1"	(1)13'8" 113 SPECIFINE	–	ENDLESS LINE HOUSE LEFT	BI–PARTING OP 10'0"AFF	MOUNT 3" ABOVE SCOREBOARD	WALL MOUNT	200#

*ABOVE STAGE FLOOR, TO CENTERLINE OF ELECTRIC LOWER BATTEN, OR BOTTOM OF CURTAIN.
ALL DIMENSIONS ARE APPROXIMATE. ACTUAL SIZES AND ELEVATIONS SHALL BE DETERMINED BY EXISTING CONDITIONS AND FIELD MEASUREMENTS.

PEERBOLTE CREATIVE
109 E PINE STREET
PO BOX 754
WARRENSBURG MO, 64093
PHONE (660)429-1383
FAX (660)429-3666
www.peerbolte.com

NOTE: STRUCTURAL AND ELECTRICAL DRAWINGS ARE FURNISHED BY PEERBOLTE CREATIVE FOR REFERENCE ONLY. THE ARCHITECT DOES NOT PERFORM ANY ENGINEERING FOR STRUCTURAL OR ELECTRICAL POWER.

A1 | Scale NO SCALE | RIGGING SCHEDULE

SHEET KEYNOTE LEGEND

KEY PLAN

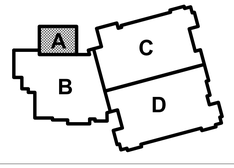

hollis+miller architects®
we design the future®
1828 Walnut Street Suite 922
Kansas City, MO 64108
t 816.442.7700
115 Wilcox Street Suite 210
Castle Rock, CO 80104
t 720.949.1689
HOLLISANDMILLER.COM
Hollis + Miller Architects
Missouri State Certificate of Authority
Architecture # 0000161
Structure # 2006031333

Bob D Campbell
Structural Engineer
State Certificate of Authority #000442
4338 Belleview Ave
Kansas City, MO 64111
816.531.4144 phone

Smith & Boucher, Inc.
Mechanical, Electrical, & Plumbing
State Certificate of Authority #EGC000178
25618 W 103rd Street
Olathe, KS 66061
913.345.2127 phone

MKEC Engineering, Inc.
Civil Engineer
State Certificate of Authority
Engineering #2001009364
Landscaping #2006027139
Surveying #2006027138
11827 W 112th Street, Suite 200
Overland Park, KS 66210
913.317.9390 phone

Peerbolte Creative
Theatrical Consultant
109 E Pine St.
Warrensburg, MO 64093-0752
660.429.1383 phone

Avant Acoustics
AV/Acoustics Consultant
14827 West 95th St.
Lenexa, KS 66215
913.888.9111 phone

Discovery Middle School Storm Shelter Addition
Liberty Public Schools
800 Midjay Dr, Liberty, MO 64068

Conformed Construction Documents

REVISIONS:

#	Description	Date
1	Addendum 01	09/14/2023
2	Addendum 04	09/28/2023

The Professional Architects seal affixed to this sheet applies only to the material and items shown on this sheet. All other sheets in this set of construction documents are not valid without the Professional Architects seal affixed to them and this architect expressly disclaims any and all responsibility for such plan, drawings, or documents not exhibiting this seal.

JOB NO: 23018
DRAWN BY: SCJ
CHECKED BY: SCJ
DATE: 10.11.2023

TH101

RIGGING SCHEDULE

Please consider the environment before printing this.

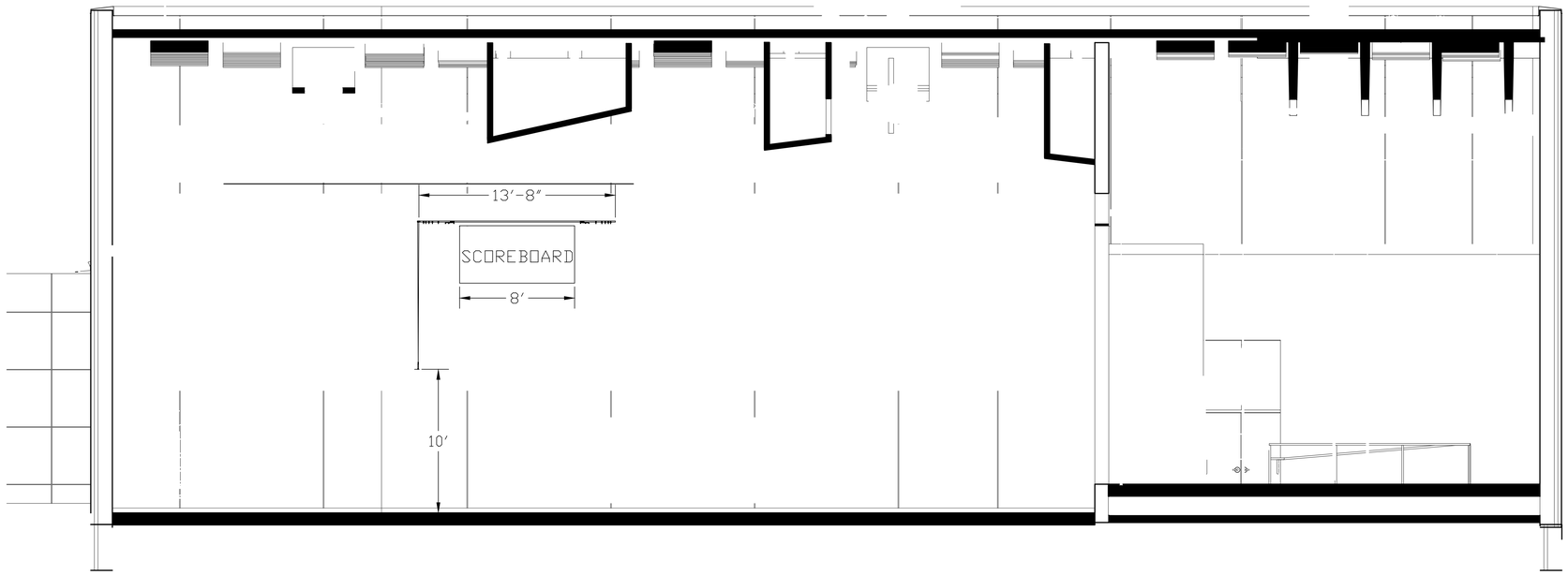

K1	Scale 1/4" = 1'-0"	SCOREBOARD MASKING CURTAIN

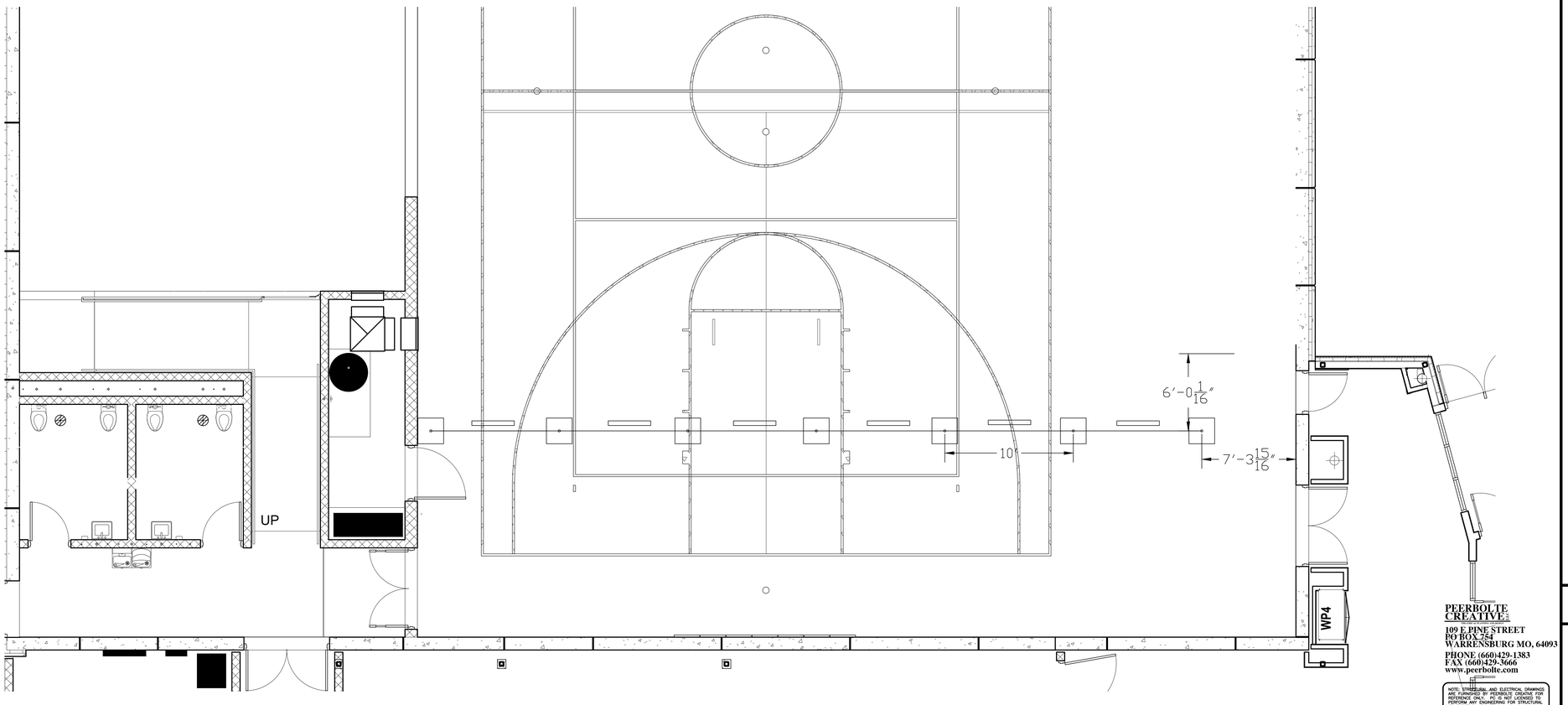

A1	Scale 1/4" = 1'-0"	PIPE AND DRAPE PLAN

PEERBOLTE CREATIVE
109 E. PINE STREET
PO BOX 754
WARRENSBURG MO, 64093
PHONE (660)429-1383
FAX (660)429-3666
www.peerbolte.com

NOTE: STRUCTURAL AND ELECTRICAL DRAWINGS ARE FURNISHED BY PEERBOLTE CREATIVE FOR REFERENCE OR INFO. PC IS NOT LICENSED TO PROVIDE ENGINEERING FOR STRUCTURAL OR ELECTRICAL POWER.

SHEET KEYNOTE LEGEND

KEY PLAN

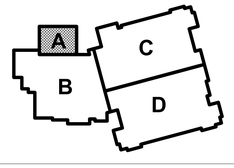

hollis + miller architects®
we design the future®
1828 Walnut Street Suite 922
Kansas City, MO 64108
t 816.442.7700
115 Wilcox Street Suite 210
Castle Rock, CO 80104
t 720.949.1689
HOLLISANDMILLER.COM
Hollis + Miller Architects
Missouri State Certificate of Authority
Architecture # 0000161
Structure # 2006031333

Bob D Campbell
Structural Engineer
State Certificate of Authority #000442
4338 Belleview Ave
Kansas City, MO 64111
816.531.4144 phone

Smith & Boucher, Inc.
Mechanical, Electrical, & Plumbing
State Certificate of Authority #EGC000178
25618 W 103rd Street
Olathe, KS 66061
913.345.2127 phone

MKEC Engineering, Inc.
Civil Engineer
State Certificate of Authority
Engineering #2001009364
Landscaping #2006027139
Surveying #2006027138
11827 W 112th Street, Suite 200
Overland Park, KS 66210
913.317.9390 phone

Peerbolte Creative
Theatrical Consultant
109 E Pine St.
Warrensburg, MO 64093-0752
660.429.1383 phone

Avant Acoustics
AV/Acoustics Consultant
14827 West 95th St.
Lenexa, KS 66215
913.888.9111 phone

Discovery Middle School Storm Shelter Addition

Liberty Public Schools

800 Midjay Dr, Liberty, MO 64068

Conformed Construction Documents

REVISIONS:

#	Description	Date
1	Addendum 01	09/14/2023
2	Addendum 04	09/28/2023

The Professional Architects seal affixed to this sheet applies only to the material and items shown on this sheet. All drawings, instruments or other documents not exhibiting this seal shall not be considered prepared by this architect, and this architect expressly disclaims any and all responsibility for such plan, drawings, or documents not exhibiting this seal.

JOB NO: 23018
DRAWN BY: SCJ
CHECKED BY: SCJ
DATE: 10.11.2023

TH102

PIPE AND DRAPE LAYOUT

Please consider the environment before printing this.

EQUIPMENT AND INSTALLATION SCHEDULE

ITEM	CONTRACTOR					
	ELECTRICAL	THEATRICAL LIGHTING	THEATRICAL RIGGING	THEATRICAL PIT COVER		OTHER
ARCHITECTURAL LIGHTING CONTROL SYSTEM		P,I,H				
THEATRICAL LIGHTING CONTROL NETWORKS		P,I,H				
THEATRICAL LIGHTING FIXTURES		P,I				
THEATRICAL RIGGING			P,I			
THEATRICAL DISTRIBUTION, PIPE AND WALL MOUNT OUTLET BOXES	H	P,I				
FLUSH/RECESSED THEATRICAL OUTLET BOXES OR POCKETS	I,H	P				
LOW VOLTAGE CABLE FOR THEATRICAL CONTROL NETWORKS	I	P,H				
RELAY PANEL	I,H	P,H				
DATA GRID IRON JUNCTION BOXES FOR ELECTRICS	I,H	P				
ALL CONDUIT	P,I					
ALL BACK BOXES	P,I					
LOAD CIRCUITS PULLED AND TERMINATED	P,I,H					
LOAD CIRCUIT BOXES AND COVER PLATES	P,I,H					
MOTORIZED RIGGING	H		P,I			

P=PROVIDE I=INSTALL H=HOOK UP R=REMOVE L=REINSTALL S=STORE

L1 Scale 1/8" = 1'-0" EQUIPMENT AND INSTALLATION SCHEDULE

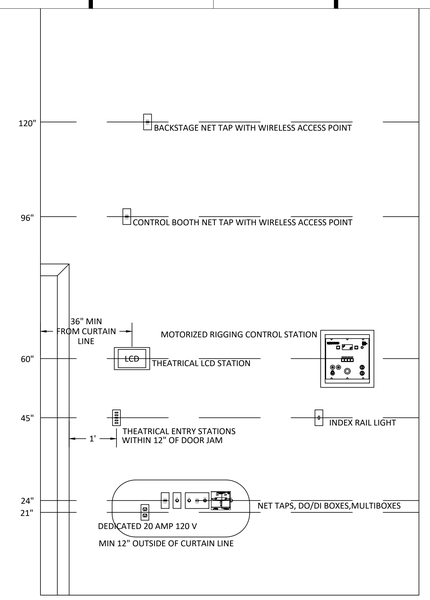

L10 Scale NO SCALE DEVICE ELEVATION

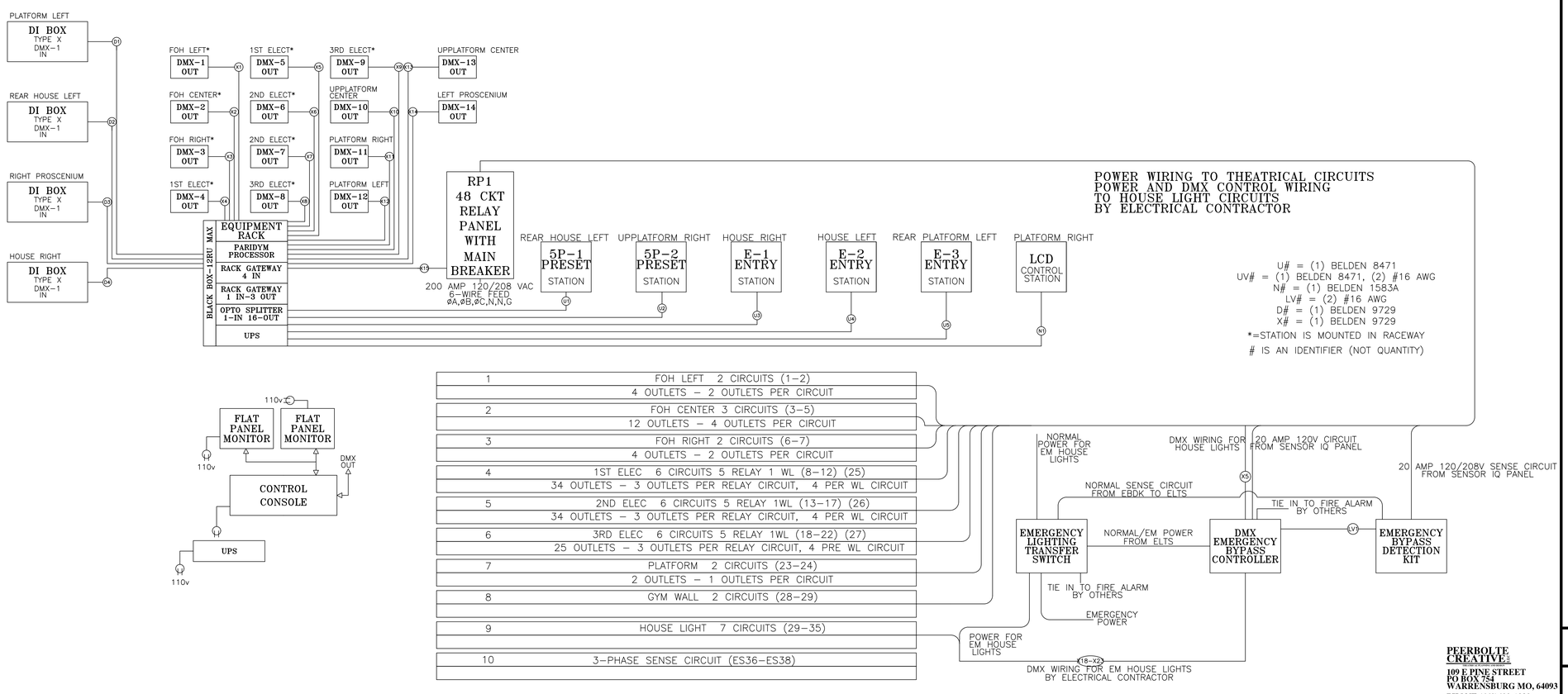

A1 Scale 1/4" = 1'-0" THEATRICAL LIGHTING RISER DIAGRAM

PEERBOLTE CREATIVE
109 E PINE STREET
PO BOX 754
WARRENSBURG MO, 64093
PHONE (660)429-1383
FAX (660)429-3666
www.peerbolte.com

NOTE: STRUCTURAL AND ELECTRICAL DRAWINGS ARE FURNISHED BY PEERBOLTE CREATIVE FOR REFERENCE ONLY. PC IS NOT LICENSED TO PROVIDE ENGINEERING FOR STRUCTURAL OR ELECTRICAL POWER.

SHEET KEYNOTE LEGEND

KEY PLAN

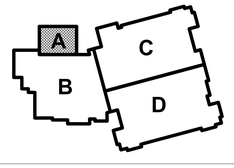

hollis+miller architects
we design the future
1828 Walnut Street Suite 922
Kansas City, MO 64108
t 816.442.7700
115 Wilcox Street Suite 210
Castle Rock, CO 80104
t 720.949.1689
HOLLISANDMILLER.COM
Hollis + Miller Architects
Missouri State Certificate of Authority
Architecture # 0000161
Structure # 2006031333

Bob D Campbell
Structural Engineer
State Certificate of Authority #000442
4338 Belleview Ave
Kansas City, MO 64111
816.531.4144 phone

Smith & Boucher, Inc.
Mechanical, Electrical, & Plumbing
State Certificate of Authority #EGC000178
25618 W 103rd Street
Olathe, KS 66061
913.345.2127 phone

MKEC Engineering, Inc.
Civil Engineer
State Certificate of Authority
Engineering #2001009364
Landscaping #2006027139
Surveying #2006027138
11827 W 112th Street, Suite 200
Overland Park, KS 66210
913.317.9390 phone

Peerbolte Creative
Theatrical Consultant
109 E Pine St.
Warrensburg, MO 64093-0752
660.429.1383 phone

Avant Acoustics
AV/Acoustics Consultant
14827 West 95th St.
Lenexa, KS 66215
913.888.9111 phone

Discovery Middle School Storm Shelter Addition

Liberty Public Schools

800 Midjay Dr, Liberty, MO 64068

Conformed Construction Documents

REVISIONS:

#	Description	Date
1	Addendum 01	09/14/2023
2	Addendum 04	09/28/2023

The Professional Architects seal affixed to this sheet applies only to the material and items shown on this sheet. All other information on this sheet is supplied by others and is not the responsibility of the Professional Architects seal affixed and this architect expressly disclaims any and all responsibility for such plan, drawings, or documents not exhibiting this seal.

JOB NO: 23018
DRAWN BY: SCJ
CHECKED BY: SCJ
DATE: 10.11.2023

TH110

THEATRICAL RISER DIAGRAM

Please consider the environment before printing this.

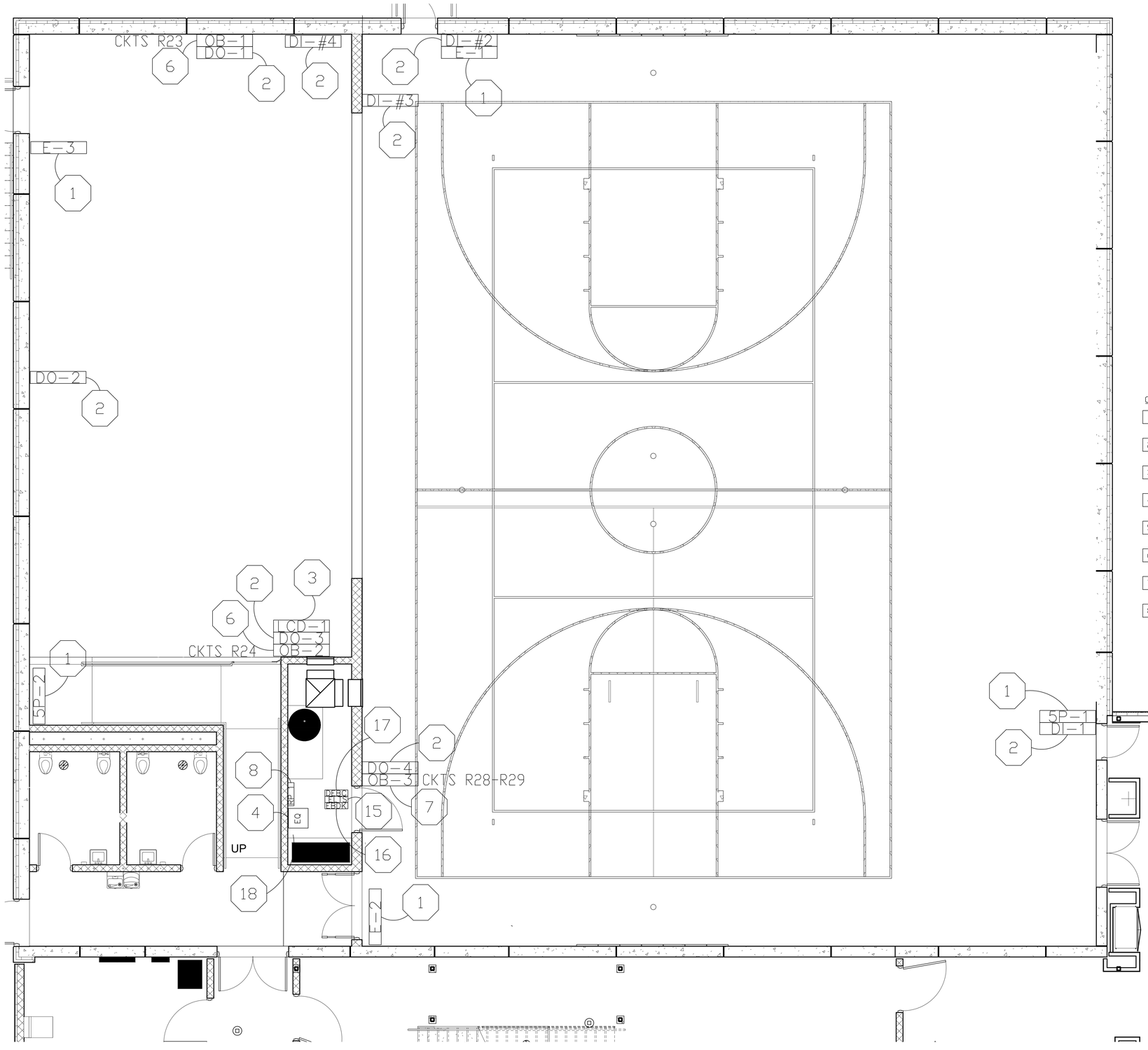

GENERAL NOTES

1. CONDUIT RUNS SHOULD BE COMBINED WHENEVER POSSIBLE
2. ALL DEVICES ARE TO BE FLUSH MOUNTED UNLESS SPECIFICALLY NOTED OTHERWISE
3. ANY EXPOSED CONDUIT IN BACKSTAGE AREAS MUST BE PAINTED TO MATCH WALL.
4. ALL EXPOSED CONDUIT RUNS MUST BE APPROVED BY THE ARCHITECT.
5. ALL CABLES MUST BE RUN IN CONDUIT UNLESS NOTED OTHERWISE.
6. CONDUIT MAY NOT BE EXPOSED IN AREAS VISIBLE TO THE AUDIENCE.
7. REUSE EXISTING CONDUIT, WIRES, AND BACK BOXES WHENEVER POSSIBLE
8. CONDUIT IN CATWALKS MAY NOT BE RUN HORIZONTALLY ALONG RAILINGS ON STAGE SIDE OF CATWALK AND MAY ONLY BE RUN VERTICALLY WITHIN 6' OF A VERTICAL SUPPORT. HORIZONTAL CONDUITS MUST BE 36' ABOVE TOP RAILING MINIMUM OR MUST BE AT OR BELOW CATWALK FLOOR LEVEL.

KEY TO THEATRE LIGHTING SYMBOLS

E#	ENTRY STATION (SINGLE GANG BACK BOX)
5P#	5 BUTTON PRESET STATION (SINGLE GANG BACK BOX)
LCD	LCD CONTROL STATION (MANUFACTURER SUPPLIED BACK BOX)
DI#	DMX-IN JACK (SINGLE GANG BACK BOX)
DO#	DMX-OUT JACK (SINGLE GANG BACK BOX)
OB#	WALL MOUNTED PLUG BOX
JNC#	GRID IRON JUNCTION BOX
NNC#	GRID IRON NET BOX (NET OR DMX)
$	TOGGLE SWITCH
DR#	EQUIPMENT AND RACKS (DR#=RELAY RACK, EQ=EQUIPMENT RACK, ELTS=EMERGENCY LIGHTING TRANSFER SWITCH DEBC=DMX EMERGENCY BYPASS CONTROLLER EBDK=EMERGENCY BYPASS DETECTION KIT)

PEERBOLTE CREATIVE
109 E PINE STREET
PO BOX 754
WARRENSBURG MO, 64093
PHONE (660)429-1383
FAX (660)429-3666
www.peerbolte.com

NOTE: STRUCTURAL AND ELECTRICAL DRAWINGS ARE FURNISHED BY PEERBOLTE CREATIVE FOR REFERENCE ONLY. PC IS NOT LICENSED TO PERFORM ANY ENGINEERING FOR STRUCTURAL OR ELECTRICAL POWER.

SHEET KEYNOTE LEGEND

1. 1/2" CONDUIT TO RELAY PANEL
   CONTAINS (1) BELDEN 8471, (1) #14 AWG
   MOUNT 3'9" AFF
2. 1/2" CONDUIT TO EQUIPMENT RACK
   CONTAINS (1) BELDEN 9729, (1) #14 AWG
   MOUNT 2'0" AFF
3. 1/2" CONDUIT TO EQUIPMENT RACK
   CONTAINS (1) BELDEN 8471, (2) #16, (1) #14 AWG MOUNT 5'0" AFF
4. CONDUIT TO BUILDING POWER
   REQUIRES (1) 20 AMP CIRCUIT
   3/4" CONDUIT TO RELAY PANEL
   CONTAINS (1) BELDEN 9729, (1) BELDEN 8471, (1) #14 AWG
   WALL MOUNT ADJACENT TO RELAY PANEL
5. CONDUIT TO DIMMER RACK
   CONTAINS (3) 20 AMP CIRCUITS
   6 WIRES + GND
   DEAD HANG FROM STRUCTURE
6. CONDUIT TO RELAY PANEL
   CONTAINS (2) 20 AMP CIRCUIT
   2 WIRES + GND
   MOUNT 2'0" AFF
7. CONDUIT TO RP1
   CONTAINS (2) 20 AMP CIRCUITS
   4 WIRES + GND
   MOUNT 1'9" AFF
8. RELAY PANEL 1
   CONDUIT TO BUILDING POWER
   REQUIRES 100 AMP 120/208 VAC 6-WIRE
   FEED A,B,C,N,N,G
9. CONDUIT TO RP1
   CONTAINS (2) 20 AMP CIRCUITS
   4 WIRES + GND
   MOUNT ABOVE PIPE
10. CONDUIT TO RP1
    CONTAINS (3) 20 AMP CIRCUITS
    6 WIRES + GND
    MOUNT ABOVE PIPE
11. CONDUIT TO RP1
    CONTAINS (11) 20 AMP CIRCUITS
    22 WIRES + GND
    MOUNT TO OVERHEAD STRUCTURE
12. CONDUIT TO RP1
    CONTAINS (8) 20 AMP CIRCUITS
    16 WIRES + GND
    MOUNT TO OVERHEAD STRUCTURE
13. 3/4" CONDUIT TO EQUIPMENT RACK
    CONTAINS (1) BELDEN 9729, (1) #14 AWG
    MOUNT TO OVERHEAD STRUCTURE
14. 3/4" CONDUIT TO EQUIPMENT RACK
    CONTAINS (2) BELDEN 9729, (1) #14 AWG
    MOUNT TO OVERHEAD STRUCTURE
15. EMERGENCY LIGHTING TRANSFER SWITCH
    CONDUIT TO RP1
    CONTAINS (1) 20 AMP 3-PHASE CIRCUIT FOR NORMAL POWER SENSE CIRCUIT, (7) 20 AMP CIRCUIT FOR NORMAL POWER TO LIGHTS
    CONDUIT TO EMERGENCY POWER
    CONTAINS (1) 120V CIRCUIT FOR EMERGENCY POWER, AMPERAGE AS REQUIRED
    CONDUIT TO FIRE ALARMS FOR FIRE ALARM TIE-IN
    CONTAINS (2) 10 AWG WIRES
    MOUNT TO WALL, ARRANGE AS NECESSARY
16. EMERGENCY BYPASS DETECTION KIT
    CONDUIT TO RP1
    CONTAINS (1) 20 AMP CIRCUIT FOR NORMAL POWER SENSE CIRCUIT
    3/4" CONDUIT TO DMX EMERGENCY BYPASS CONTROLLER
    CONTAINS (2) #10 AWG FOR LOW VOLTAGE CONTROL
    MOUNT TO WALL, ARRANGE AS NECESSARY
17. DMX EMERGENCY BYPASS CONTROLLER
    1" CONDUIT EQUIPMENT RACK
    CONTAINS (7) BELDEN 9729 FOR NORMAL CONTROL DMX WIRING
    CONDUIT TO EMERGENCY LIGHTING TRANSFER SWITCH
    CONTAINS (1) 20 AMP CIRCUIT FOR DEBC NORMAL/EMERGENCY POWER
    3/4" CONDUIT TO FIRE ALARMS FOR FIRE ALARM TIE-IN
    CONTAINS (2) #10 AWG
    MOUNT TO WALL, ARRANGE AS NECESSARY
18. DIMMER ROOM SHALL MAINTAIN 75 DEGREES, NON CONDENSING 10-90% HUMIDITY
    APPX 8000 BTU/HR FOR THEATRICAL EQUIPMENT
    DRI 37 dbA
    NETWORK SWITCH 47.3 dbA

KEY PLAN

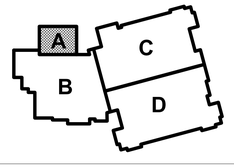

hollis+miller architects
we design the future
1828 Walnut Street Suite 922
Kansas City, MO 64108
t 816.442.7700
115 Wilcox Street Suite 210
Castle Rock, CO 80104
t 720.949.1689
HOLLISANDMILLER.COM
Hollis + Miller Architects
Missouri State Certificate of Authority
Architecture # 0000161
Structure # 2006031333

Bob D Campbell
Structural Engineer
State Certificate of Authority #000442
4338 Belleview Ave
Kansas City, MO 64111
816.531.4144 phone

Smith & Boucher, Inc.
Mechanical, Electrical, & Plumbing
State Certificate of Authority #EGC000178
25618 W 103rd Street
Olathe, KS 66061
913.345.2127 phone

MKEC Engineering, Inc.
Civil Engineer
State Certificate of Authority
Engineering #2001009364
Landscaping #2006027139
Surveying #2006027138
11827 W 112th Street, Suite 200
Overland Park, KS 66210
913.317.9390 phone

Peerbolte Creative
Theatrical Consultant
109 E Pine St.
Warrensburg, MO 64093-0752
660.429.1383 phone

Avant Acoustics
AV/Acoustics Consultant
14827 West 95th St.
Lenexa, KS 66215
913.888.9111 phone

Discovery Middle School Storm Shelter Addition

Liberty Public Schools

800 Midjay Dr, Liberty, MO 64068

Conformed Construction Documents

REVISIONS:

#	Description	Date
1	Addendum 01	09/14/2023
2	Addendum 04	09/28/2023

The Professional Architects seal affixed to this sheet applies only to the material and items shown on this sheet. All drawings, instruments or other documents not exhibiting this seal shall not be considered prepared by this architect, and this architect expressly disclaims any and all responsibility for such plan, drawings, or documents not exhibiting this seal.

JOB NO: 23018
DRAWN BY: SCJ
CHECKED BY: SCJ
DATE: 10.11.2023

TH111

A1 | Scale 1/4" = 1'-0" | LIGHTING AND CONTROL - LEVEL 1 DEVICES

THEATRICAL LIGHTING AND CONTROL LEVEL 1 DEVICES

Please consider the environment before printing this.

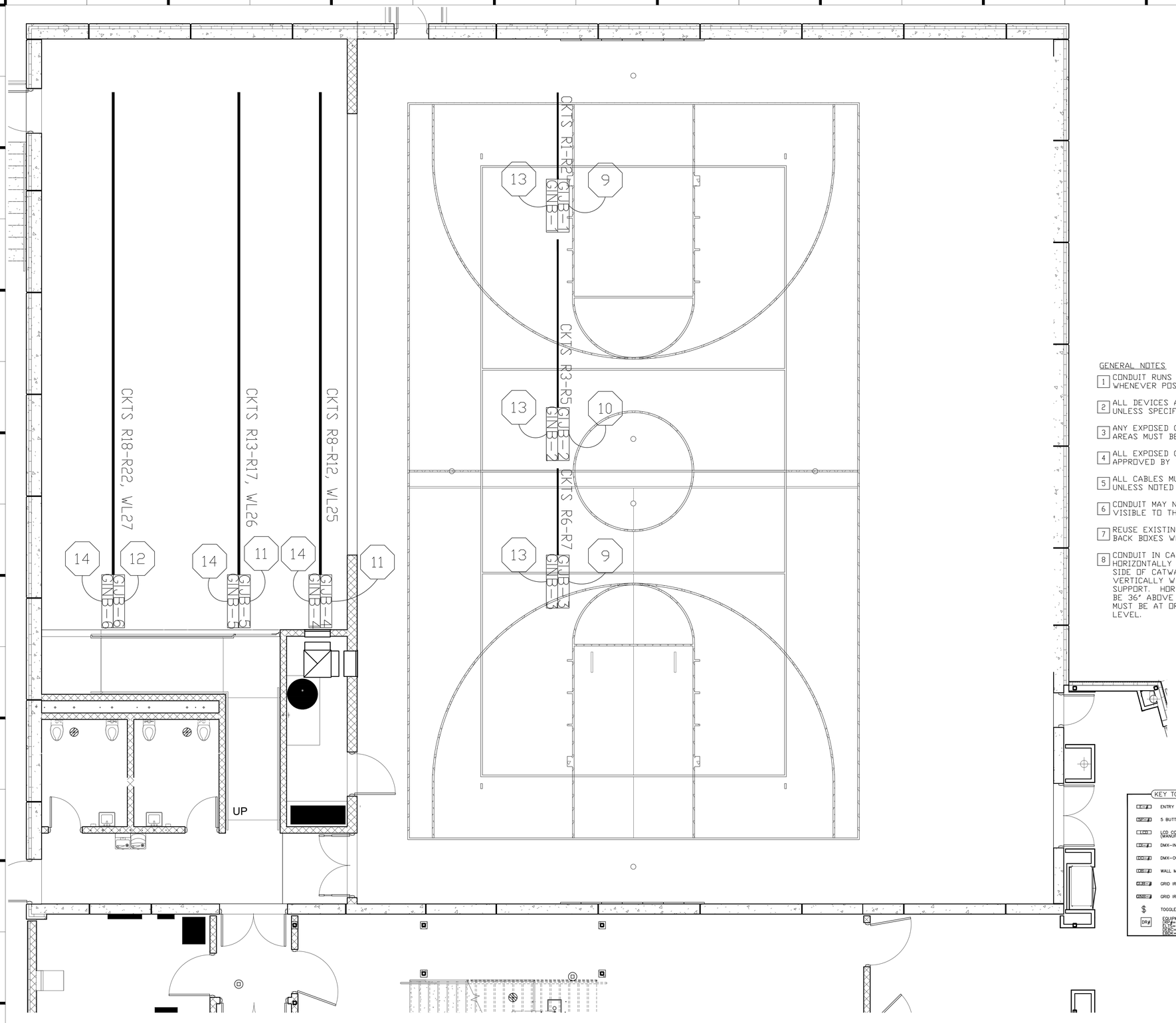

GENERAL NOTES

1. CONDUIT RUNS SHOULD BE COMBINED WHENEVER POSSIBLE
2. ALL DEVICES ARE TO BE FLUSH MOUNTED UNLESS SPECIFICALLY NOTED OTHERWISE
3. ANY EXPOSED CONDUIT IN BACKSTAGE AREAS MUST BE PAINTED TO MATCH WALL.
4. ALL EXPOSED CONDUIT RUNS MUST BE APPROVED BY THE ARCHITECT.
5. ALL CABLES MUST BE RUN IN CONDUIT UNLESS NOTED OTHERWISE.
6. CONDUIT MAY NOT BE EXPOSED IN AREAS VISIBLE TO THE AUDIENCE.
7. REUSE EXISTING CONDUIT, WIRES, AND BACK BOXES WHENEVER POSSIBLE
8. CONDUIT IN CATWALKS MAY NOT BE RUN HORIZONTALLY ALONG RAILINGS ON STAGE SIDE OF CATWALK AND MAY ONLY BE RUN VERTICALLY WITHIN 6" OF A VERTICAL SUPPORT. HORIZONTAL CONDUITS MUST BE 36" ABOVE TOP RAILING MINIMUM OR MUST BE AT OR BELOW CATWALK FLOOR LEVEL.

KEY TO THEATRE LIGHTING SYMBOLS

ESP	ENTRY STATION (SINGLE GANG BACK BOX)
5BP	5 BUTTON PRESET STATION (SINGLE GANG BACK BOX)
LCD	LCD CONTROL STATION (MANUFACTURER SUPPLIED BACK BOX)
DMX-IN	DMX-IN JACK (SINGLE GANG BACK BOX)
DMX-OUT	DMX-OUT JACK (SINGLE GANG BACK BOX)
WPB	WALL MOUNTED PLUG BOX
GIB	GRID IRON JUNCTION BOX
GNB	GRID IRON NET BOX (NET OR DMX)
$	TOGGLE SWITCH
DRW	EQUIPMENT AND RACKS (RRW=RELAY RACK, ERW=EQUIPMENT RACK, ELTS=EMERGENCY LIGHTING TRANSFER SWITCH DEBC=DMX EMERGENCY BYPASS CONTROLLER EBDK=EMERGENCY BYPASS DETECTION KIT,

SHEET KEYNOTE LEGEND

1. 1/2" CONDUIT TO RELAY PANEL
   CONTAINS (1) BELDEN 8471, (1) #14 AWG
   MOUNT 3'9" AFF
2. 1/2" CONDUIT TO EQUIPMENT RACK
   CONTAINS (1) BELDEN 9729, (1) #14 AWG
   MOUNT 2'0" AFF
3. 1/2" CONDUIT TO EQUIPMENT RACK
   CONTAINS (1) BELDEN 8471, (2) #16, (1) #14 AWG MOUNT 5'0" AFF
4. CONDUIT TO BUILDING POWER
   REQUIRES (1) 20 AMP CIRCUIT
   3/4" CONDUIT TO RELAY PANEL
   CONTAINS (1) BELDEN 9729, (1) BELDEN 8471, (1) #14 AWG
   WALL MOUNT ADJACENT TO RELAY PANEL
5. CONDUIT TO DIMMER RACK
   CONTAINS (3) 20 AMP CIRCUITS
   6 WIRES + GND
   DEAD HANG FROM STRUCTURE
6. CONDUIT TO RELAY PANEL
   CONTAINS (2) 20 AMP CIRCUIT
   2 WIRES + GND
   MOUNT 2'0" AFF
7. CONDUIT TO RP1
   CONTAINS (2) 20 AMP CIRCUITS
   4 WIRES + GND
   MOUNT 1'9" AFF
8. RELAY PANEL 1
   CONDUIT TO BUILDING POWER
   REQUIRES 100 AMP 120/208 VAC 6-WIRE
   FEED A,B,C,N,N,G
9. CONDUIT TO RP1
   CONTAINS (2) 20 AMP CIRCUITS
   4 WIRES + GND
   MOUNT ABOVE PIPE
10. CONDUIT TO RP1
    CONTAINS (3) 20 AMP CIRCUITS
    6 WIRES + GND
    MOUNT ABOVE PIPE
11. CONDUIT TO RP1
    CONTAINS (11) 20 AMP CIRCUITS
    22 WIRES + GND
    MOUNT TO OVERHEAD STRUCTURE
12. CONDUIT TO RP1
    CONTAINS (8) 20 AMP CIRCUITS
    16 WIRES + GND
    MOUNT TO OVERHEAD STRUCTURE
13. 3/4" CONDUIT TO EQUIPMENT RACK
    CONTAINS (1) BELDEN 9729, (1) #14 AWG
    MOUNT TO OVERHEAD STRUCTURE
14. 3/4" CONDUIT TO EQUIPMENT RACK
    CONTAINS (2) BELDEN 9729, (1) #14 AWG
    MOUNT TO OVERHEAD STRUCTURE
15. EMERGENCY LIGHTING TRANSFER SWITCH
    CONDUIT TO RP1
    CONTAINS (1) 20 AMP 3-PHASE CIRCUIT FOR NORMAL POWER SENSE CIRCUIT, (7) 20 AMP CIRCUIT FOR NORMAL POWER TO LIGHTS
    CONDUIT TO EMERGENCY POWER
    CONTAINS (1) 120V CIRCUIT FOR EMERGENCY POWER, AMPERAGE AS REQUIRED
    CONDUIT TO FIRE ALARMS FOR FIRE ALARM TIE-IN
    CONTAINS (2) 10 AWG WIRES
    MOUNT TO WALL, ARRANGE AS NECESSARY
16. EMERGENCY BYPASS DETECTION KIT
    CONDUIT TO RP1
    CONTAINS (1) 20 AMP CIRCUIT FOR NORMAL POWER SENSE CIRCUIT
    3/4" CONDUIT TO DMX EMERGENCY BYPASS CONTROLLER
    CONTAINS (2) #10 AWG FOR LOW VOLTAGE CONTROL
    MOUNT TO WALL, ARRANGE AS NECESSARY
17. DMX EMERGENCY BYPASS CONTROLLER
    1" CONDUIT EQUIPMENT RACK
    CONTAINS (7) BELDEN 9729 FOR NORMAL CONTROL DMX WIRING
    CONDUIT TO EMERGENCY LIGHTING TRANSFER SWITCH
    CONTAINS (1) 20 AMP CIRCUIT FOR DEBC NORMAL/EMERGENCY POWER
    3/4" CONDUIT TO FIRE ALARMS FOR FIRE ALARM TIE-IN
    CONTAINS (2) #10 AWG
    MOUNT TO WALL, ARRANGE AS NECESSARY
18. DIMMER ROOM SHALL MAINTAIN 75 DEGREES, NON CONDENSING 10-90% HUMIDITY
    APPX 8000 BTU/HR FOR THEATRICAL EQUIPMENT
    DRI 37 dbA
    NETWORK SWITCH 47.3 dbA

hollis+miller architects®
we design the future®
1828 Walnut Street Suite 922
Kansas City, MO 64108
t 816.442.7700
115 Wilcox Street Suite 210
Castle Rock, CO 80104
t 720.949.1689
HOLLISANDMILLER.COM

Hollis + Miller Architects
Missouri State Certificate of Authority
Architecture # 0000161
Structure # 2006031333

Bob D Campbell
Structural Engineer
State Certificate of Authority #000442
4338 Belleview Ave
Kansas City, MO 64111
816.531.4144 phone

Smith & Boucher, Inc.
Mechanical, Electrical, & Plumbing
State Certificate of Authority #EGC000178
25618 W 103rd Street
Olathe, KS 66061
913.345.2127 phone

MKEC Engineering, Inc.
Civil Engineer
State Certificate of Authority
Engineering #2001009364
Landscaping #2006027139
Surveying #2006027138
11827 W 112th Street, Suite 200
Overland Park, KS 66210
913.317.9390 phone

Peerbolte Creative
Theatrical Consultant
109 E Pine St.
Warrensburg, MO 64093-0752
660.429.1383 phone

Avant Acoustics
AV/Acoustics Consultant
14827 West 95th St.
Lenexa, KS 66215
913.888.9111 phone

Discovery Middle School Storm Shelter Addition

Liberty Public Schools

800 Midjay Dr, Liberty, MO 64068

Conformed Construction Documents

REVISIONS:

#	Description	Date
1	Addendum 01	09/14/2023
2	Addendum 04	09/28/2023

The Professional Architects seal affixed to this sheet applies only to the material and items shown on this sheet. All drawings, instruments or other documents not exhibiting this seal shall not be considered prepared by this architect, and this architect expressly disclaims any and all responsibility for such plan, drawings, or documents not exhibiting this seal.

JOB NO: 23018
DRAWN BY: SCJ
CHECKED BY: SCJ
DATE: 10.11.2023

PEERBOLTE CREATIVE
109 E PINE STREET
PO BOX 754
WARRENSBURG MO, 64093
PHONE (660)429-1383
FAX (660)429-3666
www.peerbolte.com

NOTE: STRUCTURAL AND ELECTRICAL DRAWINGS ARE FURNISHED BY PEERBOLTE CREATIVE FOR REFERENCE ONLY. PC IS NOT LICENSED TO PERFORM ANY ENGINEERING FOR STRUCTURAL OR ELECTRICAL POWER.

KEY PLAN

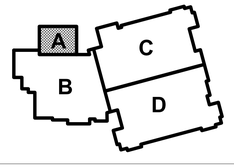

TH112

A1 | Scale 1/4" = 1'-0" | LIGHTING AND CONTROL - LEVEL 2 DEVICES

THEATRICAL LIGHTING AND CONTROL LEVEL 2 DEVICES

Please consider the environment before printing this.

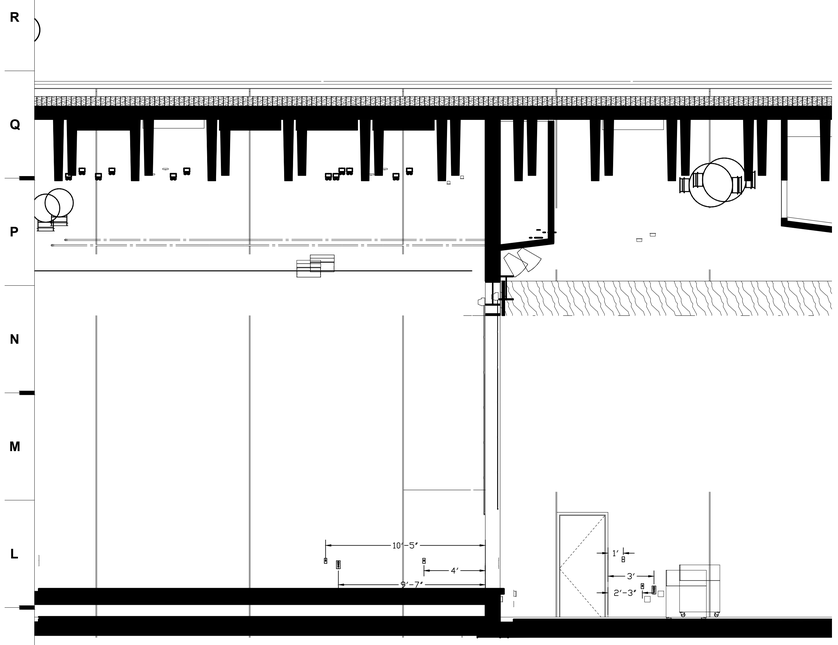

H1 Scale 1/4" = 1'-0" PLATFORM LEFT ELEVATION

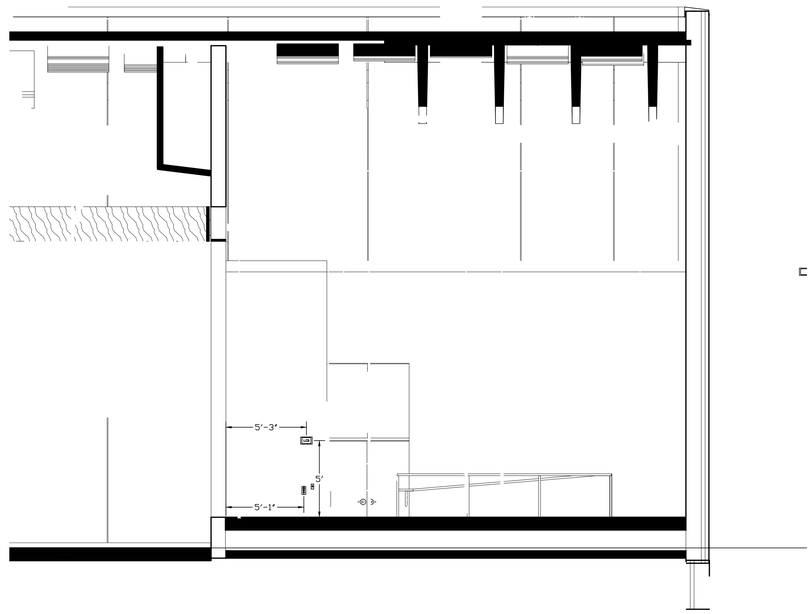

H9 Scale 1/4" = 1'-0" PLATFORM RIGHT ELEVATION

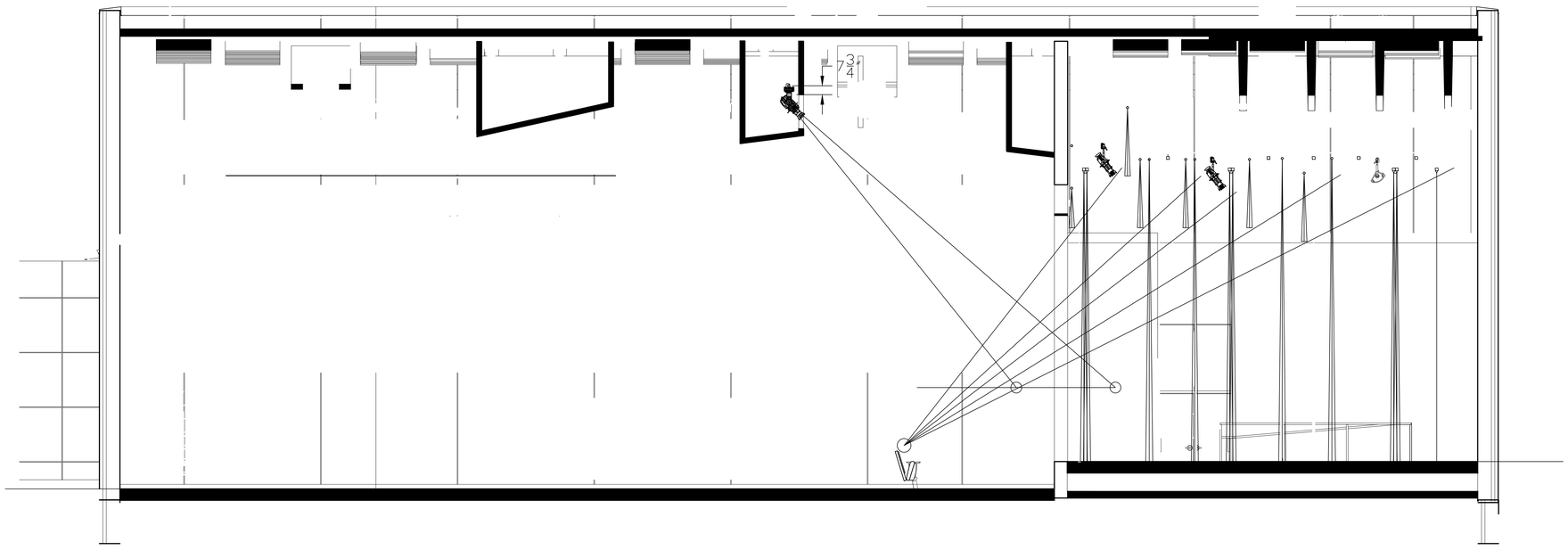

A1 Scale 1/4" = 1'-0" AUDITORIUM SECTION

SHEET KEYNOTE LEGEND

hollis + miller architects®

we design the future®

1828 Walnut Street Suite 922
Kansas City, MO 64108
t 816.442.7700

115 Wilcox Street Suite 210
Castle Rock, CO 80104
t 720.949.1689

HOLLISANDMILLER.COM

Hollis + Miller Architects
Missouri State Certificate of Authority
Architecture # 0000161
Structure # 2006031333

Bob D Campbell
Structural Engineer
State Certificate of Authority #000442
4338 Belleview Ave
Kansas City, MO 64111
816.531.4144 phone

Smith & Boucher, Inc.
Mechanical, Electrical, & Plumbing
State Certificate of Authority #EGC000178
25618 W 103rd Street
Olathe, KS 66061
913.345.2127 phone

MKEC Engineering, Inc.
Civil Engineer
State Certificate of Authority
Engineering #2001009364
Landscaping #2006027139
Surveying #2006027138
11827 W 112th Street, Suite 200
Overland Park, KS 66210
913.317.9390 phone

Peerbolte Creative
Theatrical Consultant
109 E Pine St.
Warrensburg, MO 64093-0752
660.429.1383 phone

Avant Acoustics
AV/Acoustics Consultant
14827 West 95th St.
Lenexa, KS 66215
913.888.9111 phone

Discovery Middle School Storm Shelter Addition

Liberty Public Schools

800 Midjay Dr, Liberty, MO 64068

Conformed Construction Documents

REVISIONS:

#	Description	Date
1	Addendum 01	09/14/2023
2	Addendum 04	09/28/2023

PEERBOLTE CREATIVE

109 E PINE STREET
PO BOX 754
WARRENSBURG MO, 64093

PHONE (660)429-1383
FAX (660)429-3666
www.peerbolte.com

NOTE: STRUCTURAL AND ELECTRICAL DRAWINGS ARE FURNISHED BY PEERBOLTE CREATIVE FOR REFERENCE ONLY. PC IS NOT LICENSED TO PERFORM ANY ENGINEERING FOR STRUCTURAL OR ELECTRICAL POWER.

KEY PLAN

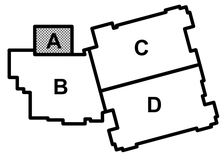

The Professional Architects seal affixed to this sheet applies only to the material and items shown on this sheet. All drawings, instruments or other documents not exhibiting this seal shall not be considered prepared by this architect, and this architect expressly disclaims any and all responsibility for such plan, drawings, or documents not exhibiting this seal.

JOB NO: 23018
DRAWN BY: SCJ
CHECKED BY: SCJ
DATE: 10.11.2023

TH130

THEATRICAL SECTIONS AND ELEVATIONS

Please consider the environment before printing this.