ARCHITECTURE

TMP ARCHITECTURE INC
1191 WEST SQUARE LAKE ROAD · BLOOMFIELD HILLS · MICHIGAN · 48302
PH · 248.338.4561 FX · 248.338.0223 EM · INFO@TMP-ARCHITECTURE.COM

WYLIE ELEMENTARY SCHOOL POOL UPGRADES

DEXTER COMMUNITY SCHOOLS

DEXTER, MICHIGAN 48130

PROJECT NUMBER 22072A

CONSTRUCTION DOCUMENTS-BID PACK #1

CONSULTANTS:

MECHANICAL ENGINEER

POOL CONSULTANT

COUNSILMAN / HUNSAKER & ASSOCIATES
POOL CONSULTANTS
10733 SUNSET OFFICE DRIVE SUITE 400
ST. LOUIS, MISSOURI 63127
PHONE: (314) 894-1245
FAX: (314) 894-0109

ELECTRICAL ENGINEER

PETER BASSO ASSOCIATES INC.
ELECTRICAL ENGINEERS
5145 LIVERNOIS ROAD, SUITE 100
TROY, MICHIGAN 48098-3276
PHONE: (248) 879-5666
FAX: (248) 879-0007

CONSULTANT

CIVIL ENGINEER

CONSULTANT

STRUCTURAL ENGINEER

WILLIAM A. KIBBBE & ASSOCIATES, INC.
CONSULTING ENGINEERS
1475 S. WASHINGTON AVE.
SAGINAW, MI 48601
PHONE: (989) 752-5000
FAX: (989) 752-5002

CONSULTANT

LIST OF DRAWINGS

GENERAL INFORMATION
TS.1 COVER SHEET
TG.1 GENERAL INFORMATION

CIVIL

STRUCTURAL
S0.0 STRUCTURAL GENERAL NOTES
S1.3 ROOF FRAMING PLAN
S5.1 MASONRY DETAILS

ARCHITECTURAL
A0.1 DOOR & FRAME SCHEDULE
A0.1A FIRST LEVEL DEMOLITION PLAN - ZONE 'A'
A1.1A FIRST LEVEL FLOOR PLAN - ZONE 'A'
A3.1 POOL EQUIPMENT ELEVATION

MECHANICAL

ELECTRICAL
E0.1 ELECTRICAL STANDARDS AND DRAWING INDEX
E0.2 ELECTRICAL STANDARD SCHEDULES
E0.3 ELECTRICAL COMPOSITE PLAN
ED1.1 FIRST FLOOR ELECTRICAL DEMOLITION PLAN
E3.1 FIRST FLOOR POWER PLAN
E5.1 ONE LINE DIAGRAM
E5.2 PANEL SCHEDULES

TECHNOLOGY

AQUATICS
AQ0.0 POOL REFERENCE PLAN
AQ0.1 POOL DEMOLITION PLAN
AQ0.2 POOL & MECHANICAL ROOM EXISTING CONDITIONS
AQ0.3 POOL & MECHANICAL ROOM EXISTING CONDITIONS
AQ1.0 SURGE TANK STRUCTURAL PLANS AND DETAILS
AQ2.0 COMPETITION POOL PLAN & SECTIONS
AQ3.0 INSTRUCTIONAL POOL PLAN & SECTIONS
AQ4.0 POOL MECHANICAL ROOM PLAN & SECTIONS
AQ4.1 SURGE TANK PLAN & SECTIONS
AQ4.2 POOL & MECHANICAL ROOM DETAILS
AQ4.3 POOL & MECHANICAL ROOM DETAILS
AQ5.0 COMPETITION POOL SYSTEMS SCHEMATIC

PROJECT DATA:

LOCATION MAP

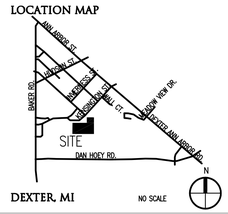

DEXTER, MI NO SCALE

ADDRESS: WYLIE ELEMENTARY SCHOOL
3060 KENSINGTON ST.
DEXTER, MICHIGAN 48130

BUILDING:

EXISTING BUILDING AREA = 110,053 SQ. FT.

CODE:

GOVERNING CODES :

- 2016 SCHOOL FIRE SAFETY RULES (2012 Life Safety Code, plus amendments)
- 2015 MICHIGAN BUILDING CODE
- 2015 MICHIGAN REHABILITATION CODE FOR EXISTING BUILDINGS
- 2015 MICHIGAN PLUMBING CODE
- 2015 MICHIGAN MECHANICAL CODE
- 2015 MICHIGAN UNIFORM ENERGY CODE (ANSI/ASHRAE/IES Standard 90.1-2013)
- 2014 MICHIGAN ELECTRICAL RULES (2014 NEC, plus Part 8 Rules)
- 2010 MICHIGAN ELEVATOR RULES (ASME A17.1-2010, ASME A18.1-2011)
- MICHIGAN BARRIER FREE CODE (Michigan Building Code 2015 and ICC A117.1-2009)
- 2013 MICHIGAN BOILER CODE RULES (ASME Boiler and Pressure Vessel Code, 2010 edition, plus 2011a addenda) (National Board Inspection Code [NBIC], 2011 edition)

CONSTRUCTION CLASSIFICATION : TYPE II (000) (NFPA)
TYPE II B (MBC)

USE GROUP CLASSIFICATION : "E" EDUCATION

DATE	ISSUED FOR:
05-25-2023	CONSTRUCTION DOCUMENTS

LICENSEE'S STATEMENT:

This Document has been prepared under the supervision of the Architect, as the person in Responsible Charge with the firm of TMP ARCHITECTURE, INC. An original embossed or rubber stamp seal and original signature of the Architect is required and shall be affixed to any copy of this Document submitted to a governmental agency for approval or record. This is in conformance with the State of Michigan's PA 299, Article 20 and the General Rules of the Board of Architects.

The Architect's seal provided hereon does not take responsibility for certain portions of the Documentation or project requiring the services of a licensed Professional Engineer or other design professional. An original embossed or rubber stamp seal and original signature of the Professional Engineer is required and shall be affixed to any copy of this or other Document submitted to a governmental agency for approval or record. The engineering firms associated with this document are listed above as Consultants.

REGISTRATION SEALS

COPYRIGHT

© The "architectural work" displayed on these documents is owned exclusively by TMP Architecture, Inc. and may not be used for any purpose without their involvement or express written consent.

PROJECT TITLE
Wylie Elementary School Pool Upgd.

PROJECT NO.
22072A

DRAWING NO.
TS.1

Drawing File: G:\Local\22072mpp\22072a\22072a_cd\22072a_ts1.dwg
May 30, 2023 - 8:00am

ABBREVIATIONS

A

ABV.	ABOVE
A.F.F.	ABOVE FINISH FLOOR
A.R.F.	ABOVE REFERENCE FLOOR
ABR.	ABRASIVE
ABS.	ABSORBING
ACC.	ACCESS
ACC. PNL	ACCESS PANEL
AC.	ACOUSTIC/ACOUSTICAL
ACT	ACOUSTIC TILE
AC. INSUL.	ACOUSTIC INSULATION
ADD.	ADDENDUM
ADDN.	ADDITION
ADDNL.	ADDITIONAL
ADH.	ADHESIVE
ADJ.	ADJUSTABLE
AGGR.	AGGREGATE
A.C.B.	AIR CIRCUIT BREAKER
A/C	AIR CONDITIONING
A.C.C.	AIR CONDITIONING COMPRESSOR
A.C.U.	AIR CONDITIONING UNIT
A.H.U.	AIR HANDLING UNIT
ALT.	ALTERNATE
ALUM./AL	ALUMINUM
AMT	AMOUNT
AMP	AMPHERE
AMPL.	AMPLIFIER
ANCH.	ANCHOR
A.B.	ANCHOR BOLT
&	AND
AND./ L or ∠	ANGLE
ANOD.	ANODIZED
APT.	APARTMENT
APPR.	APPROVED
APPROX.	APPROXIMATE
ARCH.	ARCHITECT/ARCHITECTURAL
A-	ARCHITECTURAL DRAWING-NO.
A.T.	ASH TRAY
ATM	AUTOMATIC TELLER MACHINE
ASPH.	ASPHALT
ASSY.	ASSEMBLY
@	AT
AUTO.	AUTOMATIC
A.S.R.	AUTOMATIC SPRINKLER RISER
AUX.	AUXILIARY
AVG.	AVERAGE

B

B/B	BACK-TO-BACK
B.F.P.	BACK FLOW PREVENTER
B.D.D.	BACK DRAFT DAMPER
B.F.	BARRIER FREE
B.B.R.	BASE BOARD RADIATION
B.PL	BASE PLATE
BSMT	BASEMENT
B.	BATH ROOM
BM	BEAM
B/C	BACK OF CURB
BRG	BEARING
B.R.	BEDROOM
B.M.	BENCH MARK
BT	BENT
BETW.	BETWEEN
BEV.	BEVEL
BIT.	BITUMINOUS
B.I.	BLACK-IRON
BLK.	BLOCK
BLKG	BLOCKING
BD	BOARD
BLR	BOILER
BLR. F.	BOILER FEED
BLR. H.	BOILER HOUSE
BK. SH.	BOOK SHELVES
B.S.	BOTH SIDES
B.W.	BOTH WAYS
BOT.	BOTTOM
BOT. EL.	BOTTOM ELEVATION
BLVD	BOULEVARD
BDRY	BOUNDARY
BRKT	BRACKET
BR.	BRASS
BRKR	BREAKER
BRK	BRICK
BTU	BRITISH THERMAL UNIT
BRZ	BRONZE
BLDG.	BUILDING
B.L.	BUILDING LINE
B.U.R.	BUILT-UP ROOFING
B.N.	BULLNOSE
BLKD	BULKHEAD
BULL.	BULLETIN
B.A.	BURGLAR ALARM
BUZZ.	BUZZER

C

CAB.	CABINET
C.U.H.	CABINET UNIT HEATER
CAP.	CAPACITY
CPT	CARPET
C.R.S.	CARPET REDUCER STRIP
CSMT	CASEMENT
CSWRK	CASEWORK
CSG	CASING
C.I.	CAST IRON
C.I.F.	CAST IRON FRAME
C.I.P.	CAST IRON PIPE/CAST-IN-PLACE
CSTG	CASTING
CAT. NO.	CATALOG NUMBER
C.B.	CATCH BASIN
CLG.	CEILING
C.D.	CEILING DIFFUSER
CLG. HT.	CEILING HEIGHT
CEM.	CEMENT
CEM. PLAS.	CEMENT PLASTER
CTR	CENTER
℄	CENTERLINE
C/C	CENTER-TO-CENTER
CER.	CERAMIC
C.T.	CERAMIC TILE
C.BD.	CHALKBOARD
CHAM.	CHAMFER
CHG.	CHANGE
CHAN. or ⊏	CHANNEL
CHKD. PL.	CHECKERED PLATE
CHWR	CHILLED WATER RETURN
CHWS	CHILLED WATER SUPPLY
CHD	CHORD
CIRCUM.	CIRCUMFERENCE
CIR.	CIRCLE/CIRCULAR
CIRC.	CIRCUIT
C.BR	CIRCUIT BREAKER
C-	CIVIL DRAWING-NO.
CL.	CLASS
CLRM	CLASSROOM
C.O.	CLEAN OUT
CLR	CLEAR
CLR GL	CLEAR GLASS
CLR W.GL	CLEAR WIRE GLASS
CL.	CLOSET
CLO.	CLOSURE
C.OL.	COAT CLOSET
COEF.	COEFFICIENT
CW	COLD WATER
COL.	COLUMN
CO.	COMPANY
COMPT.	COMPARTMENT
COMPO.	COMPOSITION
CA	COMPRESSED AIR
COMPR.	COMPRESSOR
CONC.	CONCRETE
C.M.U.	CONCRETE MASONRY UNIT
CWR	CONDENSING WATER RETURN
CWS	CONDENSING WATER SUPPLY
COND.	CONDUIT
CONF.	CONFERENCE
CONN.	CONNECT
CONST.	CONSTRUCTION
C.J.	CONTROL JOINT
CONT.	CONTINUE/CONTINUOUS
CONTR.	CONTRACTOR
C.P.	CONTROL PANEL
CONV.	CONVECTOR
CNVYR	CONVEYOR
COR.	CORNER
C.G.	CORNER GUARD
CORR.	CORRIDOR/CORRUGATED
CPR	COPPER
CNTR	COUNTER
CTSK	COUNTERSINK
CRS.	COURSE
COV.	COVER
COV. PL.	COVER PLATE
C.C.T.	CUBICAL CURTAIN TRACK
CU.FT.	CUBIC FEET/ CUBIC FOOT
CFM	CUBIC FEET PER MINUTE
CY	CUBIC YARD
CULV.	CULVERT
C.D.	CUP DISPENSER
CYL.	CYLINDER
CYC.	CYCLES

D

DMPR.	DAMPER
DMPFG	DAMPPROOFING
D.L.	DEAD LOAD
DB	DECIBEL
D.	DEEP
DWG.	DRAWING
DMT. PARTN	DEMOUNTABLE PARTITION
DEPT.	DEPARTMENT
DEPR.	DEPRESSED
DES.	DESIGN
DET.	DETAIL
D.E. CO.	DETROIT EDISON COMPANY
DIAG.	DIAGONAL
DGM	DIAGRAM
DIA.	DIAMETER
DIFF.	DIFFUSER
DIM.	DIMENSION
D.R.	DINING ROOM
DIR.	DIRECTORY
DISC.	DISCONNECT
DISCONT.	DISCONTINUOUS
DW	DISHWASHER
DISP.	DISPENSER
DIST.	DISTANCE
D.P.	DISTRIBUTION PANEL
DO	DITTO (DO OVER)
DIV.	DIVIDER/DIVISION
DR.	DOOR
D.O.	DOOR OPENING
DR. OP.	DOOR OPERATOR
DBL.	DOUBLE
D.A.	DOUBLE ACTING
D.H.	DOUBLE HUNG
DWL.	DOWEL
DN	DOWN
D.S.	DOWNSPOUT
DRN	DRAIN
D.T.	DRAIN TILE
D.T.C.	DRAIN TILE CONNECTOR
DWR	DRAWER
DWG	DRAWING
D.F.	DRINKING FOUNTAIN
D.B.	DRY BULB
D.S.P.	DRY STAND PIPE
DBWTR	DUMBWAITER
DUP.	DUPLICATE
D.DR.	DUTCH DOOR

E

EA	EACH
E.F.	EACH FACE
E.W.	EACH WAY
E	EAST
E.I.F.S.	EXTERIOR INSULATION FINISH SYSTEM
ELAST.	ELASTOMERIC
ELAST. FLASH.	ELASTOMERIC FLASHING
ELAST. W.P.	ELASTOMERIC WATERPROOFING
E.S.R.	ELASTOMERIC SHEET ROOFING
ELEC.	ELECTRIC/ELECTRICAL
ELEC. CL.	ELECTRICAL CLOSET
ELEC. CAB.	ELECTRICAL CABINET
E.C.	ELECTRICAL CONTRACTOR
E-	ELECTRICAL DRAWING-NO.
E.P.	ELECTRICAL PANEL
EWC	ELECTRIC WATER COOLER
ELEC. OPER.	ELECTRICALLY OPERATED
EL.,	ELEVATION
ELEV.	ELEVATOR
EMERG.	EMERGENCY
ENCL.	ENCLOSURE
ENGR	ENGINEER
E/E	END-TO-END
ENTR.	ENTRANCE/ENTRY
EP.	EPOXY
EPDM	ETHYLENE PROPYLENE DIENE MONOMER
EQ.	EQUAL
EQUIP.	EQUIPMENT
EQUIV.	EQUIVALENT
ESC.	ESCALATOR
EST.	ESTIMATE
EXC.	EXCAVATED
EXH.	EXHAUST
E.D.	EXHAUST DUCT
E.F.	EXHAUST FAN
E.G.	EXHAUST GRILLE
E.R.	EXHAUST REGISTER
EXIST.	EXISTING
EXP.	EXPANSION
EXP.B.	EXPANSION BOLT
E.J.	EXPANSION JOINT
EXPL.P.	EXPLOSION PROOF
EXP'D	EXPOSED
EXT'N	EXTENSION
EXT.	EXTERIOR
E.I.F.S.	EXTERIOR INSULATION FINISH SYSTEM
E.H.	EXTRA HEAVY
EXTR.	EXTRUDED
E.S.P.	EXTERNAL STATIC PRESSURE

F

FAB.	FABRICATED/FABRIC
F/F	FACE-TO-FACE
F. FIN.	FACTORY FINISH
F.C.U.	FAN COIL UNIT
F.S.	FAR SIDE
FAS.	FASTENER
FDR	FEEDER
FT or '	FEET/FOOT
FPM	FEET PER MINUTE
FN	FENCE
F.BD.	FORM BOARD
FIG.	FIGURE
FIN.	FINISH/FINISHED
FIN. FLR/F.F.	FINISH FLOOR
F.T.R.	FINNED TUBE RADIATION
F.A.	FIRE ALARM
F.A.C.P.	FIRE ALARM CONTROL PANEL
F. BRK	FIRE BRICK
F.D.	FIRE DAMPER
F.E.	FIRE EXTINGUISHER
F.E.C.	FIRE EXTINGUISHER CABINET
F.H.C.	FIRE HOSE CABINET
F.H.	FIRE HYDRANT
F.L.	FIRE LINE
F.R.	FIRE RETARDANT/FIRE RATED
F.R.T.WD	FIRE RETARDANT TREATED WOOD
F.V.C.	FIRE VALVE CABINET
FP.	FIREPLACE
FPRFG.	FIREPROOFING
FIXT.	FIXTURE
FLASH.	FLASHING
FHMS	FLAT HEAD MACHINE SCREW
FHWS	FLAT HEAD WOOD SCREW
F.C.	FLEXIBLE CONNECTION
FLR	FLOOR
F.C.O.	FLOOR CLEAN OUT
F.D.	FLOOR DRAIN
FLR. FIN.	FLOOR FINISH
FLUOR.	FLUORESCENT
FLDG	FOLDING
FTG	FOOTING
FM. BD	FORMBOARD
FDN	FOUNDATION
FR.	FRAME
FR/COV.	FRAME AND COVER
FRWG	FRAMING
FRZR	FREEZER
F.S.	FULL SIZE
FURN.	FURNISH/FURNISHED
FURR.	FURRING/FURRED
FUT.	FUTURE

G

GA.	GAUGE
GAL.	GALLON
GPH	GALLONS PER HOUR
GPM	GALLONS PER MINUTE
GALV.	GALVANIZED
GALV. I.	GALVANIZED IRON
G	GAS
GSKT	GASKET
G.V.& B.	GATE VALVE AND BOX
GEN'L.	GENERAL
GL.	GLASS
GLZ	GLAZING
G.H.T.	GLAZED HOLLOW TILE
G.B.	GRAB BAR
GR.	GRADE/GRILLE
GB	GRADE BEAM
GRAT.	GRATING
G.L.	GRID LINE
GRN	GRANITE
G.S.	GREASE SEPARATOR
G.T.	GREASE TRAP
GND	GROUND
G.F.I.	GROUND FAULT INTERRUPTER
GT	GROUT
G.	GUTTER ELEVATION
GYP.	GYPSUM
GYP.BD.	GYPSUM BOARD

H

HNDCP	HANDICAPPED
H.R.	HANDRAIL
H.BD	HARDBOARD
HDWE	HARDWARE
HDWD	HARDWOOD
HD	HEAD
HDR	HEADER
H.A. GL.	HEAT ABSORBING GLASS
H.R.U.	HEAT RECOVERY UNIT
HTR	HEATER
HTG	HEATING
H/V	HEATING AND VENTILATING
H.V.A.C.	HEATING, VENTILATING AND AIR CONDITIONING
HHWR	HEATING HOT WATER SUPPLY
HHWS	HEATING HOT WATER RETURN
HGT	HEIGHT
HEX.	HEXAGON
H.	HIGH
H.I.D.	HIGH INTENSITY DISCHARGE
H.P.	HIGH POINT
H.PR.	HIGH PRESSURE
H.S.	HIGH STRENGTH
H.S.B.	HIGH STRENGTH BOLT
H.V.	HIGH VOLTAGE
HWY	HIGHWAY
HSTWY	HOISTWAY
H.C.	HOLLOW CORE
H.M.	HOLLOW METAL
HNYCB	HONEYCOMB
HK	HOOK
HORIZ.	HORIZONTAL
HP	HORSEPOWER
H.B.	HOSE BIBB
H.S.P.	HOSE STAND PIPE
H.V.C.	HOSE VALVE CABINET
HOSP.	HOSPITAL
H.W.	HOT WATER
HWR	HOT WATER RETURN
HWS	HOT WATER SUPPLY
HR.	HOUR
H.O.	HUB OUTLET
HYD.	HYDRANT/HYDRAULIC
H	HYDROGEN

I

I.D.	IDENTIFICATION
INCAND.	INCANDESCENT
IN. or "	INCH/INCHES
INCIN.	INCINERATOR
INCL.	INCLUDE/INCLUDING
IND.	INDIRECT WASTE
INFO.	INFORMATION
I.D.	INSIDE DIAMETER
I.F.	INSIDE FACE
INST'L.	INSTALL/INSTALLATION
INSUL.	INSULATE/INSULATION
INT.	INTERIOR
INTER.	INTERMEDIATE
INV.	INVERT
I.E.	INVERT ELEVATION

J

J.C.	JANITOR CLOSET
JT	JOINT
JST	JOIST
J.B.	JUNCTION BOX
JR	JUNIOR

K

K.P.	KICK PLATE
KV	KILOVOLT
KVA	KILOVOLT AMPHERE
KW	KILOWATT
K	KIP (1000#)
KIT.	KITCHEN
K.S.	KNEE SPACE
K.D.	KNOCK DOWN
K.O.P.	KNOCK-OUT PANEL

L

LBL.	LABEL
LAB.	LABORATORY
LAD.	LADDER
L.B.	LAG BOLT
LAM.	LAMINATE/LAMINATED
LDG	LANDING
L-	LANDSCAPE DRAWING-NO.
LGE	LARGE
LDRY	LAUNDRY
LAV.	LAVATORY
L.H.	LEFT HAND
L.H.R.B.	LEFT HAND REVERSE BEVEL
LGTH	LENGTH
LEV.	LEVEL
LIB.	LIBRARY
LT.	LIGHT
LPRF	LIGHTPROOF
LTG	LIGHTING
L.P.	LIGHTING PANEL
L.R.P.	LIGHTING RECEPTACLE PANEL
LTWT.	LIGHTWEIGHT
LTWT. CONC.	LIGHTWEIGHT CONCRETE
LMS	LIMESTONE
LTL	LINTEL
LIN. DIFF.	LINEAR DIFFUSER
L.F.	LINEAR FEET/FOOT
LIQ	LIQUID
LPG	LIQUID PROPANE GAS
L.P.G.	LIQUID PETROLEUM GAS
L.L.	LIVE LOAD
L.R.	LIVING ROOM
LOC.	LOCATION
LKR	LOCKER
LG	LONG
L.L.H.	LONG LEG HORIZONTAL
L.L.V.	LONG LEG VERTICAL
LVR	LOUVER
L.O.	LOUVER OPENING
L.P.	LOW POINT
L.PR.	LOW PRESSURE
LBR	LUMBER
LBS. or #	POUNDS

M

MACH.	MACHINE
M.B.	MACHINE BOLT
MACH. RM	MACHINE ROOM
M.A.U.	MAKE-UP AIR UNIT
M.D.P.	MAIN DISTRIBUTION PANEL
M.S.B.	MAIN SWITCH BOARD
MAINT.	MAINTENANCE
MH.	MANHOLE
MFR	MANUFACTURER
MAR.	MARBLE
MK	MARK
MAS.	MASONRY
M.O.	MASONRY OPENING
MATL	MATERIAL
MAX.	MAXIMUM
MECH.	MECHANICAL
M-	MECHANICAL DRAWING-NO.
M.C.	MEDICINE CABINET
MED.	MEDIUM
MEMB.	MEMBRANE
MET.	METAL
M.D.S.	METAL DIVIDER STRIP
M.E.S.	METAL EDGE STRIP
M.L.	METAL LATH
M.L.& PLAS.	METAL LATH AND PLASTER
M.T.	METAL THRESHOLD
MET. W.P.	METALLIC WATERPROOFING
MEZZ.	MEZZANINE
MDOT	MICHIGAN DEPARTMENT OF TRANSPORTATION
MWK	MILLWORK
MIN.	MINIMUM
MIR.	MIRROR
M.& S.	MIRROR AND SHELF
MISC.	MISCELLANEOUS
M.I.	MISCELLANEOUS IRON
MOD.	MODEL
MON.	MONUMENT
M.S.& S.	MOP STRIP AND SHELF
M.O.D.	MOTOR OPERATED DAMPER
MLDG	MOLDING
MTD	MOUNTED
MTG	MEETING/MOUNTING
MOV.	MOVEABLE
MOV. PARTN.	MOVEABLE PARTITION
MULL	MULLION
M	THOUSAND (1000)

N

NAT.	NATURAL
N.S.	NEAR SIDE
NEUT.	NEUTRAL
NRC	NOISE REDUCTION COEFFICIENT
NOM.	NOMINAL
NOR.	NORMAL
N	NORTH
NOS.	NOSING
N.I.C.	NOT-IN-CONTRACT
N.T.S.	NOT-TO-SCALE
NO. or #	NUMBER

O

OBS.	OBSCURE
OBS.GL.	OBSCURE GLASS
OFF.	OFFICE
O.C.	ON CENTER
OPQ.	OPAQUE
OPG.	OPENING
OPER.	OPERATOR
OPP.	OPPOSITE
OPP.HD.	OPPOSITE HAND
ORIG.	ORIGINAL
ORN.	ORNAMENTAL
OZ.	OUNCE
O/O	OUT-TO-OUT
O.A.	OUTSIDE AIR
O.D.	OUTSIDE DIAMETER
O.F.	OUTSIDE FACE
O.H.S.	OVAL HEAD SCREW
O.A.	OVERALL
OHD	OVERHEAD
OHD.DR	OVERHEAD DOOR
OXY.	OXYGEN

P

PTD	PAINTED
PR	PAIR
PG.	PAGE.
PNL	PANEL
P.T.D.	PAPER TOWEL DISPENSER
P.T.W.R.	PAPER TOWEL WASTE RECEPTACLE
PRL	PARALLEL
PKG	PARKING
P.BD	PARTICLE BOARD
PRTN	PARTITION
PASS.	PASSAGE
PAT.	PATENT
PVMT	PAVEMENT
PVG	PAVING
PED.	PEDESTAL
PERF.	PERFORATED
PERIM.	PERIMETER
PERM.	PERMANENT
PERP.	PERPENDICULAR
P. or ϕ	PHASE
PHOTO.	PHOTOGRAPH
P.H.	PHYSICALLY HANDICAPPED
PC.	PIECE
PCS.	PIECES
PLAS.	PLASTER
PL. LAM.	PLASTIC LAMINATE
PL.	PLATE
PL. GL.	PLATE GLASS
PLAT.	PLATFORM
PLBG	PLUMBING
PLWD	PLYWOOD
PT	POINT
P.T.	POINT OF TANGENCY
P.C.	POINT OF CURVATURE
POL.	POLISH/POLISHED
PVC	POLYVINYLCLORIDE
PORC.	PORCELAIN
PORC. ENAM.	PORCELAIN ENAMEL
POR.	POROUS
PORT.	PORTABLE
POS.	POSITION
P.I.V.	POST INDICATOR VALVE
PLF	POUNDS PER LINEAR FOOT
PSF	POUNDS PER SQUARE FOOT
PSI	POUNDS PER SQUARE INCH
PCF	POUNDS PER CUBIC FOOT
P.P	POWER PANEL
P/C	PRECAST
P.T.R.	PRECAST TERRAZZO RECEPTOR
PREFAB.	PREFABRICATED
PFN.	PREFINISHED
P.T.WD	PRESERVATIVE TREATED WOOD
P.G.	PRESSURE GAUGE
P.R.V.	PRESSURE REDUCING VALVE
PRIM.	PRIMARY
PROJ.	PROJECT/PROJECTION
PROP.	PROPERTY/PROPOSED
P.L.	PROPERTY LINE
P.A.	PUBLIC ADDRESS
P.S.	PURSE SHELF
P.B.	PUSH BUTTON

Q

QTY	QUANTITY
Q.T.	QUARRY TILE
QTR	QUARTER
QTR. RD	QUARTER ROUND

R

RBT	RABBET
RAD. or R.	RADIUS
R.W.C.	RAIN WATER CONDUCTOR
R.R.	RAILROAD
RECV.	RECEIVE/RECEIVING
RECPT.	RECEPTACLE
R.P.	RECEPTACLE PANEL
REC.	RECESS
RECT.	RECTANGLE/RECTANGULAR
RED.	REDUCER
RWD	REDWOOD
REF.	REFER/REFERENCE
REFL.	REFLECTED/REFLECTIVE
REFR.	REFRIGERATOR
REG.	REGISTER
REINF.	REINFORCE/REINFORCING/ REINFORCEMENT
REM.	REMOVE/REMOVABLE
REP.	REPAIR
REQ'D.	REQUIRED
RESIL.	RESILIENT
RET.	RETURN
R.A.	RETURN AIR
R.A.D.	RETURN AIR DIFFUSER
R.A.F.	RETURN AIR FAN
REV.	REVISED/REVISION
RPM	REVOLUTIONS PER MINUTE
R.	RISER
R.H.	RIGHT HAND
R.H.R.B.	RIGHT HAND REVERSE BEVEL
R.O.W.	RIGHT OF WAY
RN'T	RIVET
RD	ROAD
R.S.C.	ROLLING STEEL CURTAIN
RF	ROOF
R.C.	ROOF CONDUCTOR
R.D.	ROOF DRAIN
RF.H.	ROOF HATCH
R.S.	ROOF SUMP
R.V.	ROOF VENTILATOR
RFG	ROOFING
R.T.U.	ROOF TOP UNIT
RM	ROOM
R.O.	ROUGH OPENING
RND or ◯	ROUND
RHMS	ROUND HEAD MACHINE SCREW
RHWS	ROUND HEAD WOOD SCREW
R.T.	RUBBER TILE

S

SAN.	SANITARY
S.N.D.	SANITARY NAPKIN DISPENSER
S.N.R.	SANITARY NAPKIN RECEPTACLE
SCHED.	SCHEDULE
SCN	SCREEN
STG	SEATING
SECT.	SECTION
SERV.	SERVICE
S.S.	SERVICE SINK
SHTHG	SHEATHING
SHT	SHEET
SHT. MET.	SHEET METAL
SH.& R.	SHELF AND ROD
SHWR	SHOWER
S.C.R.	SHOWER CURTAIN ROD
S.DR	SHOWER DOOR
S.W.	SIDEWALK
SIM.	SIMILAR
SGL.	SINGLE
SIK	SINK
S.D.	SOAP DISPENSER
S.C.	SOLID CORE
STC	SOUND TRANSMISSION CLASS
S	SOUTH
SP.	SPACE
SPR.	SPARE
SPKR	SPEAKER
SPEC.	SPECIFICATIONS
S.D.	SPLITTER DAMPER
SPRYED	SPRAYED
SPRKLR	SPRINKLER
SQ.	SQUARE
S.F.	SQUARE FEET/SQUARE FOOT
STAG.	STAGGERED
ST.STL	STAINLESS STEEL
STD	STANDARD
SP.	STANDPIPE
S.P.	STATIC PRESSURE
STA.	STATION
STM	STEAM
STL	STEEL
STL. PL.	STEEL PLATE
STIFF.	STIFFENER
STO. FR.	STOREFRONT
STOR.	STORAGE
STR.	STRAIGHT
ST.	STREET
STRUCT.	STRUCTURAL
S-	STRUCTURAL DRAWING-NO.
S.G.F.T.	STRUCTURAL GLAZED FACING TILE
S.STL	STRUCTURAL STEEL
SS.D.	SUBSOIL DRAIN
SS.D.C.	SUBSOIL DRAIN CONNECTION
SUB.	SUBSTATION
S.A.G.	SUPPLY AIR GRILLE
S.D.	SUPPLY DIFFUSER/ DUCT
SUBST.	SUBSTITUTE
S.A.R.	SUPPLY AIR REGISTER
S.F.	SUPPLY FAN

S

SW.	SWITCH
SWBD	SWITCHBOARD
SWGR	SWITCHGEAR
SYM	SYMBOL/ SYMMETRICAL
SYS.	SYSTEM
SUPP.	SUPPORT
SURF.	SURFACE/ SURFACING
SUSP.	SUSPEND/ SUSPENSION

T

T.BD	TACKBOARD
TAN.	TANGENT
TECH.	TECHNICAL
TEL.	TELEPHONE
TEL. CAB.	TELEPHONE CABINET
TV	TELEVISION
TV.M	TELEVISION MONITOR
TEMP.	TEMPERATURE
TEMP. GL.	TEMPERED GLASS
T.U.	TERMINAL UNIT
TERR.	TERRAZZO
T.B.	TEST BORING
T.	THERMOSTAT
THK	THICK/ THICKNESS
T.S.	THICKENED SLAB
THD	THREAD
THRESH.	THRESHOLD
THRU	THROUGH
T.	TILE
T./ TOIL.	TOILET
T.P.D.	TOILET PAPER DISPENSER
T.P.H.	TOILET PAPER HOLDER
T & G	TONGUE AND GROOVE
T & B	TOP AND BOTTOM
T/C	TOP OF CURB
T/EL.	TOP ELEVATION
T/F	TOP OF FOOTING
T/G	TOP OF GUTTER
T/M	TOP OF MASONRY
T/P	TOP OF PARAPET
T/PR	TOP OF PAVEMENT
T/R	TOP OF RIM
T/S	TOP OF STEEL
T/W	TOP OF WALL
T.B.	TOWEL BAR
T.D.	TOWEL DISPENSER
TD & WR	TOWEL DISPENSER AND WASTE RECEPTACLE
T.G.	TRANSFER GRILLE
TRFR	TRANSFORMER
TRAN.	TRANSOM
T	TREAD
T.D.	TRENCH DRAIN
TS	TUBE SECTION
T.V.	TURNING VANE
T.W.	TWIN TEE
TYP.	TYPICAL

U

U.C.	UNDERCUT
U.G.	UNDER GROUND
U.L.	UNDERWRITER'S LABORATORY
ULT.	ULTIMATE
UNFIN.	UNFINISHED
U.H.	UNIT HEATER
U.SUB.	UNIT SUBSTATION
UV	UNIT VENTILATOR
USGS	UNITED STATES GEOLOGICAL SURVEY
U.O.N.	UNLESS OTHERWISE NOTED
UR.	URINAL

V

VAC.	VACUUM
V.B.	VACUUM BREAKER
V.C.O.	VACUUM CLEANER OUTLET
V. BARR.	VAPOR BARRIER
VAR.	VARIABLE
VARN.	VARNISH
VNR	VENEER
V. PLAS.	VENEER PLASTER
V.	VENT
VTR	VENT THRU ROOF
VENT.	VENTILATE/ VENTILATION
V.I.F.	VERIFY IN FIELD
VS.	VERSUS
VERT.	VERTICAL/ VERTICALLY
VERT. C.	VERTICAL CURVE
VEST.	VESTIBULE
V.I.	VIBRATION ISOLATOR
VNY	VINYL
VCT	VINYL COMPOSITION TILE
VIN. FAB.	VINYL FABRIC
V.R.S.	VINYL REDUCER STRIP
VIT.	VITREOUS
VCP	VITRIFIED CLAY PIPE
VOL.	VOLUME
V.D.	VOLUME DAMPER
V	VOLTS

W

WAINS.	WAINSCOT
W.CAB.	WALL CABINET
W.C.O.	WALL CLEAN OUT
W.H.	WALL HYDRANT
W/W	WALL-TO-WALL
W.V.	WALL VENT
WHSE	WAREHOUSE
W.F.	WASH FOUNTAIN
W.	WASTE/ WATTS
W & V	WASTE AND VENT
W.R.	WASTE RECEPTACLE
W.C.	WATER CLOSET
W.G.	WATER GAUGE
W.H.	WATER HEATER
WP	WATERPROOFING
W.PRFG.	WEATHERPROOFING
W.STPG.	WEATHERSTRIPPING
WT.	WEIGHT
W.W.F.	WELDED WIRE FABRIC
W	WEST
W.B.	WET BULB
W.	WIDE/ WIDTH
W_×_	WIDE FLANGE SECTION
WT	WIDE FLANGE TEE SECTION
W.O.	WINDOW OPENING
W.GL.	WIRE GLASS
W.M.	WIRE MESH
w/	WITH
w/o	WITHOUT
WD	WOOD
W.L.	WORK LINE
W.P.	WORK POINT
W.I.	WROUGHT IRON

X

Y

YD	YARD
Y.P.	YIELD POINT
Y.S.	YIELD STRENGTH
YR	YEAR

Z

ZC	ZINC

TYPICAL MOUNTING HEIGHTS

MISCELLANEOUS ACCESSORIES, TOILET ACCESSORIES AND FIXTURES

NOTE: MOUNTING HEIGHTS SHOWN ARE PROPOSED FOR ALL ACCESSORIES AND FIXTURES REQUIRED UNLESS OTHERWISE NOTED OR DIMENSIONED ON DRAWINGS FOR SPECIFIC CONDITIONS (B.F. - DENOTES ACCESSIBLE BARRIER FREE REQUIREMENTS)

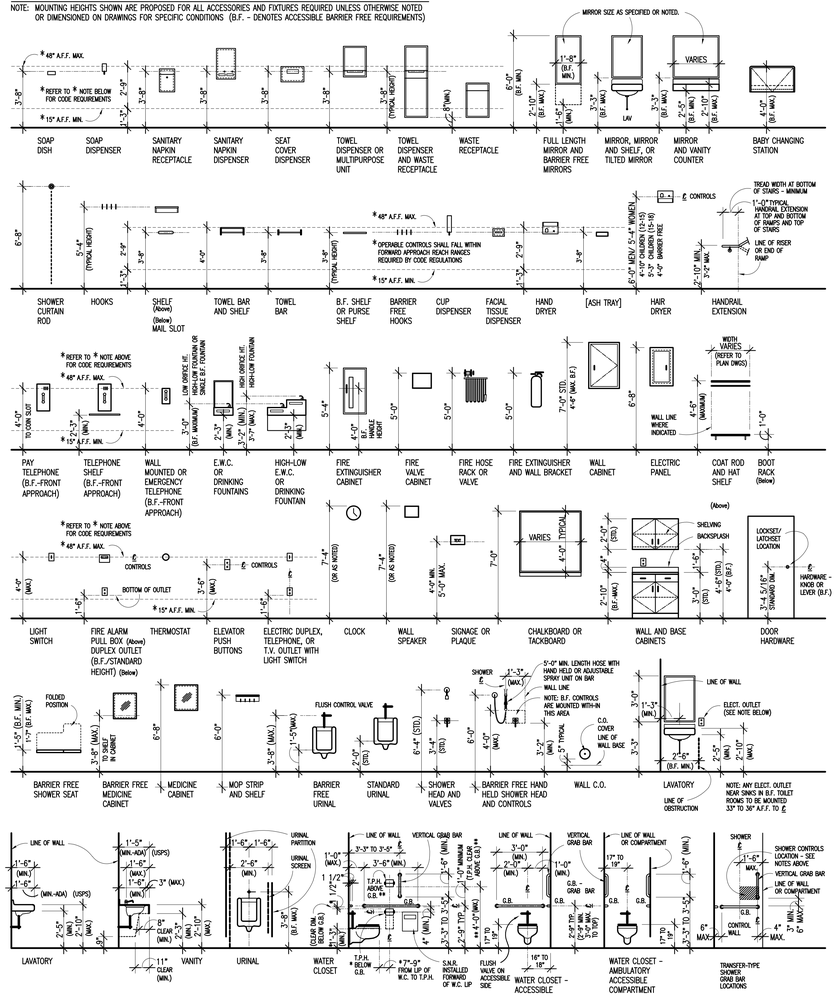

MATERIAL DESIGNATIONS

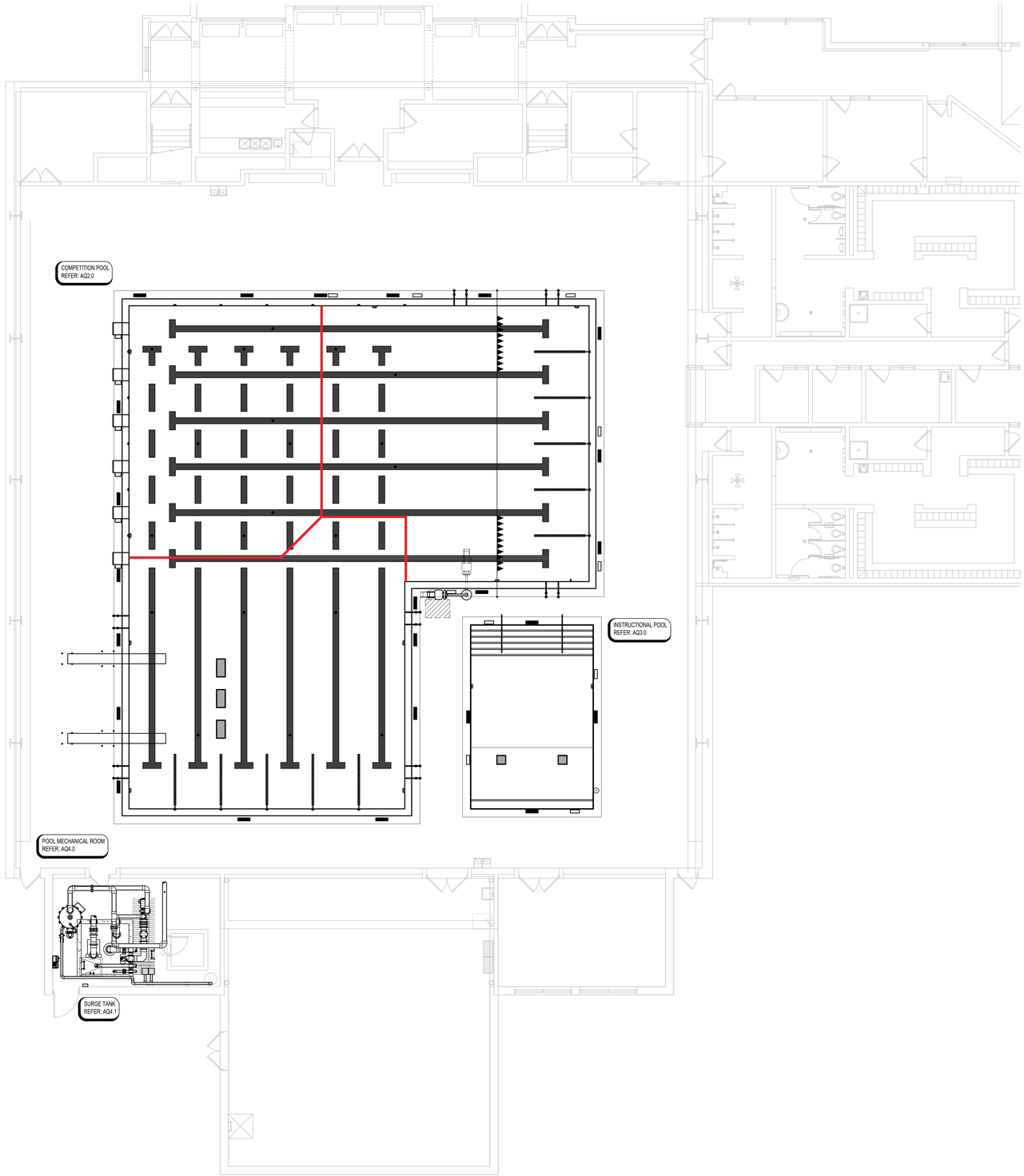

1 AQ0.0 POOL REFERENCE PLAN
1/8" = 1'-0"

DESIGN DATA

	UNITS	COMPETITION POOL	INSTRUCTIONAL POOL
LENGTH	FT.	82'-1"	30'-0"
WIDTH	FT.	75'-1"	20'-0"
WATER SURFACE AREA	SQ. FT.	5,040	600
PERIMETER	FT.	300	100
VOLUME	GALLON	282,744	10,753
RECIRCULATION SYSTEM			
POOL TURNOVER RATE	HOUR	5.89	1.79
RECIRCULATION RATE	GPM	800	100
SURGE CAPACITY	GALLON	5,835	N/A
BATHER LOAD	PERSON	201	42

GENERAL POOL NOTES

1. REFER TO POOL STRUCTURAL DRAWINGS AND SPECIFICATIONS FOR ALL DIMENSIONS RELATING TO THE THICKNESS OF THE SURGE TANK AND CONCRETE CURING METHODS.
2. ALL PROPRIETARY NAMES MENTIONED ARE TO DESIGNATE PERFORMANCE STANDARDS. EQUIVALENT PRODUCTS MUST BE SUBMITTED FOR APPROVAL.
3. ELECTRICAL INSPECTOR MUST APPROVE INSTALLATION OF BONDING GRID FOR POOL REINFORCING AND ALL POOL EMBEDS PRIOR TO PLACEMENT OF CONCRETE.
4. NO GROUND WATER MUST BE ALLOWED TO RISE ABOVE ANY PORTION OF THE POOL BOTTOM DURING CONSTRUCTION.
5. ALL POOL REINFORCING STEEL, METAL FITTINGS, EQUIPMENT WITHIN 5'-0" OF POOL EDGE AND ANY METAL PARTS OF POOL EQUIPMENT IN CONTACT WITH POOL RECIRCULATION SYSTEM MUST BE BONDED PER NEC 680. REFER: 14/AQ4.2
6. CONTRACTOR TO INCLUDE CHEMICAL QUANTITIES TO ACHIEVE WATER BALANCE PRIOR TO OWNER TURNOVER.
7. THE SURGE TANK MUST BE WATER TESTED IN ACCORDANCE TO THE HYDROSTATIC TIGHTNESS TESTING OF AN OPEN CONCRETE CONTAINMENT STRUCTURE AS REQUIRED BY THE AMERICAN CONCRETE INSTITUTE (ACI) 350.1-10 SECTION 2. REFER TO SPECIFICATIONS.

DRAWING INDEX

SHEET	DESCRIPTION
AQ0.0	POOL REFERENCE PLAN
AQ0.1	POOL DEMOLITION PLAN
AQ0.2	POOL & MECHANICAL ROOM EXISTING CONDITIONS
AQ0.3	POOL & MECHANICAL ROOM EXISTING CONDITIONS
AQ1.0	SURGE TANK STRUCTURAL PLANS & DETAILS
AQ2.0	COMPETITION POOL PLAN & SECTIONS
AQ3.0	INSTRUCTIONAL POOL PLAN & SECTIONS
AQ4.0	POOL MECHANICAL ROOM PLAN & SECTIONS
AQ4.1	SURGE TANK PLAN & SECTIONS
AQ4.2	POOL & MECHANICAL ROOM DETAILS
AQ4.3	POOL & MECHANICAL ROOM DETAILS
AQ5.0	COMPETITION POOL SYSTEMS SCHEMATIC

TMP ARCHITECTURE

TMP ARCHITECTURE INC
1191 WEST SQUARE LAKE ROAD
BLOOMFIELD HILLS · MICHIGAN · 48302
PH · 248.338.4561 FX · 248.338.0223
EM · INFO@TMP-ARCHITECTURE.COM

REGISTRATION SEAL

STATE OF MICHIGAN
CARL P. NYLANDER
ENGINEER
NO. 6201066291
LICENSED PROFESSIONAL ENGINEER

05-25-2023

CONSULTANT

COUNSILMAN•HUNSAKER
www.chh2o.com

PROJECT TITLE

Wylie Elementary School Pool Upgrades

Dexter Community Schools

DRAWING TITLE
POOL REFERENCE PLAN

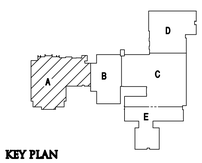

KEY PLAN

ISSUE DATES

DATE:	ISSUED FOR:
05-25-2023	CONSTRUCTION DOCUMENTS

DRAWN	CJL
CHECKED	NRK
APPROVED	CPN

PROJECT NO.
22072A

DRAWING NO.
AQ0.0

© 2023 COUNSILMAN•HUNSAKER

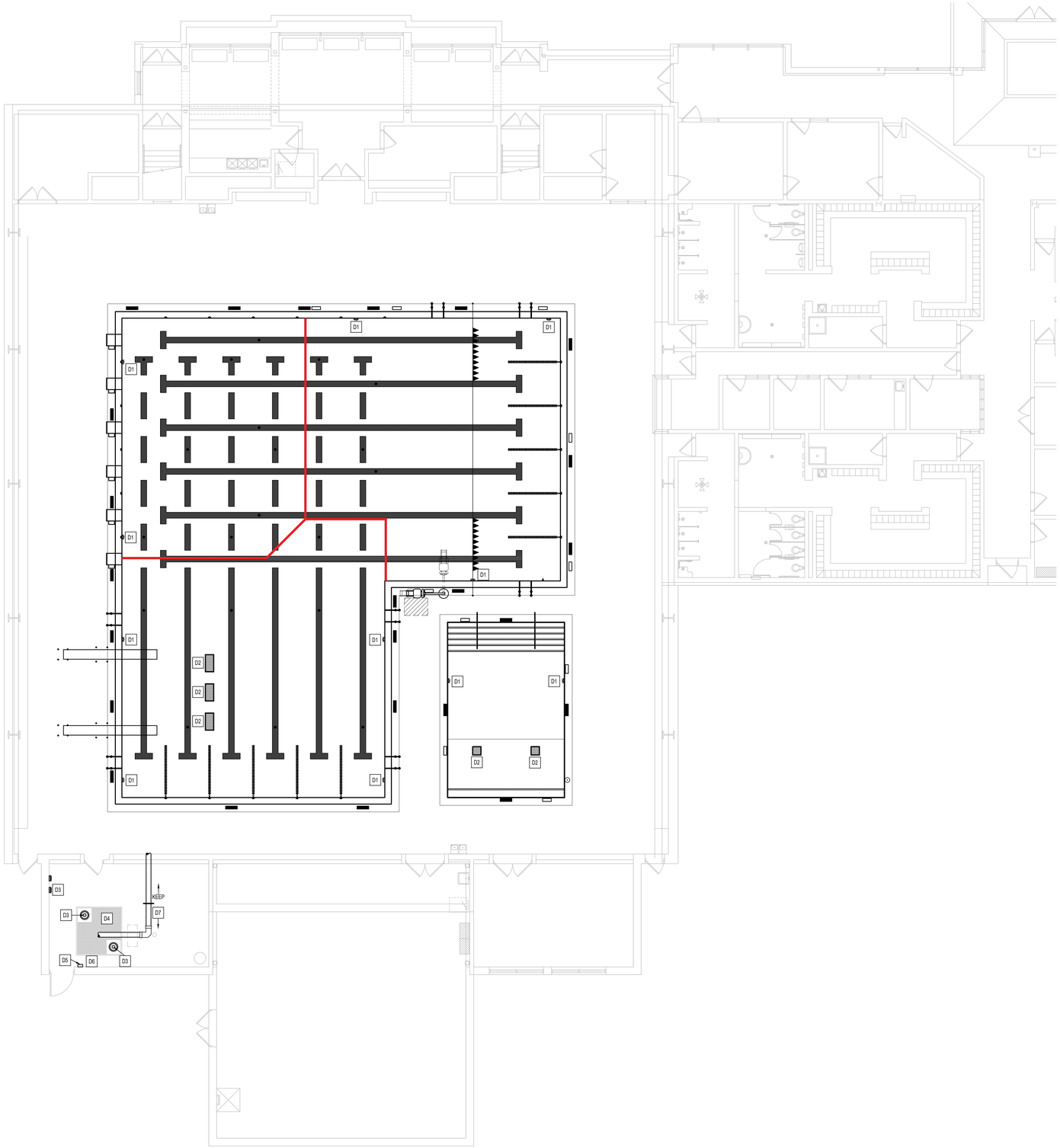

1 AQ0.1 POOL DEMOLITION PLAN

1/8" = 1'-0"

GENERAL POOL DEMOLITION AND RENOVATION NOTES

1. COORDINATE ALL DEMOLITION PLANS AND WORK WITH THE CONSTRUCTION MANAGER AND CONSTRUCTION DOCUMENTS PRIOR TO THE START OF DEMOLITION.
2. REVIEW RECORD DOCUMENTS OF EXISTING CONSTRUCTION PROVIDED BY THE OWNER. NEITHER THE OWNER NOR ENGINEER MAKES ANY GUARANTEE THAT THE EXISTING CONDITIONS REFLECT THOSE INDICATED IN THE RECORD DOCUMENTS. CONTRACTOR TO PROVIDE NOTIFICATION OF ANY DISCREPANCIES BETWEEN EXISTING CONDITIONS AND THE CONTRACT DOCUMENTS BEFORE PROCEEDING WITH DEMOLITION.
3. CONTRACTOR TO SURVEY EXISTING CONDITIONS AND CORRELATE WITH REQUIREMENTS INDICATED IN THE CONTRACT DOCUMENTS TO DETERMINE THE EXTENT OF DEMOLITION REQUIRED. CONTRACTOR TO RECORD EXISTING CONDITIONS WITH DETAILED PRECONSTRUCTION PHOTOGRAPHS.
4. UNLESS OTHERWISE INDICATED, DEMOLITION WASTE BECOMES PROPERTY OF THE CONTRACTOR.
5. EXCEPT FOR ITEMS OR MATERIALS INDICATED TO BE RECYCLED, REUSED, SALVAGED, REINSTALLED, OR OTHERWISE INDICATED TO REMAIN OWNER'S PROPERTY, REMOVE DEMOLISHED MATERIALS FROM PROJECT SITE AND LEGALLY DISPOSE OF THEM. OWNER HAS THE FIRST RIGHT OF REFUSAL ON ALL DEMOLITION MATERIALS.
6. IF HAZARDOUS MATERIALS ARE ENCOUNTERED, DO NOT DISTURB. IMMEDIATELY NOTIFY THE OWNER AND ENGINEER.
7. INDICATE RECEIPT AND ACCEPTANCE OF ANY HAZARDOUS WASTES BY A LANDFILL FACILITY LICENSED TO ACCEPT SUCH HAZARDOUS WASTES.
8. MAINTAIN EXISTING UTILITIES TO REMAIN IN SERVICE AND PROTECT THEM AGAINST DAMAGE DURING DEMOLITION OPERATIONS. REFER TO OTHER TRADES FOR COORDINATION.
9. ELECTRICIAN MUST VERIFY EXISTING BOND GRID. ALL NEW EMBEDS AND MECHANICAL EQUIPMENT MUST BE BONDED PER NEC ARTICLE 680. REFER: 14/AQ4.2. REFER TO ELECTRICAL FOR TESTING.
10. CONTRACTOR TO DRAIN AND FILL POOL AT A RATE NOT TO EXCEED 1" OF POOL DEPTH PER HOUR AND AT A WATER TEMPERATURE WITHIN 10 DEGREES FAHRENHEIT OF AMBIENT TO CONTROL MOISTURE AND THERMAL SHOCK TO THE TILE.
11. PROTECT ALL EXISTING POOL FINISHES, GUTTERS, MAIN DRAINS, AND ANY OTHER POOL RELATED APPURTENANCES DURING CONSTRUCTION.
12. ALL EXISTING BELOW GRADE PIPING MUST BE PROTECTED DURING CONSTRUCTION. REFER TO PIPING SCHEMATICS FOR SPECIFIC PIPING RUNS TO BE REPLACED/RELOCATED AS A PART OF THE RENOVATION.
13. THE CONTRACTOR MUST BE RESPONSIBLE FOR CONTINUOUSLY MONITORING GROUNDWATER LEVELS ON THE SITE DURING ANY AND ALL PERIODS WHEN THE SWIMMING POOL IS NOT FULL OF WATER. PROTECTION OF THE EXISTING POOL STRUCTURE FROM DAMAGE DUE TO HYDROSTATIC PRESSURE IS THE SOLE RESPONSIBILITY OF THE CONTRACTOR.
14. CLEAN ADJACENT STRUCTURES AND IMPROVEMENTS OF DUST, DIRT, AND DEBRIS FOLLOWING DEMOLITION OPERATIONS. CONTRACTOR TO RETURN ADJACENT AREAS TO CONDITION EXISTING BEFORE THE START OF DEMOLITION OPERATIONS.

POOL DEMOLITION KEYNOTES

COORDINATE ALL DEMOLITION PLANS WITH ARCHITECT AND CONSTRUCTION DOCUMENTS PRIOR TO DEMOLITION

D1	REMOVE THE EXISTING UNDERWATER LIGHTS FROM THE NICHES. WIRING AND POWER BY ELECTRICAL. REFER: 1/AQ0.2
D2	REMOVE THE EXISTING VGB COVERS AT THE MAIN DRAIN SUMPS. REFER: 2/AQ0.2 & 3/AQ0.2
D3	REMOVE THE EXISTING PUMPS AND ASSOCIATED MOTOR STARTERS, CONDUIT, AND WIRING. REFER: 4/AQ0.2 & 1/AQ0.3
D4	REMOVE THE EXISTING VACUUM SAND FILTER AND ASSOCIATED CONTROLS. REFER: 1/AQ0.3 & 2/AQ0.3
D5	REMOVE THE EXISTING WATER LEVEL CONTROLLER. REFER: 3/AQ0.3
D6	REMOVE THE EXISTING FILL WATER PIPING AT THE LOCATION INDICATED. REFER: 3/AQ0.3
D7	REMOVE THE EXISTING PIPING FROM THE FILTER TO THE RETURN LINE WITHIN THE MECHANICAL ROOM AT THE LOCATION INDICATED. REFER: 4/AQ0.3

TMP ARCHITECTURE

TMP ARCHITECTURE INC

1191 WEST SQUARE LAKE ROAD
BLOOMFIELD HILLS · MICHIGAN · 48302
PH · 248.338.4561 FX · 248.338.0223
EM · INFO@TMP-ARCHITECTURE.COM

REGISTRATION SEAL

STATE OF MICHIGAN
CARL P. NYLANDER
ENGINEER
NO. 6201066291
LICENSED PROFESSIONAL ENGINEER

05-25-2023

CONSULTANT

COUNSILMAN•HUNSAKER
www.chh2o.com

PROJECT TITLE

Wylie Elementary School Pool Upgrades

Dexter Community Schools

DRAWING TITLE

POOL DEMOLITION PLAN

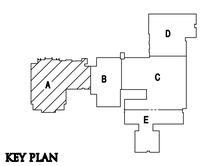

KEY PLAN

ISSUE DATES

DATE:	ISSUED FOR:
05-25-2023	CONSTRUCTION DOCUMENTS

DRAWN	CJL
CHECKED	NRK
APPROVED	CPN

PROJECT NO.

22072A

DRAWING NO.

AQ0.1

© 2023 COUNSILMAN•HUNSAKER

NOTE:
REMOVE THE EXISTING VGB COVERS AT THE MAIN DRAIN SUMPS IN TWO (2) LOCATIONS.

3 / AQ0.2 INSTRUCTIONAL POOL MAIN DRAIN COVERS TO BE REPLACED

NTS

NOTE:
REMOVE THE EXISTING VGB UNDERWATER LIGHTS FROM THE NICHES. NINE (9) LOCATIONS ON THE COMPETITION POOL AND TWO (2) LOCATIONS ON THE INSTRUCTION POOL. WIRING AND POWER BY ELECTRICAL.

1 / AQ0.2 EXISTING UNDERWATER LIGHTS TO BE REPLACED

NTS

NOTE:
REMOVE THE EXISTING PUMP STARTER ASSOCIATED WITH THE RECIRCULATION SYSTEM.

4 / AQ0.2 PUMP STARTER TO BE REMOVED

NTS

NOTE:
REMOVE THE EXISTING VGB COVERS AT THE MAIN DRAIN SUMPS IN THREE (3) LOCATIONS.

2 / AQ0.2 COMPETITION POOL MAIN DRAIN COVERS TO BE REPLACED

NTS

TMP ARCHITECTURE

TMP ARCHITECTURE INC
1191 WEST SQUARE LAKE ROAD
BLOOMFIELD HILLS · MICHIGAN · 48302
PH · 248.338.4561 FX · 248.338.0223
EM · INFO@TMP-ARCHITECTURE.COM

REGISTRATION SEAL

STATE OF MICHIGAN
CARL P. NYLANDER
ENGINEER
NO. 6201066291
LICENSED PROFESSIONAL ENGINEER

05-25-2023

CONSULTANT

COUNSILMAN•HUNSAKER
www.chh2o.com

PROJECT TITLE

Wylie Elementary School Pool Upgrades

Dexter Community Schools

DRAWING TITLE

POOL & MECHANICAL ROOM EXISTING CONDITIONS

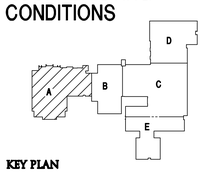

KEY PLAN

ISSUE DATES

DATE:	ISSUED FOR:
05-25-2023	CONSTRUCTION DOCUMENTS

DRAWN	CJL
CHECKED	NRK
APPROVED	CPN

PROJECT NO.

22072A

DRAWING NO.

AQ0.2

© 2023 COUNSILMAN•HUNSAKER

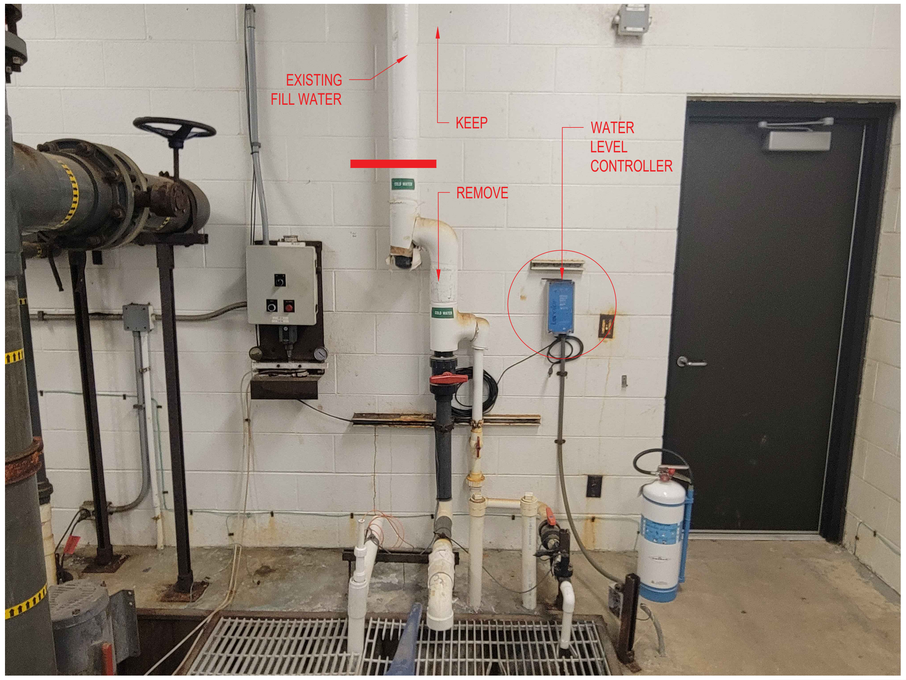

NOTE:
REMOVE THE FILL PIPING, AS SHOWN, AND THE EXISTING WATER LEVEL CONTROLLER.

3 / AQ0.3 EXISTING WATER LEVEL CONTROLLER FOR REMOVAL MAKE-UP WATER SUPPLY FOR MODIFICATION

NTS

NOTE:
REMOVE THE EXISTING PUMPS, VACUUM SAND FILTER, AND ASSOCIATED COMPONENTS.

1 / AQ0.3 EXISTING VACUUM SAND FILTER & PUMPS FOR REMOVAL

NTS

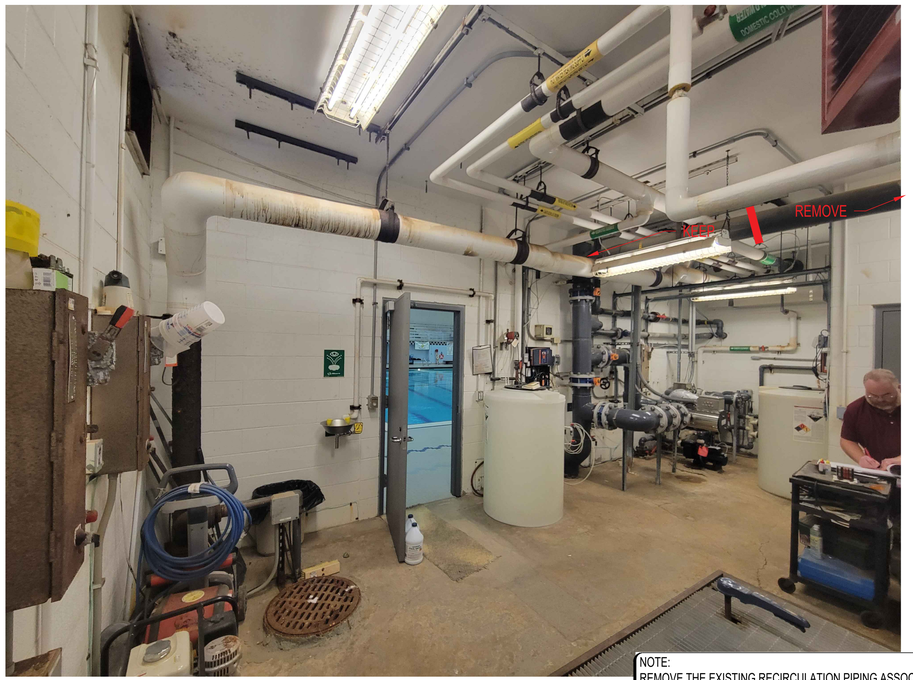

NOTE:
REMOVE THE EXISTING RECIRCULATION PIPING ASSOCIATED WITH THE POOL PUMPS AND VACUUM SAND FILTER, UNTIL THE LOCATION SHOWN.

4 / AQ0.3 EXISTING MECHANICAL ROOM EQUIPMENT TO REMAIN & RETURN PIPING FOR CONNECTION

NTS

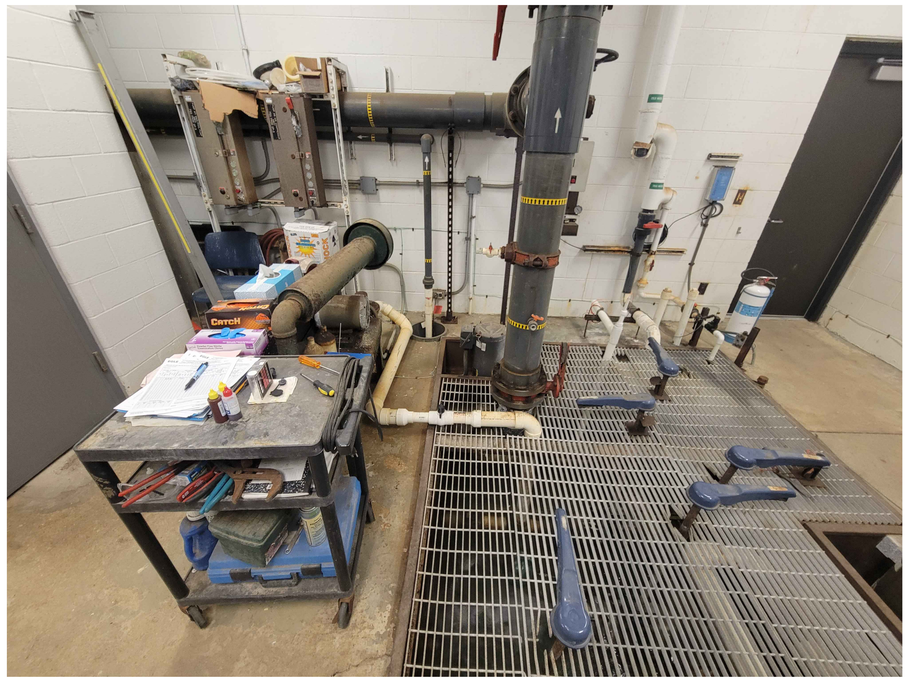

NOTE:
REMOVE THE VACUUM SAND FILTER AND ASSOCIATED COMPONENTS.

2 / AQ0.3 EXISTING VACUUM SAND FILTER, MOTOR STARTER, & PIPING FOR REMOVAL

NTS

TMP ARCHITECTURE

TMP ARCHITECTURE INC
1191 WEST SQUARE LAKE ROAD
BLOOMFIELD HILLS · MICHIGAN · 48302
PH · 248.338.4561 FX · 248.338.0223
EM · INFO@TMP-ARCHITECTURE.COM

REGISTRATION SEAL

STATE OF MICHIGAN
CARL P. NYLANDER
ENGINEER
NO. 6201066291
LICENSED PROFESSIONAL ENGINEER

05-25-2023

CONSULTANT

COUNSILMAN•HUNSAKER
www.chh2o.com

PROJECT TITLE

Wylie Elementary School Pool Upgrades

Dexter Community Schools

DRAWING TITLE

POOL & MECHANICAL ROOM EXISTING CONDITIONS

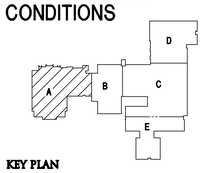

KEY PLAN

ISSUE DATES

DATE:	ISSUED FOR:
05-25-2023	CONSTRUCTION DOCUMENTS

DRAWN	CJL
CHECKED	NRK
APPROVED	CPN

PROJECT NO.

22072A

DRAWING NO.

AQ0.3

© 2023 COUNSILMAN•HUNSAKER

ABBREVIATIONS LIST

AR	ANCHOR RODS
ACI	AMERICAN CONCRETE INSTITUTE
ADD'L	ADDITIONAL
ADH	ADHESIVE
ADJ	ADJACENT
AESS	ARCHITECTURALLY EXPOSED STRUCTURAL STEEL
AFF	ABOVE FINISHED FLOOR
AGGR	AGGREGATE
AHU	AIR HANDLING UNIT
AISC	AMERICAN INSTITUTE OF STEEL CONSTRUCTION
AISI	AMERICAN IRON AND STEEL INSTITUTE
ALUM	ALUMINUM
ALT	ALTERNATE
APA	AMERICAN PLYWOOD ASSOCIATION
APPROX	APPROXIMATE
ARCH	ARCHITECT
ASTM	AMERICAN SOCIETY OF TESTING MATERIALS
AWS	AMERICAN WELDING SOCIETY
L	ANGLE
BB	BOND BEAM
B/B	BACK TO BACK
BC	BOTTOM CHORD
BD	BOARD
BLDG	BUILDING
BLK	BLOCK
BM	BEAM
BOTT	BOTTOM
BP	BEARING PLATE
BRDG	BRIDGING
BRG	BEARING
BRK	BRICK
BS	BOTH SIDES
BSMT	BASEMENT
BTWN	BETWEEN
BUC	BUILT UP COLUMN
c	CAMBER
C/C	CENTER TO CENTER
CANT	CANTILEVER
CFS	COLD FORMED STEEL
CJ	CONTROL AND OR CONSTRUCTION JOINT
CL	CENTERLINE
CLR	CLEAR
CMU	CONCRETE MASONRY UNIT
COL	COLUMN
COORD	COORDINATE
COMP	COMPACTED
CONC	CONCRETE
CONN	CONNECTION
CONST	CONSTRUCTION
CONT	CONTINUOUS
CTR	CENTER
CTRD	CENTERED
DIA	DIAMETER
DIAG	DIAGONAL
DIM	DIMENSION
DL	DEAD LOAD
DLT	DEEP LEG TRACK
DO	DITTO
DN	DOWN
DTL	DETAIL
DWG	DRAWING
DWL	DOWEL
EA	EACH
EE	EACH END
EF	EACH FACE
ENG	ENGINEER
ELEV	ELEVATION
ELECT	ELECTRICAL
EOD	EDGE OF DECK
EOS	EDGE OF SLAB
EQ	EQUAL
EQUIV	EQUIVALENT
ES	EACH SIDE
EW	EACH WAY
EX	EXISTING
EXP	EXPANSION
EXT	EXTERIOR
F/	FACE OF
FD	FLOOR DRAIN
FDN	FOUNDATION
FIN	FINISH
FLR	FLOOR
FLG	FLANGE
FS	FAR SIDE
FTG	FOOTING
GA	GAUGE
GALV	GALVANIZED
GB	GRADE BEAM
GC	GENERAL CONTRACTOR
GL	GLULAM
GR	GRADE
HC	HOLLOW CORE
HD	HOLD DOWN
HGT	HEIGHT
HORIZ	HORIZONTAL
HP	HIGH POINT
HS	HEADED STUD
HSS	HOLLOW STRUCTURAL SECTION
ID	INSIDE DIAMETER
IF	INSIDE FACE
INFO	INFORMATION
INT	INTERIOR
INV	INVERT
JST	JOIST
JT	JOINT
K	KIP
KO	KNOCK OUT
LB	POUND
LDG	LEDGE
LG	LONG
LL	LIVE LOAD
LLH	LONG LEG HORIZONTAL
LLV	LONG LEG VERTICAL
LNTL	LINTEL
LSL	LONG SLOTTED HOLES
LONG	LONGITUDINAL
LP	LOW POINT
LVL	LAMINATED VENEER LUMBER
MAS	MASONRY
MAT'L	MATERIAL
MAX	MAXIMUM
MBM	METAL BUILDING MFR
MCJ	MASONRY CONTROL JT
MECH	MECHANICAL
MEZZ	MEZZANINE
MFR	MANUFACTURER
MIN	MINIMUM
MISC	MISCELLANEOUS
MO	MASONRY OPENING
MOM	MOMENT
MSW	MASONRY SHEAR WALL
MSL	MEAN SEA LEVEL
MTL	METAL
MW	MASONRY WALL
NIC	NOT IN CONTRACT
NO	NUMBER
NS	NEAR SIDE
NTS	NOT TO SCALE
O/O	OUT TO OUT
OA	OVERALL
OC	ON CENTER
OD	OUTSIDE DIAMETER
OF	OUTSIDE FACE
OH	OVER HEAD
OPNG	OPENING
OPP	OPPOSITE
OPP HD	OPPOSITE HAND
OSB	ORIENTED STRAND BOARD
OSL	OUTSTANDING LEG
OVS	OVERSIZE HOLE
PAF	POWDER ACTUATED FASTENER
PC	PRECAST
PL	PLATE
PLF	POUNDS PER LINEAR FOOT
PLYWD	PLYWOOD
PNL	PANEL
PROJ	PROJECTION
PSF	POUNDS PER SQUARE FOOT
PSI	POUNDS PER SQUARE INCH
PSL	PARALLEL STRAND LUMBER
PT	PRESSURE TREATED
PTN	PARTITION
PVMT	PAVEMENT
QTY	QUANTITY
R	RADIUS
RD	ROOF DRAIN
REF	REFERENCE
REINF	REINFORCE(D)(ING)(MENT)
REQ'D	REQUIRED
REV	REVISION/REVISED
RO	ROUGH OPENING
RRD	ROOF RELIEF DRAIN
RTN	RETURN
RTU	ROOF TOP UNIT
RW	RETAINING WALL
SCHED	SCHEDULE
SECT	SECTION
SHT	SHEET
SIM	SIMILAR
SJ	SAWCUT JOINT
SJI	STEEL JOIST INSTITUTE
SL	SLOPED
SLRS	SEISMIC LOAD RESISTING SYSTEM
SPA	SPACE(S)
SPECS	SPECIFICATIONS
SQ	SQUARE
SS	STAINLESS STEEL
SSL	SHORT SLOTTED HOLES
STD	STANDARD
STIFF	STIFFENERS
STL	STEEL
STRUCT	STRUCTURAL
SW	SHEAR WALL
SYMM	SYMMETRICAL
T&B	TOP AND BOTTOM
T&G	TONGUE AND GROOVE
TB	TIE BEAM
TC	TOP CHORD
TEMP	TEMPERATURE
TF	TRENCH FOOTING
THK	THICK
THKS	THICKENED SLAB
THR'D	THREADED
TL	TOTAL LOAD
TOP'G	TOPPING
TRANS	TRANSVERSE
TYP	TYPICAL
UNO	UNLESS NOTED OTHERWISE
VERT	VERTICAL
VIF	VERIFY IN FIELD
w/	WITH
WD	WOOD
WO	WINDOW OPENING
WP	WORKING POINT
WT	WEIGHT
WWF	WELDED WIRE FABRIC

ELEVATION TOP AND BOTTOM OF LIST

T/	ELEVATION, TOP OF
B/	ELEVATION, BOTTOM OF
T/BB	TOP OF BOND BEAM
T/BM	TOP OF BEAM
T/CONC	TOP OF CONCRETE
T/F	TOP OF FOOTING
T/LDG	TOP OF LEDGE
T/MAS	TOP OF MASONRY
T/P	TOP OF PIER
T/SLAB	TOP OF SLAB
T/STL	TOP OF STEEL
T/W	TOP OF WALL
T/GB	TOP OF GRADE BEAM
T/CAIS	TOP OF CAISSON
B/PL	BOTTOM OF PLATE
B/F	BOTTOM OF FOOTING

SYMBOLS

ø	DIAMETER
°	DEGREE
⊕	ELEVATION
±	PLUS OR MINUS

BAR DEVELOPMENT & SPLICE LENGTHS

BAR	TENSION DEVELOPMENT		SPLICES	
	TOP BAR *	OTHER	TOP BAR *	OTHER
#3	19"	15"	25"	19"
#4	25"	19"	33"	25"
#5	31"	24"	41"	31"
#6	37"	29"	49"	37"
#7	54"	42"	71"	54"
#8	62"	48"	81"	62"
#9	70"	54"	91"	70"
#10	79"	61"	102"	79"
#11	87"	67"	114"	87"

* USE TOP BAR LENGTHS WHEN BARS ARE PLACED SUCH THAT THERE IS MORE THAN 1'-0" OF CONCRETE BELOW BAR

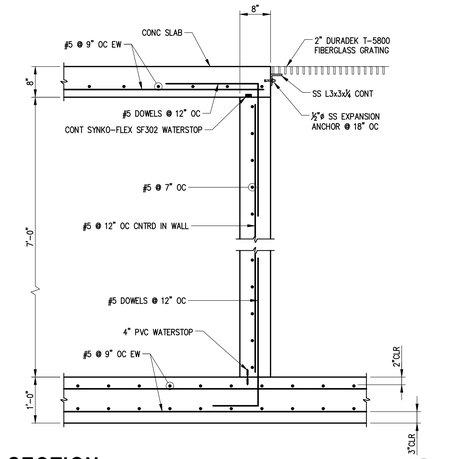

SECTION 04/AQ1.0

SCALE: NTS DET004_7020.0205

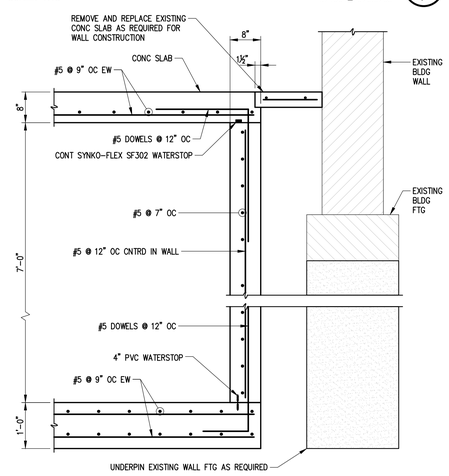

SECTION 05/AQ1.0

SCALE: NTS DET003_7020.0205

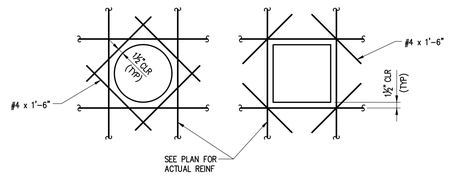

TYP REINFORCING AT EMBEDDED ITEMS 01/AQ1.0

SCALE: NTS POOL-001

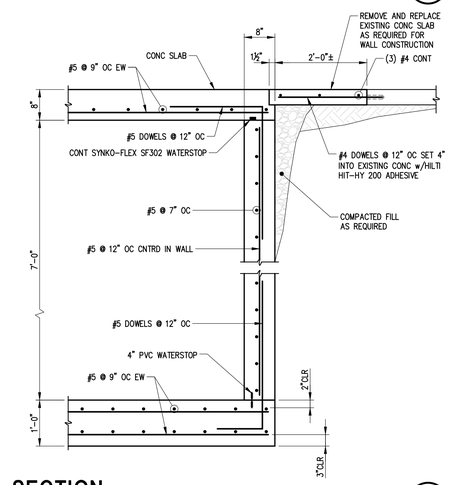

SECTION 02/AQ1.0

SCALE: NTS POOL-011

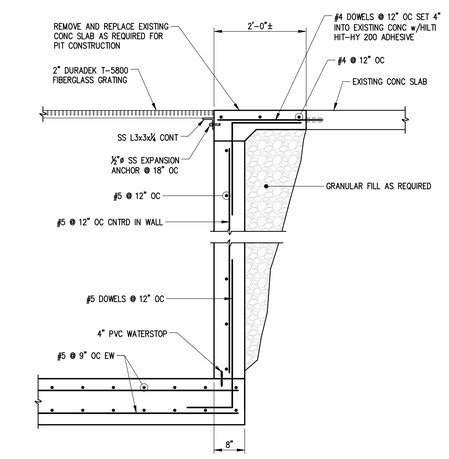

SECTION 03/AQ1.0

SCALE: NTS DET005_7020.0205

GENERAL SURGE TANK STRUCTURAL NOTES

PG1. Building Codes:
Model: International Building Code 2018
Concrete: American Concrete Institute ACI 318-14
American Concrete Institute ACI 350-06

PG2. The surge tank structure renovations have been designed to withstand all anticipated loadings under both full and empty conditions in accordance with the criteria of ACI 350.

PG3. The surge tank shell renovations have not been designed to withstand any surcharge loading from adjacent structures. Inform engineer immediately if adjacent structures are close to the pool shell.

PG4. Adequacy of the existing pool shell elements have not been evaluated and are not covered in the scope of these construction documents.

REINFORCED CONCRETE NOTES

PC1. Surge tank to be cast-in-place concrete.

PC2. All concrete shall be 4000 psi minimum 28 day compressive strength with 6% air entrainment. Limit water to cementitious material ratio (w/c) to 0.42.

PC3. All reinforcing steel shall be detailed, supplied and placed in accordance with these construction documents and with ACI 318-05, ACI 315-05, and CRSI MSP-1-01.

PC4. All reinforcing steel shall be shop fabricated to conform to ASTM A615, Grade 60.

PC5. All pool concrete shall be "wet" cured using hoses and polyethylene covering.

PC6. Reinforcing clearance: 2" Surge tank walls
2" Surge tank slabs
3" All surfaces cast against earth

STRUCTURAL DEMOLITION NOTES

D1. All shoring shall be in place before demolition begins.

D2. It is the Contractor's responsibility to select the appropriate shoring system for the loads and work indicated.

D3. Reactions and forces indicated for shoring are actual, working loads.

D4. If Drawings and specifications are in conflict, the most stringent restrictions and requirements shall govern. Contractor shall bring all discrepancies to the attention of the engineer immediately.

D5. Verify all existing conditions prior to any demolition, construction or fabrication. If different than shown, notify engineer/architect immediately for modification of drawings.

D6. All contractors are required to coordinate their work with all disciplines to avoid conflicts. The architectural, mechanical, electrical and plumbing aspects are not in the scope of these drawings. Therefore, all required materials and work may not be indicated. It is the contractor's responsibility to coordinate these drawings with all other construction documents. Refer to architectural drawings for all dimensions not shown on these drawings. Locations, sizes and numbers of all openings may not be completely indicated in the structural drawings, the respective contractor shall verify their work with all other disciplines.

D7. The contract documents represent the structure only. They do not indicate the method of demolition, shoring or construction. The contractor shall provide all measures necessary to protect the structure during demolition and construction. The Engineer of Record is not responsible for the contractor's means, methods, techniques, sequences or safety procedures during construction.

McCOMAS/ O'DONNELL & NACCARATO
STRUCTURAL ENGINEERS
O'DONNELL & NACCARATO, INC.
1717 EAST 116th STREET | SUITE 200 | CARMEL, INDIANA 46032
(317) 580-0402 | WWW.O-N.com | Project No: 7020.0205.00

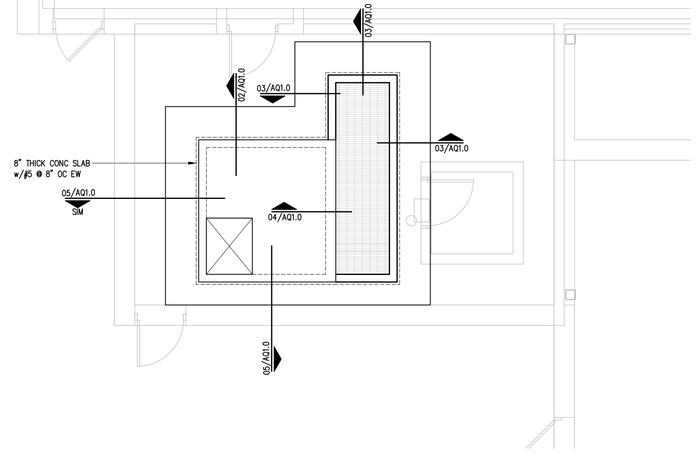

SURGE TANK TOP SLAB PLAN

SCALE: ¼" = 1'-0" 0'6" 1' 2' 4' 8'

PLAN NORTH

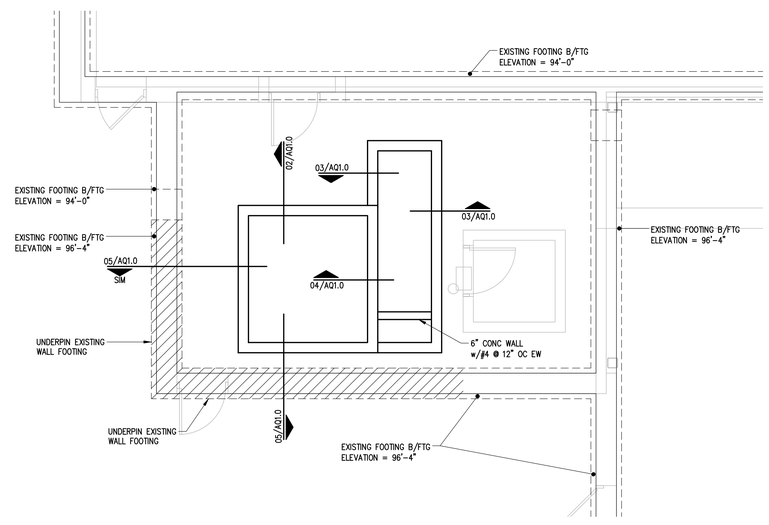

SURGE TANK BASE PLAN

SCALE: ¼" = 1'-0" 0'6" 1' 2' 4' 8'

PLAN NORTH

TMP ARCHITECTURE
TMP ARCHITECTURE INC
1191 WEST SQUARE LAKE ROAD
BLOOMFIELD HILLS • MICHIGAN • 48302
PH • 248.338.4561 FX • 248.338.0223
EM • INFO@TMP-ARCHITECTURE.COM

REGISTRATION SEAL

STATE OF MICHIGAN C. RODNEY McCOMAS ENGINEER No. 6201039008 LICENSED PROFESSIONAL ENGINEER

05-25-2023

CONSULTANT

COUNSILMAN•HUNSAKER
www.chh2o.com

PROJECT TITLE

Wylle Elementary School Pool Upgrades

Dexter Community Schools

DRAWING TITLE
SURGE TANK STRUCTURAL PLANS AND DETAILS

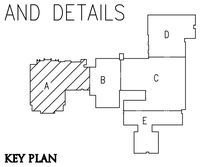

KEY PLAN

ISSUE DATES

DATE:	ISSUED FOR:
05-25-2023	CONSTRUCTION DOCUMENTS

DRAWN	KLT
CHECKED	TMM
APPROVED	CRM

PROJECT NO.
22072A

DRAWING NO.
AQ1.0

© 2023 COUNSILMAN•HUNSAKER

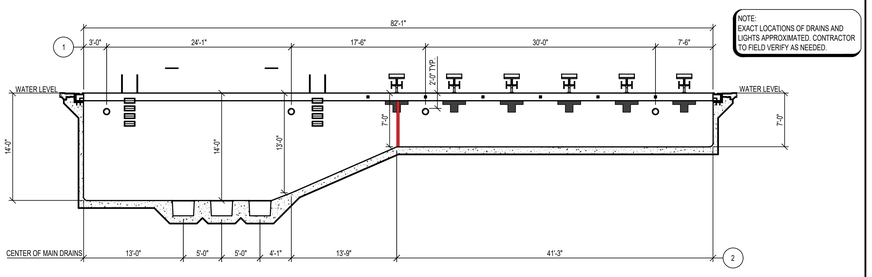

2 AQ2.0 COMPETITION POOL SECTION
1/8" = 1'-0"

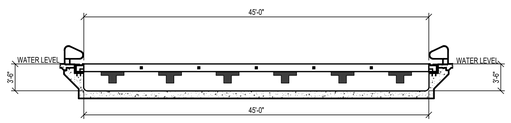

3 AQ2.0 COMPETITION POOL SECTION
1/8" = 1'-0"

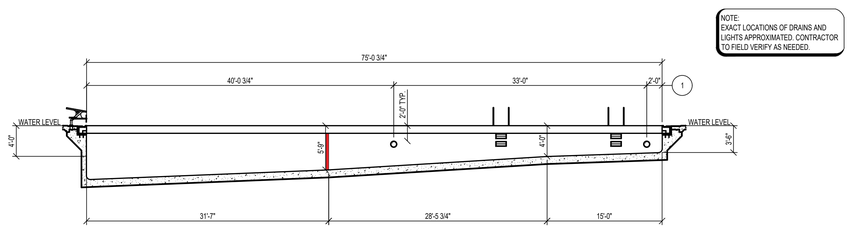

4 AQ2.0 COMPETITION POOL SECTION
1/8" = 1'-0"

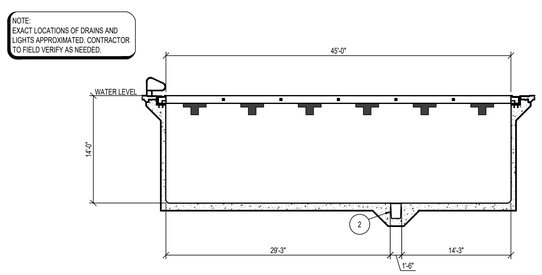

5 AQ2.0 COMPETITION POOL SECTION
1/8" = 1'-0"

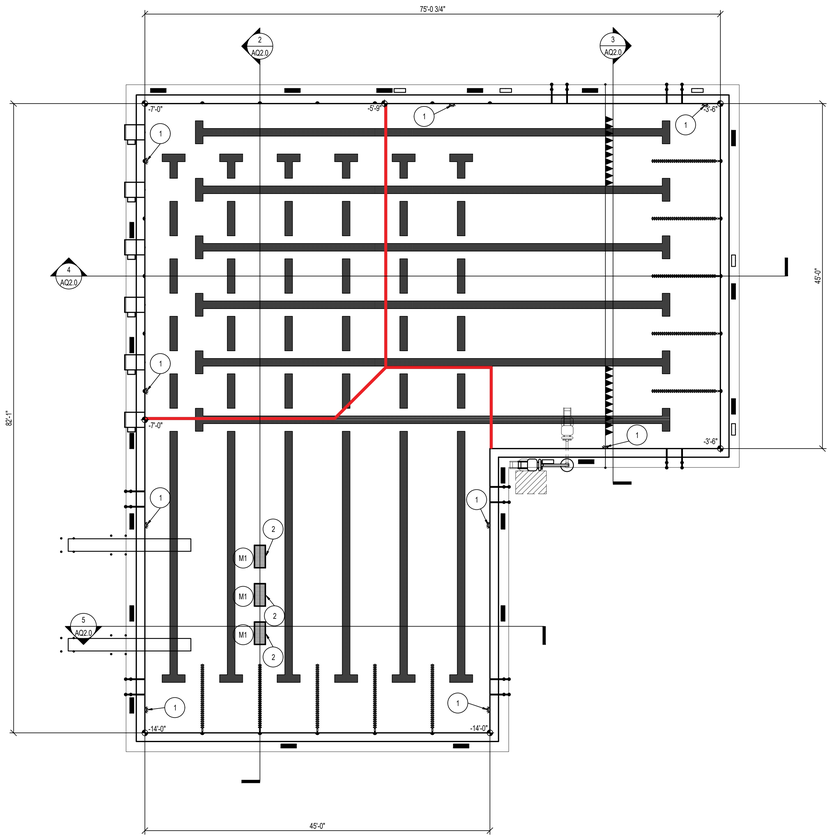

1 AQ2.0 COMPETITION POOL PLAN
1/8" = 1'-0"

EQUIPMENT SCHEDULE

ID	ITEM
1	UNDERWATER LIGHT REFER: 2/AQ4.2
2	MAIN DRAIN REFER: 13/AQ4.2

TMP ARCHITECTURE

TMP ARCHITECTURE INC
1191 WEST SQUARE LAKE ROAD
BLOOMFIELD HILLS · MICHIGAN · 48302
PH · 248.338.4561 FX · 248.338.0223
EM · INFO@TMP-ARCHITECTURE.COM

REGISTRATION SEAL

STATE OF MICHIGAN
CARL P. NYLANDER
ENGINEER
NO. 6201066291
LICENSED PROFESSIONAL ENGINEER

05-25-2023

CONSULTANT

COUNSILMAN•HUNSAKER
www.chh2o.com

PROJECT TITLE

Wylie Elementary School Pool Upgrades

Dexter Community Schools

DRAWING TITLE
COMPETITION POOL PLAN & SECTIONS

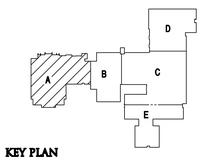

KEY PLAN

ISSUE DATES

DATE:	ISSUED FOR:
05-25-2023	CONSTRUCTION DOCUMENTS

DRAWN	CJL
CHECKED	NRK
APPROVED	CPN

PROJECT NO.
22072A

DRAWING NO.
AQ2.0

© 2023 COUNSILMAN•HUNSAKER

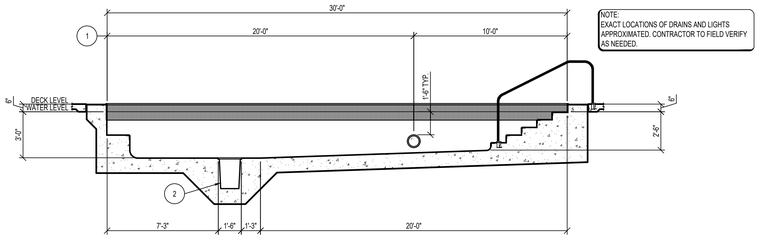

2 AQ3.0 INSTRUCTIONAL POOL SECTION

1/4" = 1'-0"

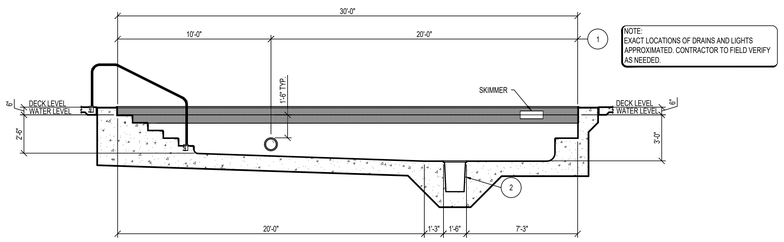

3 AQ3.0 INSTRUCTIONAL POOL SECTION

1/4" = 1'-0"

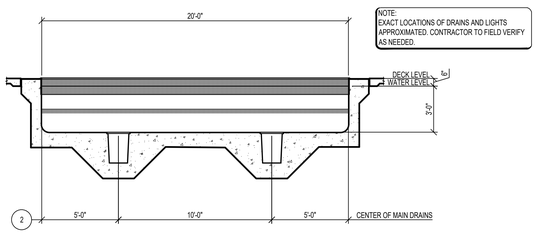

4 AQ3.0 INSTRUCTIONAL POOL SECTION

1/4" = 1'-0"

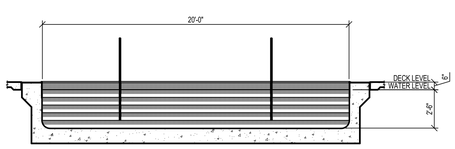

5 AQ3.0 INSTRUCTIONAL POOL SECTION

1/4" = 1'-0"

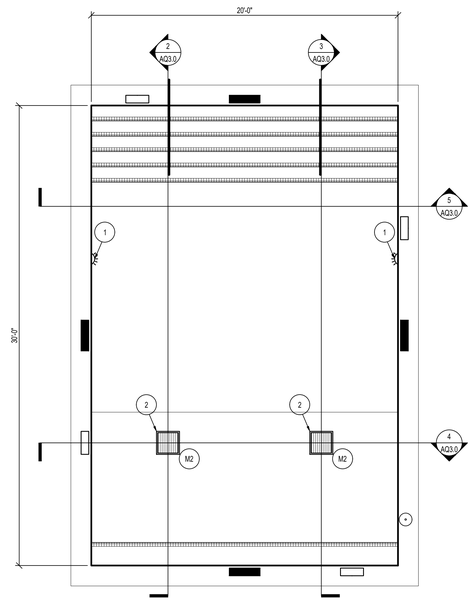

1 AQ3.0 INSTRUCTIONAL POOL PLAN

1/4" = 1'-0"

EQUIPMENT SCHEDULE

ID	ITEM
1	UNDERWATER LIGHT REFER: 2/AQ4.2
2	MAIN DRAIN REFER: 13/AQ4.2

TMP ARCHITECTURE

TMP ARCHITECTURE INC

1191 WEST SQUARE LAKE ROAD
BLOOMFIELD HILLS · MICHIGAN · 48302
PH · 248.338.4561 FX · 248.338.0223
EM · INFO@TMP-ARCHITECTURE.COM

REGISTRATION SEAL

STATE OF MICHIGAN
CARL P. NYLANDER
ENGINEER
NO. 6201066291
LICENSED PROFESSIONAL ENGINEER

05-25-2023

CONSULTANT

COUNSILMAN•HUNSAKER
www.chh2o.com

PROJECT TITLE

Wylie Elementary School Pool Upgrades

Dexter Community Schools

DRAWING TITLE

INSTRUCTIONAL POOL PLAN & SECTIONS

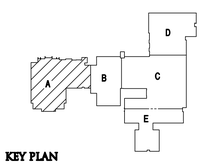

KEY PLAN

ISSUE DATES

DATE:	ISSUED FOR:
05-25-2023	CONSTRUCTION DOCUMENTS

DRAWN	CJL
CHECKED	NRK
APPROVED	CPN

PROJECT NO.

22072A

DRAWING NO.

AQ3.0

© 2023 COUNSILMAN•HUNSAKER

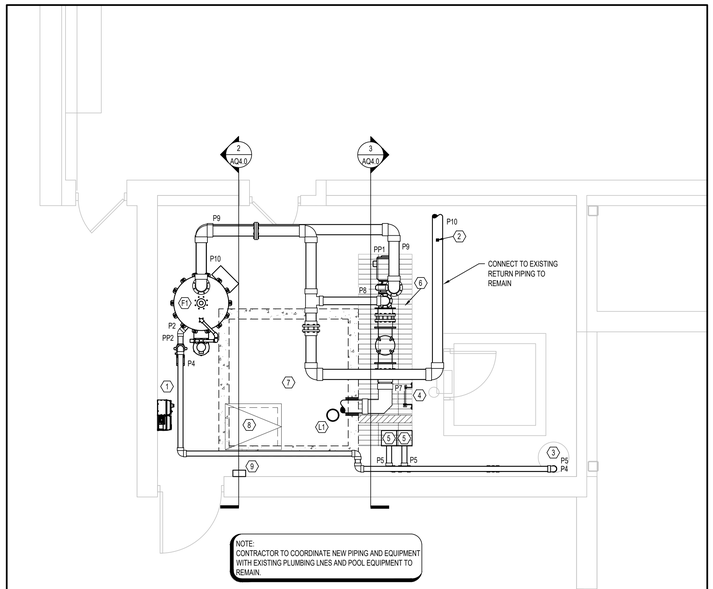

1 AQ4.0 POOL MECHANICAL ROOM PLAN

1/4" = 1'-0"

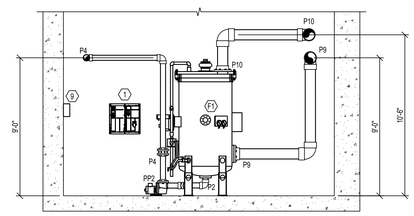

2 AQ4.0 POOL MECHANICAL ROOM SECTION

1/4" = 1'-0"

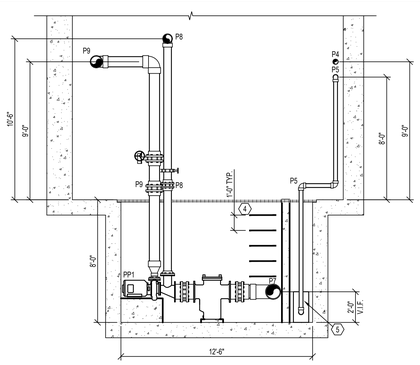

3 AQ4.0 POOL MECHANICAL ROOM SECTION

1/4" = 1'-0"

EQUIPMENT SCHEDULE

ID	ITEM
1	VARIABLE FREQUENCY DRIVE AND BYPASS PANEL
2	FLOW METER SENSOR REFER: 4/AQ4.2
3	EXISTING BACKWASH FUNNEL
4	LADDER RUNGS
5	GOULDS WE1034H SUMP PUMP
6	12'-6"X3'-6"X5'-0" DEEP PUMP PIT
7	7'-9.25"X8'-3.25"X7'-0" DEEP SURGE TANK
8	SURGE TANK ACCESS HATCH REFER: 1/AQ4.3
9	EXISTING WATER LEVEL CONTROLLER

GENERAL POOL MECHANICAL ROOM NOTES

1. PUMP PIT FLOOR MUST SLOPE 1/4" TO 1/2" PER FOOT TO FLOOR DRAINS OR SUMP PIT. REFER TO PLUMBING.
2. THE FOLLOWING INFORMATION MUST BE LAMINATED AND POSTED IN THE POOL MECHANICAL ROOM: BACKWASH PROCEDURE, POOL FILLING AND DRAINING, VALVE REFERENCE CHART, POOL MECHANICAL ROOM PLAN, POOL PIPING SCHEMATICS, AND POOL SYSTEMS SCHEMATICS.

PIPING

1. MINIMUM 7'-0" CLEARANCE BENEATH ALL OVERHEAD PIPING.
2. PROVIDE AND SUPPORT OVERHEAD AND VERTICAL PIPING PER SPECIFICATION REQUIREMENTS.
3. LABEL AND IDENTIFY ALL PIPING IN COMPLIANCE WITH THE SPECIFICATIONS.
4. ALL FLOW METERS MUST BE SIZED TO MATCH THE PIPE ON WHICH IT IS INSTALLED. PROVIDE PRESSURE GAUGES ON INFLUENT AND EFFLUENT SIDE OF EACH FILTRATION SYSTEM AND A FULL LINE SIZE FLOW METER ON FILTER RETURN.
5. HYDROSTATICALLY TEST ALL PIPING AT 50 PSI FOR TWO HOURS AND MAINTAIN A PRESSURE OF 20 PSI IN ALL PIPING THROUGHOUT CONSTRUCTION. SECURE ALL FIXTURES PER SPECIFICATION REQUIREMENTS BEFORE HYDROSTATIC TEST.
6. REFER TO DETAILS 7-12 ON DRAWING AQ4.2 FOR INSTALLATION OF PIPE SUPPORTS.
7. ALL VALVE HARDWARE MUST BE 316L STAINLESS STEEL AND MEET ANSI HARDWARE INSTALLATION GUIDELINES. REFER: 16/AQ4.2.

CHEMICAL TREATMENT

1. CHEMICAL FEED REQUIREMENTS - REFER TO THE POOL SYSTEMS SCHEMATIC(S) ON AQ5.0
2. INTERLOCK POOL RECIRCULATION PUMP(S) WITH ITS CORRESPONDING WATER CHEMISTRY CONTROLLER, CHEMICAL FEED PUMP(S) AND HEATER(S).
3. SAMPLE FEED PIPING TO/FROM THE RECIRCULATION SYSTEM TO THE WATER CHEMISTRY CONTROLLER MUST BE PIPED PER THE SYSTEMS SCHEMATIC. BYPASS PIPING MUST BE SADDLED OR TEED. NO TAPPING OR DRILLING INTO THE PIPING WILL BE ALLOWED.
4. INSTALL SANITIZER INJECTION POINT DOWNSTREAM OF PH BUFFER INJECTION POINT ON FILTERED WATER RETURN PIPE. CHEMICAL INJECTION POINTS MUST BE LOCATED DOWNSTREAM OF ALL OTHER EQUIPMENT/SYSTEMS IN THE POOL MECHANICAL ROOM AT A MAXIMUM HEIGHT OF 7'-0" ABOVE FINISHED FLOOR. REFER: 3/AQ4.2.

ELECTRICAL

1. GFCI'S PROVIDED AT OUTLETS. REFER TO ELECTRICAL.
2. CONDUIT MUST BE ROUTED OVERHEAD OR BELOW GRADE.
3. PROVIDE SUMP PUMPS WITH EMERGENCY POWER OR BATTERY BACK UP.

FILTER SCHEDULE

ID	POOL	MANUFACTURER	FILTER MODEL	QTY.	FILTRATION TYPE	MAXIMUM FILTRATION RATE (GPM/SQ. FT)	REQUIRED FILTRATION AREA (SQ. FT.)	DESIGN FILTRATION RATE (GPM/SQ.FT.)	DESIGN FILTRATION AREA (SQ. FT.)	BACKWASH FLOW RATE PER FILTER (GPM)	NOTES
F1	COMPETITION	PADDOCK	PPEC 700S	1	RMF	1.13	615.40	1.30	707.30	100	1-8

NOTE:
1. ALL FILTER SUPPORTS MUST BE SEISMICALLY RATED FOR THE SEISMIC ZONE IN WHICH IT IS INSTALLED IN ACCORDANCE WITH LOCAL AND/OR STATE REQUIREMENTS.
2. FILTER MANUFACTURER MUST CERTIFY FILTER MEDIA.
3. VALVES MUST BE PROVIDED TO BACKWASH THE FILTER VESSEL INDEPENDENTLY.
4. THE BACKWASH PIPING MUST TERMINATE NO CLOSER THAN 6" ABOVE THE FLOOD RIM OF THE BACKWASH CATCH BASIN OR TWICE THE PIPE DIAMETER, WHICHEVER IS GREATER.
5. FILTER TANK ASSEMBLIES MUST BEAR THE NATIONAL SANITATION FOUNDATION SEAL OF APPROVAL FOR A MAXIMUM FLOW RATE OF 1.6 GPM PER SQUARE FOOT OF FILTER MEDIA.
6. PROVIDE HARD PLUMBED SCHEDULE 80 PIPE FROM BOTTOM OF THE FILTER TANK TO WASTE PIT IN ORDER TO MECHANICALLY DRAIN TANK AND MEDIA ON AN NEEDED BASIS.
7. PROVIDE NON-HAZARDOUS, NON-TOXIC, FILTER MEDIA, PARTICLE SIZE MUST HAVE MEDIAN PORE SIZE OF NO GREATER THAN 20 MICRONS.
8. FINAL FILTER LOCATION BE VERFIED IN THE FIELD TO AVOID EXISTING STRUCTURES.

MAIN DRAIN SCHEDULE

ID	DESCRIPTION	SIZE	QTY	DESIGN FLOW (GPM)	DESIGN VELOCITY (FPS)	MFG ALLOWABLE FLOW @ COVER (GPM)	MODEL	MANUFACTURER	NOTES
M1	COMPETITION POOL	18X18	6	800	0.70	1632	MLD-FGD-1818	EVOQUA	1-7
M2	INSTRUCTIONAL POOL	12X12	2	100	0.40	365	MLD-FGD-1212	EVOQUA	1-7

NOTE:
1. MAIN DRAIN GRATING MUST BE MANUFACTURED BY EVOQUA, DALDORADO, OR APPROVED EQUAL.
2. MAXIMUM FACE VELOCITY MUST NOT EXCEED 1.5 FEET PER SECOND.
3. OPEN AREA IS BASED ON MANUFACTURER'S DATA.
4. THE INSTALLED LIFE OF THE MAIN DRAIN COVER MUST BE A MINIMUM OF10 YEARS.
5. ALL MAIN DRAINS MUST BE INSTALLED IN THE POOL FLOOR FASTEN MAIN DRAIN COVER TO EMBEDDED PVC FRAME/POOL FLOOR WITH S/S TAMPER PROOF FASTENERS AT A SPACING NO GREATER THAN 24" O.C. REFER TO FRAME AND GRATE MANUFACTURER'S INSTALLATION INSTRUCTIONS.
6. PROVIDE WATER BONDING FITTING IN MAIN DRAIN SUMP AT DEEPEST SECTION OF THE POOL. BASIS OF DESIGN: PERMA-CAST SWIMMING POOL PRODUCTS MODEL PB-BK-20. REFER: 15/AQ4.2.
7. CONTRACTOR TO FIELD VERIFY EXISTING MAIN DRAIN SUMPS INCLUDING SIZES AND CONDITION PRIOR TO ORDERING.

PUMP SCHEDULE

ID	DESCRIPTION	MANUFACTURER	MODEL	SIZE	GPM	TDH	HP	NOTES
PP1	COMPETITION POOL RECIRCULATION PUMP REFER: 1/AQ4.1	PACO	40957 LC	256JM	800	65	20	1-4,6,7
PP2	TRASH PUMP REFER: 4/AQ4.3	NEPTUNE BENSON	393A-95	184JM	100	60	5	1-3,5-7

NOTE:
1. THE MANUFACTURER INDICATED IS BASIS OF DESIGN. PUMP MANUFACTURERS: GRISWOLD, HERBORNER, PACO OR AURORA MUST BE CONSIDERED EQUAL PROVIDED THEY MEET SPECIFICATIONS AS INDICATED IN BID DOCUMENTS.
2. POOL PUMPS AND STRAINERS MUST BE INSTALLED ON HOUSEKEEPING PADS.
3. PROVIDE INFLUENT AND EFFLUENT GAUGES FOR EACH PUMP. PRESSURE GAUGES HAVE A RANGE OF 0-60 PSI. COMPOUND GAUGES HAVE A RANGE OF 0-30 HG / 0-60 PSI.
4. PROVIDE WITH 460 VOLT, 3 PHASE, 60HZ, 1760 RPM MOTOR.
5. PROVIDE WITH 460 VOLT, 3 PHASE, 3450 RPM MOTOR.
6. PROVIDE WITH CHECK VALVE.
7. PROVIDE VARIABLE FREQUENCY DRIVE.

PIPE SCHEDULE

ID	DESCRIPTION
P1	10" FROM M1 TO SURGE TANK
P2	4" FROM F1 TO PP2
P3	6" FROM POOL SURGE TANK OVERFLOW TO SUMP
P4	4" PP2 TO BACKWASH FUNNEL
P5	3" FROM SUMP PUMP(S) TO BACKWASH FUNNEL
P6	10" FROM COMPETITION POOL GUTTER DROPOUT BOXES TO SURGE TANK
P7	10" FROM SURGE TANK TO PP1
P8	6" PRECOAT LINE FROM P10 TO PP1
P9	8" FROM PP1 TO F1
P10	8" FROM F1 TO EXISTING PIPING
P11	8" FROM POOL FILL FUNNEL TO SURGE TANK
P12	4" FROM SURGE TANK TO SUMP

TMP ARCHITECTURE

TMP ARCHITECTURE INC
1191 WEST SQUARE LAKE ROAD
BLOOMFIELD HILLS · MICHIGAN · 48302
PH · 248.338.4561 FX · 248.338.0223
EM · INFO@TMP-ARCHITECTURE.COM

REGISTRATION SEAL

STATE OF MICHIGAN
CARL P. NYLANDER
ENGINEER
NO. 6201066291
LICENSED PROFESSIONAL ENGINEER

05-25-2023

CONSULTANT

COUNSILMAN•HUNSAKER
www.chh2o.com

PROJECT TITLE

Wylie Elementary School Pool Upgrades

Dexter Community Schools

DRAWING TITLE

POOL MECHANICAL ROOM PLAN & SECTIONS

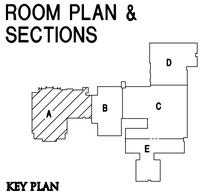

KEY PLAN

ISSUE DATES

05-25-2023	CONSTRUCTION DOCUMENTS

DATE:	ISSUED FOR:
DRAWN	CJL
CHECKED	NRK
APPROVED	CPN

PROJECT NO.

22072A

DRAWING NO.

AQ4.0

© 2023 COUNSILMAN•HUNSAKER

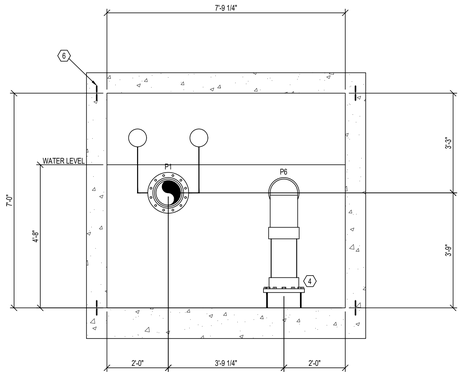

4 AQ4.1 SURGE TANK SECTION
1/2" = 1'-0"

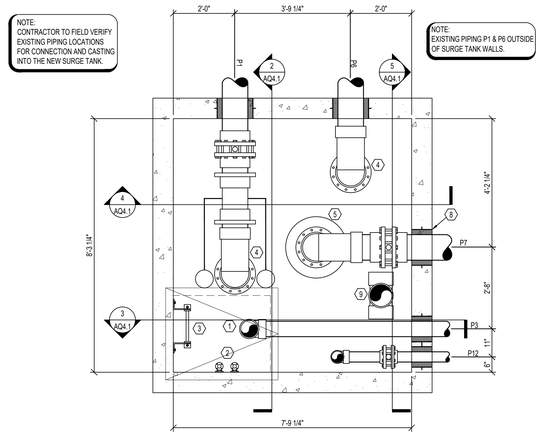

1 AQ4.1 SURGE TANK PLAN
1/2" = 1'-0"

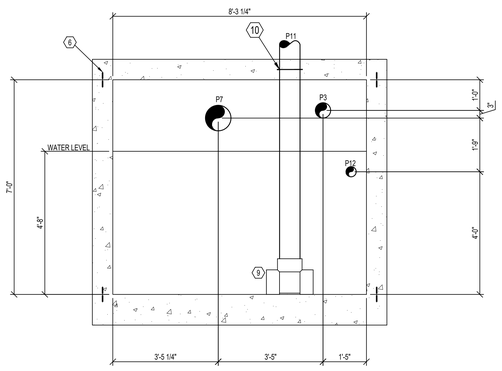

5 AQ4.1 SURGE TANK SECTION
1/2" = 1'-0"

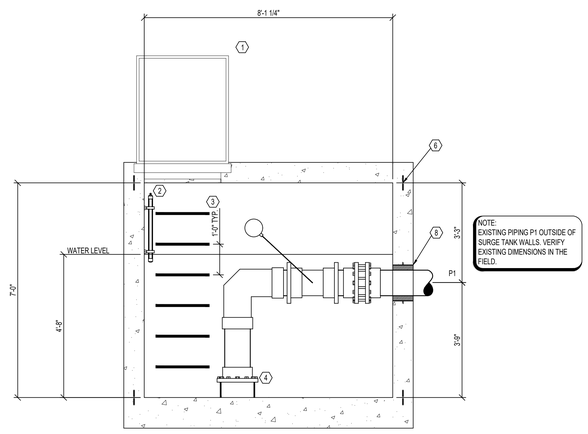

2 AQ4.1 SURGE TANK SECTION
1/2" = 1'-0"

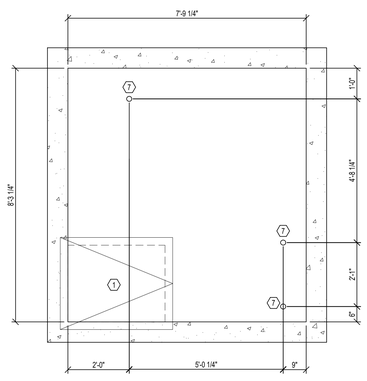

6 AQ4.1 SURGE TANK VALVE EXTENSION PLAN
1/2" = 1'-0"

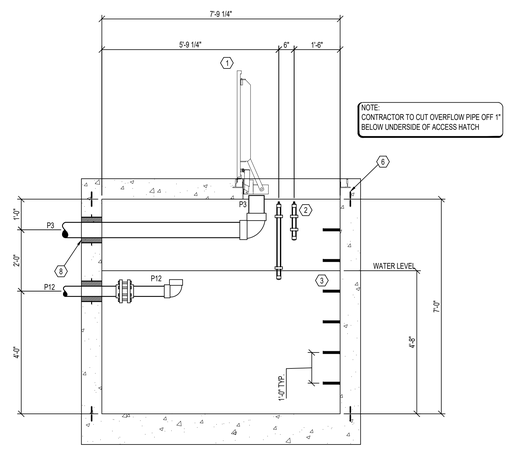

3 AQ4.1 SURGE TANK SECTION
1/2" = 1'-0"

SURGE TANK NOTES

1. A WATERPROOFING COATING MUST BE PROVIDED TO ALL INTERIOR SURFACES OF SURGE TANK INCLUDING LID.
2. PROVIDE WATER TIGHT PIPE PENETRATIONS AND INTERFACES WITHIN THE SURGE TANK.
3. REFER TO POOL STRUCTURAL DRAWINGS FOR SURGE TANK STRUCTURAL SHELL DESIGN.
4. SLEEVES IN SLAB OVER SURGE TANK FOR VALVE EXTENSIONS POSITIONED DIRECTLY ABOVE SURGE TANK VALVES BELOW MUST BE COORDINATED.
5. DRILL 1" DIAMETER HOLE ON TOP OF ELBOW. TYPICAL ALL GUTTER DROPOUT LINES.
6. LADDER RUNGS MUST BE PROVIDED.
7. REFER TO POOL STRUCTURAL DRAWINGS FOR WATER STOPS.
8. PVC ANTI-VORTEX PLATE MUST BE MINIMUM 2.5 TIMES CONNECTING PIPE DIAMETER UP TO 24" AND 4" A.F.F.
9. SUPPORT FLANGE WITH FOUR (4) LEGS EQUAL TO NOMINAL PIPE DIAMETER, BUT NOT LESS THAN 6" A.F.F.

PIPE SCHEDULE

ID	DESCRIPTION
P1	10" FROM M1 TO SURGE TANK
P2	4" FROM F1 TO PP2
P3	6" FROM POOL SURGE TANK OVERFLOW TO SUMP
P4	4" PP2 TO BACKWASH FUNNEL
P5	3" FROM SUMP PUMP(S) TO BACKWASH FUNNEL
P6	10" FROM COMPETITION POOL GUTTER DROPOUT BOXES TO SURGE TANK
P7	10" FROM SURGE TANK TO PP1
P8	6" PRECOAT LINE FROM P10 TO PP1
P9	8" FROM PP1 TO F1
P10	8" FROM F1 TO EXISTING PIPING
P11	8" FROM POOL FILL FUNNEL TO SURGE TANK
P12	4" FROM SURGE TANK TO SUMP

EQUIPMENT SCHEDULE

ID	ITEM
1	ACCESS HATCH REFER: 1/AQ4.3
2	WATER LEVEL CONTROLLER(S) REFER: 3/AQ4.3
3	LADDER RUNGS
4	SUPPORT FLANGE
5	ANTI-VORTEX PLATE
6	WATERSTOP
7	VALVE EXTENSION REFER: 2/AQ4.3
8	LINK SEAL REFER: 6/AQ4.2
9	SUPPORT TEE REFER: 5/AQ4.3
10	WATER SEAL REFER: 5/AQ4.2

TMP ARCHITECTURE

TMP ARCHITECTURE INC
1191 WEST SQUARE LAKE ROAD
BLOOMFIELD HILLS · MICHIGAN · 48302
PH · 248.338.4561 FX · 248.338.0223
EM · INFO@TMP-ARCHITECTURE.COM

REGISTRATION SEAL

STATE OF MICHIGAN
CARL P. NYLANDER
ENGINEER
NO. 6201066291
LICENSED PROFESSIONAL ENGINEER

05-25-2023

CONSULTANT

COUNSILMAN•HUNSAKER
www.chh2o.com

PROJECT TITLE

Wylie Elementary School Pool Upgrades

Dexter Community Schools

DRAWING TITLE

SURGE TANK PLAN & SECTIONS

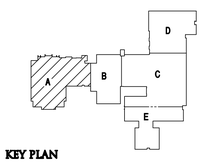

KEY PLAN

ISSUE DATES

DATE:	ISSUED FOR:
05-25-2023	CONSTRUCTION DOCUMENTS

DRAWN	CJL
CHECKED	NRK
APPROVED	CPN

PROJECT NO.

22072A

DRAWING NO.

AQ4.1

© 2023 COUNSILMAN•HUNSAKER

NOTE:
1. CONTRACTOR TO REPLACE MAIN DRAIN GRATING ONLY. VERIFY EXISTING INSTALLED CONDITIONS ONCE THE POOL IS DRAINED INCLUDING ANGLE SUPPORTS FOR THE DRAIN COVERS. SEPARATION OF THE SUCTION LINE FROM THE UNDERSIDE OF THE COVER, AND PROPER OPERATION OF THE HYDROSTATIC RELIEF VALVES.
2. ALL MAIN DRAINS MUST BE CONSTRUCTED TO COMPLY WITH THE VIRGINIA GRAEME BAKER ACT AND ASME ANSI/APSP-16-2017.
3. MAIN DRAINS MAY USE MULTIPLE VGB COMPLIANT GRATES SECURELY FASTENED PER MANUFACTURER RECOMMENDATIONS.

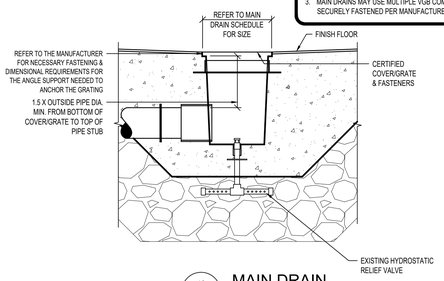

13 / AQ4.2 MAIN DRAIN
3/4" = 1'-0"

NOTE:
BASIS OF DESIGN: COOPER B-LINE. ALTERNATE MANUFACTURER GRINELL OR APPROVED EQUAL.

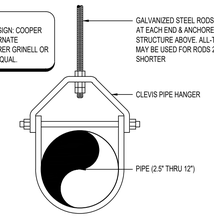

9 / AQ4.2 CLEVIS PIPE HANGER
1-1/2" = 1'-0"

NOTE:
1. WATER SEALS MUST BE LOCATED AT THE CENTERLINE OF THE WALL OR SLAB PRIOR TO PLACEMENT OF CONCRETE TO ENSURE A WATERTIGHT SEAL.
2. PROVIDE 1 1/2" MINIMUM CONCRETE COVERAGE BETWEEN ADJACENT REBAR AND WATER SEAL.

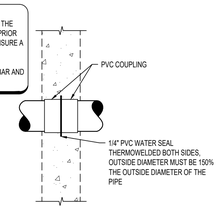

5 / AQ4.2 WATER SEAL
1" = 1'-0"

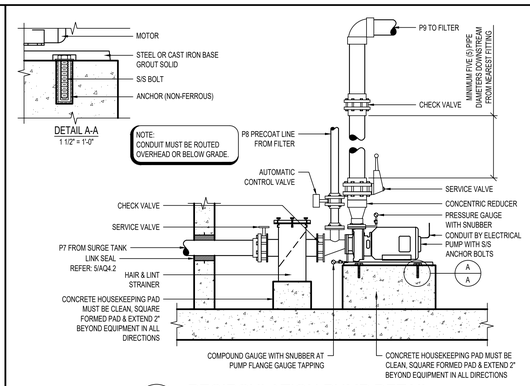

1 / AQ4.2 RECIRCULATION PUMP DETAIL
1/2" = 1'-0"

NOTE:
1. ALL BONDING PER NEC 680. SEE DRAWINGS AND SPECIFICATIONS. COORDINATE WITH ELECTRICAL.
2. ANY METAL PARTS OF ELECTRICAL EQUIPMENT IN CONTACT WITH POOL RECIRCULATION SYSTEM MUST BE BONDED.
3. DRAWINGS FOR REFERENCE ONLY.

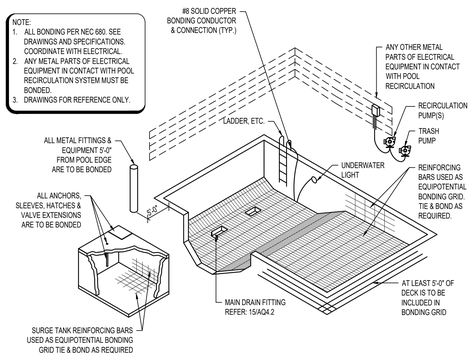

14 / AQ4.2 TYPICAL POOL BONDING DETAIL
NTS

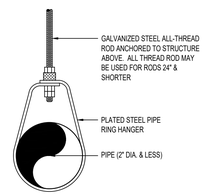

NOTE:
BASIS OF DESIGN: COOPER B-LINE. ALTERNATE MANUFACTURER GRINELL OR APPROVED EQUAL.

10 / AQ4.2 SWIVEL RING PIPE HANGER
1-1/2" = 1'-0"

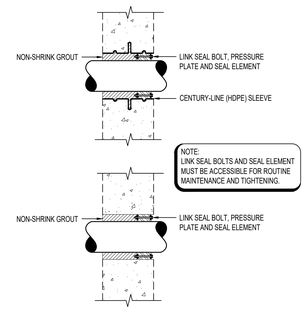

6 / AQ4.2 LINK SEAL
3/4" = 1'-0"

NOTE:
1. PROVIDE SUFFICIENT CORD AND COIL AROUND LIGHT FIXTURE FOR DECK RELAMPING.
2. SEAL CONDUIT INSIDE LIGHT NICHE WITH POTTING COMPOUND.

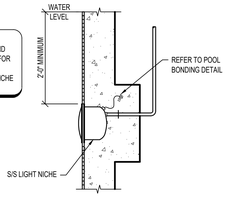

2 / AQ4.2 UNDERWATER LIGHT
3/4" = 1'-0"

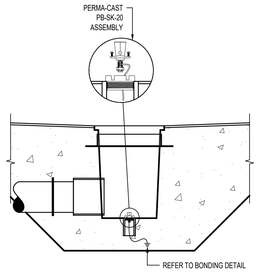

15 / AQ4.2 MAIN DRAIN BONDING DETAIL
3/4" = 1'-0"

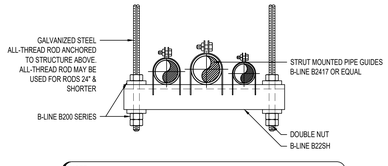

NOTE:
1. COOPER B-LINE (BASIS OF DESIGN) ALTERNATE MANUFACTURERS UNISTRUT OR PRE APPROVED EQUAL.
2. REFER TO THE PROJECT MANUAL FOR FINISH REQUIREMENT.
3. CONTRACTOR MUST FOLLOW ALL RECOMMENDATIONS FROM MANUFACTURER.

11 / AQ4.2 TRAPEZE HANGER
3" = 1'-0"

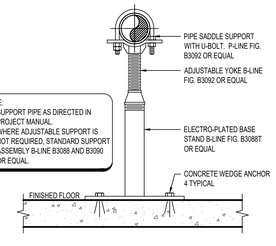

7 / AQ4.2 FLOOR MOUNTED PIPE SUPPORT
3" = 1'-0"

NOTE:
1. CHEMICAL INJECTIONS MUST BE SCH 80 PVC SADDLES OR SCH 80 PVC TEE FITTINGS WITH REDUCER BUSHING.
2. POOL CONTRACTOR CAN ELECT TO USE TEE FITTINGS WITH REDUCER BUSHINGS OR SCH 80 PVC SADDLES FOR BOTH THE PH CHEMICAL INJECTION AND THE SANITIZER INJECTION. CHEMICAL INJECTION MUST NOT BE TAPPED INTO RECIRCULATION PIPING.
3. INSTALL SANITIZER INJECTION POINT DOWNSTREAM OF PH BUFFER INJECTION POINT. REFER TO SYSTEMS SCHEMATIC.

DO NOT DRILL AND TAP POOL PIPING

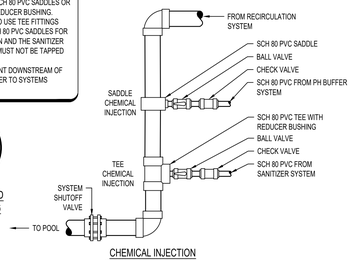

CHEMICAL INJECTION INSTALLATION OPTIONS

3 / AQ4.2 CHEMICAL INJECTION
1/2" = 1'-0"

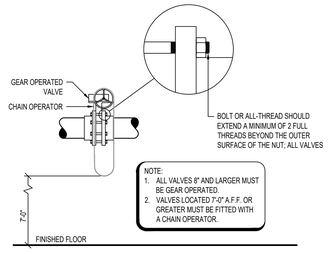

16 / AQ4.2 VALVE
1/2" = 1'-0"

NOTE:
1. MUST BE FIGURE B3064 BY B-LINE OR EQUAL.
2. BRACKET MUST HAVE AN ELECTRO-PLATED FINISH.
3. FOLLOW MANUFACTURERS RECOMMENDATIONS FOR MAX. LOADING AND ATTACHMENT REQUIREMENTS.

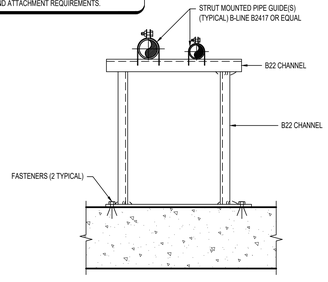

12 / AQ4.2 FLOOR MOUNTED ADJUSTABLE STRUT BRACKET
3" = 1'-0"

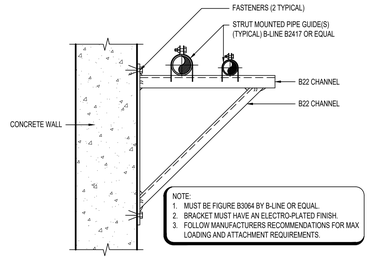

NOTE:
1. MUST BE FIGURE B3064 BY B-LINE OR EQUAL.
2. BRACKET MUST HAVE AN ELECTRO-PLATED FINISH.
3. FOLLOW MANUFACTURERS RECOMMENDATIONS FOR MAX. LOADING AND ATTACHMENT REQUIREMENTS.

8 / AQ4.2 ADJUSTABLE STRUT BRACKET
3" = 1'-0"

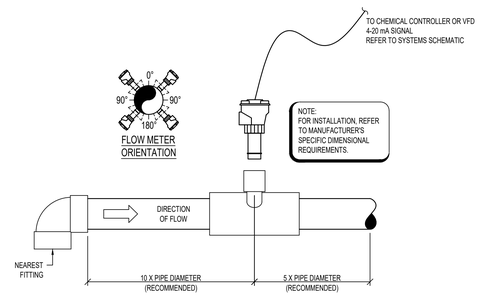

4 / AQ4.2 FLOW METER SENSOR
3/4" = 1'-0"

TMP ARCHITECTURE

TMP ARCHITECTURE INC
1191 WEST SQUARE LAKE ROAD
BLOOMFIELD HILLS · MICHIGAN · 48302
PH · 248.338.4561 FX · 248.338.0223
EM · INFO@TMP-ARCHITECTURE.COM

REGISTRATION SEAL

STATE OF MICHIGAN
CARL P. NYLANDER
ENGINEER
NO. 6201066291
LICENSED PROFESSIONAL ENGINEER

05-25-2023

CONSULTANT

COUNSILMAN•HUNSAKER
www.chh2o.com

PROJECT TITLE
Wylie Elementary School Pool Upgrades

Dexter Community Schools

DRAWING TITLE
POOL & MECHANICAL ROOM DETAILS

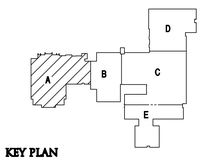

KEY PLAN

ISSUE DATES

DATE:	ISSUED FOR:
05-25-2023	CONSTRUCTION DOCUMENTS

DRAWN	CJL
CHECKED	NRK
APPROVED	CPN

PROJECT NO.
22072A

DRAWING NO.
AQ4.2

© 2023 COUNSILMAN•HUNSAKER

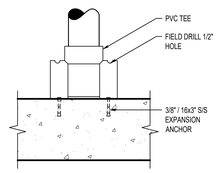

5 / AQ4.3 SUPPORT TEE
1" = 1'-0"

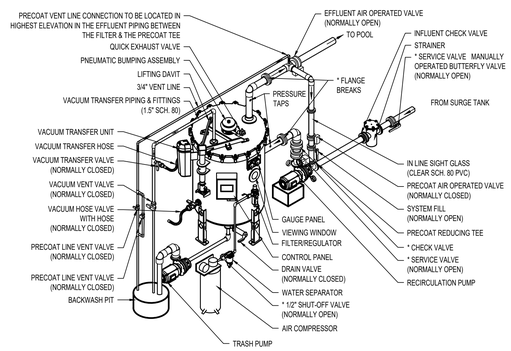

NOTE:
1. INSTALL EFFLUENT VALVE AS CLOSE AS POSSIBLE TO PRECOAT TEE.
2. REFER TO MECHANICAL ROOM LAYOUT AND PIPE SCHEDULE FOR PIPE SIZES.
3. AUXILIARY EQUIPMENT MUST BE LOCATED DOWNSTREAM OF THE EFFLUENT VALVE.
4. ALL PNEUMATIC ACTUATORS SHOULD BE INSTALLED SO VALVE POSITION IS VISIBLE FROM FLOOR.
5. * - INDICATED VALVES AND FLANGES THAT MUST BE PURCHASED OUTSIDE THE FILTER PACKAGE.

6 / AQ4.3 AUTOMATIC REGENERATIVE MEDIA SCHEMATIC
NTS

NOTE:
FRAME AREAS THAT COME IN CONTACT WITH CONCRETE MUST BE COATED WITH BITUMINOUS PAINT.

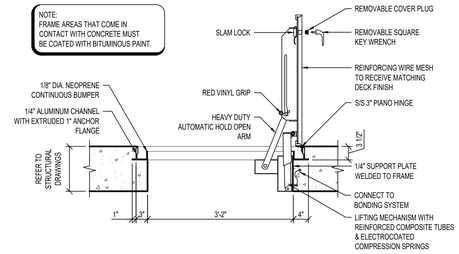

1 / AQ4.3 SURGE TANK ACCESS HATCH
3/4" = 1'-0"

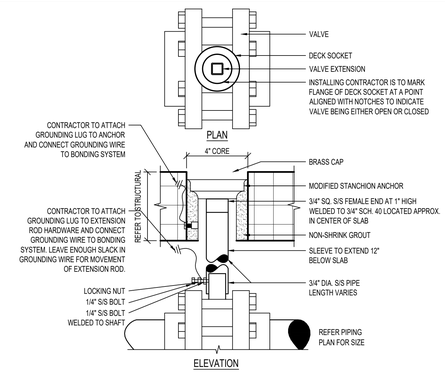

2 / AQ4.3 VALVE EXTENSION
3" = 1'-0"

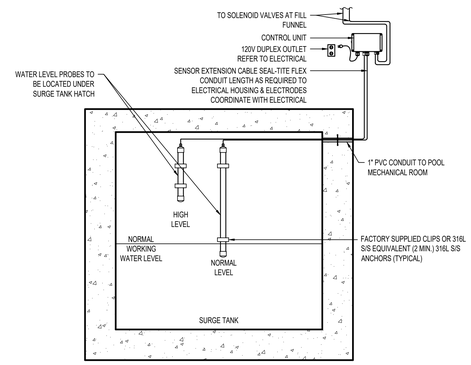

3 / AQ4.3 WATER LEVEL CONTROLLER
3/4" = 1'-0"

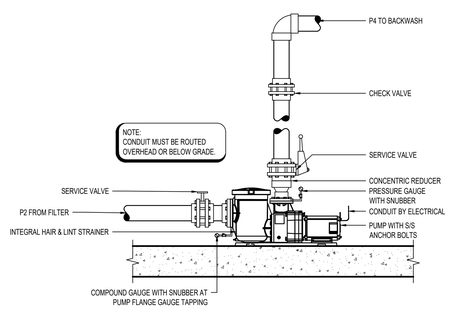

4 / AQ4.3 TRASH PUMP DETAIL
1/2" = 1'-0"

TMP ARCHITECTURE

TMP ARCHITECTURE INC
1191 WEST SQUARE LAKE ROAD
BLOOMFIELD HILLS · MICHIGAN · 48302
PH · 248.338.4561 FX · 248.338.0223
EM · INFO@TMP-ARCHITECTURE.COM

REGISTRATION SEAL

STATE OF MICHIGAN
CARL P. NYLANDER
ENGINEER
NO. 6201066291
LICENSED PROFESSIONAL ENGINEER

05-25-2023

CONSULTANT

COUNSILMAN•HUNSAKER
www.chh2o.com

PROJECT TITLE

Wylie Elementary School Pool Upgrades

Dexter Community Schools

DRAWING TITLE

POOL & MECHANICAL ROOM DETAILS

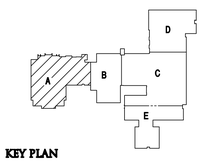

KEY PLAN

ISSUE DATES

DATE:	ISSUED FOR:
05–25–2023	CONSTRUCTION DOCUMENTS

DRAWN	CJL
CHECKED	NRK
APPROVED	CPN

PROJECT NO.

22072A

DRAWING NO.

AQ4.3

© 2023 COUNSILMAN•HUNSAKER

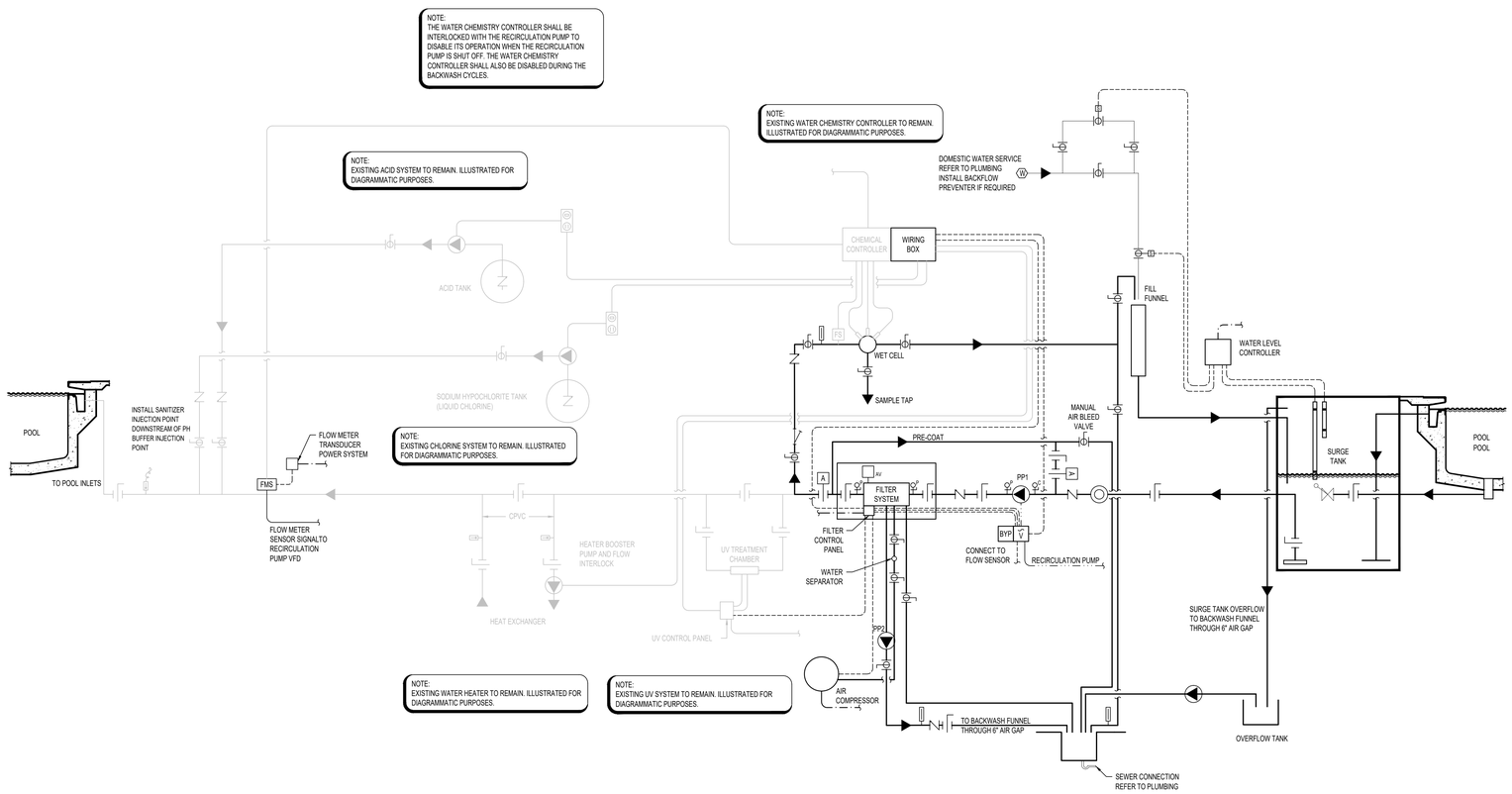

1 / AQ5.0 COMPETITION POOL SYSTEMS SCHEMATIC

NTS

SCHEMATIC LEGEND

LEGEND	ITEM
	FLOW DIRECTION
	BUTTERFLY VALVE
	BALL VALVE
	MODULATING FLOAT VALVE
	SOLENOID VALVE
	CHECK VALVE
	THREE WAY VALVE
	PUMP
	HAIR AND LINT STRAINER
	"Y" STRAINER
FMS	FLOW METER SENSOR
FS	FLOW SWITCH
	IMPACT FLOW METER
	VENTURI FLOW METER
W	WATER METER
AV	AUTOMATIC AIR VENT
V	AIR VENT
I	AIR INLET
P	PRESSURE GAUGE AND COCK
C	COMPOUND GAUGE AND COCK
	DIGITAL TEMP SENSOR
	THERMOMETER
A	PNEUMATIC ACTUATOR
	FLOW CONTROL VALVE
GFCI	COMBINATION SWITCH/RECEPTACLE
APSO	AUTOMATIC PUMP SHUT-OFF DEVICE
VFD	VARIABLE FREQUENCY DRIVE
R	REMOTE START/STOP
E	EMERGENCY STOP
BYP	VARIABLE FREQUENCY DRIVE BYPASS
CMS	CONTACT MOTOR SELECTOR
	15 MINUTE TIMER SWITCH
	LOW VOLTAGE CONTROL
	WATER LINE
	1 PHASE POWER
	3 PHASE POWER
	CO_2 LINE
N	NETWORK LINE BY ELECTRICAL
G	GAS LINE

TMP ARCHITECTURE

TMP ARCHITECTURE INC
1191 WEST SQUARE LAKE ROAD
BLOOMFIELD HILLS · MICHIGAN · 48302
PH · 248.338.4561 FX · 248.338.0223
EM · INFO@TMP-ARCHITECTURE.COM

REGISTRATION SEAL

STATE OF MICHIGAN
CARL P. NYLANDER
ENGINEER
NO. 6201066291
LICENSED PROFESSIONAL ENGINEER

05-25-2023

CONSULTANT

COUNSILMAN•HUNSAKER
www.chh2o.com

PROJECT TITLE

Wylie Elementary School Pool Upgrades

Dexter Community Schools

DRAWING TITLE

COMPETITION POOL SYSTEMS SCHEMATIC

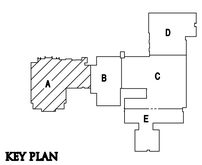

KEY PLAN

ISSUE DATES

DATE:	ISSUED FOR:
05-25-2023	CONSTRUCTION DOCUMENTS

DRAWN	CJL
CHECKED	NRK
APPROVED	CPN

PROJECT NO.

22072A

DRAWING NO.

AQ5.0

© 2023 COUNSILMAN•HUNSAKER

STRUCTURAL GENERAL NOTES

GENERAL

1. THIS BUILDING HAS BEEN DESIGNED AND SHALL BE CONSTRUCTED IN ACCORDANCE WITH THE MICHIGAN BUILDING CODE, 2015 EDITION.
2. THE OWNER WILL EMPLOY QUALIFIED SPECIAL INSPECTORS TO PERFORM INSPECTIONS IN ACCORDANCE WITH CHAPTER 17 OF THE MICHIGAN BUILDING CODE, EXCEPT AS NOTED BELOW. SPECIAL INSPECTIONS WILL BE PERFORMED FOR THE FOLLOWING:

   A. MASONRY.
      I. MASONRY SPECIAL INSPECTION SHALL BE PERFORMED IN ACCORDANCE WITH TMS 402 & TMS 602 AND SHALL BE LEVEL B QUALITY ASSURANCE.
   B. STEEL.
      I. STEEL SPECIAL INSPECTION SHALL BE PERFORMED IN ACCORDANCE WITH AISC 360.
3. WHEN "PROFESSIONAL ENGINEER" IS REFERRED TO IN THE FOLLOWING NOTES, IT DENOTES A LICENSED PROFESSIONAL ENGINEER REGISTERED IN THE STATE OF MICHIGAN, QUALIFIED TO PERFORM THE WORK.
4. THE CONTRACTOR SHALL VISIT THE SITE TO BECOME FAMILIAR WITH THE EXISTING CONDITIONS, THE OWNERS REQUIREMENTS FOR ACCESS TO THE SITE AND CONTINUED OPERATIONS DURING CONSTRUCTION.
5. THE PLAN, DETAIL DIMENSIONS & ELEVATIONS RELATIVE TO THE EXISTING STRUCTURE HAVE BEEN TAKEN FROM AVAILABLE DRAWINGS. IT SHALL BE THE RESPONSIBILITY OF THE CONTRACTOR TO VERIFY SUCH DIMENSIONS, ELEVATIONS & DETAILS AS NECESSARY AND MAKE APPROVED ADJUSTMENTS PRIOR TO CONSTRUCTION OR ORDERING OF MATERIAL.
6. THE CONTRACTOR SHALL SUBMIT STRUCTURAL STEEL SHOP DRAWINGS PRIOR TO FABRICATION. THE CONTRACTOR SHALL ALSO SUBMIT MATERIAL REQUIREMENTS AND CONCRETE MIX DESIGNS. ALLOW (2) WEEKS FOR ENGINEER REVIEW.
7. THE STRUCTURE SHALL BE CONSIDERED TO BE IN AN UNSTABLE CONDITION UNTIL ALL FLOOR, WALL AND ROOF STRUCTURES ARE COMPLETED. CONTRACTOR SHALL PROVIDE TEMPORARY BRACING FOR STABILITY AND TO RESIST LATERAL LOADS DURING ERECTION.
8. ALL NON LOAD BEARING WALLS, EXCEPT INDICATED SHEAR WALLS, SHALL BE CONSTRUCTED TO ALLOW FOR VERTICAL DEFLECTION OF THE STRUCTURE ABOVE.

DIVISION 2 - DEMOLITION/SHORING

1. CONTRACTOR SHALL PROVIDE ALL NECESSARY SHORING WHERE REQUIRED DURING CONSTRUCTION. SHORING SHALL BE DESIGNED & DETAILED UNDER THE DIRECT SUPERVISION OF A PROFESSIONAL ENGINEER. SHORING PROCEDURES, DESIGNS AND DETAILS SHALL BE SUBMITTED FOR REVIEW PRIOR TO COMMENCEMENT OF WORK, ALLOW (2) WEEKS FOR ENGINEER TO REVIEW.
2. THE CONTRACTOR IS RESPONSIBLE FOR DETERMINING ERECTION PROCEDURE AND SEQUENCING AND TO SUBMIT WRITTEN PROCEDURES TO ENSURE THE SAFETY OF THE STRUCTURE AND IT'S COMPONENTS DURING ERECTION.
3. FIELD VERIFY ALL EXISTING CONDITIONS PRIOR TO DEMOLITION. IF CONDITIONS EXIST THAT ARE DIFFERENT FROM WHAT IS INDICATED ON THE DRAWINGS, NOTIFY ARCHITECT FOR DIRECTION BEFORE PROCEEDING.
4. DUE CARE MUST BE TAKEN NOT TO UNDERMINE OR DISTURB EXISTING SOIL AND FOUNDATIONS WHEN EXCAVATING ADJACENT TO EXISTING FOUNDATIONS. FIELD VERIFY THE DEPTH AND WIDTH OF ANY EXISTING FOOTINGS & NOTIFY ARCHITECT OF ANY INTERFERENCE WITH NEW WORK.

DIVISION 4 - MASONRY

1. THE LATEST REVISION OF THE FOLLOWING CODES GOVERN THE DESIGN, DETAILING AND CONSTRUCTION OF ALL MASONRY:

   A. THE MASONRY SOCIETY (TMS) TMS 402, BUILDING CODE REQUIREMENTS FOR MASONRY STRUCTURES.
   B. TMS 602, SPECIFICATIONS FOR MASONRY STRUCTURES.
2. ALL MASONRY SHALL HAVE A MINIMUM COMPRESSIVE STRENGTH OF F'm = 2000 PSI.
3. ALL MORTAR SHALL BE TYPE S, PROPORTIONED BY VOLUME ACCORDING TO ASTM C270.
4. ALL GROUT SHALL HAVE A MINIMUM 28 DAY COMPRESSIVE STRENGTH OF 2000 PSI AND SHALL BE PROPORTIONED BY VOLUME ACCORDING TO ASTM C476.
5. ALL CONCRETE MASONRY UNITS SHALL BE MEDIUM OR HEAVY WEIGHT ASTM C90, GRADE N, UNITS UNLESS NOTED OTHERWISE. UNITS SHALL HAVE A MINIMUM NET AREA COMPRESSIVE STRENGTH OF 2800 PSI.
6. ALL MASONRY WALLS SHALL HAVE HORIZONTAL JOINT REINFORCEMENT (9 GA. HOT DIPPED GALVANIZED) AT 16" O.C. PROVIDE PREFABRICATED CORNER PIECES AT ALL CORNERS AND INTERSECTIONS OF WALLS.
7. ALL DEFORMED BAR REINFORCING SHALL BE ASTM A615, GRADE 60. AT LOCATIONS WHERE REINFORCING IS TO BE WELDED, THE DEFORMED BAR REINFORCING SHALL BE ASTM A706, GRADE 60.
8. LAP SPLICES IN WALLS SHALL BE DETERMINED IN ACCORDANCE WITH TMS 402 AND ARE INDICATED IN THE TYPICAL DETAILS, THE MINIMUM SPLICE SHALL BE 48 BAR DIAMETERS.
9. ALL MASONRY REINFORCING SHALL BE SECURED IN PLACE WITH REBAR POSITIONERS AND SPACERS.
10. ALL VERTICAL MASONRY WALL REINFORCEMENT SHALL BE CENTERED ON THE WALL, DOWELED INTO THE FOOTINGS, AND GROUTED SOLID, UNLESS NOTED OTHERWISE ON DETAILS.
11. IN ADDITION TO ALL OTHER REINFORCING IN MASONRY WALLS PROVIDE A MINIMUM OF (1) #5 BAR AT EACH SIDE OF ALL OPENINGS, EACH SIDE OF CONTROL JOINTS, AT CORNERS OR ENDS OF WALLS AND AT BEAM OR LINTEL BEARING. BAR TO BE FULL HEIGHT OF WALL.
12. ALL MASONRY WALLS SHALL HAVE A CONTINUOUSLY REINFORCED BOND BEAM NEAR THE TOP OF THE WALL, WITH (2) #5 BARS U.N.O. PROVIDE BENT CORNER BARS AT ALL BOND BEAM INTERSECTIONS. REFER TO APPROPRIATE DETAILS FOR LOCATION OF BOND BEAM.
13. THE CONTRACTOR IS RESPONSIBLE FOR PROVIDING TEMPORARY WALL BRACING ADEQUATE TO RESIST LATERAL LOADS.
14. SEE ARCHITECTURAL DRAWINGS FOR LOCATIONS OF WALL CONTROL JOINTS AND EXPANSION JOINTS.
15. UNLESS NOTED OTHERWISE ON PLANS, LINTELS IN NON-LOAD BEARING MASONRY WALLS SHALL BE SIZED AS PER THE LOOSE LINTEL SCHEDULE ON THE DRAWINGS.
16. REFER TO ARCHITECTURAL DRAWINGS AND SPECIFICATIONS FOR TYPE, SIZE, LOCATION AND ATTACHMENT REQUIREMENTS FOR MASONRY VENEER AND OTHER CLADDING.

DIVISION 5 - STRUCTURAL STEEL

1. THE LATEST REVISION OF THE FOLLOWING CODES GOVERN THE DESIGN, DETAILING, FABRICATION AND ERECTION OF ALL STRUCTURAL STEEL.

   A. AMERICAN INSTITUTE OF STEEL CONSTRUCTION (AISC) AISC 360, SPECIFICATION FOR STRUCTURAL STEEL BUILDINGS.
   B. AISC 303, CODE OF STANDARD PRACTICE FOR STEEL BUILDINGS AND BRIDGES.
2. STRUCTURAL STEEL SHALL CONFORM TO THE FOLLOWING ASTM MATERIAL SPECIFICATIONS:

   A. W AND WT SHAPES: ASTM A992, GRADE 50 (Fy = 50 KSI).
   B. MISCELLANEOUS SHAPES AND PLATES: ASTM A36 (Fy = 36 KSI).
   C. PIPE: ASTM A53, GRADE B, TYPE E OR S (Fy = 35 KSI).
   D. HOLLOW STRUCTURAL SECTIONS: ASTM A500, GRADE C (Fy = 50 KSI).
   E. ALL COLUMN ANCHOR RODS SHALL BE ASTM F1554 (Fy = 36 KSI).
3. ALL WELDING SHALL BE PERFORMED USING THE ELECTRIC ARC METHOD IN ACCORDANCE WITH THE LATEST REVISION OF THE AMERICAN WELDING SOCIETY (AWS) D1.1 "STRUCTURAL WELDING CODE". E70XX ELECTRODES CONFORMING TO AWS A5.1 OR A5.5 SHALL BE USED FOR SHIELDED METAL ARC METHOD & FX7-EC0X FLUX - ELECTRODE COMBINATION CONFORMING TO AWS A5.17 FOR SUBMERGED ARC METHOD.
4. ALL BOLTS SHALL BE 3/4" DIAMETER ASTM F3125 GRADE A325 TYPE N BOLTS. ALL BOLTED CONNECTIONS SHALL BE SNUG-TIGHT BEARING TYPE BOLTS UNLESS NOTED OTHERWISE.
5. THE CONTRACTOR SHALL SUBMIT SHOP DRAWINGS SHOWING SIZES, DESIGN VALUES, MATERIALS, DIMENSIONS AND CONNECTIONS.
6. ALL CONNECTIONS NOT SPECIFICALLY DETAILED, SHALL BE DESIGNED AND DETAILED UNDER THE DIRECT SUPERVISION OF A PROFESSIONAL ENGINEER. DETAILING SHALL BE PERFORMED USING RATIONAL ENGINEERING DESIGN AND STANDARD PRACTICE IN ACCORDANCE WITH THE CONTRACT DOCUMENTS. THE GENERAL DETAILS SHOWN ON THE DRAWINGS ARE APPROXIMATE ONLY AND DO NOT INDICATE THE REQUIRED NUMBER OF BOLTS OR WELD SIZES, UNLESS SPECIFICALLY NOTED.
7. PROVIDE "SLIP-CRITICAL" CONNECTIONS AT BRACING, WHERE BOLTS ARE IN TENSION AND AT MOMENT CONNECTIONS.
8. ALL BEAM CONNECTIONS ARE TO CONFORM TO AISC STANDARD TWO ANGLE WEB CONNECTIONS CAPABLE OF SUPPORTING 66% OF THE TOTAL UNIFORM LOAD CAPACITY OF THE BEAM OR FOR LOADS INDICATED ON DRAWING. NO CONNECTION SHALL CONSIST OF LESS THAN TWO 3/4" DIAMETER BOLTS OR A WELD DEVELOPING LESS THAN 10 KIPS.
9. DESIGN HORIZONTAL AND VERTICAL BRACING END CONNECTIONS FOR LOADS INDICATED ON THE DRAWINGS OR 50% OF THE TENSILE CAPACITY OF THE MEMBER WHICHEVER IS GREATER.
10. ALL FIELD CONNECTIONS SHALL BE BOLTED UNLESS NOTED OTHERWISE. FIELD WELDING IS NOT ALLOWED EXCEPT WHERE SPECIFICALLY INDICATED OR APPROVED.
11. PROVIDE 3/4" DIAMETER SHOULDER BOLTS WITH LOCK WASHERS AT ALL SLOTTED CONNECTIONS OF WIND COLUMNS OR AS NOTED.
12. ALL SHOP AND FIELD WELDS SHALL BE VISUALLY INSPECTED PER AWS D1.1. ALL DEFICIENT OR NON CONFORMING ITEMS SHALL BE REPORTED TO THE ENGINEER WHO WILL DETERMINE THE CORRECTIVE ACTION REQUIRED.
13. ALL BEAMS SHALL BE FABRICATED WITH THE NATURAL CAMBER UP. PROVIDE CAMBERS AS INDICATED ON THE DRAWINGS.
14. GROUT REQUIRED UNDER COLUMN BASE PLATES AS SHOWN IN THE DETAILS SHALL BE A STANDARD NON-SHRINK GROUT SUCH AS "MASTERFLOW 100" BY MASTER BUILDERS.
15. PRIME PAINT ALL STRUCTURAL STEEL WITH FABRICATOR'S STANDARD LEAD AND CHROMATE- FREE, NONASPHALTIC, RUST-INHIBITING PRIMER COMPLYING WITH MASTER PAINTER INSTITUTE (MPI) #79. APPLY PRIMER ACCORDING TO THE MANUFACTURER'S WRITTEN INSTRUCTIONS AND AT RATE RECOMMENDED BY SSPC TO PROVIDE A MINIMUM DRY FILM THICKNESS OF 1.5 MILS. USE PRIMING METHODS THAT RESULT IN FULL COVERAGE OF JOINTS, CORNERS, EDGES, AND EXPOSED SURFACES. TOUCH-UP DAMAGED OR MISSING PAINT AFTER STEEL ERECTION IS COMPLETE. OMIT PAINT AT: HOLES FOR SLIP CRITICAL CONNECTIONS, AT STEEL TO BE FIRE PROOFED, AT STEEL ENCASED IN CONCRETE AND ON THE TOP FLANGE OF STEEL BEAMS WITH SHEAR CONNECTIONS.
16. PROVIDE AND HAVE IN PLACE ADEQUATE LATERAL BRACING AND VERTICAL SUPPORTS FOR THE SAFE ERECTION AND TRUE ALIGNMENT OF THE STRUCTURAL STEEL. THIS CONTRACTOR ASSUMES FULL RESPONSIBILITY FOR THE SAFE ERECTION AND TEMPORARY BRACING OF STRUCTURAL STEEL.
17. VERIFY NUMBER AND SIZE OF OPENINGS IN ROOF, WALLS AND FLOOR WITH ARCHITECTURAL, MECHANICAL AND ELECTRICAL DRAWINGS. SEE DETAILS, AND SPECIFICATIONS, FOR STRUCTURAL REQUIREMENTS. VERIFY ALL INFORMATION WITH THE APPROPRIATE CONTRACTOR.
18. ALL DIMENSIONS RELATED TO STRUCTURAL STEEL USED TO SUPPORT EQUIPMENT OR FRAME OPENINGS SHALL BE VERIFIED WITH CERTIFIED AND APPROVED SHOP DRAWINGS OF PURCHASED EQUIPMENT PRIOR TO DETAILING AND FABRICATION.
19. PROVIDE L3x3x1/4 SHELF ANGLES AT TOPS OF COLUMNS AS REQUIRED TO SUPPORT ROOF DECK.
20. ALL EDGES OF METAL DECK SHALL BE SUPPORTED AT A CHANGE IN DECK SPAN WHETHER SHOWN ON DRAWINGS OR NOT. PROVIDE TUBE STEEL OR A DOUBLE ANGLE BETWEEN JOIST OR STRUCTURAL STEEL AND METAL DECK.
21. ALL FREE EDGES OF METAL DECK SHALL BE SUPPORTED WITH AN EDGE ANGLE L3x3x1/4 OR OTHER SUITABLE SUPPORT. THIS SHALL BE PROVIDED WHETHER SHOWN ON DRAWINGS OR NOT.
22. ALL BEAMS, JOISTS, OR LINTELS BEARING ON MASONRY WALLS SHALL HAVE BEARING PLATES WITH ANCHOR BOLTS. IF NOT NOTED ON PLAN, SEE TYPICAL DETAILS.
23. ALL WF BEAMS SUPPORTING MASONRY AND WITH SPANS GREATER THAN 6'-0" SHALL HAVE 1/2" DIAMETER BY 6" LONG HEADED CONCRETE ANCHORS SPACED AT 2'-0" O.C. WELDED TO THE TOP FLANGE.
24. ALL STEEL IN EXTERIOR MASONRY WALLS IS TO BE HOT-DIP GALVANIZED IN ACCORDANCE WITH ASTM A-123.

DESIGN CRITERIA

MICHIGAN BUILDING CODE 2015 (ASCE 7-10)
RISK CATEGORY III

ROOF DEAD LOADS (ASSUMED)

• METAL DECK	2 PSF
• INSULATION	1 PSF
• EPDM	2 PSF
• STEEL	5 PSF
• MECHANICAL AND ELECTRICAL	5 PSF
• MISCELLANEOUS	5 PSF
TOTAL	**20 PSF**

ROOF LIVE LOADS

• MINIMUM LOAD	20 PSF

SNOW LOADS

• IMPORTANCE FACTOR	I_s = 1.1
• GROUND SNOW LOAD	P_g = 25 PSF
• SNOW EXPOSURE FACTOR	C_e = 1.0
• THERMAL FACTOR	C_t = 1.0
• FLAT USE SNOW	P_f = 22 PSF (TYPICAL ROOF)
• SNOW DRIFT PER ASCE 7	

WIND LOADS

• BASIC WIND SPEED	120 MPH (3 SEC GUST)
• EXPOSURE CATEGORY	B
• COMPONENTS AND CLADDING PER ASCE 7	

SEISMIC DESIGN DATA

• SITE CLASS	D
• RESPONSE COEFFICIENTS	SD_S = 0.097
	SD_1 = 0.075
• SEISMIC DESIGN CATEGORY	B

ABBREVIATIONS

@	AT
A.B.	ANCHOR BOLT
ADD'L	ADDITIONAL
A.F.F.	ABOVE FINISHED FLOOR
B.C.	BOTTOM CHORD
B.O.	BOTTOM OF
B.O.D.	BOTTOM OF DECK
B.O.F.	BOTTOM OF FOOTING
B.O.S.	BOTTOM OF STEEL
B.O.T.	BOTTOM OF TRUSS
B.S.	BOTH SIDES
BM	BEAM
BOTT	BOTTOM
BRG	BEARING
C.L.	CENTER LINE
CJ	CONTROL JOINT
COL	COLUMN
CONC	CONCRETE
CONT	CONTINUOUS
CSJ	CONSTRUCTION JOINT
DET	DETAIL
DIA	DIAMETER
DIAG	DIAGONAL
DIM	DIMENSION
DL	DEAD LOAD
DWG	DRAWING
EA	EACH
ELEV	ELEVATION
EQ	EQUAL
EX	EXISTING
F.S.	FAR SIDE
F.V.	FIELD VERIFY
FIN	FINISH
FLG	FLANGE
FLR	FLOOR
FDN	FOUNDATION
FT	FOOT
FTG	FOOTING
GA	GAGE
G.L.	GIRT LINE
H.P.	HIGH POINT
HORIZ	HORIZONTAL
k	KIPS
LG	LONG
L.P.	LOW POINT
LL	LIVE LOAD
L.L.H.	LONG LEG HORIZONTAL
L.L.V.	LONG LEG VERTICAL
L.S.H.	LONG SIDE HORIZONTAL
LN	LINE
MAX	MAXIMUM
MTL	METAL
MIN	MINIMUM
MISC	MISCELLANEOUS
N.S.	NEAR SIDE
N.T.S.	NOT TO SCALE
NO	NUMBER
O.C.	ON CENTER
OPP	OPPOSITE
PC	PIECE
PL	PLATE
PLCS	PLACES
PSF	POUNDS PER SQUARE FOOT
PSI	POUNDS PER SQUARE INCH
REF	REFERENCE
REINF	RINFORC-ED, -ING, EMENT
REQ'D	REQUIRED
SCHED	SCHEDULE
SECT	SECTION
SIM	SIMILAR
SPA	SPACES
STD	STANDARD
STL	STEEL
T.O.	TOP OF
T.O.C.	TOP OF CONCRETE
T.O.F.	TOP OF FOOTING
T.O.M.	TOP OF MASONRY
T.O.S.	TOP OF STEEL
TYP	TYPICAL
U.N.O.	UNLESS NOTED OTHERWISE
VERT	VERTICAL
W.P.	WORK POINT
W/	WITH
WWR	WELDED WIRE REINFORCEMENT

TMP architecture

T M P A R C H I T E C T U R E I N C

1191 WEST SQUARE LAKE ROAD · BOX 289
BLOOMFIELD HILLS · MICHIGAN · 48302
PH · 248.338.4561 FX · 248.338.0223
EM · INFO@ TMP-ARCHITECTURE.COM

REGISTRATION SEAL

CONSULTANT

WILLIAM A. KIBBE & ASSOCIATES, INC.
ENGINEERS | ARCHITECTS | SURVEYORS

PROJECT TITLE

Wylie Elementary School Pool Upgrades

Dexter Community Schools

DRAWING TITLE

Structural General Notes

KEY PLAN

ISSUE DATES

DATE:	ISSUED FOR:
05-25-2023	CONSTRUCTION DOCUMENTS

DRAWN	E. FREDERICK
CHECKED	E. MANNOR
APPROVED	E. MANNOR

PROJECT NO.

22072A

DRAWING NO.

S0.0

C:\Users\efred\OneDrive - William A. Kibbe & Associates, Inc\Pictures\Documents\23147301\54_22072A Dexter - Wylie
5/25/2023 10:21:49 AM
efred@wakibbe.com.rvt

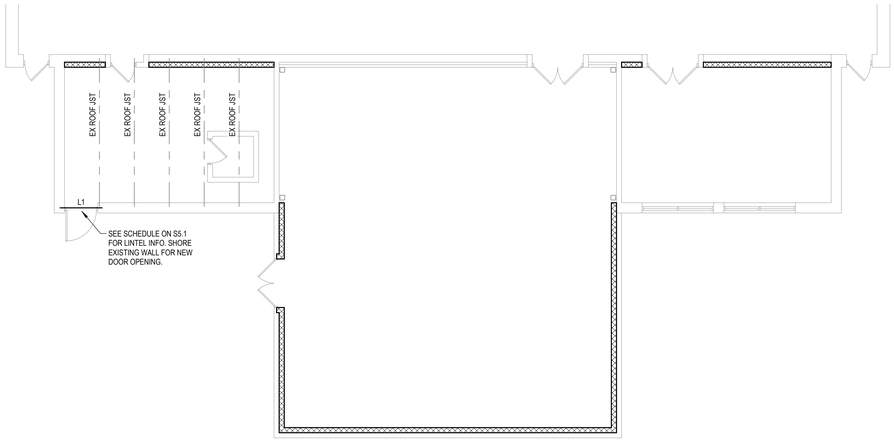

N

ROOF FRAMING PLAN – ZONE 'H'

SCALE: 1/8" = 1'-0"

TMP ARCHITECTURE INC

1191 WEST SQUARE LAKE ROAD · BOX 289
BLOOMFIELD HILLS · MICHIGAN · 48302
PH · 248.338.4561 FX · 248.338.0223
EM · INFO@TMP-ARCHITECTURE.COM

REGISTRATION SEAL

CONSULTANT

WILLIAM A. KIBBE & ASSOCIATES, INC.
ENGINEERS | ARCHITECTS | SURVEYORS

PROJECT TITLE

Wylie Elementary School Pool Upgrades

Dexter Community Schools

DRAWING TITLE

Roof Framing Plan

N

KEY PLAN

ISSUE DATES

DATE:	ISSUED FOR:
05-25-2023	CONSTRUCTION DOCUMENTS

DRAWN	E. FREDERICK
CHECKED	E. MANNOR
APPROVED	E. MANNOR

PROJECT NO.

22072A

DRAWING NO.

S1.3

C:\Users\nrad\OneDrive - William A. Kibbe & Associates, Inc\Pictures\Documents\231473015\4_22072A Dexter - Wylie
5/25/2023 3:16:21 PM
ekibbe.com.rvt

NOTE:

BETWEEN GROUT POURS A HORIZ CONST JT SHALL BE FORMED BY STOPPING ALL WYTHES AT THE SAME ELEV AND WITH GROUT STOPPING A MINIMUM OF 1 1/2" BELOW A MORTAR JT EXCEPT AT TOP OF WALL.

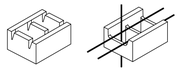

SLOTTED UNIT UNIT WITH SECTIONS REMOVED

NOTE:

KNOCKOUT SLOTS MAY BE CAST IN UNIT WHEN MOLDED
OR
CUT OUT WITH A MASONRY SAW AFTER UNIT HAS BEEN CURED

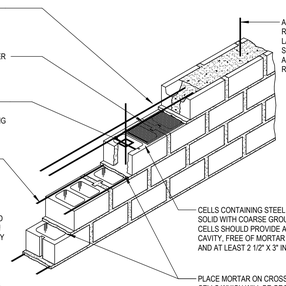

NOTE:
HIGH LIFT GROUTING SHALL BE PERFORMED IN ACCORDANCE WITH THE LATEST EDITION OF ACI 530.1 SPECIFICATIONS FOR MASONRY STRUCTURES. CLEANOUTS SHALL BE PROVIDED AND INSPECTED.

NOTE:
LOW LIFT-GROUTING TECHNIQUE- GROUT IS PLACED IN LIFTS UP TO 5'-0"

1 S5.1 LOW LIFT-GROUTING TECHNIQUE
NOT TO SCALE

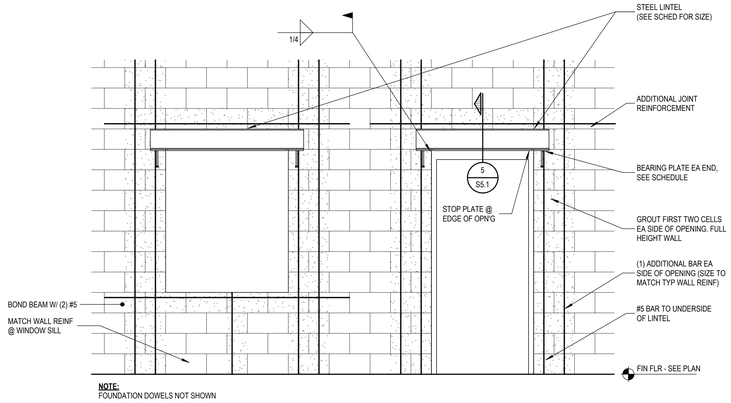

NOTE:
FOUNDATION DOWELS NOT SHOWN

2 S5.1 TYP MASONRY OPENING W/ STL LINTEL
NOT TO SCALE

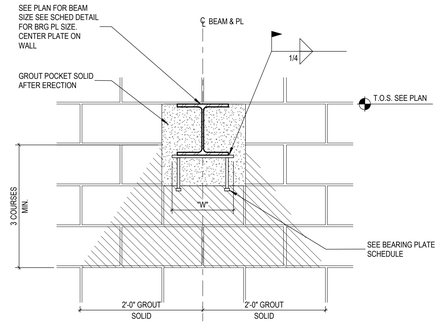

3 S5.1 TYP BEAM PERPENDICULAR TO WALL
NOT TO SCALE

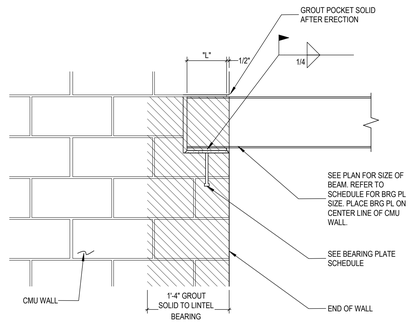

4 S5.1 TYP BEAM PARALLEL TO WALL
NOT TO SCALE

STEEL LINTEL SCHEDULE

MARK	SIZE	DETAIL
L-1	GALV W8x13 + 5/16" PL W/ BP-1 EA END	5/S5.1 & 7/S6.1

BEARING PLATE SCHEDULE

BM/JOIST OR MARK	SIZE	REMARKS
BP-1	3/8" X 6" X 8" W/ (2) 1/2" Ø X 6" LG HEADED STUDS (GA = 6")	

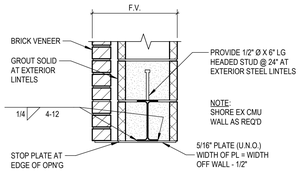

5 S5.1 TYP STEEL LINTEL DETAIL
NOT TO SCALE

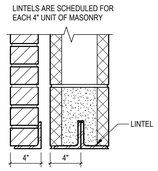

LOOSE LINTEL SCHEDULE

*L (FT)	SIZE OF LINTEL	BEARING EA END (IN)
UP TO 4	L 3-1/2X3-1/2X1/4	4
5	L 3-1/2X3-1/2X1/4	6
6	L 3-1/2X3-1/2X1/4	6
7	L 4X3-1/2X1/4 LLV	6
8	L 5X3-1/2X1/4 LLV	8
9	L 6X3-1/2X5/16 LLV	8

NOTES:
1. LINTEL SCHEDULE APPLIES AT ALL OPENINGS IN MASONRY VENEER & NON LOAD BEARING MASONRY. SEE ARCH DWGS FOR SIZE AND LOCATION.
2. (SLV) - SHORT LEG VERTICAL
3. (LLV) - LONG LEG VERTICAL
4. *L = CLEAR OPENING

6 S5.1 TYP LOOSE LINTEL SCHEDULE
NOT TO SCALE

NOTE:
SEE BRG PLATE SCHEDULE THIS SHEET FOR ADD'L INFORMATION

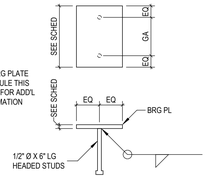

7 S5.1 TYP BEARING PL DETAIL
SCALE: 1 1/2" = 1'-0"

TMP architecture

T M P A R C H I T E C T U R E I N C

1191 WEST SQUARE LAKE ROAD · BOX 289
BLOOMFIELD HILLS · MICHIGAN · 48302
PH · 248.338.4561 FX · 248.338.0223
EM · INFO@ TMP-ARCHITECTURE.COM

REGISTRATION SEAL

CONSULTANT

WILLIAM A. KIBBE & ASSOCIATES, INC.
ENGINEERS | ARCHITECTS | SURVEYORS

PROJECT TITLE

Wylie Elementary School Pool Upgrades

Dexter Community Schools

DRAWING TITLE

Masonry Details

N

KEY PLAN

ISSUE DATES

DATE:	ISSUED FOR:
05-25-2023	CONSTRUCTION DOCUMENTS

DRAWN	E. FREDERICK
CHECKED	E. MANNOR
APPROVED	E. MANNOR

PROJECT NO.

22072A

DRAWING NO.

S5.1

C:\Users\ernad\OneDrive - William A. Kibbe & Associates, Inc\Pictures\Documents\231473015\4_22072A Dexter - Wylie
5/25/2023 3:16:21 PM
ernad@wakabe.com.rvt

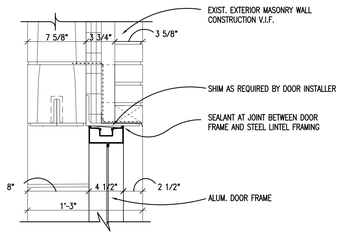

3 / AD.1 FRP DOOR HEAD DETAIL

SCALE: 1 1/2" = 1'-0"

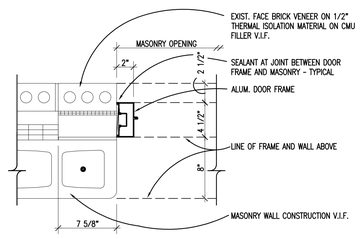

2 / AD.1 FRP DOOR JAMB DETAIL

SCALE: 1 1/2" = 1'-0"

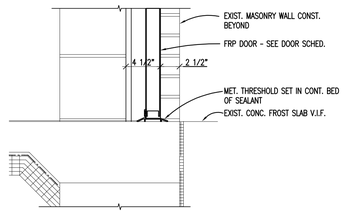

1 / AD.1 FRP DOOR SILL DETAIL

SCALE: 1 1/2" = 1'-0"

DOOR & FRAME SCHEDULE

Opening		Door				Frame				Details						
No.	Opening Size (Width x Height)	Type	Material	Finish	Glass	Type	Material	Finish	Glass	Head	Jamb	Sill	Threshold	U.L. Label	Hdwe. Set	Remarks
Lower Level - Zone 'A'																
.	.	.	.	.	.	.	.	.	.	.	.	.	.	.	.	.
A117A	4'-0" X 7'-0"	A	FRP	PFN	.	1	FRP	PFN	.	3/AD.1	2/AD.1	1/AD.1	.	.	01	VERIFY EXIST. DR. OPENING AND SIZE
.	.	.	.	.	.	.	.	.	.	.	.	.	.	.	.	.

A

DOOR TYPES

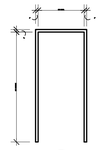

1

FRAME TYPES

DOOR SCHEDULE ABBREVIATIONS AND NOTES

(REFER TO SPECIFICATIONS FOR ADDITIONAL DOOR INFORMATION)

DOOR SCHEDULE ABBREVIATIONS

AL	ALUMINUM
ALGL	ALUMINUM AND GLASS
EX	EXISTING
FRAF	FIRE RATED ALUMINUM FRAMING
FRP	FIBERGLASS REINFORCED POLYESTER
HM	HOLLOW METAL
LAM	PLASTIC LAMINATE CLAD
MET	METAL THRESHOLD
NAT	NATURAL FINISHED WOODWORK
PFN	PREFINISHED BY MANUFACTURER
PTD	PAINTED
SDSF	SOLID SURFACE THRESHOLD
STL	STEEL
STSTL	STAINLESS STEEL
WD	SOLID CORE HARDWOOD

DOOR SCHEDULE GENERAL NOTES

1. GALVANIZED METAL TO BE PROVIDED FOR HOLLOW METAL DOOR AND/OR FRAME AT EXTERIOR LOCATION.
2. DOORS ARE 1-3/4" THICK UNLESS OTHERWISE NOTED.
3. DETAIL NUMBERS NOTED SIM. REFER TO DETAILS SHOWING HEAD, JAMB, AND/ OR SILL DETAILS THAT REPRESENT CONDITIONS SIMILAR TO THOSE NOTED.
4. HOLLOW METAL FRAMES SET IN MASONRY WALLS ARE 5 3/4" WIDE (U.O.N.).
5. HOLLOW METAL FRAMES, SET IN GYPSUM BD. /METAL STUD PARTITIONS, SHALL BE "DOUBLE BACK-BEND" FRAMES WITH A THROAT DIMENSION EQUAL TO THE PARTITION THICKNESS PLUS 9/16" RETURNS ON EACH SIDE OF THE PARTITION. PROVIDE EQUAL RABBETS.
6. AN ASTERISK (*) CALLS ATTENTION TO THE REMARKS COLUMN OF THE SCHEDULE.
7. WHERE NEW DOORS ARE INDICATED IN EXISTING FRAMES, FIELD VERIFY EXISTING FRAME PREPS AND FABRICATE DOORS TO MATCH.

U.L. DOOR LABEL DESIGNATIONS:

U.L. LABEL**	MIN. OPENING PROTECTION ASSEMBLY
180	3 HR. FIRE RATING
90	1-1/2 HR. FIRE RATING
60	1 HR. FIRE RATING
45	3/4 HR. FIRE RATING
20	1/3 HR. FIRE RATING

** ALL FIRE RATED DOORS SHALL BE SMOKE AND DRAFT CONTROL LABELED IN ADDITION TO U.L. LABELS INDICATED.

GLAZING TYPES

(REFER TO SPECIFICATIONS FOR ASSEMBLIES)

GL-1 1/4" (6mm) CLEAR ANNEALED MONOLITHIC GLASS
GL-2 1/4" (6mm) CLEAR TEMPERED MONOLITHIC GLASS
GL-12 1" (25mm) CLEAR ANNEALED INSULATING GLASS (LOW-E)
GL-13 1" (25mm) CLEAR TEMPERED INSULATING GLASS (LOW-E)
GL-20 1" (25mm) TINTED TEMPERED INSULATING GLASS (LOW-E)

TMP ARCHITECTURE

TMP ARCHITECTURE INC
1191 WEST SQUARE LAKE ROAD
BLOOMFIELD HILLS · MICHIGAN · 48302
PH · 248.338.4561 FX · 248.338.0223
EM · INFO@TMP-ARCHITECTURE.COM

REGISTRATION SEAL

CONSULTANT

PROJECT TITLE

Wylie Elementary School Pool Upgrades

Dexter Community Schools

DRAWING TITLE

Door & Frame Schedule

ISSUE DATES

DATE:	ISSUED FOR:
05-25-2023	CONSTRUCTION DOCUMENTS

DRAWN JCG
CHECKED ...
APPROVED ...

PROJECT NO.

22072A

DRAWING NO.

AD.1

Drawing File: G:\cad\2022\mep\22072A\22072A\22072A_cd\22072A_ad1.dwg
May 26, 2023 - 11:03am

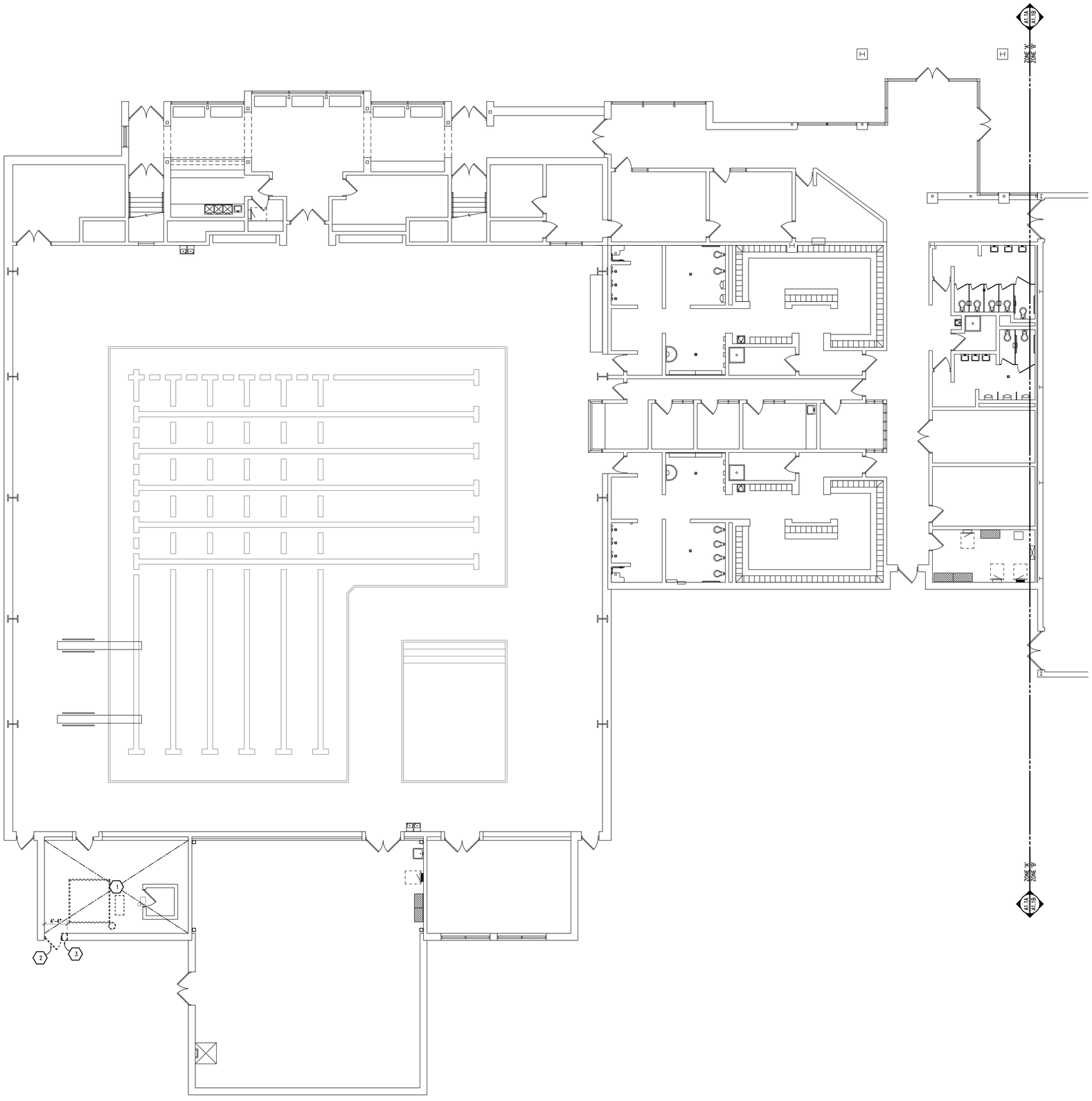

FIRST LEVEL DEMOLITION PLAN - ZONE 'A'

SCALE: 1/8" = 1'-0"

GENERAL NOTES

1. REFER TO MECHANICAL AND ELECTRICAL DRAWINGS FOR RELATED AND ADDITIONAL DEMOLITION AND PATCHING WORK BY MECHANICAL AND ELECTRICAL TRADES.
2. REFER TO ROOF PLANS FOR THE EXTENT OF ROOFING DEMOLITION.
3. SEE CIVIL DRAWINGS FOR SITE DEMOLITION AND PATCHING WORK.
4. SEE EXTERIOR ELEVATIONS FOR ADDITIONAL DEMOLITION AND PATCHING WORK AT EXTERIOR OF BUILDING, INCLUDING (BUT NOT LIMITED TO) DEMOLITION NOTES RELATED TO WINDOW REPLACEMENT.
5. WHERE REMOVAL OF CASEWORK, MILLWORK, CHALKBOARDS, TACKBOARDS, OR EQUIPMENT IS INDICATED, FILL HOLES AND PATCH EXISTING WALLS, BASE AND CEILINGS WHICH ARE TO REMAIN EXPOSED.
6. UNLESS OTHERWISE INDICATED, TOOTH NEW MATERIAL, INTO EXISTING, WHEREVER INFILL REMAINS EXPOSED.
7. SEE SPECIFICATION SECTIONS 01 7329 AND 02 4100 FOR ADDITIONAL DEMOLITION AND PATCHING REQUIREMENTS.
8. REFER TO ARCHITECTURAL WALL SECTIONS FOR ADDITIONAL SELECTIVE DEMOLITION.

DEMOLITION KEYNOTES

1. REFER TO POOL DOCUMENTATIONS FOR EXTENT OF EQUIPMENT TO BE REMOVED. TO REFER TO MECHANICAL DRAWINGS FOR ADDITIONAL NOTES AND DETAILS. PATCH, REPAIR AND/OR FILL EXPOSED ADJACENT SURFACES TO MATCH EXISTING (U.O.N.).
2. REMOVE EXTERIOR DOOR AND FRAME, TURN OVER TO OWNER FOR REUSE.
3. REMOVE EXTERIOR BRICK AND CMU FOR NEW OPENING. COORDINATE EXTENT WITH THE NEW WORK. SAVE THE EXISTING BRICK FOR PATCHING OF THE WALL.

SALVAGED ITEMS

- EXISTING DOOR, HARDWARE AND FRAME (IF POSSIBLE)

TMP ARCHITECTURE

TMP ARCHITECTURE INC

1191 WEST SQUARE LAKE ROAD
BLOOMFIELD HILLS · MICHIGAN · 48302
PH · 248.338.4561 FX · 248.338.0223
EM · INFO @TMP-ARCHITECTURE.COM

REGISTRATION SEAL

CONSULTANT

PROJECT TITLE

Wylie Elementary School Pool Upgrades

Dexter Community Schools

DRAWING TITLE

First Level Demolition Plan - Zone 'A'

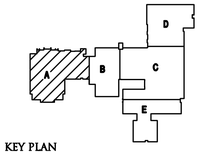

KEY PLAN

ISSUE DATES

DATE:	ISSUED FOR:
05-25-2023	CONSTRUCTION DOCUMENTS

DRAWN	ASH
CHECKED	...
APPROVED	...

PROJECT NO.

22072A

DRAWING NO.

A0.1A

Drawing File: G:\Local\2022Proj\22072A\22072a_cd\22072a_a01a.dwg
May 25, 2023 - 3:06pm

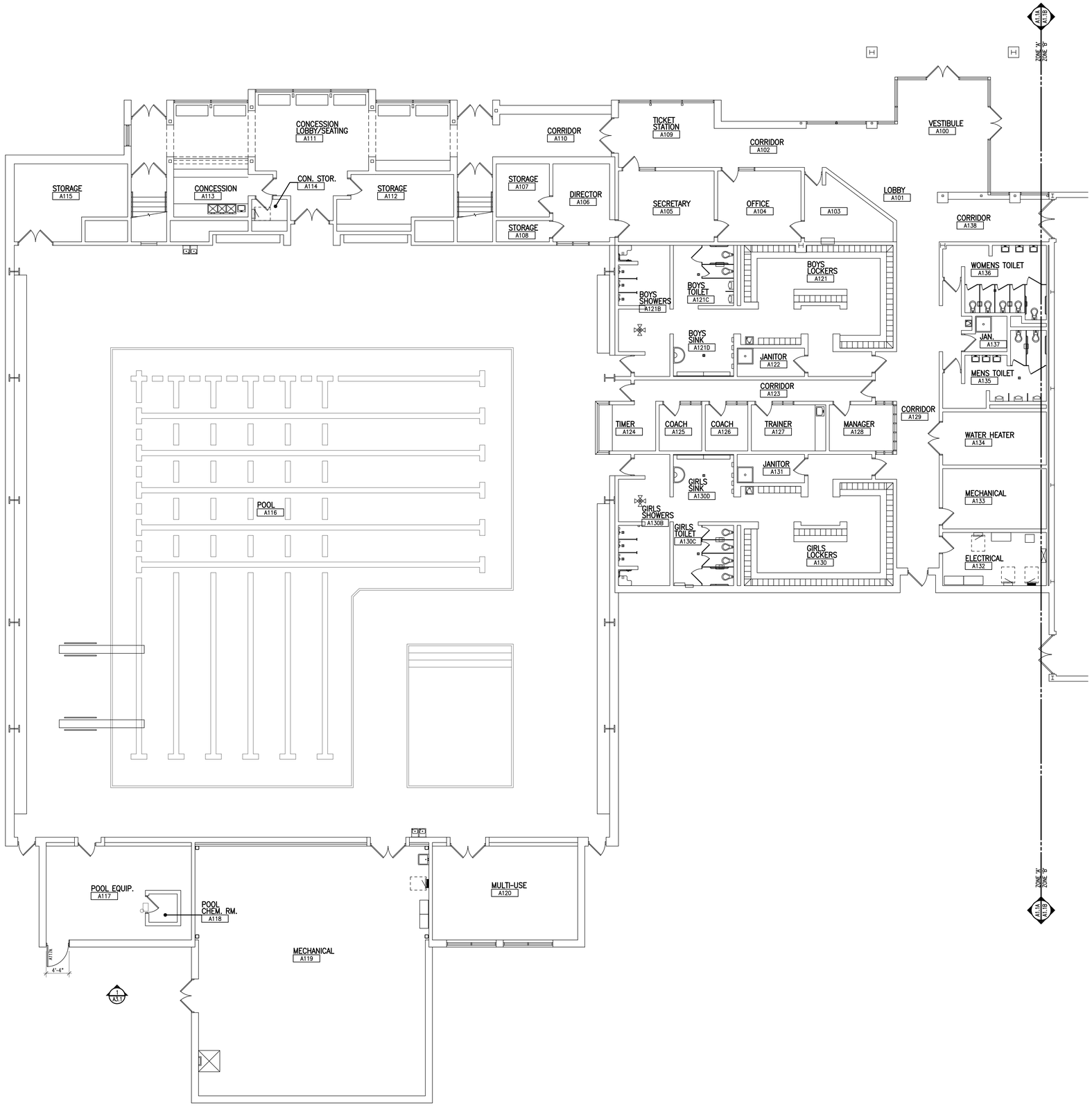

N

FIRST LEVEL FLOOR PLAN - ZONE 'A'

SCALE: 1/8" = 1'-0"

GENERAL NOTES

1. COORDINATE SIZE AND LOCATION OF ALL CONCRETE HOUSEKEEPING PADS AND/OR EQUIPMENT SUPPORTS WITH APPROPRIATE EQUIPMENT MANUFACTURER.
2. COORDINATE SIZE AND LOCATION OF ALL ACCESS PANELS WITH TRADE REQUIRING THE SAME. ACCESS PANELS ARE SPECIFIED ARCHITECTURALLY BUT ARE REQUIRED TO BE PROVIDED BY EACH TRADE. ALL LOCATIONS MUST BE COORDINATED AND APPROVED BY THE ARCHITECT'S FIELD REPRESENTATIVE.
3. CONTRACTORS SHALL VERIFY ALL EXISTING BUILDING DIMENSIONS, PARTITION AND WALL LOCATIONS, AND FLOOR ELEVATIONS IN THE FIELD AND NOTIFY THE ARCHITECTS REPRESENTATIVE OF ANY DISCREPANCIES BEFORE START OF WORK.
4. FLOOR PLANS ARE DIMENSIONED TO NOMINAL WALL THICKNESS - TYPICAL.
5. DIMENSIONS FOLLOWED BY ± SHOULD BE REVIEWED AND ALL NECESSARY ADJUSTMENTS MADE PRIOR TO FABRICATION AND/OR INSTALLATION OF AFFECTED WORK. NOTIFY ARCHITECTS REPRESENTATIVE IF DISCREPANCIES ARISE BEFORE PROCEEDING WITH THE WORK.
6. PROVIDE CONTROL JOINTS WHERE INTERIOR CMU (ON SLAB) ABUTS EXTERIOR/INTERIOR MASONRY (ON FOUNDATIONS OR FOOTINGS).
7. VERIFY QUANTITY, SIZE, AND LOCATION OF ALL FLOOR, ROOF, AND WALL OPENINGS FOR MECHANICAL AND ELECTRICAL WORK WITH THE APPROPRIATE TRADE. PROVIDE ALL OPENINGS SHOWN OR REQUIRED FOR THE COMPLETION OF THE WORK. PROVIDE ALL LINTELS REQUIRED FOR THESE OPENINGS PER SPECIFICATIONS.
8. REFER TO STRUCTURAL DRAWINGS FOR ALL WIND FRAME LOCATIONS AT INTERIOR AND EXTERIOR WALLS.
9. REFER TO STRUCTURAL DRAWINGS FOR ORIENTATION AND SIZES OF ALL STRUCTURAL COLUMNS.
10. VERIFY ALL DIMENSIONS IN FIELD.
11. PROVIDE WOOD BLOCKING WITHIN STUD WALLS FOR WALL MOUNTED ITEMS i.e. GRAB BARS, TOWEL DISPENSERS, PENCIL SHARPENERS, WALL STOPS, ACCORDIAN PARTITION JAMBS, ETC. REFER ALSO TO A9.__ SERIES AND A6.__ SERIES DRAWINGS.
12. REFER TO EXTERIOR ELEVATIONS AND PLAN DETAILS FOR LOCATIONS OF CONTROL JOINTS IN EXTERIOR WALLS.

PATCHING NOTES

1. REFER TO DEMOLITION PLANS FOR ADDITIONAL PATCHING NOTES.
2. FOR ALL FLOOR SURFACES RECEIVING NEW FLOOR FINISHES, PREPARE SUBSTRATE BY PROVIDING LEVELING AND PATCHING COMPOUNDS RECOMMENDED BY FINISH FLOORING MANUFACTURERS. CONTRACTOR'S BASE BID PROPOSAL SHALL ASSUME THAT ALL AREAS, INDICATED TO RECEIVE NEW FINISHES, WILL REQUIRE FLOOR PREPARATION.
3. PATCH AND REPAIR ALL FLOOR AND WALL SURFACES LEFT DAMAGED OR INCOMPLETE FROM REMOVAL OF EXISTING PARTITIONS, MILLWORK, CASEWORK, CHALKBOARDS, TACKBOARDS, DISPLAY CASES OR OTHER FIXED EQUIPMENT WITH MATERIALS TO MATCH EXISTING, AS ACCEPTABLE TO THE ARCHITECT.
4. MATCH EXISTING MASONRY COURSING ADJACENT IN EACH AREA AND TOOTH NEW WORK INTO EXISTING, UNLESS OTHERWISE INDICATED.
5. AT EXISTING FLOOR FINISHES TO REMAIN, THAT BECOME SUBSTRATES FOR NEW FLOOR FINISHES, PATCH AND FILL EXISTING AS REQUIRED TO PREPARE FOR NEW FLOOR FINISH UNTIL ACCEPTABLE TO NEW FLOOR FINISH CONTRACTOR.
6. TOOTH-IN MASONRY INTO EXISTING, U.O.N., INCLUDING JAMBS OF DOOR AND OTHER OPENINGS.

TMP ARCHITECTURE

TMP ARCHITECTURE INC

1191 WEST SQUARE LAKE ROAD
BLOOMFIELD HILLS · MICHIGAN · 48302
PH · 248.338.4561 FX · 248.338.0223
EM · INFO@TMP-ARCHITECTURE.COM

REGISTRATION SEAL

CONSULTANT

PROJECT TITLE

Wylie Elementary School Pool Upgrades

Dexter Community Schools

DRAWING TITLE

First Level Floor Plan - Zone 'A'

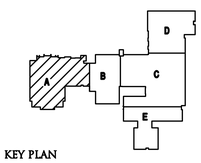

KEY PLAN

ISSUE DATES

DATE:	ISSUED FOR:
05-25-2023	CONSTRUCTION DOCUMENTS

DRAWN	ASH
CHECKED	...
APPROVED	...

PROJECT NO.

22072A

DRAWING NO.

A1.1A

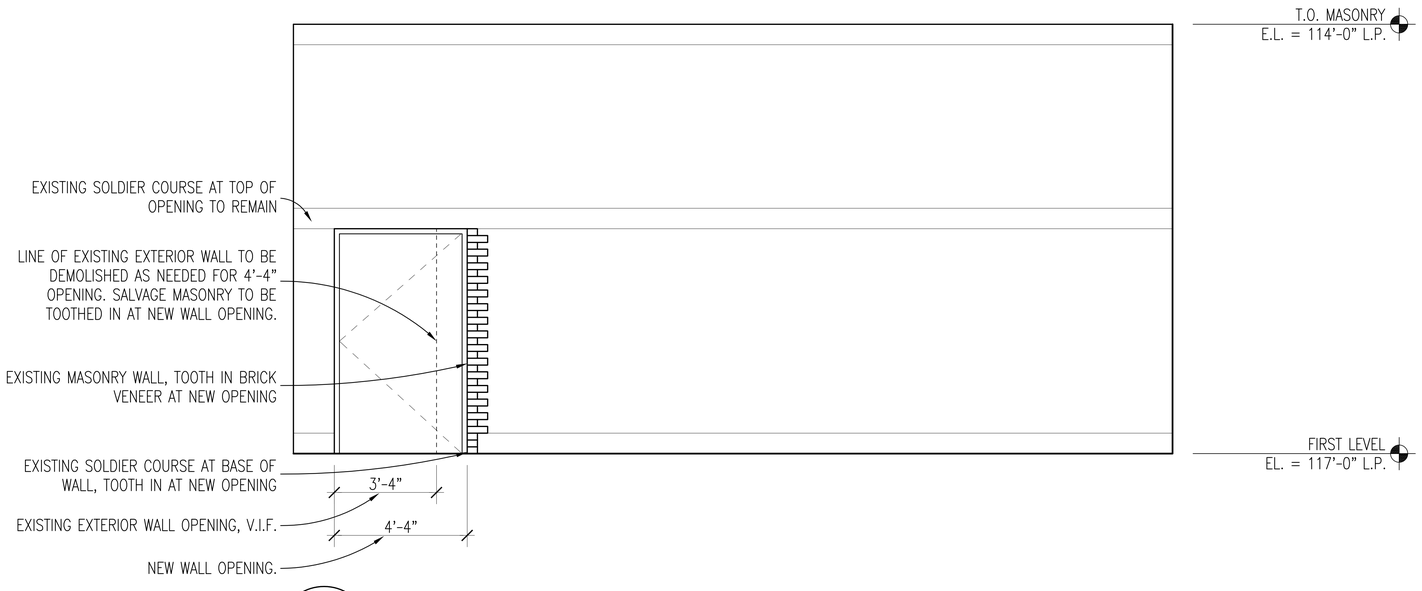

1
A3.1

POOL EQUIPMENT EXTERIOR ELEVATION

SCALE: 1/2" = 1'-0"

TMP ARCHITECTURE

TMP ARCHITECTURE INC

1191 WEST SQUARE LAKE ROAD
BLOOMFIELD HILLS · MICHIGAN · 48302
PH · 248.338.4561 FX · 248.338.0223
EM · INFO @TMP-ARCHITECTURE.COM

REGISTRATION SEAL

CONSULTANT

PROJECT TITLE

Wylie Elementary School Pool Upgrades

TMP Architecture
Bloomfield Hills, Michigan

DRAWING TITLE

Pool Equipment Elevation

ISSUE DATES

DATE:	ISSUED FOR:
05-25-2023	CONSTRUCTION DOCUMENTS

DRAWN	ASH
CHECKED	...
APPROVED	...

PROJECT NO.

22072A

DRAWING NO.

A3.1

Drawing File: G:\Local\2022Proj\22072A\22072A_Art\22072A_A3.1.dwg
May 25, 2023 - 2:26pm

ELECTRICAL SYMBOL LIST

(NOTE: SOME SYMBOLS AND ABBREVIATIONS SHOWN MAY NOT APPLY TO THIS PROJECT)

SYMBOL	DESCRIPTION
X (NL)	X DENOTES FIXTURE TYPE (NL INDICATES NIGHT LIGHT)
	LIGHTING FIXTURE
	DIRECT/INDIRECT LIGHTING FIXTURE
	FILL DENOTES EMERGENCY FIXTURE
	LIGHTING FIXTURE
	WALL MOUNTED LIGHTING FIXTURE
	LIGHTING FIXTURE
	DIRECTIONAL LIGHTING FIXTURE
	PENDANT LIGHTING FIXTURE
	WALL SCONCE
	LIGHTING TRACK
	TRACK LIGHTING FIXTURE
	POLE MOUNTED LIGHTING FIXTURE
	POLE MOUNTED LIGHTING FIXTURE – POST TOP
	BOLLARD LIGHTING FIXTURE
	EMERGENCY LIGHTING UNIT
	EXIT LIGHTING FIXTURE WITH DIRECTIONAL ARROWS (SHADED AREA INDICATES FACE)
	EXIT LIGHTING FIXTURE WITH DIRECTIONAL ARROWS (SHADED AREA INDICATES FACE)
	EXIT LIGHTING FIXTURE – WALL MOUNTED
	EXIT/EMERGENCY LIGHTING COMBO
BCELTS	BRANCH CIRCUIT EMERGENCY LIGHTING TRANSFER SWITCH
ALCR	AUTOMATIC LOAD CONTROL RELAY
LC	LIGHTING CONTROL DEVICE – REFER TO LIGHTING CONTROL SCHEDULE
XX	ROOM CONTROL DESIGNATION – REFER TO LIGHTING CONTROL SCHEDULE
S	SINGLE POLE TOGGLE SWITCH
S2	TWO POLE TOGGLE SWITCH
S3	3 WAY TOGGLE SWITCH
S4	4 WAY TOGGLE SWITCH
K	KEY OPERATED SWITCH
K3	3 WAY KEY OPERATED SWITCH
K4	4 WAY KEY OPERATED SWITCH
D	DIMMER SWITCH
D3	3 WAY DIMMER SWITCH
DO	DIMMER OCCUPANCY SENSOR SWITCH
DL	LOW VOLTAGE DIMMER SWITCH
SP	PILOT SWITCH

SYMBOL	DESCRIPTION
TWC	TWO-WAY COMMUNICATION SYSTEM CALL STATION
TWCD	TWO-WAY COMMUNICATION SYSTEM AUTO DIALER
TWCA	TWO-WAY COMMUNICATION SYSTEM ANNUNCIATOR & COMMUNICATION PANEL
TWCP	TWO-WAY COMMUNICATION SYSTEM POWER SUPPLY WITH BATTERY BACK-UP
TWCDP	TWO-WAY COMMUNICATION SYSTEM AUTO DIALER POWER SUPPLY WITH BATTERY BACK-UP
RGP	REMOTE GENERATOR ANNUCIATOR PANEL
ATS	AUTOMATIC TRANSFER SWITCH
UPS	UNINTERRUPTIBLE POWER SUPPLY
CSX	LOW VOLTAGE CONTROL STATION "X" INDICATES TYPE
X	SINGLE / DUPLEX RECEPTACLE OUTLET "X" INDICATES TYPE
	SINGLE/DUPLEX RECEPTACLE OUTLET CONTROLLED BY AUTOMATIC CONTROL DEVICE/SYSTEM
	QUAD RECEPTACLE OUTLET
X	ABOVE COUNTER DUPLEX RECEPTACLE OUTLET (SIMILAR FOR TAMPER RESISTANT, CONTROLLED, QUADS, EMERGENCY, UPS, USB, AND GFCI RECEPTACLE OUTLETS)
	DUPLEX GROUND FAULT CIRCUIT INTERRUPTER RECEPTACLE OUTLET
	DEAD FRONT GROUND FAULT CIRCUIT INTERRUPTER
	DUPLEX EMERGENCY RECEPTACLE OUTLET
	DUPLEX TAMPER RESISTANT RECEPTACLE OUTLET
	QUAD TAMPER RESISTANT RECEPTACLE OUTLET
X	DUPLEX UPS RECEPTACLE OUTLET
X	DUPLEX RECEPTACLE OUTLET WITH 2 USB PORTS
	4 PORT USB CHARGING STATION
X	CEILING MOUNTED DUPLEX/QUAD RECEPTACLE OUTLET
	POWER POLE
	WALL/CEILING MOUNTED SPECIAL RECEPTACLE OUTLET – REFER TO ELECTRICAL STANDARD SCHEDULES
	MULTI-OUTLET SURFACE RACEWAY
X	MULTI-SERVICE DROP SEE ELECTRICAL DETAILS AND DIAGRAMS SHEET "X" INDICATES TYPE
PTX	POKE-THROUGH ASSEMBLY "X" INDICATES TYPE
FBX	FLOOR SERVICE FITTING "X" INDICATES TYPE
AFX	ACCESS FLOOR SERVICE FITTING "X" INDICATES TYPE
RX	CORD REEL "X" INDICATES TYPE
S3	DUAL SWITCHING FOR INNER/OUTER LAMPS OF FLUORESCENT LIGHT FIXTURES
S3S3	3-WAY DUAL SWITCHING FOR INNER/OUTER LAMPS OF FLUORESCENT LIGHT FIXTURES
S4S4	4-WAY DUAL SWITCHING FOR INNER/OUTER LAMPS OF FLUORESCENT LIGHT FIXTURES
ST	DIGITAL TIME SWITCH
SI	ILLUMINATED TOGGLE SWITCH FOR CONTROL OF LIGHTING ON CRITICAL POWER-ILLUMINATED WHEN SWITCH IS IN "OFF" POSITION
SL	LOW VOLTAGE SWITCH
SO	OCCUPANCY SENSOR REFER TO ELECTRICAL STANDARD SCHEDULES
SO2	OCCUPANCY SENSOR
OS X	OCCUPANCY SENSOR "X" INDICATES TYPE

SYMBOL	DESCRIPTION
CP	CONTROL PANEL
	MOTOR
VFC	VARIABLE FREQUENCY CONTROLLER.
	MANUAL CONTROLLER
	MAGNETIC CONTROLLER
	COMBINATION MAGNETIC CONTROLLER
	NON-FUSIBLE DISCONNECT SWITCH
	FUSIBLE DISCONNECT SWITCH
CB	ENCLOSED CIRCUIT BREAKER
	PUSH BUTTON STATION
J	JUNCTION BOX
	HARD WIRE POWER CONNECTION
	GROUND ROD
	GROUND CONNECTION
HH	HANDHOLE
X	CONDUIT SLEEVE WITH BUSHINGS LENGTH AS REQUIRED "X" INDICATES CONDUIT SIZE
	CONDUIT UP
	CONDUIT DOWN
	EMPTY BOX FOR FUTURE TELECOMMUNICATION OUTLET
	ABOVE COUNTER EMPTY BOX FOR FUTURE TELECOMMUNICATION OUTLET
	EMPTY BOX FOR FUTURE CEILING MOUNTED TELECOMMUNICATION OUTLET
	TELECOMMUNICATION OUTLET "X" INDICATES TYPE
	ABOVE COUNTER TELECOMMUNICATION OUTLET "X" INDICATES TYPE
	TELECOMMUNICATION CEILING MOUNTED OUTLET "X" INDICATES TYPE
	TELECOMMUNICATION BACKBOARD
TGB	TELECOMMUNICATION GROUNDING BUS BAR
TMGB	TELECOMMUNICATION MAIN GROUNDING BUS BAR
IC	INTERCOM OUTLET
S	SPEAKER
S	SPEAKER – WALL MOUNTED
MIC	MICROPHONE
VC	VOLUME CONTROL/STATION SELECTOR
B	SIGNALING BELL
	SINGLE FACE CLOCK – CEILING MOUNTED
	SINGLE FACE CLOCK – WALL MOUNTED
	DOUBLE FACE CLOCK – CEILING MOUNTED
S	DOUBLE FACE COMBINATION CLOCK/SPEAKER CEILING MOUNTED
	DOUBLE FACE CLOCK – WALL MOUNTED
S	DOUBLE FACE COMBINATION CLOCK/SPEAKER WALL MOUNTED
TC	TIME CLOCK
C	CONTACTOR
P	PHOTOCELL
TT	TWIST TIMER
EVSE	ELECTRICAL VEHICLE SUPPLY EQUIPMENT
DCFC	DC FAST CHARGER – STANDALONE
DCPM	DC FAST CHARGER – POWER MODULE
DCDP	DC FAST CHARGER – DISPENSER

REFER TO ELECTRICAL STANDARD SCHEDULES

SYMBOL	DESCRIPTION
	SECURITY CAMERA
MD	MOTION DETECTOR
K	SECURITY KEY SWITCH
DC	DOOR CONTACT
KP	KEY PAD
CR	CARD READER
DB	DURESS PUSH BUTTON STATION
DE	DELAYED EGRESS
REX	REQUEST TO EXIT STATION
PP	AUTOMATIC DOOR PUSH PAD OPERATOR
DO	DOOR OPERATOR
DA	DOOR ACTUATOR
AC	ACCESS CONTROL STATION
ACCP	ACCESS CONTROL CONTROL PANEL
ACPS	ACCESS CONTROL POWER SUPPLY
	CIRCUIT BREAKER
	DRAWOUT CIRCUIT BREAKER MANUALLY/ OPERATED
	DRAWOUT CIRCUIT BREAKER ELECTRICALLY/ OPERATED
	SWITCH
	AUTOMATIC OR MANUAL TRANSFER SWITCH
	FUSE
	TRANSFORMER
	CURRENT TRANSFORMER
	POTENTIAL TRANSFORMER
	LIGHTNING ARRESTOR
X	PANELBOARD "X" INDICATES PANELBOARD NAME
	GROUND
	STRESS CONE TERMINATION
K	SECURITY KEY INTERLOCK
G	ENGINE GENERATOR
M	UTILITY METER
EMU	ELECTRONIC METERING UNIT
A	AMMETER
V	VOLTMETER
AS	AMMETER SWITCH
VS	VOLTMETER SWITCH
SPD	SURGE PROTECTIVE DEVICE
CR	CONTROL RELAY
TDR	TIME DELAY RELAY
PRM	PHASE ROTATION MONITOR
	CAMLOK – MALE
	CAMLOK – FEMALE
	THERMAL OVERLOAD RELAY
	NORMALLY OPEN CONTACTS
	NORMALLY CLOSED CONTACTS
	N.O. PUSH BUTTON SINGLE CIRCUIT
	N.C. PUSH BUTTON SINGLE CIRCUIT
X–X	CABLE VAULT "X–X" INDICATES TYPE
	BRANCH CIRCUIT PANELBOARD
	LOAD CENTER
	MOTOR CONTROL CENTER
T	TRANSFORMER
	DISTRIBUTION PANEL
GB	ELECTRICAL GROUNDING BUS BAR
PB	PLUG IN BUSWAY
FB	FEEDER BUSWAY

SYMBOL	DESCRIPTION
F	MANUAL FIRE ALARM BOX
SD	SMOKE DETECTOR
DD	DUCT SMOKE DETECTOR
CO	CARBON MONOXIDE DETECTOR
RT	REMOTE TEST STATION (FOR DUCT DETECTOR)
TD	THERMAL DETECTOR
BD	PROJECTED BEAM DETECTOR
F	FIRE ALARM BELL
F	FIRE ALARM AUDIBLE NOTIFICATION APPLIANCE
XX	FIRE ALARM VISUAL NOTIFICATION APPLIANCE "XX" INDICATES CANDELA RATING IF NO RATING SHOWN, APPLIANCE IS 15cd
XX	FIRE ALARM COMBINATION VISUAL/ AUDIBLE "XX" INDICATES CANDELA RATING IF NO RATING SHOWN, APPLIANCE IS 15cd
F XX	FIRE ALARM COMBINATION VISUAL/ AUDIBLE NOTIFICATION APPLIANCE– CEILING MOUNTED "XX" INDICATES CANDELA RATING IF NO RATING SHOWN, APPLIANCE IS 15cd
XX	FIRE ALARM VISUAL NOTIFICATION APPLIANCE CEILING MOUNTED "XX" INDICATES CANDELA RATING IF NO RATING SHOWN, APPLIANCE IS 15cd
F	FIRE ALARM AUDIBLE NOTIFICATION APPLIANCE – CEILING MOUNTED
F	FIREFIGHTERS PHONE JACK
FACP	FIRE ALARM CONTROL PANEL
FAA	FIRE ALARM ANNUNCIATOR PANEL
NAC	NOTIFICATION APPLIANCE CIRCUIT EXTENDER PANEL
IM	ADDRESSABLE MONITORING MODULE
CM	ADDRESSABLE CONTROL MODULE
TS	TAMPER SWITCH
FS	FLOW SWITCH
DR	MAGNETIC DOOR RELEASE

ELECTRICAL DRAWING INDEX

SHEET NO.	SHEET TITLE
E0.1	ELECTRICAL STANDARDS AND DRAWING INDEX
E0.2	ELECTRICAL STANDARD SCHEDULES
E0.3	ELECTRICAL COMPOSITE PLAN
ED1.1	FIRST FLOOR ELECTRICAL DEMOLITION PLAN
E3.1	FIRST FLOOR POWER PLAN
E5.1	ONE LINE DIAGRAM
E5.2	PANEL SCHEDULES

ELECTRICAL ABBREVIATION LIST

ABBREVIATION	DESCRIPTION
A	AMPERES
AER	ARC ENERGY REDUCTION
AF	AMPERES FRAME (BREAKER RATING)
AFCI	ARC FAULT CIRCUIT INTERRUPTER
A.F.F.	ABOVE FINISH FLOOR
AIC	AMPS INTERRUPTING CAPACITY
AL	AUDIENCE LEFT
ALCR	AUTOMATIC LOAD CONTROL RELAY
AR	AUDIENCE RIGHT
AT	AMPERES TRIP (BREAKER SETTING)
ATS	AUTOMATIC TRANSFER SWITCH
AUX	AUXILIARY
BCELTS	BRANCH CIRCUIT EMERGENCY LIGHTING TRANSFER SWITCH
BKR	BREAKER
BPS	BOLTED PRESSURE SWITCH
C	CONDUIT
CB	CIRCUIT BREAKER
CFCI	CONTRACTOR FURNISHED, CONTRACTOR INSTALLED
CKT	CIRCUIT
CT	CURRENT TRANSFORMER
DEMO	DEMOLITION
DIM	DIMENSION
DISC	DISCONNECT
DP	DISTRIBUTION PANEL
DS	DOWNSTAGE
DWG	DRAWING
EBU	EMERGENCY BATTERY UNIT
EC	ELECTRICAL CONTRACTOR
ECM	ELECTRONICALLY COMMUTATED MOTOR
ELEC	ELECTRICAL
EM/ EMERG	EMERGENCY
EMT	ELECTRICAL METALLIC TUBING
EO	ELECTRICALLY OPERATED
EPO	EMERGENCY POWER OFF
EWC	ELECTRIC WATER COOLER
EXIST	EXISTING
FA	FIRE ALARM
FLA	FULL LOAD AMPS
FLR	FLOOR
FOH	FRONT OF HOUSE
FSEC	FOOD SERVICE EQUIPMENT CONTRACTOR
FU	FUSE

ABBREVIATION	DESCRIPTION
G/GRD/EG	GROUND
GFCI	GROUND FAULT CIRCUIT INTERRUPTER
GFP	GROUND FAULT PROTECTION
HOA	HAND–OFF–AUTO
HP	HORSEPOWER
HV	HIGH VOLTAGE
HZ	HERTZ
IG	ISOLATED GROUND
JB	JUNCTION BOX
KA	THOUSAND AMP
KV	KILOVOLT
KVA	KILOVOLT – AMPERES
KW	KILOWATT
KWH	KILOWATT – HOURS
LA	LIGHTNING ARRESTOR
LP	LIGHTING PANEL
LDP	LIGHTING DISTRIBUTION PANEL
MAX	MAXIMUM
MCA	MINIMUM CIRCUIT AMPACITY
MCB	MAIN CIRCUIT BREAKER
MCC	MOTOR CONTROL CENTER
MDP	MAIN DISTRIBUTION PANEL
MECH	MECHANICAL
MIN	MINIMUM
MISC.	MISCELLANEOUS
MLO	MAIN LUGS ONLY
MOP	MAXIMUM OVERCURRENT PROTECTION
MTD	MOUNTED
MTG	MOUNTING
MTR	MOTOR
N	NEUTRAL
NC	NORMALLY CLOSED
NEC	NATIONAL ELECTRICAL CODE
NF	NON–FUSIBLE
NIC	NOT IN CONTRACT
NL	NIGHT LIGHT
NO	NORMALLY OPEN
NTS	NOT TO SCALE

ABBREVIATION	DESCRIPTION
OC	ON CENTER
OFCI	OWNER FURNISHED, CONTRACTOR INSTALLED
OFOI	OWNER FURNISHED, OWNER INSTALLED
P	POLE
PB	PUSHBUTTON STATION
PH	PHASE
PT	POTENTIAL TRANSFORMER
PDP	POWER DISTRIBUTION PANEL
RECEPT.	RECEPTACLE
RDP	RECEPTACLE DISTRIBUTION PANEL
RP	RECEPTACLE PANEL
RSC	RIGID STEEL CONDUIT
SCCR	SHORT CIRCUIT CURRENT RATING
SCHED	SCHEDULE
SPD	SURGE PROTECTION DEVICE
ST	SHUNT TRIP
SW	SWITCH
SWBD	SWITCHBOARD
SWGR	SWITCHGEAR
TB	TERMINAL BOX
TELECOM	TELECOMMUNICATIONS
TR	TAMPER RESISTANT
TTB	TELEPHONE TERMINAL BACKBOARD
TYP	TYPICAL
U.O.N.	UNLESS OTHERWISE NOTED
US	UPSTAGE
V	VOLTS
W	WIRE OR WATTS
WAP	WIRELESS ACCESS POINT
WG	WIRE GUARD
WP	WEATHERPROOF
WR	WEATHER RESISTANT
XFMR	TRANSFORMER
XP	EXPLOSION PROOF
(E)	EXISTING
(R)	RELOCATED

STANDARD MOUNTING HEIGHTS

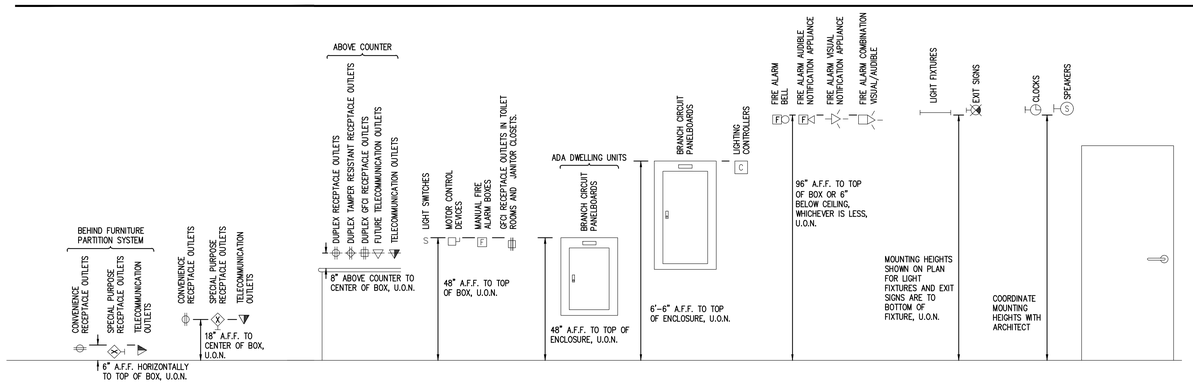

STANDARD METHODS OF NOTATION

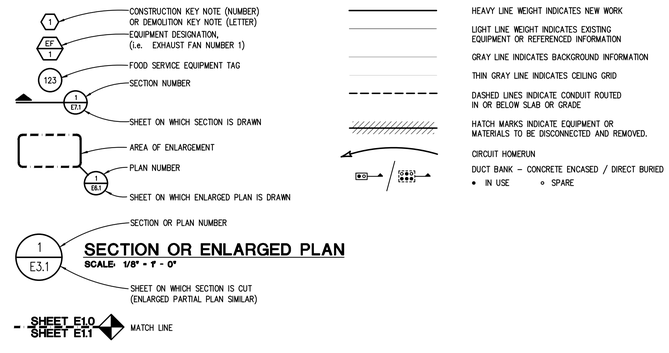

TMP ARCHITECTURE

TMP ARCHITECTURE INC
1191 WEST SQUARE LAKE ROAD
BLOOMFIELD HILLS • MICHIGAN • 48302
PH • 248.338.4561 FX • 248.338.0223
EM • INFO@TMP-ARCHITECTURE.COM

REGISTRATION SEAL

CONSULTANT

Peter Basso Associates Inc
CONSULTING ENGINEERS
5145 Livernois, Suite 100
Troy, Michigan 48098-3276
Tel: 248-879-5666
Fax: 248-879-0007
www.PeterBassoAssociates.com
PBA Project No.: 2023-0227

PROJECT TITLE

Wylie Elementary School Pool Upgrades

Dexter Community Schools

DRAWING TITLE

ELECTRICAL STANDARDS AND DRAWING INDEX

ISSUE DATES

DATE:	ISSUED FOR:
05–25–2023	CONSTRUCTION DOCUMENTS

DRAWN STP
CHECKED STP
APPROVED STP

PROJECT NO.

22072A

DRAWING NO.

E0.1

g:\2023\2023-0227-00\CAD\2023-0227-E0-IND.dwg, E0.1, 5/25/2023 1:18:08 PM, Dominic P. Moceri, None ,0.13459, Peter Basso Associates Inc.

MOTOR CIRCUIT SIZING SCHEDULE (480V, 3 PHASE)

MOTOR HP	SWITCH/ FUSE	CIRCUIT BREAKER	STARTER SIZE/TYPE	MOTOR DISCONNECT (NOTE 3)
1/2	30/3A	15A	1	30A
3/4	30/3A	15A	1	30A
1	30/6A	15A	1	30A
1 1/2	30/6A	15A	1	30A
2	30/6A	15A	1	30A
3	30/10A	15A	1	30A
5	30/15A	15A	1	30A
7 1/2	30/20A	20A	1	30A
10	30/20A	25A	1	30A
15	30/30A	40A	2	30A
20	60/40A	60A	2	60A
25	60/50A	70A	2	60A
30	60/60A	80A	3	60A
40	100/80A	90A	3	100A
50	100/100A	100A	3	100A
60	200/125A	125A	4	200A
75	200/150A	150A	4	200A
100	200/200A	200A	4	200A
125	200/200A	225A	5	200A
150	400/250A	250A	5	400A
200	400/350A	350A	5	400A

GENERAL NOTES:
1. BASED ON MOTOR FULL LOAD AMPERES AS PROVIDED BY THE NEC
2. BASED ON MOTOR RUNNING OVERLOAD PROTECTIONS PROVIDED BY THERMAL OVERLOAD RELAYS.
3. WHERE THE STARTER IS LOCATED REMOTE FROM THE MOTOR, PROVIDE DISCONNECT LOCATED AT THE MOTOR, SIZE AS INDICATED.

FEEDER AND BRANCH CIRCUIT SIZING SCHEDULE - GENERAL PURPOSE

OVERCURRENT DEVICE RATING (AMPERES)	COPPER CONDUCTORS						KEYED NOTES	ALUMINUM CONDUCTORS				
	WIRE SIZE (AWG OR KCMIL)		CONDUIT SIZE					WIRE SIZE (AWG OR KCMIL)		CONDUIT SIZE		
	PHASE & NEUTRAL	GROUND	SINGLE PHASE 2 WIRE+G (1PH, 1N, 1G, 2PH, 1G)	SINGLE PHASE 3 WIRE+G (2PH, 1N, 1G)	THREE PHASE 3 WIRE+G (3PH, 1G)	THREE PHASE & NEUTRAL 4 WIRE+G (3PH, 1N, 1G)		PHASE & NEUTRAL	GROUND	SINGLE PHASE 3 WIRE+G (2PH, 1N, 1G)	THREE PHASE 3 WIRE+G (3PH, 1G)	THREE PHASE & NEUTRAL 4 WIRE+G (3PH, 1N, 1G)
15-20	12	12	3/4"	3/4"	3/4"	3/4"		NOT ACCEPTABLE				
25-30	10	10	3/4"	3/4"	3/4"	3/4"						
35-40	8	10	3/4"	3/4"	3/4"	3/4"						
45-50	8 (6)	10	3/4"	3/4"	3/4"	3/4"	1					
60	6 (4)	10	3/4" (1")	3/4" (1")	3/4" (1")	1" (1 1/4")	1					
70	4	8	1"	1 1/4"	1 1/4"	1 1/4"						
80	4 (3)	8	1"	1 1/4"	1 1/4"	1 1/4"	1					
90-100	3 (2)	8	1 1/4"	1 1/4"	1 1/4"	1 1/4"	1	1	6	1 1/2"	1 1/2"	1 1/2"
110	2 (1)	6	–	1 1/4"	1 1/4"	1 1/4" (1 1/2")	1	1/0	4	1 1/2"	1 1/2"	2"
125	1 (1/0)	6	–	1 1/4" (1 1/2")	1 1/4" (1 1/2")	1 1/2"	1	2/0	4	1 1/2"	1 1/2"	2"
150	1/0	6	–	1 1/2"	1 1/2"	1 1/2"		3/0	4	2"	2"	2 1/2"
175	2/0	6	–	2"	2"	2"		4/0	4	2"	2"	2 1/2"
200	3/0	6	–	2"	2"	2 1/2"		250	4	2"	2"	3"
225	4/0	4	–	2"	2"	2 1/2"		300	2	2 1/2"	2 1/2"	3"
250	250	4	–	2 1/2"	2 1/2"	2 1/2"		350	2	2 1/2"	2 1/2"	3"
300	350	4	–	2 1/2"	2 1/2"	3"		500	2	3"	3"	3 1/2"
350	500	3	–	3"	3"	3"		2-4/0	2-1/0	2-2"	2-2"	2-2"
400	500	3	–	3"	3"	3"		2-250	2-1/0	2-2 1/2"	2-2 1/2"	2-2 1/2"
450	2-4/0	2-2	–	2-2"	2-2"	2-2 1/2"		2-300	2-1/0	2-2 1/2"	2-2 1/2"	2-3"
500	2-250	2-2	–	2-2" 1/2"	2-2 1/2"	2-2 1/2"		2-350	2-1/0	2-2 1/2"	2-2 1/2"	2-3"
600	2-350	2-1	–	2-2" 1/2"	2-2 1/2"	2-3"		2-500	2-2/0	2-3"	2-3"	2-3 1/2"
700	2-500	2-1/0	–	2-3"	2-3"	2-3"		2-600	2-3/0	2-3"	2-3"	2-3 1/2"
800	2-500	2-1/0	–	2-3"	2-3"	2-3 1/2"		3-400	3-3/0	3-3"	3-3"	3-3 1/2"
1000	3-400	3-2/0	–	3-3"	3-3"	3-3"		3-600	3-4/0	–	3-3 1/2"	3-3 1/2"
1200	3-600	3-3/0	–	3-3 1/2"	3-3 1/2"	3-3 1/2"		4-500	4-250	–	4-3"	4-3 1/2"
1600	4-600	4-4/0	–	4-3 1/2"	4-3 1/2"	4-3 1/2"		5-600	5-350	–	5-3 1/2"	5-4"
2000	5-600	5-250	–	5-3 1/2"	5-3 1/2"	5-3 1/2"		6-600	6-400	–	6-3 1/2"	6-4"

GENERAL NOTES:
1. CONTRACTOR TO SIZE FEEDERS AND BRANCH CIRCUITS BASED ON THIS SCHEDULE AND OVER CURRENT DEVICE SIZE, UNLESS NOTED OTHERWISE.
2. CONTRACTOR MAY COMBINE 20A CIRCUITS AS NOTED IN SPECIFICATION.
3. COPPER CONDUCTORS ARE BASED ON THHN/THWN UP TO AND INCLUDING #4/0. COPPER CONDUCTORS LARGER THAN #4/0 AND ALUMINUM CONDUCTORS ARE BASED ON XHHW-2.
4. CONDUIT SIZES ARE VALID FOR EMT OR RGS. CONDUIT SIZES SHALL BE ADJUSTED AS REQUIRED FOR OTHER TYPES OF CONDUIT.
5. ELECTRICAL CONTRACTOR TO COORDINATE WITH MECHANICAL CONTRACTOR AND PROVIDE REQUIRED WIRE SIZES TO ACCOMMODATE MECHANICAL EQUIPMENT LUG SIZES.
6. SIZE OF DISCONNECT SWITCH LOCATED AT EQUIPMENT SHALL BE SIZED BASED UPON OVERCURRENT PROTECTION OF THAT DEVICE.
7. OBTAIN APPROVAL FROM ENGINEER PRIOR TO INSTALLING DIFFERENT SIZE/QUANTITY OF CONDUCTORS TO OBTAIN AN EQUIVALENT AMPACITY.
8. SPLICE FROM ALUMINUM TO COPPER PRIOR TO ENTERING EQUIPMENT LISTED FOR USE WITH COPPER CONDUCTORS ONLY OR USE COPPER CONDUCTORS FOR THE ENTIRE LENGTH OF FEEDER.

KEYED NOTES:
1. CONDUCTORS ARE BASED ON 90°C, 600V. INSULATED WIRE APPLIED AT 75°C FOR TERMINATION RATED 60/75°C OR 75°C. FOR TERMINATION RATED AT 60°C, USE CONDUCTORS AND CONDUIT SIZES INDICATED IN PARENTHESES.

RACEWAY / CONDUCTOR / CABLE APPLICATION SCHEDULE

		WIRE			RACEWAY											CABLE/ CORD		
		COPPER, TYPE THHN/THWN-2	COPPER, TYPE XHHW-2	ALUMINUM, TYPE XHHW-2 (100A AND ABOVE ONLY)	ELECTRICAL METALLIC TUBING (EMT)	INTERMEDIATE METAL CONDUIT (IMC)	RIGID STEEL CONDUIT (RSC)	PVC COATED RIGID STEEL CONDUIT	PVC COATED INTERMEDIATE METAL CONDUIT	RIGID NON-METALLIC CONDUIT (RNC) TYPE EPC-40	HIGH DENSITY POLYETHYLENE (HDPE) SCHEDULE 40	REINFORCED THERMOSET RESIN CONDUIT (RTRC) TYPE 8G	FLEXIBLE METAL CONDUIT (FMC)	LIQUID TIGHT FLEXIBLE METAL CONDUIT (LFMC)	SURFACE RACEWAY	METAL CLAD TYPE CABLE WITH INSULATED GROUND WIRE (TYPE MC)	VFC CABLE	POWER LIMITED CABLE
FEEDERS – INTERIOR	CONCEALED, ACCESSIBLE CEILINGS	X		X	X	X												
	CONCEALED, INACCESSIBLE CEILINGS	X		X	X	X												
	CONCEALED IN GYPSUM BOARD PARTITION WALLS	X		X	X	X												
	CONCEALED IN CMU WALLS	X		X	X	X												
	EXPOSED, BELOW 10' AFF AND SUBJECT TO DAMAGE	X		X		X	X	X										
	EXPOSED, BELOW 10' AFF AND NOT SUBJECT TO DAMAGE	X		X	X	X												
	EXPOSED, ABOVE 10' AFF UNFINISHED SPACES	X		X	X	X												
	EXPOSED, FINISHED SPACES	X		X											X			
	BELOW SLAB ON GRADE	X		X			X	X		X								
	DAMP AND WET LOCATIONS	X		X		X	X	X		X								
BRANCH CIRCUITS – EXTERIOR	EXPOSED, SURFACE MOUNTED TO STRUCTURE		X			X	X	X										
	EXPOSED, WITH FREESTANDING SUPPORT		X			X	X	X										
	CONCEALED IN RETAINING WALL OR SIMILAR ELEMENT		X				X	X		X								
	BELOW PARKING LOTS AND ROADWAYS		X				X	X		X	X							
	BELOW GREEN SPACE		X							X								
	WITHIN 5' OF FOUNDATION WALL		X				X	X										
	ROOFTOPS (WHEN APPROVED BY ENGINEER)		X			X	X	X										
BRANCH CIRCUITS – INTERIOR	CONCEALED, ACCESSIBLE CEILINGS	X			X	X										X		
	CONCEALED, INACCESSIBLE CEILINGS	X			X	X												
	CONCEALED IN GYPSUM BOARD PARTITION WALLS	X			X	X							X			X		
	CONCEALED IN CMU WALLS	X			X	X												
	EXPOSED, BELOW 10' AFF AND SUBJECT TO DAMAGE	X				X	X	X										
	EXPOSED, BELOW 10' AFF AND NOT SUBJECT TO DAMAGE	X			X	X									X			
	EXPOSED, ABOVE 10' AFF UNFINISHED SPACES	X			X	X												
	EXPOSED, FINISHED SPACES	X													X			
	BELOW SLAB ON GRADE	X								X								
	EMBEDDED IN ELEVATED CONCRETE SLAB	X								X								
	DAMP AND WET LOCATIONS	X				X	X	X		X				X				
SPECIAL APPLICATIONS	CONNECTION BETWEEN VFC AND MOTORS (KEYED NOTE 1)																X	
	CLASS 1 CONTROL CIRCUITS	X			X	X	X											
	CLASS 2 CONTROL CIRCUITS	X			X	X	X											X
	CLASS 3 CONTROL CIRCUITS	X			X	X	X											X
	NATATORIUMS AND POOLS, PUBLIC SPACES	X	X					X	X	X		X		X				
	POOL AND FOUNTAIN EQUIPMENT ROOMS	X	X					X	X	X		X		X				

GENERAL NOTES:
1. TRANSITION FROM PVC/HDPE AND PROVIDE RIGID STEEL OR RTRC SWEEPS WHERE CONDUITS PENETRATE WALLS, CONCRETE SLABS, CONCRETE BASES, AND ASPHALT.
2. REFER TO SPECIFICATIONS FOR RESTRICTIONS ON MC/AC CABLE INSTALLATION.
3. EMT SHALL NOT BE USED ON THE EXTERIOR OF A BUILDING OR IN AREAS SUBJECT TO DAMAGE BELOW 10' AFF.
4. INSTALL SURFACE RACEWAYS ONLY WHERE INDICATED ON DRAWINGS.

KEYED NOTES:
1. NON-ARMORED CABLE SHALL BE INSTALLED IN RACEWAY. ARMORED CABLE SHALL BE INSTALLED IN TRAY OR FREE-AIR AS APPLICABLE.

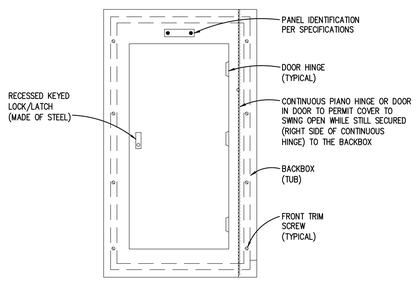

PANELBOARD FRONT COVER DETAIL
NO SCALE

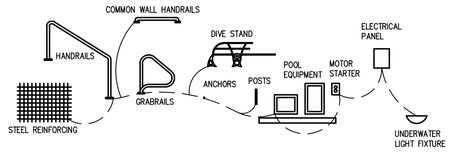

POOL SCHEMATIC BONDING DETAIL
NO SCALE

NOTE: GROUND POOL EQUIPMENT AND MISCELLANEOUS METAL OBJECTS WITH #8 SOLID COPPER GROUND CONDUCTOR TO THE GROUND IN ELECTRICAL PANEL. GROUND ALL METAL OBJECTS WITHIN 5 FEET OF THE POOL TO COMPLY WITH ARTICLE 680 OF THE N.E.C. PROVIDE GROUND FAULT INTERRUPTER IN ALL CIRCUITS SERVING ADAPTERS OR OTHER EQUIPMENT WITHIN 5 FEET OF POOL.

BRANCH CIRCUIT VOLTAGE DROP WIRING SCHEDULE FOR SINGLE PHASE CIRCUITS

BRANCH CKT RATING (A)	WIRE SIZE (AWG)	MAXIMUM BRANCH CIRCUIT LENGTH (IN FEET)				
		120V	208V	240V	277V	480V
20A	12	83	143	165	191	331
	10	128	222	256	295	511
	8	201	348	402	464	804
	6	313	542	625	721	1250
30A	10	85	148	170	197	341
	8	134	232	268	309	536
	6	208	361	417	481	833
	4	313	542	625	721	1250

GENERAL NOTES:
1. THE ABOVE TABLE VALUES ARE BASED ON COPPER CONDUCTORS, IN STEEL CONDUIT, WITH A LOAD POWER FACTOR OF 0.85 PER NEC CHAPTER 9, TABLE 9.
2. PROVIDE BRANCH CIRCUIT CONDUCTORS AS INDICATED IN THE TABLE ABOVE FOR ALL LIGHTING AND RECEPTACLE BRANCH CIRCUITS. WHERE BRANCH CIRCUITS SERVE DEDICATED EQUIPMENT, THE CONTRACTOR MAY PERFORM VOLTAGE DROP CALCULATIONS BASED ON ACTUAL EQUIPMENT CONNECTED LOAD AND PROVIDE CONDUCTORS APPROPRIATELY SIZED TO LIMIT VOLTAGE DROP TO A MAXIMUM OF 3%.
3. CONDUCTOR SIZES ARE BASED ON MAXIMUM OF 9 CURRENT CARRYING CONDUCTORS IN A SINGLE CONDUIT.
4. LIMITS FOR CONDUCTOR LENGTHS SHOWN ARE BASED ON A MAXIMUM BRANCH CIRCUIT LOADING OF 64% OF THE BRANCH BREAKER RATING AND A MAXIMUM OF 3 PERCENT VOLTAGE DROP TO COMPLY WITH ASHRAE 90.1 AND THE NEC. FOR CIRCUITS LOADED GREATER THAN 64% OF BRANCH BREAKER RATING, THE CONTRACTOR SHALL PROVIDE CONDUCTORS APPROPRIATELY SIZED TO LIMIT VOLTAGE DROP TO 3%.

NOTE: SOME SYMBOLS AND ABBREVIATIONS SHOWN MAY NOT APPLY TO THIS PROJECT.

TMP ARCHITECTURE

TMP ARCHITECTURE INC
1191 WEST SQUARE LAKE ROAD
BLOOMFIELD HILLS • MICHIGAN • 48302
PH • 248.338.4561 FX • 248.338.0223
EM • INFO@TMP-ARCHITECTURE.COM

REGISTRATION SEAL

CONSULTANT

Peter Basso Associates Inc
CONSULTING ENGINEERS
5145 Livernois, Suite 100
Troy, Michigan 48098-3276
Tel: 248-879-5666
Fax: 248-879-0007
www.PeterBassoAssociates.com
PBA Project No.: 2023-0227

PROJECT TITLE
Wylie Elementary School Pool Upgrades

Dexter Community Schools

DRAWING TITLE
ELECTRICAL STANDARD SCHEDULES

ISSUE DATES

DATE:	ISSUED FOR:
05-25-2023	CONSTRUCTION DOCUMENTS

DRAWN STP
CHECKED STP
APPROVED STP

PROJECT NO.
22072A

DRAWING NO.
E0.2

g:\2023\2023-0227-00\CAD\2023-0227-E0-IND.dwg, E0.2, 5/25/2023 1:18:09 PM, Dominic P. Maceri, None ,0.13459, Peter Basso Associates Inc.

THE FOLLOWING DIMENSION EQUALS ONE INCH WHEN PRINTED TO SCALE. 1"

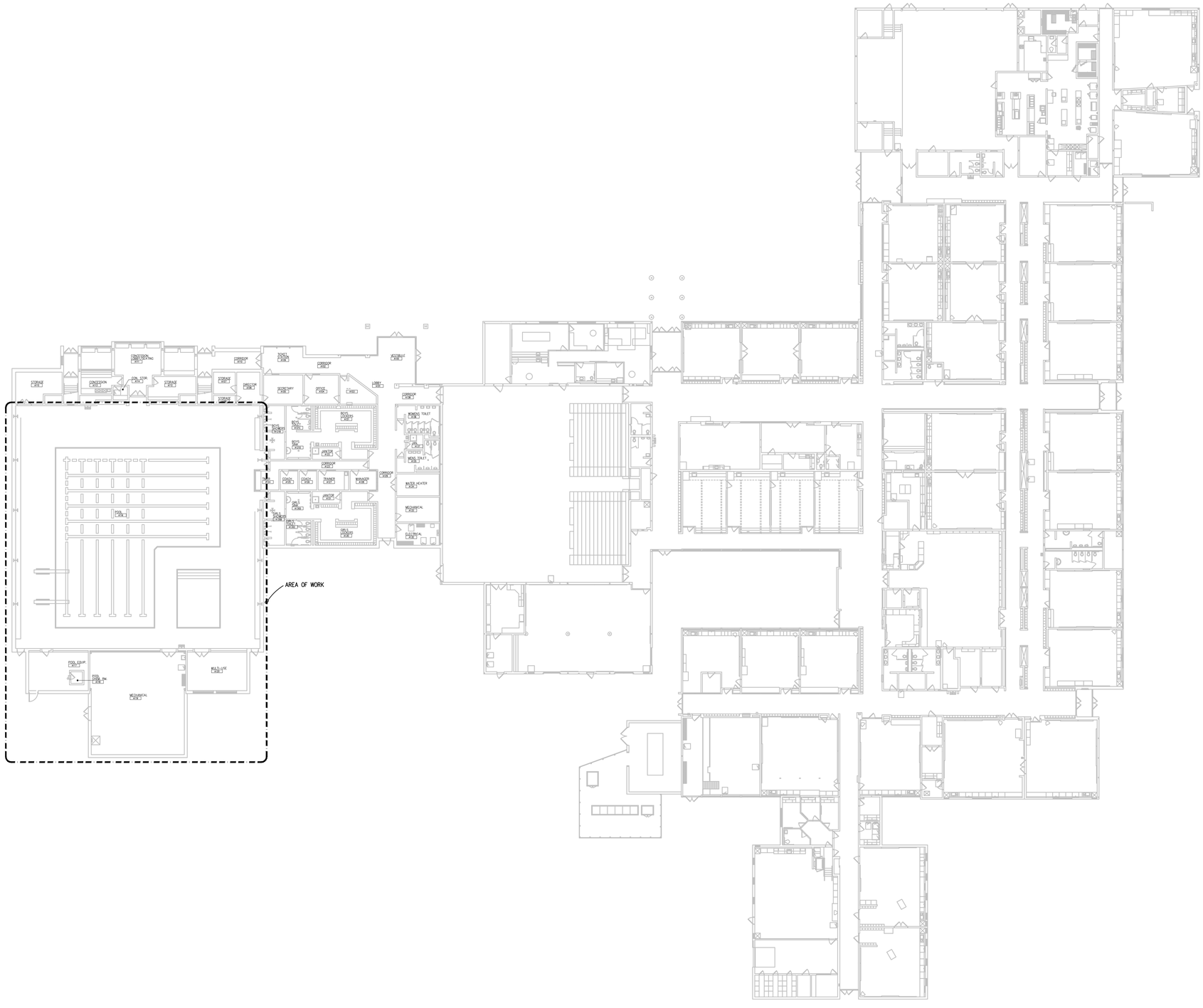

ELECTRICAL COMPOSITE PLAN

SCALE: 1" = 20' - 0"

TMP ARCHITECTURE

TMP ARCHITECTURE INC
1191 WEST SQUARE LAKE ROAD
BLOOMFIELD HILLS • MICHIGAN • 48302
PH • 248.338.4561 FX • 248.338.0223
EM • INFO@TMP-ARCHITECTURE.COM

REGISTRATION SEAL

CONSULTANT

Peter Basso Associates Inc
CONSULTING ENGINEERS
5145 Livernois, Suite 100
Troy, Michigan 48098-3276
Tel: 248-879-5666
Fax: 248-879-0007
www.PeterBassoAssociates.com
PBA Project No.: 2023-0227

PROJECT TITLE

Wylie Elementary School Pool Upgrades

Dexter Community Schools

DRAWING TITLE

ELECTRICAL COMPOSITE PLAN

ISSUE DATES

DATE:	ISSUED FOR:
05-25-2023	CONSTRUCTION DOCUMENTS

DRAWN	STP
CHECKED	STP
APPROVED	STP

PROJECT NO.

22072A

DRAWING NO.

E0.3

g:\2023\2023-0227-00\CAD\2023-0227-E0-CMP.dwg, E0.3, 5/25/2023 1:18:15 PM, Dominic P. Maceri, None ,0.13459, Peter Basso Associates Inc.

THE FOLLOWING DIMENSION EQUALS ONE INCH WHEN PRINTED TO SCALE. 1"

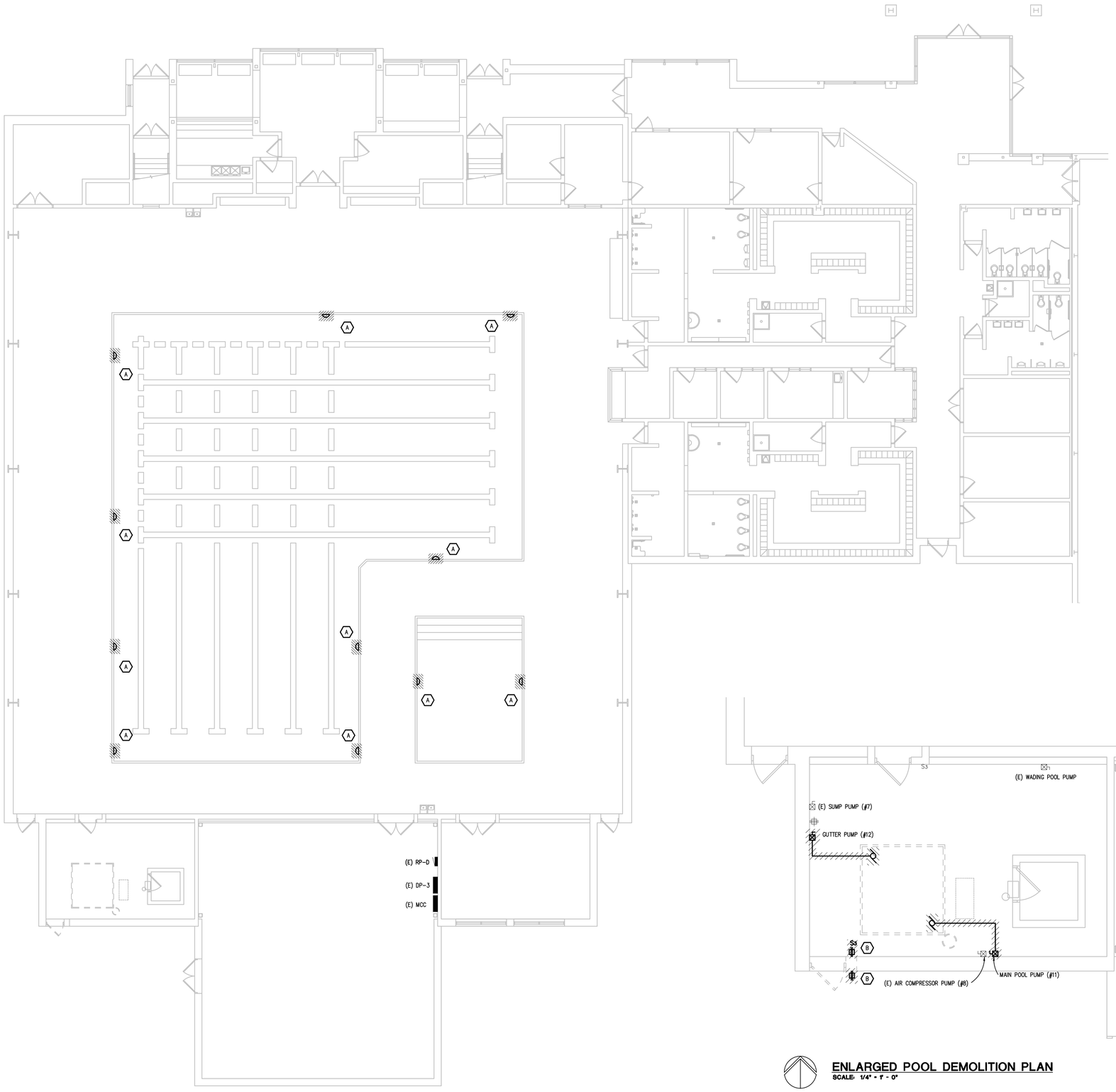

FIRST FLOOR ELECTRICAL DEMOLITION PLAN
SCALE: 1" = 20' - 0"

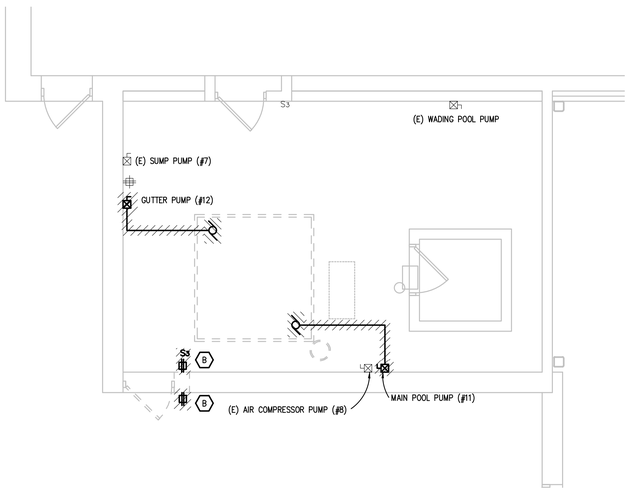

ENLARGED POOL DEMOLITION PLAN
SCALE: 1/4" = 1' - 0"

ELECTRICAL DEMOLITION GENERAL NOTES:

1. VISIT THE SITE PRIOR TO SUBMISSION OF BID TO EXAMINE THE EXISTING CONDITIONS AND THE EXTENT OF DEMOLITION WORK.
2. EXAMINE THE DRAWINGS OF OTHER TRADES AND BE FAMILIAR WITH THE DEMOLITION REQUIRED BY OTHER TRADES. PERFORM ALL INCIDENTAL ELECTRICAL DEMOLITION AND/OR RELOCATION REQUIRED TO FACILITATE THE DEMOLITION WORK OF OTHER TRADES, WHETHER OR NOT SPECIFICALLY INDICATED.
3. REMOVE EQUIPMENT OR MATERIALS AS INDICATED ON PLAN WITH CROSS HATCHING. DEMOLITION SHALL INCLUDE, BUT NOT BE LIMITED TO, THOSE COMPONENTS SHOWN.
4. COORDINATE WITH NEW WORK PLANS, ONE LINE DIAGRAMS AND RISER DIAGRAMS FOR EXTENT OF DEMOLITION WORK.
5. PROVIDE PROPER SUPPORT FOR EXISTING TO REMAIN CONDUITS AND BOXES WHERE EXISTING SUPPORT IS TO BE REMOVED. RE-ROUTE BRANCH CIRCUIT CONDUITS AND RELOCATE JUNCTION BOXES AS REQUIRED TO FACILITATE INSTALLATION OF NEW EQUIPMENT AND SYSTEMS IN CEILING SPACES.
6. REMOVE ALL CONDUIT AND WIRE BACK TO THE SOURCE OR NEAREST UPSTREAM DEVICE REMAINING IN SERVICE.
7. MAINTAIN ELECTRICAL SERVICE TO ALL LIGHTING FIXTURES, DEVICES AND EQUIPMENT THAT ARE TO REMAIN. EXTEND CONDUIT AND WIRE AS REQUIRED WHERE DEMOLITION WORK AFFECTS ELECTRICAL SERVICE TO DOWNSTREAM LOADS THAT ARE TO REMAIN.
8. DISPOSE OF ALL MATERIALS OFF SITE AND INCLUDE ALL COSTS FOR DISPOSAL IN BID. ALL MATERIALS SHALL BE DISPOSED OF IN ACCORDANCE WITH ALL FEDERAL, STATE, AND LOCAL REGULATIONS, INCLUDING TCLP TESTING, PROPER DISPOSAL AND/OR RECYCLING OF FLUORESCENT LAMPS.
9. PROVIDE BLANK COVER PLATES WHERE SWITCHES AND DEVICES ARE REMOVED BUT EXISTING WALLS REMAIN INTACT.
10. RING OUT AND TAG ALL CIRCUITS AFFECTED BY THIS ALTERATION AT BOTH ENDS. MARK ALL UNUSED CIRCUIT BREAKERS "SPARE".
11. PROVIDE UPDATED TYPED-IN DIRECTORIES FOR ALL PANELS AFFECTED BY THIS ALTERATION.
12. VERIFY ALL UNDERGROUND AND IN SLAB UTILITY LOCATIONS PRIOR TO SAW-CUTTING OR PENETRATING ANY FLOOR SLAB.
13. COORDINATE ANY SHUT DOWN OF EXISTING SERVICES AND EQUIPMENT THAT ARE REMAINING IN USE WITH THE OWNER'S REPRESENTATIVE. WHERE EXISTING BUILDING SERVICE IS REQUIRED TO BE SHUT DOWN, INCLUDE ALL ASSOCIATED OVERTIME COSTS TO PERFORM THIS WORK DURING WEEKENDS AND EVENINGS INCLUDE ALL COSTS FOR PROVIDING TEMPORARY POWER WHERE SHUT DOWNS MUST OCCUR FOR PERIODS LONGER THAN THESE HOURS. COORDINATE ELECTRICAL SHUT DOWNS WITH THE OWNER 72 HOURS PRIOR TO SHUT DOWN.

(#) DEMOLITION KEY NOTES:

A. UNDERWATER LIGHT FIXTURE BEING REPLACED. DISCONNECT LIGHT FIXTURE MAINTAIN BRANCH CIRCUIT FOR REUSE.

B. RECEPTACLES AND LIGHTING CONTROL TO BE RELOCATED. MAINTAIN BRANCH CIRCUIT FOR REUSE.

TMP ARCHITECTURE

TMP ARCHITECTURE INC
1191 WEST SQUARE LAKE ROAD
BLOOMFIELD HILLS • MICHIGAN • 48302
PH • 248.338.4561 FX • 248.338.0223
EM • INFO@TMP-ARCHITECTURE.COM

REGISTRATION SEAL

CONSULTANT

Peter Basso Associates Inc
CONSULTING ENGINEERS
5145 Livernois, Suite 100
Troy, Michigan 48098-3276
Tel: 248-879-5666
Fax: 248-879-0007
www.PeterBassoAssociates.com
PBA Project No.: 2023-0227

PROJECT TITLE

Wylie Elementary School Pool Upgrades

Dexter Community Schools

DRAWING TITLE

FIRST FLOOR ELECTRICAL DEMOLITION PLAN

ISSUE DATES

DATE:	ISSUED FOR:
05-25-2023	CONSTRUCTION DOCUMENTS

DRAWN STP
CHECKED STP
APPROVED STP

PROJECT NO.

22072A

DRAWING NO.

ED1.1

g:\2023\2023-0227-00\CAD\2023-0227-ED1-DP1.dwg, ED1.1, 5/25/2023 1:18:21 PM, Dominic P. Moceri, None ,0.13459, Peter Basso Associates Inc.

THE FOLLOWING DIMENSION EQUALS ONE INCH WHEN PRINTED TO SCALE. 1"

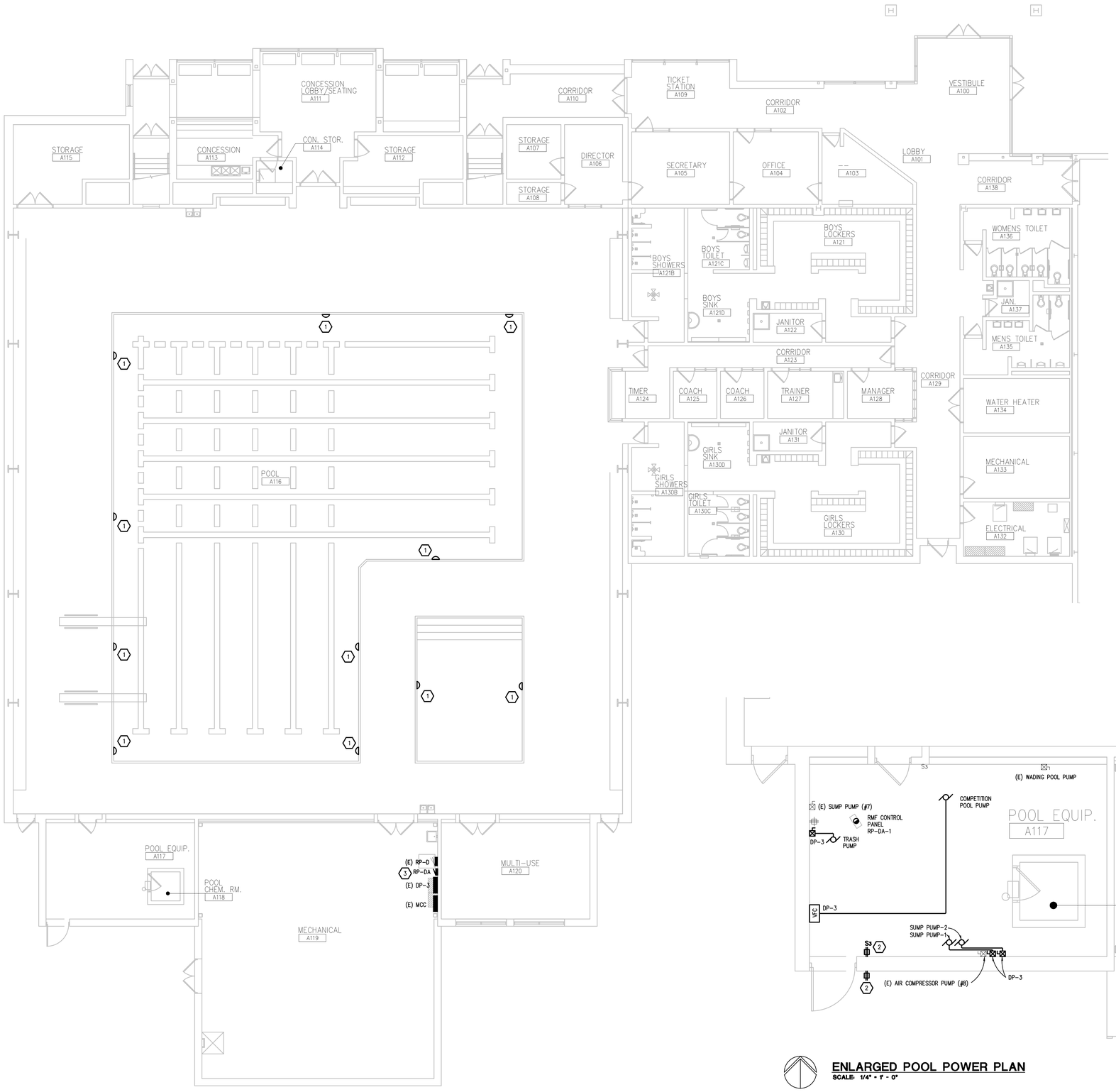

FIRST FLOOR POWER PLAN
SCALE: 1" = 20' - 0"

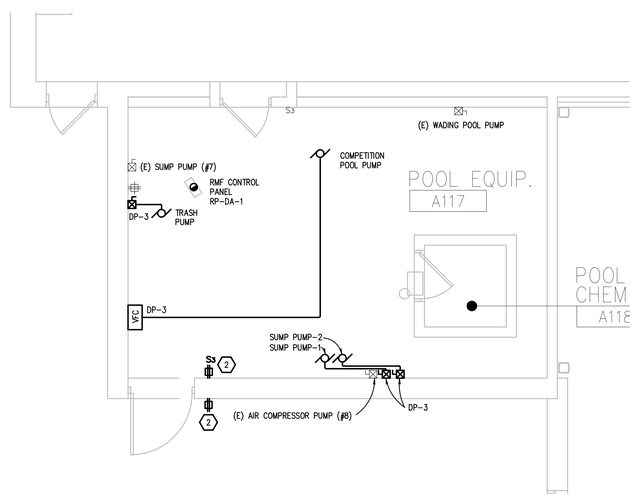

ENLARGED POOL POWER PLAN
SCALE: 1/4" = 1' - 0"

ELECTRICAL GENERAL NOTES:

1. THESE DRAWINGS REPRESENT THE GENERAL EXTENT AND ARRANGEMENT OF SYSTEMS. COORDINATE EXACT EQUIPMENT LOCATIONS, ELEVATIONS, AND FINAL CONNECTION REQUIREMENTS. PROVIDE EACH SYSTEM COMPLETE, INCLUDING ALL NECESSARY COMPONENTS, FITTINGS AND OFFSETS.
2. INSTALL SYSTEMS SUCH THAT REQUIRED CLEARANCE AND SERVICE ACCESS SPACE IS PROVIDED AROUND ALL MECHANICAL AND ELECTRICAL EQUIPMENT, AND AROUND ANY COMPONENTS WHICH REQUIRE SERVICE ACCESS.
3. COORDINATE AND PROVIDE ACCESS DOORS WITHIN INACCESSIBLE CEILING, SHAFT, AND CHASE AREAS FOR ALL COMPONENTS WHICH REQUIRE SERVICE ACCESS. REFER TO ARCHITECTURAL DRAWINGS FOR CEILING TYPES.
4. PROVIDE SUPPLEMENTARY STEEL AS REQUIRED FOR THE PROPER SUPPORT OF ALL SYSTEMS.
5. MOTOR CIRCUIT PROTECTION SHALL BE SIZED IN ACCORDANCE WITH MOTOR CIRCUIT SIZING SCHEDULES SHOWN ON "ELECTRICAL STANDARD SCHEDULES DRAWING" UNLESS OTHERWISE NOTED.
6. COORDINATE THE MOUNTING HEIGHTS OF DEVICES WITH THE TRADES INSTALLING THE WORK.

(#) CONSTRUCTION KEY NOTES:

1. CONNECT NEW UNDERWATER LIGHT FIXTURE TO MAINTAINED BRANCH CIRCUIT. UNDERWATER LIGHT FIXTURE PROVIDED BY OTHERS.
2. CONNECT NEW RECEPTACLES AND LIGHTING CONTROL TO MAINTAINED BRANCH CIRCUIT. EXTEND CONDUIT AND WIRE AS REQUIRED.
3. RELOCATE THREE SINGLE POLE CIRCUIT BREAKERS FROM (E)RP-D TO NEW RP-DA. PROVIDE 60A-3P CIRCUIT CIRCUIT BREAKER IN (E)RP-D TO FEED RP-DA.

TMP ARCHITECTURE

TMP ARCHITECTURE INC
1191 WEST SQUARE LAKE ROAD
BLOOMFIELD HILLS • MICHIGAN • 48302
PH • 248.338.4561 FX • 248.338.0223
EM • INFO@TMP-ARCHITECTURE.COM

REGISTRATION SEAL

CONSULTANT

Peter Basso Associates Inc
CONSULTING ENGINEERS
5145 Livernois, Suite 100
Troy, Michigan 48098-3276
Tel: 248-879-5666
Fax: 248-879-0007
www.PeterBassoAssociates.com
PBA Project No.: 2023-0227

PROJECT TITLE

Wylie Elementary School Pool Upgrades

Dexter Community Schools

DRAWING TITLE

FIRST FLOOR POWER PLAN

ISSUE DATES

DATE:	ISSUED FOR:
05-25-2023	CONSTRUCTION DOCUMENTS

DRAWN STP
CHECKED STP
APPROVED STP

PROJECT NO.

22072A

DRAWING NO.

E3.1

g:\2023\2023-0227-00\CAD\2023-0227-E3-PP1.dwg, E3.1, 5/25/2023 1:18:28 PM, Dominic P. Moceri, None ,0.13459, Peter Basso Associates Inc.

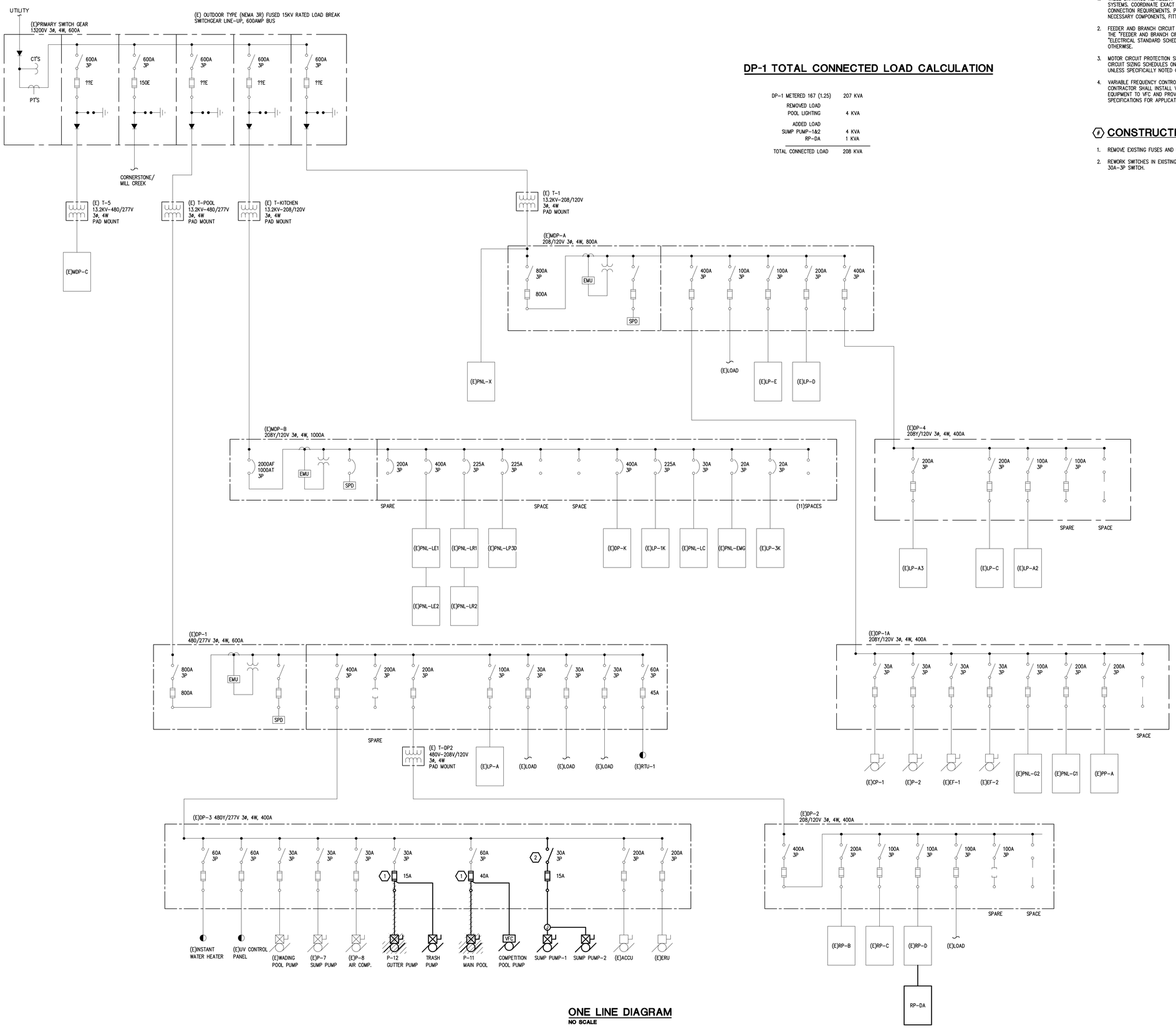

ONE LINE DIAGRAM
NO SCALE

DP-1 TOTAL CONNECTED LOAD CALCULATION

DP-1 METERED 167 (1.25)	207 KVA
REMOVED LOAD	
POOL LIGHTING	4 KVA
ADDED LOAD	
SUMP PUMP-1&2	4 KVA
RP-DA	1 KVA
TOTAL CONNECTED LOAD	208 KVA

DIAGRAM GENERAL NOTES:

1. THESE DRAWINGS REPRESENT THE GENERAL EXTENT AND ARRANGEMENT OF SYSTEMS. COORDINATE EXACT EQUIPMENT LOCATIONS, ELEVATIONS, AND FINAL CONNECTION REQUIREMENTS. PROVIDE EACH SYSTEM COMPLETE, INCLUDING ALL NECESSARY COMPONENTS, FITTINGS AND OFFSETS.
2. FEEDER AND BRANCH CIRCUIT CONDUCTORS SHALL BE SIZED IN ACCORDANCE WITH THE "FEEDER AND BRANCH CIRCUIT SIZING SCHEDULE-GENERAL PURPOSE" ON THE "ELECTRICAL STANDARD SCHEDULES DRAWING" UNLESS SPECIFICALLY NOTED OTHERWISE.
3. MOTOR CIRCUIT PROTECTION SHALL BE SIZED IN ACCORDANCE WITH THE MOTOR CIRCUIT SIZING SCHEDULES ON THE "ELECTRICAL STANDARD SCHEDULES DRAWING" UNLESS SPECIFICALLY NOTED OTHERWISE.
4. VARIABLE FREQUENCY CONTROLLERS (VFC) FURNISHED BY OTHERS. ELECTRICAL CONTRACTOR SHALL INSTALL VFC, PROVIDE POWER FEEDER FROM DISTRIBUTION EQUIPMENT TO VFC AND PROVIDE POWER FEEDER FROM VFC TO MOTOR. REFER TO SPECIFICATIONS FOR APPLICATION OF VFC POWER CABLE FROM VFC TO MOTOR.

CONSTRUCTION KEY NOTES:

1. REMOVE EXISTING FUSES AND REPLACE WITH NEW.
2. REWORK SWITCHES IN EXISTING DP-3 AS REQUIRED TO MAKE ROOM FOR A NEW 30A-3P SWITCH.

TMP ARCHITECTURE

TMP ARCHITECTURE INC
1191 WEST SQUARE LAKE ROAD
BLOOMFIELD HILLS • MICHIGAN • 48302
PH • 248.338.4561 FX • 248.338.0223
EM • INFO@TMP-ARCHITECTURE.COM

REGISTRATION SEAL

CONSULTANT

Peter Basso Associates Inc
CONSULTING ENGINEERS
5145 Livernois, Suite 100
Troy, Michigan 48098-3276
Tel: 248-879-5666
Fax: 248-879-0007
www.PeterBassoAssociates.com
PBA Project No.: 2023-0227

PROJECT TITLE

Wylie Elementary School Pool Upgrades

Dexter Community Schools

DRAWING TITLE

ONE LINE DIAGRAM

ISSUE DATES

DATE:	ISSUED FOR:
05-25-2023	CONSTRUCTION DOCUMENTS

DRAWN STP
CHECKED STP
APPROVED STP

PROJECT NO.

22072A

DRAWING NO.

E5.1

g:\2023\2023-0227-00\CAD\2023-0227-E5-DG.dwg, E5.1, 5/25/2023 1:50:34 PM, Dominic P. Maceri, None ,0.13459, Peter Basso Associates Inc.

(E)RP-D

#	LOAD TYPE	DESCRIPTION	CB TYPE	CB	VA	ØA	ØB	ØC	VA	CB	CB TYPE	DESCRIPTION	LOAD TYPE	#
1	NC	EXISTING LOAD	EXIST	20	500	1000			500	20	EXIST	EXISTING LOAD	NC	2
3	NC	EXISTING LOAD	EXIST	20	500		1000		500	20	EXIST	EXISTING LOAD	NC	4
5	NC	EXISTING LOAD	EXIST	20	500			1000	500	20	EXIST	EXISTING LOAD	NC	6
7	NC	EXISTING LOAD	EXIST	20	500	1000			500	20	EXIST	EXISTING LOAD	NC	8
9	NC	EXISTING LOAD	EXIST	20	500		1000		500	20	EXIST	EXISTING LOAD	NC	10
11	NC	EXISTING LOAD	EXIST	20	500			1000	500	20	EXIST	EXISTING LOAD	NC	12
13	NC	EXISTING LOAD	EXIST	20	500	1000			500	20	EXIST	EXISTING LOAD	NC	14
15	NC	EXISTING LOAD	EXIST	20	500		1000		500	20	EXIST	EXISTING LOAD	NC	16
17	NC	EXISTING LOAD	EXIST	20	500			1000	500	20	EXIST	EXISTING LOAD	NC	18
19	NC	EXISTING LOAD	EXIST	20	500	1000			500	20	EXIST	EXISTING LOAD	NC	20
21	NC	EXISTING LOAD	EXIST	20	500		1000		500	20	EXIST	EXISTING LOAD	NC	22
23	NC	EXISTING LOAD	EXIST	20	500			1000	500	20	EXIST	EXISTING LOAD	NC	24
25	NC	EXISTING LOAD	EXIST	20	500	1500			1000	20-2	EXIST	EXISTING LOAD	NC	26
27	NC	EXISTING LOAD	EXIST	20	500		1500		1000	–	EXIST	–	NC	28
29	NC	EXISTING LOAD	EXIST	20	500			1500	1000	20-2	EXIST	EXISTING LOAD	NC	30
31	NC	EXISTING LOAD	EXIST	20	500	1500			1000	–	EXIST	–	NC	32
33	NC	EXISTING LOAD	EXIST	20	500		1000		500	20	EXIST	EXISTING LOAD	NC	34
35	NC	EXISTING LOAD	EXIST	20	500			1000	500	20	EXIST	EXISTING LOAD	NC	36
37	NC	EXISTING LOAD	EXIST	20	500	2400			1900	60-3	NEW	RP-DA	NC	38
39	NC	EXISTING LOAD	EXIST	20-2	1000		1500		500	–	NEW	–	NC	40
41	NC	–	EXIST	–	1000			1500	500	–	NEW	–	NC	42
						9400	8000	8000						
						ØA	ØB	ØC						

PANELBOARD INFORMATION
VOLTAGE: 208Y/120
BUS AMPACITY: 225A
MAIN TYPE: MLO
MINIMUM A.I.C.:
MOUNTING: SURFACE

☐ FEED-THROUGH LUGS
☐ DOUBLE LUGS
☐ INTEGRAL SPD

PANELBOARD LOCATION

BRANCH CIRCUIT CONNECTED LOAD		DEMAND FACTOR	CALCULATED LOAD	FEEDER AND OVERCURRENT SIZING		NOTES:
CONTINUOUS LOAD (C)		100%		125%		
ELECTRIC HEAT (E)		100%		100%		
NON-CONTINUOUS LOAD (NC)	25400	100%	25400	100%	25400	
KITCHEN LOAD (K)		100%		100%		
RECEPTACLE BASE LOAD (R)		100%		100%		
RECEPTACLE DEMAND LOAD (R)		50%		100%		
LIGHTING LOAD (L)		100%		125%		
ADDITIONAL TRACK LIGHTING LOAD				100%		
MOTORS, HIGHEST LOAD (MH)		125%		100%		
MOTORS, REMAINING LOAD (M)		100%		100%		
		TOTAL(KVA):	25.40			
		TOTAL (AMPS):	71	TOTAL (AMPS):	71	

NOTE: DEMAND AND SIZING INFORMATION IS CALCULATED FROM CONNECTED LOAD

©Copyright 2021 by Peter Basso Associates, Inc

RP-DA

#	LOAD TYPE	DESCRIPTION	CB TYPE	CB	VA	ØA	ØB	ØC	VA	CB	CB TYPE	DESCRIPTION	LOAD TYPE	#
1	C	RMF-CONTROL PANEL	NEW	20	1400	1900			500	20	NEW	RELOCATED LOAD FROM (E)RP-D	NC	2
3		SPARE	NEW	20			500		500	20	NEW	RELOCATED LOAD FROM (E)RP-D	NC	4
5		SPARE	NEW	20				500	500	20	NEW	RELOCATED LOAD FROM (E)RP-D	NC	6
7		SPARE	NEW	20						20	NEW	SPARE		8
9		SPARE	NEW	20						20	NEW	SPARE		10
11		SPARE	NEW	20						20	NEW	SPARE		12
						1900	500	500						
						ØA	ØB	ØC						

PANELBOARD INFORMATION
VOLTAGE: 208Y/120
BUS AMPACITY: 60A
MAIN TYPE: MLO
MINIMUM A.I.C.: 10,000
MOUNTING: SURFACE

☐ FEED-THROUGH LUGS
☐ DOUBLE LUGS
☐ INTEGRAL SPD

PANELBOARD LOCATION

BRANCH CIRCUIT CONNECTED LOAD		DEMAND FACTOR	CALCULATED LOAD	FEEDER AND OVERCURRENT SIZING		NOTES:
CONTINUOUS LOAD (C)	1400	100%	1400	125%	1750	
ELECTRIC HEAT (E)		100%		100%		
NON-CONTINUOUS LOAD (NC)	1500	100%	1500	100%	1500	
KITCHEN LOAD (K)		100%		100%		
RECEPTACLE BASE LOAD (R)		100%		100%		
RECEPTACLE DEMAND LOAD (R)		50%		100%		
LIGHTING LOAD (L)		100%		125%		
ADDITIONAL TRACK LIGHTING LOAD				100%		
MOTORS, HIGHEST LOAD (MH)		125%		100%		
MOTORS, REMAINING LOAD (M)		100%		100%		
		TOTAL(KVA):	2.90			
		TOTAL (AMPS):	8	TOTAL (AMPS):	9	

NOTE: DEMAND AND SIZING INFORMATION IS CALCULATED FROM CONNECTED LOAD

©Copyright 2021 by Peter Basso Associates, Inc

TMP ARCHITECTURE

TMP ARCHITECTURE INC
1191 WEST SQUARE LAKE ROAD
BLOOMFIELD HILLS • MICHIGAN • 48302
PH • 248.338.4561 FX • 248.338.0223
EM • INFO@TMP-ARCHITECTURE.COM

REGISTRATION SEAL

CONSULTANT

Peter Basso Associates Inc
CONSULTING ENGINEERS
5145 Livernois, Suite 100
Troy, Michigan 48098-3276
Tel: 248-879-5666
Fax: 248-879-0007
www.PeterBassoAssociates.com
PBA Project No.: 2023-0227

PROJECT TITLE
Wylie Elementary School Pool Upgrades

Dexter Community Schools

DRAWING TITLE
PANEL SCHEDULES

ISSUE DATES

DATE:	ISSUED FOR:
05-25-2023	CONSTRUCTION DOCUMENTS

DRAWN STP
CHECKED STP
APPROVED STP

PROJECT NO.
22072A

DRAWING NO.
E5.2

g:\2023\2023-0227-00\CAD\2023-0227-E5-SH.dwg, E5.2, 5/25/2023 1:50:42 PM, Dominic P. Maceri, None ,0.13459, Peter Basso Associates Inc.