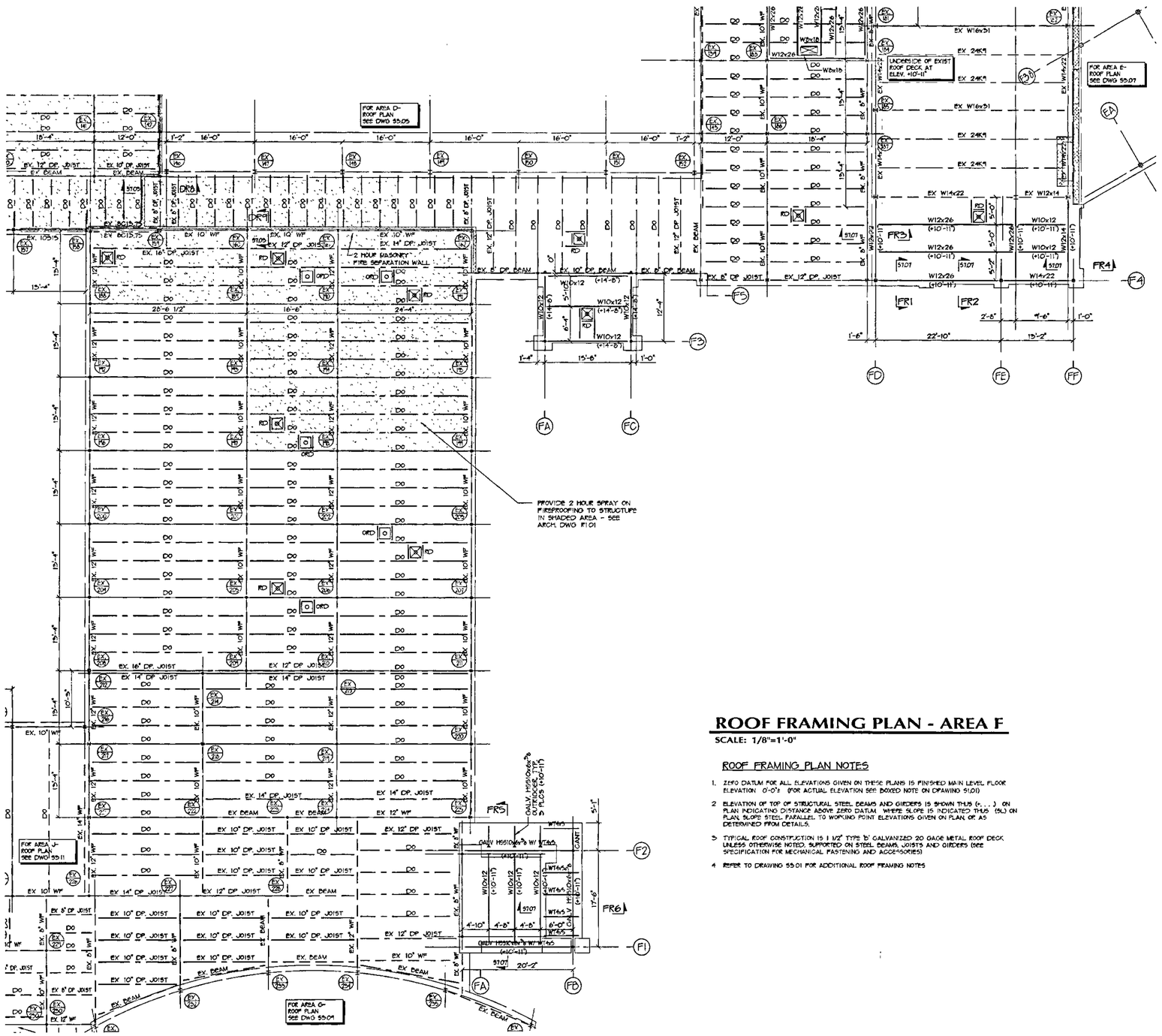

ROOF FRAMING PLAN - AREA F

SCALE: 1/8"=1'-0"

ROOF FRAMING PLAN NOTES

1. ZERO DATUM FOR ALL ELEVATIONS GIVEN ON THESE PLANS IS FINISHED MAIN LEVEL FLOOR ELEVATION: 0'-0"± (FOR ACTUAL ELEVATION SEE BOXED NOTE ON DRAWING S1.01)
2. ELEVATION OF TOP OF STRUCTURAL STEEL BEAMS AND GIRDERS IS SHOWN THUS (+...) ON PLAN INDICATING DISTANCE ABOVE ZERO DATUM. WHERE SLOPE IS INDICATED THUS (SL) ON PLAN, SLOPE STEEL PARALLEL TO WORKING POINT ELEVATIONS GIVEN ON PLAN, OR AS DETERMINED FROM DETAILS.
3. TYPICAL ROOF CONSTRUCTION IS 1 1/2" TYPE 'B' GALVANIZED 20 GAGE METAL ROOF DECK UNLESS OTHERWISE NOTED. SUPPORTED ON STEEL BEAMS, JOISTS AND GIRDERS (SEE SPECIFICATION FOR MECHANICAL FASTENING AND ACCESSORIES)
4. REFER TO DRAWING S5.01 FOR ADDITIONAL ROOF FRAMING NOTES

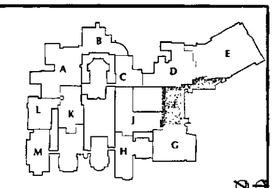

KEY PLAN MAIN LEVEL

FOR ALL ABBREVIATIONS, SYMBOL LEGENDS GENERAL NOTES AND WALL TYPES SEE SHEETS R0.01 & R0.02

REVISIONS

DATE	MARK	DESCRIPTION
NOVEMBER 22, 2004		PHASE III DRAWINGS ISSUED FOR STATE DEPARTMENT OF EDUCATION REVIEW

Regional School District No. 10 • Harwinton & Burlington, CT

RENOVATIONS AND ADDITIONS TO THE REGIONAL SCHOOL DISTRICT 10 LEWIS S. MILLS HAR-BUR COMPLEX

24/26 LYON ROAD
BURLINGTON, CT 06013

STATE PROJECT NO. 210-0036

KAESTLE BOOS ASSOCIATES, INC.

DRAWN BY: KAB
CHECKED BY

SCALE: 1/8"=1'-0"

ROOF FRAMING PLAN - AREA F

PROJECT NO.: 04000

DRAWING NO.:

DATE: NOVEMBER 15, 2004

S3.08

2004 © COPYRIGHT KAESTLE BOOS ASSOC., INC.

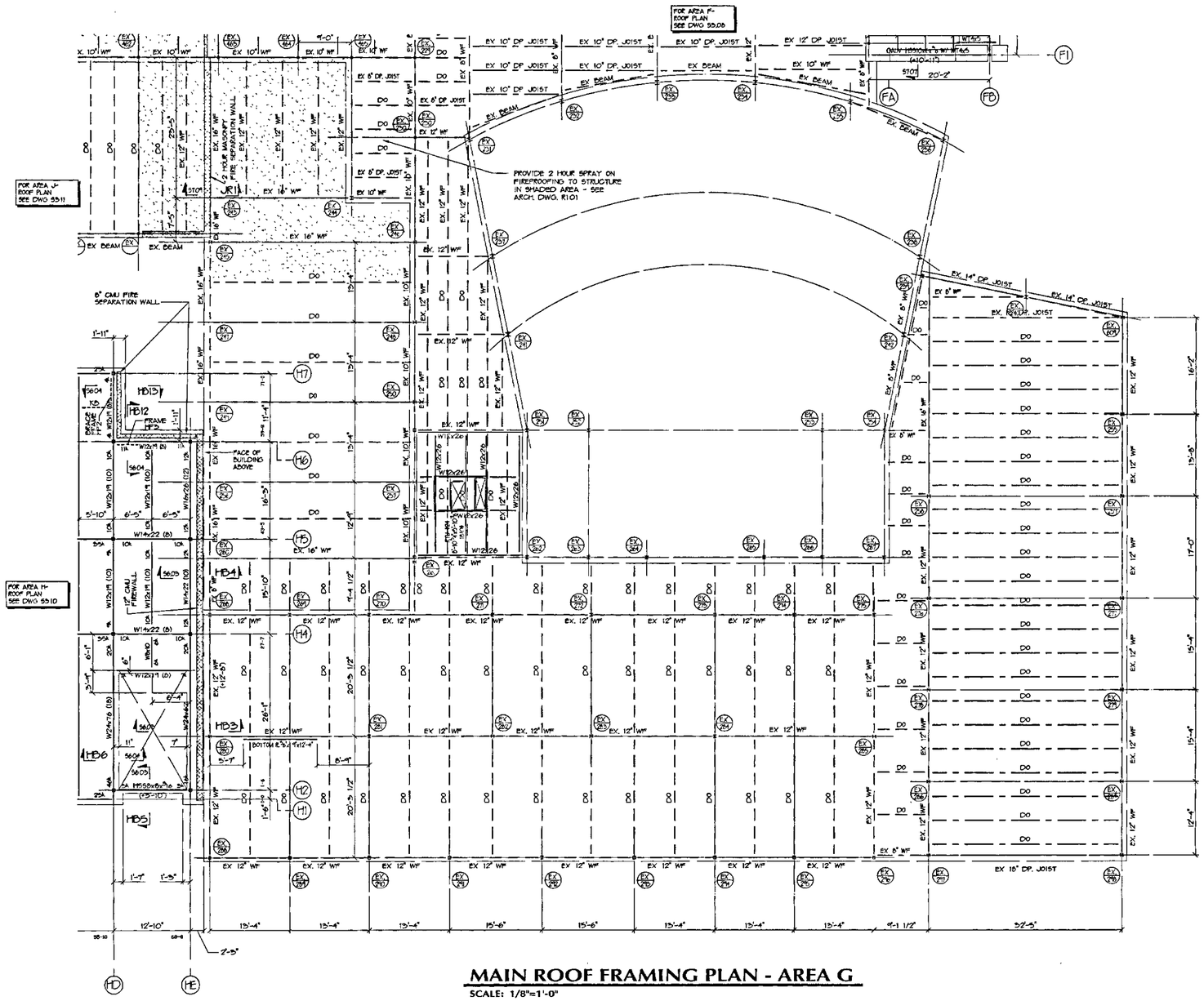

MAIN ROOF FRAMING PLAN - AREA G

SCALE: 1/8"=1'-0"

ROOF FRAMING PLAN NOTES

1 ZERO DATUM FOR ALL ELEVATIONS GIVEN ON THESE PLANS IS FINISHED MAIN LEVEL FLOOR ELEVATION 0'-0"±. (FOR ACTUAL ELEVATION SEE BOXED NOTE ON DRAWING S101)

2 ELEVATION OF TOP OF STRUCTURAL STEEL BEAMS AND GIRDERS IS SHOWN THUS (+ ,) ON PLAN INDICATING DISTANCE ABOVE ZERO DATUM. WHERE SLOPE IS INDICATED THUS (SL) ON PLAN SLOPE STEEL PARALLEL TO WORKING POINT ELEVATIONS GIVEN ON PLAN, OR AS DETERMINED FROM DETAILS

3 TYPICAL ROOF CONSTRUCTION IS 1 1/2" TYPE 'B' GALVANIZED 20 GAGE METAL ROOF DECK UNLESS OTHERWISE NOTED SUPPORTED ON STEEL BEAMS, JOISTS AND GIRDERS (SEE SPECIFICATION FOR MECHANICAL FASTENING AND ACCESSORIES)

4 REFER TO DRAWING S5.01 FOR ADDITIONAL ROOF FRAMING NOTES

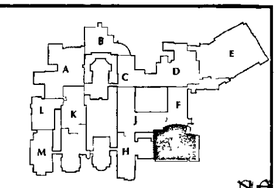

KEY PLAN MAIN LEVEL

FOR ALL ABBREVIATIONS, SYMBOL LEGENDS GENERAL NOTES AND WALL TYPES SEE SHEETS R0.01 & R0.02

REVISIONS

DATE	MARK	DESCRIPTION
NOVEMBER 22, 2004		PHASE III DRAWINGS ISSUED FOR STATE DEPARTMENT OF EDUCATION REVIEW

Regional School District No. 10 • Hebron & Burlington, Ct •

RENOVATIONS AND ADDITIONS TO THE REGIONAL SCHOOL DISTRICT 10 LEWIS S. MILLS HAR-BUR COMPLEX

24/26 LYON ROAD
BURLINGTON, CT 06013

STATE PROJECT NO. 210-0036

KAESTLE BOOS ASSOCIATES, INC.

DRAWN BY: KAB
CHECKED BY
SCALE: 1/8"=1'-0"

MAIN ROOF FRAMING PLAN - AREA G

PROJECT NO.: 04000
DRAWING NO.:

DATE: NOVEMBER 15, 2004

S3.09

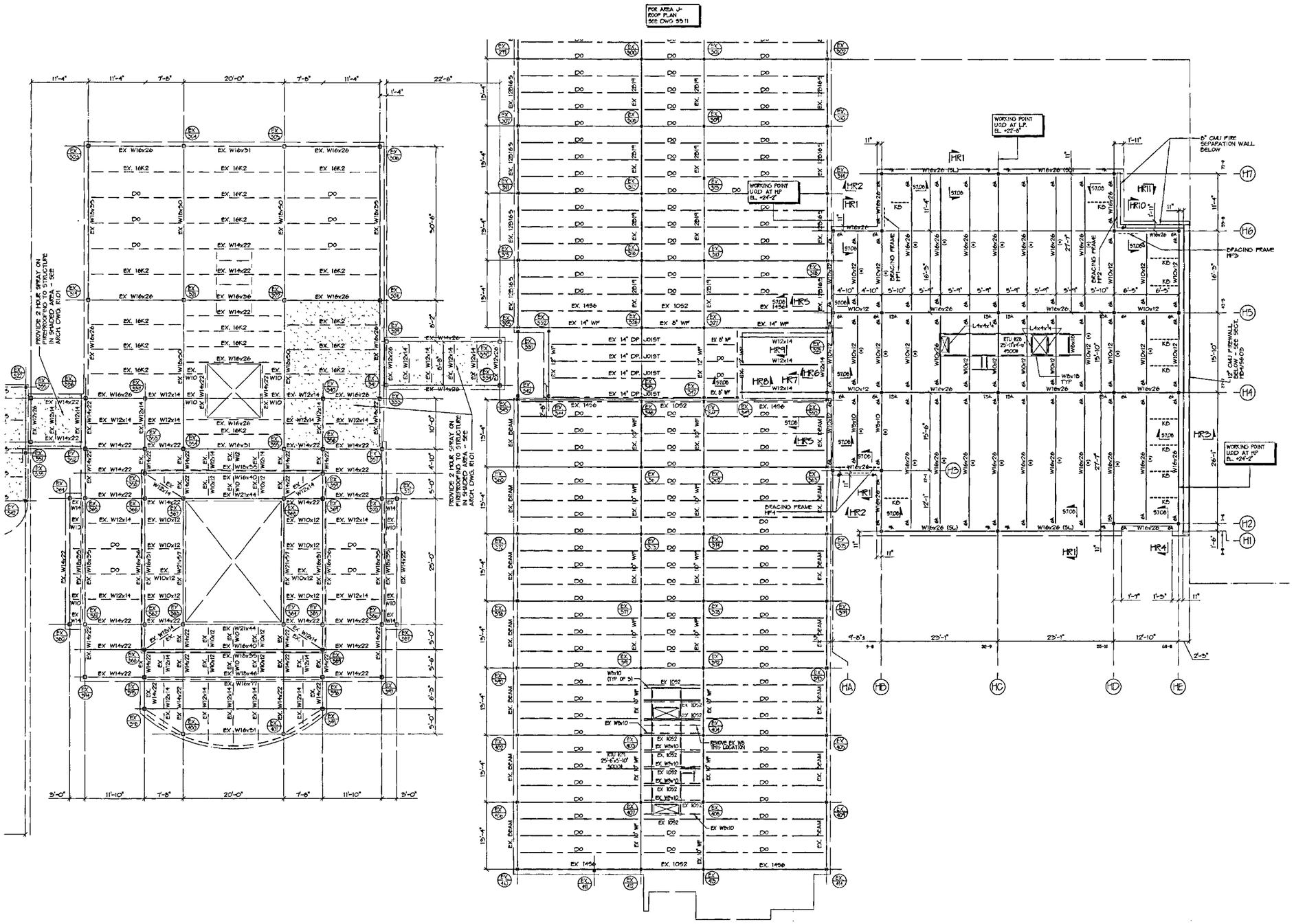

UPPER ROOF FRAMING PLAN - AREA H

SCALE: 1/8"=1'-0"

ROOF FRAMING PLAN NOTES

1. ZERO DATUM FOR ALL ELEVATIONS GIVEN ON THESE PLANS IS FINISHED MAIN LEVEL FLOOR ELEVATION 0'-0"± (FOR ACTUAL ELEVATION SEE BOXED NOTE ON DRAWING S1.01)
2. ELEVATION OF TOP OF STRUCTURAL STEEL BEAMS AND GIRDERS IS SHOWN THUS (+ . . .) ON PLAN INDICATING DISTANCE ABOVE ZERO DATUM. WHERE SLOPE IS INDICATED THUS (SL) ON PLAN, SLOPE STEEL PARALLEL TO WORKING POINT ELEVATIONS GIVEN ON PLAN, OR AS DETERMINED FROM DETAILS
3. TYPICAL ROOF CONSTRUCTION IS 1 1/2" TYPE 'B' GALVANIZED 20 GAGE METAL ROOF DECK UNLESS OTHERWISE NOTED, SUPPORTED ON STEEL BEAMS, JOISTS AND GIRDERS (SEE SPECIFICATION FOR MECHANICAL FASTENING AND ACCESSORIES)
4. [illegible] INDICATES SPRAY ON FIREPROOFING TO BE INSTALLED ON UDERSIDE OF METAL DECK AND BEAMS
5. REFER TO DRAWING S5.01 FOR ADDITIONAL ROOF FRAMING NOTES

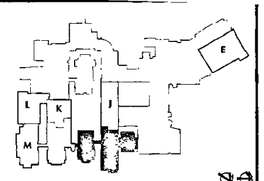

KEY PLAN UPPER LEVEL

FOR ALL ABBREVIATIONS, SYMBOL LEGENDS GENERAL NOTES AND WALL TYPES SEE SHEETS R0.01 & R0.02

REVISIONS

DATE	MARK	DESCRIPTION
NOVEMBER 22, 2004		PHASE III DRAWINGS ISSUED FOR STATE DEPARTMENT OF EDUCATION REVIEW

Regional School District No. 10 • Hebron & Burlington, CT

RENOVATIONS AND ADDITIONS TO THE REGIONAL SCHOOL DISTRICT 10 LEWIS S. MILLS HAR-BUR COMPLEX

24/26 LYON ROAD
BURLINGTON, CT 06013

STATE PROJECT NO. 210-0036

KAESTLE BOOS ASSOCIATES, INC.

DRAWN BY: KAB
CHECKED BY:
SCALE: 1/8"=1'-0"

UPPER ROOF FRAMING PLAN - AREA H

PROJECT NO.: 04000
DRAWING NO.: S3.10
DATE: NOVEMBER 15, 2004

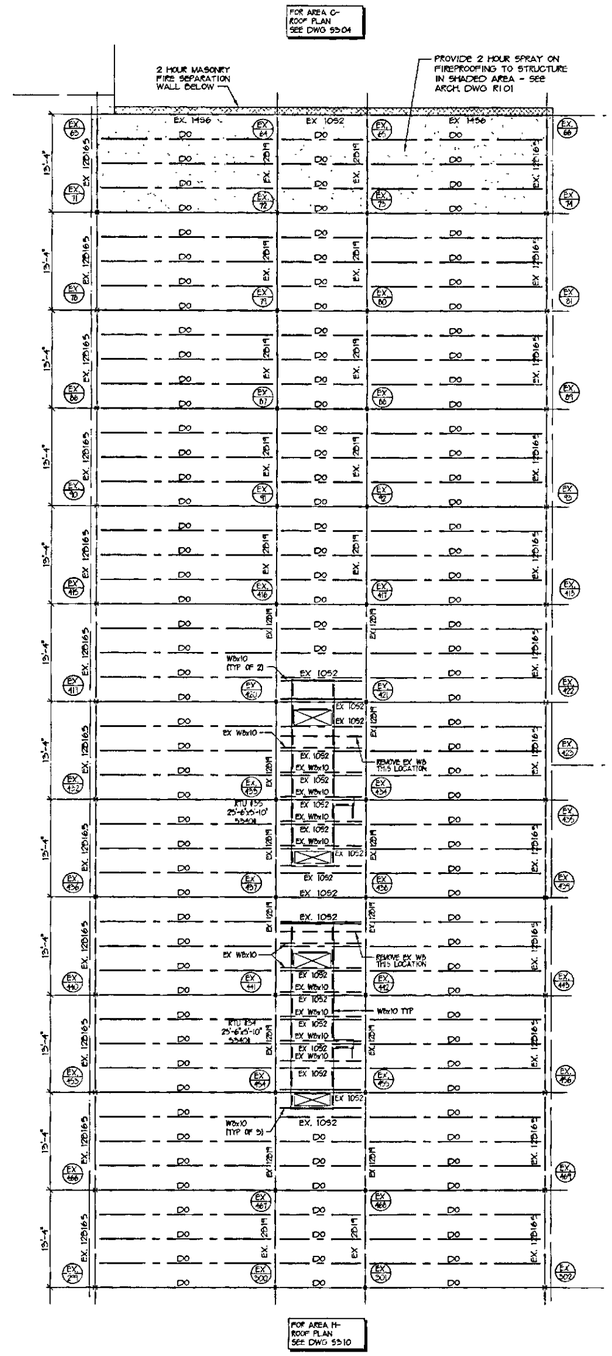
FOR AREA G-
ROOF PLAN
SEE DWG S3.04
2 HOUR MASONRY
FIRE SEPARATION
WALL BELOW
PROVIDE 2 HOUR SPRAY ON
FIREPROOFING TO STRUCTURE
IN SHADED AREA - SEE
ARCH. DWG R1.01
EX. 1456
EX. 1052
EX. 1256
EX. 1256
EX. 1256

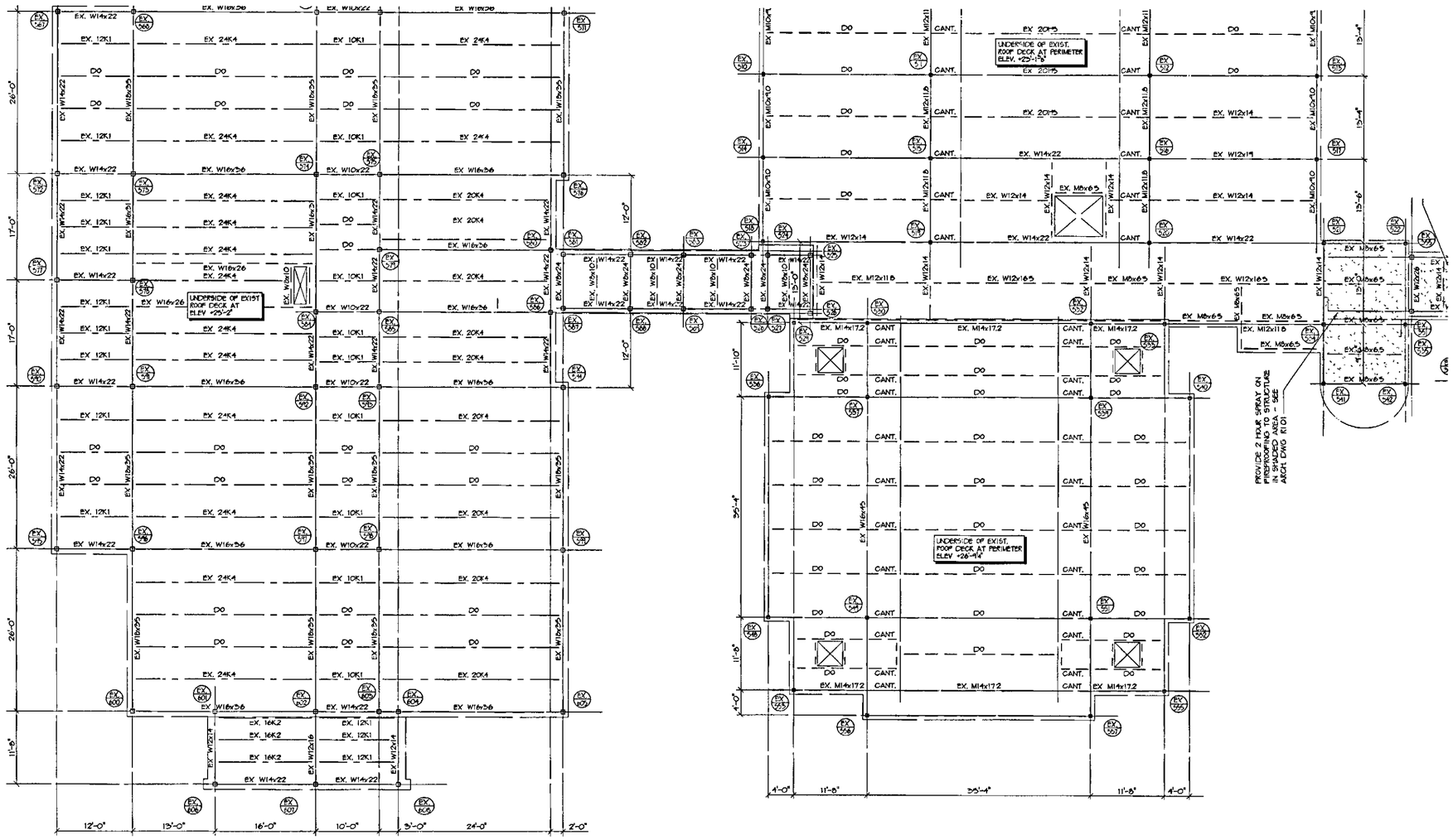

UPPER ROOF FRAMING PLAN - AREA M

SCALE: 1/8"=1'-0"

ROOF FRAMING PLAN NOTES

1. ZERO DATUM FOR ALL ELEVATIONS GIVEN ON THESE PLANS IS FINISHED MAIN LEVEL FLOOR ELEVATION 0'-0"±. (FOR ACTUAL ELEVATION SEE BOXED NOTE ON DRAWING S101)
2. ELEVATION OF TOP OF STRUCTURAL STEEL BEAMS AND GIRDERS IS SHOWN THUS (+. . .) ON PLAN INDICATING DISTANCE ABOVE ZERO DATUM. WHERE SLOPE IS INDICATED THUS (SL) ON PLAN, SLOPE STEEL PARALLEL TO WORKING POINT ELEVATIONS GIVEN ON PLAN, OR AS DETERMINED FROM DETAILS
3. TYPICAL ROOF CONSTRUCTION IS 1 1/2" TYPE B' GALVANIZED 20 GAGE METAL ROOF DECK UNLESS OTHERWISE NOTED, SUPPORTED ON STEEL BEAMS, JOISTS AND GIRDERS (SEE SPECIFICATION FOR MECHANICAL FASTENING AND ACCESSORIES)
4. REFER TO DRAWING S501 FOR ADDITIONAL ROOF FRAMING NOTES

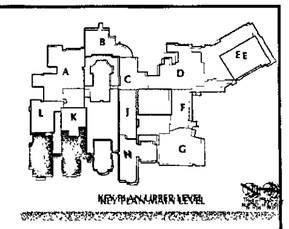

FOR ALL ABBREVIATIONS, SYMBOL LEGENDS GENERAL NOTES AND WALL TYPES SEE SHEETS R0.01 & R0.02

REVISIONS

DATE	MARK	DESCRIPTION
NOVEMBER 22, 2004		PHASE III DRAWINGS ISSUED FOR STATE DEPARTMENT OF EDUCATION REVIEW

Regional School District No. 10 • Harwinton & Burlington, CT •

RENOVATIONS AND ADDITIONS TO THE REGIONAL SCHOOL DISTRICT 10 LEWIS S. MILLS HAR-BUR COMPLEX

24/26 LYON ROAD
BURLINGTON, CT 06013

STATE PROJECT NO. 210-0036

KAESTLE BOOS ASSOCIATES, INC.

DRAWN BY: KAB
CHECKED BY:
SCALE 1/8"=1'-0"

UPPER ROOF FRAMING PLAN - AREA M

PROJECT NO: 04200
DRAWING NO.:

DATE. NOVEMBER 15, 2004

S3.14

2004 © COPYRIGHT KAESTLE BOOS ASSOC., INC.

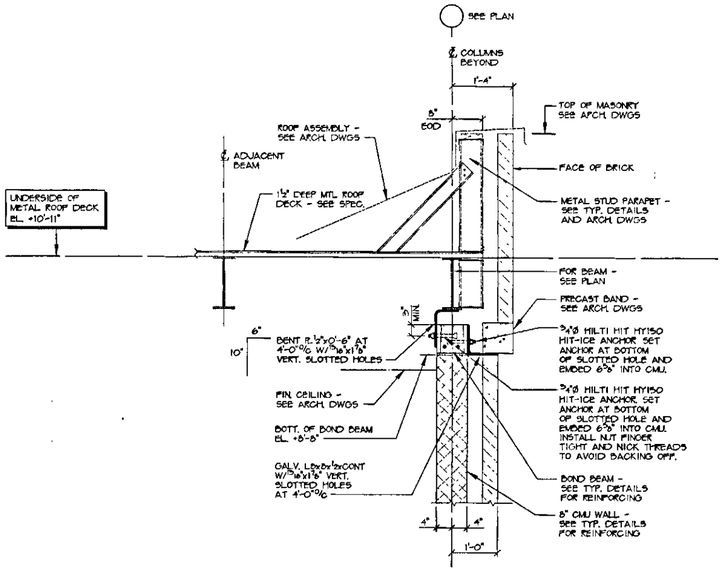

SECTION FR1

SCALE: 3/4"=1'-0"

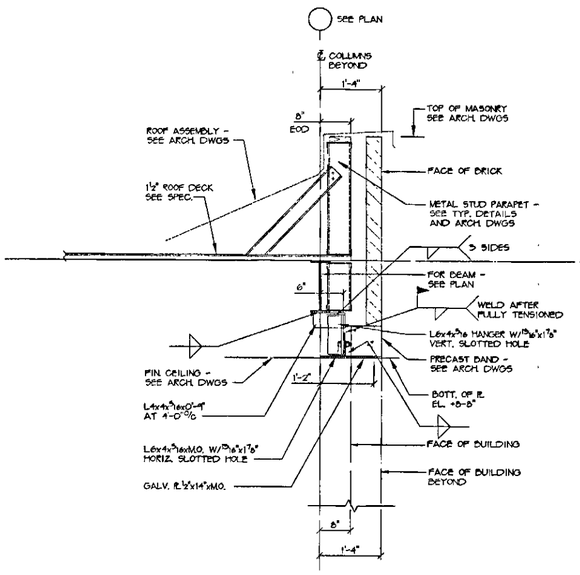

SECTION FR2

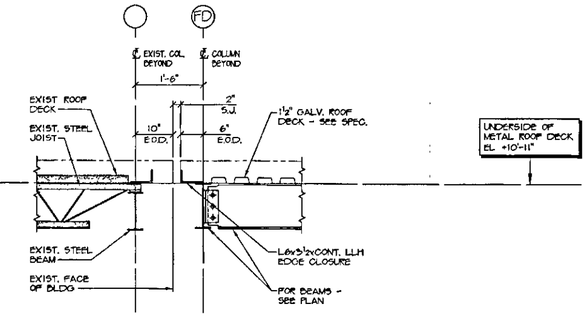

SECTION FR3

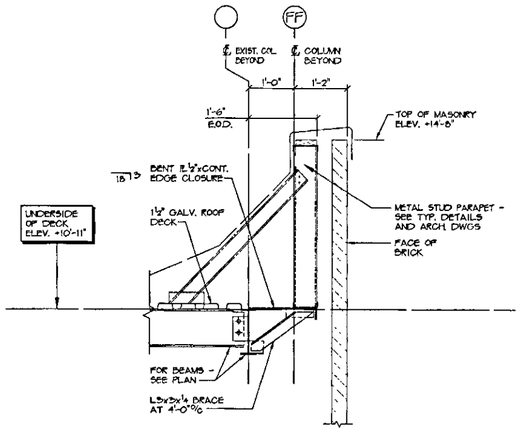

SECTION FR4

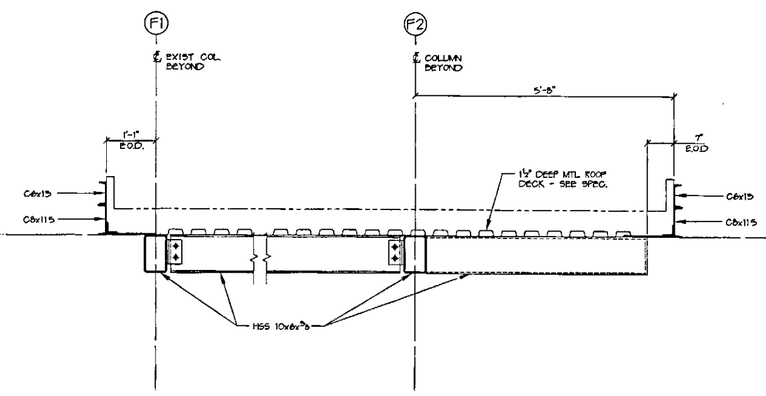

SECTION FR5

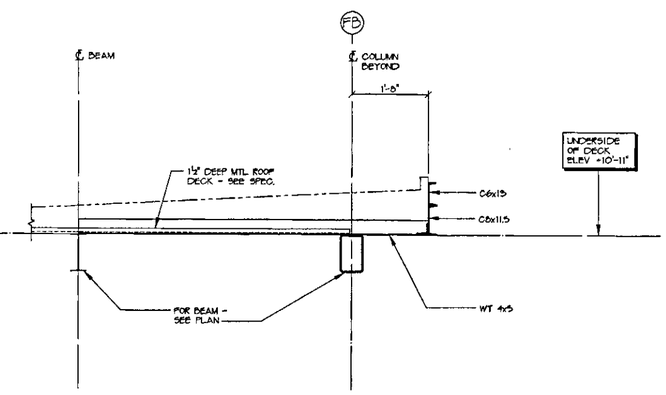

SECTION FR6

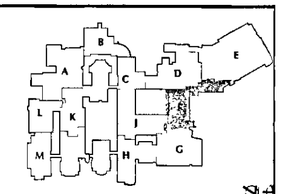

KEY PLAN MAIN LEVEL

FOR ALL ABBREVIATIONS, SYMBOL LEGENDS GENERAL NOTES AND WALL TYPES SEE SHEETS R0.01 & R0.02

REVISIONS

DATE	MARK	DESCRIPTION
NOVEMBER 22, 2004		PHASE III DRAWINGS ISSUED FOR STATE DEPARTMENT OF EDUCATION REVIEW

Regional School District No. 10 • Bethlehem & Burlington, CT

RENOVATIONS AND ADDITIONS TO THE REGIONAL SCHOOL DISTRICT 10 LEWIS S. MILLS HAR-BUR COMPLEX

24/26 LYON ROAD
BURLINGTON, CT 06013

STATE PROJECT NO. 210-0036

KAESTLE BOOS ASSOCIATES, INC.

DRAWN BY: JRW
CHECKED BY:
SCALE: 3/4"=1'-0"

ROOF DETAILS - AREA F

PROJECT NO.: 04000
DRAWING NO.:
DATE: NOVEMBER 15, 2004

S7.07

2004 © COPYRIGHT KAESTLE BOOS ASSOC., INC.

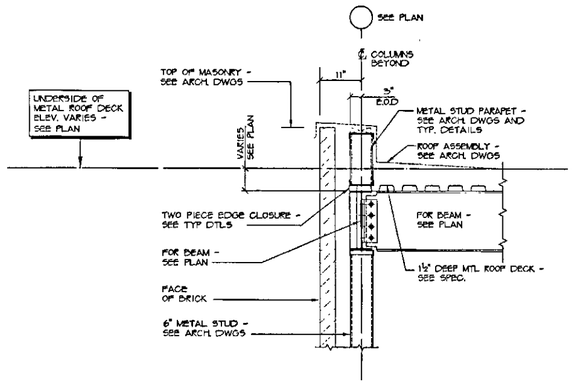

SECTION HR1

SCALE: 3/4"=1'-0"

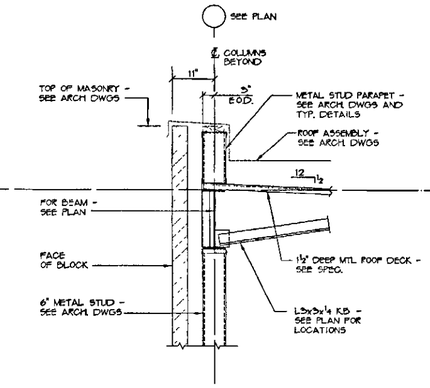

SECTION HR2

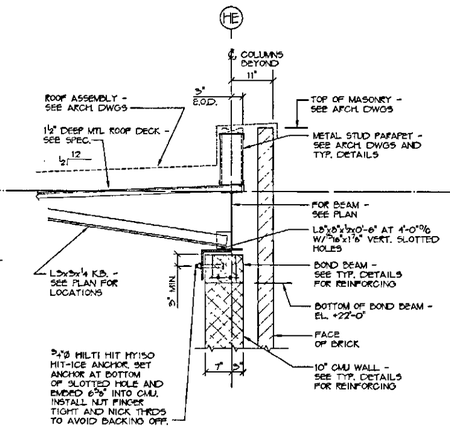

SECTION HR3

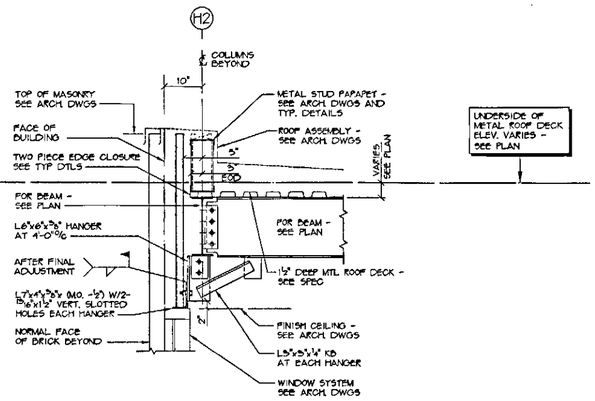

SECTION HR4

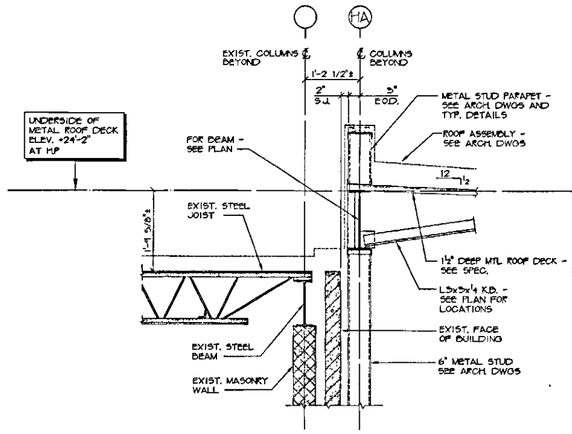

SECTION HR5

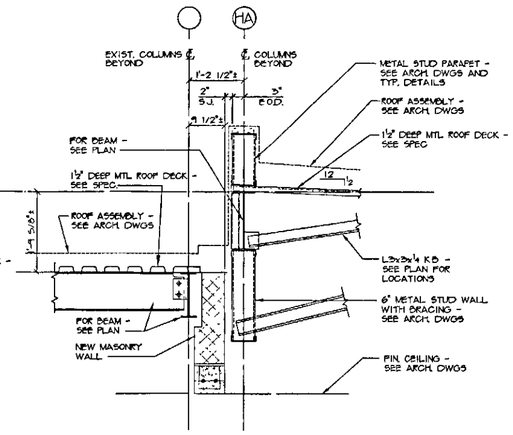

SECTION HR6

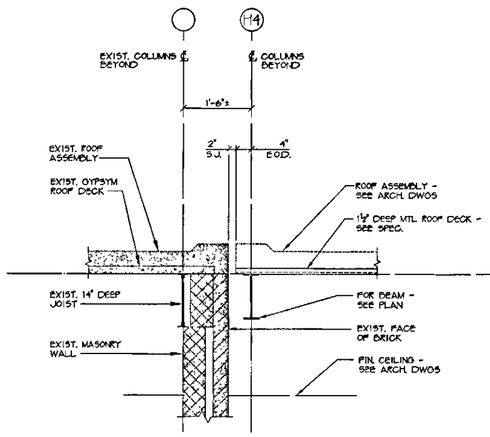

SECTION HR7

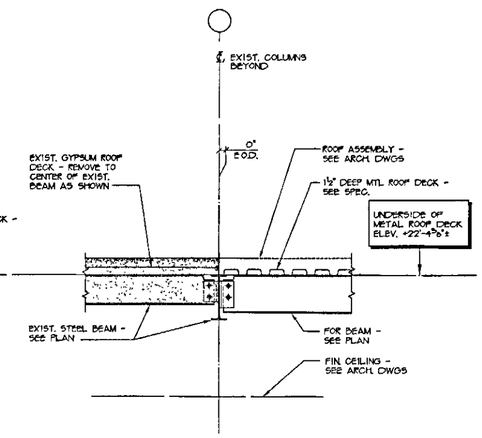

SECTION HR8

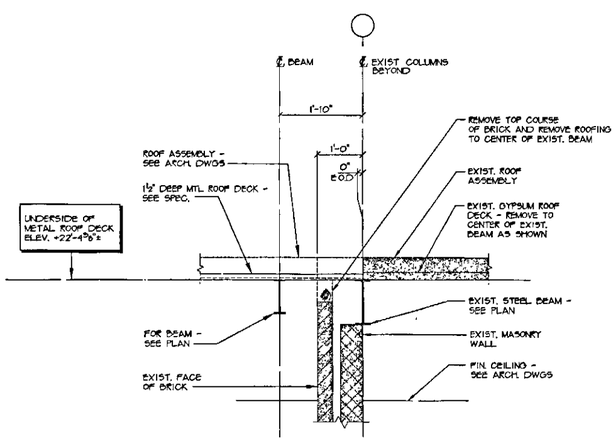

SECTION HR9

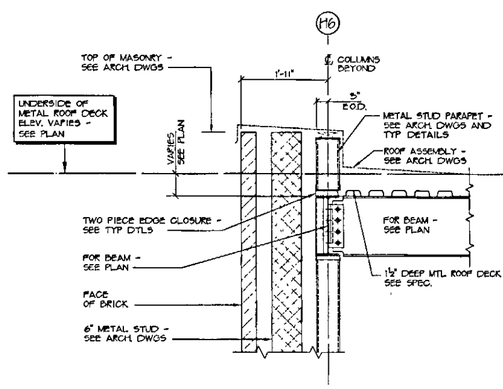

SECTION HR10

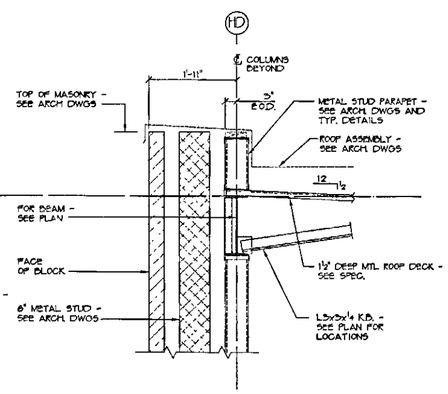

SECTION HR11

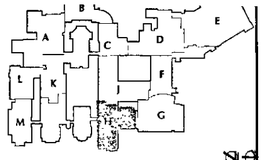

KEY PLAN MAIN LEVEL

FOR ALL ABBREVIATIONS, SYMBOL LEGENDS GENERAL NOTES AND WALL TYPES SEE SHEETS R0.01 & R0.02

REVISIONS

DATE	MARK	DESCRIPTION
NOVEMBER 22, 2004		PHASE III DRAWINGS ISSUED FOR STATE DEPARTMENT OF EDUCATION REVIEW

Regional School District No. 10 — Harwinton & Burlington, CT

RENOVATIONS AND ADDITIONS TO THE REGIONAL SCHOOL DISTRICT 10 LEWIS S. MILLS HAR-BUR COMPLEX

24/26 LYON ROAD
BURLINGTON, CT 06013

STATE PROJECT NO. 210-0036

KAESTLE BOOS ASSOCIATES, INC.

DRAWN BY JPW
CHECKED BY
SCALE 3/4"=1'-0"

ROOF DETAILS - AREA H

PROJECT NO.: 04000
DRAWING NO.: S7.08
DATE: NOVEMBER 15, 2004

2004 © COPYRIGHT KAESTLE BOOS ASSOC., INC.

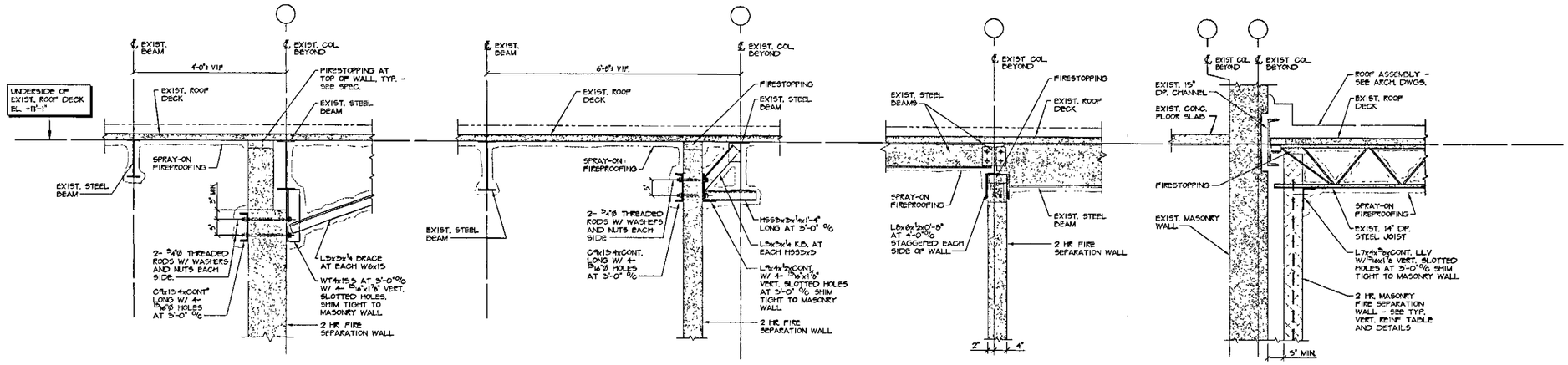

SECTION JR1

SCALE: 3/4"=1'-0"

SECTION JR2

SECTION JR3

SECTION JR4

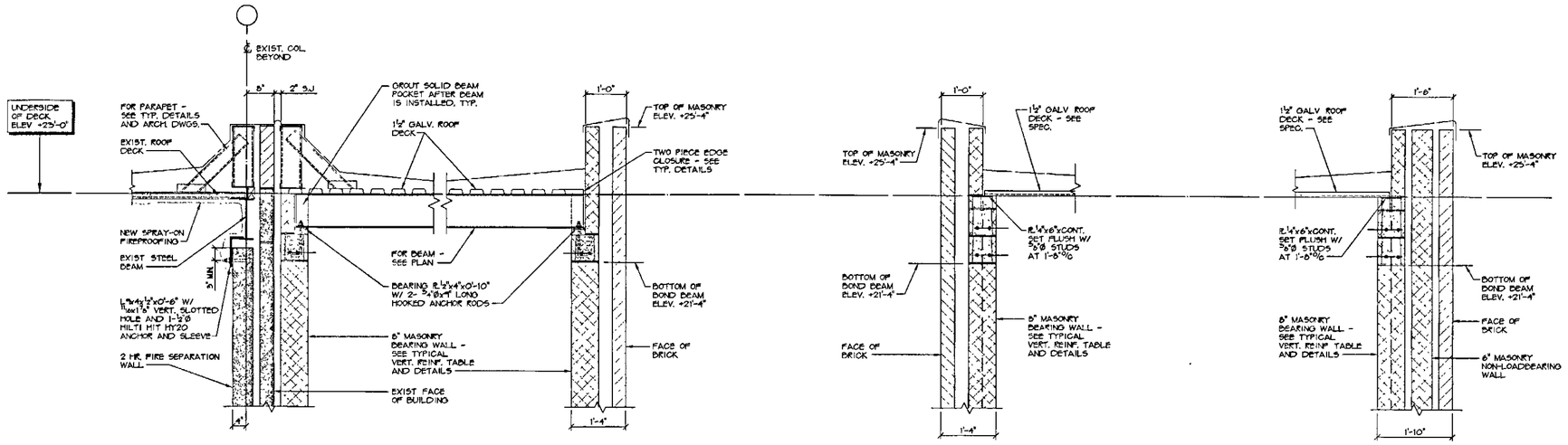

SECTION KR1

SECTION KR2

SECTION KR3

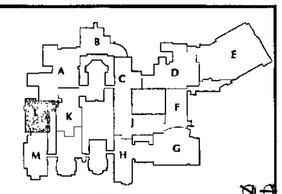

KEY PLAN MAIN LEVEL

FOR ALL ABBREVIATIONS, SYMBOL LEGENDS GENERAL NOTES AND WALL TYPES SEE SHEETS R0.01 & R0.02

REVISIONS

DATE	MARK	DESCRIPTION
NOVEMBER 22, 2004		PHASE III DRAWINGS ISSUED FOR STATE DEPARTMENT OF EDUCATION REVIEW

Regional School District No. 10 • Harwinton & Burlington, CT •

RENOVATIONS AND ADDITIONS TO THE REGIONAL SCHOOL DISTRICT 10 LEWIS S. MILLS HAR-BUR COMPLEX

24/26 LYON ROAD
BURLINGTON, CT 06013

STATE PROJECT NO. 210-0036

KAESTLE BOOS ASSOCIATES, INC.

DRAWN BY: JRW
CHECKED BY:
SCALE: 3/4"=1'-0"

ROOF DETAILS - AREAS J & K

PROJECT NO.: 04000
DRAWING NO.:

DATE: NOVEMBER 15, 2004

S7.09

2004 © COPYRIGHT KAESTLE BOOS ASSOC., INC.