# HACIENDA LA PUENTE UNIFIED SCHOOL DISTRICT
## PURCHASING DEPARTMENT

15959 E. GALE AVENUE • CITY OF INDUSTRY, CA 91716-0002
(626) 933-3930 • (626) 933-3939

*Joel Duarte*
*Director Purchasing and Warehouse*


September 28, 2023

**HACIENDA LA PUENTE UNIFIED SCHOOL DISTRICT**
**BID NUMBER 2023-24.03**
**DISTRICT OFFICE PORTABLE AND RESTROOM INSTALLATION**

**ADDENDUM NO. 4**

This Addendum Number Four (#4) hereby makes changes to Bid #2023-24.03. Bidders shall acknowledge receipt of this Addendum in space provided on the Bid Form. Failure to acknowledge any addenda issued may subject Bidders to disqualification.

- Section 32 31 13 Chain Link Fences and Gates 1.06 B shall be revised to read:

  *B. Correct defective Work within a twelve-month period after Date of Substantial Completion.*

- The following project sheets are incorporated herein:
  - T-2
  - AS-1
  - A-01
  - A-1
  - A-2
  - A-4
  - 2.00
  - 2.01
  - 5.00
  - 8.00
  - E-0.1
  - E-1.1
  - F0.2
  - F2.0
  - F3.0

Sincerely,

Joel Duarte
Director of Purchasing and Warehouse
Hacienda La Puente Unified School District

# ABBREVIATIONS

| | |
|---|---|
| & | AND |
| ∠ | ANGLE |
| @ | AT |
| ℄ | CENTERLINE |
| ⌀ | DIAMETER OR ROUND |
| # | NUMBER |
| AB | ANCHOR BOLT |
| AC | ASPHALTIC CONCRETE |
| ACP | ACOUSTICAL PANEL |
| ACT | ACOUSTICAL TILE |
| ACOUS | ACOUSTICAL |
| AD | AREA DRAIN |
| ADH | ADHESIVE |
| ADJ | ADJACENT |
| AFF | ABOVE FINISH FLOOR |
| AFP | ACCORDIAN FOLDING PARTITION |
| AGGR | AGGREGATE |
| ALT | ALTERNATE |
| ALUM | ALUMINUM |
| AMP | AMPERE |
| ANOD | ANODIZED |
| APPROX | APPROXIMATELY |
| ARCH | ARCHITECT |
| ASB | ASBESTOS |
| ASSY | ASSEMBLY |
| BAT | BATTERY |
| BBD | BULLETIN BOARD |
| BD | BOARD |
| BLDG | BUILDING |
| BLKG | BLOCKING |
| BLO | BLOWER |
| BLR | BOILER |
| BLW | BELOW |
| BM | BEAM |
| BO | BOTTOM OF |
| BRKR | BREAKER |
| BTU | BRITISH THERMAL UNIT |
| BUR | BUILT UP ROOFING |
| CAB | CABINET |
| CARP | CARPET |
| CAT | CATALOG |
| CB | CATCH BASIN |
| CEM | CEMENT |
| CF | CURB FACE |
| CFM | CUBIC FEET PER MINUTE |
| CHBD | CHALKBOARD |
| CHEM | CHEMICAL |
| CHWR | CHILLED WATER RETURN |
| CHWS | CHILLED WATER SUPPLY |
| CI | CAST IRON |
| CIR | CIRCLE |
| CJ | CONTROL JOINT |
| CL | CENTERLINE |
| CLG | CEILING |
| CLO | CLOSET |
| CLRM | CLASSROOM |
| CMT | CERAMIC MOSAIC TILE |
| CMU | CONCRETE MASONRY UNIT |
| CND | CONDUIT |
| CO | CLEANOUT |
| COL | COLUMN |
| COMM | COMMUNICATION |
| COMP | COMPOSITION |
| CONC | CONCRETE |
| CONF | CONFERENCE |
| CONN | CONNECTION |
| CONT | CONTINUOUS |
| CONTR | CONTRACTOR |
| COORD | COORDINATE |
| CORR | CORRIDOR |
| COV | COVER |
| CP | CONTROL PANEL |
| CR | CONDENSATE RETURN |
| CSWK | CASEWORK |
| CT | CERAMIC TILE |
| CTSK | COUNTERSUNK |
| CTV | CABLE TELEVISION |
| CW | COLD WATER |
| DBL | DOUBLE |
| DEMO | DEMOLITION |
| DEPT | DEPARTMENT |
| DET | DETAIL |
| DF | DRINKING FOUNTAIN |
| DG | DECOMPOSED GRANITE |
| DIA | DIAMETER |
| DIM | DIMENSION |
| DISP. | DISPENSER |
| DIST. | DISTANCE |
| DIV. | DIVISION |
| D.L. | DEAD LOAD |
| DN. | DOWN |
| DS. | DOWN SPOUT |
| DWG. | DRAWING |
| (E) | EXISTING |
| EA. | EACH |
| E.J. | EXPANSION JOINT |
| ELEC. | ELECTRICAL |
| ELEV. | ELEVATION |
| EMER. | EMERGENCY |
| ENCL. | ENCLOSURE |
| ENG. | ENGINEER |
| ENGY | ENERGY |
| ENTR | ENTRANCE |
| EP | EPOXY ENAMEL |
| EQ. | EQUAL |
| EQUIP. | EQUIPMENT |
| EST. | ESTIMATE |
| E.W.C. | ELECTRIC WATER COOLER |
| EWH | ELECTRIC WATER HEATER |
| EXH | EXHAUST |
| EXIST. | EXISTING |
| EXP. | EXPANSION |
| EXPSD. | EXPOSED |
| EXT. | EXTERIOR |
| F | FACTORY FINISH |
| F.A. | FIRE ALARM |
| FC | FOOTCANDLE |
| F.D. | FLOOR DRAIN |
| FDC | FIRE DEPARTMENT CONNECTION |
| FDN | FOUNDATION |
| F.E. | FIRE EXTINGUISHER |
| F.E.C. | FIRE EXTINGUISHER CABINET |
| F.F. | FINISH FLOOR |
| F.G. | FINISHED GRADE |
| F.H. | FIRE HYDRANT |
| FIN. | FINISH |
| F.L. | FLOW LINE |
| FLASH. | FLASHING |
| FLR. | FLOOR |
| FLUOR. | FLUORESCENT |
| F.O. | FACE OF |
| F.O.C. | FACE OF CONCRETE |
| F.O.F. | FACE OF FINISH |
| F.O.M. | FACE OF MASONRY |
| F.O.S. | FACE OF STUD |
| FPP | FOLDING PANEL PARTITION |
| FPW | FOLDING PANEL WOOD DOOR |
| F.R. | FIRE RETARDANT |
| F.R.A. | FIRE RATED ASSEMBLY |
| F.R.P. | FIBERGLASS REINFORCED PANEL |
| F.S. | FLOOR SINK |
| FT. | FOOT OR FEET |
| FTG. | FOOTING |
| FURR. | FURRING |
| FXTR. | FIXTURE |
| G. | GAS |
| GA. | GAGE |
| GALV. | GALVANIZED |
| GB | GRAB BAR |
| G.I. | GALVANIZED IRON |
| GL. | GLASS |
| GLU.LAM. | GLUE LAMINATED |
| GND. | GROUND |
| GPM | GALLONS PER MINUTE |
| GR. | GRADE |
| GYP. | GYPSUM |
| H.B. | HOSE BIBB |
| HCN | HOLLOW CORE NATURAL FINISH |
| HCP | HOLLOW CORE PAINT FINISH |
| HDBD. | HARDBOARD |
| HDR | HEADER |
| HDW. | HARDWARE |
| HDWD. | HARDWOOD |
| HGT. | HEIGHT |
| H.M. | HOLLOW METAL |
| HORIZ. | HORIZONTAL |
| HP | HORSEPOWER |
| HR. | HOUR |
| HTG. | HEATING |
| HTWR | HOT WATER RETURN |
| HTWS | HOT WATER SUPPLY |
| HVAC | HEATING, VENTILATING, AIR CONDITIONING |
| HVY | HEAVY |
| HW | HOT WATER |
| I.D. | INSIDE DIAMETER |
| I.E. | INVERT ELEVATION |
| INSUL. | INSULATION |
| INT. | INTERIOR |
| INV. | INVERT |
| IW | IRRIGATION WATER |
| JAN. | JANITOR |
| JCT. | JUNCTION |
| JT. | JOINT |
| K | KIP (1000 LB) |
| KIT. | KITCHEN |
| KO | KNOCKOUT |
| KVA | KILOVOLT AMPERE |
| LAB. | LABORATORY |
| LAM. | LAMINATED |
| LAV. | LAVATORY |
| LB. | POUND |
| LDG | LANDING |
| LL | LIVE LOAD |
| LT | LIGHT |
| LTF | LINOLEUM TILE FLOORING |
| LTG | LIGHTING |
| LVL | LEVEL |
| LVR | LOUVER |
| MAINT | MAINTENANCE |
| MAN | MANUAL |
| MAS | MASONRY |
| MATL | MATERIAL |
| MAX. | MAXIMUM |
| MCC | MOTOR CONTROL CENTER |
| MECH. | MECHANICAL |
| MED | MEDIUM |
| MEZZ | MEZZANINE |
| MFR. | MANUFACTURER |
| MH | MANHOLE |
| MIN. | MINIMUM |
| MIR | MIRROR |
| MISC. | MISCELLANEOUS |
| MKR | MARKER |
| MTL. | METAL |
| MTD. | MOUNTED |
| MUL. | MULLION |
| MVBL | MOVABLE |
| (N) | NEW |
| NAT. | NATURAL |
| NEG | NEGATIVE |
| N.I.C. | NOT IN CONTRACT |
| NO. | NUMBER |
| NOM. | NOMINAL |
| N.T.S. | NOT TO SCALE |
| O.A. | OVERALL |
| O.C. | ON CENTER |
| O.D. | OUTSIDE DIAMETER |
| O.F. | OVERFLOW DRAIN |
| OFCI | OWNER FURNISHED-CONTRACTOR INSTALLED |
| OFF | OFFICE |
| OFOI | OWNER FURNISHED-OWNER INSTALLED |
| OPNG. | OPENING |
| OPP. | OPPOSITE |
| OVHD | OVERHEAD |
| PART. | PARTITION |
| PB | PULL BOX |
| PBD | PARTICLEBOARD |
| PC | PORTLAND CEMENT |
| PD | PLANTER DRAIN |
| PERF | PERFORATED |
| PERP | PERPENDICULAR |
| PE | PAINT EGGSHELL |
| PF | PAINT FLAT |
| PG | PAINT GLOSS |
| P.H. | PANIC HARDWARE |
| PIV | POST INDICATOR VALVE |
| P.L. | PROPERTY LINE |
| PL | PLATE |
| P.LAM. | PLASTIC LAMINATE |
| PLAS. | PLASTER |
| PLAT. | PLATFORM |
| PLBG | PLUMBING |
| PLF | POUNDS PER LINEAR FOOT |
| PLYWD. | PLYWOOD |
| PNL | PANEL |
| POS | POSITIVE |
| PR. | PAIR |
| PREFAB | PREFABRICATED |
| PREFIN | PREFINISHED |
| PRELIM | PRELIMINARY |
| PROJ | PROJECT |
| PSF | POUNDS PER SQUARE FOOT |
| PSG | PAINT SEMI-GLOSS |
| PSI | POUNDS PER SQUARE INCH |
| PVC | POLYVINYL CHLORIDE |
| Q.T. | QUARRY TILE |
| QTY | QUANTITY |
| R. | RISER |
| RAD. | RADIUS |
| R.D. | ROOF DRAIN |
| RDWD. | REDWOOD |
| REF. | REFERENCE |
| REFR. | REFRIGERATOR |
| REG. | REGISTER |
| REINF. | REINFORCING |
| REQD. | REQUIRED |
| RESIL. | RESILIENT |
| RET | RETURN |
| REV. | REVERSE |
| RFG | ROOFING |
| RM. | ROOM |
| R.O. | ROUGH OPENING |
| R.T.F. | RUBBER TILE FLOORING |
| S.B. | SPLASH BLOCK |
| S.C. | SOLID CORE |
| SCHED. | SCHEDULE |
| SCN | SOLID CORE NATURAL FINISH |
| SCP | SOLID CORE PAINT FINISH |
| SCPL | SOLID CORE PLAM FINISH |
| S.D. | STORM DRAIN |
| SECT. | SECTION |
| SF | SQUARE FOOT |
| SHT. | SHEET |
| SIM. | SIMILAR |
| SLR | SEALER |
| SPEC. | SPECIFICATIONS |
| SPLY | SUPPLY |
| SQ. | SQUARE |
| S.SK. | SERVICE SINK |
| SST. | STAINLESS STEEL |
| ST. | STREET |
| STAG | STAGGERED |
| STC | SOUND TRANSMISSION CLASS |
| STD. | STANDARD |
| STL. | STEEL |
| STN | STAIN FINISH |
| STOR | STORAGE |
| STRUCT. | STRUCTURAL |
| SURF | SURFACE |
| SUSP. | SUSPENDED |
| SV | SHEET VINYL |
| SWBD | SWITCHBOARD |
| SWGR | SWITCHGEAR |
| SWR | SEWER |
| SYM. | SYMBOL |
| SYS | SYSTEM |
| T. | TREAD |
| T. & B. | TOP AND BOTTOM |
| T. & G. | TONGUE AND GROOVE |
| T.C. | TOP OF CURB |
| TD | TRENCH DRAIN |
| TECH | TECHNICAL |
| TEL. | TELEPHONE |
| TEMP. | TEMPERATURE |
| T.G. | TOP OF GRATE |
| THK | THICK |
| THRES. | THRESHOLD |
| THRU | THROUGH |
| TKBD | TACKBOARD |
| T.O. | TOP OF |
| T.O.P. | TOP OF PARAPET |
| TOT | TOTAL |
| T.P. | TOP OF PAVING |
| TRNSF. | TRANSFORMER |
| TW | TOP OF WALL |
| TYP. | TYPICAL |
| UGND | UNDERGROUND |
| UNFIN. | UNFINISHED |
| U.N.O. | UNLESS NOTED OTHERWISE |
| U.O.S. | UNDERSIDE OF STRUCTURE |
| UR. | URINAL |
| UTIL | UTILITY |
| V | VOLT |
| VAC | VACUUM |
| VAV | VARIABLE AIR VOLUME |
| V.C.T. | VINYL COMPOSITION TILE |
| VERT. | VERTICAL |
| VEST. | VESTIBULE |
| VFWC | VINYL FABRIC WALL COVERING |
| W | WATT |
| W/ | WITH |
| W.C. | WATER CLOSET |
| WD. | WOOD |
| WDW. | WINDOW |
| WHSE | WAREHOUSE |
| WL | WIND LOAD |
| WLD | WELDED |
| WP | WORKING POINT |
| WPG | WATERPROOFING |
| WR | WATER RESISTANT |
| WSCT. | WAINSCOT |
| WT | WEIGHT |
| W.W.F. | WELDED WIRE FABRIC |
| XFMR | TRANSFORMER |

# APPLICABLE CODES

APPLICABLE CODES AS OF JANUARY 1, 2023*:

2022 CALIFORNIA ADMINISTRATIVE CODE (CAC), PART 1, TITLE 24 CCR*

2022 CALIFORNIA BUILDING CODE (CBC), PART 2, TITLE 24 CCR
(2021 INTERNATIONAL BUILDING CODE, VOL. 1&2, AND 2022 CALIFORNIA AMENDMENTS)

2022 CALIFORNIA ELECTRICAL CODE (CEC), PART 3, TITLE 24 CCR
(2020 NATIONAL ELECTRICAL CODE AND 2022 CALIFORNIA AMENDMENTS)

2022 CALIFORNIA MECHANICAL CODE (CMC), PART 4, TITLE 24 CCR
(2021 IAPMO UNIFORM MECHANICAL CODE AND 2022 CALIFORNIA AMENDMENTS)

2022 CALIFORNIA PLUMBING CODE (CPC), PART 5, TITLE 24 CCR
(2021 IAPMO UNIFORM PLUMBING CODE AND 2022 CALIFORNIA AMENDMENTS)

2022 CALIFORNIA ENERGY CODE (CEC), PART 6, TITLE 24 CCR

2022 CALIFORNIA FIRE CODE (CFC), PART 9, TITLE 24 CCR
(2021 INTERNATIONAL FIRE CODE AND 2022 CALIFORNIA AMENDMENTS)

2022 CALIFORNIA EXISTING BUILDING CODE (CEBC), PART 10, TITLE 24 CCR
(2021 INTERNATIONAL EXISTING BUILDING CODE AND 2022 CALIFORNIA AMENDMENTS)

2022 CALIFORNIA GREEN BUILDING STANDARDS CODE (CALGREEN), PART 11, TITLE 24 CCR

2022 CALIFORNIA REFERENCED STANDARDS CODE, PART 12, TITTLE 24 CCR

TITLE 19 CCR, PUBLIC SAFETY, STATE FIRE MARSHAL REGULATIONS

2016 ASME A17.1/CSA B44-16 SAFETY CODE FOR ELEVATORS AND ESCALATORS
(PER 2019 CBC PART 2 CH 35)
*NOTE: CAL/OSHA ELEVATOR UNIT ENFORCES CCR TITLE 8 AND USES THE 2004 ASME A17.1 BY ADOPTION.*

2010 ADA STANDARDS FOR ACCESSIBLE DESIGN

# SUMMARY OF WORK

THE PROJECT CONSISTS OF MOVING THE EXISTING PORTABLES FROM AMAR CHILDREN'S CENTER TO THE DISTRICT OFFICE AND REMODELING OF (1) 48' X 40' (A#04-101749) PORTABLE BUILDINGS, (2) 24' X 40' AND (1) 12' X 40' RESTROOM PORTABLE .

4

# PROJECT DIRECTORY

## OWNER
HACIENDA LA PUENTE UNIFIED SCHOOL DISTRICT
15959 E. GALE AVENUE
CITY OF INDUSTRY, CA 91745
PHONE: (626) 933-1000

## CIVIL
FPL & ASSOCIATES INC.
30 CORPORATE PARK, SUITE 401
IRVINE, CA 92606
PHONE: (949) 252-1688

## ARCHITECT
tBP/ARCHITECTURE
4611 TELLER AVENUE
NEWPORT BEACH, CA 92660
PHONE : (949) 673-0300

## ELECTRICAL
FBA ENGINEERING
150 PAULARINO AVENUE, SUITE A120
COSTA MESA, CA 92626
PHONE: (949) 852-9995

## PLUMBING
POCOCK DESIGN SOLUTIONS INC.
14451 CHAMBERS ROAD, SUITE 210
TUSTIN, CA 92780
PHONE: (949) 417-3903

# PORTABLE NOTES

THE DESIGN PROFESSIONAL IN RESPONSIBLE CHANGE SHALL SUBMIT A LETTER CERTIFYING THAT THE EXISTING BUILDING CONFORMS THE ORIGINALLY APPROVED PLANS AND SPECIFICATIONS AND HAS NOT SUFFERED STRUCTURAL DETERIORATION OR BEEN STRUCTURALLY ALTERED PER DSA IR 16-1.

THE FOLLOWING DOCUMENTS SHALL BE ON THE JOBSITE PRIOR TO INSTALLATION OF THE UNIT(S):
a. IN-PLANT VERIFIED REPORT
b. LABORATORY VERIFIED REPORT
c. WELDING VERIFIED REPORT

THE SITE INSPECTOR SHALL VERIFY THE ABOVE DOCUMENTS AND SERIAL NUMBERS ARE APPLICABLE TO EACH UNIT PRIOR TO INSTALLATION OF THE UNIT(S).

NOTIFY ARCHITECT AND THE DIVISION OF THE STATE ARCHITECT FIELD ENGINEER IF ANY DISCREPANCIES OCCUR.

IN-PLANT INSPECTOR AND MANUFACTURER SHALL FOLLOW THE REQUIREMENTS OF DSA IR16-1.13 AND INCLUDE THE FOLLOWING INFORMATION ON ID TAG OF SHOP FABRICATED RE-LOCATABLE STRUCTURES:
1. THE DSA APPLICATION NUMBER AND CBC EDITION UNDER WHICH THE BUILDING CONSTRUCTION WAS AUTHORIZED;
2. THE MANUFACTURER OR BUILDER'S NAME;
3. THE SERIAL NUMBER;
4. THE DESIGN CLIMATE ZONES;
5. THE DESIGN LIVE LOADS FOR THE ROOF AND FLOOR;
6. THE DESIGN WIND SPEED AND EXPOSURE CATEGORY;
7. THE SEISMIC DESIGN PARAMETER Ss.

a. EXISTING ELECTRICAL SERVICE HAS BEEN INVESTIGATED AND FOUND TO HAVE ADEQUATE CAPACITY FOR THE PROPOSED LOAD ADDITION AS SHOWN ON THESE PLANS, OR
b. SOURCE OF POWER HAS BEEN INVESTIGATED AND IS ADEQUATE FOR THE ADDITIONAL LOAD.
c. SITE INSPECTOR IS TO WITNESS AND VERIFY GROUNDING TESTS.

DETERIORATION OR EXISTING NON COMPLAINT CONSTRUCTION - IF ANY CONDITIONS IS DISCOVERED WHICH, IF LEFT UNCORRECTED, WOULD MAKE THE BUILDING NON-COMPLIANT WITH THE REQUIREMENTS OF THE EDITION OF THE CBC IN FORCE AT THE TIME OF ORIGINAL CONSTRUCTION, THE CONDITION MUST BE CORRECTED IN ACCORDANCE WITH CURRENT CODE REQUIREMENT. A CONSTRUCTION CHANGE ORDER (CCD), OR A SEPARATE SET OF PLANS AND SPECIFICATIONS DETAILING AND SPECIFYING THE REQUIRED REPAIR WORK SHALL BE SUBMITTED TO AND APPROVED BY DSA BEFORE PROCEEDING WITH THE REPAIR WORK.

# GENERAL NOTES

ALL WORK TO CONFORM TO 2022 EDITION TITLE 24, CALIFORNIA CODE OF REGULATIONS (CCR)

CHANGES TO THE APPROVED DRAWINGS AND SPECIFICATIONS SHALL BE MADE BY ADDENDA OR CONSTRUCTION CHANGE DOCUMENTS APPROVED BY THE DIVISIONS OF THE STATE ARCHITECT, AS REQUIRED BY SECTION 4-338, PART 1, TITLE 24, CCR.

A 'DSA CERTIFIED' PROJECT INSPECTOR EMPLOYED BY THE DISTRICT (OWNER) AND APPROVED BY THE DIVISION OF THE STATE ARCHITECT SHALL PROVIDE CONTINUOUS INSPECTION OF THE WORK. THE DUTIES OF THE INSPECTOR ARE DEFINED IN SECTION 4-342, CALIFORNIA BUILDING STANDARDS ADMINISTRATIVE CODE (PART 1, TITLE 24 CCR).

A 'DSA CERTIFIED' INSPECTOR WITH CLASS (2) CERTIFICATION IS REQUIRED FOR THIS PROJECT

A DSA ACCEPTED TESTING LABORATORY DIRECTLY EMPLOYED BY THE SCHOOL BOARD SHALL CONDUCT ALL THE REQUIRED TESTS AND INSPECTIONS FOR THE PROJECT.

GRADING PLANS, DRAINAGE IMPROVEMENTS, ROAD AND ACCESS REQUIREMENTS AND ENVIRONMENTAL HEALTH CONSIDERATIONS SHALL COMPLY WITH ALL LOCAL ORDINANCES.

WHENEVER DSA FINDS ANY CONSTRUCTION WORK IS BEING PREFORMED IN A MANNER CONTRARY TO THE PROVISIONS OF CALIFORNIA BUILDING CODE AND THAT WOULD COMPROMISE THE STRUCTURAL INTEGRITY OF THE BUILDING, THE DEPARTMENT OF GENERAL SERVICES, STATE OF CALIFORNIA, IS AUTHORIZED TO ISSUE A STOP WORK ORDER PER SECTION 4-334.1 CALIFORNIA ADMINISTRATIVE CODE (PART1, TITLE 24, CCR).

THE INTENT OF THESE DRAWINGS AND SPECIFICATIONS IS THAT THE WORK OF THE ALTERATION, REHABILITATION OR RECONSTRUCTION IS TO BE IN ACCORDANCE WITH TITLE 24, CCR. SHOULD ANY EXISTING CONDITIONS SUCH AS DETERIORATION OR NON-COMPLYING CONSTRUCTION BE DISCOVERED WHICH IS NOT COVERED BY THE CONTRACT DOCUMENTS WHEREIN THE FINISHED WORK WILL NOT COMPLY WITH TITLE 24, CCR, A CONSTRUCTION CHANGE DOCUMENT (CCD), OR A SEPARATE SET OF PLANS AND SPECIFICATIONS, DETAILING AND SPECIFYING THE REQUIRED WORK SHALL BE SUBMITTED TO AND APPROVED BY DSA BEFORE PROCEEDING WITH THE WORK. (SECTION 4-317(C), PART 1, TITLE 24, CCR).

TITLE 24, PARTS 1-5 AND 9 MUST BE KEPT ON SITE DURING CONSTRUCTION.

ALL STRUCTURAL, ARCHITECTURAL, MECHANICAL, ELECTRICAL, AND PLUMBING MATERIALS INSTALLATION TO COMPLY WITH APPLICABLE CODES, STANDARDS, AND MANUFACTURER'S RECOMMENDATIONS.

THE PROJECT INSPECTOR (PI) SHALL WITNESS AND VERIFY GROUNDING.

IF ANY CONDITION IS DISCOVERED WHICH, IF LEFT UNCORRECTED, WOULD MAKE THE BUILDING NON-COMPLIANT WITH THE REQUIREMENTS OF THE EDITION OF THE CBC IN FORCE AT THE TIME OF ORIGINAL CONSTRUCTION, THE CONDITION MUST BE CORRECTED IN ACCORDANCE CURRENT REQUIREMENTS. A CONSTRUCTION CHANGE DOCUMENT, OR A SEPARATE SET OF PLANS AND SPECIFICATIONS DETAILING AND SPECIFYING THE REQUIRED REPAIR WORK SHALL BE SUBMITTED TO AND APPROVED BY DSA BEFORE PROCEEDING WITH THE REPAIR WORK.

# SHEET INDEX

(TOTAL NO. OF DRAWINGS - 79)


## GENERAL (NO. OF DRAWINGS - 3)

T-1 COVER SHEET
T-2 SHT. INDEX AND GEN. NOTES
T-3 CODE ANALYSIS SITE PLAN

## CIVIL DRAWINGS (NO. OF DRAWINGS - 5)

C1.00 SITE DEMOLITION PLAN
C2.00 GRADING PLAN
C3.00 GRADING PLAN
C4.00 WET UTILITY PLAN
C5.00 DETAIL SHEET

## ARCHITECTURAL DRAWINGS (NO. OF DRAWINGS - 16 )

AS-1 OVERALL CAMPUS SITE PLAN
AS-2 ENLARGED DEMOLITION SITE PLANS
AS-3 ENLARGED REMODEL SITE PLAN
A-01 RESTROOM PORTABLE DEMOLITION PLANS
A-1 RESTROOM PORTABLE REMODEL PLANS
A-2 48X40 PORTABLE FLOOR PLANS
A-3 48X40 PORTABLE RCP
A-4 24X40 PORTABLE FLOOR PLANS
A-5 24X40 PORTABLE RCP
A-6 RESTROOM PORTABLE PLANS AND ELEVATIONS
2.00 SITE DETAILS AND ENLARGED SITE PLANS
2.01 SITE DETAILS
4.00 WALL DETAILS
5.00 CEILING AND ROOF DETAILS
8.00 DOOR DETAILS
11.00 SIGNAGE DETAILS

## MECHANICAL DRAWINGS (NO. OF DRAWINGS - 6)

M-0.1 MECHANICAL LEGEND & NOTES
M-2.1D MECHANICAL TYP PORTABLE PLANS
M-2.1 MECHANICAL TYP PORTABLE PLANS
M-2.2 MECHANICAL RESTROOM PLANS
M-5.1 MECHANICAL DETAILS
M-5.2 TITLE 24 COMPLIANCE

## PLUMBING DRAWINGS (NO. OF DRAWINGS - 3)

P0-1 PLUMBING LEGEND, SCHEDULE, & GENERAL NOTES
P1-1 PLUMBING SITE PLAN
P2-1 PLUMBING FLOOR PLANS

## ELECTRICAL DRAWINGS (NO. OF DRAWINGS - 6)

E-0.1 GENERAL NOTES, SYMBOL LIST, DETAILS
E-0.2 SINGLE LINE DIAGRAM AND DETAILS
E-0.3 F.A. EQUIPMENT SCHEDULE, DETAILS AND CALCULATIONS
E-1.0 SITE ELECTRICAL PLAN
E-1.1 DEMOLITION BUILDINGS AND ELECTRICAL PLANS
E-1.2 DEMOLITION AND REMODEL ELECTRICAL PLANS

## *48' X 40' MODULAR CLASSROOM (NO. OF DRAWINGS - 17 )

AMERICAN MODULAR PC# 02-106373 SITE DSA A#109190

TS-1 TITLE AND BUILDING DATA NOTES
N-1 GENERAL NOTES AND SPECIFICATIONS
1 FLOOR PLAN AND NOTES
2 EXTERIOR ELEVATIONS
3 CEILING GRID, DETAILS AND NOTES
4 INTERIOR ELEVATIONS AND OPTIONS
S1 WOOD FOUNDATION PLAN AND DETAILS
S2 FLOOR FRAMING PLAN AND DETAILS
S2A BUILDING SECTIONS AND WALL DETAILS
S3 ROOF FRAMING PLANS AND DETAILS
S3A ROOF SECTIONS AND DETAILS
S4 WALL FRAMING ELEVATIONS AND WALL DETAILS
SSR RAMP PLAN, ELEVATIONS AND WALL DETAILS
M1 MECHANICAL PLAN AND NOTES
M2 ENERGY MANDATORY MEASURES
E1 ELECTRICAL AND LIGHTING PLAN AND NOTES
E2 ELECTRICAL PLAN AND NOTES

## *24' X 40' PORTABLE BUILDING (NO. OF DRAWINGS - 26)

4

MOD TECH SITE DSA A#100771

A0.0 COVER SHEET
A1.0 FLOOR PLAN
A4.2.0 ROOF PLAN
A4.3.0 EXTERIOR ELEVATIONS
A4.0 INTERIOR ELEVATIONS
A5.0 SCHEDULES
A6.0 ARCHITECTURAL DETAILS
A6.1 ARCHITECTURAL DETAILS
A7.0 REFLECTED CEILING PLAN
A7.1 REFLECTED CEILING DETAIL
SA1.0 FLOOR FRAMING PLAN
SA2.0 ROOF FRAMING PLAN
SA3.0 STRUCTURAL ELEVATIONS / DETAILS
SA3.1 STRUCTURAL DETAILS
S4.0 STRUCTURAL DETAILS
SS.0 WALL FRAMING
SS.1 FRAMING DETAILS
SS.2 WALL FRAMING DETAILS
M1.0 MECHANICAL (HVAC) PLAN
E1.0 ELECTRICAL PLAN

4

## *24' X 40' FOUNDATION PLAN (NO. OF DRAWINGS - 2)

MOD TECH PC#266

F0.2 FOUNDATION PLAN
F3.0 FOUNDATION DETAILS

## *12' X 40' FOUNDATION PLAN (NO. OF DRAWINGS - 1)

MOD TECH PC#284

F2.0 FOUNDATION (WOOD)


# REFERENCE SYMBOLS

FULL BUILDING SECTION
A — LETTER ABOVE - SECTION
A-4 — NUMBER BELOW - SHEET NUMBER
A / A-4

PARTIAL BUILDING SECTION / WALL SECTION
B — LETTER ABOVE - SECTION
A-4 — NUMBER BELOW - SHEET NUMBER

EXTERIOR ELEVATION
1 — NUMBER ABOVE - ELEVATION NUMBER
A-3 — NUMBER BELOW - SHEET NUMBER

DETAIL
2 — NUMBER ABOVE - DETAIL NUMBER
3/01 — NUMBER BELOW - SHEET NUMBER

# MATERIAL SYMBOLS

EARTH
PLYWOOD
RIGID INSULATION
SAND & GROUT
FINISH WOOD
ACOUSTICAL CEILING PANEL/ TILE
CONCRETE
LATH & PLASTER
MASONRY
GYPSUM BOARD
STEEL
BATT INSULATION

agency

tBP
architecture
planning
interiors

LICENSED ARCHITECT
JOHN L. GREBE
No. C34587
Exp. 12-31-23
STATE OF CALIFORNIA


tBP/Architecture
4611 Teller Avenue
Newport Beach, CA 92660
ph: 949.673.0300


architect

consultant

owner

DISTRICT OFFICE PORTABLES & RESTROOM PORTABLE

HACIENDA LA PUENTE UNIFIED SCHOOL DISTRICT
15959 GALE AVE.
CITY OF INDUSTRY, CA 91716

tBP project number : 21124.00

file name:

drawn by: checked by:

date: 7/11/2023

| Rev: | date: | description: |
|---|---|---|
| 4 | 9/20/2023 | ADDENDUM 04 |


THIS DRAWING AND THE DESIGNS, DEPICTIONS, IDEAS AND OTHER INFORMATION CONTAINED HEREIN CONSTITUTE UNPUBLISHED WORK OF tBP/ARCHITECTURE AND SHALL REMAIN THE PROPERTY OF tBP/ARCHITECTURE IN PERPETUITY. NO PART THEREOF SHALL BE REPRODUCED, DISCLOSED, DISTRIBUTED, SOLD, PUBLISHED OR OTHERWISE USED IN ANY WAY WITHOUT THE ADVANCED EXPRESS WRITTEN CONSENT OF tBP/ARCHITECTURE.


drawing title:

SHT. INDEX, AND GEN. NOTES

drawing no.:

T-2

drawing of

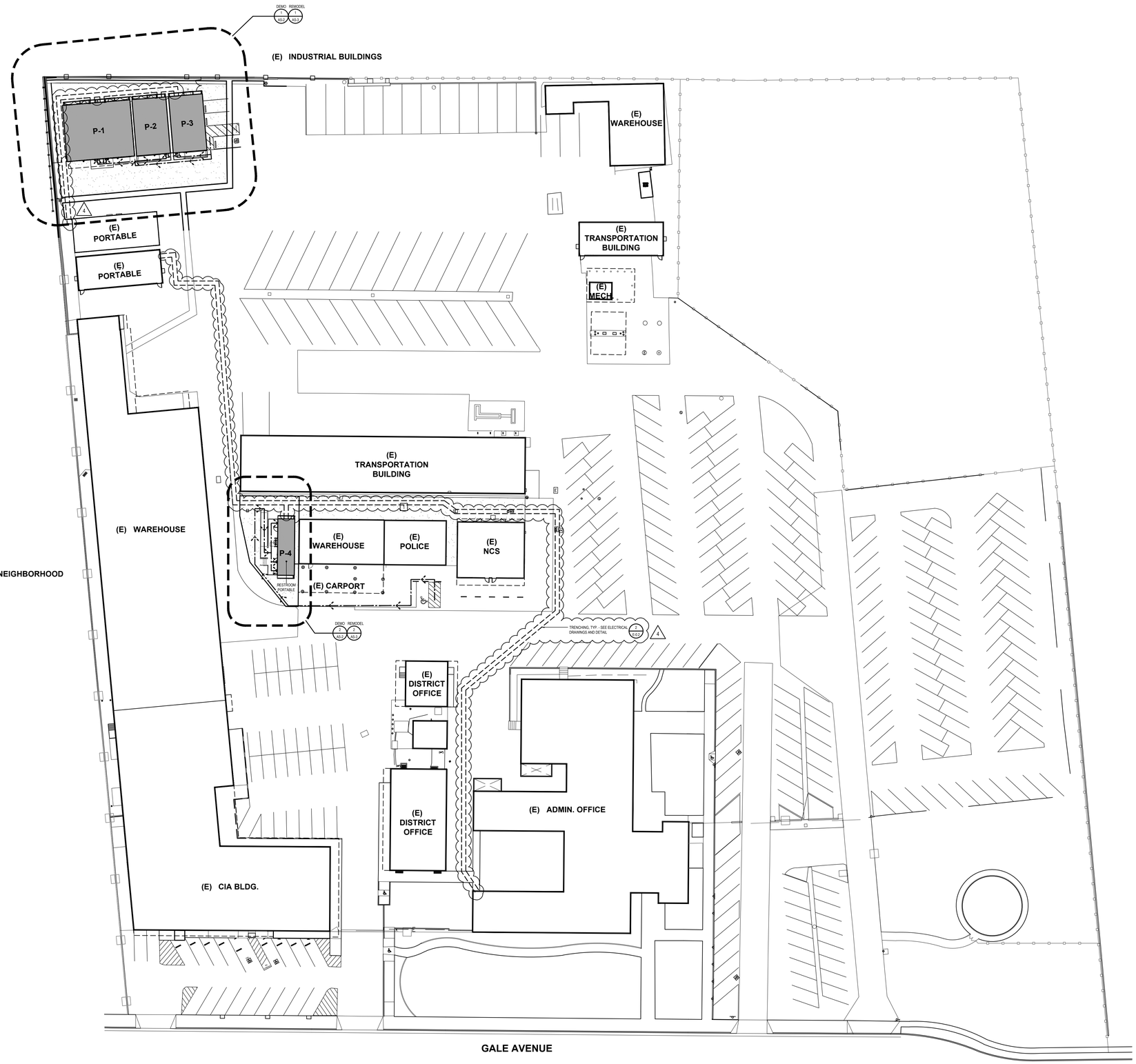


SITE PLAN

SCALE: 1"= 20' -0"

## GENERAL NOTES

1. LOCATIONS OF ALL UTILITIES SHOWN ARE APPROXIMATE. CONTRACTOR SHALL EXERCISE EXTREME CAUTION IN EXCAVATING AND TRENCHING TO AVOID INTERCEPTING EXISTING PIPING OR CONDUITS. THE ARCHITECT IS NOT RESPONSIBLE FOR THE LOCATION OF UNDERGROUND UTILITIES OR STRUCTURES WHETHER OR NOT SHOWN OR DETAILED AND INSTALLED BY OTHER CONTRACTS. THE CONTRACTOR SHALL IMMEDIATELY NOTIFY THE OWNER SHOULD SUCH UNIDENTIFIED CONDITIONS BE DISCOVERED. THESE DRAWING DO NOT INCLUDE NECESSARY COMPONENTS FOR CONSTRUCTION SAFETY.

2. VERIFY ALL EXISTING AND FINISH GRADES, DIMENSIONS AND SITE CONDITIONS BEFORE COMMENCING WORK AND REPORT ANY DISCREPANCIES TO THE ARCHITECT.

## KEYNOTES

1 REMOVE (E) GRAVEL AND PROVIDE AC PAVING - SEE CIVIL DWGS.

## SITE PLAN LEGEND

DESIGN PROFESSIONAL IN GENERAL RESPONSIBLE CHARGE STATEMENT: THE POT IDENTIFIED IN THESE CONSTRUCTION DOCUMENTS IS COMPLIANT WITH THE CURRENT APPLICABLE CALIFORNIA BUILDING CODE ACCESSIBILITY PROVISIONS FOR THE PATH OF TRAVEL REQUIREMENTS FOR ALTERATIONS, ADDITIONS AND STRUCTURAL REPAIRS. AS PART OF THE DESIGN OF THIS PROJECT, THE POT WAS EXAMINED AND ANY ELEMENTS, COMPONENTS OR PORTIONS OF THE POT THAT WERE DETERMINED TO BE NONCOMPLIANT 1) HAVE BEEN IDENTIFIED AND 2) THE CORRECTIVE WORK NECESSARY TO BRING THEM INTO COMPLIANCE HAS BEEN INCLUDED WITHIN THE SCOPE OF THIS PROJECT'S WORK THROUGH DETAILS, DRAWINGS AND SPECIFICATIONS INCORPORATED INTO THESE CONSTRUCTION DOCUMENTS. ANY NONCOMPLIANT ELEMENTS, COMPONENTS OR PORTIONS OF THE POT THAT WILL NOT BE CORRECTED BY THIS PROJECT BASED ON VALUATION THRESHOLD LIMITATIONS OR A FINDING OF UNREASONABLE HARDSHIP ARE SO INDICATED IN THESE CONSTRUCTION DOCUMENTS. ARCHITECT HAS VERIFIED P.O.T. IS BARRIER FREE.

DURING CONSTRUCTION, IF POT ITEMS WITHIN THE SCOPE OF THE PROJECT REPRESENTED AS CODE COMPLIANT ARE FOUND TO BE NONCONFORMING BEYOND REASONABLE CONSTRUCTION TOLERANCES, THEY SHALL BE BROUGHT INTO COMPLIANCE WITH THE CBC AS PART OF THIS PROJECT BY MEANS OF A CONSTRUCTION CHANGE DOCUMENT.

PATH OF TRAVEL (P.O.T.) AS VERIFIED BY ARCHITECT IS :

- A COMMON BARRIER FREE ACCESSIBLE ROUTE AT LEAST 48" WIDE WITHOUT ANY ABRUPT VERTICAL CHANGES EXCEEDING 1/2" BEVELED AT 1:2 MAXIMUM SLOPE, EXCEPT THAT LEVEL CHANGES DO NOT EXCEED 1/4" VERTICAL.
- THE PATH SURFACE IS SLIP RESISTANT, STABLE , FIRM AND SMOOTH.
- PASSING SPACES AT LEAST 60"X60" ARE LOCATED NOT MORE THAN 200' APART.
- CONTINUOUS GRADIENTS HAVE 60" LEVEL AREAS NOT MORE THAN 400' APART.
- CROSS-SLOPE DOES NOT EXCEED 2%.
- SLOPE IN THE DIRECTION OF TRAVEL IS LESS THAN 5%, UNLESS OTHERWISE INDICATED AS A RAMP.
- MAINTAIN POT FREE OF OVERHANGING OBSTRUCTIONS TO 80" MINIMUM, PROTRUDING OBJECTS GREATER THAN 4". PROJECTION FROM WALL OR EDGE AND 27" ABOVE FINISH GRADE.
- ARCHITECT SHALL VERIFY THAT THERE ARE NO BARRIERS IN THE PATH OF TRAVEL.

AREA OF WORK

AC PAVING

PATH OF TRAVEL

agency

tBP architecture planning interiors

LICENSED ARCHITECT STATE OF CALIFORNIA

tBP/Architecture
4611 Teller Avenue
Newport Beach, CA 92660
ph: 949.673.0300

architect

consultant

# DISTRICT OFFICE PORTABLES & RESTROOM PORTABLE

HACIENDA LA PUENTE UNIFIED SCHOOL DISTRICT
15959 GALE AVE,
CITY OF INDUSTRY, CA 91716

owner

| | |
|---|---|
| tBP project number : | 21124.00 |
| file name: | |
| drawn by: | checked by: |
| date: 7/11/2023 | |

| Rev: | date: | description: |
|---|---|---|
| 4 | 9/20/2023 | ADDENDUM 04 |

THIS DRAWING AND THE DESIGNS, DEPICTIONS, IDEAS AND OTHER INFORMATION CONTAINED HEREIN CONSTITUTE UNPUBLISHED WORK OF tBP/ARCHITECTURE AND SHALL REMAIN THE PROPERTY OF tBP/ARCHITECTURE IN PERPETUITY. NO PART THEREOF SHALL BE REPRODUCED, DISCLOSED, DISTRIBUTED, SOLD, PUBLISHED OR OTHERWISE USED IN ANY WAY WITHOUT THE ADVANCED EXPRESS WRITTEN CONSENT OF tBP/ARCHITECTURE.

drawing title:

OVERALL CAMPUS SITE PLAN

drawing no.:

AS-1

drawing of

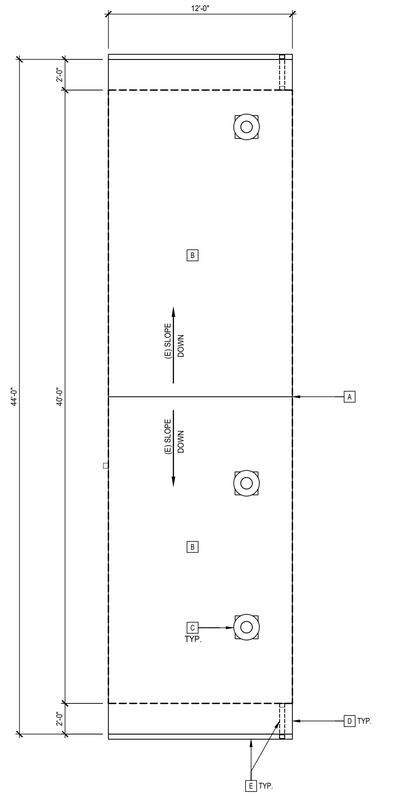

## DEMOLITON ROOF PLAN P-4 | 3

SCALE: 1/4" = 1'-0"

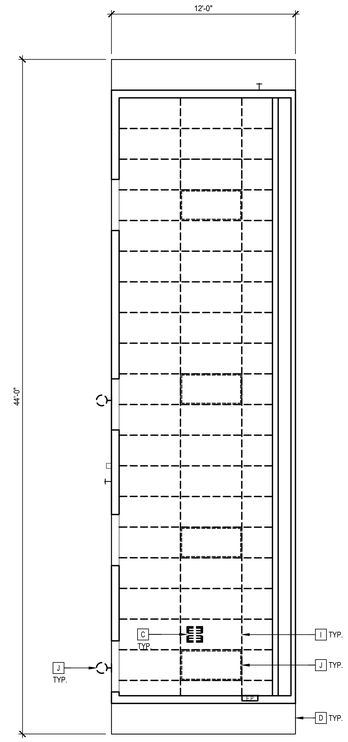


NOTE:
SEE ELECTRICAL DWGS. FIRE ALARM PLAN FOR FIRE ALARM DEVICE LOCATION.

## DEMOLITON CEILING PLAN P-4 | 2

SCALE: 1/4" = 1'-0"

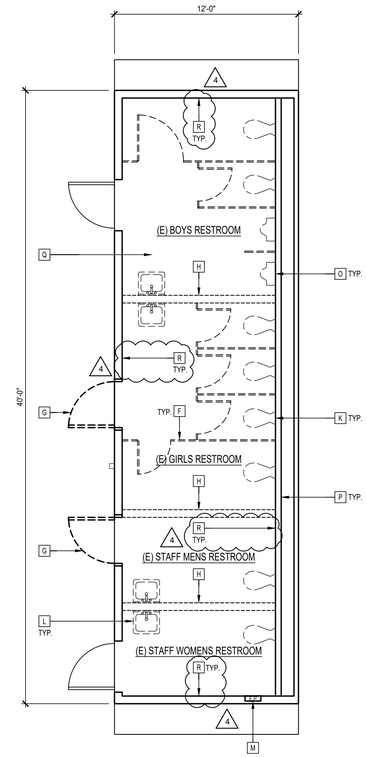





## DEMOLITON FLOOR PLAN -P-4 | 1

SCALE: 1/4" = 1'-0"

## LEGEND

- EXISTING EXTERIOR PORTABLE BUILDING WALL TO REMAIN
- ITEMS TO BE DEMOLISHED
- EXISTING INTERIOR WALL TO REMAIN
- REMOVE (E) DOOR AND FRAME

## GENERAL NOTES

1. REMOVE (E) FLOOR FINISH MATERIAL IN ITS ENTIRETY.
2. COORDINATE W/ DISTRICT TO REMOVE (E) LIGHT FIXTURES, MECHANICAL FIXTURES TO EITHER DISPOSE, OR TURN OVER TO DISTRICT FOR SALVAGE /REUSE.
3. CAREFULLY REMOVE (E) MECHANICAL UNITS WHERE OCCURS. PATCH (E) GYPSUM BOARD AT INTERIOR AND INSTALL T1-11 SIDING AT EXTERIOR TO MATCH (E) ADJACENT FINISH W/ FLUSH TRANSITION.
4. REMOVE (E) GYPSUM BOARD FINISH AND (E) FLOOR SHEATHING AS REQUIRED TO INSTALL (N) ELECTRICAL, PLUMBING, AND MECHANICAL OUTLETS, DEVICES, CONTROLS, CONDUITS, AND PIPING. PATCH (E) WALL FINISHES AND (E) FLOOR SHEATHING TO MATCH ADJACENT (E) FINISH AND (E) SHEATHING W/ FLUSH TRANSITION.
5. REFER TO DETAIL 16/4.00 FOR TYPICAL ELECTRICAL OUTLET IN PARTITION.
6. REMOVE ALL TOILET ACCESSORIES AND PATCH AND REPAIR WALLS AS REQUIRED

## DEMOLITION KEYNOTES

- A EXISTING ROOF RIDGE
- B REMOVE (E) ROOFING ON ENTIRE BUILDING, PREP FOR (N) ROOFING 4
- C REMOVE (E) EXHAUST FAN PATCH AND REPAIR. (E) ROOFING AS REQUIRED, TYP. CONNECT TO EXISTING DUCT WHEN AVAILABLE, V.I.F. SEE MECHANICAL DRAWINGS.
- D (E) ROOF OVERHANG
- E (E) GUTTER AND DOWNSPOUT TO REMAIN - REPAIR AS REQUIRED
- F REMOVE (E) TOILET PARTITION
- G REMOVE (E) DOOR AND FRAME
- H REMOVE (E) WALL PATCH AND REPAIR FLOOR, WALLS, AND CEILING AS REQUIRED 4
- I REMOVE (E) T-BAR CEILING
- J REMOVE (E) CEILING LIGHT AND WALL MOUNTED FIXTURE 4
- K REMOVE (E) TOILET
- L REMOVE (E) SINK
- M REMOVE (E) EXTERIOR LIGHT
- N (E) ELECTRICAL PANEL TO REMAIN
- O REMOVE (E) URINAL
- P (E) PLUMBING CHASE TO REMAIN
- Q REMOVE (E) FLOORING
- R REMOVE (E) WALL FINISH AND GYP BD. 4

agency

tBP
architecture
planning
interiors

LICENSED ARCHITECT
GREGORY J. MARCHESE
C-34487
STATE OF CALIFORNIA

tBP/Architecture
4611 Teller Avenue
Newport Beach, CA 92660
ph: 949.673.0300

architect

consultant

# DISTRICT OFFICE PORTABLES & RESTROOM PORTABLE

HACIENDA LA PUENTE UNIFIED SCHOOL DISTRICT
15959 GALE AVE,
CITY OF INDUSTRY, CA 91716

owner

tBP project number : 21124.00

file name:

drawn by: checked by:

date: 7/11/2023

| Rev: | date: | description: |
|---|---|---|
| 4 | 9/20/2023 | ADDENDUM 04 |

THIS DRAWING AND THE DESIGNS, DEPICTIONS, IDEAS AND OTHER INFORMATION CONTAINED HEREIN CONSTITUTE UNPUBLISHED WORK OF tBP/ARCHITECTURE AND SHALL REMAIN THE PROPERTY OF tBP/ARCHITECTURE IN PERPETUITY. NO PART THEREOF SHALL BE REPRODUCED, DISCLOSED, DISTRIBUTED, SOLD, PUBLISHED OR OTHERWISE USED IN ANY WAY WITHOUT THE ADVANCED EXPRESS WRITTEN CONSENT OF tBP/ARCHITECTURE.

drawing title:

RESTROOM PORTABLE DEMOLTION PLANS

drawing no.:

A-01

drawing of

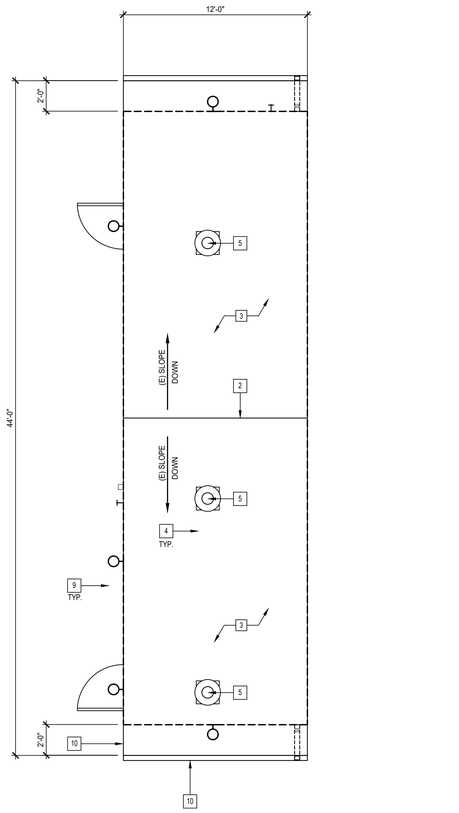


ROOF PLAN P-4 | 3
SCALE: 1/4" = 1'-0"

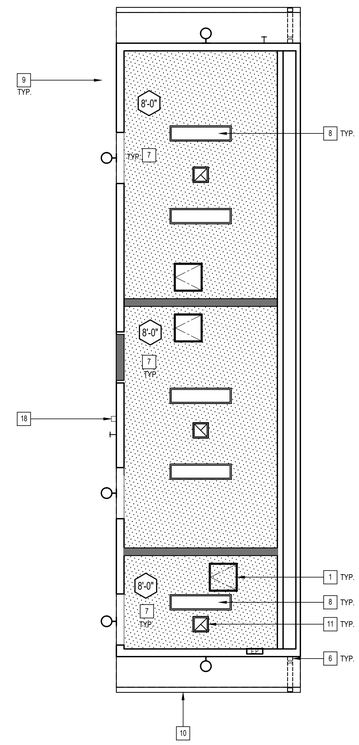


REFLECTED CEILING PLAN P-4 | 2
SCALE: 1/4" = 1'-0"

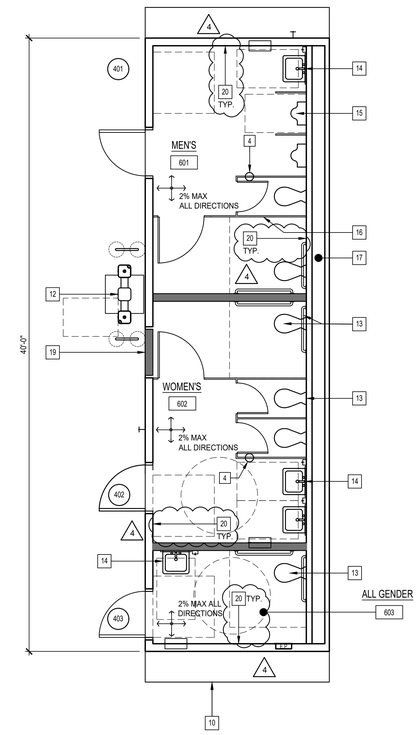


NOTE:
SEE SHEET A-6 FOR MORE INFORMATION.

FLOOR PLAN P-4 | 1
SCALE: 1/4" = 1'-0"

## LEGEND

- EXISTING EXTERIOR PORTABLE BUILDING WALL TO REMAIN
- NEW 2x WOOD STUD WALL — GYP. BD. 13 4.00; TILE 14 4.00; TILE 15 4.00
- DOOR TYPE - SEE DOOR SCHEDULE — 8 — 8.00
- EXIT SIGN - SEE ELECTRICAL DRAWINGS
- ITEMS TO BE REMOVED
- 10' CLG. — CELING HEIGHT ABOVE FINISHED FLOOR (EL.=0'-0")ITEMS TO BE REMOVED (HEIGHT AS NOTED ON PLANS)
- WOOD FRAMED GYP. BD. CEILING
- 1' x 4' FLUORESCENT FIXTURE
- CEILING ACCESS HATCH
- CEILING REGISTER

## GENERAL NOTES

1. GENERAL CONTRACTOR SHALL FIELD VERIFY EXITING CONDITIONS AND INFORM THE ARCHITECT OF ANY DISCREPANCIES
2. REFER TO SHEET T-2 FOR ADDITIONAL GENERAL NOTES, ABBREVIATIONS AND DRAFTING SYMBOLS
3. REMOVE (E) FLOOR AND WALL FINISH MATERIAL, INTERIOR PARTITION(S), AND CEILING IN ITS ENTIRETY. SALVAGE (E) THERMAL BATT INSULATION IN EXTERIOR WALLS, FLOOR, AND ROOF FOR RE-USE, V.I.F..
4. PREPARE (E) FLOOR SUBSTRATE PER MANUFACTURER'S RECOMMENDATIONS TO RECEIVE TILE FINISHES.
5. COORDINATE W/ DISTRICT TO REMOVE (E) LIGHT FIXTURES, MECHANICAL FIXTURES, PLUMBING FIXTURES, AND ACCESSORIES TO EITHER DISPOSE, OR TURN OVER TO DISTRICT FOR SALVAGE / RE-USE.
6. CAREFULLY REMOVE (E) MECHANICAL UNITS WHERE OCCURS. PATCH (E) T1-11 SIDING AT EXTERIOR TO MATCH (E) ADJACENT FINISH W/ FLUSH TRANSITION.
7. REMOVE (E) EXTERIOR T1-11 SIDING AND (E) FLOOR SHEATHING AS REQUIRED TO INSTALL ELECTRICAL, PLUMBING, AND MECHANICAL OUTLETS, DEVICES, CONTROLS, CONDUITS, AND PIPING. PATCH (E) EXTERIOR WALL FINISHES AND (E) FLOOR SHEATHING TO MATCH ADJACENT (E) FINISH AND SHEATHING W/ FLUSH TRANSITION.
8. REFER TO DETAIL 16/4.00 FOR TYPICAL ELECTRICAL OUTLET IN PARTITION.
9. DIMENSIONS ARE TO CENTER LINE OF STUD (U.N.O.)
10. INTERIOR PARTITIONS:
    - INTERIOR PARTITIONS SHALL BE 2X4 STUDS AT 16" O.C. WITH 5/8" TYPE 'X' GYPSUM BOARD EACH SIDE INSTALLED TO STRUCTURE ABOVE. (UNLESS NOTED OTHERWISE)
    - PROVIDE ACOUSTIC BATT INSULATION AT ALL INTERIOR WALLS TO UNDERSIDE OF ROOF, TYP.
    - (E) THERMAL BATT INSULATION TO REMAIN. REPLACE DAMAGED OR MISSING INSULATION TO MATCH (E), V.I.F.
11. PATCH ALL (E) DAMAGED AND MISSING EXTERIOR T1-11 SIDING AND TRIM WHERE OCCURS, V.I.F. W/ T1-11 SIDING AND TRIM TO MATCH (E). PAINT TO MATCH ADJACENT (E) PORTABLE.
12. AT T1-11 SIDING AND TRIM AREAS REQUIRED TO BE REMOVED FOR SCOPE OF PROJECT, PROVIDE T1-11 SIDING AND TRIM TO MATCH (E) FINISH AND COLORS. ALIGN T1-11 SIDING AND TRIM AT TOP AND BOTTOM W/ ADJACENT (E) SIDING AND TRIM, TYP.
13. REPLACE DAMAGED OR MISSING EXPOSED FLASHING AT EXTERIOR PERIMETER WALL BASE OF PORTABLES. PAINT TO MATCH (E).
14. PAINT PORTABLE BUILDING EXTERIOR T1-11 SIDING, TRIM, FASCIA, WINDOW FRAMES, DOORS, AND DOOR FRAMES TO MATCH ADJACENT (E) PORTABLE.
15. MECHANICAL REGISTERS, GRILLES, EXTERIOR LOUVERS, AND ELECTRICAL FIXTURES ARE SHOWN FOR LOCATION PURPOSES ONLY. VERIFY QUANTITY AND SIZES WITH MECHANICAL AND ELECTRICAL DRAWINGS. VERIFY LOCATIONS OF CEILING ACCESS PANELS.
16. 16" x 16" ACCESS PANELS REQUIRED PER MECHANICAL AND ELECTRICAL DRAWINGS, AND CBC 1209.3
17. SEE DETAIL SHEETS 5.00 FOR DETAILS OF CEILING SYSTEMS, SOFFITS AND NOTES

## KEYNOTES

1. 20'x20' CEILING ACCESS HATCH, PAINTED TO MATCH ADJACENT FINISHES, TYP. - SEE DETAIL 20 / 5.00
2. EXISTING ROOF RIDGE
3. RE-ROOF THE ENTIRE BUILDING - SEE SPECS SECTIONS 07 01 50.19 AND 07 52 00 (4)
4. FLOOR DRAIN - SEE PLUMBING DWGS.
5. EXHAUST FAN. PATCH AND REPAIR (E) ROOFING AS REQUIRED, TYP. CONNECT TO EXISTING DUCT WHEN AVAILABLE, V.I.F. SEE STRUCTURAL AND MECHANICAL DWGS
6. (E) GUTTER AND DOWNSPOUT PROTECT IN PLACE AND PAINT
7. WOOD FRAMED GYP. BD. CEILING - SEE 19 / 5.00
8. INTERIOR LIGHT FIXTURE - SEE ELECTRICAL DWGS.
9. EXTERIOR LIGHT FIXTURES, CENTERED ON DOOR AT 9'-6" AFF. TO CENTERLINE OF LIGHT FIXTURE - SEE ELECTRICAL DWGS.
10. (E) ROOF OVERHANG
11. CEILING REGISTER - SEE MECH. DWGS.
12. DRINKING FOUNTAIN - SEE DETAIL 4 / 2.00 AND PLUMBING DWGS.
13. WALL TOILET - SEE PLUMBING DWGS.
14. (E) WALL HUNG LAVATORY - SEE PLUMBING DWGS.
15. URINAL - SEE PLUMBING DWGS.
16. TOILET PARTITION - SEE SPECS.
17. (E) PLUMBING CHASE TO REMAIN
18. FIRE HORN - SEE ELEC. DWGS.
19. INFILL (E) DOOR OPENING - PAINT TO MATCH (E)
20. PROVIDE GYP. BD. AND WALL TILE PER SHEET A-6 (4)

agency

tBP
architecture
planning
interiors

LICENSED ARCHITECT
LICENSE NO. C-29487
STATE OF CALIFORNIA


tBP/Architecture
4611 Teller Avenue
Newport Beach, CA 92660
ph: 949.673.0300


architect

consultant

# DISTRICT OFFICE PORTABLES & RESTROOM PORTABLE

HACIENDA LA PUENTE UNIFIED SCHOOL DISTRICT
15959 GALE AVE,
CITY OF INDUSTRY, CA 91716

owner

tBP project number : 21124.00

file name:

drawn by: checked by:

date: 7/11/2023

| Rev: | date: | description: |
|---|---|---|
| 4 | 9/20/2023 | ADDENDUM 04 |


THIS DRAWING AND THE DESIGNS, DEPICTIONS, IDEAS AND OTHER INFORMATION CONTAINED HEREIN CONSTITUTE UNPUBLISHED WORK OF tBP/ARCHITECTURE AND SHALL REMAIN THE PROPERTY OF tBP/ARCHITECTURE IN PERPETUITY. NO PART THEREOF SHALL BE REPRODUCED, DISCLOSED, DISTRIBUTED, SOLD, PUBLISHED OR OTHERWISE USED IN ANY WAY WITHOUT THE ADVANCED EXPRESS WRITTEN CONSENT OF tBP/ARCHITECTURE.


drawing title:
RESTROOM PORTABLE REMODEL PLANS

drawing no.:
A-1
drawing of

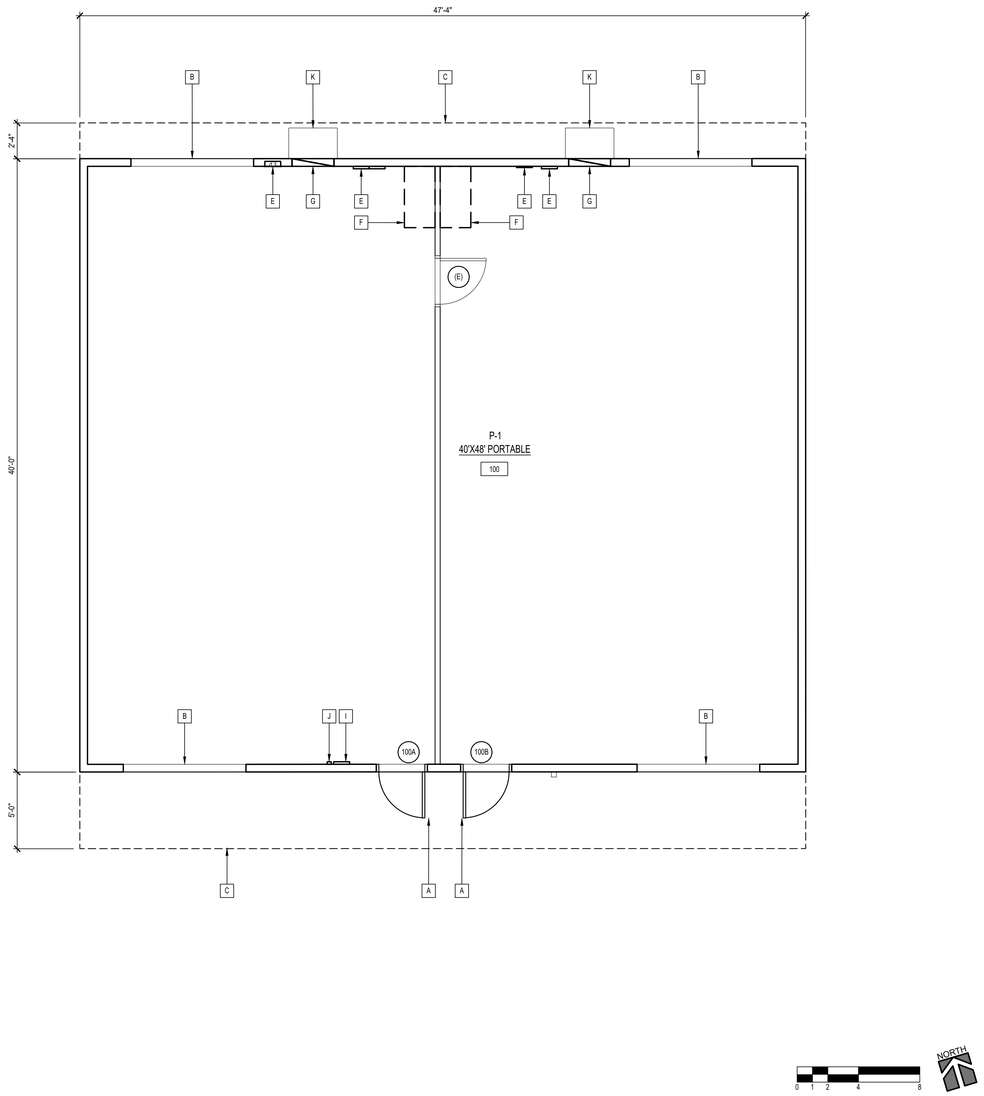


DEMO FLOOR PLAN P-1 | 2
SCALE: 1/4" = 1'-0"

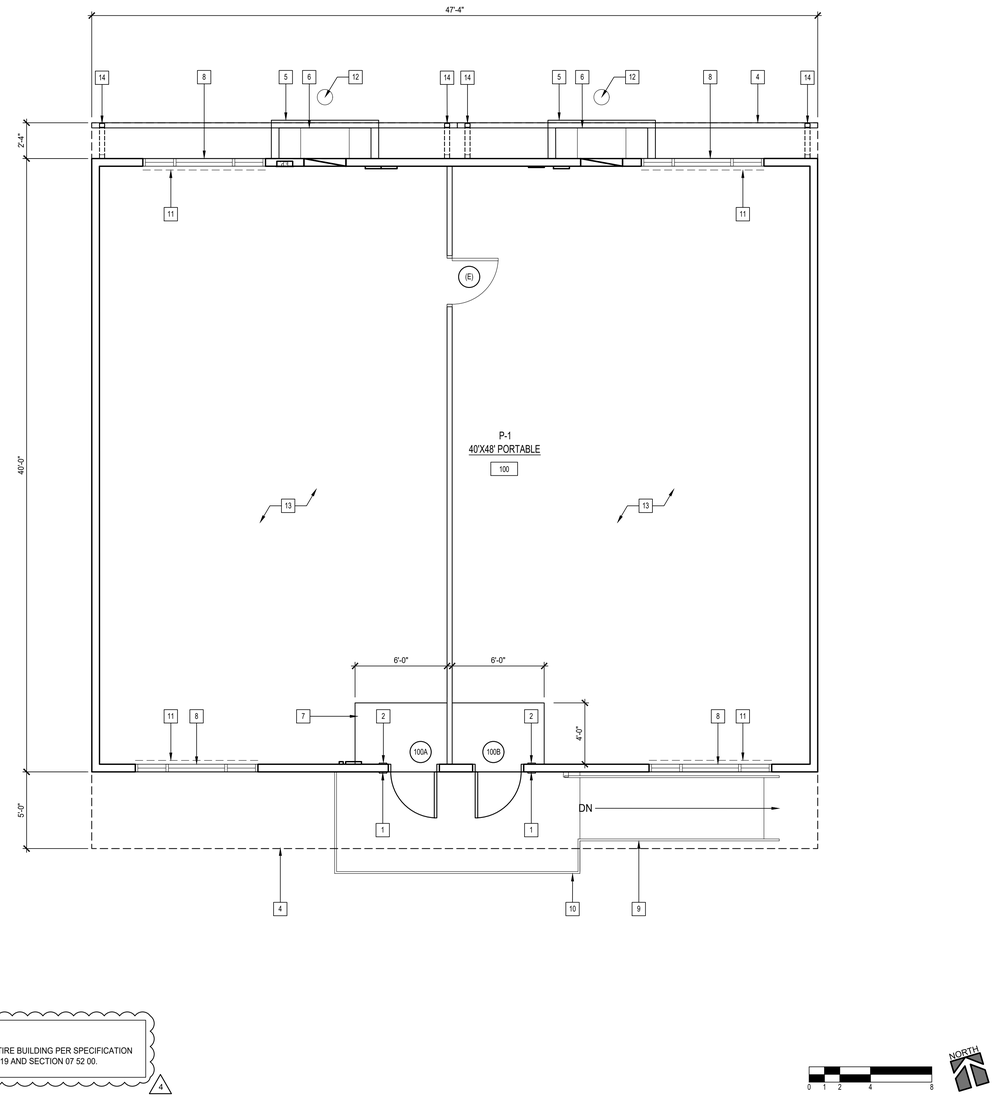


NOTE:

RE-ROOF THE ENTIRE BUILDING PER SPECIFICATION SECTION 07 01 50.19 AND SECTION 07 52 00.

4

REMODEL FLOOR PLAN P-1 | 1
SCALE: 1/4" = 1'-0"

## DEMO KEYNOTES

- A (E) DOOR TO REMAIN PROTECT IN PLACE - PAINT
- B (E) PORTABLE BUILDING WINDOW - PROTECT IN PLACE
- C (E) ROOF OVERHANG
- D REMOVE (E) EXTERIOR LIGHTS
- E (E) ELECTRICAL PANEL TO REMAIN
- F DEMO (E) CASEWORK, CAP UTILITIES, PATCH AND REPAIR WALL AS REQUIRED
- G (E) GRILL TO REMAIN (4)
- H REMOVE (E) VCT FLOORING AND BASE
- I (E) SPEAKER TO REMAIN
- J (E) PHONE TO REMAIN
- K REMOVE (E) WALL MOUNT. HVAC UNIT

## LEGEND

- EXISTING EXTERIOR PORTABLE BUILDING WALL TO REMAIN
- NEW 2x WOOD STUD WALL — GYP. BD. 13 / 4.00; TILE 14 / 4.00; TILE 15 / 4.00
- DOOR TYPE - SEE DOOR SCHEDULE — # / - / 8.00
- ITEMS TO BE REMOVED

## GENERAL NOTES

1. GENERAL CONTRACTOR SHALL FIELD VERIFY EXITING CONDITIONS AND INFORM THE ARCHITECT OF ANY DISCREPANCIES
2. REFER TO SHEET T-2 FOR ADDITIONAL GENERAL NOTES, ABBREVIATIONS AND DRAFTING SYMBOLS
3. DIMENSIONS ARE TO CENTER LINE OF STUD (U.N.O.)
4. INTERIOR PARTITIONS:
   - INTERIOR PARTITIONS SHALL BE 2X4 STUDS AT 16" O.C. WITH 5/8" TYPE 'X' GYPSUM BOARD EACH SIDE INSTALLED TO STRUCTURE ABOVE. (UNLESS NOTED OTHERWISE)
   - PROVIDE ACOUSTIC BATT INSULATION AT ALL INTERIOR WALLS TO UNDERSIDE OF ROOF, TYP.
   - (E) ACOUSTIC BATT INSULATION TO REMAIN. REPLACE DAMAGED OR MISSING INSULATION TO MATCH (E), V.I.F.
5. PATCH ALL (E) DAMAGED AND MISSING EXTERIOR T1-11 SIDING AND TRIM WHERE OCCURS. V.I.F. W/ T1-11 SIDING AND TRIM TO MATCH (E). PAINT TO MATCH ADJACENT (E) PORTABLE.
6. AT T1-11 SIDING AND TRIM AREAS REQUIRED TO BE REMOVED FOR SCOPE OF PROJECT, PROVIDE T1-11 SIDING AND TRIM TO MATCH (E) FINISH AND COLORS. ALIGN T1-11 SIDING AND TRIM AT TOP AND BOTTOM W/ ADJACENT (E) SIDING AND TRIM, TYP.
7. REPLACE DAMAGED OR MISSING EXPOSED FLASHING AT EXTERIOR PERIMETER WALL BASE OF PORTABLES. PAINT TO MATCH (E).
8. PAINT PORTABLE BUILDING EXTERIOR T1-11 SIDING, TRIM, FASCIA, WINDOW FRAMES, DOORS, AND DOOR FRAMES TO MATCH ADJACENT (E) PORTABLE.

## REMODEL KEYNOTES

- 1 ROOM SIGN - SEE DETAIL 17 / 11.00
- 2 TACTILE EXIT SIGN - SEE DETAIL 20 / 11.00
- 3 NOT USED
- 4 ROOF OVERHANG
- 5 GAURDRAIL FOR HVAC UNIT - SEE DETAIL 2 / 2.00
- 6 WALL MOUNTED HVAC UNIT - SEE MECH. DWGS.
- 7 WALK - OFF MAT
- 8 PORTABLE BUILDING WINDOW - PROTECT IN PLACE
- 9 RAMP - SEE DETAIL 15 / 2.00
- 10 HANDRAIL - SEE DETAIL 4 / 2.01
- 11 VERTICAL WINDOW BINDS - SEE FINISH SCHEDULE
- 12 DRY WELL - SEE DETAIL 1 / 2.00
- 13 REPLACE (E) CARPET WITH NEW FLOOR FINISH - SEE FINISH SCHEDULE
- 14 DOWNSPOUT - SIZE TO MATCH (E)

agency

tBP
architecture
planning
interiors

LICENSED ARCHITECT
DAVID L. CHENG
No. C34187
Exp. 4-30-24
STATE OF CALIFORNIA

tBP/Architecture
4611 Teller Avenue
Newport Beach, CA 92660
ph: 949.673.0300

architect

consultant

# DISTRICT OFFICE PORTABLES & RESTROOM PORTABLE

HACIENDA LA PUENTE UNIFIED SCHOOL DISTRICT
15959 GALE AVE,
CITY OF INDUSTRY, CA 91716

owner

tBP project number : 21124.00

file name:

drawn by: checked by:

date: 7/11/2023

| Rev: | date: | description: |
|---|---|---|
| 4 | 9/20/2023 | ADDENDUM 04 |

THIS DRAWING AND THE DESIGNS, DEPICTIONS, IDEAS AND OTHER INFORMATION CONTAINED HEREIN CONSTITUTE UNPUBLISHED WORK OF tBP/ARCHITECTURE AND SHALL REMAIN THE PROPERTY OF tBP/ARCHITECTURE IN PERPETUITY. NO PART THEREOF SHALL BE REPRODUCED, DISCLOSED, DISTRIBUTED, SOLD, PUBLISHED OR OTHERWISE USED IN ANY WAY WITHOUT THE ADVANCED EXPRESS WRITTEN CONSENT OF tBP/ARCHITECTURE.

drawing title:
48X40 PORTABLE FLOOR PLANS

drawing no.:
A-2
drawing of

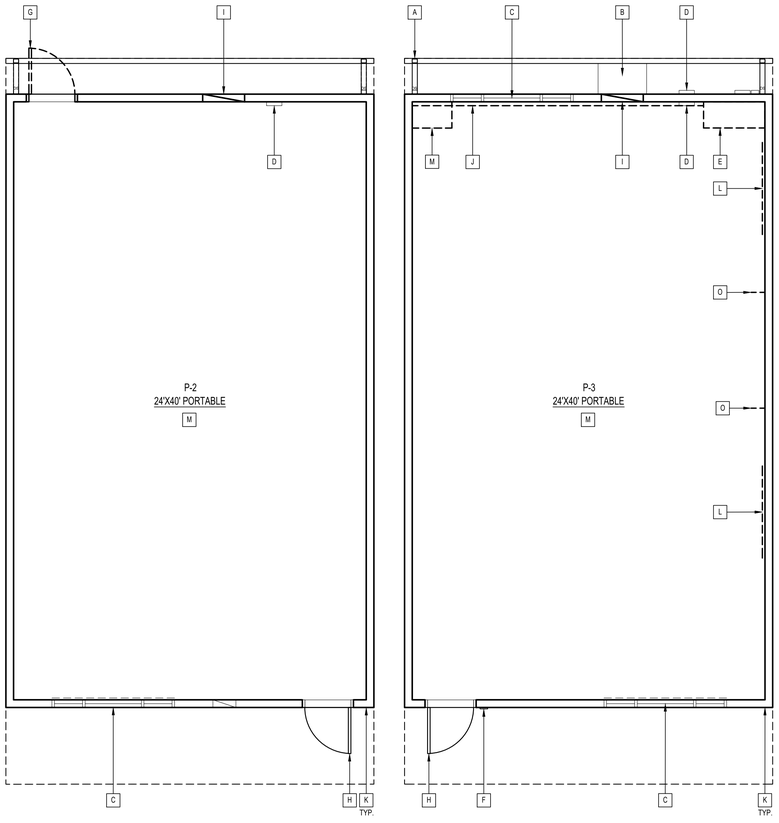


## DEMO FLOOR PLAN 2

SCALE: 1/4" = 1'-0"

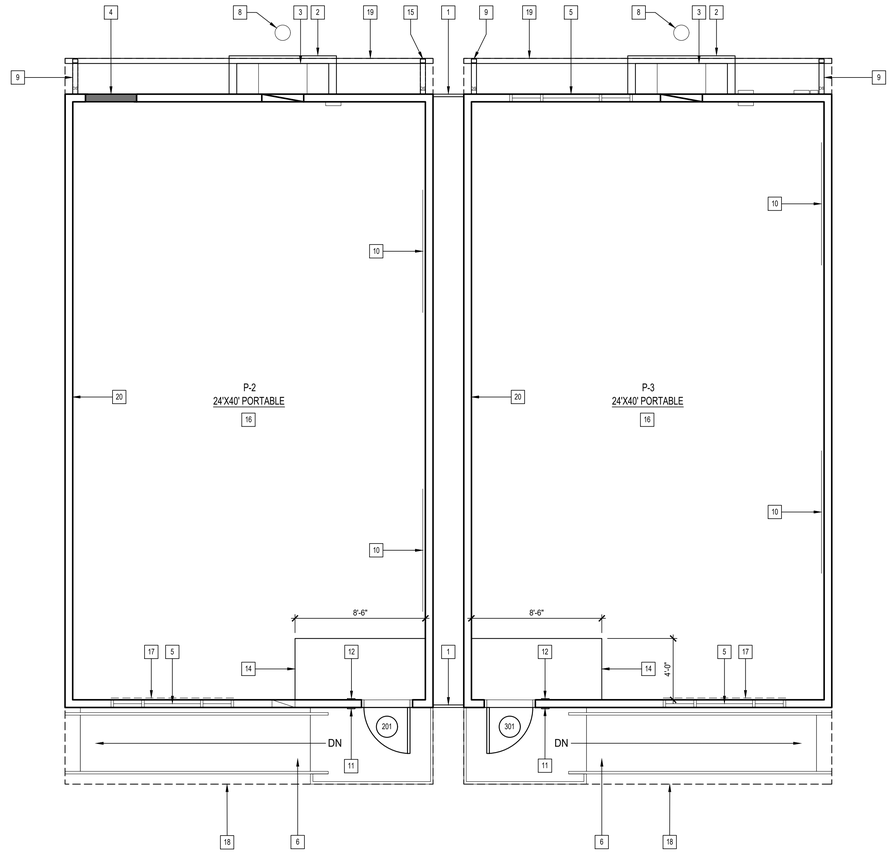


NOTE:

RE-ROOF THE ENTIRE BUILDING PER SPECIFICATION SECTION 07 01 50.19 AND SECTION 07 52 00.

4

## REMODEL FLOOR PLAN 1

SCALE: 1/4" = 1'-0"

## DISTRICT STANDARD EXTERIOR FINISHES

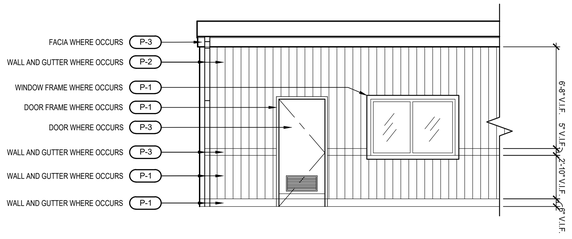


## DEMO KEYNOTES

- A (E) GUTTER AND DOWNSPOUT TO REMAIN
- B REMOVE (E) WALL MOUNTED HVAC UNIT
- C (E) PORTABLE BUILDING WINDOW
- D (E) ELECTRICAL PANEL TO REMAIN
- E REMOVE (E) CASEWORK, CAP UTILITIES, PATCH AND REPAIR WALL AS REQUIRED
- F REMOVE ROOM SIGNAGE 4
- G (E) DOOR AND FRAME TO BE REMOVED
- H (E) DOOR TO REMAIN PROTECT IN PLACE
- I (E) GRILL TO REMAIN
- J (E) RACEWAY ALONG WALL TO BE REMOVED
- K (E) DAMAGED TRIM - REPAIR AS REQUIRED
- L (E) WHITEBOARD TO BE REMOVED
- M REMOVE (E) VTC-FLOORING AND BASE
- N (E) IDF CABINET TO REMAIN
- O REMOVE (E) WALL BRACKETS - PATCH AND REPAIR AS REQUIRED

## LEGEND

EXISTING EXTERIOR PORTABLE BUILDING WALL TO REMAIN

NEW 2x WOOD STUD WALL — GYP. BD. 13 / 4.00; TILE 14 / 4.00; TILE 15 / 4.00

DOOR TYPE - SEE DOOR SCHEDULE # / 8.00

## GENERAL NOTES

1. GENERAL CONTRACTOR SHALL FIELD VERIFY EXITING CONDITIONS AND INFORM THE ARCHITECT OF ANY DISCREPANCIES
2. REFER TO SHEET T-2 FOR ADDITIONAL GENERAL NOTES, ABBREVIATIONS AND DRAFTING SYMBOLS
3. DIMENSIONS ARE TO CENTER LINE OF STUD (U.N.O.)
4. INTERIOR PARTITIONS:
   - INTERIOR PARTITIONS SHALL BE 2X4 STUDS AT 16" O.C. WITH 5/8" TYPE 'X' GYPSUM BOARD EACH SIDE INSTALLED TO STRUCTURE ABOVE. (UNLESS NOTED OTHERWISE)
   - PROVIDE ACOUSTIC BATT INSULATION AT ALL INTERIOR WALLS TO UNDERSIDE OF ROOF, TYP.
   - (E) ACOUSTIC BATT INSULATION TO REMAIN. REPLACE DAMAGED OR MISSING INSULATION TO MATCH (E), V.I.F.
5. PATCH ALL (E) DAMAGED, HOLES AND MISSING EXTERIOR T1-11 SIDING AND TRIM WHERE OCCURS, V.I.F. W/ T1-11 SIDING AND TRIM TO MATCH (E). PAINT TO MATCH ADJACENT (E) PORTABLE.
6. AT T1-11 SIDING AND TRIM AREAS REQUIRED TO BE REMOVED FOR SCOPE OF PROJECT, PROVIDE T1-11 SIDING AND TRIM TO MATCH (E) FINISH AND COLORS. ALIGN T1-11 SIDING AND TRIM AT TOP AND BOTTOM W/ ADJACENT (E) SIDING AND TRIM, TYP.
7. REPLACE DAMAGED OR MISSING EXPOSED FLASHING AT EXTERIOR PERIMETER WALL BASE OF PORTABLES. PAINT TO MATCH (E).
8. PAINT PORTABLE BUILDING EXTERIOR T1-11 SIDING, TRIM, FASCIA, WINDOW FRAMES, DOORS, AND DOOR FRAMES TO MATCH ADJACENT (E) PORTABLE.

## REMODEL KEYNOTES

- 1 CLOSURE PANEL - SEE DETAIL 5 / 4.00
- 2 GAURDRAIL FOR HVAC UNIT - SEE DETAIL 2 / 2.00
- 3 WALL MOUNTED HVAC UNIT - SEE MECH. DWGS.
- 4 INFILL (E) DOOR OPENING 5 / 5.00
- 5 PORTABLE BUILDING WINDOW - PROTECT IN PLACE
- 6 RAMP - SEE DETAIL 15 / 2.00
- 7 HANDRAIL - SEE DETAIL 4 / 2.01
- 8 DRY WELL - SEE DETAIL 1 / 2.00
- 9 DOWNSPOUT - TO MATCH (E) SIZE
- 10 4'-x 8' WHITE BOARD
- 11 ROOM SIGN - SEE DETAIL 17 / 11.00
- 12 TACTILE EXIT SIGN - SEE DETAIL 20 / 11.00
- 13 NOT USED
- 14 WALK - OFF MAT
- 15 DOWNSPOUT TO REMAIN - PAINT
- 16 CARPET - SEE FINISH SCHEDULE
- 17 VERTICAL WINDOW BLINDS
- 18 (E) ROOF OVERHANG - PATCH AND REPAIR FLASHING AND PAINT
- 19 (E) ROOF DRAIN - PATCH AND REPAIR GUTTER AND PAINT
- 20 (E) INTERIOR WALLS TO BE PAINTED - PATCH AND REPAIR AS REQUIRED - SEE FINISH SCHEDULE

agency

tBP
architecture
planning
interiors

LICENSED ARCHITECT
JAMES L. CHENG
No. C34187
Exp. 4-30-24
STATE OF CALIFORNIA

tBP/Architecture
4611 Teller Avenue
Newport Beach, CA 92660
ph: 949.673.0300

architect

consultant

# DISTRICT OFFICE PORTABLES & RESTROOM PORTABLE

HACIENDA LA PUENTE UNIFIED SCHOOL DISTRICT
15959 GALE AVE,
CITY OF INDUSTRY, CA 91716

owner

tBP project number : 21124.00

file name:

drawn by: checked by:

date: 7/11/2023

| Rev: | date: | description: |
|---|---|---|
| 4 | 9/20/2023 | ADDENDUM 04 |

THIS DRAWING AND THE DESIGNS, DEPICTIONS, IDEAS AND OTHER INFORMATION CONTAINED HEREIN CONSTITUTE UNPUBLISHED WORK OF tBP/ARCHITECTURE AND SHALL REMAIN THE PROPERTY OF tBP/ARCHITECTURE IN PERPETUITY. NO PART THEREOF SHALL BE REPRODUCED, DISCLOSED, DISTRIBUTED, SOLD, PUBLISHED OR OTHERWISE USED IN ANY WAY WITHOUT THE ADVANCED EXPRESS WRITTEN CONSENT OF tBP/ARCHITECTURE.

drawing title:
24X40 PORTABLE FLOOR PLANS

drawing no.:
A-4

drawing of

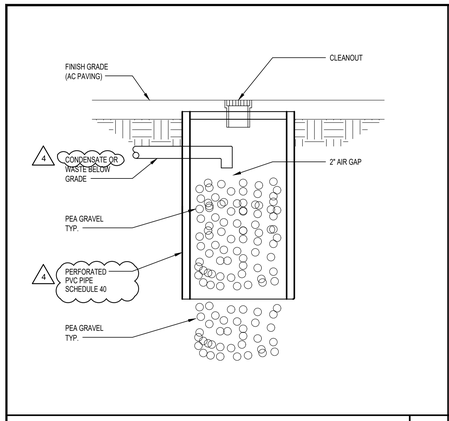


DRYWELL — SCALE: 1-1/2" = 1'-0" — 1

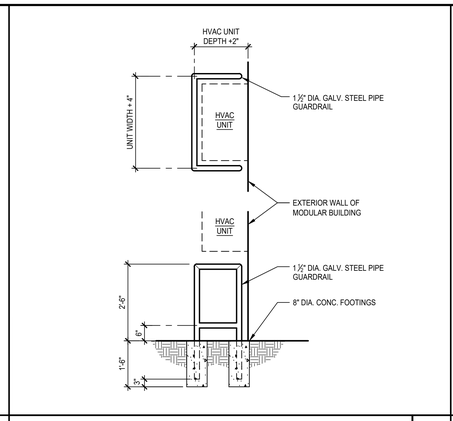


HVAC UNIT GUARDRAIL — SCALE: 1/2" = 1'-0" — 2

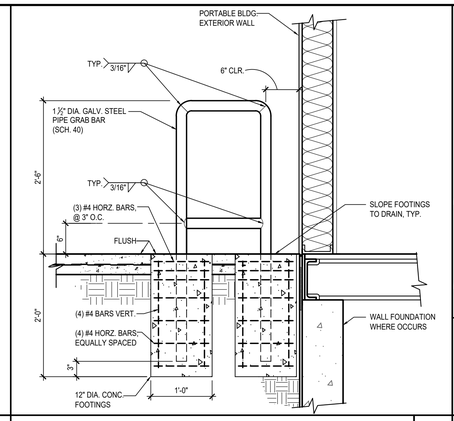


DRINKING FOUNTAIN GRAB BAR — SCALE: 1" = 1'-0" — 3

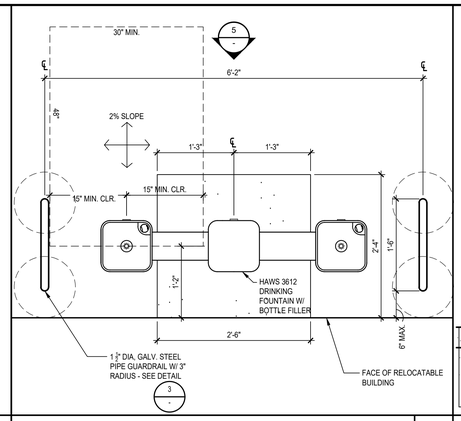


PEDESTAL D.F. W/ BOTTLE FILLER — SCALE: 1" = 1'-0" — 4

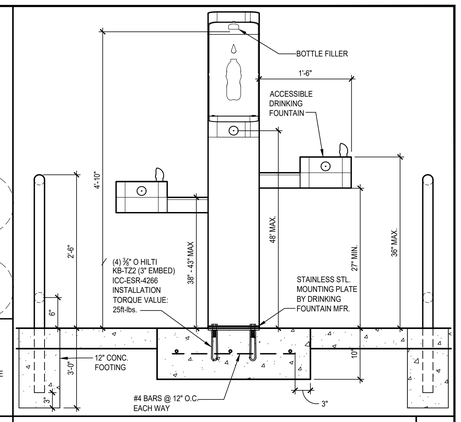


PEDESTAL DRINKING FOUNTAIN ELEVATION — SCALE: 1" = 1'-0" — 5

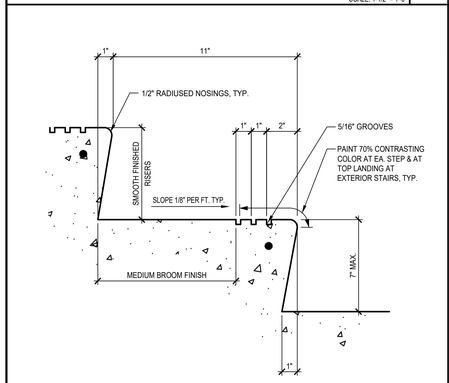


TYP. EXTERIOR STAIR TREAD — SCALE: 3" = 1'-0" — 6

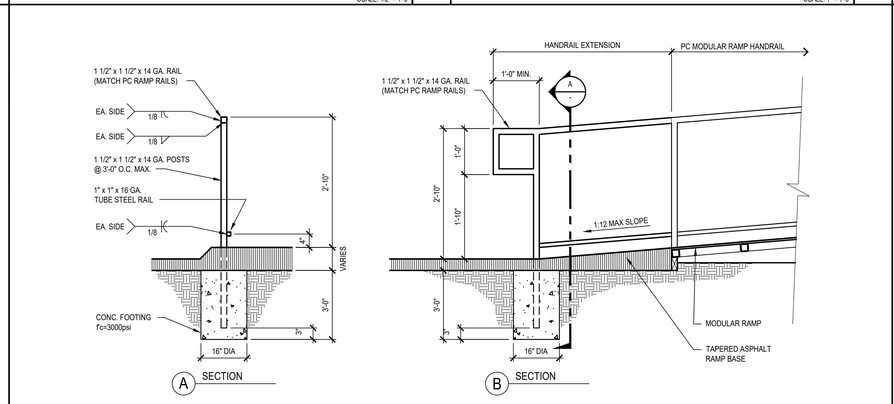


RAMP EXTENSION AND HANDRAIL — SCALE: 3/4" = 1'-0" — 8

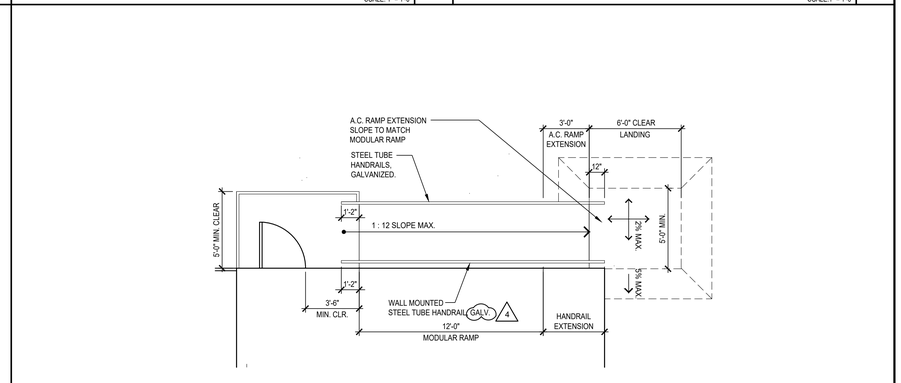


AC RAMP EXTENSION AND HANDRAIL — SCALE: 1/4" = 1'-0" — 10

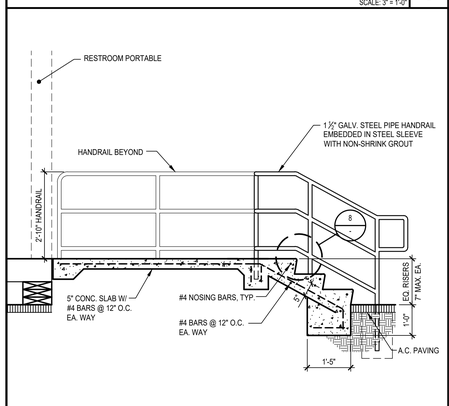


STAIR AT RESTROOM — SCALE: 1/2" = 1'-0" — 12

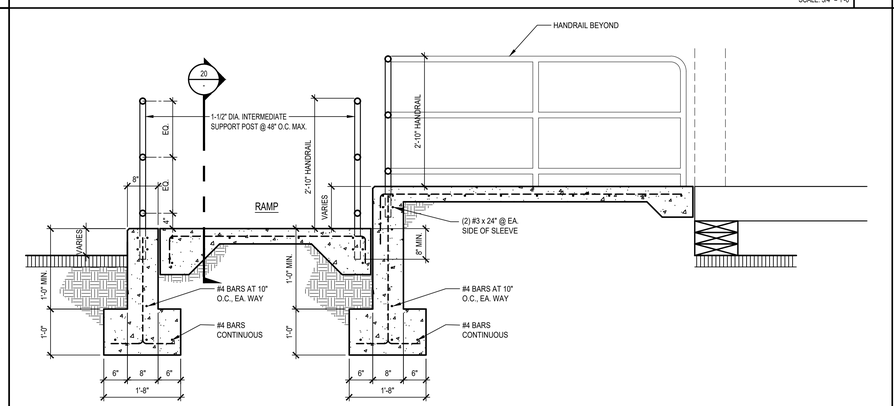


RAMP ON GRADE CROSS SECTION — SCALE: 3/4" = 1'-0" — 13

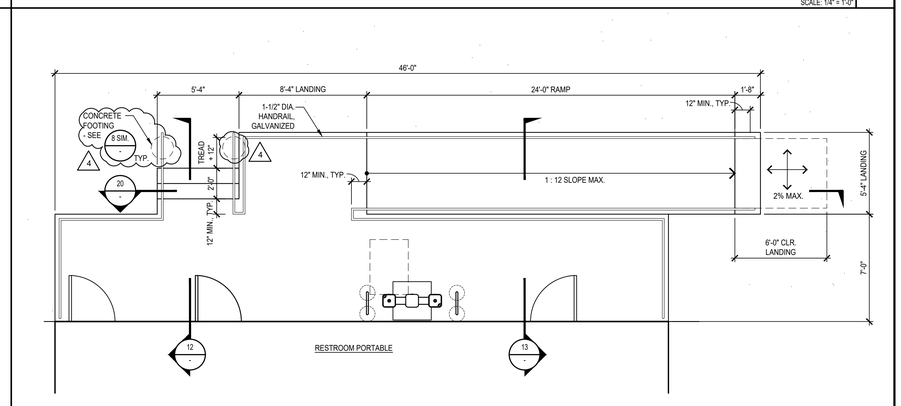


CONCRETE RAMP AND HANDRAILS — SCALE: 1/4" = 1'-0" — 15

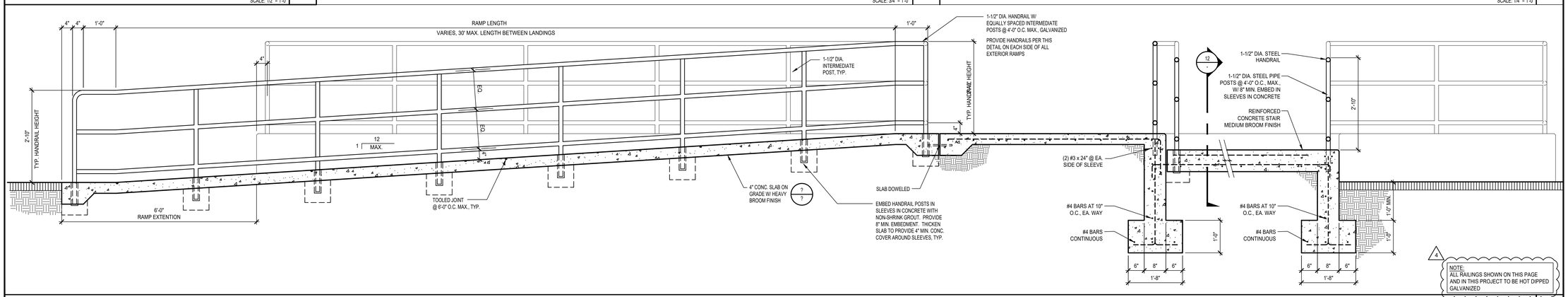


NOTE:
ALL RAILINGS SHOWN ON THIS PAGE AND IN THIS PROJECT TO BE HOT DIPPED GALVANIZED

RAMP AND STAIR SECTION — SCALE: 3/4" = 1'-0" — 20

agency

architecture
planning
interiors

tBP/Architecture
4611 Teller Avenue
Newport Beach, CA 92660
ph: 949.673.0300

architect

consultant

# DISTRICT OFFICE PORTABLES & RESTROOM PORTABLE

HACIENDA LA PUENTE UNIFIED SCHOOL DISTRICT
15959 GALE AVE,
CITY OF INDUSTRY, CA 91716

owner

tBP project number : 21124.00
file name: 0AS-5_Site Details
drawn by: EL checked by: CL
date: 7/11/2023

| Rev: | date: | description: |
|---|---|---|
| 4 | 9/20/2023 | ADDENDUM 04 |

THIS DRAWING AND THE DESIGNS, DEPICTIONS, IDEAS AND OTHER INFORMATION CONTAINED HEREIN CONSTITUTE UNPUBLISHED WORK OF tBP/ARCHITECTURE AND SHALL REMAIN THE PROPERTY OF tBP/ARCHITECTURE IN PERPETUITY. NO PART THEREOF SHALL BE REPRODUCED, DISCLOSED, DISTRIBUTED, SOLD, PUBLISHED OR OTHERWISE USED IN ANY WAY WITHOUT THE ADVANCED EXPRESS WRITTEN CONSENT OF tBP/ARCHITECTURE.

drawing title:
SITE DETAILS AND ENLARGED SITE PLANS

drawing no.:
2.00
drawing of

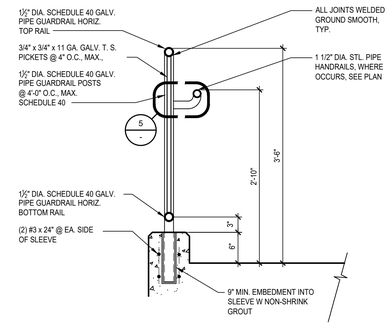


STEEL PIPE GUARDRAIL 4
SCALE: 1" = 1'-0"

NOTE:
ALL RAILINGS SHOWN ON THIS PAGE AND IN THIS PROJECT TO BE HOT DIPPED GALVANIZED
4

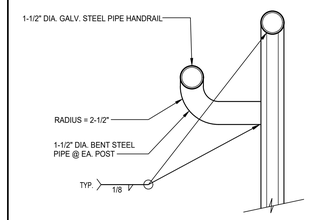


POST MOUNTED HANDRAIL 5
SCALE: 3" = 1'-0"

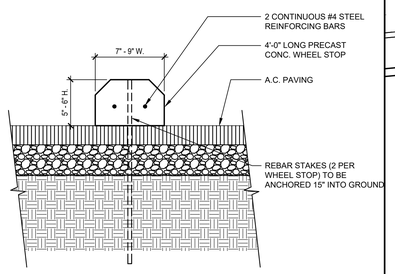


CONCRETE WHEEL STOP 7
SCALE: 1-1/2" = 1'-0"

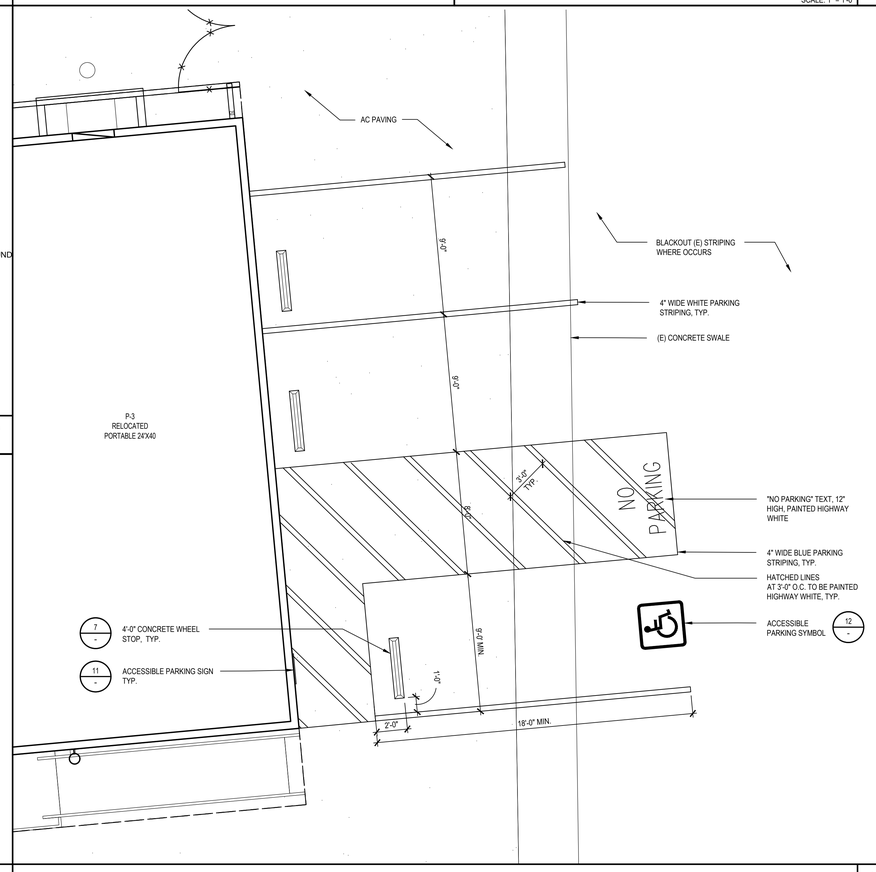


ENLARGED ACCESSIBLE PARKING STALL 14
SCALE: 1/4" = 1'-0"

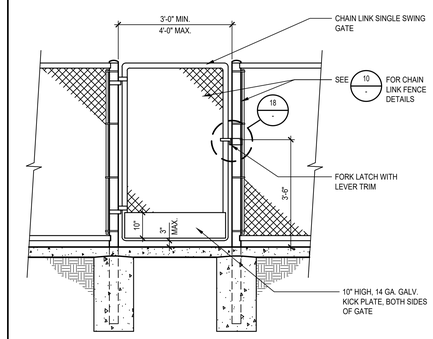


ACCESSIBLE GATE ELEVATION 10
SCALE: 1/2" = 1'-0"

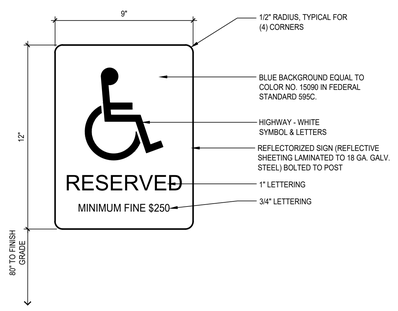


ACCESSIBLE PARKING STALL SIGN 11
SCALE: 3" = 1'-0"

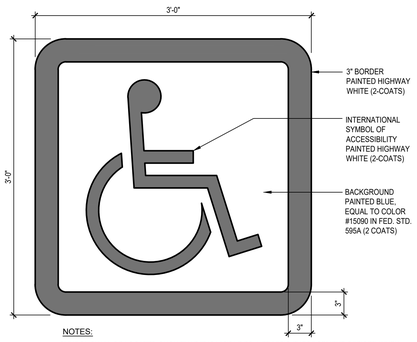


NOTES:
SYMBOL SHALL BE LOCATED SUCH THAT IT IS VISIBLE TO A TRAFFIC ENFORCEMENT OFFICER WHEN A VEHICLE IS PROPERLY PARKED IN THE STALL.

ACCESSIBLE PARKING SYMBOL 12
SCALE: 1-1/2" = 1'-0"

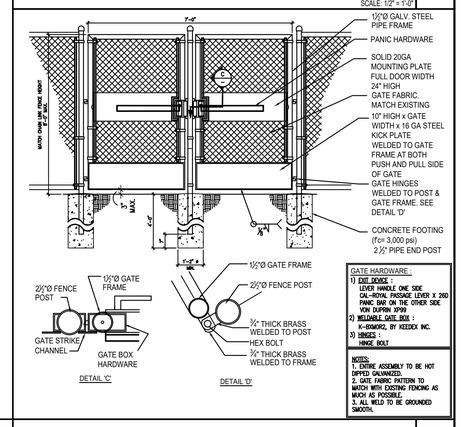


INSIDE SCHOOL FENCE GATE WITH PANIC 15
SCALE: 3/8" = 1'-0"

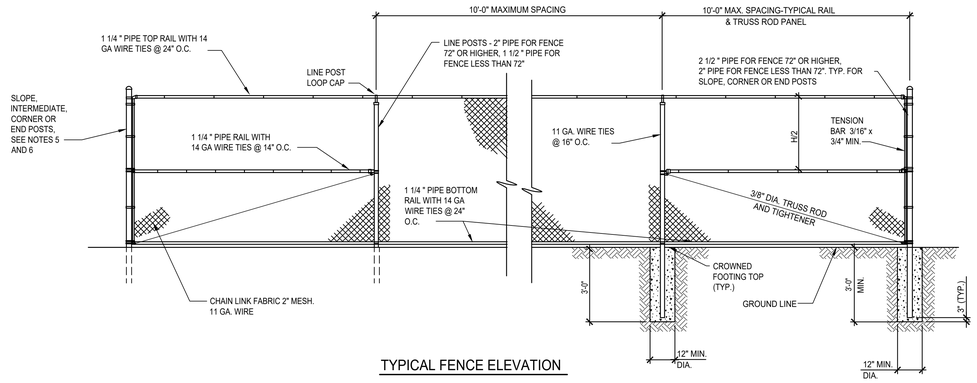


TYPICAL FENCE ELEVATION

## NOTES

1. FABRIC SHALL HAVE KNUCKLED FINISH ON BOTH TOP AND BOTTOM EDGES.
2. ALL GATE HINGES SHALL BE HEAVY DUTY MALLEABLE IRON OR STEEL INDUSTRIAL SERVICE TYPE AND NOT LESS THAN 3-INCHES IN WIDTH.
3. ALL TIES SHALL BE GALVANIZED STEEL.
4. TOP CAP SHALL BE SECURED TO POST USING 1/4-INCH RIVET.
5. CORNER OR SLOPE POSTS SHALL BE INSTALLED WHEN THE CHANGE IN DEFLECTION ANGLE IS 30 DEGREES OR MORE AT CORNER OR SLOPE POINTS. CONSTRUCT SLOPE POSTS AS THOUGH THEY WERE CORNER POSTS.
6. INTERMEDIATE POSTS SHALL BE PROVIDED WHEN THE DISTANCE BETWEEN CORNER OF SLOPE POSTS EXCEEDS 300 FEET. THEY SHALL BE CONSTRUCTED AS THOUGH THEY WERE CORNER OR SLOPE POSTS.
7. THREADS OF ALL 3/8-INCH ROUND TRUSS RODS SHALL BE PEENDED AFTER INSTALLATION.
8. WHEN TOP RAIL IS OMITTED BY PLAN, PROVIDE 7-GAGE TENSION WIRE WITH 11-GAGE FABRIC TIES OR HOG RINGS SPACED AT 24-INCH INTERVALS.
9. GATES SHALL BE PROVIDED WITH A COMBINATION SPRING LATCH AND PLUNGER ROD, APPROVED BY THE ENGINEER.
10. TENSION WIRE SHALL BE SECURELY FASTENED TO THE TERMINAL POSTS AND BE TAUT AND FREE OF SAG.
11. THE FABRIC SHALL BE PLACED ON THE OUTWARD FACING SIDE OF THE POSTS, STRETCHED TAUT, AND FASTENED SECURELY.

CHAIN LINK FENCE DETAIL 20
SCALE: NTS

agency

tBP
architecture
planning
interiors

LICENSED ARCHITECT
CHRISTOPHER LEE
CSA#28
STATE OF CALIFORNIA


tBP/Architecture
4611 Teller Avenue
Newport Beach, CA 92660
ph: 949.673.0300


architect

consultant

# DISTRICT OFFICE PORTABLES & RESTROOM PORTABLE

HACIENDA LA PUENTE UNIFIED SCHOOL DISTRICT
15959 GALE AVE,
CITY OF INDUSTRY, CA 91716

owner

tBP project number : 21124.00
file name: 0AS-5_Site Details
drawn by: EL checked by: CL
date: 7/11/2023

| Rev: | date: | description: |
|---|---|---|
| 4 | 9/20/2023 | ADDENDUM 04 |


THIS DRAWING AND THE DESIGNS, DEPICTIONS, IDEAS AND OTHER INFORMATION CONTAINED HEREIN CONSTITUTE UNPUBLISHED WORK OF tBP/ARCHITECTURE AND SHALL REMAIN THE PROPERTY OF tBP/ARCHITECTURE IN PERPETUITY. NO PART THEREOF SHALL BE REPRODUCED, DISCLOSED, DISTRIBUTED, SOLD, PUBLISHED OR OTHERWISE USED IN ANY WAY WITHOUT THE ADVANCED EXPRESS WRITTEN CONSENT OF tBP/ARCHITECTURE.


drawing title:
SITE DETAILS

drawing no.:
2.01
drawing of

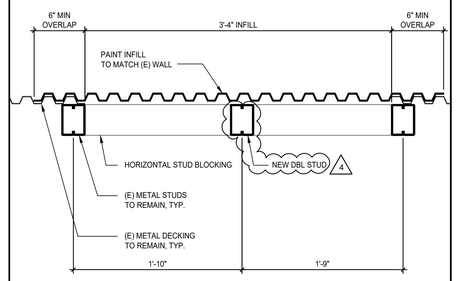


WAREHOUSE WALL INFILL 3
SCALE: 1-1/2" = 1'-0"

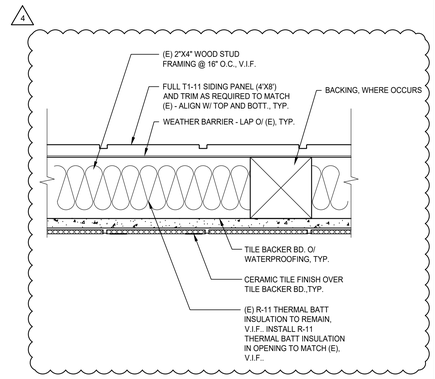


EXISTING EXTERIOR PORTABLE WALL 4
SCALE: 3" = 1'-0"

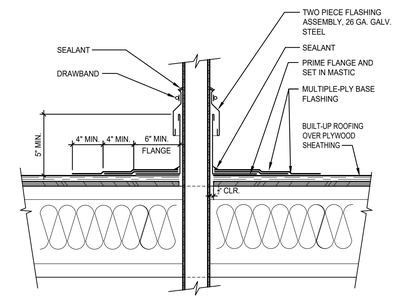


VENT PIPE PENETRATION FLASHING 9
SCALE: 1-1/2" = 1'-0"

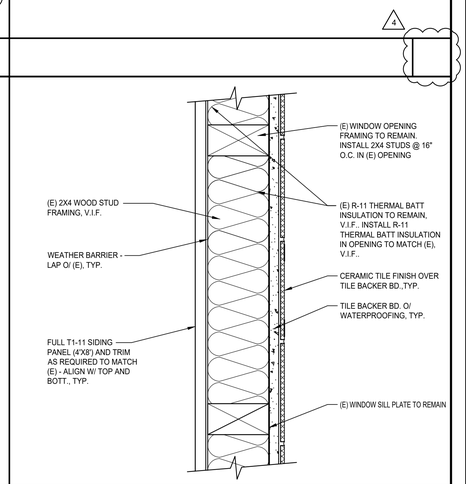


EXTERIOR WALL INFILL @ INTERIOR TILE FINISH 10
SCALE: 3" = 1'-0"

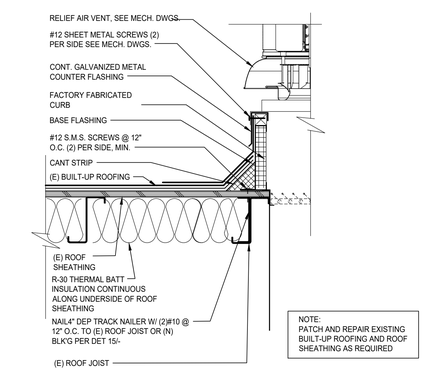


RELIEF AIR VENT PENETRATION AT ROOF 14
SCALE: 1-1/2" = 1'-0"

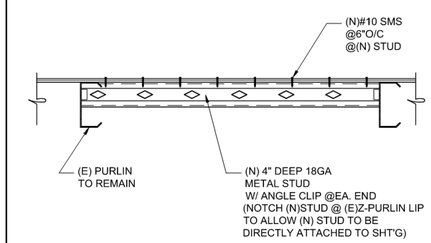


BLK'G @ (N) ROOF OPENING 15
SCALE: NTS

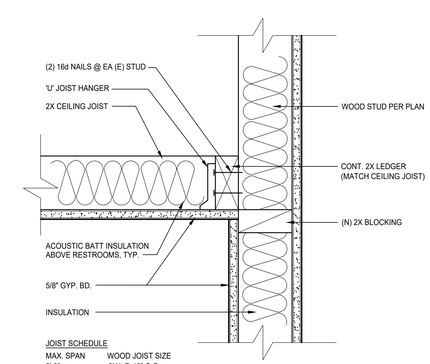


JOIST SCHEDULE

| MAX. SPAN | WOOD JOIST SIZE |
|---|---|
| 8'-9" | 2X4 @ 16" O.C. |
| 13'-0" | 2X6 @ 16" O.C. |
| 10'-2" | 2X8 @ 16" O.C. |

FRAMED CEILING CONNECTION 19
SCALE: 3" = 1'-0"

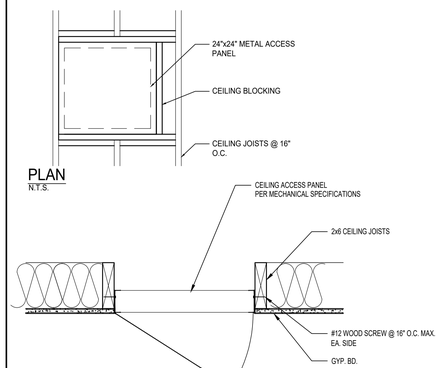


CEILING ACCESS PANEL 20
SCALE: 1-1/2" = 1'-0"

agency

architecture
planning
interiors

LICENSED ARCHITECT
JAMES T. GREGG
No. C34187
Exp. 4-30-24
STATE OF CALIFORNIA

tBP/Architecture
4611 Teller Avenue
Newport Beach, CA 92660
ph: 949.673.0300

architect

consultant

# DISTRICT OFFICE PORTABLES & RESTROOM PORTABLE

HACIENDA LA PUENTE UNIFIED SCHOOL DISTRICT
15959 GALE AVE,
CITY OF INDUSTRY, CA 91716

owner

tBP project number : 21124.00

file name:

drawn by: checked by:

date: 7/11/2023

| Rev: | date: | description: |
|---|---|---|
| 1 | 9/20/2023 | ADDENDUM 04 |

THIS DRAWING AND THE DESIGNS, DEPICTIONS, IDEAS AND OTHER INFORMATION CONTAINED HEREIN CONSTITUTE UNPUBLISHED WORK OF tBPARCHITECTURE AND SHALL REMAIN THE PROPERTY OF tBPARCHITECTURE IN PERPETUITY. NO PART THEREOF SHALL BE REPRODUCED, DISCLOSED, DISTRIBUTED, SOLD, PUBLISHED OR OTHERWISE USED IN ANY WAY WITHOUT THE ADVANCED EXPRESS WRITTEN CONSENT OF tBPARCHITECTURE.

drawing title:

## CEILING AND ROOF DETAILS

drawing no.:

5.00

drawing of

1. DOORS SHALL BE 1-3/4" THICK, UNLESS NOTED OTHERWISE.
2. THE LETTER 'L' FOLLOWING 'DOOR TYPE' DESIGNATION IN THE DOOR SCHEDULE INDICATES DOORS WITH LOUVERS. SEE DOOR TYPE FOR SIZE OF LOUVER.
3. EXTERIOR DOOR REQUIREMENTS

   ALL EXTERIOR DOORS IN BUILDINGS, INCLUDING, BUT NOT LIMITED TO DOORS OF TOILETS AND STORAGE ROOMS, SHALL CONFORM WITH THE REQUIREMENTS OF THE LATEST EDITION OF THE CALIFORNIA BUILDING CODE:

   - EXIT DOOR SHALL BE OPERABLE FROM THE INSIDE WITHOUT THE USE OF A KEY OR ANY SPECIAL KNOWLEDGE OR EFFORT.
   - HAND ACTIVATED DOOR OPENING HARDWARE SHALL BE CENTERED BETWEEN 30" AND 44" ABOVE FINISH FLOOR. PANIC HARDWARE SHALL BE 38" TO 44" ABOVE FINISH FLOOR.
   - DEAD BOLTS ARE NOT PERMITTED UNLESS OPERABLE WITH A SINGLE EFFORT LEVER TYPE HARDWARE.
   - ALL ROOMS SERVING AN OCCUPANCY LOAD OF 50 OR GREATER AND DOORS LOCATED ON THE DISCHARGE OF EXIT CORRIDORS ARE REQUIRED TO BE PROVIDED WITH PANIC HARDWARE (CBC 1008.1.10).
   - ALL FIRE DOOR LABELS SHALL COMPLY WITH C.B.C. 715.4.6

## DOOR SCHEDULE NOTES

DOOR HARDWARE GROUP NO.1

HINGES: HAGER 4-1/2X4-1/2 BUTTS, BB1279 US26D, 1-1/2 PAIR SCREW IN BARREL AND BALL BEARING DESIGN.
CLOSER: NORTON 8500DA OR 8500BF SERIES, LCN 1460 DEL SERIES OR EQUAL. (5 LBS. MAX. PRESSURE)
WEATHERSTRIPPING: ALL EXTERIOR DOORS SHALL BE WEATHERSTRIPPED WITH PEMKO 2990, ULTRA WS007 OR EQUAL, AT DOOR JAMBS AND HEAD.
THRESHOLD: THRESHOLD SHALL BE PEMKO 271 AV 5" ALUMINUM WITH PEMKO 216 AV ULTRA THD42 DOOR BOTTOM.
LEVER: EXTERIOR DOOR LOCKSET W/ LEVER RHODES SCHLAGE ND95PD

## DOOR HARDWARE

SCALE: NTS

13

## PORTABLE DOOR SCHEDULE

| DOOR NO. | | DIMENSION WIDTH | DIMENSION HEIGHT | DOOR TYPE | DOOR MAT. | DOOR FINISH | DOOR COLOR | FRAME MAT. | FRAME FINISH | FRAME COLOR | DETAILS HEAD | DETAILS TRANSOM | DETAILS JAMB | DETAILS JAMB | DETAILS THRESHOLD | DOOR ASSEMBLY RATING | DOOR GROUP | REMARKS | SIGNAGE TEXT | SIGNAGE DETAIL |
|---|---|---|---|---|---|---|---|---|---|---|---|---|---|---|---|---|---|---|---|---|
| EXT. | 101 | 3'-0" | 7'-0" | B | - | - | - | - | - | - | | | | | 20 | | 1 | PROVIDE ELECTRONIC DOOR LOCKS | OFFICE | 19/11.00 |
| | 102 | 3'-0" | 7'-0" | B | - | - | - | - | - | - | | | | | 20 | | 1 | PROVIDE ELECTRONIC DOOR LOCKS | OFFICE | 19/11.00 |
| EXT. | 201 | 3'-0" | 7'-0" | B | - | - | - | - | - | - | | | | | 20 | | 1 | PROVIDE ELECTRONIC DOOR LOCKS | OFFICE | 19/11.00 |
| | 301 | 3'-0" | 7'-0" | B | - | - | - | - | - | - | | | | | 20 | | 1 | PROVIDE ELECTRONIC DOOR LOCKS | OFFICE | 19/11.00 |
| | 501 | 3'-0" | 7'-0" | B | - | - | - | - | - | - | | | | | 20 | | 1 | PROVIDE ELECTRONIC DOOR LOCKS | WAREHOUSE | 19/11.00 |

## RESTROOM PORTABLE DOOR SCHEDULE

| DOOR NO. | | DIMENSION WIDTH | DIMENSION HEIGHT | DOOR TYPE | DOOR MAT. | DOOR FINISH | DOOR COLOR | FRAME MAT. | FRAME FINISH | FRAME COLOR | DETAILS HEAD | DETAILS TRANSOM | DETAILS JAMB | DETAILS JAMB | DETAILS THRESHOLD | DOOR ASSEMBLY RATING | DOOR GROUP | REMARKS | SIGNAGE TEXT | SIGNAGE DETAIL |
|---|---|---|---|---|---|---|---|---|---|---|---|---|---|---|---|---|---|---|---|---|
| EXT. | 401 | 3'-0" | 7'-0" | A | HM | PSG | P-2 | HM | PSG | P-2 | 14/11.00 | | | | 20 | | 1 | PROVIDE ELECTRONIC DOOR LOCKS | MEN'S RESTROOM | 15/11.00 |
| | 402 | 3'-0" | 7'-0" | A | HM | PSG | P-2 | HM | PSG | P-2 | 14/11.00 | | | | 20 | | 1 | PROVIDE ELECTRONIC DOOR LOCKS | WOMEN'S RESTROOM | 14/11.00 |
| | 403 | 3'-0" | 7'-0" | A | HM | PSG | P-2 | HM | PSG | P-2 | 14/11.00 | | | | 17 | | 1 | PROVIDE ELECTRONIC DOOR LOCKS | ALL GENDER | 13/11.00 |
| | | | | | | | | | | | | | | | | | 1 | | | |

## ABBREVIATION

| | |
|---|---|
| AL | ALUMINUM |
| GL | GLASS |
| PH | PANIC HARDWARE |
| SC | SOLID CORE WOOD |
| SG | STAIN GRADE |
| OM | ORNAMENTAL METAL |
| FF | FACTORY FINISH |
| P | FIELD PAINTED |
| T | TEMPERED GLASS |
| PG | PAINT GRADE |
| SS | STAINLESS STEEL |
| VIN | VINYL PANEL |
| WS | WOOD SAINED |

## DOOR TYPE A

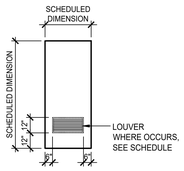


## DOOR TYPE B

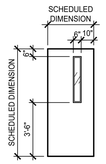


## COLOR SCHEDULE

| SPEC. SECTION | MATERIAL | DESIGNATION | MANUFACTURER | COLOR NO. | COLOR NAME | REMARKS |
|---|---|---|---|---|---|---|
| 08 11 13 HOLLOW MTL. DOOR & FRAMES | METAL DOOR | HMD-1 | - | - | - | P-3 |
| | METAL FRAME | HMF-1 | - | - | - | P-1 |
| GROUT | FACTORY FINISH | GT-1 | MAPEI | 107 | IRON | |
| 09 30 00 TILING | CERAMIC TILE | CT-1 | DALTILE | LP 21 | GRIGIO | 12X24 PORCELAIN TILE LINDEN POINT |
| | CERAMIC TILE | CT-2 | DALTILE | PF01 | ICE | 6X24 PORCELAIN TILE PORTFOLIO |
| 09 51 00 ACOUSTICAL CEILING PANELS | ACOUSTIC CEILING PANELS AND RUNNERS | ACP-1 | ARMSTRONG CIRCUS SECOND LOOK II | 1714 | WHITE | 2X4 TILE |
| 09 65 00 RESILIENT FLOORING | LVT | LVT-1 | MOHAWK | 969 | TWO TONED | PREMIUM WOOD LIVING LOCAL COLLECTION |
| | RUBBER BASE | RB-1 | BURKE 6" BASE | 727 | THUNDER | 6" HBH |
| 09 68 00 CARPET | CARPET | C-1 | TARKET ABRASIVE ACTION II | 19103 | WINTER GRAY | - |
| 09 90 00 PAINTING | SEMI-GLOSS | P-1 | DUNN EDWARDS | 0168-00221 | CAPE COD GRAY | SSH-50-1 SPRASHLP EX 3/6 |
| | SEMI-GLOSS | P-2 | DUNN EDWARDS | 0101-06191 | WINTER MIST | TO MATCH DISTRICT STANDARD |
| | SEMI-GLOSS | P-3 | DUNN EDWARDS | 0019-06191 | INKY SKY | |
| 10 14 00 SIGNS | PLASTIC SIGNS | PS-1 | - | - | - | TO MATCH (E) SITE |
| 10 21 13 PARTITIONS | SOLID PHENOLIC | TCP-2 | BOBRICK | 0077 FH | CHARCOAL | COMPACT LAMINATE (DURA LINE SERIES) |

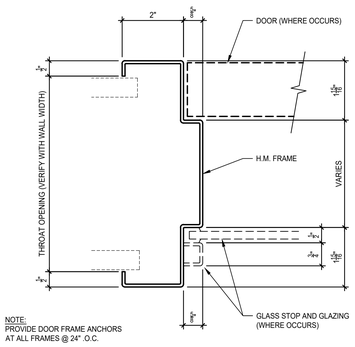


NOTE:
PROVIDE DOOR FRAME ANCHORS AT ALL FRAMES @ 24" .O.C.

## TYPICAL HOLLOW METAL FRAME PROFILE

SCALE: HALF

10

## INTERIOR FINISH SCHEDULE

| | SPACE NAME | FLOOR MATERIAL | FLOOR TYPE | FLOOR FINISH | FLOOR COLOR | BASE MATERIAL | BASE TYPE | BASE FINISH | BASE COLOR | WALLS MATERIAL | WALLS TYPE | WALLS FINISH | WALLS COLOR | CEILING MATERIAL | CEILING TYPE | CEILING FINISH | CEILING COLOR | | HEIGHT | REMARKS |
|---|---|---|---|---|---|---|---|---|---|---|---|---|---|---|---|---|---|---|---|---|
| PORTABLES | | | | | | | | | | | | | | | | | | | | |
| P-1 | OPEN OFFICE | LVT | - | - | N/A | RESIL. | 4" | F | N/A | PAINT | - | PSG | PPG1036 | AC. TILE | - | F | 1714 | | 8'-6" | - |
| P-2 | OPEN OFFICE | LVT | - | - | N/A | RESIL. | 4" | F | N/A | PAINT | - | PSG | PPG1036 | AC. TILE | - | F | 1714 | | 8'-6" | - |
| P-3 | OPEN OFFICE | LVT | - | - | N/A | RESIL. | 4" | F | N/A | PAINT | - | PSG | PPG1036 | AC. TILE | - | F | 1714 | | 8'-6" | - |
| RESTROOM PORTABLE | | | | | | | | | | | | | | | | | | | | |
| 601 | MEN'S RESTROOM | TILE | - | - | N/A | TILE | - | F | N/A | TILE / PAINT | - | PSG | PPG1036 | AC. TILE | - | F | 1714 | | 8'-0" | - |
| 602 | WOMEN'S RESTROOM | TILE | - | - | N/A | TILE | - | F | N/A | TILE / PAINT | - | PSG | PPG1036 | AC. TILE | - | F | 1714 | | 8'-0" | - |
| 603 | ALL GENDER | TILE | - | - | N/A | TILE | - | F | N/A | TILE / PAINT | - | PSG | PPG1036 | AC. TILE | - | F | 1714 | | 8'-0" | - |

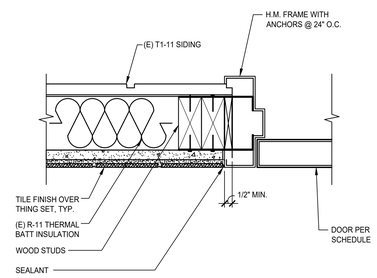


NOTE:
1. FRAME WIDTH TO BE DETERMINED BY OVERALL WALL THICKNESS.
2. FOR ADDITIONAL INFORMATION, SEE DETAIL 1/-

## RESTROOM EXTERIOR DOOR JAMB (HEAD SIM.)

SCALE: 3" = 1'-0"

15

## ABREVIATIONS

| | | | |
|---|---|---|---|
| AC. TILE | ACOUSTICAL CEILING TILE | MTL | METAL |
| ALUM | ALUMINUM | PE | PAINT-EPOXY |
| ANOD | ANODIZE | PF | PAINT FLAT |
| CLR | CLEAR | PG | PAINT GLOSS |
| CONC. | CONCRETE | PSG | PAINT SEMI GLOSS |
| (E) | EXISTING | PNL | PANEL |
| EXP. | EXPOSED | R.S. F. | RESILIENT SHEET FLOORING |
| F.F. | FACTORY FINISH | SLR. | SEALER |
| FRP | FIBER REINFORCED PLASTIC PANEL | S.V.B. | SHEET VINYL BASE |
| GL | GLASS AND GLAZING | U.O.S. | UNDERSIDE OF STRUCTURE |
| GYP. BD. | GYPSUM BOARD | VCT. | VINYL COMPOSITION TILE |
| | | V.W.C | VINYL FABRIC ON WOOD FIBERBOARD |

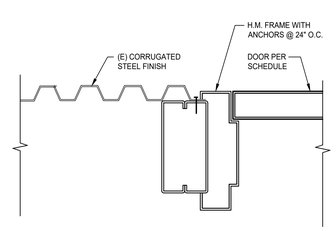


NOTE:
1. FRAME WIDTH TO BE DETERMINED BY OVERALL WALL THICKNESS.

## WAREHOUSE EXTERIOR DOOR JAMB (HEAD SIM.)

SCALE: 3" = 1'-0"

17

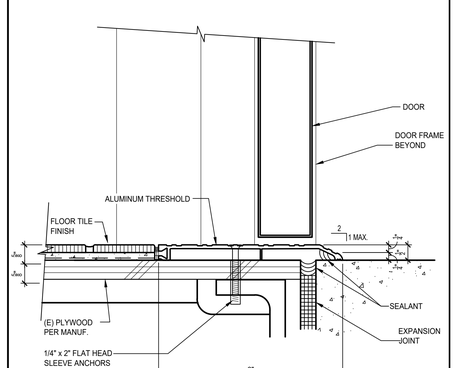


## RESTROOM EXTERIOR THRESHOLD DETAIL

SCALE: HALF

19

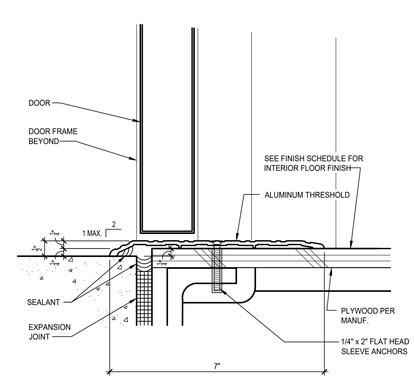


## TYPICAL EXTERIOR THRESHOLD DETAIL

SCALE: HALF

20

agency

tBP architecture planning interiors

LICENSED ARCHITECT STATE OF CALIFORNIA


tBP/Architecture
4611 Teller Avenue
Newport Beach, CA 92660
ph: 949.673.0300


architect

consultant

# DISTRICT OFFICE PORTABLES & RESTROOM PORTABLE

HACIENDA LA PUENTE UNIFIED SCHOOL DISTRICT
15959 GALE AVE,
CITY OF INDUSTRY, CA 91716

owner

tBP project number : 21124.00
file name:
drawn by: checked by:
date: 7/11/2023

| Rev: | date: | description: |
|---|---|---|
| 4 | 9/20/2023 | ADDENDUM 04 |


THIS DRAWING AND THE DESIGNS, DEPICTIONS, IDEAS AND OTHER INFORMATION CONTAINED HEREIN CONSTITUTE UNPUBLISHED WORK OF tBP/ARCHITECTURE AND SHALL REMAIN THE PROPERTY OF tBP/ARCHITECTURE IN PERPETUITY. NO PART THEREOF SHALL BE REPRODUCED, DISCLOSED, DISTRIBUTED, SOLD, PUBLISHED OR OTHERWISE USED IN ANY WAY WITHOUT THE ADVANCED EXPRESS WRITTEN CONSENT OF tBP/ARCHITECTURE.


drawing title:
DOOR DETAILS

drawing no.:
8.00
drawing of

# LIGHT FIXTURE SCHEDULE

| FIXTURE IMAGE | TYPE | LIGHT FIXTURE DESCRIPTION | FIXTURE MAXIMUM TOTAL INPUT WATTS | FIXTURE MINIMUM LUMEN OUTPUT EFFICIENCY | FIXTURE MOUNTING | LAMP TYPE | LAMP COLOR TEMPERATURE K° | LAMP CRI, NOT LESS THAN | WEIGHT |
|---|---|---|---|---|---|---|---|---|---|
| | SL1 | LED WALL SCONCE .7"W X 7.9"H X 7.7"D. WITH DIE CAST ALUMINUM HOUSING IN CUSTOM FINISH AS SELECTED BY ARCHITECT; BUILT-IN PHOTOELECTRIC SENSOR AND INTEGRAL EMERGENCY BATTERY BACK-UP; WET LOCATION LISTED.<br><br>GARDCO #GBS A03 740 T4M UNV PCB EM OR EQUAL BY LITHONIA, McGRAW EDISON. | 25 | 4,000 | WALL | LED | 4000 | 80 | 7LBS |
| | SL2 | SAME AS TYPE SL1 EXCEPT WITH LOWER LUMENS.<br><br>GARDCO #GBS A02 740 T4M UNV PCB EM OR EQUAL BY LITHONIA, McGRAW EDISON. | 17 | 2,500 | WALL | LED | 4000 | 80 | 7LBS |
| | IL1<br><br>IL1EM | 2'W. X 4'L X 2.5"D. LED LUMINAIRE WITH SMOOTH REFLECTOR; INTEGRAL DIMMER DRIVER; 0-10V DIMMING DRIVER<br><br>DAY-BRITE #2EVG48L840-3-R-UNV-DIM OR EQUAL BY FOCAL POINT , LITHONIA<br><br>SAME AS TYPE IL1 EXCEPT WITH INTERGRAL BATTERY UNIT FOR 90 MINUTES OF EMERGENCY LUMINATION.<br><br>DAY-BRITE #2EVG48L840-3-R-UNV-DIM-EMLED OR EQUAL BY FOCAL POINT , LITHONIA | 34 | 4800 | RECESSED | LED | 4000 | 82 | 18LBS |
| | IL2 | LED 4'-0" LONG LUMINAIRE WITH DIE CAST ALUMINUM HOUSING IN FINISH AS SELECTED BY ARCHITECT; IMPACT RESISTANT PEARLESCENT POLYCARBONATE LENS; FLAT END CAPS; CONTINUOUS ROW OR SINGLE TYPE; INTEGRAL DRIVERS; 0-10V DRIVER; WET LOCATION LISTED.<br><br>KENALL #MLHA12-48-R-PP-45L40K-DCC-1-DV OR EQUAL | 50 | 5000 | SURFACE | LED | 4000K | 82 | 12LBS |
| | X1 | LED EXIT SIGN, INTEGRAL EMERGENCY BATTERY FOR 90 MINUTES EMERGENCY ILLUMINATION, BRUSHED FACE, GREEN LETTERS, BLACK HOUSING, UNIVERSAL INPUT VOLTAGE.<br><br>LITHONIA "LE" SERIES OR EQUAL BY EATON, GAROCO | 2 | LED | WALL/CEILING | - | - | - | 4LBS |

# GENERAL NOTES

1. PORTIONS OF THESE PLANS HAVE BEEN DERIVED FROM INFORMATION TAKEN FROM ORIGINAL ELECTRICAL PLANS. THE INTENT OF THESE PLANS IS TO PROVIDE COMPLETE AND OPERABLE SYSTEMS.
2. IT IS THE CONTRACTOR'S RESPONSIBILITY TO VISIT THE SITE AND BECOME THOROUGHLY FAMILIAR WITH ALL THE FEATURES OF THE BUILDING AND SITE WHICH WAY AFFECT THE PROPER PERFORMANCE OF THIS WORK.
3. IT IS THE CONTRACTOR'S RESPONSIBILITY TO REFER TO THE DRAWINGS OF OTHER TRADES FOR ADDITIONAL DETAILS AND REQUIREMENTS WHICH AFFECT THE PROPER PERFORMANCE OF THIS WORK.
4. RACEWAY ROUTING, DIMENSIONS, AND EQUIPMENT LOCATIONS ARE APPROXIMATE. CONTRACTOR SHALL FIELD VERIFY ALL DIMENSIONS AND EXACT RACEWAY ROUTING TO CONFORM TO FIELD CONDITIONS.
5. ELECTRICAL DOWN TIME MUST BE APPROVED BY THE DISTRICT. CONTRACTOR SHALL MAKE PROVISIONS TO ACCOMPLISH THE WORK OF THIS CONTRACT WITHOUT UNDUE INTERFERENCE WITH COLLEGE OPERATIONS.
6. ALL EQUIPMENT DEVICES, CONDUIT FITTINGS, JUNCTION BOXES, AND CONSTRUCTION LOCATED OUTDOORS SHALL BE WEATHERPROOF.
7. ALL SIGNAL AND FIRE ALARM SYSTEMS TERMINATIONS MADE IN JUNCTION BOXES SHALL BE EXECUTED USING TERMINAL BLOCKS.
8. SIGNAL AND/OR FIRE ALARM SYSTEMS SPLICES ARE NOT PERMITTED IN UNDERGROUND PULLBOXES.
9. ALL ELECTRICAL EQUIPMENT INCLUDING PANELS, OUTLET BOXES, CONDUITS, ETC. SHALL BE ANCHORED TO BUILDING STRUCTURE. ANCHORING SHALL BE DESIGNED FOR 1.0 GRAVITY LATERAL ACCELERATION OF THE EQUIPMENT.
10. VERIFY THE EXACT LOCATION OF THE RELOCATABLE BUILDING PANELBOARD WITH THE BUILDING MANUFACTURER PRIOR TO ROUGH-IN.
11. WHERE POSSIBLE ALL RACEWAYS SHALL BE ROUTED CONCEALED IN WALLS AND/OR ABOVE ACCESSIBLE CEILING SPACE.
12. UNLESS SPECIFICALLY SHOWN ON THESE PLANS NO STRUCTURAL MEMBER SHALL BE CUT NEITHER DRILLED NOR NOTCHED WITHOUT PRIOR WRITTEN AUTHORIZATION FROM THE STRUCTURAL ENGINEER AND THE DIVISION OF THE STATE ARCHITECT.
13. PROVIDE OZ COMPANY TYPE "DX" EXPANSION/DEFLECTION FITTINGS WITH BONDING JUMPER ON ALL CONDUITS AT ALL BUILDING EXPANSION OR SEISMIC JOINT CROSSINGS.

# PERFORMANCE NOTES

1. VISIT THE SITE PRIOR TO BID AND INVESTIGATE THE EXISTING FIRE ALARM, DATA, AND INTRUSION DETECTION SYSTEMS EQUIPMENT ON CAMPUS. COORDINATE WITH THE EXISTING SYSTEMS MANUFACTURERS FOR ALL REQUIRED EQUIPMENT MODIFICATIONS, CONDUIT, WIRING AND UPGRADING REQUIRED TO EXTEND THE EXISTING SYSTEMS TO THE NEW MODULAR BUILDINGS. INCLUDE ALL COSTS IN BID. ALL NEW COMPONENTS SHALL BE COMPATIBLE WITH THE EXISTING SYSTEM.
2. PAINT ALL EXPOSED RACEWAYS TO MATCH BACKGROUND COLOR.
3. PROVIDE GROUNDING SYSTEM PER DETAIL 6/E0.2 WHERE METAL RAMPS OR RAILWAYS ARE USED PROVIDE 1#2 BONDING ELECTRODE FROM THE RAMPS AND RAILWAYS TO THE STRUCTURAL STEEL MEMBER OF THE BUILDING.
4. PROVIDE WEATHERPROOF SEALANT AROUND PRECAST CONCRETE PULL BOX COVERS AFTER WORK IS COMPLETED WITHIN BOX.
5. PROVIDE APPROVED WEATHERPROOF SEALANT AROUND ALL WALL PENETRATIONS. SEAL IN A MANNER ACCEPTABLE TO THE ARCHITECT.
6. PROVIDE CORE DRILLING OF ALL STRUCTURES AS REQUIRED FOR RACEWAY ROUTING AND DISCOVERED SITE CONDITIONS.
7. RECONNECT EXISTING CIRCUITS FOR EQUIPMENT THAT IS TO REMAIN IF DISRUPTED BY WORK PERFORMED UNDER THIS CONTRACT. MAINTAIN CONTINUITY OF ALL FEED THRU WIRING.
8. WHERE NEW CONDUCTOR(S)/CABLING IS SPECIFIED IN EXISTING CONDUITS CONTAINING EXISTING WIRING THE CONTRACTOR SHALL REMOVE ENOUGH OF THE EXISTING WIRING TO PULL IN NEW PLUS REPLACEMENT OF EXISTING REMOVED.
9. PROVIDE NEW FIRE ALARM, DATA, AND INTRUSION IN MODULAR BUILDINGS WHERE INDICATED ON DRAWINGS.

# EQUIPMENT ANCHORAGE NOTES

**MEP COMPONENT ANCHORAGE NOTE**

ALL MECHANICAL, PLUMBING, AND ELECTRICAL COMPONENTS SHALL BE ANCHORED AND INSTALLED PER THE DETAILS ON THE DSA APPROVED CONSTRUCTION DOCUMENTS. THE FOLLOWING COMPONENTS SHALL BE ANCHORED OR BRACED TO MEET THE FORCE AND DISPLACEMENT REQUIREMENTS PRESCRIBED IN THE 2019 CBC SECTIONS 1617A.1.18 THROUGH 1617A.1.26 AND ASCE 7-16 CHAPTER 13, 26 AND 30.

1. ALL PERMANENT EQUIPMENT AND COMPONENTS.
2. TEMPORARY, MOVABLE OR MOBILE EQUIPMENT THAT IS PERMANENTLY ATTACHED (E.G. HARD WIRED) TO THE BUILDING UTILITY SERVICES SUCH AS ELECTRICITY, GAS OR WATER. "PERMANENTLY ATTACHED" SHALL INCLUDE ALL ELECTRICAL CONNECTIONS EXCEPT PLUGS FOR 110/220 VOLT RECEPTACLES HAVING A FLEXIBLE CABLE.
3. TEMPORARY, MOVABLE OR MOBILE EQUIPMENT WHICH IS HEAVIER THAN 400 POUNDS OR HAS A CENTER OF MASS LOCATED 4 FEET OR MORE ABOVE THE ADJACENT FLOOR OR ROOF LEVEL THAT DIRECTLY SUPPORT THE COMPONENT ARE REQUIRED TO BE RESTRAINED IN A MANNER APPROVED BY DSA.

THE FOLLOWING MECHANICAL AND ELECTRICAL COMPONENTS SHALL BE POSITIVELY ATTACHED TO THE STRUCTURE BUT NEED NOT DEMONSTRATE DESIGN COMPLIANCE WITH REFERENCES NOTED ABOVE. THESE COMPONENTS SHALL HAVE FLEXIBLE CONNECTIONS PROVIDED BETWEEN THE COMPONENT AND ASSOCIATED DUCTWORK, PIPING, AND CONDUIT. FLEXIBLE CONNECTIONS MUJST ALLOW MOVEMENT IN BOTH TRANSVERSE AND LONGITUDINAL DIRECTIONS:

A. COMPONENTS WEIGHING LESS THAN 400 POUNDS AND HAVE A CENTER OF MASS LOCATED 4 FEET OR LESS ABOVE THE ADJACENT FLOOR OR ROOF LEVEL THAT DIRECTLY SUPPORT THE COMPONENT.

B. COMPONENTS WEIGHING LESS THAN 20 POUNDS, OR IN THE CASE OF DISTRIBUTED SYSTEMS, LESS THAN 5 POUNDS PER FOOT, WHICH ARE SUSPENDED FROM A ROOF OR FLOOR OR HUNG FROM A WALL.

THE ANCHORAGE OF ALL MECHANICAL, ELECTRICAL AND PLUMBING COMPONENTS SHALL BE SUBJECT TO THE APPROVAL OF THE DESIGN PROFESSIONAL IN GENERAL RESPONSIBLE CHARGE OR STRUCTURAL ENGINEER DELEGATED RESPONSIBILITY AND ACCEPTANCE BY DSA. THE PROJECT INSPECTOR WILL VERIFY THAT ALL COMPONENTS AND EQUIPMENT HAVE BEEN ANCHORED IN ACCORDANCE WITH ABOVE REQUIREMENTS.

**PIPING, DUCTWORK, AND ELECTRICAL DISTRIBUTION SYSTEM BRACING NOTE**

PIPING, DUCTWORK, AND ELECTRICAL DISTRIBUTION SYSTEMS SHALL BE BRACED TO COMPLY WITH THE FORCES AND DISPLACEMENTS PRESCRIBED IN ASCE 7-16 SECTION 13.3 AS DEFINED IN ASCE 7-16 SECTIONS 13.6.5, 13.6.6, 13.6.7, 13.6.8; AND 2019 CBC, SECTIONS 1617A.1.24, 1617A.1.25 AND 1617A.1.26.

THE METHOD OF SHOWING BRACING AND ATTACHMENTS TO THE STRUCTURE FOR THE IDENTIFIED DISTRIBUTION SYSTEM ARE AS NOTED BELOW. WHEN BRACING AND ATTACHMENTS ARE BASED ON A PRE-APPROVED INSTALLATION GUIDE (e.g., OSHPD OPM FOR 2013 CBC OR LATER), COPIES OF THE BRACING SYSTEM INSTALLATION GUIDE OR MANUAL SHALL BE AVAILABLE ON THE JOBSITE PRIOR TO THE START OF AND DURING THE HANGING AND BRACING OF THE DISTRIBUTION SYSTEMS. THE STRUCTURAL ENGINEER OF RECORD SHALL VERIFY THE ADEQUACY OF THE STRUCTURE TO SUPPORT THE HANGER AND BRACE LOADS.

MECHANICAL PIPING (MP), MECHANICAL DUCTS (MD), PLUMBING PIPING (PP), ELECTRICAL DISTRIBUTION SYSTEMS (E):

MP☐ MD☐ PP☐ E☒ - OPTION 1: DETAILED ON THE APPROVED DRAWINGS WITH PROJECT SPECIFIC NOTES AND DETAILS.

MP☐ MD☐ PP☐ E☐ - OPTION 2: SHALL COMPLY WITH APPLICABLE OSHPD PRE-APPROVAL (OPM#) #_____.

# SYMBOL LIST

(ALL SYMBOLS NOT NECESSARILY USED ON THESE DRAWINGS)
ALL SYMBOL DESCRIPTIONS ARE SUBJECT TO MODIFICATION AS NOTED ON THE DRAWINGS.
VERIFY EXACT LOCATIONS AND HEIGHTS OF OUTLETS WITH ARCHITECTURAL INTERIOR ELEVATIONS PRIOR TO ROUGH-IN.

- JUNCTION BOX, FLUSH WALL MOUNTED, +18".
- JUNCTION BOX CONCEALED ABOVE ACCESSIBLE CEILING AREA OR MOUNTED ON ROOF.
- INDICATES CONNECTION TO EQUIPMENT AS REQUIRED, TYPICAL.
- PANELBOARD, ADJACENT LINE INDICATES PANEL FRONT. ADJACENT BALLOON INDICATES PANEL DESIGNATION "A", SEE DRAWING E-1 FOR PANEL SCHEDULE.
- TERMINAL CABINET. ADJACENT LINE INDICATES CABINET FRONT.
- EQUIPMENT CABINET. ADJACENT LINE INDICATES CABINET FRONT.
- SINGLE POLE TOGGLE SWITCH, ON FLUSH WALL MOUNTED OUTLET BOX, +45". INSTALL MULTIPLE SWITCHES UNDER COMMON COVER PLATE. SUBSCRIPT OR SUPERSCRIPT AT SWITCH SYMBOL INDICATES THE FOLLOWING:
  2 - DOUBLE POLE 4 - FOUR WAY M - MANUAL MOTOR STARTERS
  3 - THREE WAY P - PILOT LIGHT K - KEY OPERATED
  R - SPDT MOMENTARY CONTACT RELAY SWITCH V - VAPOR PROOF
  a,b,c,d, ETC. - MULTIPLE SWITCHES WITH IDENTIFICATION OF OUTLET CONTROLLED.
- FIXTURE SCHEDULE DESIGNATION: "2" INDICATES FIXTURE TYPE, "100" INDICATES FIXTURE TOTAL WATTAGE.
- DETAIL CALLOUT, "C" INDICATES DETAIL, "E-2" INDICATES DRAWING WHERE DETAIL OCCURS.
- PLAN NOTE CALLOUT. REFER TO CORRESPONDING NOTE ON DRAWING WHERE CALLOUT OCCURS.
- CONDUIT, INSTALLED CONCEALED IN WALL OR IN CEILING SPACE.
  1/2" C - 2 #12, 1#12(GRD) — 3/4" C - 6 #12, 1#12(GRD)
  1/2" C - 3 #12, 1#12(GRD) — 1" C - 7 #12, 1#12(GRD)
  3/4" C - 4 #12, 1#12(GRD) — 1" C - 8 #12, 1#12(GRD)
  3/4" C - 5 #12, 1#12(GRD) — 1 1/4" C - 9 #12, 1#12(GRD)
- CONDUIT, INSTALLED CONCEALED IN OR UNDER FLOOR OR BELOW GRADE, 3/4"C. MINIMUM.
- CONDUIT, INSTALLED EXPOSED.
- HOMERUN TO PANEL "B" FOR CIRCUITS 5, 7, 9 WITH COMMON NEUTRAL
- UNDERGROUND CONDUIT STUBOUT, STUB 5'-0" FROM BUILDING OR WALKWAY, CAP, MARK AND RECORD.
- INDICATES CONDUIT SLEEVE(S) THROUGH WALL ABOVE THE CEILING. NUMBER AND SIZE OF CONDUITS AS NOTED.
- EXISTING CONDUIT.
- INTRUSION DETECTION SYSTEM - 3/4"C. WITH CONDUCTORS AS SPECIFIED.
- COMPUTER/DATA PROCESSING SYSTEM - 3/4"C., WITH ONE(1) CAT6 CABLE AS SPECIFIED.
  D2 - 1"C., WITH TWO(2) CAT6 CABLES AS SPECIFIED.
  D3 - 1 1/4"C., WITH THREE(3) CAT6 CABLES AS SPECIFIED.
  D4 - 1 1/4"C., WITH FOUR(4) CAT6 CABLES AS SPECIFIED.
- INTRUSION DETECTION SYSTEM MOTION SENSOR, ON FLUSH CEILING MOUNTED OUTLET BOX.
- COMPUTER/DATA OUTLET WITH TWO (2) OUTLET CONNECTORS ON FLUSH WALL MOUNTED OUTLET BOX +18". PROVIDE OUTLET BOX DATA JACKS AND 1" CONDUIT TO ACCESSIBLE CEILING SPACE UNLESS NOTED OTHERWISE. PROVIDE TWO (2) CAT6 DATA NETWORK CABLES AS SPECIFIED FROM THE OUTLET TO THE IDF.
- COMPUTER/DATA OUTLET WITH TWO (2) DATA OUTLET CONNECTORS, ON CEILING MOUNTED OUTLET BOX. FOR WIRELESS ACCESS POINT. PROVIDE OUTLET BOX, DATA JACK, FACE PLATE, ETC. PROVIDE TWO (2) CAT 6 DATA NETWORK CABLE AS SPECIFIED FROM THE OUTLET TO THE RESPECTIVE IDF.
- DUPLEX CONVENIENCE RECEPTACLE VERTICAL ON FLUSH WALL MOUNTED OUTLET BOX, +6" ABOVE THE FLASH.
- DUPLEX CONVENIENCE RECEPTACLE VERTICAL ON FLUSH WALL MOUNTED OUTLET BOX, +18". INDICATES WALL MOUNTED OUTLET BOX, TYPICAL.
- DOUBLE DUPLEX (FOUR-PLEX) CONVENIENCE RECEPTACLE ON ONE FLUSH WALL MOUNTED OUTLET BOX
- CIRCUIT BREAKER STATIONARY (NON-DRAWOUT) SECONDARY VOLTAGE.
- DENOTES CONDUIT(S) RISING UP.
- MODULAR BUILDING GROUND ROD. SEE DETAIL 3/E-005.
- DATA OUTLET, WITH TWO (2) CATEGORY 6 DATA OUTLET CONNECTORS, MOUNTED ON SURFACE RACEWAY LEGRAND 5400 SERIES. COLOR AS SELECT BY ARCHITECT. PROVIDE TWO (2) DATA CATEGORY 6 CABLES FROM CONNECTORS TO THE BUILDING IDF.
- DUPLEX CONVENIENCE RECEPTACLE OUTLET, MOUNTED ON SURFACE RACEWAY LEGRAND 5400 SERIES. COLOR AS SELECT BY ARCHITECT. PROVIDE 2#12, 1#12 GRD. TO BUILDING PANEL, U.N.O.
- CCTV CAMERA, WITH A SINGLE OUTLET CONNECTOR, ON FLUSH WALL MOUNTED OUTLET BOX. PROVIDE 1" CONDUIT TO ACCESSIBLE CEILING SPACE U.N.O. PROVIDE ONE CAT6 DATA NETWORK CABLE AS SPECIFIED FROM THE OUTLET TO THE RESPECTIVE IDF. COORDINATE EXACT MOUNTING HEIGHT WITH ARCHITECT/DISTRICT REPRESENTATIVE PRIOR TO ROUGH IN.
- 4" SQUARE BOX, FLUSH WALL MOUNTED, +48" WITH SINGLE GANG TRIM RING AND 3/4"C.O. STUB INTO ACCESSIBLE CEILING SPACE FOR FUTURE CARD READER CABLING.

# ABBREVIATIONS

| | |
|---|---|
| A.F.F. | ABOVE FINISH FLOOR |
| A.F.G. | ABOVE FINISH GRADE |
| AWG | AMERICAN WIRE GAUGE |
| AMP, A | AMPERE |
| AF/AT | AMP FRAME, AMP TRIP |
| AS/AF | AMP SWITCH, AMP FUSE |
| AV | AUDIO VISUAL |
| CIRC., CKT. | CIRCUIT |
| CB | CIRCUIT BREAKER |
| C | CONDUIT |
| C.O. | CONDUIT ONLY |
| CONN | CONNECTED |
| DIA | DIAMETER |
| EMCS | ENERGY MANAGEMENT CONTROL SYSTEM |
| EMT | ELECTRICAL METALLIC TUBING |
| EWC | ELECTRIC WATER COOLER |
| E-O-L | END-OF-LINE CIRCUIT TERMINATOR |
| EF | EXHAUST FAN |
| ER | EXISTING EQUIPMENT TO BE REMOVED |
| E | EXISTING EQUIPMENT |
| FT. OR ' | FEET |
| FA | FIRE ALARM |
| FLA | FULL LOAD AMPS |
| GFI | GROUND FAULT INTERRUPTER |
| GRD | GROUND |
| HVAC | HEATING, VENTILATING AND AIR CONDITIONING |
| H.,W.,D.,L. | HEIGHT, WIDTH, DEPTH, LENGTH |
| HP | HORSEPOWER |
| IDF | INTERMEDIATE DISTRIBUTION FRAME |
| IN. OR " | INCHES |
| IG | ISOLATED GROUND |
| J-BOX | JUNCTION BOX |
| KVA | KILOVOLT AMPERES |
| KW | KILOWATT |
| LCL | LONG CONTINUOUS LOAD |
| L.O. | LUGS ONLY |
| LTG, LTS | LIGHTING |
| MCB | MAIN CIRCUIT BREAKER |
| MDF | MAIN DISTRIBUTION FRAME |
| MH | METAL HALIDE |
| MCC | MOTOR CONTROL CENTER |
| MCM | THOUSAND CIRCULAR MILS |
| MCP | MOTOR CIRCUIT PROTECTOR |
| MLO | MAIN LUGS ONLY |
| MTD | MOUNTED |
| NEC | NATIONAL ELECTRICAL CODE |
| NC | NORMALLY CLOSED |
| NO | NORMALLY OPENED |
| NIC | NOT IN CONTRACT |
| NO. OR # | NUMBER |
| PRIMARY | OVER 600 VOLTS |
| PH. OR | PHASE |
| PROVIDE | FURNISH, INSTALL AND CONNECT |
| PA | PUBLIC ADDRESS |
| REC, RECEPT | RECEPTACLE |
| REF | REFRIGERATOR |
| RGS | RIGID GALVANIZED STEEL |
| RL | RELOCATED EXISTING EQUIPMENT |
| SECONDARY | 600 VOLTS AND LESS |
| O | INDICATES DEVICE ON SURFACE WALL MOUNTED OUTLET BOX. |
| TV | TELEVISION |
| TYP | TYPICAL |
| U.N.O. | UNLESS NOTED OTHERWISE |
| V | VOLTS |
| VA | VOLT AMPERES |
| WP | WEATHERPROOF |
| W | WIRE |
| DFCI | DISTRICT FURNISHED CONTRACTOR INSTALLED |
| DFDI | DISTRICT FURNISHED DISTRICT INSTALLED |
| BLDG. | BUILDING |
| IWB | INTERACTIVE WHITE BOARD |
| AVC | AUDIO/VIDEO CABINET |
| 1P | SINGLE POLE |
| 2P | DOUBLE POLE |
| 3P | TRIPLE POLE |

NOTES:

1. QUANTITY OF OCCUPANCY SENSORS, PHOTOCELLS, SWITCHES, AND ALL DEVICES SHALL BE PER ELECTRICAL PLANS.

2. PROVIDE JUNCTION BOX FOR EACH DIMMER PACK

3. LIGHTING CONTROL DIAGRAM IS BASED ON NLIGHT LIGHTING CONTROL, CONTRACTOR SHALL CONTACT AND COORDINATE WITH MANUFACTURER'S REPRESENTATIVE AS NECESSARY PRIOR TO START OF WORK. DETAIL DRAWING IS TYPICAL DIAGRAM. CONTRACTOR IS RESPONSIBLE TO PROVIDE ALL NECESSARY MATERIAL AND LABOR AS NECESSARY FOR A COMPETE LIGHTING CONTROL SYSTEM.

4. NLIGHT CONTACT IF NEEDED: JOE PORTERA JOEP@PERFORMANCELTG.COM

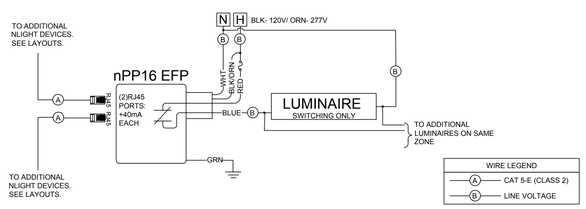


TYPICAL WIRING DIAGRAM: NPP16 EFP

N.T.S.

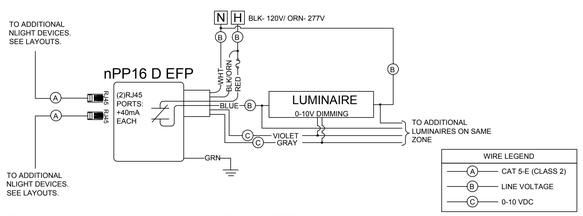


TYPICAL WIRING DIAGRAM: NPP16 D EFP

N.T.S.

LIGHTING CONTROL DIAGRAM - TYPICAL | SCALE: NONE | 2

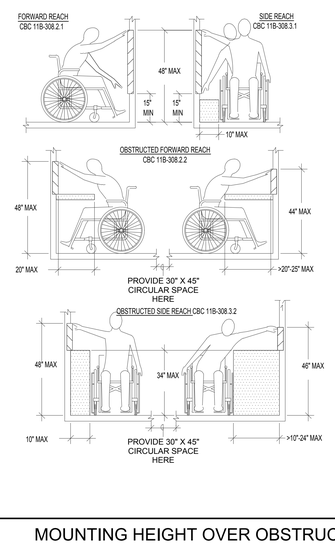


ALL MAX.HEIGHTS ARE TO THE TOP OF THE ELECTRICAL BOX AND MINIMUM HEIGHTS ARE TO THE BOTTOM OF THE ELECTRICAL BOX.

MOUNTING HEIGHT OVER OBSTRUCTION | SCALE: 1/8" = 1'-0" | 1

agency

tBP architecture planning interiors

LICENSED ARCHITECT — STATE OF CALIFORNIA

tBP/Architecture
4611 Teller Avenue
Newport Beach, CA 92660
ph: 949.673.0300

architect

FBA Engineering
Consulting Electrical Engineers
150 Paularino Avenue Suite A120
Costa Mesa, CA 92626
949.852.9995 • 949.852.1657 (fax)
fbaeng.com
FBA Job Number: 212.309

REGISTERED PROFESSIONAL ENGINEER — ELECTRICAL — STATE OF CALIFORNIA

consultant

DISTRICT OFFICE PORTABLES & RESTROOM PORTABLE

HACIENDA LA PUENTE UNIFIED SCHOOL DISTRICT
15959 GALE AVE.
CITY OF INDUSTRY, CA 91716

owner

tBP project number : 21124.00

file name:

drawn by: checked by:

date:

| Rev: | date: | description: |
|---|---|---|
| 1 | 9/21/2023 | ADDENDUM 4 |

THIS DRAWING AND THE DESIGNS, DEPICTIONS, IDEAS AND OTHER INFORMATION CONTAINED HEREIN CONSTITUTE UNPUBLISHED WORK OF tBP/ARCHITECTURE AND SHALL REMAIN THE PROPERTY OF tBP/ARCHITECTURE IN PERPETUITY. NO PART THEREOF SHALL BE REPRODUCED, DISCLOSED, DISTRIBUTED, SOLD, PUBLISHED OR OTHERWISE USED IN ANY WAY WITHOUT THE ADVANCED EXPRESS WRITTEN CONSENT OF tBP/ARCHITECTURE.

drawing title:
GENERAL NOTES, SYSMBOL LIST, DETAILS

drawing no.:
E-0.1

drawing of

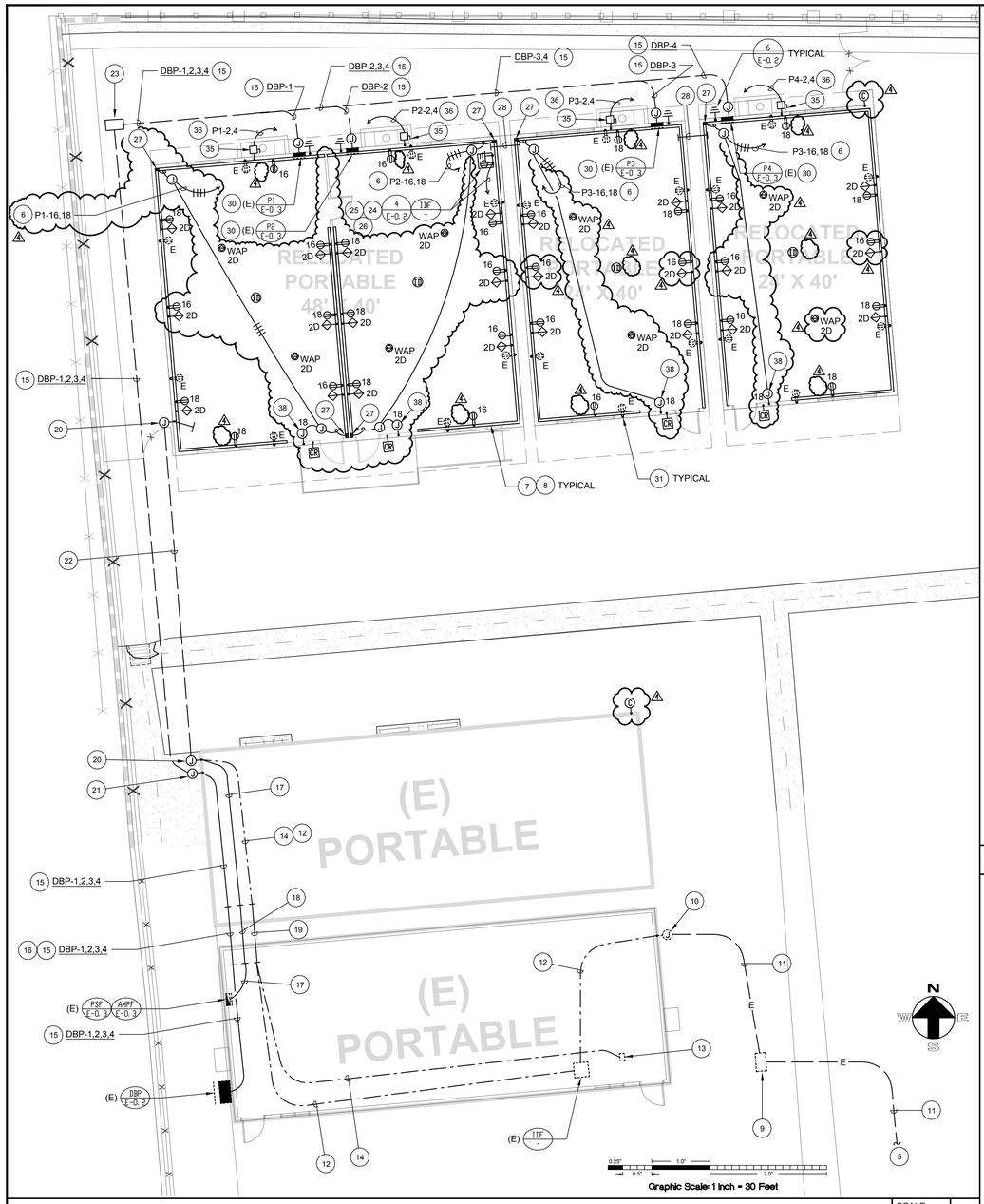


ELECTRICAL PLAN - RELOCATABLE CLASSROOM BUILDING | SCALE: 1/8"=1'-0" | 2

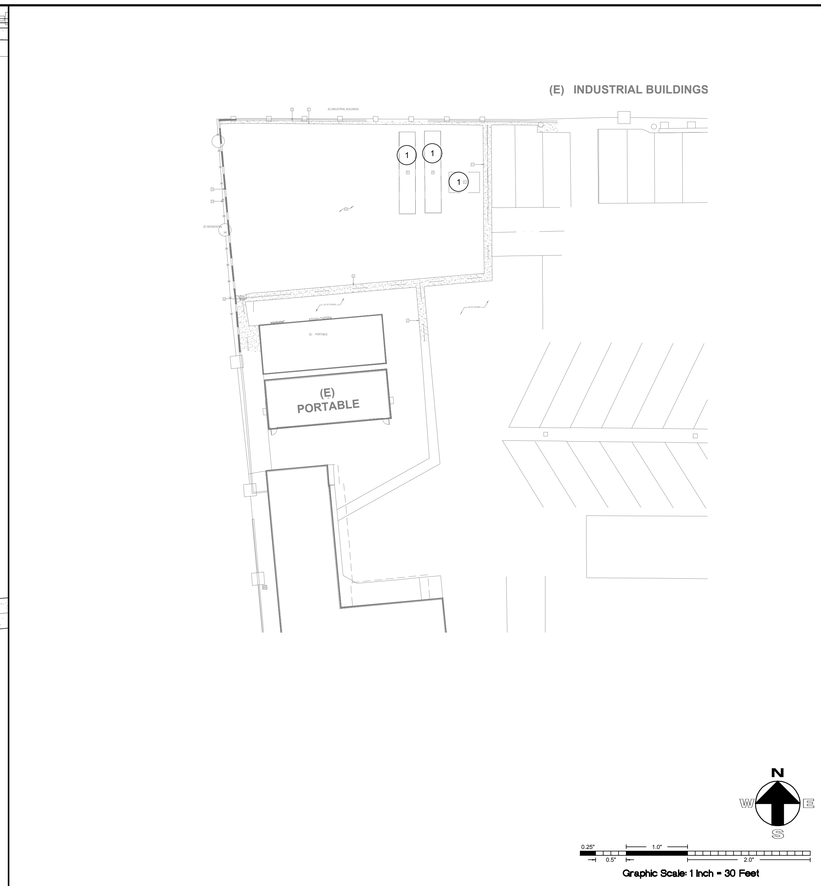


DEMOLITION SITE ELECTRICAL PLAN | SCALE: 1"=30'-0" | 1

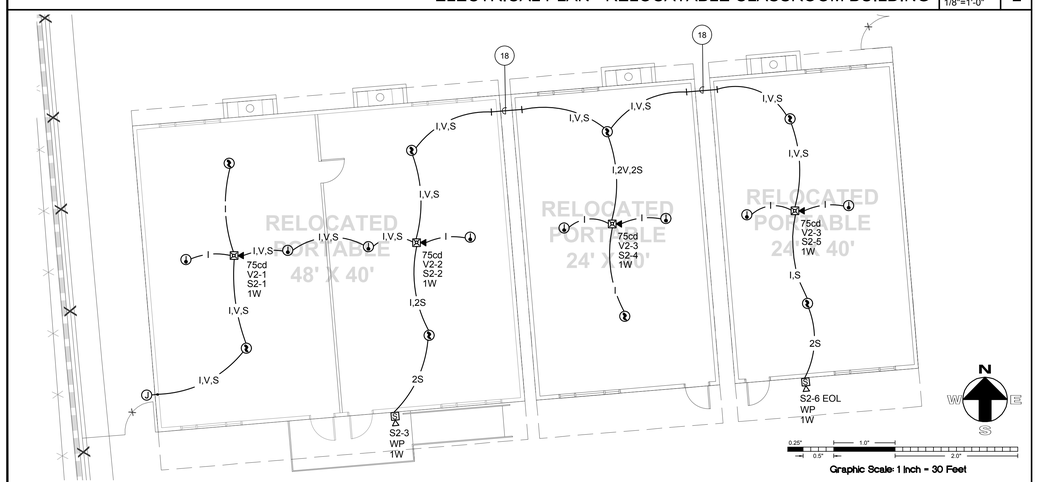


FIRE ALARM PLAN - RELOCATABLE CLASSROOM BUILDING | SCALE: 1/8"=1'-0" | 3

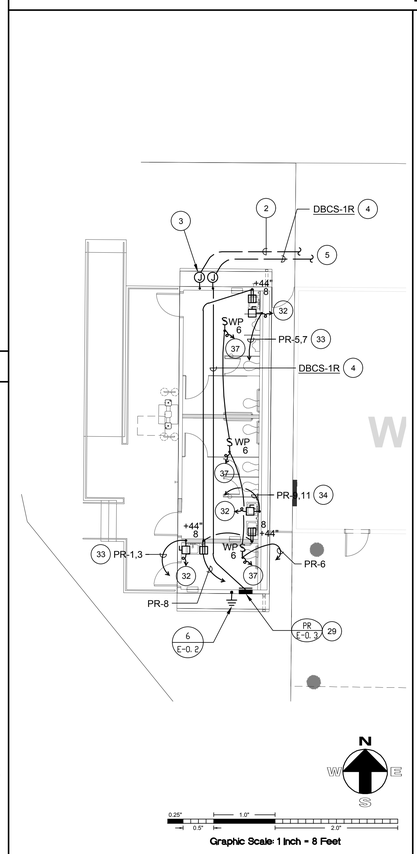


ELECTRICAL PLAN - RESTROOM | SCALE: 1/8"=1'-0" | 4

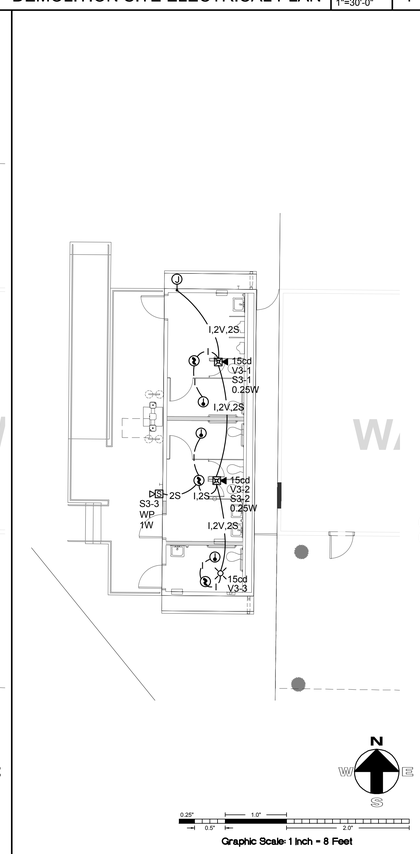


FIRE ALARM PLAN - RESTROOM | SCALE: 1/8"=1'-0" | 5

# PLAN NOTES

1. DISCONNECT AND REMOVE ALL EXISTING ELECTRICAL AND TELECOMMUNICATION SYSTEMS FROM BUILDING TO BE DEMOLISHED. ALL ELECTRICAL EQUIPMENT, ETC. DEEMED SALVAGEABLE BY THE DISTRICT SHALL BE RETURNED TO THE DISTRICT AND DEPOSITED AT THE LOCATION AS DIRECTED BY THE DISTRICT.
2. PROVIDE THE FOLLOWING SIGNAL SYSTEM CONDUITS WITH SPECIFIED SYSTEM CONDUCTORS:
   1 1/2"C. (FIRE ALARM)
   1 1/2"C.O. (SPARE)
3. PROVIDE 8" X 8" X 6"D. WEATHERPROOF PULLBOX FOR FIRE ALARM. MOUNT PULLBOXES TO EXTERIOR WALL OF BUILDING. PROVIDE ENGRAVED PLATE FOR PULLBOX INDICATING SYSTEM.
4. REFER TO SINGLE LINE DIAGRAM ON SHEET E-0.2 FOR FEEDER SIZE.
5. REFER TO SITE ELECTRICAL PLAN DETAIL #1/E-1.0 FOR CONTINUATION.
6. PROVIDE 4#12, 1#12 GRD. -1"C. TO BUILDING PANELBOARD. PROVIDE TWO (2) 20A 1 POLE CIRCUIT BREAKERS IN AVAILABLE SPACE AND CONNECT AS REQUIRED.
7. PROVIDE HORIZONTAL SECTION OF WIREMOLD 5400 SERIES RACEWAY SYSTEM SURFACE MOUNTED AT +24" AFF.
8. PROVIDE WIREMOLD 5400 SERIES RACEWAY SYSTEM AS SHOWN COMPLETE WITH ALL NECESSARY ACCESSORIES SUCH AS END FITTINGS, ELBOWS, COUPLINGS, DEVICES PLATES, OUTLETS, ETC.
9. EXISTING SIGNAL PULLBOX TO REMAIN.
10. EXISTING WALL MOUNTED SIGNAL PULLBOX TO REMAIN.
11. PROVIDE 12 STRAND SINGLE MODE AND 12 STRAND MULTI-MODE FIBER OPTIC CABLE THROUGH THE EXISTING COMPUTER/DATA NETWORK CONDUIT SYSTEM.
12. PROVIDE 12 STRAND SINGLE MODE AND 12 STRAND MULTI-MODE FIBER OPTIC CABLE. SUSPEND CABLES ABOVE ACCESSIBLE CEILING SPACE.
13. EXISTING INTRUSION DETECTION KEYPAD TO REMAIN. INTERCEPT EXISTING INTRUSION DETECTION CABLING IN EXISTING J-BOX AND EXTEND WITH NEW CABLING AS INDICATED.
14. PROVIDE NEW INTRUSION DETECTION CABLING PER MANUFACTURER REQUIREMENT. SUSPEND CABLES ABOVE ACCESSIBLE CEILING SPACE.
15. REFER TO SINGLE LINE DIAGRAM DETAIL #1/E-0.2 FOR FEEDER SIZE.
16. PROVIDE FOUR (4) 2" SLEEVES FOR ROUTING POWER SYSTEM CONDUCTORS.
17. PROVIDE 2#16 TSP, 2#12 NOTIFICATION, 2#16TP - 1"C.
18. PROVIDE 1" SLEEVE FOR ROUTING FIRE ALARM SYSTEM CABLINGS.
19. PROVIDE 2" SLEEVE FOR ROUTING DATA FIBER OPTIC AND 1" SLEEVE FOR ROUTING INTRUSION DETECTION SYSTEM CABLINGS.
20. PROVIDE THREE (3) 8" X 8" X 6"D. WEATHERPROOF PULLBOXES FOR DATA, INTRUSION DETECTION AND FIRE ALARM. MOUNT PULLBOXES TO EXTERIOR WALL OF BUILDING. PROVIDE ENGRAVED PLATE FOR EACH PULLBOX INDICATING SYSTEM.
21. PROVIDE 18" X 18" X 6"D. WEATHERPROOF PULLBOXES FOR POWER. MOUNT PULLBOX TO EXTERIOR WALL OF BUILDING. PROVIDE ENGRAVED PLATE FOR EACH PULLBOX INDICATING SYSTEM.
22. PROVIDE THE FOLLOWING SIGNAL SYSTEM CONDUITS WITH SPECIFIED SYSTEM CONDUCTORS:
    1"C. (FIRE ALARM)
    1"C. (INTRUSION DETECTION)
    2"C. (DATA - 12 STRAND SM AND 12 STRAND MM FIBER OPTIC)
23. PROVIDE 17" X 30" X 36"D. CONCRETE PULLBOX WITH BOLT-DOWN COVER ENGRAVED "POWER". WHEN LOCATED IN PAVED TOP OF PULLBOX AND COVER SHALL SET FLUSH WITH ADJACENT PAVING.
24. MOUNT THE INTERMEDIATE DISTRIBUTION FRAME "IDF" 6" BELOW THE CEILING.
25. MOUNT RECEPTACLE OUTLET INSIDE THE IDF CABINET. PROVIDE 2#12, 1#12 GRD. - 3/4"C. TO BUILDING PANELBOARD FOR POWER. PROVIDE ONE (1) 20 AMP - 1 POLE. CIRCUIT BREAKER IN PANELBOARD AND CONNECT AS REQUIRED FOR A COMPLETE AND OPERABLE SYSTEM.
26. PROVIDE TECHNICAL GROUND BUS WITH 1#8 GRD. - 1"C. TO APPROVED GROUND LOCATION.
27. PROVIDE VERTICAL SECTION OF WIREMOLD 5400 SERIES RACEWAY SYSTEM FROM HORIZONTAL SECTION TO CEILING SECTION.
28. PROVIDE THREE (3) 2" SLEEVE FOR ROUTING SIGNAL SYSTEM CABLINGS.
29. REMOVE EXISTING PANEL AND REPLACE WITH NEW PANEL.
30. PROVIDE A NEW PANEL COVER/DOOR FOR THE EXISTING PANEL.
31. EXISTING RECEPTACLE TO REMAIN.
32. PROVIDE CONNECTION TO WATER HEATER PER MANUFACTURER REQUIREMENTS.
33. PROVIDE 2#10, 1#10 GRD. - 1"C.
34. PROVIDE 2#6, 1#10 GRD. - 1"C.
35. PROVIDE CONNECTION TO WALL MOUNTED HVAC UNIT PER MANUFACTURER REQUIREMENTS.
36. PROVIDE 2#8, 1#10 GRD. - 1"C. TO BUILDING PANELBOARD FOR POWER. PROVIDE ONE (1) 40 AMP - 2 POLE. CIRCUIT BREAKER IN PANELBOARD AND CONNECT AS REQUIRED FOR A COMPLETE AND OPERABLE SYSTEM.
37. PROVIDE CONNECTION TO EXHAUST FAN PER MANUFACTURER REQUIREMENTS.
38. WALL MOUNTED IN ACCESSIBLE CEILING SPACE FOR FUTURE ACCESS CONTROL SYSTEM.

FIRE ALARM CONDUIT SCHEDULE

| SYMBOL | CONDUCTORS | CONDUIT |
|---|---|---|
| I | 2#14 UNSHIELDED TWISTED-PAIR INITIATING CIRCUIT | 3/4"C. |
| V | 2#12 VISUAL CIRCUIT | 3/4"C. |
| S | 2#18 SPEAKER CIRCUIT (SHIELDED TWISTED-PAIR) | 3/4"C. |
| 2V | 4#12 VISUAL CIRCUIT | 3/4"C. |
| 2S | 4#18 SPEAKER CIRCUIT (SHIELDED TWISTED-PAIR) | 3/4"C. |
| I,V,S | 2#14 UNSHIELDED TWISTED-PAIR INITIATING CIRCUIT<br>2#18 SPEAKER CIRCUIT (SHIELDED TWISTED-PAIR)<br>4#12 VISUAL CIRCUIT | 1"C. |

agency

tBP architecture planning interiors

LICENSED ARCHITECT C. L. GREBE No. C34187 STATE OF CALIFORNIA

tBP/Architecture
4611 Teller Avenue
Newport Beach, CA 92660
ph: 949.673.0300

architect

**FBA** Engineering
Consulting Electrical Engineers
150 Paularino Avenue Suite A120
Costa Mesa, CA 92626
949.852.9995 • 949.852.1657 (fax)
fbaengr.com
FBA Job Number: 212.309

REGISTERED PROFESSIONAL ENGINEER No. 10372 Exp. 09-30-24 ELECTRICAL STATE OF CALIFORNIA

consultant

# DISTRICT OFFICE PORTABLES & RESTROOM PORTABLE

HACIENDA LA PUENTE UNIFIED SCHOOL DISTRICT
15959 GALE AVE,
CITY OF INDUSTRY, CA 91716

owner

tBP project number : 21124.00
file name:
drawn by: checked by:
date:

| Rev: | date: | description: |
|---|---|---|
| 4 | 9/21/2023 | ADDENDUM 4 |

THIS DRAWING AND THE DESIGNS, DEPICTIONS, IDEAS AND OTHER INFORMATION CONTAINED HEREIN CONSTITUTE UNPUBLISHED WORK OF tBP/ARCHITECTURE AND SHALL REMAIN THE PROPERTY OF tBP/ARCHITECTURE IN PERPETUITY. NO PART THEREOF SHALL BE REPRODUCED, DISCLOSED, DISTRIBUTED, SOLD, PUBLISHED OR OTHERWISE USED IN ANY WAY WITHOUT THE ADVANCED EXPRESS WRITTEN CONSENT OF tBP/ARCHITECTURE.

drawing title:
DEMOLITION BUILDINGS AND ELECTRICAL PLANS

drawing no.:
E-1.1
drawing of

"MACHINE APPLIED 16d FASTENERS SHALL HAVE AN EMBEDMENT OF NOT LESS THAN 1 1/2" INTO SECOND MEMBER, AND SHALL BE NOT LESS THAN 3" IN OVERALL LENGTH"

THE ABOVE NAILS SHALL ALSO BE ACCEPTABLE FOR HAND NAILING, PROVIDED THE REQUIRED EMBEDMENT IS MAINTAINED.

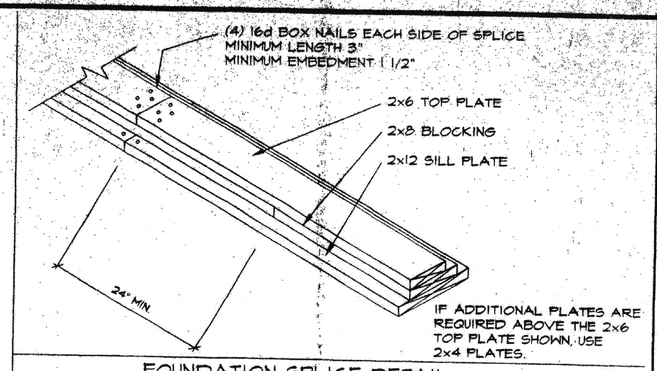


FOUNDATION SPLICE DETAIL

3" X 16" END WALL VENTS
AS REQUIRED FOR ADJACENT BUILDING APPLICATIONS
MIN. 18" FROM BLDG. CORNERS
MIN. 18" FROM MODLINES
MIN. 12" BLOCKING BETWEEN VENTS

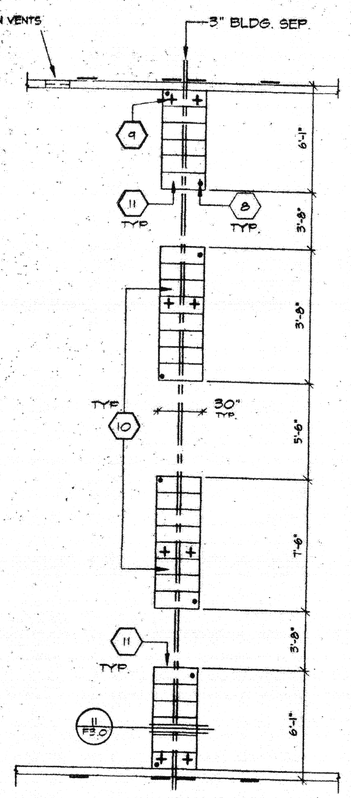


PAD FTG'S AT ADJ. BLDG.

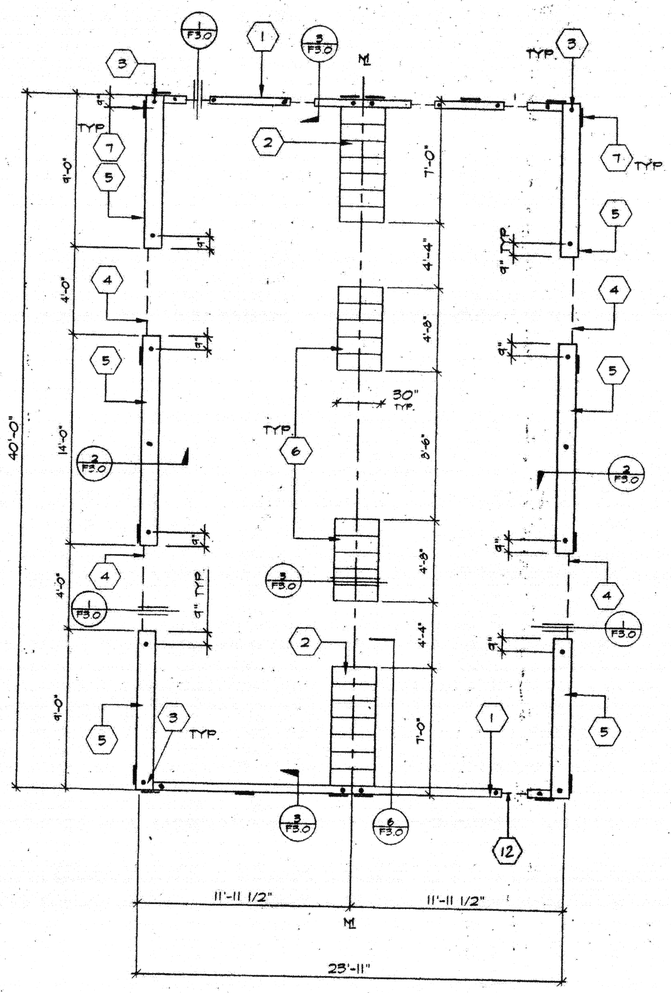


## KEY NOTES

1. 2"X6" SILL PLATE (ENDWALL)
2. 7 - 2X12X30" LONG SILL PADS
3. PIPE TO GRADE (TYP.)
4. 3" HIGH BY 4'-0" LONG VENT - SIDEWALL
   3" HIGH BY 2'-0" LONG VENT - ENDWALL
5. 2X12 SILL PLATE (SIDE WALL)
6. 5-2X12X30" LONG SILL PADS
7. 6"X12"X10 GA. PLATES
8. 1" Ø PIPE EA. END
   EA. PAD AT ADJ. BLDG. LINE
9. 5/8" Ø X4" LAG
   (4-PER BLDG. MIN.)
10. 8 - 2X12X30" LONG SILL PADS
11. 6 - 2X12X30" LONG SILL PADS
12. THIS VENT TO BE LOCATED UNDER LANDIN. PROVIDE EQUAL AREA SCREENED VENT @ LANDING SKIRT.

## NOTES

1. SILL RESTRAINT: ON A.C. PAVING AND ON SOIL 1" O.D. GALVANIZED PIPE AT 10'-0" 12" PENETRATION BELOW SURFACE VERTICALLY. DRILL SILL 1-1/4" MAX. PIPE MAY BE DRIVEN MAX. OF 45° ANGLE TO VERTICAL. (18-1/2" LONG PIPE REQUIRED FOR PENETRATION AT 45° ANGLE)
2. ON CONCRETE PAVING HILTI DS 82-P10 THRU SILL PLATE:
   END WALLS: 8" O.C.
   SIDE WALLS: 22 "O.C.
3. WHERE SHIM STOCK IS REQUIRED FOR LEVELING USE 1/4", 1/2", OR 3/4" THICK PLYWOOD SAME WIDTH AS BLOCK, P.T.
4. VERIFY DRAINAGE, TO PREVENT WATER FROM PONDING BENEATH THE STRUCTURE, WITH DISTRICT ARCHITECT SITE PLANS
5. ALL FOUNDATION MATERIAL SHALL BE HEM FIR
   GROUND CONTACT: LP-22 (CCA .40)
   ABOVE GROUND: LP-2 (CCA .25)
6. FOUNDATION DESIGNED FOR 1000 PS SOIL BEARING PRESSURE PER ORS IR 23-6.

## VENT CALCS.

BLD'G SIZE 24' X 40'= 960 Ø
VENTILATION REQ'D 960÷150= 6.4 Ø
3" X 4'-0" VENT=1.0 Ø
4 VENTS X 1.0 Ø = 4 Ø VENTING PROVIDED
3" X 2'-0" VENT=0.5 Ø
5 VENTS X 0.5 Ø = 2.5 Ø VENTING PROVIDED
6.5 Ø > 6.4 Ø

# FOUNDATION (WOOD SILL)

24 x 40 - 50 + 20 PSF LL

SCALE 1/4"=1'-0"

IDENTIFICATION STAMP
DIV. OF THE STATE ARCHITECT
03 118064
AC FLS SS
Date

| REVISIONS | ELECTRICAL | MECHANICAL | STRUCTURAL | ARCHITECT | DIVISION OF THE STATE ARCHITECT |
|---|---|---|---|---|---|
| △ | | | REGISTERED PROFESSIONAL ENGINEER JAMES T. SIMPSON No. 38052 CIVIL STATE OF CALIFORNIA | REGISTERED ARCHITECT EDWARD C. METZLER EXP. 6-30-98 No. C-8113 STATE OF CALIFORNIA | REVISED IDENTIFICATION STAMP DIV. OF THE STATE ARCHITECT OFFICE OF REGULATION SERVICES PC 266 AC FLS SS DATE 5-9-96 |

MODTECH INC.

MODTECH INC.
2830 BARRETT AVE.
PERRIS, CA. 92572
PH. (909) 943-4014
FX. (909) 940-0427

CONFIDENTIAL - THIS DOCUMENT AND THE INFORMATION CONTAINED HEREIN ARE THE PROPERTY OF MODTECH INC. UNAUTHORIZED COPYING, DISCLOSURE, OR OTHER UNAUTHORIZED USES ARE PROHIBITED

JOB NO.

IDENTIFICATION STAMP DIV. OF THE STATE ARCHITECT OFFICE OF REGULATION SERVICES
APPL 65 8 1 1
AC FLS SS
DATE

IDENTIFICATION STAMP DIV. OF THE STATE ARCHITECT
APPL 65 5 0
AUG 25 2011

DRAWN BY RN
DATE
CHECKED BY
DATE 8/96

FOUNDATION PLAN

FO.2

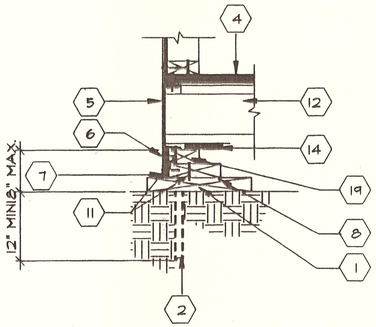


1 PERIMETER FD. SIDE WALL

SCALE 1 1/2"=1'

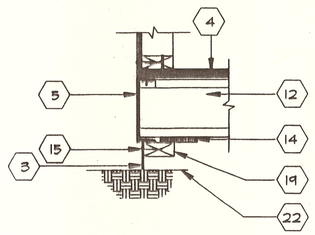

2 FOUNDATION VENT

SCALE 1 1/2"=1'

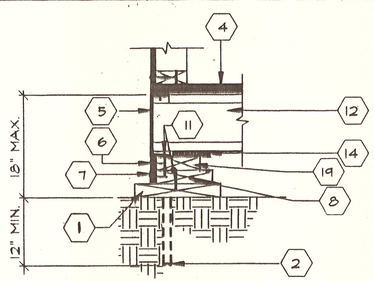


3 PERIMETER FD. END WALL

SCALE 1 1/2"=1'

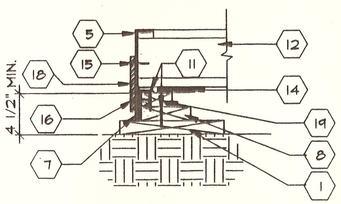


4 TYPICAL HOLD-DOWN

SCALE 1 1/2"=1'

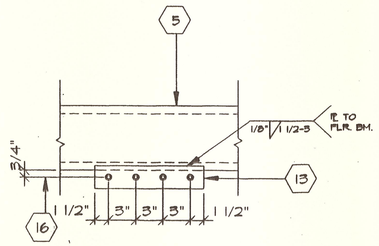


5 ALTERNATE HOLD-DOWN

SCALE 1 1/2"=1'

NOTE:
SIDE WALL SHOWN

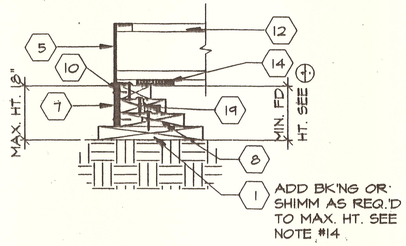


6 FOUNDATION MAX. HEIGHT

SCALE 1 1/2"=1'

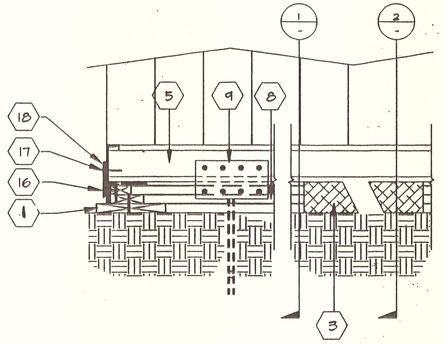

7 DEATIL @ FOUNDATION CORNER

SCALE 1"=1'

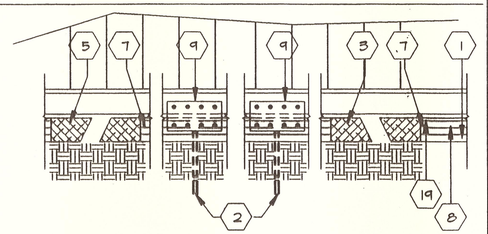

8 FOUNDATION ELEVATION @ SIDEWALL

SCALE 1"=1'

| VENTING REQUIREMENTS | |
|---|---|
| SIZE OF BUILDING | 12' X 40' |
| TOTAL SQ. FT. OF BLD'G(S) | 480 |
| NO. OF BUILDINGS | 1 |
| U.B.C. SECT. 2516 (c) (6) | 480/ |
| DIVIDE TOT. SQ.FT./150 | 150 |
| REQ.'D VENTING SQ.FT. | 3.2 |

| | | |
|---|---|---|
| TYPE "C" (SIDEWALLS) | 3" X 60" | 180 SQ. IN / 144 = 1.25 SQ.FT. |

| | |
|---|---|
| SIZE OF BUILDINGS | 12' X 40' |
| REQ.'D VENTING SQ.FT. | 3.2 |
| VENTING PROVIDED | (4) "C" |
| 1.25 SQ. FT. X 4 VENTS | 5 SQ. FT. |
| OK | 5 > 3.2 |

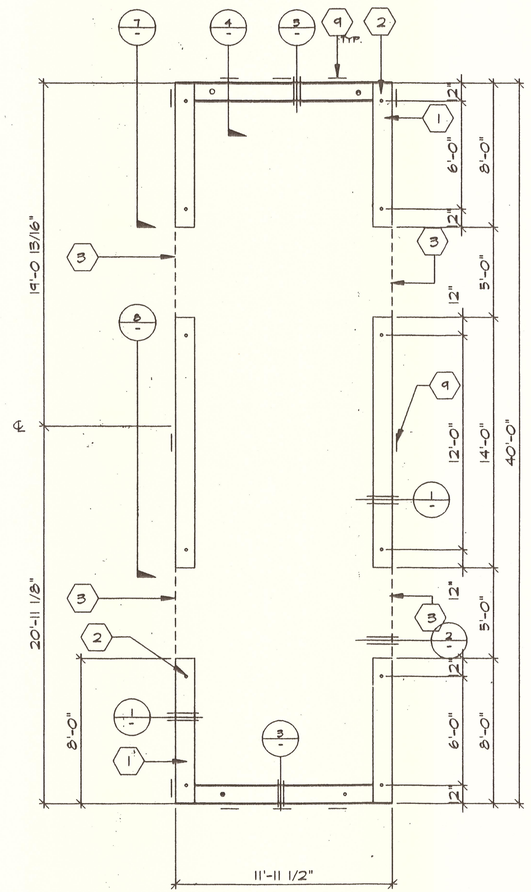


NOTE:
TOP PLATE TO BE CONTINUOUS

FOUNDATION (WOOD SILL)

SCALE 1/4"=1'-0"

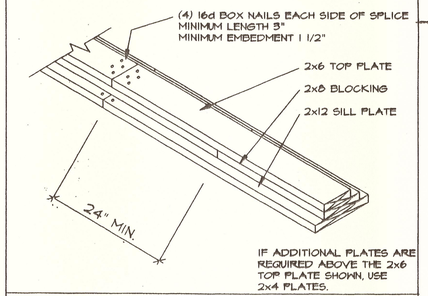


FOUNDATION SPLICE DETAIL

"MACHINE APPLIED 16d FASTENERS SHALL HAVE AN EMBEDMENT OF NOT LESS THAN 1 1/2" INTO SECOND MEMBER, AND SHALL BE NOT LESS THAN 3" IN OVERALL LENGTH"

THE ABOVE NAILS SHALL ALSO BE ACCEPTABLE FOR HAND NAILING, PROVIDED THE REQUIRED EMBEDMENT IS MAINTAINED.

## KEY NOTES

1. 2"X12" SILL PLATE (SEE FOUND.)
2. SILL RESTRAINT 1" Φ PIPE (SEE FOUNDATION PLAN FOR LOCATION)
3. VENT MIN. 3"X5'-0" TYPICAL EXPANED METAL MESH PRIME PAINTED
4. PLYWOOD FLOOR SHEETHING
5. FLOOR FRAMING BEAM
6. EN (EDGE NAIL SEE NOTE #7)
7. EN ATTACH 5/8" EXT. PLYW'D W/#10 STSMS OR AREOSMITH 6" @ SIDEWALL 4" @ ENDWALL TO STEEL CHANNEL AND 10d BOX @ 6" O.C. & 4" O.C. TO WD. PLATE. AT VENT ATTACH SKIRT'F @12"O.C. TOP AND BOTTOM
8. 2 X8 PLATE
9. 6"X12"X10GA. PLATE W/4 - #10 STSMS TO FLOOR & 4 -1/4ΦX3" LAG TO FOUNDATION TOP PLATE TYPICAL 12 PLACES
10. 2 X 4 BLOCKING
11. 16d BOX @ 9" O.C.AT SIDEWALLS AND 6" O.C. AT ENDWALLS
12. FLOOR JOIST
13. 2 1/2"X12"X10GA. PLATE
14. 5/8" SHIM CONT.
15. 10d ELECTROGAL BOX NAIL @ MAX. 4" O.C.
16. 1/4" ΦX3" LAB BOLT TYP. 4 PER PLATE
17. #10X3/4" STS TYP. 4 PER PLATE
18. 6"X12"X10GA. PLATE
19. 2X6 TOP PLATE W/16d FACE NAIL NAIL TO BK'NG @ MAX. 12" O.C.
20. 2 X 6 SILL PLATE
21. 2-16d BOX NAILS PLATE TO PLATE @ 6" O.C. TYP. AT INTERIOR WALL
22. FINISH GRADE

## GENERAL NOTES

A. SOIL RESTRAINT: ON A.C. PAVING AND ON SOIL 1" O.D. GALVANIZED PIPE AT 10'-0" 12" PENETRATION BELOW SURFACE VERTICALLY. DRILL SILL 1-1/4" MAX. PIPE MAY BE DRIVEN MAX. OF 45° ANGLE TO VERTICAL. (18-1/2" LONG PIPE REQUIRED FOR PENETRATION AT 45° ANGLE.)

B. ON CONCRETE PAVING HILTI DS 82-P10 THRU SILL PLATE:
END WALLS: 7" O.C.
SIDE WALLS: 19 "O.C.
INTERIOR WALL 3 1/2" O.C.

C. WHERE SHIM STOCK IS REQUIRED FOR LEVELING USE 1/4", 1/2", OR 3/4" THICK PLYWOOD SAME WIDTH AS BLOCK. P.T.

D. VERIFY DRAINAGE TO PREVENT WATER FROM PONDING BENEATH THE STRUCTURE. WITH DISTRICT ARCHITECT SITE PLANS

E. ALL FOUNDATION MATERIAL SHALL BE PRESSURE TREATED D.F.
GROUND CONTACT: LP-22 (CCA .40)
ABOVE GROUND: LP-2 (CCA .25)

| ARCHITECT | ELECTRICAL | STRUCTURAL | MECHANICAL | FIRE MARSHAL | ACCESS COMPLIANCE | STRUCTURAL SAFETY |
|---|---|---|---|---|---|---|
| | | LICENSED PROFESSIONAL ENGINEER JAMES T. BARRETT No. 2602 Exp. 6-30-96 STRUCTURAL STATE OF CALIFORNIA LICENSE EXPIRES 6-30-2000 | | | | KENTFIELD-RAMON AVE. DIV. OF THE MARIN AREA OFFICE OF REGULATORY AGENCIES 284 NO. ___ FILE ___ DATE SEP 6 1996 |

MODTECH INC.

JOB # 3032

© MODTECH INC. 1993

DRAWN BY
DATE
CHECKED BY
DATE

FOUNDATION (WOOD)

F2.0

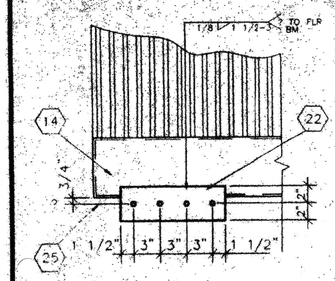


9 SCALE: 1 1/2"=1'-0"
ALTERNATE HOLD DOWN

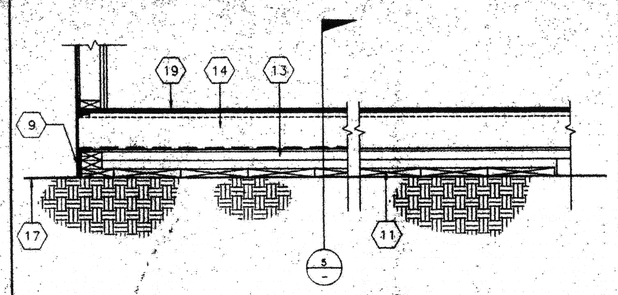


6 SCALE: 1 1/2"=1'-0"
MODLINE PAD @ END WALL

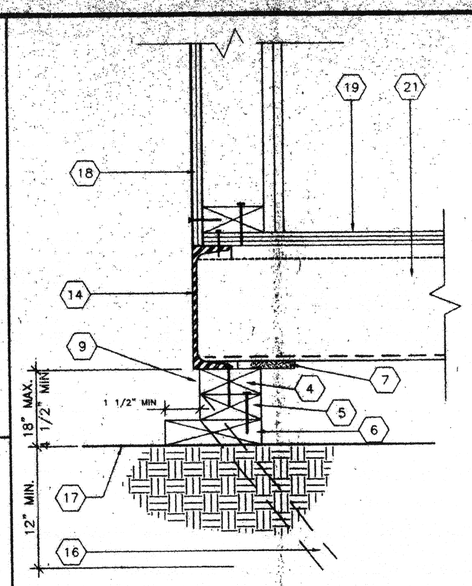


3 SCALE: 3"=1'-0"
FOUNDATION @ END WALL

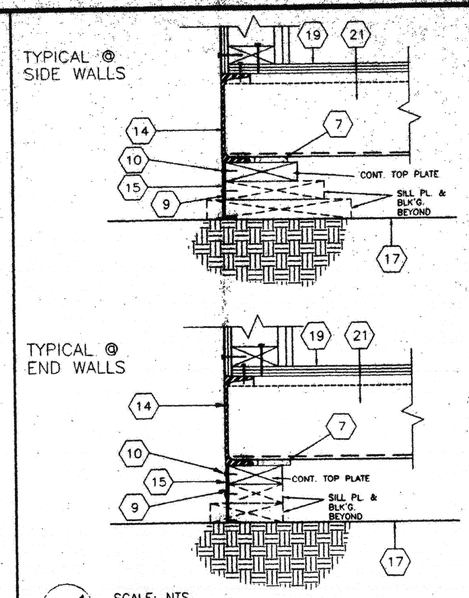


1 SCALE: NTS
FOUNDATION VENT

## KEY NOTES

1. 2X12 SILL PLATE SEE FOUND. PLAN FOR LENGTH
2. 2X8 BLOCKING W/16d @MAX 5"O.C. TO SILL PLATE
3. 2X6 TOP PLATE W/16d @MAX 5" O.C. TO BLOCKING
4. 2X4 TOP PLATE W/16d @ MAX 5" O.C. TO BLOCKING
5. 2X4 BLOCKING W/16d MAX. 5" O.C. TO SILL PLATE
6. 2X6 SILL PLATE SEE FOUND. PLAN FOR LENGTH
7. 5/8"X2 1/2" SHIM (WHEN REQ.)
8. INSERT REQ'D 2X4 BLK'NG OR PLYWD. SHIM W/16d @ 12" O.C. FACE NAIL
9. OPTIONAL – MIN. 3/8" PLYWOOD SHIRTING W/ 10d @ MIN. 4" O.C. @ ENDWALLS & 8" O.C. @ SIDEWALLS E.N. & TYP. 12" O.C. FN. PLATE TO PLATE. NAILING FOR THE FOUNDATION MEMBERS CAN BE DECREASED TO 12" O.C. AND FOUNDATION BLOCKING SHALL BE RECESSED SUCH THAT THE SKIRTING SHALL BE INSTALLED FLUSH WITH THE PERIMETER FLOOR CHANNEL.
10. 10d GALV. NAIL @ MAX. 4" O.C.
11. 2X12X2'-6" SILL PLATE SEE FOUND. PLAN FOR QUANITY REQ.'D
12. 2 X 10 PLATES W/ 2-16D BOX @ 6" O.C.
13. 2X10 BLK'NG FACE OR TOE NAIL 16d @ MAX 12" O.C. ADD BLKS. OR SHIMS AS REQ'D
14. FLOOR FRAME BEAM SEE. STRUCTURAL
15. TYPICAL FOUNDATION VENT (SEE FOUNDATION PLAN FOR SIZES AND LOCATIONS).
16. SILL RESTRAINT 1" ø PIPE SEE FOUND. FOR LOCATION
17. FINISH GRADE
18. EXTERIOR FINISH
19. PLYWOOD SUBFLOOR
20. MOD-LINE
21. FLOOR-JOIST
22. 4"X12"X10 GA. PLATE
23. 6"X12"X10 GA. PLATE
24. 1/4" ø S.T.S. TYP. 4-PLACES
25. 1/4" ø X3" LG. LAG SCREW TYP. 4-PLACES
26. 5/8" øX4" LAGS (FOR LOCATION SEE PLAN)

**FOUNDATION LUMBER TO BE PRE-CUT AT FACTORY. LUMBER GRADES & PRESSURE TREATING TO BE VERIFIED BY IN-PLANT INSPECTOR.**

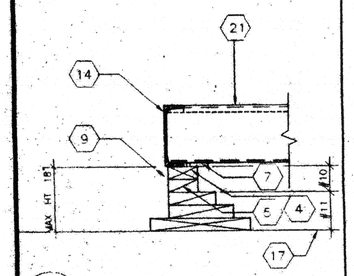


10 SCALE: 1 1/2"=1'-0"
ADD BLK'S/SHIMS TO LEVEL FOUND.

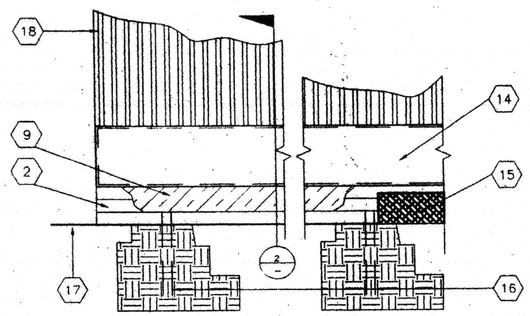


7 SCALE: 1 1/2"=1'-0"
FOUNDATION ELEVATION @ SIDE WALL

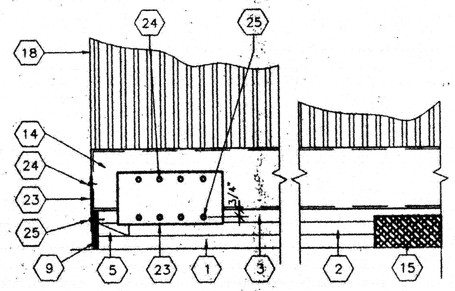


4 SCALE: 1 1/2"=1'-0"
DETAIL @ FOUNDATION CORNER

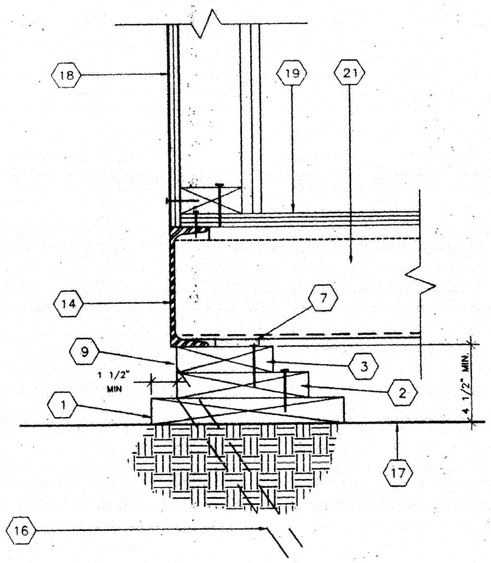


2 SCALE: 3"=1'-0"
FOUNDATION @ SIDE WALL

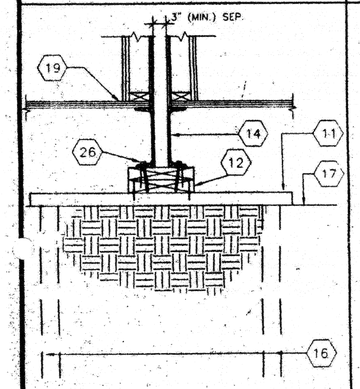


11 SCALE: 1 1/2"=1'-0"
FOUND. AT ADJ. BLDG

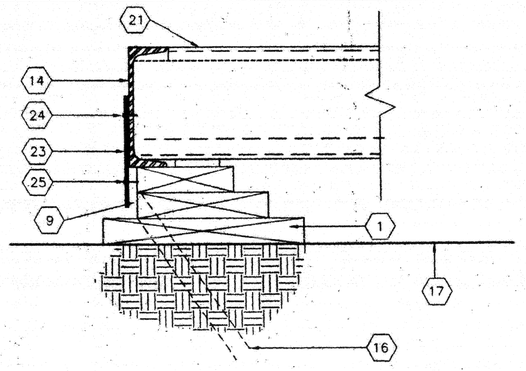


8 SCALE: 3"=1'-0"
TYPICAL TIE PLATE

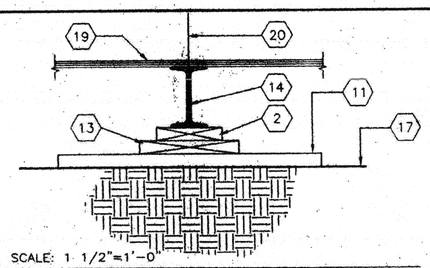


5 SCALE: 1 1/2"=1'-0"
FOUNDATION PAD @ MODLINE

| REVISIONS | ELECTRICAL | MECHANICAL | STRUCTURAL | ARCHITECT | DIVISION OF THE STATE ARCHITECT |
|---|---|---|---|---|---|
| | | | JAMES T. BARNES No. 3602 LICENSE EXPIRES 6-30-2000 | REGISTERED ARCHITECT EDWARD C. METCALF No. C 8119 STATE OF CALIFORNIA | IDENTIFICATION STAMP DIV. OF THE STATE ARCHITECT OFFICE OF REGULATION SERVICES REVISED AUG 27 1996 PC 266 AC FLS SS DATE 5-9-96 |

MODTECH INC.
2830 BARRETT AVE.
PERRIS, CA. 92572
PH. (909) 943-4014
FX. (909) 940-0427

CONFIDENTIAL - THIS DOCUMENT AND THE INFORMATION CONTAINED HEREIN ARE THE PROPERTY OF MODTECH INC. UNAUTHORIZED COPYING, DISCLOSURE, OR OTHER UNAUTHORIZED USES ARE PROHIBITED

JOB NO.

IDENTIFICATION STAMP DIV. OF THE STATE ARCHITECT OFFICE OF REGULATION SERVICES APPLICATION AC FLS SS DATE

IDENTIFICATION STAMP DIV. OF THE STATE ARCHITECT 03 118064 AC FLS SS Date MAY 10 2017

DRAWN BY RN DATE 8/96
CHECKED BY FH DATE 8/96

# FOUNDATION DETAILS

F3.0