JENSEN•HAYES•SHROPSHIRE
ARCHITECTS, P.A.

September 13, 2023

ADDENDUM NO. FOUR (4)

PROJECT: PV-TEC Building Remodel

To: **All Bidders**

This addendum forms a part of the contract documents and modifies the original bidding documents as noted below. Except as affected by data included herein, all other parts of the contract documents shall remain in full force and effect. It shall be the sole responsibility of the bidder to appropriately disseminate this data to all concerned prior to the bid time and date. Acknowledge receipt of this addendum in the space provided on the bid form. Failure to do so may subject the bidder to disqualification.

This addendum consists of 2 page(s) and 19 page(s) attachment for a total of 21 pages.

GENERAL ITEMS:

A1 Please see the attached foundation plans and structural calculations for the project.

A2 As a matter clarification and in accordance with the PEMB plans, submitted via Addendum 3, the exterior walls of the addition along the south, east, and north elevations are to be construction of 8” metal framing. There are no horizontal girts within these walls.

SPECIFICATION ITEMS:

S1 Section 08 8000 Part 2.05 – It has come to our attention that the 1” sealed insulated glass used on the original building was altered from the original specification, to the following configuration:

1. Outer Pane: 1/4" Clear Tempered.
2. Interior Pane: 1/4" clear Solarban 70 with Low E on the #3 surface.

Please use this 1” insulated glass unit in lieu of what is designated in the specification.

DRAWING ITEMS:

D1 A7.3, A7.4, A8.3 - 5/8" Gypsum Board in Wall types C and D has been removed. They were previously designed as a fire rated wall but are not longer a requirement. See attached detail corrections.

D2 A7.3, A7.4, A8.3 - The interior side of wall types C, D, E, F, and G shall be 5/8" T&G plywood

D3 A7.1, A7.2, A7.4, A8.3 - The exterior wall sheathing on wall types E and F shall be 5/8" plywood sheathing. See attached detail corrections.

D4 A8.3 – As a matter of clarification, detail 1/A8.3 has been modified to reflect the framing requirements for wall framing at the elevated floor system. Please refer to the note on the detail for requirements.

D6 A9.1, A9.2 –Door Types 2, 3 and Storefronts C, D, and Q: Please use a standard 96" door in lieu of the 95" (7'-11") door as shown.

D7 Electrical - "Provide fixture types F2 and F13 with integral occupancy sensors"

END OF ADDENDUM NO. 4

FOUNDATION CALCULATIONS

101'-6"x165' Metal Building with 40'x40' Lean-To

MVE #23-0958

CHUBBUCK SCHOOL DISTRICT - PORTNEUF VALLEY TECH/CAREER

Pocatello, Idaho

Metal Building Supplied By:

R&M STEEL COMPANY
20595 Farmway Road
Caldwell, ID 83607

SEP 11 2023

Foundation Design by:

MOUNTAIN VIEW ENGINEERING, INC.
345 No. Main, Suite A • Brigham City, Utah 84302
Phone (435) 734-9700 • Fax (435) 734-9519

10 pages of Calculations

MOUNTAIN VIEW ENGINEERING, INC.
345 No. Main, Suite A • Brigham City, Utah 84302
Phone (435) 734-9700 • Fax (435) 734-9519

DESIGN CRITERIA :

Ground Snow Load	45	psf
Roof Snow Load	34.7	psf
Roof Live Load	20	psf
Roof Collateral Load	8	psf

Code: 2018 IBC

S_{DS}	0.447	Wind Speed	115 mph
Seismic Design Category	D	Exposure	C
Site Class	D	Importance Factor	1.0
Importance Factor	1.25		

Other Loads:

Soil Bearing	1500	psf (assumed)
Frost Depth	24	inches

Notes:

Reactions per R&M STEEL COMPANY drawings.

Concrete and Reinforcement:

Concrete Strength
- 3000 P.S.I. for Foundations
- 3500 P.S.I. for Slabs
- 2500 P.S.I. Used for design, no special inspection required.

Rebar - ASTM A615 grade 60

MOUNTAIN VIEW ENGINEERING, INC.
345 No. Main, Suite A • Brigham City, Utah 84302
Phone (435) 734-9700 • Fax (435) 734-9519

Job: MVE #23-0958 R&M STEEL COMPANY Date: 09/11/23

Subject: CHUBBUCK SCHOOL DISTRICT - PORTNEUF VALLEY TECH/CAREER By: JVL

Sidewall Footings
(Lines 2 - 8 / Grid A)

P_{D+L} = 56.8 kips

F_H = 46.8 kips

Uplift = 8.0 kips

Use 7.0 ft. x 7.0 ft. x 18 inch deep footing

Horizontal Force *Use rebar tension ties across the building to resist horizontal force at the column base.*

Top of Pier to Center of Ties =	11	in	Number of Ties =	6	ties
Tensile Strength of Rebar =	24	ksi	Tie Size =	#6	rebar
Area Required =	1.950	in^2			

Use (6) #6 tension ties.

Weights

Weight of Pier =	1.09	kips
Weight of Soil Above Footing =	7.10	kips
Weight of Spot Footing =	10.66	kips
Weight of Continuous Wall =	0.00	kips
Weight of Continuous Ftg. =	0.00	kips
Use Passive Res. to Resist Moment?	NO	

Passive Soil Resistance

Wall Length for Passive Res. =	1.5	ft
Ftg. Width for Passive Res. =	7	ft
Passive Earth Pressure =	200	psf/ft
Passive Res. (Spot Footing) =	5.25	kips
Passive Res. (Wall & Pier) =	0.26	kips
Passive Res. (Cont. Ftg.) =	0.00	kips
Total Passive Resistance =	**5.51**	**kips**

Check Soil Bearing

Moment Arm =	0.9167	ft	Allowable Bearing Pressure =	1500	psf
P (total) =	56.80	kips	Top of Wall to Grade =	3	in
Overturning Moment =	42.9	kip*ft	OS Conc. to CL A.R. =	15	in
OTM Eccentricity =	9.1	inches	Pier Width =	18	in
Footing Offset =	5.5	inches	Pier Depth (wall included) =	30	in
Offset Resisting Moment =	- 26.03	kip*ft	Pier Height =	24	in
Passive Resisting Moment =	- 0.00	kip*ft	Wall Thickness =	8	in
Net Eccentricity =	3.6	inches	Wall Height =	24	in
B/6 = 14 inches **OK**			Footing Width =	16	in
			Footing Depth =	8	in

Bearing Pressure, q (max.) = 1454 psf OK

Offset footing 5.5 inches.

Uplift

Weight of Footing and Pier =	11.75	kips	Wall Length used for Uplift =	7	ft
Weight of Soil Above Footing =	7.10	kips	Cont. Ftg. Length for Uplift =	7	ft
Weight of Cont. Wall & Footing =	1.06	kips			
Total =	19.91	kips	**Factor of Safety =**	**2.49**	**> 1.0 OK**

Check Footing Flexure (Reinforcing in Direction of Horizontal Force)

q (min.) =	864	psf	Rebar d' =	3.5	in	**Options**	
OS Footing Edge from Wall =	2.708	ft	Rebar d =	14.5	in	**14**	#4 bars
q (at face of wall) =	1226	psf	Rebar fy =	60000	psi	**9**	#5 bars
Moment in Footing (Mu, ULT) =	46.11	k*ft	Concrete f'c =	2500	psi	**7**	#6 bars
As (req'd by calc.) =	0.711	in^2	ACI 7.12 As (min) =	2.722	in^2		

Opposite Direction Reinforcing

Min. Steel Ratio = 0.0018
As per ACI 7.12

Options	
14	#4 bars
9	#5 bars
7	#6 bars

Use (9) #5 bars in direction of horizontal force and use (9) #5 bars in the opposite direction.

Check Footing Shear

Shear in Footing (Vu, ULT) =	34.05	kips	
Required Thickness =	8.90	in	**OK**

For Pier Design
****See pier calculation on page 3.**

Nu =	**91**	**kips**
Mu =	**69**	**kip*ft**
Vu =	**75**	**kips**

MOUNTAIN VIEW ENGINEERING, INC.
345 No. Main, Suite A • Brigham City, Utah 84302
Phone (435) 734-9700 • Fax (435) 734-9519

Job: MVE #23-0958 R&M STEEL COMPANY
Subject: CHUBBUCK SCHOOL DISTRICT - PORTNEUF VALLEY TECH/CAREER

Date: 09/11/23
By: JVL

Concrete Column Analysis (ACI 318)

For X-Axis Flexure with Axial Compression or Tension Load
Assuming "Short", Non-Slender Member with Symmetric Reinforcing

Input

f_c' =	2500	psi
f_y =	60	ksi
d' =	2.375	in
b =	18	in
h =	30	in
ϕ =	0.65	

Loading

P_{ux} =	90.9	kips
M_{ux} =	68.6	kip-ft
V_{ux} =	74.9	kips

Column Geometry

Bar Size =	5	Total # of Bars	12
# of Bars b Face	4	Tie Size =	4
# of Bars h Face	4		

Placement of Reinforcement Steel

	d_i	A_{st}
Edge Layer (d_1)	27.63	1.24
Interor Layer (d_2)	19.21	0.62
Interor Layer (d_3)	10.79	0.62
Edge Layer (d_4)	2.38	1.24

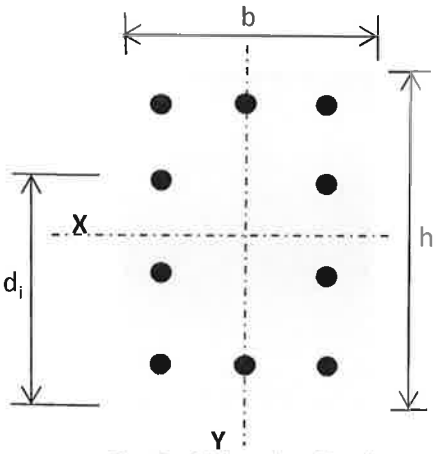

Typical Member Section

X-AXIS INTERACTION DIAGRAM

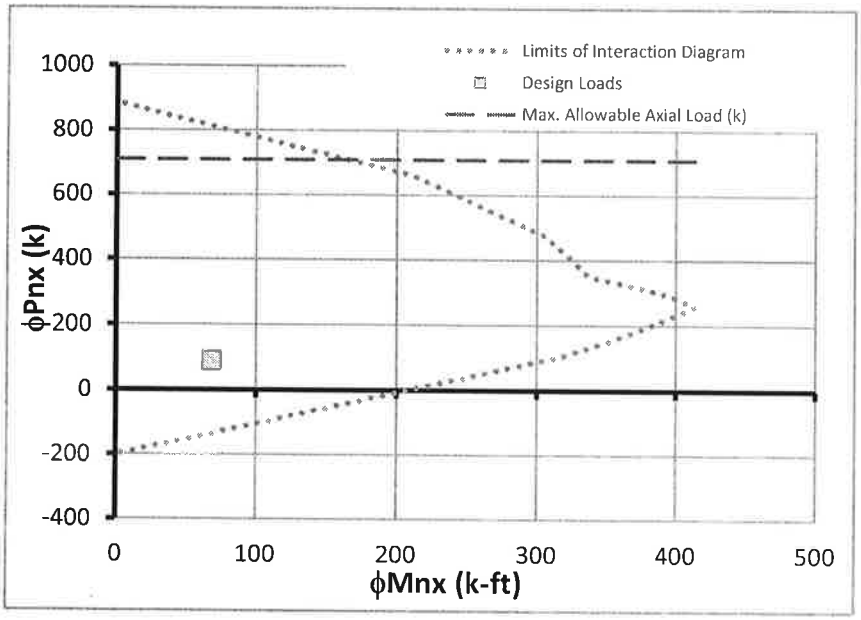

DESIGN LOADS FALL WITHIN THE LIMITS OF THE INTERACTION DIAGRAM, THEREFORE, USE (12) # 5 VERTICAL BARS IN COLUMN.

Shear Design ϕV_c = 40.432 $\phi V_c/2$ = 20.216 $V_u > \phi V_c$

If $V_u > \phi V_c/2$ then vertical spacing of ties shall not exceed the least of:

s max =	$A_v f_y/(0.75\sqrt{(f_c')}b)$	=	35.556 in
s max =	$A_v f_y/(50b)$	=	26.667 in
s max =	$d/2 \le 24$ in	=	13.813 in

If $V_u > \phi V_c$ then vertical spacing of ties shall not exceed the least of:

s max =	14.435	
s max =	13.813	if Vs <= ϕ4*(f'c)^0.5*b*d, s = d/2 <=24
s max =	6.9063	if Vs > ϕ4*(f'c)^0.5*b*d, s = d/4 <=12

4*(f'c)^0.5*b*d = 74.6 kips
Vs = 34.4 kips

USE # 4 TIES AT 8.00 INCHES ON CENTER WITH (3) IN THE TOP SIX INCHES OF PIER.

MOUNTAIN VIEW ENGINEERING, INC.
345 No. Main, Suite A • Brigham City, Utah 84302
Phone (435) 734-9700 • Fax (435) 734-9519

Endwall Footings

(Line 1 / Grids B, C, & F and Line 9 / Grids B & C)

P_{D+L} = 26.4 kips
F_H = 2.6 kips
Uplift = 5.4 kips

Check Soil Bearing

Allowable Pressure = 1500 psf
B req'd = **4.20** ft

Use 4.5 ft^2 x 12 inch deep footing
reinforced with (6) #4 bars each way.
q = **1304** psf **OK**

Horizontal Force

Use rebar hairpins to resist horizontal force.

As req'd = **0.06** in2
L req'd = **1.6** ft - reinf. slab (6x6 W1.4xW1.4 min.)
L req'd = **2.6** ft - unreinforced slab

Use # 4 hairpin w/ 4 foot legs.

Uplift

Design uplift = **5.4** kips
Slab Thickness = 5 inches
Depth to top of Ftg. = 24 inches
OS Conc. to CL Footing = 14 inches
Length of Wall for Uplift = 4.5 feet
Wall Thickness = 8 inches

Weight of Footing and Soil = 6.24 kips
Weight of Concrete Slab = 2.88 kips
Weight of Foundation Wall & Ftg. = 0.39 kips
Total = 9.51 kips

Factor of Safety = **1.76 > 1.0 OK**

Corner Footings

(Line 1 / Grid A and Line 11 / Grid D)

P_{D+L} = 9.0 kips
Uplift = 6.3 kips

Check Soil Bearing

Allowable Pressure = 1500 psf
B req'd = **2.45** ft

Use 3.0 ft^2 x 12 inch deep footing
reinforced with (4) #4 bars each way.
q = **1000** psf **OK**

Uplift

Design uplift = **6.3** kips
Slab Thickness = 5 inches
Depth to top of Ftg. = 24 inches
(EW) OS Conc. to CL Footing = 13 inches
(SW) OS Conc. to CL Footing = 11.5 inches
(EW) Length of Wall for Uplift = 13 feet
(SW) Length of Wall for Uplift = 2.5 feet
Wall Thickness = 8 inches

Weight of Footing and Soil = 2.78 kips
Weight of Concrete Slab = 1.28 kips
Weight of Foundation Wall & Ftg. = 2.54 kips
Total = 6.59 kips

Factor of Safety = **1.05 > 1.0 OK**

MOUNTAIN VIEW ENGINEERING, INC.
345 No. Main, Suite A • Brigham City, Utah 84302
Phone (435) 734-9700 • Fax (435) 734-9519

Endwall Footing
(Line 11 / Grid F)

P_{D+L} = 13.3 kips
F_H = 2.7 kips
Uplift = 3.5 kips

Check Soil Bearing

Allowable Pressure = 1500 psf
B req'd = **2.98** ft

Use 3.0 ft^2 x 12 inch deep footing
reinforced with (4) #4 bars each way.
q = **1478** psf **OK**

Horizontal Force

Use rebar hairpins to resist horizontal force.

As req'd = **0.06** in2
L req'd = **1.7** ft - reinf. slab (6x6 W1.4xW1.4 min.)
L req'd = **2.7** ft - unreinforced slab

Use # 4 hairpin w/ 4 foot legs.

Uplift

Design uplift =	**3.5**	kips
Slab Thickness =	5	inches
Depth to top of Ftg. =	24	inches
OS Conc. to CL Footing =	14	inches
Length of Wall for Uplift =	4.5	feet
Wall Thickness =	8	inches

Weight of Footing and Soil =	2.78	kips
Weight of Concrete Slab =	2.04	kips
Weight of Foundation Wall & Ftg. =	0.65	kips
Total =	5.47	kips

Factor of Safety = **1.56 > 1.0 OK**

Corner Footing
(Line 9 / Grid A)

P_{D+L} = 17.3 kips
Uplift = 4.6 kips

Check Soil Bearing

Allowable Pressure = 1500 psf
B req'd = **3.40** ft

Use 3.5 ft^2 x 12 inch deep footing
reinforced with (5) #4 bars each way.
q = **1412** psf **OK**

Uplift

Design uplift =	**4.6**	kips
Slab Thickness =	5	inches
Depth to top of Ftg. =	24	inches
(EW) OS Conc. to CL Footing =	13	inches
(SW) OS Conc. to CL Footing =	11.5	inches
(EW) Length of Wall for Uplift =	13	feet
(SW) Length of Wall for Uplift =	2.5	feet
Wall Thickness =	8	inches

Weight of Footing and Soil =	3.78	kips
Weight of Concrete Slab =	1.42	kips
Weight of Foundation Wall & Ftg. =	2.38	kips
Total =	7.57	kips

Factor of Safety = **1.65 > 1.0 OK**

MOUNTAIN VIEW ENGINEERING, INC.
345 No. Main, Suite A • Brigham City, Utah 84302
Phone (435) 734-9700 • Fax (435) 734-9519

Sidewall Footing
(Line 10 / Grid D)

P_{D+L} = 22.8 kips
F_H = 6.6 kips
Uplift = 6.1 kips

Check Soil Bearing

Allowable Pressure = 1500 psf
B req'd = **3.90** ft

Use 4.0 ft^2 x 12 inch deep footing
reinforced with (6) #4 bars each way.
q = **1425** psf **OK**

Horizontal Force

Use rebar hairpins to resist horizontal force.

As req'd = **0.16** in2
L req'd = **4.2** ft - reinf. slab (6x6 W1.4xW1.4 min.)
L req'd = **6.6** ft - unreinforced slab

Use # 4 hairpin w/ 8 foot legs.

Uplift

Design uplift = **6.1** kips
Slab Thickness = 5 inches
Depth to top of Ftg. = 24 inches
OS Conc. to CL Footing = 14.0 inches
Length of Wall for Uplift = 4 feet
Wall Thickness = 8 inches

Weight of Footing and Soil = 4.93 kips
Weight of Concrete Slab = 2.58 kips
Weight of Foundation Wall & Ftg. = 0.31 kips
Total = 7.83 kips

Factor of Safety = **1.28 > 1.0 OK**

MOUNTAIN VIEW ENGINEERING, INC.
345 No. Main, Suite A • Brigham City, Utah 84302
Phone (435) 734-9700 • Fax (435) 734-9519

Sidewall Footings Adjacent to Existing Foundation
(Lines 9 & 10 / Grid G)

P_{D+L} = 22.8 kips
F_H = 6.0 kips
Uplift = 7.9 kips

Note: Drill and epoxy all short direction reinforcing into existing foundation 6" min.

Check Soil Bearing

Allowable Pressure = 1500 psf
A req'd = **15** ft^2

Use 3.5 x 6.5 ft x 13 inch deep footing
reinforced with (8) #5 bars short direction
and (4) #5 bars long direction

q = **1002** psf **OK**

Horizontal Force

Use rebar hairpins to resist horizontal force.

As req'd = **0.14** in2
L req'd = **3.8** ft - reinf. slab (6x6 W1.4xW1.4 min.)
L req'd = **6** ft - unreinforced slab

Use # 4 hairpin w/ 6 foot legs.

Uplift

Design uplift = **7.9** kips
Slab Thickness = 5 inches
Depth to top of Ftg. = 5 inches
OS Conc. to CL Footing = 12 inches

Weight of Footing and Soil = 3.70 kips
Weight of Concrete Slab = 5.86 kips
Total = 9.56 kips

Factor of Safety = **1.2 > 1.0 OK**

Corner Footings Adjacent to Existing Foundation
(Lines 1 & 11 / Grid G)

P_{D+L} = 9.2 kips
F_H = 2.4 kips
Uplift = 5.5 kips

Note: Drill and epoxy all short direction reinforcing into existing foundation 6" min.

Check Soil Bearing

Allowable Pressure = 1500 psf
A req'd = **6.1** ft^2

Use 2.0 x 3.5 ft x 12 inch deep footing
reinforced with (5) #4 bars short direction
and (3) #4 bars long direction

q = **1314** psf **OK**

Horizontal Force

Horizontal Force will be resisted by rebar drilled and epoxied into existing foundation.

Uplift

Design uplift = **5.5** kips
Slab Thickness = 5 inches
Depth to top of Ftg. = 24 inches
OS Conc. to CL Footing = 12 inches
Length of Wall for Uplift = 10 feet
Wall Thickness = 8 inches

Weight of Footing and Soil = 2.16 kips
Weight of Concrete Slab = 1.88 kips
Weight of Foundation Wall & Ftg. = 2.40 kips
Total = 6.43 kips

Factor of Safety = **1.17 > 1.0 OK**

MOUNTAIN VIEW ENGINEERING, INC.
345 No. Main, Suite A • Brigham City, Utah 84302
Phone (435) 734-9700 • Fax (435) 734-9519

Sidewall Footings with Cross-Ties Adjacent to Existing Building

(Lines 2 - 8 / Grid G)

P_{D+L} = 54.0 kips
F_H = 46.8 kips
Uplift = 8.2 kips

Check Soil Bearing

Allowable Pressure = 1500 psf
A req'd = **36.00** ft^2

Use 6.7 x 20 ft x 21 inch deep footing,
see pages 9-10 for footing calculation.

Note: Calculations involving footing width include 8" of the exisitng foundation wall (assumed) added to the footing that will assist in the footing bearing pressure calculation because of the short direction reinforcing drilled and epoxied into the existing foundation.

Horizontal Force

Use rebar cross-ties to resist horizontal force.

FY = 60 ksi
Wind or Seismic? n (y or n)
As req'd = 1.95 in2
As' req'd = 1.95 in2 (short term loading)

Options:
6 @ **0.33** in2
4 @ **0.49** in2
2 @ **0.98** in2

Use (6) #6 rebar crossties.

Uplift

Design uplift = **8.2** kips
Slab Thickness = 5 inches

Weight of Footing = 35.02 kips
Weight of Concrete Slab = 12.01 kips
47.02 kips

Factor of Safety = **5.73 > 1.0 OK**

General Footing

Project File: 23-0958.ec6

LIC# : KW-06014791, Build:20.23.08.30 MOUNTAIN VIEW ENGINEERING, INC. (c) ENERCALC INC 1983-2023

DESCRIPTION: Sidewall Footings, Lines 2 - 8 / Grid G

Code References

Calculations per ACI 318-14, IBC 2018, CBC 2019, ASCE 7-16
Load Combinations Used : ASCE 7-16

General Information

Material Properties

f'c : Concrete 28 day strength	=	2.50 ksi
fy : Rebar Yield	=	60.0 ksi
Ec : Concrete Elastic Modulus	=	2,850.0 ksi
Concrete Density	=	145.0 pcf
φ Values Flexure	=	0.90
Shear	=	0.750

Analysis Settings

Min Steel % Bending Reinf.	=	
Min Allow % Temp Reinf.	=	0.00090
Min. Overturning Safety Factor	=	1.0 : 1
Min. Sliding Safety Factor	=	1.0 : 1
Add Ftg Wt for Soil Pressure	:	Yes
Use ftg wt for stability, moments & shears	:	Yes
Add Pedestal Wt for Soil Pressure	:	No
Use Pedestal wt for stability, mom & shear	:	No

Soil Design Values

Allowable Soil Bearing	=	1.50 ksf
Soil Density	=	110.0 pcf
Increase Bearing By Footing Weight	=	No
Soil Passive Resistance (for Sliding)	=	200.0 pcf
Soil/Concrete Friction Coeff.	=	0.250

Increases based on footing Depth

Footing base depth below soil surface	=	2.250 ft
Allow press. increase per foot of depth	=	ksf
when footing base is below	=	ft

Increases based on footing plan dimension

Allowable pressure increase per foot of depth	=	ksf
when max. length or width is greater than	=	ft

Dimensions

Width parallel to X-X Axis	=	6.667 ft
Length parallel to Z-Z Axis	=	20.0 ft
Footing Thickness	=	21.0 in
Load location offset from footing center...		
ex : Prll to X-X Axis	=	18.5 in
	=	in
Pedestal dimensions...		
px : parallel to X-X Axis	=	24.0 in
pz : parallel to Z-Z Axis	=	18.0 in
Height	=	5.0 in
Rebar Centerline to Edge of Concrete...		
at Bottom of footing	=	3.0 in

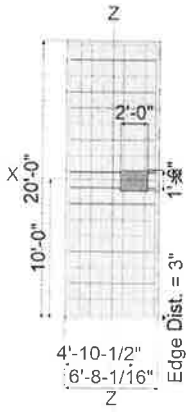

Reinforcing

Bars parallel to X-X Axis			
Number of Bars	=		18.0
Reinforcing Bar Size	=	#	5
Bars parallel to Z-Z Axis			
Number of Bars	=		9.0
Reinforcing Bar Size	=	#	5

Bandwidth Distribution Check (ACI 15.4.4.2)

Direction Requiring Closer Separation

	Bars along X-X Axis
# Bars required within zone	50.0 %
# Bars required on each side of zone	50.0 %

Applied Loads

		D	Lr	L	S	W	E	H	
P : Column Load	=	15.70	20.70		35.90	-20.90	-1.60		k
OB : Overburden	=								ksf
M-xx	=								k-ft
M-zz	=	12.50	17.70		30.70	-14.50	5.90		k-ft
V-x	=								k
V-z	=								k

General Footing

Project File: 23-0958.ec6

LIC# : KW-06014791, Build:20.23.08.30 MOUNTAIN VIEW ENGINEERING, INC. (c) ENERCALC INC 1983-2023

DESCRIPTION: Sidewall Footings, Lines 2 - 8 / Grid G

DESIGN SUMMARY

Design OK

	Min. Ratio	Item	Applied	Capacity	Governing Load Combination
PASS	0.9953	Soil Bearing	1.493 ksf	1.50 ksf	+D+S about Z-Z axis
PASS	n/a	Overturning - X-X	0.0 k-ft	0.0 k-ft	No Overturning
PASS	1.734	Overturning - Z-Z	69.835 k-ft	121.098 k-ft	+0.60D+0.60W
PASS	n/a	Sliding - X-X	0.0 k	0.0 k	No Sliding
PASS	n/a	Sliding - Z-Z	0.0 k	0.0 k	No Sliding
PASS	2.370	Uplift	-12.540 k	29.721 k	+0.60D+0.60W
PASS	0.02511	Z Flexure (+X)	0.5571 k-ft/ft	22.187 k-ft/ft	+1.20D+1.60S
PASS	0.05224	Z Flexure (-X)	1.159 k-ft/ft	22.187 k-ft/ft	+1.20D+1.60S
PASS	0.7423	X Flexure (+Z)	24.473 k-ft/ft	32.970 k-ft/ft	+1.20D+1.60S
PASS	0.7423	X Flexure (-Z)	24.473 k-ft/ft	32.970 k-ft/ft	+1.20D+1.60S
PASS	n/a	1-way Shear (+X)	0.0 psi	75.0 psi	n/a
PASS	0.03062	1-way Shear (-X)	2.297 psi	75.0 psi	+1.20D+1.60S
PASS	0.2754	1-way Shear (+Z)	20.658 psi	75.0 psi	+1.20D+1.60S
PASS	0.2754	1-way Shear (-Z)	20.658 psi	75.0 psi	+1.20D+1.60S
PASS	0.1687	2-way Punching	25.299 psi	150.0 psi	+1.20D+1.60S

Top reinforcing mat required (see 'Bending' tab).

Hand check required for anchor pullout.

FOUNDATION NOTES

1. Design Information and Loads

A. Foundation design in accordance with 2018 International Building Code using the reactions provided by the metal building manufacturer for the following design criteria.
B. Ground Snow Load . . . . . 45 psf
Roof Snow Load . . . . . 34.7 psf
C. Roof Live Load . . . . . 20 psf
D. Roof Collateral Load . . . . . 8 psf
E. Wind Speed . . . . . 115 mph
Exposure C
F. S_{DS} 0.447
G. SDC . . . . . D
H. Frost Depth . . . . . 2'-0"

2. Earthwork

A. Foundation Design Values (assumed)
i. Allowable Soil Bearing Pressure – 1500 psf
ii. Coefficient of Friction – 0.25
iii. Passive Earth Pressure – 200 psf/ft of depth
B. The building pad area shall be stripped of all frozen soil, debris, vegetation, and topsoil. All fill soils and any remaining loose natural soils shall be excavated to expose suitable natural soils.
C. Proof roll the entire building pad area to locate and remove all soft spots. Replace with compacted structural fill.
D. Place all footings and slabs on undisturbed natural soil or on properly compacted structural fill. Contractor shall verify that soil under footings is suitable to support footings.
E. Structural Fill: Structural fill should consist of well-graded sandy gravels with a maximum particle size of 3 inches and 5 to 15 percent fines (materials passing the No. 200 sieve). The liquid limit of fines should not exceed 35 and the plasticity index should be below 15. All fill soils should be free from topsoils, highly organic material, frozen soil, and other deleterious materials. Structural fill should be placed in maximum 8-inch thick loose lifts at a moisture content within 2 percent of optimum and compacted to at least 95 percent of modified proctor density (ASTM D1557) under the building and 90 percent under concrete flatwork.
F. It is the responsibility of the contractor to ensure that the depth of the bottom of the foundation is far enough below the adjacent grade to ensure adequate frost protection.

3. Concrete and Reinforcement

A. Material Standards
i. Concrete
a. Footings: Exposure Classes F0, S0, W0, C0
f'c = 3000 p.s.i., max. w/cm ratio = 0.55
b. Exterior Walls: Exposure Classes F1, S0, W0, C1
f'c = 3500 p.s.i., max. w/cm ratio = 0.55
c. Interior Walls: Exposure Classes F0, S0, W0, C0
f'c = 3000 p.s.i., max. w/cm ratio = N.A.
d. Interior Slabs: Exposure Classes F0, S0, W0, C0
f'c = 3500 p.s.i., max. w/cm ratio = 0.55
e. Air content for Exposures F1–F3 must meet the requirements of Table 19.3.3.1 of ACI 318–14. Air–entraining admixtures shall conform to ASTM C260
f. Use Type II cement for Exposure Class S0. For Exposure Classes S1, S2 and S3 use Type II or Type V as required in Table 19.3.2.1 of ACI 318–14. Cement shall conform to ASTM C150
g. Calcium Chloride admixture shall not be used in Exposures S2 and S3
h. Normal weight aggregates – ASTM C33
ii. Reinforcing
a. Rebar – ASTM A615 Grade 60 (Fy = 60 ksi)
b. Welded wire – ASTM A1064
c. Epoxy/Adhesive – Simpson SET–XP (ICC–ES ESR–2508), Hilti RE–500V3 (ICC–ES ELC–3814), or Dewalt Pure110+ (ICC–ES ESR–3298) unless noted otherwise in the drawings.
iii. Anchor Rods/Bolts
a. All anchor rods shall be cast–in–place headed anchor rods. Use of post–installed (epoxy, adhesive, expansion, screw, etc.) anchors is not allowed without written permission from MVE or unless specifically noted in the drawings.
b. Steel column anchor rods/bolts – ASTM F1554 Grade 36 with ASTM A563 heavy hex nuts and hardened washers (unless noted otherwise)
c. Wood framing anchors – ASTM A307 with A36 plate washers
d. Headed stud anchors (HSA) – ASTM A108
e. Deformed bar anchors (DBA) – ASTM A496
f. Screw Anchors for jambs as indicated in the typical anchor rod schedule – Simpson Titen HD (ICC–ES ESR–2713), Hilti Kwik HUS–TZ (ICC–ES ESR–3027), or Dewalt Screwbolt+ (ICC–ES ESR–2526)
g. Use of hooked anchor rods/bolts is limited under the ACI and the IBC. Headed anchor rods/bolts must be used where indicated in the details.
h. The symbols ℄ A.R./℄ A.B. as shown in the drawings indicate the center line of the anchor rod/bolt pattern, not the center line of any individual anchor rod/bolt.
B. Detail reinforcing to comply with ACI 315 "Manual of Standard Practice for Detailing Reinforcing Concrete Structures" and the Concrete Reinforcing Steel Institute (CRSI) recommendations.
i. Minimum clear concrete cover for reinforcement shall be as follows unless noted otherwise:
a. Concrete cast directly against and permanently exposed to earth – 3"
b. Concrete exposed to weather or earth:
1. #5 bars or smaller – 1½"
2. #6 bars or larger – 2"
c. Concrete not exposed to weather or in contact with the ground – ¾"
d. Slabs on grade – as shown in details, ¾" min. from top of slabs not exposed to weather
ii. Lap Splice Lengths with 1½" minimum clear cover
a. f'c = 2500–3500 p.s.i.
1. #6 and smaller – 49 bar diameters
2. #7 and larger – 76 bar diameters
b. f'c = 4000 p.s.i. or greater
1. #6 and smaller – 38 bar diameters
2. #7 and larger – 60 bar diameters
c. Increase lap splice lengths by 50% where epoxy coated bars are used.
iii. Stagger splices in walls so that no two adjacent bars are spliced in the same location, unless shown otherwise.
iv. Make all bars continuous around corners or provide corner bars of equal size and spacing.
v. Where 12 inches or less of fresh concrete is placed below horizontal reinforcing lap splice length may be reduced by 30%.
vi. Vertical bars in walls, grade beams, and piers to terminate in footings with ACI standard hooks (12 bar diameters) to within 4" of the bottom of the footing unless noted otherwise.
vii. Horizontal wall reinforcing shall terminate at the ends of walls with a 90 degree hook plus a 6 bar diameter extension, unless shown otherwise.
viii. Horizontal wall reinforcing shall be continuous through construction and control joints.
ix. Splices in horizontal reinforcement shall be staggered. Splices in two curtains (where used) shall not occur in the same location.
x. Use chairs or other support devices as required for proper clearance.
xi. Rebar hairpins shall be centered in slabs and shall be wire tied to the slab reinforcing (if any). Rebar hairpins shall be continuous through walls and piers; lap splices in hairpins may only occur in the floor slab unless noted otherwise.
C. Control joints in slabs on grade are recommended to control cracking. See plans for control joint spacing and details.
D. Slabs and grade beams shall not have joints in a horizontal plane. All reinforcement shall be continuous through all construction joints.
E. Floor slab thickness and reinforcing shown in these drawings are adequate to support typical uniform loads only. Mountain View Engineering has not designed the slab for any specific concentrated forces such as those from vehicles, storage racks, or heavy equipment (unless noted otherwise).
F. Welding of rebar is not allowed unless specifically indicated in the drawings. All embedments, reinforcing, and dowels shall be securely tied to framework or to adjacent reinforcing prior to placement of the concrete. Tack welding of rebar joints in grade beams, walls, or cages is not allowed. Where welding of rebar is shown in the drawings, all rebar to be welded shall be ASTM A706 Grade 60.

4. Special Inspections

A. Concrete
i. Spot Footings – Not required (IBC 1705.3 Exception 1)
ii. Continuous Ftgs. – Not required (IBC 1705.3 Exception 2.3)
iii. Slabs – Not required (IBC 1705.3 Exception 3)
iv. Grade Beams – Not required (IBC 1705.3 Exception 4)
v. Walls – Not required (IBC 1705.3 Exception 4)
vi. Anchor rods/bolts – Required (IBC Table 1705.3) Special inspection may be waived subject to the approval of the building official.
B. Steel Reinforcement
i. Placement – Third party special inspection of reinforcing placement need only be performed where specifically required by the building official.
ii. Welding – Special inspection of rebar welding is required (if any is used).

5. Miscellaneous

A. The contractor shall notify engineer of any variations in dimensions.
B. The engineer is not responsible for any deviations from these plans unless such changes are authorized in writing by the engineer.

TYPICAL ANCHOR ROD DIMENSIONS

DIA.	EMBED
½"*	10"
⅝"*	12"
¾"* or ⅞"	14"
⅞"	18"
1"	22"
1⅛"	24"
1¼"	24"

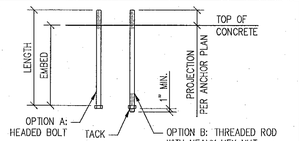

*AT OPENING JAMBS, ½"ø x 4" OR ⅝"ø x 4" SCREW ANCHORS MAY BE USED IN LIEU OF CAST–IN–PLACE ANCHORS. OPENING JAMB ANCHORS ARE NOT SHOWN ON THIS DRAWING, SEE METAL BUILDING ANCHOR PLAN.

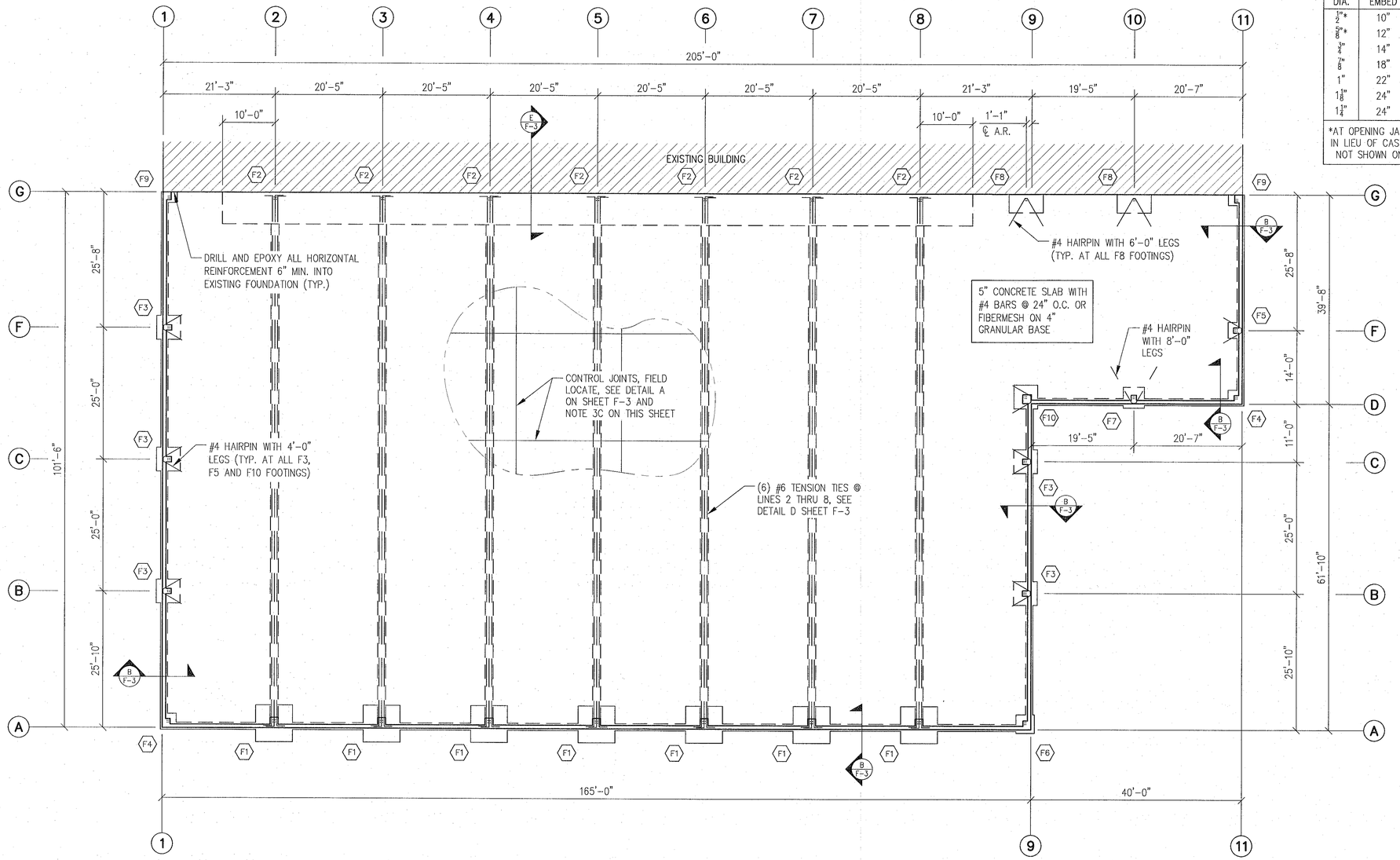

NOTE: VERIFY ALL DOOR SIZES AND LOCATIONS WITH R & M STEEL PRIOR TO CONSTRUCTION. BLOCKOUT AT ALL DOORS SEE DETAIL C SHEET F–3.

F1 INDICATES APPLICABLE FOOTING DETAIL.

FOUNDATION PLAN

SCALE: 3/32"=1'–0"

NOTE: COORDINATE THIS DRAWING WITH THE R & M STEEL ANCHOR BOLT PLAN.

MOUNTAIN VIEW ENGINEERING, INC.
Structural Engineering Consulting Design
345 North Main Street Ste. A, Brigham City, Utah 84302 (435) 734–9700 Fax (435) 734–9519

SHEET TITLE: FOUNDATION PLAN
JOB NAME: CHUBBUCK SCHOOL DISTRICT PORTNEUF VALLEY TECH / CAREER
LOCATION: POCATELLO, IDAHO
CONTRACTOR: -

PLAN ISSUE DATES

	DATE:	BY:	DESCRIPTION:
1	9–11–23	J.J.	FOR PERMIT

PROFESSIONAL ENGINEER LICENSED 19845 STATE OF IDAHO JEDEDIAH V. LARSEN
SEP 11 2023

SHEET NUMBER: F-1

DRAWN BY:	J.J.
ENGINEER:	J. LARSEN
MVE JOB NUMBER:	23-0958

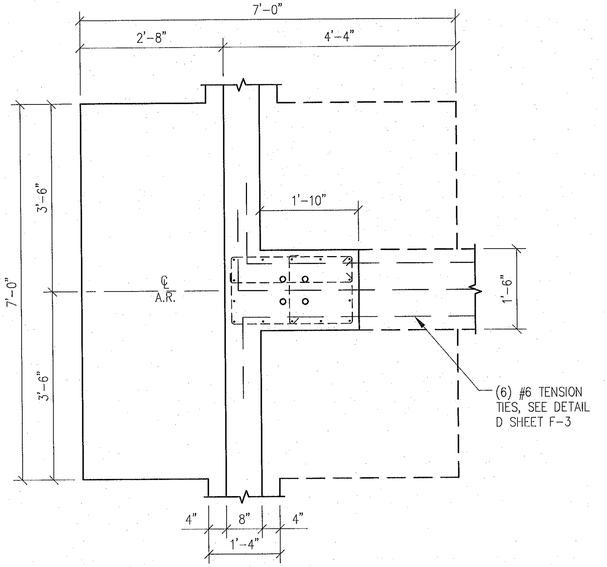

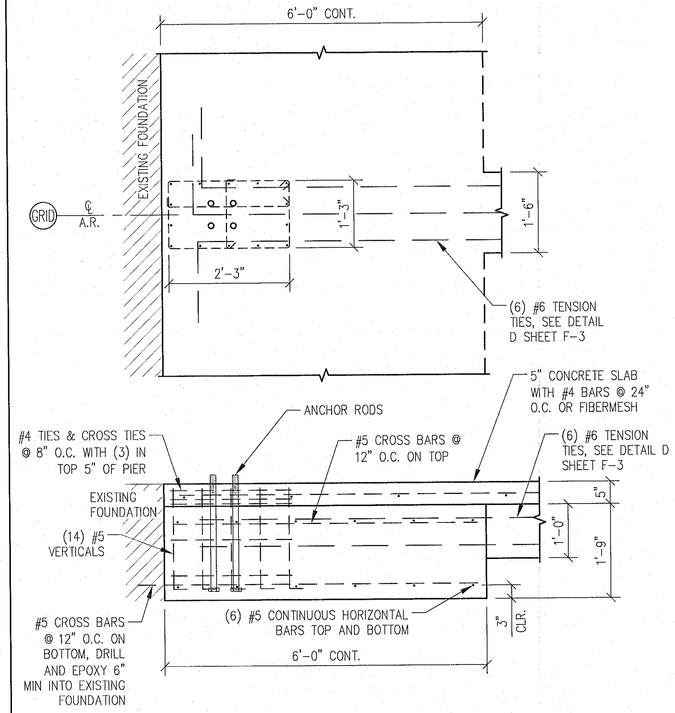

F2 SIDEWALL FOOTING DETAIL
3/4"=1'-0"

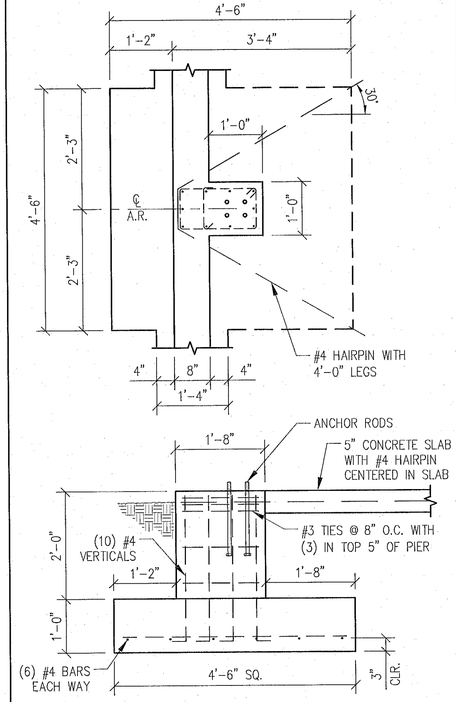

F3 ENDWALL FOOTING DETAIL
3/4"=1'-0"

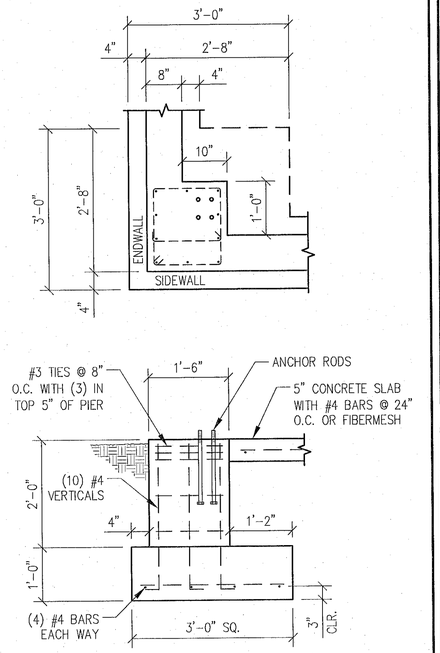

F4 CORNER FOOTING DETAIL
3/4"=1'-0"

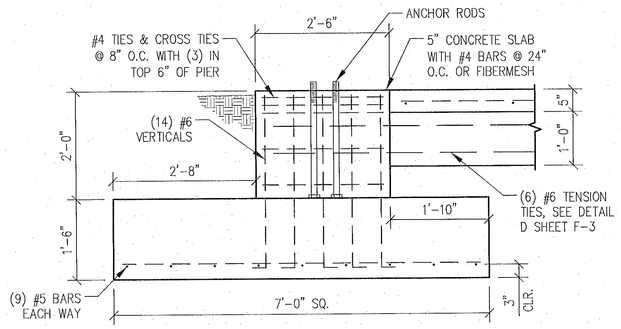

F1 SIDEWALL FOOTING DETAIL
3/4"=1'-0"

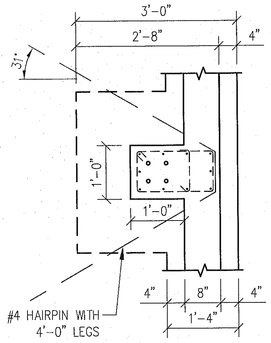

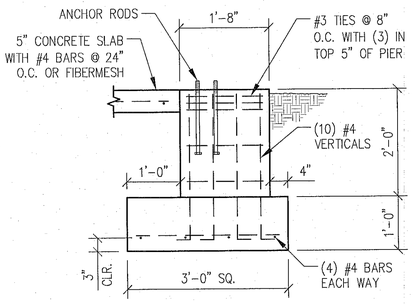

F5 ENDWALL FOOTING DETAIL
3/4"=1'-0"

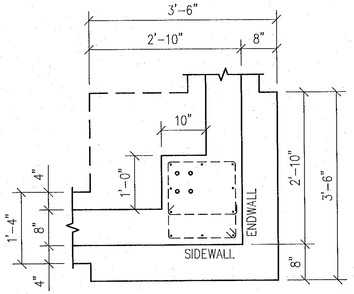

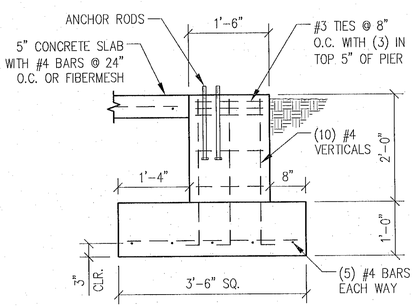

F6 CORNER FOOTING DETAIL
3/4"=1'-0"

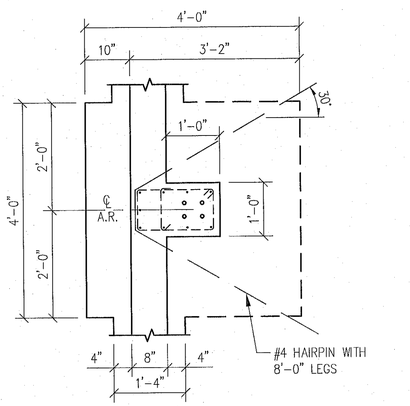

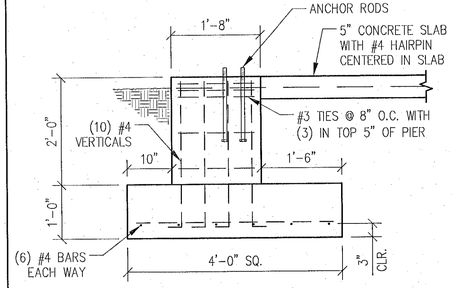

F7 SIDEWALL FOOTING DETAIL
3/4"=1'-0"

MOUNTAIN VIEW ENGINEERING, INC.
Structural Engineering Consulting Design
345 North Main Street Ste. A, Brigham City, Utah 84302 (435) 734-9700 Fax (435) 734-9519

SHEET TITLE: FOUNDATION DETAILS
JOB NAME: CHUBBUCK SCHOOL DISTRICT
PORTNEUF VALLEY TECH / CAREER
LOCATION: POCATELLO, IDAHO
CONTRACTOR: -

PLAN ISSUE DATES

	DATE:	BY:	DESCRIPTION:
1	9-11-23	J.J.	FOR PERMIT

PROFESSIONAL ENGINEER LICENSED 19845 STATE OF IDAHO JEREDIAH V. LARSEN
SEP 11 2023

SHEET NUMBER: F-2

DRAWN BY:	J.J.
ENGINEER:	J. LARSEN
MVE JOB NUMBER:	23-0958

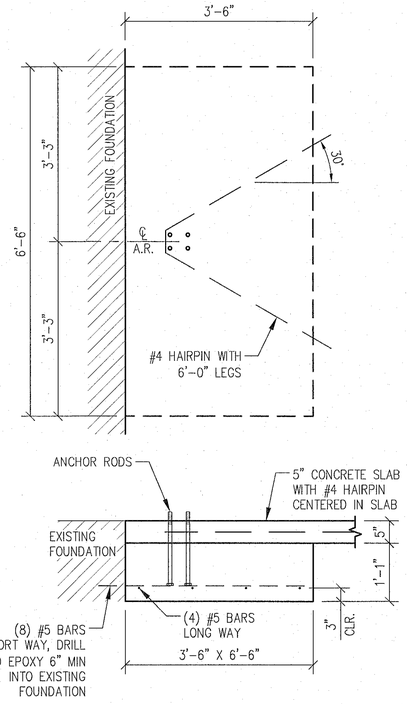

F8 SIDEWALL FOOTING DETAIL
3/4"=1'-0"

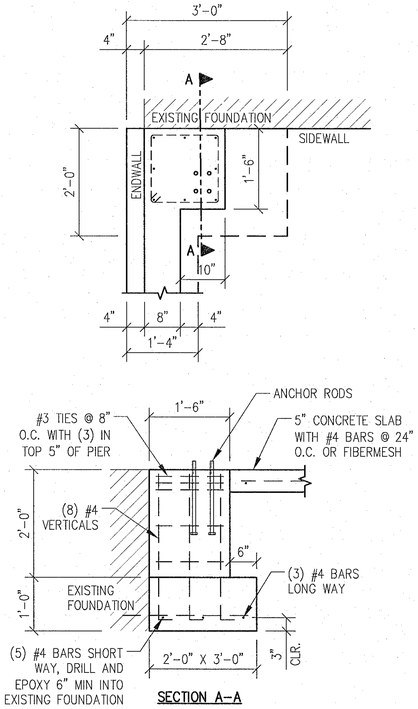

F9 CORNER FOOTING DETAIL
3/4"=1'-0"

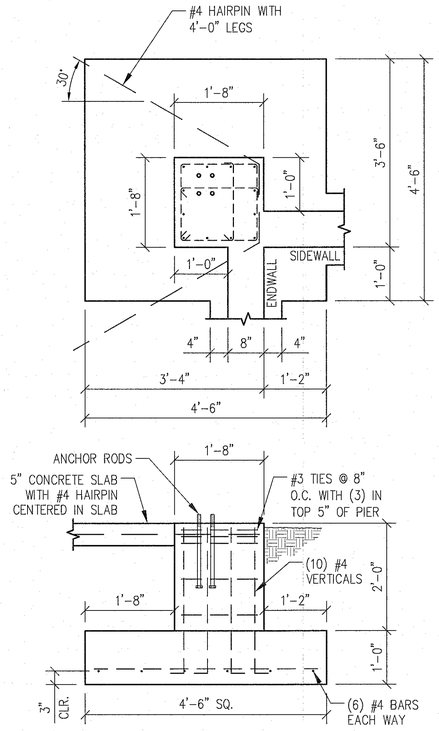

F10 CORNER FOOTING DETAIL
3/4"=1'-0"

CONTROL JOINT NOTES:

1. Control joints shall be field located by the contractor.
2. Control joints shall be located to limit the frequency and width of random cracks in the concrete slab.
3. Locate and install control joints in accordance with ACI 360R "Design of Slabs on Ground" and the details shown.
4. Maximum spacing of joints shall be per the table below.
5. Saw cuts should be made as soon as possible.

MAXIMUM SPACING OF CONTROL JOINTS

Slab thickness (T), in.	Slump 4 in. to 6 in.	
	Maximum-size aggregate less than 3/4 in.	Maximum-size aggregate 3/4 in. and larger
4	8 ft.	10 ft.
5	10 ft.	13 ft.
6	12 ft.	15 ft.
7	14 ft.	18 ft.
8	16 ft.	20 ft.

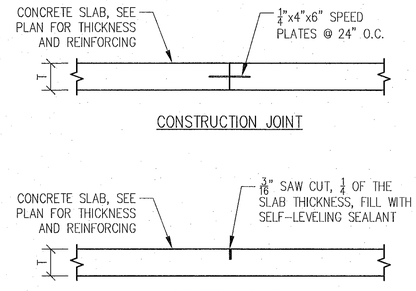

A CONTROL JOINTS
N.T.S.

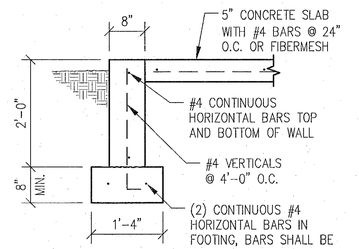

B PERIMETER GRADE BEAM DETAIL
3/4"=1'-0"

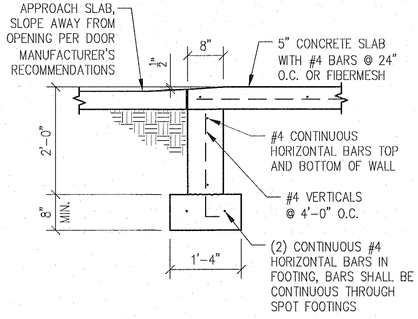

C BLOCKOUT AT DOORS
3/4"=1'-0"

(6) #6 REBAR TENSION TIES CONTINUOUS ACROSS BUILDING, TYPICAL LINES 2 THRU 8. TIES TO TERMINATE IN COLUMN PIERS WITH 90° BEND (16d_b MIN). NO MORE THAN 50% OF BARS MAY BE SPLICED AT ONE LOCATION. STAGGER SPLICES A DISTANCE AT LEAST EQUAL TO SPLICE LENGTH. SEE CHART BELOW FOR SPLICE LENGTH AND STIRRUP REQUIREMENTS.

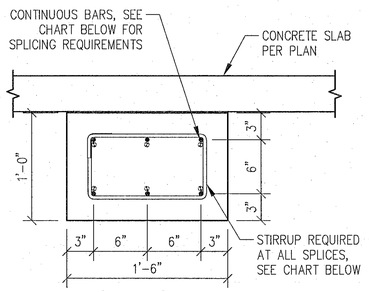

BAR SIZE	LAP LENGTH	STIRRUPS	
		SIZE	NO. & SPACING
#5	24"	#3	8 @ 3½"
#6	30"	#3	11 @ 3"
#7	42"	#4	9 @ 5¼"
#8	48"	#4	11 @ 4¾"

D TENSION TIE GRADE BEAM DETAIL
1 1/2"=1'-0"

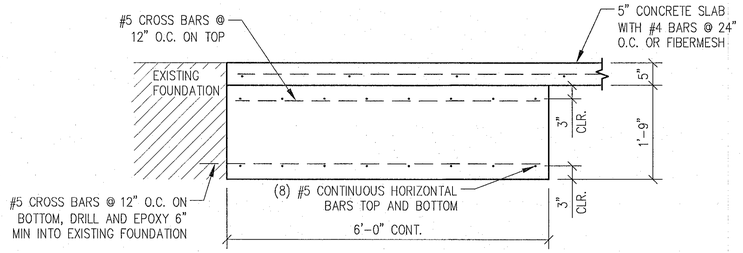

E THICKENED SLAB EDGE DETAIL
3/4"=1'-0"

MOUNTAIN VIEW ENGINEERING, INC.
Structural Engineering Consulting Design
345 North Main Street Ste. A, Brigham City, Utah 84302 (435) 734-9700 Fax (435) 734-9519

SHEET TITLE: FOUNDATION DETAILS
JOB NAME: CHUBBUCK SCHOOL DISTRICT
LOCATION: PORTNEUF VALLEY TECH / CAREER
CONTRACTOR: POCATELLO, IDAHO

PLAN ISSUE DATES

	DATE:	BY:	DESCRIPTION:
1	9-11-23	J.J.	FOR PERMIT

PROFESSIONAL ENGINEER LICENSED 19845 STATE OF IDAHO JEDEDIAH V. LARSEN
SEP 11 2023

SHEET NUMBER: F-3

DRAWN BY:	J.J.
ENGINEER:	J. LARSEN
MVE JOB NUMBER:	23-0958

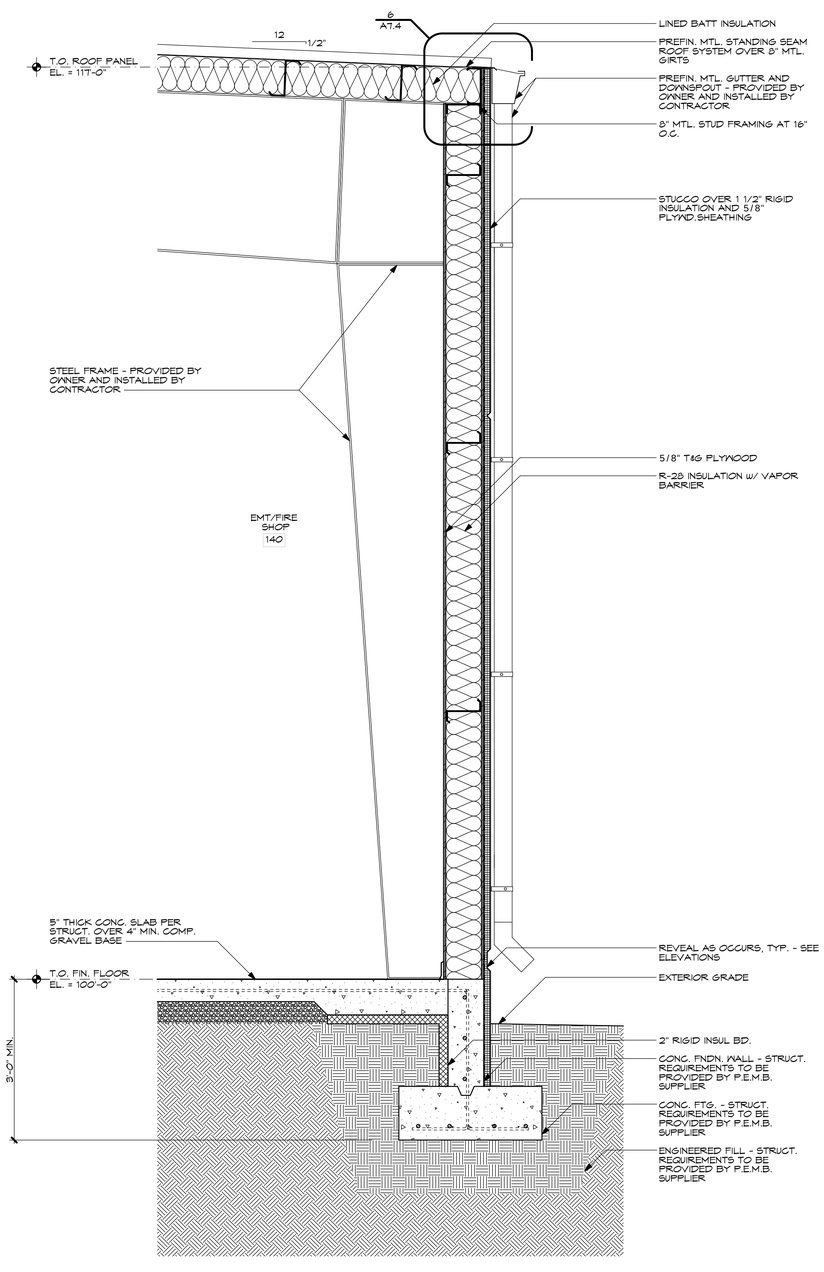

1 WALL SECTION
A7.1 3/4" = 1'-0"

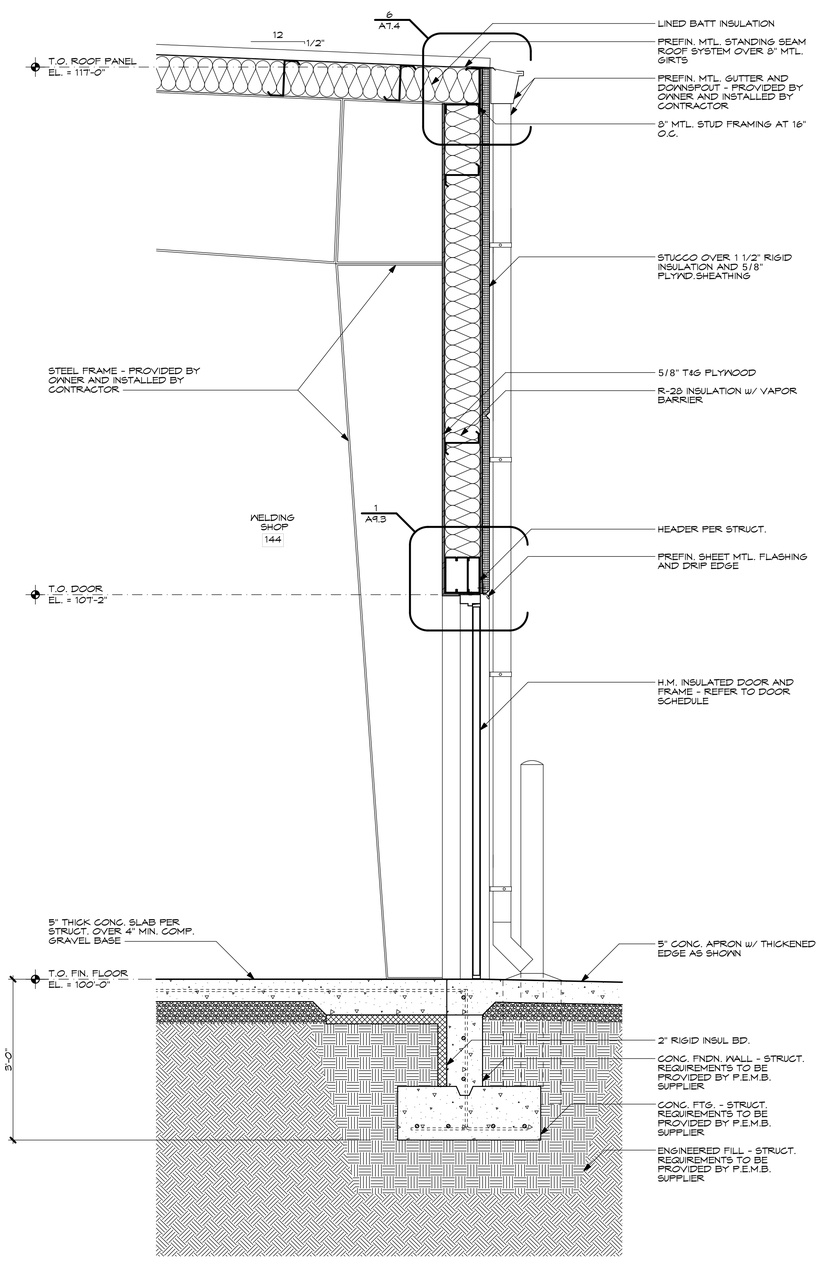

2 WALL SECTION
A7.1 3/4" = 1'-0"

4

LICENSED ARCHITECT
AR - 986832
7-14-23
SCOTT R. LLOYD
STATE OF IDAHO

COPYRIGHT 2023
JENSEN•HAYES•SHROPSHIRE
ARCHITECTS, P.A.

125 NORTH GARFIELD
POCATELLO, IDAHO 83204
(208) 232-1223

JENSEN•HAYES•SHROPSHIRE
ARCHITECTS, P.A.

PV TEC BUILDING AND REMODEL
4200 HAWTHORNE RD. POCATELLO, IDAHO

WALL SECTIONS

REVISIONS:

DATE: JUL 23

DRAWING NO. A7.1

JOB NO. 2306

23 OF 49

FILE NAME: 2306 - PV TEC Addition_R76.pln
UPDATE: 07-14-2023
DRAWN BY: ih

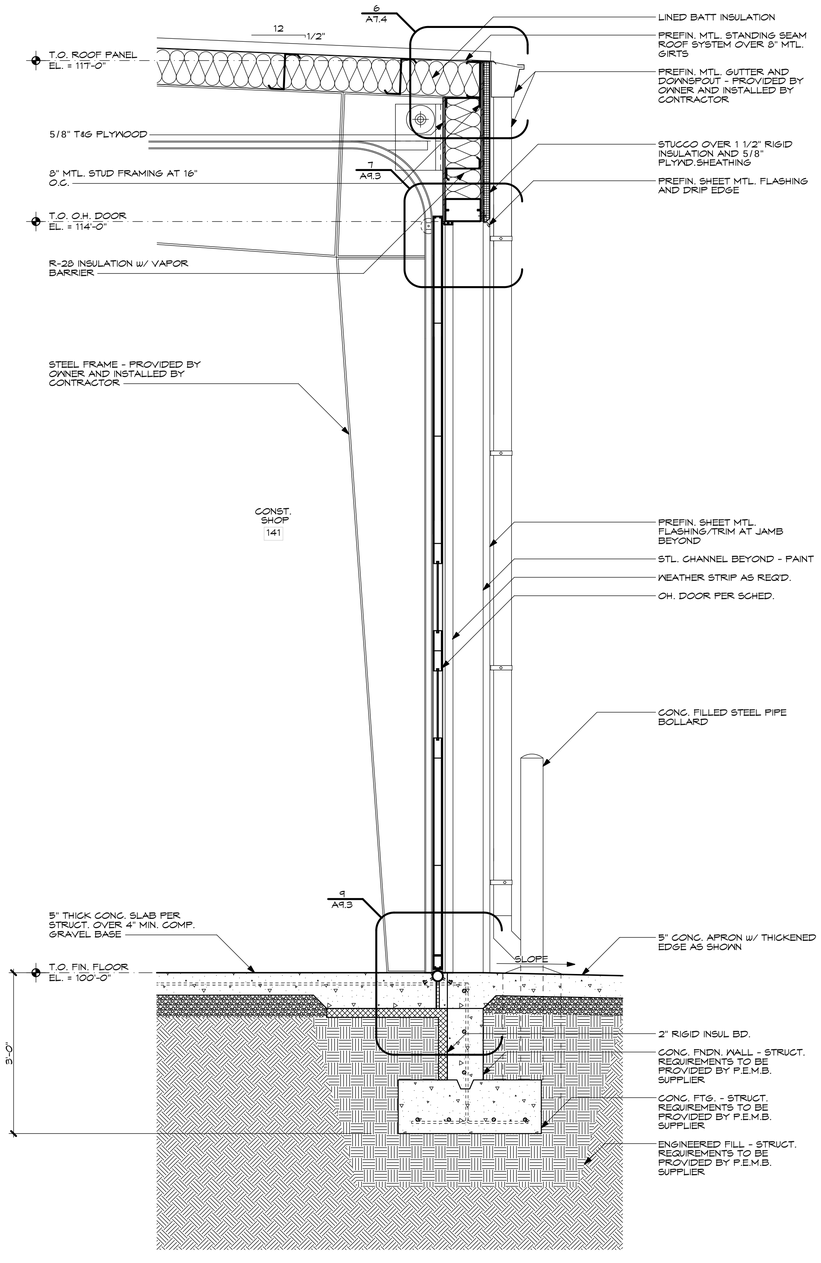

3 WALL SECTION
A7.2 3/4" = 1'-0"

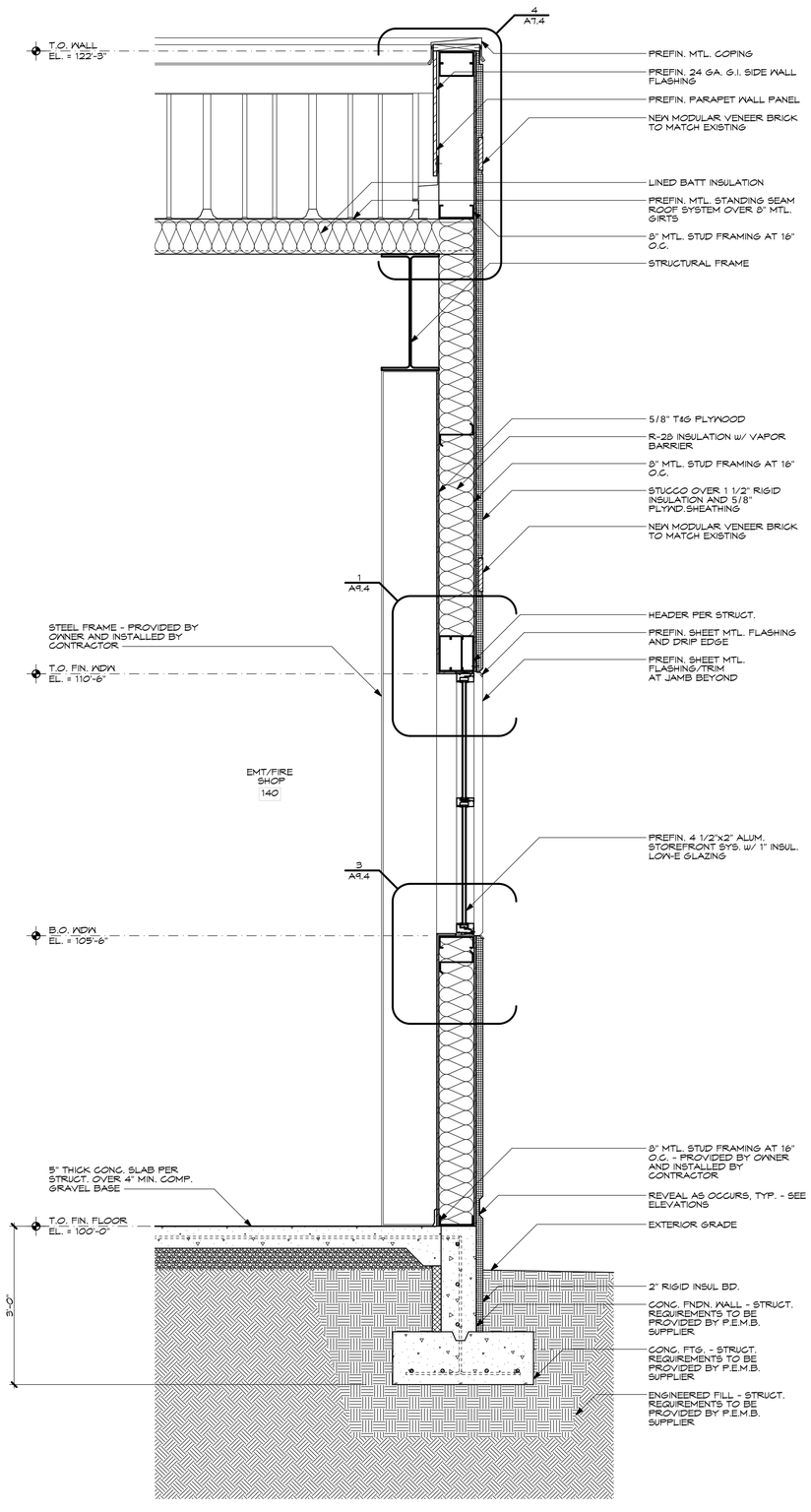

4 WALL SECTION
A7.2 3/4" = 1'-0"

4

LICENSED ARCHITECT
AR - 986832
7-14-23
SCOTT R. LLOYD
STATE OF IDAHO

COPYRIGHT 2023
JENSEN•HAYES•SHROPSHIRE ARCHITECTS, P.A.

125 NORTH GARFIELD
POCATELLO, IDAHO 83204
(208) 232-1223

JENSEN•HAYES•SHROPSHIRE
ARCHITECTS, P.A.

PV TEC BUILDING AND REMODEL
4200 HAWTHORNE RD. POCATELLO, IDAHO

WALL SECTIONS

REVISIONS:

DATE: JUL 23

DRAWING NO. A7.2

JOB NO. 2306

24 OF 49

FILE NAME: 2306 - PV TEC Addition_R76.pln
UPDATE: 07-14-2023
DRAWN BY: ih

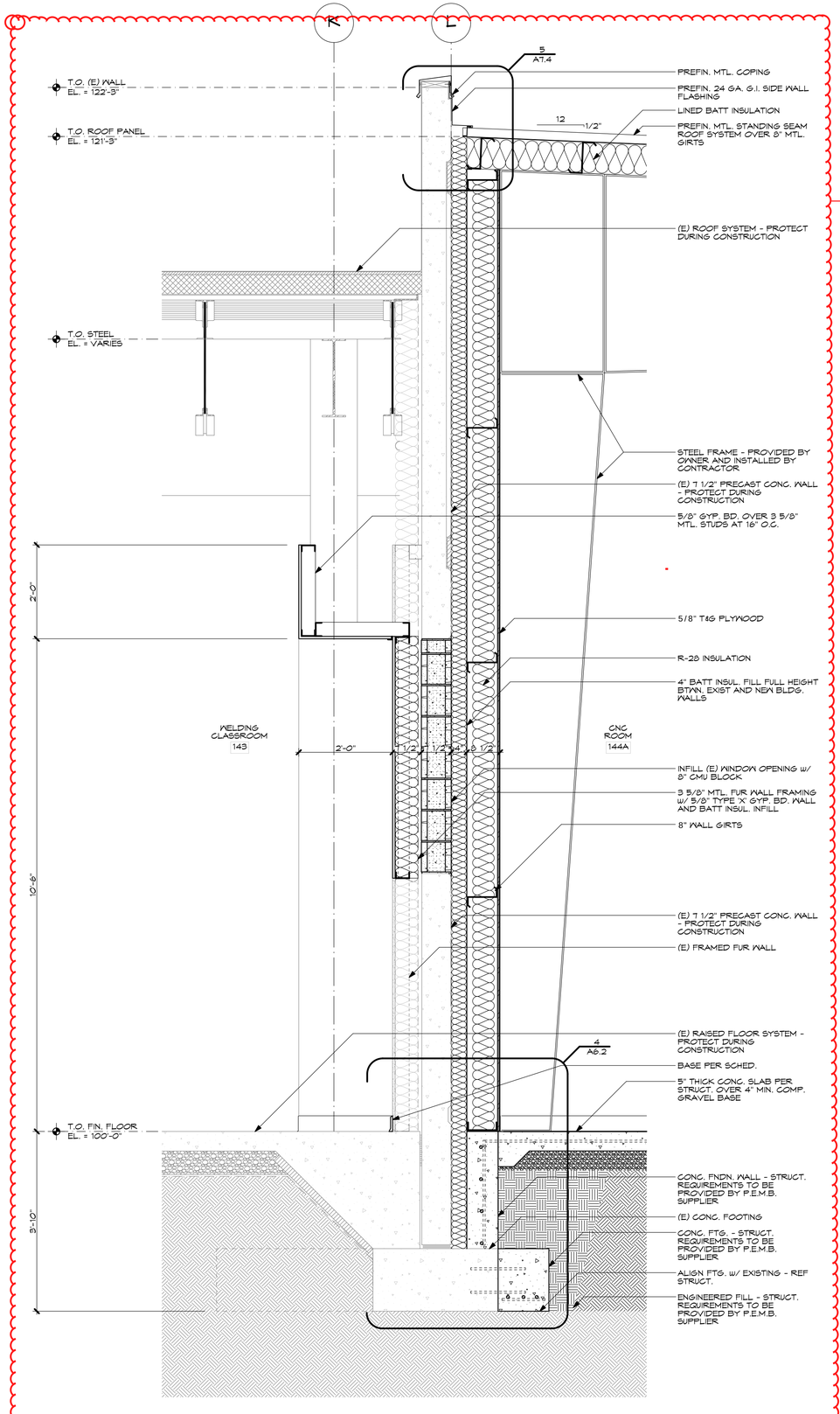

5 WALL SECTION
A7.3 3/4" = 1'-0"

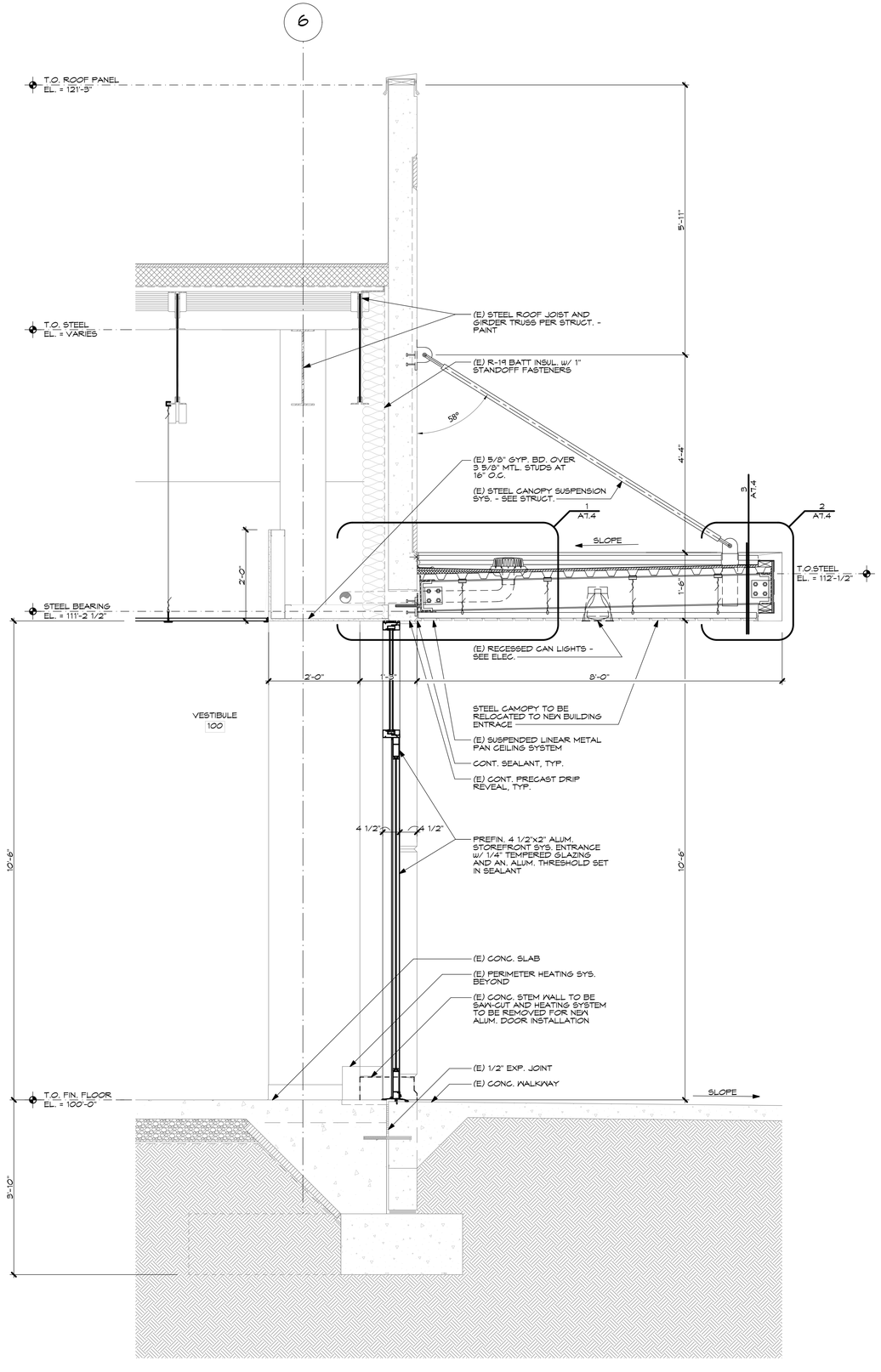

6 WALL SECTION
A7.3 3/4" = 1'-0"

LICENSED ARCHITECT
AR - 986832
7-14-23
SCOTT R. LLOYD
STATE OF IDAHO

COPYRIGHT 2023
JENSEN•HAYES•SHROPSHIRE ARCHITECTS, P.A.

125 NORTH GARFIELD
POCATELLO, IDAHO 83204
(208) 232-1223

JENSEN•HAYES•SHROPSHIRE ARCHITECTS, P.A.

PV TEC BUILDING AND REMODEL
4200 HAWTHORNE RD. POCATELLO, IDAHO

WALL SECTIONS

REVISIONS:

DATE: JUL 23

JOB NO. 2306

DRAWING NO. A7.3

25 OF 49

FILE NAME: 2306 - PV TEC Addition_R76.pln
UPDATE: 07-14-2023
DRAWN BY: ih

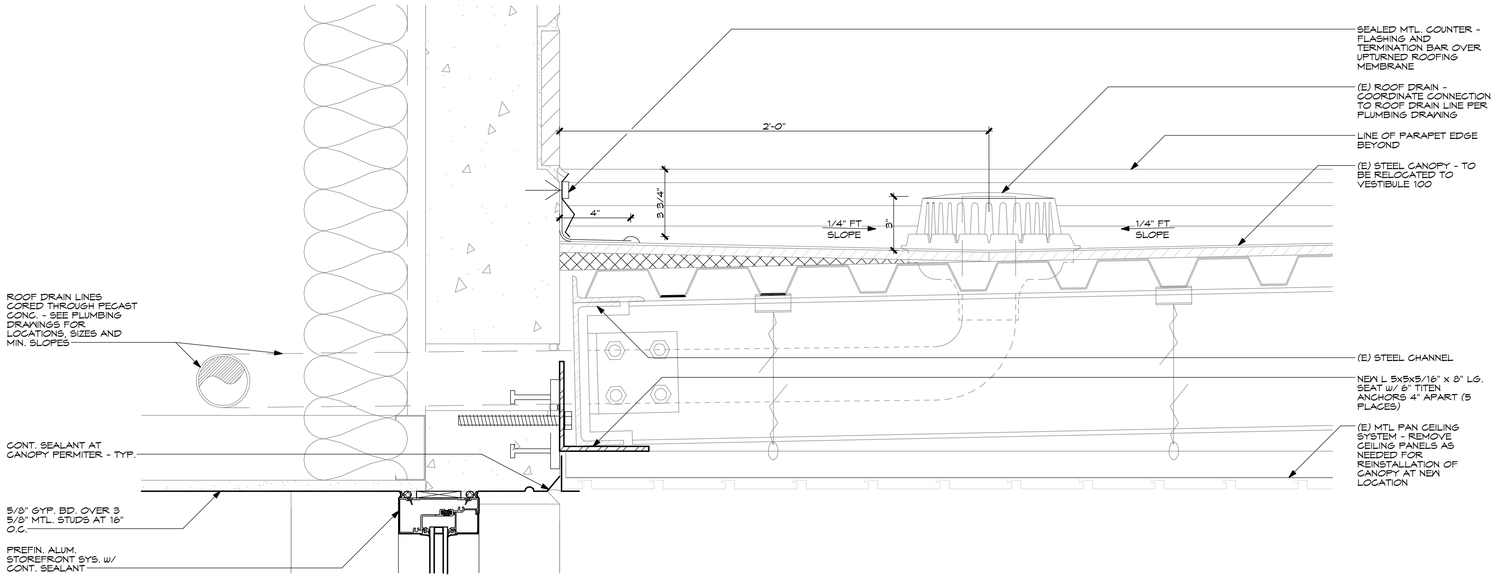

NOTE: CANOPY DETAIL SHOWS EXISTING ELEMENTS TO BE REMOVED, SALVAGED AND REINSTALLED IN DIFFERENT LOCATION. SUBSTITUTE EXISTING ELEMENTS w/ NEW WHERE DAMAGE OCCURED.

1 CANOPY DETAIL
A7.4 3" = 1'-0"

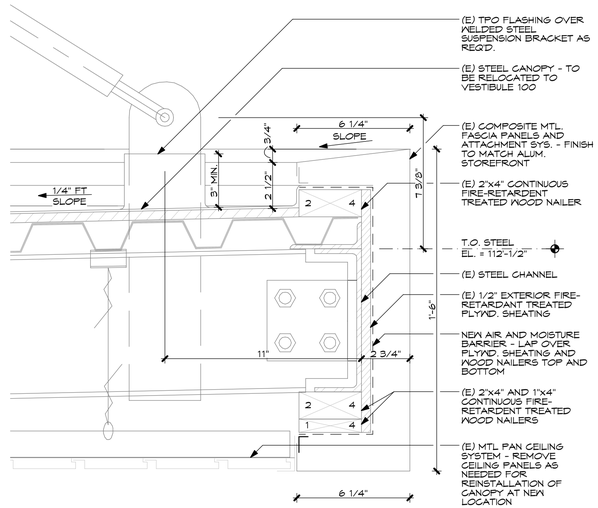

NOTE: CANOPY DETAIL SHOWS EXISTING ELEMENTS TO BE REMOVED, SALVAGED AND REINSTALLED IN DIFFERENT LOCATION. SUBSTITUTE EXISTING ELEMENTS w/ NEW WHERE DAMAGE OCCURED.

2 CANOPY DETAIL
A7.4 3" = 1'-0"

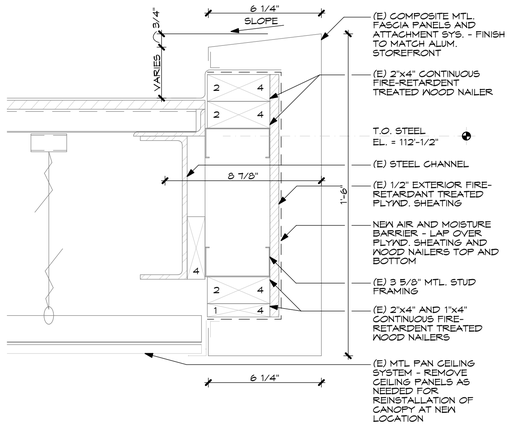

NOTE: CANOPY DETAIL SHOWS EXISTING ELEMENTS TO BE REMOVED, SALVAGED AND REINSTALLED IN DIFFERENT LOCATION. SUBSTITUTE EXISTING ELEMENTS w/ NEW WHERE DAMAGE OCCURED.

3 CANOPY DETAIL
A7.4 3" = 1'-0"

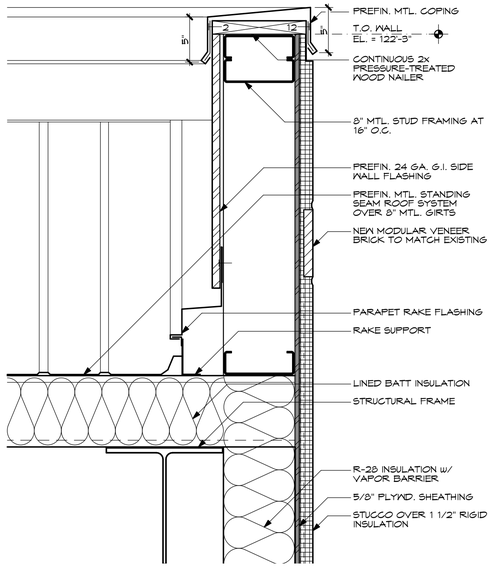

4 PARAPET DETAIL
A7.4 1 1/2" = 1'-0"

4

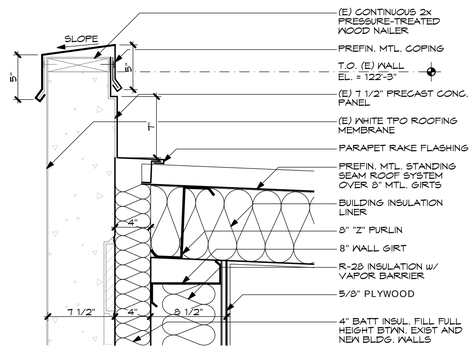

5 PARAPET DETAIL
A7.4 1 1/2" = 1'-0"

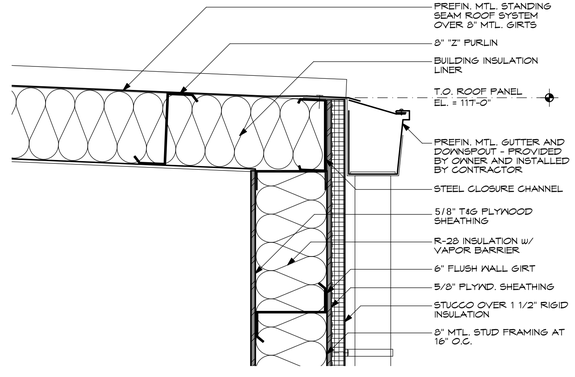

6 EAVE DETAIL
A7.4 1 1/2" = 1'-0"

LICENSED ARCHITECT
AR - 986832
7-14-23
SCOTT R. LLOYD
STATE OF IDAHO

COPYRIGHT 2023
JENSEN•HAYES•SHROPSHIRE
ARCHITECTS, P.A.

125 NORTH GARFIELD
POCATELLO, IDAHO 83204
(208) 232-1223

JENSEN•HAYES•SHROPSHIRE
ARCHITECTS, P.A.

PV TEC BUILDING AND REMODEL
4200 HAWTHORNE RD, POCATELLO, IDAHO

CANOPY AND ROOF DETAILS

REVISIONS:

DATE: JUL 23

JOB NO. 2306

DRAWING NO. A7.4

26 OF 49

FILE NAME: 2306 - PV TEC Addition_R76.pln
UPDATE: 07-14-2023
DRAWN BY: ih

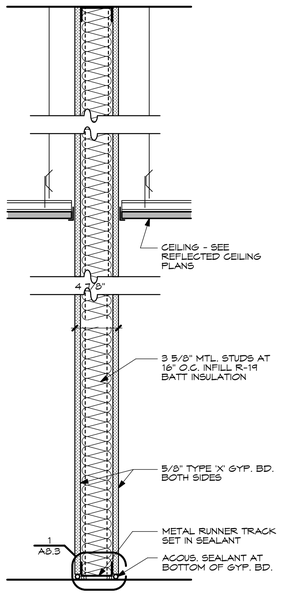

A SOUND PARTITION WALL

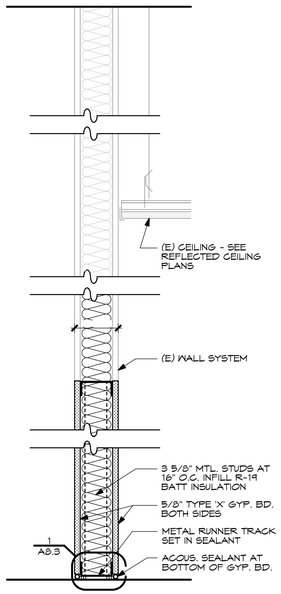

B WALL INFILL AT EXISTING OPENING

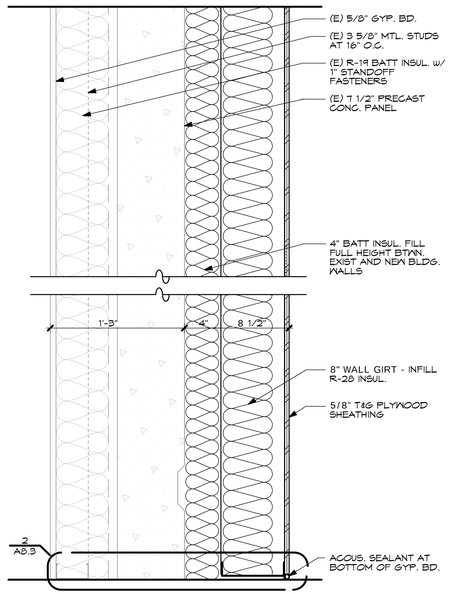

C EXISTING WALL w/ 4" INSULATION AND SOUND PARTITION WALL

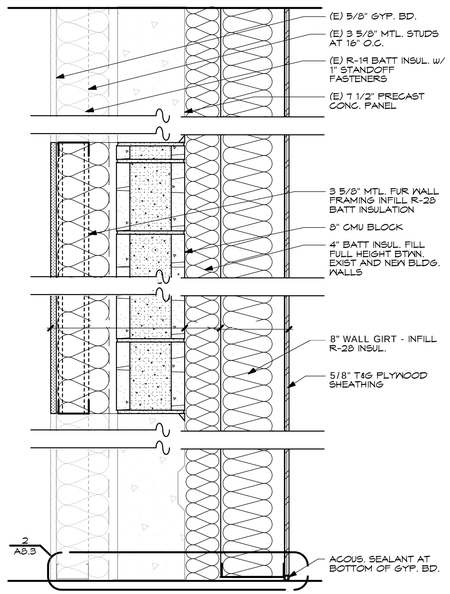

D INFILL (E) WINDOW OPENING AND 4" INSULATION AND 2-HOUR FIRE-RATED WALL

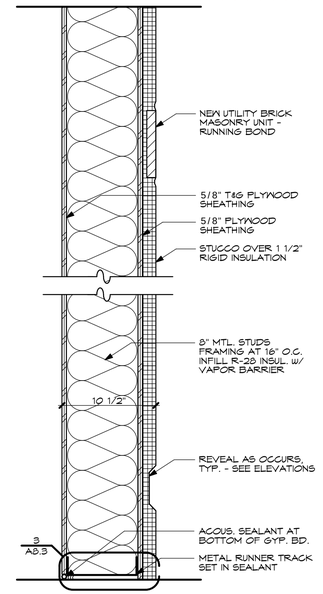

E EXTERIOR WALL FULL HEIGHT

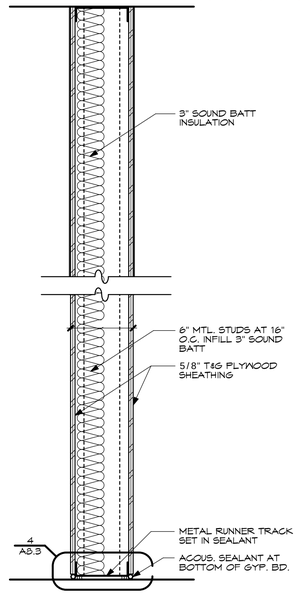

F SOUND PARTITION WALL

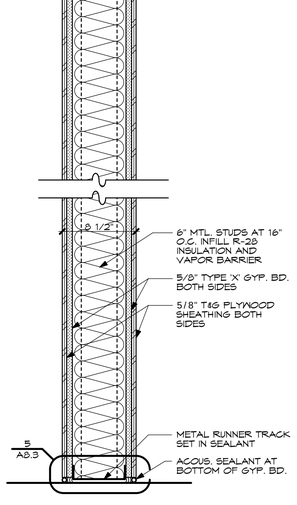

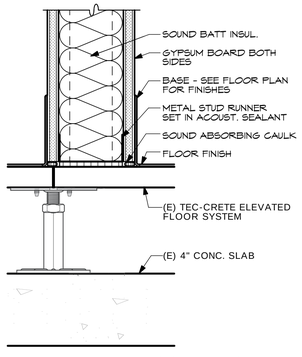

NOTE: SECURE METAL STUD RUNNER TO FLOOR SYSTEM WITH POWDER ACTUATED PINS (0.3" DIA. HEAD AND 0.143" LONG SHANK) AT 16" INTERVALS

1 BASE OF WALL DETAIL
A8.3 — 3" = 1'-0"

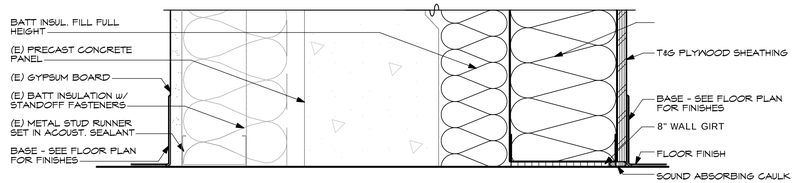

2 BASE OF WALL DETAIL
A8.3 — 3" = 1'-0"

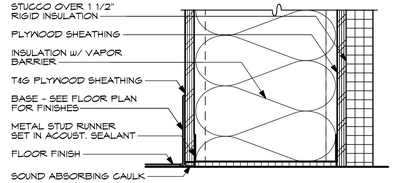

3 BASE OF WALL DETAIL
A8.3 — 3" = 1'-0"

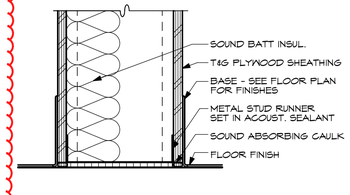

4 BASE OF WALL DETAIL
A8.3 — 3" = 1'-0"

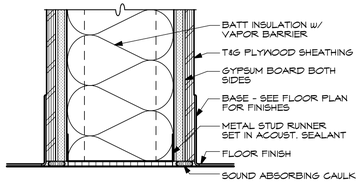

5 BASE OF WALL DETAIL
A8.3 — 3" = 1'-0"

LICENSED ARCHITECT
AR - 986832
7-14-23
SCOTT R. LLOYD
STATE OF IDAHO

COPYRIGHT 2023
JENSEN•HAYES•SHROPSHIRE ARCHITECTS, P.A.

125 NORTH GARFIELD
POCATELLO, IDAHO 83204
(208) 232-1223

JENSEN•HAYES•SHROPSHIRE
ARCHITECTS, P.A.

PV TEC BUILDING AND REMODEL
4200 HAWTHORNE RD. POCATELLO, IDAHO

WALL TYPES AND DETAILS

REVISIONS:

DATE: JUL 23

DRAWING NO. **A8.3**

JOB NO. 2306

30 OF 49

FILE NAME: 2306 - PV TEC Addition_R76.pln
UPDATE: 07-14-2023
DRAWN BY: ih