QUICK START

Cisco Unified Video Camera

1 Install

For Cisco Unified IP Phone 9971 and 9951.

1. Remove the protective plastic from the camera lens and body.
2. Remove the small plastic cover located on the topside of the phone display.
3. With your phone idle, slide the camera's USB connector into the phone's USB port (back of phone display).

4. After the phone confirms installation, adjust settings (see the Settings section).

Mount the camera on your monitor

If you prefer to mount the camera on your computer monitor (not on the phone), obtain a mounting clip and USB extension cable from your system administrator.

On the clip are two removeable sliding supports: large and small. Use the large support for a laptop monitor; use the small support for a desktop monitor (shown). Remove the remaining support.

Place the camera in the clip, then connect the extension cable.

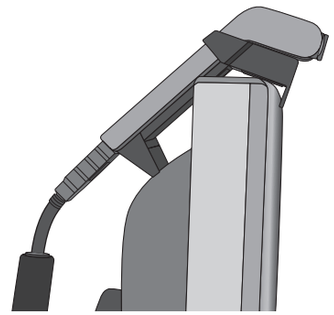

2 Make video calls

To place a video call, dial the phone as usual.

If the other party's phone has a camera enabled, the call can include 2-way video. If the other party does not have a camera enabled, the call can include one-way video (your video displays on the other party's phone).

Similarly, your phone can display video from another party even if you do not have a camera enabled during the call.

3 Choose your view

During a video call, you can:

- Enable full-screen video
- Swap between views
- Adjust the picture-in-picture position
- Hide video

Enable full-screen video

To switch to a full-screen view from a window view, press the **Full Screen** softkey.

To return to the window view, press the **Minimize** softkey.

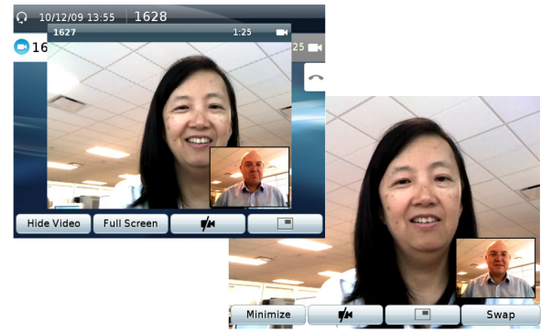

Note: If you are in the full-screen view and receive a new call, a pop-up notification displays to alert you.

Swap between views

You can find your "self view" (the image that your camera transmits to others) displayed by default in the picture-in-picture window in a corner of your phone screen.

From the full-screen view, you can press the **Swap** softkey to display your "self view" full-screen and to move the other party's image to the picture-in-picture (PIP) window.

Press **Swap** again to move your "self view" back to the PIP window.

Adjust the picture-in-picture position

Press the **picture-in-picture** (PIP) softkey to move the PIP window to a different quadrant of your phone screen, or to hide the PIP window.

The icon on the PIP softkey indicates where the PIP window will appear (or if it will be hidden) when you next press the PIP softkey.

Hide video

To hide all video on your phone screen, press the **Hide Video** softkey. Hide Video is available from the window view only (not full-screen).

To view video again, press the **Show Video** softkey.

4 Mute video

Muting video means blocking your phone from transmitting video to other parties on a call.

Mute video and audio

To mute both video and audio, press the **Mute** button on your phone.

To unmute video and audio, press **Mute** again.

Mute video only

To mute video only (not audio), press the **Mute Video** softkey.

To verify that your video is muted, look for:

- The Unmute Video softkey (red icon).
- A red light on your camera.
- The Mute Video icon on your phone screen (not visible in full-screen view).
- A Mute "self view" image with a red icon (not visible if self view is in a hidden PIP window).

To resume video transmission, press the **Unmute Video** softkey.

Mute audio only

To mute audio only (not video), do these two steps:

1. Press the **Mute** button.
2. Press the **Unmute Video** softkey.

5 Conferencing

To create a video conference, set up a conference call as usual. To participate in a video conference, answer the call as usual.

During a video conference, participants appear on your phone screen.

6 Settings

Adjust these camera settings from your phone:

- View Area
- Brightness
- Auto Transmit

View Area

The View Area acts as a wide angle and zoom function for your camera.

Adjust the camera view area

1. Press the **Applications** button.
2. Select **Accessories**.
3. Highlight **Cisco Unified Camera**.
4. Press the **Set-up** softkey.
5. Select **View Area**.
6. Use the arrows on the Navigation pad to increase or decrease the view area.
7. Press the **Save** softkey.

Brightness

The Brightness setting affects the video that you transmit to others; it does not affect video that you receive from other parties.

Because field of view can affect the brightness, adjust the View Area for your camera before adjusting Brightness.

Adjust brightness

1. Press the **Applications** button.
2. Select **Accessories**.
3. Highlight **Cisco Unified Camera**.
4. Press the **Set-up** softkey.
5. Select **Brightness**.
6. Use the arrows on the Navigation pad to increase or decrease brightness.
7. Press the **Save** softkey.

Auto Transmit

When Auto Transmit Video is on (default setting), the camera streams video automatically during calls.

When Auto Transmit is off, video for each call is automatically muted (however, your phone still receives video). To resume video transmission in this case, press the **Unmute Video** softkey.

Turn Auto Transmit on or off

1. Press the **Applications** button.
2. Select **Accessories**.
3. Highlight **Cisco Unified Camera**.
4. Press the **Set-up** softkey.
5. Press the **Turn On** or **Turn Off** softkey.

7 Tips

What does the Preview softkey do?

Press the **Preview** softkey to see the view from your camera when you are not in a video call. Try using Preview before making video calls to help set up and position your camera effectively.

What happens when I put a call on hold?

Video transmission is muted (blocked) until you resume the call.

What does the camera light indicate?

- Green—Your video is transmitting.
- Red—Your video is muted.

How can I quickly block my camera?

- Mute your video transmission—See the Mute video section.
- Close the shutter—Rotate the lens on the camera clockwise to close the shutter. Rotate counter-clockwise to open the shutter again.

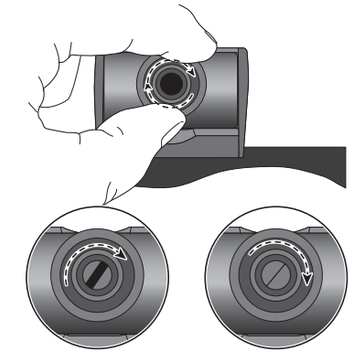

Video from my camera is dark (or light)

Lighting conditions within the camera's field of view affect the brightness. Try moving the camera to see if the brightness improves (for example, try excluding ceiling lights from the camera's field of view). You can also adjust the brightness as described in the Settings section.

Where can I find more information?

Find User Guides, Quick Start Guides, and Quick Reference Cards online:

http://cisco.com/en/US/products/ps10453/products_user_guide_list.html

Note For best results, print this guide on 8.5 x 14" (legal-sized) paper.

Americas Headquarters
Cisco Systems, Inc.
170 West Tasman Drive
San Jose, CA 95134-1706
USA
http://www.cisco.com
Tel: 408 526-4000
800 553-NETS (6387)
Fax: 408 527-0883

Cisco, Cisco Systems, the Cisco logo, and the Cisco Systems logo are registered trademarks or trademarks of Cisco Systems, Inc. and/or its affiliates in the United States and certain other countries. All other trademarks mentioned in this document or Website are the property of their respective owners. The use of the word partner does not imply a partnership relationship between Cisco and any other company. (0705R)

© 2010 Cisco Systems, Inc. All rights reserved.

Published March 24, 2010, OL-21142-01