VEX GO

Competiton Base
Build Instructions

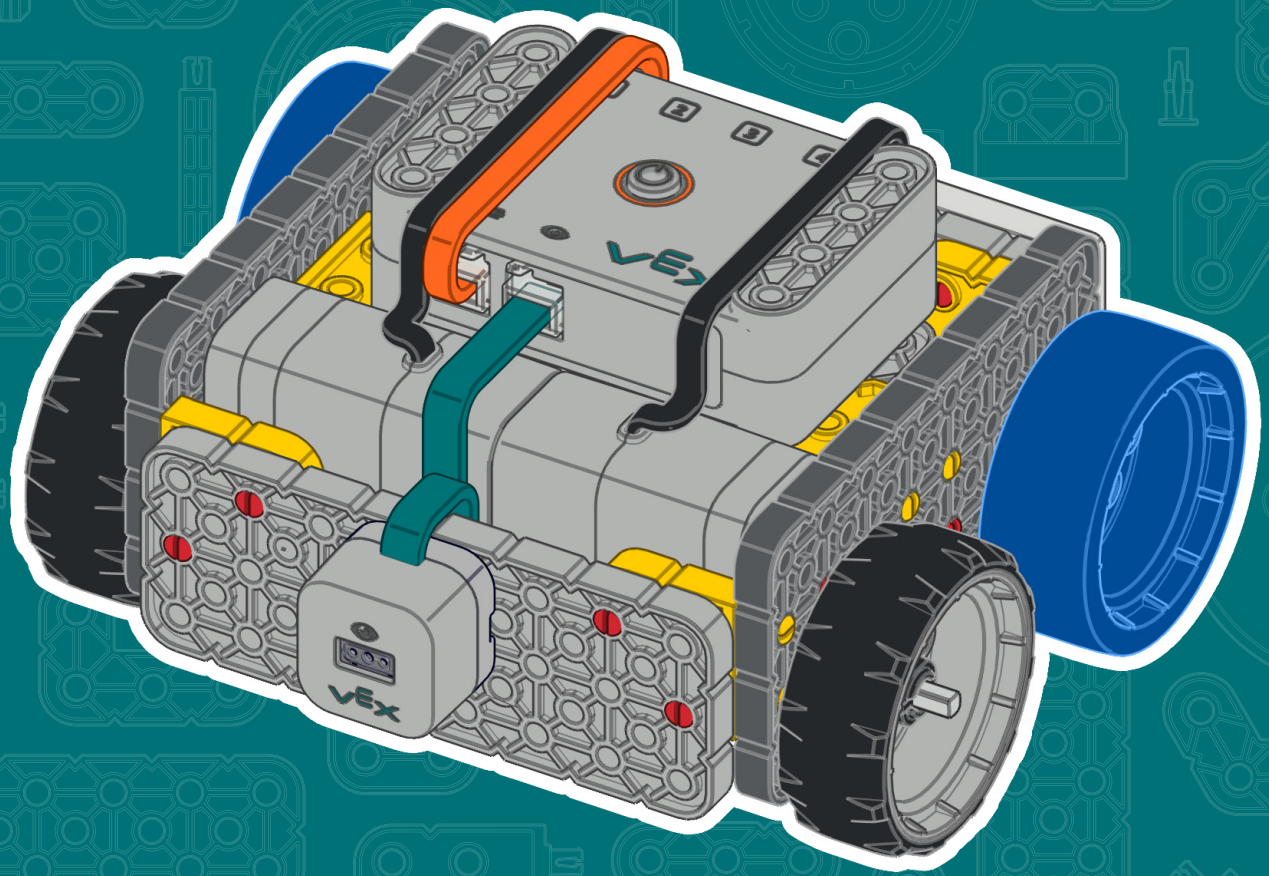

Pins

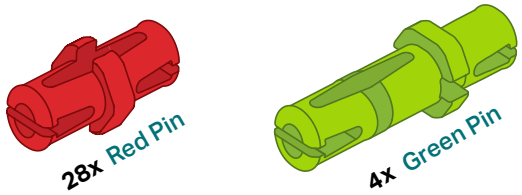

Shafts

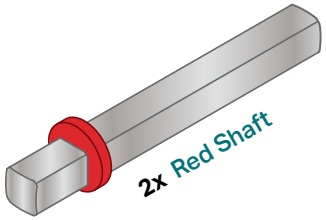

Wheels

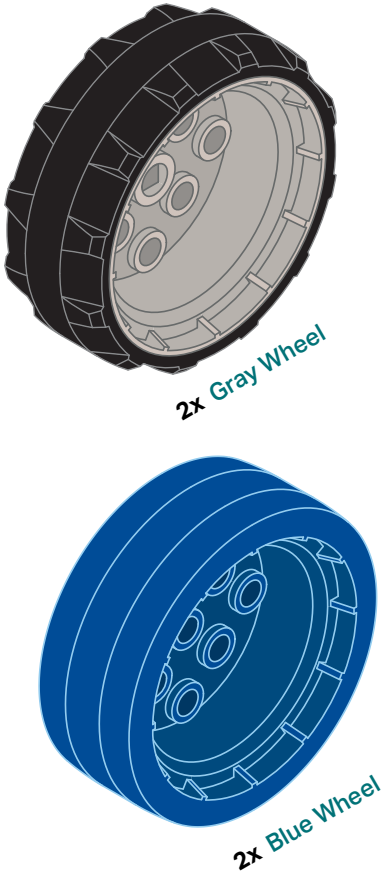

Angle Beams

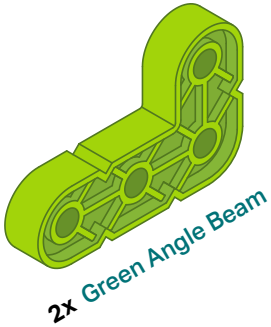

Connectors

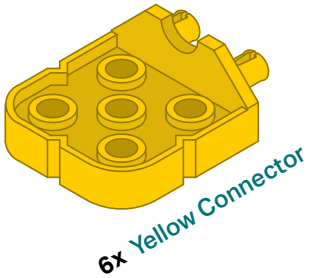

Plates

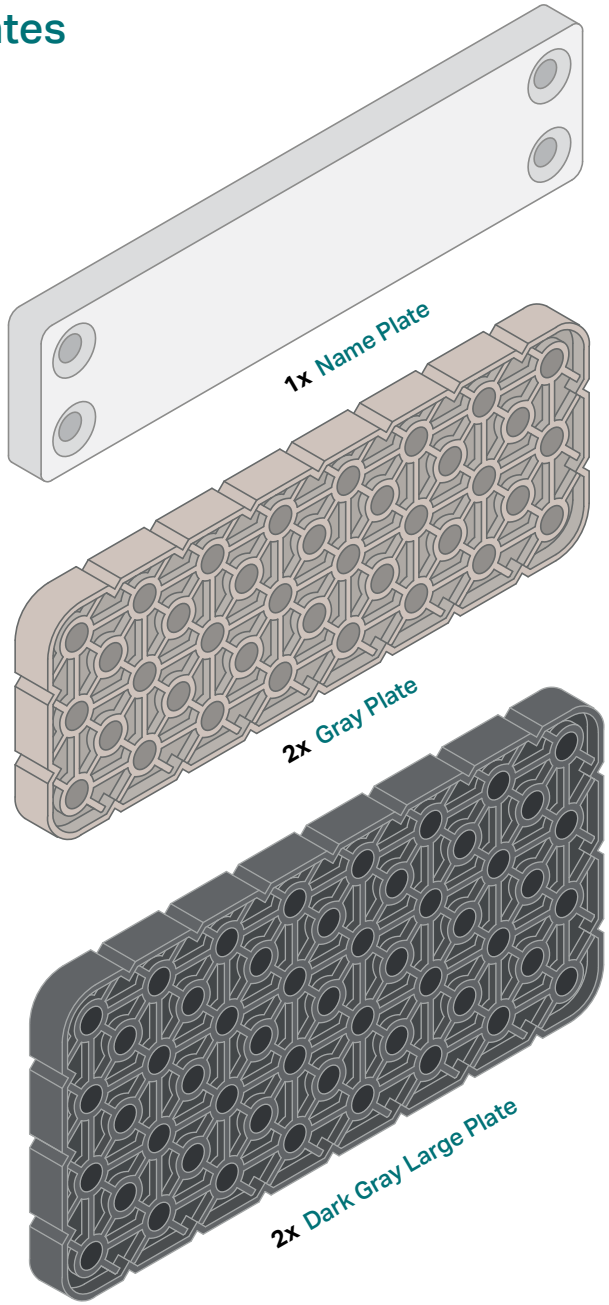

Electronics

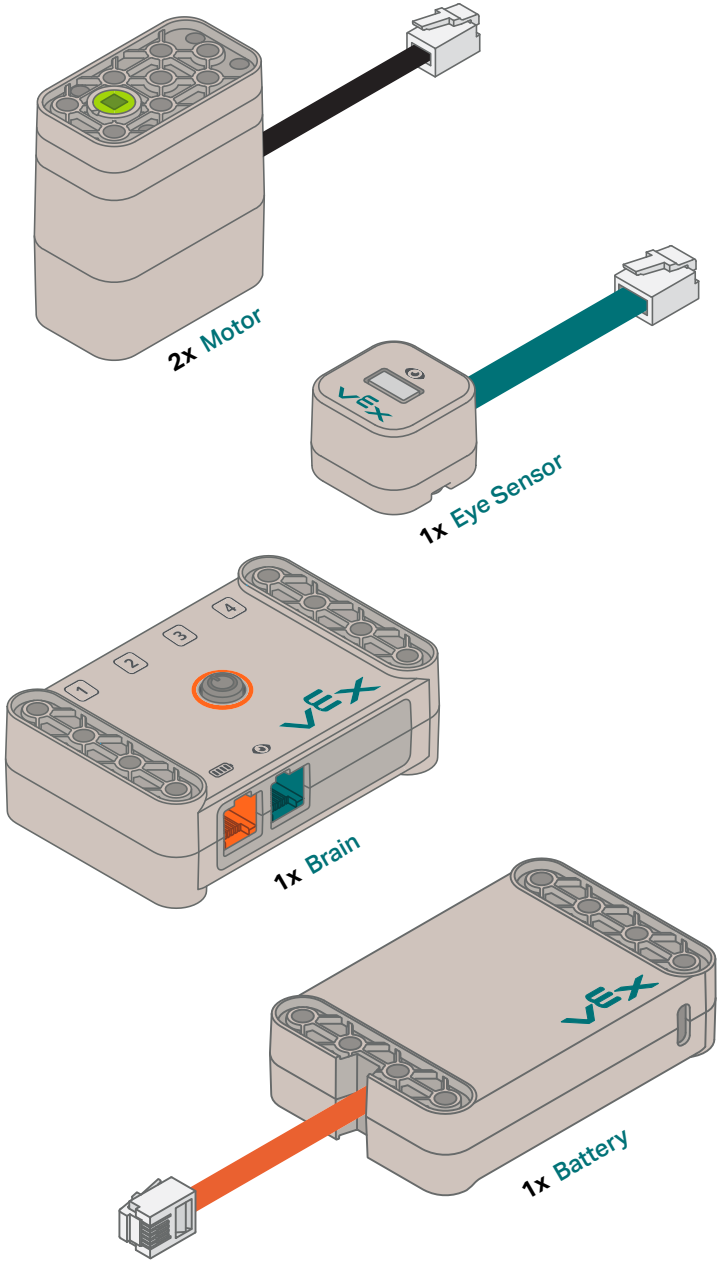

1

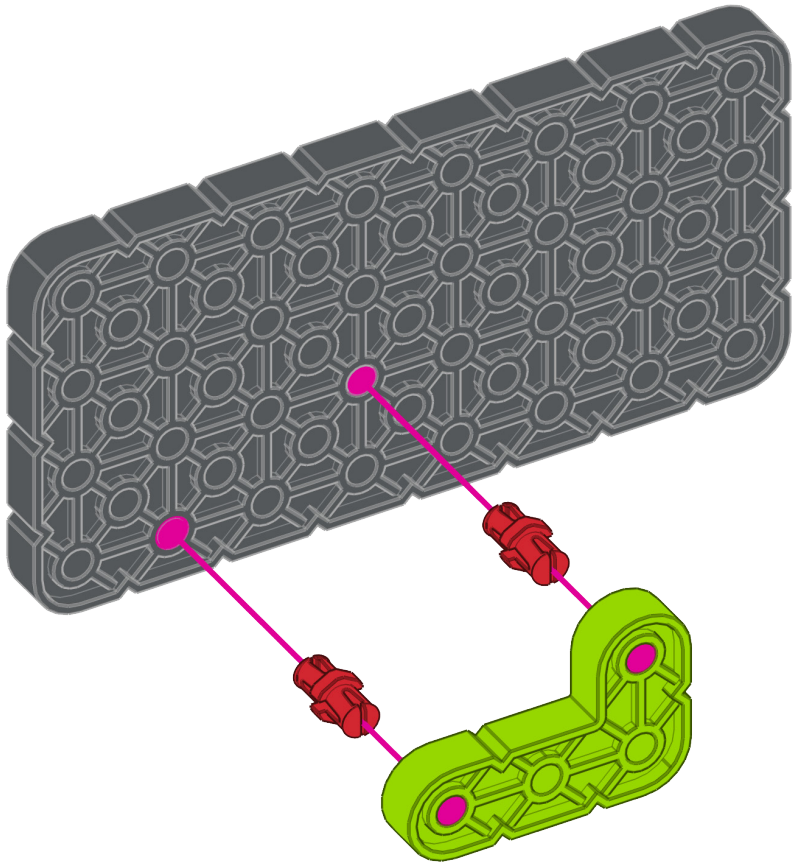

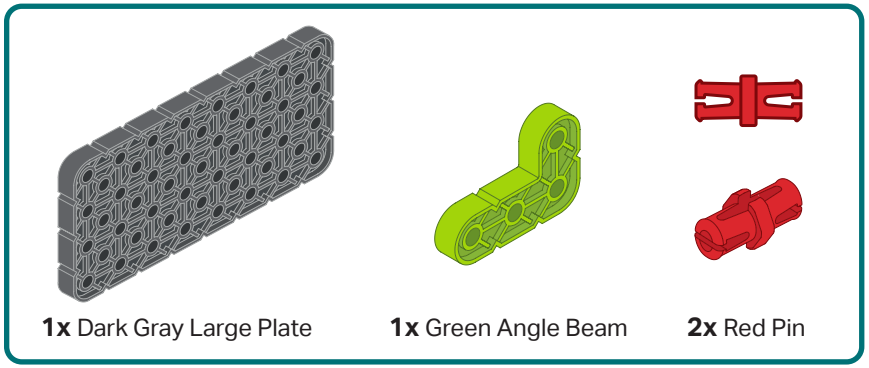

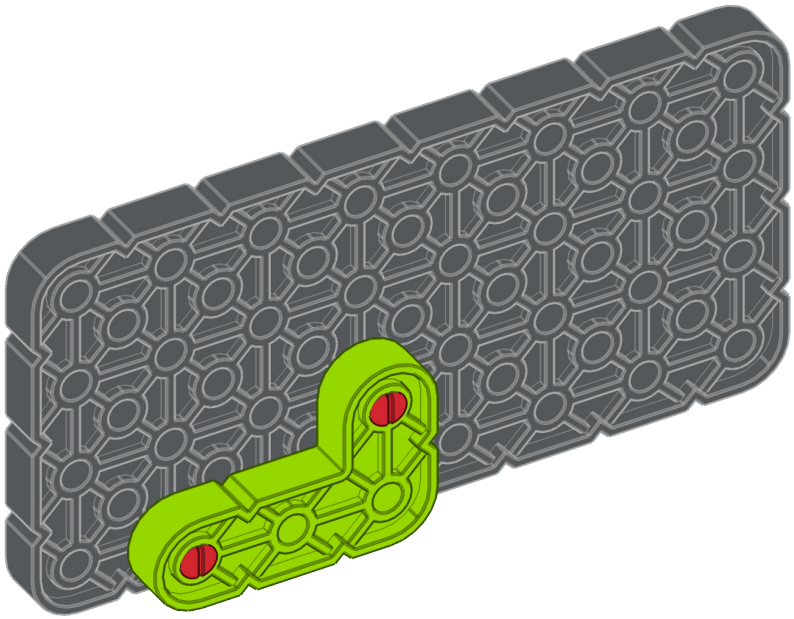

2

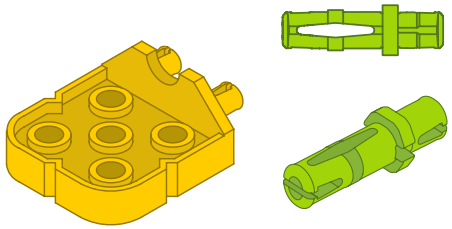

1x Yellow Connector **2x** Green Pin

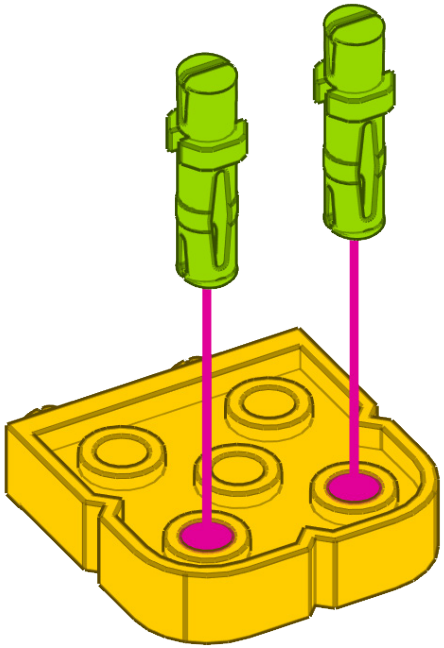

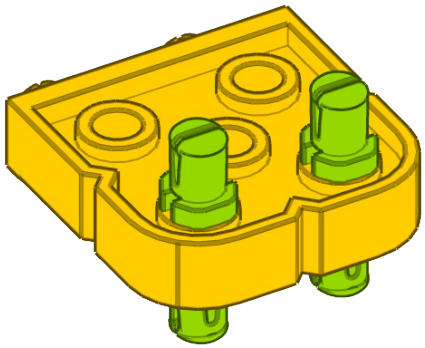

3

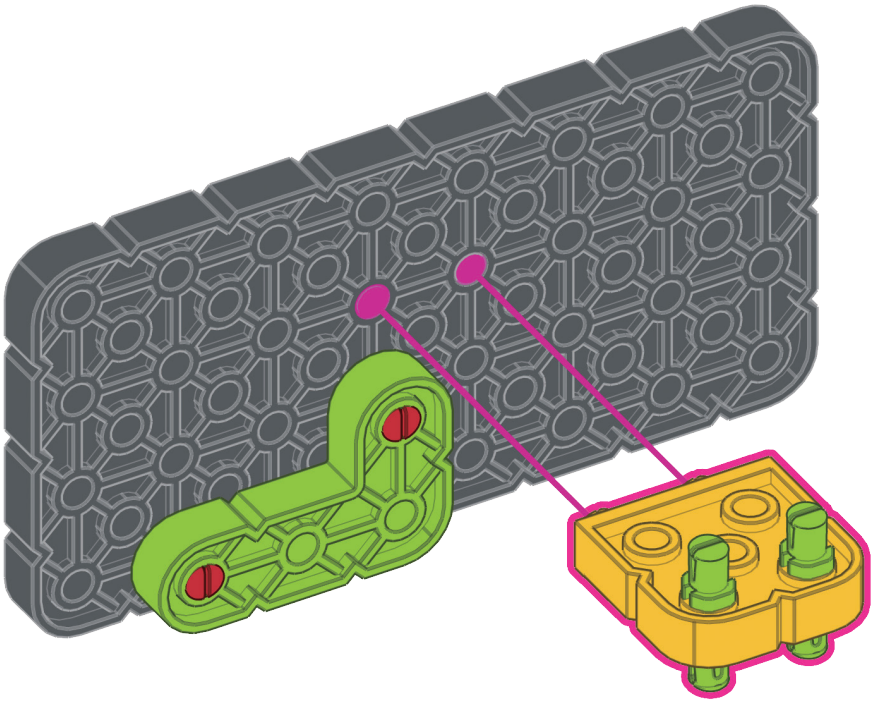

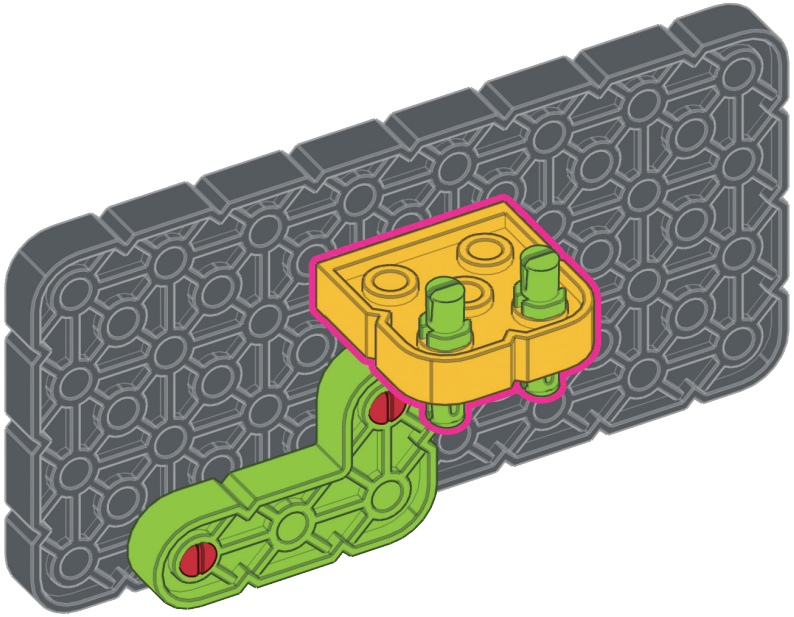

4

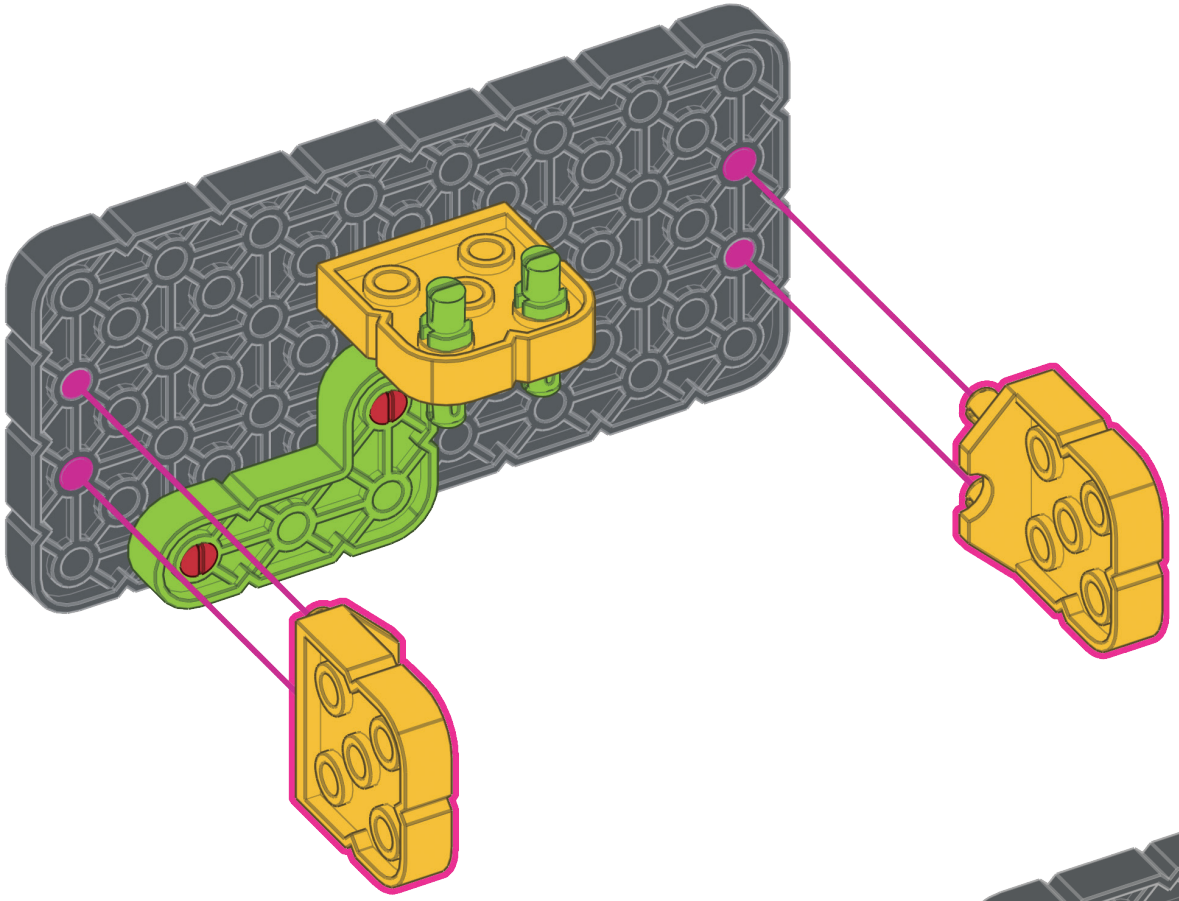

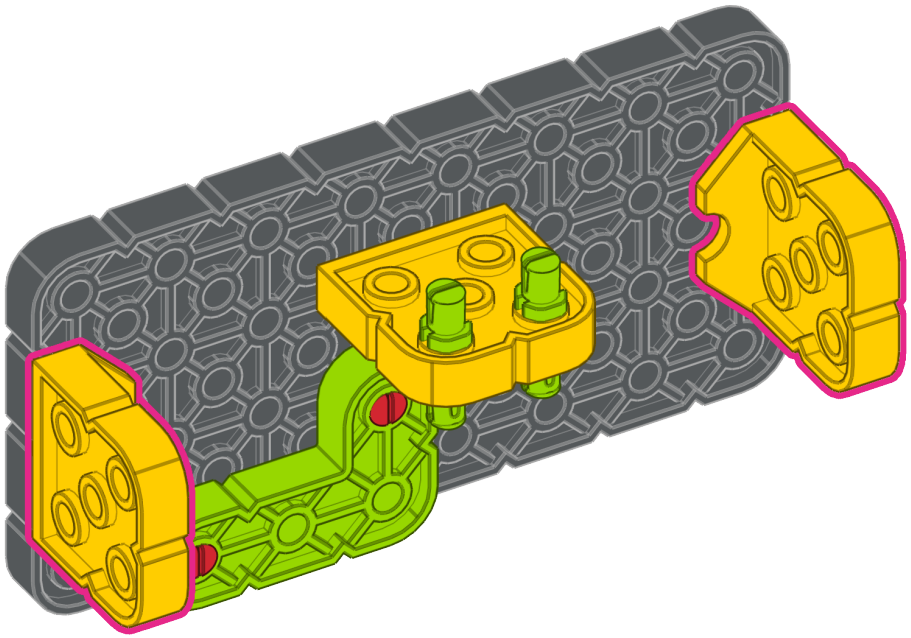

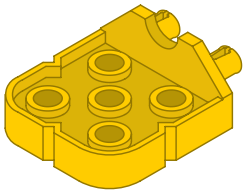

2x Yellow Connector

5

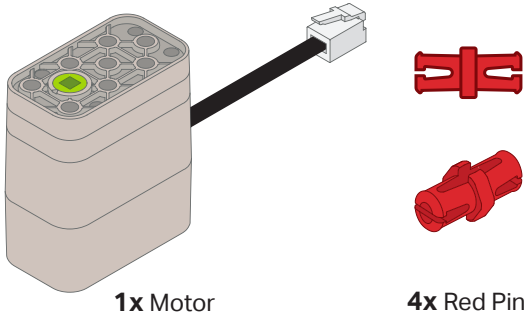

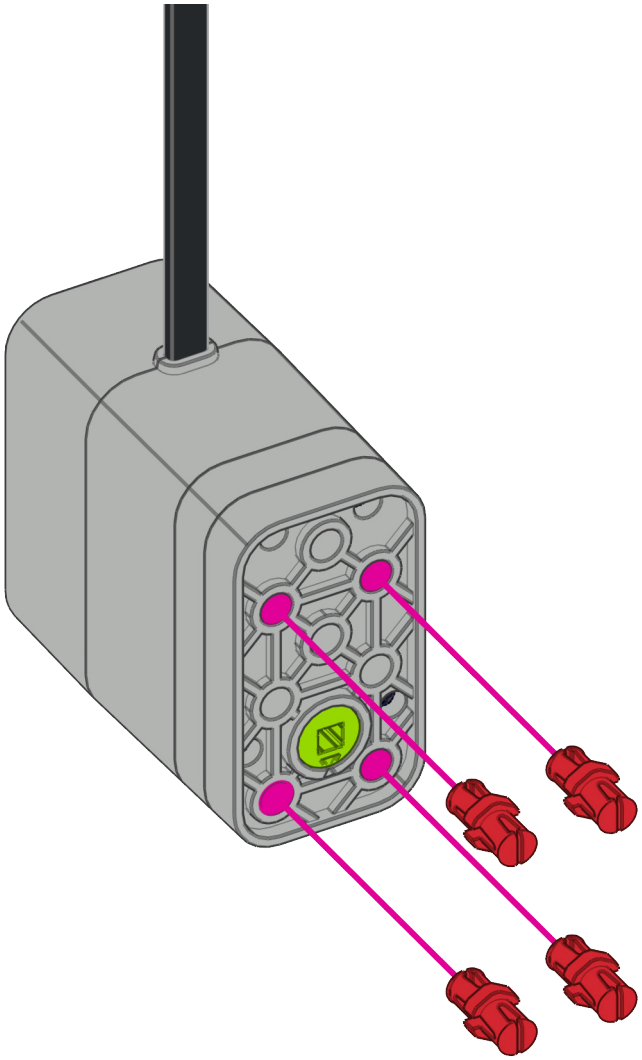

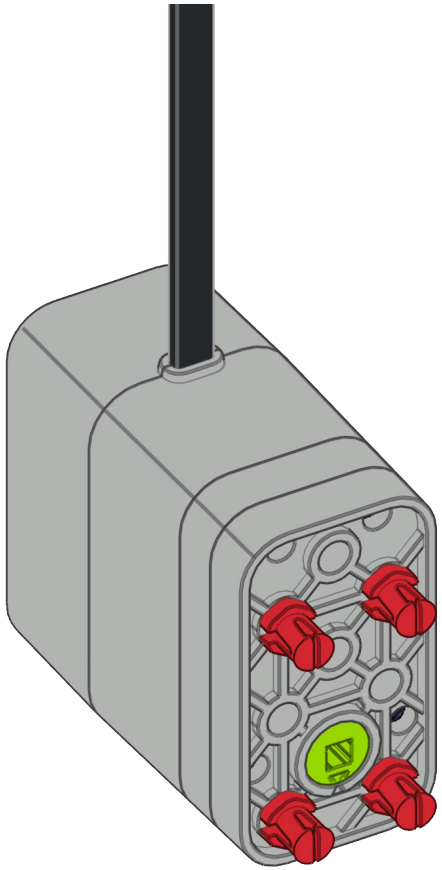

6

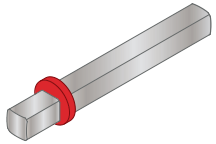

1x Red Shaft

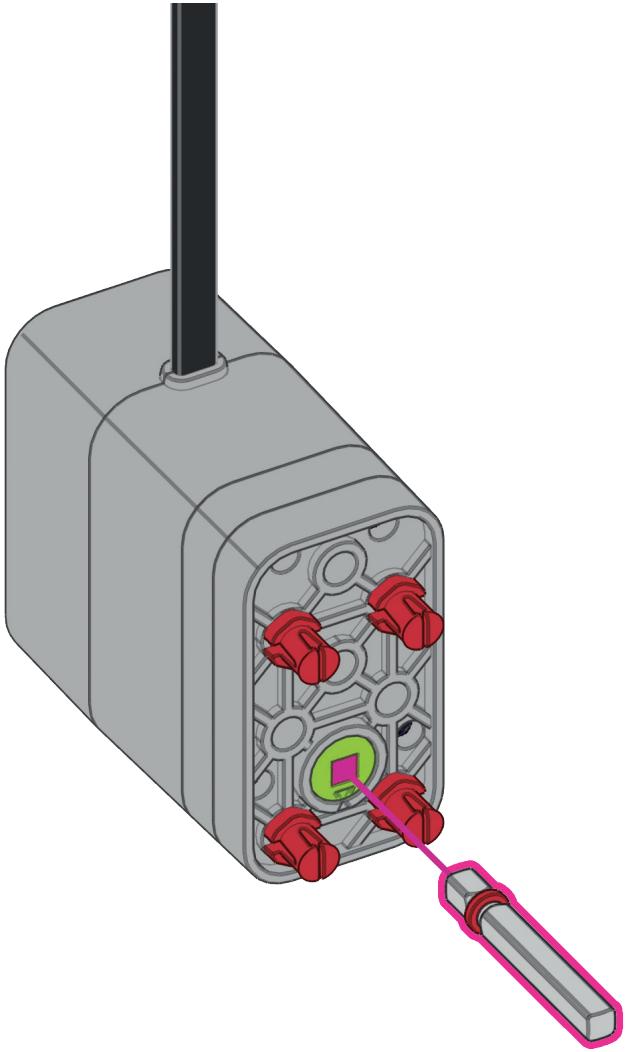

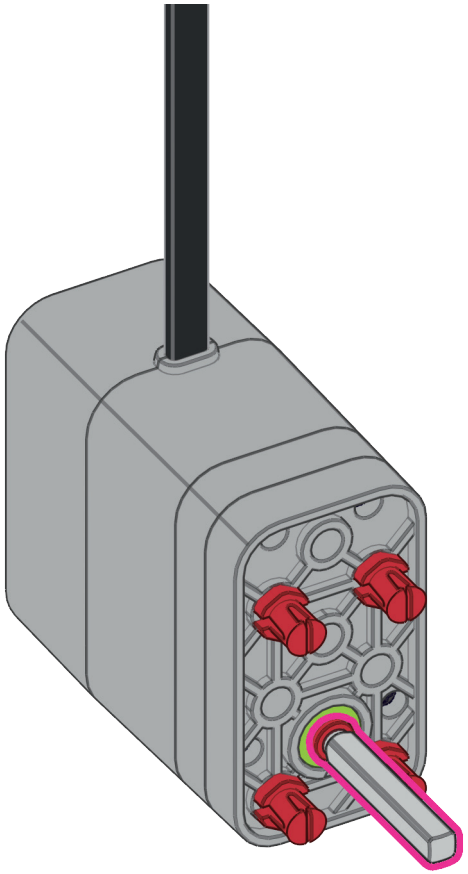

7

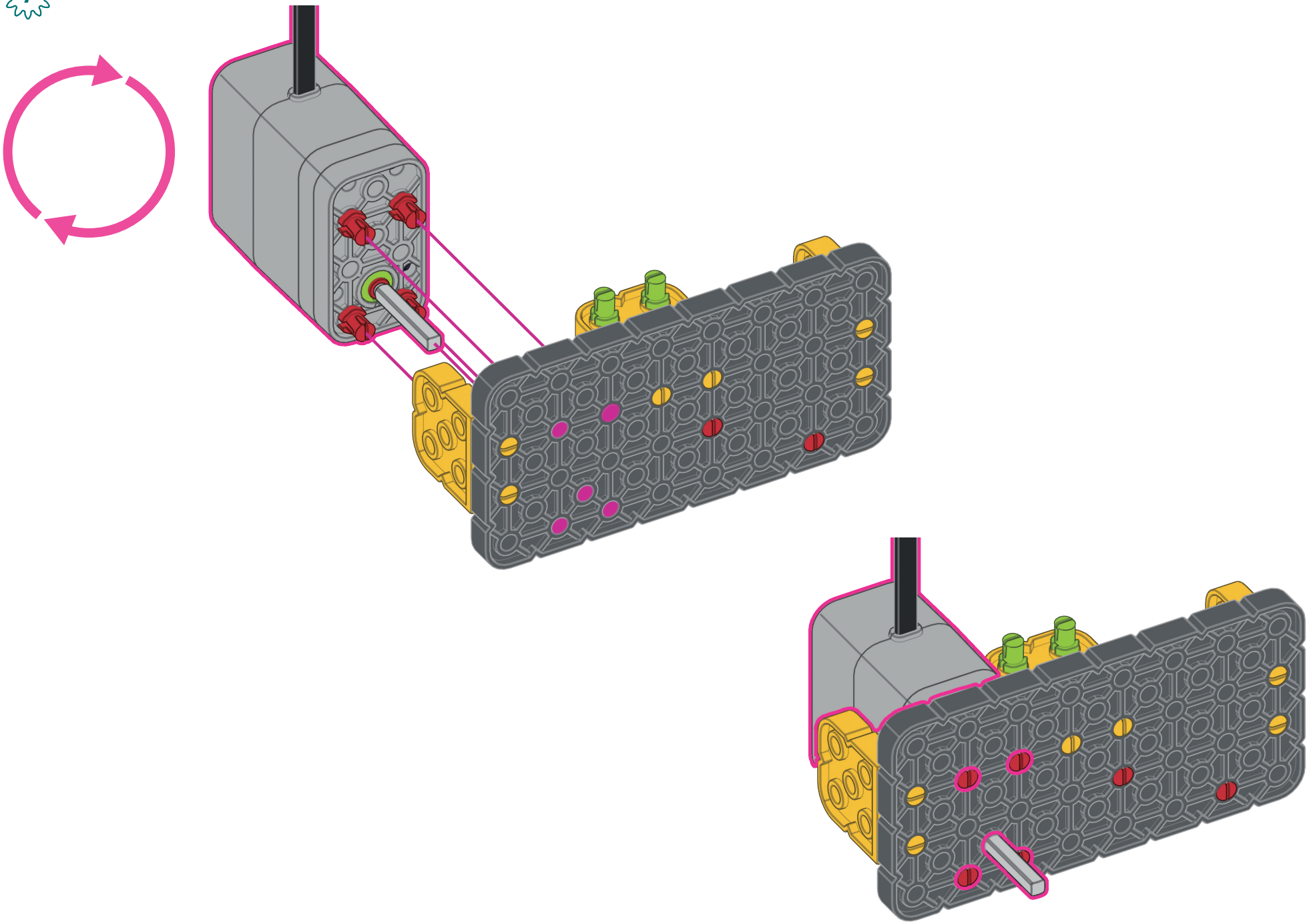

8

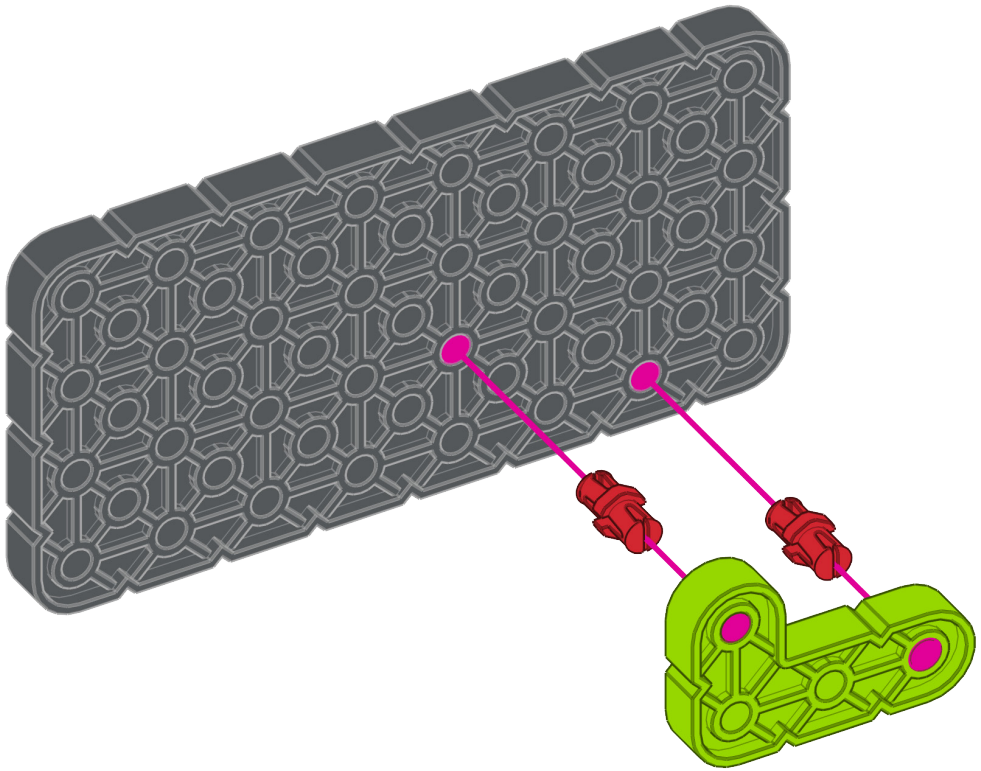

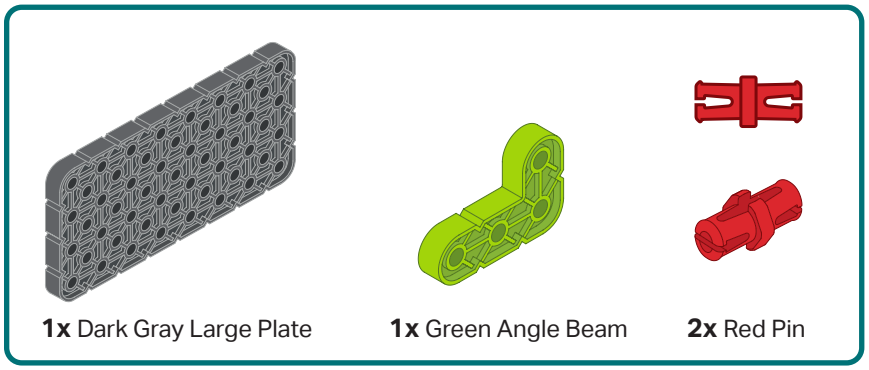

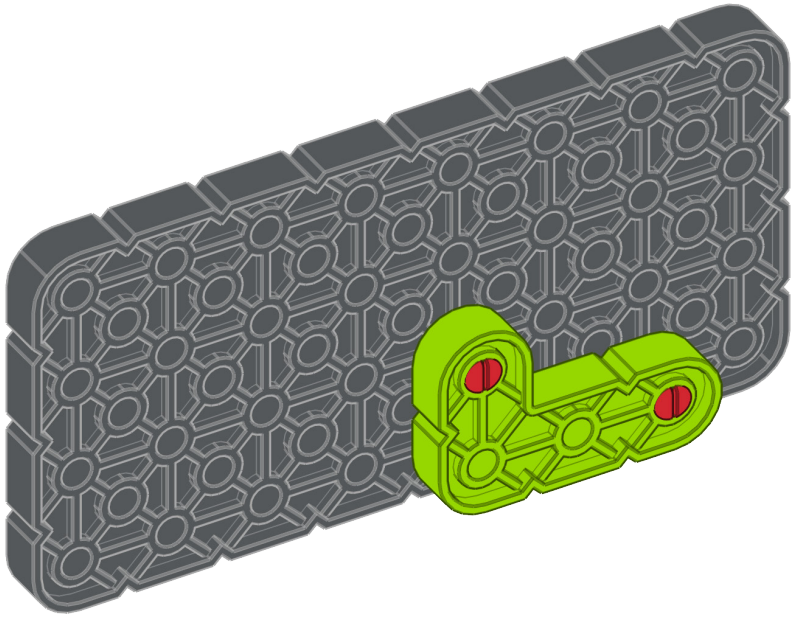

9

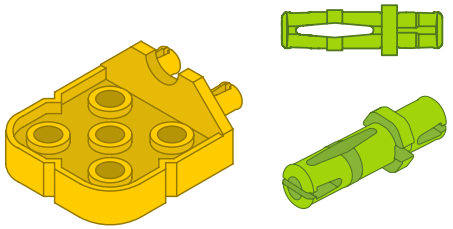

1x Yellow Connector **2x** Green Pin

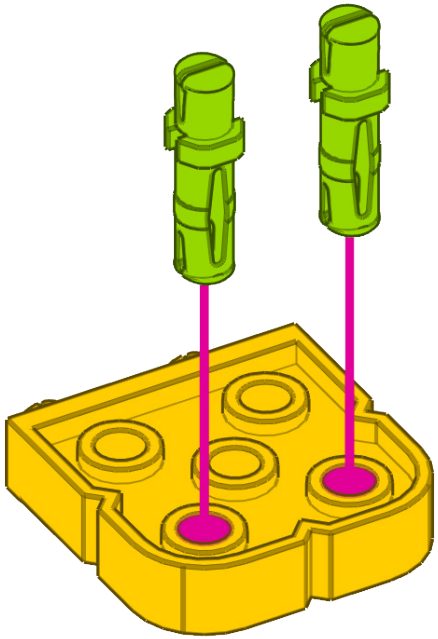

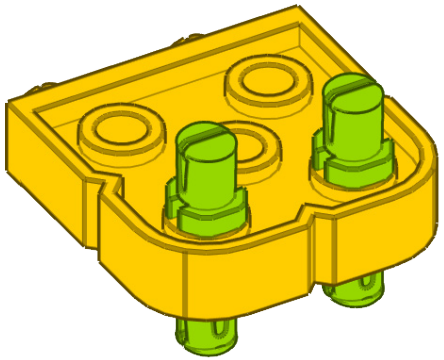

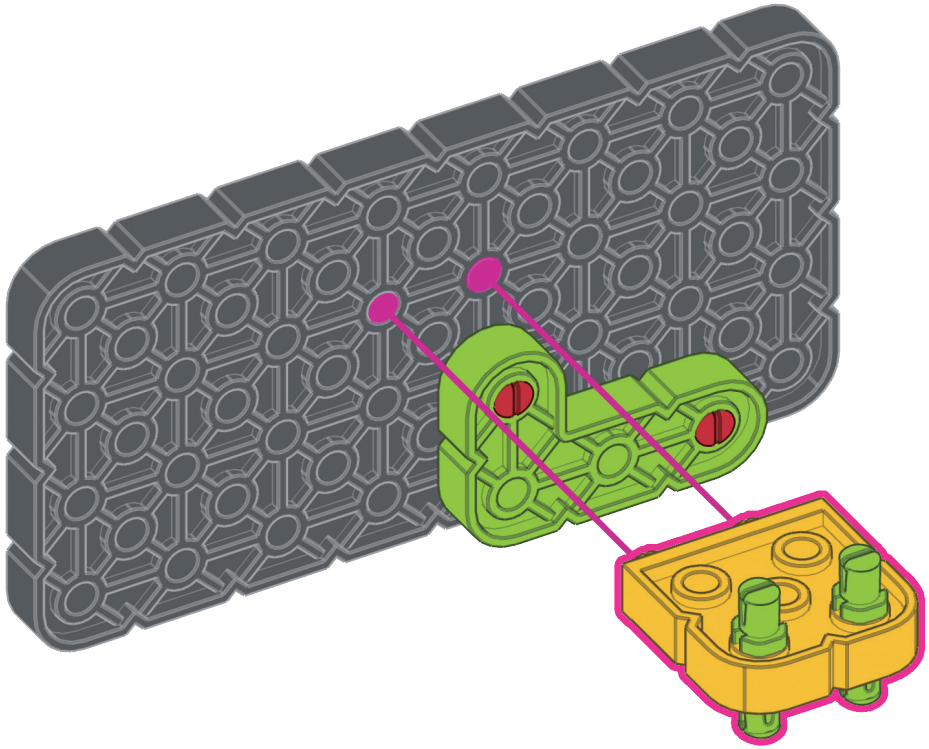

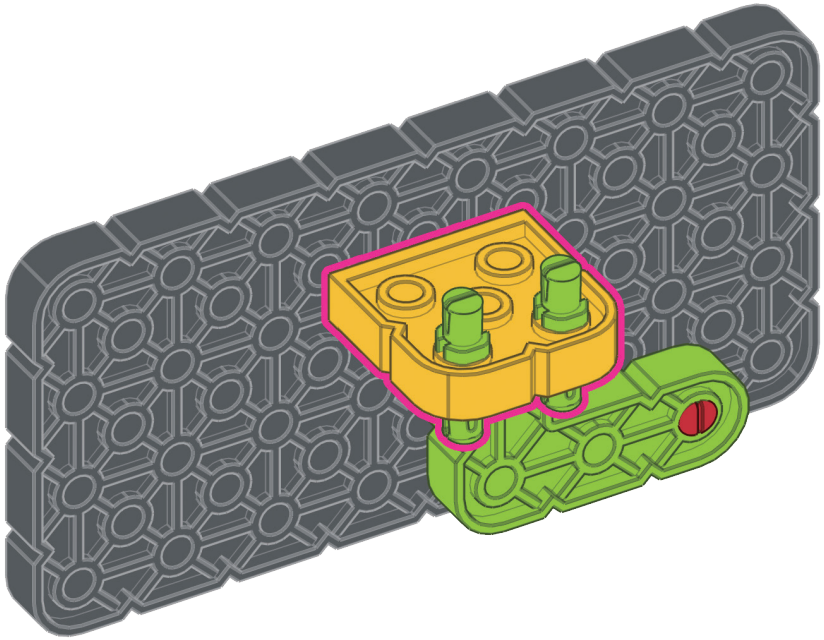

11

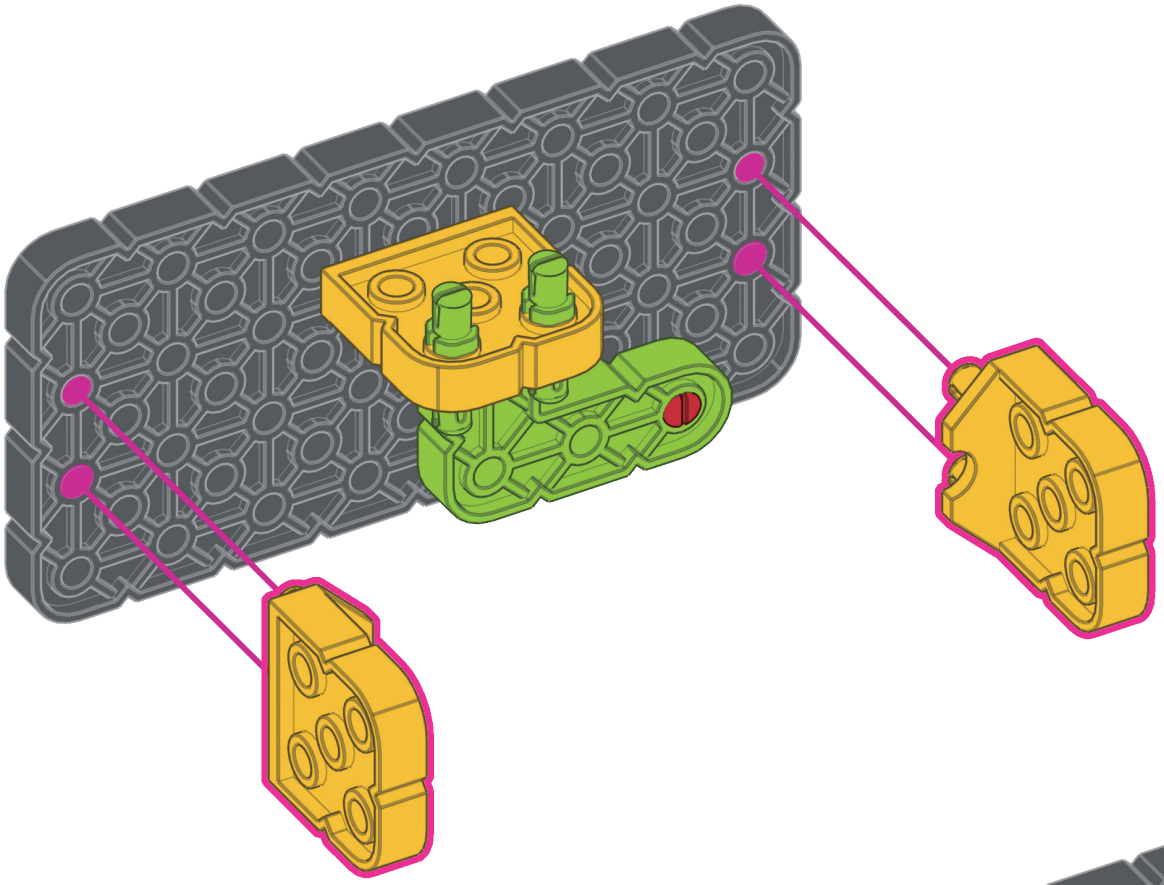

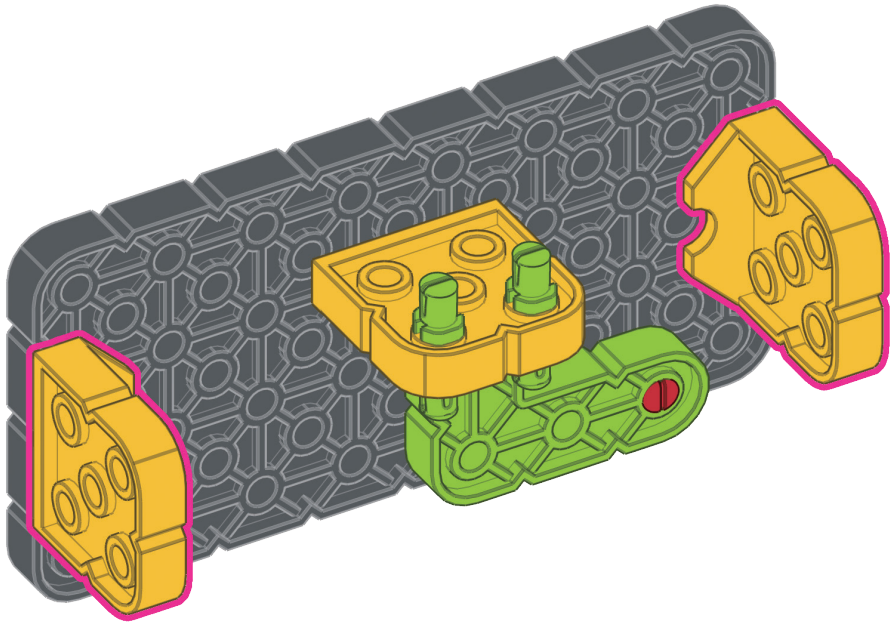

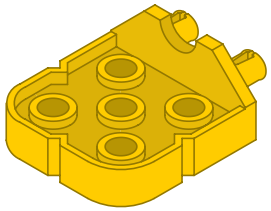

2x Yellow Connector

12

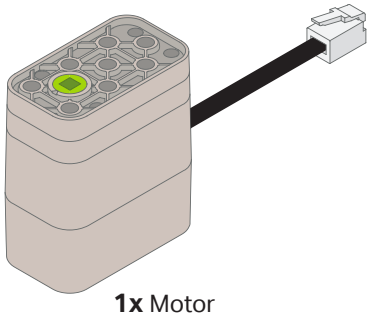

1x Motor

4x Red Pin

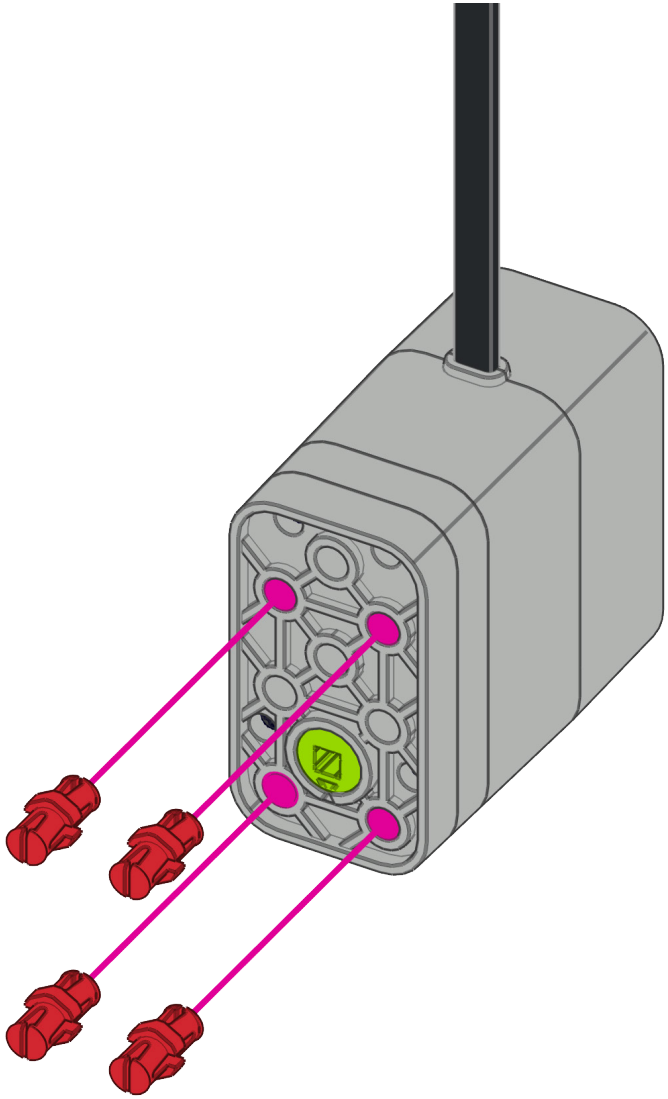

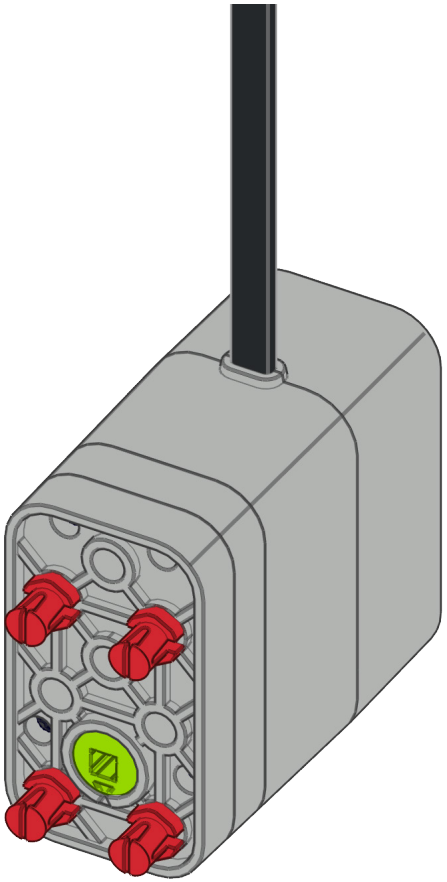

13

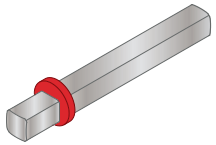

1x Red Shaft

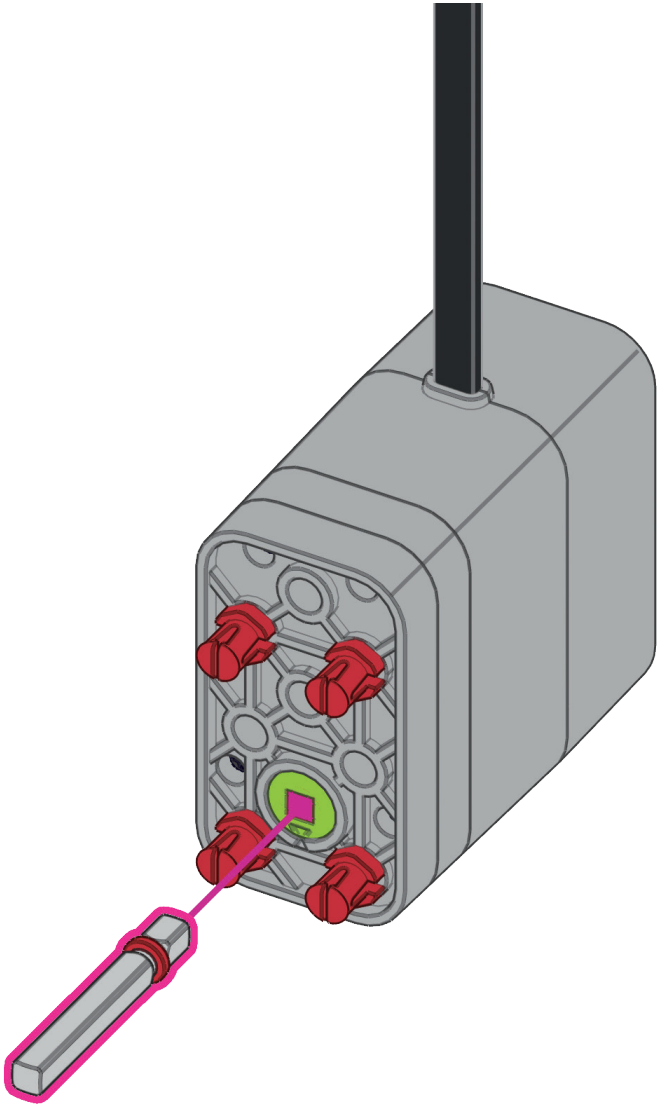

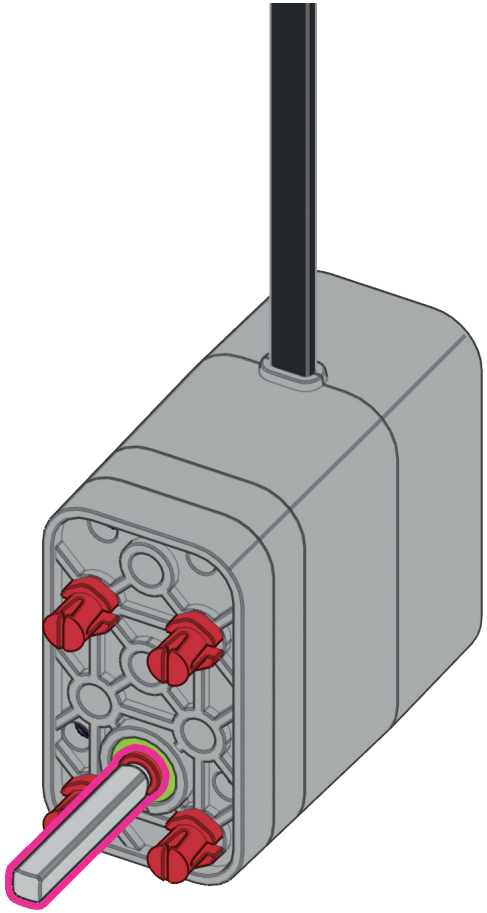

14

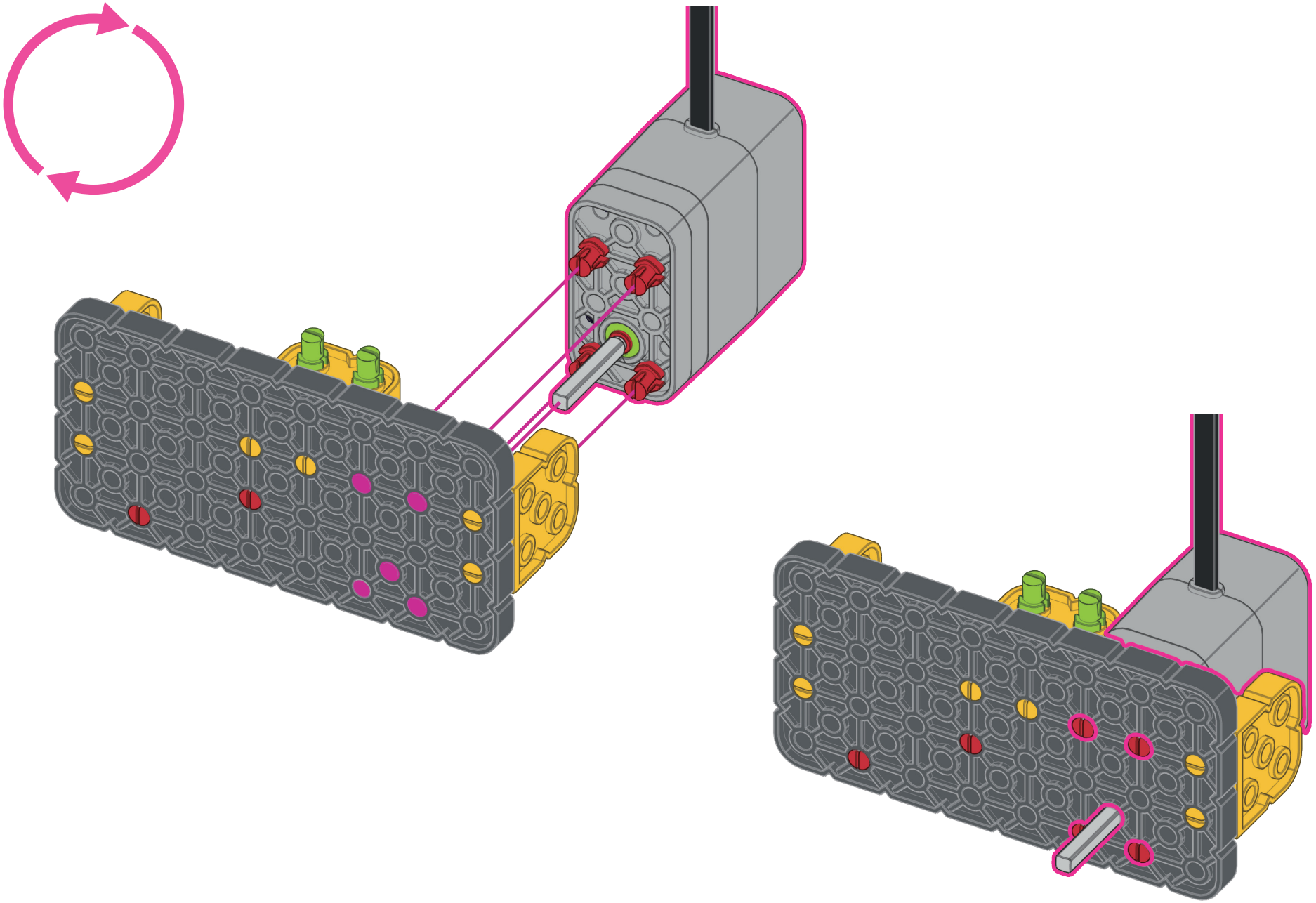

15

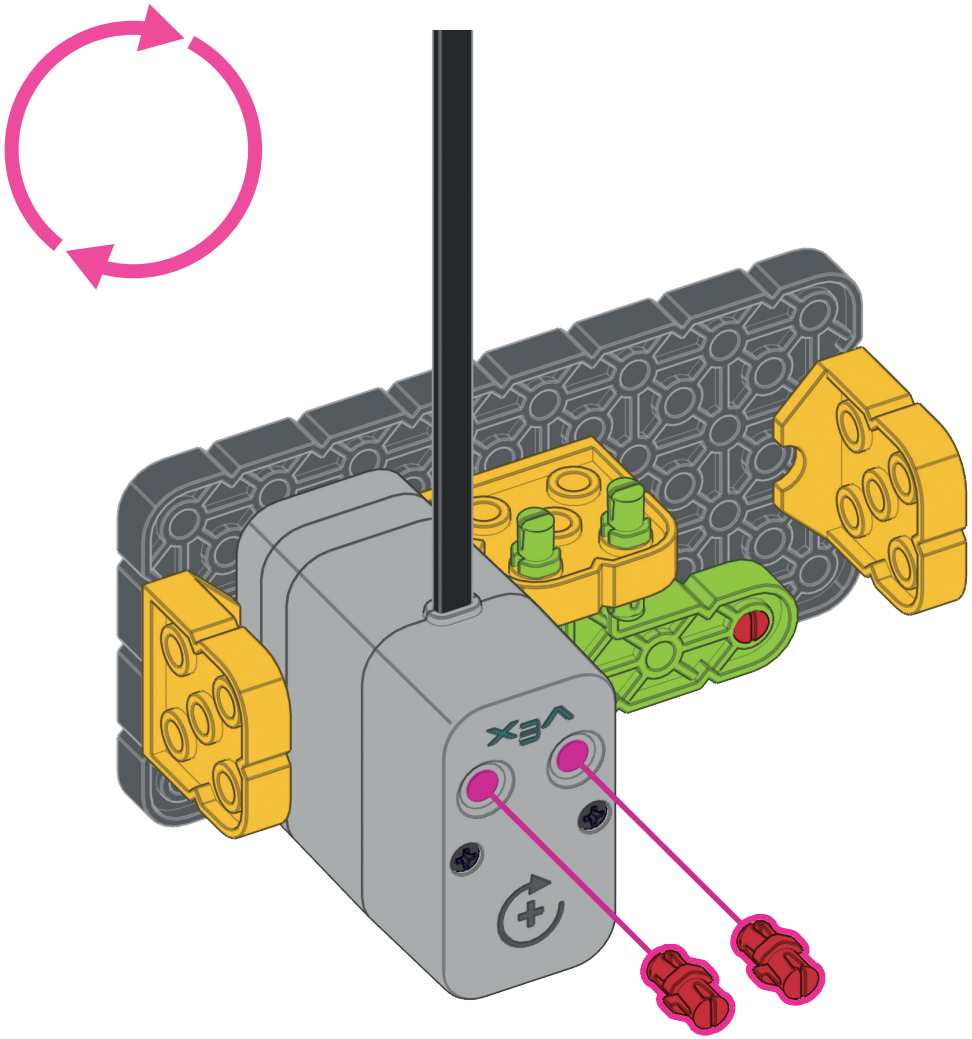

2x Red Pin

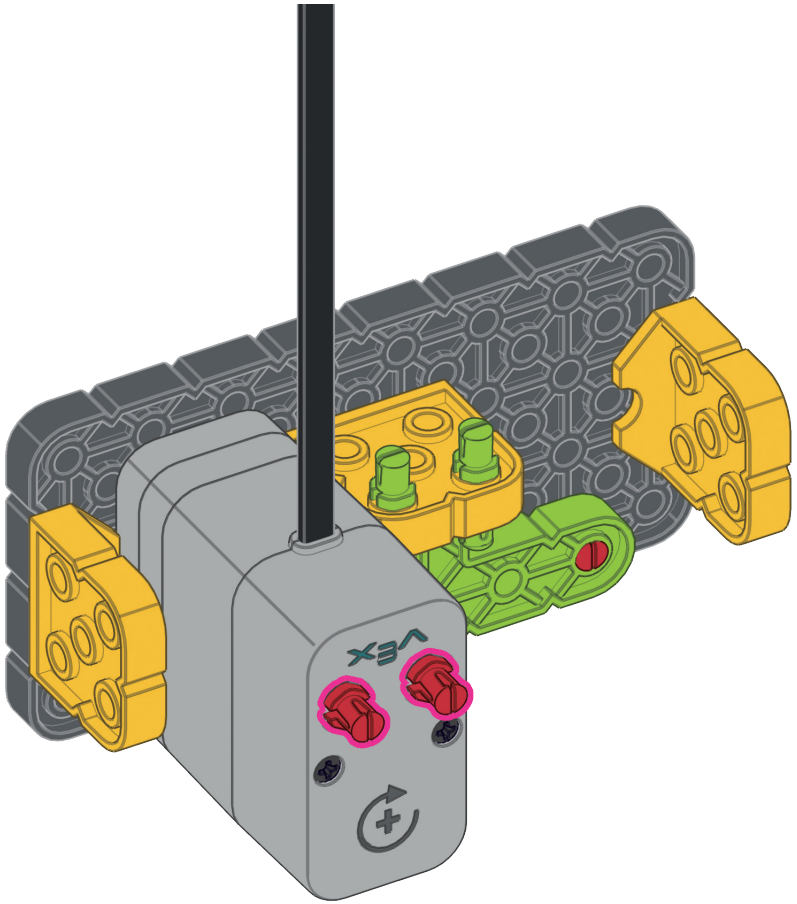

16

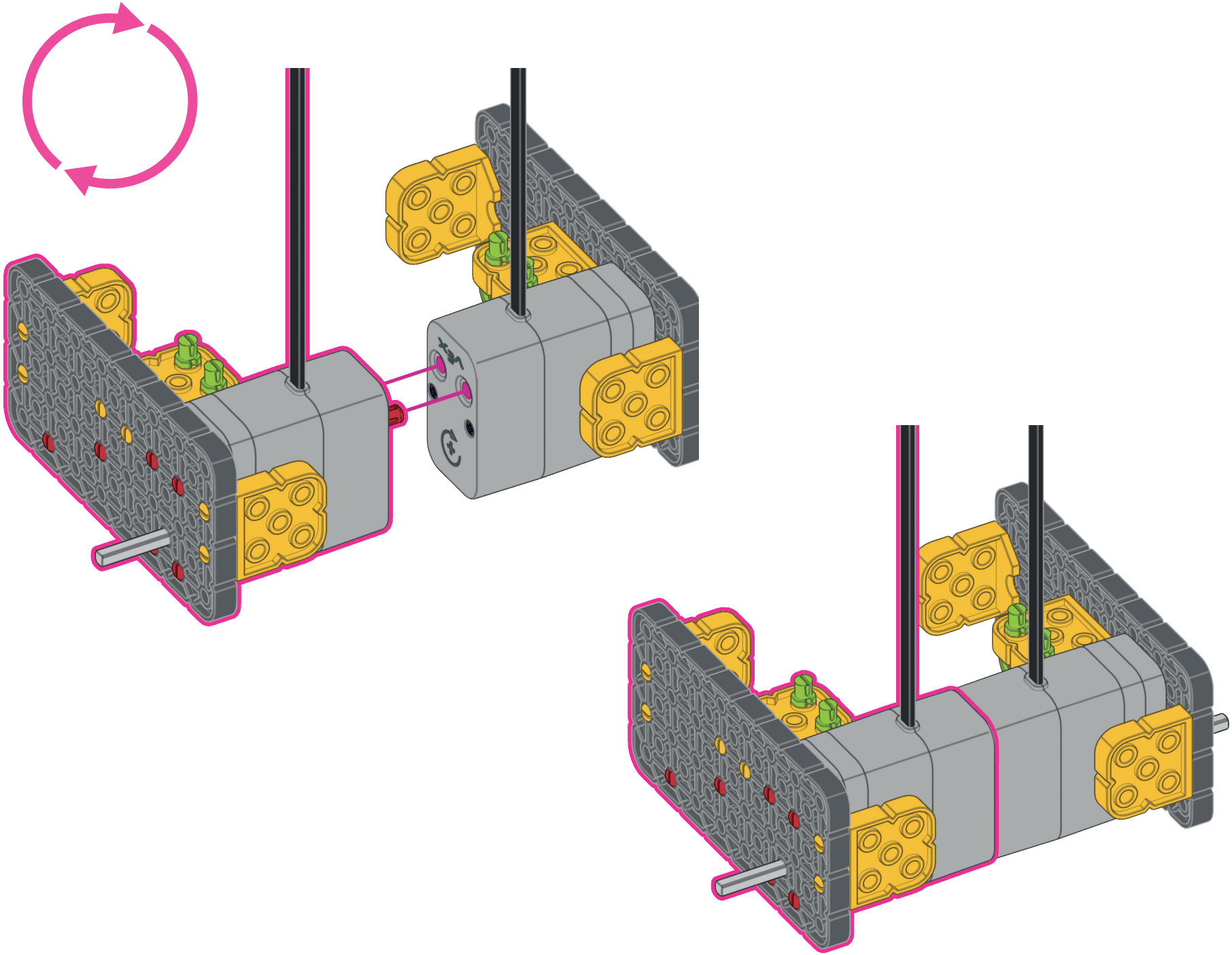

17

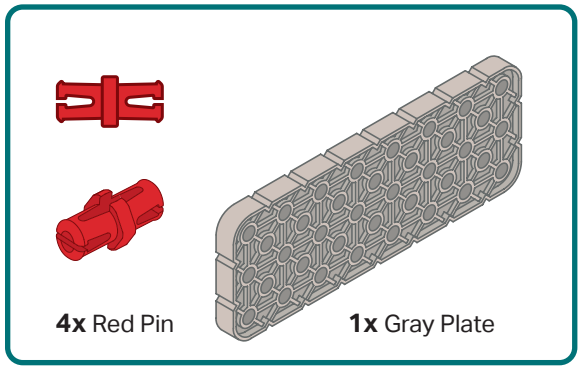

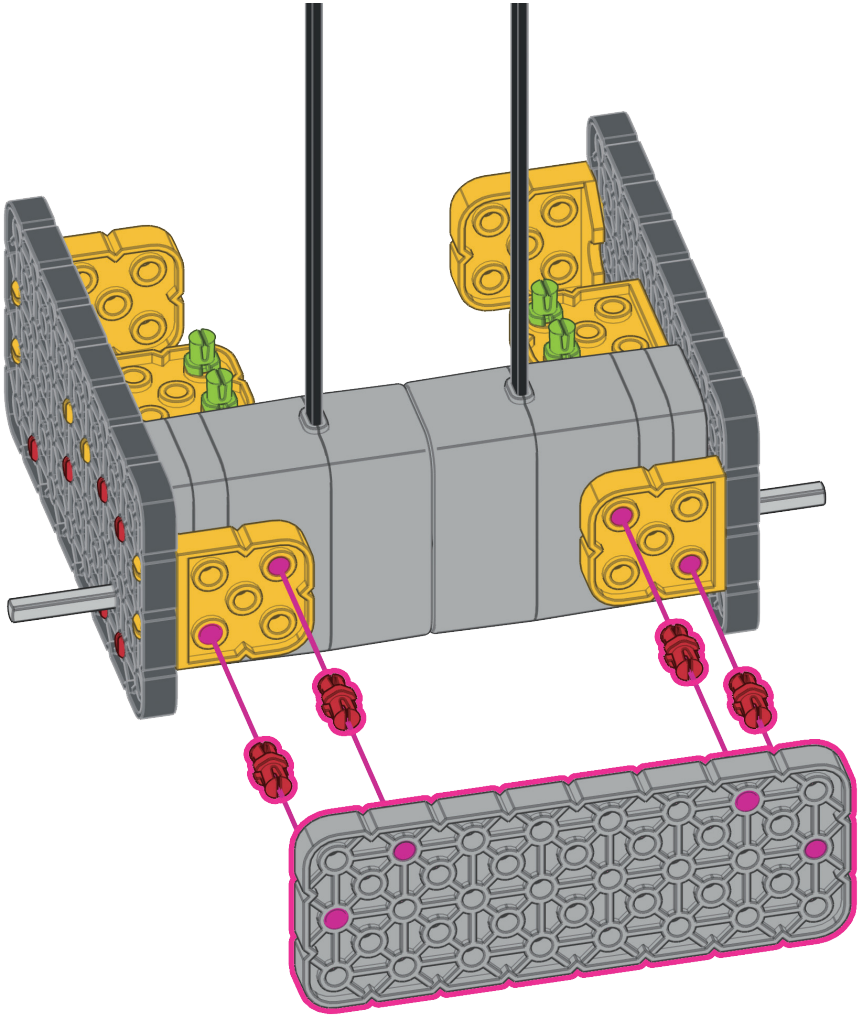

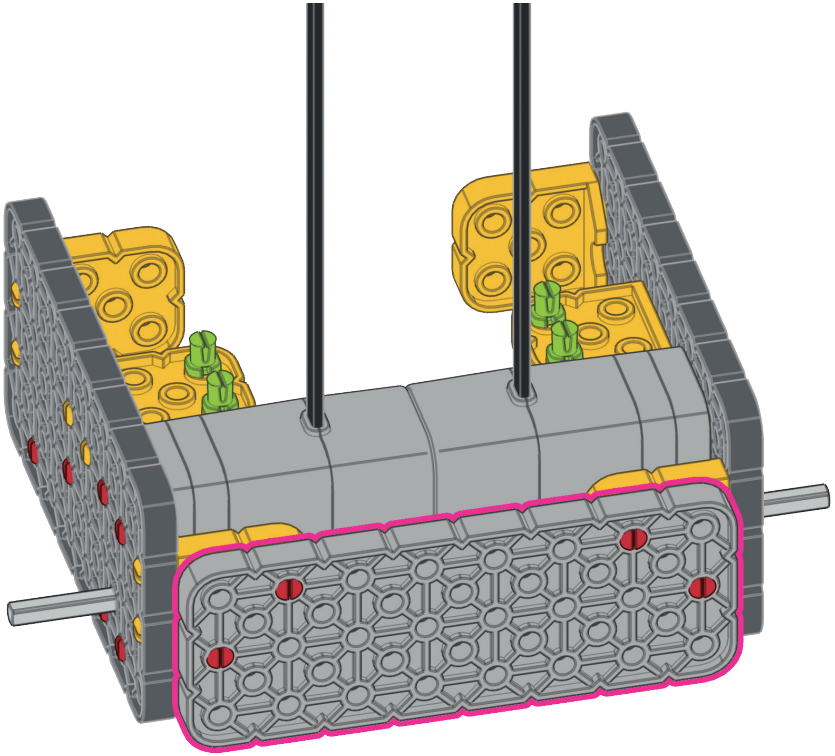

18

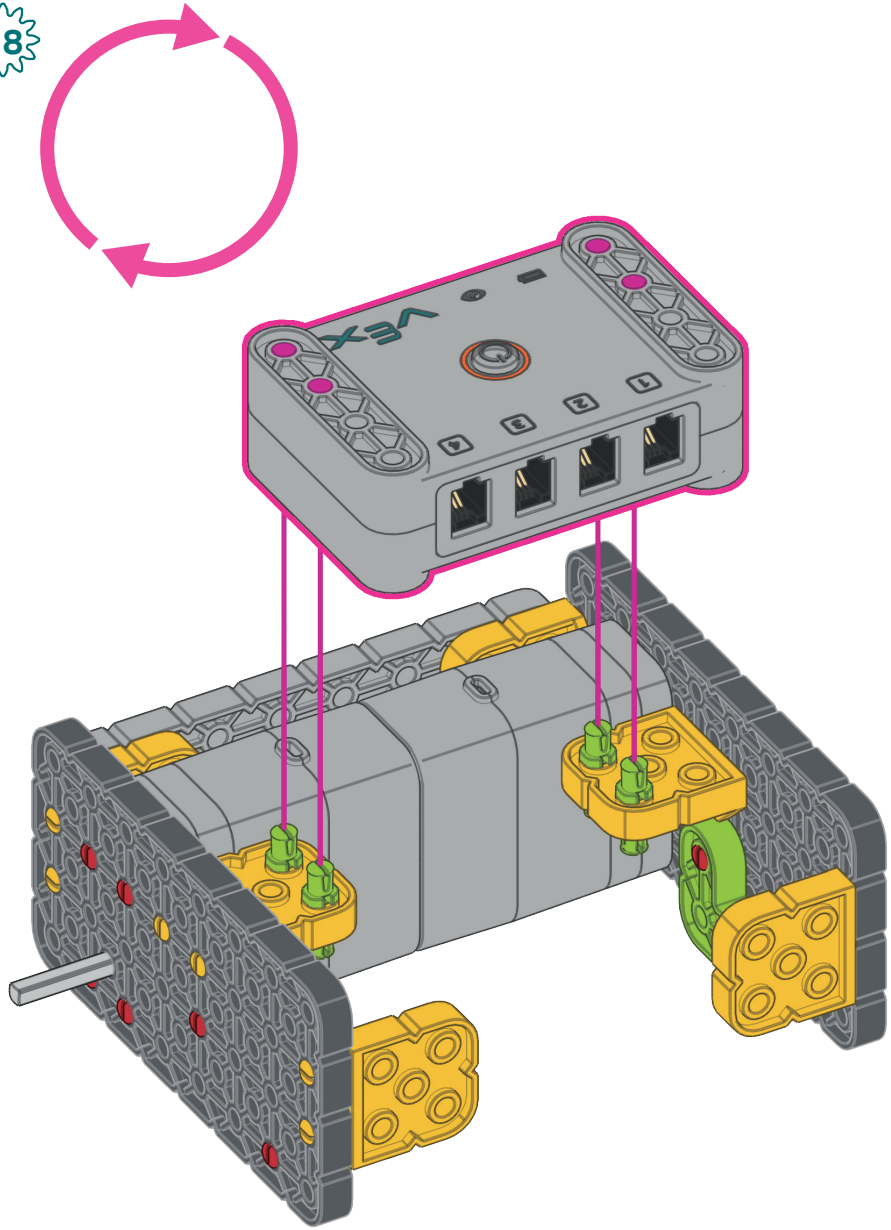

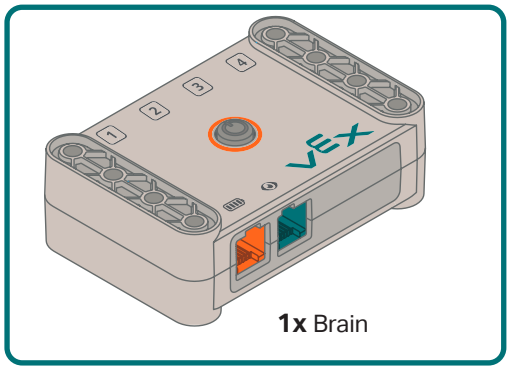

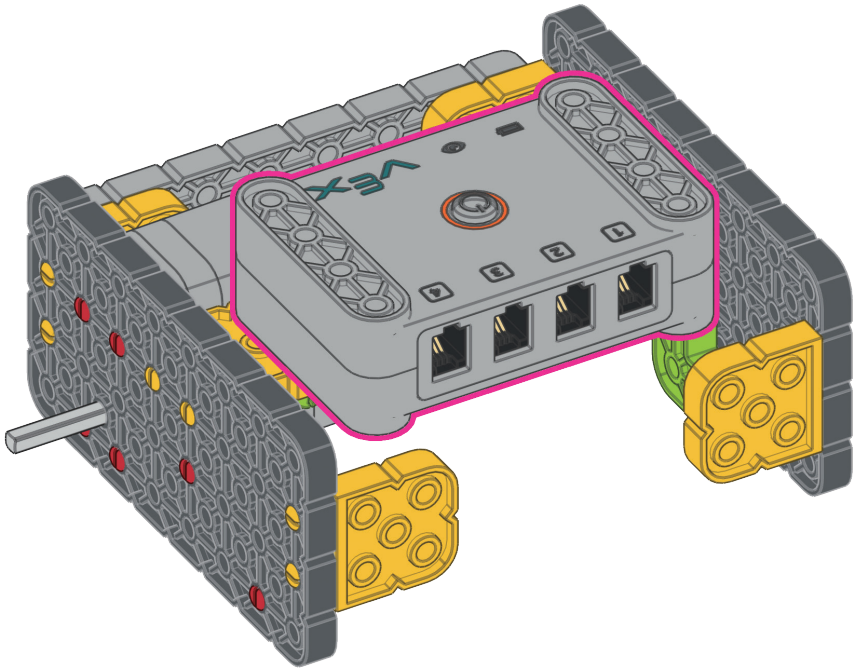

19

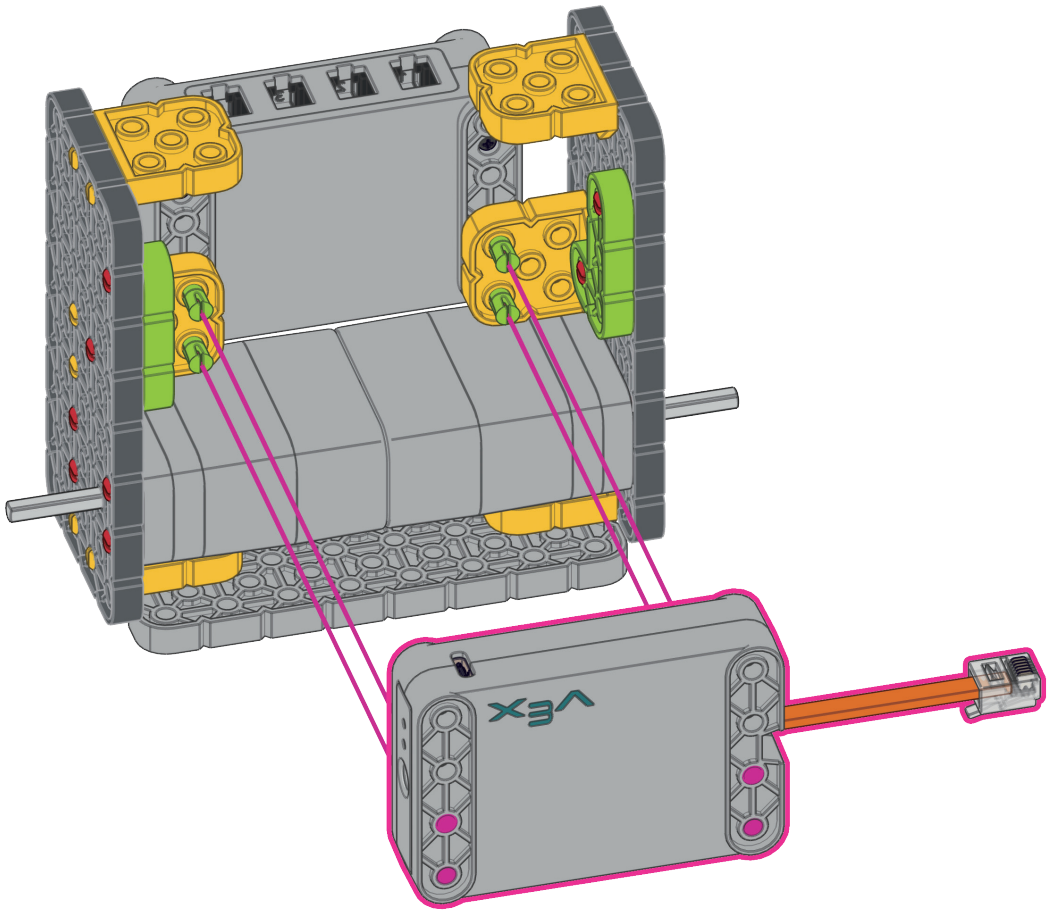

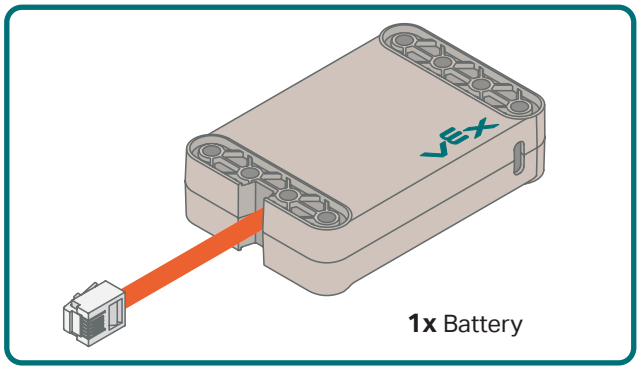

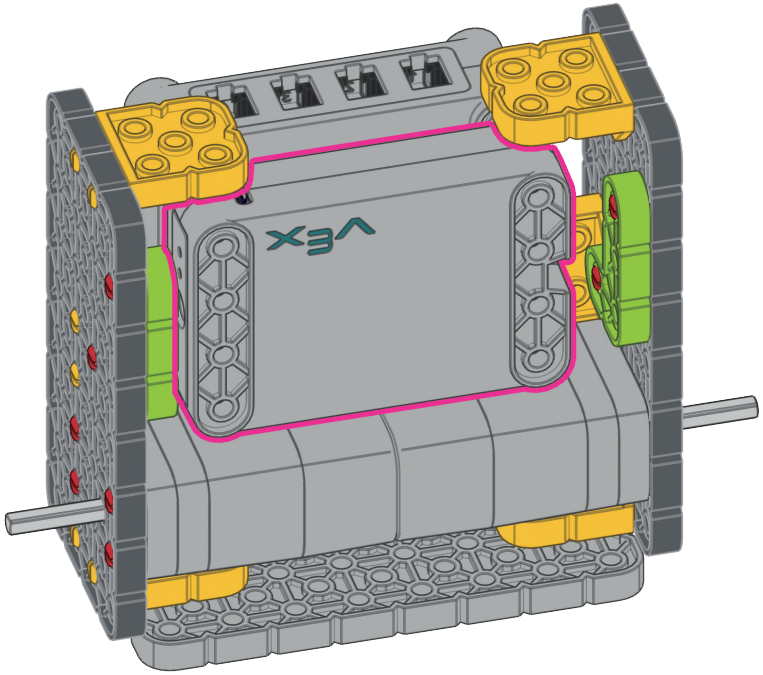

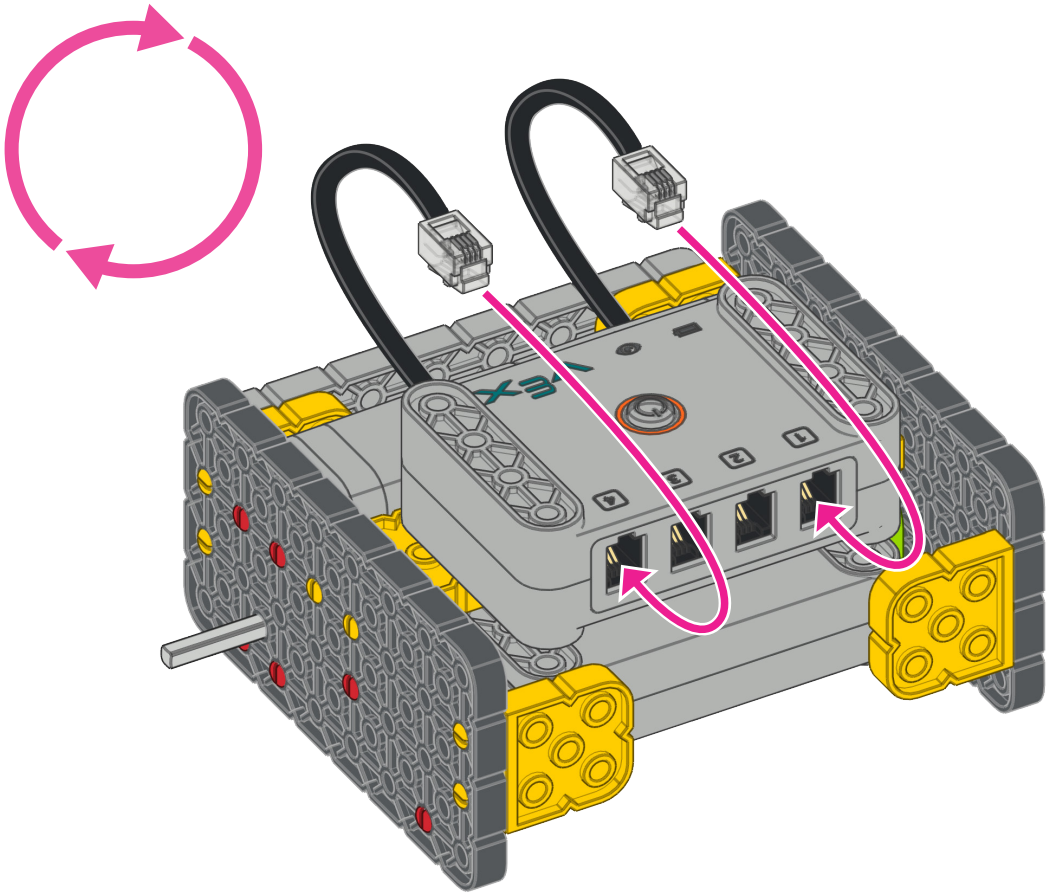

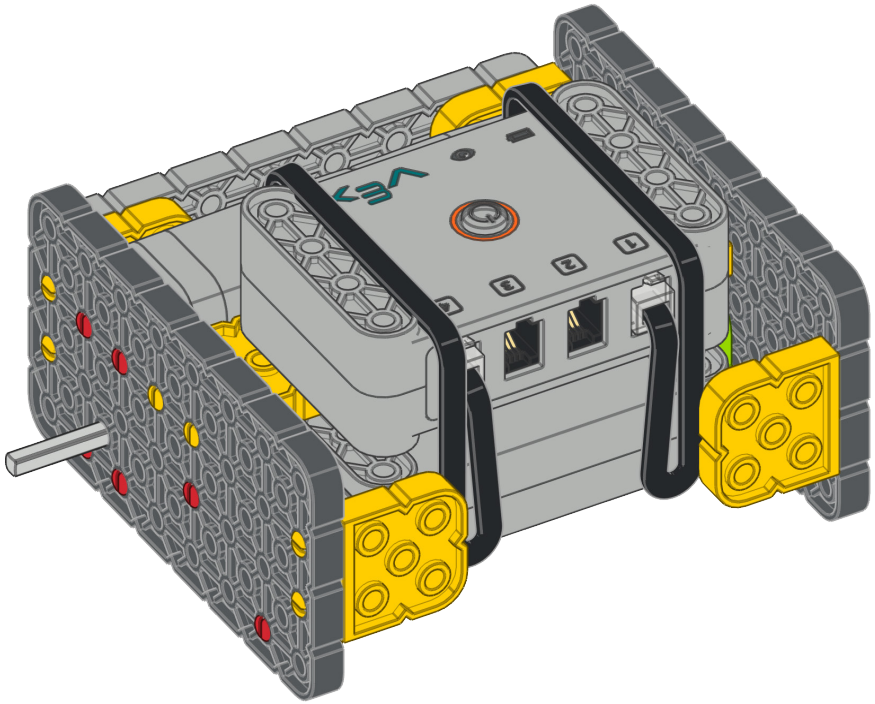

21

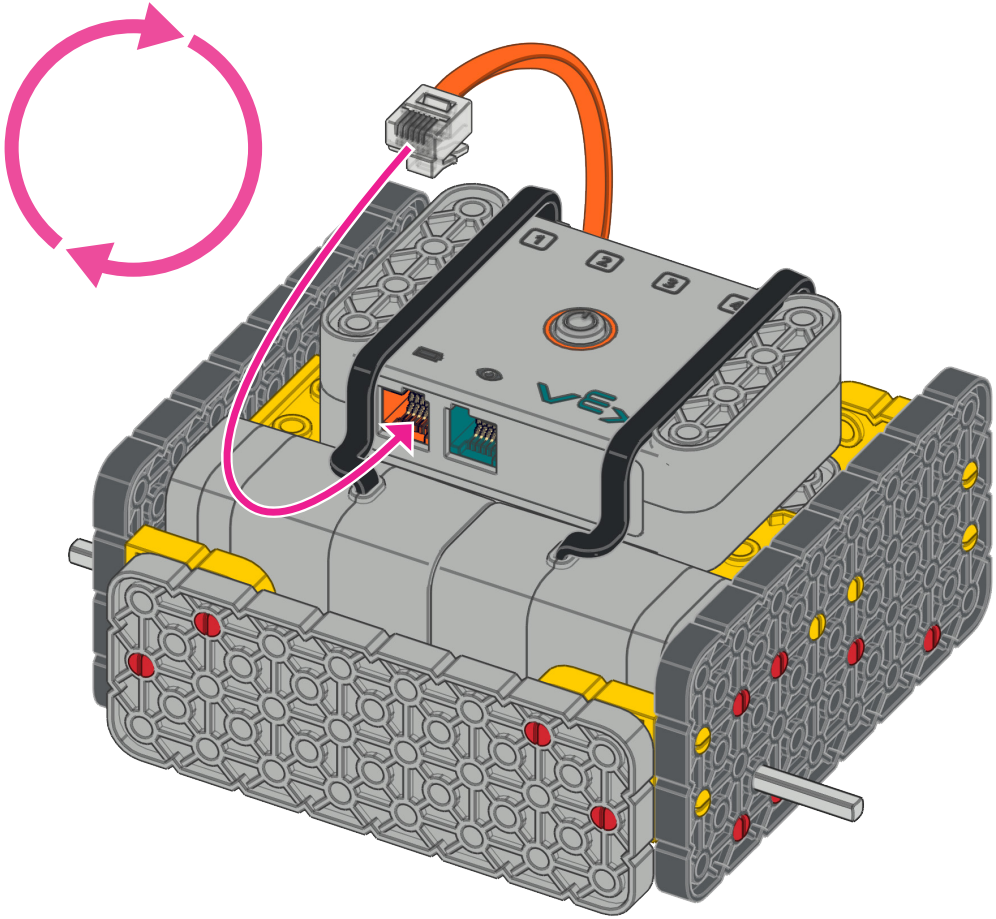

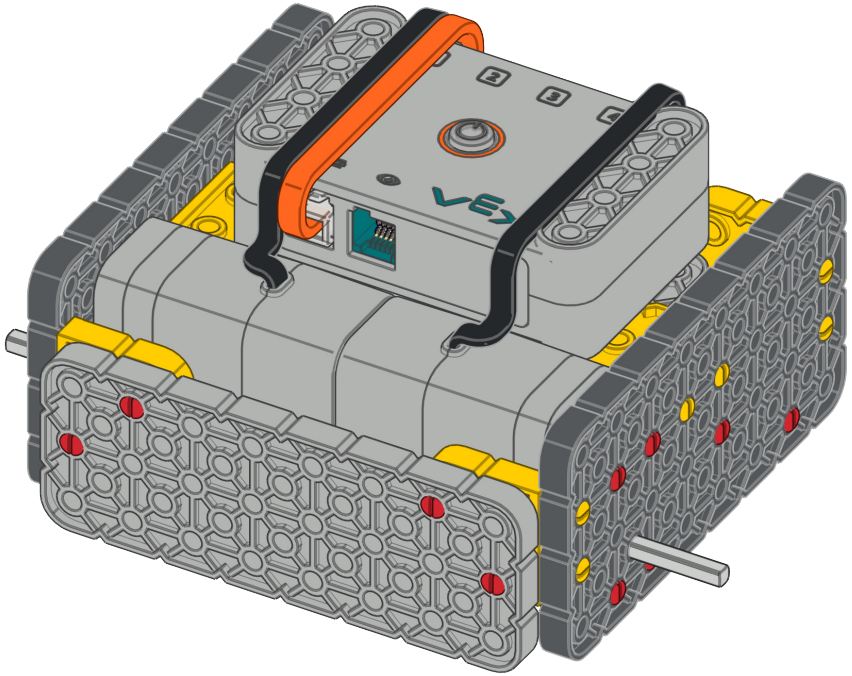

22

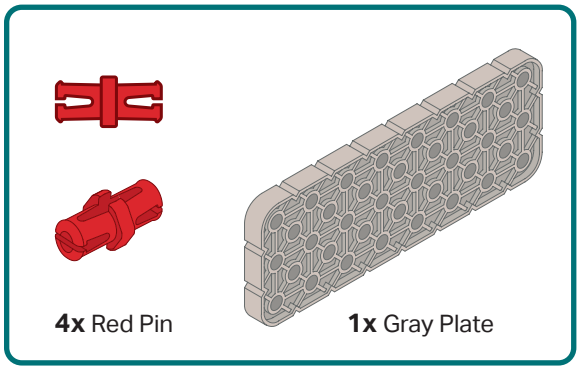

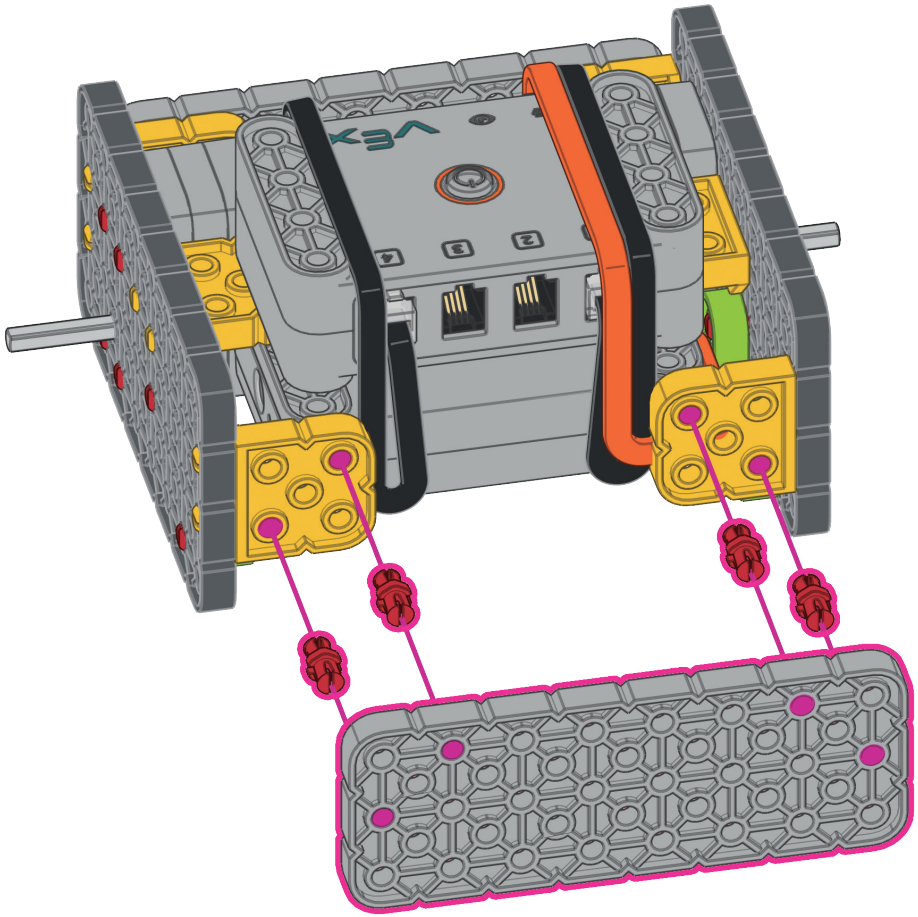

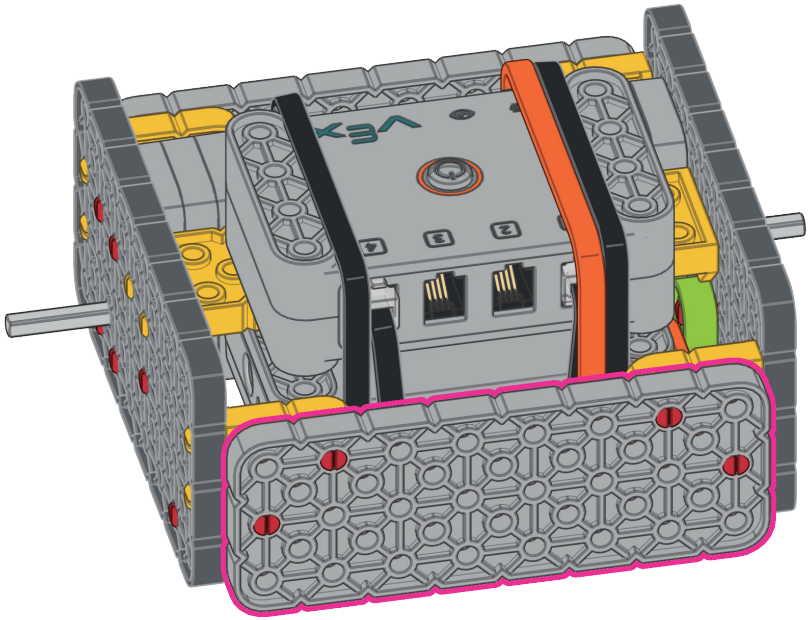

23

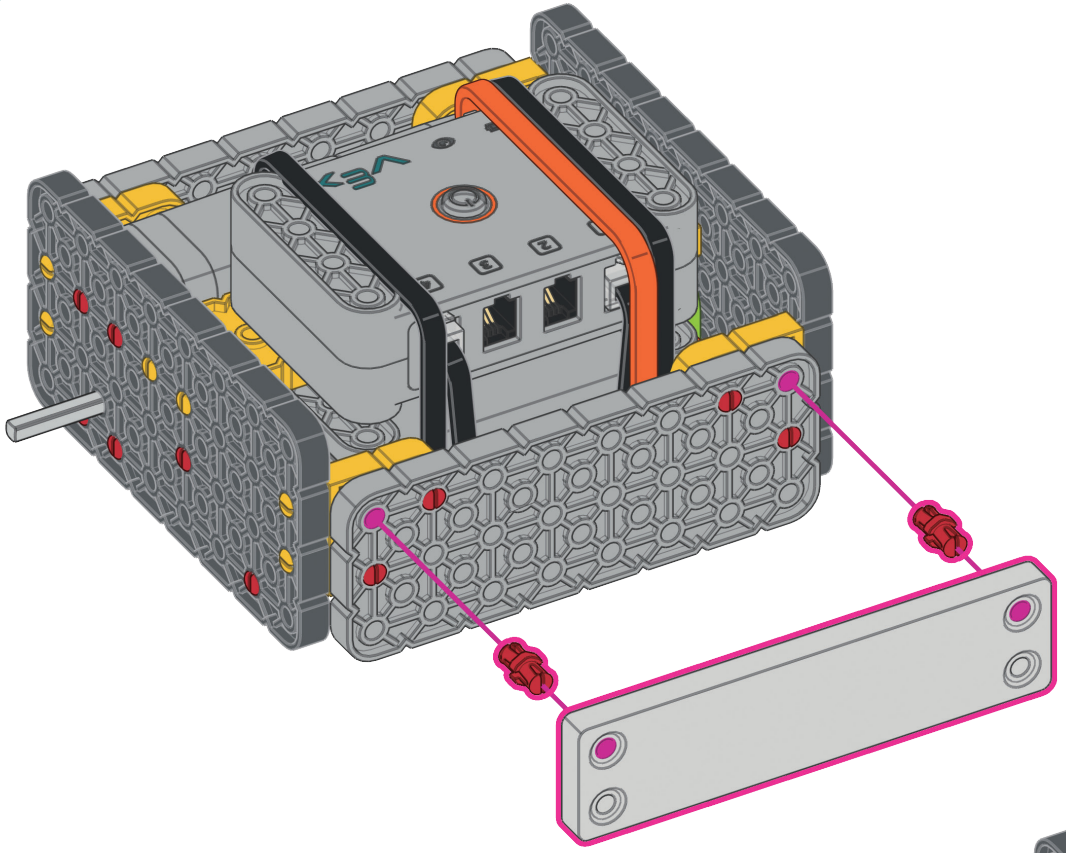

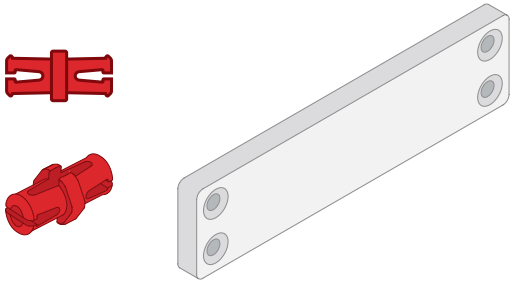

2x Red Pin

1x Name Plate

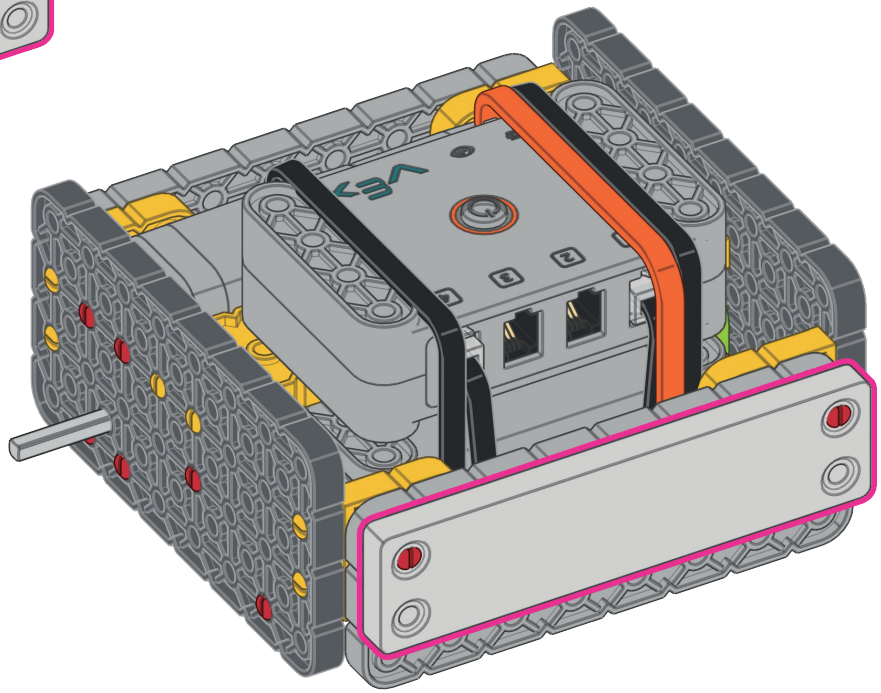

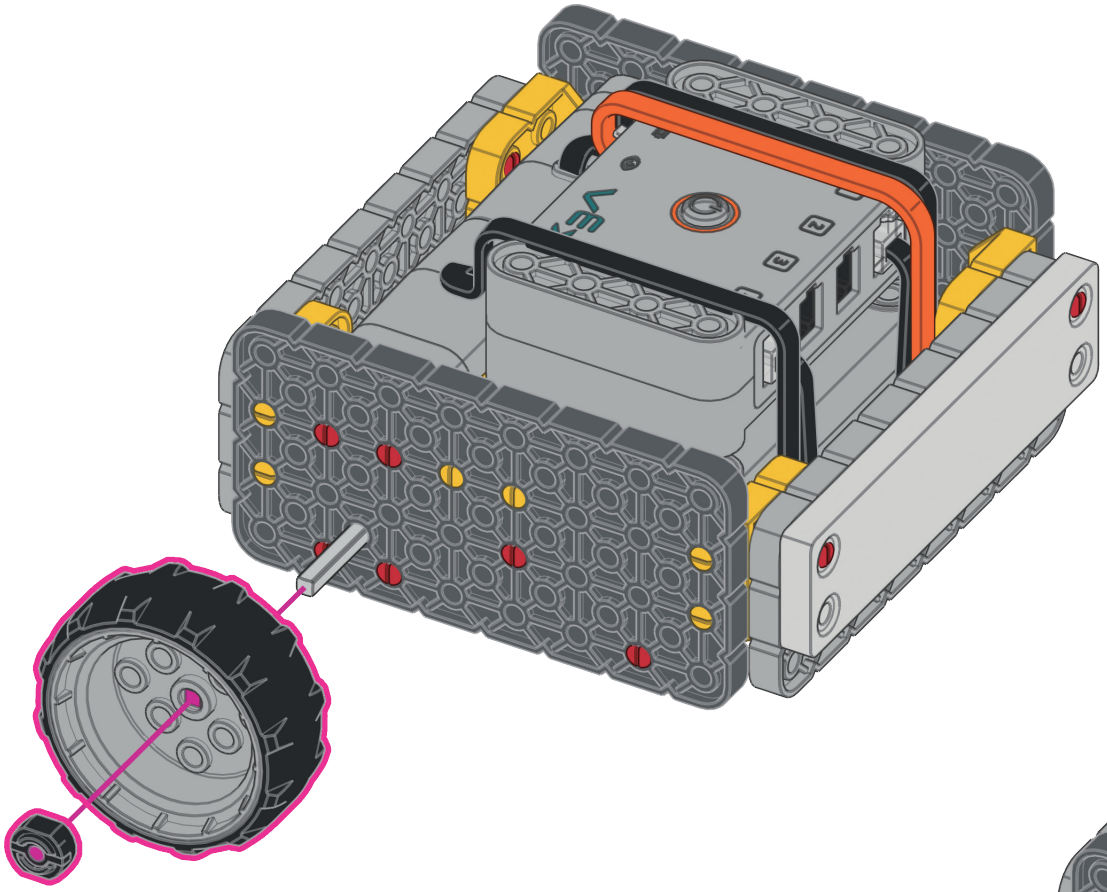

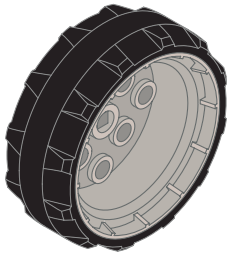

1x Gray Wheel

1x Shaft Collar

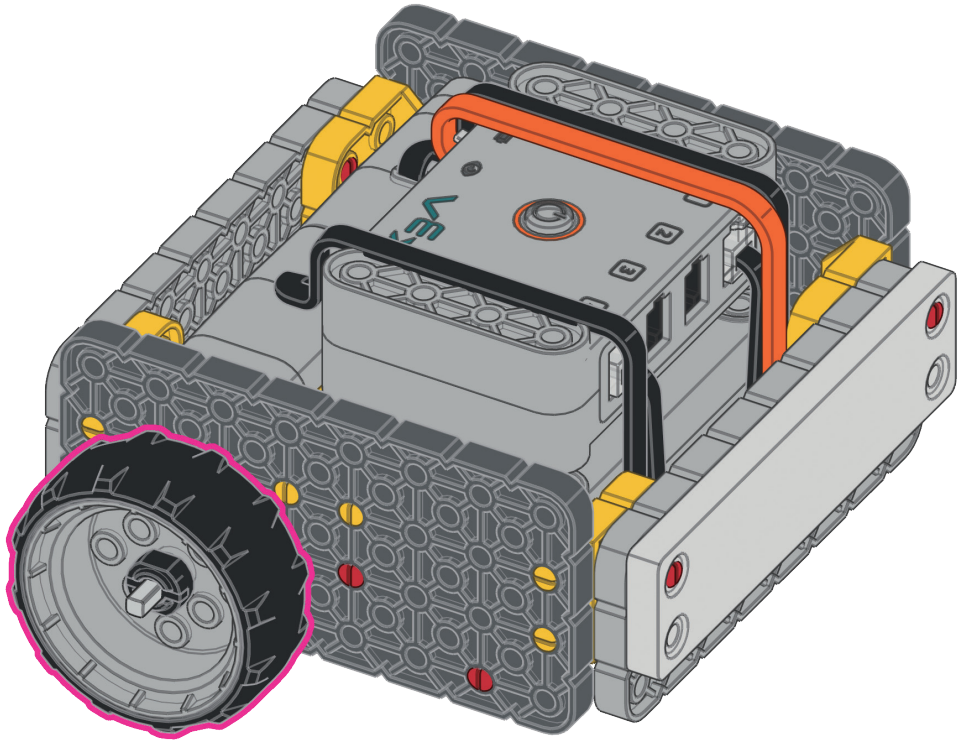

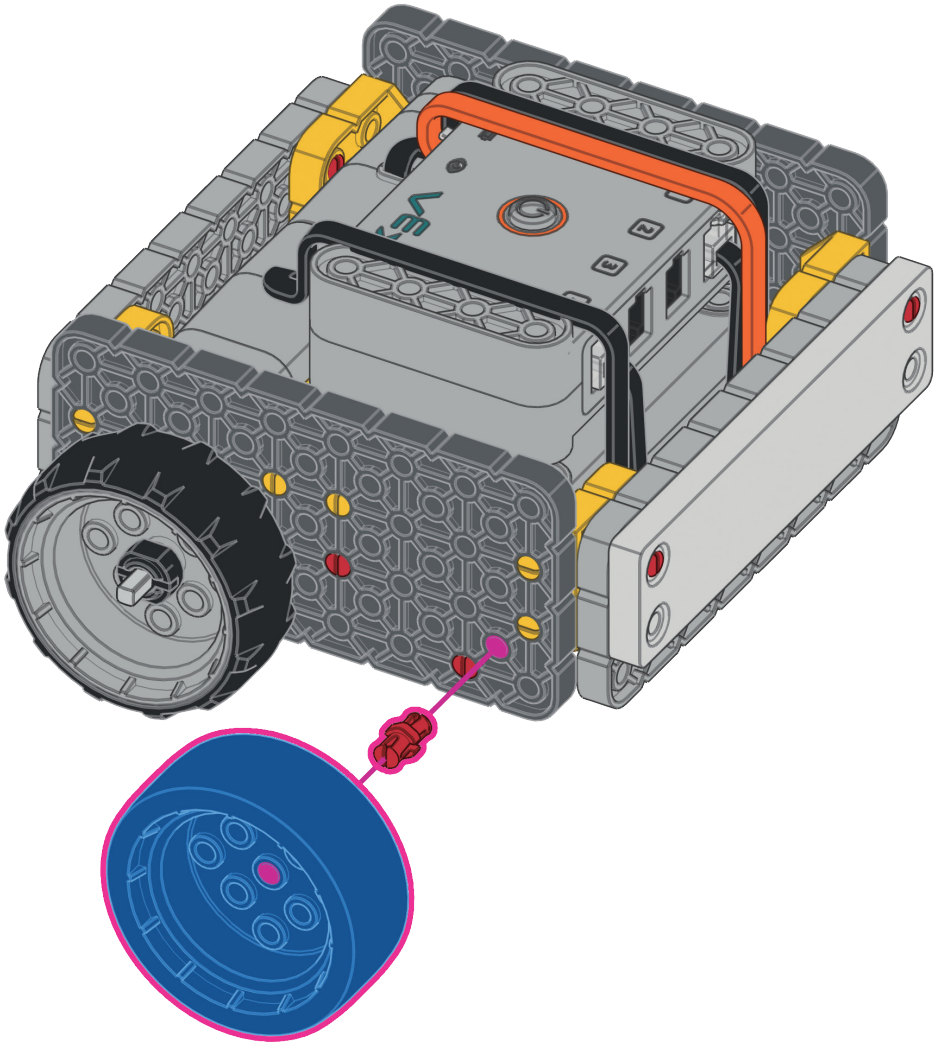

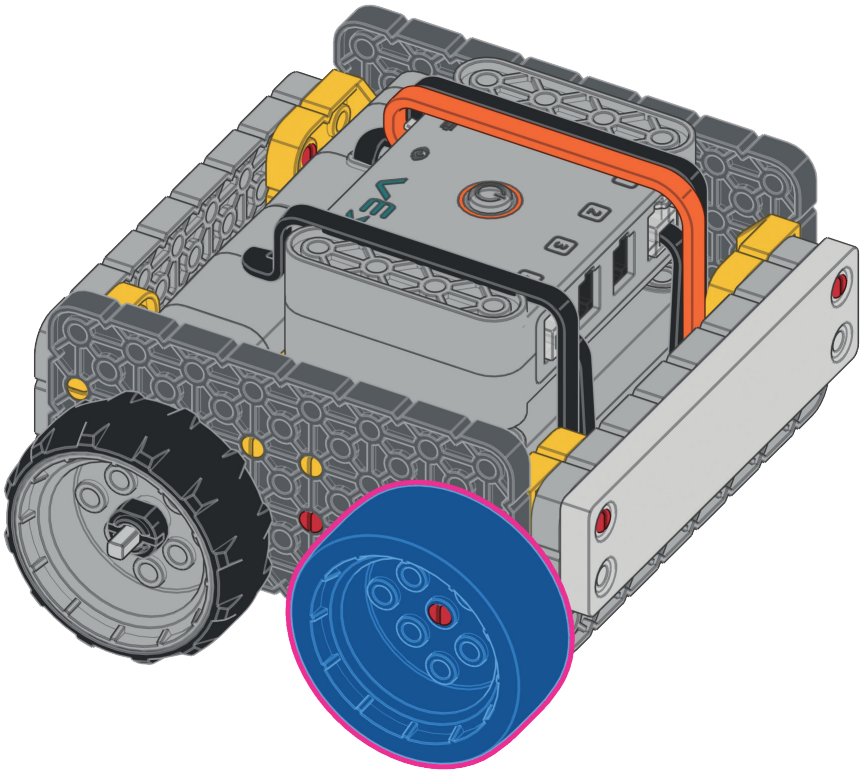

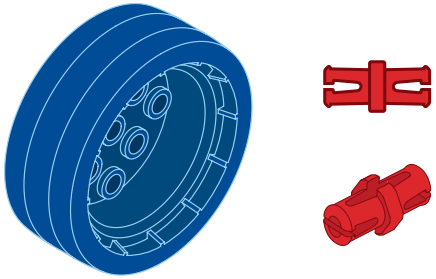

1x Blue Wheel

1x Red Pin

26

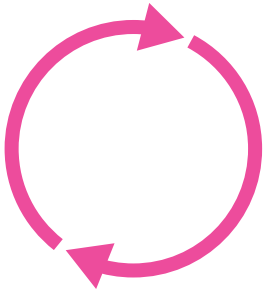

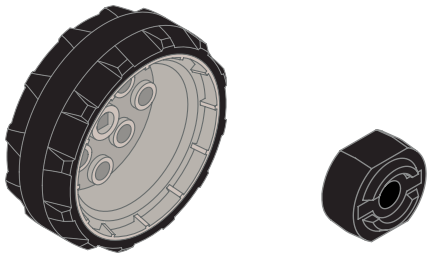

1x Gray Wheel **1x** Shaft Collar

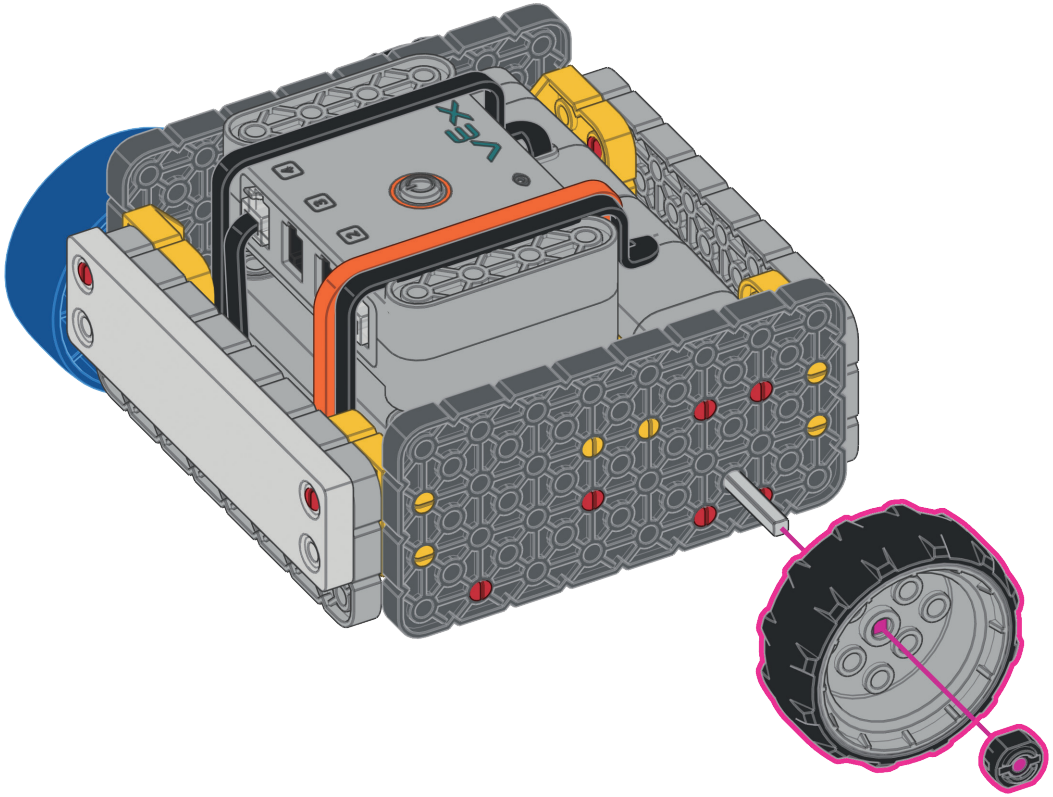

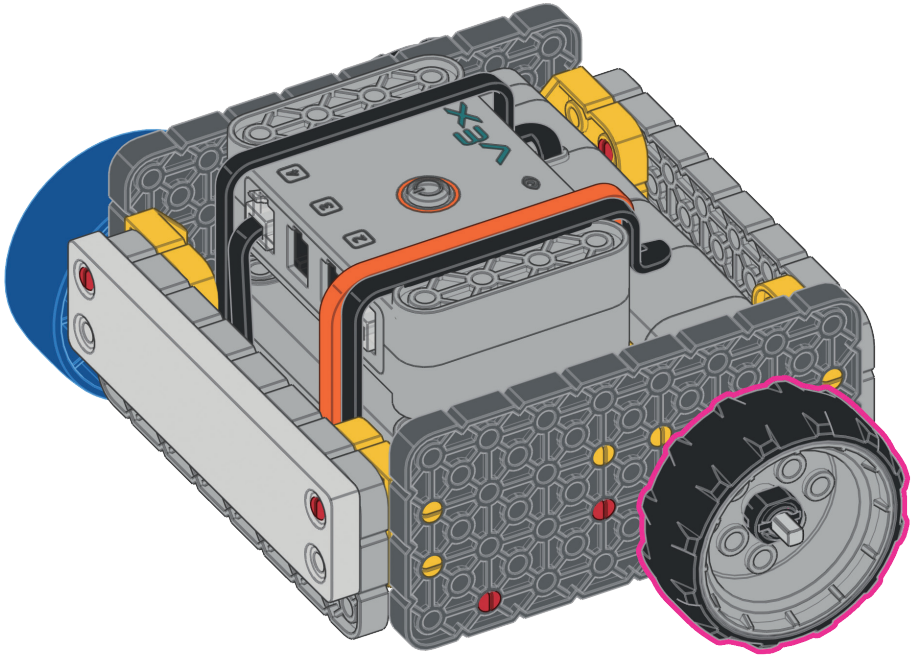

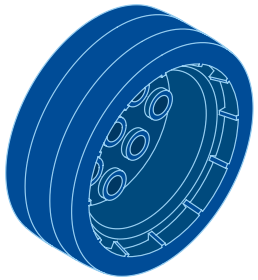

1x Blue Wheel

1x Red Pin

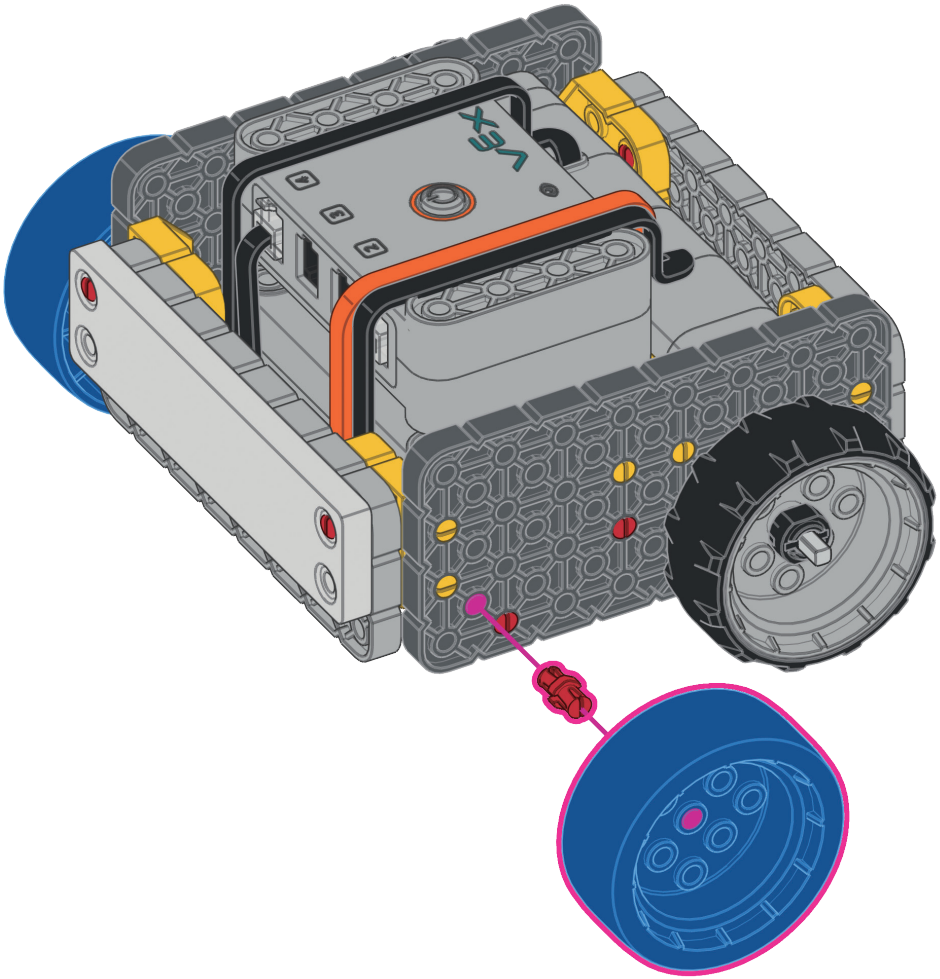

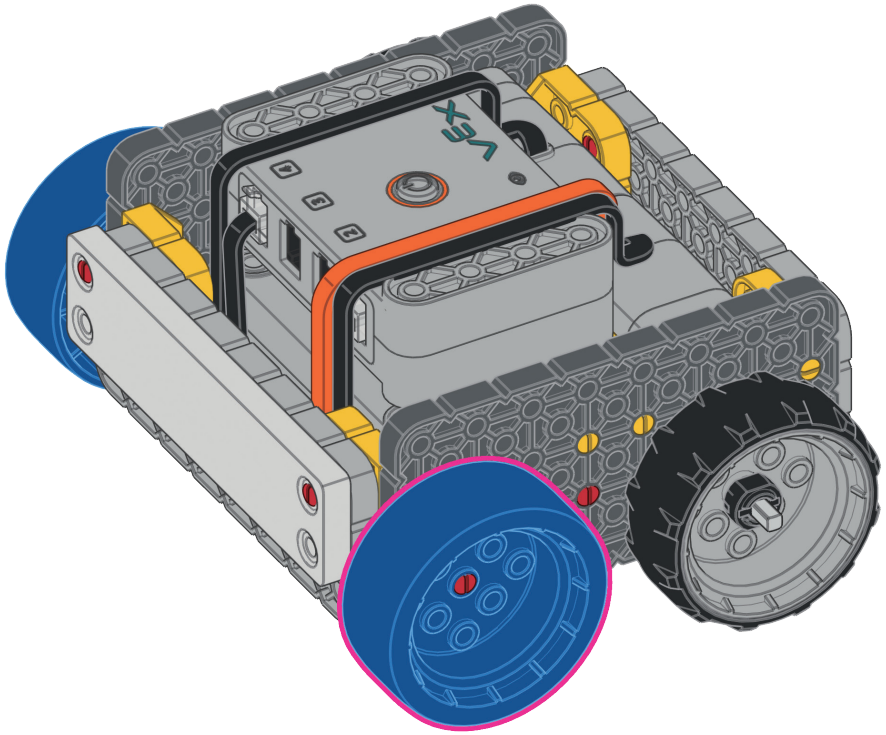

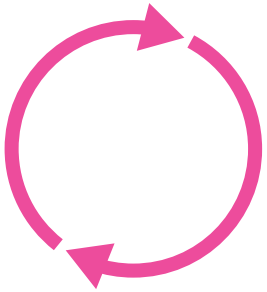

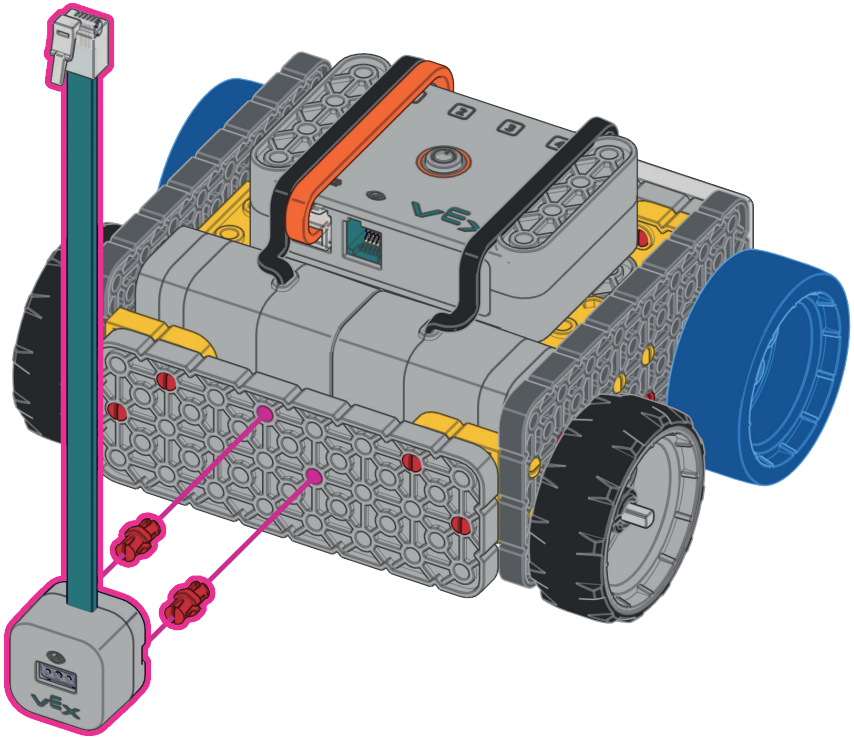

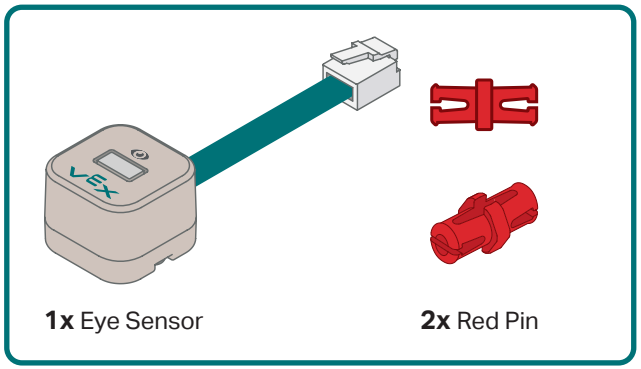
1x Eye Sensor
2x Red Pin

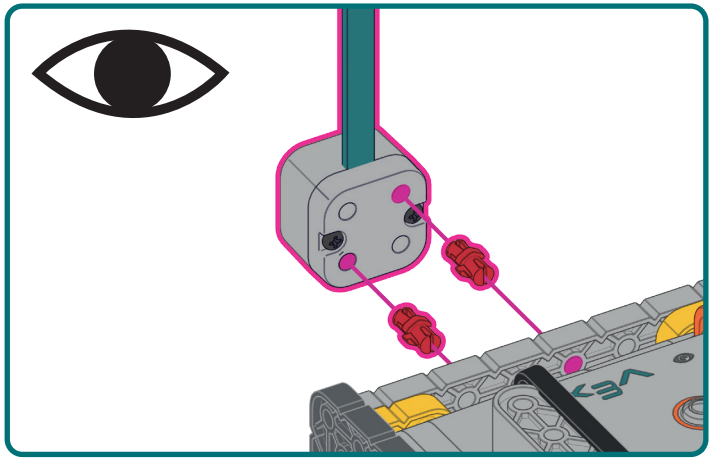

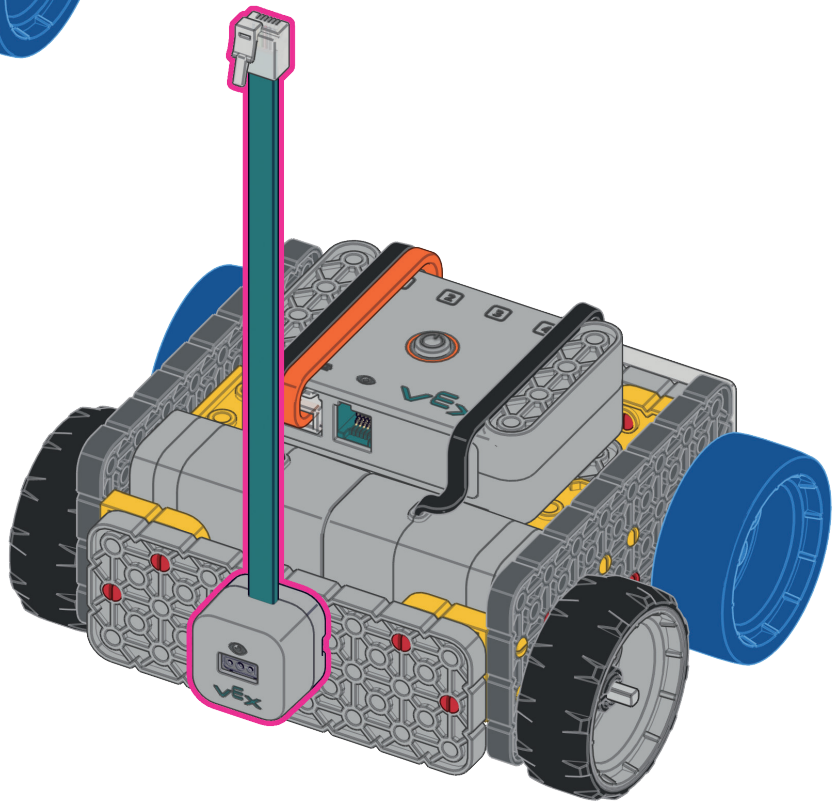

29

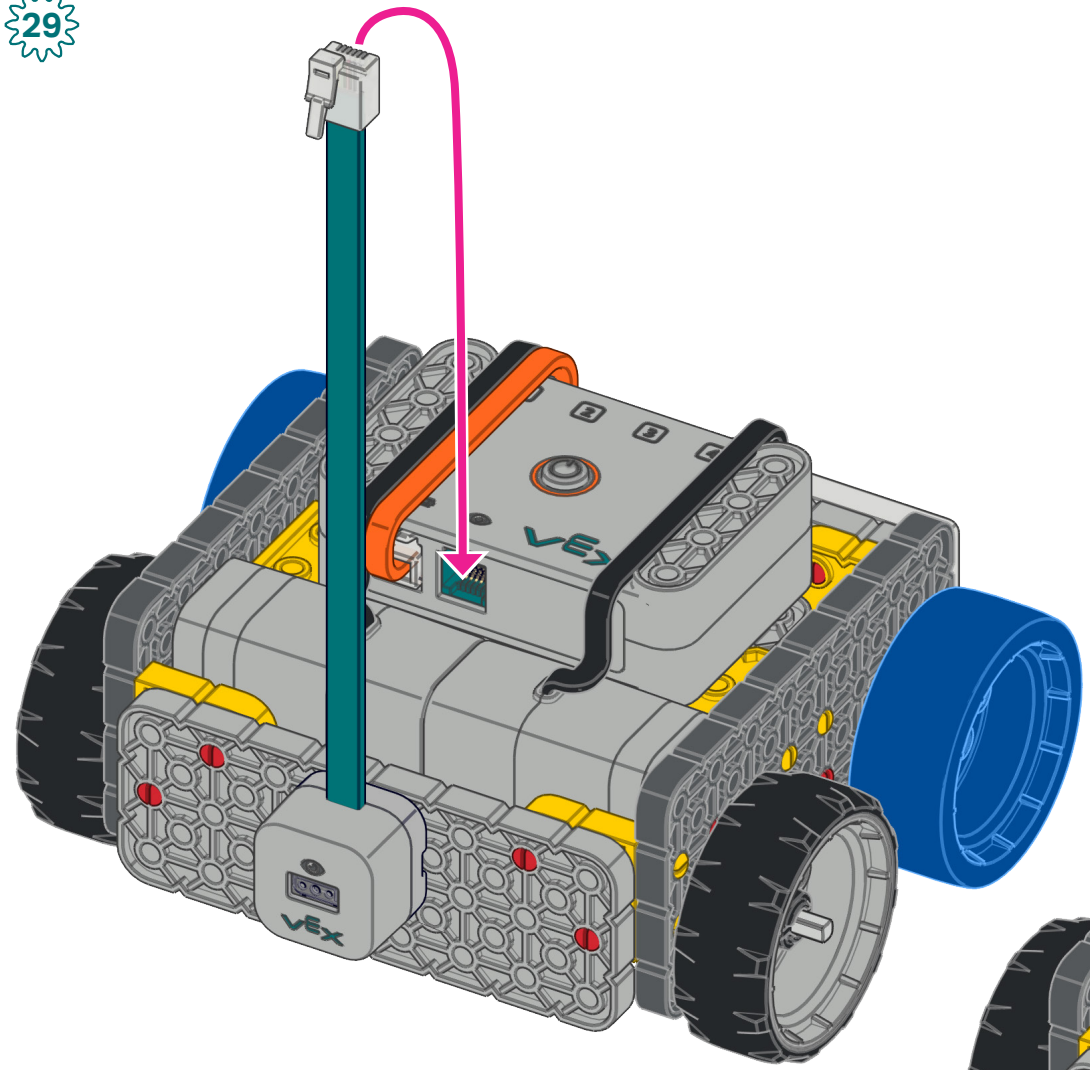

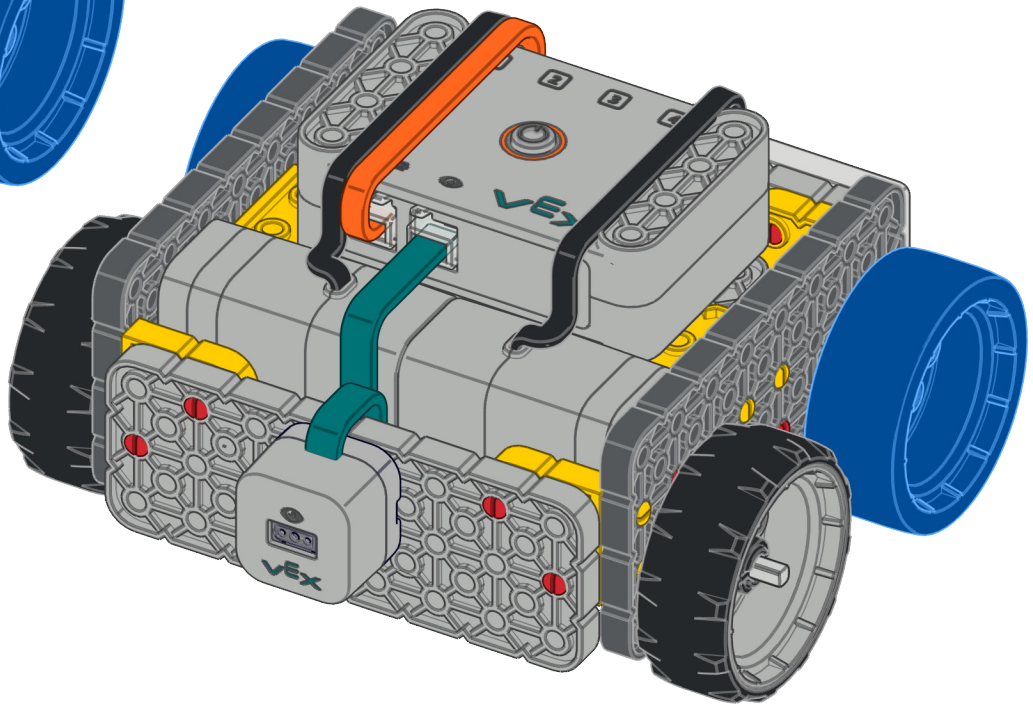

Competiton Base Build Instructions

269-8115-010 Rev3

A SUBSIDIARY OF INNOVATION FIRST® INTERNATIONAL

Custom manufactured in China for Innovation First Trading SARL. Distributed in the U.S.A, Mexico, Caribbean, Central & South America by VEX Robotics, Inc., 6725 W. FM 1570, Greenville, TX 75402, U.S.A. Distributed in China by Innovation First International (Shenzhen), Ltd., Suite 1906, Excellence Tower, 98 Fuhua Yi Road, Futian, Shenzhen, Guangdong, China 518048. Distributed in other regions by Innovation First Trading SARL, Innovation First Trading SARL, Parc Logistique Eurohub Sud, 3434 – Dudelange, Luxembourg +352 27 86 04 87. Distributed in Canada by / Distribuè au Canada par / Innovation First Trading, LLC, 6725 W. FM 1570, Greenville, TX 75402, U.S.A.