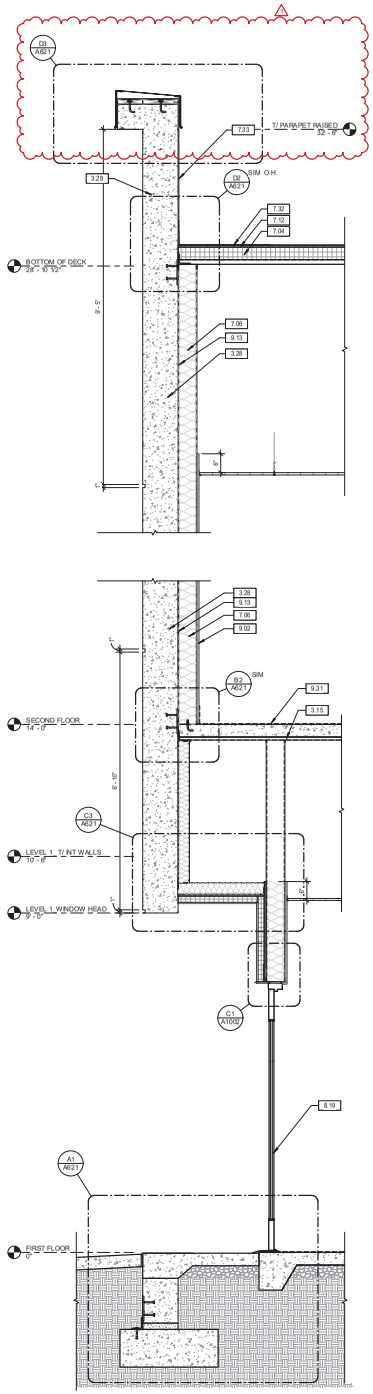

A1 A611 WS_1.A_CORRIDOR
3/4" = 1'-0"

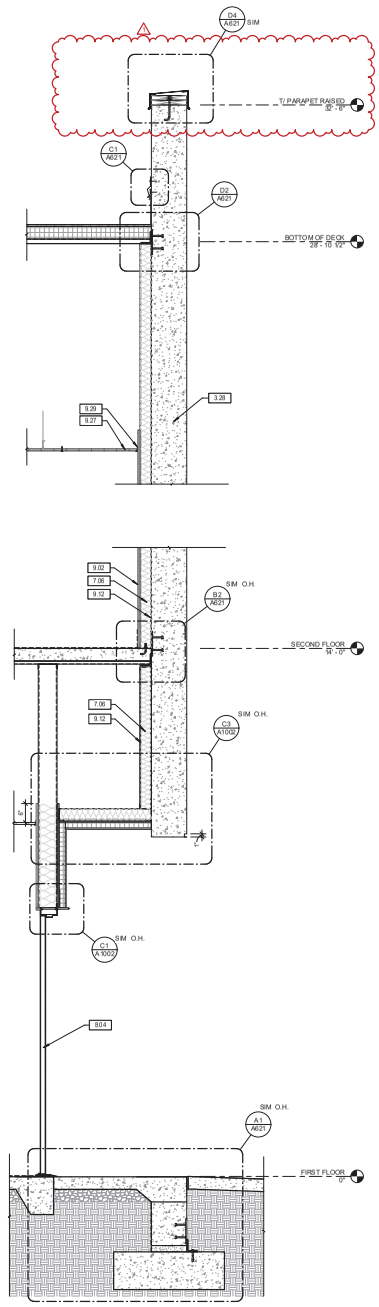

A2 A611 WS_1.B_CORRIDOR
3/4" = 1'-0"

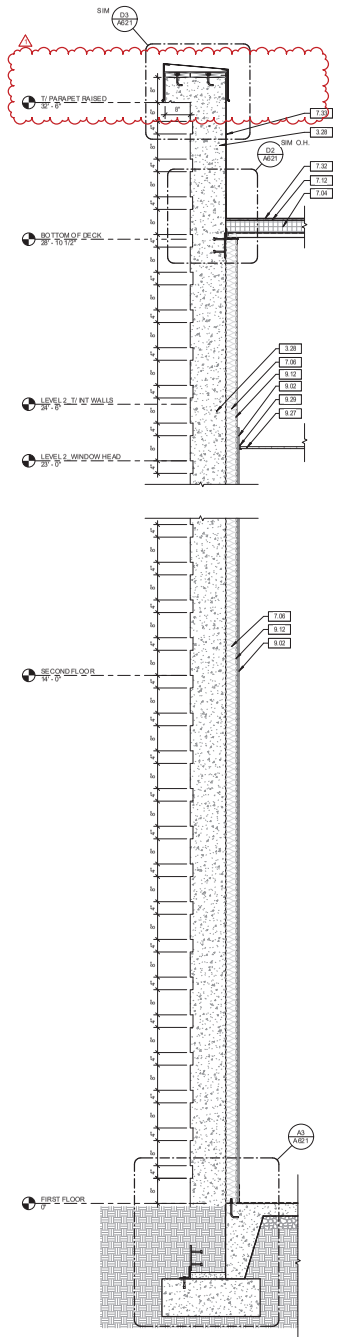

A3 A611 WS_2.A_WALL SECTION
3/4" = 1'-0"

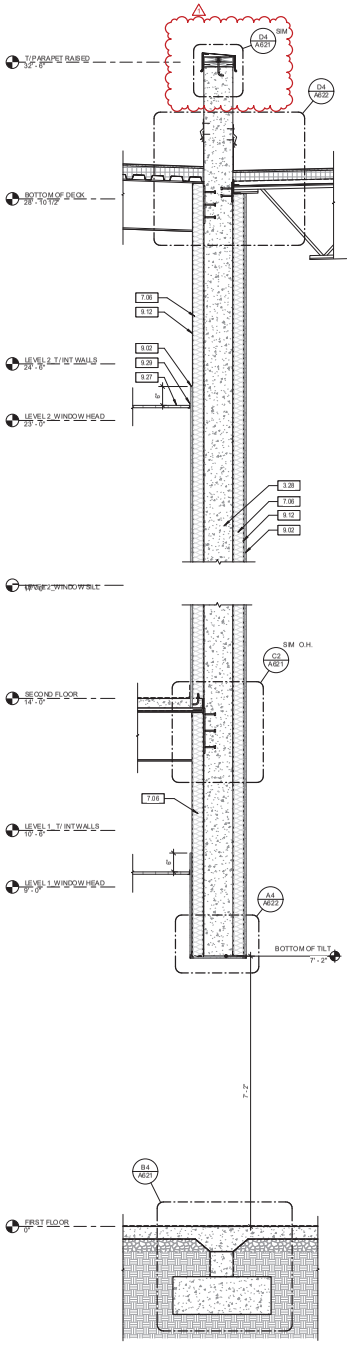

A4 A611 WS_2.B_GYM / CORRIDOR
3/4" = 1'-0"

DRAWING NOTES

3.15 CAST-IN-PLACE CONCRETE SLAB ON GRADE, REINFORCED; REFER TO STRUCTURAL DRAWINGS.
3.28 TILT-UP CONCRETE PANELS; REFER TO ARCHITECTURAL DETAILS FOR PROFILES; REFER TO STRUCTURAL DRAWINGS FOR TYPE AND REINFORCEMENT.
7.04 RIGID INSULATION; REFER TO SPECIFICATIONS FOR R-VALUE.
7.06 BATT INSULATION; REFER TO SPECIFICATIONS FOR R-VALUE.
7.12 COVER BOARD; INSTALL PER MANUFACTURER'S INSTRUCTIONS.
7.32 SINGLE PLY ROOFING MEMBRANE.
7.33 EXTEND ROOF MEMBRANE UP AND OVER TOP OF PARAPET WALLS UNDER 21'-0". IN ACCORDANCE WITH MANUFACTURER'S INSTRUCTIONS; PROVIDE HIGH TEMPERATURE UNDERLAYMENT.
8.04 DOOR; REFER TO DOOR SCHEDULE.
8.19 ALUMINUM STOREFRONT DOOR; REFER TO DOOR SCHEDULE & STOREFRONT ELEVATIONS.
9.02 5/8" GYPSUM WALL BOARD.
9.12 3-5/8" METAL STUD FRAMING SYSTEM.
9.13 6" METAL STUD FRAMING SYSTEM.
9.27 ACOUSTICAL CEILING TILE; REFER TO FINISH SCHEDULE.
9.29 CEILING SUSPENSION ASSEMBLY.
9.31 SCHEDULED FLOOR FINISH.

MUSSMAN ARCHITECTS
610 N. Main Street Greenville, SC 29601
ph: 864-626-6330 email: paulmemussmanarchitects.com

CONSULTANT LOGO

SEAL DATE: 10.07.2022

TREASURE COAST CLASSICAL ACADEMY

TCCA HIGH SCHOOL BUILDING

1400 SE COVE RD
STUART FLORIDA 34997

SHEET ISSUE:

NO.	DATE	DESCRIPTION	BY
0	10.07.22	Permit Submittal	MG
1	03.07.23	Site Plan Application Revisions	MG

PRINCIPAL IN CHARGE: PM
PROJECT ARCHITECT: MG
DRAWN BY: RM

SHEET TITLE:
WALL SECTIONS

SHEET NO. A611
PROJ. NO. 022004