SCOPE OF WORK

THIS PROJECT WORK INCLUDES THE REMOVAL OF EXISTING ASPHALT AND CONCRETE PAVING AND THE INSTALLATION OF NEW CONCRETE PAVING, CONCRETE PAVERS, SEAT WALL, CONCRETE CURBS ALONG WITH NEW PLANTING AND IRRIGATION AS INDICATED ON THE PLANS.

APPLICABLE CODES & STANDARDS

PART 1 – 2019 CALIFORNIA BUILDING STANDARD ADMINISTRATIVE CODE. TITLE 24 C.C.R.

PART 2 – 2016 CALIFORNIA BUILDING CODE – TITLE 24 C.C.R.

SYMBOLS

DETAIL CALL–OUT

4 — DETAIL NUMBER
L2.1 — SHEET NUMBER

ABREVIATIONS

CONC.	CONCRETE
CAB	CRUSHED AGGREGATE BASE
CONT.	CONTINUOUS
C.O.	CLEAN OUT
D.G.	DECOMPOSED GRANITE
DIA.	DIAMETER
E.J.	EXPANSION JOINT
(E)	EXISTING
FIN.	FINISH
FG	FINISH GRADE
FS	FINISH SURFACE
GRD.	GRADE
MAX	MAXIMUM
M.P.R.	MULTI PURPOSE ROOM
(N)	NEW
O.C.	ON CENTER
STL.	STEEL
TC	TOP OF CURB
C. TO C.	CENTER TO CENTER
TYP.	TYPICAL

CONSTRUCTION PROGRAM

THE CONTRACTOR SHALL IMPLEMENT A CONSTRUCTION PROGRAM THAT PREVENTS ILLICIT CONSTRUCTION–RELATED DISCHARGES OF POLLUTANTS INTO THE MS4, IMPLEMENTS AND MAINTAINS STRUCTURAL AND NON–STRUCTURAL BMPS TO REDUCE POLLUTANTS IN STORMWATER RUNOFF FROM CONSTRUCTION SITES, REDUCES CONSTRUCTION SITE DISCHARGES OF POLLUTANTS FROM THE MS4 TO THE MEP, AND PREVENTS CONSTRUCTION SITE DISCHARGES FROM THE MS4 FROM CAUSING OR CONTRIBUTING TO A VIOLATION OF WATER QUALITY STANDARDS.

BMP IMPLEMENTATION – CONSTRUCTION SITES LESS THAN ONE ACRE
THE CONTRACTOR SHALL REQUIRE THE IMPLEMENTATION OF AN EFFECTIVE COMBINATION OF EROSION AND SEDIMENT CONTROL BMP'S FROM THE COUNTY OF VENTURA STORMWATER QUALITY MANAGEMENT PROGRAM BEST MANAGEMENT PRACTICES FOR CONSTRUCTION LESS THAN 1 ACRE.

SIMI VALLEY UNIFIED SCHOOL DISTRICT
101 WEST COCHRAN STREET
SIMI VALLEY , CA 93065

GARDEN GROVE ELEMENTARY SCHOOL
KINDERGARTEN AREA LANDSCAPE IMPROVEMENTS
2250 N. TRACY AVENUE, SIMI VALLEY 93063

VICINITY MAP

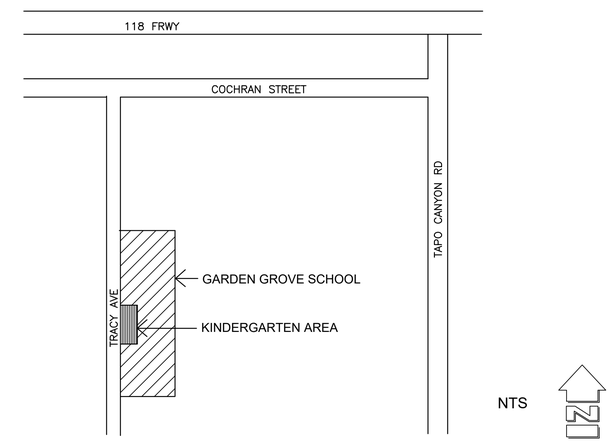

SCHEDULE OF DRAWINGS

SHEET NO.	SHEET REFERENCE	SHEET TITLE
1	T-1	COVER SHEET
2	L1.1	EXISTING CONDITIONS & REMOVALS PLAN
3	L1.2	STAKING PLAN
4	L2.1	CONSTRUCTION DETAILS
5	L2.2	CONSTRUCTION DETAILS
6	L3.1	IRRIGATION PLAN
7	L3.2	IRRIGATION PLAN
8	L3.3	IRRIGATION LEGEND AND PROJECT NOTES
9	L4.1	PLANTING PLAN
10	L4.2	PLANTING PLAN
11	L5.1	PLANTING & IRRIGATION DETAILS

JORDAN, GILBERT & BAIN
LANDSCAPE ARCHITECTS, INC.
459 N. VENTURA AVE.
VENTURA, CA. 93001

(805)-642-3641

REGISTERED LANDSCAPE ARCHITECT — PAUL J. JORDAN — 2443 — STATE OF CALIFORNIA
SIGNATURE 2-11-20
RENEWAL DATE 1-6-20
DATE

REVISIONS

NO.	DATE	BY	DESCRIPTION
1			

SIMI VALLEY UNIFIED SCHOOL DISTRICT
101 WEST COCHRAN STREET
SIMI VALLEY, CA. 93065

COVER SHEET

GARDEN GROVE ELEMENTARY
KINDERGARTEN LANDSCAPE IMPROVEMENTS
2250 N. TRACY AVENUE, SIMI VALLEY, CA. 93063

DATE 1-7-20

SHEET T-1
1 OF 11

KEY NOTES

SYMBOL	KEY SYMBOL	WORK DESCRIPTION
	A	SAW–CUT AS INDICATED AND REMOVE EXISTING CONCRETE PAVING.
	B	REMOVE EXISTING ASPHALT PAVING AND ANY BASE MATERIAL. RE–GRADE AND PREPARE SOIL FOR NEW PLANTING. AFTER ASPHALT REMOVAL THE LA WILL TAKE SOIL SAMPLES FOR LAB TESTING
	C	REMOVE EXISTING GRASS AND VEGETATION AND PREP SOIL FOR NEW PLANTING
(NO SYMBOL)	D	ENCROACHMENT PERMIT FOR THE UNDER–WALK DRAINS REQUIRED SELECTIVE REMOVAL OF PORTIONS OF THE SIDEWALK, CURB AND GUTTER, AND THE EXISTING DAMAGED UNDER–WALK DRAIN SEE THE STAKING PLAN FOR MORE DETAILS.

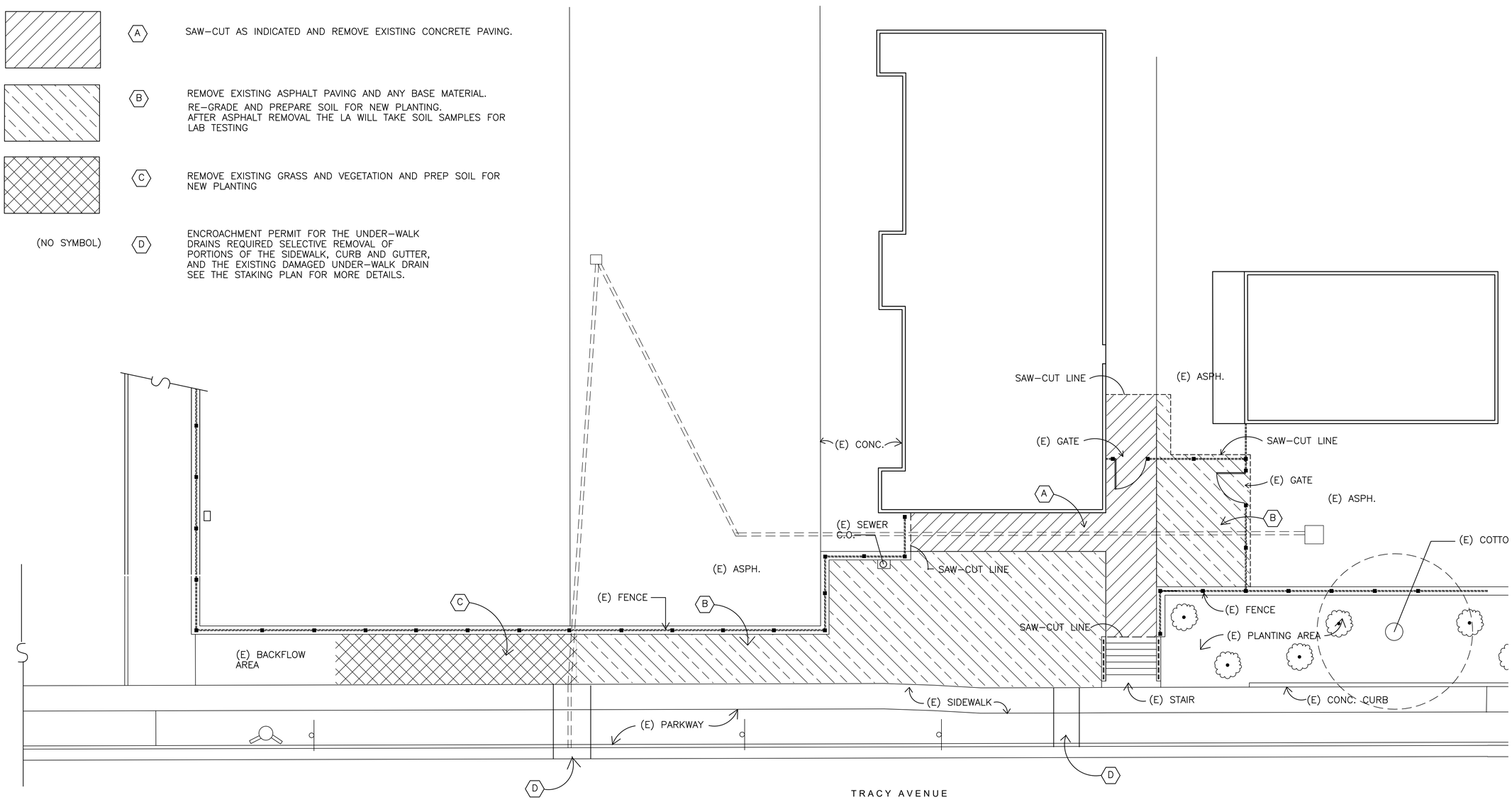

1 EXISTING CONDITIONS AND REMOVALS

GRAPHIC SCALE

0 8 16 24

SCALE: 1"=8'

JORDAN, GILBERT & BAIN
LANDSCAPE ARCHITECTS, INC.
459 N. VENTURA AVE.
VENTURA, CA. 93001

(805)-642-3641

REGISTERED LANDSCAPE ARCHITECT
PAUL J. JORDAN 1243
SIGNATURE
2–11–22
RENEWAL DATE
1–6–20
DATE
STATE OF CALIFORNIA

REVISIONS

NO.	DATE	BY	DESCRIPTION
1			

SIMI VALLEY UNIFIED SCHOOL DISTRICT
101 WEST COCHRAN STREET
SIMI VALLEY, CA. 93065

EXISTING CONDITIONS AND REMOVALS

GARDEN GROVE ELEMENTARY
KINDERGARTEN LANDSCAPE IMPROVEMENTS
2250 N. TRACY AVENUE, SIMI VALLEY, CA. 93063

DATE
1–7–20

SHEET
L1.1
2 OF 11

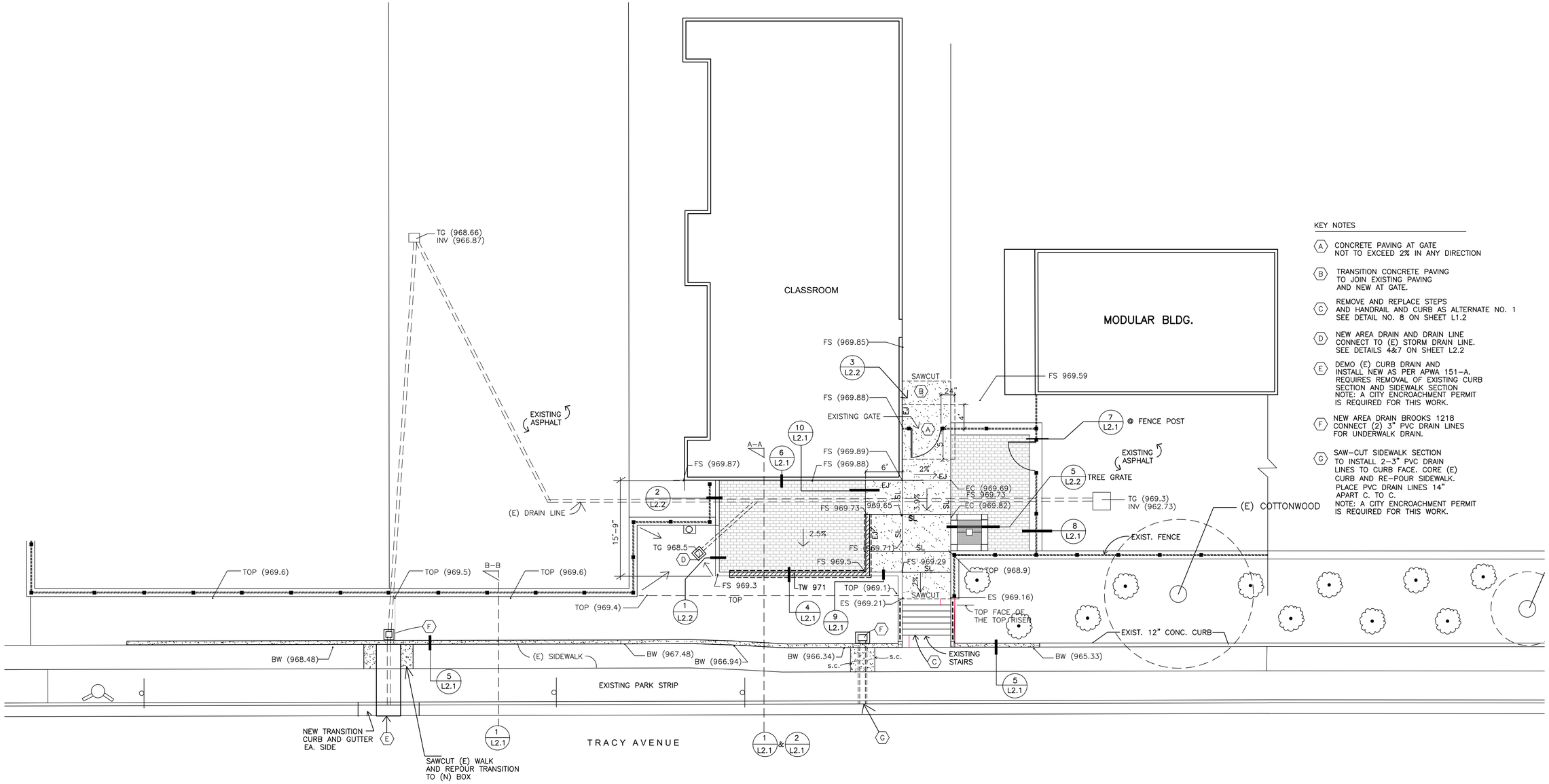

KEY NOTES

- (A) CONCRETE PAVING AT GATE NOT TO EXCEED 2% IN ANY DIRECTION
- (B) TRANSITION CONCRETE PAVING TO JOIN EXISTING PAVING AND NEW AT GATE.
- (C) REMOVE AND REPLACE STEPS AND HANDRAIL AND CURB AS ALTERNATE NO. 1 SEE DETAIL NO. 8 ON SHEET L1.2
- (D) NEW AREA DRAIN AND DRAIN LINE CONNECT TO (E) STORM DRAIN LINE. SEE DETAILS 4&7 ON SHEET L2.2
- (E) DEMO (E) CURB DRAIN AND INSTALL NEW AS PER APWA 151–A. REQUIRES REMOVAL OF EXISTING CURB SECTION AND SIDEWALK SECTION NOTE: A CITY ENCROACHMENT PERMIT IS REQUIRED FOR THIS WORK.
- (F) NEW AREA DRAIN BROOKS 1218 CONNECT (2) 3" PVC DRAIN LINES FOR UNDERWALK DRAIN.
- (G) SAW–CUT SIDEWALK SECTION TO INSTALL 2–3" PVC DRAIN LINES TO CURB FACE. CORE (E) CURB AND RE–POUR SIDEWALK. PLACE PVC DRAIN LINES 14" APART C. TO C. NOTE: A CITY ENCROACHMENT PERMIT IS REQUIRED FOR THIS WORK.

GRAPHIC SCALE

0 8 16 24

SCALE: 1"=8'

JORDAN, GILBERT & BAIN
LANDSCAPE ARCHITECTS, INC.
459 N. VENTURA AVE.
VENTURA, CA. 93001

(805)-642-3641

REGISTERED LANDSCAPE ARCHITECT
PAUL J. JORDAN
2001
SIGNATURE
2-11-22
RENEWAL DATE
1-6-20
DATE
STATE OF CALIFORNIA

REVISIONS

NO.	DATE	BY	DESCRIPTION
1			

SIMI VALLEY UNIFIED SCHOOL DISTRICT
101 WEST COCHRAN STREET
SIMI VALLEY, CA. 93065

STAKING PLAN

GARDEN GROVE ELEMENTARY
KINDERGARTEN LANDSCAPE IMPROVEMENTS
2250 N. TRACY AVENUE, SIMI VALLEY, CA. 93063

DATE
1-7-20

SHEET
L1.2
3 OF 11

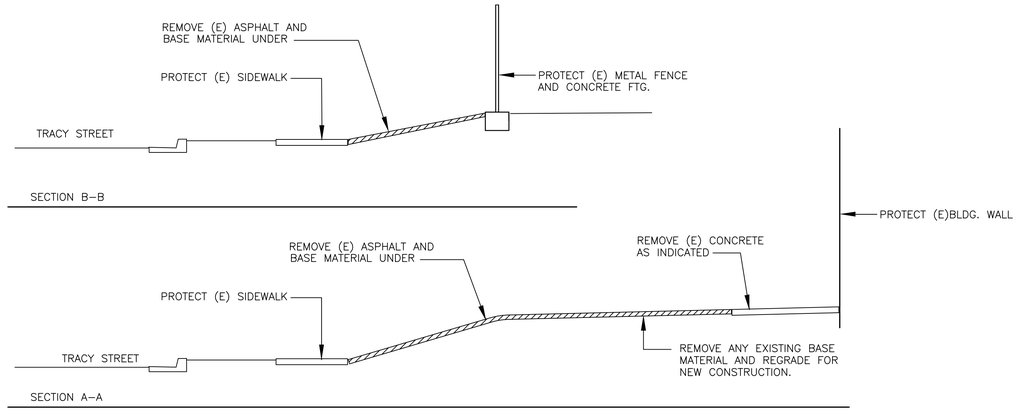

1 SECTION A-A & B-B LOOKING NORTH SCALE 1/4" = 1'-0"

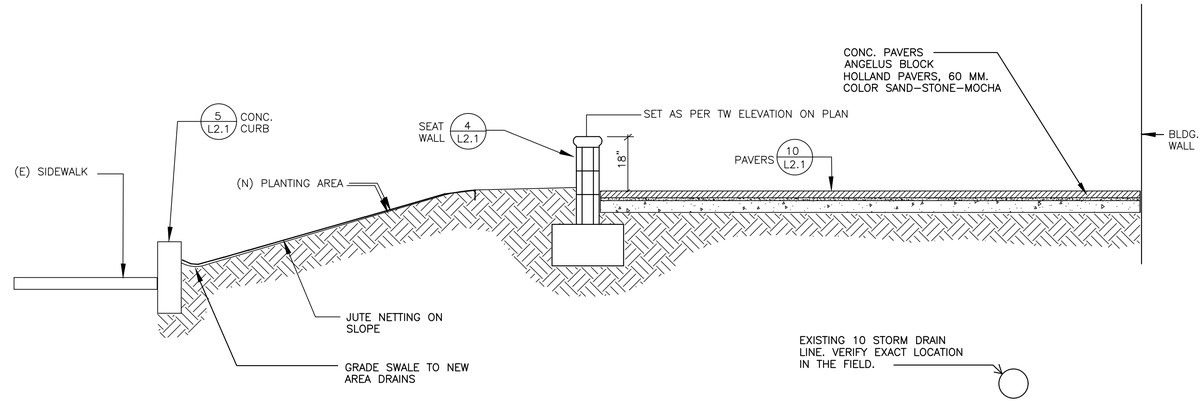

2 SECTION THRU PATIO SCALE 1/2" = 1'-0"

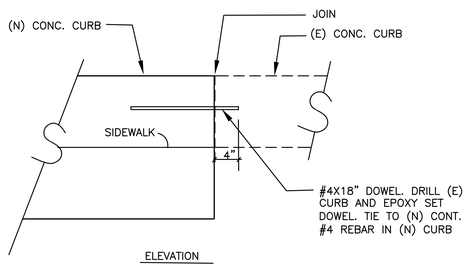

3 NEW TO EXISTING CURB CONNECTION SCALE 1" = 1'-0"

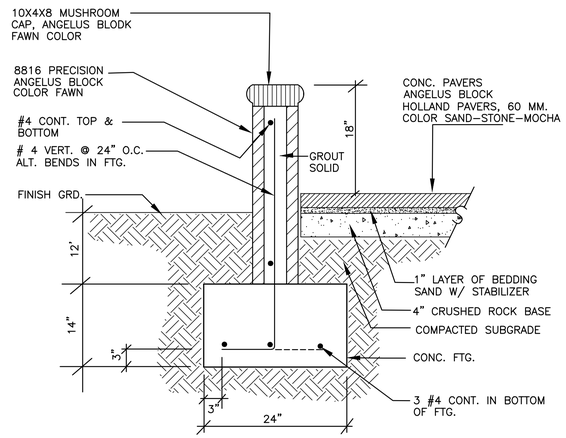

4 SEAT WALL DETAIL SCALE 1" = 1'-0"

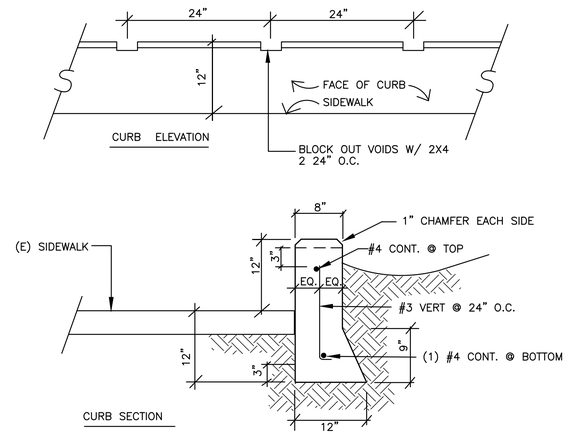

5 CONCRETE CURB DETAIL SCALE 1/2" = 1'-0"

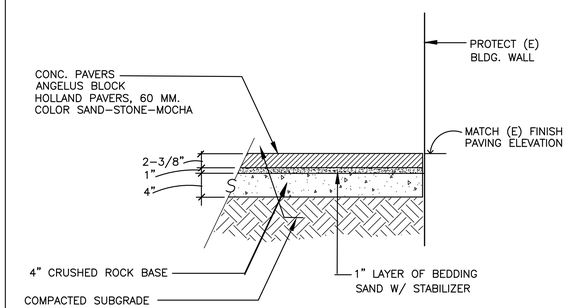

6 CONC. PAVERS SCALE 1" = 1'-0"

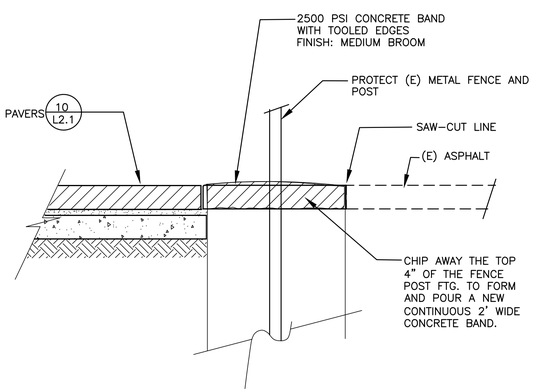

7 CONC BAND @ (E) FENCE SCALE 1" = 1'-0"

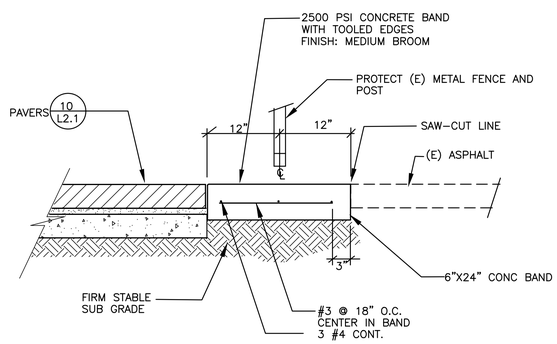

8 CONC BAND DETAIL SCALE 1" = 1'-0"

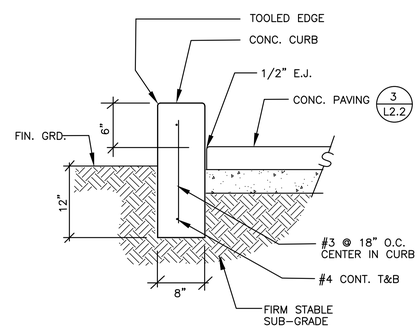

9 CONC. CURB SCALE 1" = 1'-0"

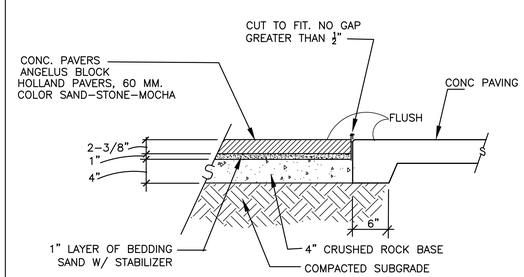

10 CONCRETE PAVERS SCALE 1" = 1'-0"

JORDAN, GILBERT & BAIN
LANDSCAPE ARCHITECTS, INC.
459 N. VENTURA AVE.
VENTURA, CA. 93001

(805)-642-3641

REGISTERED LANDSCAPE ARCHITECT
PAUL J. JORDAN
SIGNATURE
2-11-22
RENEWAL DATE
1-6-20
DATE
STATE OF CALIFORNIA

REVISIONS

NO.	DATE	BY	DESCRIPTION
1			

SIMI VALLEY UNIFIED SCHOOL DISTRICT
101 WEST COCHRAN STREET
SIMI VALLEY, CA. 93065

LANDSCAPE CONSTRUCTION DETAILS

GARDEN GROVE ELEMENTARY
KINDERGARTEN LANDSCAPE IMPROVEMENTS
2250 N. TRACY AVENUE, SIMI VALLEY, CA. 93063

DATE
1-7-20

SHEET
L2.1
4 OF 11

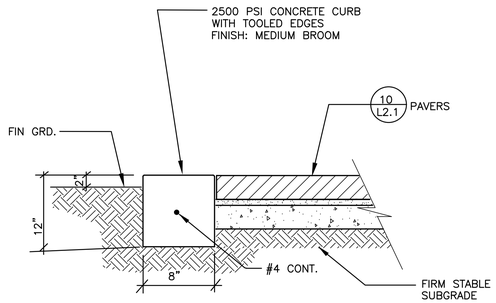

1 CONC BAND / PAVERS SCALE 1" = 1'-0"

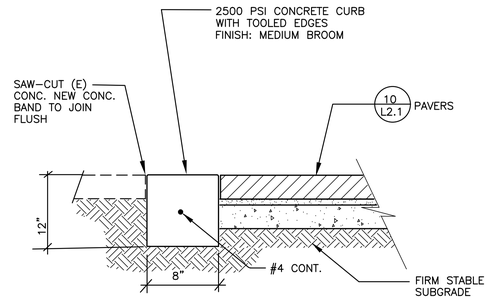

2 CONC BAND / PAVERS SCALE 1" = 1'-0"

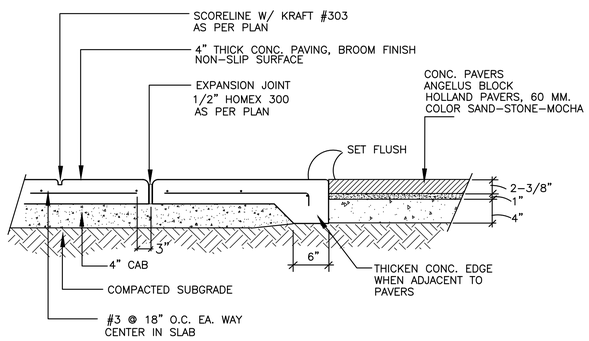

3 CONCRETE PAVING DETAIL SCALE 1" = 1'-0"

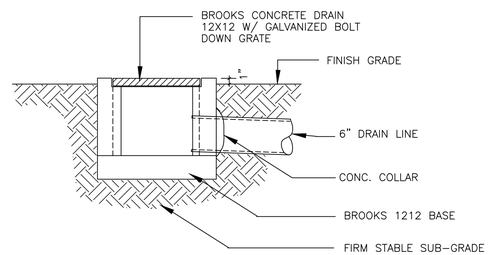

4 AREA DRAIN N.T.S.

NOTE:

1. TREE GRATE SHALL HAVE A BLACK POWDER COATED FINISH W/ SLIP RESISTANT FINISH
2. TREE GRATE FRAME SHALL HAVE A BLACK POWDER COATED FINISH
3. TREE STAKE SHALL HAVE A BLACK POWDER COATED FINISH

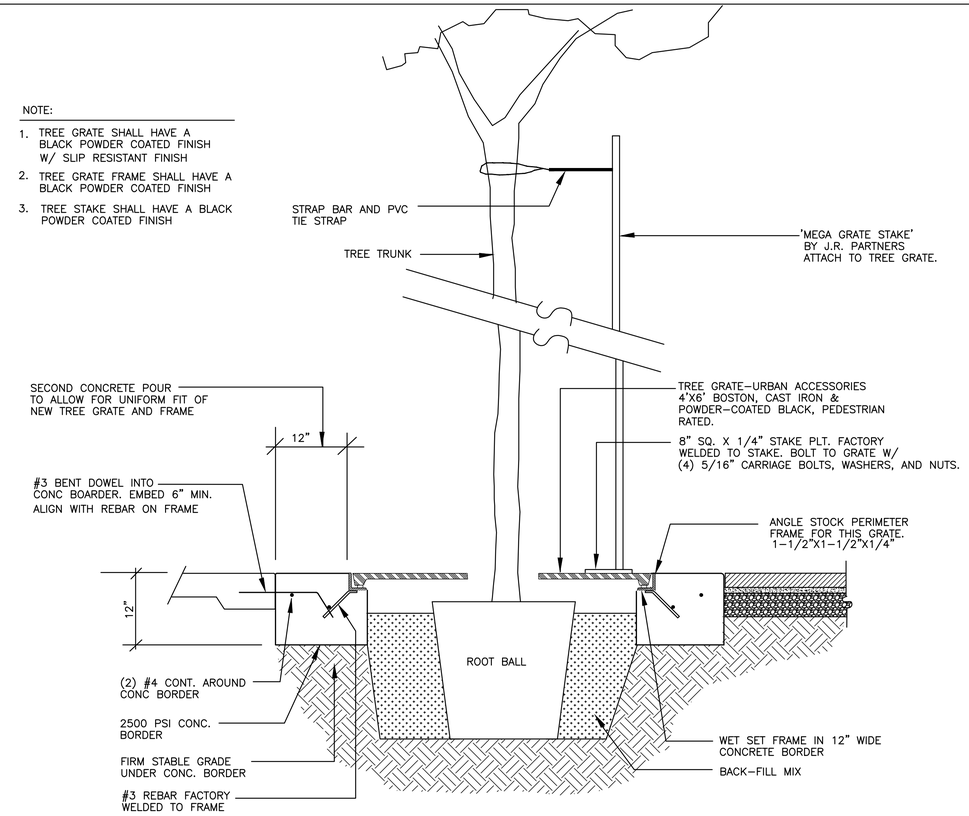

5 TREE GRATE DETAIL SCALE 1" = 1'-0"

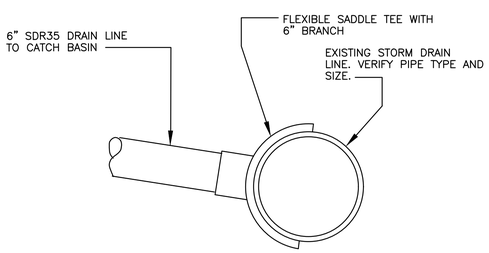

7 DRAIN LINE CONNECTION TO (E) STORM DRAIN N.T.S.

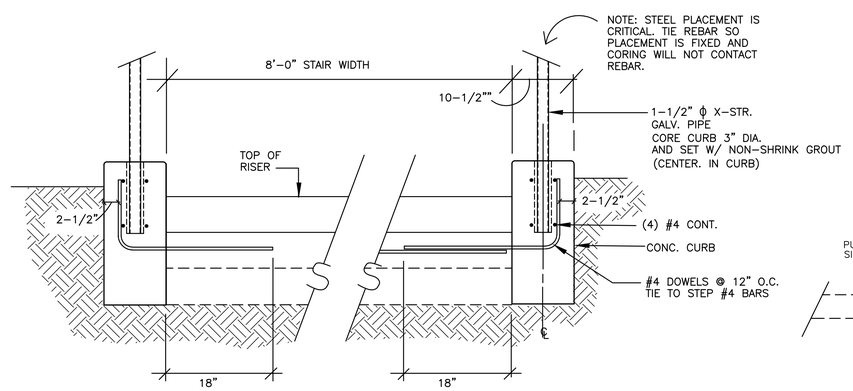

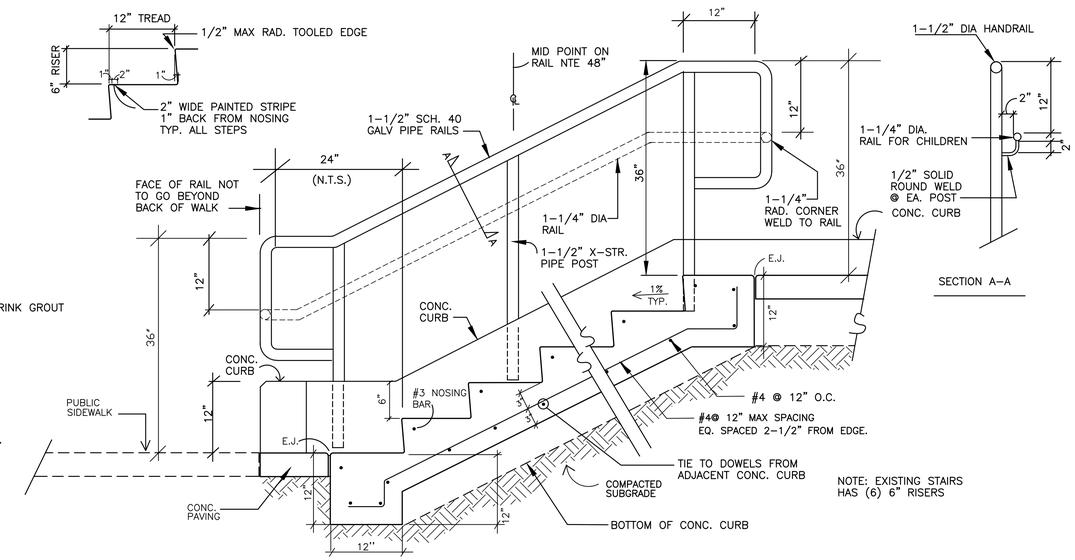

8 STEPS - (BID ALTERNATE #1) SCALE: 1" = 1'-0"

JORDAN, GILBERT & BAIN
LANDSCAPE ARCHITECTS, INC.
459 N. VENTURA AVE.
VENTURA, CA. 93001

(805)-642-3641

REGISTERED LANDSCAPE ARCHITECT
PAUL J. JORDAN
2499
SIGNATURE
2-11-22
RENEWAL DATE
1-5-20
DATE
STATE OF CALIFORNIA

REVISIONS			
NO.	DATE	BY	DESCRIPTION
1			

SIMI VALLEY UNIFIED SCHOOL DISTRICT
101 WEST COCHRAN STREET
SIMI VALLEY, CA. 93065

LANDSCAPE CONSTRUCTION DETAILS

GARDEN GROVE ELEMENTARY
KINDERGARTEN LANDSCAPE IMPROVEMENTS
2250 N. TRACY AVENUE, SIMI VALLEY, CA. 93063

DATE
1-7-20

SHEET
L2.2
5 OF 11

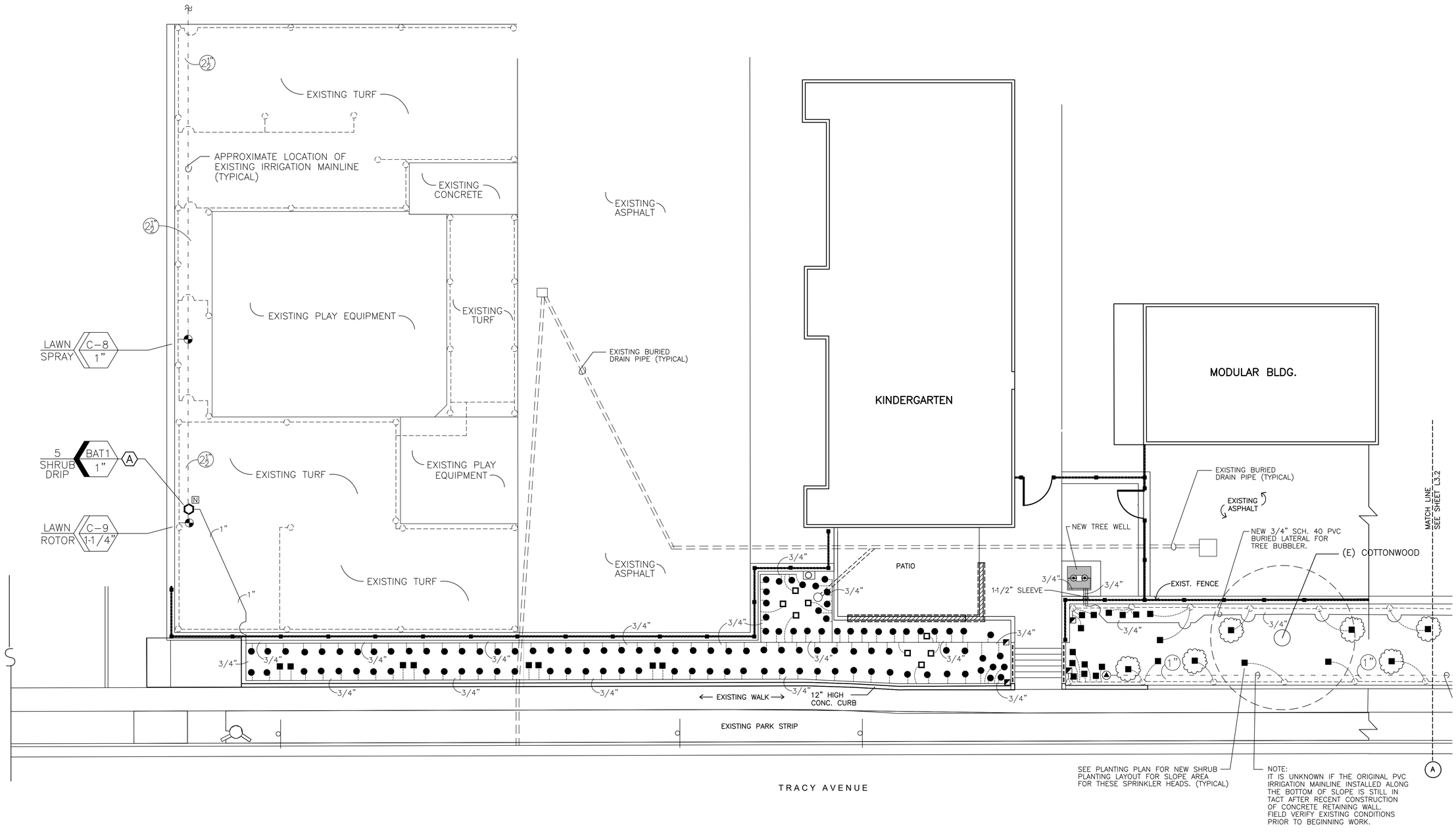

GRAPHIC SCALE

0 8 16 24

SCALE: 1"=8'

1 L3.1 IRRIGATION PLAN

JORDAN, GILBERT & BAIN
LANDSCAPE ARCHITECTS, INC.
459 N. VENTURA AVE.
VENTURA, CA. 93001

(805)-642-3641

REGISTERED LANDSCAPE ARCHITECT PAUL A. JORDAN 1432 STATE OF CALIFORNIA
SIGNATURE 2-11-22 RENEWAL DATE 1-6-20 DATE

REVISIONS			
NO.	DATE	BY	DESCRIPTION
1			

SIMI VALLEY UNIFIED SCHOOL DISTRICT
101 WEST COCHRAN STREET
SIMI VALLEY, CA. 93065

IRRIGATION PLAN

GARDEN GROVE ELEMENTARY
KINDERGARTEN LANDSCAPE IMPROVEMENTS
2250 N. TRACY AVENUE, SIMI VALLEY, CA. 93063

DATE 1-7-20

SHEET L3.1

6 OF 11

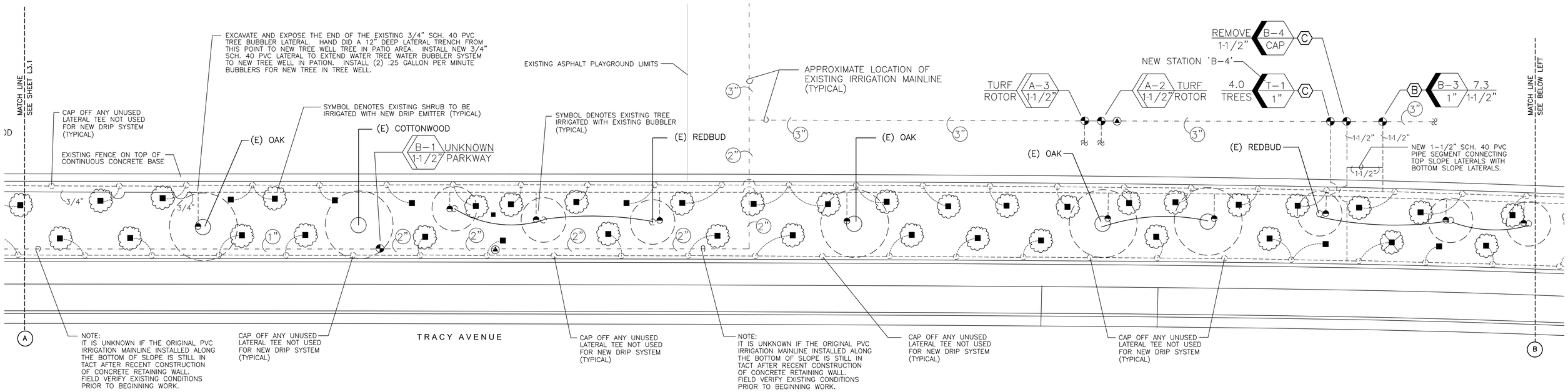

1 / L4.2 IRRIGATION PLAN

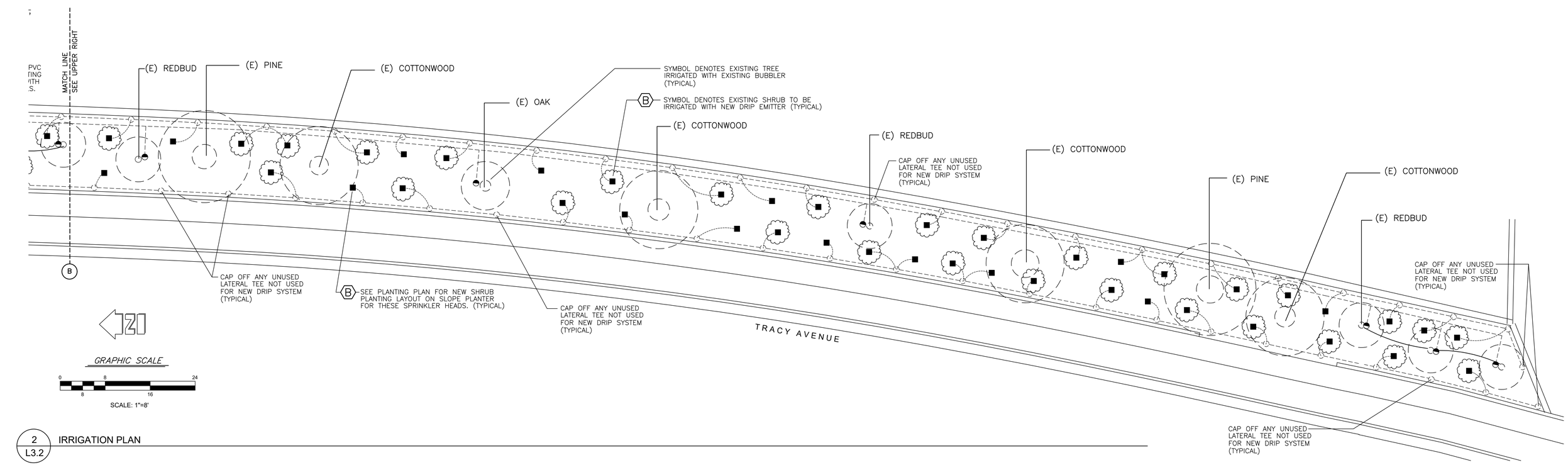

2 / L3.2 IRRIGATION PLAN

JORDAN, GILBERT & BAIN
LANDSCAPE ARCHITECTS, INC.
459 N. VENTURA AVE.
VENTURA, CA. 93001

(805)-642-3641

REGISTERED LANDSCAPE ARCHITECT
PAUL J. JORDAN 4443
SIGNATURE
2-11-22
RENEWAL DATE
1-6-20
DATE
STATE OF CALIFORNIA

REVISIONS

NO.	DATE	BY	DESCRIPTION
1			

SIMI VALLEY UNIFIED SCHOOL DISTRICT
101 WEST COCHRAN STREET
SIMI VALLEY, CA. 93065

IRRIGATION PLAN

GARDEN GROVE ELEMENTARY
KINDERGARTEN LANDSCAPE IMPROVEMENTS
2250 N. TRACY AVENUE, SIMI VALLEY, CA. 93063

DATE 1-7-20

SHEET L3.2

IRRIGATION PROJECT NOTES

1. PRIOR TO BEGINNING ANY WORK, THE CONTRACTOR AND THE S.V.U.S.D. REPRESENTATIVE SHALL PARTICIPATE IN A THOROUGH IRRIGATION SYSTEM REVIEW OF THE PROJECT SITE. ALL REMOTE CONTROL VALVES SHALL BE TURNED ON AND OBSERVED IN OPERATION BY BOTH THE CONTRACTOR AND S.V.U.S.D. REPRESENTATIVE. ANY EXISTING DEFECTS WILL BE LISTED IN DETAIL IDENTIFYING THE SPECIFIC VALVE STATION NUMBER AND DESCRIBING THE EXACT BROKEN OR NON FUNCTIONING IRRIGATION COMPONENT NOTED DURING THE SITE REVIEW. AT THE CONCLUSION OF THE IRRIGATION REVIEW, THE CONTRACTOR SHALL GENERATE A SUMMARY OF THE ITEMS IDENTIFIED BY BOTH PARTIES LISTING ALL REMOTE CONTROL VALVES OPERATED, IDENTIFYING IF THE VALVE PERFORMED WITHOUT ANY DEFECTS OR SPECIFICALLY IDENTIFYING ANY OBSERVED DEFECTS OR NON FUNCTIONING COMPONENTS, SUCH AS BROKEN HEADS, CLOGGED NOZZLES, NON OPERATING VALVE SOLENOID, BROKEN PIPING, OR OTHER NOTED DEFECT. THE COMPLETED SUMMARY OF ITEMS NOTED SHALL BE LISTED ON A DOCUMENT CALLED 'EXISTING IRRIGATION SYSTEM OBSERVATIONS'. THIS DOCUMENT SHALL BE SIGNED BY THE CONTRACTOR AND SUBMITTED TO THE S.V.U.S.D. REPRESENTATIVE FOR A CONFIRMING SIGNATURE. THE MUTUALLY SIGNED 'EXISTING IRRIGATION SYSTEM OBSERVATIONS DOCUMENT' SHALL BE SENT TO THE ATTENTION OF THE LANDSCAPE ARCHITECT FOR INSPECTION PURPOSES AT THE CONCLUSION OF THE CONSTRUCTION WORK. IF REQUESTED BY THE S.V.U.S.D. REPRESENTATIVE, THE CONTRACTOR SHALL PROVIDE A LIST OF THE EXISTING DEFECTIVE IRRIGATION COMPONENTS NOTED WITH A DETAILED WRITTEN PROPOSAL TO REPAIR EACH ITEM IDENTIFIED ON THE LIST. A COPY OF THIS PROPOSAL WILL BE SENT TO THE LANDSCAPE ARCHITECT. THIS ADDITIONAL WORK PROPOSAL MUST BE REVIEWED AND APPROVED IN WRITING BY THE S.V.U.S.D. AND FORMALLY PRESENTED TO THE GENERAL CONTRACTOR BEFORE THE LANDSCAPE SUB-CONTRACTOR CAN BEGIN ANY ADDITIONAL REPAIR WORK. THE MUTUALLY SIGNED 'EXISTING IRRIGATION SYSTEM OBSERVATION DOCUMENT' SHALL BE USED AS A GUIDE TO IDENTIFY ANY COLLATERAL DAMAGE CAUSED TO THE EXISTING IRRIGATION SYSTEM AS A RESULT OF NEW CONSTRUCTION PERFORMED ON SITE BY THE CONTRACTORS. ANY DAMAGE CAUSED TO THE EXISTING IRRIGATION SYSTEM NOT SPECIFICALLY IDENTIFIED ON THE 'EXISTING IRRIGATION SYSTEM OBSERVATION DOCUMENT' SHALL BE REPAIRED OR REPLACED AT THE CONTRACTOR'S EXPENSE. IN THE EVENT THAT THE CONTRACTOR DOES NOT PARTICIPATE OR PERFORM THE EXISTING IRRIGATION SITE REVIEW, ANY EXISTING IRRIGATION EQUIPMENT OR COMPONENTS DAMAGED ON THE PROJECT SITE NOTED BY THE LANDSCAPE ARCHITECT DURING THE FINAL IRRIGATION SYSTEM REVIEW SHALL BE REPAIRED OR REPLACED BY THE CONTRACTOR AT THEIR EXPENSE TO THE SATISFACTION OF THE S.V.U.S.D.
2. FIELD VERIFY EXISTING STATIC WATER PRESSURE AND NOTIFY THE LANDSCAPE ARCHITECT PRIOR TO BEGINNING ANY WORK.
3. CONTACT DIG ALERT AT 1-800-227-2600 TO IDENTIFY AND LOCATE ALL ON-SITE UTILITIES PRIOR TO BEGINNING WORK. THE CONTRACTOR SHALL COORDINATE WITH THE SIMI VALLEY UNIFIED SCHOOL DISTRICT (S.V.U.S.D.) REPRESENTATIVE AND REVIEW THE EXISTING SITE PRIOR TO BEGINNING WORK TO AVOID CONFLICTS WITH FUTURE CONSTRUCTION.
4. PROTECT IN PLACE AND KEEP IN WORKING CONDITION ALL EXISTING IRRIGATION SYSTEMS NOT A PART OF THIS WORK. THE CONTRACTOR SHALL REPAIR OR REPLACE ANY EXISTING MAINLINE SEGMENT, LATERAL, IRRIGATION CONTROL WIRE, HYDRAULIC TUBING, REMOTE CONTROL VALVE, VALVE BOX, QUICK COUPLER, OR ANY OTHER IRRIGATION SYSTEM COMPONENT DAMAGED DURING THE RENOVATION PROCESS. ADJACENT FUNCTIONING IRRIGATION SYSTEM COMPONENTS MUST BE KEPT IN WORKING CONDITION TO MAINTAIN THE HEALTH AND VIGOR OF THE EXISTING TURF AND LANDSCAPE PLANTINGS. PROLONGED LACK OF WATER TO THESE PLANTERS AS A RESULT OF NEW CONSTRUCTION WORK THAT RESULTS IN THE LOSS OF TURF OR PLANTS SHALL BE REPLACED BY THE CONTRACTOR AT THEIR COST AND TO THE SATISFACTION OF THE S.V.U.S.D.
5. THE CONTRACTOR SHALL BE RESPONSIBLE FOR ANY TRENCH SETTLING OR IRRIGATION HEAD SETTLING. ALL TRENCHES WILL BE BACK FILLED WITH CLEAN SOIL, COMPACTED AND PLANTED WITH APPROVED SEED OR PLANT MATERIAL AS PER PLAN. ALL HEADS THAT SETTLE WILL BE RAISED TO 1/2" ABOVE FINISH GRADE OR AS DIRECTED BY EITHER THE LANDSCAPE ARCHITECT OR S.V.U.S.D. REPRESENTATIVE. PROVIDE ADDITIONAL SOIL AS NECESSARY AND HAND TAMP AROUND HEAD TO PREVENT FUTURE SETTLING.
6. SLEEVE ALL PVC IRRIGATION PIPES AND WIRES INSTALLED UNDER PAVING. WIRES SHALL BE ENCLOSED IN SCH. 40 PVC ELECTRICAL CONDUIT SIZED BY THE CONTRACTOR, NO LESS THAN 2" IN SIZE. MAINLINE SLEEVES SHALL BE SIZED AS PER LEGEND ON PLAN. SEE SPECIFICATIONS AND IRRIGATION SLEEVING SCHEDULE FOR ADDITIONAL INFORMATION.
7. THE IRRIGATION SYSTEM IS SHOWN DIAGRAMMATICALLY. INSTALL ALL IRRIGATION EQUIPMENT WITHIN LANDSCAPE PLANTERS WHENEVER POSSIBLE.
8. ALL SPRINKLER HEADS SPECIFIED ON THIS PROJECT ARE EQUIPPED WITH FACTORY INSTALLED CHECK VALVES IN THE SPRINKLER BODY. IN THE EVENT THAT LOW HEAD DRAINAGE STILL OCCURS, THE CONTRACTOR SHALL INSTALL INLINE SWING CHECK OR SPRING LOADED CHECK VALVES ON THE PVC LATERALS TO PREVENT LOW HEAD DRAINAGE. ANY INLINE CHECK VALVE INSTALLED ON PVC LATERALS MUST BE FURNISHED WITH A 10" ROUND PLASTIC VALVE BOX WITH A LOCKING GREEN PLASTIC LID.
9. ALL VALVE BOXES INSTALLED IN CONCRETE OR ASPHALT PAVING SHALL BE TRAFFIC RATED CONCRETE BOXES (13-1/4"W X 24-1/4"L X 12"D) WITH CONCRETE LIDS. BOXES SHALL BE MANUFACTURED BY OLDCASTLE PRE-CAST, BOX MODEL N30BOX, LID MODEL B30D, CONCRETE BOX EXTENSION MODEL B30X12, OR CHRISTY CONCRETE BOX EQUIVALENT. ALL RECTANGULAR PLASTIC VALVE BOXES SHALL HAVE THE MINIMUM DIMENSIONS OF (14-1/2"W X 19-1/2"L X 12-1/4"H) AND SHALL HAVE GREEN LOCKING PLASTIC LIDS. THE CONTRACTOR SHALL INCLUDE WITH THE COST OF THE PROJECT ANY PLASTIC VALVE BOX EXTENSION THAT MIGHT BE REQUIRED TO COMPLETE THE VALVE INSTALLATION AS PART OF THE BASE BID. PLASTIC BOX MANUFACTURER'S AND MODEL NUMBERS SHALL BE CARSON MODEL 1419-12 WITH 1419-4B 'T-STYLE GREEN LID', APPLIED ENGINEERING PRODUCTS MODEL 1015T-1G2G, OR NDS MANUFACTURING APPROVED EQUAL.
10. USE ONLY SCH. 80 PVC NIPPLES WHEN INSTALLING VALVES REQUIRING THREADED FITTINGS. SCH. 40 PVC MALE ADAPTERS SHALL NOT BE USED ON ANY VALVE ASSEMBLY.
11. MAKE ALL REQUIRED ADJUSTMENTS TO BOTH EXISTING AND NEW SPRINKLER HEADS TO PREVENT ANY IRRIGATION WATER FROM OVER SPRAYING ON TO ADJACENT PAVEMENT OR CLASSROOM BUILDINGS. MAKE ANY NOZZLE REPLACEMENTS AS REQUESTED BY EITHER THE LANDSCAPE ARCHITECT OR S.V.U.S.D. REPRESENTATIVE TO IMPROVE IRRIGATION COVERAGE OR TO BALANCE PRECIPITATION RATE TO LANDSCAPE PLANTER AS PART OF BASE BID.
12. HEAT STAMP OR 'BRAND' INTO THE PLASTIC REMOTE CONTROL VALVE BOX LIDS THE NEW VALVE STATION NUMBER AND RELATED NEW AUTO CONTROLLER LETTER. PROVIDE CHRISTY STANDARD SIZE I.D. TAGS CONNECTED TO ALL NEW REMOTE CONTROL VALVE SOLENOIDS WITH STATION NUMBER AND RELATED EXISTING AUTO CONTROLLER IDENTIFICATION LETTER.
13. ALL WATER TIGHT CONNECTORS USED TO SPLICE 14 GAUGE WIRES TO REMOTE CONTROL VALVE SOLENOIDS OR TO REPAIR BROKEN EXISTING REMOTE CONTROL VALVE WIRES ON THIS PROJECT SHALL BE MANUFACTURED BY 3M COMPANY, MODEL DBR-Y6 SERIES.
14. INSTALL ALL IRRIGATION REMOTE CONTROL VALVES, BALL VALVES, AND QUICK COUPLING VALVES A MINIMUM DISTANCE OF 10'-0" FROM ALL TREE TRUNK LOCATIONS ILLUSTRATED ON PLANTING PLAN. CONFIRM LAYOUT OF EXISTING OR NEW TREE LOCATIONS PRIOR TO INSTALLING ANY VALVE.
15. EXISTING IMPROVEMENTS WITHIN THE WORK AREAS SHALL REMAIN AND BE PROTECTED IN PLACE UNLESS OTHERWISE NOTED. DAMAGE TO EXISTING IMPROVEMENTS SHALL BE REPLACED IN KIND TO A CONDITION EQUAL TO OR BETTER THAN THAT WHICH EXISTED PRIOR TO CONSTRUCTION.
16. UTILITIES MAY HAVE BEEN OMITTED ON THE IRRIGATION SHEETS. REVIEW CIVIL ENGINEER'S DRAWINGS AND EXERCISE CARE IN EXCAVATION WHILE PROTECTING EXISTING UTILITIES IN PLACE.

NEW INSTALLATION / REPLACEMENT REMOTE CONTROL VALVE SYMBOL

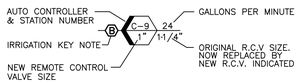

EXISTING REMOTE CONTROL VALVE SYMBOL PROTECT IN PLACE

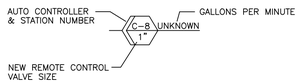

IRRIGATION SLEEVING SCHEDULE

ALL SLEEVES TO BE INSTALLED 24" BELOW GRADE

MAINLINE OR / LATERAL PIPE SIZE	SLEEVE SIZE REQUIRED
3/4" SCH. 40 PVC / SCH. 40 PVC	1-1/2" SCH. 40 PVC
1" SCH. 40 PVC / SCH. 40 PVC	2" SCH. 40 PVC
1-1/4" SCH. 40 PVC / SCH. 40 PVC	2-1/2" SCH. 40 PVC
1-1/2" SCH. 40 PVC / SCH. 40 PVC	3" CLASS 200 PVC
2" CLASS 315 / SCH. 40 PVC	4" CLASS 200 PVC
2-1/2" CLASS 315 / SCH. 40 PVC	4" CLASS 200 PVC
3" CLASS 315 / SCH. 40 PVC	6" CLASS 200 PVC
4" CLASS 315 / SCH. 40 PVC	6" CLASS 200 PVC

IRRIGATION LEGEND

SYMBOL	DESCRIPTION	MANUFACTURER	MODEL / REMARKS
	SLEEVING	PACIFIC PLASTICS	SCH. 40 PVC & CLASS 200 PVC - SOLVENT WELD - 24" BELOW GRADE
	EXISTING MAINLINE	UNKNOWN	PVC - CLASS AND SCHEDULE VARIES - SOLVENT WELD - APPROXIMATELY 18" BELOW GRADE
	NEW MAINLINE - 2" & LARGER	PACIFIC PLASTICS	CLASS 315 PVC - SOLVENT WELD - 24" BELOW GRADE (IF NEEDED)
	NEW MAINLINE - 1-1/2" & LESS	PACIFIC PLASTICS	SCH. 40 PVC - SOLVENT WELD - 24" BELOW GRADE (IF NEEDED)
	EXISTING LATERAL	UNKNOWN	PVC PIPING - APPROXIMATELY 12" BELOW GRADE - FIELD VERIFY EXACT DEPTH AND SIZE
	NEW LATERAL	PACIFIC PLASTICS	SCH. 40 PVC - SOLVENT WELD - 12" BELOW GRADE
	PVC FLEXIBLE HOSE	HUNTER	IH-250 - BROWN IN COLOR - INSTALL AS PER IRRIGATION DETAILS
	EXISTING REMOTE CONTROL VALVE	RAIN BIRD / GRISWOLD	REMOVE EXISTING REMOTE CONTROL VALVE TO MAINLINE AND REMOVE EXISTING VALVE BOX
	PRESSURE REGULATING R.C.V.	RAIN BIRD	EFB-CP-PRS-D SERIES - SIZES NOTED - IN A RECTANGULAR VALVE BOX - GREEN LID - SEE DETAIL
	DRIP REMOTE CONTROL VALVE	RAIN BIRD	RAIN BIRD EFB-CP SERIES - SIZES NOTED - WITH RAIN BIRD 1" PRESSURE REGULATING BASKET FILTER, MODEL PRB-QKCHK-100, COMPLETED ASSEMBLY INSTALLED IN A JUMBO VALVE BOX WITH LOCKING LID
	EXIST. POP UP ROTATOR HEADS	HUNTER	PROS-12-CV SERIES - BODY WITH ROTATING NOZZLES - REMOVE ALL AND RETURN TO S.V.U.S.D. REPRESENTATIVE
	DRIP SYSTEM FLUSH VALVE	SPEARS / EQUAL	3/4" SCH. 80 PVC ECONOMY BALL VALVE, IN RECTANGULAR VALVE BOX WITH 3'-0" OF FLEXIBLE PVC HOSE
	EXISTING TREE WATERING SYSTEM	RAIN BIRD	RWS SERIES - PROTECT IN PLACE
N	BATTERY AUTO CONTROLLER	HUNTER	NODE-100 - INSTALL COMPLETE WITH BATTERIES AND SOLENOID ADAPTERS SUITABLE FOR RAIN BIRD VALVES PER HUNTER SPEC'S

Q	T	H	T	T	Q	F				PSI	RAD	GPM 90°	GPM 120°	GPM 180°	GPM 240°	GPM 270°	GPM 360°
								POP UP TURF ROTATOR	HUNTER	40	22-30	.86	1.34	1.82			
								POP UP TURF ROTATOR	HUNTER	40	13-21	.43	.60	.77			
								POP UP TURF ROTATOR	HUNTER	40	13-21						1.48
								POP UP TURF ROTATOR	HUNTER	40	8-15	.21	.32	.43			
								POP UP TURF ROTATOR	HUNTER	40	8-15				.49		
								POP UP TURF ROTATOR	HUNTER	40	8-15						.84
								POP UP TURF ROTOTOR	HUNTER	40	5x30			.22			.44
								SHRUB DRIP EMITTER	HUNTER	30	1						0.03
								SHRUB / TREE DRIP EMITTER	HUNTER	30	1						0.07
								TREE DRIP EMITTER	HUNTER	30	1						0.10
								TREE FLOOD BUBBLER	HUNTER	30	1						0.25

PROJECT KEY NOTES

SYMBOL — DESCRIPTION

A — IRRIGATION POINT OF CONNECTION 'A' - CUT INTO EXISTING 2-1/2" PVC IRRIGATION MAINLINE AND INSTALL A NEW 1" DRIP REMOTE CONTROL VALVE ASSEMBLY WITH A BATTERY POWERED AUTO CONTROLLER
LOCATE EXISTING REMOTE CONTROL VALVE 'C-9' IN A PLASTIC VALVE BOX IN LANDSCAPE TURF PLANTER. THE EXISTING 2-1/2" CLASS 315 PVC IRRIGATION MAINLINE ENDS AT EXISTING REMOTE CONTROL VALVE 'C-9'. EXCAVATE AND EXPOSE THE EXISTING 2-1/2" PVC MAINLINE APPROXIMATELY 3'-0" EAST OF EXISTING REMOTE CONTROL VALVE 'C-9'. CUT MAINLINE AND INSTALL A 2-1/2" X 2-1/2" X 1" SCH. 80 PVC SLIP / THREAD TEE TO ALLOW THE INSTALLATION OF A NEW 1" BRASS ANGLE VALVE, 1" RAIN BIRD EFB-CP SERIES REMOTE CONTROL VALVE, AND A RAIN BIRD PRESSURE REGULATING DRIP FILTER COMPLETE WITH ALL FITTINGS AND NIPPLES AS PER THE DRIP REMOTE CONTROL VALVE ASSEMBLY DETAIL. INSTALL A NEW JUMBO REMOTE CONTROL VALVE BOX OVER THE COMPLETED ASSEMBLY. INSTALL A HUNTER NODE-100 SINGLE STATION BATTERY POWERED AUTO CONTROLLER AND ATTACH TO THE THE NEW REMOTE CONTROL VALVE BY REMOVING THE STANDARD 12 VOLT SOLENOID AND REPLACING IT WITH A RAIN BIRD TBOS POTTED LATCHING SOLENOID AND SOLENOID ADAPTERS SUITABLE TO CONNECT TO THE HUNTER NODE. PROVIDE AND INSTALL ALL REQUIRED BATTERIES TO OPERATE THE NODE AUTO CONTROLLER. INSTALL NEW 3M MODEL DBR-6Y WIRE CONNECTORS AND CONNECT EXISTING 14 GAUGE WIRES TO NEW REMOTE CONTROL VALVE DC LATCHING SOLENOID. INSTALL NEW SCH. 40 PVC LATERALS WITH NEW SPRINKLER DRIP EMITTERS AS PER PLAN. REPAIR EXISTING TURF PLAY AREA DUE TO TRENCHING OPERATIONS BY COMPACTING TRENCHES TO 90% COMPACTION, OVER SEEDED WITH STOVER SEED 'PRO-SPORTSFIELD MIX' AT RATE OF 12LBS PER 1,000 SQUARE FEET, AND COVER WITH AN ORGANIC MULCH TOPPER.

B — IRRIGATION POINT OF CONNECTION 'B' - CONVERT EXISTING RCV 'B-3' AND EXISTING SLOPE SPRAY SYSTEM TO NEW DRIP IRRIGATION SYSTEM
LOCATE EXISTING REMOTE CONTROL VALVE 'B-3' IN A PLASTIC VALVE BOX IN LANDSCAPE PLANTER. EXCAVATE AROUND EXISTING REMOTE CONTROL VALVE AND VALVE BOX TO EXPOSE REMOTE CONTROL VALVE FITTINGS TO MAINLINE. DISCONNECT THE EXISTING 14 GAUGE SPRINKLER WIRES FROM THE REMOTE CONTROL VALVE SOLENOID AND PROTECT IN PLACE. REMOVE AND SALVAGE EXISTING VALVE BOX AND RETURN TO S.V.U.S.D. REPRESENTATIVE. REMOVE AND SALVAGE EXISTING 1-1/2" REMOTE CONTROL VALVE WITH ALL EXISTING FITTINGS AND NIPPLES TO EXISTING MAINLINE. RETURN SALVAGED REMOTE CONTROL VALVE TO S.V.U.S.D. REPRESENTATIVE. INSTALL NEW FITTINGS, NIPPLES, AND ALL COMPONENTS AS IDENTIFIED IN THE DRIP REMOTE CONTROL VALVE DETAIL TO REPLACE EXISTING LARGER REMOTE CONTROL VALVE WITH A NEW 1" BRASS MANUAL ANGLE VALVE, A 1" RAIN BIRD EFB-CP SERIES REMOTE CONTROL VALVE, A 1" RAIN BIRD PRESSURE REGULATING DRIP FILTER MODEL PRB-QKCHK-100, AND A NEW JUMBO VALVE BOX. INSTALL NEW 3M WIRE CONNECTORS AND CONNECT EXISTING 14 GAUGE WIRES TO NEW REMOTE CONTROL VALVE SOLENOID. RECONNECT THE EXISTING SCH. 40 PVC LATERAL LINE TO THE NEW 1" REMOTE CONTROL VALVE USING NEW SCH. 40 PVC FITTINGS AND PIPE SEGMENTS AS NEEDED. TRENCH FROM EXISTING LATERAL LINE ON DOWN STREAM SIDE OF NEW REMOTE CONTROL VALVE 'B-3' TO EXISTING SCH. 40 PVC LATERAL LINE ON DISCHARGE SIDE OF EXISTING 1-1/2" REMOTE CONTROL VALVE 'B-4'. EXCAVATE AND EXPOSE THE EXISTING 1-1/2" PVC LATERAL LINE. CUT BOTH EXISTING 1-1/2" SCH. 40 PVC LATERAL LINES ON BOTH REMOTE CONTROL VALVES 'B-3' AND 'B-4'. EXISTING REMOTE CONTROL VALVE 'B-4' SHALL BE REMOVED. SEE KEY NOTE 'D' FOR ADDITIONAL INFORMATION. CONNECT THE EXISTING 1-1/2" PVC LATERAL LINES TOGETHER USING A NEW 1-1/2" SCH. 40 PVC LATERAL SEGMENT SO THAT NEW REMOTE CONTROL VALVE 'B-3' SUPPLIES WATER TO BOTH EXISTING LATERAL SYSTEMS.
REMOVE ALL (52 TOTAL) EXISTING POP UP SLOPE SPRAY HEAD BODIES FROM EXISTING BURIED PVC LATERAL LINES LOCATED BOTH ON TOP AND BOTTOM OF EXISTING LANDSCAPE SLOPE AREA. REMOVE EXISTING POP UP SPRINKLER HEADS AND SWING JOINT ASSEMBLIES TO FITTING ON BURIED LATERAL PIPING. RETURN ALL FUNCTIONING POP UP SPRINKLER POP UP BODIES WITH NOZZLES TO THE S.V.U.S.D. REPRESENTATIVE FOR FUTURE USE. USING THE REMAINING THREADED SCH. 40 PVC FITTINGS ATTACHED TO THE LATERALS AS A SOURCE, INSTALL NEW HUNTER BROWN COLORED PVC MALE ADAPTERS WITH HUNTER BROWN COLORED PVC FLEX HOSE. FIELD MEASURE AND CUT LENGTH OF FLEXIBLE PVC HOSE TO REACH THE ROOT BALL OF NEW AND EXISTING SHRUBS PLANTED ON THE EXISTING SLOPE PLANTER. REFER TO THE IRRIGATION PLAN FOR THE EXACT DRIP EMITTER MODEL NUMBER SCHEDULED FOR EACH TYPE OF PLANT INSTALLED ON THE SLOPE. COIL PVC FLEX HOSE AROUND CIRCUMFERENCE OF ROOT BALL WITHIN SOIL BASIN. POSITION NEW DRIP EMITTER ON EDGE OF PLANT ROOT BALL WITHIN SOIL BASIN. SECURE ALL PVC FLEX HOSE WITH 6" LONG GALVANIZED STEEL STAPLES INSTALLED 3'-0" O.C. AND AS PER IRRIGATION DETAILS. CONTRACTOR CAN INSTALL A MAXIMUM OF (3) DRIP EMITTERS FROM EACH EXISTING THREADED 1/2" PVC FITTING SOURCE. IF NEEDED, EXCAVATE AND EXPOSE THE EXISTING PVC LATERAL SEGMENT, CUT PIPE, AND INSTALL A SCH. 40 PVC SLIP FIX AND SCH. 40 PVC TEE TO CREATE A NEW WATER SOURCE FOR DRIP IRRIGATION PVC FLEX HOSE CONNECTION. EXCAVATE AND EXPOSE THE END OF ALL EXISTING PVC LATERAL LINES SUPPLYING WATER TO NEW DRIP EMITTERS. CUT PIPE AND INSTALL A NEW DRIP SYSTEM FLUSH VALVE ASSEMBLY TO ALLOW FOR PVC LINE FLUSHING FOR MAINTENANCE PURPOSES.

C — IRRIGATION POINT OF CONNECTION 'C' - REMOVE EXISTING RCV 'B-4' / SALVAGE EXISTING 14 GAUGE WIRES / EXTEND AND CONNECT TO EXISTING BATTERY POWERED RCV 'T-1'
LOCATE EXISTING REMOTE CONTROL VALVE 'B-4' IN A PLASTIC VALVE BOX IN LANDSCAPE PLANTER. EXCAVATE AROUND EXISTING REMOTE CONTROL VALVE AND VALVE BOX. REMOVE AND SALVAGE EXISTING VALVE BOX. DISCONNECT EXISTING 14 GAUGE SPRINKLER WIRES FROM EXISTING REMOTE CONTROL VALVE SOLENOID AND PROTECT IN PLACE. REMOVE AND SALVAGE EXISTING 1-1/2" REMOTE CONTROL VALVE WITH ALL EXISTING FITTINGS AND NIPPLES TO EXISTING MAINLINE. RETURN SALVAGED REMOTE CONTROL VALVE TO THE SIMI VALLEY SCHOOL DISTRICT REPRESENTATIVE FOR FUTURE USE. INSTALL A 1-1/2" X 12" LONG SCH. 80 PVC T.O.E. NIPPLE INTO EXISTING MAINLINE FITTING TO CAP OFF FITTING OPENING ON MAINLINE.
FIELD VERIFY THE EXACT LOCATION OF EXISTING BATTERY POWERED REMOTE CONTROL VALVE 'T-1' PRESENTLY IRRIGATING TREE BUBBLERS TO TREES PLANTED ON THE SLOPE PLANTER. DIG A 18" DEEP TRENCH FROM THE EXISTING SALVAGED IRRIGATION WIRES PREVIOUSLY CONNECTED TO REMOTE CONTROL VALVE 'B-4' TO EXISTING BATTERY POWERED REMOTE CONTROL VALVE 'T-1'. REMOVE THE SINGLE STATION BATTERY POWERED AUTO CONTROLLER WITHIN VALVE BOX 'T-1', HUNTER MODEL 'NODE-100', AS WELL AS THE D/C LATCHING REMOTE CONTROL VALVE SOLENOID, AND RETURN TO THE S.V.U.S.D. REPRESENTATIVE. SPLICE NEW 14 GAUGE COMMON AND CONTROL WIRE SEGMENTS FROM PREVIOUS REMOTE CONTROL VALVE LOCATION 'B-4' TO EXISTING 1" REMOTE CONTROL VALVE 'T-1'. INSTALL A NEW STANDARD RAIN BIRD REMOTE CONTROL VALVE SOLENOID ON TO EXISTING REMOTE CONTROL VALVE 'T-1'. SPLICE NEW WIRE SEGMENTS ON TO NEW REMOTE CONTROL VALVE SOLENOID. USE 3M MODEL DBR-Y6 WATER PROOF WIRE CONNECTORS FOR ALL WIRE SPLICES. COVER WIRE SPLICES OVER REMOVED REMOTE CONTROL VALVE 'B-4' WITH SALVAGED PLASTIC VALVE BOX REINFORCED WITH GRAVEL AND BRICKS TO MAINTAIN POSITION IN THE PLANTER. MODIFY HEAT STAMP ON VALVE BOX LID BY GRINDING OFF OLD LETTERS 'B-4' AND CHANGE TO NEW LETTERS 'SB'. MODIFY HEAT STAMP ON VALVE BOX LID 'T-1' BY GRINDING OFF 'T-1' AND BRANDING NEW LETTERS 'B-4'. BACKFILL WIRE TRENCH TO 90% COMPACTION AND RE-SEED OVER ANY EXPOSED SOIL WITH STOVER SEED 'PRO-SPORTS FIELD MIX' AND COVER WITH AN APPROVED ORGANIC TOPPER. COORDINATE WITH THE S.V.U.S.D. REPRESENTATIVE TO CHANGE THE AUTO CONTROLLER PROGRAMMING FOR REMOTE CONTROL VALVE 'A-4' TO PROVIDE A SUFFICIENT WATER SCHEDULE FOR THE EXISTING TREE BUBBLERS ON THE SLOPE.

JORDAN, GILBERT & BAIN
LANDSCAPE ARCHITECTS, INC.
459 N. VENTURA AVE.
VENTURA, CA. 93001

(805)-642-3641

REGISTERED LANDSCAPE ARCHITECT — PAUL J. JORDAN — 1143 — STATE OF CALIFORNIA — SIGNATURE 2-11-22 — RENEWAL DATE 1-6-20 — DATE

REVISIONS

NO.	DATE	BY	DESCRIPTION
1			

SIMI VALLEY UNIFIED SCHOOL DISTRICT
101 WEST COCHRAN STREET
SIMI VALLEY, CA. 93065

IRRIGATION LEGEND AND PROJECT NOTES

GARDEN GROVE ELEMENTARY
KINDERGARTEN LANDSCAPE IMPROVEMENTS
2250 N. TRACY AVENUE, SIMI VALLEY, CA. 93063

DATE: 1-7-20

SHEET: L3.3

PLANT LEGEND

SYMBOL	QTY.	SIZE	BOTANICAL NAME/ COMMON NAME	HEIGHT/SPREAD	DETAIL REGERENCE
TREES					
	2	36" BOX STANDARD	KOELREUTERIA BIPINNATA GOLDENRAIN TREE	12–14' X 6–7'	5/L5.1
	1	24" BOX STANDARD	LAGERSTROEMIA INDICA 'NATCHEZ' NATCHEZ CRAPE MYRTLE	8–10' X 2–3'	1/L5.1 6/L5.1
	5	15 GALLON MULTI TRUNK	LAGERSTROEMIA INDICA 'BLACK DIAMOND – BEST RED'	4' FULL	3/L5.1

SYMBOL	QTY.	SIZE	BOTANICAL NAME/ COMMON NAME	DETAIL REFERENCE
SHRUBS				
	24	1 GALLON	ACACIA REDOLENS 'LOW BOY'	1/L5.1
	24	5 GALLON	ANIGOZANTHOS 'BUSH RANGER'	1/L5.1
	18	1 GAL	HEMEROCALLIS 'PLUM PERFECT'	1/L5.1
	76	5 GALLON	LANTANA 'SPREADING SUNSET'	2/L5.1
	3	15 GALLON	PHORMIUM 'MAORI MAIDEN'	1/L5.1
	25	15 GALLON	RHAPHIOLEPIS UMBELLATA MINOR	1/L5.1

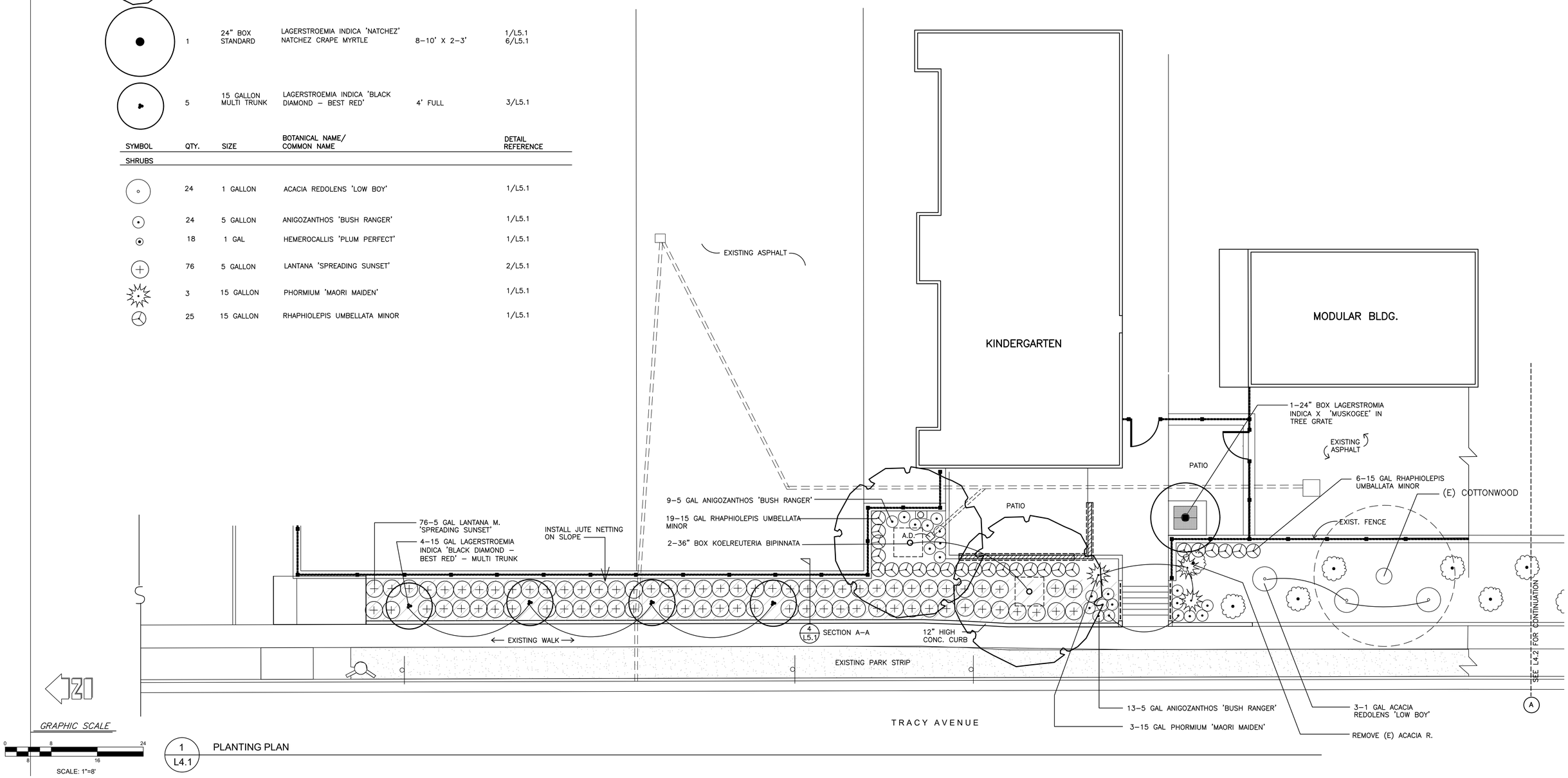

1 L4.1 PLANTING PLAN

JORDAN, GILBERT & BAIN
LANDSCAPE ARCHITECTS, INC.
459 N. VENTURA AVE.
VENTURA, CA. 93001

(805)-642-3641

REGISTERED LANDSCAPE ARCHITECT PAUL J. JORDAN L.A. 2091 SIGNATURE 2-11-22 RENEWAL DATE 1-6-20 DATE STATE OF CALIFORNIA

REVISIONS

NO.	DATE	BY	DESCRIPTION
1			

SIMI VALLEY UNIFIED SCHOOL DISTRICT
101 WEST COCHRAN STREET
SIMI VALLEY, CA. 93065

PLANTING PLAN

GARDEN GROVE ELEMENTARY
KINDERGARTEN LANDSCAPE IMPROVEMENTS
2250 N. TRACY AVENUE, SIMI VALLEY, CA. 93063

DATE 1-7-20

SHEET L4.1

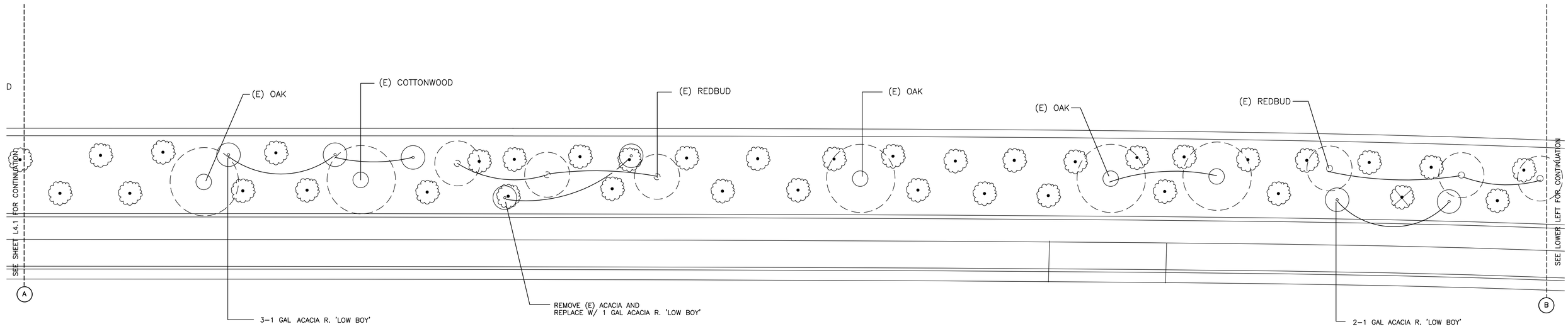

1
L4.2

PLANTING PLAN

SCALE: 1"=8'

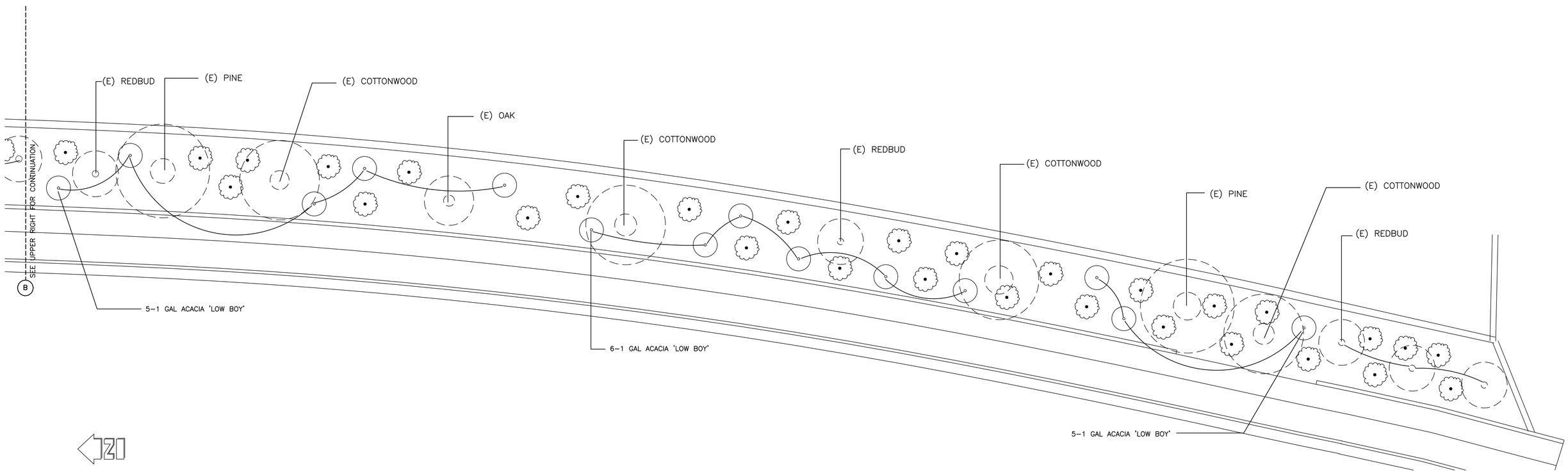

GRAPHIC SCALE

0 8 16 24

SCALE: 1"=8'

2
L4.2

PLANTING PLAN

SCALE: 1"=8'

JORDAN, GILBERT & BAIN
LANDSCAPE ARCHITECTS, INC.
459 N. VENTURA AVE.
VENTURA, CA. 93001

(805)-642-3641

REGISTERED LANDSCAPE ARCHITECT
PAUL J. JORDAN
4433
SIGNATURE
3-11-22
RENEWAL DATE
1-6-20
DATE
STATE OF CALIFORNIA

REVISIONS

NO.	DATE	BY	DESCRIPTION
1			

SIMI VALLEY UNIFIED SCHOOL DISTRICT
101 WEST COCHRAN STREET
SIMI VALLEY, CA. 93065

PLANTING PLAN

GARDEN GROVE ELEMENTARY
KINDERGARTEN LANDSCAPE IMPROVEMENTS
2250 N. TRACY AVENUE, SIMI VALLEY, CA. 93063

DATE
1-7-20

SHEET
L4.2
10 OF 11

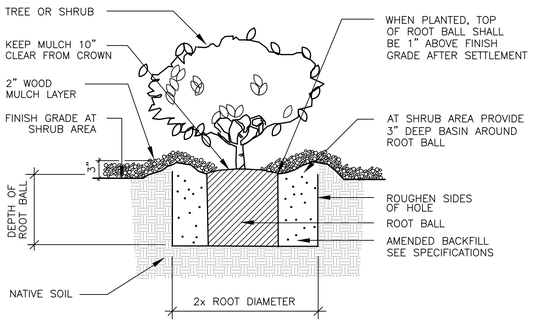

SCALE = N.T.S.

1 SHRUB PLANTING DETAIL

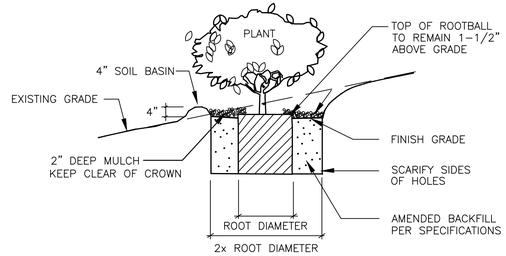

SCALE = N.T.S.

2 SHRUB PLANTING DETAIL ON SLOPE

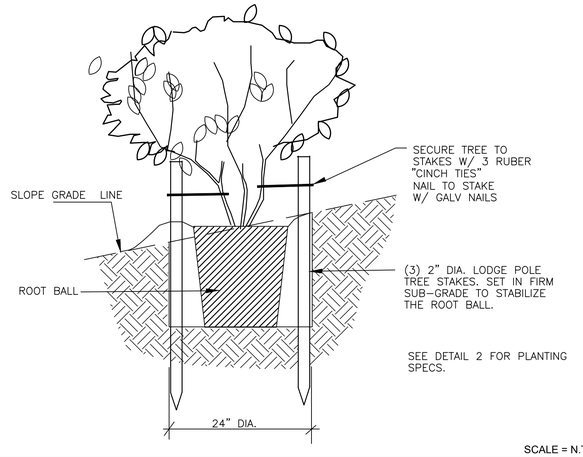

SCALE = N.T.S.

3 15 GALLON STAKING DETAIL

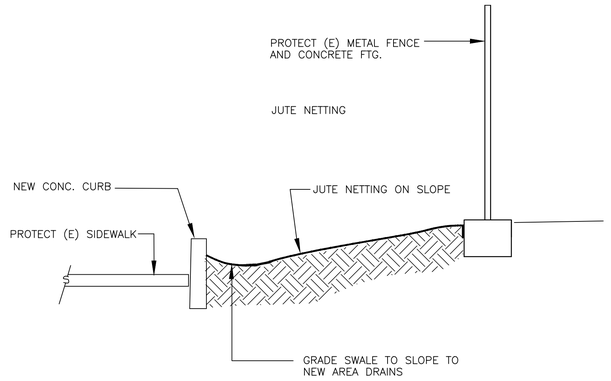

SCALE = N.T.S.

4 PLANTING SECTION @ SLOPE A-A

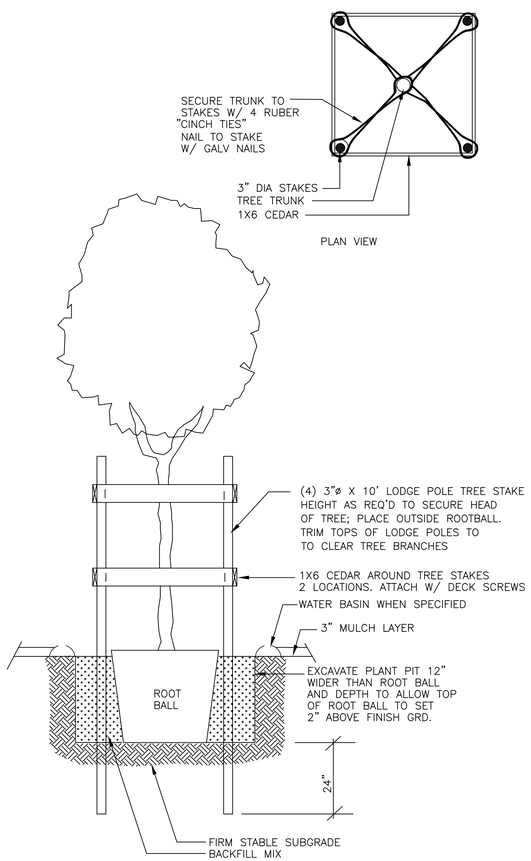

SCALE 1" = 1'-0"

5 36" BOX TREE STAKING

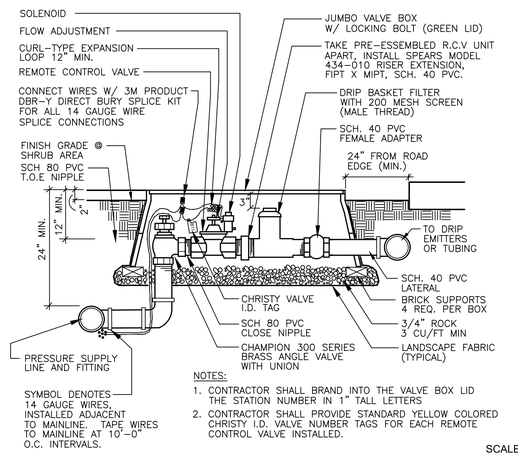

NOTES:
1. CONTRACTOR SHALL BRAND INTO THE VALVE BOX LID THE STATION NUMBER IN 1" TALL LETTERS
2. CONTRACTOR SHALL PROVIDE STANDARD YELLOW COLORED CHRISTY I.D. VALVE NUMBER TAGS FOR EACH REMOTE CONTROL VALVE INSTALLED.

SCALE = N.T.S.

6 DRIP IRRIGATION REMOTE CONTROL VALVE ASSEMBLY - 14 GAUGE WIRES

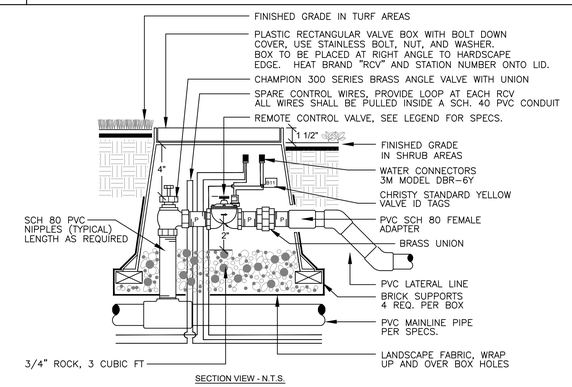

SECTION VIEW - N.T.S.

NOTES:
1. INSTALL CONTROL VALVES A MINIMUM OF 36" APART WHEN ARRANGED IN MANIFOLDS UNLESS OTHERWISE NOTED.
2. EQUIPMENT SHALL BE INSTALLED SUCH THAT THERE IS NO LEVERAGE OR STRESS ON THE VALVE ASSEMBLY. PIPE SHALL NOT COME INTO CONTACT WITH VALVE BOX.
3. USE A NON-HARDENING TEFLON PIPE SEALANT ON ALL THREADED CONNECTIONS.

SCALE = N.T.S.

7 REMOTE CONTROL VALVE ASSEMBLY - 14 GAUGE WIRE CONNECTION

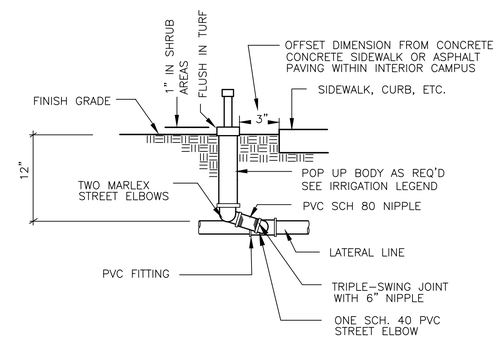

SCALE = N.T.S.

8 POP UP ROTATOR HEAD

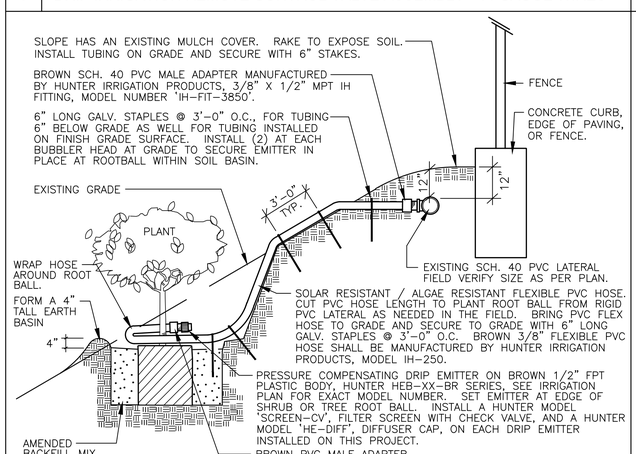

SCALE = N.T.S.

9 SHRUB OR TREE DRIP IRRIGATION DETAIL ON SLOPE

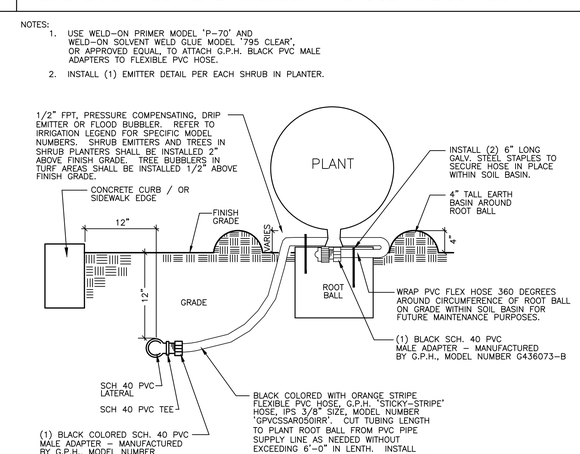

SCALE = N.T.S.

10 SHRUB OR TREE DRIP IRRIGATION DETAIL - LEVEL PLANTING AREA

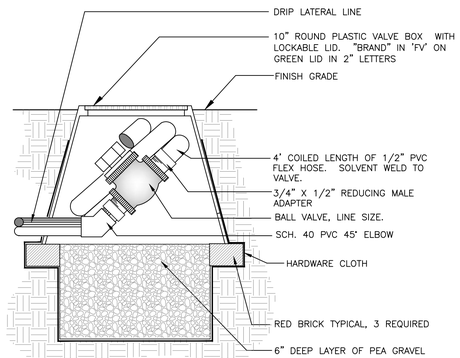

SCALE = N.T.S.

11 DRIP IRRIGATION FLUSH VALVE

JORDAN, GILBERT & BAIN
LANDSCAPE ARCHITECTS, INC.
459 N. VENTURA AVE.
VENTURA, CA. 93001

(805)-642-3641

REGISTERED LANDSCAPE ARCHITECT PAUL J. JORDAN 2143 SIGNATURE 2-11-22 RENEWAL DATE 1-6-20 DATE STATE OF CALIFORNIA

REVISIONS			
NO.	DATE	BY	DESCRIPTION
1			

SIMI VALLEY UNIFIED SCHOOL DISTRICT
101 WEST COCHRAN STREET
SIMI VALLEY, CA. 93065

PLANTING & IRRIGATION DETAILS

GARDEN GROVE ELEMENTARY
KINDERGARTEN LANDSCAPE IMPROVEMENTS
2250 N. TRACY AVENUE, SIMI VALLEY, CA. 93063

DATE 1-7-20

SHEET L5.1

11 OF 11