Menlo Park City School District

181 Encinal Avenue
Atherton, CA 94027

Oak Knoll Elementary School
Lighting Replacement & ELC - Project No. 2

1895 Oak Knoll Lane
Menlo Park, CA 94025

BID SET

04/15/2019

HED

Alliance Engineering Consultants, Inc.
4701 Patrick Henry Drive, Bldg. 10
Santa Clara, CA 95054
phone (408) 970-9888
fax (408) 970-9316
www.aec-engineers.com
PROJECT NO. 101-17-14

McCRACKEN & WOODMAN incorporated
3470 Mt. Diablo Blvd, Suite A305
Lafayette, CA 94549
www.mccracken-woodman.com
T 925-283-4891 EXT 25
C 510-333-4895

PROJECT TEAM

1. THE CONSTRUCTION CONTRACT IS FOR A COMPLETE AND FULLY FUNCTIONING INSTALLATION. THESE DOCUMENTS DESCRIBE THE DESIGN INTENT AND SPECIFIC REQUIREMENTS OF THE INSTALLATION. THE CONTRACT DOCUMENTS ARE COMPLEMENTARY, AND WHAT IS REQUIRED BY ONE SHALL BE AS BINDING AS IF REQUIRED BY ALL. THESE DOCUMENTS ARE NOT MEANT TO SHOW EVERY ITEM REQUIRED TO CONSTRUCT THE WORK. ITEMS SUCH AS BUT NOT LIMITED TO, FASTENERS, CONNECTORS, FILLERS, MISCELLANEOUS CLOSURE ELEMENTS, ANCILLARY CONTROL WIRING AND POWER WHERE REQUIRED FOR THE CONTROL OR OPERATION OF THE PROVIDED EQUIPMENT, ETC. ARE NOT ALWAYS SHOWN BUT ARE CONSIDERED TO BE INCLUDED IN THE SCOPE OF THE WORK. IT IS THE RESPONSIBILITY OF THE CONTRACTOR TO PROVIDE A FULLY FUNCTIONING INSTALLATION WHICH MEETS THE DESIGN INTENT, INCLUDING THE SPECIFIC REQUIREMENTS INCLUDED IN THESE DOCUMENTS.
2. THESE DOCUMENTS DESCRIBE A SINGLE CONSTRUCTION CONTRACT. THE USE OF SUB-CONTRACTORS IS THE ELECTION OF THE GENERAL CONTRACTOR. THE DRAWINGS DO NOT INTEND TO DIVIDE THE WORK AMONG THE SUB-CONTRACTORS. WHERE THE DOCUMENTS IDENTIFY WORK WITH SUCH NOTES AS "NOT IN MECHANICAL WORK" OR "NOT IN ELECTRICAL WORK" OR "SEE STRUCTURAL DRAWINGS," IT MEANS THAT THE WORK IS NOT FURTHER DESCRIBED OR SPECIFIED ON THE DRAWING WHERE SUCH NOTES APPEAR; IT DOES NOT PRECLUDE THE CONTRACTOR FROM DELEGATING THE WORK TO THE ENTITIES OF HIS ELECTION. IN ADDITION, THE DIVISION OF THE CONTRACT DOCUMENTS INTO ARCHITECTURAL, STRUCTURAL, ELECTRICAL AND MECHANICAL OR OTHER DESIGN DISCIPLINES IS FOR CONVENIENCE ONLY, AND IS NOT INTENDED TO DIVIDE THE WORK AMONG THE CONTRACTOR'S VARIOUS SUB-CONTRACTORS NOR IMPLY THAT ALL OF THE WORK FOR A PARTICULAR TRADE IS SHOWN ONLY IN THOSE DRAWINGS OR SPECIFICATIONS.
3. REFERENCE TO "CONTRACTOR" IN THESE DOCUMENTS SHALL BE INTERPRETED AS REFERRING TO THE GENERAL CONTRACTOR OR TO ANY SUB-CONTRACTOR TO THE GENERAL CONTRACTOR, COLLECTIVELY OR AS INDIVIDUAL ENTITIES. FURTHER, REFERENCE TO A PARTICULAR SUB-CONTRACTOR IS FOR CONVENIENCE ONLY, AND IS NOT INTENDED TO LIMIT THE SCOPE OF THE WORK TO THAT TRADE OR LIMIT THE RESPONSIBILITIES OF THE GENERAL CONTRACTOR TO COORDINATE THE WORK OF ALL TRADES.
4. THE DRAWINGS AND PROJECT MANUAL ESTABLISH DETAILED MINIMUM REQUIREMENTS FOR THE DESIGN AND CONSTRUCTION OF THE PROJECT. PARTIAL OR OUTDATED SETS OF CONTRACT DOCUMENTS ARE INCOMPLETE AND SHOULD NOT BE DISTRIBUTED OR UTILIZED.
5. ALL WORK IS TO COMPLY WITH ALL GOVERNING FEDERAL, STATE AND LOCAL CODES AND REGULATIONS IN FORCE AT THE TIME OF CONSTRUCTION.
6. CONTRACTOR IS RESPONSIBLE FOR OBTAINING AND PAYING FEES FOR ALL PERMITS PRIOR TO STARTING CONSTRUCTION. PERMITS ARE TO BE POSTED IN A CONSPICUOUS PLACE ON THE PROJECT SITE AS REQUIRED BY AUTHORITY HAVING JURISDICTION.
7. UNLESS SPECIFICALLY NOTED AS BEING RE-USED, ALL MATERIALS FURNISHED AT THE JOB SITE SHALL BE NEW AND FREE FROM DEFECTS, AND SHALL BE STORED AT THE SITE IN SUCH A MANNER AS TO PROTECT THEM FROM DAMAGE. ALL WORK SHALL BE OF BEST PRACTICE OF EACH TRADE.
8. IT IS THE RESPONSIBILITY OF THE CONTRACTOR AND ALL SUB-CONTRACTORS TO REVIEW ALL DRAWINGS, PROJECT MANUAL, ADDENDA, ETC. IN ORDER TO ASSURE COORDINATION OF ALL WORK BY ALL TRADES. FAILURE TO REVIEW AND COORDINATE ALL CONTRACT DOCUMENTS BY THE GENERAL CONTRACTOR WITH THE SUB-CONTRACTORS FOR APPLICABLE PORTIONS OF THE WORK DOES NOT RELIEVE ANY PARTY FROM PERFORMING THE MATERIALS AND WORK REQUIRED FOR A COMPLETE INSTALLATION.
9. THE PROJECT MANUAL WHICH INCLUDES THE GENERAL CONDITIONS, SUPPLEMENTAL CONDITIONS AND TECHNICAL SPECIFICATIONS AND THE DRAWINGS ARE COMPLIMENTARY AND TOGETHER DESCRIBE THE PROJECT REQUIREMENTS. WHERE THERE ARE DISCREPANCIES BETWEEN THE PROJECT MANUAL AND THE DRAWINGS, THE CONTRACTOR SHALL ADVISE THE ARCHITECT OF SUCH AND REQUEST CLARIFICATION. IN GENERAL, THE PROJECT MANUAL TAKES PRECEDENCE OVER DRAWINGS. LARGE SCALE DETAILS TAKE PRECEDENCE OVER SMALL SCALE DETAILS.
10. IT IS THE RESPONSIBILITY OF THE CONTRACTOR TO COMPLETELY COORDINATE WORK AS REQUIRED TO MEET THE DESIGN INTENT AS DEFINED BY THE DOCUMENTS. THE CONTRACTOR SHALL LAY OUT AND SEQUENCE THE INSTALLATION OF WORK SO THAT THE DIFFERENT SYSTEMS DO NOT OBSTRUCT INSTALLATION OF SUBSEQUENT WORK. IN GENERAL, SYSTEMS INSTALLED FIRST SHOULD BE AS HIGH AND AS TIGHT TO THE STRUCTURE AS POSSIBLE TO ALLOW SPACE FOR SYSTEMS WHICH FOLLOW.
11. THE GENERAL CONTRACTOR AND ALL SUB-CONTRACTORS SHALL VISIT THE SITE PRIOR TO BIDDING IN ORDER TO FAMILIARIZE THEMSELVES WITH THE EXISTING CONDITIONS AND THE IMPACT OF THE PROPOSED WORK INDICATED ON THE DRAWINGS AND SPECIFICATIONS ON THESE CONDITIONS. ANY QUESTIONS REGARDING THE COORDINATION OF NEW WORK WITH EXISTING CONDITIONS MUST BE SUBMITTED TO THE ARCHITECT IN WRITING PRIOR TO THE BID SUBMISSION AND WITH ADEQUATE TIME FOR RESPONSE TO ALL BIDDERS. THE ARCHITECT WILL RESPOND TO TIMELY QUESTIONS WITH A WRITTEN RESPONSE TO ALL BIDDERS.
12. ALL WORK NOTED "NIC" IS NOT IN CONTRACT. CONTRACTOR SHALL COORDINATE WITH OTHER CONTRACTORS PER REQUIREMENT ESTABLISHED BY OWNER.
13. THE EXISTING DIMENSIONS AND CONDITIONS INDICATED IN THESE DOCUMENTS ARE FROM ELECTRONIC CAD INFORMATION PROVIDED BY THE OWNER AND ARE ASSUMED TO BE ACCURATE AS SHOWN. THE CONTRACTOR SHALL VERIFY THE ACCURACY OF SUCH INFORMATION PRIOR TO THE START OF CONSTRUCTION, AND ADVISE THE ARCHITECT OF ANY DEVIATIONS OR CONFLICTS WITH THE INFORMATION SHOWN ON THE DRAWINGS.
14. DRAWINGS ARE NOT TO BE SCALED. CONTRACTOR SHALL REFER TO THE DIMENSIONS INDICATED OR THE ACTUAL SIZES OF CONSTRUCTION ITEMS. WHERE NO DIMENSION OR METHODS OF DETERMINING A LOCATION EXISTS, VERIFY DIMENSION WITH ARCHITECT PRIOR TO LAYOUT AND INSTALLATION.
15. THE DRAWINGS AND REFERENCED DETAILS HAVE BEEN DIMENSIONED IN ORDER TO ESTABLISH THE CONTROL AND GUIDELINES FOR FIELD LAYOUT. WHERE DISCREPANCIES EXIST BETWEEN THE DRAWINGS AND FIELD CONDITIONS THE CONTRACTOR SHALL NOTIFY THE ARCHITECT OF SUCH PRIOR TO LAYOUT AND INSTALLATION.
16. DIMENSIONS ON DOCUMENTS ARE TO FACE OF STUDS FOR NEW CONSTRUCTION AND TO FACE OF FINISH MATERIALS FOR EXISTING CONSTRUCTION, UNLESS OTHERWISE INDICATED.
17. WHERE DIMENSIONS INDICATED ARE NOTED AS VERIFY IN FIELD (VIF) THE DIMENSION SHOWN IS THE BASIS OF DESIGN, BUT MAY DIFFER FROM ACTUAL CONDITIONS. CONTRACTOR SHALL VERIFY THESE DIMENSIONS WHILE LAYING OUT THE WORK AND REPORT ANY DISCREPANCIES TO THE ARCHITECT PRIOR TO PROCEEDING. WHERE DIMENSIONS ARE NOTED AS "+/-" FIELD DIMENSIONS MAY VARY FROM THE NOTED DIMENSIONS BY MINOR AMOUNTS. DISCREPANCIES OF MORE THAN 1" SHOULD BE BROUGHT TO THE ATTENTION OF THE ARCHITECT FOR CONFIRMATION.
18. DETAILS ARE KEYED TO THE PLANS AT TYPICAL LOCATIONS. TYPICAL DETAILS APPLY TO ALL LOCATIONS WHICH ARE SIMILAR BUT ARE NOT NECESSARILY KEYED TO EVERY LOCATION TO WHICH THEY APPLY. CONTRACTOR IS RESPONSIBLE TO COORDINATE THE LOCATION OF ALL TYPICAL DETAILS AND INSTALL THE WORK INDICATED. FEATURES NOT SHOWN IN THEIR ENTIRETY SHALL BE COMPLETELY PROVIDED AS IF SHOWN IN FULL. IF DISCREPANCIES EXIST, CONTRACTOR IS TO REQUEST CLARIFICATION BY THE ARCHITECT OF SUCH CONDITIONS.
19. FINISH FLOOR ELEVATIONS REFER TO TOP OF CONCRETE SLAB, UNLESS NOTED OTHERWISE. WHERE CONCRETE SLAB IS DEPRESSED TO ACCOMMODATE SETTING BEDS, RAISED ACCESS FLOOR, OR OTHER SIMILAR FLOOR ASSEMBLIES, FINISH FLOOR ELEVATIONS ARE TO TOP OF FINISH FLOOR ASSEMBLY INDICATED.
20. FIRE RATING "TAPES" INDICATED ON FLOOR PLANS SHOW EXTENT OF FIRE RATED PARTITIONS, BARRIERS AND FIRE WALLS. RATING IN A PARTITION SHALL BE CONTINUOUS AND SHALL CONTINUE OVER DOORS AND WINDOWS WHETHER OR NOT THEY ARE SHOWN AS SUCH ON THE PLANS. REFER TO PARTITION DETAILS FOR REQUIREMENTS OF THE RATED ASSEMBLIES.
21. VERIFY AND COORDINATE SIZES, LOCATION AND MOUNTING REQUIREMENTS OF ALL EQUIPMENT AND FIXTURES. IT IS THE CONTRACTOR'S RESPONSIBILITY TO PROVIDE REQUIRED BLOCKING, BACKING, SLEEVES, ETC. FOR A COMPLETE, NEAT INSTALLATION. COORDINATE INSTALLATION OF ALL SLEEVES AND OPENINGS AS REQUIRED THROUGH ALL EXISTING OR NEW CONSTRUCTION.
22. DETAILS INDICATE DESIGN INTENT OF WORK IN PLACE. MINOR MODIFICATIONS MAY BE REQUIRED TO SUIT JOB CONDITIONS OR DIMENSIONS AND ARE TO BE INCLUDED AS PART OF THE WORK.
23. PROVIDE PROTECTION FOR PEDESTRIANS OR USERS OF ADJACENT AREAS OF THE BUILDING AS NECESSARY AND AS REQUIRED BY THE AUTHORITY HAVING JURISDICTION.
24. MAINTAIN THE PREMISES CLEAN AND FREE OF TRASH AND DEBRIS. PROTECT PROJECT, THE SITE, AND PERSONAL PROPERTY FROM DAMAGES.
25. PROTECT WORK AREAS AND EXISTING ADJACENT AREAS, INCLUDING EXISTING UTILITIES, FROM DAMAGE. REPAIR, REPLACE, OR PATCH ANY DAMAGE DUE TO CONSTRUCTION. REPAIRED CONSTRUCTION IS SUBJECT TO REVIEW AND ACCEPTANCE BY ARCHITECT.
26. PROVIDE REQUIRED TEMPORARY UTILITIES, BRACING, SUPPORTS, SHORING, ETC. CONTRACTOR SHALL BE RESPONSIBLE FOR DESIGN ADEQUACY AND SAFETY OF ERECTION.
27. CONTRACTOR SHALL MAINTAIN CURRENT UPDATED RECORD DRAWINGS AND SPECIFICATIONS ON SITE AT ALL TIME.
28. CONTRACTOR IS RESPONSIBLE FOR MEANS AND METHODS OF CONSTRUCTION, INCLUDING BUT NOT LIMITED TO SITE SAFETY AND SECURITY FOR WORKERS AND GENERAL MEMBERS OF THE PUBLIC.
29. METAL FABRICATIONS AND SUPPORT ASSEMBLIES WHETHER SHOWN OR NOT SHALL BE PROVIDED FOR THE STRUCTURAL SUPPORT OF MISCELLANEOUS ELEMENTS. GENERAL CONTRACTOR IS RESPONSIBLE FOR PROVIDING ENGINEERED STRUCTURAL ASSEMBLIES AND CALCULATIONS SHOWING COMPLIANCE WITH CODE REQUIREMENTS AND ACCOUNTING FOR STATIC AND DYNAMIC LOADS INCLUDING ANY WIND OR SEISMIC LOADS, THERMAL MOVEMENT OF SUPPORTING STRUCTURE AND DIMENSIONAL TOLERANCES OF THE BUILDING.
30. THE CONTRACTOR SHALL PROVIDE AND INSTALL ALL STIFFENERS, BRACING, BACK-UP PLATES AND SUPPORTING BRACKETS REQUIRED FOR THE BEST POSSIBLE INSTALLATION OF ALL TOILET ROOM ACCESSORIES AND PARTITIONS AND ALL WALL MOUNTED OR SUSPENDED MECHANICAL, ELECTRICAL OR MISCELLANEOUS EQUIPMENT.
31. PIPE SLEEVES IN MECHANICAL EQUIPMENT ROOMS EXTEND 2" ABOVE THE FLOOR LINE. FILL THE ANNULAR SPACES OF PIPE SLEEVES THROUGH THE FLOOR OR THROUGH RATED WALLS WITH FIRE SAFING AND SMOKE SEAL COMPOUND AS INDICATED ON THE SPECIFICATION, AND AS APPROVED BY THE AUTHORITY HAVING JURISDICTION. PROVIDE APPROVED RATED FIRE DAMPERS FOR ALL DUCTS PENETRATING FIRE RATED WALLS. FIRE DAMPER ASSEMBLIES, INCLUDING SLEEVES AND INSTALLATION PROCEDURES MUST BE APPROVED BY THE BUILDING OFFICIAL PRIOR TO INSTALLATION. WHEREVER POSSIBLE, MANUAL RESET LEVER FOR THE FIRE DAMPER MUST BE PLACED ON NON-PUBLIC OR LAY-IN CEILING SIDE OF THE RATED WALL.
32. SIZES OF MECHANICAL EQUIPMENT PADS AND BASES SHOWN ON PLAN ARE APPROXIMATE. CONTRACTOR SHALL VERIFY DIMENSIONS OF ALL PADS AND BASES WITH THE APPROPRIATE EQUIPMENT MANUFACTURERS. CONTRACTOR SHALL COORDINATE MOUNTINGS WITH APPROPRIATE EQUIPMENT MANUFACTURERS. PADS AND BASES SHALL BE INDICATED ON SUBMITTALS AND BROUGHT TO THE ATTENTION OF THE ARCHITECT PRIOR TO LAY-OUT OF REINFORCING STEEL OR STEEL DECK.
33. PROVIDE ACCESS PANELS FOR MECHANICAL AND ELECTRICAL EQUIPMENT AS REQUIRED BY APPLICABLE CODES. ALL ACCESS PANELS IN GYP BOARD SHALL BE CONCEALED, MUD-IN TYPE. ELECTRICAL J-BOXES, PLUMBING CLEANOUTS, FIRE DAMPERS AND OTHER SIMILAR ITEMS REQUIRING ACCESS ARE NOT TO BE LOCATED ABOVE GYPSUM BOARD OR SIMILAR NON-ACCESSIBLE CEILING.

APPLICABLE CODES

- 2016 CALIFORNIA ADMINISTRATIVE CODE..........................(CAC) (PART 1, TITLE 24, CCR)
- 2016 CALIFORNIA BUILDING CODE (CBC) VOLUMES 1 & 2...........(PART 2, TITLE 24, CCR) (2015 EDITION INTERNATIONAL BUILDING CODE WITH 2016 CALIFORNIA AMENDMENTS)
- 2016 CALIFORNIA ELECTRICAL CODE (CEC)..................................(PART 3, TITLE 24, CCR) (2014 EDITION NATIONAL ELECTRICAL CODE WITH 2016 CALIFORNIA AMENDMENTS)
- 2016 CALIFORNIA MECHANICAL CODE (CMC)................................(PART 4, TITLE 24, CCR) (2015 EDITION IAPMO UNIFORM MECHANICAL CODE WIT`H 2016 CALIFORNIA AMENDMENTS)
- 2016 CALIFORNIA PLUMBING CODE (CPC).....................................(PART 5, TITLE 24, CCR) (2015 EDITION IAPMO UNIFORM PLUMBING CODE WITH 2016 CALIFORNIA AMENDMENTS)
- 2016 CALIFORNIA ENERGY CODE..(PART 6, TITLE 24, CCR)
- 2016 CALIFORNIA FIRE CODE (CFC)..(PART 9, TITLE 24, CCR) (2015 EDITION OF INTERNATIONAL FIRE CODE WITH 2016 CALIFORNIA ADMENDMENTS)
- 2016 CALIFORNIA EXISTING BUILDING CODE (CEBC)..................(PART 10, TITLE 24, CCR) (2015 EDITION OF INTERNATIONAL EXISTING BUILDING CODE WITH 2016 CALIFORNIA AMENDMENTS)
- 2016 CALIFORNIA GREEN BUILDING STANDARDS CODE............(PART 11, TITLE 24, CCR)
- 2016 CALIFORNIA REFERENCE STANDARDS CODE.....................(PART 12, TITLE 24, CCR)
- TITLE 19 CCR, PUBLIC SAFETY, STATE FIRE MARSHAL REGULATIONS
- NFPA 13 - STANDARD FOR THE INSTALLATION OF SPRINKLER SYSTEMS (2016 EDITION - CA AMENDED)
- NFPA 72 - 2016 NATIONAL FIRE ALARM AND SIGNALING CODE (CA AMENDED)
- NFPA 80 - STANDARD FOR FIRE DOORS AND OTHER OPENING PROTECTIVES (2016 EDITION)
- UL 464 - AUDIBLE SIGNALING DEVICES FOR FIRE ALARM AND SIGNALING SYSTEMS, INCLUDING ACCESSORIES (2003 EDITION)
- UL 521 - STANDARD FOR HEAT DETECTORS FOR FIRE PROTECTIVE SIGNALING SYSTEMS (1999 EDITION)
- UL 1971 - STANDARD FOR SIGNALING DEVICES FOR THE HEARING IMPAIRED (2002 EDITION)
- REFERENCE CODE SECTIONS FOR APPLICABLE STANDARDS
- 2010 ADA STANDARDS FOR ACCESSIBLE DESIGN

PROJECT DIRECTORY

OWNER
MENLO PARK CITY SCHOOL DISTRICT
181 ENCINAL AVE.
ATHERTON, CA 94027
650.321.7140

ARCHITECT
HED
417 MONTGOMERY STREET, SUITE 400
SAN FRANCISCO, CA 94104
415.981.2345

ELECTRICAL & FIRE ALARM
ALLIANCE ENGINEERING CONSULTANTS INC.
4701 PATRICK HENRY DRIVE, BUILDING 10
SANTA CLARA,CA 95054
408.970.9888

MECHANICAL & PLUMBING
McCRACKEN & WOODMAN
3470 MOUNT DIABLO BOULEVARD, SUITE A305
LAFAYETTE, CA 94549
925.283.4891

DRAWING LIST

#	NAME	ISSUED FOR
G-000	COVER SHEET	
GENERAL		
G-001	GENERAL INFORMATION	
G-011	SITE PLAN	
ARCHITECTURAL		
AD-101	DEMOLITION CEILING PLAN AND SECTIONS	
A-101	IMPROVEMENT FLOOR PLAN AND SECTIONS	
A-102	INTERIOR ELEVATIONS AND DETAILS	
A-501	DETAILS	
A-571	CEILING DETAILS	
A-572	CEILING DETAILS	
ELECTRICAL		
E0.1	GENERAL NOTES, LEGEND, ABBREVIATIONS AND DRAWING INDEX	
E0.2	CERTIFICATE OF COMPLIANCE TITLE 24	
E1.1	ELECTRICAL DEMOLITION PLAN	
E2.1	ELECTRICAL PLAN	
E3.1	ELECTRICAL SCHEDULES	
E3.2	ELECTRICAL DETAILS	
MECHANICAL		
M-0.1	MECHANICAL LEGEND, NOTES, SCHEDULE AND DETAILS	
M-1.1	MECHANICAL FLOOR PLANS - ELC CLASSROOM	
PLUMBING		
P-0.1	PLUMBING LEGEND, NOTES AND SCHEDULE	
P-1.1	PLUMBING FLOOR PLANS - ELC CLASSROOM	
P-2.1	PLUMBING DETAILS	

SUMMARY OF WORK

THE WORK SHALL INCLUDE BUT IS NOT LIMITED TO THE :

1. REPLACEMENT OF EXISTING LIGHTING AND ALL RELATED ACCESSORIES W/ NEW PENDANT LIGHTING SYSTEM.
2. REPLACEMENT OF EXISTING 12 X 12 ADHESIVE APPLIED ACOUSTICAL CEILING TILE.
3. REPLACEMENT OF NEW ACOUSTICAL SUSPENDED CEILING SYSTEM AT ROOM K1.
4. PLACEMENT OF NEW TOILETS, CASEWORK, FLOORING AND WALLS AT ROOM K5 FOR NEW EARLY LEARNING CENTER..
5. SELECTIVE DEMOLITION, PATCH, REPAIR AND REFINISH OF AREAS AFFECTED BY NEW WORK.
6. REFER TO ELECTRICAL DRAWINGS FOR ADDITIONAL INFORMATION.

THE PRECEDING DESCRIPTION DOES NOT LIMIT THE EXTENT OF WORK. THE CONTRACTOR IS RESPONSIBLE FOR ALL WORK CONTAINED WITHIN THE CONTRACT DOCUMENTS.

ABBREVIATIONS

NOTE: NOT ALL ABBREVIATIONS MAY BE USED IN THIS PROJECT

A.B./ANCHOR BOLT
ABV./ABOVE
A.C./ASPHALTIC CONCRETE
A.C.T./ACOUSTICAL CEILING TILE
A/C/AIR CONDITIONING
ACOUS./ACOUSTICAL
A.D./AREA DRAIN
ADMIN./ADMINISTRATION
ADJ./ADJUSTABLE
A.F.F./ABOVE FINISHED FLOOR
AGGR./AGGREGRATE
AL./ALUMINUM
ALT./ALTERNATE
A.P./ACCESS PANEL
APP/APPLICATION
APPROX./APPROXIMATE
ARCH./ARCHITECTURAL
ASPH./ASPHALT
ATTEN./ATTENUATING

BD./BOARD
BET./BETWEEN
B.F./BRACED FRAME
BLDG./BUILDING
BLK./BLOCKING
BM./BEAM
BOT./BOTTOM

CAB./CABINET
C/C/CENTER TO CENTER
CEM./CEMENT
CER./CERAMIC
C.F./CUBIC FEET
CH./CHANNEL
C.I./CAST IRON
C.J./CONTROL JOINT
C.L./CENTERLINE
CLG./CEILING
CLKG./CAULKING
CLO./CLOSET
CLR./CLEAR
C.M.U./CONCRETE MASONRY UNIT
COL./COLUMN
COMP./COMPUTER
CONC./CONCRETE
CONF./CONFERENCE
CONT./CONTINUOUS
CONTR./CONTRACTOR
CONST./CONSTRUCTION
CORR./CORRIDOR
CPT./CARPET
C.R./COLD-ROLLED
CSMT./CASEMENT
C.T./CERAMIC TILE
CTR./CENTER
CTSK./COUNTERSUNK
C.Y./CUBIC YARDS

D./DRYER
DBL./DOUBLE
DECK./DECKING
DEG./DEGREE
DEMO./DEMOLITION
DEPT./DEPARTMENT
DET./DETAIL
D.F./DRINKING FOUNTAIN
DIA./DIAMETER
DIM./DIMENSION
DIR./DIRECTION
DIST./DISTRIBUTION
DIV./DIVISION
DN./DOWN
DR./DOOR
D.S./DOWNSPOUT
D.S.A./ DIVISION OF STATE ARCHITECT
D.S.P./DRY STAND PIPE
DWG./DRAWING

E./EAST
(E)/EXISTING
EA./EACH
E.J./EXPANSION JOINT
EL./ELEVATION
ELAS./ELASTOMERIC
ELEC./ELECTRICAL
ELEV./ELEVATOR
EMER./EMERGENCY
ENCL./ENCLOSURE
ENGR./ENGINEER
EQ./EQUAL
EQUIP./EQUIPMENT
E.S./EACH SIDE
EXP./EXPANSION
EXH./EXHAUST
EXIST./EXISTING
EXT./EXTERIOR
E.W./EACH WAY

F./FREEZER
F.A./FIRE ALARM
F.A.F./FORCED AIR FURNACE
F.D./FLOOR DRAIN
FND./FOUNDATION
F.E./FIRE EXTINGUISHER
F.E.C./FIRE EXTINGUISHER & CABINET
FED./FEDERAL
F.V./FIELD VERIFY
F.F./FINISH FLOOR
F.H.C./FIRE HOSE CABINET
FIN./FINISH
FIX./FIXTURE
F.L./FLOW LINE
FLR./FLOOR
FLUOR./FLUORESCENT
F.O./FACE OF
F.O.C./FACE OF CONCRETE
F.O.F./FACE OF FINISH
F.O.M./FACE OF MASONRY
F.O.S./FACE OF STUD
F.O.W./FACE OF WALL
FPRF./FIREPROOF(ING)
FRM'G/FRAMING
F.R.T./FIRE RETARDANT TREATED
F.R.P./FIBERGLASS REINFORCED POLYESTER
F.S./FLOOR SINK
F.S.E./FOOD SERVICE EQIPMENT
FT./FOOT OR FEET
FTG./FOOTING
FURR./FURRING
FUT./FUTURE

GA./GAUGE
GALV./GALVANIZED
G.L.B./GLUE- LAMINATED (WOOD) BEAM
GL /GLASS
GND./GROUND
G.R.G./GLASS REINFORCED GYPSUM
G.S.M./GALVANIZED SHEET METAL
GYP./GYPSUM
G.W.B./GYPSUM WALL BOARD

H.B./HOSE BIBB
H.C./HOLLOW CORE HDWR./HARDWARE
HDWD./HARDWOOD
HT./HEIGHT
H.M./HOLLOW METAL
HORIZ./HORIZONTAL
H.P./HIGH POINT
HVAC/HEATING, VENTILATING, AIR CONDITIONING

I.D./INSIDE DIAMETER
IN./INCH
INCAND./INCANDESCENT
INCR./INCREMENT
INFO./INFORMATION
INSUL./INSULATION
INT./INTERIOR

JAN./JANITOR
JST./JOIST
JT./JOINT

KIT./KITCHEN
K.P./KICK PL

LAB./LABORATORY
LAM./LAMINATE
LAV./LAVATORY
LB./POUND
L.F./LINEAR FEET
L.H./LEFT HAND
LIN./LINEAR
LKR./LOCKER
L.L.H./LONG LEG HORIZONTAL
L.P./LOW POINT
LT./LIGHT
LVR./LOUVER

MACH./MACHINE
MAINT./MAINTENANCE
MATL./MATERIAL
MAS./MASONRY
MAX./MAXIMUM
M.B./MARKER BOARD or MACHINE BOLT
M.C./MEDICINE CABINET
MECH./MECHANICAL
MEMB./MEMBRANE
MET./METAL
MFR./MANUFACTURER
MIN./MINIMUM
MIR./MIRROR
MISC./MISCELLANEOUS
MK./MARK
M.O./MASONRY OPENING
MTD./MOUNTED
MTL./METAL
MUL./MULLION

N./NORTH
(N)/NEW
N/A/NOT APPLICABLE
N.E./NORTHEAST
N.I.C./NOT IN CONTRACT
NO./NUMBER
NOM./NOMINAL
N.T.S./NOT TO SCALE
N.W./NORTHWEST

OBS./OBSCURE
O.C./ON CENTER
O.D./OUTSIDE DIAMETER or DIMENSION
O.F.C.I./OWNER FURNISHED, CONTRACTOR INSTALLED
O.F.D./OVERFLOW DRAIN
O.F.S./OVERFLOW SCUPPER
O.H./OVER HEAD
OPNG./OPENING
OPP. HD./ OPPOSITE HAND
OZ./OUNCE

P.A./PLANTING AREA
P.B./PANIC BAR
P.C.P./PRECAST CONCRETE PANEL
PERIM./PERIMETER
PL./PLATE
PL .G./PLATE GLASS
P.LAM./PLASTIC LAMINATE
PLAS./PLASTER
PLBG./PLUMBING
PLYWD./PLYWOOD
PNL./PANEL
PR./PAIR
PREP./PREPARATION
P.S.F./POUNDS PER SQUARE FOOT
P.S.I./POUNDS PER SQUARE INCH
P.T./PRESSURE TREATED
PT./POINT
P.T.D./PAPER TOWEL DISPENSER
PTN./PARTITION
PVC/POLYVINYL CHLORIDE
PVMT./PAVEMENT

R./RISER OR REFRIGERATOR
(R)/REMOVE
R.A./RETURN AIR
RAD./RADIUS
R.B./RUBBER BASE
R.C.P./REFLECTED CEILING PLAN
R.D./ROOF DRAIN
REF./REFERENCE
REFR./REFRIGERATION
REINF./REINFORCED
REQD./REQUIRED
REV./REVISION OR REVISED
RESIL./RESILIENT
R.H./RIGHT HAND
RM./ROOM
R.O./ROUGH OPENING
RWD./REDWOOD
R.W.L./RAINWATER LEADER

S./SOUTH
S.A./SUPPLY AIR
S.B./SCOREBOARD
S.C./SOLID CORE
S.C.D./SEE CIVIL DRAWINGS
SCHED./SCHEDULE
S.D./STORM DRAIN
S.D.S./SEE DOOR SCHEDULE
S.E./SOUTHEAST
S.E.D./SEE ELECTRICAL DRAWINGS
SECT./SECTION
S.F./SQUARE FOOT (FEET)
S.F.S./SEE (ROOM) FINISH SCHEDULE
S.G.S./SEE GLAZING SCHEDULE
SHT./SHEET
SHTG./SHEATHING
SIM./SIMILAR
S.L.D./SEE LANDSCAPE DRAWINGS
S.M./SHEET METAL
SL /SLOPE
SMACNA /SHEET METAL AND AIR CONDITIONING CONTRACTORS NATIONAL ASSOCIATION
S.M.D./SEE MECHANICAL DRAWINGS
S.M.S/SHEET METAL SCREW
S.N.D./SANITARY NAPKIN DISPENSER
S.N.R./SANITARY NAPKIN RECEPTACLE
S.O.G./SLAB ON GRADE
S.P.D./SEE PLUMBING DRAWINGS
SPEC./SPECIFICATION
SPR/SPRINKLERED
S.P.S./SEE PARTITION SCHEDULE
SQ./SQUARE
S.S.D./SEE STRUCTURAL DRAWINGS
STD./STANDARD
STL./STEEL
STRL./STRUCTURAL
S4S/SURFACE FOUR SIDES
S2S/SURFACE TWO SIDES
S.S./STAINLESS STEEL

SVC/SERVICE
STOR /STORAGE
SUSP./SUSPENDED
S.W./SOUTHWEST
S.W.S./SEE WINDOW SCHEDULE
SYM./SYMMETRICAL

T./TREAD
T.B./TACKBOARD
TECH./TECHNOLOGY
TELE./TELEPHONE
TEMP./TEMPERED OR TEMPERATURE
TER./TERRAZZO
T & G/TONGUE & GROOVE
THK./THICK
THRES./THRESHOLD
T.O./TOP OF
T.O.C./TOP OF CURB or CONCRETE
T.O.D./TOP OF DECKING
T.O.M./TOP OF MASONRY
T.O.P./TOP OF PAVEMENT or PARAPET
T.O.S./TOP OF STEEL
T.O.W./TOP OF WALL
T.S./TUBULAR STEEL
T.S.C.D./TOILET SEAT COVER DISPENSER
T.T.D./TOILET TISSUE DISPENSER
TV/TELEVISION
TYP./TYPICAL

U.B.C./UNIFORM BUILDING CODE
U.G./UNDERGROUND
U.L./UNDERWRITERS LABORATORY
UNF./UNFINISHED
U.O.N./UNLESS OTHERWISE NOTED
UR./URINAL

V.C.T./VINYL COMPOSITION TILE
VERT./VERTICAL
VEST./VESTIBULE
V.G.D.F./VERTICAL GRAIN DOUGLAS FIR
V.I.F./VERIFY IN FIELD
VOL./VOLUME
V.T.R./VENT THRU ROOF (S..P.D.
V.W.C./VINYL WALL COVERING

W./WEST OR WASHER
W/ /WITH
W.C./WATER CLOSET
WD./WOOD
WDW./WINDOW
W.F./WIDE FLANGE
WGL/WIRE GLASS
W.H./WATER HEATER
W.I./WOODWORK INSTITUTE
W.O./WHERE OCCURS
W/O/WITHOUT
W.P./WORKING POINT
WSCT./WAINSCOT
W.S.P./WET STANDPIPE
WT./WEIGHT
W.W.F./WELDED WIRE FABRIC

& /AND
@ /AT
d /PENNY
/POUND OR NUMBER

DEFERRED SUBMITTAL

NONE

SYMBOL LEGEND

PROPERTY LINE
DF — DRINKING FOUNTAIN
SR — STAFF RESTROOM
BR — BOYS RESTROOM
GR — GIRLS RESTROOM
G101 — OPENING (TAG)
E05B — DOOR TAG
RESTROOM E01-R1 — ROOM NAME & NUMBER (TAG)
ACCESSIBLE PATH OF TRAVEL
1 / A102 — DETAIL NUMBER
SHEET NUMBER WHERE SECTION, DETAIL, PLAN RESIDES

VICINITY MAP

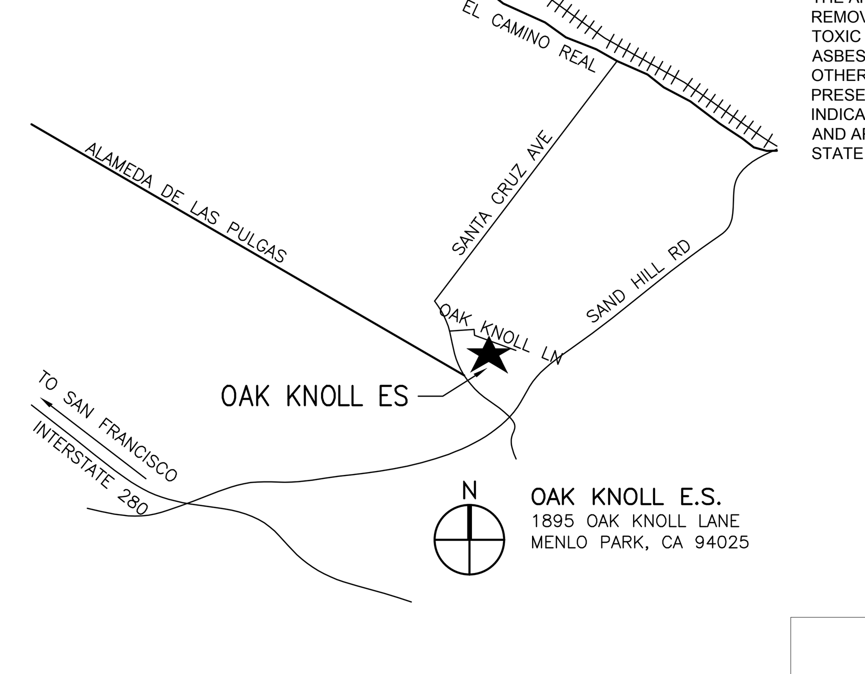

HAZARDOUS MATERIAL NOTE

THE ARCHITECT HAS NO RESPONSIBILITY FOR THE DISCOVERY, PRESENCE, HANDLING, REMOVAL OR DISPOSAL OF, OR EXPOSURE OF PERSONS TO, HAZARDOUS MATERIALS OR TOXIC SUBSTANCES IN ANY FORM AT THE PROJECT SITE, INCLUDING BUT NOT LIMITED TO ASBESTOS, ASBESTOS PRODUCTS, POLYCHLORINATED BIPHENYL (PCB), LEAD PAINT OR OTHER TOXIC SUBSTANCES. THE FACT THAT THESE DOCUMENTS DO NOT INDICATE THE PRESENCE OF OR REMOVAL OR CONTAINMENT OF THE FOREGOING IS NOT INTENDED TO INDICATE THAT THESE MATERIALS OR SUBSTANCES, AMONG OTHERS, ARE NOT PRESENT AND ARE NOT REQUIRED TO BE REMOVED OR CONTAINED IN COMPLIANCE FEDERAL, STATE AND LOCAL REGULATIONS.

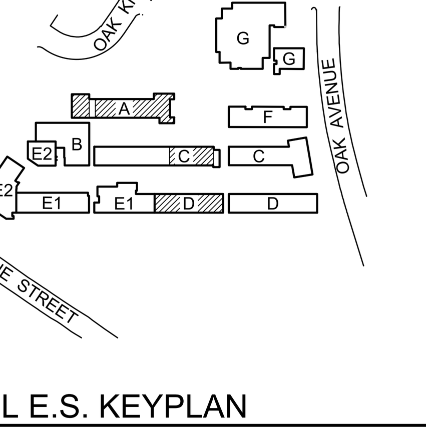

OAK KNOLL E.S. KEYPLAN

N

MENLO PARK
CITY SCHOOL DISTRICT

Oak Knoll E.S.
Lighting & ELC
Project

Project #2
Buildings A, C & D
1895 Oak Knoll Lane,
Menlo Park, CA 94027

Date	Issued For
4/15/19	BID SET

HED
417 Montgomery Street
Suite 400
San Francisco, CA
94104 USA

(415) 981-2345

WWW.HED.DESIGN

© 2018

2018-04589-000

General
Information

G-001

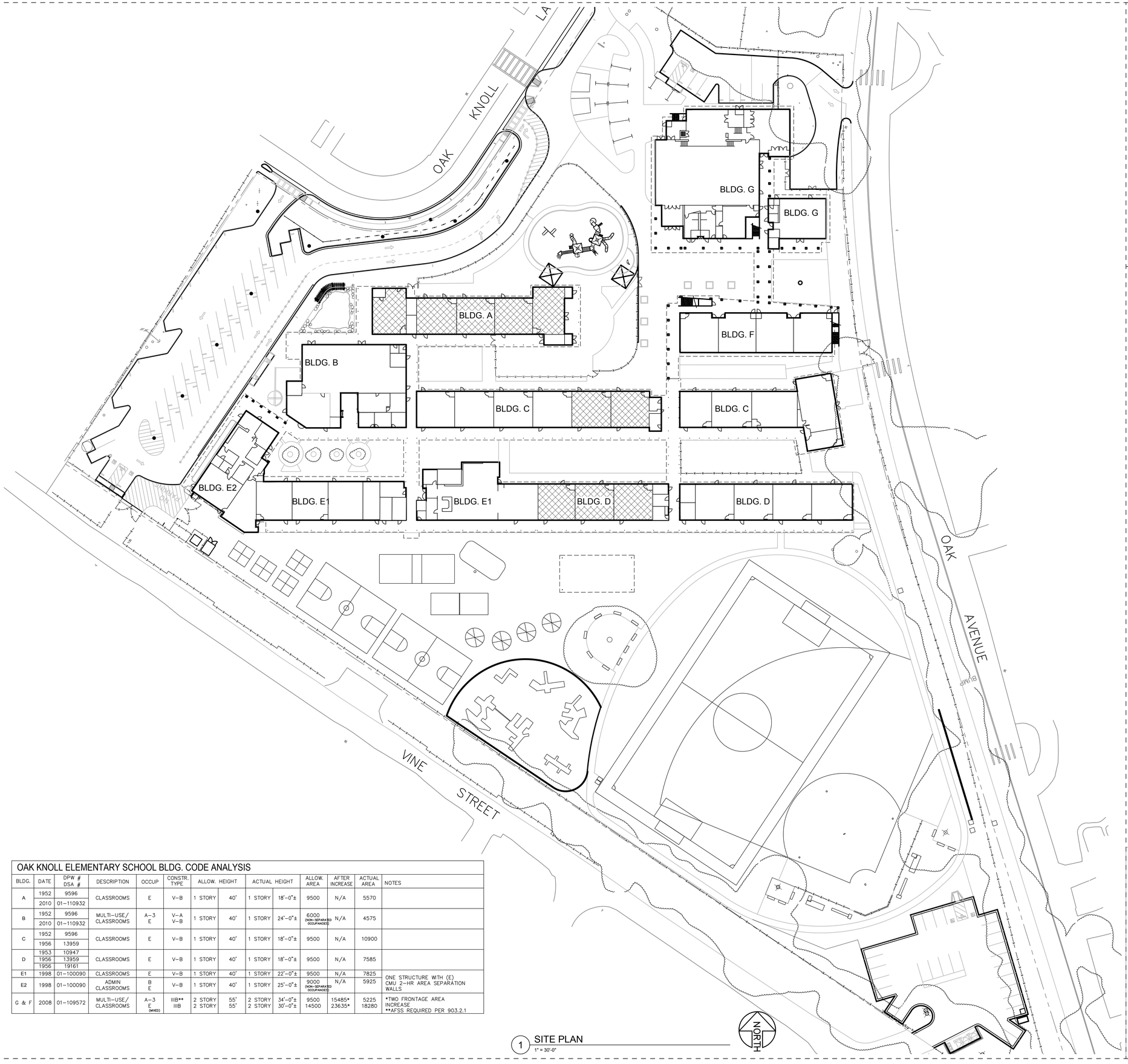

1 SITE PLAN
1" = 30'-0"

OAK KNOLL ELEMENTARY SCHOOL BLDG. CODE ANALYSIS

BLDG.	DATE	DPW # DSA #	DESCRIPTION	OCCUP	CONSTR. TYPE	ALLOW. HEIGHT		ACTUAL HEIGHT		ALLOW. AREA	AFTER INCREASE	ACTUAL AREA	NOTES
A	1952	9596	CLASSROOMS	E	V–B	1 STORY	40'	1 STORY	18'–0"±	9500	N/A	5570	
	2010	01–110932											
B	1952	9596	MULTI–USE/ CLASSROOMS	A–3 E	V–A V–B	1 STORY	40'	1 STORY	24'–0"±	6000 (NON–SEPARATED OCCUPANCIES)	N/A	4575	
	2010	01–110932											
C	1952	9596	CLASSROOMS	E	V–B	1 STORY	40'	1 STORY	18'–0"±	9500	N/A	10900	
	1956	13959											
D	1953	10947	CLASSROOMS	E	V–B	1 STORY	40'	1 STORY	18'–0"±	9500	N/A	7585	
	1956	13959											
	1956	19161											
E1	1998	01–100090	CLASSROOMS	E	V–B	1 STORY	40'	1 STORY	22'–0"±	9500	N/A	7825	ONE STRUCTURE WITH (E) CMU 2–HR AREA SEPARATION WALLS
E2	1998	01–100090	ADMIN CLASSROOMS	B E	V–B	1 STORY	40'	1 STORY	25'–0"±	9000 (NON–SEPARATED OCCUPANCIES)	N/A	5925	
G & F	2008	01–109572	MULTI–USE/ CLASSROOMS	A–3 E (MIXED)	IIIB** IIIB	2 STORY 2 STORY	55' 55'	2 STORY 2 STORY	34'–0"± 30'–0"±	9500 14500	15485* 23635*	5225 18280	*TWO FRONTAGE AREA INCREASE **AFSS REQUIRED PER 903.2.1

LEGEND

EXISTING BUILDING IN SCOPE WORK

GENERAL NOTES

1. REFER TO ELECTRICAL, MECHANICAL AND PLUMBING DRAWINGS FOR ADDITIONAL INFORMATION.

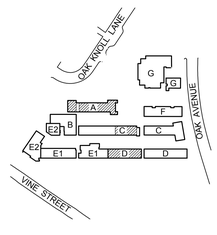

OAK KNOLL E.S. KEYPLAN

MENLO PARK CITY SCHOOL DISTRICT

Oak Knoll E.S.
Lighting & ELC
Project

Project #2
Buildings A, C & D
1895 Oak Knoll Lane,
Menlo Park, CA 94027

Date	Issued For
4/15/19	BID SET

HED
417 Montgomery Street
Suite 400
San Francisco, CA
94104 USA

(415) 981-2345

WWW.HED.DESIGN

© 2018

2018-04589-000

SITE PLAN &
CODE ANALYSIS

G-011

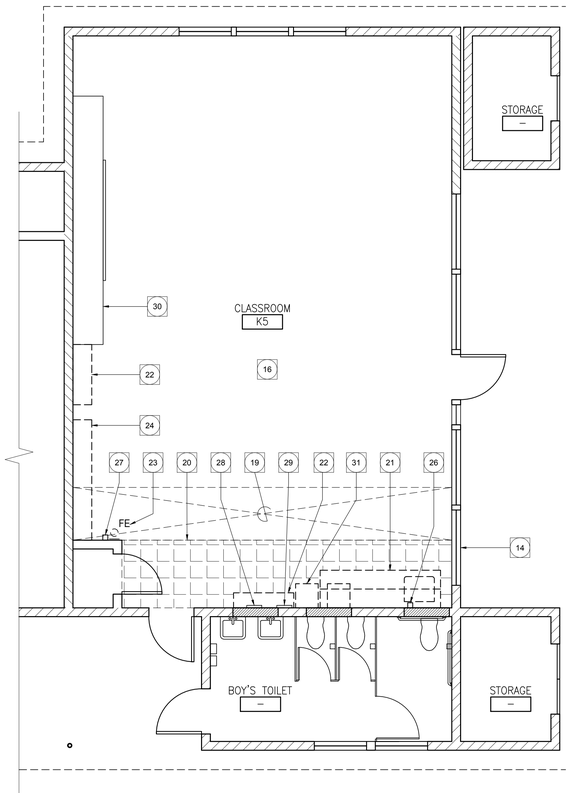

4 BUILDING C & D - DEMO SECTION
1/4" = 1'-0"

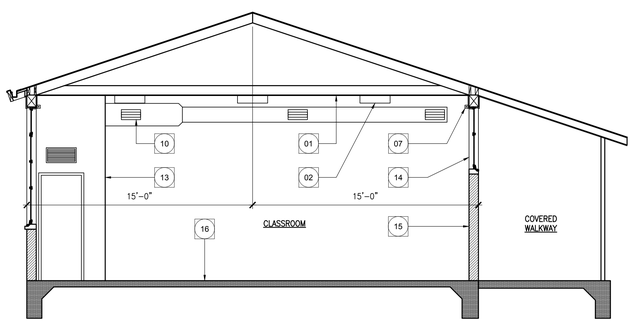

3 BUILDING C & D - DEMO SECTION
1/4" = 1'-0"

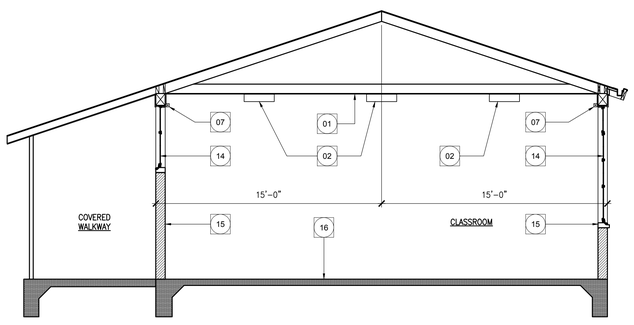

2 BUILDING C & D - DEMO SECTION
1/4" = 1'-0"

1 BUILDING C & D - DEMO CEILING PLAN
1/8" = 1'-0"

LEGEND

- (E) CMU WALL
- (E) WINDOW
- (E) CEILING FAN
- (E) MOTION SENSOR
- (E) GLUE-ON CEILING TILE TO BE REMOVED
- (E) LIGHT FIXTURE TO BE REMOVED
- (E) SUSPENDED CEILING SYSTEM TO BE REMOVED

GENERA NOTES

1. THESE NOTES APPLY TO THE ENTIRE AREA OF DEMOLITION. THE PLANS ARE DIAGRAMMATIC INDICATION OF THE GENERAL AREAS IN WHICH DEMOLITION MUST TAKE PLACE TO INSTALL NEW IMPROVEMENTS. THE CONTRACTOR WILL PROVIDE COMPLETE DEMOLITION AND REMOVAL WHETHER SPECIFICALLY SHOWN OR NOTED ON THE SPECIFICATIONS. THE CONTRACTOR WILL FIELD VERIFY ALL QUANTITIES AND LOCATIONS OF IMPROVEMENTS IN THIS AREA
2. IN ADDITION TO THOSE AREAS NOTED FOR GENERAL DEMOLITION, THE CONTRACTOR MAY CONDUCT ADDITIONAL DEMOLITION AND REPLACEMENT OF MATERIALS TO FACILITATE CONSTRUCTION OPERATIONS AT NO ADDITIONAL EXPENSE TO THE OWNER. ALL REPLACEMENT SHALL CONFORM TO THE PLANS AND SPECIFICATIONS FOR NEW WORK.
3. FOR EXTENT OF DEMOLITION, CONTRACTOR TO VERIFY FINISHED ELEVATIONS WHERE NEW WORK MEETS EXISTING SURFACES PROVIDE FLUSH TRANSITION U.N.O. CONTRACTOR SHALL SURVEY THE AREA AND INCLUDE ALL REQUIRED IN BID.
4. OWNER SHALL HAVE FIRST RIGHT OF RESUFAL FOR ALL DEMOLISHED /REMOVED ITEMS.
5. AFTER DEMOLITION OF EXISTING ITEMS IS COMPLETE, CLEAN AND PREP SITE AS REQUIRED TO RECEIVE NEW WORK.
6. REFER TO ELECTRICAL DRAWINGS FOR ADDITIONAL INFORMATION.
7. REMOVE AND REINSTALL EXISTING FA DEVICES AS NEEDED DUE TO NEW WORK.
8. PATCH, REPAIR AND PAINT ANY AREAS AFFECTED BY NEW WORK.

DEMO KEYNOTES

X

01 REMOVE (E) GLUED-ON CEILING TILE AND ALL RELATED ACCESSORIES.
02 REMOVE SURFACE MOUNTED (E) LIGHT FIXTURES AND ALL RELATED ACCESSORIES.
03 REMOVE ALL (E) WALL TILE FROM THIS ROOM.
04 TEMPORARILY REMOVE (E) FAN AND RE-INSTALL AFTER INSTALLATION OF NEW CEILING.
05 TEMPORALLY REMOVE (E) CEILING MOUNTED PROJECTOR, PROJECTOR CEILING MOUNT BRACKET AND REINSTALL AFTER INSTALLATION OF NEW CEILING.
06 REMOVE (E) SUSPENDED CEILING SYSTEM AND ALL RELATED ACCESSORIES.
07 TEMPORARILY REMOVE (E) WINDOW SHADES AND RE-INSTALL AFTER INSTALLATION OF NEW CEILING.
08 REMOVE (E) CEILING SURFACE MOUNTED CONDUITS.
09 (E) WD FURRING TO REMAIN, PROTECT.
10 (E) MECH. DUCT TO REMAIN, PROTECT.
11 REMOVE (E) INSULATION AND ALL RELATED ACCESSORIES.
12 (E) ROOF JOIST, PROTECT.
13 (E) MECH. CLOSET, PROTECT.
14 (E) WINDOW, PROTECT.
15 (E) CMU WALL, PROTECT.
16 (E) CARPET TO REMAIN, U.N.O.
17. NOT USED
18. NOT USED
19. REMOVE PORTION OF (E) CARPET. PATCH AND REPAIR CARPET TO REMAIN.
20. REMOVE (E) VCT FLOORING.
21. REMOVE (E) CASEWORK, SINK AND ALL RELATED ACCESSORIES.
22. RELOCATE (E) BOOKSHELVES.
23. RELOCATE (E) WALL MOUNTED FIRE EXTINGUISHER.
24. RELOCATE (E) CUBBY STORAGE & MODIFY AS NEED TO INSTALL REFRIGERATOR
25. REMOVE (E) SHELVING
26. REMOVE (E) SOAP DISPENSER.
27. RELOCATE (E) LIGHT CONTROL, SED.
28. (E) WALL MOUNTED CLOCK TO REMAIN, PROTECT.
29. (E) WALL MOUNTED SPEAKER TO REMAIN, PROTECT.
30. (E) TEACHING WALL TO REMAIN, PROTECT.

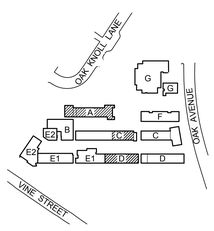

OAK KNOLL E.S. KEYPLAN

MENLO PARK CITY SCHOOL DISTRICT

Oak Knoll E.S. Lighting & ELC Project

Project #2
Buildings A, C & D
1895 Oak Knoll Lane,
Menlo Park, CA 94027

Date	Issued For
4/15/19	BID SET

HED
417 Montgomery Street
Suite 400
San Francisco, CA
94104 USA

(415) 981-2345

WWW.HED.DESIGN

© 2018

2018-04589-000

DEMOLITION CEILING PLAN & BLDG. SECTIONS

AD-101

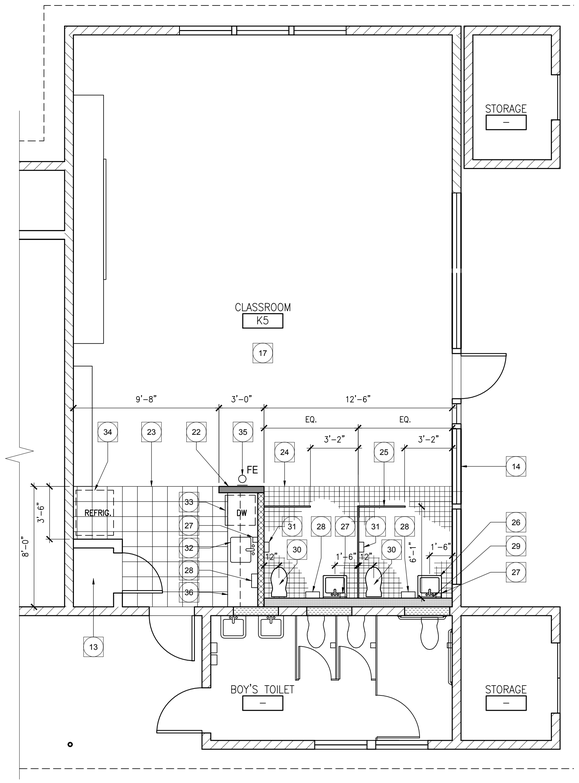

4 EARLY LEARNING CENTER PLAN
1/4" = 1'-0"

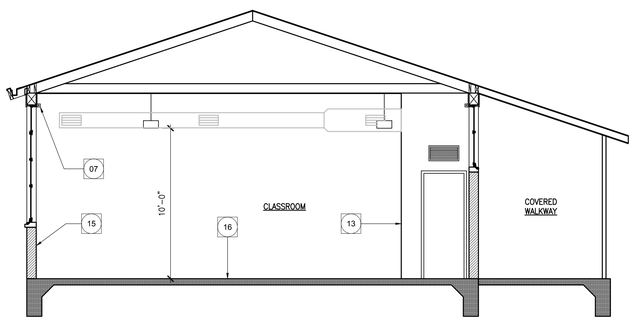

3 BUILDING A, C & D - DEMO SECTION
1/4" = 1'-0"

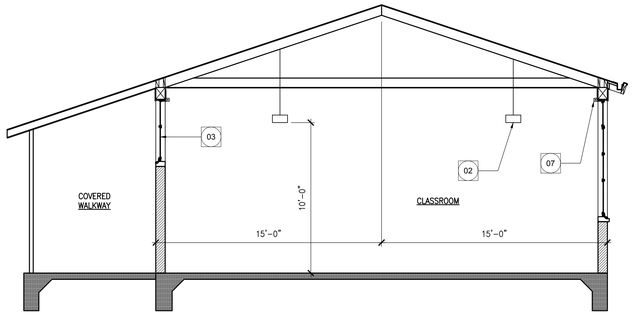

2 BUILDING A, C & D - DEMO SECTION
1/4" = 1'-0"

1 BUILDING A, C & D - IMPROVEMENT CEILING PLAN
1/8" = 1'-0"

LEGEND

- (E) CMU WALL
- (E) INFILL 2X WALL
- FULL HEIGHT WALL W/ 6" x 16 GA MTL @ 16" O.C. & 1/2" THK. GYP. ON EA. SIDE.
- 5'-0" HEIGHT PLUMBING WALL W/ 6" x 16 GA MTL @ 16" O.C. & 1/2 THK. CEM. BD ON ONE SIDE.
- (E) WINDOW
- (E) CEILING FAN
- (E) MOTION SENSOR
- SUSPENDED CEILING SYSTEM
- GLUED ON CEILING TILE
- PENDANT LIGHT FIXTURE
- LIGHT FIXTURE

GENERA NOTES

1. REFER TO ELECTRICAL DRAWINGS FOR ADDITIONAL INFORMATION.
2. REFER TO SHEETS A-102 FOR INTERIOR ELEVATIONS.
3. AT EXISTING BOY'S TOILET, PATCH AND PAINT EXISTING WALLS, TILE AND FLOORING AS NEEDED TO MAKE SANITARY SEWER AND/OR WATER CONNECTION.
4. AT ROOM K5, REPAINT ALL WALLS.

KEYNOTES

01	SUSPENDED CEILING SYSTEM.
02	PENDANT LIGHT FIXTURE.
03	GLUE-ON CEILING TILE.
04	(E) CEILING FAN.
05	(E) CEILING MOUNTED PROJECTOR, PROJECTOR CEILING MOUNT BRACKET.
06	DROP CEILING LIGHT FIXTURE.
07	(E) WINDOW SHADES.
08	1X3 WD TRIM, PAINT.
09	(E) WD FURRING TO REMAIN, PROTECT.
10	(E) MECH. DUCT TO REMAIN, PROTECT.
11	BATT INSULATION.
12	(E) ROOF JOIST, PROTECT.
13	(E) MECH. CLOSET, PROTECT.
14	(E) WINDOW, PROTECT.
15	(E) CMU WALL, PROTECT.
16	(E) CARPET O/ CONC. SLAB, PATCH AND REPAIR DUE TO NEW WORK.
17	NOT USED.
18	NOT USED.
19	(E) 2X WALL INFILL.
20	PLUMBING CHASE WALL, 5'-0" HEIGHT.
21	WALL, 7'-6" HEIGHT.
22	WALL, FULL HEIGHT.
23	VCT/MARMOLEUM FLOORING.
24	CERAMIC TILE.
25	TOILET PARTITION, 48" HEIGHT.
26	LAVATORY, SPD.
27	SOAP DISPENSER, OWNER FURNISHED OWNER INSTALLED.
28	PAPER TOWEL DISPENSER, OWNER FURNISHED OWNER INSTALLED.
29	MIRROR, OWNER FURNISHED OWNER INSTALLED.
30	TOILET, SPD.
31	TOILET PAPER DISPENSER, OWNER FURNISHED OWNER INSTALLED.
32	SINK, SPD.
33	DISHWASHER, OWNER FURNISHED CONTRACTOR INSTALLED.
34	REFRIGERATOR, OWNER FURNISHED CONTRACTOR INSTALLED.
35	FIRE EXTINGUISHER.
36	BASE CABINET, PLASTIC LAMINATE COUNTERTOP AND UPPER CABINET.

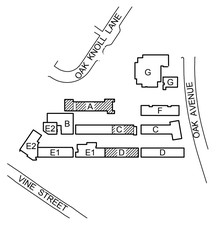

OAK KNOLL E.S. KEYPLAN

MENLO PARK CITY SCHOOL DISTRICT

Oak Knoll E.S. Lighting & ELC Project

Project #2
Buildings A, C & D
1895 Oak Knoll Lane,
Menlo Park, CA 94027

Date	Issued For
4/15/19	BID SET

HED
417 Montgomery Street
Suite 400
San Francisco, CA
94104 USA

(415) 981-2345

WWW.HED.DESIGN

© 2018

2018-04589-000

IMPROVEMENT CEILING PLAN, ELC PLAN & BLDG. SECTIONS

A-101

WOOD NAILING

cbc

1. ALL NAILS FOR STRUCTURAL WORK SHALL BE COMMON WIRE NAILS CONFORMING TO THE FOLLOWING MINIMUM SIZES:
   a. 8d 0.131" DIAM x 2-1/2" LONG
   b. 10d 0.148" DIAM x 3" LONG
   c. 10d SHORT 0.148" DIAM x 1-5/8" PLUS SHEATHING THICKNESS LONG
   d. 16d 0.162" DIAM x 3-1/2" LONG
   e. 20d 0.192" DIAM x 4" LONG
2. PROVIDE NAILS AT CONNECTIONS AS INDICATED ON THE STRUCTURAL DRAWINGS. WHERE NAILS AT CONNECTIONS ARE NOT INDICATED, NAIL PER NAILING SCHEDULE BELOW (CBC TABLE 2304.10.1).
3. NAILING NOT NOTED IN SCHEDULE BELOW OR IN THE STRUCTURAL DRAWINGS SHALL BE A MINIMUM OF TWO NAILS AT EACH CONTACT. USE 8d NAILS FOR NOMINAL 1x MATERIAL AND 16d FOR NOMINAL 2x MATERIAL.
4. HOLES SHALL BE PRE-DRILLED WHERE NECESSARY TO PREVENT SPLITTING. NAILS INTO PRESERVATIVE TREATED LUMBER SHALL BE OF HOT DIPPED ZINC-COATED GALVANIZED STEEL, STAINLESS STEEL, SILICON BRONZE, OR COPPER.

TABLE 2304.10.1
FASTENING SCHEDULE

DESCRIPTION OF BUILDING ELEMENTS	NUMBER AND TYPE OF FASTENER	SPACING AND LOCATION
ROOF		
BLOCKING BETWEEN CEILING JOISTS, RAFTERS OR TRUSSES TO TOP PLATE OR OTHER FRAMING BELOW	3-8D COMMON (2 1/2" x 0.131")	16" OC EACH FACE, FACE NAIL
BLOCKING BETWEEN RAFTERS OR TRUSS NOT AT ALL TOP PLATE, TO RAFTER OR TRUSS	3-8D COMMON (2 1/2" X 0.131")	16" OC EACH FACE, FACE NAIL
	3-16D COMMON (3 1/2" X 0.162")	END NAIL
RAFTER OR ROOF TRUSS TO TOP PLATE	3-10D COMMON (3" X 0.148")	TOENAIL
ROOF RAFTERS TO RIDGE VALLEY OR HIP RAFTERS; OR ROOF RAFTER TO 2-INCH RIDGE BEAM	2-16D COMMON (3 1/2" X 0.162")	END NAIL
	3-10D COMMON (3 1/2" X 0.148")	TOENAIL
WALL		
STUD TO STUD AND ABUTTING STUDS AT INTERSECTING WALL CORNERS	16D COMMON (3" X 0.162")	16" OC FACE NAIL
BUILT-UP HEADER (2" TO 2" HEADER)	16D COMMON (3 1/2" X 0.162")	16" OC EACH EDGE, FACE NAIL
CONTINUOUS HEADER TO STUD	4-8D COMMON (2 1/2" x 0.131"	TOENAIL
TOP PLATE TO TOP PLATE	16D COMMON (3 1/2" X 0.162")	16" OC FACE NAIL
TOP PLATE TO TOP PLATE, AT END JOINTS	8-16D COMMON (3 1/2" X 0.162")	EACH SIDE OF END JOINT, FACE NAIL (MINIMUM 24" LAP SPLICE LENGTH EACH SIDE OF END JOINT)
BOTTOM PLATE TO JOIST, RIM JOIST, BAND JOIST OR BLOCKING AT BRACED WALL PANELS	2-16D COMMON (3 1/2" X 0.162")	16" OC FACE NAIL
STUD TO TOP OR BOTTOM PLATE	4-8D COMMON (2 1/2" X 0.131")	TOENAIL
	2-16D COMMON (3 1/2" X 0.162")	END NAIL
TOP OR BOTTOM PLATE TO STUD	2-16D COMMON (3 1/2" X 0.162")	END NAIL
TOP PLATES, LAPS AT CORNERS AND INTERSECTIONS	2-16D COMMON (3 1/2" X 0.162")	FACE NAIL
FLOOR		
JOIST TO SILL, TOP PLATE, OR GIRDER	3-8D COMMON (2 1/2" X 0.131")	TOENAIL
RIM JOIST, BAND JOIST, OR BLOCKING TO TOP PLATE, SILL OR OTHER FRAMING BELOW	8D COMMON (2 1/2" X 0.131")	6" OC TOENAIL
BUILT-UP GIRDERS AND BEAMS, 2" LUMBER LAYERS	20D COMMON (4" X 0.192")	32" OC FACE NAIL AT TOP AND BOTTOM STAGGERED ON OPPOSITE SIDES
	AND: 2-20D COMMON (4" X 0.192")	ENDS AND AT EACH SPLICE, FACE NAIL
LEDGER STRIP SUPPORTING JOISTS OR RAFTERS	3-16D COMMON (3 1/2" X 0.162")	EACH JOIST OR RAFTER, FACE NAIL
JOIST TO BAND JOIST OR RIM JOIST	3-16D COMMON (3 1/2" X 0.162")	END NAIL
BRIDGING OR BLOCKING TO JOIST, RAFTER OR TRUSS	2-8D COMMON (2 1/2" X 0.131")	EACH END, TOENAIL

LEGEND

GENERA NOTES

1. REFER TO ELECTRICAL DRAWINGS FOR ADDITIONAL INFORMATION.
2. REFER TO SHEET A-501 FOR CASEWORK AND INTERIOR DETAILS.

KEYNOTES

X

1 (E) DOOR AND TRANSOME TO REMAIN, PROTECT.
2 TOILET, SPD.
3 NOT USED.
4 TOILET PARTITION W/ 12" CLEAR VERTICAL OPENING FROM FLOOR FIN., SEE DETAIL 22/A-501
5 LAVATORY, SPD.
6 TOILET PAPER DISPENSER.
7 MIRROR.
8 TRASH RECEPTACLE.
9 PAPER TOWEL DISPENSER.
10 CERAMIC WALL TILE.
11 SINK, SPD.
12 DISHWASHER, SPD.
13 FIRE EXTINGUISHER CABINET. 24/A-501
14 5'-0" HIGH PARTIAL HEIGHT PLUMBING CHASE WALL.
15. RUBBER BASE.
16. (E) WALL, PAINT.

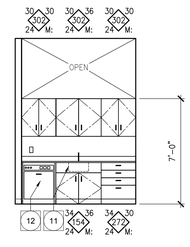

2 KITCHENETTE ELEVATION
1/4" = 1'-0"

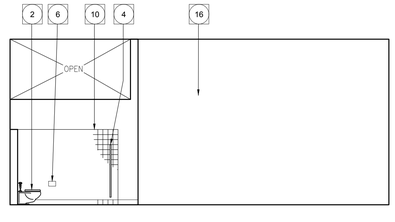

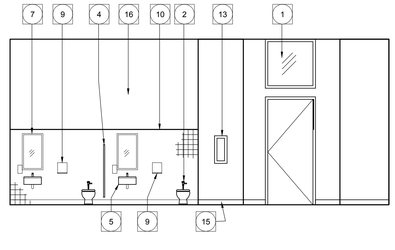

1 TOILET AND ENTRANCE ELEVATION
1/4" = 1'-0"

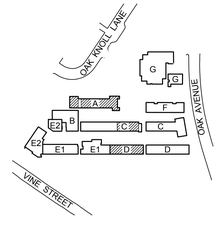

OAK KNOLL E.S. KEYPLAN

N

MENLO PARK CITY SCHOOL DISTRICT

Oak Knoll E.S. Lighting & ELC Project

Project #2
Buildings A, C & D
1895 Oak Knoll Lane,
Menlo Park, CA 94027

Date	Issued For
4/15/19	BID SET

HED
417 Montgomery Street
Suite 400
San Francisco, CA
94104 USA

(415) 981-2345

WWW.HED.DESIGN

© 2018

2018-04589-000

INTERIOR ELEVATIONS AND DETAILS

A-102

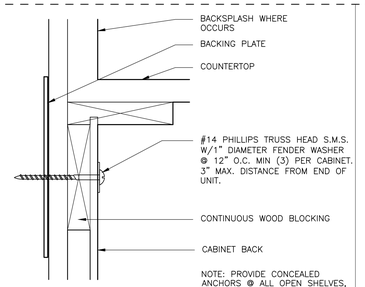

10 BASE CABINET ANCHORAGE
6" = 1'-0"

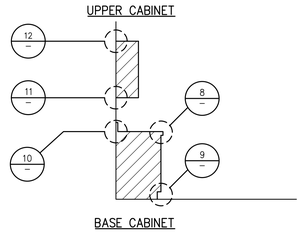

5 CASEWORK ATTACHMENT
NTS

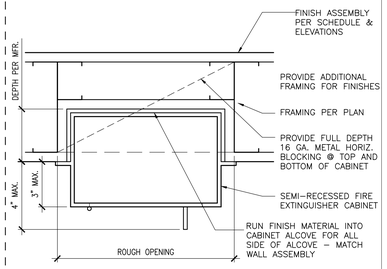

24 FIRE EXTINGUISHER CABINET
3" = 1'-0"

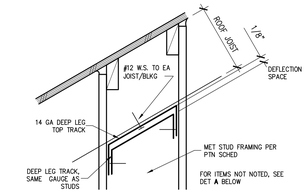

C. PERPENDICULAR TO SLOPED ROOF JOISTS
THIS DET APPLICABLE TO SLOPE OR FLAT ROOF JOIST CONDITIONS

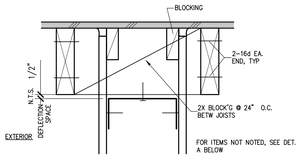

B. PARALLEL TO ROOF JOISTS
THIS DET APPLICABLE TO FLAT ROOF JOIST CONDITIONS

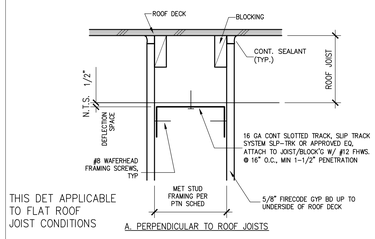

THIS DET APPLICABLE TO FLAT ROOF JOIST CONDITIONS

A. PERPENDICULAR TO ROOF JOISTS

18 PARTITION TOP PLATE (METAL STUDS)
3" = 1'-0"

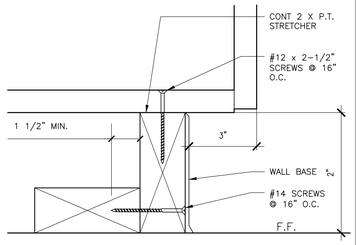

9 CABINET ANCHORAGE
6" = 1'-0"

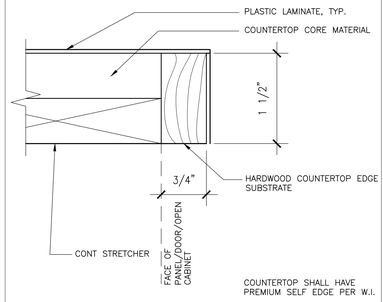

8 COUNTERTOP EDGE (P-LAM)
FULL SIZE

1. GRADE: CUSTOM, EXCEPT AS HEREIN MODIFIED.

2. W.I. CONSTRUCTION STYLE: STYLE A FRAMELESS.

3. W.I. CONSTRUCTION TYPE: TYPE I MULTIPLE SELF-SUPPORTING UNITS RIGIDLY JOINED TOGETHER.

4. W.I. DOOR AND DRAWER FRONT STYLE: FLUSH OVERLAY.

5. PROVIDE LOCKS ON ALL DOORS AND DRAWERS, TO BE KEYED THE SAME WITHIN EACH ROOM U.O.N.

6. PROVIDE ATTACHMENTS PER CASEWORK MOUNTING DETAILS AND PER BACKING PLATE SCHEDULE. SEE "CASEWORK ATTACHMENT" SCHEDULE.

7. BASE FOR FLOOR MOUNTED CASEWORK TO MATCH HEIGHT AND MATERIAL MOUNTED ON WALL U.O.N. PROVIDE FINISH BASE MATERIAL PER FINISH SCHEDULE AND EXTENDING TO WALLS AT ALL CABINET RETURNS, BACK PANELS AND END PANELS.

8. PROVIDE SEISMIC-RESTRAINT LIP AT FRONT OF ALL OPEN CABINET SHELVING. SEE "OPEN SHELVING RESTRAINT".

9. SHELVING: COMPLY WITH THE FOLLOWING, FOR A LOAD FACTOR OF 50#/S.F. EXCEPT AS MODIFIED BELOW:
A. FIXED SHELVING BETWEEN VERTICAL MEMBERS OF THE CABINET BODY, AND ADJUSTABLE SHELVING CONCEALED:
1) USE 3/4" MDF UP TO 25" LONG.
2) USE 1" MDF UP TO 34" LONG.
3) USE 3/4" COMBINATION CORE PLYWOOD WITH HARDWOOD VENEER 2 SIDES UP TO 46" LONG.

B. ADJUSTABLE SHELVING, EXPOSED:
1) USE 3/4" 3 OR 5 PLY PANELS, COMBINATION CORE WITH HARDWOOD VENEER PLIES UP TO 40" LONG.

10. FILLER PANELS: FOR SPACES OF 3" OR MORE, USE FLUSH-TYPE FILLER PANELS, WITH SURFACES AND EDGING TO MATCH CABINETS.

11. PROVIDE DUST PANELS OF 1/4" INCH PLYWOOD OR TEMPERED HARDBOARD ABOVE COMPARTMENTS AND DRAWERS EXCEPT WHERE LOCATED DIRECTLY UNDER TOPS U.O.N.

12. PRE-CUT OPENINGS: FABRICATE WORK WITH PRE-CUT OPENINGS, WHEREVER POSSIBLE, TO RECEIVE HARDWARE AND SIMILAR ITEMS. LOCATE OPENINGS ACCURATELY AND USE TEMPLATES OR ROUGH-IN DIAGRAMS FOR PROPER SIZE AND SHAPE. SMOOTH THE EDGES OF CUTOUTS AND WHERE LOCATED IN COUNTER TOPS AND SIMILAR EXPOSURES, SEAL THE EDGES OF CUTOUTS WITH A WATER-RESISTANT COATING.

13. PROVIDE CUTOUTS IN CASEWORK FOR ELECTRICAL SERVICE AND PLUMBING FIXTURES, OR ACCESS POINTS.

14. CABINET DOORS: SHALL BE OF COMBINATION CORE PLYWOOD, FOR SMALL DOORS.

15. INSTALLATION SHALL COMPLY WITH W.I. CERTIFIED SEISMIC INSTALLATION PROGRAM.

3 CABINET SCHEDULE NOTES
NTS

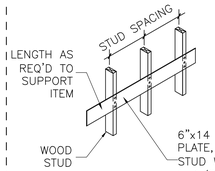

TYPE D WOOD STUDS:

TOILET ACCESSORIES, CHALK & TACK BOARDS, BASE CABINETS, TALL STOR. CABINETS, SLIDING MARKER BOARD ASSEMBLY, MOUNT ITEM TO PLATE W/ #12 SELF-TAPPING SCREWS U.O.N.

6"x14 GA. MIN. FLAT PLATE, FASTEN TO EA. STUD W/ (3) #10 x 1-1/2" FLAT OR PAN HEAD WD. SCREWS

23 IN-WALL BACKING PLATE SCHEDULE
NTS

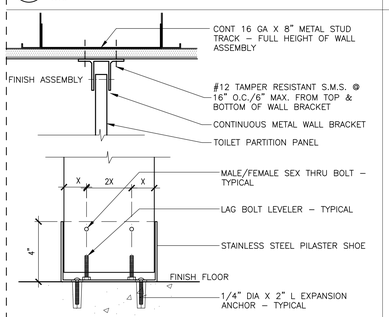

22 TOILET PARTITION MOUNTING
6" = 1'-0"

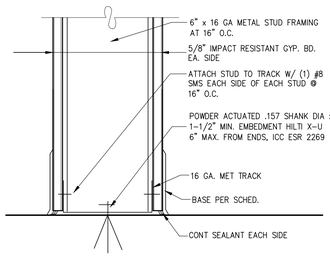

TYP CONDITION (NON-RATED)

17 PARTITION SILL (METAL STUDS)
3" = 1'-0"

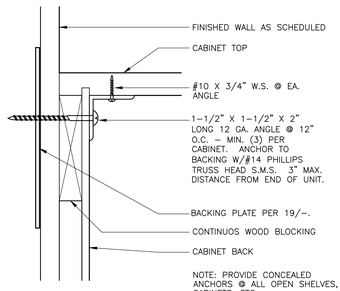

12 UPPER CABINET ANCHORAGE
1-1/2" = 1'-0"

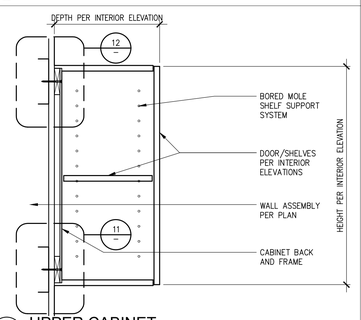

7 UPPER CABINET
1-1/2" = 1'-0"

CASEWORK ELEVATIONS PER INTERIOR ELEVATIONS

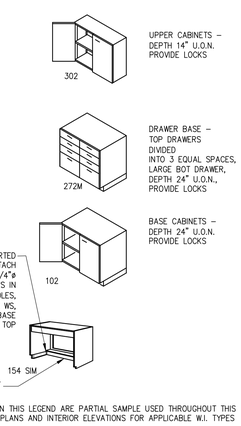

CASEWORK SHOWN ON THIS LEGEND ARE PARTIAL SAMPLE USED THROUGHOUT THIS PROJECT. REFER TO PLANS AND INTERIOR ELEVATIONS FOR APPLICABLE W.I. TYPES

1 CASEWORK LEGEND & TYPES
NTS

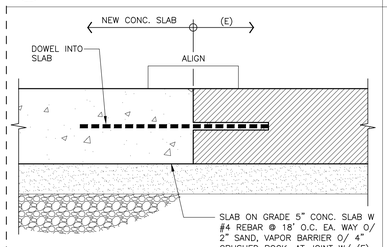

21 NEW CONC. SLAB TO (E) CONC.
3" = 1'-0"

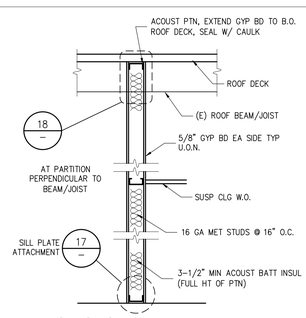

16 PARTITION SECTION
3/4" = 1'-0"

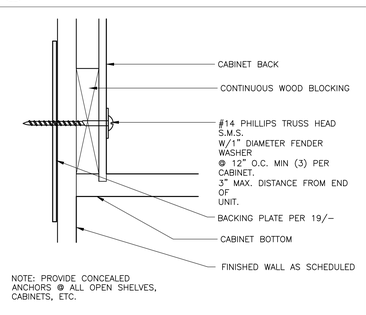

11 UPPER CABINET ANCHORAGE II
1-1/2" = 1'-0"

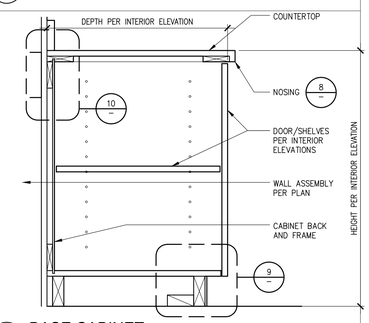

6 BASE CABINET
1-1/2" = 1'-0"

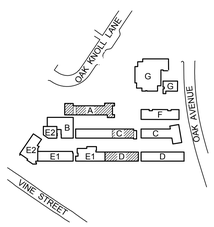

OAK KNOLL E.S. KEYPLAN

MENLO PARK CITY SCHOOL DISTRICT

Oak Knoll E.S. Lighting & ELC Project

Project #2
Buildings A, C & D
1895 Oak Knoll Lane,
Menlo Park, CA 94027

Date	Issued For
4/15/19	BID SET

HED
417 Montgomery Street
Suite 400
San Francisco, CA
94104 USA
(415) 981-2345
WWW.HED.DESIGN

© 2018

2018-04589-000

DETAILS

A-501

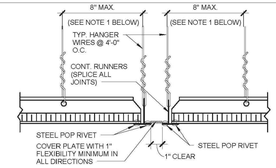

EXPANSION JOINT

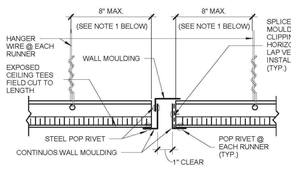

EXPANSION JOINT ALTERNATE

EXPANSION JOINTS AT THE INTERSECTION OF CORRIDORS AND AT JUNCTIONS OF CORRIDORS AND LOBBIES OR OTHER SIMILAR AREAS

NOTES:
1. PROVIDE #12 GAGE HANGER WIRES AT THE ENDS OF ALL MAIN AND CROSS RUNNERS WITHIN EIGHT (8) INCHES OF THE SUPPORT OR WITHIN ONE-FOURTH (1/4) OF THE LENGTH OF THE END TEE, WHICHEVER IS LESS, FOR THE PERIMETER OF THE CEILING AREA. PERIMETER WIRES ARE NOT REQUIRED WHEN THE LENGTH OF THE END TEE IS EIGHT (8) INCHES OR LESS.

Basis Document: DSA IR 25-2.13
Sheet Title: SUSPENDED ACOUSTICAL CEILING - EXPANSION JOINT AT INTERSECTIONS
rev. 09-21-15
Sheet No: 2.40

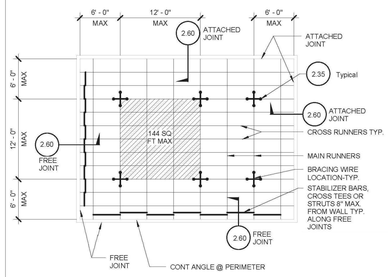

NOTE:
BRACING WIRES AND COMP. STRUT SHALL OCCUR AT EVERY 144 SQ. FT. MAX. IN ROOMS OVER 144 SQ. FT.

Basis Document: DSA IR 25-2.13
Sheet Title: TYPICAL CEILING PLAN FOR 12'-0" x 12'-0" Brace Assembly Spacing
rev. 09-21-15
Sheet No: 2.12

STRUCTURAL CONDITION OF FLOOR / ROOF ABOVE COMPRESSION STRUT	APPLICABLE DETAIL
METAL DECK	5.20
CONCRETE OVER METAL DECK	5.21
CONCRETE SLAB, BEAM, OR JOIST	5.30
STRUCTURAL STEEL	5.40
SAWN TIMBER WITH GYPSUM BOARD	5.50
SAWN TIMBER WITHOUT GYPSUM BOARD	5.60

Basis Document: DSA IR 25-2.13
Sheet Title: COMPRESSION STRUT CONNECTION TO STRUCTURE - CONNECTION MATRIX
rev. 09-21-15
Sheet No: 5.10

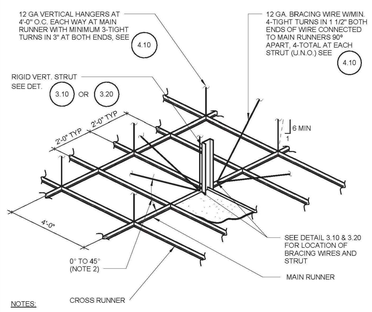

NOTES:
1. STRUTS SHALL NOT REPLACE HANGER WIRES.
2. THE MINIMUM ACCEPTABLE ANGLE IS DETERMINED SUCH THAT THE WIRES DO NOT INTERFER WITH THE RUNNERS, LIGHT FIXTURES, ETC. AND REMAIN STRAIGHT AND UNOBSTRUCTED.

Basis Document: DSA IR 25-2.13
Sheet Title: SUSPENDED CEILING - SUSPENSION AND BRACING ASSEMBLY
rev. 09-21-15
Sheet No: 2.35

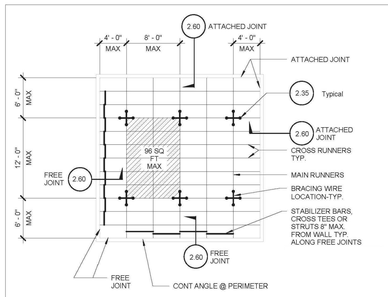

NOTE:
BRACING WIRES AND COMP. STRUT SHALL OCCUR AT EVERY 96 SQ. FT. MAX. IN ROOMS OVER 144 SQ. FT.

Basis Document: DSA IR 25-2.13
Sheet Title: TYPICAL CEILING PLAN FOR 8'-0" x 12'-0" Brace Assembly Spacing
rev. 09-21-15
Sheet No: 2.11

STRUCTURAL CONDITION OF FLOOR/ ROOF ABOVE SUSPENDED CEILING	APPLICABLE HANGER WIRE DETAIL	APPLICABLE BRACING WIRE DETAIL
METAL DECK	4.20	4.30
CONCRETE OVER METAL DECK	4.21	4.31
CONCRETE SLAB, BEAM, OR JOIST	4.22	4.32
STRUCTURAL STEEL	4.23	4.33
METAL STUD WALL	4.24	4.34
SAWN TIMBER	4.25, 4.29	4.35
WOOD I JOIST	4.26	4.36, 4.37
WOOD CHORD TRUSS	4.27, 4.29	4.38, 4.29
OPEN WEB STEEL JOIST	4.28, 4.29	4.39, 4.29

Basis Document: DSA IR 25-2.13
Sheet Title: HANGER AND BRACING WIRE CONNECTION MATRIX
rev. 09-21-15
Sheet No: 4.11

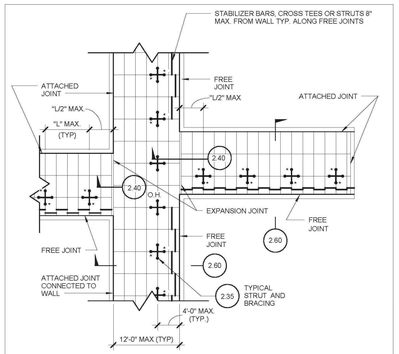

LOCATION OF EXPANSION/SLIP JOINTS IN CORRIDORS

NOTES:
1. "L"IS MAX. BRACE ASSEMBLY SPACING PER CEILING PLAN DETAIL, FOR EXAMPLE, WHERE 8' x 12' SPACING IS SPECIFIED, USE "L" = 8'.

Basis Document: DSA IR 25-2.13
Sheet Title: SUSPENDED ACOUSTICAL CEILING-CORRIDOR CEILING PLAN (Schools)
rev. 09-21-15
Sheet No: 2.30

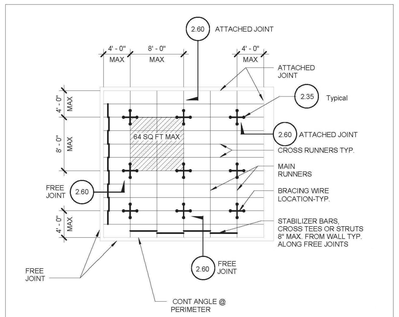

NOTE:
BRACING WIRES AND COMP. STRUT SHALL OCCUR AT EVERY 64 SQ. FT. MAX. IN ROOMS OVER 144 SQ. FT.

Basis Document: DSA IR 25-2.13
Sheet Title: TYPICAL CEILING PLAN FOR 8'-0" X 8'-0" Brace Assembly Spacing
rev. 09-21-15
Sheet No: 2.10

COMPRESSION STRUT TABLE

EMT COMPRESSION STRUT	MAXIMUM LENGTH
1/2" DIAMETER EMT (0.042" WALL THICKNESS)	5'-10"
3/4" DIAMETER EMT (0.049" WALL THICKNESS)	7'-8"
1" DIAMETER EMT (0.057" WALL THICKNESS)	9'-9"
1 1/4" DIAMETER EMT (0.065" WALL THICKNESS)	12'-9"
1 1/2" DIAMETER EMT (0.065" WALL THICKNESS)	14'-9"
2" DIAMETER EMT (0.065" WALL THICKNESS)	18'-10"

CHANNEL COMPRESSION STRUT	MAXIMUM LENGTH
250S125-33	5'-0"
250S137-33	6'-10"
362S137-33	8'-0"
250137-43	8'10"
400S137-43	10'-10"

Basis Document: DSA IR 25-2.13
Sheet Title: COMPRESSION STRUT TABLE
rev. 09-21-15
Sheet No: 3.21

DSA IR 25-2.13 METAL SUSPENSION SYSTEMS FOR LAY-IN PANEL CEILINGS

1. CEILING SYSTEM GENERAL NOTES:

1.01 Ceiling system components shall comply with ASTM C635-07 and Section 5.1 of ASTM E580-10a.

1.02 The ceiling grid system must be rated heavy duty as defined by ASTM C635-08

1.03 Ceiling systems. The following ceiling system(s) is/are part of the scope of this project:

Manufacturer's Name ARMSTRONG
Product Name and Evaluation Report Type/Number PRELUDE XL ICC ESR 1308
Manufacturer's Model Number - main runner 7301 HD.
Manufacturer's catalog number - cross runner XL 8320 MRC

1.04 Seismic Wall Clip:

Manufacturer's Model BERC 2

1.05 Ceiling panels shall not support any light fixtures, air terminals or devices.

1.06 For ceiling installations utilizing acoustical tile panels of mineral or glass fiber, it is not mandatory to provide 3/4" clearance between the acoustical tile panels and the wall on the sides of the ceiling which are free to slip. For all other ceiling panel types, provide 3/4" clearance between the ceiling panel and the wall on the sides of the ceiling free to slip.

2. MATERIALS:

2.01 Ceiling wire shall be Class 1 zinc coated (galvanized) carbon steel conforming to ASTM A641-09a. Wire shall be #12 gage (0.106" diameter) with soft temper and minimum tensile strength = 70 ksi.

2.02 Galvanized sheet steel (including that used for metal stud and track compression struts/post) shall conform to ASTM A653-11, or other equivalent sheet steel listed in Section A2.1 of the North American Specification for the Design of Cold-Formed Steel Structural Members 2007, including supplement 2 dated 2010 (AISI S100-07/S2-10). Material 43 mil (18 gage) and lighter shall have minimum yield strength of 33 ksi. Material 54 mil (16 gage) and heavier shall have a minimum yield strength of 50 ksi.

2.03 Electrical metallic tube (EMT) shall be ANSI C80.3/UL 797 carbon steel with G90 galvanizing. EMT shall have minimum yield strength (Fy) of 30 ksi and minimum ultimate strength (Fu) of 48 ksi.

3. ATTACHMENT OF HANGER AND BRACING WIRES:

3.01 Separate all ceiling hanger and bracing wires at least six (6) inches from all unbraced ducts, pipes, conduit, etc.

3.02 Hanger and bracing wires shall not attach to or bend around obstructions including but not limited to: piping, ductwork, conduit and equipment.

3.03 Hanger wires that are more than one (horizontal) in six (vertical) out of plumb shall have counter-sloping wires.

3.04 Slack safety wires shall be considered hanger wires for installation and testing requirements.

3.05 Hanger and bracing wire anchorage to the structure shall be installed in such a manner that the direction of the anchorage aligns closely with the direction of the wire. (e.g. bracing wire ceiling clips must be bent as shown in the details and rotated as required to align closely with the direction of the wire, screw eyes in wood must be installed so they align closely with the direction of the wire, etc.)

4. FASTENERS AND WELDING:

4.01 Sheet metal screws shall comply with ASTM C1513-10, ASME B18.6.4-89 (R2005). Penetration of screws through joined material shall not be less than three exposed threads.

4.02 Expansion anchors shall be:

Manufacturer's Name HILTI
Product Name and Evaluation Report Type/Number KWIK BOLT TZ ESR 1917
Manufacturer's Load for each size specified (per CBC 1913A.7.2) SEE 12/SI

4.03 Power-Actuated Fasteners shall be:

Manufacturer's Name HILTI
Product Name and Evaluation Report Type/Number X-U or X-P ESR 2269.

4.04 If not otherwise specified in the evaluation report, power-actuated fasteners installed in steel shall be installed so the entire pointed end of the fastener is driven through the steel member.

4.05 Power-actuated fasteners in concrete are not permitted for bracing wires.

4.06 Concrete reinforcement and prestressing tendons shall be located by non-destructive means prior to installing post - installed anchor.

4.07 Welding shall be in accordance with AWS D1.3 using E60XX series electrodes.

5. TESTING: All field testing must be performed in the presence of the project inspector.

5.01 Post-installed anchors in concrete used to support hanger wires shall be tested at a frequency of 10 percent. Power actuated fasteners in concrete shall be field tested for 200 lbs. in tension. All other post-installed anchors in concrete shall be tested in accordance with CBC Section 1913A.7.

5.02 Post-installed anchors in concrete used to attach bracing wires shall be tested at a frequency of 50 percent in accordance with CBC Section 1913A.7.

6. LIGHT FIXTURES:

6.01 All light fixtures shall be positively attached to the ceiling suspension systems by mechanical means to resist a horizontal force equal to the weight of the fixture. A minimum of two screws or approved fasteners are required at each light fixture, per ASTM E580, Section 5.3.1.

6.02 Surface-mounted light fixtures shall be attached to the main runner with at least two positive clamping devices. The clamping device shall completely surround the supporting ceiling runner and be made of steel with a minimum thickness of #14 gage. Rotational spring catches do not comply. A #12 gage slack safety wire shall be connected from each clamping device to the structure above. Provide additional supports when light fixtures are eight (8) feet or longer or exceed 56 lb. Maximum spacing between supports shall not exceed eight (8) feet.

6.03 Light fixtures weighing less than or equal to 10 lb. shall have a minimum of one (1) #12 gage slack safety wire connected from the fixture housing to the structure above.

6.04 Light fixtures weighing less than or equal to 10 lb. shall have a minimum of one (1) #12 gage slack safety wire connected from the fixture housing to the structure above.

6.05 Light fixtures weighing greater than 10 lb. but less than or equal to 56 lbs. may be supported directly on the ceiling runners, but they shall have a minimum of two (2) #12 gage slack safety wires connected from the fixture housing at diagonal corners to the structure above.

Exception: All light fixtures greater than two by four feet weighing less than 56 lbs. shall have a #12 gage slack safety wire at each corner.

6.06 All Light fixtures weighing greater than 56 lb. shall be independently supported by not less than four (4) taut #12 gage hanger wires (one at each corner) attached from the fixture housing to the structure above or other approved hangers. The four (4) taut #12 gage wires or other approved hangers, including their attachment to the structure above, shall be capable of supporting four (4) times the weight of the fixture.

7. SERVICES WITHIN THE CEILING:

7.01 All flexible sprinkler hose fitting mounting brackets, ceiling-mounted air terminals or other services shall be positively attached to the ceiling suspension systems by mechanical means. Screws or approved fasteners are required. A minimum of two attachments are required at each component.

7.02 Ceiling-mounted air terminals or other services weighing less than or equal to 20 lb. shall have one (1) #12 gage slack safety wire attached from the terminal or service to the structure above.

7.03 Flexible sprinkler hose fittings, ceiling-mounted air terminals or other services weighing more than 20 lb. but less than or equal to 56 lb. shall have two (2) #12 gage slack safety wires (at diagonal corners) connected from the terminal or service to the structure above.

7.04 Flexible sprinkler hose fittings, ceiling-mounted air terminals or other services weighing more than 56 lb. shall be supported directly from the structure above by not less than four (4) taut #12 gage hanger wires attached from the terminal or service to the structure above or other approved hangers.

8. OTHER DEVICES WITHIN THE CEILING:

8.01 All lightweight miscellaneous devices, such as strobe lights, occupancy sensors, speakers, exit signs, etc., shall be attached to the ceiling grid. In addition, devices weighing more than 10 lbs. shall have a #12 gage slack safety wire anchored to the structure above. Devices weighing more than 20 lb. shall be supported independently from the structure above.

CEILING NOTES (DSA IR 25-2.13) 1

SHEET NOTES

1. ALL NOTES AND DRAWINGS ARE PER DSA IR 25-2.13.

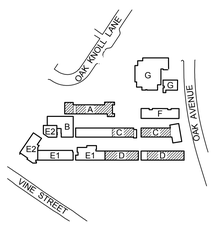

OAK KNOLL E.S. KEYPLAN

MENLO PARK CITY SCHOOL DISTRICT

Oak Knoll E.S. Lighting & ELC Project

Project #2
Buildings A, C & D
1895 Oak Knoll Lane,
Menlo Park, CA 94027

Date	Issued For
4/15/19	BID SET

HED
417 Montgomery Street
Suite 400
San Francisco, CA
94104 USA
(415) 981-2345
WWW.HED.DESIGN

© 2018

2018-04589-000

Details Suspended Ceiling Assembly Typical

A-571

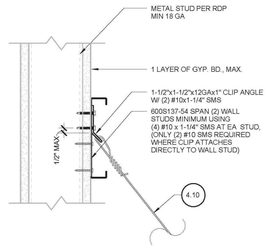

Basis Document : DSA IR 25-2.13			Sheet No:
Sheet Title : **BRACING WIRE CONNECTION TO METAL STUD WALL**	rev.	09-21-15	4.34

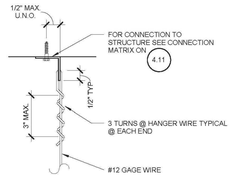

HANGER WIRE

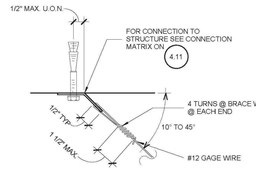

BRACING WIRE

Basis Document : DSA IR 25-2.13			Sheet No:
Sheet Title : **HANGER AND BRACING WIRE CONNECTION - TYPICAL WIRE TURNS**	rev.	09-21-15	4.10

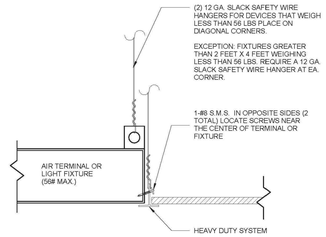

Basis Document : DSA IR 25-2.13			Sheet No:
Sheet Title : **SUSPENDED ACOUSTICAL CEILING - LIGHT FIXTURES/ AIR TERMINAL SUPPORT DETAIL**	rev. rev.	09-21-15 02-10-16	2.80

SHEET NOTES

1. ALL NOTES AND DRAWINGS ARE PER DSA IR 25-2.13.

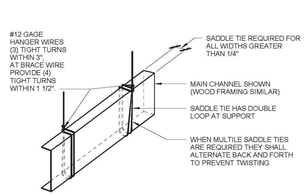

TYPICAL SADDLE TIE DETAIL

HANGER WIRE CONDITION SHOWN. BRACE WIRE CONDITION SIMILAR

Basis Document : DSA IR 25-2.13			Sheet No:
Sheet Title : **TYPICAL SADDLE TIE DETAIL**	rev.	09-21-15	4.29

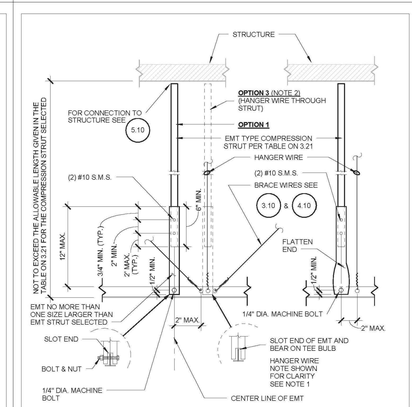

OPTION 1 & 3 **OPTION 2**

SEE OPTION 1 FOR INFORMATION NOT SHOWN

NOTES:

1. MACHINE BOLT IS NOT REQUIRED ON OPTION 3
2. APPLICABLE TO SAWN TIMBER WITHOUT GYPSUM BOARD ONLY.

Basis Document : DSA IR 25-2.13			Sheet No:
Sheet Title : **SUSPENDED ACOUSTICAL CEILING - EMT TYPE STRUT**	rev.	09-21-15	3.20

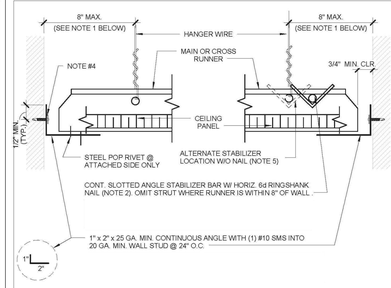

ATTACHED JOINT **FREE JOINT**

NOTES:

1. PROVIDE #12 GAGE HANGER WIRES AT THE ENDS OF ALL MAIN AND CROSS RUNNERS WITHIN EIGHT (8) INCHES OF THE SUPPORT OR WITHIN ONE-FOURTH (1/4) OF THE LENGTH OF THE END TEE. WHICHEVER IS LESS. FOR THE PERIMETER OF THE CEILING AREA. PERIMETER WIRES ARE NOT REQUIRED WHEN THE LENGTH OF THE END TEE IS EIGHT (8) INCHES OR LESS.
2. NAILS AT ENDS OF HORIZONTAL STABILIZERS ARE TO BE PLACED WITH NAIL HEAD TOWARD CENTER LINE OF SPAN OF STRUT.
3. STABILIZER BAR MAY BE SLOTTED APPROVED ANGLES OR CHANNELS WITH "DIAMOND POINTS" OF SPRING STEEL WHICH SNAP TIGHT TO PREVENT MOVEMENT OF STRUT.
4. (1) #10 SMS TO 20 GA. MIN. WALL STUD @ 24" O.C.

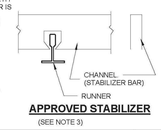

APPROVED STABILIZER

(SEE NOTE 3)

Basis Document : DSA IR 25-2.13			Sheet No:
Sheet Title : **CEILING PERIMETER**	rev.	09-21-15	2.60

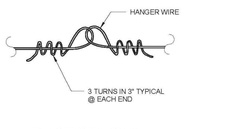

HANGER WIRE ONLY

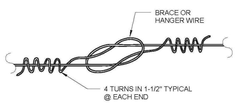

HANGER OR BRACE WIRE

NOTES:

WIRE SPLICES ARE SHOWN LOOSELY TIED FOR ILLUSTRATIVE PURPOSES ONLY AND SHALL BE DRAWN TIGHT TO COMPLETE INSTALLATION WHEN CONSTRUCTED.

Basis Document : DSA IR 25-2.13			Sheet No:
Sheet Title : **CEILING WIRE SPLICES**	rev.	09-21-15	6.10

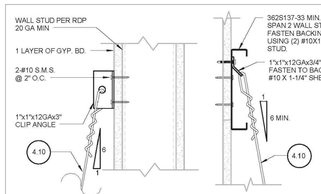

OPTION 1 **OPTION 2**

NOTES:

1. THIS IS APPLIED FOR PERIMETER WIRE ATTACHMENT OR WHERE OBSTRUCTION PREVENTS ATTACHMENT TO STRUCTURE ABOVE

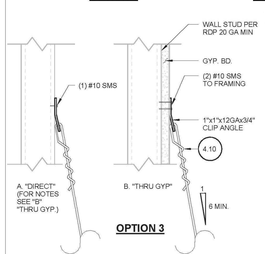

OPTION 3

Basis Document : DSA IR 25-2.13			Sheet No:
Sheet Title : **HANGER WIRE CONNECTION TO METAL STUD WALL**	rev.	09-21-15	4.24

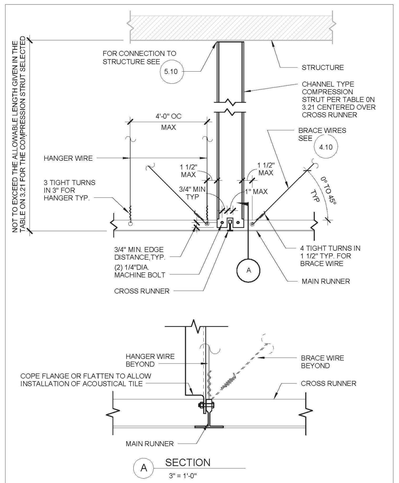

Basis Document : DSA IR 25-2.13			Sheet No:
Sheet Title : **SUSPENDED ACOUSTICAL CEILING - CHANNEL TYPE STRUT**	rev.	09-21-15	3.10

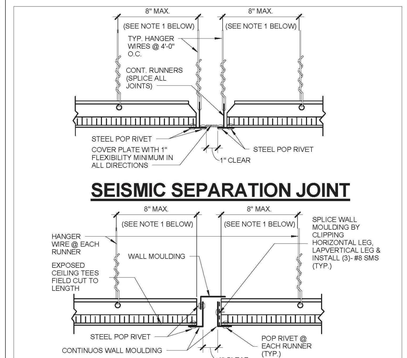

SEISMIC SEPARATION JOINT

ALTERNATE SEISMIC SEPARATION JOINT

SEISMIC SEPARATION JOINT AT CONTINUOUS CEILING AREAS EXCEEDING 2500 SQ. FT. SEE CEILING PLANS FOR LOCATION

NOTES:

1. PROVIDE #12 GAGE HANGER WIRES AT THE ENDS OF ALL MAIN AND CROSS RUNNERS WITHIN EIGHT (8) INCHES OF THE SUPPORT OR WITHIN ONE-FOURTH (1/4) OF THE LENGTH OF THE END TEE. WHICHEVER IS LESS, FOR THE PERIMETER OF THE CEILING AREA. PERIMETER WIRES ARE NOT REQUIRED WHEN THE LENGTH OF THE END TEE IS EIGHT (8) INCHES OR LESS.

Basis Document : DSA IR 25-2.13			Sheet No:
Sheet Title : **SUSPENDED ACOUSTICAL CEILING - SEISMIC SEPARATION JOINT**	rev.	09-21-15	2.45

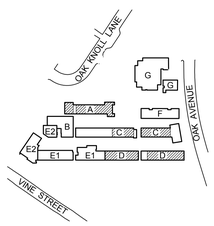

OAK KNOLL E.S. KEYPLAN

MENLO PARK CITY SCHOOL DISTRICT

Oak Knoll E.S.
Lighting & ELC
Project

Project #2
Buildings A, C & D
1895 Oak Knoll Lane,
Menlo Park, CA 94027

Date	Issued For
4/15/19	BID SET

HED
417 Montgomery Street
Suite 400
San Francisco, CA
94104 USA

(415) 981-2345

WWW.HED.DESIGN

© 2018

2018-04589-000

Details Suspended
Ceiling Assembly
Typical - Part B

A-572

GENERAL NOTES

1. THE COMPLETE ELECTRICAL INSTALLATION SHALL BE IN ACCORDANCE WITH THE LATEST ADOPTED EDITION OF THE CALIFORNIA ELECTRICAL CODE, SPECIFICATIONS AND STANDARD, THE LATEST RULES AND REGULATIONS OF THE SAFETY ORDERS ISSUED BY THE DIVISION OF INDUSTRIAL SAFETY, THE NATIONAL BOARD OF FIRE UNDERWRITERS AND ALL APPLICABLE STATE AND LOCAL CODES ISSUED BY AUTHORITIES HAVING JURISDICTION.
2. PRIOR TO SUBMITTING PROPOSAL, BIDDER SHALL EXAMINE ALL GENERAL CONSTRUCTION DRAWINGS. VISIT CONSTRUCTION SITE AND ATTEND THE PRE–BID MEETING TO BE FAMILIAR WITH EXISTING CONDITIONS UNDER WHICH HE WILL HAVE TO OPERATE AND WHICH WILL IN ANYWAY AFFECT THE WORK UNDER THIS CONTRACT. NO SUBSEQUENT ALLOWANCE WILL BE MADE IN THIS CONNECTION IN BEHALF OF THE CONTRACTOR FOR ANY ERROR OR NEGLIGENCE ON HIS PART.
3. THIS CONTRACTOR SHALL INCLUDE ALL CONTINGENCIES WHICH MAY ARISE AND WHICH MAY BE REQUIRED BY ALTERATION AND DEMOLITION WORK. THIS IS TO INCLUDE ALL REMOVAL, RELOCATION AND REWORKING OF ELECTRICAL OUTLETS, CONDUITS, WIRING AND ITEMS FOR ELECTRICAL EQUIPMENT REQUIRED AND ANY NECESSARY SPLICING OR EXTENSION OF EXISTING CONDUIT AND WIRING SYSTEMS. THE ELECTRICAL CONTRACTOR SHALL VISIT JOB SITE AND DETERMINE EXTENT OF THE WORK.
4. FIELD VERIFY TO CONFIRM ALL FIRE RESISTIVE CEILINGS AND WALLS. PROVIDE FIRE STOP SEALS PER UNIFORM BUILDING CODE FOR CONDUIT PENETRATION THROUGH FIRE RESISTIVE FLOORS, WALLS AND CEILINGS.
5. ALL ELECTRICAL MATERIALS AND EQUIPMENT SHALL BE LISTED BY UNDERWRITER'S LABORATORIES AND BEAR THEIR LABEL.
6. CONDUIT ROUTING SHOWN IS ESSENTIALLY DIAGRAMMATIC. CONTRACTOR SHALL LAYOUT RUNS TO SUIT FIELD CONDITIONS AND THE COORDINATION REQUIREMENTS OF OTHER TRADES. ALL EXPOSED CONDUIT, BOXES, FITTINGS, SUPPORT, ETC. SHALL BE PAINTED TO MATCH ADJACENT SURFACES.
7. THE CONTRACTOR SHALL CONSULT THE ARCHITECTURAL AND OTHER DRAWINGS RELATED TO THIS PROJECT FOR ADDITIONAL WORK TO BE PROVIDED.
8. THE OWNER RETAINS FIRST SALVAGE RIGHTS TO ALL EXISTING EQUIPMENT REMOVED UNDER THIS CONTRACT. THE ELECTRICAL CONTRACTOR SHALL CONSULT WITH THE OWNER FOR DISPOSITION OF THE EXISTING EQUIPMENT TO BE REMOVED BY HIM. THE CONTRACTOR SHALL INCLUDE IN HIS BID PROPOSAL ALL COSTS RELATED TO THE DISPOSAL OF EXISTING EQUIPMENT REMOVED UNDER THIS CONTRACT.
9. ANY POWER SHUTDOWN SHALL BE COORDINATED WITH SCHOOL DISTRICT CONSTRUCTION COORDINATOR. A SHUTDOWN SCHEDULE SHALL BE PRESENTED TO SCHOOL DISTRICT FOR APPROVAL TWO WEEKS PRIOR TO COMMENCEMENT OF WORK. SHUTDOWN SHALL BE PERFORMED IN OVERTIME HOURS IF SO DIRECTED BY SCHOOL DISTRICT.
10. ALL FEEDER AND BRANCH CIRCUIT CONDUITS SHALL BE INSTALLED CONCEALED IN FINISHED AREA, UNLESS OTHERWISE NOTED. CUT AND PATCH (E) WALL OR CEILING AS REQUIRED. SURFACE TYPE RACEWAY MAY BE PROVIDE IN LIEU OF CONCEALED CONDUITS. SEE NOTES 34, 35 AND 36 FOR REQUIREMENTS.
11. ALL PENETRATIONS THROUGH FIRE RESISTIVE WALLS SHALL BE TOTALLY SEALED TO PREVENT THE SPREAD OF SMOKE, FIRE, TOXIC GASES, AND WATER THROUGH THE PENETRATION BEFORE, DURING AND AFTER A FIRE CONDITION. THE FIRE RATING OF THE SEALED PENETRATION SHALL BE AT LEAST THAT OF THE WALL INTO WHICH IT IS INSTALLED. THE SEAL SHALL PERMIT THE VIBRATION, EXPANSION AND/OR CONTRACTION OF THE CONDUIT PASSING THROUGH THE PENETRATION WITHOUT THE SEAL CRACKING OR CRUMBLING.
12. PROVIDE FLEXIBLE CONDUIT AT BUILDING SEISMIC JOINTS.
13. UNLESS OTHERWISE INDICATED, THE MINIMUM SIZE OF CONDUCTORS SHALL BE 12 AWG THWN STRANDED COPPER ONL.Y.
14. UNLESS OTHERWISE INDICATED, THE MINIMUM SIZE OF CONDUIT SHALL BE 3/4".
15. GREEN INSULATED GROUND CONDUCTORS SHALL BE INSTALLED IN ALL FEEDER AND BRANCH CIRCUIT WIRING.
16. PROVIDE LABELS ON ALL EQUIPMENT AND DEVICES. LABELS SHALL BE SELF–ADHESIVE PHENOLIC TYPE AND WHITE LETTER ON BLACK BACKGROUND, PROVIDE BRADY OR DYMO TYPE LABELS (CIRCUIT IDENTIFICATION) FOR ALL SWITCHES AND RECEPTACLES.
17. THE CONTRACTOR SHALL PROVIDE TYPEWRITTEN DIRECTORIES FOR ALL ELECTRICAL PANELS INVOLVED IN THIS PROJECT. THE PANEL DIRECTORIES SHALL REFLECT THE AS–BUILT CIRCUITS. ONE COPY OF THE SCHEDULE SHALL BE TAPED TO THE INSIDE OF THE PANEL DOOR, AND ONE COPY SHALL BE SUBMITTED TO THE ENGINEER AS AN "AS–BUILT" DRAWING.
18. ALL ELECTRICAL EQUIPMENT SHALL BE BRACED OR ANCHORED TO RESIST A HORIZONTAL FORCE ACTING IN ANY DIRECTION PER CBC REQUIREMENTS.
19. THE CONTRACTOR SHALL EMPLOY QUALIFIED AND EXPERIENCED WORKMEN FOR THIS WORK. ALL RESTORATION WORK SHALL BE SUBJECT TO THE APPROVAL OF THE ARCHITECT AND/OR OWNER AND IOR.
20. THE CONTRACTOR SHALL BE HELD FULLY RESPONSIBLE FOR THE PROPER RESTORATION OF ALL EXISTING SURFACES REQUIRING PATCHING, PLASTERING PAINTING AND/OR OTHER REPAIRS DUE TO THE INSTALLATION OF ELECTRICAL WORK UNDER THE TERMS OF THIS SPECIFICATION. CLOSE ALL OPENINGS, REPAIR ALL SURFACES, ETC., AS REQUIRED. THIS SHALL INCLUDE ALL WALLS, CEILINGS, ROOFS, PAVEMENT, PLANTERS, ETC.
21. WHERE CONDUIT IS ROUTED ON ROOF STRUCTURES, PROVIDE SUPPORT AT 10'–0" O.C. MAXIMUM.
22. ALL EXPOSED CONDUIT BELOW 7'–0" SHALL BE RSC AND ALL EXPOSED HARDWARE SHALL BE "HOT DIPPED" GALVANIZED. ALL INTERIOR CONDUITS MAY BE EMT, UNLESS OTHERWISE NOTED.
23. WHERE SURFACE WIRING IS CALLED FOR IN A FINISHED AREA, SURFACE TYPE RACEWAY SYSTEM SHALL BE INSTALLED COMPLETE WITH ALL PROPER FITTINGS, ADAPTERS, OUTLETS, DEVICES COVERS, END CAPS, ETC. AS MANUFACTURED BY PANDUIT OR AN APPROVED EQUAL AND SHALL BE PAINTED TO MATCH COLOR OF ADJACENT WALL OR CEILING. ALL EXPOSED CONDUITS, BOXES AND CABINETS SHALL ALSO BE PAINTED TO MATCH COLOR OF ADJACENT WALL OR CEILING.

GENERAL NOTES (CONTINUATION)

24. SURFACE TYPE RACEWAY SYSTEM SHALL BE INSTALLED PARALLEL TO, OR AT RIGHT ANGLES TO BUILDING LINES AND ROUTE AROUND SURFACE MOUNTED ITEMS, SUCH AS TACK BOARDS, ETC.
25. ALL WIRES SHALL BE IN CONDUIT U.O.N.
26. GENERALLY, HORIZONTAL RUNS SHALL BE INSTALLED ON THE CORNER BELOW CEILING LINE AS APPROVED BY THE ENGINEER.
27. ALL UNDERGROUND CONDUIT SHALL HAVE #12 TRACER WIRE WITH THWN INSULATION UNDER EACH RUN OF THE UNDERGROUND CONDUIT DUCTBAMK AND 6" FOIL MARKER IN TRENCH. TRACE WIRE SHALL EXTEND AT TERMINATION POINTS A MIN. OF 3 FT FROM SUCH SURFACE AND SHALL BE TRAPPED SECURED TO CONDUIT OR ACCEPTABLE EQUIVALENT.
28. UPON COMPLETION OF CONSTRUCTION, PAINT ALL EXPOSED ELECTRICAL CONDUITS, DEVICES AND BOXES (UNLESS DEVICES OR BOXES ARE ALREADY PRE–FINISHED) PER SPECIFICATION SECTION 09900, PARAGRAPH 2.3 PAINTING SCHEDULE. PAINT COLOR SHALL MATCH THE EXISTING SURFACES.
29. THE CONTRACTOR SHALL MAINTAIN AT THE JOB SITE, AN UP TO DATE "AS BUILT" DRAWING SET. THE "AS BUILT" DRAWING SET SHALL REFLECT ALL APPROVED CHANGES TO THE DESIGN DRAWINGS. THE "AS BUILT" DRAWING SET SHALL BE KEPT CLEAN AND IN GOOD CONDITION AND SHALL BE TURNED OVER TO THE OWNER AT THE COMPLETION OF THE PROJECT. THESE DRAWINGS SHALL BE UPDATED DAILY AND BE CHECKED WEEKLY BY IOR. THE PROGRESS PAYMENT IS TIED TO THEIR COMPLETION.
30. UPON COMPLETION OF THE WORK, THE CONTRACTOR SHALL SCHEDULE AND PERFORM A COMPLETE FUNCTIONAL TEST IN THE PRESENCE OF DSA IOR TO DEMONSTRATE TO THE OWNER THAT THE NEW INSTALLATION IS OPERATING AS INTENDED TEST RESULTS SHALL BE SENT TO DISTRICT FOR IOR AND AOR. ANY DEFECTS OR DEFICIENCIES IN THE MATERIALS OR WORK SHALL BE CORRECTED IMMEDIATELY BY AND AT THE CONTRACTOR'S EXPENSE.

LEGEND

Symbol	Description
	HOMERUN TO PANEL, HASHMARKS INDICATE NUMBER OF #12 AWG WIRES IF MORE THAN (3); (↾) INDICATES GROUND.
	CONDUIT AND CONDUCTORS CONCEALS IN WALL OR CEILING
	CONDUIT AND WIRES CONCEALED IN FLOOR OR UNDERGROUND
LV	CAT6 CABLE IN 3/4" CONDUIT (LOW VOLTAGE CONTROL CABLE)
	CONDUIT STUBBED OUT IN ACCESSIBLE LOCATION, CAP AND MARK LOCATION
	CONDUIT RISER
	SURFACE MOUNTED ELECTRICAL PANELBOARD, 120/208V
	RECESSED MOUNTED ELECTRICAL PANELBOARD, 120/208V
	HASHMARK INDICATES EXISTING ELECTRICAL ITEM TO BE DISCONNECTED AND REMOVED INCLUDING WIRES AND CONDUIT UP TO THE NEXT JUNCTION BOX WHICH IS TO REMAIN.
	PULLBOX, SIZE AS SHOWN ON THE DRAWING
J	JUNCTION BOX OR PULL BOX, SIZE PER CODE.
	DUPLEX RECEPTACLE, 20A, 120V, NEMA 5–20, +18" AFF (UON)
	SINGLE RECEPTACLE, 50A, 250V, NEMA 6–50R, +18" AFF (UON) (COORDINATE WITH THE ELECTRIC RANGE PLUG TO BE COMPATIBLE)
OS	CEILING MOUNTED OCCUPANCY SENSOR
PS	DIMMING CLOSED LOOP DIGITAL PHOTOSENSOR WATTSTOPPER CAT. #LMLS–400
OS	DUAL TECHNOLOGY CORNER MOUNTED OCCUPANCY SENSOR WATTSTOPPER CAT. #LMDX–100
	1'x8' LIGHT FIXTURE
RC	DIMMING ROOM CONTROLLER WATTSTOPPER CAT. #LMRC–212
RC A	DIMMING ROOM CONTROLLER WATTSTOPPER CAT. #LMRC–213
PS	DIMMING CLOSED LOOP DIGITAL PHOTOSENSOR WATTSTOPPER CAT. #LMLS–400
D $_{ab}$/ D $_{abc}$	DIMMING SCENE SWITCH WATTSTOPPER CAT. #LMSW–105
1	SHEET NOTE REFERENCE, SEE NOTE 1
1 / E3.1	DETAIL TAG. REFER TO DETAIL 1 ON SHEET NUMBER E3.1
P	(E) PROJECTOR

ABBREVIATIONS

A AMP	AMPERE
AFF	ABOVE FINISHED FLOOR
AP	ACCESS POINT
BRKR	BREAKER
C	CONDUIT, CLOCK
CATV	CABLE TELEVISION
CBC	CALIFORNIA BUILDING CODE
CCTV	CLOSED CIRCUIT TELEVISION
CEC	CALIFORNIA ELECTRIC CODE
CKT	CIRCUIT
CO	CONDUIT ONLY WITH PULL ROPE
CPS	CURRICULUM AND PRESENTATION SYSTEM
CSC	CLOCK/SPEAKER CABINET
(E)	EXISTING
FU	FUSE
G	GROUND, GUARD
IDF	INTERMEDIATE DISTRIBUTION FRAME
MAX	MAXIMUM
MDF	MAIN DISTRIBUTION FRAME
MIN	MINIMUM
MPOE	MAIN POINT OF ENTRY
MSTC	MAIN SIGNAL TELEPHONE CABINET
MTB	MAIN TELEPHONE BOARD
NEC	NATIONAL ELECTRICAL CODE
NL	NIGHT LIGHT
NTS	NOT TO SCALE
O.C.	ON CENTER
PA	PUBLIC ADDRESS
PH, ø	PHASE
PNL	PANEL
(R)	RELOCATED
RECEPT.	RECEPTACLE
SAD	SEE ARCHITECTURAL DRAWINGS
STC	SATELLITE TERMINAL CABINET
TRANSF.	TRANSFORMER
TB	TELEPHONE BOARD
TC	TERMINAL CAN
TYP	TYPICAL
UON	UNLESS OTHERWISE NOTED
V	VOLT
W	WATT
WG	WIRE GUARD
WP	WEATHERPROOF
XFMR	TRANSFORMER

DRAWING INDEX

E0.1	GENERAL NOTES, LEGEND, ABBREVIATION AND DRAWING INDEX
E0.2	CERTIFICATE OF COMPLIANCE TITLE 24
E1.1	ELECTRICAL DEMOLITION PLAN
E2.1	ELECTRICAL PLAN
E3.1	ELECTRICAL SCHEDULES
E3.2	ELECTRICAL DETAILS

LIST OF APPLICABLE CODES

1. 2016 CALIFORNIA BUILDING STANDARDS ADMINISTRATIVE CODE (PART 1, TITLE 24, CCR)
2. 2016 CALIFORNIA BUILDING CODE (CBC), VOLUMES 1 & 2 (PART 2, TITLE 24, CCR)
3. 2016 CALIFORNIA ELECTRICAL CODE (PART 3, TITLE 24, CCR)
4. 2016 CALIFORNIA MECHANICAL CODE (PART 4, TITLE 24, CCR)
5. 2016 CALIFORNIA PLUMBING CODE (PART 5, TITLE 24, CCR)
6. 2016 CALIFORNIA ENERGY CODE (PART 6, TITLE 24, CCR)
7. 2013 CALIFORNIA ELEVATOR SAFETY CONSTRUCTION CODE (PART 7, TITLE 24, CCR)
8. 2016 CALIFORNIA FIRE CODE (PART 9, TITLE 24, CCR)
9. 2016 CALIFORNIA REFERENCE STANDARDS CODE (PART 12, TITLE 24, CCR)
10. NFPA 13, 2016 EDITION, THE INSTALLATION OF AUTOMATIC SPRINKLER SYSTEMS, AS AMENDED
11. NFPA 14, 2016 EDITION, THE INSTALLATION OF STANDPIPE, PRIVATE HYDRANT AND HOSE SYSTEMS
12. NFPA 24, 2016 EDITION, THE INSTALLATION OF PRIVATE FIRE SERVICE MAINS AND THEIR APPURTENANCES
13. NFPA 72, 2016 EDITION, NATIONAL FIRE ALARM CODE, AS AMENDED

MENLO PARK
CITY SCHOOL DISTRICT

Oak Knoll E.S.
Lighting & ELC
Project

Project #2
Buildings A, C & D
1895 Oak Knoll Lane,
Menlo Park, CA 94027

Date **Issued For**

Alliance Engineering Consultants, Inc.
4701 Patrick Henry Drive, Bldg. 10
Santa Clara, CA 95054
phone (408) 970-9888
fax (408) 970-9316
www.aec-engineers.com
PROJECT NO. 101-19-01

REGISTERED PROFESSIONAL ENGINEER
KENNETH S. NGAI
No. 11537
Exp. 6/30/19
ELECT.
STATE OF CALIFORNIA

HED
417 Montgomery Street
Suite 400
San Francisco, CA
94104 USA

(415) 981-2345

WWW.HED.DESIGN

© 2018

2018-04589-000

GENERAL NOTES, LEGEND
ABBREVIATIONS
AND DRAWING INDEX

E0.1

FILE: M:\101-19-01 Oak Knoll – Menlo Park\02_PROJ-2\E01.dwg Mar 19, 2019 11:41 am Scale: 1=1 by: CHRIS
XREFS:

STATE OF CALIFORNIA
INDOOR LIGHTING
CEC-NRCC-LTI-01-E (Revised 04/16) — CALIFORNIA ENERGY COMMISSION

CERTIFICATE OF COMPLIANCE	NRCC-LTI-01-E
Indoor Lighting	(Page 1 of 6)
Project Name: OAK KNOLL E.S.	Date Prepared: 4/16/2019

A. General Information

Climate Zone: 3	Conditional Floor Area: 9,284 Unconditioned Floor Area: 0				
Building Type:	☐ Nonresidential	☐ High-Rise Residential	☐ Hotel/Motel		
☐ Schools	☐ Relocatable Public Schools	☑ Conditioned Spaces	☐ Unconditioned Spaces		
Phase of Construction:	☐ New Construction	☐ Addition	☑ Alteration		
Method of Compliance:	☑ Complete Building	☐ Area Category	☐ Tailored		
Project Address: 1895 OAK KNOLL LANE					

B. Lighting Compliance Documents (select yes for each document included)

For detailed instructions on the use of this and all Energy Efficiency Standards compliance documents, refer to the Nonresidential Manual published by the California Energy Commission.

YES	NO	COMP. DOC.	TITLE
☑	☐	NRCC-LTI-01-E	Certificate of Compliance. All Pages required on plans for all submittals.
☑	☐	NRCC-LTI-02-E	Lighting Controls; Certificate of Compliance, and PAF Calculation. All Pages required on plans for all submittals.
☑	☐	NRCC-LTI-03-E	Indoor Lighting Power Allowance
☐	☑	NRCC-LTI-04-E	Tailored Method Worksheets
☐	☑	NRCC-LTI-05-E	Line Voltage Track Lighting Worksheets
☐	☐	NRCC-LTI-06-E	Indoor Lighting Existing Conditions

STATE OF CALIFORNIA
INDOOR LIGHTING
CEC-NRCC-LTI-01-E (Revised 04/16) — CALIFORNIA ENERGY COMMISSION

CERTIFICATE OF COMPLIANCE	NRCC-LTI-01-E
Indoor Lighting	(Page 2 of 6)
Project Name: OAK KNOLL E.S.	Date Prepared: 4/16/2019

C. Summary of Allowed Lighting Power

Conditioned and Unconditioned space Lighting must not be combined for compliance

Indoor Lighting Power for Conditioned Spaces			Watts	Indoor Lighting Power for Unconditioned Spaces		Watts
01	**Installed** Lighting NRCC-LTI-01-E, Table H, page 3	+	4,448	**Installed** Lighting NRCC-LTI-01-E, Table H, page 3	+	0
02	Portable Only for Offices NRCC-LTI-01-E, Table G, page 4	+				
03	Minus Lighting Control Credits NRCC-LTI-02-E, page 2	-	0	Minus Lighting Control Credits NRCC-LTI-02-E, page 2	-	0
04	Adjusted **Installed** Lighting Power (row 1 plus row 2 minus row 3)	=	4,448	Adjusted **Installed** Lighting Power (row 1 minus row 3)	=	0
Complies ONLY if **Installed** ≤ **Allowed** (Box 04 < Box 05)				Complies ONLY if **Installed** ≤ **Allowed** (Box 04 < Box 05)		
05	**Allowed** Lighting Power Conditioned NRCC-LTI-03-E, page 1 Alterations with replacement luminaires that have at least 50/35% lower power compared to the original existing luminaires, may instead use the allowed wattage from NRCC-LTI-06, page 2		8,820	**Allowed** Lighting Power Unconditioned NRCC-LTI-03-E, page 1 Alterations with replacement luminaires that have at least 50/35% lower power compared to the original existing luminaires, may instead use the allowed wattage from NRCC-LTI-06, page 2		0

D. Declaration of Required Certificates of Installation

Declare by selecting yes for all of the Certificates that will be submitted. (Retain copies and verify forms are completed and signed.)

YES	NO	Compliance Document/Title	
☑	☐	NRCI-LTI-01-E - Must be submitted for all buildings	☐ Field Inspector
☐	☑	NRCI-LTI-02-E - Must be submitted for a lighting control system, or for an Energy Management Control System (EMCS), to be recognized for compliance.	☐ Field Inspector
☐	☑	NRCI-LTI-03-E - Must be submitted for a line-voltage track lighting integral current limiter, or for a supplementary overcurrent protection panel used to energize only line-voltage track lighting, to be recognized for compliance.	☐ Field Inspector
☐	☑	NRCI-LTI-04-E - Must be submitted for two interlocked systems serving an auditorium, a convention center, a conference room, a multipurpose room, or a theater to be recognized for compliance.	☐ Field Inspector
☐	☑	NRCI-LTI-05-E - Must be submitted for a Power Adjustment Factor (PAF) to be recognized for compliance.	☐ Field Inspector
☐	☑	NRCI-LTI-06-E - Must be submitted for additional wattage installed in a video conferencing studio to be recognized for compliance.	☐ Field Inspector

STATE OF CALIFORNIA
INDOOR LIGHTING
CEC-NRCC-LTI-01-E (Revised 04/16) — CALIFORNIA ENERGY COMMISSION

CERTIFICATE OF COMPLIANCE	NRCC-LTI-01-E
Indoor Lighting	(Page 3 of 6)
Project Name: OAK KNOLL E.S.	Date Prepared: 4/16/2019

E. Declaration of Required Certificates of Acceptance

Declare by selecting yes for all of the Certificates that will be submitted. (Retain copies and verify forms are completed and signed.)

YES	NO	Compliance Document/Title	
☑	☐	NRCA-LTI-02-A - Must be submitted for occupancy sensors and automatic time switch controls.	☐ Field Inspector
☑	☐	NRCA-LTI-03-A - Must be submitted for automatic daylight controls.	☐ Field Inspector
☐	☑	NRCA-LTI-04-A - Must be submitted for demand responsive lighting controls.	☐ Field Inspector
☐	☑	NRCA-LTI-05-A – Must be submitted for institutional tuning power adjustment factor (PAF).	☐ Field Inspector

A Separate Lighting Schedule Must Be Filled Out for Conditioned and Unconditioned Spaces. Installed Lighting Power listed on this Lighting Schedule is only for:

☐ **CONDITIONED SPACE** ☐ **UNCONDITIONED SPACE**

F. Indoor Lighting Schedule and Field Inspection Energy Checklist

☐ The actual indoor lighting power listed on the next 2 pages includes all Installed permanent and planned portable lighting systems.
☐ When Complete Building Method is used for compliance, list each different type of luminaire on separate lines.
☐ When Area Category Method or Tailored Method is used for compliance, list each different type of luminaire by each different function area on separate lines
☐ Also include track lighting in schedule, and submit the track lighting compliance document (NRCC-LTI-05-E) when line-voltage track lighting is installed.

STATE OF CALIFORNIA
INDOOR LIGHTING
CEC-NRCC-LTI-01-E (Revised 04/16) — CALIFORNIA ENERGY COMMISSION

CERTIFICATE OF COMPLIANCE	NRCC-LTI-01-E
Indoor Lighting	(Page 3 of 6)
Project Name: OAK KNOLL E.S.	Date Prepared: 4/16/2019

A Separate Lighting Schedule Must Be Filled Out for Conditioned and Unconditioned Spaces. Installed Lighting Power listed on this Lighting Schedule is only for:

☑ **CONDITIONED SPACE** ☐ **UNCONDITIONED SPACE**

H. Indoor Lighting Schedule and Field Inspection Energy Checklist

Luminaire Schedule		Installed Watts					Location	Field Inspector[1]	
01	02	03	04		05	06	07	08	
Name or Item Tag	Complete Luminaire Description (i.e. 3 lamp fluorescent troffer, F32T8, one dimmable electronic ballast)	Watts per Luminaire	How wattage was determined: CEC Default Non-MH	According to §130.0(j)	Number Luminaires	Total Installed Watts in this area (Watts x Nos)	Primary function area in which these luminaires are installed	Pass	Fail
A.A1	74.8W LED LIGHT FIXTURE	74.8	☑	☐	54	4,039	Comp Bldg Classroom	☐	☐
A2	37.4W LED LIGHT FIXTURE	37.4	☑	☐	3	112	Comp Bldg Classroom	☐	☐
B.B1	27W LED LIGHT FIXTURE	27.0	☑	☐	11	297	Comp Bldg Classroom	☐	☐
			☐	☐				☐	☐
			☐	☐				☐	☐
			☐	☐				☐	☐
			☐	☐				☐	☐
			☐	☐				☐	☐
			☐	☐				☐	☐
INSTALLED WATTS PAGE TOTAL:						4,448	Enter sum total of all pages into NRCC-LTI-01-E, Page 2		

STATE OF CALIFORNIA
INDOOR LIGHTING
CEC-NRCC-LTI-01-E (Revised 04/16) — CALIFORNIA ENERGY COMMISSION

CERTIFICATE OF COMPLIANCE	NRCC-LTI-01-E
Indoor Lighting	(Page 6 of 6)
Project Name: OAK KNOLL E.S.	Date Prepared: 4/16/2019

DOCUMENTATION AUTHOR'S DECLARATION STATEMENT

I. I certify that this Certificate of Compliance documentation is accurate and complete.

Documentation Author Name:	DOAN TRANG HOANG	Documentation Author Signature:	Doan Trang Hoang
Company:	Alliance Engineering Consultants, Inc	Signature Date:	4/16/2019
Address:	4701 PATRICK HENRY DRIVE, BLDG 10	CEA Certification Identification (if applicable):	
City/State/Zip:	SANTA CLARA, CA 95054	Phone:	408--970--9888

RESPONSIBLE PERSON'S DECLARATION STATEMENT

I certify the following under penalty of perjury, under the laws of the State of California:
1. The information provided on this Certificate of Compliance is true and correct.
2. I am eligible under Division 3 of the Business and Professions Code to accept responsibility for the building design or system design identified on this Certificate of Compliance (responsible designer).
3. The energy features and performance specifications, materials, components, and manufactured devices for the building design or system design identified on this Certificate of Compliance conform to the requirements of Title 24, Part 1 and Part 6 of the California Code of Regulations.
4. The building design features or system design features identified on this Certificate of Compliance are consistent with the information provided on other applicable compliance documents, worksheets, calculations, plans and specifications submitted to the enforcement agency for approval with this building permit application.
5. I will ensure that a completed signed copy of this Certificate of Compliance shall be made available with the building permit(s) issued for the building, and made available to the enforcement agency for all applicable inspections. I understand that a completed signed copy of this Certificate of Compliance is required to be included with the documentation the builder provides to the building owner at occupancy.

Responsible Designer Name:	KEN NGAI	Responsible Designer Signature:	
Company:	ALLIANCE ENGINEERING CONSULTANTS, INC.	Date Signed:	4/16/2019
Address:	4701 PATRICK HENRY DRIVE, BLDG 10	License:	11537
City/State/Zip:	SANTA CLARA, CA 95054	Phone:	(408) 970-9888

STATE OF CALIFORNIA
INDOOR LIGHTING – LIGHTING CONTROLS
CEC-NRCC-LTI-02-E (Revised 07/16) — CALIFORNIA ENERGY COMMISSION

CERTIFICATE OF COMPLIANCE	NRCC-LTI-02-E
Indoor Lighting - Lighting Controls	(Page 1 of 3)
Project Name: OAK KNOLL E.S.	Date Prepared: 4/16/2019

A. Mandatory Lighting Control Declaration Statements (Indicate if the measure applies by checking yes or no below.)

YES	NO	Control Requirements
☑	☐	Lighting shall be controlled by self-contained lighting control devices which are certified to the Energy Commission according to the Title 20 Appliance Efficiency Regulations in accordance with Section 110.9.
☐	☑	Lighting shall be controlled by a lighting control system or energy management control system in accordance with §110.9. An Installation Certificate shall be submitted in accordance with Section 130.4(b).
☐	☑	One or more Track Lighting Integral Current Limiters shall be installed which have been certified to the Energy Commission in accordance with §110.9 and §130.0. Additionally, an Installation Certificate shall be submitted in accordance with Section 130.4(b).
☐	☑	A Track Lighting Supplementary Overcurrent Protection Panel shall be installed in accordance with Section 110.9 and Section 130.0. Additionally, an Installation Certificate shall be installed in accordance with Section 130.4(b).
☐	☐	All lighting controls and equipment shall comply with the applicable requirements in §110.9 and shall be installed in accordance with the manufacturer's instructions in accordance with Section 130.1.
☐	☑	All luminaires shall be functionally controlled with manually switched ON and OFF lighting controls in accordance with Section 130.1(a).
☑	☐	General lighting shall be separately controlled from all other lighting systems in an area. Floor and wall display, window display, case display, ornamental, and special effects lighting shall each be separately controlled on circuits that are 20 amps or less. When track lighting is used, general, display, ornamental, and special effects lighting shall each be separately controlled, in accordance with Section 130.1(a)4.
☑	☐	The general lighting of any enclosed area 100 square feet or larger, with a connected lighting load that exceeds 0.5 watts per square foot shall meet the multi-level lighting control requirements in accordance with Section 130.1(b).
☑	☐	All installed indoor lighting shall be equipped with controls that meet the applicable Shut-OFF control requirements in Section 130.1(c).
☐	☐	Lighting in all Daylit Zones shall be controlled in accordance with the requirements in Section 130.1(d) and daylit zones are shown on the plans.
☐	☐	Lighting power in buildings larger than 10,000 square feet shall be capable of being automatically reduced in response to a Demand Responsive Signal in accordance with Section 130.1(e).
☐	☐	Before an occupancy permit is granted for a newly constructed building or area, or a new lighting system serving a building, area, or site is operated for normal use, indoor lighting controls serving the building, area, or site shall be certified as meeting the Acceptance Requirements for Code Compliance in accordance with Section 130.4 (a). The controls required to meet the Acceptance Requirements include automatic daylight controls, automatic shut-OFF controls, and demand responsive controls.

STATE OF CALIFORNIA
INDOOR LIGHTING – LIGHTING CONTROLS
CEC-NRCC-LTI-02-E (Revised 07/16) — CALIFORNIA ENERGY COMMISSION

CERTIFICATE OF COMPLIANCE	NRCC-LTI-02-E
Indoor Lighting - Lighting Controls	(Page 2 of 3)
Project Name: OAK KNOLL E.S.	Date Prepared: 4/16/2019

A separate document must be filed out for Conditioned and Unconditioned Spaces. This page is used only for the following:

☑ CONDITIONED SPACES ☐ UNCONDITIONED SPACES

B. Mandatory and Prescriptive Indoor Lighting Control Schedule, PAF Calculation, and Field Inspection Checklist

Lighting Control Schedule			Standards Complying With[1] (✓ all that apply, or enter 'N' if Exempted)									PAF Credit Calculation[2]: Watts of Controlled Lighting	PAF	Control Credit (B x L)	✓ if Acceptance Test Required	Field Inspector	
01	02	03	04	05	06	07	08	09	10	11	12	13	14	15			
Location in Building	Type/Description of Lighting Control (i.e.: occupancy sensor, automatic time switch, dimmer, automatic daylight, etc...)	# of Units	§130.1(a)	§130.1(b)	§130.1(c)	§130.1(d)	§130.1(e)	§140.6(a)2	§140.6(d)					Pass	Fail		
BLDGS	Occupancy Sensor	11	☐	☐	☑	☐	☐	☐	☐				✓	☐	☐		
BLDGS	Multi Level	10	☐	☐	☑	☐	☐	☐	☐				✓	☐	☐		
BLDGS	Automatic Daylighting	20	☐	☐	☐	☑	☐	☐	☐				✓	☐	☐		
			☐	☐	☐	☐	☐	☐	☐					☐	☐		
			☐	☐	☐	☐	☐	☐	☐					☐	☐		
			☐	☐	☐	☐	☐	☐	☐					☐	☐		
Control Credit PAGE TOTAL (Sum of Column 13):														0			
IF MULTIPLE PAGES ARE USED, ENTER SUM TOTAL OF Control Credit for all pages HERE (Sum of all Column 13):														0			
Enter Control Credit total into NRCC-LTI-01-E, Page 1.																	

1. §130.1(a) = Manual area controls; §130.0(b) = Multi Level; §130.1(c) = Auto Shut-Off; §130.1(d) = Mandatory Daylight; §130.1(e) = Demand Responsive; §140.6(d) = Additional lighting controls installed to earn a PAF; §140.6(d) = Prescriptive Secondary Sidelit Daylight Controls.
2. Check Table 140.6-A for correct Factor. PAFs shall not be traded between conditioned and unconditioned spaces. As a condition to earn a PAF, an Installation Certificate is also required to be filled out, signed, and submitted.

STATE OF CALIFORNIA
INDOOR LIGHTING – LIGHTING CONTROLS
CEC-NRCC-LTI-02-E (Revised 07/16) — CALIFORNIA ENERGY COMMISSION

CERTIFICATE OF COMPLIANCE	NRCC-LTI-02-E
Indoor Lighting - Lighting Controls	(Page 3 of 3)
Project Name: OAK KNOLL E.S.	Date Prepared: 4/16/2019

DOCUMENTATION AUTHOR'S DECLARATION STATEMENT

I. I certify that this Certificate of Compliance documentation is accurate and complete.

Documentation Author Name:	DOAN TRANG HOANG	Documentation Author Signature:	Doan Trang Hoang
Company:	Alliance Engineering Consultants, Inc	Signature Date:	4/16/2019
Address:	4701 PATRICK HENRY DRIVE, BLDG 10	CEA Certification Identification (if applicable):	
City/State/Zip:	SANTA CLARA, CA 95054	Phone:	408--970--9888

RESPONSIBLE PERSON'S DECLARATION STATEMENT

I certify the following under penalty of perjury, under the laws of the State of California:
1. The information provided on this Certificate of Compliance is true and correct.
2. I am eligible under Division 3 of the Business and Professions Code to accept responsibility for the building design or system design identified on this Certificate of Compliance (responsible designer).
3. The energy features and performance specifications, materials, components, and manufactured devices for the building design or system design identified on this Certificate of Compliance conform to the requirements of Title 24, Part 1 and Part 6 of the California Code of Regulations.
4. The building design features or system design features identified on this Certificate of Compliance are consistent with the information provided on other applicable compliance documents, worksheets, calculations, plans and specifications submitted to the enforcement agency for approval with this building permit application.
5. I will ensure that a completed signed copy of this Certificate of Compliance shall be made available with the building permit(s) issued for the building, and made available to the enforcement agency for all applicable inspections. I understand that a completed signed copy of this Certificate of Compliance is required to be included with the documentation the builder provides to the building owner at occupancy.

Responsible Designer Name:	KEN NGAI	Responsible Designer Signature:	
Company:	ALLIANCE ENGINEERING CONSULTANTS, INC.	Date Signed:	4/16/2019
Address:	4701 PATRICK HENRY DRIVE, BLDG 10	License:	11537
City/State/Zip:	SANTA CLARA, CA 95054	Phone:	(408) 970-9888

STATE OF CALIFORNIA
INDOOR LIGHTING POWER ALLOWANCE
CEC-NRCC-LTI-03-E (Revised 04/16) — CALIFORNIA ENERGY COMMISSION

CERTIFICATE OF COMPLIANCE	NRCC-LTI-03-E
Certificate of Compliance - Indoor Lighting Power Allowance	(Page 1 of 4)
Project Name: OAK KNOLL E.S.	Date Prepared: 4/16/2019

A separate page must be filled out for Conditioned and Unconditioned Spaces. This page is only for:
☑ CONDITIONED spaces ☐ UNCONDITIONED spaces

A. SUMMARY TOTALS OF LIGHTING POWER ALLOWANCES

☐ If using Complete Building Method for compliance, use only the total in column (a) as total allowed building watts.
☐ If using Area Category Method, Tailored Method, or a combination of Area Category and Tailored Method for compliance, use only the total in column (b) as the total allowed building watts

	(a)		(b)
01 Complete Building Method Allowed Watts. Documented in section B of NRCC-LTI-03-E (below on this page)	8,820		
02 Area Category Method Allowed Watts. Documented in section C-1 of NRCC-LTI-03-E (below on this page)			
03 Tailored Method Allowed Watts. Documented in section A of NRCC-LTI-04-E			
TOTAL ALLOWED BUILDING WATTS. Enter number into correct cell on NRCC-LTI-01, Page 2, Row 1	8,820		

☐ Check here if building contains both conditioned and unconditioned areas.

B. COMPLETE BUILDING METHOD LIGHTING POWER ALLOWANCE

01	02		03		04
TYPE OF BUILDING (From §140.6 Table 140.6-B)	WATTS PER ft²	X	COMPLETE BLDG. AREA	=	ALLOWED WATTS
Comp Bldg School	0.95		9,284		8,820
Total Area					
Total Watts. Enter Total Watts into section A, row 1 (Above on this page)					

C-1 AREA CATEGORY METHOD TOTAL LIGHTING POWER ALLOWANCES	Watts
Total from section C-2.	
Total from section C-3.	
Total Watts. Enter Total Watts into section A, row 2 (Above on this page).	
For Alterations Only – Reduced lighting power option (Total Allowed Watts x 0.85). Enter this value into section A, row 2 if using this option.	

STATE OF CALIFORNIA
INDOOR LIGHTING POWER ALLOWANCE
CEC-NRCC-LTI-03-E (Revised 04/16) — CALIFORNIA ENERGY COMMISSION

CERTIFICATE OF COMPLIANCE	NRCC-LTI-03-E
Certificate of Compliance - Indoor Lighting Power Allowance	(Page 4 of 4)
Project Name: OAK KNOLL E.S.	Date Prepared: 4/16/2019

DOCUMENTATION AUTHOR'S DECLARATION STATEMENT

I. I certify that this Certificate of Compliance documentation is accurate and complete.

Documentation Author Name:	DOAN TRANG HOANG	Documentation Author Signature:	
Company:	Alliance Engineering Consultants, Inc	Signature Date:	4/16/2019
Address:	4701 PATRICK HENRY DRIVE, BLDG 10	CEA Certification Identification (if applicable):	
City/State/Zip:	SANTA CLARA, CA 95054	Phone:	408--970--9888

RESPONSIBLE PERSON'S DECLARATION STATEMENT

I certify the following under penalty of perjury, under the laws of the State of California:
1. The information provided on this Certificate of Compliance is true and correct.
2. I am eligible under Division 3 of the Business and Professions Code to accept responsibility for the building design or system design identified on this Certificate of Compliance (responsible designer).
3. The energy features and performance specifications, materials, components, and manufactured devices for the building design or system design identified on this Certificate of Compliance conform to the requirements of Title 24, Part 1 and Part 6 of the California Code of Regulations.
4. The building design features or system design features identified on this Certificate of Compliance are consistent with the information provided on other applicable compliance documents, worksheets, calculations, plans and specifications submitted to the enforcement agency for approval with this building permit application.
5. I will ensure that a completed signed copy of this Certificate of Compliance shall be made available with the building permit(s) issued for the building, and made available to the enforcement agency for all applicable inspections. I understand that a completed signed copy of this Certificate of Compliance is required to be included with the documentation the builder provides to the building owner at occupancy.

Responsible Designer Name:	KEN NGAI	Responsible Designer Signature:	
Company:	ALLIANCE ENGINEERING CONSULTANTS, INC.	Date Signed:	4/16/2019
Address:	4701 PATRICK HENRY DRIVE, BLDG 10	License:	11537
City/State/Zip:	SANTA CLARA, CA 95054	Phone:	(408) 970-9888

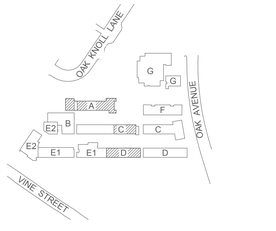

OAK KNOLL E.S. KEYPLAN

MENLO PARK CITY SCHOOL DISTRICT

Oak Knoll E.S.
Lighting & ELC
Project

Project #2
Buildings A, C & D
1895 Oak Knoll Lane,
Menlo Park, CA 94027

Date	Issued For

Alliance Engineering Consultants, Inc.
4701 Patrick Henry Drive, Bldg. 10
Santa Clara, CA 95054
phone: (408) 970-9888
fax: (408) 970-9889
www.aec-engineers.com
PROJECT NO. 101-19-01

PROFESSIONAL ENGINEER — KENNETH S. NGAI — No. 11537 — Exp. 6/30/19 — ELECT. — STATE OF CALIFORNIA

HED
417 Montgomery Street
Suite 400
San Francisco, CA
94104 USA
(415) 981-2345
WWW.HED.DESIGN

© 2018

2018-04589-000

CERTIFICATE OF COMPLIANCE TITLE 24

E0.2

FILE: M:\JOB-15-05 GSSC\OSE2.dwg Sep 15, 2015 6:33 pm Scale: 1=1 by: TRANG
XREFS: TITLE BLOCK.dwg

1 DEMOLITION PLAN – ELECTRICAL
SCALE: 1/8"=1'-0"

SHEET NOTES:

1. ALL (E) LIGHT FIXTURES, POWER PACKS, OCCUPANCY SENSORS AND SWITCHES SHOWN ON THIS ROOM SHALL BE DISCONNECTED AND REMOVED.
2. DISCONNECT AND REMOVE (E) LIGHT FIXTURE, COIL UP AND TAPE (E) WIRES IN (E) JUNCTION BOX FOR RECONNECTION IN THE (N) WORK.
3. (E) 3/4"C FROM (E) JUNCTION BOX TO (E) SWITCH SHALL REMAIN FOR (N) DIMMER SWITCH TO BE INSTALLED IN THE (N) WORK. REMOVE (E) WIRES.
4. (E) FAN CONTROL SWITCHES SHALL REMAIN.
5. RELOCATE (E) CEILING FAN WITH SWITCHES TO THE (N) LOCATION SHOWN IN THE (N) WORK.
6. RELOCATE (E) CLOCK AND SPEAKER TO THE (N) LOCATION SHOWN IN THE (N) WORK.
7. (E) SPEAKER TO REMAIN. MAINTAIN CIRCUIT CONTINUITY.

OAK KNOLL E.S. KEYPLAN

MENLO PARK CITY SCHOOL DISTRICT

Oak Knoll E.S. Lighting & ELC Project

Project #2
Buildings A, C & D
1895 Oak Knoll Lane, Menlo Park, CA 94027

Date | Issued For

Alliance Engineering Consultants, Inc.
PROJECT NO. 101-19-01

HED
417 Montgomery Street
Suite 400
San Francisco, CA
94104 USA
(415) 981-2345
WWW.HED.DESIGN

© 2018

2018-04589-000

ELECTRICAL DEMOLITION PLAN
-

E1.1

FILE: M:\101-19-01 Oak Knoll - Menlo Park\02_PROJ-2\E1.1.dwg Mar 19, 2019 11:43 am Scale: 1=1 by: CHRIS
XREFS:

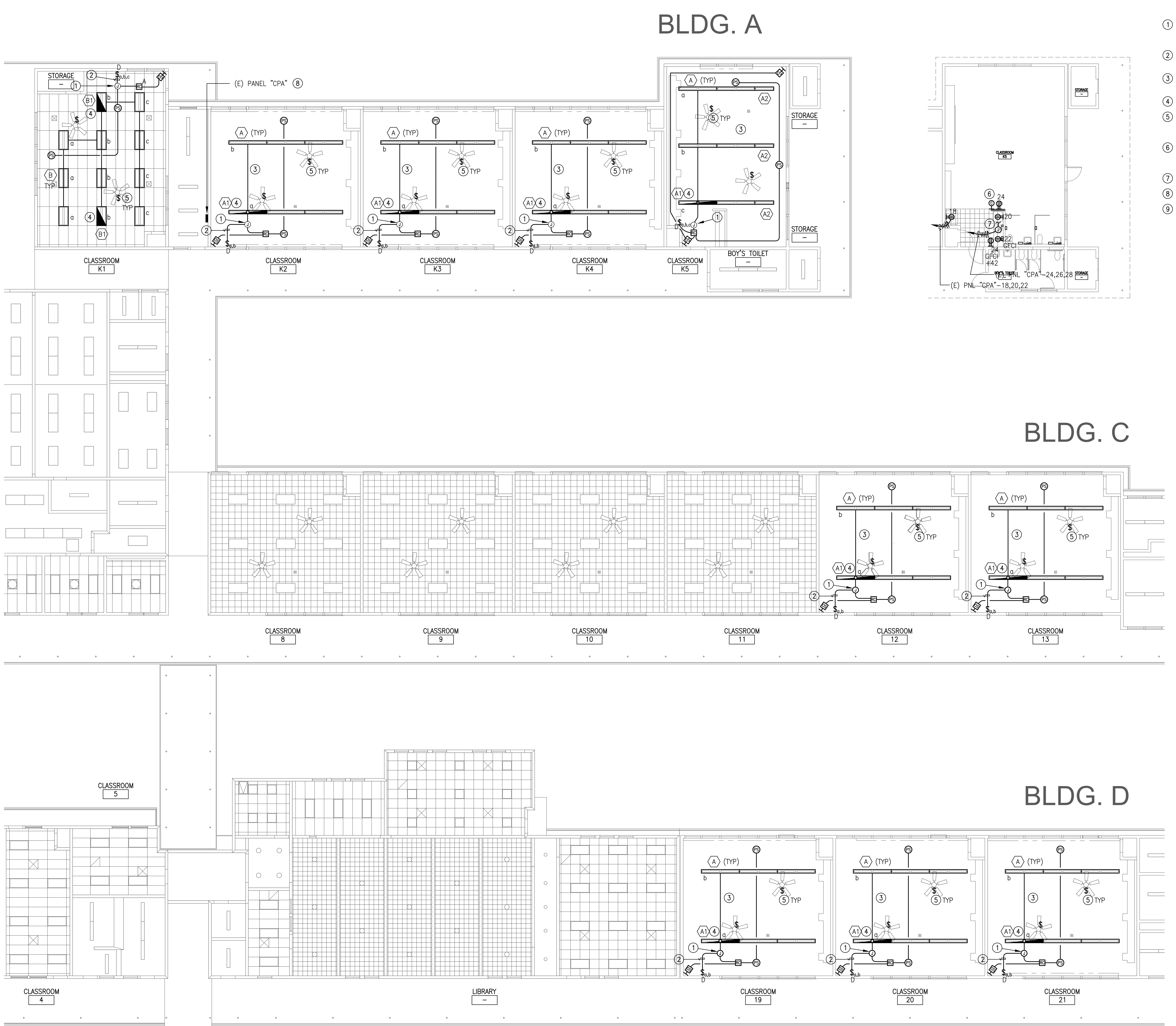

1 ELECTRICAL PLAN 9
SCALE: 1/8"=1'-0"

SHEET NOTES:

1. INTERCEPT (E) HOT WIRES (FIELD VERIFY) AND EXTEND (N) CONDUIT AND WIRES TO (N) LIGHTING FIXTURES AS SHOWN. REFER TO NOTE (2) ON SHEET E1.1.
2. UTILIZE (E) 3/4"C TO INSTALL (N) CAT6 CABLE FOR DIMMING CONTROL. REFER TO NOTE (3) ON SHEET E1.1.
3. SEE CONTROL WIRING DIAGRAM FOR ADDITIONAL WORK REQUIRED AND INFORMATION.
4. PROVIDE UNSWITCHED HOT WIRE TO EMERGENCY DRIVER.
5. REINSTALL (E) CEILING FAN WITH SWITCH. EXTEND CONDUIT AND WIRES AS REQUIRED TO PUT IT BACK IN SERVICE. SEE ATTACHMENT DETAIL 1 ON SHEET E3.1.
6. RELOCATED (E) CLOCK AS PER NOTE ON SHEET E1.1. EXTEND CONDUIT AND WIRES AS REQUIRED TO PUT IT BACK IN SERVICE.
7. MAKE FINAL CONNECTION TO INSTANT WATER HEATER.
8. SEE PANEL SCHEDULE FOR WORK REQUIRED.
9. ALL (E) LIGHTING CIRCUIT IN EACH CLASSROOM SHALL BE USED.

OAK KNOLL E.S. KEYPLAN

MENLO PARK CITY SCHOOL DISTRICT

Oak Knoll E.S.
Lighting & ELC
Project

Project #2
Buildings A, C & D
1895 Oak Knoll Lane,
Menlo Park, CA 94027

Date **Issued For**

HED
417 Montgomery Street
Suite 400
San Francisco, CA
94104 USA
(415) 981-2345
WWW.HED.DESIGN

© 2018
2018-04589-000

ELECTRICAL PLAN

E2.1

SHEET NOTES:

1. UTILIZE (E) SPARE CIRCUIT BREAKERS, SIZE AS SHOWN.
2. ALL COMPONENTS FOR THIS PANEL ARE (E) TO REMAIN, UON.
3. PROVIDE (N) CIRCUIT BREAKER IN (E) SPACES. SIZE AS SHOWN. (N) CIRCUIT BREAKER TYPE AND INTERRUPTING CURRENT SHALL MATCH (E).

LIGHTING FIXTURE SCHEDULE

MARK	MANUFACTURERS MODEL NO.	LAMPS QTY.	LAMPS TYPE	TOTAL WATTS	VOLTS	MOUNTING	DESCRIPTION AND REMARKS	WEIGHT
A	FINELITE CAT #S12-LED-ID-DCO-CTO-8FT-3E-V-V-3500K-91-120-SC-FA50-FE-C4	–	LED	74.8	120	PENDANT	DIRECT/INDIRECT LED LIGHT FIXTURE WITH 0-10 V DIMMING DRIVER	25 LBS
A1		–	–	–	–	–	SAME AS TYPE "A" EXCEPT WITH EMERGENCY BATTERY PACK.	25 LBS
A2	FINELITE CAT #S12-LED-ID-DCO-CTO-4FT-3E-V-V-3500K-91-120-SC-FA50-FE-C4	–	LED	37.4	120	PENDANT	SAME AS TYPE "A" EXCEPT WITH 4FT LENGTH.	16 LBS
B	FINELITE CAT #HPR-LED-A-2X4-DCO-S-835-120-SC-C1-0BO	–	LED	27	120	RECESSED LAY-IN	2'X4' LED LIGHT FIXTURE WITH STEEL REFLECTORS 0-10 V DIMMING DRIVER	10 LBS
B1		–	–	–	–	–	SAME AS TYPE "B" EXCEPT WITH EMERGENCY BATTERY PACK.	10 LBS

PANEL # (E) CPA (2)

VOLTS 120/208V,3PH,4W	LOCATION	FEEDER SIZE EXISTING
AMPS 225	MLO [X] FEED THRU LUGS [ ]	FLUSH [ ] SURFACE [X]
AIC RATING 10K	MCB [ ] MCB AMPS	NEMA 1 [X] NEMA 3R [ ]
	BUS AMPS 225	

DESCRIPTION	LOAD (VA) A	LOAD (VA) B	LOAD (VA) C	BKR/ POLE	CKT No.	CKT No.	BKR/ POLE	LOAD (VA) A	LOAD (VA) B	LOAD (VA) C	DESCRIPTION	NOTE
(E) LOAD				20/1	1	2	20/1	720			(E) LOAD	
					3	4			720			
					5	6				360	SPARE	
					7	8						
					9	10						
					11	12						
					13	14						
					15	16						
					17	18				1000	REFRIGERATOR	(1)
					19	20		1200			DISH WASHER	(1)
					21	22			1200		MICROWAVE	(1)
					23	24				360	RECEPTACLE	(1)
SPARE					25	26	20/2	1800			WATER HEATER	(3)
					27	28	20/2		1800			(3)
					29	30	-				SPACE	
					31	32	-					
					33	34	-					
SPACE				-	35	36	-					
				-	37	38	-					
				-	39	40	-					
				-	41	42	-					
SUBTOTAL								1920	1920	1720	SUBTOTAL	

TOTAL LOAD 5.56 KVA; @ 208 VOLTS = 15.4 AMPS

MENLO PARK
CITY SCHOOL DISTRICT

Oak Knoll E.S. Lighting & ELC Project

Project #2 Buildings A, C & D

1895 Oak Knoll Lane,
Menlo Park, CA 94027

Date **Issued For**

Alliance Engineering Consultants, Inc.
4701 Patrick Henry Drive, Bldg. 10
Santa Clara, CA 95054
phone (408) 970-9888
fax (408) 970-9316
www.aec-engineers.com
PROJECT NO. 101-19-01

REGISTERED PROFESSIONAL ENGINEER
KENNETH S. NGAI
No. 11537
Exp. 6/30/19
ELECT.
STATE OF CALIFORNIA

HED
417 Montgomery Street
Suite 400
San Francisco, CA
94104 USA
(415) 981-2345
WWW.HED.DESIGN

© 2018

2018-04589-000

ELECTRICAL SCHEDULES

E3.1

FILE: M:\101-18-10 Encinal- Admin\10-E3.32.dwg Jan 09, 2019 4:35 pm Scale: 1=1 by: CHRIS
XREFS: 2018-03800-000 BASESHEETBORDER.dwg

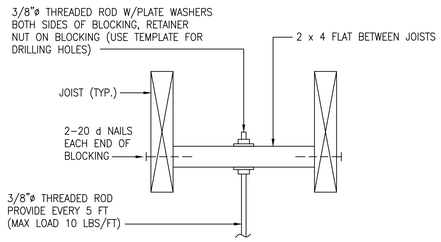

1 CEILING FAN/PENDANT LIGHT FIXTURE UPPER SUPPORT MOUNTING DETAIL (TYP)

NOT TO SCALE

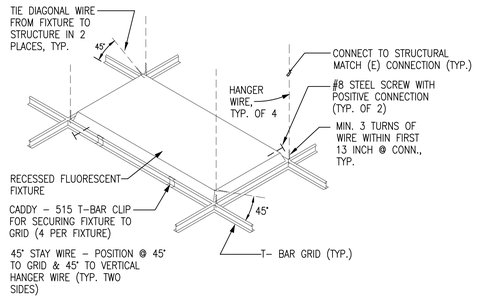

2 TYPICAL SUPPORT REQUIREMENTS FOR RECESSED LIGHT FIXTURES

NOT TO SCALE

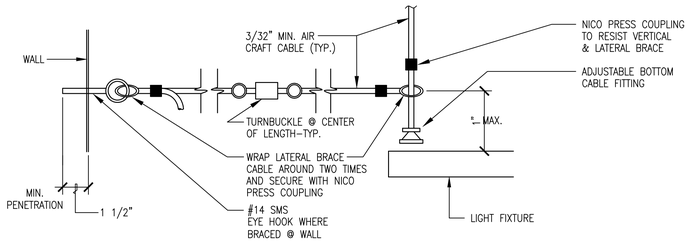

NOTE:

1. WHERE NEEDED TO BRACE TO TRUSS CHORDS, DRILL 1/4"ø HOLE MAX. AND WRAP 2 TIMES SECURE WITH NICO PRESS COUPLING

A E3.1 SEISMIC RESTRAINT DETAIL (ON THE WALL)

NOT TO SCALE

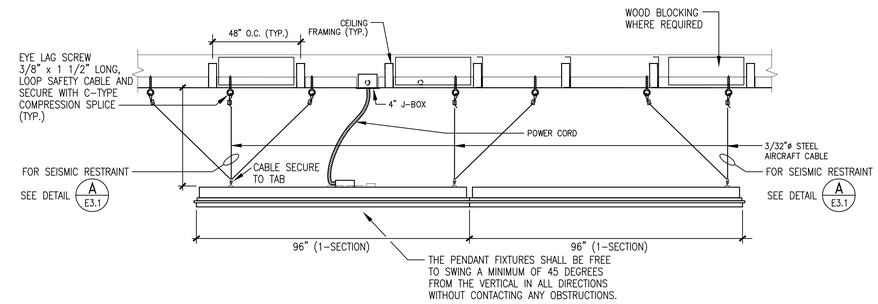

3 PENDANT LIGHT FIXTURE MOUNTING DETAIL

NOT TO SCALE

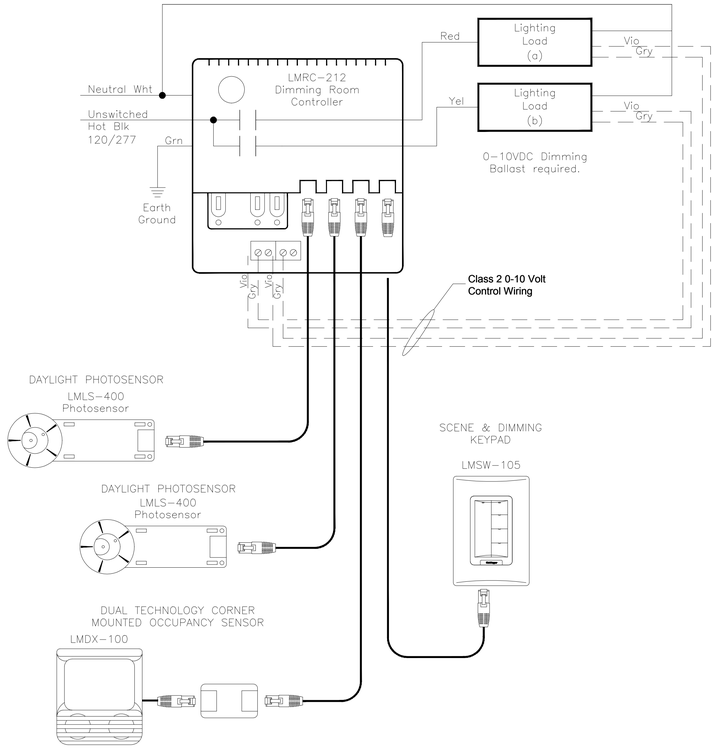

4 TWO ZONE CLASSROOM DIAGRAM

NOT TO SCALE

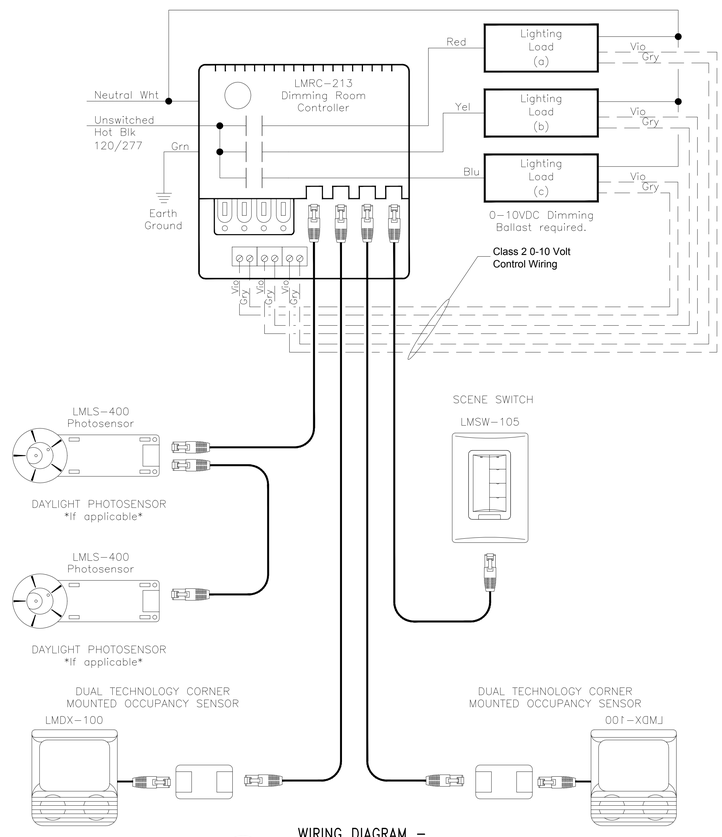

5 WIRING DIAGRAM - THREE ZONE SPACE

N.T.S.

MENLO PARK CITY SCHOOL DISTRICT

Oak Knoll E.S.
Lighting & ELC
Project

Project #2
Buildings A, C & D
1895 Oak Knoll Lane,
Menlo Park, CA 94027

Date Issued For

Alliance Engineering Consultants, Inc.
CSB Pacific Iowa Drive, Bldg. 10
Santa Clara, CA 95054
phone: (408) 970-0888
fax: (408) 970-0889
www.aec-engineers.com
PROJECT NO. 101-19-01

REGISTERED PROFESSIONAL ENGINEER
CHRISTOPHER S. NGO
No. 11537
Exp. 6/30/19
ELECT.
STATE OF CALIFORNIA

HED
417 Montgomery Street
Suite 400
San Francisco, CA
94104 USA

(415) 981-2345

WWW.HED.DESIGN

© 2018

2018-04589-000

ELECTRICAL DETAILS

E3.2

FILE: M:\101-19-01 Oak Knoll - Menlo Park\02_PROJ-2\E3.dwg Mar 19, 2019 11:47 am Scale: 1=1 by: CHRIS
XREFS:

SYSTEM ACOUSTICS NOTES

1. ALL HVAC EQUIPMENT IS TO BE ADJUSTED SO THAT IT IS OPERATING AT OR BELOW THE MANUFACTURER'S LISTED NOISE LEVELS.

   A. SINGLE PHASE MOTOR HUM IS NOT ACCEPTABLE. ANY MOTORS THAT EXHIBIT MOTOR HUM ARE TO BE REPLACED.

   B. EXCESSIVE EQUIPMENT VIBRATION IS NOT ACCEPTABLE. EQUIPMENT THAT EXHIBITS EXCESSIVE OR LOUD VIBRATIONS IS TO BE CORRECTED OR REPLACED.

2. ALL POSSIBLE SOURCES OF NOISE ARE TO BE REVIEWED AND ADDRESSED SO THAT THE SYSTEMS ARE OPERATING QUIETLY INCLUDING THE FOLLOWING:

   A. ALL FAN SYSTEMS ARE TO BE ADJUSTED SUCH THAT THE SYSTEMS DELIVER THE REQUIRED CFM AIRFLOW AT THEIR LOWEST POSSIBLE SPEED SETTINGS. THIS ADJUSTMENT IS TO INCLUDE DRIVE AND/OR SHEAVE CHANGES AS REQUIRED ON ANY FAN SYSTEMS THAT DO NOT MEET AIRFLOW OR ACOUSTICAL REQUIREMENTS.

   B. AIR BALANCE PROCEDURE IS TO BE AS FOLLOWS:

1. ADJUST ALL DAMPERS IN DUCT SYSTEM TO THEIR FULL OPEN POSITION.
2. MEASURE AND RECORD THE TOTAL DELIVERED AIRFLOW OF FAN SYSTEM.
3. REDUCE FAN SPEED TO DELIVER TOTAL REQUIRED CFM AIRFLOW AS SHOWN ON THE FLOOR PLANS.
4. ADJUST INDIVIDUAL BALANCING DAMPERS IN THE DUCTWORK TO PROPORTION CFM TO AIRFLOW VALUES SHOWN ON THE FLOOR PLANS.

3. VARY TOTAL SYSTEM AIR QUANTITIES BY ADJUSTMENT OF FAN SPEEDS. INSTALL DRIVE AND/OR SHEAVE CHANGES AS REQUIRED. VARY BRANCH AIR QUANTITIES BY DAMPER REGULATION.

4. AIR BALANCING OF THE DUCT SYSTEMS IS TO BE MADE SO THAT AIR NOISE IS KEPT TO A MINIMUM. AIR BALANCING IS TO BE MADE STARTING WITH THE FARTHEST REGISTER FROM THE FAN, WORKING BACK TO THE EQUIPMENT. "PINCHING" AN IN-LINE DAMPER THAT IS CLOSE TO THE FAN IS NOT ACCEPTABLE.

5. BALANCING DAMPERS ARE TO BE INSTALLED IN ALL BRANCH SUPPLY, RETURN, OUTSIDE AIR, AND EXHAUST DUCTS WHETHER OR NOT SHOWN ON THE DRAWINGS. ALL BALANCING DAMPERS ARE TO BE INSTALLED IN THE WYE BRANCHES, OR IN THE BRANCH DUCT AS FAR AWAY FROM THE REGISTER OR GRILLE AS POSSIBLE. STRAIGHT RUNS OF EXPOSED DUCT WITH DUCT MOUNTED REGISTERS OR GRILLES ARE TO INCLUDE BALANCING DAMPERS AT THE MID-POINTS BETWEEN THE REGISTERS OR GRILLES. INSTALL CABLE OPERATED DAMPERS AT INACCESSIBLE AREAS.

6. SPRING ISOLATORS ARE TO BE ADJUSTED SUCH THAT THE ISOLATED EQUIPMENT IS @FLOATING FREELY@ ON ITS SPRINGS. SPRING RATES ARE TO BE CORRECTLY ORDERED SO THAT THE EQUIPMENT SITS LEVEL, WITHOUT ANY ONE SIDE OR AREA BOTTOMING OR OVERLOADING THE SPRINGS.

7. FOR ALL EQUIPMENT WITHOUT SPRING ISOLATORS, INSTALL 3/4" THICK NEOPRENE ISOLATION PADS, MASON SUPER W OR EQUAL.

8. FLEXIBLE FABRIC DUCT CONNECTORS ARE TO BE INSTALLED AT ALL CONNECTIONS TO EQUIPMENT.

9. FLEXIBLE ELECTRICAL AND PLUMBING CONNECTORS ARE TO BE USED AT ALL CONNECTIONS TO NON-RIGIDLY MOUNTED EQUIPMENT.

10. ALL ROOF, CEILING, AND WALL PENETRATIONS (DUCT AND PIPING) ARE TO BE CAULKED AND SEALED. INSULATION MAY BE USED IN CONCEALED AREAS TO FILL VOIDS. FIRE CAULK ALL PENETRATIONS THROUGH RATED WALLS WITH 3M FIRESTOPPING SYSTEMS, OR EQUAL.

11. COMPRESSORS ARE TO BE RELEASED FROM THEIR SHIPPING BOLTS.

12. ALL SIDEWALL SUPPLY AIR REGISTERS ARE TO BE ADJUSTED SO THAT THE HORIZONTAL BLADES ARE POINTING SLIGHTLY ABOVE HORIZONTAL AND THE VERTICAL BLADES ARE ADJUSTED SO THAT THEY ARE DIFFUSED IN A 45° PATTERN. ADJUSTMENTS ARE TO BE MADE SUCH THAT NO DRAFTS ARE NOTICEABLE AT 7'-0"AFF OR BELOW. PATTERN IS TO BE CONSISTENT THROUGHOUT.

FIRESTOPPING

1. ALL WALL, FLOOR AND ROOF PENETRATIONS SHALL BE PROTECTED BY A FIRESTOP SYSTEM THAT MEETS THE REQUIREMENTS OF CFC 1404.3 OR 1405.3. ALSO REFER TO SPECIFICATION SECTION 07 84 00.

FIRE RATED PENETRATIONS

1. ALL ROOF, CEILING, AND WALL PENETRATIONS (DUCT AND PIPING) ARE TO BE CAULKED AND SEALED. INSULATION MAY BE USED IN CONCEALED AREAS TO FILL VOIDS. FIRE CAULK ALL PENETRATIONS THROUGH RATED WALLS WITH 3M FIRESTOPPING SYSTEMS, OR EQUAL. SYSTEMS TO MEET ALL REQUIREMENTS OF 2016 CBC SECTIONS 714 & 717.

2. THROUGH PENETRATIONS SHALL BE PROTECTED BY AN APPROVED PENETRATION FIRESTOP SYSTEM INSTALLED AS TESTED IN ACCORDANCE WITH ASTM E 814 OR UL 1479, WITH A MINIMUM POSITIVE PRESSURE DIFFERENTIAL OF 0.01 INCH OF WATER AND SHALL HAVE AN F RATING OF NOT LESS THAN THE REQUIRED FIRE-RESISTANCE RATING OF THE WALL PENETRATED (2016 CBC SECTION 714.3.1.2). 3M FIRESTOPPING SYSTEMS, OR EQUAL.

3. INSTALL FIRE DAMPERS OR FIRE/SMOKE DAMPERS WHERE REQUIRED TO MEET ALL REQUIREMENTS OF 2016 CBC SECTIONS 714 & 717.

CLEARANCE NOTES

1. CLEARANCES IN ALL ATTIC AREAS ARE EXTREMELY LIMITED. ALL TRADES ARE TO WORK CLOSELY TOGETHER TO ENSURE THAT PROPER ROUTING OF THE ALL SYSTEMS MAY OCCUR.

2. ALL CONDITIONS HAVE BEEN SHOWN AS ACCURATELY AS POSSIBLE. ALL CONDITIONS ARE TO BE FIELD VERIFIED. MECHANICAL CONTRACTOR IS TO INCLUDE IN HIS BID ADJUSTMENTS TO THE WORK AS REQUIRED TO ACCOMMODATE THE ACTUAL FIELD CONDITIONS.

3. THE FIRE SPRINKLER PIPING SYSTEMS ARE TO BE COORDINATED WITH THE MECHANICAL CONTRACTOR SO AS NOT TO BLOCK INSTALLATION OF THE MECHANICAL SYSTEMS, AND SUCH THAT THE DUCTWORK CAN BE INSTALLED IN THE LOCATIONS SHOWN ON THE MECHANICAL DRAWINGS. THE DUCTWORK IS TO HAVE THE HIGHEST PRIORITY.

4. THE FIRE SPRINKLER PIPING SYSTEMS ARE TO BE COORDINATED WITH ALL TRADES SO AS NOT TO BLOCK INSTALLATION OF OTHER SYSTEMS. SPECIAL ATTENTION IS TO BE MADE SUCH THAT THE MECHANICAL SYSTEMS CAN BE INSTALLED IN THE LOCATIONS SHOWN ON THE DRAWINGS.

MECHANICAL LEGEND AND ABBREVIATIONS

SYMBOL	ABBREVIATION (SIZES SHOWN ARE EXAMPLES)	DESCRIPTION
	18"x12"-SE6	SIDEWALL EXHAUST GRILLE - TITUS MODEL 350ZRL. ALL STEEL GRILLE WITH 3/4" BLADE SPACING AND 0° FIXED DEFLECTION. SIZE AS SHOWN ON DRAWINGS. BORDER TYPE 1 SURFACE MOUNT. COLOR: WHITE.

SYMBOL	ABBREVIATION	DESCRIPTION
S		SWITCH OR SENSOR - MOUNT WITH TOP OF SWITCH OR SENSOR AT +48" AFF.
CO2		CARBON DIOXIDE SENSOR - MOUNT AT +48" AFF
4		SHEET NOTE DESIGNATION
M		ITEM FURNISHED AND INSTALLED BY MECHANICAL CONTRACTOR
E		ITEM FURNISHED AND INSTALLED BY ELECTRICAL CONTRACTOR
P		ITEM FURNISHED AND INSTALLED BY PLUMBING CONTRACTOR
1 / M2.1		DETAIL REFERENCE - UPPER NUMBER=DETAIL NUMBER, LOWER NUMBER=SHEET NUMBER
REF 1		EQUIPMENT TAG
		LINED DUCT - ALL DIMENSIONS SHOWN ARE NET CLEAR INSIDE DIMENSIONS. DUCTS ARE TO BE INCREASED IN SIZE TO ACCOMMODATE LINING, WITHOUT LOSS OF AREA.
		SQUARE TO ROUND FITTING - RECTANGULAR TO ROUND DUCT TRANSITION
	VD	VOLUME DAMPER

ABBREVIATION	DESCRIPTION
Φ	DIAMETER
Φ	PHASE
AFF	ABOVE FINISHED FLOOR
ALT.	ALTERNATE
AP	ACCESS PANEL
APPROX.	APPROXIMATE
ARCH.	ARCHITECT, ARCHITECTURAL
BD	BOTTOM OF DUCT
BF	BELOW FLOOR
BG	BELOW GRADE
BLDG.	BUILDING
CFH	CUBIC FEET PER HOUR
CFM	CUBIC FEET PER MINUTE
CKT.	CIRCUIT
℄	CENTERLINE
CLG	CEILING
CONC.	CONCRETE
CONN.	CONNECTION
CONT.	CONTINUATION
CONTR.	CONTRACTOR
CTE	CONNECT TO EXISTING
DF	DOUGLAS FIR
DIA.	DIAMETER
DIM.	DIMENSION
DIV.	DIVISION
DN	DOWN
DWG	DRAWING
DWGS.	DRAWINGS
(E)	EXISTING
EAT	ENTERING AIR TEMPERATURE
EFF.	EFFICIENT, EFFICIENCY
EF	EXHAUST FAN
ELEC.	ELECTRICAL
ELEC. CHAR.	ELECTRICAL CHARACTERISTICS
ELEV.	ELEVATION
EMBED.	EMBEDMENT
ENT.	ENTERING
EQ.	EQUAL
EXH	EXHAUST
EXIST.	EXISTING
FF, F.F.	FINISHED FLOOR
FT.	FEET
FPM	FEET PER MINUTE
FPS	FEET PER SECOND
GA.	GAUGE
GAL.	GALLON
GC	GENERAL CONTRACTOR
GPM	GALLONS PER MINUTE
GSM	GALVANIZED SHEET METAL
GYP. BD.	GYPSUM BOARD
HT.	HEIGHT
HVAC	HEATING, VENTILATING AND AIR CONDITIONING
IFC	IN FURRED CEILING
IN.	INCHES

ABBREVIATION	DESCRIPTION
(1"L)	1" LINED DUCT - ALL DIMENSIONS SHOWN ARE NET CLEAR INSIDE DIMENSIONS. DUCTS ARE TO BE INCREASED IN SIZE TO ACCOMMODATE LINING, WITHOUT LOSS OF AREA. (1"L) INDICATES 1" THICK, 1.5 PCF LINING.
LBS., #	POUNDS
IN.	LEAVING
MAT'L, MATL.	MATERIAL
MAX.	MAXIMUM
MBH	1,000 BTU/HR.
MECH.	MECHANICAL
MED.	MEDIUM
MFG.	MANUFACTURER
MIN.	MINIMUM
MIN.	MINUTE
MTD.	MOUNTED
NA	NOT AVAILABLE
(N)	NEW
NC	NORMALLY CLOSED
NIC, N.I.C.	NOT IN CONTRACT
NO	NORMALLY OPEN
OC	ON CENTER
O.D.	OUTSIDE DIAMETER
OPNG.	OPENING
OSA	OUTSIDE AIR
PC	PLUMBING CONTRACTOR
PCF	POUNDS PER CUBIC FOOT
PLMB.	PLUMBING
POC	POINT OF CONNECTION
PRESS.	PRESSURE
PSI	POUNDS PER SQUARE INCH
R	RADIUS
RA	RETURN AIR
REF.	REFERENCE
REQD.	REQUIRED
RET.	RETURN
REV.	REVISION
RHWS	ROUND HEAD WOOD SCREWS
SA	SUPPLY AIR
SAD	SEE ARCHITECTURAL DRAWINGS
SED	SEE ELECTRICAL DRAWINGS
SENS.	SENSIBLE
SF, S.F.	SQUARE FEET
SIM	SIMILAR
SM	SHEET METAL
SPD	SEE PLUMBING DRAWINGS
SS	STAINLESS STEEL - TYPE 316 UNO
SSD	SEE STRUCTURAL DRAWINGS
STL.	STEEL
TD	TOP OF DUCT
TEMP.	TEMPERATURE
TS, T.S.	TOP OF STEEL
TS, T.S.	TUBE STEEL
TYP.	TYPICAL
UL, U.L.	UNDERWRITERS' LABORATORY
UNO	UNLESS NOTED OTHERWISE
VIF	VERIFY IN FIELD
WG	WATER GAGE
W.O.G.	WATER OIL GAS
W.P.	WATERPROOF
W/	WITH

ROOF EXHAUST FAN SCHEDULE

SYMBOL	MANUFACTURER	MODEL NO.	AIR QUANTITY (CFM)	STATIC PRESSURE (IN. WG.)	VOLTAGE/ PHASE	HP	OPERATING POWER (HP)	RPM	SONES	APPROX. OPER. WEIGHT (LBS)	NOTES
REF 2/	GREENHECK	G-098-VG	250	0.38	120V/1Φ	1/4	0.03	997	4.4	50	1

ROOF EXHAUST FAN NOTES:

1. PROVIDE WITH THE FOLLOWING:
   A. VARIGREEN EC MOTOR W/MOUNTED AND WIRED POTENTIONMETER DIAL.
   B. ATS SOUND ROOF CURB, BACKDRAFT DAMPER, BIRD SCREEN, WEATHERPROOF DISCONNECT SWITCH.
   C. BACKDRAFT DAMPER TO PROVIDE 100% SHUT-OFF WHEN UNIT IS OFF-LINE.
   D. ADJUST FAN SPEED TO DELIVER REQUIRED CFM AT LOWEST POSSIBLE SPEED SETTING.

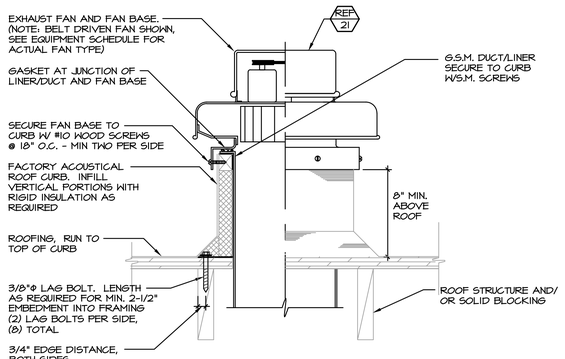

ROOF EXHAUST FAN MOUNTING DETAIL

1 / M-0.1

NO SCALE

NOTES:

1. VERIFY ROOFING TYPE AND SLOPE PRIOR TO ORDERING CURB.

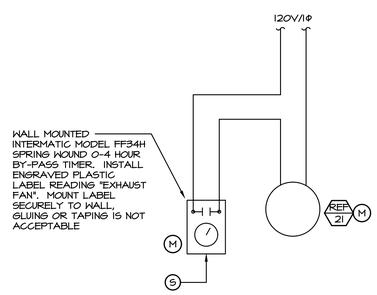

SCHEMATIC CONTROL DIAGRAM

2 / M-01

NO SCALE

MECHANICAL LIST OF DRAWINGS

M-0.1 MECHANICAL LEGEND, NOTES, SCHEDULE AND DETAILS

M-1.1 MECHANICAL FLOOR PLANS - ELC CLASSROOM

MENLO PARK CITY SCHOOL DISTRICT

Oak Knoll E.S.
Lighting Project

Project #2
Buildings A, C & D

1895 Oak Knoll Lane,
Menlo Park, CA 94027

Date	Issued For

McCRACKEN & WOODMAN Incorporated
tel. 925-283-4891
3470 Mt. Diablo Blvd, Suite A305
Lafayette, CA 94549
www.mccracken-woodman.com

REGISTERED PROFESSIONAL ENGINEER
MARC A. WOODMAN
No. M026405
Exp. 6/30/19
MECHANICAL
STATE OF CALIFORNIA

HED
417 Montgomery Street
Suite 400
San Francisco, CA
94104 USA

(415) 981-2345

WWW.HED.DESIGN

© 2018

2018-04589-000

MECHANCIAL LEGEND, NOTES SCHEDULE AND DETAILS

M-0.1

P:\1903\dwg\m01.dwg, 4/10/2019 3:40:07 PM, DWG To PDF.pc3

SHEET NOTES

1. EXHAUST FAN MOUNTED ON A LEVEL FACTORY ACOUSTIC ROOF CURB. FOR FAN MOUNTING SEE 1/M-0.1. FOR FAN CONTROL SEE 2/M-0.1. EXTEND 12"x12"(1"L) DUCT DOWN THRU ROOF AND EXTEND DN TO ABOVE TOP OF CEILING FRAMING AND PROVIDE 1" LINED CAP TO FORM A PLENUM. CONNECT 12"x6"(1"L) DUCT TO SIDE OF PLENUM ABOVE CEILING AND ROUTE AS SHOWN.

2. EXTEND 12"x6"(1"L) DUCT DN TO 6'-10" AFF MOUNTED SECURELY TO WALL. PROVIDE ESCUTCHEON AT PENETRATION OF CEILING. INSTALL SIDEWALL EXHAUST GRILLE IN FACE OF DUCT WITH THE UNDERSIDE OF GRILLE AT 7'-0" AFF. DUCT BELOW CEILING AND GRILLE ARE EXPOSED, INSTALL IN A NEAT AND ORDERLY MANNER.

3. 0-4 HOUR BYPASS TIMER FOR EXHAUST FAN CONTROL IS TO BE MOUNTED TO WALL, SEE 2/M-0.1.

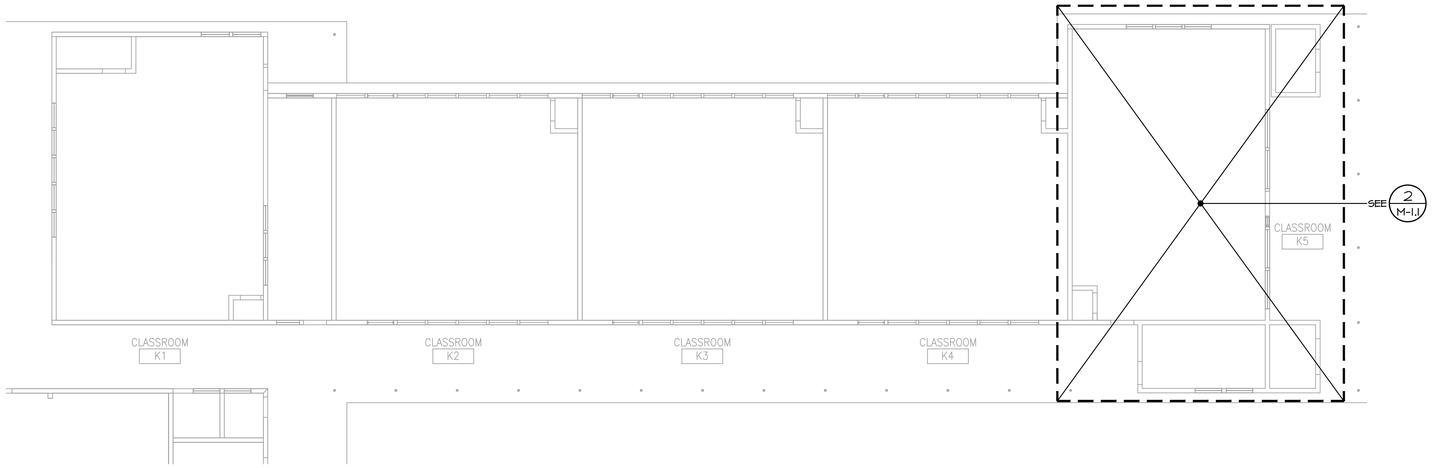

MECHANICAL FLOOR PLAN - BUILDING A

SCALE: 1/8" = 1'-0"

1 M-1.1

NORTH

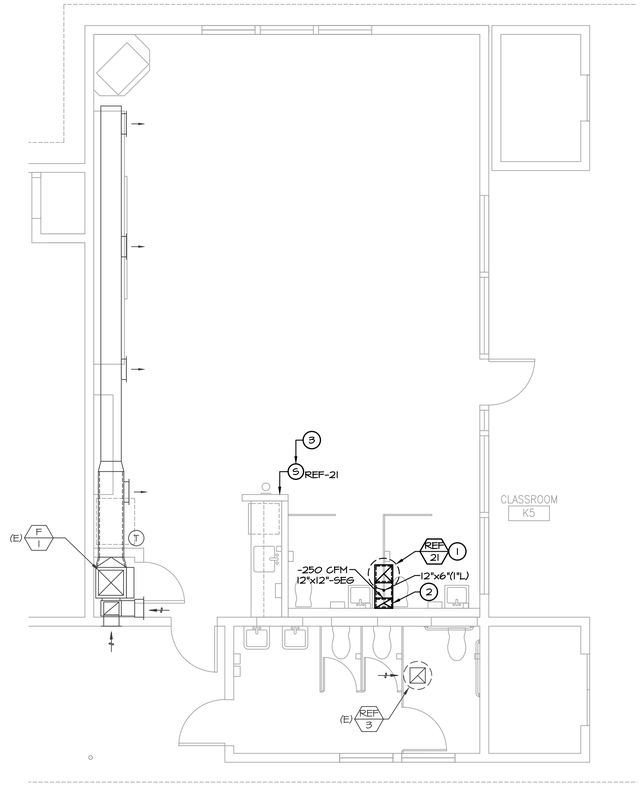

MECHANICAL PARTIAL PLAN - EARLY LEARNING CENTER

SCALE: 1/4" = 1'-0"

2 M-1.1

NORTH

MENLO PARK CITY SCHOOL DISTRICT

Oak Knoll E.S.
Lighting Project

Project #2
Buildings A, C & D

1895 Oak Knoll Lane,
Menlo Park, CA 94027

Date	Issued For

McCRACKEN & WOODMAN Incorporated

TEL 925-283-4891

3470 Mt. Diablo Blvd, Suite A305
Lafayette, CA 94549
www.mccracken-woodman.com

REGISTERED PROFESSIONAL ENGINEER
MARC A. WOODMAN
No. M026405
Exp. 6/30/19
MECHANICAL
STATE OF CALIFORNIA

HED

417 Montgomery Street
Suite 400
San Francisco, CA
94104 USA

(415) 981-2345

WWW.HED.DESIGN

© 2018

2018-04589-000

MECHANICAL
FLOOR PLANS

M-1.1

P:\19003\dwgs\m11.dwg, 4/10/2019 3:40:17 PM, DWG To PDF.pc3

GENERAL NOTES

1. PIPING FLOOR PLAN IS DIAGRAMMATIC. ALL ABOVE GRADE PIPING SHOWN NEAR A PLUMBING CHASE IS TO BE LOCATED WITHIN THE PLUMBING CHASE, UNLESS OTHERWISE NOTED. OFFSET PIPING AROUND BEAMS, COLUMNS, WALLS, ETC., AS REQUIRED.
2. ALL CONDITIONS HAVE BEEN SHOWN AS ACCURATELY AS POSSIBLE. CONTRACTOR IS TO INCLUDE IN HIS BID ADJUSTMENTS TO THE WORK AS REQUIRED TO ACCOMODATE THE ACTUAL FIELD CONDITIONS.
3. FIELD VERIFY LOCATIONS OF NEW AIR CONDITIONING (A/C) UNIT OUTSIDE AIR INTAKES. VENT PIPING TERMINATIONS IN ALL CASES ARE TO BE A MINIMUM OF TEN (10) FEET FROM A/C UNIT OUTSIDE AIR INTAKES AND ARE TO BE OFFSET AS REQUIRED. ALL VENT PIPING SUPPORTS, ETC., NECESSARY TO MEET THIS REQUIREMENT ARE TO BE INCLUDED.
4. ALL HORIZONAL CONDENSATE DRAINAGE PIPING SHALL MAINTAIN A MINIMUM 2% SLOPE TO POINT OF DISPOSAL.
5. ALL HORIZONTAL WASTE PIPING SHALL MAINTAIN A MINIMUM 2% SLOPE TO POINT OF DISPOSAL.
6. ALL CORING AND PENETRATIONS OF WALLS AND/OR FLOORS FOR PIPING ARE TO BE AS SMALL AS POSSIBLE. OVERSIZING OF OPENINGS IS TO BE AVOIDED.

   WALL PENETRATIONS ARE TO BE COORDINATED WITH ALL OTHER TRADES AND THE DRAWINGS. WALL PENETRATIONS ARE TO BE KEPT AS HIGH AS POSSIBLE AND ARE TO BE MADE IN AREAS WHERE PIPING WILL BE CONCEALED.

   IF PENETRATIONS IN EXPOSED LOCATIONS ARE UNAVOIDABLE, INSTALL ESCUCTHEON RINGS AT THESE LOCATIONS.
7. ALL HORIZONTAL ROOF DRAIN AND OVERFLOW PIPING SHALL MAINTAIN A MINIMUM 2% SLOPE TO POINT OF DISPOSAL.

CLEARANCE NOTES

1. CLEARANCES ARE EXTREMELY LIMITED. ALL TRADES ARE TO WORK CLOSELY TOGETHER TO ENSURE THAT PROPER ROUTING OF THE DUCTWORK AND INSTALLATION OF ALL SYSTEMS MAY OCCUR. DUCTWORK IS TO HAVE THE HIGHEST PRIORITY.
2. ALL CONDITIONS HAVE BEEN SHOWN AS ACCURATELY AS POSSIBLE. ALL CONDITIONS ARE TO BE FIELD VERIFIED. PLUMBING CONTRACTOR IS TO INCLUDE IN HIS BID ADJUSTMENTS TO THE WORK AS REQUIRED TO ACCOMMODATE THE ACTUAL FIELD CONDITIONS.
3. ROUTE ALL PIPING PARALLEL OR PERPENDICULAR TO STRUCTURE. ALL SYSTEMS ARE TO BE INSTALLED IN A NEAT AND ORGAINIZED MANNER. SPECIAL ATTENTION IS TO BE PAID TO PIPING IN EXPOSED AREAS.

AB 1953 REQUIREMENTS

ALL PLUMBING FAUCETS SHALL MEET THE REQUIREMENTS OF THE STATE OF CALIFORNIA AB 1953. ANY FAUCETS THAT ARE INSTALLED WHICH DO NOT MEET CA AB 1953 ARE TO BE REPLACED, AT NO COST TO THE OWNER, WITH A FAUCET WHICH MEETS CA AB 1953 AND WHICH IS APPROVED BY THE ARCHITECT.

TRENCHING AND BACKFILLING NOTES

1. AT ALL LOCATIONS WHERE BELOWGRADE PIPING IS INDICATED, TRENCHING AND BACKFILLING IS REQUIRED. THIS CONTRACTOR IS TO INCLUDE TRENCHING AND BACKFILLING AS A PART OF HIS WORK. SEE SPECIFICATIONS FOR REQUIREMENTS.

PLUMBING LEGEND AND ABBREVIATIONS

SYMBOL	ABBREVIATION	DESCRIPTION
4		SHEET NOTE DESIGNATION
M		ITEM FURNISHED AND INSTALLED BY MECHANICAL CONTRACTOR
E		ITEM FURNISHED AND INSTALLED BY ELECTRICAL CONTRACTOR
P		ITEM FURNISHED AND INSTALLED BY PLUMBING CONTRACTOR
1 / P2.1		DETAIL REFERENCE - UPPER NUMBER=DETAIL NUMBER, LOWER NUMBER=SHEET NUMBER
	S, SS, W	SANITARY SOIL OR WASTE PIPING
	V	SANITARY VENT PIPING
	CW	COLD WATER PIPING
	HW	HOT WATER PIPING
	BV	BALL VALVE
	CH.V.	CHECK VALVE
FCO	FCO	FLOOR CLEANOUT
GCO	GCO	GRADE CLEANOUT
	G.C.	GAS COCK
	G.V.	GATE VALVE
WCO	WCO	WALL CLEANOUT
		UNION
		CHANGE IN PIPE SIZE
		EXISTING FIXTURES, PIPING OR EQUIPMENT TO REMAIN
		EXISTING FIXTURES, PIPING OR EQUIPMENT TO BE REMOVED

ABBREVIATION	DESCRIPTION
Φ	DIAMETER
Φ	PHASE
AFF	ABOVE FINISHED FLOOR
ALT.	ALTERNATE
AP	ACCESS PANEL
APPROX.	APPROXIMATE
ARCH.	ARCHITECT, ARCHITECTURAL
BF	BELOW FLOOR
BFF	BELOW FINISHED FLOOR
BG	BELOW GRADE
BLDG.	BUILDING
BV	BALL VALVE
CFH	CUBIC FEET PER HOUR
CFCI	CONTRACTOR FURNISHED / CONTRACTOR INSTALLED
℄	CENTERLINE
CI	CAST IRON
CKV	CHECK VALVE
CLG	CEILING
CO	CLEANOUT
COMP.	COMPARTMENT
CONC.	CONCRETE
CONN.	CONNECT, CONNECTION
CONT.	CONTINUATION
CONTR.	CONTRACTOR
CTE	CONNECT TO EXISTING
DEMO	DEMOLITION
DF	DRINKING FOUNTAIN
DFU	DRAINAGE FIXTURE UNITS
DIA.	DIAMETER
DIM.	DIMENSION
DIR.	DIRECT
DN	DOWN
DWG	DRAWING
DWGS.	DRAWINGS
(E)	EXISTING
ELEC.	ELECTRICAL
ELEV.	ELEVATION
EMBED.	EMBEDMENT
EQ.	EQUAL
EST.	ESTIMATED
EXIST.	EXISTING
FCO	FLOOR CLEANOUT
FD	FLOOR DRAIN
FF, F.F.	FINISHED FLOOR
F.H.	FLAT HEAD
FIN.	FINISHED
F & I	FURNISHED AND INSTALLED
FS	FLOOR SINK
FU	FIXTURE UNITS
GA.	GAUGE
GC, G.C.	GAS COCK
GC, G.C.	GENERAL CONTRACTOR
GCO	GRADE CLEANOUT
GPF	GALLONS PER FLUSH
GPH	GALLONS PER HOUR
GPM	GALLONS PER MINUTE
GSM	GALVANIZED SHEET METAL

ABBREVIATION	DESCRIPTION
HB	HOSE BIBB
HT.	HEIGHT
IE, I.E.	INVERT ELEVATION
IFG	IN FURRED CEILING
IND.	INDIRECT
INV	INVERT
IWH	INSTANTANEOUS WATER HEATER
LAV	LAVATORY
LBS., #	POUNDS
MAX.	MAXIMUM
MECH.	MECHANICAL
MFG.	MANUFACTURER
MIN.	MINIMUM
MT	MOUNT
(N)	NEW
OC	ON CENTER
OPER.	OPERABLE, OPERATING
PC, P.C.	PLUMBING CONTRACTOR
PLMB.	PLUMBING
P.O.C.	POINT OF CONNECTION
PRESS.	PRESSURE
PSI, PSI.	POUNDS PER SQUARE INCH
P/T	PRESSURE/TEMPERATURE
REF.	REFERENCE
REQD.	REQUIRED
REV.	REVISION
RHWS	ROUND HEAD WOOD SCREWS
RWL	RAINWATER LEADER
SAD	SEE ARCHITECTURAL DRAWINGS
SCH 40, 80	SCHEDULE 40 OR 80 PIPE
SED	SEE ELECTRICAL DRAWINGS
S.F., SF	SQUARE FEET
SK	SINK
SM	SHEET METAL
SMD	SEE MECHANICAL DRAWINGS
SOV	SHUT-OFF VALVE
SS OR S	SANITARY SEWER
SSD	SEE STRUCTURAL DRAWINGS
SSK	SERVICE SINK
TP	TRAP PRIMER
T&P	TEMPERATURE AND PRESSURE
TPC	TRAP PRIMER CONNECTION
TYP, TYP.	TYPICAL
U/C	UNDER COUNTER
UNO	UNLESS OTHERWISE NOTED
UR	URINAL
VIF	VERIFY IN FIELD
VTR	VENT THROUGH ROOF
WC	WATER CLOSET
WC	WATER COLUMN (PRESS.)
WCO	WALL CLEANOUT
WH	WATER HEATER
WOG	WATER OIL GAS
WT.	WEIGHT

PLUMBING FIXTURE/EQUIPMENT SCHEDULE

ITEM	DESCRIPTION	S OR W	V	CW	HW	SPECIFICATIONS AND REMARKS
WC	WATER CLOSET FLOOR MOUNTED	4"	2"	1"	-	AMERICAN STANDARD 2282.001 "BABY DEVORO FLOWISE" FLOOR MOUNTED; SLOAN ROYAL #111-1.28 FLUSH VALVE WITH ADA HANDLE, OLSONITE 126-CC OPEN FRONT SOLID WHITE PLASTIC SEAT WITH STAINLESS STEEL EXTERNAL CHECK HINGE, 1" THICK WITH BUMPER.
LAV	LAVATORY (ACCESSIBLE)	2"	1-1/2"	1/2"	-	AMERICAN STANDARD "LUCERNE" 0355.012 WITH FAUCET HOLES ON 4" CENTERS. CHICAGO 857-E2805-665PSHAB METERING FAUCET WITH 0.5 GPM AERATOR. CHROME PLATE BRASS GRID DRAIN AND TAILPIECE. CHROME PLATED CAST BRASS P-TRAP WITH CLEANOUT PLUG, BRASSCRAFT HEAVY DUTY LOOSE KEY ANGLE STOP. FLOOR MOUNTED CARRIER. INSTALL CLEANOUT TEE AND WCO IN WASTE RISER BELOW FIXTURE. REFER TO THE ARCHITECTURAL DRAWINGS FOR MOUNTING HEIGHTS.
SK	SINK (ACCESSIBLE)	2"	1-1/2"	1/2"	1/2"	JUST SL-ADA-1921-A-GR, 18 GA, 6-1/2" DEEP, STAINLESS STEEL SINGLE COMPARTMENT SINK. CHICAGO 201-AE35ABCP, 8" CENTERS, 1.5 GPM SOFTFLO AERATOR, L-TYPE SWING SPOUT. JUST J-35-SSF-VR STAINLESS STEEL GRID DRAIN. 17 GA P-TRAP, BRASSCRAFT HEAVY DUTY LOOSE KEY ANGLE STOPS. INSULATE SINK WASTE AND HW SUPPLY WITH SKALGARD SS101 AND SS102 PROTECTIVE DEVICES. INSTALL CLEANOUT TEE AND WCO IN WASTE RISER BELOW FIXTURE. ORDER SINK WITH PUNCHING HOLES TO MATCH REQUIRED OPENINGS. PROVIDE WASTE PIPING WITH AIR GAP FITTING AND HOT WATER PIPING FROM ANGLE STOP FOR DISHWASHER.
AR	WATER HAMMER ARRESTOR	-	-	LINE SIZE 2" MAX.	-	WATTS SERIES 15. MOUNT WATER HAMMER ARRESTOR IN WALL, BEHIND WALL ACCESS PANEL. INSTALL PER MANUFACTURER'S INSTRUCTIONS. SEE PLUMBING DETAILS FOR REQUIREMENTS.
FCO	FLOOR CLEANOUT	LINE SIZE 4" MAX.	-	-	-	ZURN ZN-1400-TX-BP IN TILED AREAS AND Z-1400-BP IN REMAINING AREAS. PROVIDE KC FLASHING PAN WITH CLAMPING COLLAR WHERE WATERPROOF MEMBRANE OCCURS. SEE PLUMBING DETAILS FOR REQUIREMENTS.
WCO	WALL CLEANOUT	LINE SIZE 4" MAX.	-	-	-	ZURN Z-1446. SEE PLUMBING DETAILS FOR REQUIREMENTS.
IWH	INSTANTANEOUS HOT WATER HEATER (ELECTRIC)	-	-	1/2"	1/2"	STIEBEL ELTRON DHC 5-2, 33°F RISE AT .75 GPM, 3600 W, 18A AT 208V-1Φ. MOUNT IN WALL, BEHIND WALL ACCESS PANEL WITH SHUTOFF VALVE ON INLET SIDE OF IWH. EXTEND HW SUPPLY PIPING CONCEALED IN WALL FROM IWH TO EXPOSED HW STOP. HW STOP TO BE MOUNTED TO LEFT OF CW STOP. COORDINATE WITH ELECTRICAL CONTRACTOR SO THAT ALL POWER WIRING IS CONCEALED IN WALL.

PLUMBING LIST OF DRAWINGS

P-0.1 PLUMBING LEGEND, NOTES AND SCHEDULE

P-1.1 PLUMBING FLOOR PLANS - ELC CLASSROOM

P-2.1 PLUMBING DETAILS

MENLO PARK CITY SCHOOL DISTRICT

Oak Knoll E.S.
Lighting Project

Project #2
Buildings A, C & D

1895 Oak Knoll Lane,
Menlo Park, CA 94027

Date	Issued For

McCRACKEN & WOODMAN Incorporated

TEL 925-283-4891

3470 Mt. Diablo Blvd, Suite A305
Lafayette, CA 94549
www.mccracken-woodman.com

REGISTERED PROFESSIONAL ENGINEER
MARC A. WOODMAN
No. M026405
Exp. 6/30/19
MECHANICAL
STATE OF CALIFORNIA

HED

417 Montgomery Street
Suite 400
San Francisco, CA
94104 USA

(415) 981-2345

WWW.HED.DESIGN

© 2018

2018-04589-000

PLUMBING
LEGEND, NOTES
AND SCHEDULE

P-0.1

P:\1903\dwgs\p01.dwg, 4/10/2019 3:40:25 PM, DWG To PDF.pc3

SHEET NOTES

1. CONNECT (N) 4"S TO (E) 4"S BG. FIELD VERIFY ACTUAL LOCATION, SIZE AND INVERT ELEVATION OF (E) SANITARY SEWER PIPING.
2. REMOVE (E) FCO. CONNECT (N) 2"W TO (E) 2"W BG AND ROUTE AS SHOWN.
3. 2"W DN AND 1-1/2"V UP IN WALL.
4. 2"V UP IN WALL.
5. REMOVE (E) 2"VTR AND REPLACE WITH (N) 3"VTR. (E) 2"V IS TO BE CONNECTED TO (N) 3"VTR. FLASH AND COUNTERFLASH ENLARGED ROOF PENETRATION WATERTIGHT.
6. 2"V UP IN WALL AND CONNECT TO (N) 3"VTR.
7. CONNECT (N) 2"CW TO (E) 2"CW IFC. FIELD VERIFY ACTUAL LOCATION AND SIZE OF (E) COLD WATER PIPING.
8. 2"CW DN IN WALL.

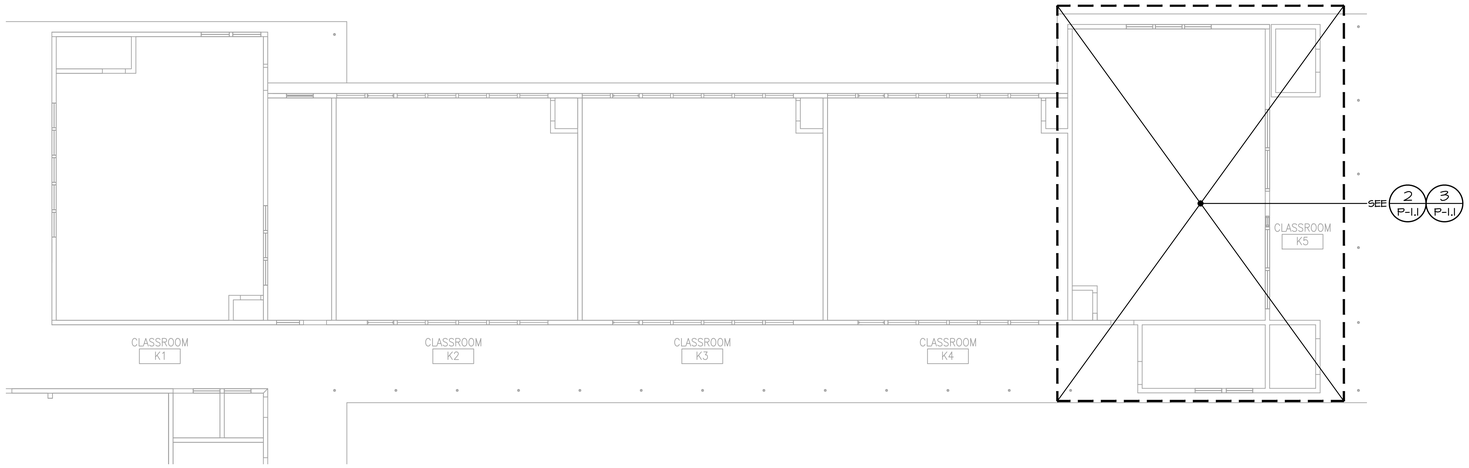

PLUMBING FLOOR PLAN - BUILDING A

SCALE: 1/8" = 1'-0"

1 P-1.1 NORTH

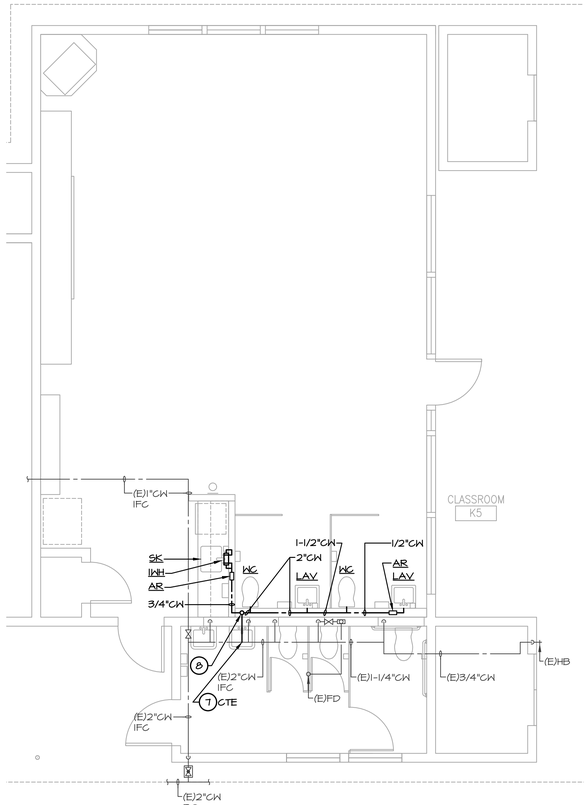

PLUMBING PARTIAL PLAN - EARLY LEARNING CENTER - CW AND HW

SCALE: 1/4" = 1'-0"

3 P-1.1 NORTH

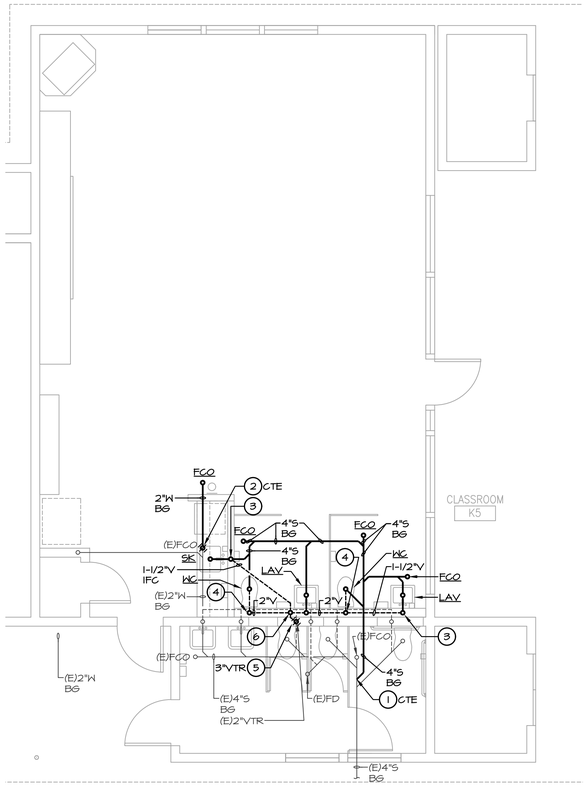

PLUMBING PARTIAL PLAN - EARLY LEARNING CENTER - S, W AND V

SCALE: 1/4" = 1'-0"

2 P-1.1 NORTH

MENLO PARK CITY SCHOOL DISTRICT

Oak Knoll E.S.
Lighting Project

Project #2
Buildings A, C & D

1895 Oak Knoll Lane,
Menlo Park, CA 94027

Date	Issued For

McCRACKEN & WOODMAN Incorporated

TEL 925-283-4891

3470 Mt. Diablo Blvd, Suite A305
Lafayette, CA 94549
www.mccracken-woodman.com

REGISTERED PROFESSIONAL ENGINEER
JAMES A. WOODMAN
No. M026405
Exp. 6/30/19
MECHANICAL
STATE OF CALIFORNIA

HED
417 Montgomery Street
Suite 400
San Francisco, CA
94104 USA

(415) 981-2345

WWW.HED.DESIGN

© 2018

2018-04589-000

PLUMBING
FLOOR PLANS -
ELC CLASSROOM

P-1.1

P:\1903\dwg\p11.dwg, 4/10/2019 3:40:30 PM, DWG To PDF.pc3

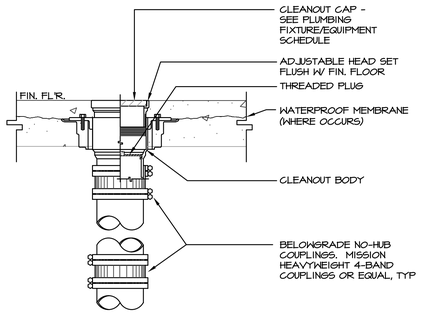

FLUSH FLOOR CLEANOUT DETAIL

NO SCALE

3 / P-2.1

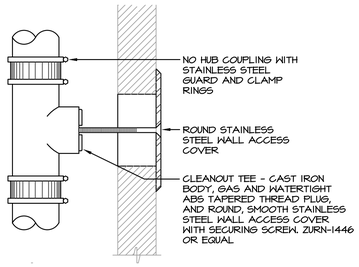

WALL CLEANOUT TEE DETAIL

NO SCALE

2 / P-2.1

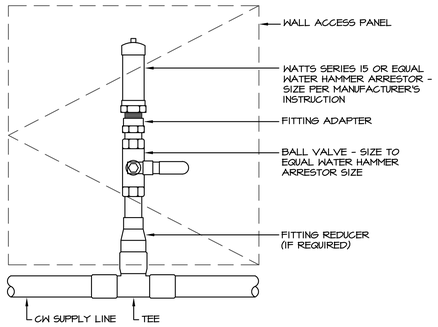

WATER HAMMER ARRESTOR DETAIL

NO SCALE

1 / P-2.1

NOTE:

1. COMBINE SHUT-OFF VALVES, TRAP PRIMERS AND WATER HAMMER ARRESTORS BEHIND SINGLE WALL ACCESS PANEL WHERE POSSIBLE.

MENLO PARK CITY SCHOOL DISTRICT

Oak Knoll E.S.
Lighting Project

Project #2
Buildings A, C & D

1895 Oak Knoll Lane,
Menlo Park, CA 94027

Date	Issued For

McCRACKEN & WOODMAN Incorporated

TEL 925-283-4891

3470 Mt. Diablo Blvd, Suite A305
Lafayette, CA 94549
www.mccracken-woodman.com

REGISTERED PROFESSIONAL ENGINEER
MARC A. WOODMAN
No. M026405
Exp. 6/30/19
MECHANICAL
STATE OF CALIFORNIA

HED

417 Montgomery Street
Suite 400
San Francisco, CA
94104 USA

(415) 981-2345

WWW.HED.DESIGN

© 2018

2018-04589-000

PLUMBING DETAILS

P-2.1

P:\1903\dwgs\p21.dwg, 4/10/2019 3:40:12 PM, DWG To PDF.pc3