Collins Architectural Group, p.s.
950 12th Avenue, Suite 200
Longview, WA 98632

Addendum No. 1

Date: January 20, 2023

Project: **Longview District No. 122**
VESTIBULE SECURITY PROJECT PHASE II
Project Number 2021-18
Longview, WA

Notice to Contractor:
The following changes in the Contract Documents, including the Drawings and Specifications, constitute this Addendum. All changes included in Addenda shall become a part of the Contract Documents for this Project. Any changes herein offset only the specific Drawings or Notes on Drawings or words or paragraphs in Specifications referenced to and the balance of the Drawings shall remain in full force.

ARCHITECTURAL SPECIFICATION

ITEM	SHEET NO./ SECTION NO.	DESCRIPTION
1.0	Attendance List	See attached for sign-in sheet from the first Pre-Bid Walk held on 1/18/23.
1.1	Card Readers	Existing Stanley Wi-Q Card Readers for door access controls to remain and be coordinated with new installations.
1.2	Speak Hole	Typical Speak Hole height, unless noted otherwise, to be Max 60” height for adults and Max 48” height for children if indicated.
1.3	Base Bid	No existing glazing replacement per Keynote L
1.4	Bid Form	See revised bid form with alternates listed.

ARCHITECTURAL DRAWINGS

1.10 Drawing A/A1.2

Revise Keynote L: Alternate Bid #1: Install Applied Laminated Security Glass at interior of curtain wall sash in frame aligned to sight lines of existing curtain wall frame. Clean existing interior glass before installation. Notify owner and architect if any fingerprints, markings, dust, or debris cannot be removed prior to installation. Alternate Bid #2: Revise Alternate Bid #1 to have new 6 mil 3M Ultra Security Film in place of laminated glass at existing glazing locations this site (Mt. Solo) only.

Add Jamb detail south side of door 11, see attached drawings clouded delta ADD1. Reduce sidelite to accommodate jamb attachment/finish.

1.11 Drawings 3-7/A1.3

Revise Typical storefront system to be 1 ¾”x4 ½”. Bottom Rail to be 2 ½”x4 ½”.

1.12 Drawing 6/A1.3

Revise Storefront midrail to be 6”x4 ½”.

1.13 Drawing A/A2.2

Revise Keynote K: Remove existing desk, clean terrazzo floor. Repair any holes left from desk anchor hardware removed. Use epoxy resin of a matching pigment. Grind, sand, seal, and buff patch. Individual floor finish penetrations larger than 1 sq. in. will be covered by change order.

1.14 Drawing 4/A2.3

Revise Storefront sill to be 4 ½"x4 ½".

1.15 Drawings 1-3/A2.3

Revise New bulkhead framing above storefront to align with soffit. See attached drawings clouded delta ADD1.

1.16 Drawing 1/A6.3

Revise Storefront door midrail to be 8"x4 ½" at level of handle/push bar and 6"x4 ½" at upper midrail.

Add Jamb details with (2) 20ga studs and brake metal finish to support header framing. See attached drawings clouded delta ADD1.

1.17 Drawings 2/A6.3

Revise Provide (1) 20ga 3" nom. diagonal stud bracing from middle of storefront head framing to wide flange structure above. Case bottom and sides of brace in brake metal and paint (off white) to match decking above.

1.18 Drawing A/A7.2

Revise Clear dimension to be 5'-4"

Revise Keynote K: Shift exist. reception counter +/- 18" East, maintain 60" clear to west wall. Remove countertop overhang to allow storefront framing tor rest on cabinet face, maintain 48" clear beyond the swing of door 71. Anchor cabinet to floor.

1.19 Sheet A7.3

Revise See attached sheet for revised Door Schedule, elevations and details clouded delta ADD1.

1.20 Drawing A/A9.2

Revise Keynote O: New Hollow Metal Relite.

Revise Keynote M: New Hollow Metal Relite.

Revise Location of Keynote E/Camera to right side (south) of Door 91 onto midrail of storefront.

1.21 Drawing A/A13.2

Revise Existing Door 136 is a single 36x84 leaf door and frame

1.22 Drawing 1/A13.3

Revise Lower panel in new assembly to be ¼" Glazeguard 250.

1.22 Door Schedule A13.3

Revise Existing Door 136 size is 36"x84"x1 ¾".

1.23 Sheet A15.2

Revise Keynote S: New overhead can lighting, use Lithonia LDN6 Cylinder Series Surface Mounting Type with emergency light function, use photocell for light control. Provide Raceway and cabling to nearest lighting circuit.

Product Substitution Approvals

Specified Item	Approved Substitution
#1 N/A	No substitution requests

END OF ADDENDUM 1

LONGVIEW SCHOOL DISTRICT SECURITY VESTIBULE PROJECT PHASE II

PRE-BID WALK ATTENDANCE SIGN-IN

1/18/2023

NAME	COMPANY	PHONE NUMBER	E-MAIL
Craig Collins	Collins Architectural Group, PS	360 425 0000	craigc@collinsarchgroup.com
Joseph Beer	Collins Architectural Group, PS	360 425 0000	joeb@collinsarchgroup.com
Jason Reetz	Longview School District	360 575 7854	jreetz@longview.k12.wa.us
Kurt Moyer	Pacific Tech Const.	360.414.8084	estimating@pactechgroup.com
Brent Christensen	Anchor Electric	360-798-3217	anchorelectric17@gmail.com
Ty Davis	Twin city Glass	360-431-6899	tyr@tricityglassco.com
BOB	TWIN CITY GLASS	360-430-7493	BOB@TWINCITYGLASSCO.COM
Terri	✓	360-425-4540	terri@tricityglassco.com
JC Russell	SIGNATURE SECURITY	360 750-6000	office@signaturesecurityinc.com
Connie Russell	"	"	
Cooper Hart	Elite Electrical Contracting	(360) 947-3440	cooper@elteec.net
Bobby Davis	Elite	360-947-3440	bobby@elteec.net

Longview School District No. 122
Security Vestibule Project Phase II
Project Nos. 2021-18
Advertisement for Bids Issued: January 10, 2023

BID FORM

To be submitted no later than 2:00 p.m. on the bid submittal date indicated in the Advertisement for Bids (as modified by any addenda).

TO: Barbara Howe
Maintenance Secretary
Longview School District No. 122
bhowe@longview.k12.wa.us

The undersigned Bidder submits the following bid:

BASE BID:

Pursuant to and in compliance with the Contract Documents, including the Advertisement for Bids and Instructions to Bidders, the Bidder hereby certifies that it has carefully examined the Contract Documents entitled:

Security Vestibule Project Phase II

Prepared by Longview School District No. 122

and the conditions affecting the Work, and being familiar with the site; and having made the necessary examinations, proposes to furnish all labor, materials, equipment, and services necessary to complete the Work in strict accordance with the Contract Documents for the above-named Project for the following sum, which is hereby designated as the Base Bid:

Base Bid	
Mt. Solo Middle School Vestibule	$_____
Monticello Middle School Vestibule	$_____
Cascade Middle School Vestibule	$_____

_____
Initials of Bidder's Representative

Columbia Heights Elementary School Vestibule	$_____
Columbia Valley Gardens Elementary School Vestibule	$_____
RA Long High School Vestibule	$_____
Broadway Learning Center Vestibule	$_____
Total Base Bid	$_____
Alternate Bid #1 Laminated Glass	$_____
Alternate Bid #2 Mt. Solo Security Film	$_____

SALES TAX:

None of the sums stated in the foregoing include Washington State Sales Tax, except as designated in Article 4 of the Instructions for Bidders.

TIME OF COMPLETION AND LIQUIDATED DAMAGES:

The undersigned Bidder agrees, if awarded the Contract, to complete the Work of the Contract within the number of calendar days specified in the Contract Documents and also agrees to the amounts specified for Liquidated Damages. It is further agreed that the time for completion of the Work described herein is a reasonable time considering the average climatic range and usual industrial conditions prevailing in the locality.

TRENCH EXCAVATION SAFETY PROVISIONS:

If the Contract Documents contain any work which requires trenching exceeding a depth of four feet, all costs for adequate trench safety systems shall be identified as a separate bid item in compliance with Chapter 39.04 RCW and WAC 296-155-650. The purpose of this provision is to ensure that the Bidder agrees to comply with all the relevant trench safety requirements of Chapter 49.17 RCW. This bid amount shall be considered as part of the Base Bid set forth above.

_____

Initials of Bidder's Representative

Bidder must include a lump sum dollar amount in blank below (even if the value is $0.00) to be responsive.

Trench Excavation Safety Provisions Only: N/A

CONTRACT AND BONDS:

If the Owner awards a contract based on this bid within thirty (30) days of the bid submittal deadline, the Bidder agrees to execute a contract for the above work, for compensation computed from the above stated sums, on the Owner's contract form, and to furnish Payment and Performance Bonds and acceptable evidence of insurance as required by the Contract Documents.

PRE-BID MEETING:

Bidder certifies that its representative attended mandatory pre-bid meeting on following dates (initial next to each date attended):

January 17, 2023

BID GUARANTEE:

Pursuant to the Instruction to Bidders, the Bidder hereby certifies that it has furnished a bid guarantee for no less than five (5) percent of the base bid, and that such guarantee accompanies this Bid Form.

The successful bidder shall submit an executed Contract, Payment and Performance Bonds, and acceptable evidence of insurance within seven (7) days after receipt of award notice and public works contract form from the Owner. If the successful bidder, upon award of a contract by the Owner, fails to execute the public works contract or submit the Payment and Performance Bonds and acceptable evidence of insurance as required within the time specified, Owner may revoke the award. Should the successful bidder fail to enter into a contract with Owner, the bid guarantee may be retained by Owner as liquidated damages, not as a penalty.

If a contract is not awarded within thirty (30) days after the bid submittal deadline, or if the bidder delivers a signed public works contract, Payment and Performance Bonds, and acceptable evidence of insurance, then the certified or cashier's check or cash submitted as the bid guarantee shall be returned to the bidder, or the Bid Bond shall become void.

CERTIFICATION:

By submitting this Bid Form, the Bidder agrees that it meets the responsibility criteria described in Section 1.01(K) of the Instructions to Bidders.

_____

Initials of Bidder's Representative

Bidder's Business Name:		
Type of Business: ☐ Sole Proprietorship ☐ Partnership ☐ Corporation (State of Incorporation:___) ☐ Other		
Physical Business Address (Must not be a P.O. Box):		
City:	State:	Zip Code:
Business Telephone Number:	Business Fax Number:	Business E-mail Address:
State of Washington numbers for the following:		
Contractor Registration No.:	UBI No.:	Employment Security Dept. No.:
Receipt is hereby acknowledged of Addenda No(s).: _____ _____ _____ _____ _____ _____		
Bidder is in compliance with the responsible bidder criteria requirement of RCW 39.04.350(1)(g).		

OFFICIAL AUTHORIZED TO SIGN FOR BIDDER:

"I certify (or declare) under penalty of perjury under the laws of the State of Washington that the foregoing is true and correct":	
Signature:	Date:
Print Name and Title	Location or Place Executed: (City, State)

END OF BID FORM

Revised 6/14/2022

_____

Initials of Bidder's Representative

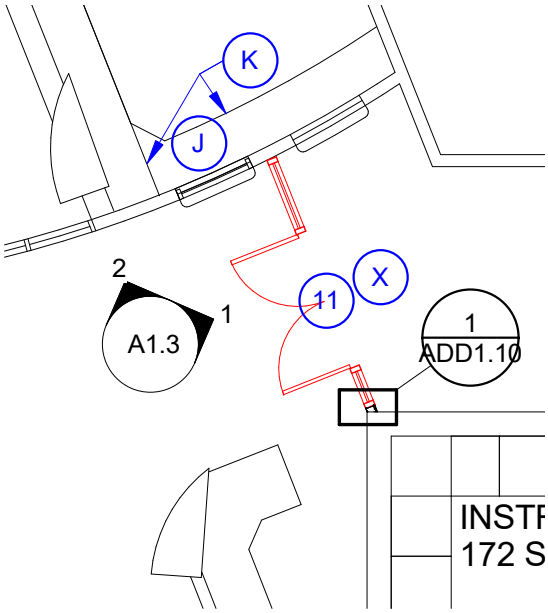

A FLOOR PLAN
ADD1.10 1/8" = 1'-0"

ADD1

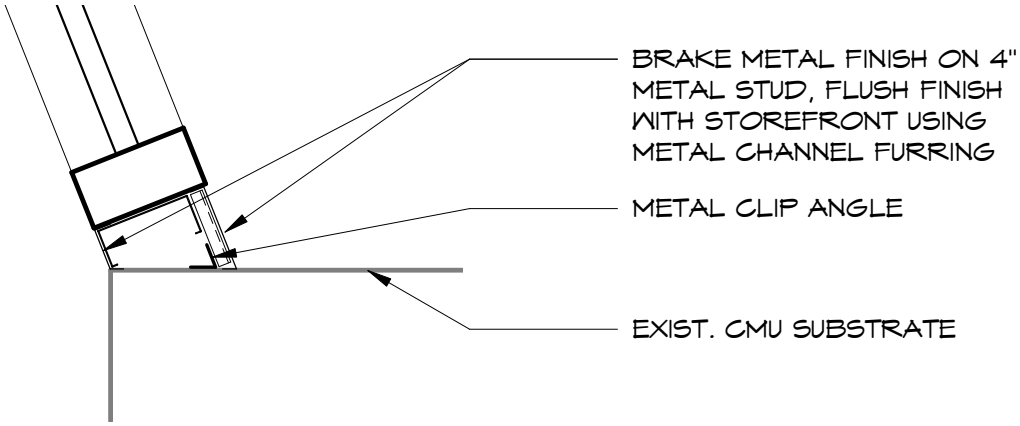

1 JAMB DETAIL
ADD1.10 1 1/2" = 1'-0"

4331 REGISTERED ARCHITECT
CRAIG M. COLLINS
STATE OF WASHINGTON

JAMB DETAIL

LONGVIEW SCHOOL DISTRICT

MT. SOLO MIDDLE SCHOOL

COLLINS ARCHITECTURAL GROUP, P.S.
950 12th AVE., SUITE 200
LONGVIEW, WA 98632
PHONE: 360-425-0000

Scale
As indicated

Date
01/19/2023

Project #
2021-18

ADD1.10

DOOR SCHEDULE

DOOR NO.	SIZE WxHxT	DOOR					FRAME			HARDWARE GROUP	REMARKS
		GLAZING	TYPE	MAT	FINISH	LABEL	TYPE	MAT	FIN		
21	3'-0"x7'-0 1/8"x1 3/4"	TEMP	1/A2.3	ALUM	-	-	1/A2.3	ALUM	-	05	1, 3
22	3'-0"x7'-0"x1 3/4"	temp	exist.	alum	-	-	exist.	alum	-	06	1, 3
23	PR 6'-0"x7'-0"x2"	temp	exist.	alum	-	-	exist.	alum	-	07	1, 2, 3

UPPERCASE = NEW MATERIAL lowercase = existing material

REMARKS:
1. DOOR HAS ELECTRONIC ACCESS CONTROL OR MONITORING.
2. DOOR HAS ADA OPERATOR
3. POWER SUPPLY REQUIRES 120V AC

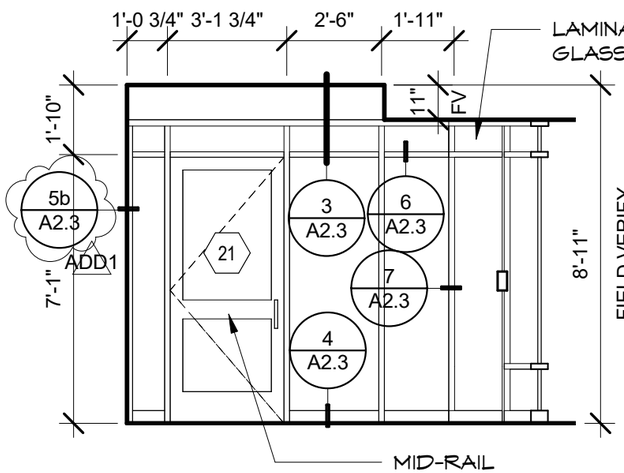

1 A2.3 NORTH INT. SF PARTITION
1/4" = 1'-0"

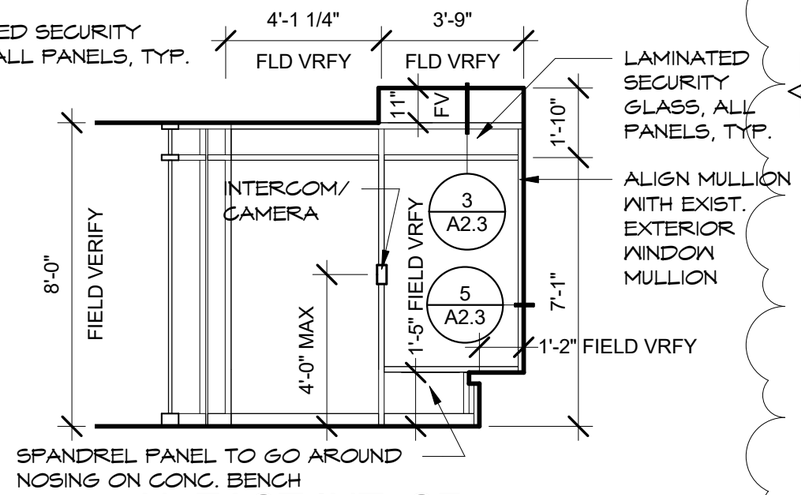

2 A2.3 N. EAST INT. SF PARTITION
1/4" = 1'-0"

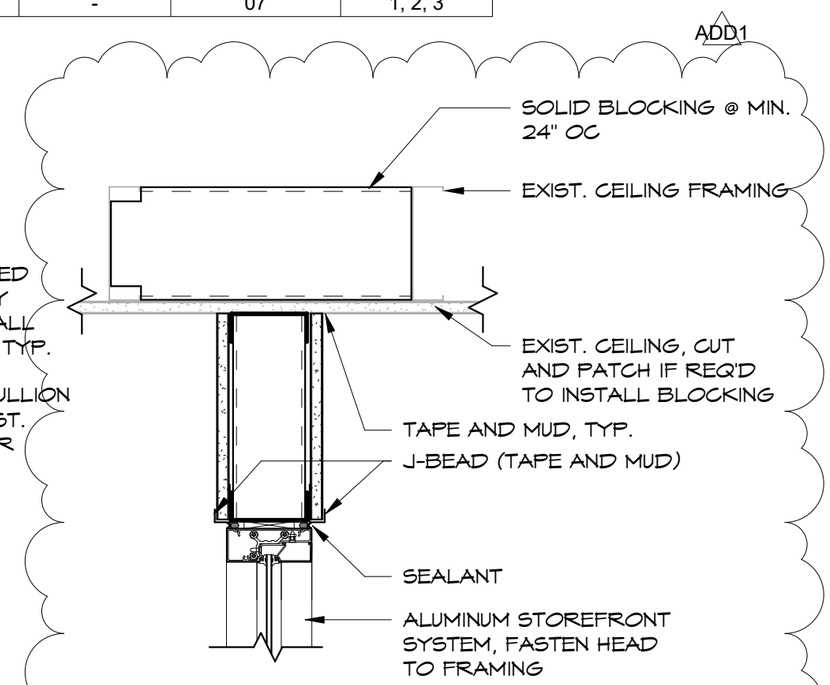

3 A2.3 STOREFRONT HEAD
1 1/2" = 1'-0"

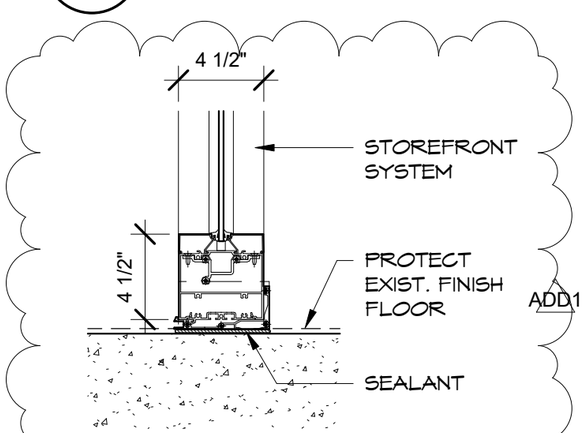

4 A2.3 STOREFRONT SILL
1 1/2" = 1'-0"

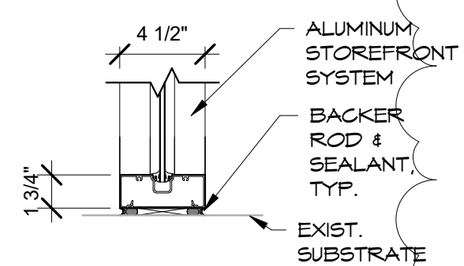

5 A2.3 STOREFRONT JAMB
1 1/2" = 1'-0"

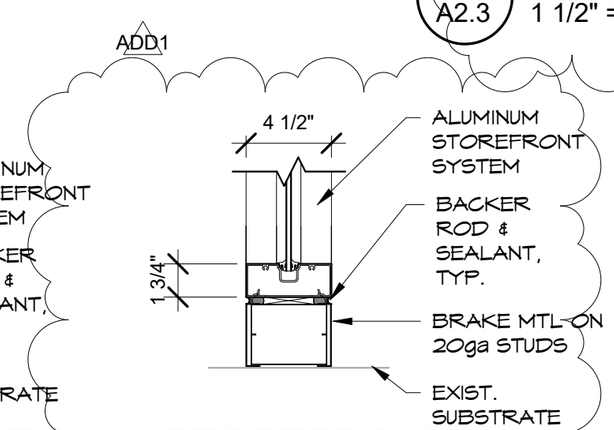

5b A2.3 STOREFRONT JAMB
1 1/2" = 1'-0"

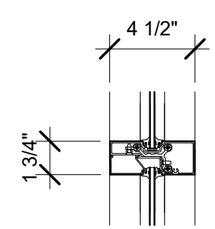

6 A2.3 SF MULLION
1 1/2" = 1'-0"

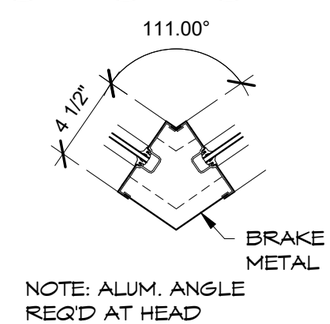

7 A2.3 VARIABLE CORNER
1 1/2" = 1'-0"

REGISTERED ARCHITECT
4331
CRAIG M. COLLINS
STATE OF WASHINGTON

Scale As indicated
Date 01/19/2023
Project # 2021-18

COLLINS ARCHITECTURAL GROUP, P.S.
950 12th AVE., SUITE 200
LONGVIEW, WA 98632
PHONE: 360-425-0000

SCHEDULE, ELEVATIONS, & DETAILS
LONGVIEW SCHOOL DISTRICT
MONTICELLO MIDDLE SCHOOL

A2.3

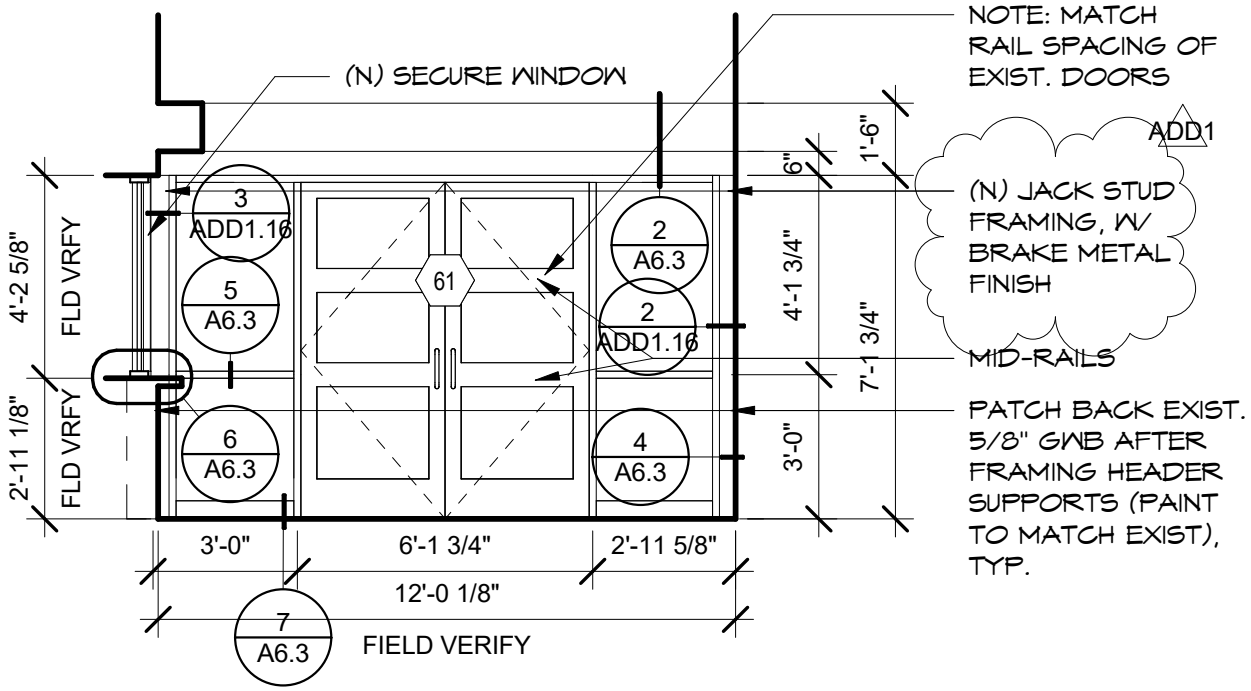

INT. STOREFRONT S. WEST ELEVATION

1 ADD1.16 1/4" = 1'-0"

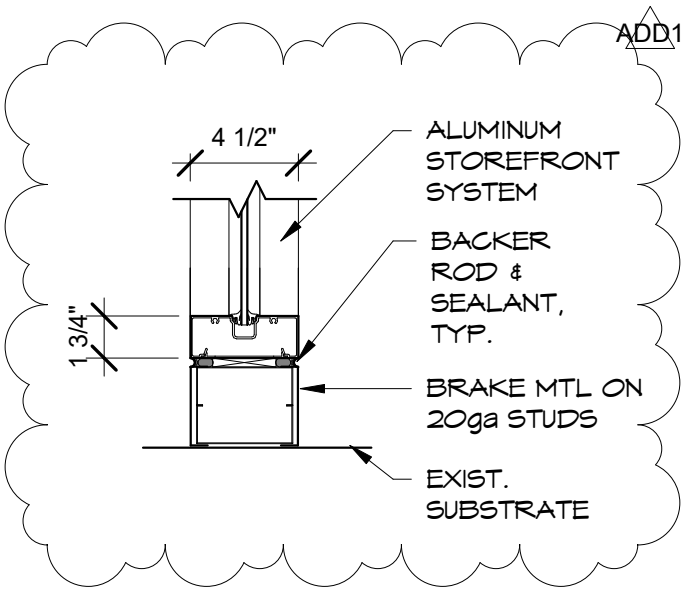

2 JAMB DETAIL

ADD1.16 1 1/2" = 1'-0"

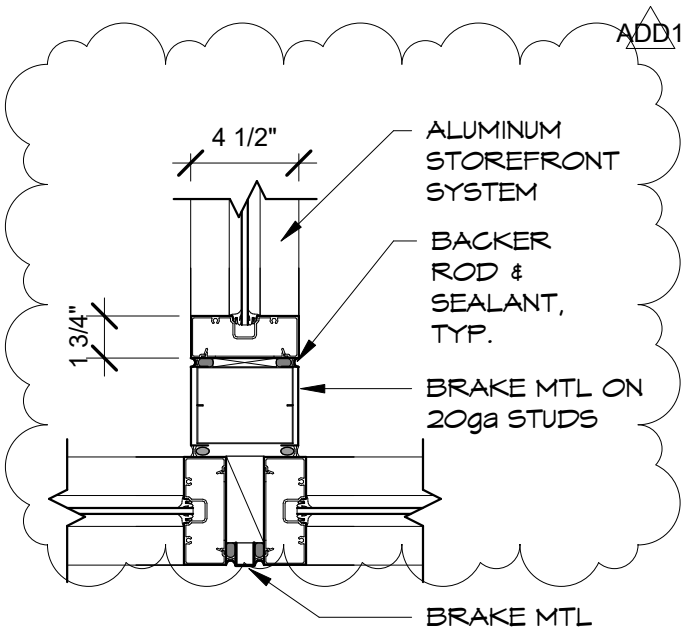

3 JAMB DETAIL

ADD1.16 1 1/2" = 1'-0"

4331 REGISTERED ARCHITECT
CRAIG M. COLLINS
STATE OF WASHINGTON

JAMB DETAIL

LONGVIEW SCHOOL DISTRICT

CASCADE MIDDLE SCHOOL

COLLINS ARCHITECTURAL GROUP, P.S.
950 12th AVE., SUITE 200
LONGVIEW, WA 98632
PHONE: 360-425-0000

Scale: As indicated
Date: 01/19/2023
Project #: 2021-18

ADD1.16

DOOR SCHEDULE

DOOR NO.	SIZE WxHxT	DOOR					FRAME			HARDWARE GROUP	REMARKS
		GLAZING	TYPE	MAT	FINISH	LABEL	TYPE	MAT	FIN		
71	3'-0"x7'-0"x1 3/4"	TEMP	1/A7.3	ALUM	-	-	1/A7.3	ALUM	-	13	1, 2
72	PR 6'-0"x6'-8"x1 3/4"	temp	exist.	alum	-	-	exist.	alum	-	14	1, 2

UPPERCASE = NEW MATERIAL lowercase = existing material

REMARKS:
1. DOOR HAS ELECTRONIC ACCESS CONTROL OR MONITORING
2. POWER SUPPLY REQUIRES 120V AC

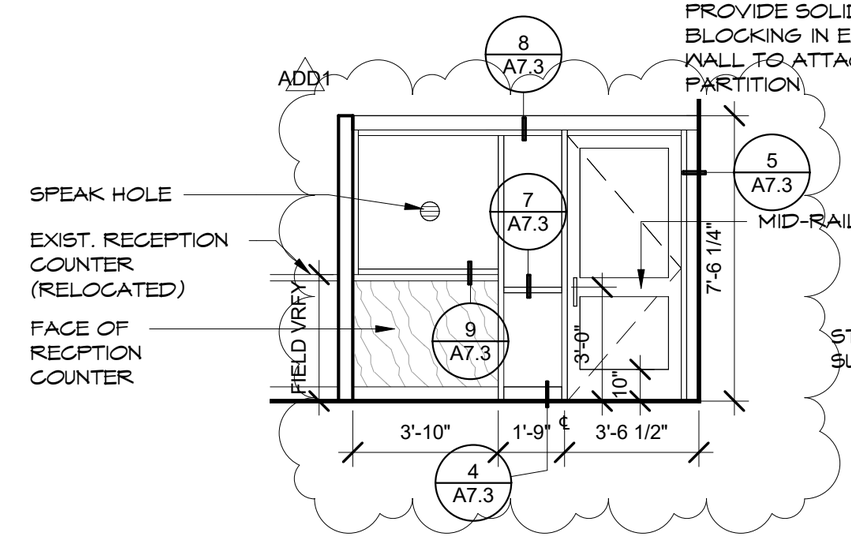

1 A7.3 STOREFRONT ELEVATION SOUTH
1/4" = 1'-0"

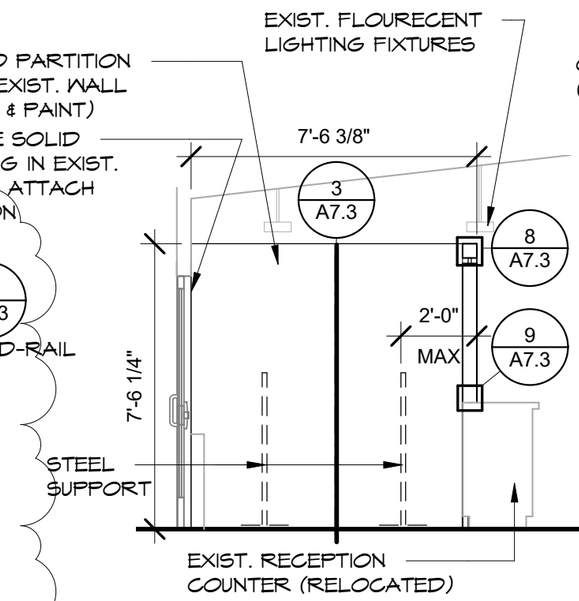

2 A7.3 SF ELEVATION EAST
1/4" = 1'-0"

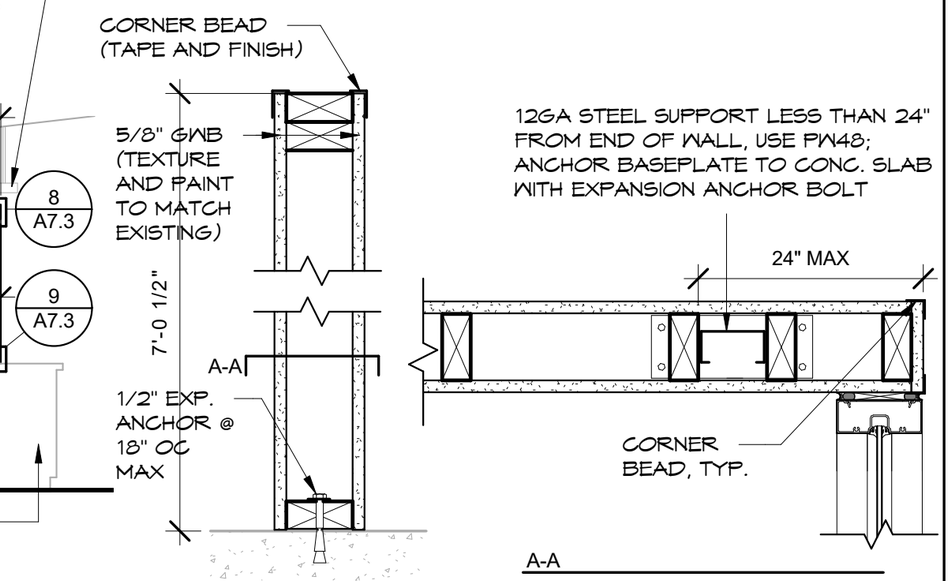

3 A7.3 PARTITION WALL
1 1/2" = 1'-0"

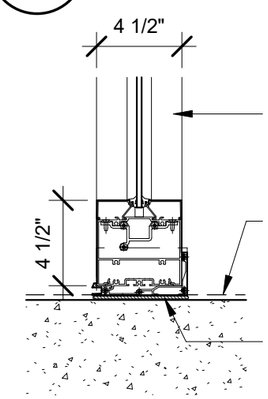

4 A7.3 SF SILL
1 1/2" = 1'-0"

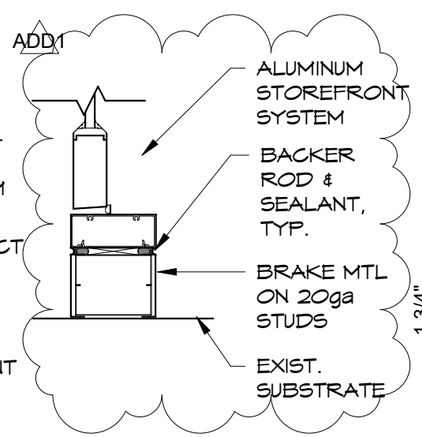

5 A7.3 SF JAMB
1 1/2" = 1'-0"

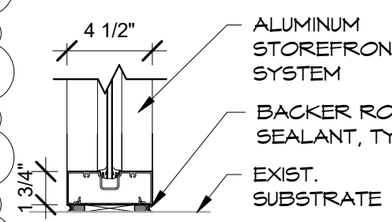

6 A7.3 SF JAMB
1 1/2" = 1'-0"

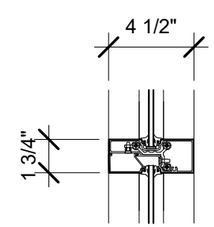

7 A7.3 MULLION
1 1/2" = 1'-0"

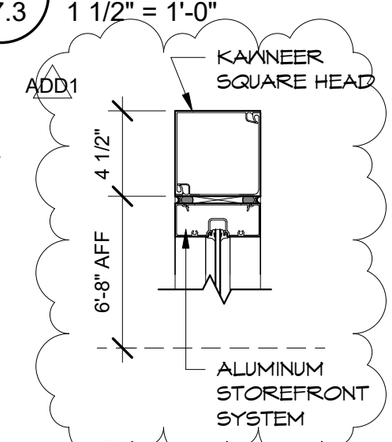

8 A7.3 SF HEAD
1 1/2" = 1'-0"

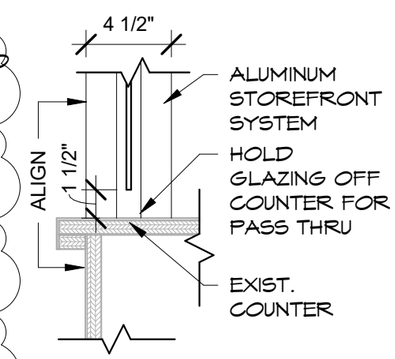

9 A7.3 PASS THRU SILL
1 1/2" = 1'-0"

4331 REGISTERED ARCHITECT
CRAIG M. COLLINS
STATE OF WASHINGTON

Scale As indicated
Date 01/19/2023
Project # 2021-18

COLLINS ARCHITECTURAL GROUP, P.S.
950 12th AVE., SUITE 200
LONGVIEW, WA 98632
PHONE: 360-425-0000

SCHEDULE, ELEVATIONS, & DETAILS

LONGVIEW SCHOOL DISTRICT

COLUMBIA HEIGHTS ELEMENTARY SCHOOL

A7.3