CONNECTICUT DEPARTMENT OF TRANSPORTATION

Plans For

REPLACEMENT OF BRIDGE NO. 04576
PLEASANTVIEW DRIVE
OVER HOCKANUM RIVER

Town of

VERNON

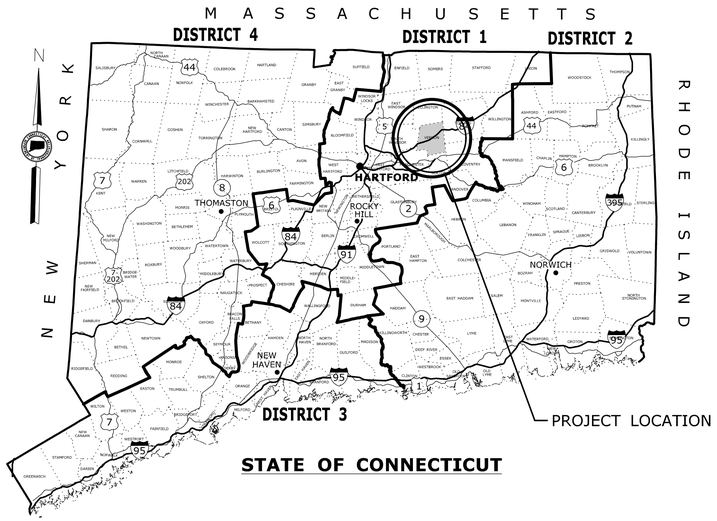

STATE OF CONNECTICUT

ROAD	MAINTENANCE RESPONSIBILITY	LENGTH
PLEASANTVIEW DRIVE	TOWN	190 FEET

F.A.P. #	MAINTENANCE RESPONSIBILITY	PROJECT #
XXXXXXX	TOWN	0146-0200

LOCATION PLAN

NOT TO SCALE

GENERAL NOTES:

1. FEDERAL AID PROJECT NO. XXXXXXXXX
2. CONSTRUCTION SPECIFICATIONS:
   Connecticut Department of Transportation, Standard Specifications for Roads, Bridges and Incidental Construction, Form 817, dated 2016; Supplemental Specifications, dated January 2017; and Special Provisions
3. 400 FOOT GRID BASED ON CONNECTICUT COORDINATE SYSTEM SYSTEM N.A.D. 1927
4. VERTICAL DATUM BASED ON N.A.V.D. OF 1988

ADT: 1020 VPD (2015)
CONNECTICUT D.O.T. CLASSIFICATION: URBAN LOCAL
DESIGN SPEED: 25 MPH

DISCLAIMER

IT IS THE RESPONSIBILITY OF EACH BIDDER AND ALL OTHER INTERESTED PARTIES TO OBTAIN ALL BIDDING RELATED INFORMATION AND DOCUMENTS FROM OFFICAL SOURCES WITHIN THE DEPARTMENT.

PERSONS AND/OR ENTITIES WHICH REPRODUCE AND/OR MAKE SUCH INFORMATION AVAILABLE BY ANY MEANS ARE NOT AUTHORIZED BY THE DEPARTMENT TO DO SO AND MAY BE LIABLE FOR CLAIMS RESULTING FROM THE DISSEMINATION OF UNOFFICAL, INCOMPLETE AND/OR INACCURATE INFORMATION.

LIST OF SUBSETS

SUBSET NO.	SUBSET TITLE	*SUBSET SHEET COUNT
01	GENERAL	2
02	REVISIONS	1
03	HIGHWAYS	7
04	STRUCTURE	21
05	UTILITY	3
06	TRAFFIC	2
	HIGHWAY STANDARD INDEX SHEETS	
	TRAFFIC STANDARD INDEX SHEET	

*THE INITIAL SUBSET SHEET COUNT DOES NOT INCLUDE ADDENDUMS AND CHANGE ORDERS

LIST OF DRAWINGS
SUBSET 01 - GENERAL

DRAWING TITLE	DRAWING NO.
TITLE SHEET	G-01
DETAILED ESTIMATE SHEET	G-02

STANDARD CONVENTIONS

North Arrow W/No. Coor.
Grid Arrow
Edge Of Road
Concrete Pavement
Dirt Road
B.C.L.C.
Granite Curb
Guide Rail
Concrete Median Barrier
Bit. Walk
Conc. Sidewalk
Railroad Tracks
Limit Of Marsh
Stone Wall
Ledge Outcrop
Inland Wetland Limits
STATE LINE
Power Line
Swamp
Building
Transmission Tower
Chain Link Fence
Rustic Fence
Pipe Fence
Board Fence
Water Edge
Stream
Ditch
TOWN LINE
Riprap
Hedge Row
Tree Line
Shrub
Evergreen Tree
Deciduous Tree
Retaining Wall
Highway Line
Street Line
Property Line
Lot Line
Easement Line

Plans For
REPLACEMENT OF BRIDGE NO. 04576
PLEASANTVIEW DRIVE
OVER HOCKANUM RIVER

Town of
VERNON

STATE PROJECT NO.
0146-0200

DRAWING NO.
G-01

SHEET NO.
01.01

H I G H W A Y I T E M S

ITEM NUMBER	0201001	0202000	0202100	0202216	0202529	0205001	0205002	0209001	0211000	0212000	0213100	0219001	0219011	0304002	0406170	0406171	0406236	0406303	0507001	0507006	0586601	0651001	0651011	0651012	0652009	0652010	0703011	0703012	0755009	0815001	0815091	0822001	0910090A	0910091A	0910092A	0912503	0944000	0950005	0950013	0969062A	0970007A	0971001A	0975004	0976002	0978002	0979003	0980001	1131002
ITEM	CLEARING AND GRUBBING	EARTH EXCAVATION	ROCK EXCAVATION	EXCAVATION AND REUSE OF EXISTING CHANNEL BOTTOM MATERIAL	CUT BITUMINOUS CONCRETE PAVEMENT	TRENCH EXCAVATION 0'-4' DEEP	ROCK IN TRENCH EXCAVATION 0'-4' DEEP	FORMATION OF SUBGRADE	ANTI-TRACKING PAD	SUBBASE	GRANULAR FILL	SEDIMENTATION CONTROL SYSTEM	SEDIMENT CONTROL SYSTEM AT CATCH BASIN	PROCESSED AGGREGATE BASE	HMA S1	HMA S0.5	MATERIAL FOR TACK COAT	SAWING AND SEALING JOINTS	TYPE "C" CATCH BASIN	TYPE "C" CATCH BASIN TOP	RESET TYPE "C" CATCH BASIN	BEDDING MATERIAL	12" R.C. PIPE	15" R.C. PIPE	12" R.C. CULVERT END	15" R.C. CULVERT END	INTERMEDIATE RIPRAP	MODIFIED RIPRAP	GEOTEXTILE	BITUMINOUS CONCRETE LIP CURBING	REMOVAL OF BITUMINOUS CONCRETE LIP CURBING	TEMPORARY PRECAST CONCRETE BARRIER CURB	STEEL-BACKED TIMBER GUIDERAIL TYPE A	STEEL-BACKED TIMBER GUIDERAIL - TERMINAL SECTION	STEEL-BACKED TIMBER GUIDERAIL - BRIDGE ATTACHMENT	REMOVE METAL BEAM RAIL	FURNISHING AND PLACING TOPSOIL	TURF ESTABLISHMENT	EROSION CONTROL MATTING	CONSTRUCTION FIELD OFFICE, MEDIUM	TRAFFICPERSON (UNIFORMED FLAGGER)	MAINTENANCE AND PROTECTION OF TRAFFIC	MOBILIZATION AND PROJECT CLOSEOUT	BARRICADE WARNING LIGHTS - HIGH INTENSITY	TRAFFIC DRUM	CONSTRUCTION BARRICADE TYPE III	CONSTRUCTION STAKING	REMOTE CONTROL CHANGEABLE MESSAGE SIGN
UNIT	LS	C.Y.	C.Y.	C.Y.	L.F.	C.Y.	C.Y.	S.Y.	S.Y.	C.Y.	C.Y.	L.F.	EA.	C.Y.	TON	TON	GAL	L.F.	EA.	EA.	EA.	C.Y.	L.F.	L.F.	EA.	EA.	C.Y.	C.Y.	S.Y.	L.F.	L.F.	L.F.	L.F.	EA.	EA.	L.F.	S.Y.	S.Y.	S.Y.	MO.	HR	LS	LS	DAY	EA.	EA.	LS	DAY
PROJECT: 146-200 BRIDGES: 04576	LS	321	80	116	62	55	14	365	175	132	45	464	4	6	80	112	20	194	2	2	2	10	68	68	1	1	211	4	16	220	276	42	40	4	4	207	228	228	30	6	105	LS	LS	756	74	5	LS	15
SUBTOTAL	LS	321	80	116	62	55	14	365	175	132	45	464	4	6	80	112	20	194	2	2	2	10	68	68	1	1	211	4	16	220	276	42	40	4	4	207	228	228	30	6	105	LS	LS	756	74	5	LS	15
UNASSIGNED																																																
TOTAL	LS	321	80	116	62	55	14	365	175	132	45	464	4	6	80	112	20	194	2	2	2	10	68	68	1	1	211	4	16	220	276	42	40	4	4	207	228	228	30	6	105	LS	LS	756	74	5	LS	15

S T R U C T U R E I T E M S

ITEM NUMBER	1206023A	1208928	1220027	1400124A	1408455A		0203202	0203304	0204001	0204151A	0216000	0406173	0503866A	0514228	0520036A	0521001	0601016A	0601201	0601276A	0601504	0602006	0702026	0702027	0702028	0702029	0707009A	0708001	0904051A	0974001
ITEM	REMOVAL AND RELOCATION OF EXISTING SIGNS	SIGN FACE - SHEET ALUMINUM (TYPE III REFLECTIVE SHEETING)	CONSTRUCTION SIGNS	CONCRETE ENCASED 12" POLYVINYL CHLORIDE PIPE (SANITARY SEWER)	TEMPORARY SANITARY SEWER BYPASS		STRUCTURE EXCAVATION-EARTH (EXCLUDING COFFERDAM AND DEWATERING)	STRUCTURE EXCAVATION - ROCK (EXCLUDING COFFERDAM & DEWATERING)	COFFERDAM AND DEWATERING	HANDLING WATER	PERVIOUS STRUCTURE BACKFILL	HMA S0.25	REMOVAL OF EXISTING CULVERT (SITE NO. 1)	PRESTRESSED DECK UNITS (4'-0" X 1'-9")	ASPHALTIC PLUG EXPANSION JOINT SYSTEM	ELASTOMERIC BEARING PADS	PRECAST APPROACH SLAB	CLASS "F" CONCRETE	PRECAST SUBSTRUCTURE ELEMENTS	1" PREFORMED EXPANSION JOINT FILLER FOR BRIDGES	DEFORMED STEEL BARS - EPOXY COATED	MICROPILES	VERIFICATION TEST FOR MICROPILES	PROOF TEST FOR MICROPILES	MICROPILE LENGTH ADJUSTMENT	MEMBRANE WATERPROOFING (COLD LIQUID ELASTOMERIC)	DAMPPROOFING	3 TUBE CURB MOUNTED BRIDGE RAIL	REMOVAL OF EXISTING MASONRY
UNIT	LS	S.F.	S.F.	L.F.	LS		C.Y.	C.Y.	L.F.	LS	C.Y.	TON	LS	L.F.	C.F.	C.I.	S.Y.	C.Y.	C.Y.	S.F.	LB.	EA.	EA.	EA.	L.F.	S.Y.	S.Y.	L.F.	C.Y.
PROJECT: 146-200 BRIDGES: 04576	LS	3	175	70	LS		100	390	300	LS	145	16	LS	420	26	1944	145	101	137	310	5000	52	1	2	146	275	70	130	60
SUBTOTAL	LS	3	175	70	LS		100	390	300	LS	145	16	LS	420	26	1944	145	101	137	310	5000	52	1	2	146	275	70	130	60
UNASSIGNED																													
TOTAL	LS	3	175	70	LS		100	390	300	LS	145	16	LS	420	26	1944	145	101	137	310	5000	52	1	2	146	275	70	130	60

REV.	DATE	REVISION DESCRIPTION	SHEET NO.
-	-	-	-
-	-	-	-
-	-	-	-
-	-	-	-
-	-	-	-
-	-	-	-

THE INFORMATION, INCLUDING ESTIMATED QUANTITIES OF WORK, SHOWN ON THESE SHEETS IS BASED ON LIMITED INVESTIGATIONS BY THE STATE AND IS IN NO WAY WARRANTED TO INDICATE THE CONDITIONS OF ACTUAL QUANTITIES OF WORK WHICH WILL BE REQUIRED.

Plotted Date: 5/19/2017

DESIGNER/DRAFTER: **JRA**

CHECKED BY: **AML**

STATE OF CONNECTICUT
DEPARTMENT OF TRANSPORTATION

Filename: ...\HW_MSH_146-200_EST.dgn

SIGNATURE/ BLOCK:

PROJECT TITLE:
REPLACEMENT OF BRIDGE NO. 04576 PLEASANTVIEW DRIVE OVER HOCKANUM RIVER

TOWN: **VERNON**

DRAWING TITLE:
DETAILED ESTIMATE SHEET

PROJECT NO. **146-200**

DRAWING NO. **G-02**

SHEET NO. **01.02**

REV. No.	SHEET No.	DATE mm/dd/yy	NEW	REV.	DEL.	DESCRIPTION	BY	REV. No.	SHEET No.	DATE mm/dd/yy	NEW	REV.	DEL.	DESCRIPTION	BY	REV. No.	SHEET No.	DATE mm/dd/yy	NEW	REV.	DEL.	DESCRIPTION	BY

SEMI FINAL DESIGN REVIEW

REV.	DATE	REVISION DESCRIPTION	SHEET NO.

THE INFORMATION, INCLUDING ESTIMATED QUANTITIES OF WORK, SHOWN ON THESE SHEETS IS BASED ON LIMITED INVESTIGATIONS BY THE STATE AND IS IN NO WAY WARRANTED TO INDICATE THE CONDITIONS OF ACTUAL QUANTITIES OF WORK WHICH WILL BE REQUIRED.

Plotted Date: 10/7/2011

DESIGNER/DRAFTER: JRA

CHECKED BY: AML

SCALE AS NOTED

STATE OF CONNECTICUT
DEPARTMENT OF TRANSPORTATION

Filename: ...\New_Revision_Sheet.dgn

SIGNATURE BLOCK:

PROJECT TITLE:
REPLACEMENT OF BRIDGE NO. 04576 PLEASANTVIEW DRIVE OVER HOCKANUM RIVER

TOWN: **VERNON**

DRAWING TITLE:
LIST OF REVISIONS

PROJECT NO. **146-200**

DRAWING NO. **REV-1**

SHEET NO. **02.01**

03 - HIGHWAYS
INDEX OF DRAWINGS

DRAWING NUMBER	DRAWING TITLE	DRAWING NUMBER	DRAWING TITLE
HWY-01	INDEX OF DRAWINGS		
TYP-01	TYPICAL SECTIONS		
ALN-01	ALIGNMENT PLAN		
PLN-01	ROADWAY PLAN		
PRO-01	PROFILE		
XSC-01	CROSS SECTIONS		
XSC-02	CROSS SECTIONS		

DESIGNED BY:
Stantec
STANTEC CONSULTING SERVICES INC.
55 CHURCH STREET, SUITE 601
NEW HAVEN, CT 06510

SEMI FINAL DESIGN REVIEW

REV.	DATE	REVISION DESCRIPTION	SHEET NO.

THE INFORMATION, INCLUDING ESTIMATED QUANTITIES OF WORK, SHOWN ON THESE SHEETS IS BASED ON LIMITED INVESTIGATIONS BY THE STATE AND IS IN NO WAY WARRANTED TO INDICATE THE CONDITIONS OF ACTUAL QUANTITIES OF WORK WHICH WILL BE REQUIRED.

Plotted Date: 5/19/2017

DESIGNER/DRAFTER: **JRA**
CHECKED BY: **ADC**
SCALE AS NOTED

STATE OF CONNECTICUT
DEPARTMENT OF TRANSPORTATION

Filename: ...\HWY-01_INDEX OF DRAWINGS.dgn

SIGNATURE/ BLOCK:

PROJECT TITLE:
REPLACEMENT OF BRIDGE NO. 04576 PLEASANTVIEW DRIVE OVER HOCKANUM RIVER

TOWN: **VERNON**

DRAWING TITLE: **INDEX OF DRAWINGS**

PROJECT NO. **146-200**
DRAWING NO. **HWY-01**
SHEET NO. **03.01**

TYPICAL SECTIONS

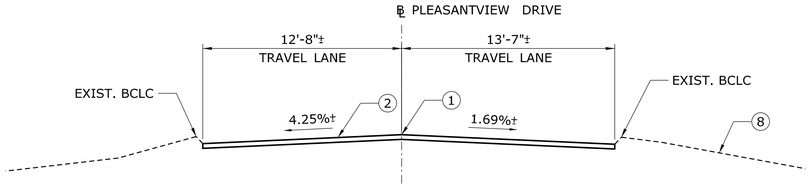

EXISTING ROADWAY SECTION
END PROJ. NO. 146-0200
STA. 12+50.00
MATCH EXISTING
NOT TO SCALE

STA. 11+15.31 TO STA. 11+96.88
SEE STRUCTURE SHEETS
NOT TO SCALE

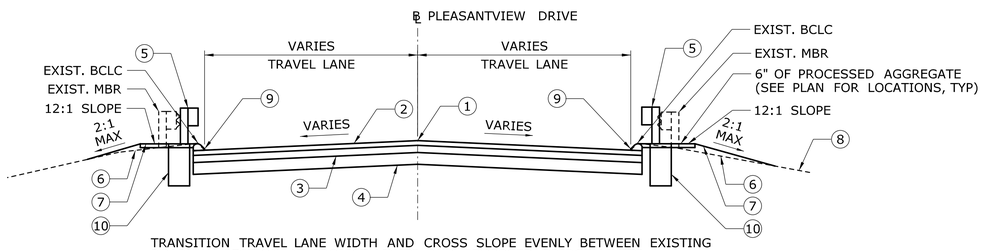

TRANSITION TRAVEL LANE WIDTH AND CROSS SLOPE EVENLY BETWEEN EXISTING ROADWAY SECTION AT PROJECT LIMITS AND PROPOSED BRIDGE LIMITS.

PROPOSED ROADWAY TRANSITION SECTION
STA. 10+60.00 TO STA. 11+15.31
AND
STA. 11+96.88 TO STA. 12+50.00
NOT TO SCALE

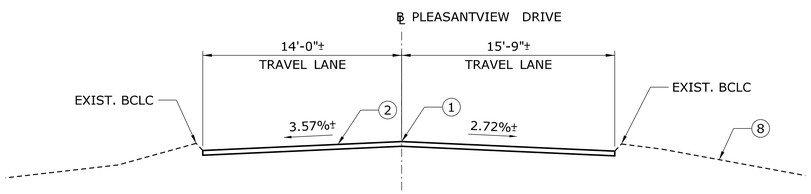

EXISTING ROADWAY SECTION
BEGIN PROJ. NO. 146-0200
STA. 10+60.00
MATCH EXISTING
NOT TO SCALE

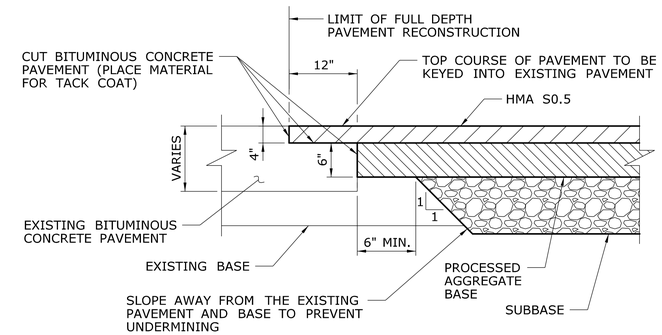

TRANSVERSE PAVEMENT TRANSITION DETAIL FOR
PLACEMENT AT EXISTING PAVEMENT
NOT TO SCALE

NOTE: THERE SHALL BE NO DIRECT PAYMENT FOR THE WORK ASSOCIATED WITH KEYING THE NEW PAVEMENT INTO THE EXISTING PAVEMENT, INCLUDING THE LOWER SAWCUT(S) AND PLACEMENT OF MATERIAL FOR TACK COAT. THE COST SHALL BE INCLUDED IN THE OTHER BID ITEMS. ALL WORK SHALL MEET THE APPROVAL OF THE ENGINEER.

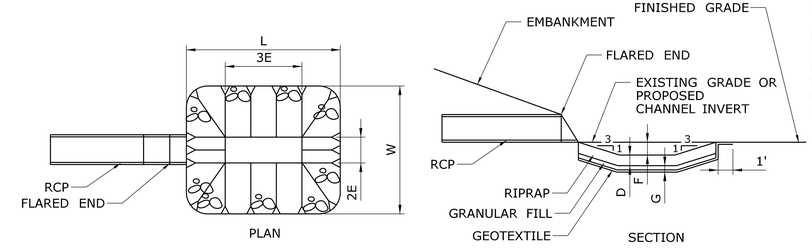

SCOUR HOLE #1/2

Do = 15" = E
W = 6'
L = 8'
D = 12" MODIFIED RIPRAP
F = 7.5"
G = 6"

PREFORMED SCOUR HOLE
NOT TO SCALE

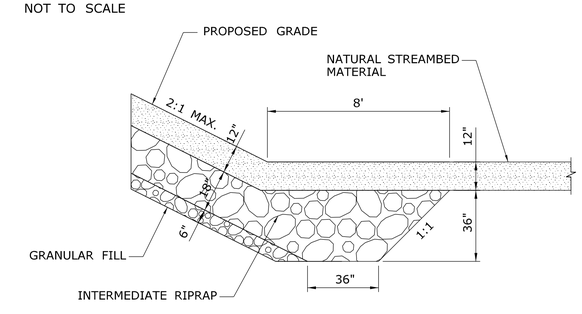

RIPRAP FOR SLOPE PROTECTION
NOT TO SCALE

LEGEND

1. POINT OF APPLICATION OF GRADE
2. 4" HMA S0.5 TRAFFIC LEVEL 2 (PLACED IN TWO EQUAL LIFTS)
3. 4" HMA S1.0 TRAFFIC LEVEL 2 (PLACED IN A SINGLE LIFT)
4. 12" SUBBASE
5. MERRITT PARKWAY GUIDERAIL (AS SHOWN ON PLANS)
6. 4" TOPSOIL AND TURF ESTABLISHMENT
7. EROSION CONTROL MATTING
8. EXISTING GRADE
9. BITUMINOUS CONCRETE LIP CURBING (AS SHOWN ON PLANS)
10. 20" DIA. HOLE WITH 6" LIFTS OF PROCESSED AGGREGATE

SEMI FINAL DESIGN REVIEW

REV.	DATE	REVISION DESCRIPTION	SHEET NO.

THE INFORMATION, INCLUDING ESTIMATED QUANTITIES OF WORK, SHOWN ON THESE SHEETS IS BASED ON LIMITED INVESTIGATIONS BY THE STATE AND IS IN NO WAY WARRANTED TO INDICATE THE CONDITIONS OF ACTUAL QUANTITIES OF WORK WHICH WILL BE REQUIRED.

Plotted Date: 5/19/2017

DESIGNER/DRAFTER: JJF
CHECKED BY: ADC
SCALE AS NOTED

STATE OF CONNECTICUT
DEPARTMENT OF TRANSPORTATION

Filename: ...\TYP-01_TYPICAL SECTIONS.dgn

SIGNATURE/
BLOCK:

PROJECT TITLE:
REPLACEMENT OF BRIDGE NO. 04576 PLEASANTVIEW DRIVE OVER HOCKANUM RIVER

TOWN: **VERNON**

DRAWING TITLE: **TYPICAL SECTION**

PROJECT NO. **146-200**
DRAWING NO. **TYP-01**
SHEET NO. **03.02**

PLEASANTVIEW DRIVE

CURVE NO. 1

R = 300.00'
L = 17.32'
DELTA = 03° 28' 28.76"
P.I. N 864180.66, E 1068964.94

PLEASANTVIEW DRIVE

CURVE NO. 2

R = 100.00'
L = 96.13'
DELTA = 22° 11' 24.34"
P.I. N 864153.30, E 1069044.21

LEGEND:

(A) — EASEMENT TO INSTALL, CONSTRUCT, AND MAINTAIN GUIDERAIL AND END ANCHORAGE REQUIRED.

(B) — DRAINAGE RIGHT OF WAY REQUIRED

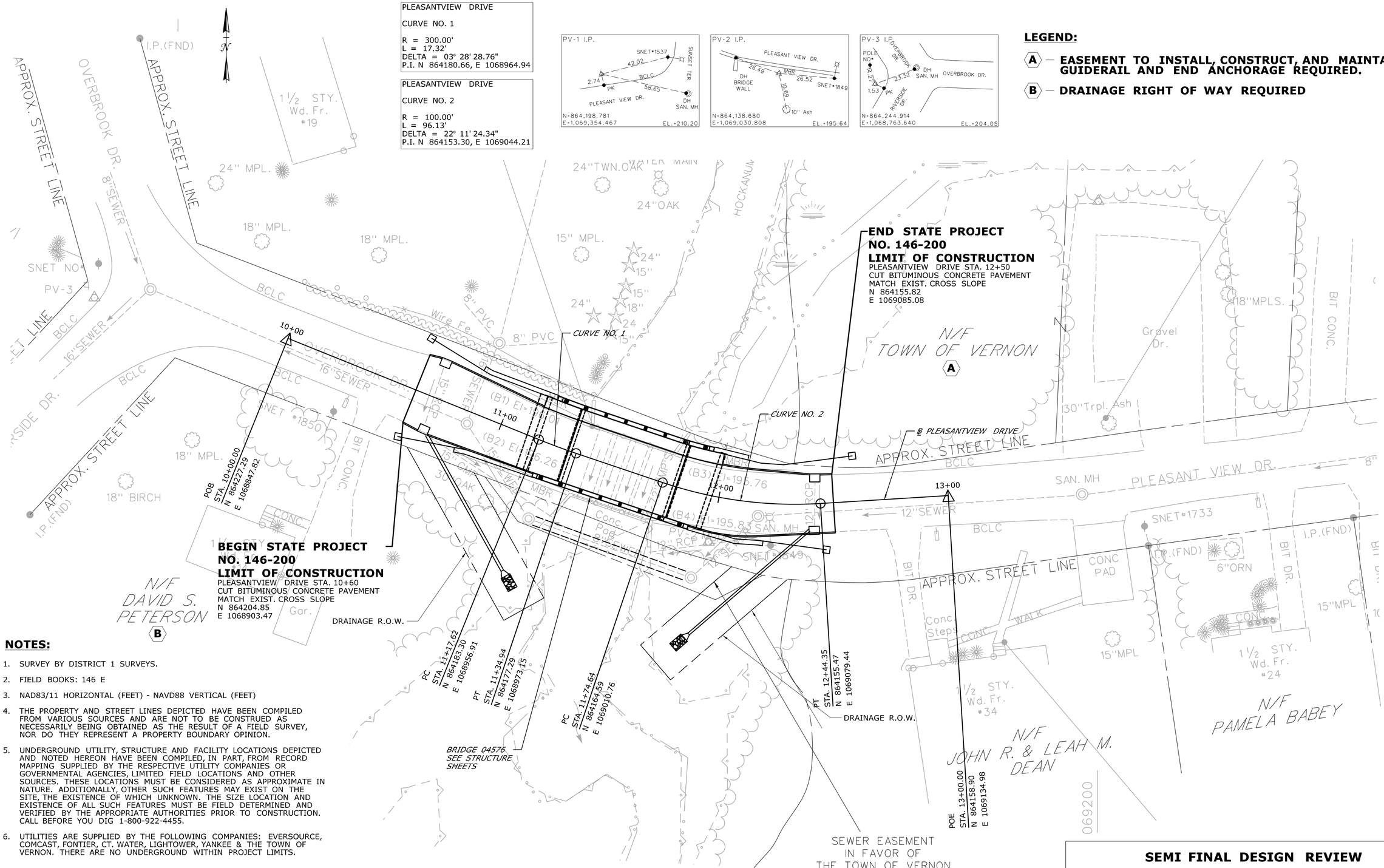

NOTES:

1. SURVEY BY DISTRICT 1 SURVEYS.
2. FIELD BOOKS: 146 E
3. NAD83/11 HORIZONTAL (FEET) - NAVD88 VERTICAL (FEET)
4. THE PROPERTY AND STREET LINES DEPICTED HAVE BEEN COMPILED FROM VARIOUS SOURCES AND ARE NOT TO BE CONSTRUED AS NECESSARILY BEING OBTAINED AS THE RESULT OF A FIELD SURVEY, NOR DO THEY REPRESENT A PROPERTY BOUNDARY OPINION.
5. UNDERGROUND UTILITY, STRUCTURE AND FACILITY LOCATIONS DEPICTED AND NOTED HEREON HAVE BEEN COMPILED, IN PART, FROM RECORD MAPPING SUPPLIED BY THE RESPECTIVE UTILITY COMPANIES OR GOVERNMENTAL AGENCIES, LIMITED FIELD LOCATIONS AND OTHER SOURCES. THESE LOCATIONS MUST BE CONSIDERED AS APPROXIMATE IN NATURE. ADDITIONALLY, OTHER SUCH FEATURES MAY EXIST ON THE SITE, THE EXISTENCE OF WHICH UNKNOWN. THE SIZE LOCATION AND EXISTENCE OF ALL SUCH FEATURES MUST BE FIELD DETERMINED AND VERIFIED BY THE APPROPRIATE AUTHORITIES PRIOR TO CONSTRUCTION. CALL BEFORE YOU DIG 1-800-922-4455.
6. UTILITIES ARE SUPPLIED BY THE FOLLOWING COMPANIES: EVERSOURCE, COMCAST, FONTIER, CT. WATER, LIGHTOWER, YANKEE & THE TOWN OF VERNON. THERE ARE NO UNDERGROUND WITHIN PROJECT LIMITS.

SEMI FINAL DESIGN REVIEW

REV.	DATE	REVISION DESCRIPTION	SHEET NO.

THE INFORMATION, INCLUDING ESTIMATED QUANTITIES OF WORK, SHOWN ON THESE SHEETS IS BASED ON LIMITED INVESTIGATIONS BY THE STATE AND IS IN NO WAY WARRANTED TO INDICATE THE CONDITIONS OF ACTUAL QUANTITIES OF WORK WHICH WILL BE REQUIRED.

Plotted Date: 5/19/2017

DESIGNER/DRAFTER: JRA
CHECKED BY: ADC
SCALE IN FEET
0 20 40
SCALE 1"=20'

STATE OF CONNECTICUT
DEPARTMENT OF TRANSPORTATION

Filename: ...\ALN-01_ALIGNMENT PLAN.dgn

SIGNATURE/ BLOCK:

PROJECT TITLE: REPLACEMENT OF BRIDGE NO. 04576 PLEASANTVIEW DRIVE OVER HOCKANUM RIVER

TOWN: VERNON

DRAWING TITLE: ALIGNMENT PLAN

PROJECT NO. 146-200
DRAWING NO. ALN-01
SHEET NO. 03.03

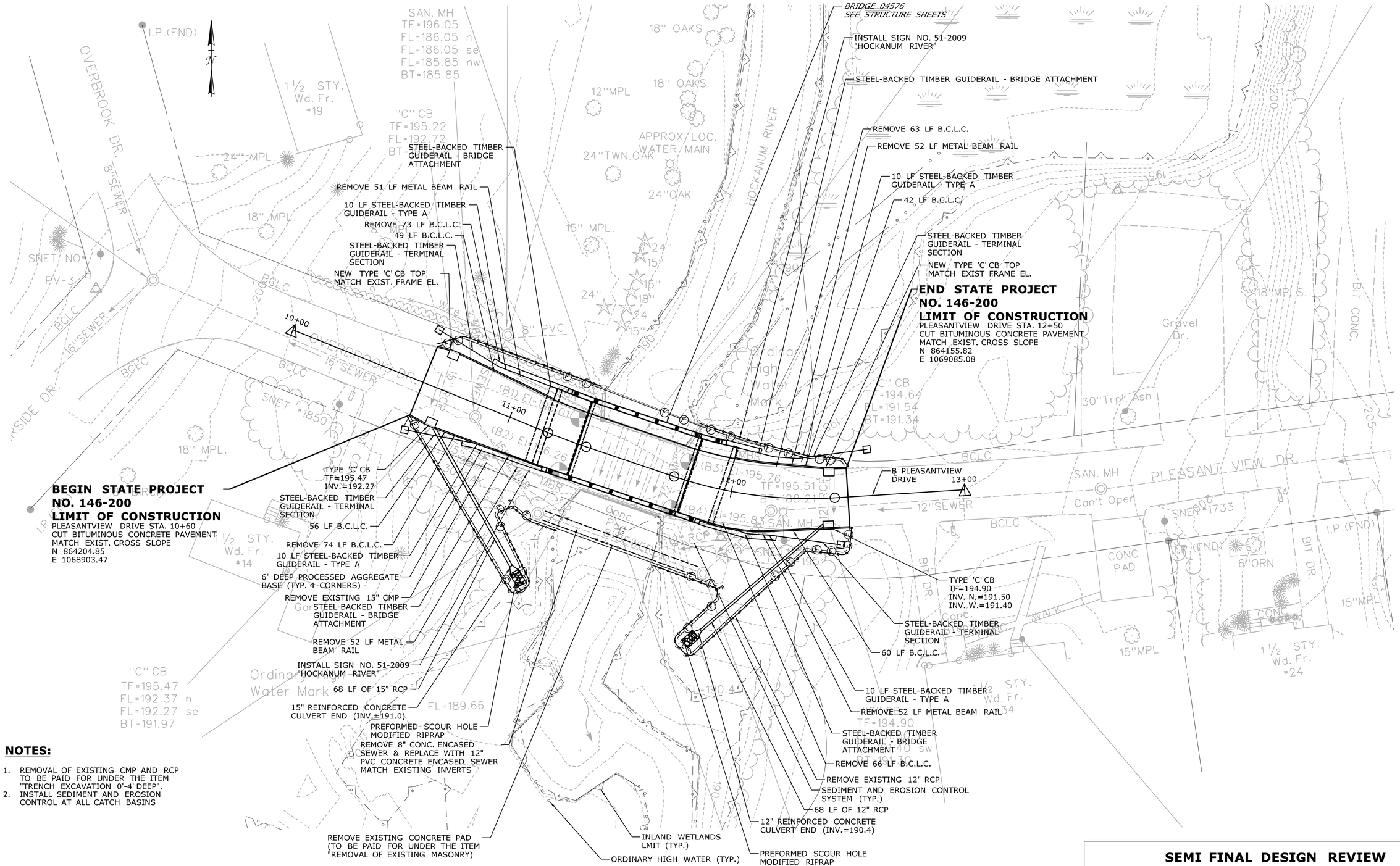

NOTES:

1. REMOVAL OF EXISTING CMP AND RCP TO BE PAID FOR UNDER THE ITEM "TRENCH EXCAVATION 0'-4' DEEP".
2. INSTALL SEDIMENT AND EROSION CONTROL AT ALL CATCH BASINS

SEMI FINAL DESIGN REVIEW

REV.	DATE	REVISION DESCRIPTION	SHEET NO.

THE INFORMATION, INCLUDING ESTIMATED QUANTITIES OF WORK, SHOWN ON THESE SHEETS IS BASED ON LIMITED INVESTIGATIONS BY THE STATE AND IS IN NO WAY WARRANTED TO INDICATE THE CONDITIONS OF ACTUAL QUANTITIES OF WORK WHICH WILL BE REQUIRED.

Plotted Date: 5/19/2017

DESIGNER/DRAFTER: JRA
CHECKED BY: ADC
SCALE IN FEET 0 20 40
SCALE 1"=20'

STATE OF CONNECTICUT
DEPARTMENT OF TRANSPORTATION

Filename: ...\PLN-01_ROADWAY PLAN.dgn

SIGNATURE/ BLOCK:

PROJECT TITLE: REPLACEMENT OF BRIDGE NO. 04576 PLEASANTVIEW DRIVE OVER HOCKANUM RIVER

TOWN: VERNON

DRAWING TITLE: ROADWAY PLAN

PROJECT NO. 146-200
DRAWING NO. PLN-01
SHEET NO. 03.04

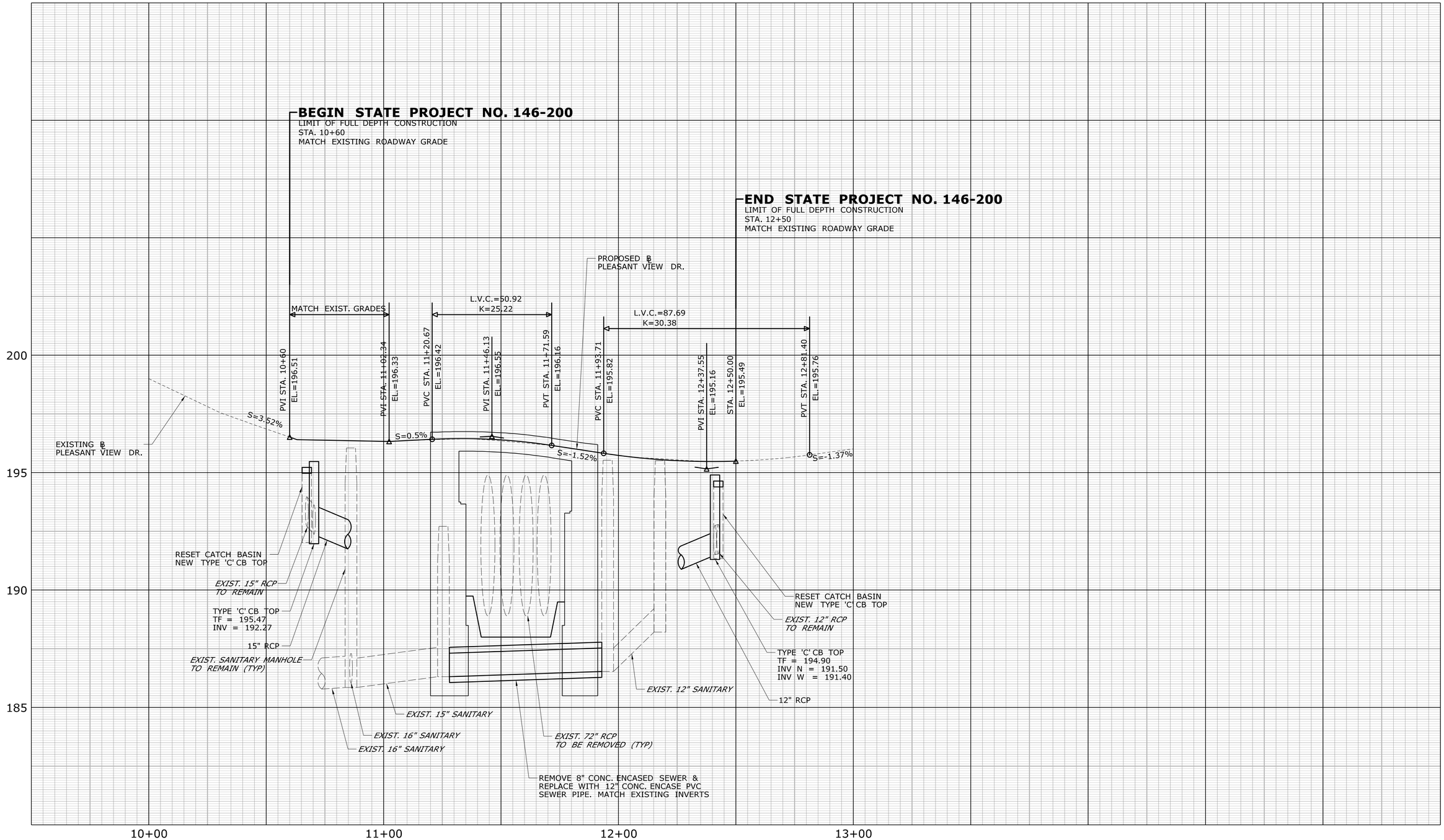

REV.	DATE	REVISION DESCRIPTION	SHEET NO.

THE INFORMATION, INCLUDING ESTIMATED QUANTITIES OF WORK, SHOWN ON THESE SHEETS IS BASED ON LIMITED INVESTIGATIONS BY THE STATE AND IS IN NO WAY WARRANTED TO INDICATE THE CONDITIONS OF ACTUAL QUANTITIES OF WORK WHICH WILL BE REQUIRED.

Plotted Date: 5/19/2017

DESIGNER/DRAFTER: **KG**

CHECKED BY: **ADC**

HORIZ. SCALE IN FEET 0 20 40

VERT. SCALE IN FEET 0 2 4

STATE OF CONNECTICUT
DEPARTMENT OF TRANSPORTATION

Filename: ...\Highways\PRO-01_PROFILE.dgn

SIGNATURE/
BLOCK:

PROJECT TITLE:
REPLACEMENT OF BRIDGE NO. 04576 PLEASANTVIEW DRIVE OVER HOCKANUM RIVER

TOWN: **VERNON**

DRAWING TITLE: **PROFILE**

PROJECT NO. **146-200**

DRAWING NO. **PRO-01**

SHEET NO. **03.05**

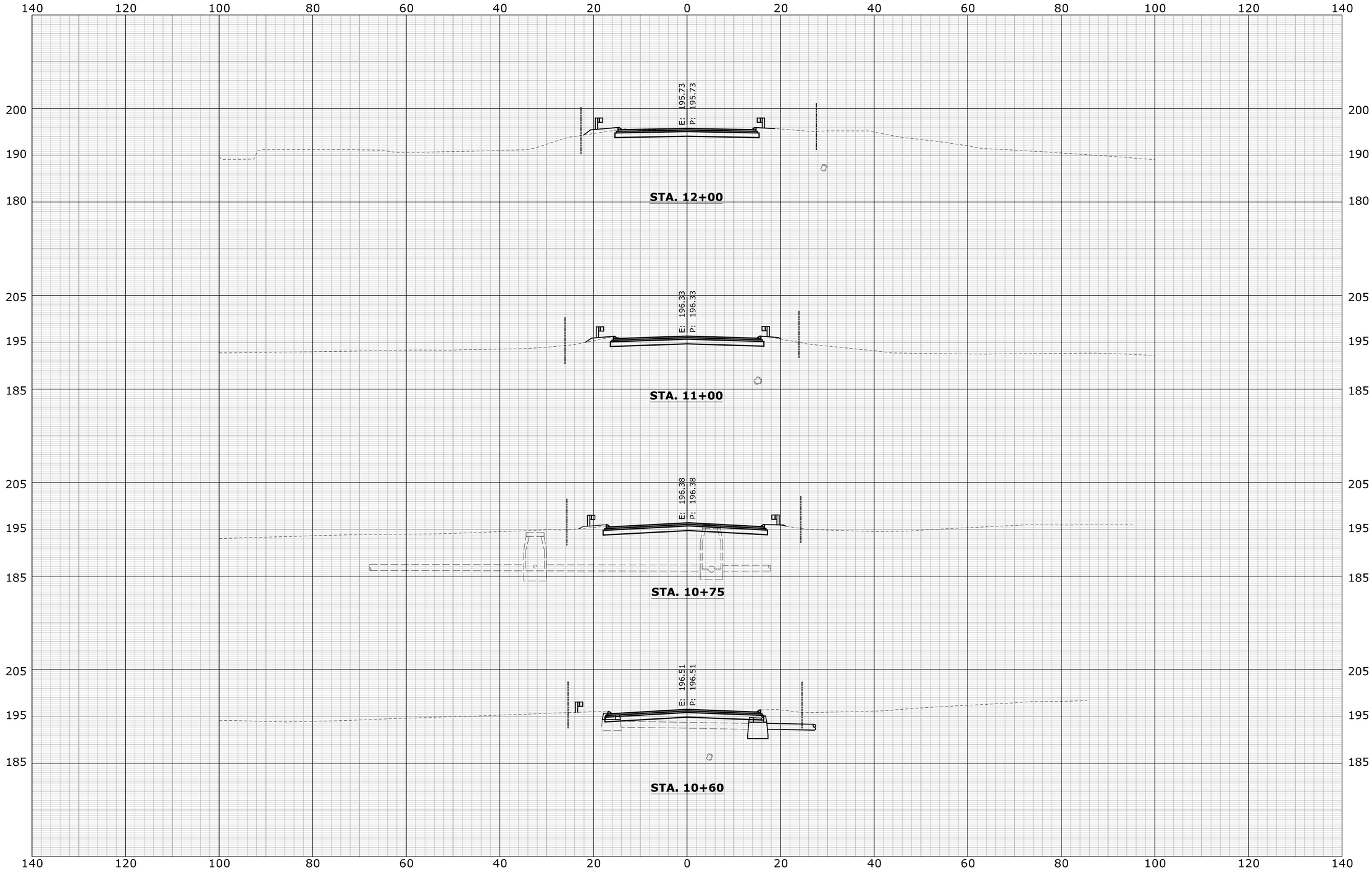

REV.	DATE	REVISION DESCRIPTION	SHEET NO.

THE INFORMATION, INCLUDING ESTIMATED QUANTITIES OF WORK, SHOWN ON THESE SHEETS IS BASED ON LIMITED INVESTIGATIONS BY THE STATE AND IS IN NO WAY WARRANTED TO INDICATE THE CONDITIONS OF ACTUAL QUANTITIES OF WORK WHICH WILL BE REQUIRED.

Plotted Date: 5/19/2017

DESIGNER/DRAFTER: **KG**

CHECKED BY: **ADC**

SCALE IN FEET

0 10 20

SCALE 1" = 10'

STATE OF CONNECTICUT
DEPARTMENT OF TRANSPORTATION

Filename: ...\XSC-01_CROSS SECTIONS.dgn

SIGNATURE/
BLOCK:

PROJECT TITLE:
REPLACEMENT OF BRIDGE NO. 04576 PLEASANTVIEW DRIVE OVER HOCKANUM RIVER

TOWN: **VERNON**

DRAWING TITLE: **CROSS SECTIONS**

PROJECT NO. **146-200**

DRAWING NO. **XSC-01**

SHEET NO. **03.06**

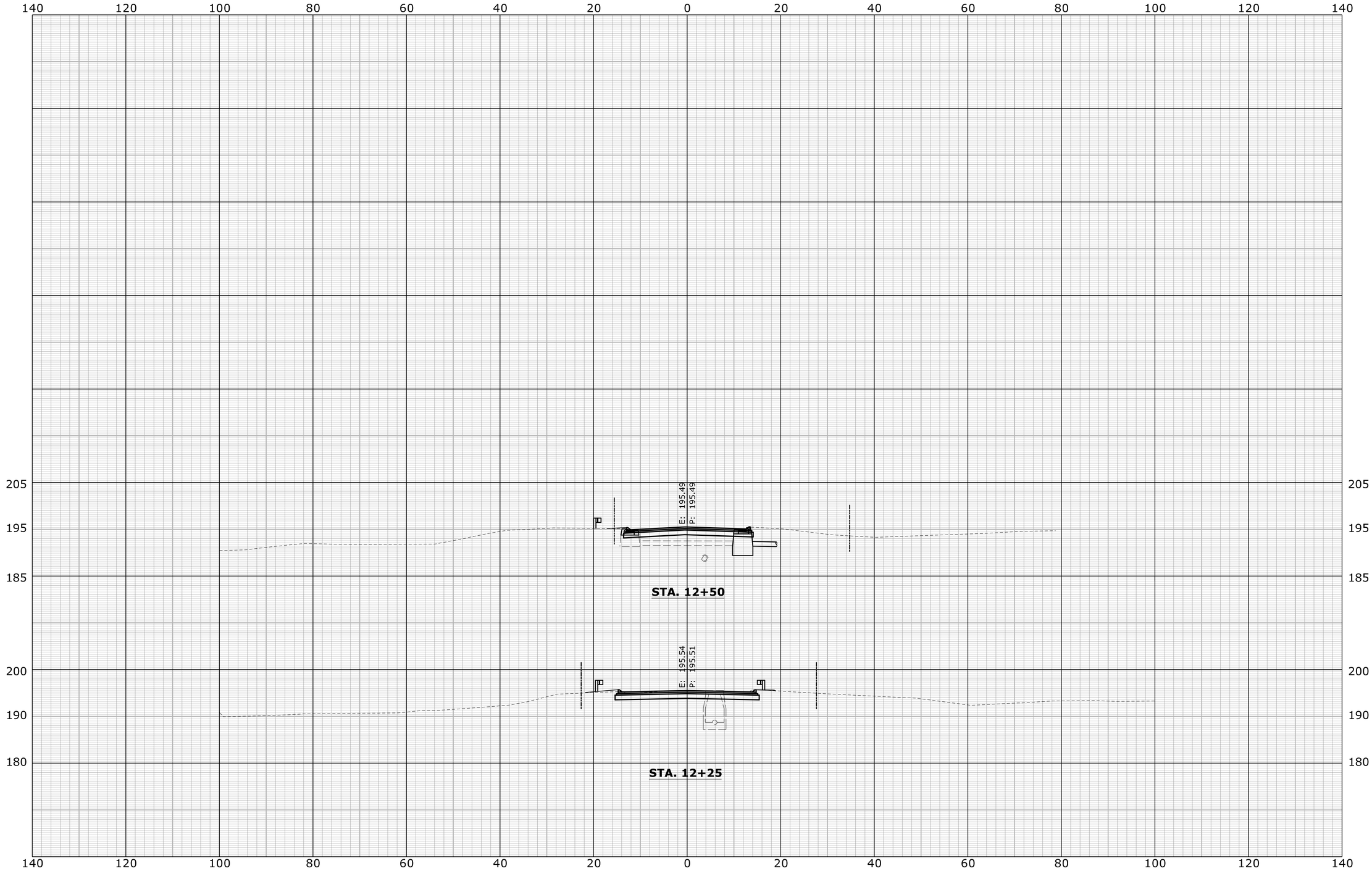

REV.	DATE	REVISION DESCRIPTION	SHEET NO.

THE INFORMATION, INCLUDING ESTIMATED QUANTITIES OF WORK, SHOWN ON THESE SHEETS IS BASED ON LIMITED INVESTIGATIONS BY THE STATE AND IS IN NO WAY WARRANTED TO INDICATE THE CONDITIONS OF ACTUAL QUANTITIES OF WORK WHICH WILL BE REQUIRED.

Plotted Date: 5/19/2017

DESIGNER/DRAFTER: **KG**

CHECKED BY: **ADC**

SCALE IN FEET 0 10 20

SCALE 1" = 10'

STATE OF CONNECTICUT
DEPARTMENT OF TRANSPORTATION

Filename: ...\XSC-02_CROSS_SECTIONS.dgn

SIGNATURE/ BLOCK:

PROJECT TITLE:
REPLACEMENT OF BRIDGE NO. 04576 PLEASANTVIEW DRIVE OVER HOCKANUM RIVER

TOWN: **VERNON**

DRAWING TITLE: **CROSS SECTIONS**

PROJECT NO. **146-200**

DRAWING NO. **XSC-02**

SHEET NO. **03.07**

04 - STRUCTURES
INDEX OF DRAWINGS

DRAWING NUMBER	DRAWING TITLE	DRAWING NUMBER	DRAWING TITLE
S-01	INDEX OF DRAWINGS	S-21	PRECAST CONCRETE ELEMENT TOLERANCES
S-02	GENERAL PLAN		
S-03	GENERAL NOTES & QUANTITIES		
S-04	BORING LOGS - 1		
S-05	BORING LOGS - 2		
S-06	DEWATERING PLAN		
S-07	MICROPILE LAYOUT PLAN & DETAILS		
S-08	ABUTMENT 1		
S-09	ABUTMENT 2		
S-10	ABUTMENT DETAILS		
S-11	WINGWALL DETAILS		
S-12	FOOTING DETAILS		
S-13	FRAMING PLAN		
S-14	BEAM DETAILS - 1		
S-15	BEAM DETAILS - 2		
S-16	DECK PLAN		
S-17	DECK ELEVATIONS		
S-18	DECK & JOINT DETAILS		
S-19	APPROACH SLAB DETAILS		
S-20	RAILING DETAILS		

DESIGNED BY:
Stantec
STANTEC CONSULTING SERVICES INC.
55 CHURCH STREET, SUITE 601
NEW HAVEN, CT 06510

SEMI FINAL DESIGN REVIEW

REV.	DATE	REVISION DESCRIPTION	SHEET NO.

THE INFORMATION, INCLUDING ESTIMATED QUANTITIES OF WORK, SHOWN ON THESE SHEETS IS BASED ON LIMITED INVESTIGATIONS BY THE STATE AND IS IN NO WAY WARRANTED TO INDICATE THE CONDITIONS OF ACTUAL QUANTITIES OF WORK WHICH WILL BE REQUIRED.

Plotted Date: 5/19/2017

DESIGNER/DRAFTER: **JMB**
CHECKED BY: **AML**

STATE OF CONNECTICUT
DEPARTMENT OF TRANSPORTATION

Filename: ...\S-01_INDEX OF DRAWINGS.dgn

SIGNATURE/ BLOCK:

PROJECT TITLE:
REPLACEMENT OF BRIDGE NO. 04576 PLEASANTVIEW DRIVE OVER HOCKANUM RIVER

TOWN: **VERNON**

DRAWING TITLE: **INDEX OF DRAWINGS**

PROJECT NO. **146-200**
DRAWING NO. **S-01**
SHEET NO. **04.01**

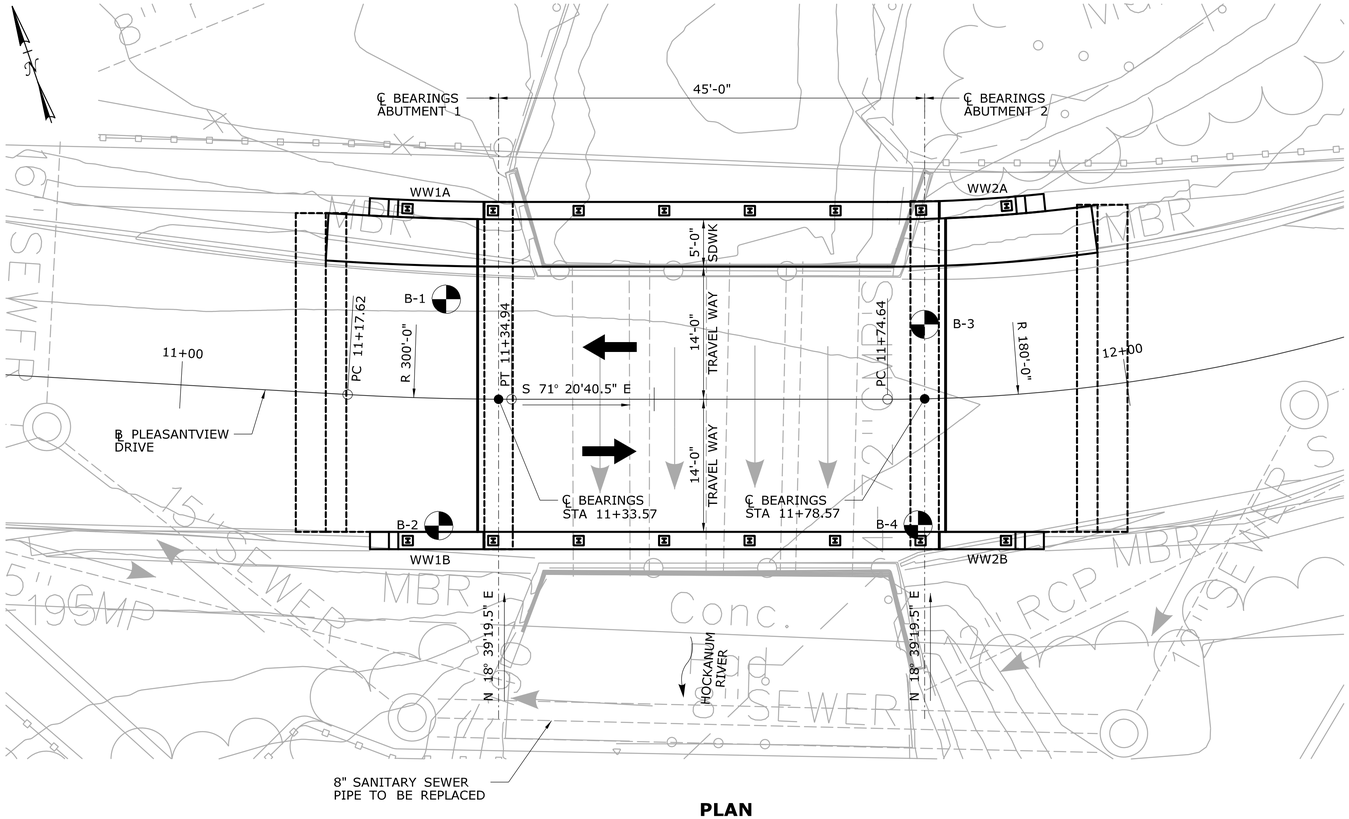

PLAN

SCALE: 1/8" = 1'-0"

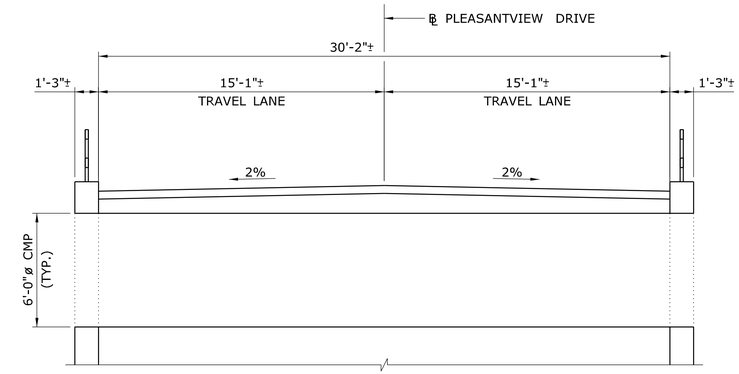

EXISTING SECTION

SCALE: 1/4" = 1'-0"

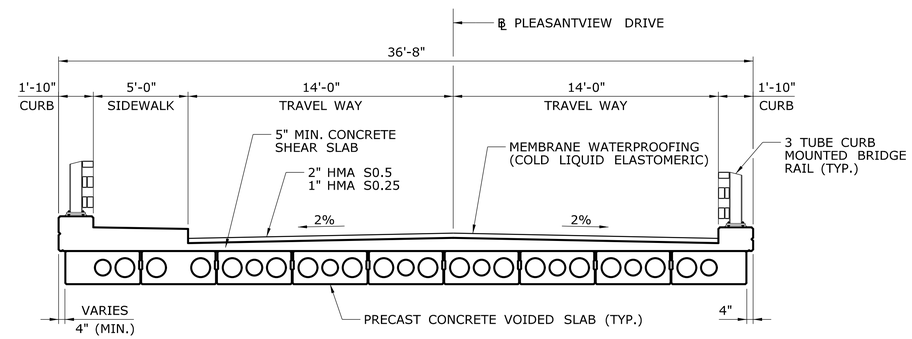

PROPOSED SECTION

SCALE: 1/4" = 1'-0"

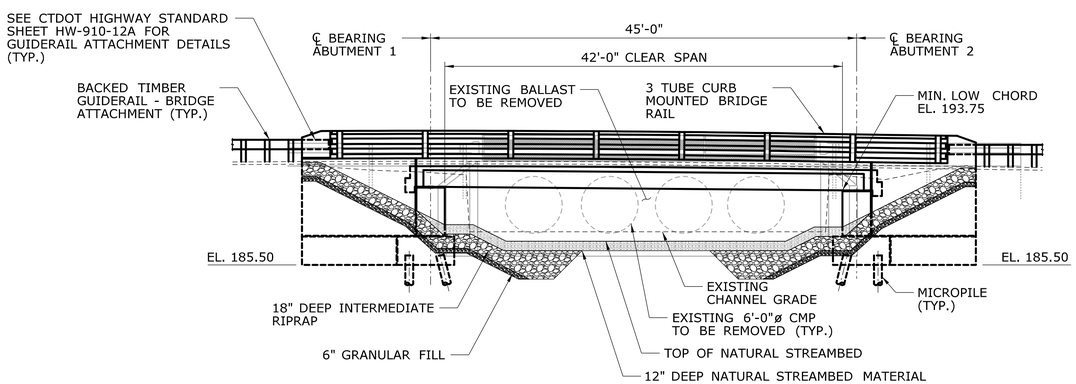

ELEVATION

SCALE: 1/8" = 1'-0"

HYDRAULIC DATA	
DRAINAGE AREA	XX.XX SQ. MI.
DESIGN FREQUENCY	XXX-YEAR
DESIGN DISCHARGE	XXXX CFS
AVERAGE DAILY FLOW EL	XX CFS
UPSTREAM DESIGN WSE	XX.XX
DOWNSTREAM DESIGN WSE	XX.XX
MAXIMUM SCOUR EL	-X.XX
FREQUENCY	XXX-YEAR
DISCHARGE	XXXX CFS
WORST CASE SUBSTRUCTURE UNIT	XXXX ABUT.

ESTIMATED SHIPPING DATA			
MEMBER	SHIPPING HEIGHT	SHIPPING LENGTH	SHIPPING WEIGHT
TYPICAL GIRDER	XX	XX	XXXXX LBS

CONCRETE DISTRIBUTION		
Superstructure	C.Y.	XXX
Substructure	C.Y.	XXX
Footings	C.Y.	XXX
Total	C.Y.	XXX

INSPECTION OF FIELD WELDS		
METHODS	UNIT	QUANTITY
Ultrasonic	inch	none
Magnetic Particle	feet	none

NOTICE TO BRIDGE INSPECTORS

The Department's Bridge Safety procedures require this bridge to be inspected for, but not limited to, all appropriate components indicated in the governing manuals for bridge inspection. Attention must be given to inspecting the following special components and details. (The listing for components for specific attention shall not be construed to reduce the importance of inspection of any other component of the structure.) The frequency of inspection of this structure shall be in accordance with the governing manuals for bridge inspection, unless otherwise directed by the Manager of Bridge Safety and Evaluation.

Component or Detail	Structure Sheet Reference
NONE	-
-	-

SEMI FINAL DESIGN REVIEW

REV.	DATE	REVISION DESCRIPTION	SHEET NO.

THE INFORMATION, INCLUDING ESTIMATED QUANTITIES OF WORK, SHOWN ON THESE SHEETS IS BASED ON LIMITED INVESTIGATIONS BY THE STATE AND IS IN NO WAY WARRANTED TO INDICATE THE CONDITIONS OF ACTUAL QUANTITIES OF WORK WHICH WILL BE REQUIRED.

Plotted Date: 5/19/2017

DESIGNER/DRAFTER: JMB
CHECKED BY: AML
SCALE AS NOTED

STATE OF CONNECTICUT
DEPARTMENT OF TRANSPORTATION

Filename: ...\S-02..GENERAL PLAN.dgn

SIGNATURE/ BLOCK:

PROJECT TITLE: REPLACEMENT OF BRIDGE NO. 04576 PLEASANTVIEW DRIVE OVER HOCKANUM RIVER

TOWN: VERNON

DRAWING TITLE: GENERAL PLAN

PROJECT NO. 146-200
DRAWING NO. S-02
SHEET NO. 04.02

GENERAL NOTES

SPECIFICATIONS: CONNECTICUT DEPARTMENT OF TRANSPORTATION FORM 817 (2016), SUPPLEMENTAL SPECIFICATIONS DATED XXXXX AND SPECIAL PROVISIONS.

DESIGN SPECIFICATIONS: LRFD BRIDGE DESIGN SPECIFICATIONS 7TH EDITION (20XX), WITH INTERIM SPECIFICATIONS UP TO AND INCLUDING 20XX, AS SUPPLEMENTED BY THE CONNECTICUT DEPARTMENT OF TRANSPORTATION BRIDGE DESIGN MANUAL (2003).

ALLOWABLE DESIGN STRESSES:

CLASS 'A' CONCRETE:
BASED ON f'c = 3,000 psi

CLASS 'F' CONCRETE:
BASED ON f'c = 4,000 psi

THE SPECIFIED CONCRETE STRENGTH USED IN DESIGN, f'c, OF THE CONCRETE COMPONENTS IS NOTED ABOVE. THE MINIMUM COMPRESSIVE STRENGTH OF THE CONCRETE IN THE CONSTRUCTED COMPONENTS SHALL CONFORM TO THE REQUIREMENTS OF THE SPECIAL PROVISION "SECTION 6.01 CONCRETE FOR STRUCTURES".

REINFORCEMENT:
ASTM A615 GRADE 60
Fy = 60,000 psi

LIVE LOAD: HL-93 DESIGN VEHICLE
(2) CTDOT LEGAL VEHICLES
(10) CTDOT PERMIT VEHICLES

FUTURE PAVING ALLOWANCE: NONE

BITUMINOUS CONCRETE OVERLAY: THIS SHALL CONSIST OF TWO LIFTS. THE FIRST SHALL BE HMA S0.25 (1" THICK) AND THE SECOND SHALL BE HMA S0.5 (2" THICK).

FOUNDATION PRESSURES: THE VARIOUS GROUP LOADINGS NOTED ON THE SUBSTRUCTURE PLAN SHEETS REFER TO THE GROUP LOADS AS GIVEN IN THE AASHTO LRFD GUIDE SPECIFICATIONS.

DIMENSIONS: WHEN DECIMAL DIMENSIONS ARE GIVEN TO LESS THAN THREE DECIMAL PLACES, THE OMITTED DIGITS SHALL BE ASSUMED TO BE ZEROS.

COMPOSITE CONSTRUCTION: NO TEMPORARY INTERMEDIATE SUPPORTS SHALL BE USED DURING THE PLACING AND SETTING OF THE CONCRETE DECK.

CLASS "F" CONCRETE: UNLESS NOTED OTHERWISE, CLASS "F" CONCRETE SHALL BE USED FOR BRIDGE DECKS INCLUDING PARAPETS AND SIDEWALKS, APPROACH SLABS, SLEEPER SLABS, AND CAST-IN-PLACE VOID INFILL IN PRECAST SUBSTRUCTURE ELEMENTS.

HIGH EARLY STRENGTH CONCRETE: HIGH EARLY STRENGTH CONCRETE SHALL BE USED FOR PRECAST APPROACH SLAB CLOSURE POURS.

PRECAST SUBSTRUCTURE ELEMENTS: SEE SPECIAL PROVISIONS FOR PRECAST SUBSTRUCTURE ELEMENT CONCRETE REQUIREMENTS.

JOINT SEAL: SEE SPECIAL PROVISIONS.

EXPOSED EDGES: EXPOSED EDGES OF CONCRETE SHALL BE BEVELED 1" x 1" UNLESS DIMENSIONED OTHERWISE.

CONCRETE COVER: ALL REINFORCEMENT SHALL HAVE TWO INCHES COVER UNLESS DIMENSIONED OTHERWISE.

REINFORCEMENT: ALL REINFORCEMENT SHALL BE ASTM A615 GRADE 60.

EPOXY COATED REINFORCING BARS: ALL REINFORCEMENT IN THE SUPERSTRUCTURE INCLUDING THE CONCRETE DECK AND THE PARAPETS SHALL BE EPOXY COATED UNLESS OTHERWISE NOTED. ALL REINFORCEMENT IN THE TOP MAT OF THE APPROACH SLABS AND STEMS OF SLEEPER SLABS SHALL BE EPOXY COATED.

PREFORMED EXPANSION JOINT FILLER: THE COST OF FURNISHING AND INSTALLING PREFORMED EXPANSION JOINT FILLER SHALL BE INCLUDED IN THE COST OF THE ITEM "1" PREFORMED EXPANSION JOINT FILLER FOR BRIDGES".

CLOSED CELL ELASTOMER: THE COST OF FURNISHING AND INSTALLING CLOSED CELL ELASTOMER SHALL BE INCLUDED IN THE COST OF THE ITEM "CLASS 'F' CONCRETE".

CONSTRUCTION JOINTS: CONSTRUCTION JOINTS, OTHER THAN THOSE SHOWN ON THE PLANS, WILL NOT BE PERMITTED WITHOUT THE PRIOR APPROVAL OF THE ENGINEER.

TRAFFIC: ALL WORK SHALL BE DONE IN ACCORDANCE WITH THE SPECIAL PROVISIONS "MAINTENANCE AND PROTECTION OF TRAFFIC".

TABLE OF BRIDGE QUANTITIES

ITEM	UNIT	QUANTITY
STRUCTURE EXCAVATION - EARTH (EXCLUDING COFFERDAM AND DEWATERING)	CY	XXX
STRUCTURE EXCAVATION - ROCK (EXCLUDING COFFERDAM AND DEWATERING)	CY	XXX
COFFERDAM AND DEWATERING	LF	XXX
HANDLING WATER	LS	XXX
COMPACTED GRANULAR FILL	CY	XXX
PERVIOUS STRUCTURAL BACKFILL	CY	XXX
HMA S0.5	TON	XXX
HMA S0.25	TON	XXX
REMOVAL OF EXISTING CULVERT (SITE NO. 1)	LS	XXX
PRESTRESSED DECK UNITS (4'-0" X 1'-9")	LF	XXX
ASPHALTIC PLUG EXPANSION JOINT SYSTEM	SY	XXX
ELASTOMERIC BEARING PADS	EA	XXX
PRECAST APPROACH SLAB	SY	XXX
CLASS 'F' CONCRETE	CY	XXX
PRECAST SUBSTRUCTURE ELEMENTS	CY	XXX
1" PREFORMED EXPANSION JOINT FILLER FOR BRIDGES	SF	XXX
DEFORMED STEEL BARS - EPOXY COATED	LB	XXX
MICROPILES	EA	XXX
VERIFICATION TEST FOR MICROPILES	EA	XXX
PROOF TEST FOR MICROPILES	EA	XXX
MIRCOPILE LENGTH ADJUSTMENT	LF	XXX
MEMBRANE WATERPROOFING (COLD LIQUID ELASTOMERIC)	SY	XXX
DAMPROOFING	SY	XXX
3 TUBE CURB MOUNTED BRIDGE RAIL	LF	XXX
REMOVAL OF EXISTING MASONRY	CY	XXX

WORKING POINTS

POINT	LOCATION	NORTH	EAST
WP-01	℄ BRG. WEST ABUT. WB - ⅊ ROAD	XXXXXX.XX	XXXXXX.XX
WP-02	℄ BRG. EAST ABUT. WB - ⅊ ROAD	XXXXXX.XX	XXXXXX.XX
WP-03	END WEST APPROACH SLAB - ⅊ ROAD	XXXXXX.XX	XXXXXX.XX
WP-04	END EAST APPROACH SLAB - ⅊ ROAD	XXXXXX.XX	XXXXXX.XX
WP-05	℄ BEARING ABUTMENT 1 - SOUTH EDGE	XXXXXX.XX	XXXXXX.XX
WP-06	℄ BEARING ABUTMENT 2 - SOUTH EDGE	XXXXXX.XX	XXXXXX.XX
WP-07	℄ BEARING ABUTMENT 1 - NORTH EDGE	XXXXXX.XX	XXXXXX.XX
WP-08	℄ BEARING ABUTMENT 1 - NORTH EDGE	XXXXXX.XX	XXXXXX.XX
WP-09	END OF WINGWALL 1A - OUTSIDE FACE	XXXXXX.XX	XXXXXX.XX
WP-10	END OF WINGWALL 2A - OUTSIDE FACE	XXXXXX.XX	XXXXXX.XX
WP-11	END OF WINGWALL 1B - OUTSIDE FACE	XXXXXX.XX	XXXXXX.XX
WP-12	END OF WINGWALL 2B - OUTSIDE FACE	XXXXXX.XX	XXXXXX.XX

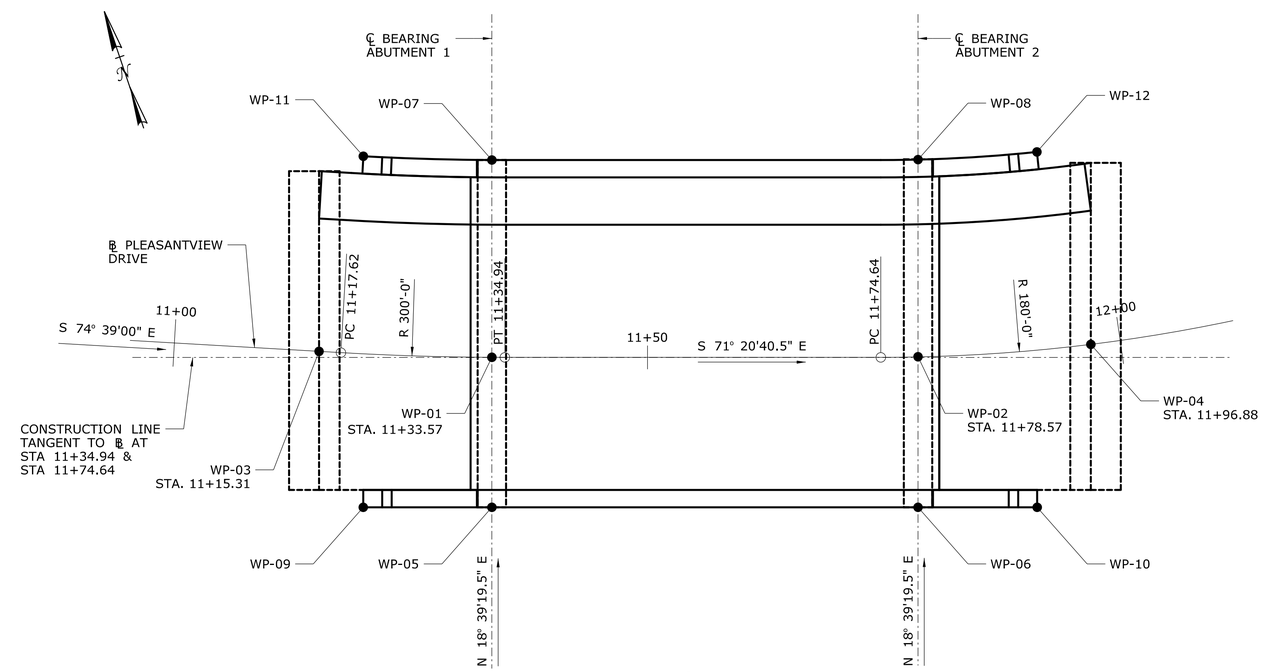

LAYOUT PLAN
SCALE: 1/8" = 1'-0"

SEMI FINAL DESIGN REVIEW

REV.	DATE	REVISION DESCRIPTION	SHEET NO.

THE INFORMATION, INCLUDING ESTIMATED QUANTITIES OF WORK, SHOWN ON THESE SHEETS IS BASED ON LIMITED INVESTIGATIONS BY THE STATE AND IS IN NO WAY WARRANTED TO INDICATE THE CONDITIONS OF ACTUAL QUANTITIES OF WORK WHICH WILL BE REQUIRED.

Plotted Date: 5/19/2017

DESIGNER/DRAFTER: JMB
CHECKED BY: AML
SCALE AS NOTED

STATE OF CONNECTICUT
DEPARTMENT OF TRANSPORTATION

Filename: ...\S-03_GENERAL NOTES AND QUANTITIES.dgn

SIGNATURE/ BLOCK:

PROJECT TITLE: REPLACEMENT OF BRIDGE NO. 04576 PLEASANTVIEW DRIVE OVER HOCKANUM RIVER

TOWN: VERNON

DRAWING TITLE: GENERAL NOTES & QUANTITIES

PROJECT NO. 146-200
DRAWING NO. S-03
SHEET NO. 04.03

B-1

(603) 437-1610 **New England Boring Contractors** **Fax: (603) 437-0034**
P.O. Box 165
Derry, NH 03038
E-Mail: nebc@neboring.com

Boring # B-1 **Project**: CJM – test Drilling (Vernon) **Project #** C05521

Project Address: Pleasant View Drive over Hockanum River **City:** Vernon **State:** CT **Zip:**
Date Start: 8/19/16 **Date End:** 8/19/16 **Location:** See Plan

Casing: HW **Sampler:** S/S **Sampler:**
Size: 4" Size: 1 3/8 in. I.D.
Fall: 30 in.

G R O U N D W A T E R O B S E R V A T I O N

Date: 8/19/16	Depth: 6'9"	Casing:	Stabilization Period

DP	S#	DEPTH	PEN	REC	BLOWS/6"	S/C	SAMPLE DESCRIPTION
-						4"	ASPHALT
-	S-1	1' – 3'	24"	14"	12-12-16-18		Dry, medium dense, brown FINE TO COARSE SAND, some fine gravel, trace inorganic silt, occasional cobbles.
-							
-							
5'0"	S-2	5' – 7'	24"	14"	10-8-5-7	~6'	Dry, medium dense, brown FINE TO COARSE SAND, some fine gravel, trace inorganic silt, occasional cobbles.
-							
-							Dry, medium dense, brown FINE SAND, some inorganic silt.
-						9'9"	
-							
10'0"	S-3	10' – 10'5"	5"	4"	100/5"		Very weathered SANDSTONE. Advanced roller bit to 11' and began coring.
-							
-	C-1	11' – 16'	60"	44"	3-3-3-3-3		Very weathered, very fractured, red/brown SANDSTONE. Percent Recovery = 73% RQD = 0%
-							
-							
15'0"							
-	C-2	16' – 21'	60"	60"	3-4-4-4-4		Slightly weathered, very fractured, red/brown SANDSTONE. Percent Recovery = 100% RQD = 0%
-							
-							
-							
20'0"							
-	C-3	21' – 26'	60"	60"	4-4-4-4-4		Moderately fractured, red/brown SANDSTONE. Percent Recovery = 100% RQD = 8%
-							
-							
-							
25'0"						26'	
-							Bottom of Exploration = 26'
-							
-							
-							
30'0"							
-							

Driller: Trent Roe **Helpers:** Orrin Cone **Inspector:** Mike Wood

Remarks: Coring times = minutes per foot.

S/#: Sample **PEN:** Penetration **REC:** Recovery **S/C:** Strata Change

B-2

(603) 437-1610 **New England Boring Contractors** **Fax: (603) 437-0034**
P.O. Box 165
Derry, NH 03038
E-Mail: nebc@neboring.com

Boring # B-2 **Project**: CJM – test Drilling (Vernon) **Project #** C05521

Project Address: Pleasant View Drive over Hockanum River **City:** Vernon **State:** CT **Zip:**
Date Start: 8/22/16 **Date End:** 8/22/16 **Location:** See Plan

Casing: HW **Sampler:** S/S **Sampler:**
Size: 4" Size: 1 3/8 in. I.D.
Fall: 30 in.

G R O U N D W A T E R O B S E R V A T I O N

Date: 8/22/16	Depth: ~8'	Casing:	Stabilization Period

DP	S#	DEPTH	PEN	REC	BLOWS/6"	S/C	SAMPLE DESCRIPTION
-							ASPHALT
-	S-1	1' – 3'	24"	14"	29-42-33-28		Dry, very dense, brown FINE TO MEDIUM SAND, little fine to coarse gravel, trace inorganic silt.
-							
-							
5'0"	S-2	5' – 7'	24"	16"	10-11-7-10		Dry, medium dense, brown FINE TO MEDIUM SAND, little fine to coarse gravel, trace inorganic silt.
-							
-							
-					RQD = 0%		
-							
10'0"	S-3	10' – 10'10"	10"	6"	49-50/4"	10'10"	Dry, medium dense, brown FINE TO MEDIUM SAND, little fine to coarse gravel, trace inorganic silt.
-							Top of BEDROCK at 10'10", began coring.
-	C-1	10'10"	60"	32"	3-3-4-4-4		BEDROCK
-		15'10"					Percent Recovery = 53% RQD = 0%
15'0"							
-	C-2	15'10"	60"	60"	4-4-4-4-4		BEDROCK
-		20'10"					Percent Recovery = 100% RQD = 0%
-							
-							
20'0"							
-	C-3	20'10"	60"	48"	4-4-4-4-4		BEDROCK
-		25'10"					Percent Recovery = 100% RQD = 0%
-							
-							
25'0"						25'10"	
-							Bottom of Exploration = 25'10"
-							
-							
-							
30'0"							
-							

Driller: Trent Roe **Helpers:** **Inspector:** Mike Wood

Remarks: Coring times = minutes per foot.

S/#: Sample **PEN:** Penetration **REC:** Recovery **S/C:** Strata Change

B-3

(603) 437-1610 **New England Boring Contractors** **Fax: (603) 437-0034**
P.O. Box 165
Derry, NH 03038
E-Mail: nebc@neboring.com

Boring # B-3 **Project**: CJM – test Drilling (Vernon) **Project #** C05521

Project Address: Pleasant View Drive over Hockanum River **City:** Vernon **State:** CT **Zip:**
Date Start: 8/19/16 **Date End:** 8/19/16 **Location:** See Plan

Casing: HW **Sampler:** S/S **Sampler:**
Size: 4" Size: 1 3/8 in. I.D.
Fall: 30 in.

G R O U N D W A T E R O B S E R V A T I O N

Date: 8/19/16	Depth: ~6'9"	Casing:	Stabilization Period

DP	S#	DEPTH	PEN	REC	BLOWS/6"	S/C	SAMPLE DESCRIPTION
-						5"	ASPHALT
-	S-1	1' – 3'	24"	12"	12-14-10-8		Dry, medium dense, red/brown FINE TO COARSE SAND, some gravel, trace silt.
-							
-							
5'0"	S-2	5' – 7'	24"	10"	3-4-1-1	6'	Dry, loose, red/brown FINE TO COARSE SAND, some gravel, trace silt.
-							
-							Wet, very loose, gray/black ORGANIC SILT, some fine sand.
-						9'6"	
-							
10'0"	S-3	10' – 10'7"	7"	6"	50-50/1"		Very weathered SANDSTONE. Advanced roller bit to 11' and began coring.
-							
-	C-1	11' – 16'	60"	60"	3-4-4-4-4		Very weathered and fractured, red/brown SANDSTONE. Percent Recovery = 100% RQD = 0%
-							
-							
15'0"							
-	C-2	16' – 21'	60"	60"	3-3-3-3-3		Very fractured, red/brown SANDSTONE. Percent Recovery = 100% RQD = 0%
-							
-							
-							
20'0"							
-	C-3	21' – 26'	60"	56"	2-2-3-3-4		Moderately fractured, red/brown SANDSTONE. Percent Recovery = 93% RQD = 34%
-							
-							
-							
25'0"						26'0"	
-							Bottom of Exploration = 26'0"
-							
-							
-							
30'0"							
-							

Driller: Trent Roe **Helpers:** **Inspector:** Mike Wood

Remarks: Coring times = minutes per foot.

S/#: Sample **PEN:** Penetration **REC:** Recovery **S/C:** Strata Change

SEMI FINAL DESIGN REVIEW

REV.	DATE	REVISION DESCRIPTION	SHEET NO.

THE INFORMATION, INCLUDING ESTIMATED QUANTITIES OF WORK, SHOWN ON THESE SHEETS IS BASED ON LIMITED INVESTIGATIONS BY THE STATE AND IS IN NO WAY WARRANTED TO INDICATE THE CONDITIONS OF ACTUAL QUANTITIES OF WORK WHICH WILL BE REQUIRED.

Plotted Date: 5/19/2017

DESIGNER/DRAFTER: **JMB**
CHECKED BY: **AML**
SCALE AS NOTED

STATE OF CONNECTICUT
DEPARTMENT OF TRANSPORTATION

Filename: ...\S-04_BORING LOGS - 1.dgn

SIGNATURE/ BLOCK:

PROJECT TITLE: **REPLACEMENT OF BRIDGE NO. 04576 PLEASANTVIEW DRIVE OVER HOCKANUM RIVER**

TOWN: **VERNON**

DRAWING TITLE: **BORING LOGS - 1**

PROJECT NO. **146-200**
DRAWING NO. **S-04**
SHEET NO. **04.04**

B-4

(603) 437-1610	New England Boring Contractors P.O. Box 165 Derry, NH 03038 E-Mail: nebc@neboring.com	Fax: (603) 437-0034

Boring # B-4 **Project**: CJM – test Drilling (Vernon) **Project #** C05521

Project Address: Pleasant View Drive over Hockanum River **City:** Vernon **State:** CT **Zip:**

Date Start: 8/22/16 **Date End:** 8/22/16 **Location:** See Plan

Casing: HW **Sampler:** S/S **Sampler:** 1 3/8 in. I.D.
Size: 4" Size: Fall: 30 in.

GROUNDWATER OBSERVATION

Date:	Depth:	Casing:	Stabilization Period
8/22/16	–8'		

DP	S#	DEPTH	PEN	REC	BLOWS/6"	S/C	SAMPLE DESCRIPTION
-						1'	ASPHALT and ROADBASE
-	S-1	1' – 3'	24"	10"	26-40-36-29		Dry, very dense, red/brown FINE TO MEDIUM SAND, little fine to coarse gravel, trace silt.
5'0"	S-2	5' – 7'	24"	16"	15-18-26-31		Dry, dense, red/brown FINE TO MEDIUM SAND, little fine to coarse gravel, trace silt.
-						10'	
10'0"	S-3	10' – 10'2"	2"	0"	50/2"		Probable BEDROCK. Began coring at 10'
-	C-1	10' – 15'	60"	36"	4-3-4-4-4		Red SANDSTONE. Percent Recovery = 60% RQD = 0%
15'0"	C-2	16' – 21'	60"	50"	3-3-3-4-4		Red SANDSTONE. Percent Recovery = 83% RQD = 0%
20'0"	C-3	21' – 26'	60"	54"	4-4-4-4-4		Red SANDSTONE. Percent Recovery = 90% RQD = 36%
						25'0"	
25'0"							Bottom of Exploration = 25'
30'0"							

Driller: Orrin Cone **Helpers:** **Inspector:** Mike Wood

Remarks: Coring times = minutes per foot.

S/#: Sample **PEN:** Penetration **REC:** Recovery **S/C:** Strata Change

B-5

Driller: T. Roe	**Connecticut DOT Boring Report**	Hole No.: B-5
Inspector: M. Kenney	Town: Vernon	Stat./Offset:
Engineer: T Dykstra	Project No.: 146-200	Northing: --
Start Date: 3-23-2017	Route No.: Pleasantview Drive	Easting: --
Finish Date: 3-23-2017	Bridge No.: 04576	Surface Elevation: 196.5

Project Description: Pleasantview Drive over Hockanum River

Casing Size/Type: 4" HW / 4" HSA	Sampler Type/Size: Split Spoon 2 in	Core Barrel Type: Triple Tube
Hammer Wt.: 300 lb Fall: 24 in.	Hammer Wt.: 140 lbs Fall: 30 in	

Groundwater Observations: 7 feet b.g.s.

Depth (ft)	Sample Type/No.	Blows on Sampler per 6 inches (SAMPLES)	Pen. (in.)	Rec. (in.)	RQD %	Casing Blows per 6"	Generalized Strata Description	Material Description and Notes	Well Construction	Elevation (ft)
0							ASPHALT	0-0.33 Ft: ASPHALT (4 in.)		
	S-1	28 27 23 20	24	10			FILL	Brown c-f SAND, some m-f gravel, trace silt.		195
	S-2	6 7 8 9	24	9				Brown, m-f SAND, some f gravel, trace medium gravel, little c sand, trace silt.		
5	S-3	7 9 7 9	24	10				Brown, c-f SAND and m-f gravel, little silt		190
	S-4	2 4 14 16	24	9				Grayish brown, f SAND and silt, wet		
10	S-5	17 27 28 100/4"	20	19				Brown, c-m SAND and m-f gravel, little f sand, trace silt, saturated		
							BEDROCK			185
15	C-1		60	15	0			Highly weathered, intensely fractured, reddish brown, medium to coarse grained, SANDSTONE.		
20	C-2		60	58	0			Medium strong, slightly weathered, highly fractured, reddish brown, medium to coarse grained, SANDSTONE. Joints are dipping at less than 5 degrees.		180
25	C-3		60	60	42			Medium strong, slightly weathered, highly fractured, reddish brown, medium to coarse grained, SANDSTONE. Joints are dipping at less than 5 degrees.		175
30								END OF BORING 26ft		170

Sample type: S = Split Spoon C = Core UP = Undisturbed Piston V = Vane Shear Test
Proportions Used: Trace = 1-10%, Little = 10-20%, Some = 20-35%, And = 35-50%

Total Penetration in Earth: 10.8 ft Rock: 15.2 ft
No. of Soil Samples: 5 No. of Core Runs: 3

Sheet 1 of 1

SM-001-M REV. 1/02

SEMI FINAL DESIGN REVIEW

REV.	DATE	REVISION DESCRIPTION	SHEET NO.

THE INFORMATION, INCLUDING ESTIMATED QUANTITIES OF WORK, SHOWN ON THESE SHEETS IS BASED ON LIMITED INVESTIGATIONS BY THE STATE AND IS IN NO WAY WARRANTED TO INDICATE THE CONDITIONS OF ACTUAL QUANTITIES OF WORK WHICH WILL BE REQUIRED.

Plotted Date: 5/19/2017

DESIGNER/DRAFTER: **JMB**
CHECKED BY: **AML**
SCALE AS NOTED

STATE OF CONNECTICUT
DEPARTMENT OF TRANSPORTATION

Filename: ...\S-05..BORING LOGS - 2.dgn

SIGNATURE/ BLOCK:

PROJECT TITLE: **REPLACEMENT OF BRIDGE NO. 04576 PLEASANTVIEW DRIVE OVER HOCKANUM RIVER**

TOWN: **VERNON**

DRAWING TITLE: **BORING LOGS - 2**

PROJECT NO. **146-200**
DRAWING NO. **S-05**
SHEET NO. **04.05**

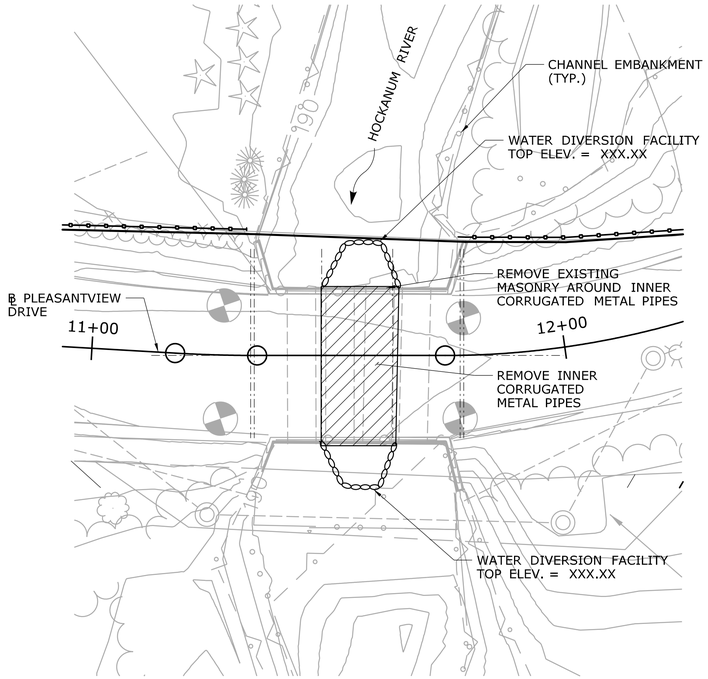

STAGE 1A PLAN

SCALE: 1/16" = 1'-0"

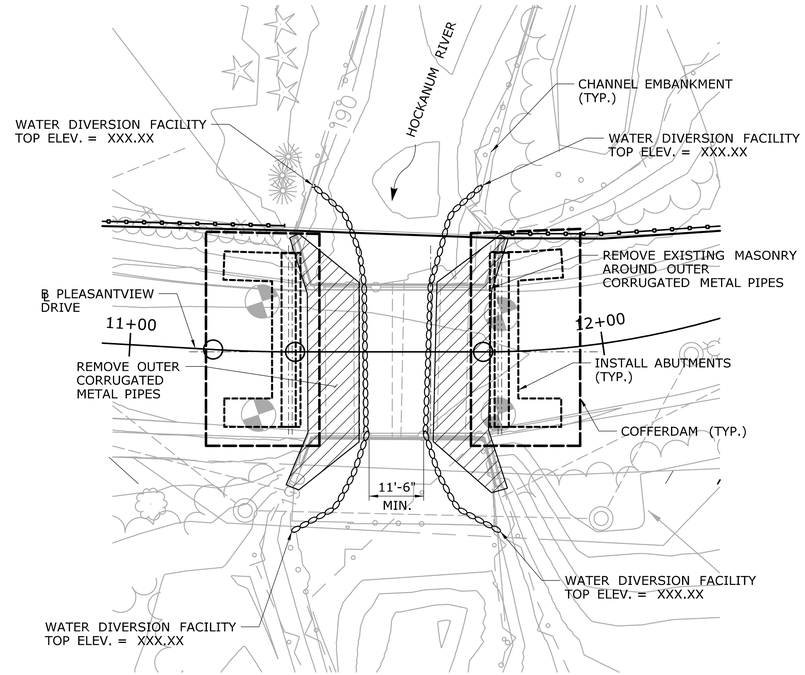

STAGE 1B PLAN

SCALE: 1/16" = 1'-0"

TEMPORARY HYDRAULIC DATA	
AVERAGE DAILY FLOW	XX CFS
AVERAGE SPRING FLOW	XX CFS
2-YEAR FREQUENCY DISCHARGE	XXX CFS
TEMPORARY DESIGN DISCHARGE	XXX CFS
TEMPORARY DESIGN FREQUENCY	XX-YEAR
TEMPORARY WATER SURFACE EL. UPSTREAM	XXX.XX FT
TEMPORARY WATER SURFACE EL. DOWNSTREAM	XXX.XX FT

SUGGESTED SEQUENCE OF CONSTRUCTION

STAGE 1A:

1. INSTALL WATER DIVERSION FACILITY AROUND THE TWO INNER CORRUGATED METAL PIPES.
2. DEWATER WORK AREA BEHIND WATER DIVERSION FACILITY AS REQUIRED FOR CONSTRUCTION.
3. REMOVE FILL ABOVE CORRUGATED METAL PIPES.
4. REMOVE TWO INNER CORRUGATED METAL PIPES BEHIND WATER DIVERSION FACILITY.
5. ESTABLISH PROPOSED CHANNEL GRADING WITHIN DEWATERED WORK AREA.
6. REMOVE WATER DIVERSION FACILITY.

STAGE 1B:

1. INSTALL WATER DIVERSION FACILITY AROUND THE WINGWALLS AND OUTER CORRUGATED METAL PIPES.
2. DEWATER WORK AREA BEHIND WATER DIVERSION FACILITY AS REQUIRED FOR CONSTRUCTION.
3. REMOVE EXISTING MASONRY SURROUNDING ALL CORRUGATED METAL PIPES.
4. REMOVE OUTER CORRUGATED METAL PIPES BEHIND WATER DIVERSION FACILITY, INSTALL MICROPILES, AND INSTALL PRECAST ABUTMENTS AND WINGWALLS.
5. ESTABLISH PROPOSED CHANNEL GRADING WITHIN DEWATERED WORK AREA.
6. INSTALL COFFERDAM AROUND PROPOSED ABUTMENTS.
7. INSTALL MICROPILES.
8. CONSTRUCT PROPOSED ABUTMENTS.
9. REMOVE COFFERDAM.
10. REMOVE WATER DIVERSION FACILITY.

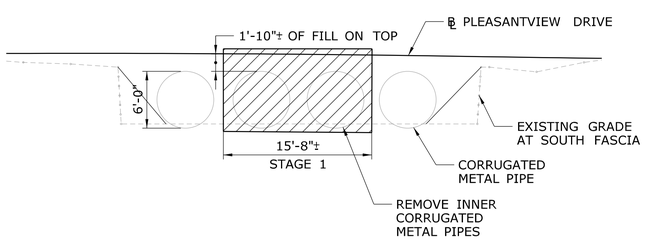

EXISTING SECTION - STAGE 1A

SCALE: 1/8" = 1'-0"

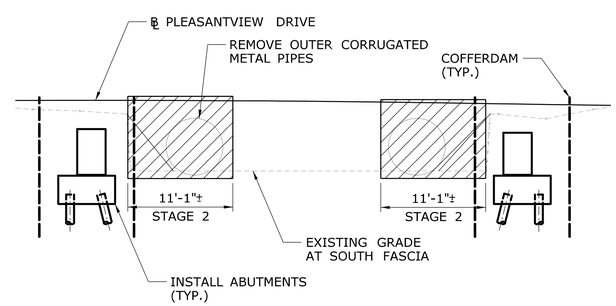

EXISTING SECTION - STAGE 1B

SCALE: 1/8" = 1'-0"

SEMI FINAL DESIGN REVIEW

REV.	DATE	REVISION DESCRIPTION	SHEET NO.

THE INFORMATION, INCLUDING ESTIMATED QUANTITIES OF WORK, SHOWN ON THESE SHEETS IS BASED ON LIMITED INVESTIGATIONS BY THE STATE AND IS IN NO WAY WARRANTED TO INDICATE THE CONDITIONS OF ACTUAL QUANTITIES OF WORK WHICH WILL BE REQUIRED.

Plotted Date: 5/19/2017

DESIGNER/DRAFTER: JMB
CHECKED BY: AML
SCALE AS NOTED

STATE OF CONNECTICUT
DEPARTMENT OF TRANSPORTATION

Filename: ...\S-06_DEWATERING PLAN.dgn

SIGNATURE/BLOCK:

PROJECT TITLE: REPLACEMENT OF BRIDGE NO. 04576 PLEASANTVIEW DRIVE OVER HOCKANUM RIVER

TOWN: VERNON

DRAWING TITLE: DEWATERING PLAN

PROJECT NO. 146-200
DRAWING NO. S-06
SHEET NO. 04.06

MICROPILE NOTES

1. THE MICROPILE SHALL BE DESIGNED BY THE CONTRACTOR ACCORDING TO THE PROJECT SPECIFICATIONS, THE LATEST VERSION OF AASHTO LRFD BRIDGE DESIGN SPECIFICATIONS, INCLUDING LATEST INTERIM REVISIONS FOR THE LOADS PROVIDED HEREIN.
2. THE CONTRACTOR SHALL SELECT AND DESIGN THE MICROPILE TYPE, SIZE, PILE TOP ATTACHMENT, INSTALLATION MEANS AND METHODS, ESTIMATE THE GROUND-GROUT BOND VALUE AND DETERMINE THE REQUIRED GROUT BOND LENGTH AND FINAL MICROPILE DIAMETER, TAKING INTO ACCOUNT THE MINIMUM AND MAXIMUM REQUIREMENTS INDICATED ON THIS SHEET AND IN THE SPECIFICATIONS.
3. THE MICROPILE LOAD CAPACITIES SHALL BE CONFIRMED BY VERIFICATION AND PROOF LOAD TESTING AS REQUIRED AND MUST MEET THE ACCEPTANCE CRITERIA SPECIFIED IN THE SPECIAL PROVISIONS.
4. NO SPLICING OF THE CENTRAL REINFORCEMENT WILL BE ALLOWED WITHIN THE TOP 10 FEET OF THE MICROPILE.
5. MECHANICAL SPLICE COUPLERS, IF REQURIED, SHALL DEVELOP 125% OF THE SPECIFICED YIELD STRENGTH OF THE BAR BEING USED, BOTH IN TENSION AND COMPRESSION.
6. THE MICROPILE DESIGN BY THE CONTRACTOR SHALL INCLUDE THE CONNECTION/ANCHORAGE OF THE PILE TO THE FOOTING. THE CONNECTION SHALL BE DESIGNED FOR 100% OF THE ULTIMATE CAPACITY OF THE PILE.

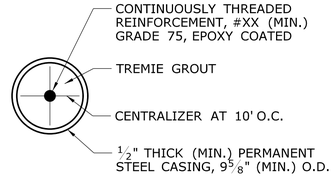

SECTION - CASED MICROPILE

NOT TO SCALE

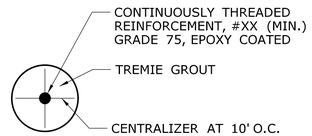

SECTION - UNCASED MICROPILE

NOT TO SCALE

MINIMUM DESIGN REQUIREMENTS:

TYPE XX MICROPILE
MINIMUM PILE DIAMETER = 9⅝"
MINIMUM PILE WALL THICKNESS = ½"
MINIMUM PERMANENT CASING YIELD STRENGTH = XXX KSI
MINIMUM BOND ZONE DIAMETER = XXX"

A RESISTANCE FACTOR OF 0.55 WAS USED.

	COMPRESSION	TENSION
SVL	XX TONS	XX TONS
STL	XX TONS	XX TONS
UPC	XXX TONS	XX TONS

SVL = MAXIMUM SERVICE LOAD
STL = MAXIMUM STRENGTH LOAD
UPC = REQUIRED ULTIMATE PILE CAPACITY

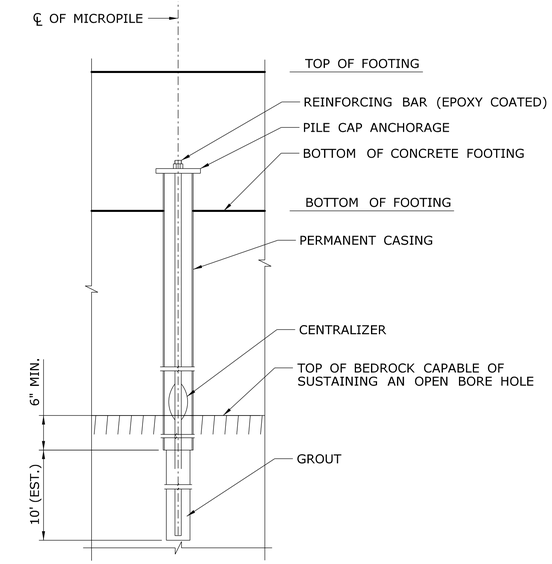

ESTIMATED CASING TIP BOTTOM = EL XX.XX (ABUT. 1)
EL XX.XX (ABUT. 2)

MICROPILE DETAIL

NOT TO SCALE

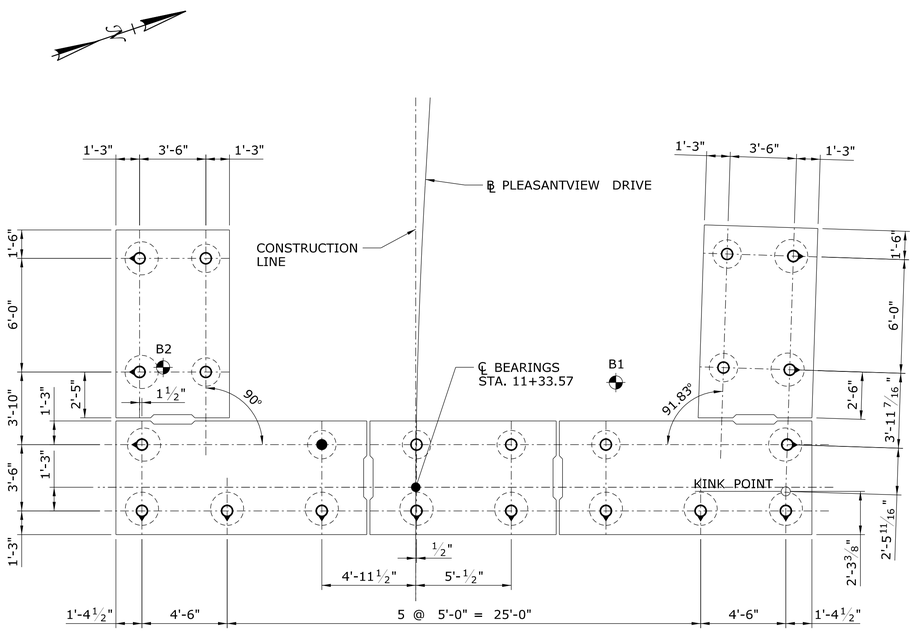

ABUTMENT 1 - PILE LAYOUT PLAN

SCALE: ¼" = 1'-0"

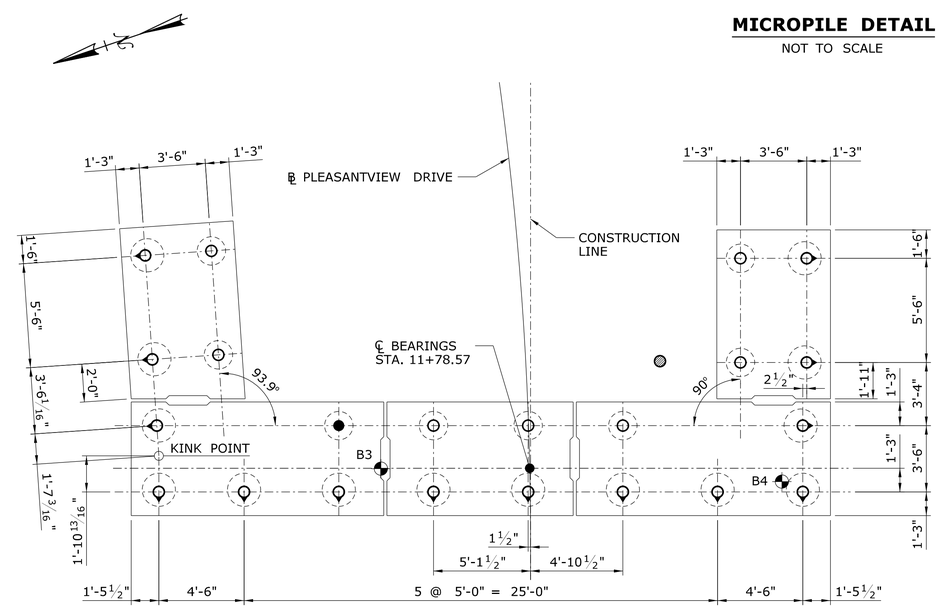

ABUTMENT 2 - PILE LAYOUT PLAN

SCALE: ¼" = 1'-0"

LEGEND

- ○ = MICROPILE - PLUMB
- ○ = MICROPILE - BATTERED 4:12 (H:V)
- ● = MICROPILE PROOF TEST - PLUMB
- ◉ = MICROPILE VERIFICATION PILE
- ◐ = BORING

SEMI FINAL DESIGN REVIEW

REV.	DATE	REVISION DESCRIPTION	SHEET NO.

THE INFORMATION, INCLUDING ESTIMATED QUANTITIES OF WORK, SHOWN ON THESE SHEETS IS BASED ON LIMITED INVESTIGATIONS BY THE STATE AND IS IN NO WAY WARRANTED TO INDICATE THE CONDITIONS OF ACTUAL QUANTITIES OF WORK WHICH WILL BE REQUIRED.

Plotted Date: 5/19/2017

DESIGNER/DRAFTER: JMB
CHECKED BY: AML
SCALE AS NOTED

STATE OF CONNECTICUT
DEPARTMENT OF TRANSPORTATION

Filename: ...\S-07_MICROPILE LAYOUT PLAN & DETAILS.dgn

SIGNATURE/BLOCK:

PROJECT TITLE: REPLACEMENT OF BRIDGE NO. 04576 PLEASANTVIEW DRIVE OVER HOCKANUM RIVER

TOWN: VERNON

DRAWING TITLE: MICROPILE LAYOUT PLAN & DETAILS

PROJECT NO. 146-200
DRAWING NO. S-07
SHEET NO. 04.07

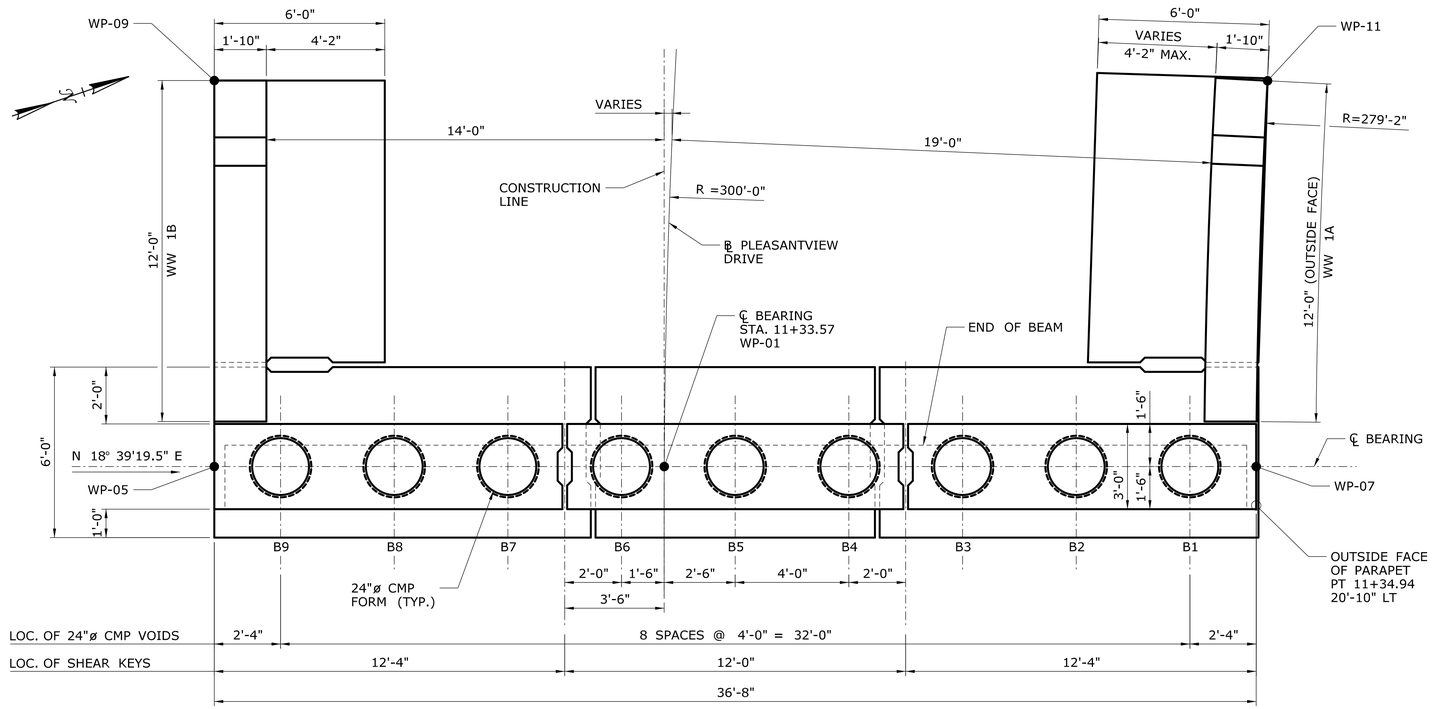

ABUTMENT 1 PLAN

SCALE: 3/8" = 1'-0"

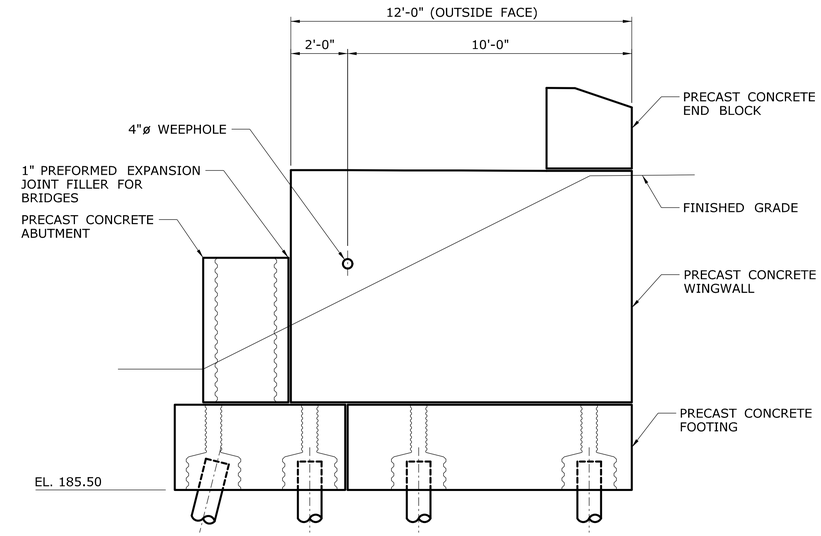

WINGWALL 1A DEVELOPED ELEVATION

SCALE: 3/8" = 1'-0"

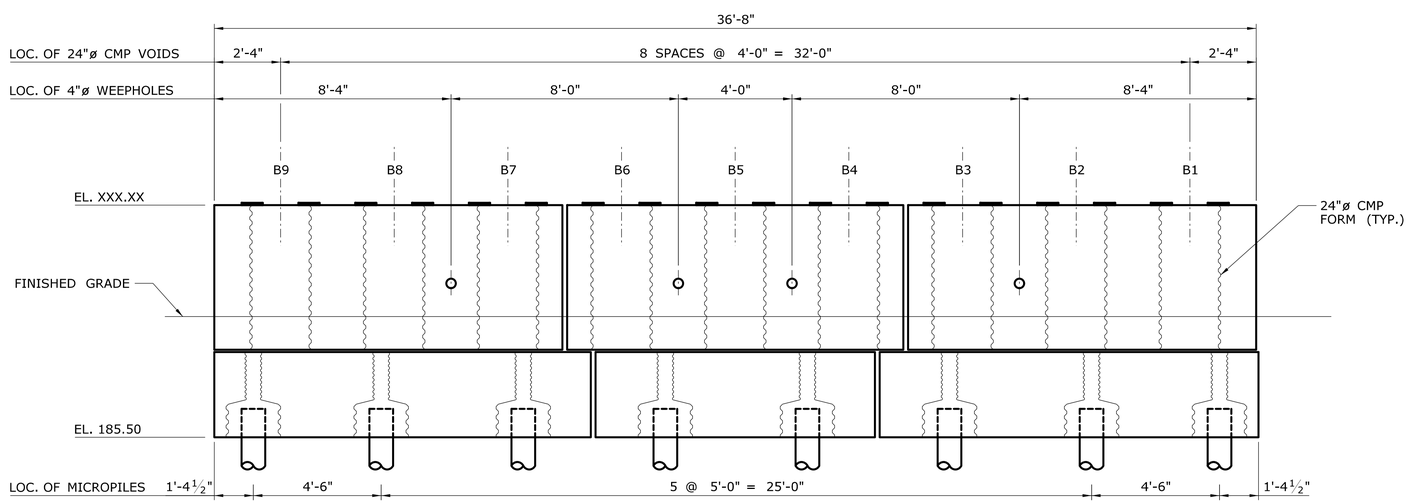

ABUTMENT 1 ELEVATION

SCALE: 3/8" = 1'-0"

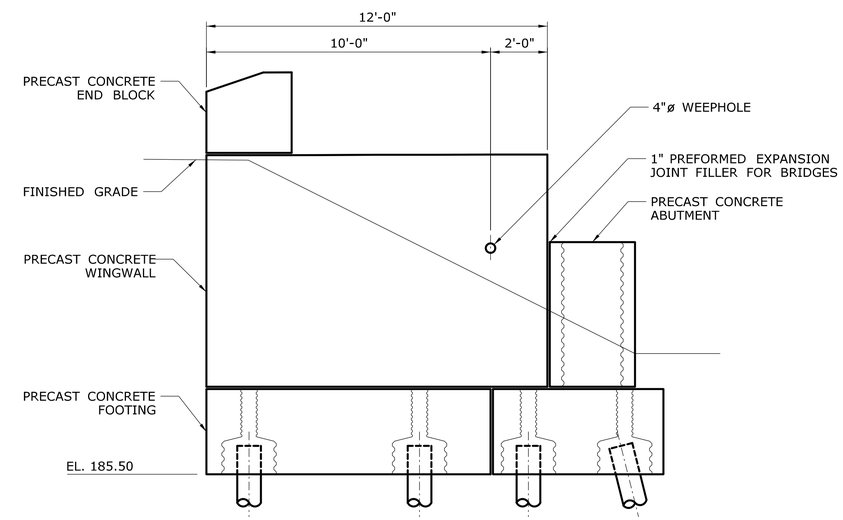

WINGWALL 1B ELEVATION

SCALE: 3/8" = 1'-0"

SEMI FINAL DESIGN REVIEW

REV.	DATE	REVISION DESCRIPTION	SHEET NO.

THE INFORMATION, INCLUDING ESTIMATED QUANTITIES OF WORK, SHOWN ON THESE SHEETS IS BASED ON LIMITED INVESTIGATIONS BY THE STATE AND IS IN NO WAY WARRANTED TO INDICATE THE CONDITIONS OF ACTUAL QUANTITIES OF WORK WHICH WILL BE REQUIRED.

Plotted Date: 5/19/2017

DESIGNER/DRAFTER: JMB
CHECKED BY: AML
SCALE AS NOTED

STATE OF CONNECTICUT
DEPARTMENT OF TRANSPORTATION

Filename: ...\S-08_ABUTMENT 1.dgn

SIGNATURE/ BLOCK:

PROJECT TITLE:
REPLACEMENT OF BRIDGE NO. 04576 PLEASANTVIEW DRIVE OVER HOCKANUM RIVER

TOWN: **VERNON**

DRAWING TITLE: **ABUTMENT 1**

PROJECT NO. **146-200**
DRAWING NO. **S-08**
SHEET NO. **04.08**

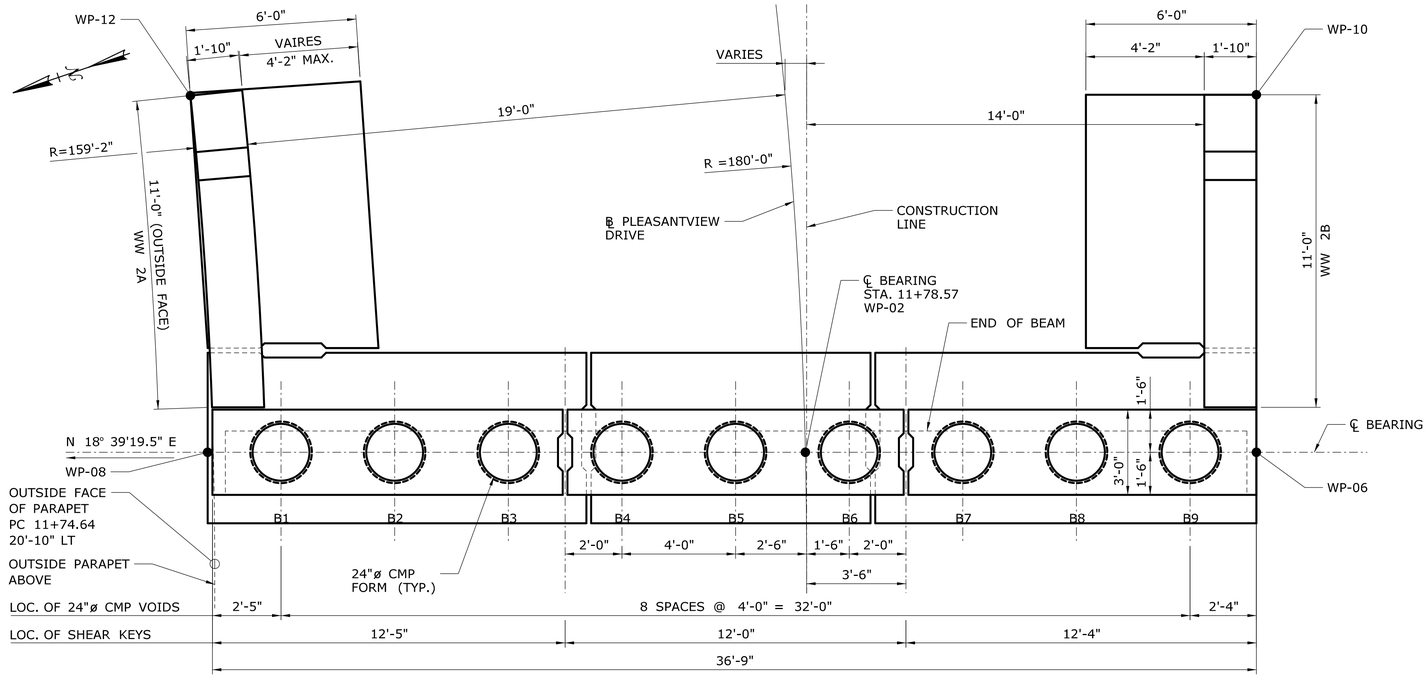

ABUTMENT 2 PLAN

SCALE: 3/8" = 1'-0"

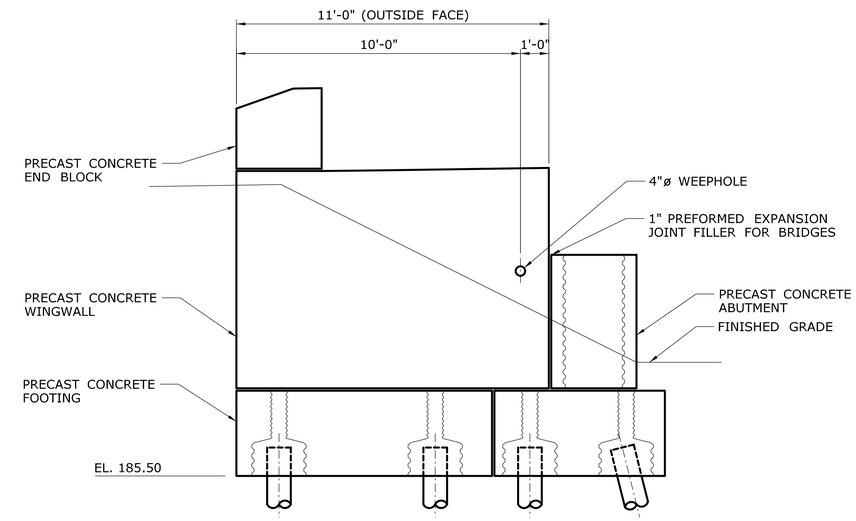

WINGWALL 2A DEVELOPED ELEVATION

SCALE: 3/8" = 1'-0"

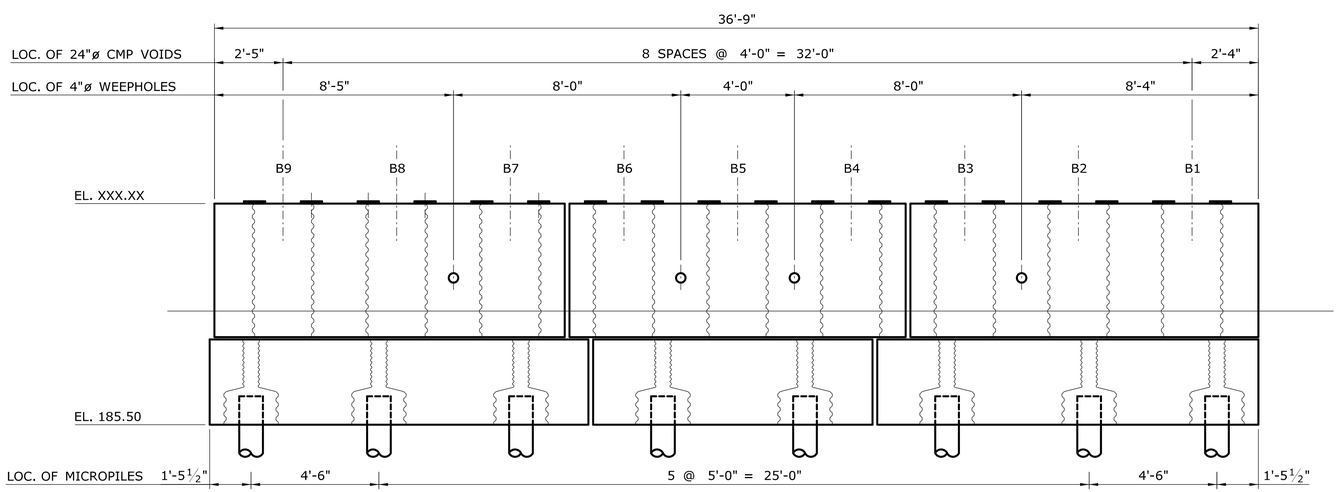

ABUTMENT 2 ELEVATION

SCALE: 3/8" = 1'-0"

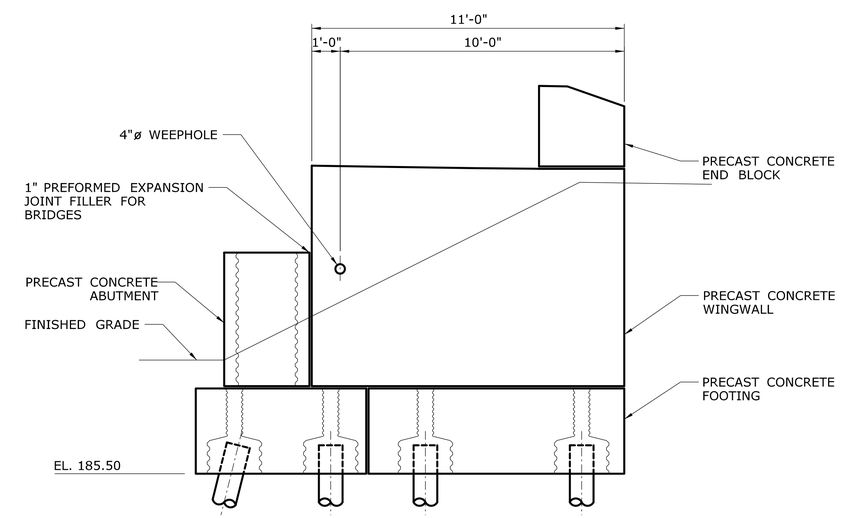

WINGWALL 2B ELEVATION

SCALE: 3/8" = 1'-0"

SEMI FINAL DESIGN REVIEW

REV.	DATE	REVISION DESCRIPTION	SHEET NO.

THE INFORMATION, INCLUDING ESTIMATED QUANTITIES OF WORK, SHOWN ON THESE SHEETS IS BASED ON LIMITED INVESTIGATIONS BY THE STATE AND IS IN NO WAY WARRANTED TO INDICATE THE CONDITIONS OF ACTUAL QUANTITIES OF WORK WHICH WILL BE REQUIRED.

Plotted Date: 5/19/2017

DESIGNER/DRAFTER: JMB
CHECKED BY: AML
SCALE AS NOTED

STATE OF CONNECTICUT
DEPARTMENT OF TRANSPORTATION

Filename: ...\S-09..ABUTMENT 2.dgn

SIGNATURE/ BLOCK:

PROJECT TITLE:
REPLACEMENT OF BRIDGE NO. 04576 PLEASANTVIEW DRIVE OVER HOCKANUM RIVER

TOWN: **VERNON**

DRAWING TITLE: **ABUTMENT 2**

PROJECT NO. **146-200**
DRAWING NO. **S-09**
SHEET NO. **04.09**

SUGGESTED GROUTED SPLICE COUPLER CONNECTION SEQUENCE:

1. IT IS RECOMMENDED THAT THE GROUTING PROCEDURE BE COMPLETED IN THE PRESENCE OF A CONTRACTOR'S SUPERVISOR THAT IS EXPERIENCED IN THE INSTALLATION OF GROUTED SLEEVES. MANUFACTURER TRAINING MAY BE REQUIRED FOR INEXPERIENCED STAFF.
2. FOLLOW THE WRITTEN INSTALLATION PROCEDURES OF THE COUPLER MANUFACTURER. THE FOLLOWING ARE GENERAL PROCEDURES THAT APPLY TO MOST COUPLER MANUFACTURERS.
3 IT IS RECOMMENDED THAT THE ELEMENT WITH THE REINFORCEMENT BAR EXTENSIONS BE FABRICATED WITH EXTENDED LENGTHS.
4. SURVEY LOCATION AND ELEVATION OF LOWER ELEMENT.
5. DETERMINE THE REQUIRED REINFORCING BAR EXTENSION LENGTHS AND THE REQUIRED SHIM HEIGHTS BASED ON THE SURVEY.
6. CUT THE BAR EXTENSIONS TO THE REQUIRED LENGTH BASED ON THE SURVEY AND THE COUPLER MANUFACTURER'S RECOMMENDATIONS. FOR COATED BARS, THE ENDS OF THE BARS NEED NOT BE RE-COATED.
7. PRE-BED PRECAST COMPONENT WITH NON-SHRINK GROUT WITH THICKNESS MORE THAN SHIM STACK.
8. ERECT UPPER ELEMENT TO WITHIN THE SPECIFIED ERECTION TOLERANCES. PREVENT BEDDING GROUT FROM FLOWING INTO COUPLER.
9. MAINTAIN INTEGRITY OF GROUT BED DURING SETTING OPERATION. REPAIR GROUT THAT IS DISPLACED OR GAPS THAT DEVELOP IN THE GROUT JOINT USING HAND TOOLS.
10. BRACE THE UPPER ELEMENT.
11. INSTALL GROUT IN COUPLERS FOLLOWING THE MANUFACTURER'S WRITTEN PROCEDURES. IF THE COUPLER IS BELOW THE JOINT, THE COUPLER GROUT CAN BE INSTALLED PRIOR TO APPLICATION OF BEDDING GROUT.
12. ERECTION OF SUBSEQUENT ELEMENTS ABOVE A CONNECTION SHOULD NOT COMMENCE UNTIL THE CONNECTION HAS ACHIEVED ADEQUATE STRENGTH AS DETERMINED THROUGH STRENGTH TESTING OF THE GROUT. THE TIMING OF SUBSEQUENT CONSTRUCTION STEPS SHOULD BE SPECIFIED IN THE BRIDGE ASSEMBLY PLAN.

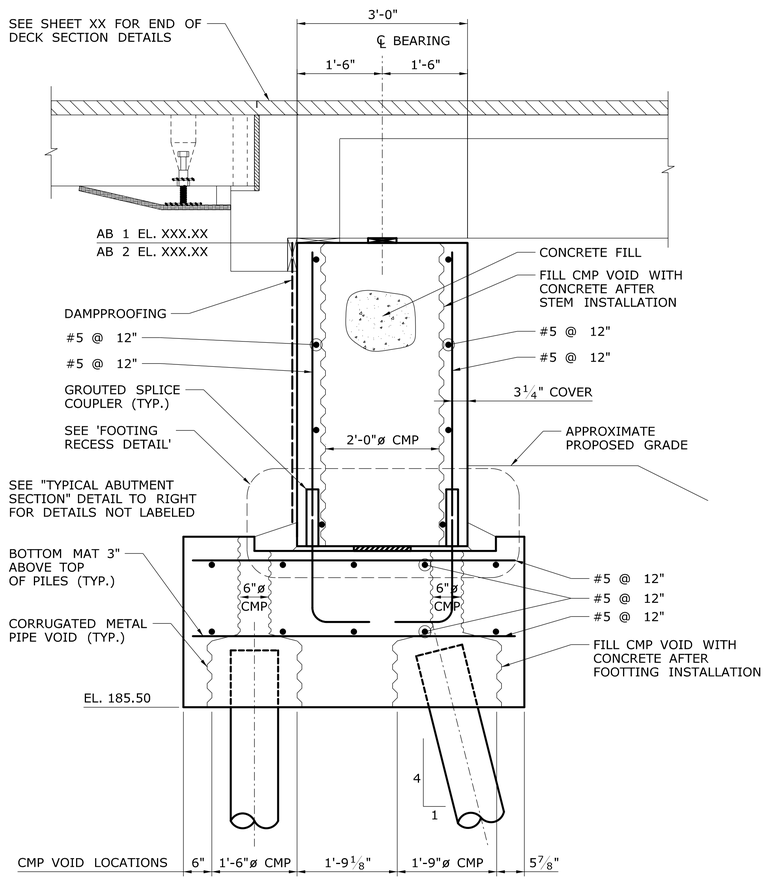

TYPICAL ABUTMENT SECTION AT VOID

SCALE: ¾" = 1'-0"

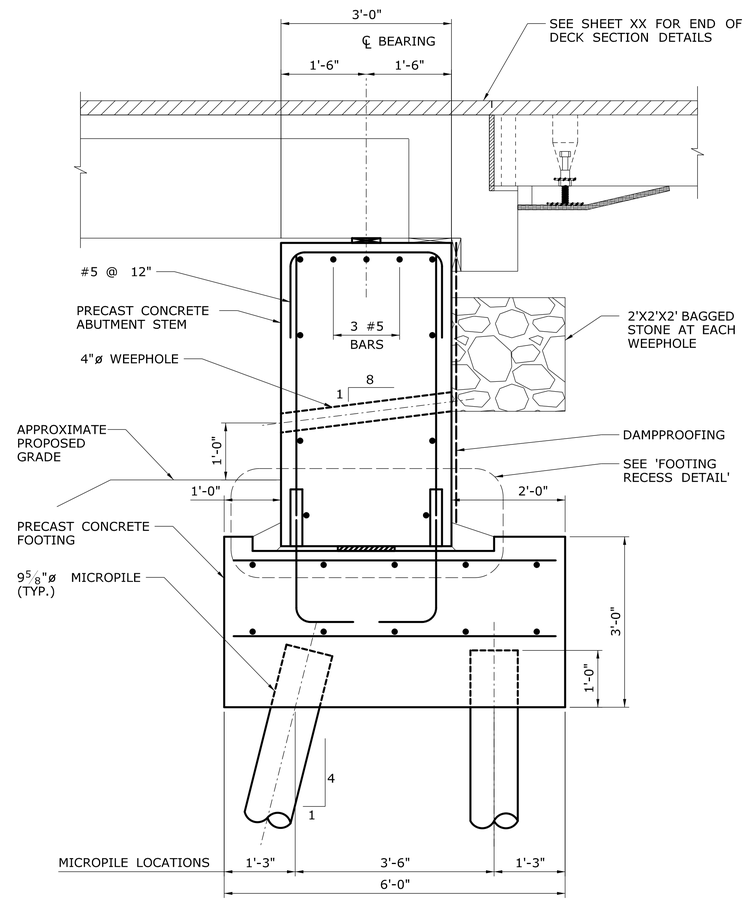

TYPICAL ABUTMENT SECTION

SCALE: ¾" = 1'-0"

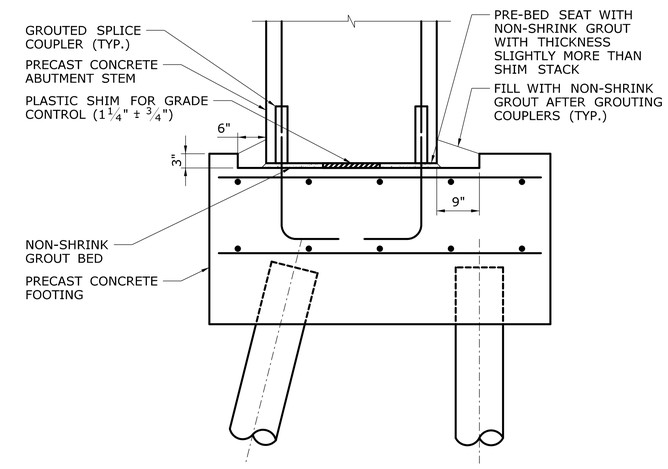

FOOTING RECESS DETAIL

NOT TO SCALE

SEMI FINAL DESIGN REVIEW

REV.	DATE	REVISION DESCRIPTION	SHEET NO.

THE INFORMATION, INCLUDING ESTIMATED QUANTITIES OF WORK, SHOWN ON THESE SHEETS IS BASED ON LIMITED INVESTIGATIONS BY THE STATE AND IS IN NO WAY WARRANTED TO INDICATE THE CONDITIONS OF ACTUAL QUANTITIES OF WORK WHICH WILL BE REQUIRED.

Plotted Date: 5/19/2017

DESIGNER/DRAFTER: **JMB**

CHECKED BY: **AML**

SCALE AS NOTED

STATE OF CONNECTICUT
DEPARTMENT OF TRANSPORTATION

Filename: ...\S-10. ABUTMENT DETAILS.dgn

SIGNATURE/ BLOCK:

PROJECT TITLE:
REPLACEMENT OF BRIDGE NO. 04576 PLEASANTVIEW DRIVE OVER HOCKANUM RIVER

TOWN: **VERNON**

DRAWING TITLE: **ABUTMENT DETAILS**

PROJECT NO. **146-200**

DRAWING NO. **S-10**

SHEET NO. **04.10**

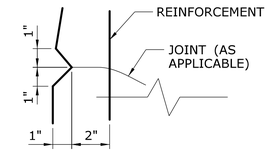

RUSTICATION DETAIL

SCALE: 3" = 1'-0"

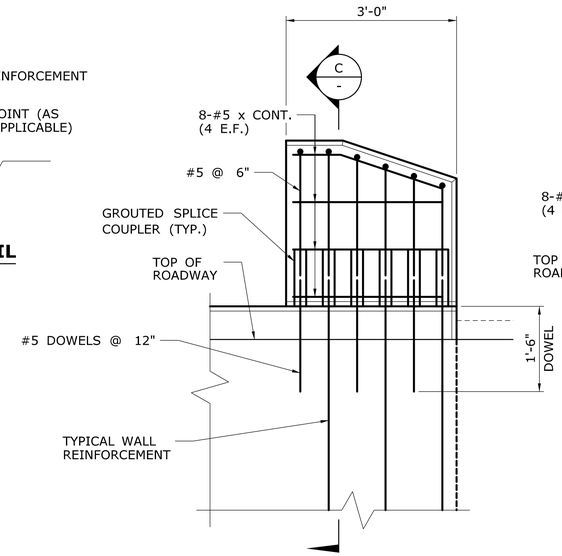

TYPICAL END BLOCK REINFORCEMENT

SCALE: $^3/_4$" = 1'-0"

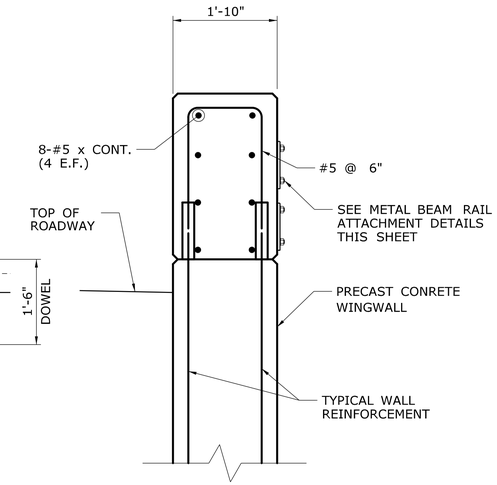

SECTION - END BLOCK C / -

SCALE: $^3/_4$" = 1'-0"

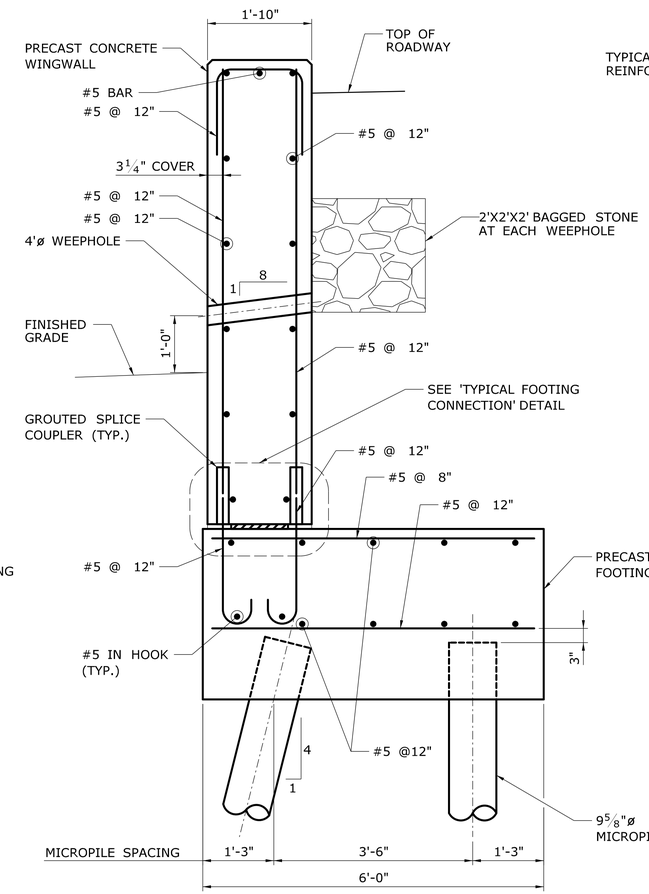

TYPICAL WINGWALL SECTION

SCALE: $^3/_4$" = 1'-0"

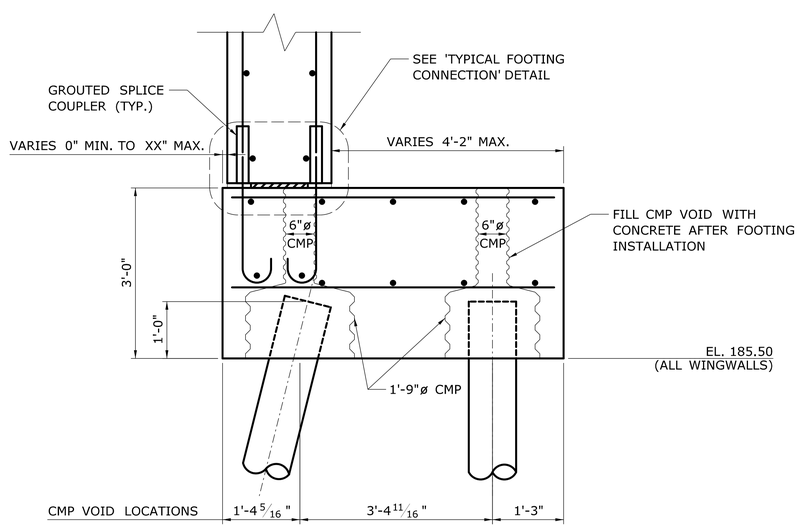

TYPICAL FOOTING CONNECTION AT VOID

SCALE: $^3/_4$" = 1'-0"

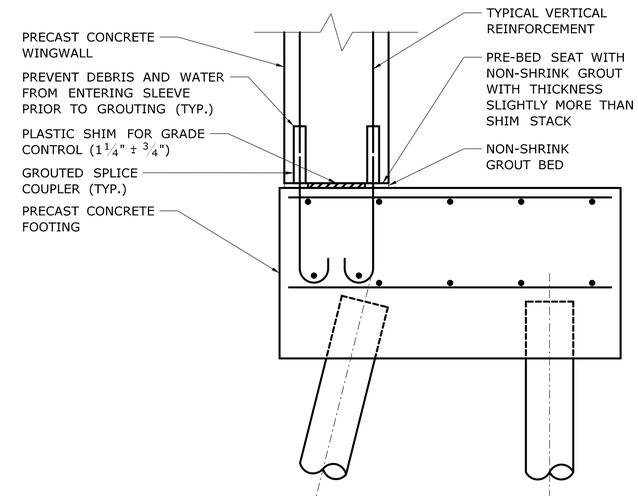

TYPCIAL FOOTING CONNECTION

NOT TO SCALE

SEMI FINAL DESIGN REVIEW

REV.	DATE	REVISION DESCRIPTION	SHEET NO.

THE INFORMATION, INCLUDING ESTIMATED QUANTITIES OF WORK, SHOWN ON THESE SHEETS IS BASED ON LIMITED INVESTIGATIONS BY THE STATE AND IS IN NO WAY WARRANTED TO INDICATE THE CONDITIONS OF ACTUAL QUANTITIES OF WORK WHICH WILL BE REQUIRED.

Plotted Date: 5/19/2017

DESIGNER/DRAFTER: **JMB**

CHECKED BY: **AML**

SCALE AS NOTED

STATE OF CONNECTICUT
DEPARTMENT OF TRANSPORTATION

Filename: ...\S-11_WINGWALL DETAILS.dgn

SIGNATURE/ BLOCK:

PROJECT TITLE:
REPLACEMENT OF BRIDGE NO. 04576 PLEASANTVIEW DRIVE OVER HOCKANUM RIVER

TOWN: **VERNON**

DRAWING TITLE: **WINGWALL DETAILS**

PROJECT NO. **146-200**

DRAWING NO. **S-11**

SHEET NO. **04.11**

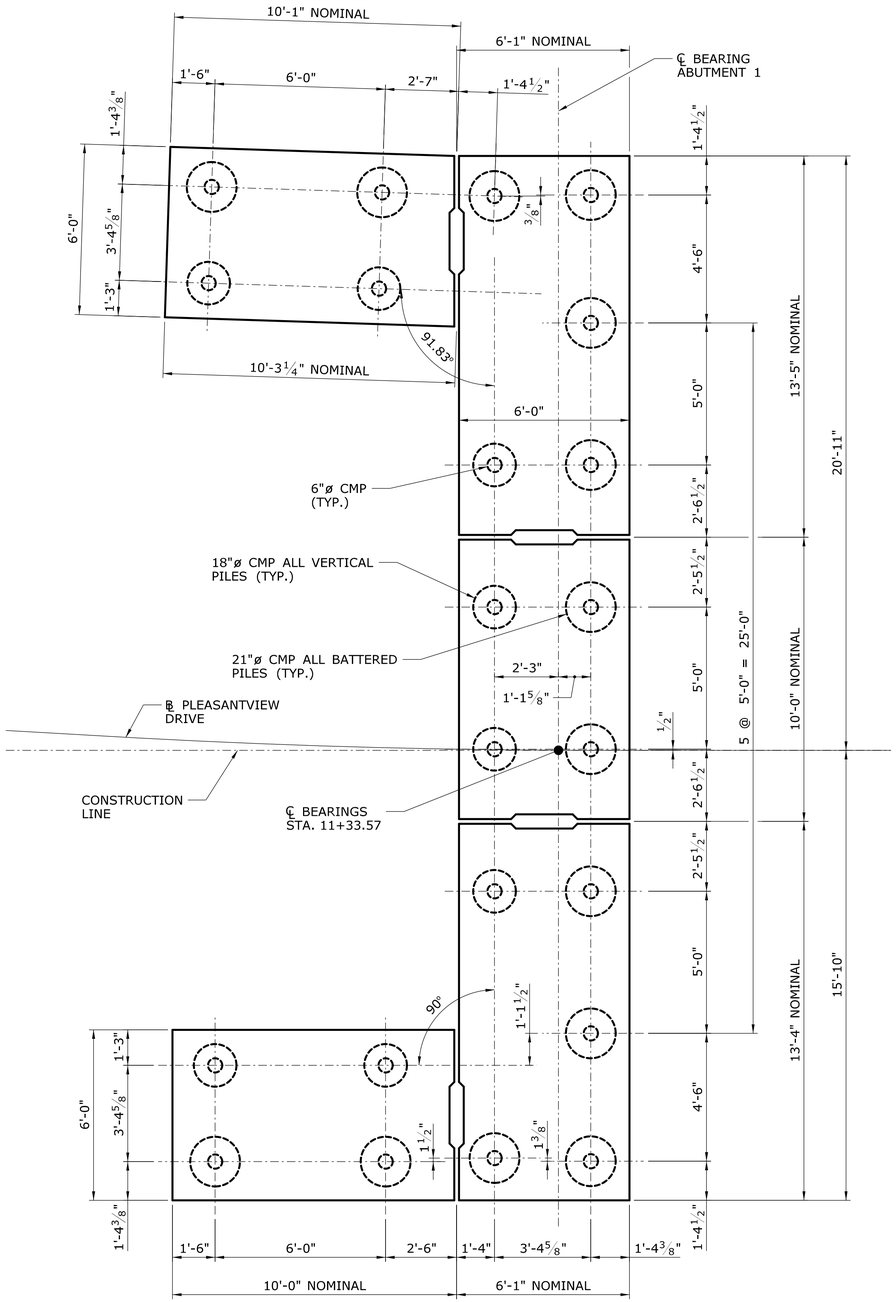

ABUTMENT 1 - FOOTING PLAN

SCALE: ⅜" = 1'-0"

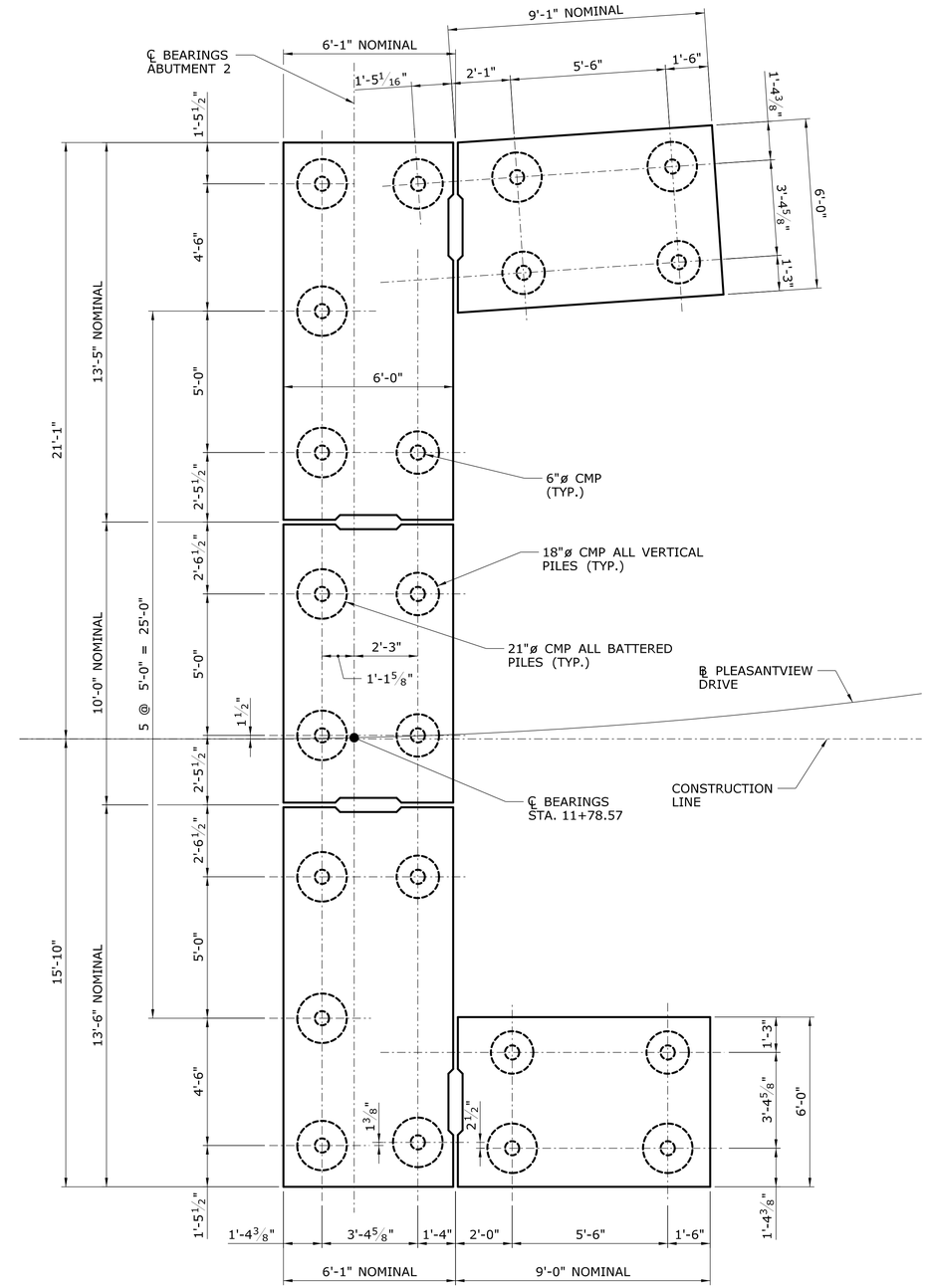

ABUTMENT 2 - FOOTING PLAN

SCALE: ⅜" = 1'-0"

SEMI FINAL DESIGN REVIEW

REV.	DATE	REVISION DESCRIPTION	SHEET NO.

THE INFORMATION, INCLUDING ESTIMATED QUANTITIES OF WORK, SHOWN ON THESE SHEETS IS BASED ON LIMITED INVESTIGATIONS BY THE STATE AND IS IN NO WAY WARRANTED TO INDICATE THE CONDITIONS OF ACTUAL QUANTITIES OF WORK WHICH WILL BE REQUIRED.

Plotted Date: 5/19/2017

DESIGNER/DRAFTER: **JMB**

CHECKED BY: **AML**

SCALE AS NOTED

STATE OF CONNECTICUT
DEPARTMENT OF TRANSPORTATION

Filename: ...\S-12_FOOTING_DETAILS.dgn

SIGNATURE/ BLOCK:

PROJECT TITLE:
REPLACEMENT OF BRIDGE NO. 04576 PLEASANTVIEW DRIVE OVER HOCKANUM RIVER

TOWN: **VERNON**

DRAWING TITLE: **FOOTING DETAILS**

PROJECT NO. **146-200**

DRAWING NO. **S-12**

SHEET NO. **04.12**

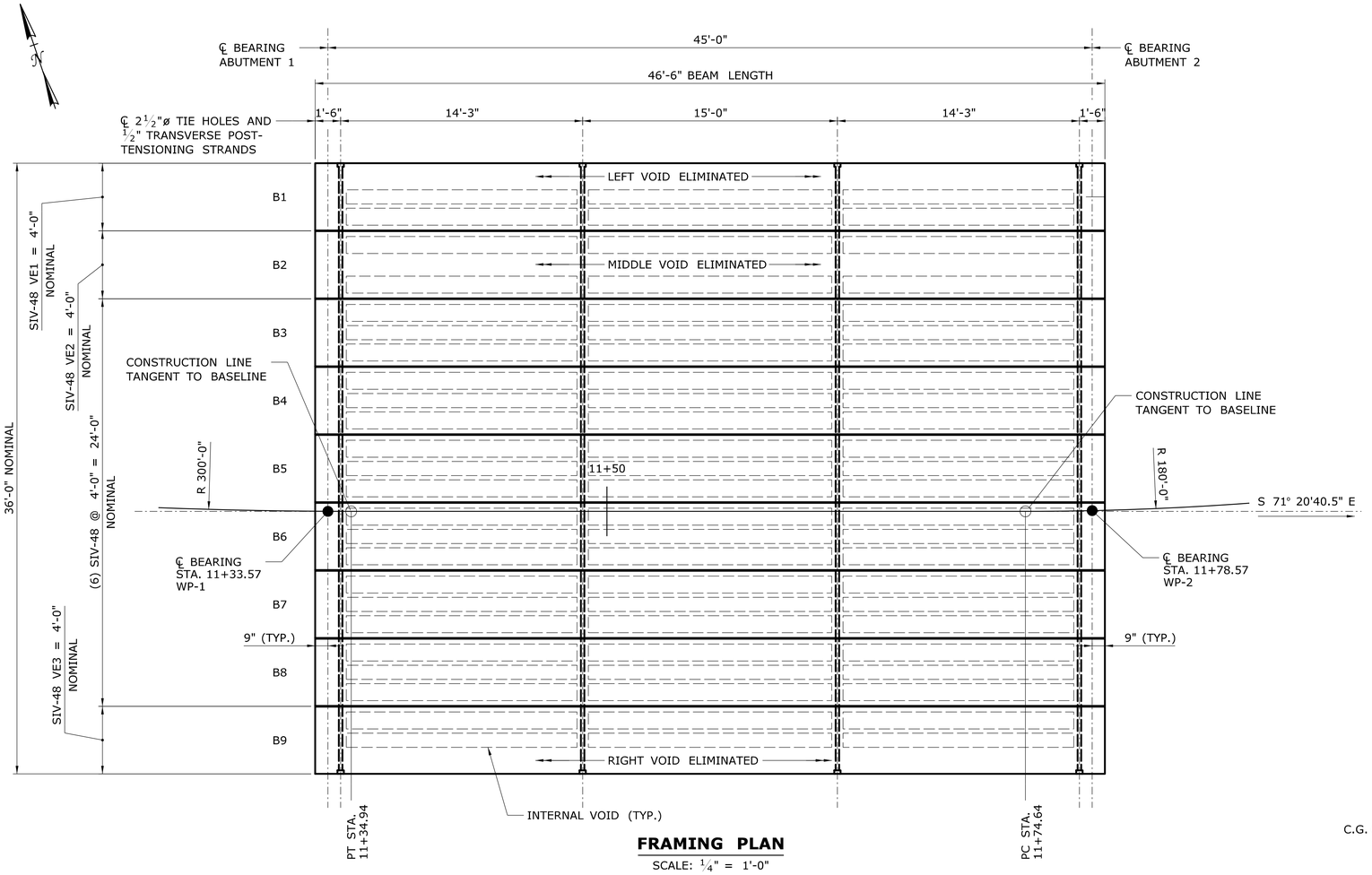

FRAMING PLAN

SCALE: ¼" = 1'-0"

PRESTRESSED CONCRETE NOTES:

1. PRESTRESSED CONCRETE SHALL CONFORM TO THE FOLLOWING REQUIREMENTS:

   MINIMUM COMPRESSIVE STRENGTH AT TRANSFER (f'ci) = 4,000 PSI
   MINIMUM 28 COMPRESSIVE STRENGTH (f'c) = 5,500 PSI

2. PRESTRESSING STRANDS SHALL BE ½"ø, 7 WIRE, UNCOATED, LOW RELAXATION STRANDS CONFORMING TO THE REQUIREMENTS OF AASHTO 203 (ASTM A416), GRADE 270, AND SHALL CONFORM TO THE FOLLOWING REQUIREMENTS:

   ULTIMATE JACKING STRENGTH (fs) = 270 KSI
   INITIAL JACKING TENSION = 30.98 KIPS

3. PRESTRESSING STRANDS SHALL BE PLACED AT 2" ON CENTER MINIMUM, SHALL HAVE A MINIMUM COVER OF 1½", SHALL BE DISTRIBUTED OVER THE SLAB WIDTH AS EVENLY AS POSSIBLE, AND SHALL HAVE STRAND PATTERNS THAT ARE SYMMETRICAL ABOUT THE CENTERLINE OF THE SLAB.

4. ALL NON-PRESTRESSED REINFORCEMENT SHALL CONFORM TO ASTM A615 GRADE 60 AND SHALL HAVE A MINIMUM COVER OF 2" UNLESS OTHERWISE NOTED.

5. ALL NON-PRESTRESSED REINFORCEMENT IN TEH PRESTRESSED SLABS INCLUDING STIRRUPS, BAR TIES AND CHAIRS, SHALL BE EPOXY COATED AND SHALL BE INCLUDED IN THE ITEMS "PRESTRESSED DECK UNITS (4'-0" x 1'-9")".

6. ENDS OF THE PRESTRESSED VOIDED SLABS SHALL BE VERTICAL UPON APPLICATION OF FULL DEAD LOADS.

7. IT IS NOT INTENDED THAT THE VOIDED SLABS BE INSTALLED IN CONTACT WITH EACH OTHER, BUT RATHER THAT THE CENTERLINE DISTANCE BETWEEN EACH BE 4'-0".

8. NO ADDITIONAL DEAD LOADS OR LIVE LOADS SHALL BE APPLIED TO THE VOIDED SLABS UNTIL THE TRANSVERSE TIES HAVE BEEN FULLY TENSIONED AND THE GROUT IN THE LONGITUDINAL SHEAR KEYS HAS REACHED A SEVEN-DAY COMPRESSIVE STRENGTH OF 4,500 PSI.

9. POCKETS FOR TRANSVERSE TIE ANCHORAGE SHALL BE DRY PACKED WITH NON-SHRINK GROUT FLUSH WITH THE EXTERIOR SURFACE OF THE FASCIA SLAB AFTER TRANSFER OF TENSIONING HAS BEEN COMPLETED.

10. THE CONTRACTOR MAY SUBMIT FOR REVIEW AN ALTERNATE PRESTRESSED VOIDED SLAB DESIGN USING DEBONDED AND/OR DRAPED STRANDS. THE MAXIMUM NUMBER OF DEBONDED STRANDS SHALL BE 25% OF THE TOTAL NUMBER OF STRANDS. ALL DEBONDING SHALL BE LOCATED WITHIN A DISTANCE OF 15% OF THE SPAN LENGTH FROM THE END OF THE MEMBER. IF DRAPED STRANDS ARE USED, THE TOTAL HOLD DOWN FORCE OF ALL THE DRAPED STRANDS SHALL NOT EXCEED 75% OF THE TOTAL WEIGHT OF THE MEMBER. SEE SPECIAL PROVISIONS FOR THE DESIGN AND PLAN SUBMISSION REQUIREMENTS.

VOIDED SLAB TYPES:

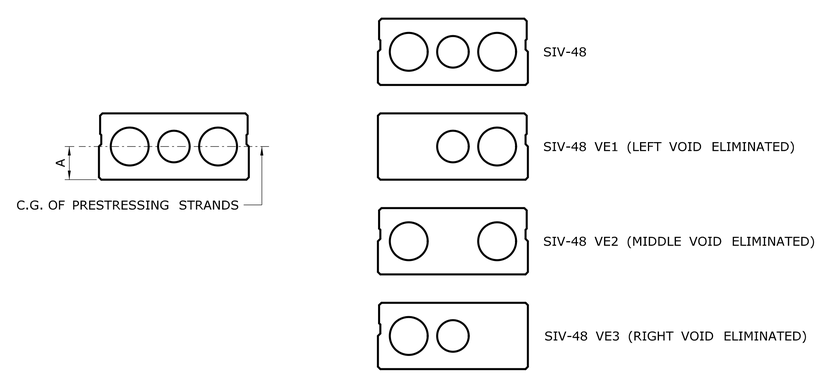

PRESTRESSED VOIDED SLAB DATA

	STRAND DATA		AT MIDSPAN	AT END	ESTIMATED CAMBER AT MIDSPAN			FINAL ESTIMATED DEFLECTION AT MIDSPAN		
BEAM TYPE	TYPE	NO. OF STRANDS	DIM. "A"	DIM. "A"	AT TRANSFER	AT ERECTION	FINAL	GIRDER DL	ADD'L DL	COMPOSITE DL
SIV-48	STRAIGHT	22	3.45"	3.45"	0.694"	1.230"	0.740"	1.417"	-0.342"	-0.322"
SIV-48 VE1	STRAIGHT	24	3.33"	3.33"	0.736"	1.254"	0.820"	1.504"	-0.331"	-0.312"
SIV-48 VE2	STRAIGHT	24	3.33"	3.33"	0.736"	1.254"	0.820"	1.504"	-0.331"	-0.312"
SIV-48 VE3	STRAIGHT	24	3.33"	3.33"	0.736"	1.254"	0.820"	1.504"	-0.331"	-0.312"

CAMBER NOTES:

1. 'AT TRANSFER' INDICATES CAMBER DUE TO PRESTRESSING FORCE AT TRANSFER MINUS DEFLECTION DUE TO BEAM SELF WEIGHT.
2. 'AT ERECTION' INDICATES CAMBER DUE TO PRESTRESSING FORCE MINUS DEFLECTION DUE TO BEAM SELF WEIGHT APPROXIMATELY 30 DAYS AFTER TRANSFER.
3. 'FINAL' INDICATES LONG-TERM CAMBER PRESENT AFTER ALL DEAD LOADS ARE APPLIED TO THE STRUCTURE.
4. POSITIVE CAMBER INDICATES UPWARD DEFLECTION.

DEFLECTION NOTES:

1. 'GIRDER DL' INDICATES LONG-TERM DEFLECTION DUE TO PRESTRESSING FORCE AND DEFLECTION DUE TO BEAM SELF WEIGHT.
2. 'ADD'L DL' INDICATES LONG-TERM DEFLECTION DUE TO THE DECK SLAB CONCRETE.
3. 'COMPOSITE DL' INDICATES THE LONG-TERM DEFLECTION DUE TO THE PARAPETS AND BITUMINOUS OVERLAY.
4. POSITIVE DEFLECTION INDICATES UPWARD DEFLECTION.

SEMI FINAL DESIGN REVIEW

REV.	DATE	REVISION DESCRIPTION	SHEET NO.

THE INFORMATION, INCLUDING ESTIMATED QUANTITIES OF WORK, SHOWN ON THESE SHEETS IS BASED ON LIMITED INVESTIGATIONS BY THE STATE AND IS IN NO WAY WARRANTED TO INDICATE THE CONDITIONS OF ACTUAL QUANTITIES OF WORK WHICH WILL BE REQUIRED.

Plotted Date: 5/19/2017

DESIGNER/DRAFTER: JMB
CHECKED BY: AML
SCALE AS NOTED

STATE OF CONNECTICUT
DEPARTMENT OF TRANSPORTATION

Filename: ...\S-13_FRAMING PLAN.dgn

SIGNATURE/ BLOCK:

PROJECT TITLE: REPLACEMENT OF BRIDGE NO. 04576 PLEASANTVIEW DRIVE OVER HOCKANUM RIVER

TOWN: VERNON

DRAWING TITLE: FRAMING PLAN

PROJECT NO. 146-200
DRAWING NO. S-13
SHEET NO. 04.13

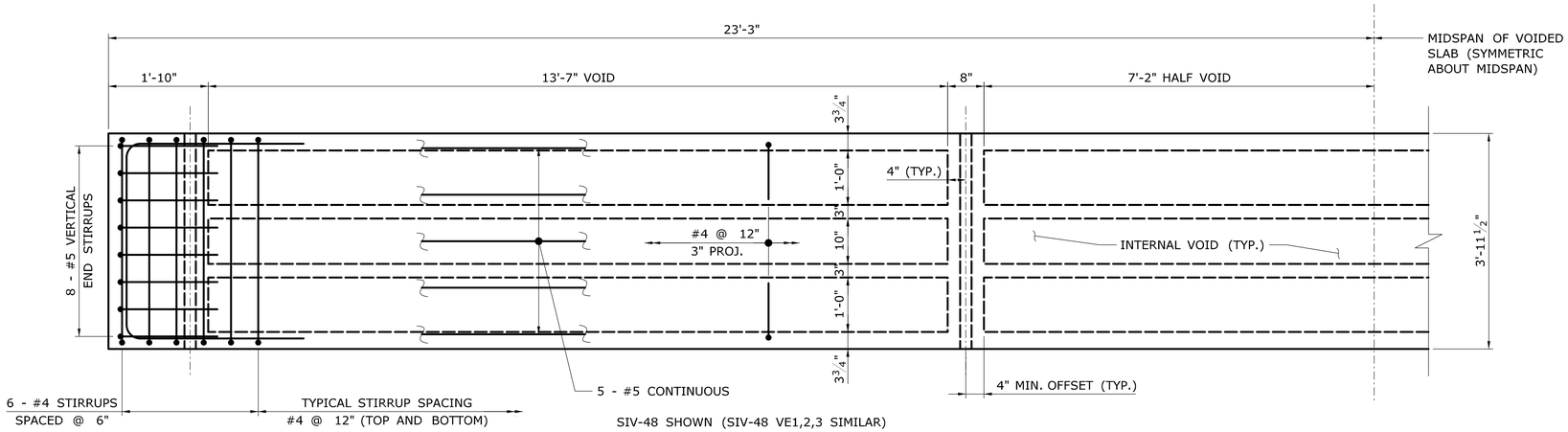

SIV-48 SHOWN (SIV-48 VE1,2,3 SIMILAR)

SIV-48 AND SIV-48 VE PLAN

SCALE: ¾" = 1'-0"

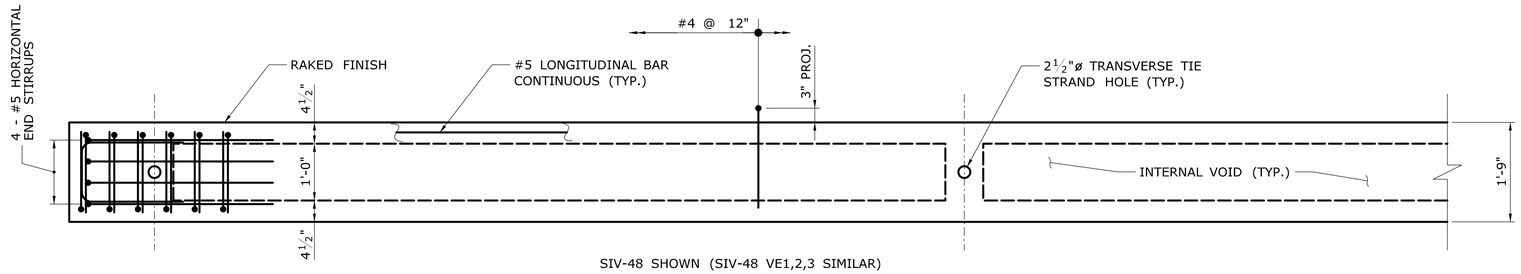

SIV-48 SHOWN (SIV-48 VE1,2,3 SIMILAR)

SIV-48 AND SIV-48 VE ELEVATION

SCALE: ¾" = 1'-0"

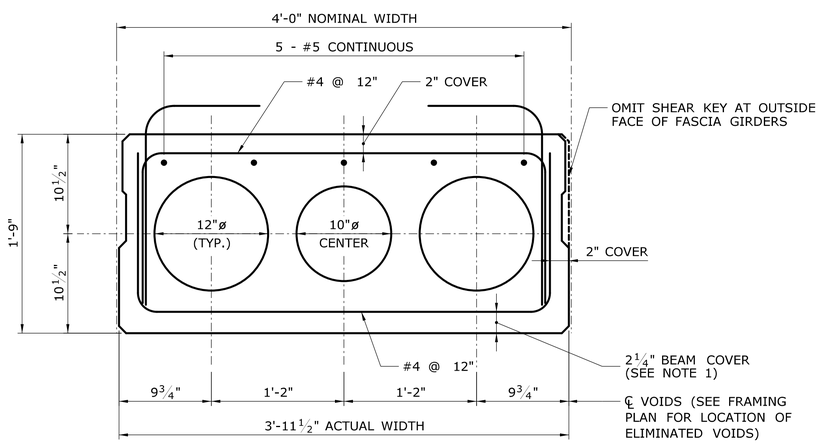

SIV-48 SHOWN (SIV-48 VE1,2,3 SIMILAR)

SIV-48 SECTION AT VOIDS

SCALE: 1½" = 1'-0"

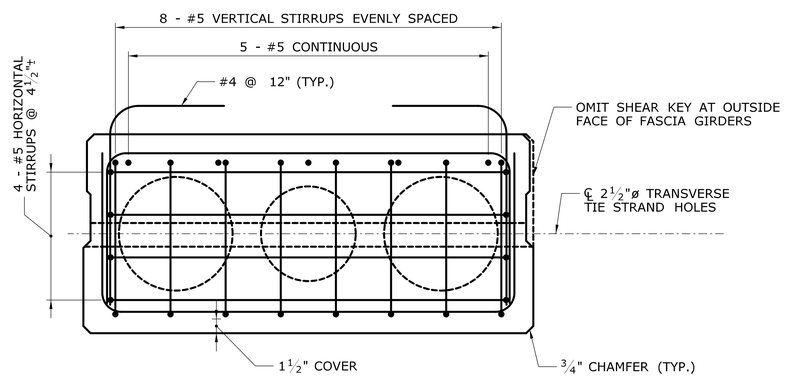

SIV-48 SHOWN (SIV-48 VE1,2,3 SIMILAR)

SIV-48 SECTION AT END

SCALE: 1½" = 1'-0"

BEAM NOTES:

1. 2¼" COVER SHOWN IS REQUIRED TO FACILITATE THE PLACEMENT OF THE BOTTOM ROW OF PRESTRESSING STRANDS. THE FABRICATOR MAY MODIFY COVER TO A MINIMUM OF 1½" IF NO CONFLICTS EXIST WITH THE PRESTRESSING STRANDS.
2. EXTEND LONGITUDINAL LEGS TO A MINIMUM DISTANCE EQUAL TO THE DEPTH OF THE BEAM OR 12" INTO THE WEB OF THE VOIDED SECTION, WHICHEVER IS LARGER.
3. HORIZONTAL LEGS OF THE VERTICAL STIRRUPS ARE EQUAL TO THE DEPTH OF THE BEAM.
4. THE VERTICAL LOCATION OF THE TRANSVERSE TIE STRANDS MUST BE COORDINATED WITH THE LOCATION OF THE PRESTRESSED STRANDS AND ADJUSTED AS NECESSARY BY THE FABRICATOR.
5. THE SLAB UNITS SHALL BE PLACED AT THE NOMINAL SPACING SHOWN ON THE PLAN WITH A GAP BETWEEN UNITS. THE WIDTH OF THE GAPS WILL VARY DUE TO THE SWEEP OF THE UNITS.
6. GROUT FOR THE SHEAR KEYS SHALL BE RODDED OR VIBRATED TO ENSURE THAT ALL VOIDS IN THE SHEAR KEYS ARE FILLED.
7. TRANSVERSE TIES SHALL BE COVERED BY A SEAMLESS POLYPROPYLENE SHEATH, WITH CORROSION INHIBITING GREASE BETWEEN THE STRAND AND SHEATH, FOR THE FULL LENGTH OF THE STRAND EXCEPT AT THE ANCHORAGE LOCATION.
8. OTHER TRANSVERSE ANCHORAGE SYSTEMS MAY BE SUBMITTED WITH THE APPROVAL OF THE ENGINEER. ALTERNATE ANCHORAGE SYSTEMS SHALL BE WATERTIGHT AND CORROSION PROOF.
9. THE DRILLING OF HOLES IN (OR THE USE OF POWER ACTUATED TOOLS ON) PRESTRESSED MEMBERS WILL NOT BE PERMITTED.

TRANSVERSE STRAND POST-TENSIONING PROCEDURE:

1. AFTER ERECTING THE PRESTRESSED VOIDED SLABS FOR THE CONSTRCUTION STAGE, INSTALL THE TRANSVERSE TIES.
2. TENSION EACH TRANSVERSE TIE TO 5 KIPS.
3. SEAL THE BOTTOM OF THE LONGITUDINAL SHEAR KEYS WITH CLOSED CELL POLYETHYLENE FOAM BACKER ROD AND PLACE NON-SHRINK GROUT IN THE LONGITUDINAL SHEAR KEYS AND INTERNAL DIAPHRAGMS. THE GROUT SHALL BE RODDED OR VIBRATED TO ENSURE THAT ALL THE VOIDS IN THE SHEAR KEYS ARE FILLED.
4. WHEN THE GROUT HAS ATTAINED A COMPRESSIVE STRENGTH OF 1500 PSI, AT EACH TRANSVERSETIE LOCATION, TENSION THE TIE TO 15 KIPS. REPEAT THIS TENSIONING SEQUENCE ONCE MORE SO THAT EACH TIE IS TENSIONED TO 30 KIPS.
5. NO DEAD LOADS OR LIVE LOADS SHALL BE APPLIED TO THE BUTTED VOIDED SLABS UNTIL THE TRANSVERSE TIES HAVE BEEN FULLY TENSIONED AND THE GROUT IN THE LONGITUDINAL SHEAR KEYS HAS REACHED A SEVEN-DAY COMPRESSIVE STRENGTH OF 4500 PSI.

SEMI FINAL DESIGN REVIEW

REV.	DATE	REVISION DESCRIPTION	SHEET NO.

THE INFORMATION, INCLUDING ESTIMATED QUANTITIES OF WORK, SHOWN ON THESE SHEETS IS BASED ON LIMITED INVESTIGATIONS BY THE STATE AND IS IN NO WAY WARRANTED TO INDICATE THE CONDITIONS OF ACTUAL QUANTITIES OF WORK WHICH WILL BE REQUIRED.

Plotted Date: 5/19/2017

DESIGNER/DRAFTER: JMB
CHECKED BY: AML
SCALE AS NOTED

STATE OF CONNECTICUT
DEPARTMENT OF TRANSPORTATION

Filename: ...\S-14.BEAM DETAILS - 1.dgn

SIGNATURE/ BLOCK:

PROJECT TITLE: REPLACEMENT OF BRIDGE NO. 04576 PLEASANTVIEW DRIVE OVER HOCKANUM RIVER

TOWN: VERNON

DRAWING TITLE: BEAM DETAILS - 1

PROJECT NO. 146-200
DRAWING NO. S-14
SHEET NO. 04.14

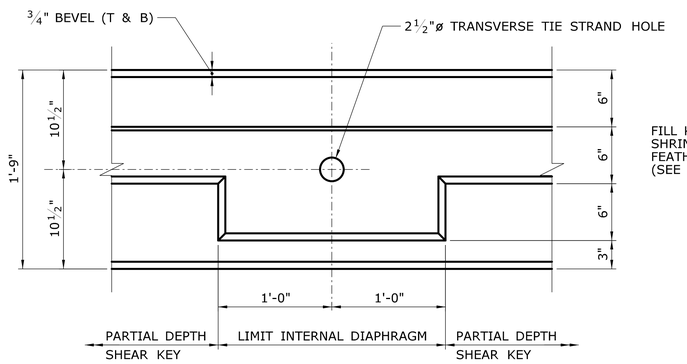

SHEAR KEY AT DIAPHRAGMS

SCALE: 1 1/2" = 1'-0"

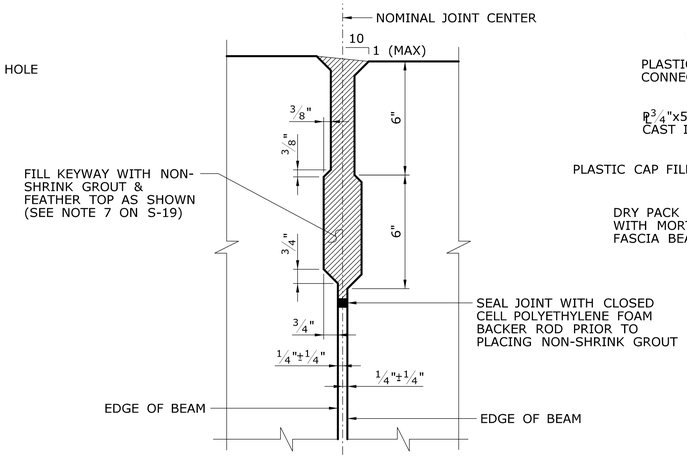

TYPICAL LONGITUDINAL JOINT

SCALE: 3" = 1'-0"

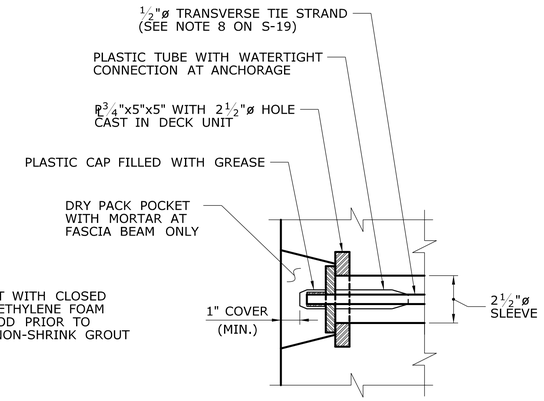

TRANSVERSE TIE POCKET DETAIL

SCALE: 3" = 1'-0"

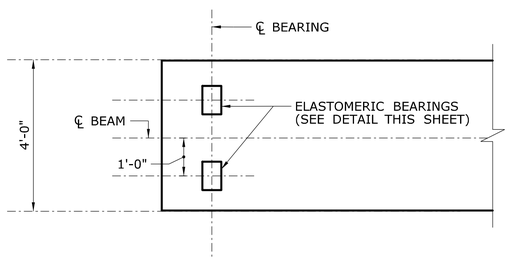

TYPICAL BEARING LAYOUT

SCALE: 1/2" = 1'-0"

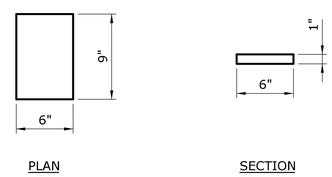

ELASTOMERIC BEARING PAD

SCALE: 1 1/2" = 1'-0"

ELASTOMERIC BEARING NOTES:

1. THE ELASTOMERIC BEARINGS ARE DESIGNED USING "METHOD A" OF THE AASHTO LRFD BRIDGE DESIGN SPECIFICATIONS.
2. THE CONTRACTOR SHALL SURVEY THE AS BUILT BRIDGE SEAT MEASUREMENTS AND SUBMIT TO THE ENGINEER FOR REVIEW PRIOR TO BEAM ERECTION.
3. THE ELASTOMER SHALL CONTAIN ONLY VIRGIN POLYCHLOROPRENE (NEOPRENE) AS THE RAW POLYMER AND HAVE A SPECIFIED SHEAR MODULUS BETWEEN 0.08 KSI AND 0.175 KSI.
10. THE ELASTOMERIC BEARINGS SHALL BE INSTALLED WHEN THE AMBIENT AIR AND BEARING TEMPERATURES ARE BETWEEN 40° F AND 85° F AND HAVE BEEN WITHIN THIS RANGE FOR AT LEAST TWO HOURS.
11. THE COST OF FURNISHING AND INSTALLING THE ELASTOMERIC BEARINGS SHALL BE PAID FOR UNDER THE ITEM "ELASTOMERIC BEARING PADS."
12. THE MAXIMUM UNFACTORED DESIGN LOAD (DL + LL WITHOUT IMPACT) FOR EACH BEARING PAD IS 30 KIPS. THIS INFORMATION IS PROVIDED FOR THE PROOF LOAD TEST DESCRIBED IN THE SPECIFICATIONS.

SEMI FINAL DESIGN REVIEW

REV.	DATE	REVISION DESCRIPTION	SHEET NO.

THE INFORMATION, INCLUDING ESTIMATED QUANTITIES OF WORK, SHOWN ON THESE SHEETS IS BASED ON LIMITED INVESTIGATIONS BY THE STATE AND IS IN NO WAY WARRANTED TO INDICATE THE CONDITIONS OF ACTUAL QUANTITIES OF WORK WHICH WILL BE REQUIRED.

Plotted Date: 5/19/2017

DESIGNER/DRAFTER: JMB

CHECKED BY: AML

SCALE AS NOTED

STATE OF CONNECTICUT
DEPARTMENT OF TRANSPORTATION

Filename: ...\S-15_BEAM DETAILS - 2.dgn

SIGNATURE/ BLOCK:

PROJECT TITLE: REPLACEMENT OF BRIDGE NO. 04576 PLEASANTVIEW DRIVE OVER HOCKANUM RIVER

TOWN: VERNON

DRAWING TITLE: BEAM DETAILS - 2

PROJECT NO. 146-200

DRAWING NO. S-15

SHEET NO. 04.15

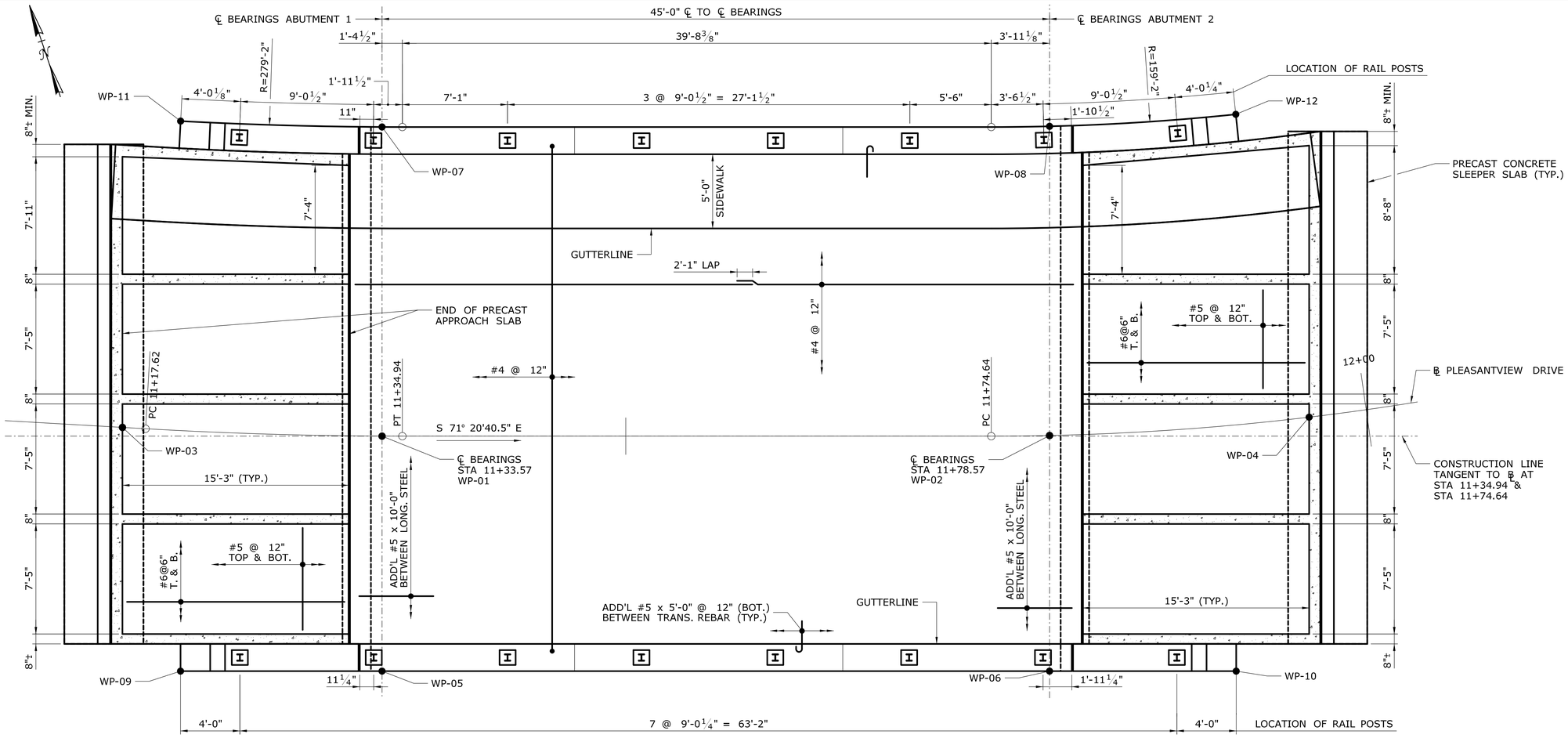

DECK PLAN

SCALE: ¼" = 1'-0"

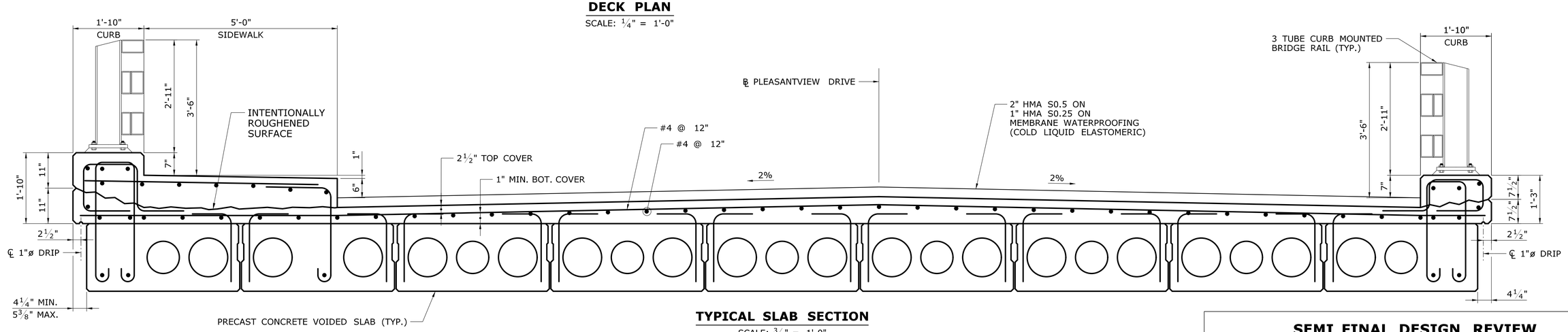

TYPICAL SLAB SECTION

SCALE: ¾" = 1'-0"

SEMI FINAL DESIGN REVIEW

REV.	DATE	REVISION DESCRIPTION	SHEET NO.

THE INFORMATION, INCLUDING ESTIMATED QUANTITIES OF WORK, SHOWN ON THESE SHEETS IS BASED ON LIMITED INVESTIGATIONS BY THE STATE AND IS IN NO WAY WARRANTED TO INDICATE THE CONDITIONS OF ACTUAL QUANTITIES OF WORK WHICH WILL BE REQUIRED.

Plotted Date: 5/19/2017

DESIGNER/DRAFTER: JMB

CHECKED BY: AML

SCALE AS NOTED

STATE OF CONNECTICUT
DEPARTMENT OF TRANSPORTATION

Filename: ...\S-16..DECK PLAN.dgn

SIGNATURE/ BLOCK:

PROJECT TITLE: REPLACEMENT OF BRIDGE NO. 04576 PLEASANTVIEW DRIVE OVER HOCKANUM RIVER

TOWN: VERNON

DRAWING TITLE: DECK PLAN

PROJECT NO. 146-200

DRAWING NO. S-16

SHEET NO. 04.16

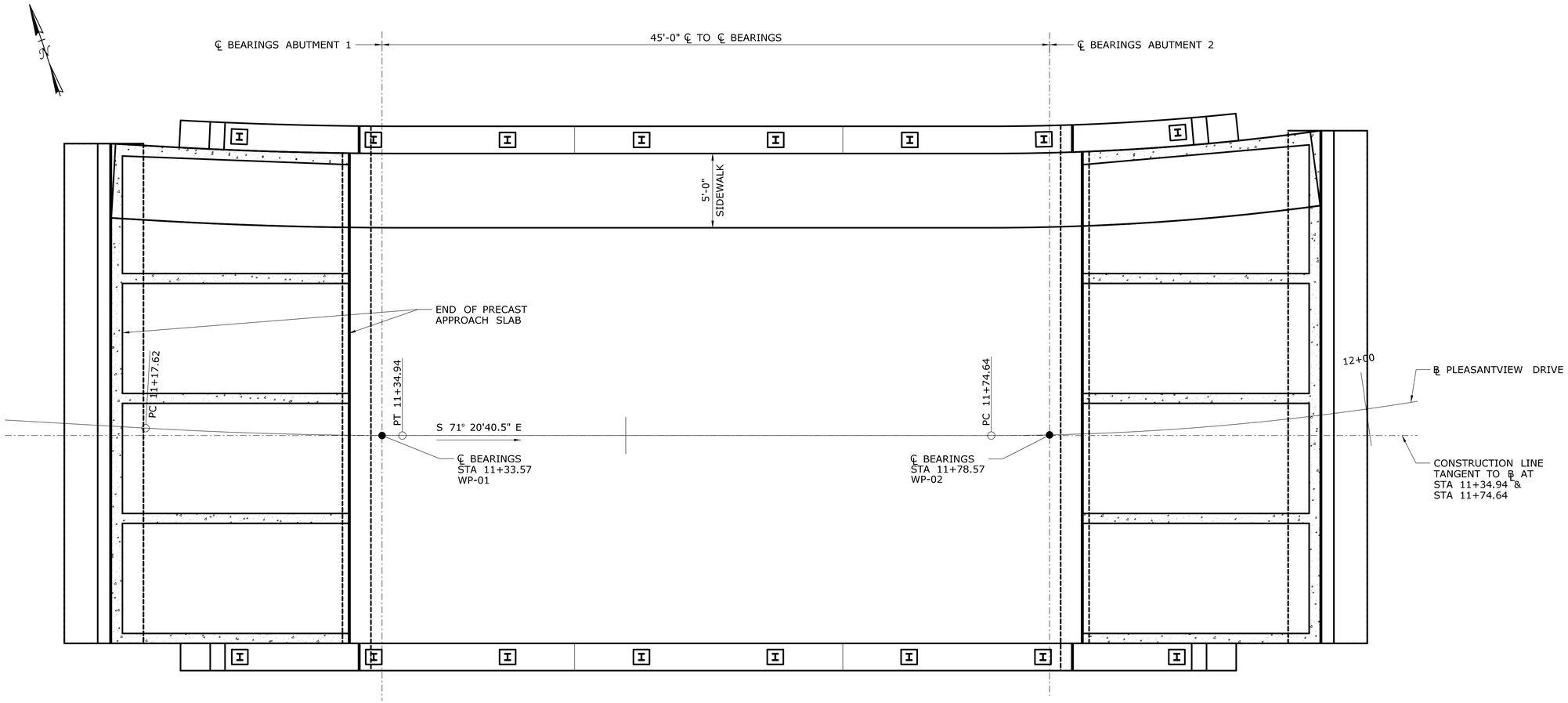

DECK PLAN

SCALE: 1/4" = 1'-0"

TOP OF SLAB ELEVATIONS

	ABUTMENT 1		0.1L		0.2L		0.3L		0.4L		0.5L		0.6L		0.7L		0.8L		0.9L		ABUTMENT 2	
	STATION	ELEVATION	STATION	ELEVATION	STATION	ELEVATION	STATION	ELEVATION	STATION	ELEVATION	STATION	ELEVATION	STATION	ELEVATION	STATION	ELEVATION	STATION	ELEVATION	STATION	ELEVATION	STATION	ELEVATION
B1																						
B2																						
B3																						
B4																						
B5																						
B6																						
B7																						
B8																						
B9																						

SEMI FINAL DESIGN REVIEW

REV.	DATE	REVISION DESCRIPTION	SHEET NO.

THE INFORMATION, INCLUDING ESTIMATED QUANTITIES OF WORK, SHOWN ON THESE SHEETS IS BASED ON LIMITED INVESTIGATIONS BY THE STATE AND IS IN NO WAY WARRANTED TO INDICATE THE CONDITIONS OF ACTUAL QUANTITIES OF WORK WHICH WILL BE REQUIRED.

Plotted Date: 5/19/2017

DESIGNER/DRAFTER: **JRA**

CHECKED BY: **AML**

SCALE AS NOTED

STATE OF CONNECTICUT
DEPARTMENT OF TRANSPORTATION

Filename: ...\S-17_DECK ELEVATIONS.dgn

SIGNATURE/
BLOCK:

PROJECT TITLE:
REPLACEMENT OF BRIDGE NO. 04576 PLEASANTVIEW DRIVE OVER HOCKANUM RIVER

TOWN: **VERNON**

DRAWING TITLE: **DECK ELEVATIONS**

PROJECT NO. **146-200**

DRAWING NO. **S-17**

SHEET NO. **04.17**

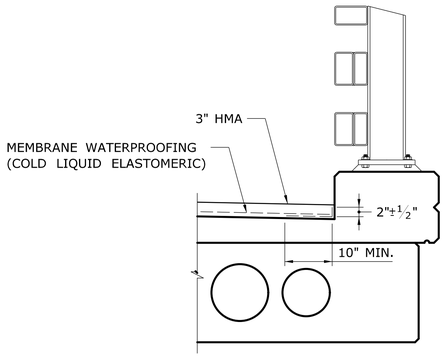

NOTE: SOUTH SIDE SHOWN. NORTH SIDE SIMILAR.

MEMBRANE WATERPROOFING AT GUTTERLINE

SCALE: ¾" = 1'-0"

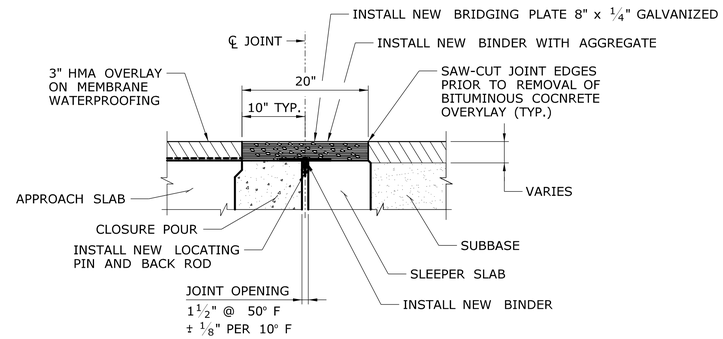

ASPHALTIC PLUG EXPANSION JOINT SYSTEM

NOT TO SCALE

ASPHALTIC PLUG EXPANSION JOINT NOTES:

1. REMOVE NEW BITUMINOUS CONCRETE OVERLAY AND MEMBRANE WATERPROOFING. REPLACE WITH ASPHALTIC PLUG EXPANSION JOINT SYSTEM. TO BE PAID FOR UNDER THE ITEM "ASPHALTIC PLUG EXPANSION JOINT SYSTEM" (SEE SPECIAL PROVISIONS).
2. REFER TO SPECIAL PROVISIONS FOR TEMPERATURE REQUIREMENTS DURING INSTALLATION OF ASPHALTIC PLUG EXPANSION JOINTS.
3. SEALING OF PARAPET JOINTS SHALL BE PAID FOR UNDER THE ITEM "ASPHALTIC PLUG EXPANSION JOINT SYSTEM."
4. SEE TABLE FOR MAXIMUM DESIGN THERMAL MOVEMENT RANGE.
5. THE CLOSED CELL BACKER ROAD SHALL BE PLACED A MINIMUM OF 2" FROM THE OUTSIDE FACE OF THE PARAPET.
6. THE NON-SAGGING SILICONE SEALANT SHALL BE PLACED ON THE BACKER ROD ½" THICK. AT THE GUTTER, THE SILICONE SEALANT SHALL BE PLACED FLUSH WITH THE OUTSIDE FACE OF CONCRETE.
7. PRIOR TO INSTALLING SILICONE SEALANT, CLEAN JOINT SIDES BY SANDBLASTING. DUST SHALL BE REMOVED BY THE METHOD APPROVED BY THE ENGINEER. THIS WORK SHALL BE PAID FOR UNDER THE ITEM "ASPHALTIC PLUG EXPANSION JOINT SYSTEM" (SEE SPECIAL PROVISIONS).

THERMAL MOVEMENT

LOCATION	MOVEMENT RANGE
ABUT. 1	½"
ABUT. 2	½"

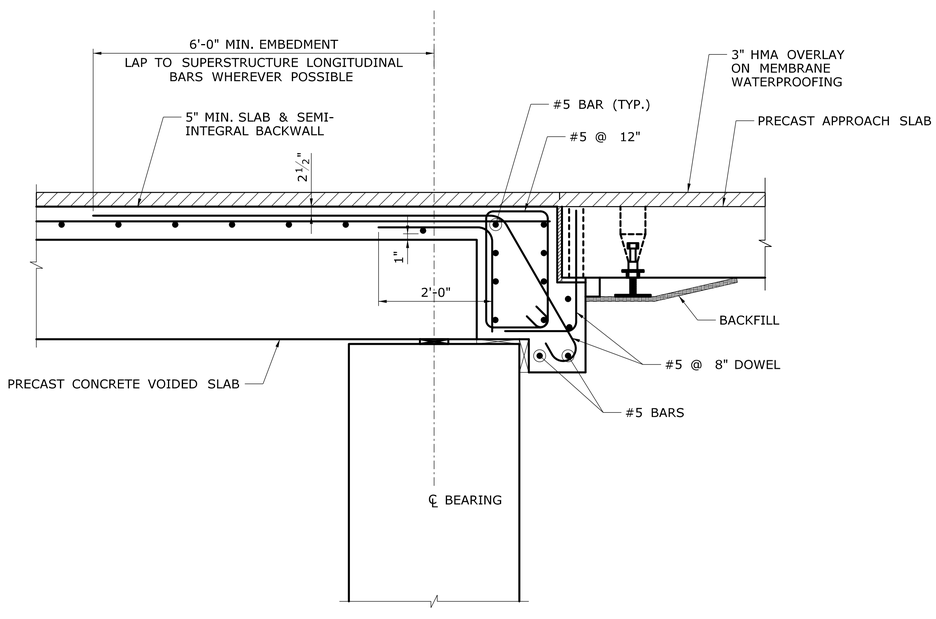

END OF DECK SECTION

SCALE: ¾" = 1'-0"

SEMI FINAL DESIGN REVIEW

REV.	DATE	REVISION DESCRIPTION	SHEET NO.

THE INFORMATION, INCLUDING ESTIMATED QUANTITIES OF WORK, SHOWN ON THESE SHEETS IS BASED ON LIMITED INVESTIGATIONS BY THE STATE AND IS IN NO WAY WARRANTED TO INDICATE THE CONDITIONS OF ACTUAL QUANTITIES OF WORK WHICH WILL BE REQUIRED.

Plotted Date: 5/19/2017

DESIGNER/DRAFTER: JMB
CHECKED BY: AML
SCALE AS NOTED

STATE OF CONNECTICUT
DEPARTMENT OF TRANSPORTATION

Filename: ...\S-18_DECK & JOINT DETAILS.dgn

SIGNATURE/
BLOCK:

PROJECT TITLE:
REPLACEMENT OF BRIDGE NO. 04576 PLEASANTVIEW DRIVE OVER HOCKANUM RIVER

TOWN: VERNON

DRAWING TITLE: DECK & JOINT DETAILS

PROJECT NO. 146-200
DRAWING NO. S-18
SHEET NO. 04.18

NOTE: THE COST OF THE C.I.P. CLOSURE POUR, REINFORCEMENT, AND CONTROLLED DENSITY FILL SHALL BE INCLUDED IN THE ITEM "PRECAST APPROACH SLAB", AND WILL NOT BE MEASURED FOR PAYMENT. SEE SPECIAL PROVISIONS.

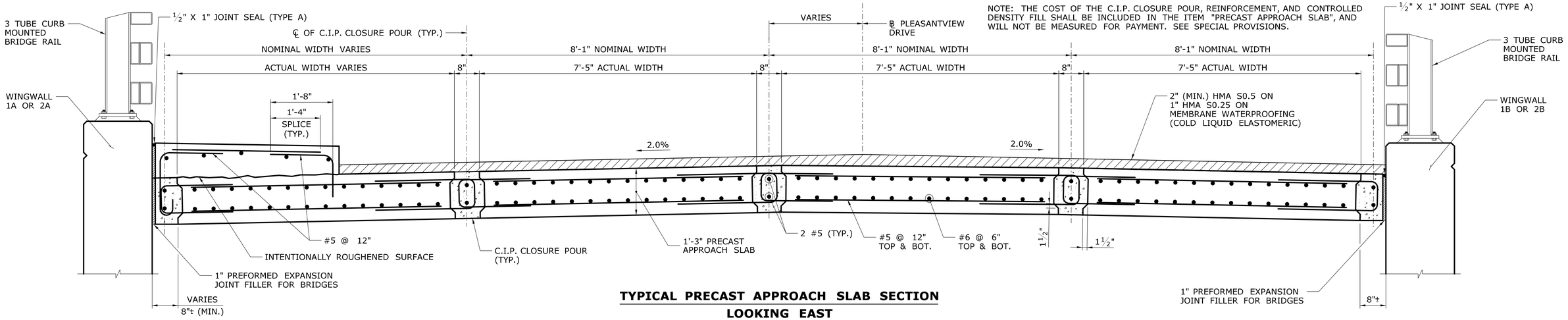

TYPICAL PRECAST APPROACH SLAB SECTION
LOOKING EAST

SCALE: ¾" = 1'-0"

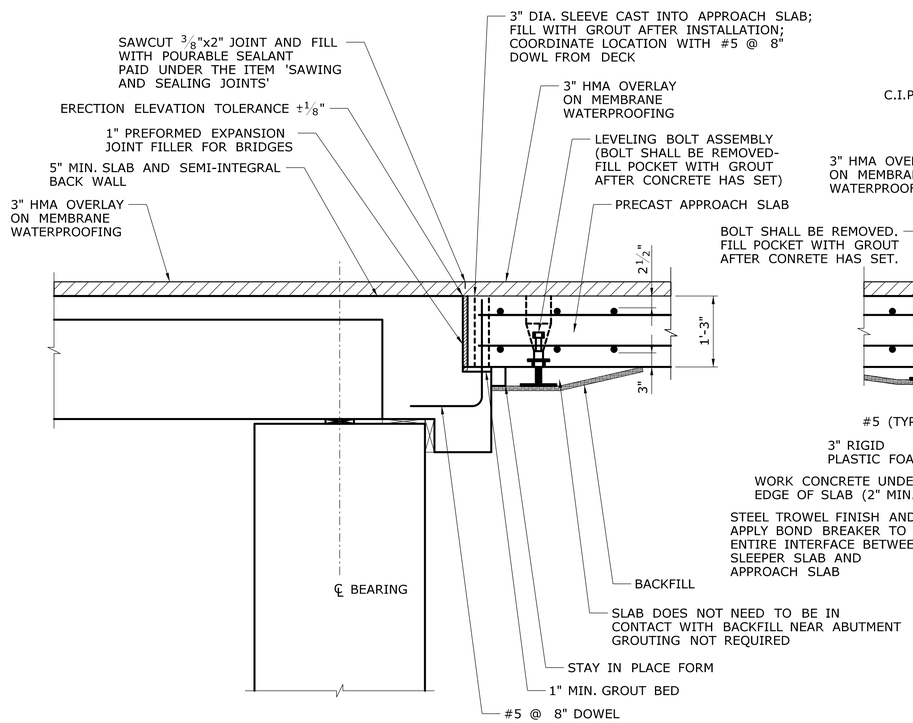

PRECAST APPROACH SLAB AT ABUTMENT

SCALE: ¾" = 1'-0"

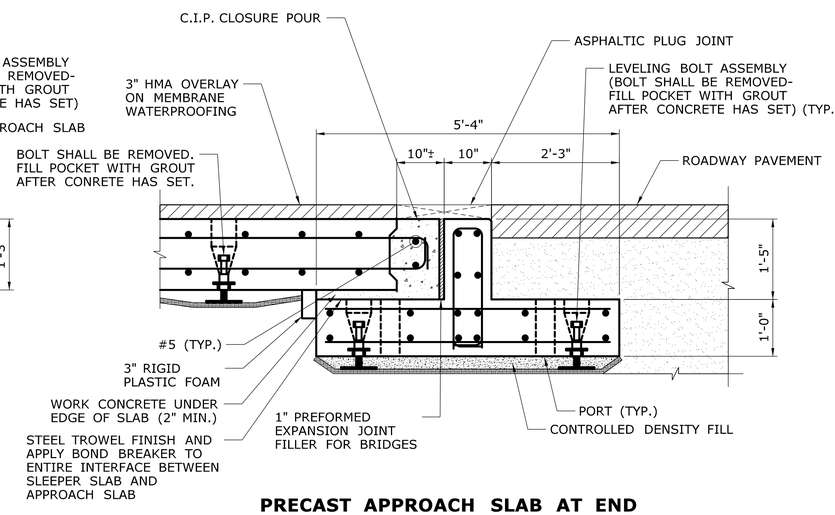

PRECAST APPROACH SLAB AT END

SCALE: ¾" = 1'-0"

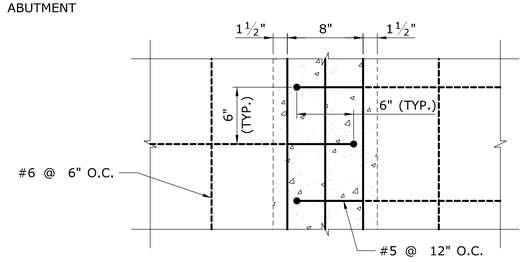

LONGITUDINAL JOINT PLAN

SCALE: 1½" = 1'-0"

PRECAST SLEEPER SLAB NOTES:

1. CONTRACTOR TO DETERMINE SIZE AND SPACING OF PORTS BASED ON CONTROLLED DENSITY FILL PROPERTIES.
2. EXCAVATION FOR SLEEPER SLABS SHALL BE CAREFULLY MADE AFTER COMPACTED ABUTMENT EMBANKMENT IS IN PLACE. THE SLEEPER SLABS SHALL BE FOUNDED ON UNDISTURBED COMPACT MATERIAL OR RE-COMPACTED MATERIAL. NO LOOSE BACKFILL SHALL BE ALLOWED. THE CONTRACTOR SHALL TAKE ALL NECESSARY PRECAUTIONS TO PROTECT THE SLEEPER SLAB FROM TEMPORARY LOADINGS OR ANY CONDITION WHICH COULD CAUSE MOVEMENTS OR UNEVEN SETTLEMENT OF THE SLEEPER SLAB.

SEMI FINAL DESIGN REVIEW

REV.	DATE	REVISION DESCRIPTION	SHEET NO.
-	-	-	-
-	-	-	-
-	-	-	-
-	-	-	-
-	-	-	-
-	-	-	-

THE INFORMATION, INCLUDING ESTIMATED QUANTITIES OF WORK, SHOWN ON THESE SHEETS IS BASED ON LIMITED INVESTIGATIONS BY THE STATE AND IS IN NO WAY WARRANTED TO INDICATE THE CONDITIONS OF ACTUAL QUANTITIES OF WORK WHICH WILL BE REQUIRED.

Plotted Date: 5/19/2017

DESIGNER/DRAFTER: JMB
CHECKED BY: AML
SCALE AS NOTED

STATE OF CONNECTICUT
DEPARTMENT OF TRANSPORTATION

Filename: ...\S-19_APPROACH_SLAB_DETAILS.dgn

SIGNATURE/ BLOCK:

PROJECT TITLE:
REPLACEMENT OF BRIDGE NO. 04576 PLEASANTVIEW DRIVE OVER HOCKANUM RIVER

TOWN: **VERNON**

DRAWING TITLE: **APPROACH SLAB DETAILS**

PROJECT NO. **146-200**
DRAWING NO. **S-19**
SHEET NO. **04.19**

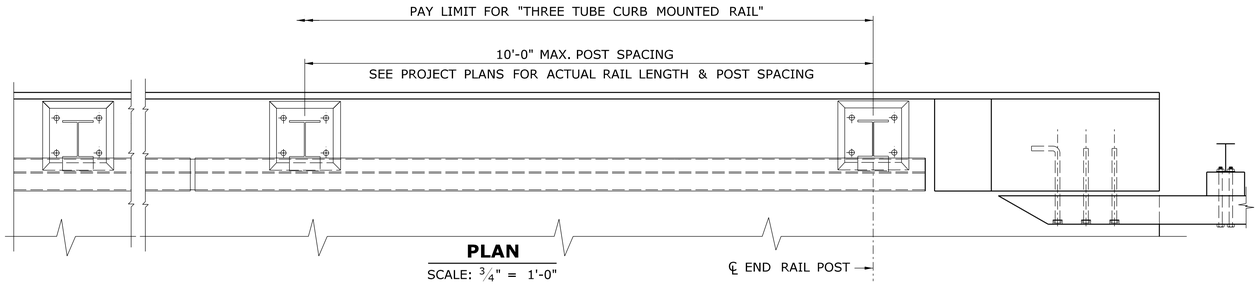

PLAN

SCALE: 3/4" = 1'-0"

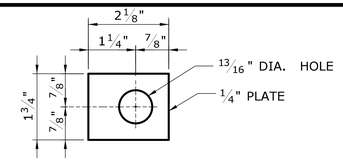

PLATE WASHER

SCALE: 6" = 1'-0"

NOTES:

THIS SHEET IS BASED ON A DESIGN DEVELOPED BY THE OREGON DEPARTMENT OF TRANSPORTATION WHICH MET ALL THE EVALUATION CRITERIA FOR AN NCHRP REPORT 350 BRIDGE RAIL AT TEST LEVEL 4 (TL-4). THIS DESIGN WAS TESTED BY THE TEXAS TRANSPORTATION INSTITUTE TO NATIONAL COOPERATIVE HIGHWAY RESEARCH PROGRAM (NCHRP) REPORT 350 TEST LEVEL 4 (TL-4) AND DOCUMENTED IN THREE SEPARATE REPORTS, ALL DATED MAY 2000, ENTITLED "NCHRP REPORT 350 TEST 4-10 OF THE OREGON 3-TUBE BRIDGE RAIL", "NCHRP REPORT 350 TEST 4-11 OF THE OREGON 3-TUBE BRIDGE RAIL", AND "NCHRP REPORT 350 TEST 4-12 OF THE OREGON 3-TUBE BRIDGE RAIL", RESPECTIVELY.
THIS SYSTEM WAS ACCEPTED FOR USE ON THE NATIONAL HIGHWAY SYSTEM (NHS) BY THE FHWA BY MEMORANDUM DATED APRIL 22, 2003.

THIS RAIL SYSTEM IS ACCEPTABLE FOR USE AS A TL-4 RAIL SYSTEM AS A TRAFFIC RAIL (ADJACENT TO VEHICULAR TRAFFIC) AND ALSO AS A COMBINATION BARRIER (ALONG OUTER EDGES OF BRIDGE SIDEWALKS) AS DEFINED IN THE AASHTO LRFD BRIDGE DESIGN SPECIFICATIONS.

FABRICATE RAILS TO THE HORIZONTAL AND VERTICAL ALIGNMENT OF THE STRUCTURE. INSTALL POSTS NORMAL TO GRADE.

WEIGHT: WEIGHT OF SYSTEM IS 70 POUNDS PER LINEAR FOOT. THIS INCLUDES WEIGHT OF THE POSTS AT AN ASSUMED SPACING OF 8' BUT NOT THE WEIGHT OF THE CONCRETE CURB.

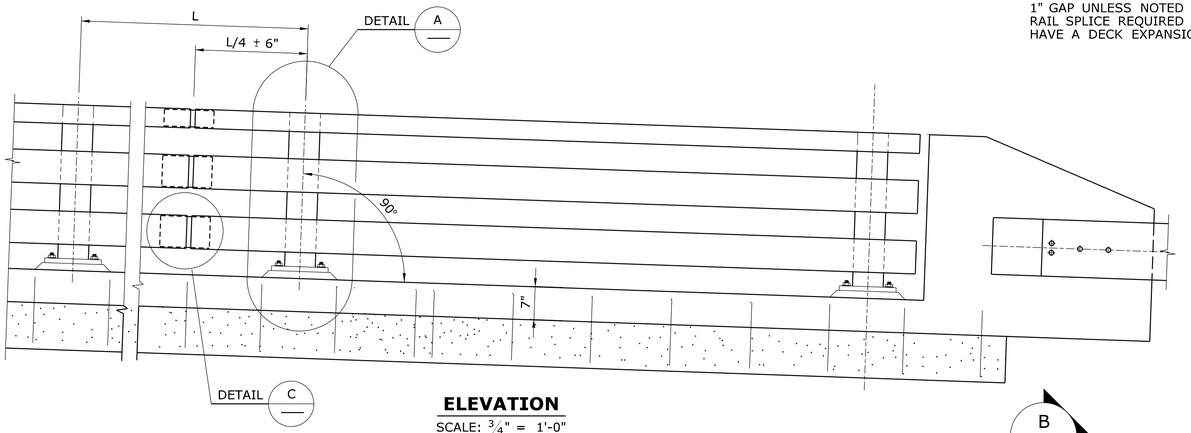

ELEVATION

SCALE: 3/4" = 1'-0"

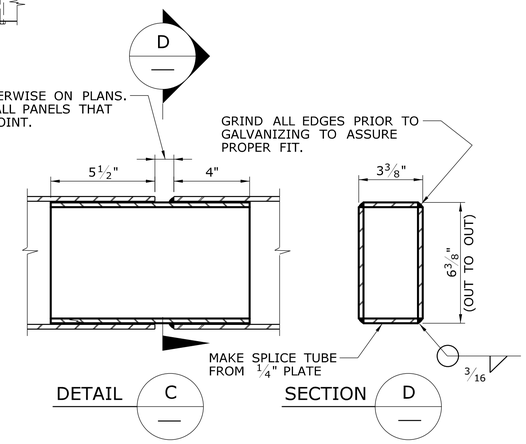

RAIL SPLICE DETAILS

SCALE: 3" = 1'-0"

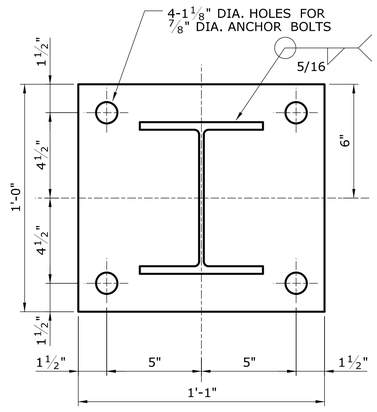

BASE PLATE DETAILS

SCALE: 3" = 1'-0"

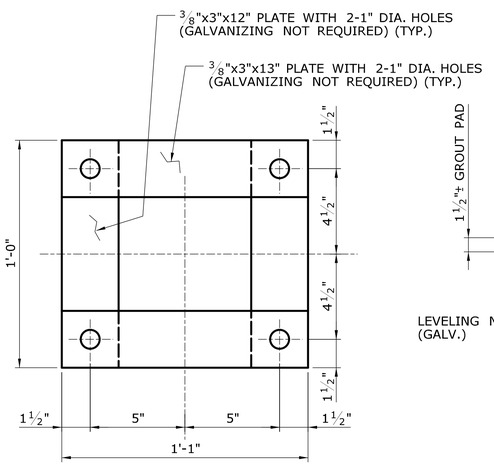

ANCHORAGE PLATES

SCALE: 3" = 1'-0"

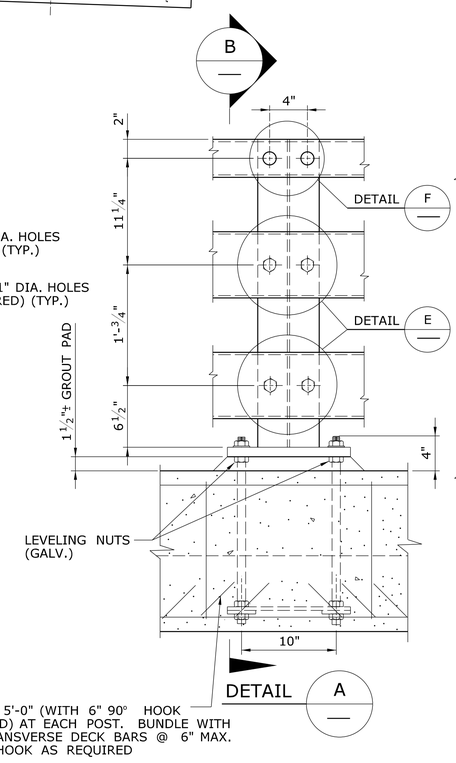

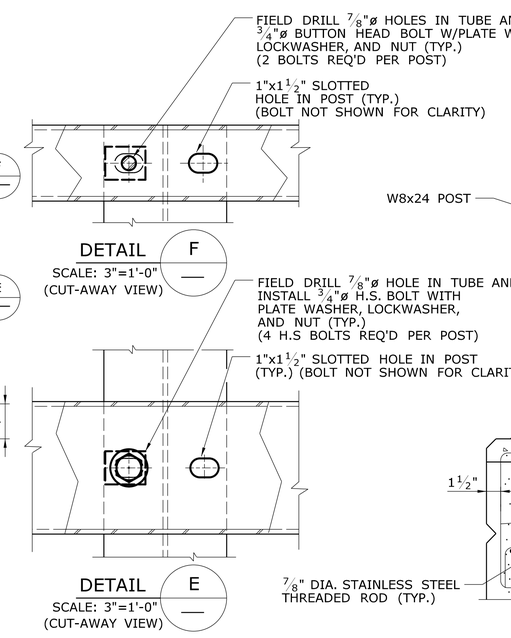

CURB AND POST DETAILS

SCALE: 1 1/2" = 1'-0"

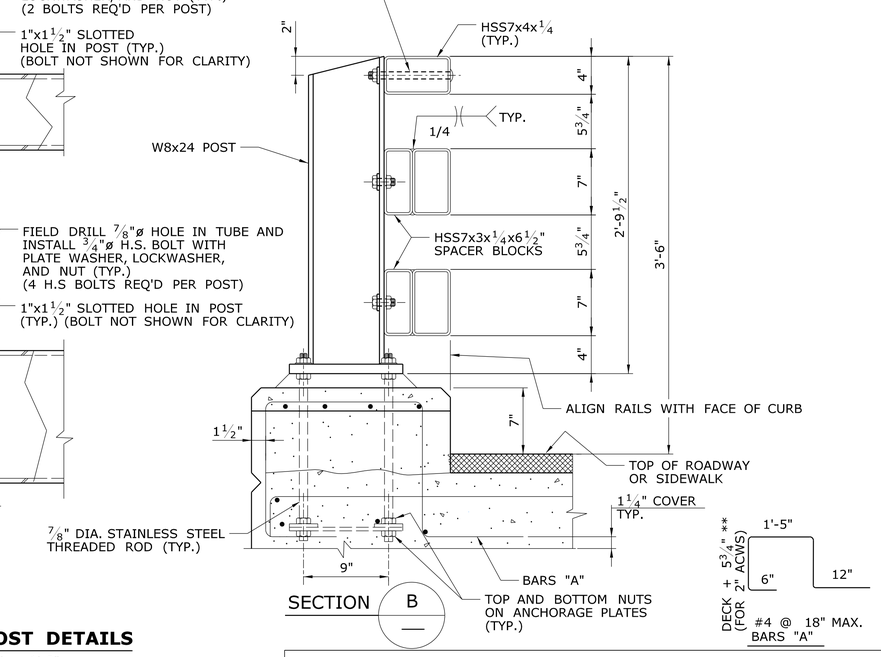

SEMI FINAL DESIGN REVIEW

REV.	DATE	REVISION DESCRIPTION	SHEET NO.

THE INFORMATION, INCLUDING ESTIMATED QUANTITIES OF WORK, SHOWN ON THESE SHEETS IS BASED ON LIMITED INVESTIGATIONS BY THE STATE AND IS IN NO WAY WARRANTED TO INDICATE THE CONDITIONS OF ACTUAL QUANTITIES OF WORK WHICH WILL BE REQUIRED.

Plotted Date: 5/19/2017

DESIGNER/DRAFTER: JMB
CHECKED BY: AML
SCALE AS NOTED

STATE OF CONNECTICUT
DEPARTMENT OF TRANSPORTATION

Filename: ...\S-20_RAILING DETAILS.dgn

SIGNATURE/ BLOCK:

PROJECT TITLE: REPLACEMENT OF BRIDGE NO. 04576 PLEASANTVIEW DRIVE OVER HOCKANUM RIVER

TOWN: VERNON

DRAWING TITLE: RAILING DETAILS

PROJECT NO. 146-200
DRAWING NO. S-20
SHEET NO. 04.20

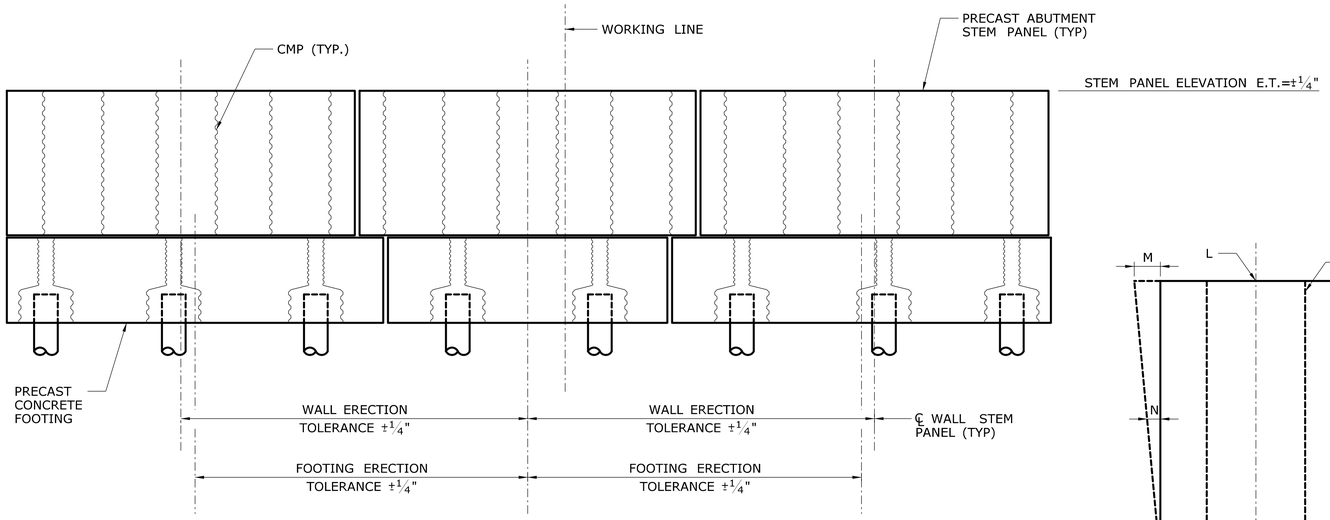

ABUTMENT ERECTION TOLERANCES

NOT TO SCALE

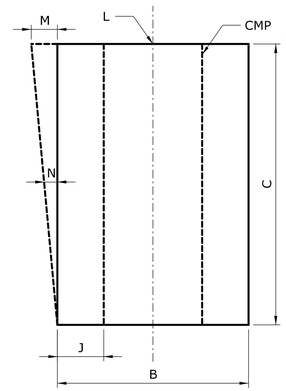

SECTION

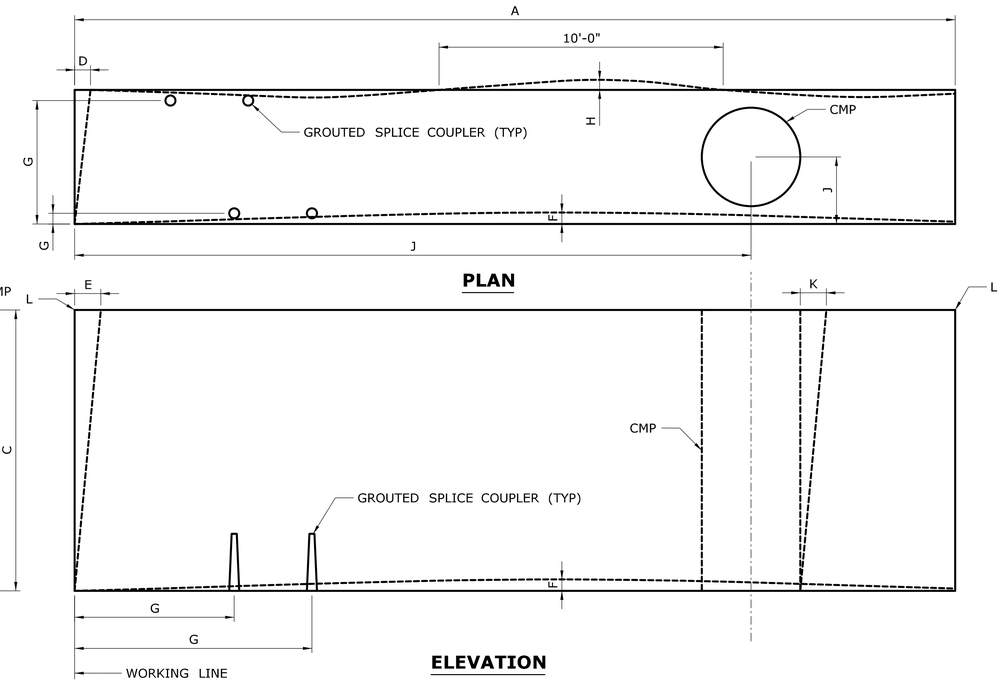

PLAN

ELEVATION

WALL SEGMENT ERECTION AND FABRICATION TOLERANCES

NOT TO SCALE

WALL SEGMENT ELEVATION ERECTION TOLERANCES

L	TOP ELEVATION FROM NOMINAL TOP ELEVATION	1/4"
M	MAXIMUM PLUMB VARIATION OVER HEIGHT OF PANEL	1/2"
N	PLUMB IN ANY 10 FEET OF PANEL HEIGHT	1/4"

WALL SEGMENT FABRICATION TOLERANCES

A	LENGTH	±1/4"
B	WIDTH (OVERALL)	±1/4"
C	DEPTH (OVERALL)	±1/4"
D	VARIATION FROM SPECIFIED PLAN END SQUARENESS OR SKEW	±1/2"
E	VARIATION FROM SPECIFIED ELEVATION END SQUARENESS OR SKEW	±1/2"
F	SWEEP OVER MEMBER LENGTH	±3/8"
G	LOCATION OF GROUTED SPLICE COUPLER MEASURED FROM A WORKING LINE	±1/4"
H	LOCAL SMOOTHNESS OF ANY SURFACE	±1/4" IN 10 FEET
J	LOCATION OF BLOCKOUT FOR PILES OR VOIDS	±1/2"
K	MAXIMUM PLUMB VARIATION OVER HEIGHT OF CMP VOID	±1/2"

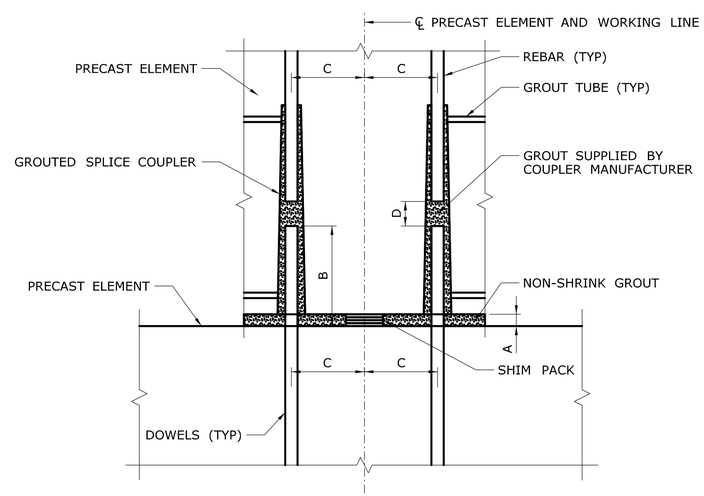

GROUTED SPLICE COUPLER TOLERANCES

A	SHIM PACK HEIGHT	1 1/4"±3/4"
B	DOWEL HEIGHT	CONSULT MANUFACTURER
C	LOCATION OF REINFORCING, GROUTED SPLICE COUPLER, AND DOWELS MEASURED FROM A WORKING LINE	±1/4"
D	GAP BETWEEN DOWELS AND REINFORCING	CONSULT MANUFACTURER

NOTES:

1. USE MATCHING TEMPLATES FOR THE LOCATION OF REINFORCEMENT AND GROUTED SPLICE COUPLER PLACEMENT WITHIN THE ELEMENTS TO CONTROL THE CRITICAL DIMENSION "C".
2. CONSULT MANUFACTURER OF THE GROUTED SPLICE COUPLER FOR PROPER DIMENSIONS "B" AND "D" AND FOR TOLERANCES ON THESE AND ALL DIMENSIONS.
3. BEFORE EXECUTING GROUTED SPLICE COUPLER ASSEMBLIES, ALWAYS SEEK INSTALLATION RECOMMENDATIONS FROM THE MANUFACTURER OF THE GROUTED SPLICE COUPLER USED.

GROUTED SPLICE COUPLER DETAILS

NOT TO SCALE

SEMI FINAL DESIGN REVIEW

REV.	DATE	REVISION DESCRIPTION	SHEET NO.
-	-	-	-
-	-	-	-
-	-	-	-
-	-	-	-
-	-	-	-
-	-	-	-

THE INFORMATION, INCLUDING ESTIMATED QUANTITIES OF WORK, SHOWN ON THESE SHEETS IS BASED ON LIMITED INVESTIGATIONS BY THE STATE AND IS IN NO WAY WARRANTED TO INDICATE THE CONDITIONS OF ACTUAL QUANTITIES OF WORK WHICH WILL BE REQUIRED.

Plotted Date: 5/19/2017

DESIGNER/DRAFTER: **JRA**

CHECKED BY: **AML**

SCALE AS NOTED

STATE OF CONNECTICUT
DEPARTMENT OF TRANSPORTATION

Filename: ...\S-21_PRECAST CONCRETE ELEMENT TOLERANCES.dgn

SIGNATURE/ BLOCK:

PROJECT TITLE:
REPLACEMENT OF BRIDGE NO. 04576 PLEASANTVIEW DRIVE OVER HOCKANUM RIVER

TOWN: **VERNON**

DRAWING TITLE:
ABUTMENT AND WALL ELEMENT TOLERANCES

PROJECT NO. **146-200**

DRAWING NO. **S-21**

SHEET NO. **04.21**

05 - UTILITIES
INDEX OF DRAWINGS

DRAWING NUMBER	DRAWING TITLE	DRAWING NUMBER	DRAWING TITLE
UTL-01	INDEX OF DRAWINGS		
UTL-02	SANITARY SEWER DEWATERING PLAN		
UTL-03	UTILITY DETAILS		

DESIGNED BY:
Stantec
STANTEC CONSULTING SERVICES INC.
55 CHURCH STREET, SUITE 601
NEW HAVEN, CT 06510

REV.	DATE	REVISION DESCRIPTION	SHEET NO.

THE INFORMATION, INCLUDING ESTIMATED QUANTITIES OF WORK, SHOWN ON THESE SHEETS IS BASED ON LIMITED INVESTIGATIONS BY THE STATE AND IS IN NO WAY WARRANTED TO INDICATE THE CONDITIONS OF ACTUAL QUANTITIES OF WORK WHICH WILL BE REQUIRED.

Plotted Date: 5/19/2017

DESIGNER/DRAFTER: JMB
CHECKED BY:
SCALE AS NOTED

STATE OF CONNECTICUT
DEPARTMENT OF TRANSPORTATION

Filename: ...\UTL-01_INDEX OF DRAWINGS.dgn

SIGNATURE/ BLOCK:

PROJECT TITLE:
REPLACEMENT OF BRIDGE NO. 04576 PLEASANTVIEW DRIVE OVER HOCKANUM RIVER

TOWN: VERNON

DRAWING TITLE: INDEX OF DRAWINGS

PROJECT NO. 146-200
DRAWING NO. UTL-01
SHEET NO. 05.01

TEMPORARY HYDRAULIC DATA	
AVERAGE DAILY FLOW	XX CFS
AVERAGE SPRING FLOW	XX CFS
2-YEAR FREQUENCY DISCHARGE	XXX CFS
TEMPORARY DESIGN DISCHARGE	XXX CFS
TEMPORARY DESIGN FREQUENCY	XX-YEAR
TEMPORARY WATER SURFACE EL. UPSTREAM	XXX.XX FT
TEMPORARY WATER SURFACE EL. DOWNSTREAM	XXX.XX FT

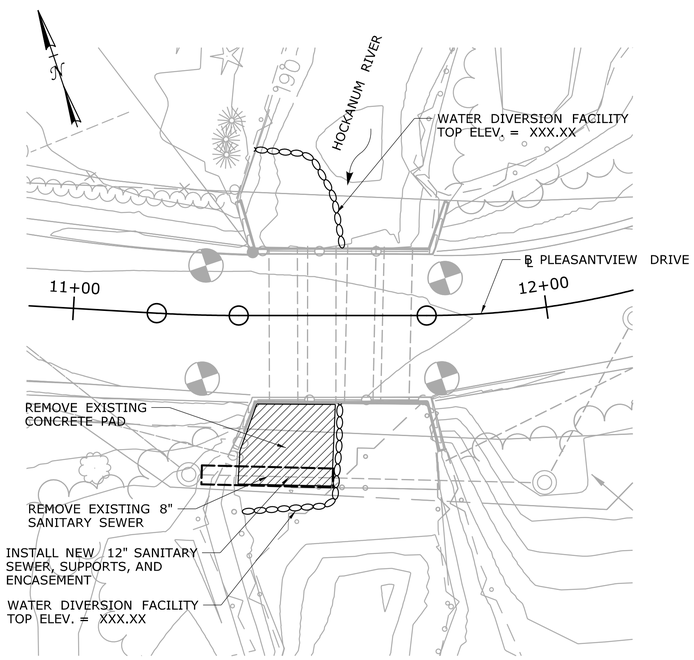

PHASE 1 PLAN

SCALE: 1/16" = 1'-0"

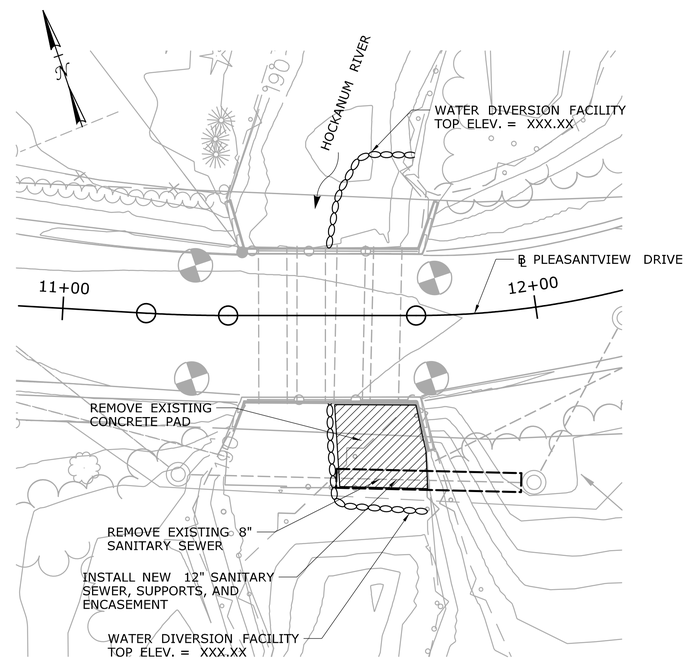

PHASE 2 PLAN

SCALE: 1/16" = 1'-0"

SUGGESTED SEQUENCE OF CONSTRUCTION

PHASE 1:

1. INSTALL WATER DIVERSION FACILITY AROUND THE WEST WINGWALLS AND THE WESTERN TWO CORRUGATED METAL PIPES.
2. DEWATER WORK AREA BEHIND WATER DIVERSION FACILITY AS REQUIRED FOR CONSTRUCTION.
3. INSTALL PUMP TO BYPASS 8" SANITARY SEWER PIPE THAT WILL BE REPLACED.
4. REMOVE EXISTING MASONRY AND 8" SANITARY SEWER PIPE ALONG CHANNEL BOTTOM BEHIND WATER DIVERSION FACILITY.
5. INSTALL CONCRETE ENCASED 12" POLYVINYL CHLORIDE PIPE UP TO WATER DIVERSION FACILITY.
6. MOVE WATER DIVERSION FACILITY AS NEEDED TO PROVIDE PHASE 2 LAYOUT.

PHASE 2:

1. INSTALL WATER DIVERSION FACILITY AROUND THE EAST WINGWALLS AND EASTERN TWO CORRUGATED METAL PIPES.
2. DEWATER WORK AREA BEHIND WATER DIVERSION FACILITY AS REQUIRED FOR CONSTRUCTION.
3. REMOVE EXISTING MASONRY AND 8" SANITARY SEWER PIPE ALONG CHANNEL BOTTOM BEHIND WATER DIVERSION FACILITY.
4. INSTALL REMAINDER OF CONCRETE ENCASED 12" POLYVINYL CHLORIDE PIPE.
5. REMOVE PUMP FROM BYPASS AND WATER DIVERSION FACILITY.

NOTES

1. THE DIVERTING OF WATER TO FACILITATE REMOVAL OF THE EXISTING SEWER, AND INSTALLATION OF THE NEW SEWER AND ASSOCIATED ELEMENTS, SHALL BE INCLUDED AND PAID FOR UNDER THE ITEM "HANDLING WATER", AND WILL NOT BE MEASURED FOR PAYMENT.

REV.	DATE	REVISION DESCRIPTION	SHEET NO.

THE INFORMATION, INCLUDING ESTIMATED QUANTITIES OF WORK, SHOWN ON THESE SHEETS IS BASED ON LIMITED INVESTIGATIONS BY THE STATE AND IS IN NO WAY WARRANTED TO INDICATE THE CONDITIONS OF ACTUAL QUANTITIES OF WORK WHICH WILL BE REQUIRED.

Plotted Date: 5/19/2017

DESIGNER/DRAFTER: JMB

CHECKED BY: AML

SCALE AS NOTED

STATE OF CONNECTICUT
DEPARTMENT OF TRANSPORTATION

Filename: ...\UTL-02_DEWATERING PLAN.dgn

SIGNATURE/
BLOCK:

PROJECT TITLE:
REPLACEMENT OF BRIDGE NO. 04576 PLEASANTVIEW DRIVE OVER HOCKANUM RIVER

TOWN: VERNON

DRAWING TITLE:
SANITARY SEWER DEWATERING PLAN

PROJECT NO. 146-200

DRAWING NO. UTL-02

SHEET NO. 05.02

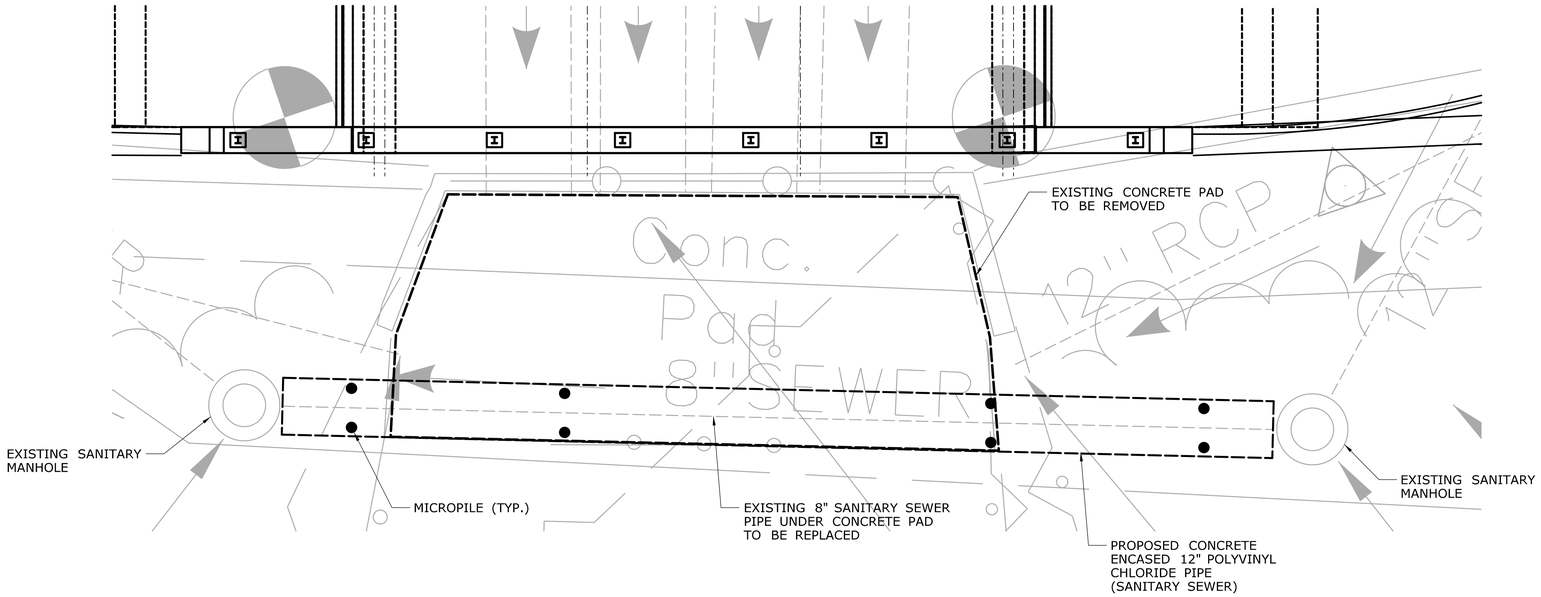

PLAN AT SOUTH END

SCALE: 3/16" = 1'-0"

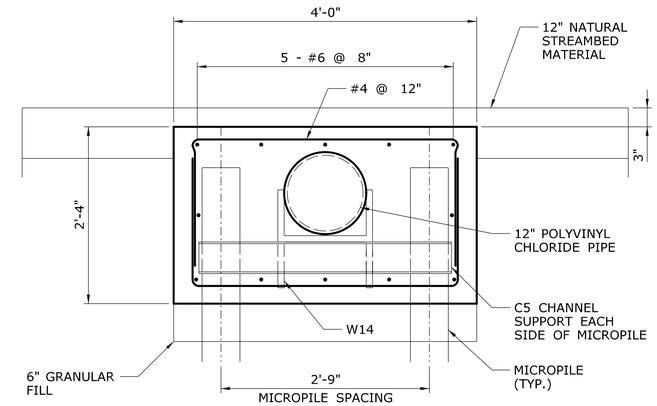

PROPOSED CONCRETE ENCASED SECTION

SCALE: 1" = 1'-0"

ENCASED SEWER PIPE NOTES:

1. THE DETAILS DEPICT THE PORTION OF PROPOSED SEWER PIPE UNDER THE WATERWAY TO BE EXTERNALLY SUPPORTED AND ENCASED IN CONCRETE. SEE SPECIAL PROVISION "CONCRETE ENCASED 12" POLYVINYL CHLORIDE PIPE (SANITARY SEWER)".
2. CONTRACTOR SHALL VERIFY ALL ELEVATIONS AND DIMENSIONS PRIOR TO START OF WORK.
3. TEMPORARY SUPPORT OF EXCAVATION NECESSARY FOR THE INSTALLATION OF THE PROPOSED SEWER PIPE SHALL BE INCLUDED IN THE ITEM "CONCRETE ENCASED 12" POLYVINYL CHLORIDE PIPE (SANITARY SEWER)".
4. CONTRACTOR SHALL PROVIDE BLOCKING AND CRADLE, AT HIS DISCRETION, TO SUPPORT THE SEWER PIPE AT THE PROPER ELEVATION UNTIL THE ENCASED CONCRETE HAS CURED. COST OF THIS WORK SHALL BE INCLUDED IN THE ITEM "CONCRETE ENCASED 12" POLYVINYL CHLORIDE PIPE (SANITARY SEWER)".
5. SEE STRUCTURE SHEET S-07 FOR MICROPILE DETAILS.

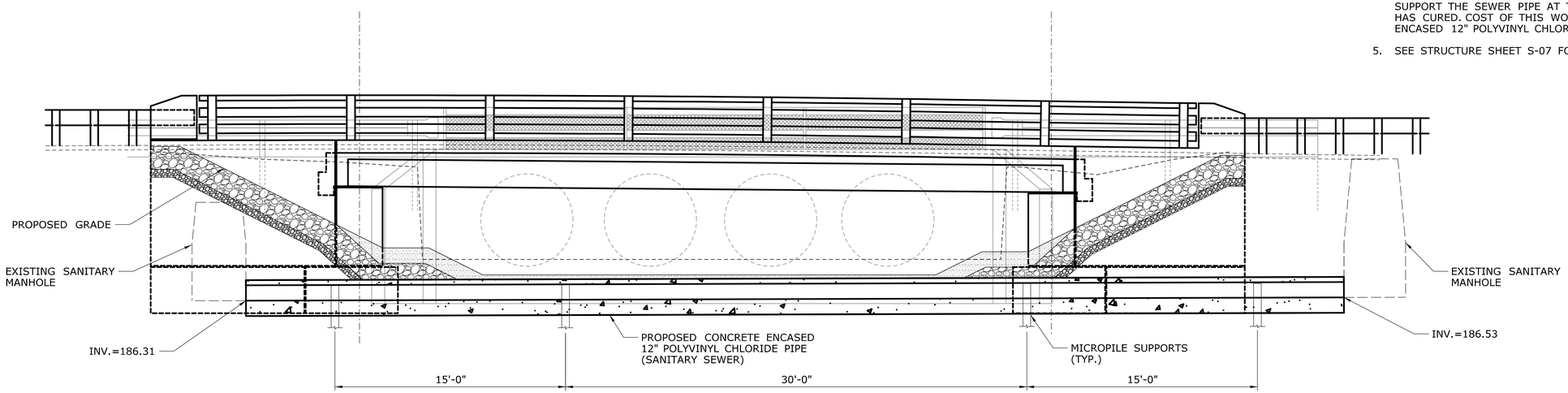

ELEVATION AT SOUTH END

SCALE: 1/4" = 1'-0"

REV.	DATE	REVISION DESCRIPTION	SHEET NO.

THE INFORMATION, INCLUDING ESTIMATED QUANTITIES OF WORK, SHOWN ON THESE SHEETS IS BASED ON LIMITED INVESTIGATIONS BY THE STATE AND IS IN NO WAY WARRANTED TO INDICATE THE CONDITIONS OF ACTUAL QUANTITIES OF WORK WHICH WILL BE REQUIRED.

Plotted Date: 5/19/2017

DESIGNER/DRAFTER: JMB

CHECKED BY:

SCALE AS NOTED

STATE OF CONNECTICUT
DEPARTMENT OF TRANSPORTATION

Filename: ...\UTL-03_UTILITY_DETAILS.dgn

SIGNATURE/
BLOCK:

PROJECT TITLE:
REPLACEMENT OF BRIDGE NO. 04576 PLEASANTVIEW DRIVE OVER HOCKANUM RIVER

TOWN: VERNON

DRAWING TITLE: UTILITY DETAILS

PROJECT NO. 146-200

DRAWING NO. UTL-03

SHEET NO. 05.03

06 - TRAFFIC
INDEX OF DRAWINGS

VN ENGINEERS
116 WASHINGTON AVENUE
NORTH HAVEN, CT 06473

SEMI FINAL DESIGN REVIEW

REV.	DATE	REVISION DESCRIPTION	SHEET NO.

THE INFORMATION, INCLUDING ESTIMATED QUANTITIES OF WORK, SHOWN ON THESE SHEETS IS BASED ON LIMITED INVESTIGATIONS BY THE STATE AND IS IN NO WAY WARRANTED TO INDICATE THE CONDITIONS OF ACTUAL QUANTITIES OF WORK WHICH WILL BE REQUIRED.

Plotted Date: 5/17/2017

DESIGNER/DRAFTER: SAI

CHECKED BY: MWD

STATE OF CONNECTICUT
DEPARTMENT OF TRANSPORTATION

Filename: ...\TR_MSH_146-200_DTR_01_subset_titlesheet.dgn

SIGNATURE/ BLOCK:

VN ENGINEERS INC.
Traffic • Infrastructure • Planning
116 WASHINGTON AVENUE | NORTH HAVEN, CT 06473 | 203.234.7862

PROJECT TITLE:
REPLACEMENT OF BRIDGE NO. 04576, PLEASANTVIEW DRIVE OVER HOCKANUM RIVER

TOWN: **VERNON**

DRAWING TITLE: **TRAFFIC INDEX OF DRAWINGS**

PROJECT NO. **146-200**

DRAWING NO. **IDX-01**

SHEET NO. **06.01**

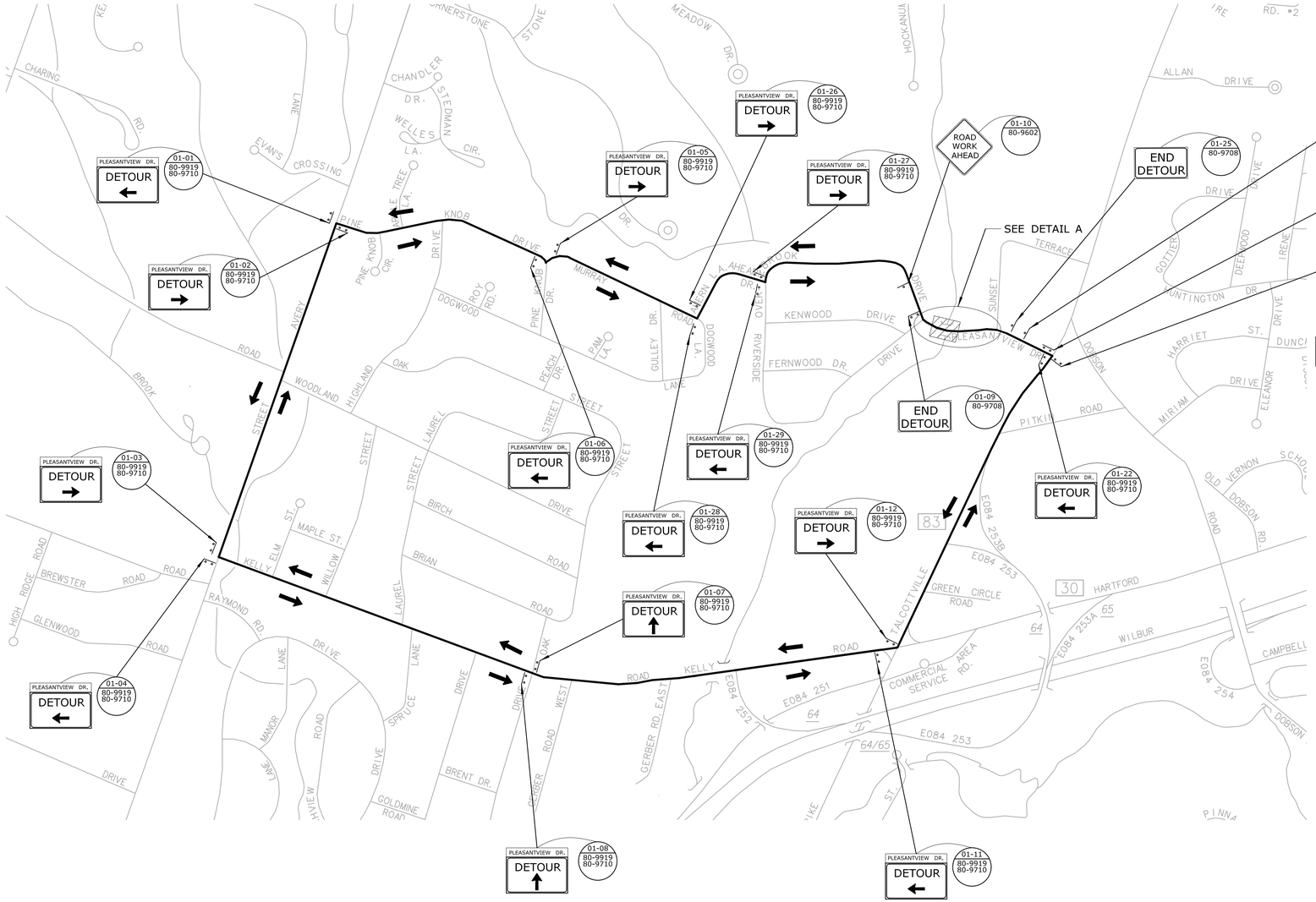

DETAIL A

LEGEND:

- DOUBLE POST MOUNTED SIGN
- SINGLE POST MOUNTED SIGN
- TRAFFIC FLOW
- WORK AREA
- TEMPORARY PRECAST CONCRETE BARRIER CURB

NOTES:

1. SEE SPECIAL PROVISION SECTION 1.08 - PROSECUTION AND PROGRESS CONSTRUCTION STAGING REQUIREMENTS.
2. PRIOR TO INITIATING THE DETOUR, THE CONTRACTOR SHALL NOTIFY THE ENGINEER, CTDOT DISTRICT 1, THE TOWN OF VERNON AND THE TOWN OF SOUTH WINDSOR EMERGENCY SERVICES AND DEPARTMENTS OF PUBLIC WORKS.
3. EXACT LOCATIONS OF SIGNS TO BE VERIFIED BY THE ENGINEER IN THE FIELD AND SHALL BE ADJUSTED TO MEET FIELD CONDITIONS.
4. DETOUR SIGNS TO BE PAID UNDER ITEM #1220027 - CONSTRUCTION SIGNS.
5. CONSTRUCTION/DETOUR SIGNS ARE TO BE INSTALLED SO THAT THEY DO NOT BLOCK OR ARE NOT BLOCKED BY EXISTING SIGNS.
6. ALL CONFLICTING SIGNS SHALL BE COVERED OR REMOVED WHEN THE DETOUR IS IN EFFECT. REMOVAL/COVERING OF EXISTING SIGNS IS PAYABLE UNDER ITEM #0971001A - MAINTENANCE AND PROTECTION OF TRAFFIC.
7. TWO WEEKS PRIOR TO INITIATING THE DETOUR, INSTALL ITEM #1131002 - REMOTE CONTROL CHANGEABLE MESSAGE SIGN ON PLEASANTVIEW DRIVE TO ALERT DRIVERS OF THE CLOSURE.
8. DETOUR SIGNS ARE ONLY TO BE POSTED WHILE THE DETOUR IS IN EFFECT. DETOUR SIGNS ARE TO BE COVERED OR REMOVED WHILE THE DETOUR IS NOT OPERATIONAL.
9. BARRICADE WARNING LIGHTS - HIGH INTENSITY SHALL BE MOUNTED ON ALL DIAMOND SHAPED POST-MOUNTED CONSTRUCTION SIGNS AND ARE PAYABLE UNDER ITEM #0976002.
10. ANY EXISTING SIGNING DAMAGED BY THE CONTRACTOR SHALL BE REPLACED AT NO COST TO THE STATE.
11. ALL CONSTRUCTION/DETOUR SIGNS TO BE INSTALLED ON BREAKAWAY POSTS PER TRAFFIC STANDARD SHEETS TR-1208-1, TR-1208-2 AND TR-1220-2, UNLESS OTHERWISE DIRECTED.

SEMI FINAL DESIGN REVIEW

REV.	DATE	REVISION DESCRIPTION	SHEET NO.

THE INFORMATION, INCLUDING ESTIMATED QUANTITIES OF WORK, SHOWN ON THESE SHEETS IS BASED ON LIMITED INVESTIGATIONS BY THE STATE AND IS IN NO WAY WARRANTED TO INDICATE THE CONDITIONS OF ACTUAL QUANTITIES OF WORK WHICH WILL BE REQUIRED.

Plotted Date: 04/11/2017

DESIGNER/DRAFTER: SAI
CHECKED BY: M.BAUER
SCALE IN FEET 0 500 1000
SCALE 1"=500'

STATE OF CONNECTICUT
DEPARTMENT OF TRANSPORTATION

Filename: TR_DTR_146-200_001.dgn

SIGNATURE/BLOCK:
VN ENGINEERS INC.
Traffic • Infrastructure • Planning
116 WASHINGTON AVENUE | NORTH HAVEN, CT 06473 | 203.234.7862

PROJECT TITLE:
REPLACEMENT OF BRIDGE NO. 04576, PLEASANTVIEW DRIVE OVER HOCKANUM RIVER

TOWN: **VERNON**

DRAWING TITLE: **DETOUR PLAN**

PROJECT NO. **146-200**
DRAWING NO. **DTR-01**
SHEET NO. **06.02**

***ONLY STANDARD SHEETS MARKED WITH AN "✓" ARE IN THIS PROJECT #** 146-200

****REVISED OR ADDED**

✓*	SHEET NO.	TITLE	APPROVAL DATE**
	HW-506_01	ENDWALLS, SLOPE PAVED INLETS AND OUTLETS	1-26-12
	HW-506_02	TYPE "D-G" & "L" ENDWALLS	7-13-12
	HW-506_03	ENDWALLS FOR PIPE ARCH	9-18-09
✓	HW-507_01	TYPE "C", "C-L" & DROP INLET CATCH BASIN	7-24-13
	HW-507_02	TYPE "C", "C-L" & DOUBLE GRATE TYPE - I	7-24-13
	HW-507_03	TYPE "C", "C-L" & DOUBLE GRATE TYPE - II	7-24-13
	HW-507_04	TYPE "C", "C-L" & ROUND PRECAST CONCRETE CB	11-10-11
	HW-507_05	TYPE "C" & "C-L" PRECAST CONCRETE CB DOUBLE GRATE TYPE - I	11-10-11
	HW-507_06	TYPE "C" & "C-L" PRECAST CONCRETE CB DOUBLE GRATE TYPE - II	11-10-11
✓	HW-507_07	TYPE "C" & "C-L" CATCH BASIN TOPS AND CURBS	11-10-11
✓	HW-507_08	CATCH BASIN FRAMES AND GRATES	9-18-09
	HW-507_09	HEAVY DUTY LOCK DOWN TOPS	7-12-12
	HW-507_10	MANHOLE - FRAME & COVER	7-24-13
	HW-601_01	FIGURES FOR DATES ON BRIDGE PARAPETS	6-09-11
	HW-651_01	C.C.M. PIPE INSTALLATIONS IN FILL & ROCK SLOPES & PIPE TRENCH DETAIL	7-24-13
	HW-651_02	SLOTTED DRAIN PIPE 12"- 15"-18"-24"-30" (305-381-457-610-762)	7-12-12
	HW-652_01	PIPE ENDS	7-24-13
	HW-751_01	UNDERDRAINS AND UNDERDRAIN OUTLETS	7-12-12
	HW-803_01	PAVED DITCH AND PAVED APRON	7-12-12
✓	HW-811_01	CURBING	7-12-12
	HW-813_01	GRANITE STONE TRANSITION CURBING	7-24-13
	HW-821_01a	TRANSITION 45" (1145) F-SHAPE TO 45" (1145) VERTICAL SHAPE SHEET 1	1-26-12
	HW-821_01b	TRANSITION 45" (1145) F-SHAPE TO 45" (1145) VERTICAL SHAPE SHEET 2	10-18-10
	HW-821_01c	TRANSITION 45" (1145) F-SHAPE TO 45" (1145) VERTICAL SHAPE SHEET 3	1-26-12
	HW-821_02a	45" (1145) F-SHAPE PRECAST CONCRETE BARRIER CURB SHEET 1	7-24-13
	HW-821_02b	45" (1145) F-SHAPE PRECAST CONCRETE BARRIER CURB SHEET 2	7-24-13
	HW-821_03a	TRANSITION - 32" (813) JERSEY SHAPE TO 45" (1145) VERTICAL SHAPE SHEET 1	1-26-12
	HW-821_03b	TRANSITION - 32" (813) JERSEY SHAPE TO 45" (1145) VERTICAL SHAPE SHEET 2	10-18-10
	HW-821_03c	TRANSITION - 32" (813) JERSEY SHAPE TO 45" (1145) VERTICAL SHAPE SHEET 3	10-18-10
	HW-821_03d	TRANSITION - 32" (813) JERSEY SHAPE TO 45" (1145) VERTICAL SHAPE SHEET 4	10-18-10
	HW-821_03e	TRANSITION - 32" (813) JERSEY SHAPE TO 45" (1145) F-SHAPE	7-24-13
	HW-821_04a	MERRITT PARKWAY NARROW MEDIAN BARRIER	6-09-11
	HW-821_04b	MERRITT PARKWAY - 2' (610) WIDE MEDIAN BARRIER AND ROADSIDE BARRIER	7-24-13

✓*	SHEET NO.	TITLE	APPROVAL DATE**
	HW-821_05a	TRANSITION - 45" (1145) F-SHAPE TO 54" (1372) VERTICAL SHAPE SHEET 1	1-26-12
	HW-821_05b	TRANSITION - 45" (1145) F-SHAPE TO 54" (1372) VERTICAL SHAPE SHEET 2	1-26-12
	HW-821_06	54" (1372) VERTICAL SHAPE BARRIER	2-6-12
	HW-821_07	MISCELLANEOUS DETAILS FOR BARRIER TRANSITIONS	7-12-12
	HW-822_01	TEMPORARY PRECAST CONCRETE BARRIER CURB	7-24-13
	HW-905_01	FENCES AND BARWAYS	7-13-12
	HW-910_01	W- BEAM METAL BEAM RAIL HARDWARE	6-09-11
	HW-910_02	METAL BEAM RAIL (TYPE R-B 350) GUIDERAIL	6-09-11
	HW-910_03	METAL BEAM RAIL (TYPE MD-B 350)	6-09-11
	HW-910_04	METAL BEAM RAIL (TYPE R-B 350) SYSTEMS 5, 5A, & 6	6-09-11
	HW-910_05	METAL BEAM RAIL R-B 350 SPAN TYPE I, II, III SECTIONS	7-24-13
	HW-910_06	R-B 350 BRIDGE ATTACHMENT SAFETY SHAPE PARAPET	6-09-11
	HW-910_07	R-B 350 BRIDGE ATTACHMENT VERTICAL SHAPE PARAPET	6-09-11
	HW-910_08	R-B 350 BRIDGE ATTACHMENT TRAILING END	6-09-11
	HW-910_09a	MISCELLANEOUS GUIDERAIL TRANSITIONS SHEET 1	1-26-12
	HW-910_09b	MISCELLANEOUS GUIDERAIL TRANSITIONS SHEET 2	7-25-12
	HW-910_10	METAL BEAM RAIL 8" (203) X 6" (152) BOX BEAM	7-24-13
	HW-910_11	CURVED GUIDERAIL TREATMENT DETAIL	7-25-12
✓	HW-910_12a	MERRITT PARKWAY GUIDERAIL ATTACHMENT - SYSTEM 2 & 3	7-24-13
✓	HW-910_12b	MERRITT PARKWAY GUIDERAIL	7-24-13
	HW-910_12c	MERRITT PARKWAY GUIDERAIL TRAILING END ATTACHMENTS	7-24-13
	HW-910_12d	MERRITT PARKWAY MEDIAN GUIDERAIL AND END ANCHOR	6-09-11
	HW-910_13a	THRIE-BEAM METAL BEAM RAIL HARDWARE	7-24-13
	HW-910_13b	THRIE-BEAM TRANSITIONS	7-24-13
	HW-910_14a	THRIE-BEAM 350 BRIDGE ATTACHMENT	6-09-11
	HW-910_14b	THRIE-BEAM 350 GUIDERAIL TRANSITION TO R-B 350 GUIDERAIL	6-09-11
	HW-910_15	MD-B 350 MEDIAN BARRIER SAFETY SHAPE ATTACHMENT TYPE I	6-09-11
	HW-910_16	MD-B 350 MEDIAN BARRIER SAFETY SHAPE ATTACHMENT TYPE II	6-09-11
	HW-910_17	R-B TERMINAL SECTION	7-24-13
	HW-910_18	METAL BEAM RAIL (TYPE MD-I)	10-18-10
	HW-910_19a	METAL BEAM RAIL (MODIFIED TYPE R-I) AND END ANCHORAGE TYPE I	7-24-13
	HW-910_19b	METAL BEAM RAIL (MODIFIED TYPE R-I) AND END ANCHORAGE TYPE II	7-24-13
	HW-910_19c	METAL BEAM RAIL (MODIFIED TYPE R-I) SYSTEMS 2 AND 3	7-24-13

REV.	DATE	REVISION DESCRIPTION
-	-	-
-	-	-
-	-	-
-	-	-
-	-	-
1	7-24-13	REVISED 23 SHEETS

THE INFORMATION, INCLUDING ESTIMATED QUANTITIES OF WORK, SHOWN ON THESE SHEETS IS BASED ON LIMITED INVESTIGATIONS BY THE STATE AND IS IN NO WAY WARRANTED TO INDICATE THE CONDITIONS OF ACTUAL QUANTITIES OF WORK WHICH WILL BE REQUIRED.

Plotted Date: 7/25/2013

NOT TO SCALE

STATE OF CONNECTICUT
DEPARTMENT OF TRANSPORTATION

Filename: CTDOT_HIGHWAY_STD2013.dgn Model: 1 - HW-INX_1

CTDOT STANDARD SHEET

OFFICE OF ENGINEERING

STANDARD SHEET TITLE:

HIGHWAY STANDARD SHEET INDEX

STANDARD SHEET NO.:

HW_INX

1 of 2

*ONLY STANDARD SHEETS MARKED WITH AN "✓" ARE IN THIS PROJECT #

**REVISED OR ADDED

✓*	SHEET NO.	TITLE	APPROVAL DATE**
	HW-911_01	R-B END ANCHORAGE TYPE I AND II	7-24-13
	HW-911_02	MD-B END ANCHORAGE TYPE I	10-18-10
	HW-911_03	ANCHOR IN EARTH CUT SLOPE & ANCHOR IN ROCK CUT SLOPE	10-18-10
	HW-911_04	TYPICAL GRADING PLAN FOR W-BEAM GUIDERAIL TURN-DOWN END ANCHOR	10-18-10
✓	HW-911_05	MERRITT PARKWAY GUIDERAIL END ANCHORS	7-24-13
	HW-913_01	CHAIN LINK FENCE	7-12-12
	HW-918_01a	THREE CABLE GUIDERAIL (I-BEAM POSTS) SHEET 1	7-24-13
	HW-918_01b	THREE CABLE GUIDERAIL (I-BEAM POSTS) SHEET 2	1-26-12
	HW-918_01c	THREE CABLE GUIDERAIL (I-BEAM POSTS) SHEET 3	7-24-13
	HW-921_01	DRIVEWAY RAMPS AND SIDEWALKS	1-26-12
	HW-925_01	PAVEMENT FOR RAILING	6-09-11
	HW-949_01	PLANTING DETAILS FOR TREES	7-12-12
	HW-949_02	PLANTING DETAILS FOR SHRUBS	7-12-12
	HW-1800_01	GRADING PLAN FOR TYPE B IMPACT ATTENUATION SYSTEM (FLARED)	6-20-11
	HW-1800_02	GRADING PLAN FOR TYPE B IMPACT ATTENUATION SYSTEM (MEDIAN/GORE)	6-09-11
	HW-1800_03	GRADING PLAN FOR TYPE B IMPACT ATTENUATION SYSTEM (TANGENTIAL)	6-20-11
	HW-1806_01a	CT TRUCK MOUNTED IMPACT ATTENUATOR SHEET 1	10-18-10
	HW-1806_01b	CT TRUCK MOUNTED IMPACT ATTENUATOR SHEET 2	10-18-10
	HW-1806_01c	CT TRUCK MOUNTED IMPACT ATTENUATOR SHEET 3	10-18-10

✓*	SHEET NO.	TITLE	APPROVAL DATE**

REV.	DATE	REVISION DESCRIPTION
-	-	-
-	-	-
-	-	-
-	-	-
-	-	-
1	7/24/13	REVISED 8 SHEETS

THE INFORMATION, INCLUDING ESTIMATED QUANTITIES OF WORK, SHOWN ON THESE SHEETS IS BASED ON LIMITED INVESTIGATIONS BY THE STATE AND IS IN NO WAY WARRANTED TO INDICATE THE CONDITIONS OF ACTUAL QUANTITIES OF WORK WHICH WILL BE REQUIRED.

Plotted Date: 8/29/2014

NOT TO SCALE

STATE OF CONNECTICUT
DEPARTMENT OF TRANSPORTATION

Filename: CTDOT_HIGHWAY_STD.dgn Model: 2 - HW-INX_2

CTDOT
STANDARD SHEET

OFFICE OF ENGINEERING

STANDARD SHEET TITLE:

HIGHWAY
STANDARD SHEET INDEX

STANDARD SHEET NO.:

HW_INX
2 of 2

ONLY STANDARD SHEETS MARKED WITH AN "✓" ARE IN THIS PROJECT #

	SHEET NO.	TITLE	APPROVAL DATE
	TR-1000_01	GENERAL CLAUSES (TEST PROCEDURES)	1/2014
	TR-1001_01	TRENCHING & BACKFILLING, ELECTRICAL CONDUIT	4/2012
	TR-1002_01	TRAFFIC CONTROL FOUNDATIONS	1/2014
	TR-1010_01	CONCRETE HANDHOLE	4/2014
	TR-1102_01	PEDESTALS, PEDESTRIAN SIGNALS	4/2012
	TR-1105_01	TRAFFIC SIGNALS AND CABLE ASSIGNMENTS	5/2015
	TR-1107_01	PEDESTRIAN PUSH BUTTON	4/2014
	TR-1108_01	CONTROLLERS	5/2013
	TR-1111_01	LOOP VEHICLE DETECTOR AND SAWCUT	4/2014
	TR-1113_01	CONTROL CABLE	4/2014
	TR-1114_01	BONDING & UTILITY POLE ATTACHMENT DETAILS, SIGN HANGER, "Y" CLAMP DETAILS	5/2015

	SHEET NO.	TITLE	APPROVAL DATE
✓	TR-1205_01	DELINEATION, DELINEATOR AND OBJECT MARKER DETAILS [7]	8/2015
	TR-1208_01	SIGN SUPPORT AND SIGN PLACEMENT DETAILS, GORE EXIT SIGN [8]	2/2011
✓	TR-1208_02	METAL SIGN POSTS AND SIGN MOUNTING DETAILS [9]	2/2011
	TR-1210_01	PAVEMENT MARKINGS (DURABLE MARKINGS) FOR DIVIDED HIGHWAYS [21A]	12/2013
	TR-1210_02	PAVEMENT MARKINGS (DURABLE MARKINGS) FOR DIVIDED HIGHWAYS [22A]	12/2013
✓	TR-1210_03	SPECIAL DETAILS & TYPICAL PAVEMENT MARKINGS FOR TWO-WAY HIGHWAYS [25]	11/2014
✓	TR-1220_01	SIGNS FOR CONSTRUCTION AND PERMIT OPERATIONS [23]	8/2015
✓	TR-1220_02	CONSTRUCTION SIGN SUPPORTS AND CHANNELIZING DEVICES [23A]	8/2015

STANDARD SHEETS SHALL BE USED WITH STANDARD SPECIFICATIONS

REV.	DATE	REVISION DESCRIPTION
3	4-2014	REMOVED TR-1111_02.
2	1-2014	REMOVED TR-1103_01.
1	4-2012	RENUMBERED TR-1107_02 TO TR-1114_01. REMOVED TR-1116_01.

THE INFORMATION, INCLUDING ESTIMATED QUANTITIES OF WORK, SHOWN ON THESE SHEETS IS BASED ON LIMITED INVESTIGATIONS BY THE STATE AND IS IN NO WAY WARRANTED TO INDICATE THE CONDITIONS OF ACTUAL QUANTITIES OF WORK WHICH WILL BE REQUIRED.

Plotted Date: 4/11/2014

NOT TO SCALE

STATE OF CONNECTICUT
DEPARTMENT OF TRANSPORTATION

Filename: CTDOT_TRAFFIC_STD.DGN Model: TR-01-STD_INDEX

SUBMITTED BY: NAME/DATE/TIME:

CTDOT
STANDARD SHEET

OFFICE OF ENGINEERING

STANDARD SHEET TITLE:

TRAFFIC
STANDARD SHEET INDEX

STANDARD SHEET NO.:

TR-STD_INDEX