Project Manual
Volume 1 of 1

Vernon CT WPCF Upgrade IFAS Treatment System Equipment Pre-Selection

Contract # 2017 - 1/5/2018

Town of Vernon, Connecticut

December, 2017

Tighe&Bond
53 Southampton Rd
Westfield, MA 01085

WPCF Upgrade Project
IFAS Treatment System Equipment
Pre-Selection
Vernon, Connecticut

Table of Contents

Section	Title	Number of Pages
Division 0 – Bidding and Contract Requirements		
00100	Advertisement for Bids	2
00200	Instructions to Bidders	12
	Attachments to Instructions to Bidders	
00410	Form for Bid	15
	Attachments to Bid Form	
00430	Bid Bond	2
00520	Agreement	7
00610	Performance Bond	4
00700	General Conditions	31
00800	Supplementary Conditions	12
	Attachments to Supplementary Conditions	
	A. Connecticut Executive Orders	
	B. State Required Construction Contract Provisions under Department of Environmental Protection's Clean Water Fund	
	C. Clean Water Fund Memorandum – American Iron and Steel	
Division 1 – General Requirements		
01330	Submittal Procedures	10
01630	Product Substitution During Construction	4
01770	Closeout Procedures	6
Division 11 - Equipment		
11000	Equipment – General	7
11391	IFAS Treatment System	74
11391A	IFAS Treatment System Aeration Systems	27
11391B	IFAS Treatment System Blowers	25
11391C	IFAS Treatment System Mixers	22

Appendix

Appendix A – Figures

- Figure 1 – Existing Plant Process Flow Diagram
- Figure 2 – Proposed Process Flow Diagram
- Figure 3 – Existing Plant Hydraulic Profile
- Figure 4 – Existing Plant and Proposed Changes Hydraulic Profile
- Figure 5 – IFAS System Plan
- Figure 6 – IFAS System Sections
- Figure 7 – Blower Building Plan & Sections

Appendix B – Existing Plant Influent Data

DIVISION 0 - BIDDING AND CONTRACT REQUIREMENTS

SECTION 00100

ADVERTISEMENT FOR BIDS

TOWN OF VERNON CONNECTICUT

WPCF UPGRADE IFAS TREATMENT SYSTEM

CONTRACT # 2017 – 1/5/2018

ADVERTISEMENT FOR BIDS

Sealed Bids for the IFAS Treatment System equipment to be supplied as part of the "Town of Vernon CT Water Pollution Control Facility Upgrade Project" will be received at the Office of the Town Administrator, 3rd floor, 14 Park Place, Vernon, CT 06066 until 10:00 a.m. local time on January 5, 2018 at which time the Bids received will be publicly opened and read. Sealed Bids must have outer envelope marked as "Town of Vernon CT WPCF Upgrade IFAS Treatment System Equipment Pre-Selection".

The Town will select an equipment manufacturer to provide the IFAS Treatment System equipment to be installed as part of a construction project to upgrade the Vernon Water Pollution Control Facility. The selected IFAS Treatment System will be used as the basis of design and named in the final bid documents for the Town of Vernon CT Water Pollution Control Facility Upgrade Project. The successful bidder will be required to provide information requested by the Engineer to assist in preparation of the detailed design of the system for the construction Contract Documents. The Construction Contractor selected for this future project will be required to use the Successful Bidder's equipment as a sole source at the fixed price given in the Bidding Documents. The Successful Bidder shall be required to deliver the specified equipment for the prices quoted in this Bid. If the upgrade construction contract is not awarded, the Owner will have no obligation to the Bidder.

This contract is expected to be funded in part by the State of Connecticut, Department of Energy and Environmental Protection. Neither the state, nor any of its departments, agencies, or employees is or will be a party to this contract or any lower tier subcontract. This contract is subject to the requirements of Section 22a-482 of the regulations of the Regulations of Connecticut State Agencies.

Bidding Documents may be obtained online from the Tighe & Bond website located at http://www.tighebond.com/Projects_Out_to_Bid.php. Prospective Bidders are required to register on the Tighe & Bond website to download Bidding Documents. Bidding Documents may be examined at the office of Tighe & Bond, Inc., 53 Southampton Road, Westfield, MA between the hours of 8:00 a.m. and 5:00 p.m., Monday through Friday, legal holidays excluded. Bidding Documents may also be examined at the Water Pollution Control Facility, 100 Windsorville Road, Vernon, CT between the hours of 8:00 a.m. and 3:00 p.m, Monday through Friday, legal holidays excluded. Questions for this bid can be directed to the Tighe & Bond website.

Bidders are encouraged to take water samples and conduct testing at the Vernon WPCF at their own expense. However, the WPCF upgrade project will eliminate the Zimpro PACT-WAR based secondary treatment system and, and it will be replaced with a 4/5 stage Bardenpho process, both of which will impact the primary effluent in a manner that may be material to the Bidder's equipment.

No Bid may be withdrawn until October 1, 2019.

The project is subject to the American Iron and Steel (AIS) requirement of Section 436 of Public Law (P.L.) 113-76, Consolidated Appropriations Act, 2014. Section 00800 contains further information on applicable iron and steel products and compliance.

The Town reserves the right to waive any informality in or to reject any or all Bids, or to accept any Bid which in their opinion, is in the public interest to do so.

TOWN OF VERNON, CONNECTICUT

END OF SECTION

J:\V\V0037 Vernon WWTP\005 WPCF Design\Design\Specifications\Preselection\IFAS\00100-P.doc

SECTION 00200

INSTRUCTIONS TO BIDDERS

SECTION 00200

INSTRUCTIONS TO BIDDERS

TABLE OF ARTICLES

1. Defined Terms
2. Bids Received
3. Copies of Bidding Documents
4. Qualifications of Bidders
5. Examination of Bidding Documents, Other Related Data, and Point of Destination
6. Pre-Bid Conference
7. Interpretations and Addenda
8. Bid Deposit
9. Contract Times
10. Liquidated Damages
11. Substitute and "Or Equal" Items
12. Preparation of Bid
13. Basis of Bid
14. Submittal of Bid
15. Modification or Withdrawal of Bid
16. Opening of Bids
17. Bid to Remain Subject to Acceptance
18. Evaluation of Bids and Award of Contract
19. Contract Securities and Insurance
20. Signing of Agreement
21. Sales Taxes
22. EPA Project Requirements for SRF-Funded Projects

ARTICLE 1 DEFINED TERMS

1.1 Terms used in these Instructions to Bidders will have the meanings indicated in the General Conditions and Supplementary Conditions.

ARTICLE 2 BIDS RECIEVED

2.1 Refer to Advertisement for Bids for information on receipt of Bids.

ARTICLE 3 COPIES OF BIDDING DOCUMENTS

3.1 Refer to Advertisement for Bids for information on examination and procurement of documents.

3.2 Complete sets of Bidding Documents shall be used in preparing Bids; neither Owner nor Engineer assumes any responsibility for errors or misinterpretations resulting from the use of incomplete sets of Bidding Documents.

3.1 Engineer will make available certain figures for use by Bidders in electronic AutoCAD (.dwg) format for the Bidder's use in preparing the Bidder's Bid. Such request shall be submitted in writing to the Engineer via e-mail at adweidner@tighebond.com and include the release form entitled "AGREEMENT FOR DELIVERY OF DOCUMENTS IN ELECTRONIC FORM" which is attached to this Section. Failure to request the AutoCAD files, provide a signed release form, or provide the requested Figures with the Bid may be used as justification for considering the Bid nonresponsive.

3.2 Owner and Engineer in making copies of Bidding Documents available on the above terms do so only for the purpose of obtaining Bids for the Goods and Special Services and do not confer a license or grant for any other use.

ARTICLE 4 QUALIFICATIONS OF BIDDERS

4.1 Bidder is advised to carefully review those portions of the Bid Form requiring Bidder's representations and certifications.

4.2 To demonstrate Bidder's qualifications to furnish the Goods and Special Services, each Bidder must submit with his bid a summary of their qualifications and other data as specified in Article 5 of the Bid Form (Section 00410).

4.3 Bidders shall have the minimum experience with integrated fixed-film activated sludge systems, as listed in the Division 11 specification. Submit with the bid a summary of experience that shows compliance with these requirements. In lieu of compliance with the specified experience period, submit a bond or cash deposit (in the form of an irrevocable letter of credit) at the time of the Bid in the amount of the contract value to guarantee replacement in the event of failure which shall remain in effect for the minimum experience period listed in the Division 11 specification following substantial completion of the WPCF upgrade anticipated to be on or about July 2023.

4.4 Bidders may be investigated by Owner to determine if they are qualified to furnish the Goods and Special Services. All Bidders shall be prepared to submit within five days of Owner's or Engineer's request, additional written evidence of such information and data necessary to make this determination.

4.5 The investigation of a Bidder will seek to determine whether the organization is adequate in size, has had previous experience, owns licenses, or distributes the proposed technology, has process engineering, project management and mechanical engineering support in the United States, and whether available equipment and financial resources are adequate to assure Owner that the Goods and Special Services will be completed in accordance with the terms of the Agreement. The amount of other work to which the Bidder is committed may also be considered.

4.6 Owner reserves the right to reject any Bid if the evidence submitted by, or investigation of such Bidder fails to satisfy Owner that such Bidder is properly qualified to carry out the

obligations of the Contract and to furnish the Goods and Special Services contemplated therein.

4.7 In evaluating Bids, Owner will consider the qualifications of only those Bidders whose Bids are in compliance with the prescribed requirements.

ARTICLE 5 EXAMINATION OF BIDDING DOCUMENTS, OTHER RELATED DATA, AND POINT OF DESTINATION

5.1 Upon request and schedule permitting, the Owner will provide Bidder access to the Point of Destination and the site where Goods are to be installed or Special Services are to be provided so the Bidder may conduct such additional examinations, investigations, explorations, tests, and studies as Bidder deems necessary for preparing and submitting a successful Bid. Owner will not have any obligation to grant such access if doing so is not practical because of existing operations, security or safety concerns, or restraints on Owner's authority regarding the Site.

5.2 It is the responsibility of each Bidder before submitting a Bid to:

A. examine and carefully study the Bidding Documents, including any Addenda, data, and referenced items identified in the Bidding Documents;

B. become familiar with the Owner's safety program (as the General Conditions indicate, if an Owner safety program exists, it will be noted in the Supplementary Conditions) that may govern work at the Site.

C. become familiar with and satisfy itself as to all Laws and Regulations that may affect cost, progress, or the furnishing of the Goods and Special Services;

D. carefully study, consider and correlate the information commonly known to sellers of similar goods doing business in the locality of the Point of Destination and the site where the Goods will be installed or where Special Services will be provided; information and observations obtained from Bidder's visits, if any, to the Point of Destination and the site where the Goods are to be installed or Special Services are to be provided; and any reports and drawings identified in the Bidding Documents regarding the Point of Destination and the site where the Goods will be installed or where Special Services will be provided, with respect to the effect of such information, observations, and documents on the cost, progress, and performance of Bidder's obligations under the Contract Documents;

E. agree, based on the information and observations referred to in the preceding paragraph, that at the time of submitting its Bid no further examinations, investigations, studies, or data are necessary for the determination of its Bid for providing Goods and Special Services at the price bid and within the times and in accordance with the other terms and conditions of the Bidding Documents; promptly give Engineer written notice of all conflicts, errors, ambiguities, or discrepancies that Bidder discovers in the Bidding Documents and confirm that the written resolution thereof by Engineer is acceptable to Bidder;

F. determine that the Bidding Documents are generally sufficient to indicate and convey understanding of all terms and conditions for furnishing Good and Special Services and

G. agree that the submission of a Bid will constitute an incontrovertible representation by Bidder that Bidder has complied with every requirement of this Article, that without exception the Bid and all prices in the Bid are premised upon furnishing Goods and Special Services required by the Bidding Documents.

ARTICLE 6 PRE-BID CONFERENCE

6.1 There will be no pre-Bid conference.

6.2 At a time acceptable to the Owner, Bidders may take water samples and conduct testing at the Vernon WPCF, 100 Windsorville Road, Vernon CT at their own expense. If performed, the Owner has the following coordination requests:

A. Provide two days advance notice to Steve Boske at (860) 870-3545 or sboske@vernon-ct.gov.

B. Bidders can visit Mon – Fri between 8 am – 3 pm

C. Bidders must check in with Steve Boske in the Administration Building.

D. If requested in advance, the Owner can provide a small work area in their lab.

E. Bidders should plan to be off-site by 3 pm when the day shift ends.

ARTICLE 7 INTERPRETATIONS AND ADDENDA

7.1 All questions about the meaning or intent of the Bidding Documents shall be submitted in writing to the Engineer via the Tighe & Bond website for bidding document distribution at http://www.tighebond.com/Projects_Out_to_Bid.php. Prospective bidders are responsible for ensuring their questions are received by the Engineer. Prospective bidders must be registered users of the website to submit questions regarding the project. In order to receive consideration, questions must be received by Engineer at least seven business days prior to the date fixed for the opening of Bids. Interpretations or clarifications considered necessary by Engineer in response to such questions will be issued by Addenda to all parties recorded by Engineer as having received the Bidding Documents not later than five business days prior to the date fixed for the opening of Bids. Only questions answered by Addenda will be binding. Oral and other interpretations or clarifications will be without legal effect.

7.2 Addenda may be issued to clarify, correct, supplement or change the Bidding Documents. Such Addenda, if any, will be issued in the manner and within the time period stated in paragraph 7.1. Note that addenda issued during the bidding period will be submitted for review and approval of DEEP prior to bid opening.

7.3 The Bidder must acknowledge receipt of each Addenda, if any, in the space provided on the Bid Form.

ARTICLE 8 BID DEPOSIT

8.1 In the Bidding Documents, the terms “Bid security” and “Bid deposit” shall have the same meaning.

8.2 Bids must be accompanied by a Bid deposit in the amount of 5% of the Bidder’s maximum Bid price and in the form of a bid bond payable to the Owner. The bidders maximum bid price shall be calculated as the total Capital Cost portion of the Bid Form. The Bid Bond must be issued by a surety company licensed in the State of Connecticut.

8.3 The Bid deposit of the Successful Bidder will be retained until the Owner has signed an Agreement with the Construction Contractor, and the Successful Bidder has provided the performance bond as required, whereupon the Bid deposit will be returned.

8.4 Bid deposit of other Bidders will be returned within seven days after written notification from the Owner that it has not been selected as the successful Bidder.

ARTICLE 9 CONTRACT TIMES

9.1 See applicable provisions in the Agreement.

ARTICLE 10 LIQUIDATED DAMAGES

10.1 Provisions for liquidated damages, if any, such as those for Bidder's failure to attain a Milestone, to deliver the Goods or furnish Special Services within the Contract Times are set forth in the Agreement.

ARTICLE 11 SUBSTITUTE AND "OR EQUAL" ITEMS

11.1 The Contract, if awarded, will be on the basis of materials and equipment specified or described in the Bidding Documents without consideration during the bidding and Contract award process of possible substitute or "or equal" items. In cases in which the Contract allows the Seller to request that Engineer authorize the use of a substitute or "or equal" item of material or equipment, application for such acceptance may not be made to and will not be considered by Engineer until after the effective date of the Contract.

ARTICLE 12 PREPARATION OF BID

12.1 A Bid must be made on the Bid form included with the Bidding Documents. The Bid form shall not be altered in any way.

12.2 The Bid form must be completed in ink. Blank spaces in the Bid form must be filled in correctly where indicated, and the Bidder must state, both in words and numerals, the prices for which he proposes to complete each and every item of Work. Ditto marks shall not be used. A Bid price shall be indicated for each item listed therein. In the case of optional alternates the words "No Bid," "No Change," or "Not Applicable" may be entered.

12.3 A Bidder shall execute his Bid as stated below.

A. A Bid by an individual shall show the Bidder's name and official address.

B. A Bid by a partnership must be executed in the partnership name and signed by a partner (whose title must appear under the signature) accompanied by evidence of authority to sign. The official address of the partnership shall be shown.

C. A Bid by a corporation must be executed in the corporate name by a corporate officer (whose title must appear under the signature) and must be accompanied by evidence of authority to sign. The corporate seal shall be affixed and attested by the corporate secretary. The state of incorporation and the official corporate address shall be shown.

D. A Bid by a limited liability company shall be executed in the name of the firm by a member or other authorized person and accompanied by evidence of authority to sign. The state of formation of the firm and the official address of the firm shall be shown.

E. A Bid by a joint venture shall be executed by an authorized representative of each joint venturer in the manner indicated on the Bid Form. The official address of the joint venture shall be shown.

F. All names must be printed in ink below the signature.

12.4 The Bid shall contain an acknowledgment of the receipt of all Addenda in the space provided on the Bid form.

12.5 Postal and email addresses and telephone number to which communications regarding the Bid are to be directed shall be shown.

12.6 In order to be considered for selection, the Bidder must submit a complete bid package in accordance with these Bidding Documents. Partial Bids will not be accepted. Refer to the Bid Form for a list of documents that shall be submitted in addition to the Bid Form.

12.7 Any deviations in completion of the Bid Form and accompanying documents from the instructions provided in this Article may be cause for rejection of the Bid.

ARTICLE 13 BASIS OF BID

13.1 General

A. Bidders shall submit a Bid as set forth in the Bid form.

B. The Owner will evaluate and accept a Bid which, in the Owner's sole and absolute judgment, will best serve the interest of the Owner. All Bids, not rejected, will be evaluated, in part, based on a present-worth cost basis using information provided by Bidders in the Bid Form, and installation costs estimated by the Engineer. Annual operation and maintenance costs included in the present worth analysis will be based on the flow scenarios defined in the bid form. Equipment and system sizing shall be as specified in Division 11 and included in the life cycle analysis.

13.2 Bid Items

A. Bidders shall include a separate price for the specified Bid Items described in Paragraph 5.3 A – CAPITAL COST of the Bid Form. The Total Present Worth Cost of Installed System will include all bid items. The Owner, at its option, may decide to delete any or all of Item Nos 2, 3, or 4, in which case the Total Present Worth Cost of Installed System shall be reduced by this amount.

13.3 The evaluation will be scored according to the following two categories and awarded to the Bidder with the highest overall score while meeting all requirements of the specifications:

Criteria	Total Available Score
A. Total Present Worth Cost of Installed System	70
B. Non-Monetary Criteria	30
Total Score	100

13.4 All Bids, not rejected, will be evaluated in part on the basis of lowest present-worth cost of the installed system, which consists of a maximum of 70 points. The cost evaluation will be based on the following:

A. Capital costs of the Bidder's equipment, including proposed equipment, spare parts, and Special Services. Special Services includes all other Bidder's services required by the Bidding Documents, including but not limited to: assisting the Engineer

throughout the design and providing shop drawing level drawings, P&IDs, specifications and any other design assistance that may be requested, service agreements (if any), the process guarantee, system checkout, startup assistance, documentation, performance testing, and operator training.

B. Construction costs as estimated by the Engineer, including installation of the proposed equipment. This includes:

1. cost of new concrete channels, piping, tanks, baffles, and basins needed to install the equipment;

2. Cost of modifying existing tanks and/or structures to accommodate the equipment

3. cost of excavation for new tanks, basins, piping, equipment rooms, if any;

4. cost of required flow control and tank/channel drainage or isolation gates not supplied by the bidder;

5. cost of furnishing and installing electrical, instrumentation and control equipment;

6. cost of furnishing and installing any necessary building/structures/canopies to house or cover the proposed systems. This includes electrical and control systems, chemical storage areas, spare equipment storage areas, and other equipment including pumping, and hoisting related to the proposed system (as required).

7. Cost of furnishing additional equipment, outside of the Bidder's scope of supply as described herein, necessary for the Bidder to guarantee successful operation of the system. This includes equipment such as chemical feed and storage equipment, and pumping equipment.

8. At the Engineer's option, the costs common to all Bidders may be excluded from the analysis.

C. The present-worth of the operation and maintenance costs will be calculated over 20 years at a specified discount rate for annual operations and maintenance costs for the proposed systems. These costs will be based on the various operating conditions and weighting as described in the Bid Form (Section 00410).

1. Operation and maintenance costs include, but are not limited to: energy consumption, chemical use, and labor and materials for operations and maintenance, and other pertinent costs associated with operating the proposed equipment to meet the required performance standards for the equipment.

2. Labor costs for operations and maintenance will be estimated based on labor rates and the quantity and type of the proposed equipment and vendor specific instrumentation, based on Engineer's pre-determined estimates of labor effort associated with typical operating and maintenance tasks associated with each item.

3. Operation and maintenance costs associated operating and maintaining necessary ancillary buildings and enclosures to account for heating, lighting, and ventilation.

4. At the Engineer's option, the costs common to all Bidders may be excluded from the analysis.

D. The total present-worth cost evaluation will consist of a maximum score of 70 points. The Bid with the lowest present-worth cost will score the maximum 70 points. Each Bid that has a present-worth cost that exceeds the lowest present-worth bid will score a percentage of the maximum points. The percentage will be calculated as the present-worth value of the lowest present-worth bid divided by the present-worth value of that bid.

13.5 All Bids, not rejected, will be evaluated, in part, on the basis of the Bidder's qualifications, United States experience, and other non-monetary criteria provided by the Bidder with their Bid and consists of a maximum of 30 points.

A. The evaluation will be based on the following:

Non-Monetary Criteria	**Total Available Score**(2)
1. General Experience: The Bidder has experience designing and starting up(1) a minimum of 5 municipal wastewater IFAS Treatment Systems and/or Moving Bed Biofilm Reactor (MBBR) Systems, successfully operating in the United States for at least 3 years and designed for an average annual flow of 6 mgd or greater.	0 or 6
2. Nitrogen Experience: The number of IFAS and/or MBBR installations the Bidder has designed and started up(1) at a municipal wastewater treatment facility in the United States that have successfully operated for a minimum of three years achieving an average effluent total inorganic nitrogen (TIN) concentration of 3 mg/L as N or less.	5
3. Bio-Phosphorus Experience: The number of IFAS and/or MBBR installations the Bidder has designed and started up(1) at a municipal wastewater treatment facility in the United States that have successfully operated for a minimum of three years to achieve enhanced biological phosphorus removal.	2
4. Need for Supplemental Carbon: Bidder's proposed IFAS Treatment System design can achieve the design effluent Total Nitrogen Concentration of 4.5 mg/L as N at future design average annual flows and loads as defined in Section 11391 without the use of a supplemental carbon source.	0 or 4
5. Operational Resilience: Owner's sole interpretation of the proposed IFAS system's operational scheme, flexibility, reliability, and maintainability. Typical examples may include but not be limited to: providing adequately design swings zones in the proposed layout; level of sophistication provided by the aeration control system to limit dissolved oxygen in the anoxic zones; and methods to optimize the systems operation such as capacity of the proposed system to increase the percent fill of the IFAS zones.	5
6. General IFAS System Design Approach: Bidder's design proposal and narrative (written explanation per Section 00410 Paragraph 5.5.N) adequately identifies and addresses the common operational concerns that have been attributed to IFAS treatment systems in the past. Points awarded based on	5

Owner's sole interpretation of the degree to which the design proposal and narrative address these operational concerns and reduce the effort of the operators in operating the system.	
7. Operation Strategy During Construction: Owner's sole interpretation of the strategy provided by Bidder to provide operation of the secondary system throughout construction based on the requirements in Section 11391. Typical examples may include operations flexibility, staging, control of aeration zones in anoxic tanks.	3
Total Score	**30**
Notes: (1) Experience "designing and starting-up" IFAS or MBBR systems may include either experience by the Bidder's company or direct and significant experience of at least three individuals on the Bidder's current project team that have worked on any given project. Substantiation of any such claim must be submitted with the bid (See Paragraph 5.6 C of the Bid Form). (2) If the total available score indicate "0 or X", then the Bidder will receive "X" points if they meet the criteria or "0" points if they do not. Unless otherwise noted, if the total score available indicates "Y", the maximum score for each category ("Y") will be assigned to the BIDDER with the highest ranking within each category. The score of other bids will be reduced from the maximum score within each criteria category proportionally.	

13.6 Bidder must submit their anticipated schedule for delivery of deliverables as specified in Article 5 of the Bid Form, Section 00410. The Owner reserves the right to consider the Bid non-responsive if the Bidder's anticipated schedule for any deliverable exceeds the maximum specified in the bid form.

13.7 In order for the Owner to assess the Bidder's experience and qualifications for the purposes of the evaluation process, each Bidder shall provide the information in Article 5 of the Bid Form with their bid.

ARTICLE 14 SUBMITTAL OF BID

14.1 A Bid shall be received no later than the date and time prescribed and at the place indicated in the advertisement for Bids and shall be enclosed in an opaque sealed envelope plainly marked with the Project title, the name and address of Bidder, and shall be accompanied by the Bid deposit and other required documents. If a Bid is sent by mail or other delivery system, the sealed envelope containing the Bid shall be enclosed in a separate envelope plainly marked on the outside with the notation "BID ENCLOSED". When using the mail or other delivery system, the Bidder is totally responsible for the mail or other delivery system delivering the Bid at the place and prior to the time indicated in the Advertisement for Bids. A mailed Bid shall be addressed to Owner at the address in the Advertisement for Bids.

14.2 Bids received after the date and time prescribed for the opening of bids, or not submitted at the correct location or in the designated manner, will not be accepted and will be returned to the Bidder unopened.

ARTICLE 15 MODIFICATION OR WITHDRAWAL OF BID

15.1 Withdrawal Prior to Bid Opening

A. A Bid may be withdrawn by an appropriate document duly executed in the same manner that a Bid must be executed and delivered to the place where Bids are to be submitted prior to the date and time for the opening of Bids. Upon receipt of such notice, the unopened Bid will be returned to the Bidder.

15.2 Modification Prior to Bid Opening

A. If a Bidder wishes to modify its Bid prior to the Bid opening, Bidder must withdraw its initial Bid in the manner specified in paragraph 15.1.A and submit a new Bid prior to the date and time for the opening of Bids.

ARTICLE 16 OPENING OF BIDS

16.1 Bids will be opened as indicated in the Advertisement for Bids and, unless obviously unresponsive, bid prices will be publicly read aloud.

16.2 In order to be considered for selection, Bids must arrive at the designated location on or before the date and time specified in the Advertisement for Bids. Bidders mailing their Bids should allow for normal mail delivery time to ensure timely receipt of their Bids by Owner.

16.3 Bids received after the time specified for the opening of Bids will not be accepted and will be returned to the Bidder unopened.

16.4 No responsibility will be attached to Owner, its employees or the Engineer for premature opening of a Bid not properly addressed and identified in accordance with the Bidding Documents.

ARTICLE 17 BIDS TO REMAIN SUBJECT TO ACCEPTANCE

17.1 All Bids will remain subject to acceptance for the period of time stated in the Bid form, but Owner may, in its sole discretion, release any Bid and return the Bid deposit prior to the end of this period.

ARTICLE 18 EVALUATION OF BIDS AND AWARD OF CONTRACT

18.1 Owner reserves the right to reject any and all Bids, to waive any and all informalities, and the right to disregard all nonconforming, nonresponsive or conditional Bids.

18.2 Owner reserves the right to reject any Bid not accompanied by specified documentation and Bid deposit.

18.3 Owner reserves the right to reject any Bid if it shows any omissions, alterations of form, additions not called for, conditions or qualifications, or irregularities of any kind.

18.4 Owner reserves the right to reject any Bid that, in his sole discretion, is considered to be unbalanced or unreasonable as to the amount bid for any lump sum or unit price item.

18.5 More than one Bid for the same Goods and Special Services from an individual, or a firm, partnership, corporation or an association under the same or different names will not be considered. Reasonable grounds for believing that any Bidder is interested in more than one Bid for the Goods and Special Services shall be cause for disqualification of that Bidder and the rejection of all Bids in which that Bidder is interested.

18.6 In evaluating Bids, Owner will consider whether or not the Bids comply with the prescribed requirements as requested in the Bid Form or prior to the Notice of Award.

18.7 Owner may conduct such investigations as Owner deems necessary to establish the responsibility, qualifications, performance record, ability to perform the size and type of work specified or to resolve other issues, and financial ability of Bidders as determined by an evaluated selection process described in Article 13.

18.8 To be considered a responsive Bidder, the Bidder shall be a registered plan holder on Tighe & Bond's bid portal and have downloaded the Bidding Documents. The Bid will not be awarded to a Bidder unless a record of download of the Bidding Documents exists in Tighe & Bond's bid portal. To meet this requirement a prospective Bidder must register using the name that is to appear in the Bid Documents.

18.9 If the Owner awards the Contract for the Goods and Special Services, such award shall be to the responsible Bidder (who has neither been disqualified nor rejected pursuant to this Article 18) whose Bid is in the best interest of the Project.

18.10 Contents of the Bid of the Successful Bidder will become part of any contract awarded.

18.11 Refer to Article 6 of the Agreement for provisions related to price adjustment.

18.12 Bidder shall hold his operation and maintenance guaranteed values bid for items in Paragraph 5.3.B of the Bid Form, until performance testing of the system is successfully completed as specified in Division 11 of the Contract Documents.

18.13 Owner reserves the right to request that Bidders attend a formal interview to review and further clarify the Bidder's response for the purpose of evaluating the Bid. The interview will be held in the Owner's Water Pollution Control Facility at a time and place to be determined after Bids have been received and opened at no expense to the Owner. Owner also reserves the right to waive any formal interview process.

ARTICLE 19 CONTRACT SECURITIES AND INSURANCE

19.1 Bidders shall submit with their bid a letter from their surety indicating that the Bidder currently qualifies for the performance bond as required above. Surety shall be licensed to transact such business in the State of Connecticut and named on the current list of "Surety Companies Acceptable on Federal Bonds" as published in the "Treasury Department Circular 570". Notice of Award of the Contract and Execution of an agreement between the Owner and the Seller shall be contingent on receipt of this letter.

ARTICLE 20 SIGNING OF AGREEMENT

20.1 The Owner will transmit the required number of unsigned Agreements to the Successful Bidder with the notice of pre-selection. Within 15 days of the date of the notice of pre-selection, the Successful Bidder shall sign the Agreements and return them to the Owner. The Owner will return one executed Contract to the Successful Bidder.

ARTICLE 21 SALES TAXES

21.1 Owner is exempt from Connecticut State sales and use taxes on materials and equipment to be incorporated in the Project. Said taxes shall not be included in the Bid. Refer to Paragraph 5.05 of the Supplementary Conditions for additional information.

ARTICLE 22 EPA PROJECT REQUIREMENTS FOR SRF-FUNDED PROJECTS

22.1 This Project is subject to the American Iron and Steel (AIS) requirement of Section 436 of Public Law (P.L.) 113-76, Consolidated Appropriations Act, 2014. Section 00800 contains further information on applicable iron and steel products and compliance.

END OF SECTION

J:\V\V0037 Vernon WWTP\005 WPCF Design\Design\Specifications\Preselection\IFAS\00200-P.doc

To Recipient: Please complete the signatory information, sign, date and return this agreement to Tighe & Bond, Inc. by email to adweidner@tighebond.com.

AGREEMENT FOR DELIVERY OF DOCUMENTS IN ELECTRONIC FORM

In connection with the **Town of Vernon CT WPCF IFAS Treatment System Equipment Pre-Selection** (hereinafter "Project") for which Tighe & Bond, Inc. ("Engineer") has been retained to provide services, _____ (hereinafter "Recipient") has requested that Engineer provide Recipient with certain Instruments of Services prepared by Engineer and its subconsultants in electronic machine readable format. These documents in such format, and as expressly listed herein, shall hereinafter be referred to as the "Electronic Documents".

In consideration of the Engineer's agreement to release Electronic Documents, the Recipient agrees as follows:

1. It is understood and agreed that all drawings, specifications or other documents of any kind prepared by Engineer or its subconsultants, whether in hard copy or any electronic or machine readable format, including Electronic Documents (collectively the "Engineer's Documents"), are, and shall remain, instruments of their services. These Instruments of Services were prepared solely for use in connection with this Project. Engineer and its subconsultants retain all common law, statutory and other reserved rights, including the copyright. This Agreement is not intended in any way to alter the respective interests of the parties in the Instruments of Service as set forth in any agreement for services between Recipient and Engineer, notwithstanding Engineer's agreement to release the Electronic Documents to Recipient.

2. The Electronic Documents are provided as a convenience to the Recipient for informational purposes only in connection with the Recipient's performance of its responsibilities and obligations relating to the Project. The Electronic Documents do not replace or supplement the paper copies of the Drawings and Specifications which are, and remain, the Contract Documents for the Project or the paper copies of any other document prepared by the Engineer or its subconsultants.

3. The parties agree that the Electronic Documents are not, nor shall they be construed to be, a product. It is expressly agreed by the Recipient that there are no warranties of any kind in such Electronic Documents or in the media in which they are contained, either express or implied.

4. It is further understood and agreed that no Electronic Documents shall be signed or sealed.

5. If any differences exist between printed Instruments of Service and the Electronic Documents, the information contained in the printed documents shall be presumed to be correct and take precedence over the Electronic Documents.

6. Recipient agrees not to add to, modify or alter in any way, or to allow others to add to, modify or alter in any way, the Electronic Documents, except as expressly described herein.

7. The Electronic Documents are supplied in the following format: **AutoCAD (.dwg)**.

It is understood by Recipient that the media in which any Electronic Documents are transmitted can deteriorate over time and under various conditions. Engineer is not responsible for such deterioration. In addition, any conversion of the format is solely the responsibility of the Recipient. Recipient understands and agrees that the conversion of paper copies of Instruments of Service into electronic or machine readable format or the conversion of Electronic Documents from the machine readable format used by Engineer to some other format may introduce errors or other inaccuracies. Recipient therefore agrees to confirm the accuracy of the Electronic Documents before using them. Recipient agrees to accept all responsibility for any errors or inaccuracies and to release Engineer and its

subconsultants from any liability or claims for recovery of damages or expenses arising as the result of such errors or inaccuracies.

8. Where the Recipient has received specific permission to use the Electronic Documents in connection with Recipient's obligation to prepare certain documents for Project, Recipient shall, in addition to the other obligations set forth herein, be obligated to remove Engineer's or Engineer's subconsultant's title block from the copy of the Electronic Documents used by Recipient.

9. Recipient further agrees that the Engineer's Documents were prepared for use in connection with this Project only and that the Electronic Documents are supplied to Recipient for the limited purpose stated herein only. Recipient agrees not to use, or allow others to use, the Electronic Documents, in whole or in part, for any purpose or project other than as stated herein without the express prior written permission of the Engineer.

10. Recipient agrees to waive any and all claims and liability against Engineer and its subconsultants resulting in any way from any failure by Recipient to comply with the requirements of this Agreement for the Delivery of Documents in Electronic Format.

11. Recipient further agrees to indemnify and save harmless the Engineer and its subconsultants and each of their partners, officers, shareholders, directors and employees from any and all claims, judgments, suits, liabilities, damages costs or expenses (including reasonable defense and attorneys fees) arising as the result of either: 1) Recipient's failure to comply with any of the requirements of this Agreement for the Delivery of Documents in Electronic Format; or 2) a defect, error or omission in the Electronic Documents or the information contained therein, which defect, error or omission was not contained in the Contract Documents as defined in Paragraph 2 or where the use of such Contract Documents would have prevented the claim, judgment, suit, liability, damage, cost or expense.

RECIPIENT

_____ **Date:** _____

Name: _____

Title: _____

Company: _____

Identification of Electronic Documents covered by this Agreement:

Figure 5 – IFAS System Plan
Figure 6 – IFAS System Sections
Figure 7 – Blower Building Plan and Sections

Approved use of Electronic Documents covered by this Agreement:
Preparation of general arrangement drawings for inclusion in Recipient's bid showing Recipient's proposed equipment within the Town of Vernon's existing structures.

J:\V\V0037 Vernon WWTP\005 WPCF Design\Design\Specifications\Preselection\IFAS\00200-A Electronic Disclosure.doc
Copy: Agreement Folder

SECTION 00410

BID FORM

SECTION 00410

FORM FOR BID

PROJECT IDENTIFICATION:

Vernon CT Water Pollution Control Facility Upgrade
IFAS Treatment System Equipment Preselection

TABLE OF ARTICLES

1. Bid Recipient

2. Bidder's Acknowledgements

3. Bidder's Representations

4. Bidder's Certifications

5. Basis of Bid

6. Time of Completion

7. Attachments to This Bid

8. Bid Submittal

ARTICLE 1 - BID RECIPIENT

1.1 This Bid is submitted to:

Town of Vernon Office of the Town Administrator
14 Park Place
Vernon, CT 06066

1.2 The undersigned Bidder proposes and agrees, if this Bid is accepted, to enter into an Agreement with Owner in the form included in the Bidding Documents. This agreement will stipulate that the Bidder's Goods and Special Services as specified or indicated in the Bidding Documents will be furnished at the prices and within the times indicated in this Bid and in accordance with the other terms and conditions of the Bidding Documents and the upcoming upgrade project.

ARTICLE 2 - BIDDER'S ACKNOWLEDGEMENTS

2.1 Bidder accepts all of the terms and conditions of the Advertisement for Bids and Instructions to Bidders, including without limitation, those dealing with the disposition of Bid deposit. The Bid will remain subject to acceptance until October 1, 2019, or for such longer period of time that Bidder may agree to in writing upon request of Buyer.

ARTICLE 3 - BIDDER'S REPRESENTATIONS

3.1 In submitting this Bid, Bidder represents, as set forth in the Agreement, that:

A. Bidder has examined and carefully studied the Bidding Documents, and any data and reference items identified in the Bidding Documents and hereby acknowledges the receipt of all Addenda. Bidder acknowledges that Vernon's Water Pollution Control Facility (WPCF) currently uses the Zimpro PACT-WAR treatment process in which powdered activated carbon is added to the aeration tanks and spent carbon is regenerated on-site. Following upgrading of the WPCF, the PACT-WAR process will be discontinued.

B. Bidder has visited the Point of Destination and site where the Goods are to be installed or Special Services will be provided and become familiar with and satisfied as to the observable local conditions that may affect cost, progress, and furnishing of Goods and Special Services, if required to do so by the Bidding Documents, or if, in Bidder's judgement, any local condition may affect cost, progress, or the furnishing of Goods and Special Services.

C. Bidder is familiar with and has satisfied itself as to all federal, state and local Laws and Regulations that may affect cost, progress and furnishing of Goods and Special Services.

D. Bidder has carefully studied, considered, and correlated the information known to Bidder; information commonly known to sellers of similar goods doing business in the locality of the Point of Destination and the site where the Goods will be installed or where Special Services will be provided; information and observations obtained from Bidder's visits, if any, to the Point of Destination and the site where the Goods will be installed or Special Services will be provided; and any reports and drawings identified in the Bidding Documents regarding the Point of Destination and the site where the Goods will be installed or where Special Services will be provided, with respect to the effect of such information, observations, and documents on the cost, progress, and performance of Seller's obligations under the Bidding Documents.

E. Bidder is aware of the general nature of work to be performed by Buyer and others at the Site that relates to the Goods and Special Services that are to be furnished as indicated in the Bidding Documents.

F. Bidder has given Engineer written notice of all conflicts, errors, ambiguities, or discrepancies that Bidder has discovered in the Bidding Documents, and confirms that the written resolution thereof by Engineer is acceptable to Bidder.

G. The Bidding Documents are generally sufficient to indicate and convey understanding of all terms and conditions for furnishing the Goods and Special Services for which this Bid is submitted.

H. The submission of this Bid constitutes an incontrovertible representation by Bidder that Bidder has complied with every requirement of this Article, and that without exception the Bid and all prices in the Bid are premised upon furnishing the Goods and Special Services required by the Bidding Documents, and that the IFAS media will perform satisfactorily when installed at the Vernon CT WPCF.

ARTICLE 4 - BIDDER'S CERTIFICATION

4.1 Bidder certifies that this Bid is genuine and not made in the interest of or on behalf of any undisclosed individual or entity and is not submitted in conformity with any collusive agreement or rules of any group, association, organization, or corporation.

4.2 Bidder certifies that Bidder has not directly or indirectly induced or solicited any other Bidder to submit a false or sham Bid.

4.3 Bidder certifies that Bidder has not solicited or induced any individual or entity to refrain from bidding.

4.4 Bidder certifies that Bidder has not engaged in corrupt, fraudulent, collusive, or coercive practices in competing for the Contract. For the purposes of this Paragraph:

A. "corrupt practice" means the offering, giving, receiving, or soliciting of anything of value likely to influence the action of a public official in the bidding process;

B. "fraudulent practice" means an intentional misrepresentation of facts made (a) to influence the bidding process to the detriment of the Owner, (b) to establish bid prices at artificial non-competitive levels, or (c) to deprive Owner of the benefits of free and open competition;

C. "collusive practice" means a scheme or arrangement between two or more Bidders, with or without the knowledge of Owner, a purpose of which is to establish bid prices at artificial, non-competitive levels; and

D. "coercive practice" means harming or threatening to harm, directly or indirectly, persons or their property to influence their participation in the bidding process.

ARTICLE 5 - BASIS OF BID

5.1 Bidder proposes to furnish all Goods and Special Services required for construction of the IFAS Treatment System Equipment for the Vernon CT WPCF Phosphorus Upgrade Project in accordance with the accompanying Bidding Documents prepared by Tighe & Bond, Inc., for the Contract Prices specified in Article 5 Paragraph 5.3A at the guaranteed operation and maintenance values and costs specified in Article 5 Paragraph 5.3B, with additional supporting equipment information, documentation and bidder qualifications as described in Article 5 Paragraphs 5.4, 5.5, and 5.6, all according to the terms of the Bidding Documents.

5.2 This Bid includes Addenda numbered _____

5.3 The proposed Contract Prices and Guaranteed Operation and Maintenance Costs are provided in Paragraphs 5.3.A and 5.3.B below:

A. CAPITAL COST

Item No.	Unit of Measure	Description	Total Price Dollar Figure Total Price Written Words
1	L.S.	Supply the IFAS Treatment System as specified herein including all ancillary equipment, spare parts, tools, and Special Services.	$
2	L.S.	Spare Mixer – The additional cost to supply one shelf spare mixer as specified in Section 11391C.	$
3	L.S.	Two-year extended warrantee for equipment– The added cost to extend the warrantee requirements specified in Section 11391, Paragraph 1.7 by two years.	$
4	L.S.	Seller's service agreement – Two-year service agreement as specified in Section 11391, Paragraph 1.11.	$
TOTAL IFAS TREATMENT SYSTEM BID PRICE CAPITAL COST Sum of Items 1, 2, 3, and 4 Above			$

B. OPERATION AND MAINTENANCE GUARANTEE

1. Chemical Consumption

Item No.	Item Description	Units	Guaranteed Value/ Cost[3]	
			Design Current Average Annual Flow 3.1 MGD[4]	**Design Future Average Annual Flow 5.0 MGD[4]**
5	Cost of **Supplemental Carbon (Glycerin) based on MicroC 2000**	$ / lb COD [1]	TBD by Engineer	
6 (a,b)	Average **Supplemental Carbon** dosage required under specified Conditions to meet TN goal of 4.5 mg/L as TN (if needed)	lb as COD / MGD [2]		

Notes:
(1) Costs of the compound specified for each item listed above based on bulk quotes from suppliers for bulk deliveries to the Vernon WPCF.
(2) lb / MGD = pounds of the compound specified for each item above per million gallons of wastewater treated on an annual average basis.
(3) Performance tests specified in the technical specifications will be used to verify the guaranteed values. If performance tests indicate that (or refinements to the operational strategy require that) the overall annual average chemical consumption is greater than the amount guaranteed, then Bidder acknowledges that a penalty may be assessed based on the cost impact as discussed in Section 11391.
(4) Flow indicated is the Primary Effluent which includes WPCF Influent Flow plus plant recycle flows

2. Energy Consumption

Item No.	Item Description	Units	Guaranteed Value/ Cost[5]	
			Design Current Average Annual Flow 3.1 MGD	**Design Future Average Annual Flow 5.0 MGD**
7	Cost of Energy	$ / KWH	$0.14 as determined by Engineer	
8 (a,b)	IFAS Treatment System Blower System Annual Energy Consumption[1]	KWH		

Item No.	Item Description	Units	Guaranteed Value/ Cost[5]	
			Design Current Average Annual Flow 3.1 MGD	Design Future Average Annual Flow 5.0 MGD
9 (a,b)	IFAS Treatment System Mixer Annual Energy Consumption[2,4]	KWH		
10 (a,b)	Maximum Required Internal Mixed Liquor Recycle Pumping Rate under specified Conditions [3,4]	%		

Notes:

(1) Blower energy consumption: Calculate energy based on the Blower System Power Requirements listed in the IFAS Treatment System Blower System Schedule 11391B-1. attached to this Bid Form. Total Energy = 10% * (5th + 95th percentile) + 20% *(20th + 80th percentile) + 50%*(50% percentile) * 24 hours/day * 365 days/year.

(2) Mixing energy consumption: Calculate energy based on the specific proposed power requirements for each mixer (based on the recommended speed setting for the mixer in that location) totaled up over all mixers to be provided (excluding spares if any) as indicated in the IFAS Treatment System Mixer Schedule 11391C-2 attached to this Bid Form and operating 24 hours a day and 365 days per year.

(3) Recycle Pumping energy consumption will be calculated by Engineer based on the pump flow (Design Average Annual Flow rate specified multiplied by the % return rate entered above (say 200% to 300%)), the pump head (to be determined by the Engineer) and the estimated pump efficiency (to be determined by the Engineer) and operating 24 hours a day and 365 days per year.

(4) Include in the calculation the manufacturer's stated efficiency for all equipment provided including motors, VFDs, and harmonic filter equipment. Provide supporting documentation. If efficiency curves are not available from a manufacturer for a component, use full load efficiency.

(5) Performance tests specified in the technical specifications will be used to verify the guaranteed values. If performance tests indicate that (or refinements to the operational strategy require that) the overall annual average energy consumption is greater than the amount guaranteed, then Bidder acknowledges that a penalty may be assessed based on the cost impact as discussed in Section 11391.

C. The Bidder acknowledges that this bid will be evaluated using the Guaranteed Operational and Maintenance Values and Costs included in Paragraph 5.3B in the following manner:

1. The annual operating costs will be based on calculations that will utilize the following weights assigned to the guaranteed costs/values:

   a. Current average daily flow of 3.1 mgd - 75%

b. Design average daily flow of 5.0 mgd - 25%

2. The Bidder acknowledges the Guaranteed Operational and Maintenance Values and Costs included in Paragraph 5.3B must be guaranteed for the time periods described in Article 18 of the Instructions for Bidders (Section 00200).

5.4 A summary of the proposed equipment (and equipment required to be provided by the Buyer), a detailed breakdown of the operational and maintenance values used to back up the values in Paragraph 5.3.B, and delivery schedule to be provided is as follows:

A. General IFAS Treatment System Equipment Requirements

		Proposed Value
1.	Total Number of Treatment Trains Proposed (#)	2
2.	Number of Treatment Trains On-Line at or above the Design Peak Hourly Flow Rate (#)	2
3.	System Maximum Bulk Fluid Flow(1) (MGD)	
4.	Recommended Minimum Flow Capacity for the Internal Mixed Liquor Recycle (IMLR) in each Train (MGD)(2)	
5.	Recommended Maximum Flow Capacity for the Internal Mixed Liquor Recycle (IMLR) pumps per Train (MGD)(2)	
6.	Media Percent Fill in IFAS Zone (%)	
7.	Maximum Allowable Media Percent Fill for IFAS Zone (%)	
8.	Number of Media Retention Screens per IFAS Treatment Zone (#)	
9.	Total Area of Media Retention Screens excluding drains Screen and Scum Screen. (square feet - total)	
10.	Total Area of Media Retention Screens excluding drains Screen and Scum Screen. (square feet- open area)	

Notes:

(1) Maximum Bulk Fluid Flow is the sum of the primary effluent flow, RAS rate, and IMLR rate(s).

(2) This will be used to select the number and size of IMLR pumps in each train.

B. IFAS Treatment System Zone Configuration & Dimensions[1]

Zone Description[2]	IFAS Treatment System Zones Configuration				
	Length (ft)	*Width (ft)*	*Side Water Depth (ft)*	*Volume (MG)*	*Number of "Aeration Control Zones" in this Zone Volume (MG)*
Anaerobic Selector #1[3]					0
Anaerobic Selector #2[3]					0
Anaerobic Selector #3[3]					0
Pre-Anoxic[4]					
Oxic *without* IFAS Media					
Oxic *with* IFAS Media					
Oxygen Depletion Zone[5]					
Post Anoxic[5]					1
Re-aeration[5]					1
Total					

Notes:

(1) Dimensions and Locations shall be for only one treatment train, with the understanding that the second treatment train will have nearly identical dimensions and volumes. Each zone listed may contain more than one Aeration Control Zone.

(2) The listed zones are the minimum required zones as specified in Section 11391, Paragraph 1.3. Additional zones required per the IFAS Treatment System Seller's specific design, shall be included in the spare rows. Information on this table shall reflect the zone configuration and dimensions as shown on Seller's layout drawing provided with this Bid.

(3) These zones to be located within Tanks #1 and #2 and will also serve as Anoxic

Selectors and a contact tank for RAS flow if plant is operated in step feed mode
(4) These zones to be located within Tanks #3 and #4 and will also serve as Oxic Swing Zones after construction is completed and as oxic zones during construction.
(5) These zones to be located within Tanks #5 and #6 and will also serve as Oxic Swing Zones after construction is completed and as oxic zones during construction.

C. Process Design Criteria

		Proposed Value
1.	Design Sludge Volume Index (mL/g) [1]	_____
2.	Design MLSS Concentration (design future conditions) (mg/L)	_____
3.	Design MLSS Concentration (during construction when Zimpro PACT-WAR system offline) (mg/L)	_____
4.	Gross Yield – during phosphorus removal season with coagulant addition for phosphorus removal (lb TSS / lb BOD)	_____
5.	Gross Yield – during phosphorus removal season with EBPR (lb TSS / lb BOD)	_____
6.	Gross Yield – during non-phosphorus removal season (lb TSS / lb BOD)	_____
7.	Gross Yield – during construction when PACT-WAR system is offline (lb TSS / lb BOD)	_____
8.	Aerobic Suspended Growth Solids Retention Time (SRT) – future design conditions (days)	_____
9.	Aerobic Suspended Growth Solids Retention Time (SRT) – during construction when Zimpro PACT-WAR system is offline (winter) (days)	_____
10.	Average Annual RAS flow rate (MGD)	_____
11.	Total Head Loss across IFAS Media Zone and IFAS Retention Screens at Current Design Average Day Flow of 3.1 MGD[2]	_____
12.	Total Head Loss across IFAS Media Zone and IFAS Retention Screens at Maximum Bulk Fluid Flow[2]	_____

Notes:

(1) Sludge Volume Index can be based on previous experience. Provide as part of the bid, data from at minimum two existing IFAS treatment systems with anaerobic selector zones operating at the provided SVI as evidence to the

design SVI.

(2) Calculate Headloss based on Maximum Bulk Fluid Flow which is the sum of the specified (primary effluent) flow, recommended RAS rate (50% to the specified flow), and IMLR rate(s).

D. IFAS Treatment System Aeration System Equipment

1. Provide a completed Aeration System Equipment Schedule, which is attached to this Bid Form as Attachments 11391A-1,11391A-2, 11391A-3, and 11391A-4.

E. IFAS Treatment System Blower System Equipment

1. Provide a completed Blower System Equipment Schedule, which is attached to this Bid Form as Attachments 11391B-1 and 11391B-2.

F. IFAS Treatment System Mixer Equipment

1. Provide a completed Mixer Equipment Schedule, which is attached to this Bid Form as Attachment 11391C-1 and 11391C-2.

G. Delivery Schedule

		Duration
1.	IFAS Treatment System (as specified in Section 11391)	
1A.	Preliminary Shop Drawings (weeks from Owner's request, maximum of 4)	_____
1B.	Shop Drawings (weeks from execution of purchase order with the Buyer, maximum of 10)	_____
1C.	Delivery of Goods (weeks from Shop Drawing Approval, maximum of 22)	_____
2.	IFAS Treatment System Aeration System (as specified in Section 11391A)	
2A.	Preliminary Shop Drawings (weeks from Owner's request, maximum of 4)	_____
2B.	Shop Drawings (weeks from execution of purchase order with the Buyer, maximum of 10)	_____
2C.	Delivery of Goods (weeks from Shop Drawing Approval, maximum of 22)	_____
3.	IFAS Treatment System Blowers (as specified in Section 11391B)	
3A.	Preliminary Shop Drawings (weeks from Owner's request, maximum of 4)	_____
3B.	Shop Drawings (weeks from execution of purchase order with the Buyer, maximum of 10)	_____

3C.	Delivery of Goods (weeks from Shop Drawing Approval, maximum of 22)	_____
4.	IFAS Treatment System Mixers (as specified in Section 11391C)	
4A.	Preliminary Shop Drawings (weeks from Owner's request, maximum of 4)	_____
4B.	Shop Drawings (weeks from execution of purchase order with the Buyer, maximum of 10)	_____
4C.	Delivery of Goods (weeks from Shop Drawing Approval, maximum of 22)	_____

5.5 The following supplementary information is to be provided with the Bid:

A. A schedule of values providing a detailed breakdown of the lump sum items provided on the Bid Form into the various types of Goods and Special Services to be provided. The breakdown shall be by specification section and content and include materials, installation, and start-up for equipment and controls where applicable.

B. A written description of the changes to the design required for the IFAS Treatment system to achieve an Annual Average Effluent Total Nitrogen (TN) less than 3.0 mg/L as N.

C. Written description and Seller's literature of the proposed system.

D. Dimensioned plans and sections of the proposed system process equipment including field instruments, control panels, and all other major system components. Provide sample control panel schematics and dimensions designed from projects of similar size and scope.

E. Dimensioned plans and sections of the proposed system layout including required number of trains, dimensions (lengths, depths, relative water surface elevations) of the minimum required process zones and any additional required process zones per Seller's design within each treatment train, IFAS media retention screen locations, aeration zone piping and grid locations, required maintenance clearances from provided equipment, and minimum relative elevations of all equipment to be supplied.

F. General arrangement drawings show the proposed equipment within the Owner's existing structures as they are illustrated on Figures 5, 6 and 7 included in Appendix A. These layouts shall show placement of blowers, mixers, IMLR pumps, aeration system droplegs, aeration system control instrumentation, and all other equipment specified herein and demonstrate compliance with all dimensional limitations and shall **be based on the AutoCAD .dwg files that were made available by the Engineer as described in Section 00200, Article 3.**

G. Design Data

1. Complete process calculations, including but not limited to:

a. Sizing of process oxic and anoxic volumes.

b. Selection of design MLSS concentration under future and current conditions subject to maximum loads specified herein.

c. Selection of design solids retention time under future and current conditions subject to maximum loads specified herein.

d. Selection of gross yield at various design conditions.

e. Selection of IMLR rate.

f. Selection of media type, quantity and percent fill.

g. Design of aeration system, determination of process air required and determination of air required for mixing.

h. Reports of process simulation model output, including a summary of kinetic rates used for both the fixed-film and suspended growth.

i. Basis for equipment recommendations to be provided by others, including IMLR pumps and Tank isolation gates (or other inlets as required to prevent media migration).

j. Energy Calculations supporting the operation and maintenance guarantee values

2. Hydraulic calculations developed to demonstrate compliance with the allowable head loss through the IFAS basin, media retention screens and other devices designed to prevent media migration downstream or upstream of the IFAS zone.

H. Description of the level of factory assembly prior to factory system testing and a description of the factory system testing conducted at this level for each of the provided pieces of equipment.

I. Written description of any specific equipment requirements such as the need for equipment to be protected from weather and the elements. Provide an explanation.

J. Details of any special tools or equipment required for operation and maintenance of the proposed system.

K. Details of the IFAS Treatment System Controls Strategy including, system preliminary process & instrumentation diagram, control panel layouts, wiring schematics, written description of the Ammonia Based D.O. Setpoint Controller modelling algorithms, and written description of the overall system automatic control systems.

L. Details demonstrating the ability of the proposed system to hydraulically pass the range of flows as required to meet the design average day and peak hour flow rate.

M. Proposed operational strategy for maintaining operations of the secondary system during construction, including phasing of tank modifications, calculations demonstrating effluent performance once the Zimpro PACT-WAR system is turned off in accordance with Section 11391, Paragraph 1.3.

N. Written explanation of how Seller's proposed IFAS Treatment System design addresses the following common operational concerns that have been attributed to IFAS Treatment Systems installed in the past:

1. Controlling DO at suitable levels to optimize treatment and keeping a mixed tank

2. IFAS media migration backflowing through IFAS media zone inlet structures into distribution channels and upstream zones in a manner that minimizes headloss.

3. IFAS media floating and rafting above retention screens

4. IFAS media being captured and caught in IMLR pumps

5. Screens blinded with impinged media

6. Removing media from tanks for purposes of in-tank inspections and maintenance

7. Excessive foaming within the IFAS media zone

8. In-situ field instrumentation becoming damaged by repeated collisions from IFAS media and biofilm growth on the sensor

5.6 The Seller represents to the Owner the following as evidence of Seller's qualifications to supply the equipment and provide services specified herein:

A. Number of years Seller has been in business under the name in which these Goods and Special Services will be furnished.

B. Number of installations in the United States and worldwide with equipment functionally similar to that proposed. Include installation dates for each.

C. A list and description of projects in the United States where the Seller's design team has designed and installed as IFAS system. The projects listed shall provide suitable detail for evaluating the Bidder's qualifications and experience, which are non-monetary criteria discussed in Article 13 of the Instruction to Bidders (Section 00200).

D. A list and description of projects in the United States where the Seller's proposed equipment has been installed. The projects listed shall provide suitable detail for evaluating the Bidder's qualifications and experience, which are non-monetary criteria discussed in Article 13 of the Instruction to Bidders (Section 00200).

E. Provide the following information for each installation cited in items C and D above:

1. Name of wastewater treatment facility

2. Name, Address, and telephone number of system owner's or operator's contact person who can address the performance and maintenance of the Seller's equipment

3. Design flow rates including average annual, maximum month, maximum day, and peak hour

4. Date system was placed into operation

5. System design objectives (i.e. BOD removal, nitrification, denitrification EBPR) and target effluent limits for ammonia, total nitrogen, and total phosphorus, if applicable

6. Supplemental Carbon Type used, if any

7. Media type

ARTICLE 6 - TIME OF COMPLETION

6.1 Bidder agrees that the furnishing of Goods and Special Services will conform to the schedule set forth in Article 5 of the Agreement.

6.2 Bidder accepts the provisions of the Agreement as to liquidated damages.

ARTICLE 7 - ATTACHMENTS TO THIS BID

7.1 The following documents are attached to and made a condition of this Bid:

A. Bid Schedules for IFAS Treatment System Aeration System, IFAS Treatment System Blower System, and IFAS Treatment System Mixer Equipment.

B. Bid deposit in the amount of _____ dollars ($_____ _____), consisting of a bid bond in the amount of five percent of the total amount of Bid provided in paragraph 5.3.A of this section.

C. A letter from surety indicating that the Bidder currently qualifies for the performance bond required as detailed in these documents

D. Evidence of Bidder's qualifications in accordance with Article 5 of this Bid as well as Supplementary Information Specified in Article 5.

E. Evidence of authority to sign.

ARTICLE 8 - BID SUBMITTAL

BIDDER: *[Indicate correct name of bidding entity]*

_____

By:
[Signature] _____

[Printed name] _____
(If Bidder is a corporation, a limited liability company, a partnership, or a joint venture, attach evidence of authority to sign.)

Attest:
[Signature] _____

[Printed name] _____

Title: _____

Submittal Date: _____

Address for giving notices:

_____

_____

_____

Telephone Number: _____

Fax Number: _____

Contact Name and e-mail address: _____

_____

Bidder's License No.: _____
(where applicable)

END OF SECTION

J:\V\V0037 Vernon WWTP\05 - WPCF Design\Design\Specifications\Preselection\Discfilters\00410-P.doc

SECTION 00410 – ATTACHED SCHEDULES

Bidder has completed the attached schedules (see all empty cells or underlined blank spaces "_____") and has provided sufficient information in the Bid support these items.

IFAS Treatment System Aeration System – Four Schedules on six pages.

Provide one Fine Bubble schedule per Fine Bubble diffuser Aeration Zone

Provide one Coarse Bubble schedule per Coarse Bubble diffuser Aeration Zone

IFAS Treatment System Blowers – Two Schedules on three pages

Provide one schedule per Blower System

IFAS Treatment System Mixers - Two schedules on two pages.

11391A – 1 – IFAS Treatment System Aeration System Aeration Zones Schedule					
Aeration Zone[(1)] No.	*Fine or Coarse Bubble[(1)]*	*Length (ft)*	*Width (ft)*	*Water Depth (ft) [(1)]*	*Volume (MG)*
Total					

Notes:

(1) Aeration Zones shall be numbers based on the treatment zone number determined by the IFAS Treatment System Bidder. Provide coarse bubble diffusers in zones containing IFAS media Only. List identical zones (from each treatment train) in the same row. Calculate water depth based on water elevation based on effluent weir height at Tanks 5 and 6.

11391A – 2 – IFAS Treatment System Aeration System General Design Conditions Schedule	
Parameter	*Value*
Influent Wastewater Temperature	
Minimum Month	10 °C
Annual Average	16 °C
Maximum Month	22 °C
Maximum Allowable MLSS Concentration (under normal conditions)	3,200 mg/L
Maximum Allowable MLSS Concentration	5,000 mg/L
Site Elevation	230 feet
Atmospheric Pressure	14.57 psia
Relative Humidity	
Typical	60%
Maximum	100%
Implied Oxygen percentage in Air	21%
Standard Oxygen Correction Factors	
Alpha (coarse bubble diffusers)	0.9
Alpha (fine bubble diffusers)	0.5
Beta	0.95
Theta	1.024
Atm Pressure	14.7 psia
Water Temp	20 °C
C^*_{sat20}	10.52 mg/l
C_{surfT}	9.07 g/l
Purge Systems required	
Coarse Bubble Diffuerss	As Noted
Fine Bubble Diffusers	Manual

11391A – 3 – IFAS Treatment System Aeration System Coarse Bubble Schedule [1] Part ___ of ___			
This schedule is for Aeration Zone(s)[1]			
Coarse Bubble Standard Oxygen Correction (AOR/SOR) (-)			
Number of Aeration Grids in Zone (#)-			
Total Number of Diffuser Laterals per Aeration Grid (#)			
Number of Orifices per Diffuser lateral (#)			
Total Number of Operating Orifices (#)			
Drop Pipe Diameter (inches)			
Aeration Zone Header Diameter (inches)			
Aeration Grid Manifold Diameter (inches)			
Diffuser Lateral Type (with Pipe Diameter (inches) if applicable)			
Orifice Density (% floor)			
Minimum Air Flow Requirement for Mixing (scfm)			
Actual Oxygen transfer at Min Requirement for Mixing (lbs/day)			
Process Requirement for Each Zone Indicated Above	***Minimum***	***Current***	***Maximum***
Dissolved Oxygen (O2) Concentration (mg/L)			
Actual O2 Required this Zone [SOR] (lbs/day)[4]			
Actual O2 Required All Zones [SOR] (lbs/day) [4]			
% of O2 delivered in this Zone (%)[4]			
Standard O2 Required this Zone [SOR] (lbs/day)			
Standard O2 Transfer Efficiency [SOTE][5] (%)			
Air Flow Required for Oxygen Transfer (scfm)			
Air Flow Normalized to Zone Area (scfm/sf)			
Air Flow Normalized to Zone Volume (scfm/1000 cf)			
Total Air Flow Required for Oxygen Transfer (scfm)			
Submergence of Diffuser Orifices (ft)[6]			
Pressure at Top of Drop Pipe (psig) [6]			

Notes:

(1) Complete One Schedule per Aeration Zone or provide the requested information in a separate document on Aeration System manufactures letterhead. - Provide coarse bubble diffusers in zones containing IFAS Media Only. List identical Aeration Zones (from each treatment train) in the same Schedule. When reference is made to "this zone" it shall refer to each Aeration Zone individually. This means that the total system requirements (for air flow, oxygen transfer, etc) is the number listed in this schedule multiplied by the number of identical zones listed in the schedule.

(2) -

(3) -

(4) Actual Oxygen required over all Aeration Zones in process including those with coarse and fine bubble diffusers to be distributed into individual zones to satisfy the requirements of both the Aeration System Manufacturer (as specified in this section) and the IFAS Treatment System Bidder (design calculations based on the flows and loads specified in Section 11391). "% of O2 delivered" is the ratio of the two prior entries in the schedule.

(5) Clean water oxygen transfer efficiencies shall be measured at Standard Conditions, at the specified average diffuser submergence, and by test procedures and conditions as specified in ASCE 2-91. Standard Conditions are defined as 14.7 psia, 68 degrees F, and 36-percent relative humidity.

(6) Minimum pressure shall be based on low aeration tanks levels (Tank Depth listed in Schedule 11391A-1) and low air demand. Maximum Pressure shall be based on high aeration tank levels (Tank Depth listed in Schedule 11391A-1 plus either 8 inches of water column due to the change in the hydraulic profile at high flows in Tanks 5 and 6 or 14 inches of water column due to the change in the hydraulic profile at high flows in Tanks 3 and 4) and high air demands.

11391A – 4 – IFAS Treatment System Aeration System Fine Bubble Schedule [1] Part ___ of ___			
This schedule is for Aeration Zone(s)[1]			
Fine Bubble Standard Oxygen Correction (AOR/SOR) (-)			
Number of Aeration Manifolds in Zone (#)-			
Total Number of Orifices/Diffuser Assemblies per manifold (#)			
Total Number of Orifices/Diffusers Assemblies in Zone (#)			
Total Number of Operating Orifices/Membrane Diffusers in Zone(#)			
Drop Pipe Diameter (inches)			
Aeration Zone Header Diameter (inches)			
Aeration Manifold Diameter (inches)			
Orifice/Diffuser Membrane Density (% floor)			
Minimum Air Flow Requirement for Mixing (scfm)			
Actual Oxygen transfer at Min Requirement for Mixing (lbs/day)			
Process Requirement for Each Zone Indicated Above	***Minimum***	***Current***	***Maximum***
Dissolved Oxygen (O2) Concentration (mg/L)			
Actual O2 Required this Zone [SOR] (lbs/day)[4]			
Actual O2 Required All Zones [SOR] (lbs/day) [4]			
% of O2 delivered in this Zone (%)[4]			
Standard O2 Required this Zone [SOR] (lbs/day)			
Standard O2 Transfer Efficiency [SOTE][5] (%)			
Air Flow Required for Oxygen Transfer (scfm)			
Air Flow per Orifice/Diffuser (scfm)			
Air Flow Normalized to Zone Area (scfm/sf)			
Air Flow Normalized to Zone Volume (scfm/1000 cf)			
Total Air Flow Required for Oxygen Transfer (scfm)			
Submergence of Orifices (ft)[6]			
Pressure at Top of Drop Pipe (psig) [6]			

Notes:

(1) Complete One Schedule per Aeration Zone or provide the requested information in a separate document on Aeration System manufactures letterhead. - Provide coarse bubble diffusers in zones containing IFAS Media Only. List identical Aeration Zones (from each treatment train) in the same Schedule. When reference is made to "this zone" it shall refer to each Aeration Zone individually. This means that the total system requirements (for air flow, oxygen transfer, etc) is the number listed in this schedule multiplied by the number of identical zones listed in the schedule.

(2) -

(3) -

(4)	Actual Oxygen required over all Aeration Zones in process including those with Coarse and fine bubble diffusers to be distributed into individual zones to satisfy the requirements of both the Aeration System Manufacturer (as specified in this section) and the IFAS Treatment System Bidder (design calculations based on the flows and loads specified in Section 11391). "% of O2 delivered" is the ratio of the two prior entries in the schedule.
(5)	Clean water oxygen transfer efficiencies shall be measured at Standard Conditions, at the specified average diffuser submergence, and by test procedures and conditions as specified in ASCE 2-91 . Standard Conditions are defined as 14.7 psia, 68 degrees F, and 36-percent relative humidity.
(6)	Minimum pressure shall be based on low aeration tanks levels (Tank Depth listed in Schedule 11391A-1) and low air demand. Maximum Pressure shall be based on high aeration tank levels (Tank Depth listed in Schedule 11391A-1 plus either 8 inches of water column due to the change in the hydraulic profile at high flows in Tanks 5 and 6 or 14 inches of water column due to the change in the hydraulic profile at high flows in Tanks 3 and 4) and high air demands.

11391B-1 - Blower System Schedule	
Description	IFAS System Blowers
Number of Units	3 Duty + 1 Spare Standby
Blower System – Turn Down Minimum Air Flow (Current) Maximum Air Flow (Future) Discharge Pressure – Low Discharge Pressure – High	 _____scfm Total _____scfm Total _____psi _____psi (Specified air flows shall be achieved over specified range of discharge pressures and temperatures specified in the Blower Package Schedule)
Current Design Conditions 5th percentile Air Flow 20th percentile Air Flow 50th percentile Air Flow 80th percentile Air Flow 95th percentile Air Flow Nominal Discharge Pressure=	**System Delivered Air Flow / Blower System Power Requirements** _____SCFM / _____KW _____SCFM / _____KW _____SCFM / _____KW _____SCFM / _____KW _____SCFM / _____KW _____psi
Future Design Conditions 5th percentile Air Flow 20th percentile Air Flow 50th percentile Air Flow 80th percentile Air Flow 95th percentile Air Flow Nominal Discharge Pressure=	**System Delivered Air Flow / Blower System Power Requirements** _____SCFM / _____KW _____SCFM / _____KW _____SCFM / _____KW _____SCFM / _____KW _____SCFM / _____KW _____psi
Starting Conditions	Design the Blower System to slowly increase air flow and pressure to flush water out of the air diffuser system piping upon startup. Startup one Blower Package at a time after a power outage.
Other Service Conditions	As noted on the Blower Package Schedule
Control Strategy	The Blower System Master Controller will 1) select the number of Blower Packages and each Blower Package speed to achieve the desired air flow rates at the system pressure required for maximum energy efficiency

11391B-1 - Blower System Schedule

Notes:

(1) As determined by (and indicated on the Bid Form of) the IFAS Treatment System Bidder based on the following design constraints:

a. Air Flow Capacities shall be based on the Actual Oxygen Requirements specified for the IFAS Treatment System, the IFAS Treatment System Bidder's design of the aeration tanks and fine and coarse bubble air diffuser systems. Note: During normal operation, the air supplied by the blower will also supply air for mixing to the existing west distribution channel - Allow for 80 scfm min (5th and 20th percentile), 200 scfm average (50th percentile), and 320 SCFM maximum (80th and 95th percentile) for supply to existing coarse bubble diffusers in the existing west distribution channel. Blower size shall not be increased by these air flow rates, and during times of peak air demand this air will be manually shut off based on an alarm from the IFAS Treatment System Main Control Panel.

b. Design pressures shall include a 0.5 psi pressure drop allowance at maximum air flow capacities for piping and fittings provided by others, plus all pressure drops for equipment included in the IFAS Treatment System Bidder's scope of supply.

c. Low pressure shall be based on low aeration tanks levels (at low flows) and low air demand and High pressure shall be based on high aeration tank levels (at design maximum month flows) and high air demands.

(2) As determined by the Blower Manufacturer and IFAS Treatment System Bidder based on conditions provided by the IFAS Treatment System Bidder and as indicated on the Bidder's Bid Form. The "Blower System Power Requirement" for each condition given shall be determined by the Blower Manufacturer by estimating the project specific "wire to air" power requirement as follows:

a. Determine the most efficient number of blowers to be operated to satisfy the specified conditions and the required flow(s) and pressure(s) to be delivered by each Blower Package.

b. Utilize manufacturer's power performance curves for the Blower Packages that are required for the specified conditions to determine the power requirements. The power requirements shall be derived from and be consistent with and directly traceable to the blower specific energy performance guaranteed in the process performance guarantee specified above per ISO 1217 Annex C.

c. Apply efficiency factors for the proposed motor based on the manufacturers data for the NEMA MG-1 routine test results.

d. Apply efficiency factors for the proposed VFD based on the VFD manufacturer's specific published data on efficiency at full load.

e. Add in the power requirement for the blower cooling fan(s) and other motors included for the operating Blower Packages.

f. Air flow rates and energy demands for Channel Mixing within the West Distribution Channel shall be excluded from the Operations and Maintenance Life Cycle Analysis.

11391B-2 - Blower Package Schedule	
Description	IFAS System Aeration Blowers
Location	Indoor Installation (Existing Blower Building)
Standard Conditions for SCFM	
Temperature	68°F
Pressure	14.7 psia
Relative humidity	36%
Design Site Conditions for ICFM	
Site elevation	220 feet
Design inlet air temperature, min-max	-10 – 100°F
Design inlet pressure	14.49 psia
Design relative humidity	80% (at max inlet temperature)
Ambient blower room air temp, min-max	40 – 100°F
Capacity of Duty Blowers	
Maximum Air Flow Capacity	_____SCFM
Minimum Air Flow Capacity	_____SCFM
Design Discharge Pressure Max	_____PSI
Design Discharge Pressure Min	_____PSI
Maximum Blower Speed	_____RPM
Blower Package Power Requirements	Discharge Pressure = Design (Max + Min)/2
Operating Point #1 (at Min Air Flow Capacity)	_____SCFM / _____KW
Operating Point #2 (at (#1+ #3)/2)	_____SCFM / _____KW
Operating Point #3 (at (#1+ #4)/2)	_____SCFM / _____KW
Operating Point #4 (at (#3 + #5)/2)	_____SCFM / _____KW
Operating Point #5 (at Max Air Flow Capacity)	_____SCFM / _____KW
Service Conditions	
Electrical Classification	Unclassified Area
Transported Material	Process Air
Noise Requirements (w/enclosure)	_____ dBA (Manufacturer's Rated Noise Level with Standard Enclosure but no more than 88 dBA)
Piped/Ducted Connections	
Inlet	For Purpose of Bidding – Assume Piped/Ducted Inlet
Discharge	Flanged (piped)
Blower Motor & Motor Drive	
Motor Size (Min.)	_____ HP
Enclosure	NEMA TEFC
Volts, Phase, Cycles	460, 3, 60
Speed (maximum)	3600 rpm
Service Factor	1.15 (Across the line) 1.0 Inverter driven
Efficiency	NEMA MG-1 Premium Efficient
Drive	Variable Frequency Drive
Variable Frequency Drive	
Location	For the purposes of Bidding, assume Bidder to provide remote VFDs with NEMA 12 enclosures.
Accessories	Harmonic Filter

11391B-2 - Blower Package Schedule	
Accessories/Appurtenances to be included	
Ducted Inlet with Flexible Connector	High Temperature Shutdown
Inlet Filter/Silencer	High Pressure Shutdown
Discharge Silencer	Inlet/Discharge Pressure Transducers
Discharge Flexible Connectors	Inlet/Discharge Temperature Sensor
Pressure Safety Valve	Weatherproof Acoustical Enclosure w/ Cooling Fan
Check Valve	Variable Frequency Drive
Operator Control Panel	

Mixer Schedule 11391C-1 – General Mixer Design Requirements	
Parameter	**Design**
Submersible Mixer Rating	Continuous submergence under water, without loss of watertight integrity, to a depth of 130 ft.
Liquid Being Mixed	Municipal Wastewater Treatment Plant Mixed Liquor and/or Return Activated Sludge
Solids Concentration Range	1,000 – 20,000 mg/L
Minimum SVI of MLSS	60 mL/g
Duty	Continuous; Designed for a minimum of ten starts per hour across the line; Designed for unlimited number starts per hour when operated with a variable speed drive
Voltage	460-V, 3-ph, 60-Hz
Motor Inverter Duty Rated	Yes
Other	Provide slow speed submersible mixers in all anaerobic, anoxic, and the appropriate swing zones, as required by the IFAS Treatment System Seller to completely mix the zones in which they are installed. Unless otherwise specified, all mixers shall be same model and size for all process zones to promote interchangeability of and minimizing spare parts. VFDs will be used to control the speed of the mixers in zones where less mixing is required.

Mixer Schedule 11391C-2 – Process Design Requirements						
Location [1]	Anaerobic/Anoxic Selectors			Pre-Anoxic Zone[4]	Anoxic / Aerobic Swing Zone [4]	Post-Anoxic Zone[4]
	#1	#2	#3			
Number of Trains (#)	2	2	2	2	2	2
Number of Zones per Train (#)	1	1	1			
Zone Width (ft)						
Zone Length (ft)						
Zone Side Water Depth (ft)						
Number of Mixers per Zone (#)						
Thrust per Mixer (Newtons)						
Propeller & Motor						
Diameter (in)						
No. of Blades (#)						
Maximum Design Mixer Speed (rpm)						
Motor Rated Power (HP)						
Number of Davit Cranes	3 (one per each pair of aeration tanks)					

Notes:

(1) Zones defined herein are minimum requirements for the IFAS Treatment System scope of supply. As needed by the IFAS Treatment System Bidder, additional zones may be required. Amend table as necessary to incorporate all zones requiring mixing to meet the IFAS Treatment System Performance Guarantee as specified.

(2) -

(3) -

(4) Mixers in these Zones shall be designed to mix tank contents with diffused air aeration system at bottom of tank but with no air flow. During aeration periods, mixer shall be able to withstand forces from diffused aeration system with mixer off. Coordinate with IFAS Treatment System Aeration System Manufacturer.

END OF SECTION

J:\V\V0037 Vernon WWTP\005 WPCF Design\Design\Specifications\Preselection\IFAS\00410-P Attachments.docx

SECTION 00430

BID BOND

BID BOND

Any singular reference to Bidder, Surety, Owner or other party shall be considered plural where applicable.

BIDDER *(Name and Address)*:

SURETY *(Name, and Address of Principal Place of Business)*:

OWNER *(Name and Address)*:

BID

Bid Due Date:

Description *(Project Name— Include Location)*:

BOND

Bond Number:

Date:

Penal sum _____ $ _____

(Words) (Figures)

Surety and Bidder, intending to be legally bound hereby, subject to the terms set forth below, do each cause this Bid Bond to be duly executed by an authorized officer, agent, or representative.

BIDDER	**SURETY**
_____ (Seal)	_____ (Seal)
Bidder's Name and Corporate Seal	Surety's Name and Corporate Seal
By: _____	By: _____
Signature	Signature (Attach Power of Attorney)
_____	_____
Print Name	Print Name
_____	_____
Title	Title
Attest: _____	Attest: _____
Signature	Signature
Title	Title

Note: Addresses are to be used for giving any required notice.
Provide execution by any additional parties, such as joint venturers, if necessary.

1. Bidder and Surety, jointly and severally, bind themselves, their heirs, executors, administrators, successors, and assigns to pay to Owner upon default of Bidder the penal sum set forth on the face of this Bond. Payment of the penal sum is the extent of Bidder's and Surety's liability. Recovery of such penal sum under the terms of this Bond shall be Owner's sole and exclusive remedy upon default of Bidder.

2. Default of Bidder shall occur upon the failure of Bidder to deliver within the time required by the Bidding Documents (or any extension thereof agreed to in writing by Owner) the executed Agreement required by the Bidding Documents and any performance and payment bonds required by the Bidding Documents.

3. This obligation shall be null and void if:

3.1 Owner accepts Bidder's Bid and Bidder delivers within the time required by the Bidding Documents (or any extension thereof agreed to in writing by Owner) the executed Agreement required by the Bidding Documents and any performance and payment bonds required by the Bidding Documents, or

3.2 All Bids are rejected by Owner, or

3.3 Owner fails to issue a Notice of Award to Bidder within the time specified in the Bidding Documents (or any extension thereof agreed to in writing by Bidder and, if applicable, consented to by Surety when required by Paragraph 5 hereof).

4. Payment under this Bond will be due and payable upon default of Bidder and within 30 calendar days after receipt by Bidder and Surety of written notice of default from Owner, which notice will be given with reasonable promptness, identifying this Bond and the Project and including a statement of the amount due.

5. Surety waives notice of any and all defenses based on or arising out of any time extension to issue Notice of Award agreed to in writing by Owner and Bidder, provided that the total time for issuing Notice of Award including extensions shall not in the aggregate exceed 120 days from the Bid due date without Surety's written consent.

6. No suit or action shall be commenced under this Bond prior to 30 calendar days after the notice of default required in Paragraph 4 above is received by Bidder and Surety and in no case later than one year after the Bid due date.

7. Any suit or action under this Bond shall be commenced only in a court of competent jurisdiction located in the state in which the Project is located.

8. Notices required hereunder shall be in writing and sent to Bidder and Surety at their respective addresses shown on the face of this Bond. Such notices may be sent by personal delivery, commercial courier, or by United States Registered or Certified Mail, return receipt requested, postage pre-paid, and shall be deemed to be effective upon receipt by the party concerned.

9. Surety shall cause to be attached to this Bond a current and effective Power of Attorney evidencing the authority of the officer, agent, or representative who executed this Bond on behalf of Surety to execute, seal, and deliver such Bond and bind the Surety thereby.

10. This Bond is intended to conform to all applicable statutory requirements. Any applicable requirement of any applicable statute that has been omitted from this Bond shall be deemed to be included herein as if set forth at length. If any provision of this Bond conflicts with any applicable statute, then the provision of said statute shall govern and the remainder of this Bond that is not in conflict therewith shall continue in full force and effect.

11. The term "Bid" as used herein includes a Bid, offer, or proposal as applicable.

SECTION 00520

AGREEMENT

SECTION 00520

AGREEMENT

This Agreement is by and between the Town of Vernon, as requested by its Water Pollution Control Authority hereinafter called Owner and _____ hereinafter called Bidder.

Owner and Bidder hereby agree as follows:

ARTICLE 1 GOODS AND SPECIAL SERVICES

1.1 Bidder shall agree to furnish the Goods and Special Services to a Construction Contractor (Buyer) as part of a future construction Project as specified or indicated in these Contract Documents.

1.2 It is anticipated that a Buyer will be awarded construction of the Vernon CT Water Pollution Control Facility Upgrade Project on or before July 1, 2019. Based upon the representations by the Bidder in its Bid, the Owner intends to direct its Engineer designing the upgrade project to include the Bidder's proposal for the Goods and Special Services (exclusive of any proposed contract terms and conditions which are to be negotiated between the Bidder and the Buyer) in the contract documents for bidding by the Buyer. The Buyer shall coordinate with the Seller, and the Buyer shall be responsible for installation of the Seller's Goods. When the Bidder executes its sub-contract with the Buyer (general contractor) the Bidder will become the Seller.

1.3 If a contract is not awarded to a Buyer, this agreement between the Owner and the Bidder shall become null and void, with no obligations to either party except as otherwise specified in the Agreement.

ARTICLE 2 THE PROJECT

2.1 The Project, of which the Goods and Special Services is only a part, is identified with the following title: "Vernon CT Water Pollution Control Facility Upgrade Project". The design of the Project is currently underway with the Owner's Engineer

ARTICLE 3 ENGINEER

3.1 The Contract Documents for the Pre-Selection of Goods and Special Services have been prepared by Tighe & Bond, Inc. 53 Southampton Road, Westfield, MA 01085 ("Engineer"), which is to act as Owner's representative, assume all duties and responsibilities, and have the rights and authority assigned to Engineer in the Contract Documents in connection with Bidder's furnishing of Goods and Special Services.

ARTICLE 4 POINT OF DESTINATION

4.1 The Point of Destination is designated as: Water Pollution Control Facility, 100 Windsorville Road, Vernon CT 06066.

ARTICLE 5 CONTRACT TIMES

5.1 Time of the Essence

A. All time limits for Milestones, if any, including the submittal of Shop Drawings and Samples, the delivery of Goods, and the furnishing of Special Services as stated in the Contract Documents are of the essence of the Contract.

5.2 Milestones

A. *Assistance to the Engineer*: Bidder shall submit all Preliminary Submittals required by the Contract Documents to Engineer within 60 days following execution of this agreement. Bidder shall submit all other (Non-preliminary) submittals (final shop drawings, product data, samples) required by the Contract Documents to the Buyer for Engineer's review and approval in accordance to the schedule provided by the Contractor under the construction contract. It is the intent of the parties that (1) Engineer conduct such review and issue its approval, or a denial accompanied by substantive comments regarding information needed to gain approval, within 35 days of Bidder's submittal of such Shop Drawings and Samples; and (2) resubmittals be limited whenever possible.

B. *Days to Achieve Delivery of Goods:* The Goods are to be delivered to the Point of Destination and ready for the Buyer's receipt of delivery approval in accordance to the schedule provided by the Buyer under the construction contract.

C. *Startup and Successful Performance Testing:* The Special Services associated with the startup of the Goods and successful completion of performance testing are to be in accordance to the schedule provided by the Buyer under the construction contract.

5.3 Liquidated Damages

A. Owner and Bidder recognize that Owner's contract with the Buyer will include provisions for Liquidated Damages. The parties also recognize that the timely performance of the Work by the Buyer is materially dependent upon Bidder's specific compliance with the requirements of Paragraph 5.2. Further, they recognize the delays, expense, and difficulties involved in proving the actual loss suffered by Owner if complete acceptable Goods are not delivered on time. Accordingly, instead of requiring such proof, Owner and Bidder agree that as liquidated damages for delay (but not as a penalty) Bidder shall pay Buyer an equitable portion of the $2,000 per day liquidated damages assessed by the Owner to the Buyer.

ARTICLE 6 CONTRACT PRICE

6.1 The Owner agrees to make provisions in the Buyer's contract for payments to the Bidder to furnish the Goods and Special Services in accordance with these Contract Documents as follows:

A. The prices stated in Bidder's Bid, as included in Paragraph 5.3.A of the Bid Form.

B. If through no fault of the Bidder, the request for bids from general contractors to upgrade the Vernon WPCF project (of which these Goods and Special Services are to be incorporated) is not advertised for bidding within 52 weeks of the date of the Bidder's bid, the Bidder's bid price for the equipment included in the Bid Form, Paragraph 5.3.A "Capital Cost", Item No. 1 will be escalated by the percent change in the published value(s) of the following indexes over the following time period: from the index value published 52 weeks following the Bidder's bid date to the index value published just prior to the date the bid for the general contractor to upgrade the Vernon WPCF project is advertised.

1. U.S. Department of Labor, Bureau of Labor Statistics, PPI commodity data:

a. Metals and metal products, WPU10, 45% of costs

b. Plastic products, WPU072, 55% of costs.

ARTICLE 7 PAYMENT PROCEDURES

7.1 Bidder shall submit Applications for Payment to the Buyer, and the Buyer will include them with their own Applications for Payment to the Engineer in accordance with the general conditions to be included in the contract between the Owner and the Buyer. Applications for Payment will be processed by Engineer as provided in the general conditions of Owner and Buyer's contract and in accordance with Clean Water Fund requirements. Bidder understands that the Owner and Buyer's contract will include retainage.

7.2 Bidder shall submit Applications for Payment to the Construction Contractor (Buyer) in amounts that are consistent with the payment schedule provided Article 10 of the General Conditions and Supplementary General Conditions.

7.3 If the Owner does not execute an agreement with the (Buyer) Construction Contractor prior to October 1, 2019, then the Owner has no liability towards the Bidder.

ARTICLE 8 INTEREST – NOT USED

ARTICLE 9 BIDDER'S REPRESENTATIONS

9.1 Bidder makes the following representations:

A. Bidder has examined and carefully studied the Contract Documents, and any data and reference items identified in the Contract Documents, as applicable to Bidder's obligations identified in Article 1 above.

B. If required by the Bidding Documents to visit the Point of Destination and site where the Goods are to be installed or Special Services will be provided, or if, in Bidder's judgment, any local condition may affect cost, progress or the furnishing of the Goods and Special Services, Bidder has visited the Point of Destination and site where the Goods are to be installed or Special Services will be provided and become familiar with and is satisfied as to the observable local conditions that may affect cost, progress and the furnishing of the Goods and Special Services.

C. Bidder is familiar with and is satisfied as to all Laws and Regulations that may affect cost, progress, and the furnishing of the Goods and Special Services.

D. Bidder has carefully studied, considered, and correlated the information known to Bidder; information commonly known to Bidders of similar goods doing business in the locality of the Point of Destination and the site where the Goods will be installed or where Special Services will be provided.

E. Bidder is aware of the general nature of work to be performed by others at the Site that relates to the Goods to be furnished and Special Services to be provided as indicated in the Contract Documents.

F. Bidder has given Engineer written notice of all conflicts, errors, ambiguities, or discrepancies that Bidder has discovered in the Contract Documents, and the written resolution thereof by Engineer is acceptable to Bidder.

G. The Contract Documents are sufficient to indicate and convey understanding of all terms and conditions for furnishing Goods and Special Services.

H. Bidder's entry into this Contract constitutes an incontrovertible representation by Bidder that without exception all prices in the Agreement are premised upon furnishing the Goods and Special Services required by the Contract Documents.

ARTICLE 10 CONTRACT DOCUMENTS

10.1 Contents

A. The Contract Documents consist of the following:

1. This Agreement (pages 00520-1 to 00520-7, inclusive);

2. General Conditions (title pages, table of contents, and pages 1 to 31, inclusive);

3. Supplementary Conditions (pages 00800-1 to 00800-14, inclusive);

4. Specifications as listed in table of contents of the Project Manual;

5. Drawings – None

6. Addenda (numbers _____ to _____, inclusive);

7. Exhibits to this Agreement (enumerated as follows):

a. Bidder's Bid, solely as to the prices set forth therein (pages ___ to ___, inclusive) and including Bidders performance bond pre-approval certification included with the Bidder's Bid;

b. Documentation submitted by Bidder prior to Notice of Award (pages __ to ___, inclusive);

B. The documents listed in Paragraph 10.1.A are attached to this Agreement (except as expressly noted otherwise above).

C. There are no Contract Documents other than those listed above in this Article 10.

D. The Contract Documents may only be amended, modified, or supplemented as provided in Paragraph 3.04 of the General Conditions.

ARTICLE 11 MISCELLANEOUS

11.1 Terms

A. Terms used in this Agreement will have the meanings indicated in the General Conditions and the Supplementary Conditions.

11.2 Assignment of Contract

A. Neither Owner nor Bidder shall, without the prior written consent of the other, assign or sublet in whole or in part any interest under any of the Contract Documents. Specifically but without limitation, moneys that may become due and moneys that are due may not be assigned without such consent (except to the extent that the effect of this restriction may be limited by Laws and Regulations). Unless specifically stated to the contrary in any written consent to such an assignment, such an assignment will not release or discharge the assignor from any duty or responsibility under the Contract Documents.

11.3 Successors and Assigns

A. Owner and Bidder each binds itself, its successors, assigns, and legal representatives to the other party hereto, its successors, assigns, and legal representatives in respect to all covenants, agreements, and obligations contained in the Contract Documents.

11.4 Severability

A. Any provision or part of the Contract Documents held to be void or unenforceable under any Law or Regulation shall be deemed stricken, and all remaining provisions shall continue to be valid and binding upon Owner and Bidder. The Contract Documents shall be reformed to replace such stricken provision or part thereof with a valid and enforceable provision that comes as close as possible to expressing the intention of the stricken provision.

11.5 Bidder Certifications

A. Bidder certifies that it has not engaged in corrupt, fraudulent, collusive, or coercive practices in competing for or in executing the Contract. For the purposes of this Paragraph 11.5:

1. "corrupt practice" means the offering, giving, receiving, or soliciting of anything of value likely to influence the action of a public official in the bidding process or in the Contract execution;

2. "fraudulent practice" means an intentional misrepresentation of facts made (a) to influence the bidding process or the execution of the Contract to the detriment of Owner, (b) to establish Bid or Contract prices at artificial non-competitive levels, or (c) to deprive Owner of the benefits of free and open competition;

3. "collusive practice" means a scheme or arrangement between two or more Bidders, with or without the knowledge of Owner, a purpose of which is to establish Bid prices at artificial, non-competitive levels; and

4. "coercive practice" means harming or threatening to harm, directly or indirectly, persons or their property to influence their participation in the bidding process or affect the execution of the Contract.

11.6 Limitations

A. *Mutual Limitation of Liability*: Owner and Bidder further agree that the total liability of each party to the other for claims, costs, losses, and damages arising from this Contract shall be limited to 100% of the amount established in this Agreement as the Contract Price on Bid Form.

11.7 Not Used

11.8 Securities

A. The Bidder shall provide a performance bond guaranteeing that the installed system will meet the Bidder's Process Performance Guarantee as specified in Division 11. The performance bond shall be equal to 100 percent of the price of Bidder's Goods and Special Services including all items and options selected by the Owner and included in the Buyer's bid price. The performance bond shall be held until all

requirements of the Bidder's Process Performance Guarantee have been met. All performance bonds signed by an agent must be accompanied by a certified copy of the authority to act. Performance Bonds shall be submitted on the forms included in Section 00610 of the Contract Documents. Additional requirements, are stated in the General or Supplementary Conditions. Suitable form modifications to cover the bonding of the process performance guarantee may be made.

B. The Bidder shall submit their performance bond at the time of the award of a construction contract to the Buyer.

C. If, at the time of construction contract award to the Buyer, the Bidder is unable to provide their performance bond the Owner reserves the right to terminate its agreement with the Bidder, invoke the Bidder's bid bond, and select the next highest ranked bidder based on the bid evaluation from the pre-selection bid process.

D. Notice of selection to the Bidder and execution of an Agreement with the Owner to be included in the design does not constitute the release of the Bidder's Bid Bond. The Bidder's Bid Bond shall only be released when the Bidder executes an agreement with the Buyer.

IN WITNESS WHEREOF, Owner and Bidder have signed this Agreement. Counterparts have been delivered to Owner and Bidder. All portions of the Contract Documents have been signed or identified by Owner and Bidder or on their behalf.

This Agreement will be effective on _____, _____ (which is the Effective Date of the Agreement).

OWNER:	BIDDER:
_____	_____
By: _____	By: _____
Title: _____	Title: _____
[CORPORATE SEAL]	[CORPORATE SEAL]
Attest: _____	Attest: _____
Title: _____	Title: _____
Address for giving notices:	Address for giving notices:
_____	_____
_____	_____
_____	_____
(Attach evidence of authority to sign and resolution or other documents authorizing execution of Owner-Bidder Agreement.)	License No. _____ (Where applicable)
	(If Bidder is a corporation or a partnership, attach evidence of authority to sign.)

END OF SECTION

J:\V\V0037 Vernon WWTP\005 WPCF Design\Design\Specifications\Preselection\IFAS\00520-P.doc

SECTION 00610

PERFORMANCE BOND

PERFORMANCE BOND
FOR PROCUREMENT CONTRACTS

Any singular reference to Seller, Surety, Buyer, or other party shall be considered plural where applicable.

SELLER (Name and Address):

SURETY (Name and Address of Principal Place of Business):

BUYER (Name and Address):

CONTRACT
Date:
Amount:
Description (Name and Location):

BOND
Date (Not earlier than Contract Date):
Bond Number:
Amount:
Modifications to this Bond Form:

Surety and Seller, intending to be legally bound hereby, subject to the terms set forth below, do each cause this Performance Bond to be duly executed on its behalf by its authorized officer, agent, or representative.

Seller as Principal
Company: (Corp. Seal)

Signature:
Name and Title:

Surety
Company: (Corp. Seal)

Signature:
Name and Title:
(Attach Power of Attorney)
Address:

Telephone Number:

(Space is provided below for signatures of additional parties, if required.)

Seller as Principal
Company: (Corp. Seal)

Signature:
Name and Title:

Surety
Company: (Corp. Seal)

Signature:
Name and Title:
Address:
Telephone Number:

Published jointly by National Society of Professional Engineers, American Council of Engineering Companies, American Society of Civil Engineers, and Associated General Contractors of America. 2010. All rights reserved.

1. Seller and Surety, jointly and severally, bind themselves, their heirs, executors, administrators, successors and assigns to Buyer for the performance of the Contract, which is incorporated herein by reference. For purposes of this bond, Buyer means Buyer's assigns, if and when Buyer has assigned the Contract.

2. If Seller performs the Contract, Surety and Seller have no obligation under this Bond, except to participate in conferences as provided in Paragraph 3.1.

3. If there is no Buyer Default, Surety's obligation under this Bond shall arise after:

   3.1. Buyer has notified Seller and Surety pursuant to Paragraph 10 that Buyer is considering declaring a Seller Default and has requested and attempted to arrange a conference with Seller and Surety to be held not later than 15 days after receipt of such notice to discuss methods of performing the Contract. (If Buyer, Seller, and Surety agree, Seller shall be allowed a reasonable time to perform the Contract, but such an agreement shall not waive Buyer's right, if any, subsequently to declare a Seller Default); and

   3.2. Buyer has declared a Seller Default and formally terminated Seller's right to complete the Contract. Such Seller Default shall not be declared earlier than 20 days after Seller and Surety have received notice as provided in Paragraph 3.1; and

   3.3. Buyer has agreed to pay the Balance of the Contract Price to:

      a. Surety in accordance with the terms of the Contract;

      b. Another seller selected pursuant to Paragraph 4.3 to perform the Contract.

4. When Buyer has satisfied the conditions of Paragraph 3, Surety shall promptly and at Surety's expense take one of the following actions:

   4.1. Arrange for Seller, with consent of Buyer, to perform and complete the Contract; or

   4.2. Undertake to perform and complete the Contract itself, through its agents or through independent contractors; or

   4.3. Obtain bids or negotiated proposals from qualified sellers acceptable to Buyer for a contract for performance and completion of the Contract, arrange for a contract to be prepared for execution by Buyer and a seller selected with Buyer's concurrence, to be secured with performance and payment bonds executed by a qualified surety equivalent to the Bonds issued on the Contract, and pay to Buyer the amount of damages as described in Paragraph 6 in excess of the Balance of the Contract Price incurred by Buyer resulting from Seller Default; or

   4.4. Waive its right to perform and complete, arrange for completion, or obtain a new seller, and with reasonable promptness under the circumstances, either:

      a. determine the amount for which it may be liable to Buyer and, as soon as practicable after the amount is determined, tender payment therefor to Buyer; or

Published jointly by National Society of Professional Engineers, American Council of Engineering Companies, American Society of Civil Engineers, and Associated General Contractors of America. 2010. All rights reserved.

b. deny liability in whole or in part and notify Buyer citing reasons therefor.

5. If Surety does not proceed as provided in Paragraph 4 with reasonable promptness, Surety shall be deemed to be in default on this Bond 15 days after receipt of an additional written notice from Buyer to Surety demanding that Surety perform its obligations under this Bond, and Buyer shall be entitled to enforce any remedy available to Buyer. If Surety proceeds as provided in paragraph 4.4, and Buyer refuses the payment tendered or Surety has denied liability, in whole or in part, without further notice Buyer shall be entitled to enforce any remedy available to Buyer.

6. After Buyer has terminated Seller's right to complete the Contract, and if Surety elects to act under Paragraph 4.1, 4.2, or 4.3, then the responsibilities of Surety to Buyer shall not be greater than those of Seller under the Contract, and the responsibilities of Buyer to Surety shall not be greater than those of Buyer under the Contract. To a limit of the amount of this Bond, but subject to commitment by Buyer of the Balance of the Contract Price to mitigation of costs and damages on the Contract, Surety is obligated without duplication for:

   6.1. the responsibilities of Seller for correction or replacement of defective Goods and Special Services and completion of the Contract;

   6.2. Additional legal, design professional, and delay costs resulting from Seller's Default, and resulting from the actions of or failure to act of Surety under Paragraph 4; and

   6.3. Liquidated damages, or if no liquidated damages are specified in the Contract, actual damages caused by delayed performance or non-performance of Seller.

7. Surety shall not be liable to Buyer or others for obligations of Seller that are unrelated to the Contract, and the Balance of the Contract Price shall not be reduced or set off on account of any such unrelated obligations. No right of action shall accrue on this Bond to any person or entity other than Buyer or its heirs, executors, administrators, successors, or assigns.

8. Surety hereby waives notice of any change, including changes of time, to the Contract or to related subcontracts, purchase orders and other obligations.

9. Any proceeding, legal or equitable, under this Bond may be instituted in any court of competent jurisdiction in the location of the Point of Destination, and shall be instituted within two years after Seller Default or within two years after Seller ceased working or within two years after Surety refuses or fails to perform its obligations under this Bond, whichever occurs first. If the provisions of this paragraph are void or prohibited by law, the minimum period of limitation available to sureties as a defense in the jurisdiction of the suit shall be applicable.

10. Notice to Surety, Buyer or Seller shall be mailed or delivered to the address shown on the signature page.

11. When this Bond has been furnished to comply with a statutory or other legal requirement in the location of the Point of Destination, any provision in this Bond conflicting with said statutory or legal requirement shall be deemed deleted herefrom and provisions conforming to such statutory or other legal requirement shall be deemed incorporated herein. The intent is that this Bond shall be construed as a statutory bond and not as a common law bond.

Published jointly by National Society of Professional Engineers, American Council of Engineering Companies, American Society of Civil Engineers, and Associated General Contractors of America. 2010. All rights reserved.

12. Definitions.

12.1. *Balance of the Contract Price:* The total amount payable by Buyer to Seller under the Contract after all proper adjustments have been made, including allowance to Seller of any amounts received or to be received by Buyer in settlement of insurance or other Claims for damages to which Seller is entitled, reduced by all valid and proper payments made to or on behalf of Seller under the Contract.

12.2. *Contract:* The agreement between Buyer and Seller identified on the signature page, including all Contract Documents and changes thereto.

12.3. *Seller Default:* Failure of Seller, which has neither been remedied nor waived, to perform or otherwise to comply with the terms of the Contract.

12.4. *Buyer Default:* Failure of Buyer, which has neither been remedied nor waived, to pay Seller as required by the Contract or to perform and complete or comply with the other terms thereof.

Published jointly by National Society of Professional Engineers, American Council of Engineering Companies, American Society of Civil Engineers, and Associated General Contractors of America. 2010. All rights reserved.

SECTION 00700

GENERAL CONDITIONS

STANDARD GENERAL CONDITIONS FOR PROCUREMENT CONTRACTS

Prepared by

EJCDC
ENGINEERS JOINT CONTRACT DOCUMENTS COMMITTEE

and

Issued and Published Jointly by

ACEC
American Council of Engineering Companies

AGC of America
THE ASSOCIATED GENERAL CONTRACTORS OF AMERICA
Quality People. Quality Projects.

ASCE American Society of Civil Engineers

National Society of Professional Engineers
Professional Engineers in Private Practice

AMERICAN COUNCIL OF ENGINEERING COMPANIES

AMERICAN SOCIETY OF CIVIL ENGINEERS

ASSOCIATED GENERAL CONTRACTORS OF AMERICA

PROFESSIONAL ENGINEERS IN PRIVATE PRACTICE
A Practice Division of the
NATIONAL SOCIETY OF PROFESSIONAL ENGINEERS

Copyright © 2010 National Society of Professional Engineers, American Council of Engineering Companies, American Society of Civil Engineers, and Associated General Contractors of America. All rights reserved.

Copyright © 2010:

National Society of Professional Engineers
1420 King Street, Alexandria, VA 22314-2794
(703) 684-2882
http://www.nspe.org

American Council of Engineering Companies
1015 15th Street N.W., Washington, DC 20005
(202) 347-7474
http://www.acec.org

American Society of Civil Engineers
1801 Alexander Bell Drive, Reston, VA 20191-4400
(800) 548-2723
http://www.asce.org

Associated General Contractors of America
2300 Wilson Boulevard, Suite 400, Arlington, VA 22201-3308
(703) 548-3118
www.agc.org

The copyright for EJCDC P-700 is owned jointly by the four EJCDC sponsoring organizations listed above. The National Society of Professional Engineers (NSPE) is the Copyright Administrator for the EJCDC documents; please direct all inquiries and requests regarding EJCDC copyrights to NSPE.

NOTE: EJCDC publications may be purchased at www.ejcdc.org, or from any of the four sponsoring organizations above.

TABLE OF CONTENTS

Page

ARTICLE 1 – DEFINITIONS AND TERMINOLOGY 1
1.01 Defined Terms 1
1.02 Terminology 4

ARTICLE 2 - PRELIMINARY MATTERS 5
2.01 Delivery of Bonds 5
2.02 Evidence of Insurance 5
2.03 Copies of Documents 5
2.04 Commencement of Contract Times; Notice to Proceed 5
2.05 Designated Representatives 5
2.06 Progress Schedule 5
2.07 Preliminary Conference 6
2.08 Safety 6

ARTICLE 3 - CONTRACT DOCUMENTS: INTENT AND AMENDING 6
3.01 Intent 6
3.02 Standards, Specifications, Codes, Laws and Regulations. 6
3.03 Reporting and Resolving Discrepancies 7
3.04 Amending and Clarifying Contract Documents 8

ARTICLE 4 - BONDS AND INSURANCE 8
4.01 Bonds 8
4.02 Insurance 9
4.03 Licensed Sureties and Insurers 9

ARTICLE 5 - SELLER'S RESPONSIBILITIES 9
5.01 Supervision and Superintendence 9
5.02 Labor, Materials and Equipment 10
5.03 Laws and Regulations 10
5.04 Or Equals 10
5.05 Taxes 11
5.06 Shop Drawings and Samples 11
5.07 Continuing Performance 13
5.08 Seller's Warranties and Guarantees 13
5.09 Indemnification 14
5.10 Delegation of Professional Design Services 15

ARTICLE 6 - SHIPPING AND DELIVERY 15
6.01 Shipping 15
6.02 Delivery 16
6.03 Risk of Loss 16
6.04 Progress Schedule 16

ARTICLE 7 - CHANGES: SCHEDULE AND DELAY 17
7.01 Changes in the Goods and Special Services 17
7.02 Changing Contract Price or Contract Times 17

Copyright © 2010 National Society of Professional Engineers, American Council of Engineering Companies, American Society of Civil Engineers, and Associated General Contractors of America. All rights reserved.

ARTICLE 8 - BUYER'S RIGHTS 18
8.01 Inspections and Testing 18
8.02 Non-Conforming Goods or Special Services 19
8.03 Correction Period 20

ARTICLE 9 - ROLE OF ENGINEER 21
9.01 Duties and Responsibilities 21
9.02 Clarifications and Interpretations 21
9.03 Authorized Variations 21
9.04 Rejecting Non-Conforming Goods and Special Services 21
9.05 Decisions on Requirements of Contract Documents 21
9.06 Claims and Disputes 22

ARTICLE 10 - PAYMENT 22
10.01 Applications for Progress Payments 22
10.02 Review of Applications for Progress Payments 23
10.03 Amount and Timing of Progress Payments 24
10.04 Suspension of or Reduction in Payment 24
10.05 Final Application for Payment 24
10.06 Final Payment 24
10.07 Waiver of Claims 25

ARTICLE 11 - CANCELLATION, SUSPENSION, AND TERMINATION 25
11.01 Cancellation 25
11.02 Suspension of Performance by Buyer 25
11.03 Suspension of Performance by Seller 26
11.04 Breach and Termination 26

ARTICLE 12 - LICENSES AND FEES 27
12.01 Intellectual Property and License Fees 27
12.02 Seller's Infringement 27
12.03 Buyer's Infringement 28
12.04 Reuse of Documents 28
12.05 Electronic Data 29

ARTICLE 13 - DISPUTE RESOLUTION 29
13.01 Dispute Resolution Method 29

ARTICLE 14 - MISCELLANEOUS 30
14.01 Giving Notice 30
14.02 Controlling Law 30
14.03 Computation of Time 30
14.04 Cumulative Remedies 30
14.05 Survival of Obligations 30
14.06 Entire Agreement 31

Copyright © 2010 National Society of Professional Engineers, American Council of Engineering Companies, American Society of Civil Engineers, and Associated General Contractors of America. All rights reserved.

STANDARD GENERAL CONDITIONS
FOR PROCUREMENT CONTRACTS

ARTICLE 1 - DEFINITIONS AND TERMINOLOGY

1.01 *Defined Terms*

A. Whenever used in the Bidding Requirements or Contract Documents and printed with initial capital letters, the terms listed below will have the meanings indicated which are applicable to the singular or plural thereof. In addition to terms specifically defined, terms with initial capital letters in the Contract Documents include references to identified articles and paragraphs, and the titles of other documents or forms.

1. *Addenda*—Written or graphic instruments issued prior to the opening of Bids which clarify, correct, or change the Bidding Requirements or the proposed Contract Documents.

2. *Agreement*—The written instrument signed by both Buyer and Seller covering the Goods and Special Services and which lists the Contract Documents in existence on the Effective Date of the Agreement.

3. *Application for Payment*—The form acceptable to Buyer which is used by Seller in requesting progress and final payments and which is accompanied by such supporting documentation as is required by the Contract Documents.

4. *Bid*— The offer or proposal of a Seller submitted on the prescribed form setting forth the prices for the Goods and Special Services to be provided.

5. *Bidder*—The individual or entity that submits a Bid directly to Buyer.

6. *Bidding Documents*—The Bidding Requirements and the proposed Contract Documents (including all Addenda).

7. *Bidding Requirements*—The advertisement or invitation to bid, Instructions to Bidders, Bid security of acceptable form, if any, and Bid Form with any supplements.

8. *Buyer*—The individual or entity purchasing the Goods and Special Services.

9. *Change Order*—A document which is signed by Seller and Buyer and authorizes an addition, deletion, or revision to the Contract Documents or an adjustment in the Contract Price or the Contract Times, issued on or after the Effective Date of the Agreement. Change Orders may be the result of mutual agreement by Buyer and Seller, or of resolution of a Claim.

Copyright © 2010 National Society of Professional Engineers, American Society of Civil Engineers, American Council of Engineering Companies, and Associated General Contractors of America. All rights reserved.

10. *Claim*—A demand or assertion by Buyer or Seller seeking an adjustment of Contract Price or Contract Times, or both, or other relief with respect to the terms of the Contract. A demand for money or services by a third party is not a Claim.

11. *Contract*—The entire and integrated written agreement between Buyer and Seller concerning the Goods and Special Services. The Contract supersedes prior negotiations, representations, or agreements, whether written or oral.

12. *Contract Documents*—Those items so designated in the Agreement. Shop Drawings and other Seller submittals are not Contract Documents, even if accepted, reviewed, or approved by Engineer or Buyer.

13. *Contract Price*—The moneys payable by Buyer to Seller for furnishing the Goods and Special Services in accordance with the Contract Documents as stated in the Agreement.

14. *Contract Times*—The times stated in the Agreement by which the Goods must be delivered and Special Services must be furnished.

15. *Drawings*—That part of the Contract Documents prepared or approved by Engineer which graphically shows the scope, extent, and character of the Goods and Special Services to be furnished by Seller. Shop Drawings and other Seller submittals are not Drawings as so defined.

16. *Effective Date of the Agreement*—The date indicated in the Agreement on which it becomes effective, but if no such date is indicated, it means the date on which the Agreement is signed and delivered by the last of the two parties to sign and deliver.

17. *Engineer*—The individual or entity designated as such in the Agreement.

18. *Field Order*—A written order issued by Engineer which requires minor changes in the Goods or Special Services but which does not involve a change in the Contract Price or Contract Times.

19. *General Requirements*—Sections of Division 1 of the Specifications. The General Requirements pertain to all sections of the Specifications.

20. *Goods*—The tangible and movable personal property that is described in the Contract Documents, regardless of whether the property is to be later attached to realty.

21. *Goods and Special Services*—The full scope of materials, equipment, other items, and services to be furnished by Seller, including Goods, as defined herein, and Special Services, if any, as defined herein. This term refers to both the Goods and the Special Services, or to either the Goods or the Special Services, and to any portion of the Goods or the Special Services, as the context requires.

Copyright © 2010 National Society of Professional Engineers, American Council of Engineering Companies, American Society of Civil Engineers, and Associated General Contractors of America. All rights reserved.

22. *Laws and Regulations; Laws or Regulations*—Any and all applicable laws, rules, regulations, ordinances, codes, and orders of any and all governmental bodies, agencies, authorities, and courts having jurisdiction.

23. *Milestone*—A principal event specified in the Contract Documents relating to an intermediate completion date or time prior to the Contract Times.

24. *Notice of Award*—The written notice by Buyer to the Successful Bidder stating that upon timely compliance by the Successful Bidder with the conditions precedent listed therein, Buyer will sign and deliver the Agreement.

25. *Notice to Proceed*—A written notice given by Buyer to Seller fixing the date on which the Contract Times commence to run and on which Seller shall start to perform under the Contract.

26. *Point of Destination*—The specific address of the location where delivery of the Goods shall be made, as stated in the Agreement.

27. *Project*—The total undertaking of which the Goods and Special Services may be the whole, or only a part.

28. *Project Manual*—The documentary information prepared for bidding and furnishing the Goods and Special Services. A listing of the contents of the Project Manual is contained in its table of contents.

29. *Samples*—Physical examples of materials, equipment, or workmanship that are representative of some portion of the Goods and Special Services and which establish the standards by which such portion of the Goods and Special Services will be judged.

30. *Seller*—The individual or entity furnishing the Goods and Special Services.

31. *Shop Drawings*—All drawings, diagrams, illustrations, schedules, and other data or information which are specifically prepared or assembled by or for Seller and submitted by Seller to illustrate some portion of the Goods and Special Services.

32. *Special Services*—Services associated with the Goods to be furnished by Seller as required by the Contract Documents.

33. *Specifications*—That part of the Contract Documents consisting of written requirements for materials, equipment, systems, standards and workmanship as applied to the furnishing of the Goods and Special Services, and certain administrative requirements and procedural matters applicable thereto.

34. *Successful Bidder*—The Bidder submitting a responsive Bid, to whom Buyer makes an award.

Copyright © 2010 National Society of Professional Engineers, American Council of Engineering Companies, American Society of Civil Engineers, and Associated General Contractors of America. All rights reserved.

35. *Supplementary Conditions*—That part of the Contract Documents which amends or supplements these General Conditions.

36. *Work Change Directive*—A written statement to Seller issued on or after the Effective Date of the Agreement and signed by Buyer ordering an addition, deletion, or other revision in the Contract Documents with respect to the Goods and Special Services. A Work Change Directive will not change the Contract Price or the Contract Times but is evidence that the parties expect that the change ordered or documented by a Work Change Directive will be incorporated in a subsequently issued Change Order following negotiations by the parties as to its effect, if any, on the Contract Price or Contract Times.

1.02 *Terminology*

A. The words and terms discussed in Paragraphs 1.02.B and 1.02.C are not defined, but have the indicated meanings when used in the Bidding Requirements or Contract Documents.

B. *Intent of Certain Terms or Adjectives:*

1. The Contract Documents include the terms “as allowed,” “as approved,” “as ordered,” “as directed” or terms of like effect or import to authorize an exercise of professional judgment by Engineer. In addition, the adjectives “reasonable,” “suitable,” “acceptable,” “proper,” “satisfactory,” or adjectives of like effect or import are used to describe an action or determination of Engineer as to the Goods and Special Services. It is intended that such exercise of professional judgment, action, or determination will be commercially reasonable and will be solely to evaluate, in general, the Goods and Special Services for compliance with the requirements of and information in the Contract Documents and conformance with the design concept of the completed Project as a functioning whole as shown or indicated in the Contract Documents (unless there is a specific statement indicating otherwise). The use of any such term or adjective shall not be effective to assign to Engineer any duty or authority to supervise or direct the furnishing of Goods or Special Services or any duty or authority to undertake responsibility contrary to any other provision of the Contract Documents.

2. The word “non-conforming” when modifying the words “Goods and Special Services,” “Goods,” or “Special Services,” refers to Goods and Special Services that fail to conform to the Contract Documents.

3. The word “receipt” when referring to the Goods, shall mean the physical taking and possession by the Buyer under the conditions specified in Paragraph 8.01.B.3.

4. The word “day” means a calendar day of 24 hours measured from midnight to the next midnight.

5. The word "furnish," when used in connection with the Goods and Special Services shall mean to supply and deliver said Goods to the Point of Destination (or some other

Copyright © 2010 National Society of Professional Engineers, American Council of Engineering Companies, American Society of Civil Engineers, and Associated General Contractors of America. All rights reserved.

specified location) and to perform said Special Services fully, all in accordance with the Contract Documents.

C. Unless stated otherwise in the Contract Documents, words or phrases that have a well-known technical or construction industry or trade meaning are used in the Contract Documents in accordance with such recognized meaning.

ARTICLE 2 – PRELIMINARY MATTERS

2.01 *Delivery of Bonds*

A. When Seller delivers the executed counterparts of the Agreement to Buyer, Seller also shall deliver such bonds as Seller may be required to furnish.

2.02 *Evidence of Insurance*

A. When Seller delivers the executed counterparts of the Agreement to Buyer, Seller shall deliver to Buyer, with copies to each additional insured identified by name in the Supplementary Conditions, certificates of insurance (and other evidence of insurance which either of them or any additional insured may reasonably request) which Seller is required to purchase and maintain in accordance with Article 4.

2.03 *Copies of Documents*

A. Buyer shall furnish Seller up to five printed or hard copies of the Contract Documents. Additional copies will be furnished upon request at the cost of reproduction.

2.04 *Commencement of Contract Times; Notice to Proceed*

A. The Contract Times will commence to run on the thirtieth day after the Effective Date of the Agreement or, if a Notice to Proceed is given, on the day indicated in the Notice to Proceed. A Notice to Proceed may be given at any time within 30 days after the Effective Date of the Agreement. In no event will the Contract Times commence to run later than the sixtieth day after the day of Bid opening or the thirtieth day after the Effective Date of the Agreement, whichever date is earlier.

2.05 *Designated Representatives*

A. Buyer and Seller shall each designate its representative at the time the Agreement is signed. Each representative shall have full authority to act on behalf of and make binding decisions in any matter arising out of or relating to the Contract.

2.06 *Progress Schedule*

A. Within 15 days after the Contract Times start to run, Seller shall submit to Buyer and Engineer an acceptable progress schedule of activities, including at a minimum, Shop Drawing and Sample submittals, tests, and deliveries as required by the Contract Documents. No progress payment will be made to Seller until an acceptable schedule is submitted to Buyer and Engineer.

Copyright © 2010 National Society of Professional Engineers, American Council of Engineering Companies, American Society of Civil Engineers, and Associated General Contractors of America. All rights reserved.

B. The progress schedule will be acceptable to Buyer and Engineer if it provides an orderly progression of the submittals, tests, and deliveries to completion within the specified Milestones and the Contract Times. Such acceptance will not impose on Buyer or Engineer responsibility for the progress schedule, for sequencing, scheduling, or progress of the work nor interfere with or relieve Seller from Seller's full responsibility therefor. Such acceptance shall not be deemed to acknowledge the reasonableness and attainability of the schedule.

2.07 *Preliminary Conference*

A. Within 20 days after the Contract Times start to run, a conference attended by Seller, Buyer, Engineer and others as appropriate will be held to establish a working understanding among the parties as to the Goods and Special Services and to discuss the schedule referred to in Paragraph 2.06.A, procedures for handling Shop Drawings and other submittals, processing Applications for Payment, and maintaining required records.

2.08 *Safety*

A. Buyer and Seller shall comply with all applicable Laws and Regulations relating to the safety of persons or property, or to the protection of persons or property from damage, injury, or loss. When Seller's personnel, or the personnel of any subcontractor to Seller, are present at the Point of Destination or any work area or site controlled by Buyer, the Seller shall be responsible for the compliance by such personnel with any applicable requirements of Buyer's safety programs that are made known to Seller.

ARTICLE 3 – CONTRACT DOCUMENTS: INTENT AND AMENDING

3.01 *Intent*

A. The Contract Documents are complementary; what is called for by one is as binding as if called for by all.

B. Any labor, documentation, services, materials, or equipment that may reasonably be inferred from the Contract Documents or from prevailing custom or trade usage as being required to produce or furnish the indicated Goods and Special Services will be provided, whether or not specifically called for, at no additional cost to Buyer.

C. Clarifications and interpretations of, or notifications of minor variations and deviations in, the Contract Documents, will be issued by Engineer as provided in Article 9.

3.02 *Standards, Specifications, Codes, Laws and Regulations*

A. Reference to standards, specifications, manuals, or codes of any technical society, organization, or association, or to Laws and Regulations, whether such reference be specific or by implication, shall mean the standard, specification, manual, code, or Laws and Regulations in effect at the time of opening of Bids (or on the Effective Date of the Agreement if there were no Bids), except as may be otherwise specifically stated in the Contract Documents.

Copyright © 2010 National Society of Professional Engineers, American Council of Engineering Companies, American Society of Civil Engineers, and Associated General Contractors of America. All rights reserved.

B. No provision of any such standard, specification, manual or code, or any instruction of a supplier shall be effective to change the duties or responsibilities of Buyer or Engineer, or any of their subcontractors, consultants, agents, or employees from those set forth in the Contract Documents, nor shall any such provision or instruction be effective to assign to Buyer or Engineer, or any of their consultants, agents, or employees any duty or authority to supervise or direct the performance of Seller's obligations or any duty or authority to undertake responsibility inconsistent with the provisions of the Contract Documents.

3.03 *Reporting and Resolving Discrepancies*

A. *Reporting Discrepancies:*

1. *Seller's Review of Contract Documents Before the Performance of the Contract*: Before performance of the Contract, Seller shall carefully study and compare the Contract Documents and check and verify pertinent figures therein and all applicable field measurements. Seller shall promptly report in writing to Engineer any conflict, error, ambiguity, or discrepancy which Seller discovers or has actual knowledge of and shall obtain a written interpretation or clarification from Engineer before proceeding with the furnishing of any Goods and Special Services affected thereby.

2. *Seller's Review of Contract Documents During the Performance of the Contract:* If, during the performance of the Contract, Seller discovers any conflict, error, ambiguity, or discrepancy within the Contract Documents or between the Contract Documents and any provision of any Law or Regulation applicable to the performance of the Contract, any standard, specification, manual or code, or of any instruction of any Supplier, Seller shall promptly report it to Engineer in writing. Seller shall not proceed with the furnishing of the Goods and Special Services affected thereby until an amendment to or clarification of the Contract Documents has been issued.

3. Seller shall not be liable to Buyer or Engineer for failure to report any conflict, error, ambiguity, or discrepancy in the Contract Documents unless Seller had actual knowledge thereof.

B. *Resolving Discrepancies:* Except as may be otherwise specifically stated in the Contract Documents, the provisions of the Contract Documents shall take precedence in resolving any conflict, error, ambiguity, or discrepancy between the provisions of the Contract Documents and:

1. the provisions of any standard, specification, manual, code, or instruction (whether or not specifically incorporated by reference in the Contract Documents); or

2. the provisions of any Laws or Regulations applicable to the furnishing of the Goods and Special Services (unless such an interpretation of the provisions of the Contract Documents would result in violation of such Law or Regulation).

Copyright © 2010 National Society of Professional Engineers, American Council of Engineering Companies, American Society of Civil Engineers, and Associated General Contractors of America. All rights reserved.

3.04 *Amending and Clarifying Contract Documents*

A. The Contract Documents may be amended to provide for additions, deletions, and revisions to the Goods and Special Services or to modify contractual terms and conditions by a Change Order.

B. Buyer may issue a Work Change Directive providing for additions, deletions, or revisions to the Goods and Special Services, in which case (1) the Contract Price shall be equitably adjusted to account for any reasonable and necessary credits to Buyer for any such deletion, or for costs (including reasonable overhead and profit) incurred by Seller to accommodate such an addition or revision and (2) the Contract Times shall be equitably adjusted to account for any impact on progress and completion of performance. Such adjustments subsequently shall be duly set forth in a Change Order.

C. The requirements of the Contract Documents may be supplemented, and minor variations and deviations in the Goods and Special Services may be authorized, by one or more of the following ways:

1. A Field Order;

2. Engineer's approval of a Shop Drawing or Sample (subject to the provisions of Paragraph 5.06.D.3); or

3. Engineer's written interpretation or clarification.

ARTICLE 4 – BONDS AND INSURANCE

4.01 *Bonds*

A. Seller shall furnish to Buyer performance and payment bonds, each in an amount at least equal to the Contract Price, as security for the faithful performance and payment of all of Seller's obligations under the Contract Documents. These bonds shall remain in effect until 1) one year after the date when final payment becomes due or 2) completion of the correction period specified in Paragraph 8.03, whichever is later, except as provided otherwise by Laws or Regulations or by the Contract Documents. Seller shall also furnish such other bonds as are required by the Contract Documents.

B. All bonds shall be in the form prescribed by the Contract Documents except as provided otherwise by Laws or Regulations, and shall be executed by such sureties as are named in the current list of "Companies Holding Certificates of Authority as Acceptable Sureties on Federal Bonds and as Acceptable Reinsuring Companies" as published in Circular 570 (amended) by the Financial Management Service, Surety Bond Branch, U.S. Department of the Treasury. All bonds signed by an agent or attorney-in-fact must be accompanied by a certified copy of that individual's authority to bind the surety. The evidence of authority shall show that it is effective on the date the agent or attorney-in-fact signed each bond.

C. If the surety on any bond furnished by Seller is declared bankrupt or becomes insolvent or its right to do business is terminated in any state where any part of the Project is located or it ceases

Copyright © 2010 National Society of Professional Engineers, American Council of Engineering Companies, American Society of Civil Engineers, and Associated General Contractors of America. All rights reserved.

to meet the requirements of Paragraph 4.01.B, Seller shall promptly notify Buyer and Engineer and shall, within 20 days after the event giving rise to such notification, provide another bond and surety, both of which shall comply with the requirements of Paragraphs 4.01.B and 4.02.

4.02 *Insurance*

A. Seller shall provide insurance of the types and coverages and in the amounts stipulated in the Supplementary Conditions.

B. Failure of Buyer to demand certificates of insurance or other evidence of Seller's full compliance with these insurance requirements or failure of Buyer to identify a deficiency in compliance from the evidence provided shall not be construed as a waiver of Seller's obligation to maintain such insurance.

C. Upon assignment of this Contract, Seller shall comply with the written request of assignee to provide certificates of insurance to assignee.

D. Buyer does not represent that insurance coverage and limits established in this Contract necessarily will be adequate to protect Seller.

E. The insurance and insurance limits required herein shall not be deemed as a limitation on Seller's liability under the indemnities granted to Buyer in the Contract Documents.

4.03 *Licensed Sureties and Insurers*

A. All bonds and insurance required by the Contract Documents to be purchased and maintained by Buyer or Seller shall be obtained from surety or insurance companies that are duly licensed or authorized in the jurisdiction in which the Project is located to issue bonds or insurance policies for the limits and coverages so required. Such surety and insurance companies shall also meet such additional requirements and qualifications as may be provided in the Supplementary Conditions.

ARTICLE 5 – SELLER'S RESPONSIBILITIES

5.01 *Supervision and Superintendence*

A. Seller shall supervise, inspect, and direct the furnishing of the Goods and Special Services competently and efficiently, devoting such attention thereto and applying such skills and expertise as may be necessary to perform its obligations in accordance with the Contract Documents. Seller shall be solely responsible for the means, methods, techniques, sequences, and procedures necessary to perform its obligations in accordance with the Contract Documents. Seller shall not be responsible for the negligence of Buyer or Engineer in the design or specification of a specific means, method, technique, sequence, or procedure that is shown or indicated in and expressly required by the Contract Documents.

Copyright © 2010 National Society of Professional Engineers, American Council of Engineering Companies, American Society of Civil Engineers, and Associated General Contractors of America. All rights reserved.

5.02 *Labor, Materials and Equipment*

A. Seller shall provide competent, qualified and trained personnel in all aspects of its performance of the Contract.

B. All Goods, and all equipment and material incorporated into the Goods, shall be as specified, and unless specified otherwise in the Contract Documents, shall be:

1. new, and of good quality;

2. protected, assembled, connected, cleaned, and conditioned in accordance with the original manufacturer's instructions; and

3. shop assembled to the greatest extent practicable.

5.03 *Laws and Regulations*

A. Seller shall give all notices required by and shall comply with all Laws and Regulations applicable to the performance of its obligations in accordance with the Contract Documents. Except where otherwise expressly required by such Laws and Regulations, neither Buyer nor Engineer shall be responsible for monitoring Seller's compliance with any Laws or Regulations.

B. If Seller furnishes Goods and Special Services knowing or having reason to know that such furnishing is contrary to Laws or Regulations, Seller shall bear all claims, costs, losses, and damages (including but not limited to all fees and charges of engineers, architects, attorneys, and other professionals and all court or arbitration or other dispute resolution costs) arising out of or relating to such performance. It shall not be Seller's responsibility to make certain that the Specifications and Drawings are in accordance with Laws and Regulations, but this provision shall not relieve Seller of Seller's obligations under Paragraph 3.03.

C. Changes in Laws or Regulations not known at the time of opening of Bids (or, on the Effective Date of the Agreement if there were no Bids) having an effect on the cost or time of performance shall be the subject of an adjustment in Contract Price or Contract Times. If Buyer and Seller are unable to agree on entitlement to or on the amount or extent, if any, of any such adjustment, a Claim may be made therefor as provided in Paragraph 9.06.

5.04 *Or Equals*

A. Whenever the Goods, or an item of material or equipment to be incorporated into the Goods, are specified or described in the Contract Documents by using the name of a proprietary item or the name of a particular supplier or manufacturer, the specification or description is intended to establish the type, function, appearance, and quality required. Unless the specification or description contains or is followed by words reading that no like, equivalent, or "or-equal" item is permitted, other items of material or equipment or material or equipment of other suppliers or manufacturers may be submitted to Buyer for Engineer's review.

Copyright © 2010 National Society of Professional Engineers, American Council of Engineering Companies, American Society of Civil Engineers, and Associated General Contractors of America. All rights reserved.

1. If in Engineer's sole discretion, such an item of material or equipment proposed by Seller is functionally equal to that named and sufficiently similar so that no change in related work will be required, it may be considered by Engineer as an "or-equal" item.

2. For the purposes of this paragraph, a proposed item of material or equipment may be considered functionally equal to an item so named only if:

    a. in the exercise of reasonable judgment, Engineer determines that: 1) it is at least equal in quality, durability, appearance, strength, and design characteristics; 2) it will reliably perform at least equally well the function imposed by the design concept of the completed Project as a functioning whole; 3) it has an acceptable record of performance and availability of responsive service; and

    b. Seller certifies that if approved: 1) there will be no increase in any cost, including capital, installation or operating costs, to Buyer; and 2) the proposed item will conform substantially to the detailed requirements of the item named in the Contract Documents.

B. *Engineer's Evaluation:* Engineer will be allowed a reasonable time within which to evaluate each proposal or submittal made pursuant to Paragraph 5.04.A. Engineer will be the sole judge of whether to accept or reject such a proposal or submittal. No "or-equal" will be ordered, manufactured or utilized until Engineer's review is complete, which will be evidenced by an approved Shop Drawing. Engineer will advise Buyer and Seller in writing of any negative determination. Notwithstanding Engineer's approval of an "or-equal" item, Seller shall remain obligated to comply with the requirements of the Contract Documents.

C. *Special Guarantee:* Buyer may require Seller to furnish at Seller's expense a special performance guarantee or other surety with respect to any such proposed "or-equal."

D. *Data:* Seller shall provide all data in support of any such proposed "or-equal" at Seller's expense.

5.05 *Taxes*

A. Seller shall be responsible for all taxes and duties arising out of the sale of the Goods and the furnishing of Special Services. All taxes are included in the Contract Price, except as noted in the Supplementary Conditions.

5.06 *Shop Drawings and Samples*

A. Seller shall submit Shop Drawings and Samples to Buyer for Engineer's review and approval in accordance with the schedule required in Paragraph 2.06.A. All submittals will be identified as required and furnished in the number of copies specified in the Contract Documents. The data shown on the Shop Drawings will be complete with respect to quantities, dimensions, specified performance and design criteria, materials, and similar data to show Engineer the services, materials, and equipment Seller proposes to provide.

Copyright © 2010 National Society of Professional Engineers, American Council of Engineering Companies, American Society of Civil Engineers, and Associated General Contractors of America. All rights reserved.

B. Where a Shop Drawing or Sample is required by the Contract Documents, any related work performed prior to Engineer's approval of the pertinent submittal will be at the sole expense and responsibility of Seller.

C. *Submittal Procedures:*

1. Before submitting each Shop Drawing or Sample, Seller shall have determined and verified:

   a. all field measurements (if required), quantities, dimensions, specified performance criteria, installation requirements, materials, catalog numbers, and similar information with respect thereto; and

   b. that all materials are suitable with respect to the indicated application, fabrication, shipping, handling, storage, assembly, and installation pertaining to the furnishing of Goods and Special Services.

2. Seller shall also have reviewed and coordinated each Shop Drawing or Sample with the Contract Documents.

3. Each submittal shall bear a stamp or include a written certification from Seller that Seller has reviewed the subject submittal and confirmed that it is in compliance with the requirements of the Contract Documents. Both Buyer and Engineer shall be entitled to rely on such certification from Seller.

4. With each submittal, Seller shall give Buyer and Engineer specific written notice of any variations that the Shop Drawing or Sample may have from the requirements of the Contract Documents. This notice shall be both in a written communication separate from the submittal and by specific notation on each Shop Drawing or Sample.

D. *Engineer's Review:*

1. Engineer will provide timely review of Shop Drawings and Samples.

2. Engineer's review and approval will be only to determine if the Goods and Special Services covered by the submittals will, after installation or incorporation in the Project, conform to the information given in the Contract Documents and be compatible with the design concept of the completed Project as a functioning whole.

3. Engineer's review and approval shall not relieve Seller from responsibility for any variation from the requirements of the Contract Documents unless Seller has complied with the requirements of Paragraph 5.06.C.4 and Engineer has given written approval of each such variation by specific written notation thereof incorporated in or accompanying the Shop Drawing or Sample. Engineer's review and approval shall not relieve Seller from responsibility for complying with the requirements of Paragraph 5.06.C.1.

E. *Resubmittal Procedures:*

Copyright © 2010 National Society of Professional Engineers, American Council of Engineering Companies, American Society of Civil Engineers, and Associated General Contractors of America. All rights reserved.

1. Seller shall make corrections required by Engineer and shall return the required number of corrected copies of Shop Drawings and submit, as required, new Samples for review and approval. Seller shall direct specific attention in writing to any revisions other than the corrections called for by Engineer on previous submittals.

5.07 *Continuing Performance*

A. Seller shall adhere to the progress schedule established in accordance with Paragraph 2.06.A., and the Goods shall be delivered and the Special Services furnished within the Contract Times specified in the Agreement.

B. Seller shall carry on furnishing of the Goods and Special Services and adhere to the progress schedule during all disputes or disagreements with Buyer. No furnishing of Goods and Special Services shall be delayed or postponed pending resolution of any disputes or disagreements, except as permitted by Paragraphs 11.03 or 11.04, or as Buyer and Seller may otherwise agree in writing.

5.08 *Seller's Warranties and Guarantees*

A. Seller warrants and guarantees to Buyer that the title to the Goods conveyed shall be proper, its transfer rightful, and free from any security interest, lien, or other encumbrance. Seller shall defend, indemnify, and hold Buyer harmless against any liens, claims, or demands contesting or affecting title of the Goods conveyed.

B. Seller warrants and guarantees to Buyer that all Goods and Special Services will conform with the Contract Documents, and with the standards established by any Samples approved by Engineer. Engineer shall be entitled to rely on Seller's warranty and guarantee. If the Contract Documents do not otherwise specify the characteristics or the quality of the Goods, the Goods shall comply with the requirements of Paragraph 5.02.B.

C. Seller's warranty and guarantee hereunder excludes defects or damage caused by:

1. abuse, improper modification, improper maintenance, or improper operation by persons other than Seller; or

2. corrosion or chemical attack, unless corrosive or chemically-damaging conditions were disclosed by Buyer in the Contract Documents and the Contract Documents required the Goods to withstand such conditions;

3. use in a manner contrary to Seller's written instructions for installation, operation, and maintenance; or

4. normal wear and tear under normal usage.

D. Seller's obligation to furnish the Goods and Special Services in accordance with the Contract Documents shall be absolute. None of the following will constitute an acceptance of Goods and Special Services that are non-conforming, or a release of Seller's obligation to furnish the Goods and Special Services in accordance with the Contract Documents:

Copyright © 2010 National Society of Professional Engineers, American Council of Engineering Companies, American Society of Civil Engineers, and Associated General Contractors of America. All rights reserved.

1. observations by Buyer or Engineer;

2. recommendation by Engineer or payment by Buyer of any progress or final payment;

3. use of the Goods by Buyer;

4. any acceptance by Buyer (subject to the provisions of Paragraph 8.02.D.1) or any failure to do so;

5. the issuance of a notice of acceptance by Buyer pursuant to the provisions of Article 8;

6. any inspection, test or approval by others; or

7. any correction of non-conforming Goods and Special Services by Buyer.

E. Buyer shall promptly notify Seller of any breach of Seller's warranties or guarantees.

F. Seller makes no implied warranties under this Contract.

5.09 *Indemnification*

A. To the fullest extent permitted by Laws and Regulations, Seller shall indemnify and hold harmless Buyer and Engineer, and the officers, directors, members, partners, employees, agents, consultants, contractors, and subcontractors of each and any of them from and against all claims, costs, losses, and damages (including but not limited to all fees and charges of engineers, architects, attorneys, and other professionals and all court or arbitration or other dispute resolution costs) arising out of or relating to the performance of Seller's obligations under the Contract Documents, provided that any such claim, cost, loss, or damages attributable to bodily injury, sickness, disease, or death, or to injury to or destruction of tangible property (other than the Goods themselves), including the loss of use resulting therefrom, but only to the extent cause by any negligent act or omission of Seller, or any individual or entity directly or indirectly employed by Seller or anyone for whose acts Seller may be liable.

B. In any and all claims against Buyer or Engineer or any of their respective assignees, consultants, agents, officers, directors, members, partners, employees, agents, consultants, contractors, or subcontractors, by any employee (or the survivor or personal representative of such employee) of Seller, any subcontractor, any supplier, or any individual or entity directly or indirectly employed by any of them to furnish any of the Goods and Special Services, or anyone for whose acts any of them may be liable, the indemnification obligation under Paragraph 5.09.A shall not be limited in any way by any limitation on the amount or type of damages, compensation, or benefits payable by or for seller or any such subcontractor, supplier, or other individual or entity under workers' compensation acts, disability benefit acts, or other employee benefit acts.

C. The indemnification obligations of Seller under Paragraph 5.09.A shall not extend to the liability of Engineer and Engineer's officers, directors, partners, employees, agents, and consultants arising out of:

Copyright © 2010 National Society of Professional Engineers, American Council of Engineering Companies, American Society of Civil Engineers, and Associated General Contractors of America. All rights reserved.

1. the preparation or approval of, or the failure to prepare or approve, maps, Drawings, opinions, reports, surveys, Change Orders, designs, or Specifications; or

2. giving directions or instructions, or failing to give them, if that is the primary cause of the injury or damage.

5.10 *Delegation of Professional Design Services*

A. Seller will not be required to provide professional design services unless such services are specifically required by the Contract Documents or unless such services are required to carry out Seller's responsibilities for furnishing the Goods and Special Services. Seller shall not be required to provide professional services in violation of applicable law.

B. If professional design services or certifications by a design professional related to the Goods and Special Services are specifically required of Seller by the Contract Documents, Buyer and Engineer will specify all performance and design criteria that such services must satisfy. Seller shall cause such services or certifications to be provided by a properly licensed professional, whose signature and seal shall appear on all drawings, calculations, specifications, certifications, Shop Drawings and other submittals prepared by such professional. Shop Drawings and other submittals related to the Goods and Special Services designed or certified by such professional, if prepared by others, shall bear such professional's written approval when submitted to Engineer.

C. Buyer and Engineer shall be entitled to rely upon the adequacy, accuracy and completeness of the services, certifications or approvals performed by such design professionals, provided Buyer and Engineer have specified to Seller all performance and design criteria that such services must satisfy.

D. Pursuant to this Paragraph 5.10, Engineer's review and approval of design calculations and design drawings will be only for the limited purpose of checking for conformance with performance and design criteria given and the design concept expressed in the Contract Documents. Engineer's review and approval of Shop Drawings and other submittals (except design calculations and design drawings) will be only for the purpose stated in Paragraph 5.06.D.2.

E. Seller shall not be responsible for the adequacy of the performance or design criteria required by the Contract Documents.

ARTICLE 6 – SHIPPING AND DELIVERY

6.01 *Shipping*

A. Seller shall select the carrier and bear all costs of packaging, transportation, insurance, special handling and any other costs associated with shipment and delivery.

Copyright © 2010 National Society of Professional Engineers, American Council of Engineering Companies, American Society of Civil Engineers, and Associated General Contractors of America. All rights reserved.

6.02 *Delivery*

A. Seller shall deliver the Goods F.O.B. the Point of Destination in accordance with the Contract Times set forth in the Agreement, or other date agreed to by Buyer and Seller.

B. Seller shall provide written notice to Buyer at least 10 days before shipment of the manner of shipment and the anticipated delivery date. The notice shall also include any instructions concerning special equipment or services required at the Point of Destination to unload and care for the Goods. Seller shall also require the carrier to give Buyer at least 24 hours notice by telephone prior to the anticipated time of delivery.

C. Buyer will be responsible and bear all costs for unloading the Goods from carrier.

D. Buyer will assure that adequate facilities are available to receive delivery of the Goods during the Contract Times for delivery set forth in the Agreement, or another date agreed by Buyer and Seller.

E. No partial deliveries shall be allowed, unless permitted or required by the Contract Documents or agreed to in writing by Buyer.

6.03 *Risk of Loss*

A. Risk of loss and insurable interests transfer from Seller to Buyer upon Buyer's receipt of the Goods.

B. Notwithstanding the provisions of Paragraph 6.03.A, if Buyer rejects the Goods as non-conforming, the risk of loss on such Goods shall remain with Seller until Seller corrects the non-conformity or Buyer accepts the Goods. If rejected Goods remain at the Point of Destination pending modification and acceptance, then Seller shall be responsible for arranging adequate protection and maintenance of the Goods at Seller's expense.

6.04 *Progress Schedule*

A. Seller shall adhere to the progress schedule established in accordance with Paragraph 2.06 as it may be adjusted from time to time as provided below.

1. Seller shall submit to Engineer for acceptance (to the extent indicated in Paragraph 2.06) proposed adjustments in the progress schedule that will not result in changing the Contract Times. Such adjustments will comply with any provisions of the General Requirements applicable thereto.

2. Proposed adjustments in the progress schedule that will change the Contract Times shall be submitted in accordance with the requirements of Article 7. Adjustments in Contract Times may only be made by a Change Order.

Copyright © 2010 National Society of Professional Engineers, American Council of Engineering Companies, American Society of Civil Engineers, and Associated General Contractors of America. All rights reserved.

ARTICLE 7 – CHANGES: SCHEDULE AND DELAY

7.01 *Changes in the Goods and Special Services*

A. Buyer may at any time, without notice to any surety, make an addition, deletion, or other revision to the Contract Documents with respect to the Goods and Services, within the general scope of the Contract, by a Change Order or Work Change Directive. Upon receipt of any such document, Seller shall promptly proceed with performance pursuant to the revised Contract Documents (except as otherwise specifically provided).

B. If Seller concludes that a Work Change Directive issued by Buyer affects the Contract Price or Contract Times, then Seller shall notify Buyer within 15 days after Seller has received the Work Change Directive, and submit written supporting data to Buyer within 45 days after such receipt. If Seller fails to notify Buyer within 15 days, Seller waives any Claim for such adjustment. If Buyer and Seller are unable to agree on entitlement to, or on the amount or extent, if any, of an adjustment in the Contract Price or Contract Times, or both, that should be allowed as a result of a Work Change Directive, a Claim may be made therefor as provided in Paragraph 9.06.

C. Seller shall not suspend performance while Buyer and Seller are in the process of making such changes and any related adjustments to Contract Price or Contract Times.

7.02 *Changing Contract Price or Contract Times*

A. The Contract Price or Contract Times may only be changed by a Change Order.

B. Any Claim for an adjustment in the Contract Price or Contract Times shall be based on written notice submitted by the party making the Claim to the Engineer and the other party to the Contract in accordance with the provisions of Paragraph 9.06.

C. If Seller is prevented from delivering the Goods or performing the Special Services within the Contract Times for any unforeseen reason beyond its control and not attributable to its actions or inactions, then Seller shall be entitled to an adjustment of the Contract Times to the extent attributable to such reason. Such reasons include but are not limited to acts or neglect by Buyer, inspection delays, fires, floods, epidemics, abnormal weather conditions, acts of God, and other like matters. If such an event occurs and delays Seller's performance, Seller shall notify Buyer in writing within 15 days of knowing or having reason to know of the beginning of the event causing the delay, stating the reason therefor.

D. Seller shall not be entitled to an adjustment in Contract Price or Contract Times for delays within the control of Seller. Delays attributable to and within the control of Seller's subcontractors or suppliers shall be deemed to be delays within the control of Seller.

E. If Seller is prevented from delivering the Goods or furnishing the Special Services within the Contract Times due to the actions or inactions of Buyer, Seller shall be entitled to any reasonable and necessary additional costs arising out of such delay to the extent directly attributable to Buyer.

Copyright © 2010 National Society of Professional Engineers, American Council of Engineering Companies, American Society of Civil Engineers, and Associated General Contractors of America. All rights reserved.

F. Neither Buyer nor Seller shall be entitled to any damages arising from delays which are beyond the control of both Buyer and Seller, including but not limited to fires, floods, epidemics, abnormal weather conditions, acts of God, and other like matters.

ARTICLE 8 – BUYER'S RIGHTS

8.01 *Inspections and Testing*

A. *General:*

1. The Contract Documents specify required inspections and tests. Buyer shall have the right to perform, or cause to be performed, reasonable inspections and require reasonable tests of the Goods at Seller's facility, and at the Point of Destination. Seller shall allow Buyer a reasonable time to perform such inspections or tests.

2. Seller shall reimburse Buyer for all expenses, except for travel, lodging, and subsistence expenses of Buyer's and Engineer's representatives, for inspections and tests specified in the Contract Documents. If as the result of any such specified testing the Goods are determined to be non-conforming, then Seller shall also bear the travel, lodging, and subsistence expenses of Buyer's and Engineer's representatives, and all expenses of re-inspection or retesting.

3. Buyer shall bear all expenses of inspections and tests that are not specified in the Contract Documents (other than any re-inspection or retesting resulting from a determination of non-conformity, as set forth in Paragraph 8.01.A.2 immediately above); provided, however, that if as the result of any such non-specified inspections or testing the Goods are determined to be non-conforming, then Seller shall bear all expenses of such inspections and testing, and of any necessary re-inspection and retesting.

4. Seller shall provide Buyer timely written notice of the readiness of the Goods for all inspections, tests, or approvals which the Contract Documents specify are to be observed by Buyer prior to shipment.

5. Buyer will give Seller timely notice of all specified tests, inspections, and approvals of the Goods which are to be conducted at the Point of Destination.

6. If, on the basis of any inspections or testing, the Goods appear to be conforming, Buyer will give Seller prompt notice thereof. If on the basis of said inspections or testing, the Goods appear to be non-conforming, Buyer will give Seller prompt notice thereof and will advise Seller of the remedy Buyer elects under the provisions of Paragraph 8.02.

7. Neither payments made by Buyer to Seller prior to any tests or inspections, nor any tests or inspections shall constitute acceptance of non-conforming Goods, or prejudice Buyer's rights under the Contract.

B. Inspection on Delivery:

Copyright © 2010 National Society of Professional Engineers, American Council of Engineering Companies, American Society of Civil Engineers, and Associated General Contractors of America. All rights reserved.

1. Buyer or Engineer will visually inspect the Goods upon delivery solely for purposes of identifying the Goods and general verification of quantities and observation of apparent condition in order to provide a basis for a progress payment. Such visual inspection will not be construed as final or as receipt of any Goods and Special Services that, as a result of subsequent inspections and tests, are determined to be non-conforming.

2. Within ten days of such visual inspection, Buyer shall provide Seller with written notice of Buyer's determination regarding conformity of the Goods. In the event Buyer does not provide such notice, it will be presumed that the Goods appear to be conforming and that Buyer has acknowledged their receipt upon delivery.

3. If, on the basis of the visual inspection specified in Paragraph 8.01.B.1, the Goods appear to be conforming, Buyer's notice thereof to Seller will acknowledge receipt of the Goods.

C. Final Inspection:

1. After all of the Goods have been incorporated into the Project, tested in accordance with such testing requirements as are specified, and are functioning as indicated, Buyer or Engineer will make a final inspection.

2. If, on the basis of the final inspection, the Goods are conforming, Buyer's notice thereof will constitute Buyer's acceptance of the Goods.

3. If, on the basis of the final inspection, the Goods are non-conforming, Buyer will identify the non-conformity in writing.

8.02 *Non-Conforming Goods and Special Services*

A. If, on the basis of inspections and testing prior to delivery, the Goods and Special Services are found to be non-conforming, or if at any time after Buyer has acknowledged receipt of delivery and before the expiration of the correction period described in Paragraph 8.03, Buyer determines that the Goods and Special Services are non-conforming, then Seller shall promptly, without cost to Buyer and in response to written instructions from Buyer, either correct such non-conforming Goods and Special Services, or, if Goods are rejected by Buyer, remove and replace the non-conforming Goods with conforming Goods, including all work required for reinstallation.

B. Buyer's Rejection of Non-Conforming Goods:

1. If Buyer elects to reject the Goods in whole or in part, Buyer's notice to Seller will describe in sufficient detail the non-conforming aspect of the Goods. If Goods have been delivered to Buyer, Seller shall promptly, and within the Contract Times, remove and replace the rejected Goods.

2. Seller shall bear all costs, losses and damages attributable to the removal and replacement of the non-conforming Goods as provided in Paragraph 8.02.E.

3. Upon rejection of the Goods, Buyer retains a security interest in the Goods to the extent of any payments made and expenses incurred in their testing and inspection.

Copyright © 2010 National Society of Professional Engineers, American Council of Engineering Companies, American Society of Civil Engineers, and Associated General Contractors of America. All rights reserved.

C. Remedying Non-Conforming Goods and Special Services:

1. If Buyer elects to permit the Seller to modify the Goods to correct the non-comformance, then Seller shall promptly provide a schedule for such modifications and shall make the Goods conforming within a reasonable time.

2. If Buyer notifies Seller in writing that any of the Special Services are non-conforming, Seller shall promptly provide conforming services acceptable to Buyer. If Seller fails to do so, Buyer may delete the Special Services and reduce the Contract Price a commensurate amount.

D. Buyer's Acceptance of Non-Conforming Goods:

Instead of requiring correction or removal and replacement of non-conforming Goods discovered either before or after final payment, Buyer may accept the non-conforming Goods. Seller shall bear all reasonable costs, losses, and damages attributable to Buyer's evaluation of and determination to accept such non-conforming Goods as provided in Paragraph 8.02.E.

E. Seller shall pay all claims, costs, losses, and damages, including but not limited to all fees and charges for re-inspection, retesting and for any engineers, architects, attorneys and other professionals, and all court or arbitration or other dispute resolution costs arising out of or relating to the non-conforming Goods and Special Services. Seller's obligations shall include the costs of the correction or removal and replacement of the non-conforming Goods and the replacement of property of Buyer and others destroyed by the correction or removal and replacement of the non-conforming Goods, and obtaining conforming Special Services from others.

F. *Buyer's Rejection of Conforming Goods:*

If Buyer asserts that Goods and Special Services are non-conforming and such Goods and Special Services are determined to be conforming, or if Buyer rejects as non-conforming Goods and Special Services that are later determined to be conforming, then Seller shall be entitled to reimbursement from Buyer of costs incurred by Seller in inspecting, testing, correcting, removing, or replacing the conforming Goods and Special Services, including but not limited to fees and charges of engineers, architects, attorneys and other professionals, and all court or arbitration or other dispute resolution costs associated with the incorrect assertion of non-conformance or rejection of conforming Goods and Special Services.

8.03 *Correction Period*

A. Seller's responsibility for correcting all non-conformities in the Goods and Special Services will extend for a period of one year after the earlier of the date on which Buyer has placed the Goods in continuous service or the date of final payment, or for such longer period of time as may be prescribed by Laws or Regulations or by the terms of any specific provisions of the Contract Documents.

Copyright © 2010 National Society of Professional Engineers, American Council of Engineering Companies, American Society of Civil Engineers, and Associated General Contractors of America. All rights reserved.

ARTICLE 9 – ROLE OF ENGINEER

9.01 *Duties and Responsibilities*

A. The duties and responsibilities and the limitations of authority of Engineer are set forth in the Contract Documents.

9.02 *Clarifications and Interpretations*

A. Engineer will issue with reasonable promptness such written clarifications or interpretations of the Contract Documents as Engineer may determine necessary, which shall be consistent with or reasonably inferable from the overall intent of the Contract Documents. Such written clarifications and interpretations will be binding on Buyer and Seller. If either Buyer or Seller believes that a written clarification or interpretation justifies an adjustment in the Contract Price or Contract Times, either may make a Claim therefor.

9.03 *Authorized Variations*

A. Engineer may authorize minor deviations or variations in the Contract Documents by: 1) written approval of specific variations set forth in Shop Drawings when Seller has duly noted such variations as required in Paragraph 5.06.C.4, or 2) a Field Order.

9.04 *Rejecting Non-Conforming Goods and Special Services*

A. Engineer will have the authority to disapprove or reject Goods and Special Services that Engineer believes to be non-conforming. Engineer will also have authority to require special inspection or testing of the Goods or Special Services as provided in Paragraph 8.01 whether or not the Goods are fabricated or installed, or the Special Services are completed.

9.05 *Decisions on Requirements of Contract Documents*

A. Engineer will be the initial interpreter of the Contract Documents and judge of the acceptability of the Goods and Special Services. Claims, disputes and other matters relating to the acceptability of the Goods and Special Services or the interpretation of the requirements of the Contract Documents pertaining to Seller's performance will be referred initially to Engineer in writing with a request for a formal decision in accordance with this paragraph.

B. When functioning as interpreter and judge under this Paragraph 9.05, Engineer will not show partiality to Buyer or Seller and will not be liable in connection with any interpretation or decision rendered in good faith in such capacity. The rendering of a decision by Engineer pursuant to this Paragraph 9.05 with respect to any such Claim, dispute, or other matter (except any which have been waived by the making or acceptance of final payment as provided in Paragraph 10.07) will be a condition precedent to any exercise by Buyer or Seller of such rights or remedies as either may otherwise have under the Contract Documents or by Laws or Regulations in respect of any such Claim, dispute, or other matter.

Copyright © 2010 National Society of Professional Engineers, American Council of Engineering Companies, American Society of Civil Engineers, and Associated General Contractors of America. All rights reserved.

9.06 *Claims and Disputes*

A. *Notice*: Written notice of each Claim relating to the acceptability of the Goods and Special Services or the interpretation of the requirements of the Contract Documents pertaining to either party's performance shall be delivered by the claimant to Engineer and the other party to the Agreement within 15 days after the occurrence of the event giving rise thereto, and written supporting data shall be submitted to Engineer and the other party within 45 days after such occurrence unless Engineer allows an additional period of time to ascertain more accurate data.

B. *Engineer's Decision*: Engineer will review each such Claim and render a decision in writing within 30 days after receipt of the last submittal of the claimant or the last submittal of the opposing party, if any.

C. If Engineer does not render a formal written decision on a Claim within the time stated in Paragraph 9.06.B., Engineer shall be deemed to have issued a decision denying the Claim in its entirety 31 days after receipt of the last submittal of the claimant or the last submittal of the opposing party, if any.

D. Engineer's written decision on such Claim or a decision denying the Claim in its entirety that is deemed to have been issued pursuant to Paragraph 9.06.C, will be final and binding upon Buyer and Seller 30 days after it is issued unless within 30 days of issuance Buyer or Seller appeals Engineer's decision by initiating the mediation of such Claim in accordance with the dispute resolution procedures set forth in Article 13.

E. If Article 13 has been amended to delete the mediation requirement, then Buyer or Seller may appeal Engineer's decision within 30 days of issuance by following the alternative dispute resolution process set forth in Article 13, as amended; or if no such alternative dispute resolution process has been set forth, Buyer or Seller may appeal Engineer's decision by 1) delivering to the other party within 30 days of the date of such decision a written notice of intent to submit the Claim to a court of competent jurisdiction, and 2) within 60 days after the date of such decision instituting a formal proceeding in a court of competent jurisdiction.

F. No Claim for an adjustment in Contract Price or Contract Times will be valid if not submitted in accordance with this Paragraph 9.06.

G. The parties agree to endeavor to avoid or resolve Claims through direct, good faith discussions and negotiations whenever practicable. Such discussions and negotiations should at the outset address whether the parties mutually agree to suspend the time periods established in this Paragraph 9.06; if so, a written record of such mutual agreement should be made and jointly executed.

ARTICLE 10 - PAYMENT

10.01 *Applications for Progress Payments*

A. Seller shall submit to Buyer for Engineer's review Applications for Payment filled out and signed by Seller and accompanied by such supporting documentation as is required by the

Copyright © 2010 National Society of Professional Engineers, American Council of Engineering Companies, American Society of Civil Engineers, and Associated General Contractors of America. All rights reserved.

Contract Documents and also as Buyer or Engineer may reasonably require. The timing and amounts of progress payments shall be as stipulated in the Agreement.

1. The first application for Payment will be submitted after review and approval by Engineer of all Shop Drawings and of all Samples required by the Contract Documents.

2. The second Application for Payment will be submitted after receipt of the Goods has been acknowledged in accordance with Paragraph 8.01.B and will be accompanied by a bill of sale, invoice, or other documentation reasonably satisfactory to Buyer warranting that Buyer has rightfully received good title to the Goods from Seller and that, upon payment, the Goods will be free and clear of all liens. Such documentation will include releases and waivers from all parties with viable lien rights. In the case of multiple deliveries of Goods, additional Applications for Payment accompanied by the required documentation will be submitted as Buyer acknowledges receipt of additional items of the Goods.

10.02 *Review of Applications for Progress Payments*

A. Engineer will, within ten days after receipt of each Application for Payment, either indicate in writing a recommendation of payment and present the Application to Buyer, or return the Application to Seller indicating in writing Engineer's reasons for refusing to recommend payment. In the latter case, Seller may make the necessary corrections and resubmit the Application.

1. Engineer’s recommendation of payment requested in the first Application for Payment will constitute a representation by Engineer, based on Engineer’s review of the Application for Payment and the accompanying data, that the Shop Drawings and Samples have been reviewed and approved as required by the Contract Documents and Seller is entitled to payment of the amount recommended.

2. Engineer’s recommendation of payment requested in the Application for Payment submitted upon Buyer’s acknowledgment of receipt of the Goods will constitute a representation by Engineer, based on Engineer’s review of the Application for Payment and the accompanying data Seller is entitled to payment of the amount recommended. Such recommendation will not constitute a representation that Engineer has made a final inspection of the Goods, that the Goods are free from non-conformities, acceptable or in conformance with the Contract Documents, that Engineer has made any investigation as to Buyer’s title to the Goods, that exhaustive or continuous inspections have been made to check the quality or the quantity of the Goods beyond the responsibilities specifically assigned to Engineer in the Contract Documents or that there may not be other matters or issues between the parties that might entitle Seller to additional payments by Buyer or Buyer to withhold payment to Seller.

3. Engineer may refuse to recommend that all or any part of a progress payment be made, or Engineer may nullify all or any part of any payment previously recommended if, in Engineer's opinion, such recommendation would be incorrect or if on the basis of subsequently discovered evidence or subsequent inspections or tests Engineer considers such refusal or nullification necessary to protect Buyer from loss because the Contract

Copyright © 2010 National Society of Professional Engineers, American Council of Engineering Companies, American Society of Civil Engineers, and Associated General Contractors of America. All rights reserved.

Price has been reduced, Goods are found to be non-conforming, or Seller has failed to furnish acceptable Special Services.

10.03 *Amount and Timing of Progress Payments*

A. Subject to Paragraph 10.02.A., the amounts of the progress payments will be as provided in the Agreement. Buyer shall within 30 days after receipt of each Application for Payment with Engineer's recommendation pay Seller the amount recommended; but, in the case of the Application for Payment upon Buyer's acknowledgment of receipt of the Goods, said 30-day period may be extended for so long as is necessary (but in no event more than 60 days) for Buyer to examine the bill of sale and other documentation submitted therewith. Buyer shall notify Seller promptly of any deficiency in the documentation and shall not unreasonably withhold payment.

10.04 *Suspension of or Reduction in Payment*

A. Buyer may suspend or reduce the amount of progress payments, even though recommended for payment by Engineer, under the following circumstances:

1. Buyer has reasonable grounds to conclude that Seller will not furnish the Goods or the Special Services in accordance with the Contract Documents, and

2. Buyer has requested in writing assurances from Seller that the Goods and Special Services will be delivered or furnished in accordance with the Contract Documents, and Seller has failed to provide adequate assurances within ten days of Buyer’s written request.

B. If Buyer refuses to make payment of the full amount recommended by Engineer, Buyer will provide Seller and Engineer immediate written notice stating the reason for such action and promptly pay Seller any amount remaining after deduction of the amount withheld. Buyer shall promptly pay Seller the amount withheld when Seller corrects the reason for such action to Buyer’s satisfaction.

10.05 *Final Application for Payment*

A. After Seller has corrected all non-conformities to the reasonable satisfaction of Buyer and Engineer, furnished all Special Services, and delivered all documents required by the Contract Documents, Engineer will issue to Buyer and Seller a notice of acceptance. Seller may then make application for final payment following the procedure for progress payments. The final Application for Payment will be accompanied by all documentation called for in the Contract Documents, a list of all unsettled Claims, and such other data and information as Buyer or Engineer may reasonably require.

10.06 *Final Payment*

A. If, on the basis of final inspection and the review of the final Application for Payment and accompanying documentation, Engineer is reasonably satisfied that Seller has furnished the

Copyright © 2010 National Society of Professional Engineers, American Council of Engineering Companies, American Society of Civil Engineers, and Associated General Contractors of America. All rights reserved.

Goods and Special Services in accordance with the Contract Documents, and that Seller's has fulfilled all other obligations under the Contract Documents, then Engineer will, within ten days after receipt of the final Application for Payment, recommend in writing final payment subject to the provisions of Paragraph 10.07 and present the Application to Buyer. Otherwise, Engineer will return the Application to Seller, indicating the reasons for refusing to recommend final payment, in which case Seller shall make the necessary corrections and resubmit the Application for payment. If the Application and accompanying documentation are appropriate as to form and substance, Buyer shall, within 30 days after receipt thereof, pay Seller the amount recommended by Engineer, less any sum Buyer is entitled to set off against Engineer's recommendation, including but not limited to liquidated damages to which Buyer is entitled.

10.07 *Waiver of Claims*

A. The making and acceptance of final payment will constitute:

1. a waiver of all Claims by Buyer against Seller, except Claims arising from unsettled liens from non-conformities in the Goods or Special Services appearing after final payment, from Seller's failure to comply with the Contract Documents or the terms of any special guarantees specified therein, or from Seller's continuing obligations under the Contract Documents; and

2. a waiver of all Claims by Seller against Buyer (other than those previously made in accordance with the requirements herein and listed by Seller as unsettled as required in Paragraph 10.05.A, and not resolved in writing).

ARTICLE 11 - CANCELLATION, SUSPENSION, AND TERMINATION

11.01 *Cancellation*

A. Buyer has the right to cancel the Contract, without cause, at any time prior to delivery of the Goods by written notice. Cancellation pursuant to the terms of this paragraph shall not constitute a breach of contract by Buyer. Upon cancellation:

1. Buyer shall pay Seller for the direct costs incurred in producing any Goods that Seller has specially manufactured for the Project, plus a fair and reasonable amount for overhead and profit.

2. For Goods that are not specially manufactured for the Project, Seller shall be entitled to a restocking charge of 10 percent of the unpaid Contract Price of such Goods.

11.02 *Suspension of Performance by Buyer*

A. Buyer has the right to suspend performance of the Contract for up to a maximum of ninety days, without cause, by written notice. Upon suspension under this paragraph, Seller shall be entitled to an increase in the Contract Times and Contract Price caused by the suspension, provided that performance would not have been suspended or delayed for causes attributable to Seller.

Copyright © 2010 National Society of Professional Engineers, American Council of Engineering Companies, American Society of Civil Engineers, and Associated General Contractors of America. All rights reserved.

11.03 *Suspension of Performance by Seller*

A. Subject to the provisions of Paragraph 5.07.B, Seller may suspend the furnishing of the Goods and Special Services only under the following circumstance:

1. Seller has reasonable grounds to conclude that Buyer will not perform its future payment obligations under the Contract; and,

2. Seller has requested in writing assurances from Buyer that future payments will be made in accordance with the Contract, and Buyer has failed to provide such assurances within ten days of Seller's written request.

11.04 *Breach and Termination*

A. Buyer's Breach:

1. Buyer shall be deemed in breach of the Contract if it fails to comply with any material provision of the Contract Documents, including but not limited to:

a. wrongful rejection or revocation of Buyer's acceptance of the Goods,

b. failure to make payments in accordance with the Contract Documents, or

c. wrongful repudiation of the Contract.

2. Seller shall have the right to terminate the Contract for cause by declaring a breach should Buyer fail to comply with any material provisions of the Contract. Upon termination, Seller shall be entitled to all remedies provided by Laws and Regulations.

a. In the event Seller believes Buyer is in breach of its obligations under the Contract, Seller shall provide Buyer with reasonably prompt written notice setting forth in sufficient detail the reasons for declaring that it believes a breach has occurred. Buyer shall have seven days from receipt of the written notice declaring the breach (or such longer period of time as Seller may grant in writing) within which to cure or to proceed diligently to cure such alleged breach.

B. Seller's Breach:

1. Seller shall be deemed in breach of the Contract if it fails to comply with any material provision of the Contract Documents, including, but not limited to:

a. failure to deliver the Goods or perform the Special Services in accordance with the Contract Documents,

b. wrongful repudiation of the Contract, or

c. delivery or furnishing of non-conforming Goods and Special Services.

Copyright © 2010 National Society of Professional Engineers, American Council of Engineering Companies, American Society of Civil Engineers, and Associated General Contractors of America. All rights reserved.

2. Buyer may terminate Seller's right to perform the Contract for cause by declaring a breach should Seller fail to comply with any material provision of the Contract Documents. Upon termination, Buyer shall be entitled to all remedies provided by Laws and Regulations.

    a. In the event Buyer believes Seller is in breach of its obligations under the Contract, and except as provided in Paragraph 11.04.B.2.b, Buyer shall provide Seller with reasonably prompt written notice setting forth in sufficient detail the reasons for declaring that it believes a breach has occurred. Seller shall have seven days from receipt of the written notice declaring the breach (or such longer period of time as Buyer may grant in writing) within which to cure or to proceed diligently to cure such alleged breach.

    b. If and to the extent that Seller has provided a performance bond under the provisions of Paragraph 4.01, the notice and cure procedures of that bond, if any, shall supersede the notice and cure procedures of Paragraph 11.04.B.2.a.

ARTICLE 12 – LICENSES AND FEES

12.01 *Intellectual Property and License Fees*

A. Unless specifically stated elsewhere in the Contract Documents, Seller is not transferring any intellectual property rights, patent rights, or licenses for the Goods delivered. However, in the event the Seller is manufacturing to Buyer's design, Buyer retains all intellectual property rights in such design.

B. Seller shall pay all license fees and royalties and assume all costs incident to the use or the furnishing of the Goods, unless specified otherwise by the Contract Documents.

12.02 *Seller's Infringement*

A. Subject to Paragraph 12.01.A, Seller shall indemnify and hold harmless Buyer, Engineer and their officers, directors, members, partners, employees, agents, consultants, contractors, and subcontractors from and against all claims, costs, losses, damages, and judgments (including but not limited to all reasonable fees and charges of engineers, architects, attorneys and other professionals and all court or arbitration or other dispute resolution costs) arising out of or relating to any infringement or alleged infringement of any United States or foreign patent or copyright by any of the Goods as delivered hereunder.

B. In the event of suit or threat of suit for intellectual property infringement, Buyer will promptly notify Seller of receiving notice thereof.

C. Seller shall promptly defend the claim or suit, including negotiating a settlement. Seller shall have control over such claim or suit, provided that Seller agrees to bear all expenses and to satisfy any adverse judgment thereof.

Copyright © 2010 National Society of Professional Engineers, American Council of Engineering Companies, American Society of Civil Engineers, and Associated General Contractors of America. All rights reserved.

1. If Seller fails to defend such suit or claim after written notice by Buyer, Seller will be bound in any subsequent suit or claim against Seller by Buyer by any factual determination in the prior suit or claim.

2. If Buyer fails to provide Seller the opportunity to defend such suit or claim after written notice by Seller, Buyer shall be barred from any remedy against Seller for such suit or claim.

D. If a determination is made that Seller has infringed upon intellectual property rights of another, Seller may obtain the necessary licenses for Buyer's benefit, or replace the Goods and provide related design and construction as necessary to avoid the infringement at Seller's own expense.

12.03 *Buyer's Infringement*

A. Buyer shall indemnify and hold harmless Seller, and its officers, directors, partners, employees, agents, consultants, contractors, and subcontractors from and against all claims, costs, losses, damages, and judgments (including but not limited to all reasonable fees and charges of engineers, architects, attorneys and other professionals and all court or arbitration or other dispute resolution costs) arising out of or relating to any infringement or alleged infringement of any United States or foreign patent or copyright caused by Seller's compliance with Buyer's design of the Goods or Buyer's use of the Goods in combination with other materials or equipment in any process (unless intent of such use was known to Seller and Seller had reason to know such infringement would result).

B. In the event of suit or threat of suit for intellectual property infringement, Seller must after receiving notice thereof promptly notify Buyer.

C. Upon written notice from Seller, Buyer shall be given the opportunity to defend the claim or suit, including negotiating a settlement. Buyer shall have control over such claim or suit, provided that Buyer agrees to bear all expenses and to satisfy any adverse judgment thereof.

1. If Buyer fails to defend such suit or claim after written notice by Seller, Buyer will be bound in any subsequent suit or claim against Buyer by Seller by any factual determination in the prior suit or claim.

2. If Seller fails to provide Buyer the opportunity to defend such suit or claim after written notice by Buyer, Seller shall be barred from any remedy against Buyer for such suit or claim.

12.04 *Reuse of Documents*

A. Neither Seller nor any other person furnishing any of the Goods and Special Services under a direct or indirect contract with Seller shall: (1) acquire any title to or ownership rights in any of the Drawings, Specifications, or other documents (or copies of any thereof) prepared by or bearing the seal of Engineer or its consultants, including electronic media versions; or (2) reuse any of such Drawings, Specifications, other documents, or copies thereof on any other project without written consent of Buyer and Engineer and specific written verification or adaptation by Engineer. This prohibition will survive termination or completion of the Contract. Nothing

Copyright © 2010 National Society of Professional Engineers, American Council of Engineering Companies, American Society of Civil Engineers, and Associated General Contractors of America. All rights reserved.

herein shall preclude Seller from retaining copies of the Contract Documents for record purposes.

12.05 *Electronic Data*

A. Unless otherwise stated in the Supplementary Conditions, copies of data furnished by Buyer or Engineer to Seller, or by Seller to Buyer or Engineer that may be relied upon are limited to the printed copies (also known as hard copies). Files in electronic media format of text, data, graphics, or other types are furnished only for the convenience of the receiving party. Any conclusion or information obtained or derived from such electronic files will be at the user's sole risk. If there is a discrepancy between the electronic files and the hard copies, the hard copies govern.

B. Because data stored in electronic media format can deteriorate or be modified inadvertently or otherwise without authorization of the data's creator, the party receiving electronic files agrees that it will perform acceptance tests or procedures within 60 days, after which the receiving party shall be deemed to have accepted the data thus transferred. The transferring party will correct any errors detected within the 60-day acceptance period.

C. When transferring documents in electronic media format, the transferring party makes no representations as to long term compatibility, usability, or readability of documents resulting from the use of software application packages, operating systems, or computer hardware differing from those used by the data's creator.

ARTICLE 13 - DISPUTE RESOLUTION

13.01 *Dispute Resolution Method*

A. Either Buyer or Seller may initiate the mediation of any Claim decided in writing by Engineer under Paragraph 9.06.B or 9.06.C before such decision becomes final and binding. The mediation will be governed by the Construction Industry Mediation Rules of the American Arbitration Association in effect as of the Effective Date of the Agreement. The request for mediation shall be submitted in writing to the American Arbitration Association and the other party to the Contract. Timely submission of the request shall stay the Engineer's decision from becoming final and binding.

B. Buyer and Seller shall participate in the mediation process in good faith. The process shall be concluded within 60 days of filing of the request. The date of termination of the mediation shall be determined by application of the mediation rules referenced above.

C. If the mediation process does not result in resolution of the Claim, then Engineer's written decision under Paragraph 9.06.B or a denial pursuant to Paragraph 9.06.C shall become final and binding 30 days after termination of the mediation unless, within that time period, Buyer or Seller:

1. elects in writing to invoke any dispute resolution process provided for in the Supplementary Conditions, or

Copyright © 2010 National Society of Professional Engineers, American Council of Engineering Companies, American Society of Civil Engineers, and Associated General Contractors of America. All rights reserved.

2. agrees with the other party to submit the Claim to another dispute resolution process, or

3. if no dispute resolution process has been provided for in the Supplementary Conditions, delivers to the other party written notice of the intent to submit the Claim to a court of competent jurisdiction, and within 60 days of the termination of the mediation institutes such formal proceeding.

ARTICLE 14 - MISCELLANEOUS

14.01 *Giving Notice*

A. Whenever any provision of the Contract Documents requires the giving of written notice, it will be deemed to have been validly given if: 1) delivered in person to the individual or to a member of the firm or to an officer of the corporation for whom it is intended, or 2) if delivered at or sent by registered or certified mail, postage prepaid, to the last business address known to the giver of the notice.

14.02 *Controlling Law*

A. This Contract is to be governed by the law of the state in which the Point of Destination is located.

B. In the case of any conflict between the express terms of this Contract and the Uniform Commercial Code, as adopted in the state whose law governs, it is the intent of the parties that the express terms of this Contract shall apply.

14.03 *Computation of Time*

A. When any period of time is referred to in the Contract Documents by days, it will be computed to exclude the first and include the last day of such period. If the last day of any such period falls on a Saturday or Sunday or on a day made a legal holiday by the law of the applicable jurisdiction, such day shall be omitted from the computation.

14.04 *Cumulative Remedies*

A. The duties and obligations imposed by these General Conditions and the rights and remedies available hereunder to the parties hereto are in addition to, and are not to be construed in any way as a limitation of, any rights and remedies available to any or all of them which are otherwise imposed or available by Laws or Regulations, by special warranty or guarantee, or by other provisions of the Contract Documents, and the provisions of this paragraph will be as effective as if repeated specifically in the Contract Documents in connection with each particular duty, obligation, right, and remedy to which they apply.

14.05 *Survival of Obligations*

A. All representations, indemnifications, warranties and guarantees made in, required by, or given in accordance with the Contract Documents, as well as all continuing obligations indicated in the

Copyright © 2010 National Society of Professional Engineers, American Council of Engineering Companies, American Society of Civil Engineers, and Associated General Contractors of America. All rights reserved.

Contract Documents, will survive final payment, completion, and acceptance of the Goods and Special Services and termination or completion of the Agreement.

14.06 *Entire Agreement*

A. Buyer and Seller agree that this Agreement is the complete and final agreement between them, and supersedes all prior negotiations, representations, or agreements, either written or oral. This Agreement may not be altered, modified, or amended except in writing signed by an authorized representative of both parties.

Copyright © 2010 National Society of Professional Engineers, American Council of Engineering Companies, American Society of Civil Engineers, and Associated General Contractors of America. All rights reserved.

SECTION 00800

SUPPLEMENTARY CONDITIONS

SECTION 00800

SUPPLEMENTARY CONDITIONS

PART 1 AMENDMENTS TO GENERAL CONDITIONS

These Supplementary Conditions amend or supplement the Standard Procurement General Conditions (EJCDC P-700, 2010 Edition) and other provisions of the Contract Documents as indicated below. All provisions which are not so amended or supplemented remain in full force and effect.

The terms used in these Supplementary Conditions have the meanings indicated in the General Conditions. Additional terms used in these Supplementary Conditions have the meanings indicated below, which are applicable to both the singular and plural thereof.

The address system used in the Supplementary Conditions is the same as the address system used in the General Conditions, with the prefix "SC" added thereto.

ARTICLE 1 – DEFINITIONS AND TERMINOLOGY

SC-1.01 Delete paragraph 1.01.A.8 in its entirety and insert the following in its place:

1.01A.8. Buyer—The individual or entity purchasing the Goods and Special Services. The Owner is not the Buyer.

SC-1.01 Delete paragraph 1.01.A.25 in its entirety.

SC-1.01 Delete paragraph 1.01A.33 in its entirety and insert the following in its place:

1.01A.33. Specifications – Sections included under Division 1 through Division 16 of the Project Manual.

SC-1.01 Add the following new paragraphs immediately after paragraph 1.01A.36:

1.01A.37. Supplier – A manufacturer, fabricator, supplier, distributer, materialman, or vendor having a direct contract with Seller to furnish materials or equipment to be incorporated in the Goods or used to provide Special Services by the Seller.

1.01A.38. Construction Contractor - The person, firm or corporation with whom the Owner will enter into a contract to act as the Buyer and for the general construction of and the installation of the Seller's Goods and performance of Special Services.

1.01A.38. Owner - The Town of Vernon.

ARTICLE 2 – PRELIMINARY MATTERS

SC-2.03 Delete paragraph 2.03A in its entirety and insert the following in its place:

2.03A Owner shall furnish to Seller up to one printed or hard copy of the Contract Documents, and one copy in electronic portable document format (PDF). Additional copies will be furnished upon request at the cost of reproduction.

SC-2.06 Delete Paragraph 2.06 in its entirety.

ARTICLE 3 –CONTRACT DOCUMENTS: INTENT AND AMENDING

SC-3.01 Amend Paragraph 3.01.B by striking out the following text: "to produce or furnish" and replacing with the text "to achieve the specified process parameters or furnish".

SC-3.01 Add the following new paragraph immediately after paragraph 3.01C:

3.01D Each and every provision of law and clause required by law to be inserted in these Contract Documents shall be deemed to be inserted herein, and they shall be read and enforced as though it were included herein, and if through mistake or otherwise, any such provision is not inserted, or if not correctly inserted, then upon the application of either party, the Contract Documents shall forthwith be physically amended to make such insertion.

ARTICLE 4 – BONDS AND INSURANCE

SC-4.01 Delete 4.01A in its entirety and insert the following in its place:

4.01A Seller shall furnish to Buyer performance bonds in an amount at least equal to the Contract Price (The total Capital Cost indicated in Paragraph 5.3A of the Bid Form), as security for the faithful performance of all of Seller's obligations under the Contract Documents. This bond shall remain in effect until 1) one year after the date when final payment becomes due 2) completion of the correction period specified in Paragraph 8.03 or 3) completion of the requirements of the performance guarantee specified in Division 11, whichever is later, except as provided otherwise by Laws or Regulations or by the Contract Documents. Seller shall also furnish such other bonds as are required by the Contract Documents. The performance bond shall be a dual oblige bond listing both the Construction Contractor and the Owner (Town of Vernon) as Dual Obligees.

SC-4.01 Add the following new paragraphs immediately after Paragraph 4.01.C:

4.01D The performance bond shall also guarantee that the installed system meets or exceeds the performance requirements and the Seller's Process Performance Guarantee included in Division 11 of the Specifications.

4.01E In the event that the performance guarantee requirements of the Division 11 of the Specifications are not met, the Seller shall propose corrective measures to bring the system into conformance as specified in Division 11 at the expense of the Seller. Corrective measures that increase Operation and Maintenance costs beyond guaranteed levels shall be

subject to a penalty. The performance bond shall be called upon to address any shortcomings of the System provided by the Seller and any other contractual obligations of the Seller.

ARTICLE 5 – SELLER'S RESPONSIBILITIES

SC-5.05 Add the following new paragraphs immediately after paragraph 5.05A:

5.05B Owner is exempt from payment of sales and compensating use taxes of the State of Connecticut and of cities and counties thereof on all materials and equipment to be incorporated into the Project facilities.

5.05B.1 Owner will furnish the required certificates of tax exemption to Seller with respect to materials and equipment to be incorporated into the Project facilities.

5.05B.2 Owner's exemption does not apply to construction tools, machinery, equipment, or other property purchased by or leased by Seller, or to supplies or materials not incorporated into the Project facilities.

5.05B.3 The Contract Price does not include the cost of sales or compensating use taxes to the extent such are exempted by this paragraph.

SC-5.06 Add the following new paragraphs immediately after Paragraph 5.06.E:

5.06F Seller shall furnish required submittals with sufficient information and accuracy in order to obtain required approval of an item with no more than three submittals. Engineer will record Engineer's time for reviewing subsequent submittals of Shop Drawings, samples, or other items requiring approval and Seller shall reimburse Buyer for Engineer's charges for such time.

5.06G In the event that Seller requests a change of a previously approved item, Seller shall reimburse Buyer for Engineer's charges for its review time unless the need for such change is beyond the control of Seller.

SC-5.07 Amend Paragraph 5.07.A by striking out the following language at the start of the paragraph: "Seller shall adhere to the progress schedule established in accordance with Paragraph 2.06.A, and". Then capitalize the word, "the" which precedes the word "Goods" in this paragraph.

ARTICLE 6 – SHIPPING AND DELIVERY

SC-6.02 Delete paragraphs 6.02.C and 6.02.D in their entirety.

ARTICLE 8 – BUYER'S RIGHTS

SC-8.02 Amend Paragraph 8.02.B.1 by inserting the words "repair of" in front of the words "remove and replace" in the 3rd line.

ARTICLE 10 - PAYMENT

SC-10.03 Add the following new paragraph immediately after paragraph 10.03.A:

10.03B Seller shall request payment from Buyer according to the following project milestones:

0% upon completion of preliminary submittals/shop drawings

0% upon receipt of Purchase Order from Buyer for equipment

10% upon completion of shop drawings (10% cumulative total)

60% upon delivery of equipment to the project site (70% cumulative total)

15% upon successful startup of equipment (85% cumulative total)

15% upon successful completion of the first performance test as specified (100% cumulative total)

where the percentages indicated above represent the percentage of the Seller's contract price exclusive of the cost of the Seller's Two-Year Service Agreement. The above percentages are subject to retainage as specified in Section 00520.

10.03B Seller's Two-year Service Agreement shall be paid according to the following project milestones:

50% 12 months after partial substantial completion.

The 50% balance in equal amounts for each of the visits called for in the agreement for the second year.

where the percentages indicated above represent the percentage of the Seller's contract price for just the Seller's Two-Year Service Agreement.

ARTICLE 11 – CANCELLATION, SUSPENSION, AND TERMINATION

SC-11.03 Delete paragraph 11.03 in its entirety.

ARTICLE 12 – LICENSES AND DISPUTE RESOLUTION

SC-12.01 Add the following to the end of Paragraph 12.01A: "In the event the Seller is manufacturing to Owner's design, Owner retains all intellectual property rights in such design excluding Seller's proprietary intellectual property and any improvements to

Seller's proprietary intellectual property which shall be and remain the sole and exclusive property of Seller."

ARTICLE 13 – DISPUTE RESOLUTION

SC-13.01 Delete paragraph 13.01 in its entirety and insert the following in its place:

13.01 Methods and Procedures

13.01A Disputes Subject to Final Resolution: The following disputed matters are subject to final resolution under the provisions of this Article:

13.01A.1 A timely appeal of an approval in part and denial in part of a Claim, or of a denial in full; and

13.01A.2 Disputes between Owner and Seller concerning the Work or obligations under the Contract Documents, and arising after final payment has been made.

13.01B Final Resolution of Disputes: For any dispute subject to resolution under this Article, Owner or Seller may:

13.01B.1 elect in writing to invoke the dispute resolution process provided for in the Supplementary Conditions; or

13.01B.2 agree with the other party to submit the dispute to another dispute resolution process; or

13.01B.3 if no dispute resolution process is provided for in the Supplementary Conditions or mutually agreed to, give written notice to the other party of the intent to submit the dispute to a court of competent jurisdiction.

ARTICLE 14 - MISCELLANEOUS

SC-14.07 Add the following new paragraphs immediately after paragraph 14.06:

14.07 American Iron and Steel

14.07A The Seller acknowledges to and for the benefit of the Owner and the State of Connecticut (the "State") that it understands the goods and services under this Agreement are being funded with monies made available by the Clean Water State Revolving Fund and/or Drinking Water State Revolving Fund that have statutory requirements commonly known as "American Iron and Steel;" that requires all of the iron and steel products used in the project to be produced in the United States ("American Iron and Steel Requirement") including iron and steel products provided by the Seller pursuant to this Agreement. The Seller hereby represents and warrants to and for the benefit of the Owner and the State that (a) the

Seller has reviewed and understands the American Iron and Steel Requirement, (b) all of the iron and steel products used in the project will be and/or have been produced in the United States in a manner that complies with the American Iron and Steel Requirement, unless a waiver of the requirement is approved, and (c) the Seller will provide any further verified information, certification or assurance of compliance with this paragraph, or information necessary to support a waiver of the American Iron and Steel Requirement, as may be requested by the Owner or the State. Notwithstanding any other provisions of this Agreement, any failure to comply with this paragraph by the Seller shall permit the Owner or State to recover as damages against the Seller any loss, expense, or cost (including without limitation attorney's fees) incurred by the Buyer, Owner, or State resulting from any such failure (including without limitation any impairment or loss of funding, whether in whole or in part, from the State or any damages owed to the State by the Buyer or Owner). While the Seller has no direct contractual privity with the State, as a lender to the Owner for the funding of its project, the Owner and the Seller agree that the State is a third-party beneficiary and neither this paragraph (nor any other provision of this Agreement necessary to give this paragraph force or effect) shall be amended or waived without the prior written consent of the State.

14.07B For the purpose of the American Iron and Steel requirement, an iron or steel product is one of the following made primarily of iron or steel (greater than 50% iron or steel, measured by cost):

- Lined or unlined pipes or fittings
- Manhole covers
- Municipal castings (see below)
- Hydrants
- Tanks
- Flanges
- Pipe clamps and restraints
- Valves
- Structural steel (see below)
- Construction materials (see below)
- Reinforced precast concrete (see below)

14.07C Production in the United States of the iron or steel products used in the project requires that all manufacturing processes, including application of coatings, must take place in the United States, with the exception of metallurgical processing involving refinement of steel additives. All manufacturing processes includes processes such as melting, refining, forming, rolling, drawing, finishing, fabricating and coating. Further, if a domestic iron and steel product is taken out of the US for any part of the manufacturing process, it becomes foreign source material. However, raw materials such as iron ore, limestone and iron and steel scrap are not covered by the AIS requirement, and the material(s), if any, being applied as a coating are similarly not covered. Non-iron or steel components of an iron and steel product may come from non-US sources.

14.07D Municipal castings are cast iron or steel infrastructure products that are melted and cast. Examples of municipal castings are:

- Access hatches
- Ballast screen
- Benches (iron or steel)
- Bollards
- Cast bases
- Cast iron hinged hatches
- Cast iron riser rings
- Catch basin inlet
- Cleanout/monument boxes
- Construction covers and frames
- Curb and corner guards
- Curb openings
- Detectable warning plates
- Downspout shoes (boot, inlet)
- Drainage grates, frames, and curb inlets
- Inlets
- Junction boxes
- Lampposts
- Manhole covers, rings and frames, risers
- Meter boxes
- Service boxes
- Steel hinged hatches
- Steel riser rings
- Trash receptacles
- Tree grates
- Tree guards
- Trench grates
- Valve boxes, covers and risers

14.07E Structural steel is rolled flanged shapes, having at least one dimension of their cross-section three inches or greater, which are used in the construction of bridges, buildings, ships, railroad rolling stock, and for numerous other constructional purposes. Such shapes are designated as wide-flange shapes, standard I-beams, channels, angles, tees and zees. Other shapes include H-piles, sheet piling, tie plates, cross ties, and those for other special purposes.

14.07F Construction materials are those articles, materials, or supplies made primarily of iron and steel (greater than 50% iron or steel, measured by cost), that are permanently incorporated into the project, not including mechanical and/or electrical components, equipment and systems. This includes, but is not limited to, the following products: wire rod, bar, angles, concrete reinforcing bar, wire, wire cloth, wire rope and cables, tubing, framing, joists, trusses, fasteners (ie., nuts and bolts), welding rods, decking, grating, railings, stairs, access ramps, fire escapes, ladders, wall panels, dome structures, roofing, ductwork, surface drains, cable hanging systems, manhole steps, fencing and fence tubing, guardrails, doors, and stationary screens.

14.07G Mechanical and electrical components, equipment and systems are not considered construction materials. Mechanical equipment is typically that which has motorized parts and/or is powered by a motor. Electrical equipment is typically any machine powered by electricity and includes components that are part of the electrical distribution system. The following examples (including their appurtenances necessary for their intended use and operation) are not considered construction materials: pumps, motors, gear reducers, drives, electric/pneumatic/manual accessories used to operate valves, mixers, gates, motorized screens, blowers/aeration equipment, compressors, meters, sensors, controls and switches, SCADA, membrane bioreactor systems, membrane filtration systems, filters, clarifiers and clarifier mechanisms, rakes, grinders, disinfection systems, presses, conveyors, cranes, HVAC (excluding ductwork), water heaters, heat exchangers, generators, cabinetry and housings, lighting fixtures, electrical conduit, emergency life systems, metal office furniture, shelving, laboratory equipment, analytical instrumentation, and dewatering equipment.

14.07H Reinforced precast concrete: the reinforcing bar and wire must be produced in the US and meet the same standards as for any other iron or steel product. Additionally, the casting of the concrete product must take place in the US. The cement and other raw materials used in concrete production are not required to be of domestic origin.

14.07I The EPA has granted a national De Minimis waiver, which applies to incidental materials used in and incorporated into the project. Individual De Minimis items may not exceed 1% of the total cost of materials used in and incorporated into the project. De Minimis items cumulatively may comprise no more than 5% of the total cost of materials used in and incorporated into the project. To claim coverage under the De Minimis waiver, Contractor shall determine which items are to be covered under the waiver and submit relevant documentation such as invoices to confirm compliance with the De Minimis waiver requirements.

14.07J Refer to Section 01330 for further information on documenting compliance with the American Iron and Steel requirement.

SC-14.08 Add the following new paragraph immediately after paragraph 14.07:

14.08 State and Federal Government Provisions - Comply with the applicable provisions of the State and Federal Requirements included in Part II of the Supplementary Conditions.

PART II – FEDERAL AND STATE GOVERNMENT PROVISIONS

Federal and State Government Provisions referenced or included herein, have been selected from those to which specific references have been made elsewhere in the Contract Documents. Each and

every other provision of law or clause required by law to be inserted in this Contract shall be deemed to be also inserted herein in accordance with paragraph 3.01.D of the Supplementary Conditions.

1.0 FEDERAL GOVERNMENT PROVISIONS – (NOT USED)

2.0 STATE PROVISIONS

2.1 The Owner and Seller agree that the following State Provisions apply to the Goods to be furnished and the Special Services to be provided under this Contract and that these provisions supersede any conflicting provisions of this Contract.

2.2 Applicable provisions of Connecticut General Statutes and Regulations and/or the United States Code and Code of Federal Regulations govern this Contract and any provision in violation of the foregoing shall be deemed null, void and of no effect. Where conflict between Code of Federal Regulations and State Statutes and Regulations exist, the more stringent requirements shall apply.

2.3 This project is subject to the Safety and Health Regulations of the U.S. Department of Labor set forth in Title 29 CFR, Part 1926 and to all subsequent amendments, and to the Connecticut Department of Labor Regulations. Seller shall be familiar with the requirements of these regulations.

2.4 Connecticut Executive Orders No. 3 and No. 17. See Attachment A of these Supplementary Conditions.

2.5 Regulations of Connecticut State Agencies

2.4.1 Section 22a-482, Clean Water Fund. See Attachment B of these Supplementary Conditions.

2.6 American Iron and Steel

2.6.1 Refer to Attachment C for further clarification on the American Iron and Steel requirements.

END OF SECTION

J:\V\V0037 Vernon WWTP\005 WPCF Design\Design\Specifications\Preselection\IFAS\00800-P.doc

ATTACHMENTS TO SUPPLEMENTARY CONDITIONS

ATTACHMENT A

Connecticut Executive Orders

Connecticut State Library

State Of Connecticut
By His Excellency
Thomas J. Meskill
Governor

Executive Order No. Three

WHEREAS, sections 4-61d(b) and 4-114a of the 1969 supplement to the general statutes require nondiscrimination clauses in state contracts and subcontracts for construction on public buildings, other public works and goods and services, and

WHEREAS, section 4-61e(c) of the 1969 supplement to the general statutes requires the labor department to encourage and enforce compliance with this policy by both employers and labor unions, and to promote equal employment opportunities, and

WHEREAS, the government of this state recognizes the duty and desirability of its leadership in providing equal employment opportunity, by implementing these laws,

NOW, THEREFORE, I, THOMAS J. MESKILL, Governor of the State of Connecticut, acting by virtue of the authority vested in me under section twelve of article fourth of the constitution of the state, as supplemented by section 3-1 of the general statutes, do hereby ORDER and DIRECT, as follows, by this Executive Order:

I. The labor commissioner shall be responsible for the administration of this Order and shall adopt such regulations as he deems necessary and appropriate to achieve the purposes of this Order. Upon the promulgation of this Order, the commissioner of finance and control shall issue a directive forthwith to all state agencies, that henceforth all state contracts and subcontracts for construction on public buildings, other public works and goods and services shall contain a provision rendering such contract or subcontract subject to this Order, and that such contract or subcontract may be cancelled, terminated or suspended by the labor commissioner for violation of or noncompliance with this Order or state or federal laws concerning nondiscrimination, notwithstanding that the labor commissioner is not a party to such contract or subcontract.

II. Each contractor having a contract containing the provisions prescribed in section 4-114a of the 1969 supplement to the general statutes, shall file, and shall cause each of his subcontractors to file, compliance reports with the contracting agency or the labor commissioner, as may be directed. Such reports shall be filed within such times and shall contain such information as to employment policies and statistics of the contractor and each subcontractor, and shall be in such form as the labor commissioner may prescribe. Bidders or prospective contractors or subcontractors may be required to state whether they have participated in any previous contract subject to the provisions of this Order or any preceding similar Order, and in that event to submit on behalf of themselves and their proposed subcontractors compliance reports prior to or as an initial part of their bid or negotiation of a contract.

III. Whenever the contractor or subcontractor has a collective bargaining agreement or other contract or understanding with a labor organization or employment agency as defined in section 31-122 of the general statutes, the compliance report shall identify the said organization or agency and the contracting agency or the labor commissioner may require a compliance report to be filed with the

contracting agency or the labor commissioner, as may be directed, by such organization or agency, signed by an authorized officer or agent of such organization or agency, with supporting information, to the effect that the signer's practices and policies, including but not limited to matters concerning personnel, training, apprenticeship, membership, grievance and representation, and upgrading, do not discriminate on grounds of race, color, religious creed, age, sex or national origin, or ancestry of any individual, and that the signer will either affirmatively cooperate in the implementation of the policy and provisions of this Order, or that it consents and agrees that recruitment, employment and the terms and conditions of employment under the proposed contract shall be in accordance with the purposes and provisions of the Order.

IV. The labor commissioner may by regulation exempt certain classes of contracts, subcontracts or purchase orders from the implementation of this Order, for standard commercial supplies or raw materials, for less than specified amounts of money or numbers of workers or for subcontractors below a specified tier. The labor commissioner may also provide by regulation for the exemption of facilities of a contractor which are in all respects separate and distinct from activities of the contractor related to the performance of the state contract, provided only that such exemption will not interfere with or impede the implementation of this Order, and provided further, that in the absence of such an exemption, all facilities shall be covered by the provisions of this Order.

V. Each contracting agency shall be primarily responsible for obtaining compliance with the regulations of the labor commissioner with respect to contracts entered into by such agency or its contractors. All contracting agencies shall comply with the regulations of the labor commissioner in discharging their primary responsibility for securing compliance with the provisions of contracts and otherwise with the terms of this Order and of the regulations of the labor commissioner issued pursuant to this Order. They are directed to cooperate with the labor commissioner and to furnish the labor commissioner such information and assistance as he may require in the performance of his functions under this Order. They are further directed to appoint or designate from among the personnel of each agency, compliance officers, whose duty shall be to seek compliance with the objectives of this Order by conference, conciliation, mediation, or persuasion.

VI. The labor commissioner may investigate the employment practices and procedures of any state contractor or subcontractor and the practices and policies of any labor organization or employment agency hereinabove described, relating to employment under the state contract, as concerns nondiscrimination by such organization or agency as hereinabove described, or the labor commissioner may initiate such investigation by the appropriate contract agency, to determine whether or not the contractual provisions hereinabove specified or statutes of the state respecting them have been violated. Such investigation shall be conducted in accordance with the procedures established by the labor commissioner and the investigating agency shall report to the labor commissioner any action taken or recommended.

VII. The labor commissioner shall receive and investigate or cause to be investigated complaints by employees or prospective employees of a state contractor or subcontractor or members or applicants for membership or apprenticeship or training in a labor organization or employment agency hereinabove described, which allege discrimination contrary to the contractual provisions specified hereinabove or state statutes requiring nondiscrimination in employment opportunity. If this investigation is conducted for the labor commissioner by a contracting agency, that agency shall report to the labor commissioner what action has been taken or is recommended with regard to such complaints.

VIII. The labor commissioner shall use his best efforts, directly and through contracting agencies, other interested federal, state and local agencies, contractors and all other available instrumentalities, including the commission on human rights and opportunities, the executive committee on human

rights and opportunities, ad the apprenticeship council under its mandate to provide advice and counsel to the labor commissioner in providing equal employment opportunities to all apprentices and to provide training, employment and upgrading opportunities for disadvantages workers, in accordance with section 31-51(d) of the 1969 supplement to the general statutes, to cause any labor organization or any employment agency whose members are engaged in work under government contracts or referring workers or providing supervising apprenticeship or training for or in the course of work under a state contract or subcontract to cooperate in the implementation of the purposes of this Order. The labor commissioner shall in appropriate cases notify the commission on human rights and opportunities or other appropriate state or federal agencies whenever it has reason to believe that the practices of any such organization or agency violate equal employment opportunity requirements of state or federal law.

IX. The labor commissioner or any agency officer or employee in the executive branch designated by regulation of the labor commissioner may hold such hearings, public or private, as the labor commissioner may deem advisable for compliance, enforcement or educational purposes under this Order.

X. (a) The labor commissioner may hold or cause to be held hearings, prior to imposing ordering or recommending the imposition of penalties and sanctions under this Order. No order for disbarment of any contractor from further state contracts shall be made without affording the contractor an opportunity for a hearing. In accordance with such regulations as the labor commissioner may adopt, the commissioner or the appropriate contracting agency may

1. Publish or cause to be published the names of contractors or labor organizations or employment agencies as hereinabove described which it has concluded have complied or failed to comply with the provisions of this Order or the regulations of the labor commissioner in implementing this Order.

2. Recommend to the commission on human rights and opportunities that in cases in which there is substantial or material violation or threat thereof of the contractual provision or related state statutes concerned herein, appropriate proceedings be brought to enforce them, including proceedings by the commission on its own motion under chapter 563 of the general statutes and the enjoining, within the limitations of applicable law, of organizations, individuals or groups who prevent directly or indirectly compliance with the provisions of this Order.

3. Recommend that criminal proceedings be brought under chapter 939 of the general statutes.

4. Cancel, terminate, suspend or cause to be cancelled, terminated, or suspended in accordance with law any contract or any portion or portions thereof for failure of the contractor or subcontractor to comply with the nondiscrimination provisions of the contract. Contracts may be cancelled, terminated, suspended absolutely or their continuance conditioned upon a program for future compliance approved by the contracting agency.

5. Provide that any contracting agency shall refrain from entering into any further contracts or extensions or modifications of existing contracts with any contractor until he has satisfied the labor commissioner that he has established and will carry out personnel and employment policies compliant with this Order.

6. Under regulations prescribed by the labor commissioner each contracting agency shall make reasonable efforts with a reasonable period of time to secure compliance with the contract provisions of this Order by methods of conference, conciliation, mediation or persuasion, before other proceedings shall be instituted under this Order or before a state contract shall

be cancelled or terminated in whole or in part for failure of the contractor or subcontractor to comply with the contract provisions of state statute and this Order.

(b) Any contracting agency taking any action authorized by this Order, whether on its own motion or as directed by the labor commissioner or pursuant to his regulations shall promptly notify him of such action. Whenever the labor commissioner makes a determination under this Order, he shall promptly notify the appropriate contracting agency and other interested federal, state and local agencies of the action recommended. The state and local agency or agencies shall take such action and shall report the results thereof to the labor commissioner within such time as he shall specify.

XI. If the labor commissioner shall so direct, contracting agencies shall not enter into contracts with any bidder or prospective contractor unless he has satisfactorily complied with the provisions of this Order, or submits a program for compliance acceptable to the labor commissioner, or if the labor commissioner so authorizes, to the contracting agency.

XII. Whenever a contracting agency cancels or terminates a contract, or a contractor has been disbarred from further government contracts because of noncompliance with the contract provisions with regard to nondiscrimination, the labor commissioner or the contracting agency shall rescind such disbarment, upon the satisfaction of the labor commissioner that the contractor has purged himself of such noncompliance and will thenceforth carry out personnel and employment policies of nondiscrimination in compliance with the provision of this Order.

XIII. The labor commissioner may delegate to any officer; agency or employee in the executive branch any function or duty of the labor commissioner under this Order except authority to promulgate regulations of a general nature.

XIV. This Executive Order supplements the Executive Order issued on September 28, 1967. All regulations, orders, instructions, designations and other directives issued heretofore in these premises, including those issued by the heads of various departments or agencies under or pursuant to prior order or statute, shall remain in full force and effect, unless and until revoked or superceded by appropriate authority, to the extent that they are not inconsistent with this Order.

This Order shall become effective thirty days after the date of this Order.

Dated at Hartford, Connecticut, this 16th day of June, 1971

Thomas J. Meskill
Governor

Filed this 16th day of
June, 1971.

Harry Hammer
Secretary Of The State

Connecticut State Library

State Of Connecticut
By His Excellency
Thomas J. Meskill
Governor

Executive Order No. Seventeen

WHEREAS, Section 31-237 of the General Statutes of Connecticut as amended requires the maintaining of the established free services of the Connecticut State Employment Service to both employers and prospective employees and

WHEREAS, Section 31-5 of the General Statutes of Connecticut requires that no compensation or fee shall be charged or received directly or indirectly for the services of the Connecticut State Employment Service and

WHEREAS, large numbers of our citizens who have served in the Armed Forces of our nation are returning to civilian life in our state and seeking employment in civilian occupations and

WHEREAS, we owe a duty as well as gratitude to these returning veterans including the duty to find suitable employment for them and

WHEREAS, many of our handicapped citizens are fully capable of employment and are entitled to be placed in suitable employment and

WHEREAS, many of the citizens of our state who are unemployed are unaware of the job openings and employment opportunities which do in fact exist in our state and

WHEREAS, notwithstanding the free services of the Connecticut State Employment Service, many of our Connecticut employers do not use its free services or do not avail themselves fully of all the services offered,

NOW, THEREFORE, I, THOMAS J. MESKILL, Governor of the State of Connecticut, acting by virtue of the authority vested in me under the fourth article of the Constitution of the State and in accordance with Section 3-1 of the General Statutes, do hereby ORDER and direct, as follows, by this Executive Order:

I. The Labor Commissioner shall be responsible for the administration of this Order and shall do all acts necessary and appropriate to achieve its purpose. Upon promulgation of this Order, the Commissioner of Finance and Control shall issue a directive forthwith to all state agencies, that henceforth all state contracts and subcontracts for construction on public buildings, other public works and goods and services shall contain a provision rendering such contract or subcontract subject to this Order, and that such contract or subcontract may be cancelled, terminated or suspended by the Labor Commissioner for violation of or noncompliance with this Order, notwithstanding that the Labor Commissioner is not a party to such contract or subcontract.

II. Every contractor and subcontractor having a contract with the state or any of its agencies, boards, commissions, or departments, every individual partnership, corporation, or business entity having business with the state or who or which seeks to do business with the state, and every bidder or

prospective bidder who submits a bid or replies to an invitation to bid on any state contract shall list all employment openings with the office of the Connecticut State Employment Service in the area where the work is to be performed or where the services are to be rendered.

III. All state contracts shall contain a clause which shall be a condition of the contract that the contractor and any subcontractor holding a contract directly under the contractor shall list al employment openings with the Connecticut State Employment Service. The Labor Commissioner may allow exceptions to listings of employment openings which the contractor proposes to fill from within its organization from employees on the rolls of the contractor on the date of publication of the invitation to bid or the date on which the public announcement was published or promulgated advising of the program concerned.

IV. Each contracting agency of the state shall be primarily responsible for obtaining compliance with this Executive Order. Each contracting agency shall appoint or designate from among its personnel one or more persons who shall be responsible for compliance with the objectives of this Order.

V. The Labor Commissioner shall be and is hereby empowered to inspect the books, records, payroll and personnel data of each individual or business entity subject to this Executive Order and may hold hearings or conferences, formal or informal, in pursuance of the duties and responsibilities hereunto delegated to the Labor Commissioner.

VI. The Labor Commissioner or any agency officer or employee in the executive branch designated by regulation of the Labor Commissioner may hold such hearings, public or private, as the Labor Commissioner may deem advisable for compliance, enforcement or educational purposes under this Order.

VII. (a) The Labor Commissioner may hold or cause to be held hearings, prior to imposing, ordering, or recommending the imposition of penalties and sanctions under this Order. In accordance herewith, the Commissioner or the appropriate contracting agency may suspend, cancel, terminate, or cause to be suspended, cancelled, or terminated in accordance with law any contract or portion or portions thereof for failure of the contractor or subcontractor to comply with the listing provisions of the contract. Contracts may be cancelled, terminated, suspended absolutely or their continuance conditioned upon a program for future compliance approved by the contracting agency.

(b) Any contracting agency taking any action authorized by this Order, whether on its own motion or as directed by the Labor Commissioner, shall promptly notify him of such action. Whenever the Labor Commissioner makes a determination under this Order, he shall promptly notify the appropriate contracting agency of the action recommended. The agency shall report the results to the Labor Commissioner promptly.

VIII. If the Labor Commissioner shall so direct, contracting agencies shall not enter into contracts with any bidder or prospective contractor unless he has satisfactorily complied with the provisions of this Order.

This Order shall become effective sixty days after the date of this Order.

Dated at Hartford, Connecticut, this 15th day of February 1973.

Thomas J. Meskill
Governor

ATTACHMENT B

State Required Construction Contract Provisions Under Department of Environmental Protection's Clean Water Fund

REQUIRED CONSTRUCTION CONTRACT PROVISIONS
UNDER THE CONNECTICUT DEPARTMENT OF ENVIRONMENTAL PROTECTION'S
CLEAN WATER FUND

Sec. 22a-482-4 (g) Required Provisions for Construction Contracts.

Municipalities must include, when appropriate, the following clauses or their equivalent in each subagreement and may substitute other terms for "grantee" and "contractor" in their subagreements.

(1) Supersession. The municipality and the contractor agree that the following general provisions or their equivalent apply to eligible work to be performed under this contract and that these provisions supersede any conflicting provisions of this contract;

(2) Privity of contract. This contract is expected to be funded in part by the State of Connecticut. Neither the State, nor any of its departments, agencies, or employees is or will be a party to this contract or any lower tier subcontract. This contract is to be subject to regulations adopted in accordance with Section 22a-482 of the Connecticut General Statutes.

(3) Changes for contracts for construction.

(A) The municipality may, at any time, without notice to any surety, by written order designated or indicated to be a change order, make any change in the work within the general scope of the subagreement, including but not limited to changes:

(i) In the specifications (including drawings and designs);

(ii) In the time, method, or manner of performance of the work;

(iii) In the municipality-furnished facilities, equipment, materials, services, or site; or

(iv) Directing acceleration in the performance of the work.

(B) A change order shall also be any other written or oral order (including direction, instruction, interpretation or determination) from the municipality which causes any change, provided the contractor gives the municipality written notice stating the date, circumstances, and source of the order and that the contractor regards the order as a change order.

(C) Except as provided in this clause, no order, statement, or conduct of the municipality shall be treated as a change under this clause or entitle the contractor to an equitable adjustment.

(D) If any change under this clause causes an increase or decrease in the contractor's cost or the time required to perform any part of the work under this contract, whether or not changed by any order, an equitable adjustment shall be made and the subagreement modified in writing. However, for claims based on defective specifications, no claim for any change under (B) above shall be allowed for any costs incurred more than 20 days before the contractor gives written notice as required in paragraph (B). In the case of defective specifications for which the municipality is responsible, the equitable adjustment shall include any increased cost reasonably incurred by the contractor in attempting to comply with those defective specifications.

(E) If the contractor intends to assert a claim for an equitable adjustment under this clause, he must, within thirty (30) days after receipt of a written change order under (A) of this change clause or the furnishing of a written notice under (B) of this clause, submit to the grantee a written statement setting forth the general nature and monetary extent of such claim. The municipality may extend the 30-day period. The statement of claim may be included in the notice under (B) of this clause.

(F) No claim by the contractor for an equitable adjustment shall be allowed if made after final payment under this contract.

(4) Changes for contracts for supplies.

(A) The municipality may at any time, by a written order and without notice to the sureties, make changes within the general scope of this subagreement in any one or more of the following:

(i) Drawings, designs, or specifications, where the supplies to be furnished are to be specially manufactured for the municipality;

(ii) Method of shipment or packing; and

(iii) Place of delivery.

(B) If any change causes an increase or decrease in the cost or the time required to perform any part of the work under this subagreement, whether or not changed by any such order, an equitable adjustment shall be made in the subagreement price or delivery schedule, or both, and the subagreement shall be modified in writing. Any claim by the contractor for adjustment under this clause must be asserted within 30 days from the date of receipt by the contractor of the notification of change. If the municipality decides that the facts justify such action, the municipality may receive and act upon any such claim asserted at any time before final payment under this subagreement. Where the cost of property made obsolete or excess as a result of a change is included in the contractor's claim for adjustment, the grantee shall have the right to prescribe the manner of disposition of such property. Nothing in this clause shall excuse the contractor from proceeding with the subagreement as changed.

(5) Differing site conditions.

(A) The contractor shall promptly, and before such conditions are disturbed, notify the municipality in writing of:

(i) Subsurface or latent physical conditions at the site differing materially from those indicated in this subagreement; or

(ii) Unknown physical conditions at the site, of an unusual nature, differing materially from those ordinarily encountered and generally recognized as inherent in work of the character provided for in this subagreement. The municipality shall promptly investigate the conditions and, if it finds that conditions are materially different and will cause an increase or decrease in the contractor's cost or the time required to perform any part of the work under this

subagreement, whether or not changed as a result of such conditions, an equitable adjustment shall be made and the subagreement modified in writing.

(B) No claim of the contractor under this clause shall be allowed unless the contractor has given notice required in (A) of this clause. However, the municipality may extend the prescribed time.

(C) No claim by the contractor for an equitable adjustment shall be allowed if asserted after final payment under this subagreement.

(6) Suspension of work.

(A) The municipality may order the Contractor, in writing, to suspend, delay, or interrupt all or any part of the work for such period of time as the municipality may determine to be appropriate for the convenience of the municipality.

(B) If the performance of all or any part of the work is suspended, delayed, or interrupted for an unreasonable period of time by an act of the municipality in administration of the contract, (or if no time is specified, within a reasonable time), an adjustment shall be made for any increase in the cost of performance of this contract (excluding profit) necessarily caused by such unreasonable suspension, delay, or interruption and the contract modified in writing. However, no adjustment shall be made under this clause for any suspension, delay, or interruption to the extent that performance would have been so suspended, delayed, or interrupted by any other cause, including the fault or negligence of the contractor, or for which an equitable adjustment is provided for or excluded under any other provision of the contract.

(C) No claim under this clause shall be allowed for any costs incurred more than 20 days before the contractor notified the municipality in writing of the act or failure to act involved (this requirement does not apply to a claim resulting from a suspension order), and unless the claim, in an amount stated, is asserted in writing as soon as practicable after the termination of such suspension, delay, or interruption, but not later than the date of final payment under the contract.

(7) Termination.

(A) This contract may be terminated in whole or in part in writing by either party in the event of substantial failure by the party to fulfill its obligations under this subagreement through no fault of the terminating party, provided that no termination may be effected unless the other party is given not less than ten (10) calendar days written notice (delivered by certified mail, return receipt requested) of intent to terminate and an opportunity for consultation with the terminating party prior to termination.

(B) This contract may be terminated in whole or in part in writing by the municipality for its convenience, provided that the contractor is given not excess than ten (10) calendar days written notice (delivered by certified mail, return receipt requested) of intent to terminate and an opportunity for consultation with the terminating party prior to termination.

(C) If termination for default is effected by the municipality, an equitable adjustment in the price provided for in this contract shall be made but no amount shall be allowed for anticipated profit on unperformed services or other work, and any payment due to the contractor at the time of termination may be adjusted to cover any additional costs to the municipality because of the contractor's default. If termination for default is effected by the contractor, or if termination for convenience is effected by the municipality, the equitable adjustment shall include a reasonable profit for services or other work performed. The equitable adjustment for any termination shall provide for payment to the contractor for services rendered and expenses incurred prior to the termination in addition to termination settlement costs reasonably incurred by the contractor relating to commitments which had become firm prior to the termination.

(D) Upon receipt of a termination action pursuant to (A) or (B) above, the contractor shall promptly discontinue all services affected (unless the notice directs otherwise), and deliver or otherwise make available to the recipient all data, drawings, specifications, reports, estimates, summaries and such other information and materials as may have been accumulated by the contractor in performing this contract whether completed or in process.

(E) Upon termination under (A) or (B) of this clause the municipality may take over the work and may award another party a contract to complete the work under this contract.

(F) If, after termination for failure of the contractor to fulfill contractual obligations, it is determined that the contractor had not failed to fulfill contractual obligations, the termination shall be deemed to have been for the convenience of the municipality. In such event, adjustment of the price provided for in this contract shall be made as provided in (C) of this clause.

(8) Remedies. Except as may be otherwise provided in this contract, all claims, counterclaims, disputes, and other matters in question between the municipality and the contractor arising out of or relating to this contract or the breach thereof will be decided by arbitration if the parties mutually agree or in a court of competent jurisdiction within the district in which the municipality is located.

(9) Price reduction for defective cost or pricing data.

NOTE - This clause is applicable to any contract negotiated between the municipality and its contractor in excess of $500,000; negotiated change orders in excess of $500,000 or 10 percent of the contract, whichever is less, affecting the price of a formally advertised, competitively awarded, fixed price contract; or any lower tier subcontract or purchase order in excess of $500,000 or 10 percent of the assistance agreement, whichever is less, under a contract other than a formally advertised, competitively awarded, fixed price subagreement. This clause is not applicable for contracts to the extent that they are awarded on the basis of effective price competition.

The contractor and subcontractor, where appropriate, warrant that cost and pricing data submitted for evaluation with respect to negotiation of prices for negotiated contracts, lower tier subcontracts and change orders is based on current, accurate, and complete data supported by their books and records. If the municipality or the Commissioner determines that any price (including profit) negotiated in connection with this contract, any lower tier

subcontract, or any amendment thereunder was increased by any significant sums because the data provided was incomplete, inaccurate, or not current at the time of submission, then such price, cost or profit shall be reduced accordingly, and the contract shall be modified in writing to reflect such reduction. Failure to agree on a reduction shall be subject to the remedies clause of this agreement.

NOTE - Since the contract is subject to reduction under this clause by reason of defective cost or pricing data submitted in connection with lower tier subcontracts, the contractor may wish to include a clause in each lower tier subcontract requiring the lower tier subcontractor to appropriately indemnify the contractor. It is also expected that any lower tier subcontractor subject to such indemnification will generally require substantially similar indemnification for defective cost or pricing data required to be submitted by lower tier contractors.

(10) Audit; Access to records.

(A) The contractor shall maintain books, records, documents, and other evidence directly pertinent to performance on grant work under this contract in accordance with generally accepted accounting principles and practices consistently applied. The contractor shall also maintain the financial information and data used by the contractor in the preparation or support of the cost submission required under Section 22a-482-4(g)(8) for any negotiated contract or change order and a copy of the cost summary submitted to the municipality. The municipality and the Commissioner or any of his authorized representatives shall have access to all such books, records, documents, and other evidence for the purpose of inspection, audit and copying during normal business hours. The contractor will provide proper facilities for such access and inspection.

(B) If this is a formally advertised, competitively awarded, fixed price contract, the contractor agrees to make (A) through (F) of this clause applicable to all negotiated change orders and contract amendments affecting the contract price. In the case of all other types of prime contracts, the contractor agrees to include (A) through (F) of this clause in all his subcontracts in excess of $10,000 and to make paragraphs (A) through (F) of this clause applicable to all change orders directly related to project performance.

(C) Audits conducted under this provision shall be in accordance with generally accepted auditing standards and established procedures and guidelines of the reviewing or audit departments and meeting the requirements of Section 20-282 of the Connecticut General Statutes.

(D) The contractor agrees to disclose all information and reports resulting from access to records under (A) and (B) of this clause.

(E) Records under (A) and (B) above shall be maintained and made available during performance on assisted work under this contract and until three years from the date of final State payment for the project. In addition, those records which relate to any dispute appeal arising under a grant assistance agreement, to litigation, to the settlement of claims arising out of such performance, or to costs or items to which an audit exception has been taken, shall be maintained and made available until three years after the date of resolution of such appeal, litigation, claim, or exception.

(F) This right of access clause (with respect to financial records) applies to:

(i) Negotiated prime subagreements;

(ii) Negotiated change orders or contract amendments in excess of $10,000 affecting the price of any formally advertised, competitively awarded, fixed price contract; and

(iii) Subcontracts or purchase orders under any contract other than a formally advertised, competitively awarded, fixed price contract. However, this right of access does not apply to a prime contract, lower tier subcontract, or purchase order awarded after effective price competition, except with respect to records pertaining directly to contract performance, (excluding any financial records of the contractor); if there is any indication that fraud, gross abuse, or corrupt practices may be involved or if the contract is terminated for default or for convenience.

(11) Covenant against contingent fees. The contractor warrants that no person or selling agency has been employed or retained to solicit or secure this contract upon an agreement or understanding for a commission, percentage, brokerage, or contingent fee, excepting bona fide employees or bona fide established commercial or selling agencies maintained by the contractor for the purpose of securing business. For breach or violation of this warranty the grantee shall have the right to annul this agreement without liability or, at its discretion, to deduct from the contract price or consideration, or otherwise recover the full amount of such commission, percentage, brokerage, or contingent fee.

(12) Gratuities.

(A) If the municipality finds, after a notice and hearing, that the contractor, or any of the contractor's agents or representatives, offered or gave gratuities (in the form of entertainment, gifts, or otherwise), to any official, employee, or agent of the municipality or the State, in an attempt to secure a contract or favorable treatment in awarding, amending, or making any determinations related to the performance of this agreement, the municipality may, by written notice to the contractor, terminate this agreement. The municipality may also pursue other rights and remedies that the law or this agreement provides. However, the existence of the facts on which the municipality bases such findings shall be in issue and may be reviewed in proceedings under the Remedies clause of this agreement.

(B) In the event this contract is terminated, as provided in (A) in this clause, the recipient may pursue the same remedies against the contractor as it could pursue in the event of a breach of the contract by the contractor and, as a penalty, in addition to any other damages to which it may be entitled by law, to exemplary damages in an amount (as determined by the grantee) which shall be not less than three nor more than ten times the costs the contractor incurs in providing any such gratuities to any such officer or employee.

(13) Responsibility of the contractor.

(A) The contractor agrees to perform all work under this agreement in accordance with this agreement's designs, drawings, and specifications.

(B) The contractor warrants and guarantees for a period of one (1) year from the date of substantial completion of the system that the completed system is free from all defects due to faulty materials, equipment or workmanship; and the contractor shall promptly make whatever adjustments or corrections necessary to cure such defects, including repairs of any damage to other parts of the system resulting from such defects. The municipality shall give notice to the contractor of observed defects with reasonable promptness. In the event that the contractor fails to make adjustments, repairs, corrections or other work that may be made necessary by such defect, the municipality may do so and charge the contractor the cost incurred. The performance bond shall remain in full force and effect through the guarantee period.

(C) The contractor's obligations under this clause are in addition to the contractor's other express or applied warranties under this agreement or State law and in no way diminish any other rights that the municipality may have against the contractor for faulty material, equipment, or work.

(14) Final payment. Upon satisfactory completion of the work performed under this agreement, as a condition before final payment under this agreement, or as a termination settlement under this agreement, the contractor shall execute and deliver to the municipality a release of all claims against the municipality arising under or by virtue of this agreement, except claims which are specifically exempted by the contractor to be set forth therein. Unless otherwise provided in this agreement or by State law or otherwise expressly agreed to by the parties to this agreement, final payment under this agreement or settlement upon termination of this agreement shall not constitute a waiver of the municipality's claims against the contractor or his sureties under this agreement or applicable performance and payment bonds.

Sec. 22a-482-4 (h) Procurement Requirements-General

(1) Applicability. This defines the responsibilities of the State and the municipality and the minimum procurement standards for each municipality's procurement system.

(2) Municipality responsibility.

(A) The municipality is responsible for the settlement and satisfactory completion in accordance with sound business judgement and good administrative practice of all contractual and administrative issues arising out of subagreements entered into under the assistance agreement. This includes issuance of invitations for bids or requests for proposals, selection of contractors, award of subagreements, settlement of protests, claims, disputes and other related procurement matters.

(B) The municipality shall maintain a subagreement administration system to assure that contractors perform in accordance with the terms, conditions and specifications of their subagreements.

(C) The municipality shall review its proposed procurement actions to avoid purchasing unnecessary or duplicative items.

(D) The municipality shall consider consolidating its procurement or dividing it into parts to obtain a more economical purchase.

(E) Where appropriate, the municipality shall make an analysis of lease versus purchase alternatives in its procurement actions.

(F) A municipality may request technical assistance from the Commissioner for the administration and enforcement of any subagreement awarded under this section. However, such assistance does not relieve the municipality of its responsibilities under this section.

(G) A municipality may use innovative procurement methods or procedures only if it receives the Commissioner's prior written approval.

(3) Municipality reporting requirements. The municipality shall request, in writing, the Commissioner's authorization to award each construction subagreement which has an aggregate value over $10,000. The request shall include:

(A) Name, address, telephone number and employee identification number of the construction contractor;

(B) Amount of the award;

(C) Estimated starting and completion dates;

(D) Project number, name and site location of the project; and

(E) Copy of the tabulations of bids or offers and the name of each bidder or offeror.

(4) Copies of contract documents. The municipality must promptly submit to the Commissioner copies of any prime contract or modification thereof, and revisions to plans and specifications.

(5) Limitations on subagreement award.

(A) The municipality shall award subagreements only to responsible contractors that possess the potential ability to perform successfully under the terms and conditions of a proposed procurement. A responsible contractor is one that has:

(i) Financial resources, technical qualifications, experience, an organization and facilities adequate to carry out the project, or a demonstrated ability to obtain these;

(ii) Resources to meet the completion schedule contained in the subagreement;

(iii) A satisfactory performance record for completion of subagreements;

(iv) Accounting and auditing procedures adequate to control property, funds and assets; and

(v) Demonstrated compliance or willingness to comply with the civil rights, equal employment opportunity, labor laws and other statutory requirements.

(B) The municipality shall not make awards to contractors who have been suspended or debarred by Connecticut State Agencies.

(6) Violations. The municipality shall refer violations of law to the local or State officials having the proper jurisdiction.

(7) Competition.

(A) The municipality shall conduct all procurement transactions in a manner that provides maximum open and free competition.

(B) Procurement practices shall not unduly restrict or eliminate competition. Examples of practices considered to be unduly restrictive include:

(i) Noncompetitive practices between firms;

(ii) Organizational conflicts of interest;

(iii) Unnecessary, experience and bonding requirements;

(iv) Local laws, ordinances, regulations or procedures which give local bidders or proposers preference over other bidders or proposers in evaluating bids or proposals; and

(v) Placing unreasonable requirements on firms in order for them to qualify to do business.

(C) The municipality may use a prequalification list(s) of persons, firms or products if it:

(i) Updates its prequalified list(s) at least every six months;

(ii) Reviews and acts on each request for prequalification made more than thirty (30) days before the closing date for receipt of proposals or bid opening; and

(iii) Gives adequate public notice of its prequalification procedures in accordance with the public notice procedures.

(D) A municipality may not use a prequalified list(s) of persons or firms if the procedure unnecessarily restricts competition.

(8) Profit.

(A) Municipalities must assure that only fair and reasonable profits are paid to contractors awarded subagreements under State assistance agreements.

(B) The municipality shall negotiate profit as a separate element of price for each subagreement in which there is no price competition, or where price is based on cost analysis.

(C) Where the municipality receives two or more bids, profit included in a formally advertised, competitively bid, fixed price subagreement shall be considered reasonable.

(D) Off-the-shelf or catalog supplies are exempt from this section.

(9) Use of small, minority, and women's businesses. The municipality must take affirmative steps to assure that small, minority, and women's businesses are used to the maximum extent practicable. The Commissioner may impose goals as conditions of financial assistances.

(10) Privity of subagreement. The State shall not be a party to any subagreement nor to any solicitation or request for proposals.

(11) Documentation.

(A) Procurement records and files for procurements in excess of $10,000 shall include the following:

(i) Basis for contractor selection;

(ii) Written justification for selection of the procurement method;

(iii) Written justification for use of any specification which does not provide for maximum free and open competition;

(iv) Written justification for the type of subagreement;

(v) Basis for award cost or price, including a copy of the cost or price analysis made and documentation of negotiations; and

(vi) A municipality must state the reasons in writing for rejecting any or all bids and the justification for procurements on a noncompetitively negotiated basis and make them available for public inspection.

(12) Specifications.

(A) Nonrestrictive specifications.

(i) No specification for bids or statement of work in connection with such works shall be written in such a manner as to contain proprietary, exclusionary or discriminatory requirements other than those based upon performance, unless such requirements are necessary to test or demonstrate a specific thing or to provide for necessary interchangeability of parts and equipment, or at least two brand names or trade names of comparable quality or utility are listed and are followed by the words "or equal". If brand or trade names are specified, the municipality must be prepared to identity to the Commissioner, or in any protest action, the salient requirements (relating to the minimum needs of the project) which must be met by any offeror. The single base bid method of solicitation for equipment and parts for determination of a low, responsive bidder may not be utilized. With regard to materials, if a single

material is specified, the municipality must be prepared to substantiate the basis for the selection of the material.

(ii) Project specifications shall, to the extent practicable, provide for maximum use of structures, machines, products, materials, construction methods, and equipment which are readily available through competitive procurement, or through standard or proven production techniques, methods, and processes.

(B) Sole source restriction. A specification shall not require the use of structures, materials, equipment, or processes which are known to be available only from a sole source, unless the Commissioner determines in advance that the municipality's engineer has adequately justified in writing that the proposed use meets the particular project's minimum needs or the Commissioner determines that use of a single source is necessary to promote innovation.

(C) Experience clause restriction. The general use of experience clauses requiring equipment manufacturers to have a record of satisfactory operation for a specified period of time or of bonds or deposits to guarantee replacement in the event of failure is restricted to special cases where the municipality's engineer adequately justifies any such requirement in writing. Where such justification has been made, submission of a bond or deposit shall be permitted instead of a specified experience period. The period of time for which the bond or deposit is required should not exceed the experience period specified.

(13) Force account work.

(A) The municipality must receive the Commissioner's prior written approval for use of the force account method for any planning, design work or construction work.

(B) The Commissioner may approve the force account method upon the municipality's demonstration that it possesses the necessary competence required to accomplish such work and that the work can be accomplished more economically by use of the force account method, or emergency circumstances dictate its use.

(C) Use of the force account method for construction work shall generally be limited to minor portions of a project.

(14) Code of conduct.

(A) The municipality shall maintain a written code or standards of conduct which shall govern the performance of its officers, employees, or agents engaged in the award and administration of subagreements supported by State funds. No employee, officer or agent of the municipality shall participate in the selection, award or administration of a subagreement supported by State funds if a conflict of interest, real or apparent, would be involved.

(B) Such a conflict would arise when:

(i) Any employee, officer or agent of the municipality, any member of the immediate families, or their partners, have a financial or other interest in the firm selected for award; or

(ii) An organization which may receive or has been awarded a subagreement employs, or is about to employ, any person under (B)(i) of this Section.

(C) The municipality's officers, employees or agents shall neither solicit nor accept gratuities, favors or anything of monetary value from contractors, potential contractors or other parties to subagreements.

(D) Municipalities may set minimum rules where the financial interest is not substantial or the gift is an unsolicited item of nominal value.

(E) To the extent permitted by State or local law or regulations, the municipality's code of conduct shall provide for penalties, sanctions or other disciplinary actions for violations of the code by the municipality's officers, employees or agents or by contractors or their agents.

(15) Payment to consultants.

(A) For all State assistance agreements, the State will limit its participation in the salary rate (excluding overhead) paid to individual consultants retained by a municipality or by a municipality's contractors or subcontractors to the maximum daily rate for a GS-18 federal employee. (Municipality's may, however, pay contractors and subcontractors more than this amount.) This limitation applies to consultation services of designated individuals with specialized skills who are paid at a daily or hourly rate. The rate does not include transportation and subsistence costs for travel performed; municipality's will pay these in accordance with their normal travel reimbursement practices.

(B) Subagreements with firms for services which are awarded using these procurement requirements are not affected by this limitation.

(16) Cost and price considerations.

(A) The municipality shall conduct a cost analysis of all negotiated change orders and all negotiated subagreements estimated to exceed $10,000.

(B) The municipality shall conduct a price analysis of all formally advertised procurements estimated to exceed $10,000 if there are fewer than three bidders.

(C) For negotiated procurement, contractors and subcontractors shall submit cost or pricing data in support of their proposals to the municipality.

(17) Small purchases.

(A) Small Purchase Procurement. If the aggregate amount involved in any one procurement transaction does not exceed $10,000, including estimated handling and freight charges, overhead and profit, the municipality may use small purchase procedures.

(B) Small Purchase Procedures. Small purchase procedures are relatively simple procurement methods that are sound and appropriate for procurement of services, supplies or other property costing in the aggregate not more than $10,000.

(C) Requirements for Competition.

(i) Municipalities shall not divide a procurement into smaller parts to avoid the dollar limitation for competitive procurement.

(ii) Municipalities shall obtain price or rate quotations from an adequate number of qualified sources.

(18) Negotiation and award of subagreements.

(A) Unless the request for proposals states that award may be based on initial offers alone, the municipality must conduct meaningful negotiations with the best qualified offerors with acceptable proposals within the competitive range, and permit revisions to obtain best and final offers. The best qualified offerors must have equal opportunities to negotiate or revise their proposals. During negotiations, the municipality must not disclose the identity of competing offerors or any information from competing proposals.

(B) The municipality must award the subagreement to the responsible offeror whose proposal is determined in writing to be the most advantageous to the municipality, taking into consideration price and other evaluation criteria set forth in the request for proposals.

(C) The municipality must promptly notify unsuccessful offerors that their proposals were rejected.

(D) The municipality must document its procurement file to indicate how proposals were evaluated, what factors were used to determine the best qualified offerors within the competitive range, and what factors were used to determine the subagreement award.

(19) Optional selection procedure for negotiation and award of subagreement for architectural and engineering services.

(A) The municipality may evaluate and select an architect or engineer using the procedures in this subdivision in place of the procedures in "Negotiation and award of subagreements" in subdivision (18).

(B) The municipality may use responses from requests for statement of qualifications to determine the most technically qualified architects or engineers.

(C) After selecting and ranking the most qualified architects or engineers, the municipality will request technical proposals from those architects or engineers and inform them of the evaluation criteria the municipality will use to rank the proposals.

(D) The municipality shall then select and determine, in writing, the best technical proposal.

(E) After selecting the best proposal, the municipality shall attempt to negotiate fair and reasonable compensation with that offeror.

(F) If the municipality and the offeror of the best proposal cannot agree on the amount of compensation, the municipality shall formally terminate negotiations with that offeror. The municipality shall then negotiate with the offeror with the next best proposal. This process will continue until the municipality reaches agreement on compensation with an offeror with an acceptable proposal. Once the municipality terminates negotiations with an offeror, the municipality cannot go back and renegotiate with that offeror.

(20) Noncompetitive negotiation procurement method. Noncompetitive negotiation may be used only when the award of a subagreement is not feasible under small purchase, formal advertising, or competitive negotiation procedures. The municipality may award a noncompetitively negotiated subagreement only under the following circumstances:

(A) The item is available only from a single source;

(B) A public exigency or emergency exists and the urgency for the requirement will not permit a delay incident to competitive procurement; or

(C) After solicitation from a number of sources, competition is determined to be inadequate.

(21) Use of the same architect or engineer during construction

(A) If the municipality is satisfied with the qualifications and performance of the architect or engineer who provided any or all of the planning or design services for the project, it may wish to retain that firm or individual during construction of the project. The municipality may do so without further public notice and evaluation of qualifications provided that it received financial assistance for the planning and/or design services and selected the architect or engineer in accordance with these procurement regulations.

(B) However, if the municipality uses the procedures in (A) to retain an architect or engineer, any construction subagreements between the architect or engineer and the municipality must meet the procurement provisions of Section 22a-482-4(i)(5).

(22) Negotiation of subagreements.

(A) Formal advertising, with adequate purchase descriptions, sealed bids, and public openings shall be the required method of procurement unless negotiation under (B) of this section is necessary to accomplish sound procurement.

(B) All negotiated procurement shall be conducted in a manner to provide to the maximum practicable extent open and free competition appropriate to the type of project work to be performed. The municipality is authorized to negotiate subagreements if any of the following conditions exist:

(i) Public exigency will not permit the delay incident to formally advertised procurement (e.g. an emergency procurement);

(ii) The aggregate amount involved does not exceed $10,000;

(iii) The material or service to be procured is available from only one person or entity. If the procurement is expected to aggregate more than $10,000, the municipality must document its file with a justification of the need for noncompetitive procurement, and provide such documentation to the Commissioner on request;

(iv) The procurement is for personal or professional services (including architectural or engineering services) or for any service that a university or other educational institution may render;

(v) No responsive, responsible bids at acceptable price levels have been received after formal advertising, and the Commissioner's prior written approval has been obtained;

(vi) The procurement is for materials or services where the price is established by law;

(vii) The procurement is for technical items or equipment requiring standardization and interchangeability of parts with existing equipment; or

(viii) The procurement is for experimental, developmental or research services.

(23) Enforcement. If the Commissioner determines that the municipality has failed to comply with any of these procurement provisions, he or she may impose any of the following sanctions:

(A) The grant may be terminated or annulled under Section 22a-482-4(t).

(B) Project costs directly related to the noncompliance may be disallowed.

(C) Payment otherwise due to the municipality of up to 10 percent may be withheld.

(D) Project work may be suspended under Sec. 22a-482-4(g) (5).

(E) A noncomplying municipality may be found nonresponsible or ineligible for future state funding assistance or a noncomplying contractor may be found nonresponsible or ineligible for approval for future contract award under state grants.

(F) An injunction may be entered or other equitable relief afforded by a court of appropriate jurisdiction.

(G) Such other administrative or judicial action may be instituted if it is legally available and appropriate.

(24) Contract Enforcement. Commissioner authority. At the request of a municipality, the Commissioner is authorized to provide technical and legal assistance in the administration and enforcement of any contract related to pollution abatement facilities for which a State grant was made and to intervene in any civil action involving the enforcement of such contracts, including contract disputes which are the subject of either arbitration or court action in accordance with the requirements of Section 22a-482-4(f)(1).

Sec. 22a-482-4 (j) Construction Contract Procurement Requirements

(This section applies to construction contracts in excess of $10,000 awarded by municipalities for any construction projects.

(1) Type of Contract. Each contract shall be a fixed price (lump sum or unit price or a combination of the two) contract, unless the Commissioner gives advance written approval for the municipality to use some other acceptable type of contract. The cost-plus percentage-of-cost contract shall not be used in any event.

(2) Formal Advertising. Each contract shall be awarded after formal advertising, unless negotiations are permitted in accordance with Sec. 22a-482-4(h)(18). Formal advertising shall be in accordance with the following:

(A) Adequate public notice. The municipality will cause adequate notice to be given of the solicitation by publication in newspapers or journals of general circulation beyond the municipality's locality (statewide, generally), inviting bids on the project work and stating the method by which bidding documents may be obtained or examined. Where the estimated cost of construction is $10 million or more, the municipality should publish the notice in trade journals of nationwide distribution. The municipality may solicit bids directly from bidders if it maintains a bidders list;

(B) Adequate time for preparing bids. Adequate time, generally not less than 30 days, must be allowed between the date when public notice is first published and the date by which bids must be submitted. Bidding documents (including specifications and drawings) shall be available to prospective bidders from the date when such notice is first published;

(C) Adequate bidding documents. The municipality shall prepare a reasonable number of bidding documents (invitations for bids) and shall furnish them upon request on a first-come, first-served basis. The municipality shall maintain a complete set of bidding documents and shall make them available for inspection and copying by any party. The bidding documents shall include:

(i) A complete statement of the work to be performed, including necessary drawings and specifications, and the required completion schedule;

(ii) The terms and conditions of the contract to be awarded;

(iii) A clear explanation of the method of bidding and the method of evaluation of bid prices, and the basis and method for award of the contract;

(iv) Responsibility requirements or criteria which will be employed in evaluating bidders;

(v) The following statement:

Any contract or contracts awarded under this invitation for bids are expected to be funded in part by the State of Connecticut (Department of Environmental Protection). Neither the State of Connecticut nor any of its departments, agencies or employees is or will be a party to this invitation for bids or any resulting contract. This procurement will be subject to the requirements contained in Section 22a-482-4, (h), (j) and (o) of the regulations of Connecticut State Agencies; (vi) A copy of Sec. 22a-482-4, (h), (j) and (o); and

(vi) The prevailing State Wage Determination as applicable.

(D) Sealed bids. The municipality shall provide for bidding by sealed bid and for the safeguarding of bids received until public opening.

(E) Addenda to bidding documents. If a municipality desires to amend any part of the bidding documents (including drawings and specifications) during the period when bids are being prepared, the addenda shall be communicated in writing to all firms which have obtained bidding documents at least five (5) working days prior to the bid opening.

(F) Bid modifications. A firm which has submitted a bid shall be allowed to modify or withdraw its bid before the time of bid opening.

(G) Public opening of bids. The municipality shall provide for a public opening of bids at the place, date and time announced in the bidding documents.

(H) Award to the low, responsive, responsible bidder.

(i) After bids are opened, the municipality shall evaluate them in accordance with the methods and criteria set forth in the bidding documents.

(ii) The municipality may reserve the right to reject all bids. Unless all bids are rejected for good cause, award shall be made to the low, responsive, responsible bidder.

(iii) If the municipality intends to make the award to a firm which did not submit the lowest bid, it shall prepare a written statement before any award, explaining why each lower bidder was deemed nonresponsible or nonresponsive. The Municipality shall retain such statement in its files and forward a copy to the Commissioner for review.

(iv) Local laws, ordinances, regulations or procedures which are designed or which operate to give local bidders preference over other bidders shall not be employed in evaluating bids.

(v) If an unresolved procurement review issue or a protest relates only to award of a subcontract or procurement of an item under the prime contract, and resolution of that issue or protest is unduly delaying performance of the prime contract, the Commissioner may authorize award and performance of the prime contract before resolution of the issue or protest, if the Commissioner determines that resolution of the protest will not affect the placement of the prime contract bidders and will not materially affect initial performance of the prime contract; and that award of the prime contract is in the State's best interest, will not materially affect resolution of the protest, and is not barred by State or local law.

(vi) The municipality shall not reject a bid as nonresponsive for failure to list or otherwise indicate the selection of a subcontractor(s) or equipment, unless the municipality has unambiguously stated in the solicitation documents that such failure to list shall render a bid nonresponsive and shall cause rejection of a bid.

Sec. 22a-482-4 (k) Negotiation of Contract Amendments (Change Orders)

(1) The Municipality is responsible for the negotiation of construction contract change orders. This function may be performed by the municipality directly or, if authorized, by its engineer. During negotiations with the contractor the municipality shall:

(A) Make certain that the contractor has a clear understanding of the scope and extent of work and other essential requirements;
(B) Assure that the contractor demonstrates that he will make available or will obtain the necessary personnel, equipment and materials to accomplish the work within the required time; and
(C) Assure a fair and reasonable price for the required work.

(2) The contract price or time may be changed only by a change order. When negotiations are required, they shall be conducted in accordance with Section 22a-482(k)(3) and (4) as appropriate. The value of any work covered by a change order or of any claim for increase or decrease in the contract price shall be determined by the method set forth in paragraphs (2)(A) through (2)(C) of this section, whichever is most advantageous to the municipality.

(A) Unit prices.

(i) Original bid items. Unit prices previously approved are acceptable for pricing changes of original bid items. However, when changes in quantities exceed 15 percent of the original bid quantity and the total dollar change of that bid item is significant, the municipality shall review the unit price to determine if a new unit price should be negotiated.

(ii) New items. Unit prices of new items shall be negotiated.

(B) A lump sum to be negotiated.

(C) Cost reimbursement. The actual cost for labor, direct overhead, materials, supplies, equipment, and other services necessary to complete the work plus an amount to be agreed upon to cover the cost of general overhead and profit to be negotiated.

(3) For each change order not in excess of $100,000 the contractor shall submit sufficient cost and pricing data to the municipality to enable the municipality to determine the necessity and reasonableness of costs and amounts proposed, and the allowability and eligibility of costs proposed.

(4) For each change order in excess of $100,000, the contractor shall submit to the municipality for review sufficient cost and pricing data as described in paragraphs (4)(A) through (4)(E) of this section to enable the municipality to ascertain the necessity and reasonableness of costs and amounts proposed, and the allowability and eligibility of costs proposed.

(A) The contractor shall certify that proposed costs reflect complete, current, and accurate cost and pricing data applicable to the date of the change order.

(B) In addition to the specific elements of cost, the estimated amount of profit shall be set forth separately in the cost summary for fixed price change orders and a specific total dollar amount of profit will be set forth separately in the cost summary for cost reimbursement change orders.

(C) The municipality may require more detailed cost data in order to substantiate the reasonableness of proposed change order costs. The Commissioner may, on a selected basis, perform a detailed cost analysis on any change order.

(D) For costs under cost reimbursement change orders, the contractor shall have an accounting system which accounts for such costs in accordance with generally accepted accounting principles. This system shall provide for the identification, accumulation and segregation of allowable and unallowable change orders. Allowable change order costs shall be determined in accordance with Sections 22a-482-4(a), (b) and (c). The contractor must propose and account for such costs in a manner consistent with his normal accounting procedures.

(E) Change orders awarded on the basis of review of a cost element summary and a certification of complete, current, and accurate cost and pricing data shall be subject to downward renegotiation and recoupment of funds where a subsequent audit substantiates that such certification was not based on complete, current and accurate cost and pricing data.

(5) Review by Commissioner. The municipality shall submit, before the execution of any change order in excess of $100,000, to the Commissioner for review and approval:

(A) The cost and pricing data the contractor submitted;

(B) A certification of review and acceptance of the contractor's cost or price; and

(C) A copy of the proposed change order.

(6) Profit. The objective of negotiations shall be the exercise of sound business judgement and good administrative practice including the determination of a fair and reasonable profit based on the contractor's assumption of risk and input to total performance and not merely the application of a predetermined percentage factor. For the purpose of negotiated change orders to construction contracts profit is defined as the net proceeds obtained by deducting all

allowable costs (direct and indirect) from the price. The municipality should review the estimate of profit as it reviews all other elements of price.

(7) Related work. Related work shall not be split into two amendments or change orders merely to keep it under $100,000 and thereby avoid the requirements of (4) of this section. For change orders which include both additive and deductive items:

(A) If any single item (additive or deductive) exceeds $100,000 the requirements of (4) of this section shall be applicable;

(B) If no single additive or deductive item has a value of $100,000 but the total price of the change order is over $100,000, the requirements of (4) of this section shall be applicable; and

(C) If the total of additive items of work in the change order exceeds $100,000 or the total of deductive items of work in the change order exceeds $100,000 and the net price of the change order is less than $100,000, the requirements of (4) of this section shall be applicable.

Sec. 22a-482-4 (l) Subcontracts under Construction Contracts

(1) The award or execution of subcontracts by a prime contractor under a construction contract awarded to the prime contractor by the municipality, and the procurement and negotiation procedures used by prime contractors in awarding or executing subcontracts are not required to comply with any of the provisions, selection procedures, policies or principles set forth in Section 22a-482-4(h) or (j) except those specifically stated in this section. In addition, the bid protest procedures of Section 22a-482-4(o) are not available to parties executing subcontracts with prime contractors except as specifically provided in that section.

(2) The award or execution of subcontracts by a prime contractor under a formally advertised, competitively bid, fixed price construction contract awarded to the prime contractor by the municipality, and the procurement and negotiation procedures used by such prime contractors in awarding or executing such subcontracts must comply with any municipality procurement system, State small, minority and women's business policy, (Section 22a-482-4(f)(9)), negotiation of contract amendments (Section 22a-482-4(i)), and clauses (8) and (9) of Section 22a-482-4(e).

Sec. 22a-482-4 (m) Progress Payments to Contractors

(1) Except as State law otherwise provides, municipalities must make prompt progress payments to prime contractors and prime contractors should make prompt progress payments to subcontractors and suppliers for eligible construction, material, and equipment costs, including those of undelivered, specifically manufactured equipment, incurred under a contract under this program. The Clean Water Fund shall only be obligated to pay the municipality amounts that the municipality is actually going to pay contractors.

(2) Conditions of progress payments. For purposes of this section, progress payments are defined as follows:

(A) Payments for work in place;

(B) Payments for materials or equipment which have been delivered to the construction site, or which are stockpiled in the vicinity of the construction site, in accordance with the terms of the contract, when conditional or final acceptance is made by or for the municipality. The municipality shall assure that items for which progress payments have been made are adequately insured and are protected through appropriate security measures. Costs of such insurance and security are allowable costs; or

(C) Payments for undelivered specifically manufactured items or equipment (excluding off-the-shelf or catalog items) as work on them progresses. Such payments must be made if provisions therefor are included in the bid and contract documents. Such provisions may be included at the option of the municipality only when all of the following conditions exist:

(i) The equipment is so designated in the project specifications;

(ii) The equipment to be specifically manufactured for the project could not be readily utilized on nor diverted to another job; and

(iii) A fabrication period of more than 6 months is anticipated.

(3) Protection of progress payments made for specifically manufactured equipment. The municipality will assure protection of the State's interest in progress payments made for items or equipment referred to in (2)(C) of this section. The protection must be acceptable to the municipality and must take the form of:

(A) Securities negotiable without recourse, condition or restrictions, a progress payment bond, or an irrevocable letter of credit provided to the municipality through the prime contractor by the subcontractor or supplier; and

(B) For items or equipment in excess of $200,000 in value which are manufactured in a jurisdiction in which the Uniform Commercial Code is applicable, the creation and perfection of a security interest under the Uniform Commercial Code which is reasonably adequate to protect the interests of the municipality.

(4) Limitations on progress payments for specifically manufactured equipment.

(A) Progress payments made for specifically manufactured equipment or items shall be limited to the following:

(i) A first payment upon submission by the prime contractor of shop drawings for the equipment or items in an amount not exceeding 15 percent of the contract or item price plus appropriate and allowable higher tier costs; and

(ii) Subsequent to the municipality's release or approval for manufacture, additional payments not more frequently than monthly thereafter up to 75 percent of the contract or item price plus appropriate and allowable higher tier costs. However, payment may also be made in accordance with the contract and grant terms and conditions for ancillary onsite work before delivery of the specifically manufactured equipment or items.

(B) In no case may progress payments for undelivered equipment or items under (4)(A)(i) or (4)(A)(ii) of this section be made in an amount greater than 75 percent of the cumulative incurred costs allocable to contract performance with respect to the equipment or items. Submission of a request for any such progress payments must be accompanied by a certification furnished by the fabricator of the equipment or item that the amount of progress payment claimed constitutes not more than 75 percent of cumulative incurred costs allocable to contract performance and, in addition, in the case of the first progress payment request a certification that the amount claimed does not exceed 15 percent of the contract or item price quoted by the fabricator.

(C) As used in this section, the term "costs allocable to contract performance" with respect to undelivered equipment or items includes all expenses of contract performance which are reasonable, allocable to the contract, consistent with sound and generally accepted accounting principles and practices consistently applied and which are not excluded by the contract.

(5) Enforcement. A subcontractor or supplier which is determined by the Commissioner to have frustrated the intent of the provisions regarding progress payments for major equipment or specifically manufactured equipment through intentional forfeiture of its bond or failure to deliver the equipment may be determined nonresponsible and ineligible for further work under State funded projects.

(6) Contract provisions. Where applicable, appropriate provisions regarding progress payments must be included in each contract and subcontract.

(7) Implementation. The foregoing progress payments policy should be implemented in invitations for bids for project funded by the Clean Water Fund. If provision for progress payments is made after contract award, it must be for consideration that the municipality deems adequate.

Sec. 22a-482-4 (n) Retention from Progress Payments

(1) The municipality may retain a portion of the amount otherwise due the contractor. The amount the municipality retains shall be limited to the following:

(A) Withholding of not more than 5 percent of the payment claimed until work is 50 percent complete;

(B) When work is 50 percent complete, reduction of the withholding to 2 percent of the dollar value of all work satisfactorily completed to date, provided that the contractor is making satisfactory progress and there is no specific cause for greater withholding;

(C) When the work is substantially complete (operational or beneficial occupancy), the withheld amount shall be further reduced below 2 percent to only that amount necessary to assure completion;

(D) The municipality may reinstate up to 5 percent withholding if the municipality determines, at its discretion, that the contractor is not making satisfactory progress or there is other specific cause for such withholding; and

(E) The municipality may accept securities negotiable without recourse, condition or restrictions, a release of retainage bond, or an irrevocable letter of credit provided by the contractor instead of all or part of the cash retainage.

(2) The foregoing retention policy shall be implemented with respect to all construction projects . Appropriate provision to assure compliance with this policy must be included in the bid documents for such projects initially or by addendum before the bid submission date and as a special condition in the funding agreement or in an amendment which is issued by the Commissioner.

(3) A municipality which delays disbursement to contractors of funds will be required to credit to the Clean Water Fund all interest earned on those funds and will be responsible for any and all tax law violations which occur as a result of their actions.

Sec. 22a-482-4 (o) Protests

(1) General. A protest based upon an alleged violation of the procurement requirements may be filed against a municipality's procurement action by a party with an adversely affected direct financial interest. Any such protest must be received by the municipality within the time period in (2)(A) of this section. The municipality is responsible for resolution of the protest before taking the protested action, in accordance with (4) of this section, except as otherwise provided by (9) of this section or 22a-482-4(j)(2)(H)(v).

(2) Time limitations.

(A) A protest under (4) of this section should be made as early as possible during the procurement process to avoid disruption of or unnecessary delay to the procurement process. A protest authorized by (4) of this section must be received by the municipality within one week after the basis for the protest is known or should have been known, whichever is earlier.

(i) In the case of an alleged violation of the specification requirements of Section 22a-482-4(h)(12), relating to specifications (e.g., that a product fails to qualify as an "or equal") a protest need not be filed prior to the opening of bids. The municipality may resolve the issue before receipt of bids or proposals through a written or other formal determination, after notice and opportunity to comment is afforded to any party with a direct financial interest.

(ii) When an alleged violation of the specification requirements of Section 22a-482-4(h)(12) first arises subsequent to the receipt of bids or proposals, the municipality must decide the protest if the protest was received by the municipality within one week of the time that the municipality's written or other formal notice is first received.

(B) A protest appeal authorized by this section must be filed in a court of competent jurisdiction within the locality of the municipality within one week after the complainant has received the municipality's determination.

(C) If a protest is mailed, the complaining party bears the risk of nondelivery within the required time period. All documents transmitted in accordance with this section

shall be mailed by certified mail (return receipt requested) or otherwise delivered in a manner which will objectively establish the date of receipt. Initiation of protest actions under (4) or (5) of this section may be made by brief telegraphic notice accompanied by prompt mailing or other delivery of a more detailed statement of the basis for the protest. Telephone protests will not be considered.

(3) Other initial requirements.

(A) The initial protest document must briefly state the basis for the protest and should:

(i) Refer to the specific portions of these regulations which allegedly prohibit the procurement action;

(ii) Specifically request a determination pursuant to this section;

(iii) Identify the specific procurement document(s) or portion(s) of them in issue; and

(iv) Include the name, telephone number, and address of the person representing the protesting party.

(B) The party filing the protest must concurrently transmit a copy of the initial protest document and any attached documentation to all other parties with a direct financial interest which may be adversely affected by the determination of the protest (all bidders or proposers who appear to have a substantial and reasonable prospect of receiving an award if the protest is denied or sustained) and to the Commissioner.

(4) Municipality determination.

(A) The municipality is responsible for the initial resolution of protests based upon alleged violations of the procurement requirements.

(B) When the municipality receives a timely written protest, it must defer the protested procurement action in accordance with (7) of this section and:

(i) Afford the complaining party and interested parties an opportunity to present arguments in support of their views in writing or at a conference or other suitable meeting (such as a city council meeting);

(ii) Inform the complainant and other interested parties of the procedures which the municipality will observe for resolution of the protest;

(iii) Obtain an appropriate extension of the period for acceptance of the bid and bid bond(s) of each interested party, where applicable (failure to agree to a suitable extension of such bid and bid bond(s) by the party which initiated the protest shall be cause for summary dismissal of the protest by the municipality or the Commissioner); and

(iv) Promptly deliver (by certified mail, return receipt requested, or by personal delivery) its written determination of the protest to the complaining party and to each other participating party.

(C) The municipality's determination must be accompanied by a legal opinion addressing issues arising under State, or local law, if any and, when construction is involved, by an engineering report, if appropriate.

(D) The municipality should decide the protest as promptly as possible – generally within 3 weeks after receipt of a protest, unless extenuating circumstances require a longer period of time for proper resolution of the protest.

(5) Procedures.

(A) Where resolution of an issue properly raised with respect to a procurement requirement necessitates prior or collateral resolution of a legal issue arising under State or local law, and such law is not clearly established in published legal decisions of the State or other relevant jurisdiction, the municipality may rely upon:

(i) An opinion of the municipality's legal counsel adequately addressing the issue;

(ii) The established or consistent practice of the municipality, to the extent appropriate;

(iii) The law of other local jurisdictions as established in published legal decisions; or

(iv) If none of the foregoing adequately resolve the issue, published decisions of the Comptroller General of the United States (U.S. General Accounting Office) or of the Federal or State courts addressing Federal or State requirements comparable to procurement requirements of this section.

(B) A party who submits a document subsequent to initiation of a protest proceeding must simultaneously furnish each of the other parties with a copy of such document.

(C) The procedures established herein are not intended to preclude informal resolution or voluntary withdrawal of protests. A complainant may withdraw its appeal at any time, and the protest proceedings shall thereupon be terminated.

(D) A protest may be dismissed for failure to comply with procedural requirements set forth in this section.

(6) Burden of proof.

(A) In protest proceedings, if the municipality proposes to award a formally advertised, competitively bid, fixed price contract to a party who has submitted the apparent lowest price, the party initiating the protest will bear the burden of proof.

(B) In protest proceedings:

(i) If the municipality proposes to award a formally advertised, competitively bid, fixed price contract to a bidder other than the bidder which submitted the apparent lowest price, the municipality will bear the burden of proving that its determination concerning responsiveness is in accordance with these regulations; and

(ii) If the basis for the municipality's determination is a finding of nonresponsibility, the municipality must establish and substantiate the basis for its determination and must adequately establish that such determination has been made in good faith.

(7) Deferral of procurement action. Upon receipt of a protest, the municipality must defer the protested procurement action (for example, defer the issuance of solicitations, contract award, or issuance of notice to proceed under a contract) until ten days after delivery of its determination to the participating parties. The municipality may receive or open bids at its own risk, if it considers this to be in its best interest. When the Commissioner has received a written protest, he or she must notify the municipality promptly to defer its protested procurement action until notified of the formal or informal resolution of the protest.

(8) Enforcement. Noncompliance with the procurement provisions by the municipality shall be cause for enforcement action in accordance with one or more of the provisions of Section 22a-482-4(f)(23).

(9) Limitation. A protest may not be filed with respect to the following:

(A) Issues not arising under the procurement provisions;

(B) Issues relating to the selection of a consulting engineer, provided that a protest may be filed only with respect to the mandatory procedural requirements of Section 22a-482-4(i);

(C) Issues primarily determined by local law or ordinance and as to which the Commissioner, upon review, determines that there is no contravening state requirement and that the municipality's action has a rational basis;

(D) Provisions of State regulations applicable to direct State contracts unless such provisions are explicitly referred to or incorporated in these regulations;

(E) Basic project design determinations; or

(F) Award of subcontracts or issuance of purchase orders under formally advertised, competitively bid, lump sum construction contracts. However, protest may be made to alleged violations of the following:

(i) Specification requirements of Section 22a-482-4(h)(12); or

(ii) Provisions applicable to the procurement procedures, negotiation or award of subcontracts or issuance of purchase orders under Section 22a-482-4(l).

ATTACHMENT C

Clean Water Fund Memorandum
American Iron and Steel

Connecticut Department of
ENERGY &
ENVIRONMENTAL
PROTECTION

79 Elm Street • Hartford, CT 06106-5127 www.ct.gov/deep Affirmative Action/Equal Opportunity Employer

Memorandum

To: All Connecticut Municipalities, Water Pollution Control Facilities, and Consultants

Date: May 28, 2015

Re: Revised American Iron and Steel Memorandum

The Department of Energy and Environmental Protection's (DEEP) Municipal Water Pollution Control Section has updated the American Iron and Steel (AIS) memorandum that was distributed on May 19, 2014.

On June 10, 2014, the Water Resources Reform and Development Act of 2014 (WRRDA) was signed into law by President Obama, which amended the Federal Water Pollution Control Act (FWPCA). The FWPCA section 608 extended the AIS provision that was originally scheduled to expire on September 30, 2014.

This means that AIS is now a **permanent** project requirement for all Connecticut Clean Water Fund (CWF) projects.

The effective date for the newly codified AIS provision is the date of enactment of the WRRDA, or June 10, 2014.

A recent Environmental Protection Agency (EPA) memorandum dated September 18, 2014 indicates that EPA intends to interpret the WRRDA language for the AIS requirement in the same manner as described in an earlier EPA guidance memo dated March 20, 2014. Therefore, the March 20, 2014 EPA memorandum shall still serve as the final EPA AIS guidance on how to apply the AIS requirement, and it is attached to the revised CWF memo.

The final memorandum is now available on our website at http://www.ct.gov/dep/cwp.

Sincerely,

George V. Hicks, P.E.
Supervising Sanitary Engineer
Bureau of Water Protection & Land Reuse

Connecticut Department of
ENERGY &
ENVIRONMENTAL
PROTECTION

79 Elm Street • Hartford, CT 06106-5127 www.ct.gov/deep Affirmative Action/Equal Opportunity Employer

Revised Clean Water Fund Memorandum (2014-001a)

TO: All Connecticut Municipalities and Consultants

RE: Implementation of American Iron and Steel provisions on Connecticut Clean Water Fund Projects

I. PURPOSE

To provide clarification on the applicability of American Iron and Steel (AIS) provisions to construction projects funded by the Connecticut Clean Water Fund (CWF).

II. GOVERNING FEDERAL PUBLIC LAW

Section 436 of Public Law (P.L.) 113-76, Consolidated Appropriations Act, 2014.

III. APPLICABILITY

All Connecticut CWF projects must use "iron and steel products" (Section III.A) that are "produced in the United States" for construction projects. The final Environmental Protection Agency (EPA) AIS guidance memorandum dated March 20, 2014 ("final EPA AIS guidance") on how to apply the AIS requirement is attached.

This memorandum summarizes the final EPA AIS guidance, and describes how it relates specifically to Connecticut CWF projects. Section III.C details what is required for a CWF project that is subject to the AIS provisions. Any definitions provided by the final EPA AIS guidance are included in Section IV.

Section 436 of P.L. 113-76 excludes products (Section III.B) to the AIS requirement, as well as a waiver request process to exclude products or the entire project from AIS requirements (Section III.D).

A. Applicable Iron and Steel Products

1. The AIS requirement applies to all of the following products:
   a. Lined or unlined pipes and fittings;
   b. Manholes covers and other "municipal castings";
   c. Hydrants;
   d. Tanks;
   e. Flanges;
   f. Pipe clamps and restraints;
   g. Valves;
   h. "Structural steel";
   i. Reinforced precast concrete; or
   j. "Construction materials".

   Refer to Section IV for further clarification of items b, h, and j.

2. Each project item listed in Section III.A.1 and is considered to be "primarily iron or steel", or comprised of greater than 50% iron or "steel" as measured by cost, becomes subject to the AIS requirement.
   a. The cost used to determine AIS applicability shall be based on the material costs, and shall include the cost to pour and cast iron and/or steel components.
   b. The cost used to determine AIS applicability shall not include assembly cost.

3. Unlike the products listed in Section III.A.1.a – h and j, all reinforced precast concrete used in applicable products is subject to the AIS requirement, no matter how much iron or steel comprises the reinforced precast concrete. The reinforcing bar and wire must be produced in the US and meet the same standards as for any other iron or steel product. The casting of the concrete product must take place in the US. The cement and other raw materials used in concrete production are not required to be of domestic origin.

4. "Construction materials" are any products that become permanently incorporated into the project, even if those products may be considered temporary in most instances. For example, any iron or steel sheeting or piles that are not removed after construction is completed are considered to be "construction materials" subject to the AIS requirement.

B. Excluded Products

1. The AIS requirement does <u>not</u> apply to any mechanical and/or electrical components, equipment and systems. Mechanical and electrical components, equipment and systems are not considered construction materials.

2. The following examples (including their appurtenances necessary for their intended use and operation) are NOT considered construction materials, and are therefore NOT subject to the AIS requirement:
   a. Pumps;
   b. Motors;
   c. Gear reducers;
   d. Drives (including variable frequency drives (VFDs));
   e. Electric/pneumatic/manual accessories used to operate valves (such as electric valve actuators);
   f. Mixers;
   g. Gates;
   h. Motorized screens (such as traveling screens);
   i. Blowers/aeration equipment;
   j. Compressors;
   k. Meters, sensors, controls and switches;
   l. Supervisory control and data acquisition (SCADA);
   m. Membrane bioreactor systems;
   n. Membrane filtration systems;
   o. Filters, clarifiers and clarifier mechanisms;
   p. Rakes, grinders;
   q. Disinfection systems;
   r. Presses (including belt presses);
   s. Conveyors, cranes;
   t. HVAC (excluding ductwork), water heaters, heat exchangers;
   u. Generators;

v. Cabinetry and housings (such as electrical boxes/enclosures);
w. Lighting fixtures;
x. Electrical conduit;
y. Emergency life systems;
z. Metal office furniture, shelving;
aa. Laboratory equipment, analytical instrumentation; and
bb. Dewatering equipment.

3. Raw materials such as iron ore, limestone, and iron/steel scrap are not covered by the AIS requirement. If any raw materials are being applied as a coating, the raw materials are similarly not covered.

C. AIS Requirements

1. For each item that meets the criteria indicated in Sections III.A, the iron and steel products contained in that item must be "produced in the United States (US)".
   a. All manufacturing processes must take place in the US, with the exception of metallurgical processes involving the refinement of steel additives.
   b. Manufacturing processes covered by the AIS requirement include: melting, refining, forming, rolling, drawing, refining, finishing, fabricating, coating.
   c. In the case of reinforced precast concrete, the casting of the concrete must also occur in the US. The cement and other raw materials used in the concrete production may come from non-US sources.
   d. Each domestic iron and steel product must remain in the US for the entire manufacturing process; otherwise, it will be considered foreign source material.
   e. Non-iron or steel components of an iron and steel product may come from non-US sources.

2. The construction contract language contained in **Appendix 4 of the attached final EPA AIS guidance** must be included in the CWF contract documents in order to obtain CWF approval of the engineering plans and specifications.

3. Certification for AIS compliance
   a. Certification must be provided for all items in Section III.A.
   b. Types of Certification
      i. Step certification process: Each handler (supplier, fabricator, manufacturer, processor, etc) of the iron and steel products certifies that their step in the process was domestically performed.
      ii. Final manufacturer certification: Alternatively, the final manufacturer that delivers the iron or steel product to the worksite, vendor, or contractor, may provide a certification asserting that all manufacturing processes occurred in the US.
   c. AIS compliance certification must be provided on company letterhead, in the format provided by **Appendix 5 of the attached final EPA AIS guidance**.
   d. These certifications shall be collected and maintained by the municipality, and must be available upon request by either the EPA or the DEEP.

D. Waiver Request Process

1. A waiver from the AIS requirement may be requested for a CWF project if at least one of the following conditions is sufficiently demonstrated:
   a. The AIS requirement will increase the cost of the overall project by more than 25 percent, as demonstrated by the inclusion of a bid alternate and backup calculations;

b. The iron and steel products are not produced in the United States in sufficient and "reasonably available quantities" and of "satisfactory quality", as demonstrated by soliciting proposals from at least three manufacturers; or
c. The AIS requirement is inconsistent with the public interest.

2. Waiver Request Format
   a. The waiver request must include a table with responses to the "Information Checklist for Waiver Request" in **Appendix 1 of the attached final EPA AIS guidance**.
   b. Evaluation of the waiver request shall include the criteria in the "HQ Review Checklist for Waiver Request" in **Appendix 2 of the attached final EPA AIS guidance.**
   c. Waiver requests shall be submitted to the Connecticut Department of Energy and Environmental Protection (DEEP) for initial screening.
   d. If the DEEP determines that a waiver to the AIS requirement has been sufficiently demonstrated, the DEEP will forward the waiver request to the EPA.

3. Final Waiver Determination
   a. The waiver request shall be made available on the EPA website and the DEEP CWF webpage.
   b. The EPA shall allow for informal public input for at least 15 days prior to making a determination.

IV. DEFINITIONS

AIS: American Iron and Steel

Assistant recipients: A borrower or grantee that receives funding from a State CWSRF program. In the case of Connecticut CWF projects, "assistance recipients" are the municipalities, as defined below.

CGS: Connecticut General Statutes

Construction materials: Construction materials are those articles, materials, or supplies made primarily of iron and steel, that are permanently incorporated into the applicable project, not including mechanical and/or electrical components, equipment and systems.

Some construction materials may overlap with what is also considered "structural steel". This includes, but is not limited to, the following products: wire rod, bar, angles, concrete reinforcing bar, wire, wire cloth, wire rope and cables, tubing, framing, joists, trusses, fasteners (i.e., nuts and bolts), welding rods, decking, grating, railings, stairs, access ramps, fire escapes, ladders, wall panels, dome structures, roofing, ductwork, surface drains, cable hanging systems, manhole steps, fencing and fence tubing, guardrails, doors, and stationary screens.

CWF: Connecticut Clean Water Fund

CWSRF: Clean Water State Revolving Fund

DEEP: Connecticut Department of Energy and Environmental Protection

Electrical equipment: Electrical equipment is typically any machine powered by electricity and includes components that are part of the electrical distribution system.

EPA: Federal Environmental Protection Agency

FWPCA: Federal Water Pollution Control Act

Final EPA AIS Guidance: This refers to the attached EPA Memorandum entitled "Implementation of American Iron and Steel provisions of P.L. 113-76, Consolidated Appropriations Act, 2014" dated March 20, 2014.

HVAC: Heating, ventilation, and air conditioning

Municipality: Any "municipality" eligible for the CWF, as defined in Section 22a-475 of the CGS. The municipalities are the "assistance recipients" for the purposes of the AIS requirement.

Iron and Steel Products: The term "iron and steel products" means the following products are made of "primarily iron or steel": lined or unlined pipes and fittings, manholes covers and other municipal castings, hydrants, tanks, flanges, pipe clamps and restraints, valves, structural steel, reinforced precast concrete, and construction materials.

Mechanical equipment: Mechanical equipment is typically that which has motorized parts and/or is powered by a motor.

Municipal castings: Municipal castings are cast iron or steel infrastructure products that are melted and cast. They typically provide access, protection, or housing for components incorporated into utility owned drinking water, storm water, wastewater, and surface infrastructure. They are typically made of grey or ductile iron, or steel. Examples of municipal castings are:

- Access Hatches;
- Ballast Screen;
- Benches (Iron or Steel);
- Bollards;
- Cast Bases;
- Cast Iron Hinged Hatches, Square and Rectangular;
- Cast Iron Riser Rings;
- Catch Basin Inlet;
- Cleanout/Monument Boxes;
- Construction Covers and Frames;
- Curb and Corner Guards;
- Curb Openings;
- Detectable Warning Plates;
- Downspout Shoes (Boot, Inlet);
- Drainage Grates, Frames and Curb Inlets;
- Inlets;
- Junction Boxes;
- Lampposts;
- Manhole Covers, Rings and Frames, Risers;
- Meter Boxes;
- Service Boxes;
- Steel Hinged Hatches, Square and Rectangular;
- Steel Riser Rings;

- Trash receptacles;
- Tree Grates;
- Tree Guards;
- Trench Grates; and
- Valve Boxes, Covers and Risers.

Primarily Iron or Steel: To be considered "primarily iron or steel", the product must be made of greater than 50% iron or steel, measured by cost. The cost should be based on the material costs.

P.L.: Public Law

Production in the US: For the purposes of the AIS requirement, "production in the US" of the iron or steel used in an applicable product requires that all manufacturing processes must take place in the US, except metallurgical processes involving refinement of steel additives.

Reasonably Available Quantity: The quantity of iron or steel products is available or will be available at the time needed and place needed, and in the proper form or specification as specified in the project plans and design.

Satisfactory Quality: The quality of iron or steel products, as specified in the project plans and designs.

SCADA: Supervisory control and data acquisition

Steel: An alloy that includes at least 50 percent iron, between 0.02 and 2 percent carbon, and may include other elements. Metallic elements such as chromium, nickel, molybdenum, manganese, and silicon may be added during the melting of steel for the purpose of enhancing properties such as corrosion resistance, hardness, or strength. The definition of steel includes carbon steel, alloy steel, stainless steel, tool steel, and other specialty steels.

Step Certification: A step certification is a process under which each handler (supplier, fabricator, manufacturer, processor, etc.) of the iron and steel products certifies that their step in the process was domestically performed.

Structural steel: Structural steel is rolled flanged shapes, having at least one dimension of their cross-section three inches or greater, which are used in the construction of bridges, buildings, ships, railroad rolling stock, and for numerous other constructional purposes. Such shapes are designated as wide-flange shapes, standard I-beams, channels, angles, tees and zees. Other shapes include H-piles, sheet piling, tie plates, cross ties, and those for other special purposes. Some structural steel may overlap with what is also considered "construction materials" (see definition above).

RCSA: Regulations of the Connecticut State Agencies

US: United States

VFDs: Variable frequency drives

WRRDA: Water Resources Reform and Development Act of 2014

5/28/2015

Date

George V. Hicks, P.E.
Supervising Sanitary Engineer
Bureau of Water Protection & Land Reuse

Attachment: EPA Memorandum: "Implementation of American Iron and Steel provisions of P.L. 113-76, Consolidated Appropriations Act, 2014" dated March 20, 2014.

UNITED STATES ENVIRONMENTAL PROTECTION AGENCY
WASHINGTON, D.C. 20460

MAR 2 0 2014

OFFICE OF WATER

MEMORANDUM

SUBJECT: Implementation of American Iron and Steel provisions of P.L. 113-76, Consolidated Appropriations Act, 2014

FROM: For Andrew D. Sawyers, Director
Office of Wastewater Management (4201M)

Peter C. Grevatt, Director
Office of Ground Water and Drinking Water (4601M)

TO: Water Management Division Directors
Regions I - X

P.L. 113-76, Consolidated Appropriations Act, 2014 (Act), includes an "American Iron and Steel (AIS)" requirement in section 436 that requires Clean Water State Revolving Loan Fund (CWSRF) and Drinking Water State Revolving Loan Fund (DWSRF) assistance recipients to use iron and steel products that are produced in the United States for projects for the construction, alteration, maintenance, or repair of a public water system or treatment works if the project is funded through an assistance agreement executed beginning January 17, 2014 (enactment of the Act), through the end of Federal Fiscal Year 2014.

Section 436 also sets forth certain circumstances under which EPA may waive the AIS requirement. Furthermore, the Act specifically exempts projects where engineering plans and specifications were approved by a State agency prior to January 17, 2014.

The approach described below explains how EPA will implement the AIS requirement. The first section is in the form of questions and answers that address the types of projects that must comply with the AIS requirement, the types of products covered by the AIS requirement, and compliance. The second section is a step-by-step process for requesting waivers and the circumstances under which waivers may be granted.

Implementation

The Act states:

Sec. 436. (a)(1) None of the funds made available by a State water pollution control revolving fund as authorized by title VI of the Federal Water Pollution Control Act (33 U.S.C. 1381 et seq.) or made available by a drinking water treatment revolving loan fund as authorized by section 1452 of the Safe Drinking Water Act (42 U.S.C. 300j–12) shall be used for a project for the construction, alteration, maintenance, or repair of a public water system or treatment works unless all of the iron and steel products used in the project are produced in the United States.

(2) In this section, the term ''iron and steel products'' means the following products made primarily of iron or steel: lined or unlined pipes and fittings, manhole covers and other municipal castings, hydrants, tanks, flanges, pipe clamps and restraints, valves, structural steel, reinforced precast concrete, and construction materials.

(b) Subsection (a) shall not apply in any case or category of cases in which the Administrator of the Environmental Protection Agency (in this section referred to as the ''Administrator'') finds that—

(1) applying subsection (a) would be inconsistent with the public interest;

(2) iron and steel products are not produced in the United States in sufficient and reasonably available quantities and of a satisfactory quality; or

(3) inclusion of iron and steel products produced in the United States will increase the cost of the overall project by more than 25 percent.

(c) If the Administrator receives a request for a waiver under this section, the Administrator shall make available to the public on an informal basis a copy of the request and information available to the Administrator concerning the request, and shall allow for informal public input on the request for at least 15 days prior to making a finding based on the request. The Administrator shall make the request and accompanying information available by electronic means, including on the official public Internet Web site of the Environmental Protection Agency.

(d) This section shall be applied in a manner consistent with United States obligations under international agreements.

(e) The Administrator may retain up to 0.25 percent of the funds appropriated in this Act for the Clean and Drinking Water State Revolving Funds for carrying out

the provisions described in subsection (a)(1) for management and oversight of the requirements of this section.

(f) This section does not apply with respect to a project if a State agency approves the engineering plans and specifications for the project, in that agency's capacity to approve such plans and specifications prior to a project requesting bids, prior to the date of the enactment of this Act.

The following questions and answers provide guidance for implementing and complying with the AIS requirements:

Project Coverage

1) What classes of projects are covered by the AIS requirement?

All treatment works projects funded by a CWSRF assistance agreement, and all public water system projects funded by a DWSRF assistance agreement, from the date of enactment through the end of Federal Fiscal Year 2014, are covered. The AIS requirements apply to the entirety of the project, no matter when construction begins or ends. Additionally, the AIS requirements apply to all parts of the project, no matter the source of funding.

2) Does the AIS requirement apply to nonpoint source projects or national estuary projects?

No. Congress did not include an AIS requirement for nonpoint source and national estuary projects unless the project can also be classified as a 'treatment works' as defined by section 212 of the Clean Water Act.

3) Are any projects for the construction, alteration, maintenance, or repair of a public water system or treatment works excluded from the AIS requirement?

Any project, whether a treatment works project or a public water system project, for which engineering plans and specifications were approved by the responsible state agency prior to January 17, 2014, is excluded from the AIS requirements.

4) What if the project does not have approved engineering plans and specifications but has signed an assistance agreement with a CWSRF or DWSRF program prior to January 17, 2014?

The AIS requirements do not apply to any project for which an assistance agreement was signed prior to January 17, 2014.

5) What if the project does not have approved engineering plans and specifications, but bids were advertised prior to January 17, 2014 and an assistance agreement was signed after January 17, 2014?

If the project does not require approved engineering plans and specifications, the bid advertisement date will count in lieu of the approval date for purposes of the exemption in section 436(f).

6) What if the assistance agreement that was signed prior to January 17, 2014, only funded a part of the overall project, where the remainder of the project will be funded later with another SRF loan?

If the original assistance agreement funded any construction of the project, the date of the original assistance agreement counts for purposes of the exemption. If the original assistance agreement was only for planning and design, the date of that assistance agreement will count for purposes of the exemption only if there is a written commitment or expectation on the part of the assistance recipient to fund the remainder of the project with SRF funds.

7) What if the assistance agreement that was signed prior to January 17, 2014, funded the first phase of a multi-phase project, where the remaining phases will be funded by SRF assistance in the future?

In such a case, the phases of the project will be considered a single project if all construction necessary to complete the building or work, regardless of the number of contracts or assistance agreements involved, are closely related in purpose, time and place. However, there are many situations in which major construction activities are clearly undertaken in phases that are distinct in purpose, time, or place. In the case of distinct phases, projects with engineering plans and specifications approval or assistance agreements signed prior to January 17, 2014 would be excluded from AIS requirements while those approved/signed on January 17, 2014, or later would be covered by the AIS requirements.

8) What if a project has split funding from a non-SRF source?

Many States intend to fund projects with "split" funding, from the SRF program and from State or other programs. Based on the Act language in section 436, which requires that American iron and steel products be used in any project for the construction, alteration, maintenance, or repair of a public water system or treatment works receiving SRF funding between and including January 17, 2014 and September 30, 2014, any project that is funded in whole or in part with such funds must comply with the AIS requirement. A "project" consists of all construction necessary to complete the building or work regardless of the number of contracts or assistance agreements involved so long as all contracts and assistance agreements awarded are closely related in purpose, time and place. This precludes the intentional splitting of SRF projects into separate and smaller contracts or assistance agreements to avoid AIS coverage on some portion of a larger

project, particularly where the activities are integrally and proximately related to the whole. However, there are many situations in which major construction activities are clearly undertaken in separate phases that are distinct in purpose, time, or place, in which case, separate contracts or assistance agreement for SRF and State or other funding would carry separate requirements.

9) What about refinancing?

If a project began construction, financed from a non-SRF source, prior to January 17, 2014, but is refinanced through an SRF assistance agreement executed on or after January 17, 2014 and prior to October 1, 2014, AIS requirements will apply to all construction that occurs on or after January 17, 2014, through completion of construction, unless, as is likely, engineering plans and specifications were approved by a responsible state agency prior to January 17, 2014. There is no retroactive application of the AIS requirements where a refinancing occurs for a project that has completed construction prior to January 17, 2014.

10) Do the AIS requirements apply to any other EPA programs, besides the SRF program, such as the Tribal Set-aside grants or grants to the Territories and DC?

No, the AIS requirement only applies to funds made available by a State water pollution control revolving fund as authorized by title VI of the Federal Water Pollution Control Act (33 U.S.C. 1381 et seq.) or made available by a drinking water treatment revolving loan fund as authorized by section 1452 of the Safe Drinking Water Act (42 U.S.C. 300j–12)

<u>Covered Iron and Steel Products</u>

11) What is an iron or steel product?

For purposes of the CWSRF and DWSRF projects that must comply with the AIS requirement, an iron or steel product is one of the following made primarily of iron or steel that is permanently incorporated into the public water system or treatment works:

Lined or unlined pipes or fittings;
Manhole Covers;
Municipal Castings (defined in more detail below);
Hydrants;
Tanks;
Flanges;
Pipe clamps and restraints;
Valves;
Structural steel (defined in more detail below);
Reinforced precast concrete; and
Construction materials (defined in more detail below).

12) What does the term 'primarily iron or steel' mean?

'Primarily iron or steel' places constraints on the list of products above. For one of the listed products to be considered subject to the AIS requirements, it must be made of greater than 50% iron or steel, measured by cost. The cost should be based on the material costs.

13) Can you provide an example of how to perform a cost determination?

For example, the iron portion of a fire hydrant would likely be the bonnet, body and shoe, and the cost then would include the pouring and casting to create those components. The other material costs would include non-iron and steel internal workings of the fire hydrant (i.e., stem, coupling, valve, seals, etc). However, the assembly of the internal workings into the hydrant body would not be included in this cost calculation. If one of the listed products is not made primarily of iron or steel, United States (US) provenance is not required. An exception to this definition is reinforced precast concrete, which is addressed in a later question.

14) If a product is composed of more than 50% iron or steel, but is not listed in the above list of items, must the item be produced in the US? Alternatively, must the iron or steel in such a product be produced in the US?

The answer to both question is no. Only items on the above list must be produced in the US. Additionally, the iron or steel in a non-listed item can be sourced from outside the US.

15) What is the definition of steel?

Steel means an alloy that includes at least 50 percent iron, between .02 and 2 percent carbon, and may include other elements. Metallic elements such as chromium, nickel, molybdenum, manganese, and silicon may be added during the melting of steel for the purpose of enhancing properties such as corrosion resistance, hardness, or strength. The definition of steel covers carbon steel, alloy steel, stainless steel, tool steel and other specialty steels.

16) What does 'produced in the United States' mean?

Production in the United States of the iron or steel products used in the project requires that all manufacturing processes, including application of coatings, must take place in the United States, with the exception of metallurgical processes involving refinement of steel additives. All manufacturing processes includes processes such as melting, refining, forming, rolling, drawing, finishing, fabricating and coating. Further, if a domestic iron and steel product is taken out of the US for any part of the manufacturing process, it becomes foreign source material. However, raw materials such as iron ore, limestone and iron and steel scrap are not covered by the AIS requirement, and the

material(s), if any, being applied as a coating are similarly not covered. Non-iron or steel components of an iron and steel product may come from non-US sources. For example, for products such as valves and hydrants, the individual non-iron and steel components do not have to be of domestic origin.

17) Are the raw materials used in the production of iron or steel required to come from US sources?

No. Raw materials, such as iron ore, limestone, scrap iron, and scrap steel, can come from non-US sources.

18) If an above listed item is primarily made of iron or steel, but is only at the construction site temporarily, must such an item be produced in the US?

No. Only the above listed products made primarily of iron or steel, permanently incorporated into the project must be produced in the US. For example trench boxes, scaffolding or equipment, which are removed from the project site upon completion of the project, are not required to be made of U.S. Iron or Steel.

19) What is the definition of 'municipal castings'?

Municipal castings are cast iron or steel infrastructure products that are melted and cast. They typically provide access, protection, or housing for components incorporated into utility owned drinking water, storm water, wastewater, and surface infrastructure. They are typically made of grey or ductile iron, or steel. Examples of municipal castings are:

Access Hatches;
Ballast Screen;
Benches (Iron or Steel);
Bollards;
Cast Bases;
Cast Iron Hinged Hatches, Square and Rectangular;
Cast Iron Riser Rings;
Catch Basin Inlet;
Cleanout/Monument Boxes;
Construction Covers and Frames;
Curb and Corner Guards;
Curb Openings;
Detectable Warning Plates;
Downspout Shoes (Boot, Inlet);
Drainage Grates, Frames and Curb Inlets;
Inlets;
Junction Boxes;
Lampposts;
Manhole Covers, Rings and Frames, Risers;

Meter Boxes;
Service Boxes;
Steel Hinged Hatches, Square and Rectangular;
Steel Riser Rings;
Trash receptacles;
Tree Grates;
Tree Guards;
Trench Grates; and
Valve Boxes, Covers and Risers.

20) What is 'structural steel'?

Structural steel is rolled flanged shapes, having at least one dimension of their cross-section three inches or greater, which are used in the construction of bridges, buildings, ships, railroad rolling stock, and for numerous other constructional purposes. Such shapes are designated as wide-flange shapes, standard I-beams, channels, angles, tees and zees. Other shapes include H-piles, sheet piling, tie plates, cross ties, and those for other special purposes.

21) What is a 'construction material' for purposes of the AIS requirement?

Construction materials are those articles, materials, or supplies made primarily of iron and steel, that are permanently incorporated into the project, not including mechanical and/or electrical components, equipment and systems. Some of these products may overlap with what is also considered "structural steel". This includes, but is not limited to, the following products: wire rod, bar, angles, concrete reinforcing bar, wire, wire cloth, wire rope and cables, tubing, framing, joists, trusses, fasteners (i.e., nuts and bolts), welding rods, decking, grating, railings, stairs, access ramps, fire escapes, ladders, wall panels, dome structures, roofing, ductwork, surface drains, cable hanging systems, manhole steps, fencing and fence tubing, guardrails, doors, and stationary screens.

22) What is not considered a 'construction material' for purposes of the AIS requirement?

Mechanical and electrical components, equipment and systems are not considered construction materials. Mechanical equipment is typically that which has motorized parts and/or is powered by a motor. Electrical equipment is typically any machine powered by electricity and includes components that are part of the electrical distribution system.

The following examples (including their appurtenances necessary for their intended use and operation) are NOT considered construction materials: pumps, motors, gear reducers, drives (including variable frequency drives (VFDs)), electric/pneumatic/manual accessories used to operate valves (such as electric valve actuators), mixers, gates, motorized screens (such as traveling screens), blowers/aeration equipment, compressors, meters, sensors, controls and switches, supervisory control and

data acquisition (SCADA), membrane bioreactor systems, membrane filtration systems, filters, clarifiers and clarifier mechanisms, rakes, grinders, disinfection systems, presses (including belt presses), conveyors, cranes, HVAC (excluding ductwork), water heaters, heat exchangers, generators, cabinetry and housings (such as electrical boxes/enclosures), lighting fixtures, electrical conduit, emergency life systems, metal office furniture, shelving, laboratory equipment, analytical instrumentation, and dewatering equipment.

23) If the iron or steel is produced in the US, may other steps in the manufacturing process take place outside of the US, such as assembly?

No. Production in the US of the iron or steel used in a listed product requires that all manufacturing processes must take place in the United States, except metallurgical processes involving refinement of steel additives.

24) What processes must occur in the US to be compliant with the AIS requirement for reinforced precast concrete?

While reinforced precast concrete may not be at least 50% iron or steel, in this particular case, the reinforcing bar and wire must be produced in the US and meet the same standards as for any other iron or steel product. Additionally, the casting of the concrete product must take place in the US. The cement and other raw materials used in concrete production are not required to be of domestic origin.

If the reinforced concrete is cast at the construction site, the reinforcing bar and wire are considered to be a construction material and must be produced in the US.

Compliance

25) How should an assistance recipient document compliance with the AIS requirement?

In order to ensure compliance with the AIS requirement, specific AIS contract language must be included in each contract, starting with the assistance agreement, all the way down to the purchase agreements. Sample language for assistance agreements and contracts can be found in Appendix 3 and 4.

EPA recommends the use of a step certification process, similar to one used by the Federal Highway Administration. The step certification process is a method to ensure that producers adhere to the AIS requirement and assistance recipients can verify that products comply with the AIS requirement. The process also establishes accountability and better enables States to take enforcement actions against violators.

Step certification creates a paper trail which documents the location of the manufacturing process involved with the production of steel and iron materials. A step certification is a process under which each handler (supplier, fabricator, manufacturer,

processor, etc) of the iron and steel products certifies that their step in the process was domestically performed. Each time a step in the manufacturing process takes place, the manufacturer delivers its work along with a certification of its origin. A certification can be quite simple. Typically, it includes the name of the manufacturer, the location of the manufacturing facility where the product or process took place (not its headquarters), a description of the product or item being delivered, and a signature by a manufacturer's responsible party. Attached, as Appendix 5, are sample certifications. These certifications should be collected and maintained by assistance recipients.

Alternatively, the final manufacturer that delivers the iron or steel product to the worksite, vendor, or contractor, may provide a certification asserting that all manufacturing processes occurred in the US. While this type of certification may be acceptable, it may not provide the same degree of assurance. Additional documentation may be needed if the certification is lacking important information. Step certification is the best practice.

26) How should a State ensure assistance recipients are complying with the AIS requirement?

In order to ensure compliance with the AIS requirement, States SRF programs must include specific AIS contract language in the assistance agreement. Sample language for assistance agreements can be found in Appendix 3.

States should also, as a best practice, conduct site visits of projects during construction and review documentation demonstrating proof of compliance which the assistance recipient has gathered.

27) What happens if a State or EPA finds a non-compliant iron and/or steel product permanently incorporated in the project?

If a potentially non-compliant product is identified, the State should notify the assistance recipient of the apparent unauthorized use of the non-domestic component, including a proposed corrective action, and should be given the opportunity to reply. If unauthorized use is confirmed, the State can take one or more of the following actions: request a waiver where appropriate; require the removal of the non-domestic item; or withhold payment for all or part of the project. Only EPA can issue waivers to authorize the use of a non-domestic item. EPA may use remedies available to it under the Clean Water Act, the Safe Drinking Water Act, and 40 CFR part 31 grant regulations, in the event of a violation of a grant term and condition.

It is recommended that the State work collaboratively with EPA to determine the appropriate corrective action, especially in cases where the State is the one who identifies the item in noncompliance or there is a disagreement with the assistance recipient.

If fraud, waste, abuse, or any violation of the law is suspected, the Office of Inspector General (OIG) should be contacted immediately. The OIG can be reached at 1-

888-546-8740 or OIG_Hotline@epa.gov. More information can be found at this website: http://www.epa.gov/oig/hotline.htm.

28) How do international trade agreements affect the implementation of the AIS requirements?

The AIS provision applies in a manner consistent with United States obligations under international agreements. Typically, these obligations only apply to direct procurement by the entities that are signatories to such agreements. In general, SRF assistance recipients are not signatories to such agreements, so these agreements have no impact on this AIS provision. In the few instances where such an agreement applies to a municipality, that municipality is under the obligation to determine its applicability and requirements and document the actions taken to comply for the State.

Waiver Process

The statute permits EPA to issue waivers for a case or category of cases where EPA finds (1) that applying these requirements would be inconsistent with the public interest; (2) iron and steel products are not produced in the US in sufficient and reasonably available quantities and of a satisfactory quality; or (3) inclusion of iron and steel products produced in the US will increase the cost of the overall project by more than 25 percent.

In order to implement the AIS requirements, EPA has developed an approach to allow for effective and efficient implementation of the waiver process to allow projects to proceed in a timely manner. The framework described below will allow States, on behalf of the assistance recipients, to apply for waivers of the AIS requirement directly to EPA Headquarters. Only waiver requests received from states will be considered. Pursuant to the Act, EPA has the responsibility to make findings as to the issuance of waivers to the AIS requirements.

Definitions

The following terms are critical to the interpretation and implementation of the AIS requirements and apply to the process described in this memorandum:

Reasonably Available Quantity: The quantity of iron or steel products is available or will be available at the time needed and place needed, and in the proper form or specification as specified in the project plans and design.

Satisfactory Quality: The quality of iron or steel products, as specified in the project plans and designs.

Assistance Recipient: A borrower or grantee that receives funding from a State CWSRF or DWSRF program.

Step-By-Step Waiver Process

Application by Assistance Recipient

Each local entity that receives SRF water infrastructure financial assistance is required by section 436 of the Act to use American made iron and steel products in the construction of its project. However, the recipient may request a waiver. Until a waiver is granted by EPA, the AIS requirement stands, except as noted above with respect to municipalities covered by international agreements.

The waiver process begins with the SRF assistance recipient. In order to fulfill the AIS requirement, the assistance recipient must in good faith design the project (where applicable) and solicit bids for construction with American made iron and steel products. It is essential that the assistance recipient include the AIS terms in any request for proposals or solicitations for bids, and in all contracts (see Appendix 3 for sample construction contract language). The assistance recipient may receive a waiver at any point before, during, or after the bid process, if one or more of three conditions is met:

1. Applying the American Iron and Steel requirements of the Act would be inconsistent with the public interest;
2. Iron and steel products are not produced in the United States in sufficient and reasonably available quantities and of a satisfactory quality; or
3. Inclusion of iron and steel products produced in the United States will increase the cost of the overall project by more than 25 percent.

Proper and sufficient documentation must be provided by the assistance recipient. A checklist detailing the types of information required for a waiver to be processed is attached as Appendix 1.

Additionally, it is strongly encouraged that assistance recipients hold pre-bid conferences with potential bidders. A pre-bid conference can help to identify iron and steel products needed to complete the project as described in the plans and specifications that may not be available from domestic sources. It may also identify the need to seek a waiver prior to bid, and can help inform the recipient on compliance options.

In order to apply for a project waiver, the assistance recipient should email the request in the form of a Word document (.doc) to the State SRF program. It is strongly recommended that the State designate a single person for all AIS communications. The State SRF designee will review the application for the waiver and determine whether the necessary information has been included. Once the waiver application is complete, the State designee will forward the application to either of two email addresses. For CWSRF waiver requests, please send the application to: cwsrfwaiver@epa.gov. For DWSRF waiver requests, please send the application to: dwsrfwaiver@epa.gov.

Evaluation by EPA

After receiving an application for waiver of the AIS requirements, EPA Headquarters will publish the request on its website for 15 days and receive informal comment. EPA Headquarters will then use the checklist in Appendix 2 to determine whether the application properly and adequately documents and justifies the statutory basis cited for the waiver – that it is quantitatively and qualitatively sufficient – and to determine whether or not to grant the waiver.

In the event that EPA finds that adequate documentation and justification has been submitted, the Administrator may grant a waiver to the assistance recipient. EPA will notify the State designee that a waiver request has been approved or denied as soon as such a decision has been made. Granting such a waiver is a three-step process:

1. Posting – After receiving an application for a waiver, EPA is required to publish the application and all material submitted with the application on EPA's website for 15 days. During that period, the public will have the opportunity to review the request and provide informal comment to EPA. The website can be found at: http://water.epa.gov/grants_funding/aisrequirement.cfm

2. Evaluation – After receiving an application for waiver of the AIS requirements, EPA Headquarters will use the checklist in Appendix 2 to determine whether the application properly and adequately documents and justifies the statutory basis cited for the waiver – that it is quantitatively and qualitatively sufficient – and to determine whether or not to grant the waiver.

3. Signature of waiver approval by the Administrator or another agency official with delegated authority – As soon as the waiver is signed and dated, EPA will notify the State SRF program, and post the signed waiver on our website. The assistance recipient should keep a copy of the signed waiver in its project files.

Public Interest Waivers

EPA has the authority to issue public interest waivers. Evaluation of a public interest waiver request may be more complicated than that of other waiver requests so they may take more time than other waiver requests for a decision to be made. An example of a public interest waiver that might be issued could be for a community that has standardized on a particular type or manufacturer of a valve because of its performance to meet their specifications. Switching to an alternative valve may require staff to be trained on the new equipment and additional spare parts would need to be purchased and stocked, existing valves may need to be unnecessarily replaced, and portions of the system may need to be redesigned. Therefore, requiring the community to install an alternative valve would be inconsistent with public interest.

EPA also has the authority to issue a public interest waiver that covers categories of products that might apply to all projects.

EPA reserves the right to issue national waivers that may apply to particular classes of assistance recipients, particular classes of projects, or particular categories of iron or steel products. EPA may develop national or (US geographic) regional categorical waivers through the identification of similar circumstances in the detailed justifications presented to EPA in a waiver request or requests. EPA may issue a national waiver based on policy decisions regarding the public's interest or a determination that a particular item is not produced domestically in reasonably available quantities or of a sufficient quality. In such cases, EPA may determine it is necessary to issue a national waiver.

If you have any questions concerning the contents of this memorandum, you may contact us, or have your staff contact Jordan Dorfman, Attorney-Advisor, State Revolving Fund Branch, Municipal Support Division, at dorfman.jordan@epa.gov or (202) 564-0614 or Kiri Anderer, Environmental Engineer, Infrastructure Branch, Drinking Water Protection Division, at anderer.kirsten@epa.gov or (202) 564-3134.

Attachments

Appendix 1: Information Checklist for Waiver Request

The purpose of this checklist is to help ensure that all appropriate and necessary information is submitted to EPA. EPA recommends that States review this checklist carefully and provide all appropriate information to EPA. This checklist is for informational purposes only and does not need to be included as part of a waiver application.

Items	✓	Notes
General • Waiver request includes the following information: — Description of the foreign and domestic construction materials — Unit of measure — Quantity — Price — Time of delivery or availability — Location of the construction project — Name and address of the proposed supplier — A detailed justification for the use of foreign construction materials • Waiver request was submitted according to the instructions in the memorandum • Assistance recipient made a good faith effort to solicit bids for domestic iron and steel products, as demonstrated by language in requests for proposals, contracts, and communications with the prime contractor		
Cost Waiver Requests • Waiver request includes the following information: — Comparison of overall cost of project with domestic iron and steel products to overall cost of project with foreign iron and steel products — Relevant excerpts from the bid documents used by the contractors to complete the comparison — Supporting documentation indicating that the contractor made a reasonable survey of the market, such as a description of the process for identifying suppliers and a list of contacted suppliers		
Availability Waiver Requests • Waiver request includes the following supporting documentation necessary to demonstrate the availability, quantity, and/or quality of the materials for which the waiver is requested: — Supplier information or pricing information from a reasonable number of domestic suppliers indicating availability/delivery date for construction materials — Documentation of the assistance recipient's efforts to find available domestic sources, such as a description of the process for identifying suppliers and a list of contacted suppliers. — Project schedule — Relevant excerpts from project plans, specifications, and permits indicating the required quantity and quality of construction materials • Waiver request includes a statement from the prime contractor and/or supplier confirming the non-availability of the domestic construction materials for which the waiver is sought • Has the State received other waiver requests for the materials described in this waiver request, for comparable projects?		

Appendix 2: HQ Review Checklist for Waiver Request

Instructions: To be completed by EPA. Review all waiver requests using the questions in the checklist, and mark the appropriate box as Yes, No or N/A. Marks that fall inside the shaded boxes may be grounds for denying the waiver. If none of your review markings fall into a shaded box, the waiver is eligible for approval if it indicates that one or more of the following conditions applies to the domestic product for which the waiver is sought:

1. The iron and/or steel products are not produced in the United States in sufficient and reasonably available quantities and of a satisfactory quality.
2. The inclusion of iron and/or steel products produced in the United States will increase the cost of the overall project by more than 25 percent.

Review Items	Yes	No	N/A	Comments
Cost Waiver Requests				
• Does the waiver request include the following information?				
— Comparison of overall cost of project with domestic iron and steel products to overall cost of project with foreign iron and steel products				
— Relevant excerpts from the bid documents used by the contractors to complete the comparison				
— A sufficient number of bid documents or pricing information from domestic sources to constitute a reasonable survey of the market				
• Does the Total Domestic Project exceed the Total Foreign Project Cost by more than 25%?				
Availability Waiver Requests				
• Does the waiver request include supporting documentation sufficient to show the availability, quantity, and/or quality of the iron and/or steel product for which the waiver is requested?				
— Supplier information or other documentation indicating availability/delivery date for materials				
— Project schedule				
— Relevant excerpts from project plans, specifications, and permits indicating the required quantity and quality of materials				
• Does supporting documentation provide sufficient evidence that the contractors made a reasonable effort to locate domestic suppliers of materials, such as a description of the process for identifying suppliers and a list of contacted suppliers?				
• Based on the materials delivery/availability date indicated in the supporting documentation, will the materials be unavailable when they are needed according to the project schedule? (By item, list schedule date and domestic delivery quote date or other relevant information)				
• Is EPA aware of any other evidence indicating the non-availability of the materials for which the waiver is requested? Examples include:				
— Multiple waiver requests for the materials described in this waiver request, for comparable projects in the same State				
— Multiple waiver requests for the materials described in this waiver request, for comparable projects in other States				
— Correspondence with construction trade associations indicating the non-availability of the materials				
• Are the available domestic materials indicated in the bid documents of inadequate quality compared those required by the project plans, specifications, and/or permits?				

Appendix 3: Example Loan Agreement Language

ALL ASSISTANCE AGREEMENT MUST HAVE A CLAUSE REQUIRING COMPLIANCE WITH THE AIS REQUIREMENT. THIS IS AN EXAMPLE OF WHAT COULD BE INCLUDED IN SRF ASSISTANCE AGREEMENTS. EPA MAKES NO CLAIMS REGARDING THE LEGALITY OF THIS CLAUSE WITH RESPECT TO STATE LAW:

Comply with all federal requirements applicable to the Loan (including those imposed by the 2014 Appropriations Act and related SRF Policy Guidelines) which the Participant understands includes, among other, requirements that all of the iron and steel products used in the Project are to be produced in the United States ("American Iron and Steel Requirement") unless (i) the Participant has requested and obtained a waiver from the Agency pertaining to the Project or (ii) the Finance Authority has otherwise advised the Participant in writing that the American Iron and Steel Requirement is not applicable to the Project.

Comply with all record keeping and reporting requirements under the Clean Water Act/Safe Drinking Water Act, including any reports required by a Federal agency or the Finance Authority such as performance indicators of program deliverables, information on costs and project progress. The Participant understands that (i) each contract and subcontract related to the Project is subject to audit by appropriate federal and state entities and (ii) failure to comply with the Clean Water Act/Safe Drinking Water Act and this Agreement may be a default hereunder that results in a repayment of the Loan in advance of the maturity of the Bonds and/or other remedial actions.

Appendix 4: Sample Construction Contract Language

ALL CONTRACTS MUST HAVE A CLAUSE REQUIRING COMPLIANCE WITH THE AIS REQUIREMENT. THIS IS AN EXAMPLE OF WHAT COULD BE INCLUDED IN ALL CONTRACTS IN PROJECTS THAT USE SRF FUNDS. EPA MAKES NO CLAIMS REGARDING THE LEGALITY OF THIS CLAUSE WITH RESPECT TO STATE OR LOCAL LAW:

The Contractor acknowledges to and for the benefit of the City of _____ ("Purchaser") and the _____ (the "State") that it understands the goods and services under this Agreement are being funded with monies made available by the Clean Water State Revolving Fund and/or Drinking Water State Revolving Fund that have statutory requirements commonly known as "American Iron and Steel;" that requires all of the iron and steel products used in the project to be produced in the United States ("American Iron and Steel Requirement") including iron and steel products provided by the Contactor pursuant to this Agreement. The Contractor hereby represents and warrants to and for the benefit of the Purchaser and the State that (a) the Contractor has reviewed and understands the American Iron and Steel Requirement, (b) all of the iron and steel products used in the project will be and/or have been produced in the United States in a manner that complies with the American Iron and Steel Requirement, unless a waiver of the requirement is approved, and (c) the Contractor will provide any further verified information, certification or assurance of compliance with this paragraph, or information necessary to support a waiver of the American Iron and Steel Requirement, as may be requested by the Purchaser or the State. Notwithstanding any other provision of this Agreement, any failure to comply with this paragraph by the Contractor shall permit the Purchaser or State to recover as damages against the Contractor any loss, expense, or cost (including without limitation attorney's fees) incurred by the Purchaser or State resulting from any such failure (including without limitation any impairment or loss of funding, whether in whole or in part, from the State or any damages owed to the State by the Purchaser). While the Contractor has no direct contractual privity with the State, as a lender to the Purchaser for the funding of its project, the Purchaser and the Contractor agree that the State is a third-party beneficiary and neither this paragraph (nor any other provision of this Agreement necessary to give this paragraph force or effect) shall be amended or waived without the prior written consent of the State.

Appendix 5: Sample Certifications

The following information is provided as a sample letter of **step** certification for AIS compliance. Documentation must be provided on company letterhead.

Date

Company Name

Company Address

City, State Zip

Subject: American Iron and Steel Step Certification for Project (XXXXXXXXXX)

I, (company representative), certify that the (melting, bending, coating, galvanizing, cutting, etc.) process for (manufacturing or fabricating) the following products and/or materials shipped or provided for the subject project is in full compliance with the American Iron and Steel requirement as mandated in EPA's State Revolving Fund Programs.

Item, Products and/or Materials:

1. Xxxx
2. Xxxx
3. Xxxx

Such process took place at the following location:

_____

If any of the above compliance statements change while providing material to this project we will immediately notify the prime contractor and the engineer.

Signed by company representative

The following information is provided as a sample letter of certification for AIS compliance. Documentation must be provided on company letterhead.

Date

Company Name

Company Address

City, State Zip

Subject: American Iron and Steel Certification for Project (XXXXXXXXXX)

I, (company representative), certify that the following products and/or materials shipped/provided to the subject project are in full compliance with the American Iron and Steel requirement as mandated in EPA's State Revolving Fund Programs.

Item, Products and/or Materials:

1. Xxxx
2. Xxxx
3. Xxxx

Such process took place at the following location:

_____

If any of the above compliance statements change while providing material to this project we will immediately notify the prime contractor and the engineer.

Signed by company representative

DIVISION 1 – GENERAL REQUIREMENTS

SECTION 01330

SUBMITTAL PROCEDURES

PART 1 GENERAL

1.1 SUMMARY

A. Section Includes

1. Action Submittals

2. Informational Submittals

B. Submittals shall be made in accordance with the schedule indicated in the technical sections.

1.2 DEFINITIONS

A. Action Submittals – includes written and graphic information submitted by Seller that requires Engineer's approval.

B. Informational Submittals – includes information submitted by Seller that does not require Engineer's approval. The Engineer will acknowledge receipt of such documents and provide comments when the submittals lack the detail required by the Contract Documents.

1.3 ACTION SUBMITTALS

A. Shop Drawings

1. Shop Drawings as defined in the General Conditions, and as specified in individual work sections include, but are not necessarily limited to, custom-prepared data such as fabrication and erection/installation drawings, schedule information, piece part drawings, actual shopwork manufacturing instructions, special wiring diagrams, coordination drawings, individual system or equipment inspection and test reports including performance curves and certification, as applicable to the Work.

2. Shop Drawings shall be of standardized sizes to enable the Buyer to maintain a permanent record of the submissions. Approved standard size drawings shall be

a. 24-inches by 36-inches

b. 22-inches by 34-inches

c. 11-inches by 17-inches

d. 8.5-inches by 11-inches

3. Submit Shop Drawings at the proper time so as to prevent delays in delivery of materials. Coordinate submittals for related or interdependent equipment.

4. Advise the Engineer in writing of any deviations from the requirements of the Contract Documents.

5. Check all Shop Drawings regarding measurements, size of members, materials, and details to determine if they conform to the Contract Documents. Shop Drawings found to be inaccurate, not in compliance, or otherwise in error shall be returned to the Seller for correction before submission to the Engineer.

6. All details on Shop Drawings submitted for approval shall show clearly the relation of the various parts to the main members and lines of the structure, and where correct fabrication of the work depends upon field measurements, such measurements shall be made and noted on the Shop Drawings before being submitted for approval.

7. Detailed installation drawings (sewers, equipment, piping, electrical conduits and controls, HVAC work, and plumbing, etc.) shall be drawn to scale and fully dimensioned.

8. No material or equipment shall be purchased or fabricated until the required Shop Drawings have been submitted and approved. Materials and equipment and the work involved in their installation or incorporation into the Work shall then be as shown in and represented by the Shop Drawings.

9. Until the necessary approval has been given, do not proceed with any portion of the work, the design or details of which are dependent upon the design or details of work, materials, equipment or other features for which approval is required.

10. If submitted equipment requires modifications to the structures, piping, layout, or other details shown on the Drawings, details of the proposed modifications must also be submitted for approval. If such equipment and modifications are approved, perform all Work necessary to make such modifications at no additional cost to the Owner.

B. Product Data: Product data as specified in individual Sections, include, but are not necessarily limited to, standard prepared data for manufactured products (catalog data), such as the manufacturer's product specification and installation instructions, availability of colors and patterns, manufacturer's printed statements of compliances and applicability, roughing-in diagrams and templates, catalog cuts, product photographs, standard wiring diagrams, printed performance curves and operational-range diagrams, production or quality control inspection and test reports and certifications, mill reports, product operating and maintenance instructions and recommended spare-parts listing, and printed product warranties, as applicable to the Work.

C. Samples and color selection charts: Provide sample, when requested by individual Specification to establish conformance with the Specifications, and as necessary to define color, texture and pattern selections available.

D. Operation and Maintenance Manuals: In accordance with Section 01770.

1.4 INFORMATIONAL SUBMITTALS

A. Schedule of Submittals

B. Product Listing and Manufacturers Qualifications

1. For products specified only by reference standards, give manufacturer, trade name, model or catalog designation and reference standards. Specifically identify the products, the anticipated schedule for delivery and storage, and the estimated value thereof for materials for which approval for off-site storage, if allowed, may be requested.

C. Certificates of Compliance

1. General:

a. Submit sworn certificates from the manufacturer or material supplier that the materials and fabrications provided under the Specification section conform with the Contract Documents.

b. Certificates shall be signed by an officer of the manufacturer's corporation and witnessed by a Notary Public.

2. Welding: Submit in accordance with individual Specification sections.

3. Installer: Prepare written statements on manufacturer's letterhead certifying that installer complies with requirements as specified in individual Specification sections.

4. Material Test: Prepared by qualified testing agency, on testing agency's standard form, indicating and interpreting test results of material for compliance with requirements.

5. Certificates of Successful Testing or Inspection: Submit when testing or inspection is required by Laws and Regulations or governing agency, or when specified in individual Specification sections.

6. Manufacturer's Certificate of Compliance: In accordance with individual Specification sections.

7. American Iron and Steel: Submit certifications regarding all iron or steel products covered by the American Iron and Steel requirement as specified in Section 00800. The final manufacturer that delivers the iron or steel product to the worksite, vendor, or contractor, shall provide a certification that all manufacturing processes occurred in the US. Additional documentation (step certification) may be required if the certification is lacking important information. A sample certification form is attached to this section.

D. Contract Closeout Submittals: In accordance with Section 01770.

E. Seller Design Data

1. Written and graphic information

2. List of assumptions

3. List of performance and design criteria

4. Summary of loads or load diagram

5. Calculations

6. List of applicable codes and regulations

7. Name and version of software

8. Information requested in individual Specification section

F. Seller's Instructions: Written or published information that documents manufacturer's recommendations, guidelines, and procedures in accordance with individual Specification sections.

G. Test and Inspection Reports

1. Submit test and inspection reports as required by individual Specification sections.

2. Test and inspection reports shall contain signature of person responsible for test or report.

3. Reports shall include identification of product and Specification, project name, date and time of test, type of test, location, test results, corrective action required if report indicates test is not in compliance with Contract Documents, interpretation of test results, and other information as required in individual Specification sections.

H. Equipment Data: Submit information on equipment to be used in the performance of the Work as required by individual Specification sections.

I. Testing and Start-up Data: Prepare and submit testing procedures proposed to perform testing required by individual Specification sections.

J. Seller Training Plan: At least two weeks prior to scheduling training of Owner's personnel, submit lesson plans for vendor training in accordance with individual Specification section and manufacturer's Operations and Maintenance Manuals.

K. Submittals stamped by another Professional Engineer: When specified in individual Specification sections, prepare and submit calculations and/or drawings stamped by a Professional Engineer licensed in the State where the work is being performed.

L. Coordination Drawings: When specified in individual Specification sections, prepare and submit drawings to show how multiple system and interdisciplinary work will be coordinated. Examples are conduit routing diagrams, duct layouts, utility coordination drawings, sprinkler plans etc.

1.5 PROCEDURES

A. Coordination

1. Prepare and submit documentation in advance of fabrication and product manufacture, so that the installation will not be delayed, other related work can be properly coordinated, and there is adequate time for review and resubmission, if required.

2. Provide no less than 30 days for review of submittals from the time received by the Engineer. For submittals of major equipment, that require more than 30 days to review, due to complexity and detail or those requiring review by multiple engineering disciplines,

3. Re-submittals will be subject to same review time.

4. No extension of time will be authorized due to failure to provide approvable submittals sufficiently in advance of the Work.

B. Review Shop Drawings, product data, and samples prior to submission and verify and determine:

1. Field measurements

2. Conformance with the Contract Documents. Advise the Buyer in writing of any deviations from the requirements of the Contract Documents.

3. Delete or strike out information that is not applicable to the Work.

C. Upload the electronic submittal files via Procore until such time that the Buyer directs otherwise. Access to Procore will be provided by the Engineer to the Seller until such time that the Buyer directs otherwise. Files must be in .pdf format and be indexed and searchable.

D. In addition to the electronic submission requirement, submit upon request, three hard copies of each submittal: one for Owner and one for Engineer's construction observer.

E. Numbering: Submissions shall be accompanied by a transmittal form (attached by the Construction Contractor) referencing the project name and applicable Specification section. A sample form similar to that which the Buyer (Construction Contractor) may request from the Seller is attached. Submittals shall be numbered sequentially, with the applicable Specification section and a hyphen preceding the number. (*e.g.* Submittal number 11330-01) Resubmittals shall bear the same transmittal number with a sequential letter suffix commencing with "A". (*e.g.* Submittal number 11330-01A)

F. When a P.E. stamp is specified in individual Specification sections, provide a completed P.E. certification form (attached at the end of this section) attached to the Submittal. Items submitted without the completed certification form will be returned by the Engineer for resubmission.

G. Partial and Incomplete Submittals

1. Shop Drawings shall be submitted as a complete package by Specification section, unless otherwise reviewed and approved by the Engineer. It is the intent that all information, materials, and samples associated with each Specification section be included as a single submittal for the Engineer's review.

2. Engineer will return entire submittals if preliminary review deems it incomplete including:

a. Missing or incomplete Submittal certification form

b. Insufficient number of copies

c. Missing content

3. Partial submittals may be considered, at Engineer's option, only when necessary to expedite the Project.

4. Partial submittals shall be clearly identified as such on the transmittal to identify missing components.

H. Submittals not required by the Specification will be returned without review or action code.

I. Resubmission

1. Make corrections and modifications required by the Engineer and resubmit until approved.

2. Clearly identify changes made to submittals and indicate other changes that have been made other than those requested by the Engineer.

3. A maximum of two re-submissions of each shop drawing will be reviewed, checked and commented upon without charge to the Seller (total of 3 submittals). Any additional submissions which are required by the Engineer to fulfill the stipulations of the Contract Documents will be charged to the Seller.

J. Distribution

1. Distribute approved Shop Drawings and approved product data to the Project Site and elsewhere as required to communicate the information to Suppliers, Subcontractors, and field personnel.

1.6 ENGINEER'S REVIEW

A. The Buyer and Engineer will review submittals for design, general methods of construction and detailing. The Buyer and Engineer's review and approval of submittals shall not be construed as a complete check nor does it relieve the Seller from responsibility for any departures or deviations from the requirements of the Contract Documents unless he has, in writing, called the Buyer and Engineer's attention to such deviations at the time of submission.

B. Action submittals as defined in paragraph 1.2 will be reviewed and returned under one of the following codes:

1. Approved (Action Code 1) is assigned when there are no notations or comments on the submittal. Equipment or materials may be released for manufacture, provided that it complies with requirements of the Contract Documents.

2. Approved as Noted (Action Code 2) is assigned when there are notations or comments on the submittal, but the equipment or materials may still be released for manufacture. All notations and comments must be incorporated in the final product. Resubmission is not necessary.

3. Revise and Resubmit (Action Code 3) is assigned when there are notations and comments requiring a resubmittal of the package. Work cannot proceed until the submittal is revised and resubmitted for review.

4. Not Approved (Action Code 4) is assigned when the submittal contains non-specified items or does not meet the requirements of the Contract Documents. It may also be assigned when there is a significant amount of missing material

required for the Engineer to perform a complete review. The entire package must be resubmitted, revised to bring the submittal into conformance. It may be necessary to resubmit using a different manufacturer/vendor to meet the requirements of the Contract Documents.

C. Informational submittals as defined in paragraph 1.2 do not require approval by the Engineer. Such submittals will be returned under one of the following codes:

1. Receipt Acknowledged (Action Code 5) is assigned when the submittal is provided for documentation purposes and is acknowledged as received. Comments may be noted using this action code.

2. Revise and Resubmit (Action Code 6) is assigned when there are notations and comments requiring a resubmittal of the package.

PART 2 PRODUCTS – NOT USED

PART 3 EXECUTION – NOT USED

END OF SECTION

J:\V\V0037 Vernon WWTP\005 WPCF Design\Design\Specifications\Preselection\IFAS\01330-P.doc

SUBMITTAL CERTIFICATION FORM

PROJECT:_____
ENGINEER:_____ ENGINEER'S PROJECT NO.:_____
CONTRACTOR:_____ CONTRACTOR'S PROJECT NO.:_____

TRANSMITTAL NO.:_____ SUBMITTAL NO.:_____
SPECIFICATION NO.:_____ DRAWING NO:_____
DESCRIPTION:_____
MANUFACTURER:_____

The above referenced submittal has been reviewed by the undersigned and I/we certify that the materials and/or equipment meets or exceeds the project specification requirements; that field measurements, dimensions, quantities, specified performance criteria, installation requirements, materials, catalog numbers and related materials have been verified; that all materials with respect to intended use, fabrication, shipping, handling, storage, assembly, and installation pertaining to the performance of the work has been determined and verified; that review includes all information related to the contractor's sole responsibility for means, methods, techniques, sequences, and procedures of construction and safety; and item has been coordinated with the overall project with:

☐ NO DEVIATIONS

☐ A COMPLETE LIST OF DEVIATIONS AS FOLLOWS:

_____
_____
_____
_____
_____
_____

SUBMITTED BY:_____ DATE:_____

GENERAL CONTRACTOR'S STAMP

THIS IS A SAMPLE FORM THAT IS SIMILAR TO THAT WHICH THE BUYER (GENERAL CONTRACTOR) MAY REQUEST FROM THE SELLER

P.E. CERTIFICATION FORM

The undersigned hereby certifies that he/she is a professional engineer registered in the State of Connecticut and that he/she has been employed by

_____ to design
(Name of Contractor)

_____
(Insert P.E. Responsibilities)

In accordance with Specification Section _____for the

_____
(Name of Project)

The undersigned further certifies that he/she has performed the said design in conformance with all applicable local, state and federal codes, rules and regulations; and, that his/her signature and P.E. stamp have been affixed to all calculations and drawings used in, and resulting from, the design.

The undersigned hereby agrees to make all original design drawings and calculations available to the

_____
(Insert Name of Owner)

or Owner's representative within seven days following written request therefor by the Owner.

_____	_____
P.E. Name	Contractor's Name
_____	_____
Signature	Signature
_____	_____
Title	Title
_____	_____
Address	Address

SAMPLE AMERICAN IRON AND STEEL CERTIFICATION

The following information is provided as a sample letter of certification for AIS compliance. Documentation must be provided on company letterhead.

Date

Company Name

Company Address
City, State, Zip

Subject: American Iron and Steel Certification for Project (_____)

I, (company representative), certify that the following products and/or materials shipped/provided to the subject project are in full compliance with the American Iron and Steel requirement as mandated in EPA's state Revolving Fund Programs.

Item, Products and/or Materials:

1. _____
2. _____
3. _____

Such process took place at the following location:

_____

If any of the above compliance statements change while providing material to this project we will immediately notify the prime contractor and the engineer.

Signed by company representative

SECTION 01630

PRODUCT SUBSTITUTION DURING CONSTRUCTION

PART 1 GENERAL

1.1 SUMMARY

A. Section Includes

1. Product substitution procedures

1.2 SELLER'S OPTIONS

A. For materials or equipment (hereinafter products) specified only by performance or reference standard, select product meeting that standard, by any Supplier. To the maximum extent possible, provide products of the same generic kind from a single source.

B. For products specified by naming several products or manufacturers, select any one of the products or Suppliers named, which fully complies with the Drawings and Specifications. Another “or-equal” product can also be considered by the Engineer if it complies with the provisions of Article 5.04, Section 00700. If a product proposed by the Seller does not qualify as an “or-equal” item, then it can be considered as a proposed substitute item, and the Seller must comply with the requirements of the Buyer regarding Substitutes.

C. For products specified by naming products or manufacturers and followed by words indicating that no “or-equal” item or substitution is permitted, there is no option and no substitution will be allowed.

D. Where more than one choice is available as a Seller's option, select product that is compatible with other products already selected or specified.

1.3 SUBSTITUTIONS

A. If in the Engineer’s sole discretion a product proposed by the Seller does not qualify as an “or-equal” item under the provisions of Article 5.04 of Section 00700, it can be considered a proposed substitute item. Submit information required under Article 5.04 of Section 00700 and Article 1.4 of this Section for proposed substitutes.

B. The Engineer will consider written requests for substitutions within 30 days after the Notice to Proceed to the general contractor. After this period, requests will be considered only in case of unavailability of product or other conditions beyond control of the Seller.

C. Submit 5 copies of request for substitutions. Submit a separate request for each proposed substitution. In addition to the submittal requirements outlined in Article 1.4 of this Section include the following in each substitution request:

1. For products or Suppliers:

a. Product identification, including Supplier & manufacturer's name and address.

b. Manufacturer's literature with product description, performance and test data, and reference standards.

c. Samples, if appropriate.

d. Name and address of similar projects on which product was used, and date of installation.

e. Such other data as the Engineer may require to establish that the proposed substitution is equal to the product, Supplier or method specified.

D. The substitution request shall include written certification and statements that are outlined Article 1.4 of this Section.

E. A request constitutes a representation that Seller:

1. Has investigated proposed product and determined that it meets or exceeds quality level of specified product.

2. Will provide same or better guarantees, warranties or bonds for proposed substitution as for specified product.

3. Will coordinate installation and make changes to other work by the construction contractor which may be required for the work of the construction contractor to be complete with no additional cost.

4. Waives all claims for additional costs or time extension which may subsequently become apparent.

5. Will reimburse Buyer for review or redesign services associated with re-approval by authorities having jurisdiction.

F. A proposed substitution will not be accepted if:

1. Acceptance will require changes in the design concept or a substantial revision of the Contract Documents.

2. It will delay completion of the Work.

3. It is intended or implied on a Shop Drawing and is not accompanied by a formal request for substitution from the Contractor.

G. The Seller is responsible for all costs relating to substitution requests.

H. Approval of a substitution does not relieve the Seller from the requirement for submission of Shop Drawings as set forth in the Contract Documents.

1.4 BUYERS REQUIREMENT FOR SUBSTITUTES

A. The following are the Buyers (Construction Contractor) requirements for Substitutions to which the Seller shall comply.

B. Unless the specification or description of an item of material or equipment required to be furnished under the Contract Documents contains or is followed by words reading that no substitution is permitted, Construction Contractor may request that Engineer authorize the use of other items of material or equipment under the

circumstances described below. To the extent possible such requests shall be made before commencement of related construction at the Site.

1. Construction Contractor shall submit sufficient information as provided below to allow Engineer to determine if the item of material or equipment proposed is functionally equivalent to that named and an acceptable substitute therefor. Engineer will not accept requests for review of proposed substitute items of material or equipment from anyone other than Construction Contractor.

2. Construction Contractor shall make written application to Engineer for review of a proposed substitute item of material or equipment that Construction Contractor seeks to furnish or use. The application:

   a. shall certify that the proposed substitute item will:

      1) perform adequately the functions and achieve the results called for by the general design,

      2) be similar in substance to that specified, and

      3) be suited to the same use as that specified.

   b. will state:

      1) the extent, if any, to which the use of the proposed substitute item will necessitate a change in Contract Times,

      2) whether use of the proposed substitute item in the Work will require a change in any of the Contract Documents (or in the provisions of any other direct contract with Owner for other work on the Project) to adapt the design to the proposed substitute item, and

      3) whether incorporation or use of the proposed substitute item in connection with the Work is subject to payment of any license fee or royalty.

   c. will identify:

      1) all variations of the proposed substitute item from that specified, and

      2) available engineering, sales, maintenance, repair, and replacement services.

   d. shall contain an itemized estimate of all costs or credits that will result directly or indirectly from use of such substitute item, including but not limited to changes in Contract Price, shared savings, costs of redesign, and claims of other contractors affected by any resulting change.

C. *Engineer's Evaluation and Determination*: Engineer will be allowed a reasonable time to evaluate each substitute request, and to obtain comments and direction from Owner. Engineer may require Construction Contractor to furnish additional data about the proposed substitute item. Engineer will be the sole judge of acceptability. No substitute will be ordered, furnished, installed, or utilized until Engineer's review is complete and Engineer determines that the proposed item is an acceptable

substitute. Engineer's determination will be evidenced by a Field Order or a proposed Change Order accounting for the substitution itself and all related impacts, including changes in Contract Price or Contract Times. Engineer will advise Construction Contractor in writing of any negative determination.

D. *Special Guarantee*: Owner may require Construction Contractor to furnish at Construction Contractor's expense a special performance guarantee or other surety with respect to any substitute.

E. *Reimbursement of Engineer's Cost*: Engineer will record Engineer's costs in evaluating a substitute proposed or submitted by Construction Contractor. Whether or not Engineer approves a substitute so proposed or submitted by Construction Contractor, Construction Contractor shall reimburse Owner for the reasonable charges of Engineer for evaluating each such proposed substitute. Construction Contractor shall also reimburse Owner for the reasonable charges of Engineer for making changes in the Contract Documents (or in the provisions of any other direct contract with Owner) resulting from the acceptance of each proposed substitute.

F. *Construction Contractor's Expense*: Construction Contractor shall provide all data in support of any proposed substitute at Construction Contractor's expense.

G. *Effect of Engineer's Determination*: If Engineer approves the substitution request, Construction Contractor shall execute the proposed Change Order and proceed with the substitution. The Engineer's denial of a substitution request shall be final and binding, and may not be reversed through an appeal under any provision of the Contract Documents. Construction Contractor may challenge the scope of reimbursement costs imposed under Paragraph 1.4.E, by timely submittal of a Change Proposal.

PART 2 PRODUCTS – NOT USED

PART 3 EXECUTION – NOT USED

END OF SECTION

J:\V\V0037 Vernon WWTP\005 WPCF Design\Design\Specifications\Preselection\IFAS\01630-P.Doc

SECTION 01770

CLOSEOUT PROCEDURES

1.1 SUMMARY

A. Section Includes

1. Documentation required for the transfer of the completed Goods and Special Services to the Buyer

1.2 SUBMITTALS

A. Closeout Submittals

1. Operation and maintenance manuals

1.3 FINAL PAYMENT

A. Refer to Article 10.06 in 00700, General Conditions, for procedures relating to obtaining Final Payment. Refer to 00520, Agreement, for Contract times.

1.4 PROJECT CLOSEOUT DOCUMENTS

A. Operation and Maintenance manuals – Submit four paper copies and two CD copies of Operation and Maintenance Manuals for items listed in other sections of these Specifications and for other items when directed by the Engineer. Electronic files provided shall be indexed and searchable. Draft O&M Manuals shall be submitted at least 60 days prior to start-up of the equipment. Respond to any comments from the draft review as part Final O&M Manuals.

1. Manuals shall be in three-ring binders. However, manuals which consist of 20 or fewer pages may be bound using three-hole, plastic, clear-front report covers.

2. Manuals shall include, as a minimum:

a. The Operations and Maintenance Manual Certification Form which shall be attached by the Construction Contractor to every copy of each Operations and Maintenance Manual submitted. A sample form similar to that which the Buyer (Construction Contractor) may request from the Seller is attached.

b. A comprehensive index broken down into sections and sub-sections.

c. Section and sub-section dividers

d. Separate divider for each product

e. A complete list of the equipment supplied, including serial numbers, ranges, and pertinent data

f. Full specifications on each item including catalog cuts, and drawings.

g. Detailed service, maintenance and operation instructions for each item supplied

h. System schematic drawings "as Constructed," illustrating all components, piping and electrical connections.

i. Clearly defined special maintenance requirements particular to this system, along with special calibration and test procedures

j. Operating instructions with a functional description of the entire system, with references to the systems schematic drawings and instructions. For emergency operations, include emergency procedures for equipment malfunctions to permit a short period of continued operation or to shut down the equipment to prevent further damage to the system's equipment. Include emergency shutdown instructions. Provide guidance on emergency operations of associated utility systems including valve locations and portions of systems controlled.

k. Complete parts lists with stock numbers and name, address, and telephone number of the local supplier

l. A complete "As Constructed" set of approved shop drawings

m. A narrative description for startup, shutdown, and post-shutdown procedures, including the control sequence for each.

n. Data sheets indicating the tag names (as used on the Drawings), manufacturer, complete model number, complete specifications, and parameter setup sheet with the parameter setup sheets following the manufacturers O&M manual in its entirety

o. All illustrations, detailed drawings, wiring diagrams, and instructions necessary for installing, operating, and maintaining the equipment, with illustrated parts numbered for identification and all information applying specifically to the equipment furnished and only including instructions that are applicable. All such illustrations shall be incorporated within the printing of the page to form a durable and permanent reference book.

p. List personnel hazards and equipment or product safety precautions for normal and emergency operating conditions.

q. List treatment chemicals needed for the process and provide, as a minimum, the CAS number, quality and concentrations required, an MSDS, transfer, unloading, and storage requirements, safety issues associated with storage and handling, delivery method and materials handling equipment needed, and contact name and address for suppliers.

r. Personnel Training Requirements: Provide information available from the manufacturers to use in training designated personnel to operate and maintain the equipment and systems properly.

s. Testing Equipment and Special Tool Information: Include information on test equipment required to perform specified tests and on special tools needed for the operation, maintenance, and repair of components.

t. Final documentation written specifically for this project including standard and modified standard documentation, with modifications to existing hardware or software manuals made on the respective pages or inserted adjacent to the modified pages. All standard documentation furnished shall have all portions that apply clearly indicated, and all portions that do not apply shall be lined out.

3. The format of the O&M manual shall meet the following general requirements:

a. Complete, comprehensive index

b. Section with operating instructions including complete overview of the system

c. Section with a complete parts list as described above

d. Section that includes all schematic diagrams, wiring diagrams etc. of the "As Constructed System"

e. Product information

B. Final Documentation – Submit the following final documentation:

1. The maintenance documentation shall describe the detailed preventative and corrective procedures required to keep the system in good operating condition. All hardware maintenance manuals shall make reference to appropriate diagnostics, where applicable, and all necessary timing diagrams shall be included. A maintenance manual or a set of manuals shall be furnished for all delivered hardware, including peripherals. The hardware maintenance documentation shall include, as a minimum, the following information:

a. Operation information – This information shall include a detailed description of how the equipment operates and a block diagram illustrating each major assembly in the equipment.

b. Preventative-maintenance instructions – These instructions shall include all applicable visual examinations, hardware testing and diagnostics routines, and the adjustments necessary for periodic preventative maintenance of the system to minimize corrective maintenance and repair.

c. Operator Service Requirements: Include instructions for services to be performed by the operator such as lubrication, adjustment, inspection, and gauge reading recording.

d. Corrective-maintenance instructions – These instructions shall include guides for locating malfunctions down to the card-replacement level. These guides shall include adequate details for quickly and efficiently locating the cause of an equipment malfunction and shall state the probable source(s) of trouble, the symptoms, probable cause, and instructions for remedying the malfunction.

e. Parts information – This information shall include the identification of each replaceable or field-repairable module. All parts shall be identified on a list in a drawing; the identification shall be of a level of detail sufficient for procuring any repairable or replaceable part. Cross-references between the Contractor's part number and manufacturer's part numbers shall be provided. All PC boards shall be identified by; manufacturer and model number, slot number, part name and configuration (if applicable).

f. When a PLC based control panel has been provided, provide two sets of documented as built Electronic PLC, PC, and OIT files on CD-ROMs in native machine readable format for all programs and configurations developed under this Contract. This machine readable documentation shall include all documentation files including logic and annotation files. Any changes made during or after factory acceptance test shall be incorporated at no additional cost to the Buyer. Provide files in formats suitable for "run-time" and "development". For example, Rockwell Automation's PanelViewPlus files should be provided in *.mer format, which is a runtime file for immediate use in a replacement operator terminal and in *.apa, which is an application archive for modification and development.

C. Provide warranties and bonds for items so listed in pertinent other sections of the Project Manual. Include the servicing and technical precautions prescribed by the manufacturers or contract documents to keep warranties in force. Provide all warranties and bonds in a three-ring binder.

D. List of service organizations, and principal vendors, including names, addresses, and telephone numbers where they can be reached for emergency service at all times including nights, weekends, and holidays.

E. Equipment start-up reports shall be submitted in duplicate to the Engineer for each piece of equipment installed. The report shall include detailed descriptions of the points inspected, tests, and adjustments made, quantitative results obtained and maintenance suggestions. The report shall certify that the equipment (1) has been satisfactorily installed and conforms to the Contract requirements; (2) is in accurate alignment and free from undue stress; (3) has been operated under full load and operates satisfactorily; and (4) nothing in the installation will render the manufacturer's warranty null and void. Equipment start-up reports shall be included in the appropriate equipment O&M manuals.

F. The performance testing report and Seller's certifications as in Equipment Specifications (Division 11).

G. Provide records of all Owner training/instruction sessions conducted in accordance with paragraph 1.5 of this Section and as required in the project Specifications. The record for each training session shall include reference to the relevant specification section, a summary of the topics covered in the training session, and a sign-in sheet listing all attendees in attendance for the training.

H. Provide color charts, legends, instructions, special tools and other requirements specifically requested in sections of the Specification.

1.5 INSTRUCTION OF OWNER'S PERSONNEL

A. Provide instruction by qualified manufacturers' representatives in the proper operation, maintenance, adjustment and the safety aspects of the equipment and materials furnished. Specific instruction requirements may be included within the sections of the Specification.

1.6 COMPLETION

A. The Contract shall be considered complete and final payment made, only when:

1. All provisions of the Contract Documents have been strictly adhered to.

2. All warranties, Operation and Maintenance Manuals, maintenance instructions, releases, and permits called for in the Contract have been submitted to the Owner and Engineer as applicable.

3. All monies owed the Buyer for services performed for the Seller by Buyer's forces in connection with the Contract have been paid.

PART 2 PRODUCTS – NOT USED

PART 3 EXECUTION – NOT USED

END OF SECTION

J:\V\V0037 Vernon WWTP\005 WPCF Design\Design\Specifications\Preselection\IFAS\01770-P.Doc

O&M MANUAL CERTIFICATION FORM

PROJECT:_____
ENGINEER:_____ ENGINEER'S PROJECT NO.:_____
CONTRACTOR:_____ CONTRACTOR'S PROJECT NO.:_____

TRANSMITTAL NO.:_____ SHOP DRAWING NO.:_____
SPECIFICATION NO.:_____ DRAWING NO:_____
DESCRIPTION:_____
MANUFACTURER:_____

The above referenced O&M manual has been reviewed by the undersigned and I/we certify that the manual is customized as needed for this project, and contains the following items, where applicable for the materials or equipment provided:

- ☐ 3-ring binder with title on binder and binding edge
- ☐ Electronic CD, when specified
- ☐ Comprehensive index broken down into sections
- ☐ Dividers for sections and sub-sections
- ☐ Warranties
- ☐ Troubleshooting information
- ☐ Startup, operation & shutdown procedures
- ☐ Safety procedures
- ☐ Manufacturer's contact information
- ☐ Complete parts list of equipment supplied
- ☐ Complete specifications/data on each item
- ☐ Detailed maintenance & operations instructions
- ☐ "As constructed" layout & schematic drawings
- ☐ Wiring diagrams
- ☐ Lubrication & maintenance schedules
- ☐ Equipment performance curves
- ☐ List of spare parts supplied and current cost
- ☐ Parts & service contact information

SUBMITTED BY:_____ DATE:_____

CONTRACTOR'S STAMP

DIVISION 11 - EQUIPMENT

SECTION 11000

EQUIPMENT - GENERAL

PART 1 GENERAL

1.1 SUMMARY

A. Section Includes

1. General requirements for the equipment and services to be provided under the Sections of Division 11 including, but not limited to, the following:
   a. Seismic restraint design
   b. Wind restraint design
   c. Snow load design (for equipment located outdoors)
   d. Handling, storing, and installing materials and equipment during the progress of the work
   e. Coordination with Buyer
   f. Anchor bolts, assembly hardware, and foundations
   g. Services of manufacturers' representatives for start-up, inspection, and testing
   h. Operation and maintenance manuals
   i. Operator training
   j. Lubricants, spare parts, nameplates, special tools, and safety equipment
   k. Surface preparation and shop prime painting of equipment
   l. Off-site inspection

B. Related Sections

1. Section 01330, Submittals
2. Section 01770, Closeout Procedures
3. Division 11 – Equipment

1.2 SUBMITTALS

A. Structural Design for Seismic, Wind, Snow, and Buoyancy

1. If required by individual equipment specification sections, submit a Structural Design Certification with a complete set of supporting calculations and design details stamped by a Professional Engineer registered in the State where the work is being performed. The Structural Design Certification shall state that the equipment components and anchoring systems comply with the applicable building codes (to be listed in the letter) and will be able to restrain the equipment from all applicable forces (gravity, seismic, liquid sloshing, wind, snow, buoyancy, etc.) without damage to the equipment/materials and support structures. The certification shall clearly reference the specific design details (to be stamped) for mounting and supporting the equipment designed by the Professional Engineer for the equipment.
2. In submitting the design certification and calculations, the Professional Engineer is representing that they are experienced in the analysis and design of the equipment being restrained and supported, equipment supports and

equipment anchorages, and securing the equipment components and related supports to structures.

3. Perform all analysis and design in accordance with the applicable building codes for the location where the work is being performed.
4. Calculate the seismic force (Fp) using equations and coefficients for the Seismic Hazard Exposure, Use Group, Building Risk Category, and Seismic Design Category for the site and building use. Include the effects of liquid movement for equipment containing free liquids subject to sloshing.
5. In addition, design for wind and snow loads if equipment is not located completely within a structure. Equipment located under a canopy must still be designed for wind and snow load.
6. In addition, design applicable systems for both submerged and non-submerged conditions. Applicable systems include, but are not limited to, equipment located below the design flood elevation, and equipment/piping installed under potentially submerged conditions. See design criteria below for the design flood elevation(s).
7. Base the analysis and design on actual equipment data (dimensions, weight, center of gravity) obtained from manufacturer's equipment submittals.
8. The structural design calculations shall be properly coordinated with the design details.
9. Coordinate all attachments with the structural engineer of record for the supporting structure to verify the attachment methods and the ability of the supporting structure to accept the loads imposed.
10. Design details shall include and clearly detail the following:
    a. All attachment points between the equipment and the supporting structure(s).
    b. Anchor type, size, embedment, minimum spacing, and minimum edges distances.
    c. Details of hanger, support, and miscellaneous structures.
    d. Other pertinent information required.

1.3 STRUCTURAL DESIGN CRITERIA FOR SEISMIC, WIND, SNOW, AND BOUYANCY

A. The design shall be based on the following:

1. Building Risk Category: III (Waste Water Treatment Facilities)
2. Snow Load:
    a. Ground Snow Load (p_g): 30 psf
    b. Snow Exposure Factor (C_e): 0.90
    c. Thermal Factor (C_t): 1.2
    d. Snow Load Importance Factor (I_s): 1.10
    e. Flat Roof Snow Load (P_f): 30 psf (minimum)
3. Wind Load:
    a. Ultimate Design Wind Speed (V_{ult}): 135 mph

b. Nominal Design Wind Speed (V_{asd}): 105 mph

c. Wind Exposure: C

d. Hurricane Prone Region: Yes

4. Earthquake Seismic Load:

a. Seismic Importance Factor (Ie): 1.25

b. Mapped Spectral Response Accelerations:

1) Short Period Response (S_S): 0.177

2) 1-Second Period Response (S_1): 0.064

c. Site Class: D

d. Design Spectral Response Coefficients:

1) Short Period Response (S_{DS}): 0.189

2) 1-Second Period Response (S_{D1}): 0.102

e. Seismic Design Category: B

1.4 DELIVERY, STORAGE AND HANDLING

A. Coat all machined surfaces subject to corrosion with an easily removable rust preventive compound prior to shipment.

B. Ship fabricated assemblies in the largest sections permitted by carrier regulations, properly labeled for field erection.

C. Deliver equipment in manufacturer's original, unopened and undamaged packages, unless mounted on equipment assembly.

PART 2 PRODUCTS

2.1 MATERIALS

A. Anchor bolts, nuts, washers, bolt sleeves, and assembly hardware shall be Type 316 stainless steel. Expansion bolts shall be "Thunderstuds", as manufactured by Unifast Industries, Inc., Hauppauge, NY; Redhead "Wedge Anchors" as manufactured by ITT Phillips, Michigan City, ID; Parabolt as manufactured by the Molly Division Emhart Corp., or equal. Epoxy encapsulated bolts shall be Hilti HVA Adhesive Anchors or equal. All expansion bolts and associated hardware are to be stainless steel.

B. Nameplates - Provide with each piece of equipment a nameplate of non-corrodible metal, fastened in place and permanently inscribed with the manufacturer's name, model or type designation. Provide motor nameplates separately.

C. Equipment Drive Guards - Provide approved all-metal guards to enclose the drive mechanism for equipment driven by open shafts, belts, chains, or gears. Guards are to be constructed of galvanized sheet steel or galvanized one inch mesh screen (woven wire or expanded metal) set in a frame of galvanized steel members. Secure guards in position by steel braces or straps, which will permit easy removal for servicing the equipment. Equipment guards shall conform with all applicable OSHA requirements.

PART 3 EXECUTION

3.1 PREPARATION

A. Surface Preparation and Shop Prime Painting

1. Paint System: Coordinate with Buyer on the selected manufacturer of the paint for the project. Seller's Primer paint must be compatible with the specified and approved field-applied top coats. Surface preparation and shop priming shall be in accordance with Division 11 Sections. Ship chains, sprockets, gears and the like from the factory with a heavy coating of protective grease.

3.2 ERECTION, INSTALLATION, APPLICATION

A. Coordination

1. Coordinate mechanical, electrical and instrumentation requirements of the equipment covered by this section with the Buyer and as needed, each of the Buyer's Suppliers and Subcontractors. This includes but is not limited to providing each with copies of preliminary and final submittals for each equipment item that may impact the work of another Supplier or Subcontractor.

B. Anchor Bolts, Inserts and Assembly Hardware

1. Anchor bolts and expansion bolts are to be provided by the Seller. Anchor bolts that are set before the concrete has been placed shall be carefully held in templates. Where specified in the Contract Documents, anchor bolts shall be provided with square plates at least 4 inches by 4 inches by 3/8 inches. Alternatively, provide anchor bolts that have square heads and washers and set in the concrete forms with pipe sleeves.

2. Concrete inserts shall be designed by the Seller to support safely, in the concrete that is used, the maximum load that can be imposed by the hangers used by the inserts. Provide galvanized inserts which permit adjustment of the hangers both horizontally (in one plane) and vertically and locking of the hanger head or nut.

3. Seller shall provide assembly hardware in accordance with the complete parts list. All assembly hardware shall be 316 stainless steel, labeled, and package separately for delivery to the job site.

C. Foundations, Installation, and Grouting

1. Buyer to furnish the necessary materials and construct concrete foundations for all equipment installed. Foundation size and elevations may be determined in the field by the Engineer. The tops of foundations shall be at such elevations as will permit grouting as specified below.

2. Allow for setting pumps, motors, and other items of equipment using at least 1 inch for grout under the equipment bases and the use of steel shims to level and adjust the bases.

3.3 QUALITY CONTROL

A. Performance Tests - General

1. All equipment, components and systems furnished under this Contract, must be demonstrated to achieve compliance with the Contract performance requirements.

B. Services of a manufacturer's representative

1. Arrange for a qualified service representative from each company manufacturing or supplying equipment to perform the work described in this section.
2. Inspect, operate, test, and adjust the equipment after installation has been completed and the equipment is presumably ready for operation, but before it is operated by others. At a minimum, include the following points in the inspection:
   a. Soundness (without cracked or otherwise damaged parts).
   b. Completeness in all details, as specified.
   c. Correctness of setting, alignment, and relative arrangement of various parts.
   d. Adequacy and correctness of packing, sealing and lubricants, etc.
3. Operate, test, and adjust equipment to prove that it is left in proper condition for satisfactory operation under the conditions specified.
4. Upon completion of this work, submit, 3 copies to the Engineer of a complete, signed Inspection Report with the results of this inspection, operation, adjustments, and tests. Include in the Inspection Report a detailed description of the points inspected, tests and adjustments made, quantitative results obtained, and suggestions for precautions to be taken to ensure proper maintenance. Certify in the report that the equipment (1) has been satisfactorily installed and conforms to the Contract Documents; (2) is in accurate alignment; (3) is free from any undue stress imposed by connecting piping, supports or anchor bolts; (4) has been operated under full load and operates satisfactorily; and (5) that nothing in the installation will render the manufacturer's warranty null and void.
5. After the Engineer has reviewed the reports from the manufacturer's representatives, make arrangements to have the manufacturer's representatives present when the field acceptance tests are made.

C. Off-Site Inspection - Fabrication, manufacture, painting or testing work may be inspected by the Engineer before shipment. Give notice to the Engineer of the place and time where such fabrication, manufacture, testing, or shipping is to be done. Such notice shall be in writing and delivered to the Engineer in ample time so that the necessary arrangements for the inspection can be made.

3.4 CLOSEOUT ACTIVITIES

A. Operator Training

1. Upon satisfactory completion of the start-up and calibration, provide the services of a manufacturer’s trained representative to instruct Owner's personnel in the proper operation and maintenance of the equipment. This separate period of on-site training shall be provided independent of start-up and testing services.
2. The manufacturer's trained representative who will be providing the instruction shall have prior operation, maintenance and instructing experience acceptable to the Engineer.

3. When requested, submit the manufacturer's trained representative's name and qualifications to the Engineer for approval at least one week prior to the scheduled operating and maintenance instruction sessions.
4. Provide the Owner with a minimum 7 days written notice of planned operator training.
5. Coordinate the scheduling of on-site training to meet the following requirements:
   a. No single training session shall be more than 6 hours duration or 4 hours if specified to occur on 2 or more separate days.
   b. Training shall not be scheduled on two consecutive days.
   c. No more than 3 training sessions shall be scheduled in any week.
   d. Training sessions shall not be scheduled for Saturdays, Sundays or holidays.
   e. Upon completion of training for each manufacturers equipment, provide Certificate and Instruction that that manufacturers equipment.

3.5 PROTECTION

A. Protection Against Electrolysis - Where dissimilar metals are used in conjunction with each other, provide insulation between adjoining surfaces to eliminate direct contact and any resultant electrolysis. Use bituminous impregnated felt, heavy bituminous coating, non-metallic separators or washers, or other approved materials as insulation materials.

3.6 MAINTENANCE

A. Lubricants - Prior to testing and acceptance, furnish a one year's supply of all lubricants recommended by the manufacturers of each component of the equipment provided.

B. Spare Parts – Pack spare parts in containers or boxes bearing labels clearly designating the contents and the piece of equipment for which they are to be used.

C. Special Tools - For each type of equipment furnished, provide a complete set of special tools (including grease guns or other lubricating devices) which may be necessary for the adjustment, operation, maintenance, and disassembly of such equipment. Tools shall be high-grade, smooth, forged, alloy, tool steel. Grease guns shall be lever type.

   Special tools are considered to be those which because of their limited use are not normally available, but which are necessary for the particular equipment.

D. Submit operation and maintenance manuals for items listed in pertinent other sections of these Specifications and for other items when requested by the Engineer. Provide manuals a minimum of 60 days prior to equipment start-up. Manuals shall comply with the requirements of Section 01770.

E. Submit Final Documentation, Equipment Startup Reports in accordance with Section 01770.

END OF SECTION

J:\V\V0037 Vernon WWTP\005 WPCF Design\Design\Specifications\Preselection\IFAS\11000-P.doc

SECTION 11391

INTEGRATED FIXED-FILM ACTIVATED SLUDGE (IFAS) TREATMENT SYSTEM

PART 1 GENERAL

1.1 SUMMARY

A. Section Includes

1. The IFAS Treatment System shall function as a complete system to treat wastewater at the Vernon, CT Water Pollution Control Facility (WPCF) to the effluent requirements specified herein. The IFAS Treatment System shall be installed within the WPCF's existing six (6) aeration tanks to create new secondary treatment process made up of six (6) tanks (Tanks) that will operate as a Biological Nutrient Removal (BNR) system in a flexible five-stage configuration including pre-anaerobic, pre-anoxic, oxic, post-anoxic, and reaeration in each of the two (2) proposed parallel treatment trains.

2. The IFAS Treatment System shall be designed to provide process flexibility during construction and to optimize the BNR processes under various operational scenarios. This process flexibility shall include the following:

   a. During construction, the ability to operate Tanks #3, #4, #5 and #6 without IFAS present in an ammonia removal mode of operation with any one of these four Tanks out of service during current design conditions and after the existing Zimpro-PACT-WAR process has been shut down. This means the IFAS Treatment System shall include installing aeration system diffusers in each zone of Tanks #3, #4, #5 and #6. If operating in this mode, then the performance criteria related to total nitrogen removal will be waived.(see Paragraph 1.3.C for additional information).

   b. The ability to vary the process seasonally from a five-stage process during the phosphorus removal season to a four-stage process during the winter when seasonal phosphorus removal is not required. This means that nitrate rich mixed liquor suspended solids (MLSS) may be internally recycled to Tanks #1 and #2 in the winter or Tanks #3 and #4 during the summer. This will allow Tanks #1 and #2 to be anoxic zones in the winter and anaerobic zones during the summer. This will allow the effective oxic zones in Tanks #3 and #4 to be increased in the winter.

   c. The ability to operate the process in step feed mode during high flows in excess of the maximum day flow. This means that Return Activated Sludge (RAS) will be returned to the head of Tanks #1 and #2 and primary effluent will be sent to the head of Tanks #3 and #4 allowing for the operator to store solids in the Tanks #1 and #2 and reduce the MLSS concentration sent to the clarifiers. If operating in this mode, nitrate rich MLSS will be pumped to Tanks #3 and #4. It is not expected that all performance criteria will be achieved when operating in this mode.

3. This Section, including the Related Sections for specific pieces of equipment all of which is to be provided by the Seller, includes the furnishing of all Goods

and Special Services required, specifically mentioned in this Section and the Related Sections required as part of the complete operational system and as needed to assist in installation, commissioning, and performance testing to provide a complete IFAS Treatment System ready for operation.

4. This Section, including the Related-Sections for specific pieces of equipment to be furnished by the Seller, gives a general description of what is required, but does not cover all details that will vary in accordance with the design requirements of specific equipment.

5. The IFAS Treatment System shall include, but not be limited to, IFAS Media, IFAS Media retention systems, screen air scour systems, related aeration system controls and instrumentation, the aeration systems (coarse and fine bubble) as specified in Section 11391A, the blower system as specified in Section 11391B, and the mixers as specified in Section 11391C.

6. The IFAS Treatment System aeration system controls and instrumentation shall include one IFAS Treatment System Main Control Panel (ITSMCP) furnished and pre-programmed prior to delivery to the site. The ITSMCP shall fully control and monitor all items furnished with the IFAS Treatment System included in this Section as well as items related to the IFAS Treatment System but not furnished herein (i.e. Internal Mixed Liquor Recycle (IMLR) pumps).

7. Aeration system controls shall include air flow control valves, air flow meters, dissolved oxygen (DO) sensors for each Aeration Zone. The aeration system controls shall also include an ammonia based D.O setpoint controller and ammonia sensors that uses an advanced process controller to determine optimal D.O. Setpoints to be used by the ITSMCP in its control algorithms.

8. In addition, The Bidder shall be responsible for providing design assistance and guidance to the Engineer as well as approval of the design of the related systems components provided by others including tank baffle walls (confirm location and screen mounting details), the IMLR pumps and related piping which will recycle nitrate rich MLSS to the pre-anoxic zones at low dissolved oxygen levels.

9. Special Services including pre-commissioning, commissioning, startup, training, process performance testing of all equipment included under this Section and Related Sections, as well as coordination with the Buyer and the Buyer's Plant Control System Programmer (PCSP) during construction for proper interface of the ITSMCP with the WPCF's Supervisory Control and Data Acquisition (SCADA) system.

10. The System shall treat primary effluent wastewater and produce effluent that complies with the Performance Requirements in Paragraph 1.3 as demonstrated through performance testing specified in Paragraph 3.6. The Seller's system shall be backed by a Performance Guarantee as required in Paragraph 1.4 and Performance Bond in Paragraph 1.10.

11. All equipment and materials specified to be supplied under this Section and the Related Sections shall be furnished by the supplier of the IFAS Treatment System, who shall have sole responsibility for coordinating and furnishing all

the parts and components specified herein; however, all equipment need not be manufactured by a single manufacturer.

B. Related Sections

1. Section 01330 – Submittals

2. Section 11000 – Equipment – General

3. Section 11391A – IFAS Treatment System Aeration Systems

4. Section 11391B – IFAS Treatment System Blowers

5. Section 11391C – IFAS Treatment System Mixers

C. Summary of Existing Treatment WPCF Processes, Permit, and Proposed Changes

1. The existing WPCF utilizes a combination of processes to treat the WPCF influent, septage, plant recycles, and trucked in wastes. The main wastewater processes include 1/2-inch mechanical screens, vortex grit removal, primary settling, secondary treatment in aeration tanks using a Powdered Activated Carbon Treatment activated sludge system with Wet Air Regeneration (Zimpro PACT-WAR) followed by secondary clarification, sand filters, disinfection by sodium hypochlorite, dechlorination, and post aeration. The existing WPCF nitrifies year-round but is not currently designed to remove total nitrogen or phosphorus. Refer to Figure 1 in Appendix A for a process flow diagram of the existing WPCF. The WPCF's operating data are included in Appendix B for information purposes only. It should be noted that the Zimpro PACT-WAR process generates a high strength recycle stream to the head of the aeration tanks.

2. As part of the project that this System will become part of, the existing WPCF will be substantially upgraded to meet new, stringent effluent water quality requirements. The project will include major changes to the entire WPCF including replacing the mechanical screens with fine (1/4-inch) screens, replacing the influent screw pumps with centrifugal pumps, replacing the Zimpro PACT-WAR system with an Integrated Fixed Film Activated Sludge (IFAS) Treatment System in the reconfigured aeration tanks to provide a four or five stage Bardenpho configuration, the addition of a new multi-point chemical addition system for phosphorus removal, replacement of the sand filters with cloth media filters, and replacement of the chlorination and dechlorination systems with ultraviolet (UV) disinfection. New aerated unthickened sludge storage tanks, rotary drum thickeners (RDTs), mixed thickened sludge storage tanks, and necessary pumping system will be installed for secondary solids handling for disposal of thickened liquid sludge off site via truck. Primary sludge will continue to be thickened in gravity thickeners and also disposed off-site as a thickened liquid. In addition, most other process equipment, including grit vortex, primary clarifier mechanisms, primary sludge and scum handling pumps, secondary clarifier mechanisms, RAS, WAS, and secondary scum pumping systems, and post aeration equipment will be upgraded in-kind. Refer to Figure 2 in Appendix A for the proposed process flow diagram after the upgrade is complete.

3. The project will incorporate New England Interstate Water Pollution Control Commission's Design Guidelines "TR-16" resiliency requirements which most notably require providing uninterrupted treatment at peak hourly flow up to a 100-year flood elevation, and protecting equipment from damage due to flooding based on a 100-year flood plus 3-feet while passing peak hour flow through the WPCF. Refer to Figures 3 and 4 in Appendix A for a hydraulic profile of the existing and proposed systems, respectively.

4. An IFAS Treatment System will be preselected as part of the plan to replace the existing Zimpro PACT-WAR system while reusing the existing aeration tanks. Refer to Figures 5, 6, and 7 for pertinent details of the existing aeration tanks and Blower Building. The IFAS Treatment System will receive effluent from the primary clarifiers and utilize a four or five-stage biological nutrient removal configuration (varies seasonally) to treat wastewater before discharging to the existing secondary clarifiers. The IFAS Treatment System will be used to comply with the WPCF's NPDES permit which includes an ammonia and BOD monthly average limit. In addition, the IFAS Treatment System will be used to comply with the Long Island Sound Nitrogen TMDL, which currently includes a mass-based annual average limit of 184 lbs/day. Based on the 20-year projected average annual plant influent/effluent flow of 4.8 MGD, this represents an average effluent total nitrogen (TN) concentration of 4.5 mg/l as N. At the permitted average annual capacity of 7.1 MGD, this represents an average effluent TN concentration of 3.1 mg/l as N. During and just prior to the phosphorus removal season of April 1 through October 31, either alum, polyaluminum chloride, or ferric chloride will be added to the primary clarifiers to chemically remove phosphorus, and the IFAS Treatment System will also be operated in a manner to remove phosphorus biologically. The target total phosphorus concentration leaving the IFAS Treatment System will be less than or equal to 1.0 mg/l.

5. A Cloth Media Filtration System will be preselected to replace the existing sand filters which are located within the sand filter building. During the phosphorus removal season of April 1 through October 31, the secondary clarifier effluent will be pumped via the intermediate pump station to the cloth media filtration system's rapid mix tanks. The intermediate pump station's pumps will be replaced and will be sized as required by the Cloth Media Filtration System hydraulics. Effluent from the cloth media filters will flow by gravity to the new UV Disinfection System. The Cloth Media Filtration system will be used to comply with the WPCF's NPDES permit which currently includes a total phosphorus mass-based seasonal average limit of 4.56 lbs/day. At the permitted capacity of 7.1 MGD, the WPCF's effluent phosphorus concentration represents a concentration of 0.077 mg/l on average over the season. In addition to the seasonal mass-based limit, the Vernon WPCF must also meet the less stringent average monthly and maximum daily total phosphorus concentration limits of 0.22 mg/l and 0.44 mg/l, respectively. The Permit also limits effluent pH to between 6 and 9 Standard Units. The Cloth Media Filtration System will utilize either iron or aluminum based coagulants as part of the treatment process. These coagulants may result in an iron or aluminum residual product carryover into the effluent and thus to the UV Disinfection System.

6. A UV Disinfection System (to be located within the existing chlorine contact tanks) will be preselected to replace the chlorine disinfection system including chlorine contact tanks, sodium hypochlorite addition system, and sodium bisulfite addition system. During the disinfection season (May 1 through September 30, which is also entirely within the phosphorus removal season), effluent from the Cloth Media Filtration System will flow by gravity from the cloth media filters to the UV Disinfection System. During the remainder of the year the secondary clarifier effluent will flow by gravity through the UV Disinfection System channels, and the lamps will, at the Owner's discretion, either be removed from the channels or remain in-place and turned off. During the disinfection season, the UV Disinfection System will be used to comply with the WPCF's NPDES permit which currently includes an *e. coli* limit of 126 cfu/100 mL on a calendar month geometric mean basis with a maximum instantaneous limit of 410 cfu/100 mL. The permit also includes a fecal coliform limit of 200 cfu/100 mL on a calendar month geometric mean basis, and a limit of 400 cfu/100 mL on a calendar week geometric mean basis.

7. The above summary is for general information only and shall not be construed as a guarantee of influent conditions to the systems to be preselected in this specification or as a performance requirement of the system to be preselected in this specification.

1.2 PRESELECTION OF EQUIPMENT

A. The Owner intends to pre-select the equipment and services specified in this section and Sections 11391A, 11391B, and 11391C (Goods and Special Services) for the Vernon WPCF. The equipment specified herein shall be purchased by the Buyer from the successful Bidder at the prices bid in the Bid Form or as otherwise allowed in these Contract Documents.

B. All requirements described herein are considered minimum requirements and must be met in order for a Bidder to be deemed responsive. The Owner reserves the right to request additional information, if required to make this determination, to show that the requirements herein have been met.

C. The Goods and Special Services specified in this Section and Sections 11391A, 11391B, and 11391C for specific pieces of equipment, shall be furnished by one Seller responsible for designing, furnishing, starting up, and testing all components of the system specified in this Section. The Seller is not required to furnish all equipment manufactured by one manufacturer.

D. The following is a summary of the preselection requirements for the Seller of the equipment specified in this Section. If the following language is in conflict with language elsewhere in these documents, then the more restrictive and/or comprehensive requirements apply.

1. Bidders shall provide the information requested on the Bid Form (Section 00410) including but not limited to performance guarantees so that the Owner can evaluate the Bidder's qualifications and equipment proposal in accordance with the Instruction to Bidders (Section 00200) to select the successful Bidder. This shall include completing the Schedules for the mixing equipment, aeration

equipment, and aeration blowers to be provided with the IFAS Treatment System.

2. During the pre-selection process, the Owner will evaluate the bids from Bidders in accordance with the criteria specified in the Instructions to Bidders (Section 00200) and as clarified on the Bid Form (Section 00410). This includes a monetary evaluation to determine the present worth of the proposed System by evaluating capital and operational and maintenance costs as well as a non-monetary evaluation of factors.

3. Provide "Preliminary Submittals" in accordance with the Schedule provided in the Bid Form (Section 00410).

   a. Preliminary submittals shall supplement (and if approved by Engineer, replace) information provided with the Bid and together with the bid submission provide sufficient detail to enable the Engineer to design the project and produce final design documents suitable for public bidding by construction contractors.

   b. This includes complete, custom, to-scale layout drawings indicating Tank layout and dimensions for each zone; dimensions of all equipment furnished under this Section and Related Sections; locations of that equipment within the Tanks; any constraints for locating equipment including aeration blowers; criteria for sizing IMLR pumps; criteria from designing inlet to the IFAS zone (i.e. submerged inlet openings or other); and any other supporting system requirements as needed for proper operation of the IFAS Treatment System to meet the effluent requirements specified herein.

   c. Provide Engineer assistance in developing final design documents and drawings. This will include preliminary submissions of all major equipment components that are sufficient in detail to design the layout and coordinate all equipment interfaces. Some of the information identified in Paragraph 1.5 may be required. This coordination shall continue until the WPCF upgrade design has been completed. Such coordination may include review of Engineer's draft drawings and specifications to confirm that they are consistent with the Bidder's design intent including items such as sizing zones, locating baffle walls, and arrangement, process flow configurations, P&IDs, equipment locations, reviewing and approving specifications for equipment to be provided by others including, but not limited to, IMLR pumps.

   d. Prior to Owner finalizing plans and specifications for bidding by general contractors, Bidder shall review the sizing of IMLR pumps and sizing of the chemical feed systems (including Magnesium Hydroxide alkalinity and supplemental carbon (glycerin), if needed) in the construction contract and submit signed certifications that these proposed systems in the construction contract are fully acceptable and will in no way void the Performance Guarantee requirements of this Section.

4. During the design phase, the Bidder may be required to make additional submittals, revise specific components, and work on issues of equipment

compatibility with other suppliers. Facility drawings, equipment data sheets, process descriptions and other information are required to assure that the related equipment and facilities are coordinated and suitable for the equipment offered by the Bidder.

1.3 PERFORMANCE REQUIREMENTS

A. Design the IFAS Treatment System with at least two identical parallel treatment trains that are sized to handle the entire peak hourly flow rate with both trains online. Each train shall be able to pass 11 mgd. A conceptual layout of the IFAS Treatment System within the existing aeration tanks is provided as Figure 5 in Appendix A. This conceptual layout shall be used as a basis for Seller's IFAS Treatment System design layout.

B. Design the IFAS Treatment System for enhanced biological nutrient removal as described in Paragraph 1.1.A. The design shall include, at a minimum, the following stages and zones when operated during the summer at normal plant flows:

1. Stage 1 - Anaerobic Zones: Configured as a three-stage selector per TR-16 guidelines as specified below to be used to condition MLSS to improve sludge settleability and provide seasonal enhanced biological phosphorus removal (EBPR). It is anticipated that these zones will be located in Tank #1 (and designated Zone 1A, 1B, 1C), in Tank #2 (and designated 2A, 2B and 2C), and possibly in a portion of Tanks #3 and #4 (and designated 3A, 4A). There shall be mixers located in each of these zones. There shall be no Aeration Zones located in Tank #1 and Tank #2. Note that during winter operation, these zones may be operated as a three-stage pre-anoxic selector. Note that during high plant flows, the zones located in Tanks #1 and #2 may be operated in the step feed mode and used to store RAS instead of as an anaerobic or anoxic selector.

1) Size the selector zones to provide the following F/M ratios:

Zone	F/M Ratios
1A, 2A	6 pounds COD per pound MLSS per day
1B, 2B	3 pounds COD per pound MLSS per day
1C, 2C (and more in Tank 3 and 4 if needed)	1.5 pounds COD per pound MLSS per day

Notes:

A) This design will provide two equally sized compartments followed by a third compartment with twice the volume of the first compartment.

B) F = COD (assume as two times BOD) under maximum month design conditions for the first-stage selector. The same F is used for F/M calculations of all of the selector compartments.

C) M = total mass of compartments considered. Mass for the first compartment is MLSS concentration multiplied by the volume of the first compartment. Mass for the second compartment is MLSS

concentration multiplied by the volume of the first two compartments. Mass for the third compartment is MLSS concentration multiplied by the volume of all three compartments.

2) Provide a total minimum HRT of 45 minutes at future annual average flow rates.

2. Stage 2 - Pre-Anoxic Zones: This zone will be used for nitrate removal and the size and location of these zones will vary seasonally. There shall be mixers located in each of these zones. There shall also be Aeration Zones in each of these zones (to be used for operator flexibility, seasonal operation changes, and to maintain plant operations during construction). It is anticipated that during summer operations, these zones will be located in Tanks #3 (and *likely* designated 3B and 3C) and #4 (and *likely* designated 4B and 4C). However, this is up to the Bidder to determine.

3. Stage 3 - Oxic Zones to provide BOD removal and nitrification

   a. Zones without IFAS Media: The size and location of this zone will vary seasonally. There shall be mixers and Aeration Zones in each of these zones. It is anticipated that during winter operations, these zones will likely be located in Tanks #3 (and *likely* designated 3D) and #4 (and *likely* designated 4D). However, this is up to the Bidder to determine.

   b. Zones with IFAS Media: The size and location of these zones will be fixed. There shall be IFAS Media and Aeration Zones in each of these zones. There shall be no mixers in these zones. These zones will be located in Tanks #5 (and *likely* designated 5A, 5B, 5C) and #6 (and *likely* designated 6A, 6B, 6C). However, this is up to the Bidder to determine.

   c. Oxygen Depletion Zones without IFAS Media: The size and location of these zones will likely be fixed. Provide adequate mixing. Provide aeration zones (to be used for operator flexibility and to maintain plant operations during construction). These zones will be located in Tanks #5 (and likely designated 5D) and #6 (and likely designated 6D).

4. Stage 4 - Post-Anoxic Zones: The size and location of these zones will likely be fixed. There shall be mixers and Aeration Zones in each of these zones (to be used for operator flexibility and to maintain plant operations during construction). These zones will likely be located in Tanks #5 (and likely designated 5E) and #6 (and likely designated 6E). However, this is up to the Bidder to determine.

5. Stage 5 - Reaeration Zones: The size and location of these zones will likely be fixed. There shall be Aeration Zones in each of these zones. There shall be no mixers in these zones. These zones will be located in Tanks #5 (and likely designated 5F) and #6 (and likely designated 6F). However, this is up to the Bidder to determine.

C. Design the IFAS Treatment System to allow for maintenance of plant operations during construction and performance testing after the operation of the Zimpro PACT-WAR system is phased out. This means that during construction, the Seller is responsible for demonstrating with design calculations that the tanks online can

achieve year-round nitrification for ammonia removal (to a concentration of less than 1 mg/L) at the current design flows and loads (specified below), when the existing aeration tanks are taken out of service one at a time, when the aeration blowers are replaced one at a time, and when either aeration tank #5 or #6 is taken out of service to install IFAS Media Retention Screens and IFAS Media in the Tanks. The design shall be robust enough and the sequencing and scheduling of equipment deliveries shall accommodate the following requirements and limitations necessary to maintain plant operations during construction and performance testing.

1. The current secondary treatment processes (with Zimpro PACT-WAR in operation) operates Tanks #3, #4, and one of either #5 and #6 for nitrification (ammonia and BOD removal) only. While the Zimpro PACT-WAR system is operating, take each of the Tanks (#3 through #6) out of service, one at a time and starting with Tank #5 or #6, to allow conversion of internal tank components into the recommended IFAS Treatment Process design configuration. During conversion of each tank, maintain operation of the remaining three tanks in a nitrification (ammonia and BOD removal) mode only.

2. Bypass pumping, which is provided by others, shall be one option to maintain continued use of the existing aeration tanks while modifications to distribution channels, gates, and process piping that is unable to be installed and modified when one Tank is isolated at a time.

3. Unless the IFAS vendor is willing to guarantee that the Zimpro PACT-WAR will not impact or adversely affect the IFAS Media and/or treatment process, IFAS Media and IFAS Media Retention Screens shall not be added to Tanks #5 and #6 until such time that Zimpro PACT-WAR process has been shut down and the powdered activated carbon and high levels of inert solids associated with the process has been reduced to levels acceptable to the Seller for the operation of the IFAS Treatment System. The Zimpro PACT-WAR process currently operates with a MLSS as approximately 37% by weight inerts, 40% by weight VSS (excluding carbon), and 23% by weight as carbon based on a three-year average of existing data. It is expected to take up to six months from the shut-down of the Zimpro WAR system for the carbon (and the excess inert levels associated with the WAR system) to be reduced to two percent (2%) of the total MLSS concentration. The Seller shall certify that satisfactory conditions have been achieved so as not to impact the media prior to adding IFAS Media . The Seller is responsible for taking monthly samples of the MLSS to certify when IFAS media can be added to the Tanks.

4. Other constraints that the Buyer will be required to manage include the following:

    a. The Zimpro PAC-WAR process cannot be shut down until the tanks and equipment necessary for secondary sludge handling systems are installed and functioning.

    b. IFAS Media and IFAS Media Retention Screens shall not be added to Tanks #5 and #6 until:

1) The installation of plant influent fine screens has been completed and other related plant work associated with redirecting all septage, other outside wastes, and n-plant raw sewage so that it passes though the plant influent fine screens for a minimum of three months.

2) All secondary clarifier upgrades have been completed.

3) The channels, gates, and piping modifications have been completed for before, within, and after the Tanks and all related bypass pumping has been completed.

4) The Tanks are ready to switch from nitrification (ammonia and BOD removal) mode to the designed BNR mode configuration and all related equipment (diffusers, mixers, pumps) are installed and successfully passed start-up testing.

Note: The above requirements are to protect this IFAS Media and provide additional flexibility and resiliency at the WPCF and ensuring permit compliance should the facility experience a process upset during construction and performance testing.

5. Install IFAS Media and Media Retention screens in Tank #6 and place the tank into service. Begin operating all Tanks in the specified BNR mode configurations and allow time for the IFAS Media to acclimate while providing guidance and training to the operators on recommended MLSS levels.

6. Complete the performance testing prior to placing IFAS Media in the second tank.

7. Install IFAS Media in the second tank to allow for more robust operation and to provide treatment capacity for future flows and loads.

D. Design the IFAS Treatment System to meet the effluent quality requirements specified herein given the full range of flows and loads entering the IFAS Treatment System as specified below. Both the "design current" and "design future" flows and loads shall be used as the basis for the design and the Operations & Maintenance guarantees as required on the Bid Form. These flows and loads include the impact of internal WPCF recycle streams, the impact of trucked in waste (e.g. septage), and the estimated impact of primary treatment removal efficiencies:

1. Primary Effluent Flows:

Flow:	Design Current (2020)	Design Future (2040)
Average Annual	3.1 MGD	5.0 MGD
Maximum Month	5.2 MGD	8.3 MGD
Maximum Day	7.9 MGD	12.7 MGD
Peak Hour	12.4 MGD	22.7 MGD

2. Primary Effluent Loads:

Parameter	Design Current (2020)	Design Future (2040)
BOD (lb/d):		
Average Annual	5,600	8,880
Maximum Month	7,730	12,290
Maximum Day	9,060	14,370
Minimum Day	3,420	5,420
Max Day Diurnal Peak	N/A	21,550
Min Day Diurnal Min	1,710	N/A
TSS (lb/d):		
Average Annual	3,950	6,140
Maximum Month	5,530	8,620
Maximum Day	7,070	11,000
TKN (lb/d):		
Average Annual	870	1,500
Maximum Month	1,100	1,880
Maximum Day	1,230	2,110
Minimum Day	630	1,090
Max Day Diurnal Peak	N/A	3,170
Min Day Diurnal Min	320	N/A
TP (lb/d) [1]:		
Average Annual	180	320
Maximum Month	270	450
Maximum Day	290	500
Other Average Annual:		
Alkalinity	165 mg/L as $CaCO_3$	See Notes 2 & 3
pH	7.2 SU	See Notes 2 & 3

Notes:

1- Total Phosphorus loads and alkalinity levels shown assume that no multipoint chemical addition for phosphorus removal will be provided upstream of the IFAS Treatment System. Actual loads and alkalinity levels will be less if multipoint chemical addition is implemented. Alkalinity addition will be provided prior to the IFAS Treatment System using magnesium hydroxide to maintain minimum alkalinity levels

Parameter	Design Current (2020)	Design Future (2040)
leaving the IFAS treatment system at greater than 50 mg/L as $CaCO_3$ and a minimum effluent pH of 6.5 s.u. 2- Alkalinity and pH data are based on existing WPCF operating data collected from 2013-2016 at the influent to the secondary process. 3. Flow & Loads during Performance Testing – During performance testing it is anticipated that the WPCF will be operated with only one train on-line, consisting of only one oxic zone containing IFAS Media operating at current flows and loads so that the equivalent influent loading of the IFAS Treatment System is as close to as possible the design future maximum month flows and loads. See Paragraph 3.6 for details of the process performance testing protocol.		

E. Effluent Performance Requirements: Provided that 1) the influent to the System meets the criteria specified in Paragraph 1.3.D above (i.e. flows and loads remain below the values specified for Design Future Max Month), 2) that the IMLR pumping and supplemental chemical (including magnesium hydroxide alkalinity and supplemental carbon (glycerin), if needed) dosing equipment provided by Buyer performs in accordance with the Seller's recommendations, the Seller shall guarantee that the IFAS Treatment System can (when operating in conjunction with the properly operating secondary clarifiers and RAS pumps) produce a WPCF effluent (measured for the purposes of this specification after the secondary clarifiers) with the following specified effluent quality:

Parameter	Criteria
Monthly Average Soluble BOD	less than 5 mg/L
Monthly Average Ammonia (NH_3) concentration	less than 1.0 mg/L as N(1)
Annual Average Total Nitrogen (TN)	less than 4.5 mg/L as N(2)
Notes: (1) If the refractory nitrogen concentration (defined as organic nitrogen that cannot be biologically decomposed, as measured in the system effluent by subtracting the soluble total nitrogen concentration by the total inorganic nitrogen concentration) is greater than 1 mg/l as N, then the effluent total nitrogen concentration will be allowed to exceed the specified limit by the same amount (e.g., if the refractory nitrogen concentration is 1.5 mg/l as N, then the effluent total nitrogen concentration shall not exceed 5.1 mg/l as N during performance testing). (2) Although not required herein, provide plan as required by the Bid Form to demonstrate modifications required to the designed system to achieve an	

effluent annual average Total Nitrogen (TN) concentration less than 3.0 mg/L as N.

F. Design the IFAS Treatment System using the constraints and design criteria specified below.

1. Biological Process Design Criteria:

Design Parameter	Value
Influent Wastewater Temperature[1]	
Minimum Month	10 °C
Annual Average	16 °C
Maximum Month	22 °C
Maximum Allowable MLSS Concentration: [2]	(mg/L)
Design Future Conditions[2a]	3,200
During Construction when Zimpro PACT-WAR system is offline[2b]	3,700
During Construction when Zimpro PACT-WAR system is offline[2c]	3,500
Maximum Allowable RAS Flow Rate	8 MGD
Minimum Allowable Gross Yield:	(lb TSS / lb BOD removed)
Phosphorus Removal Season with coagulant addition for phosphorus removal[3]	0.9
Phosphorus Removal Season with EBPR[3]	0.8
Non-Phosphorus Season[3]	0.8
During Construction when Zimpro PACT-WAR system is offline	0.8
Minimum Allowable Suspended Growth Aerobic Solid's Retention Time (SRT) [4]	(days)
Future Design Conditions	2.2
During Construction when Zimpro PACT-WAR system is offline (winter)	12
Effluent Phosphorus	<1 mg/l orthophosphorus[3]
Notes:	

1) Based on existing WPCF operating data collected from 2013-2016

2) Estimated from State Point Analysis maximum RAS rate, and a peak hour flow reflective of stated conditions.

   a) For Design Future conditions (peak hour flow = 22 MGD) with all five clarifiers online, a Sludge Volume Index (SVI) of 150 g/mL was used in the State Point Analysis, which assumes sludge conditioning in anaerobic selector zones and minimum aerobic SRTs required for good settling sludge. If Seller's proposed design alters these criteria then documentation should be provided for the adjusted maximum allowable MLSS concentration.

   b) During Construction at current conditions (peak hour flow = 12.4 MGD) with all five clarifiers online, a Sludge Volume Index (SVI) of 200 g/mL was used in the State Point Analysis. This SVI does not allow credit for any anaerobic selector zones to condition sludge.

   c) During Construction at current conditions (peak hour flow = 12.4 MGD) with only four clarifiers online, a Sludge Volume Index (SVI) of 200 g/mL was used in the State Point Analysis. This SVI does not allow credit for any anaerobic selector zones to condition sludge

   d) The potential use of a step feed operating mode may increase the allowable MLSS concentration, but this shall not be allowed in determining the IFAS Treatment System design.

3) Phosphorous removal shall be achieved through the use of either chemical addition (aluminum sulfate, polyaluminum chloride, or ferric chloride) at the effluent of the IFAS Treatment System reaeration zone, through EBPR, or a combination of these processes. The design shall accommodate the additional nonvolatile solids generated as a result of chemical addition (assuming no EBPR or limited) and its impact on the gross yield and volatile solids content of the MLSS.

4) SRT = Vo * MLSS * 8.34/ (Y * BODin) where Vo is the total volume of all operating oxic zones in million gallons, MLSS is the mixed liquor suspended solids concentration in mg/l,Y is the gross yield in lbs TSS/lb BOD, and BOD is the total BOD loading to the process in lbs/day. This SRT does not included attached growth onto the IFAS Media within the oxic zone containing IFAS Media.

2. Fit the IFAS Treatment System within the existing Tanks and Channels:

Existing Tank Dimensions				
Tank	Length (ft)	Width (ft)	Depth (ft)	Volume (MG)
No. 1	90	25	12	0.202
No. 2	90	25	12	0.202

No. 3	90	25	19.45	0.327
No. 4	90	25	19.45	0.327
No. 5	83.5	42	23	0.603
No. 6	83.5	42	23	0.603
Total	527	184	108.9	2.264

Notes:

1) All dimensions provided are based on the tanks interior dimensions.

2) The Tank Depth is based on water elevations at no/low flows through the Tanks. Actual Tanks depths will increase as flows (from the primary effluent, RAS pumps, and IMLR pumps) increase and the head losses increase (due to flow through the various tank gates, interconnecting channels, IFAS Media Retention Screens, and around baffle walls).

3) The Tank volumes do not include the added volume associated with the interconnecting channels.

4) The Tank volumes shown will decrease slightly based on the Baffle walls and IFAS Media Retention Walls, all of which will be a minimum of 12-inches thick.

5) Existing Tank Drawings provided in Appendix A. Electronic versions of these drawings are available in AutoCAD format following the procedures outlined in Section 00200.

6) Channels shown on the drawings may be reconfigured to address other hydraulic constraints.

3. Headloss Criteria

Maximum Allowable Head Loss through oxic zone containing IFAS Media, considering IFAS Media and IFAS Media Retention Screens at the maximum allowed flow through the zone (Design Future Peak hour flow plus RAS and limited IMLR flows)	3 inches

Note: Gravity flow through the IFAS Treatment System is required. Seller shall design the IFAS Treatment System to minimize hydraulic losses.

4. Aeration System and Aeration Blower System Design Criteria:

   a. Provide Coarse and Fine Bubble Aeration Systems in accordance with Section 11391A – IFAS Treatment System Aeration Systems.

   b. Provide Coarse bubble diffuser Aeration Systems within all IFAS Media oxic zones.

c. Provide Fine bubble diffusers Aeration Systems within all non-IFAS Media oxic zones and all other oxic swing zones, pre-anoxic zones, post-anoxic zones, and reaeration zones unless such zone is located in Tanks #1 or #2.

d. Provide a minimum number of Aeration Zones for the respective process zone as shown in the table below. Each Aeration Zone shall have its own D.O. Sensor, Air Control Valve, and Air Flow Meter.

Process Zone	Minimum # of Aeration Zones
Oxic Zone not containing IFAS Media /Swing Zone	2 or 3
Oxic Zone Containing IFAS Media	3
Post-Anoxic Zone	1
Reaeration Zone	1

e. Provide one (1) motor operated air control valve to the regulate airflow for each Aeration Zone for installation above the drop pipe for that zone. Size the valve to meet the design airflow requirements for each Aeration Zone.

f. Provide Aeration Blowers in accordance with Section 11391B – IFAS Treatment System Rotary Screw Blower System.

g. Design the Aeration System and Aeration Blower System to operate efficiently over the full range of potential flows and loads specified in Paragraph 1.3.D above. The range shall include the current design minimum day flows and loads to the future design maximum day flows and loads, including turndown at these conditions for diurnal variations. To standardize design, Seller should use the following standard design procedure and the theoretical oxygen demands and credits.

1) Actual Oxygen Requirement (AOR) values shall be calculated based on the quantity of BOD oxidized and the quantity of TKN oxidized. To avoid oversizing the blowers, a denitrification credit shall be applied for the quantity of nitrate reduced during denitrification.

2) Assume 5% of TKN removed is completed via assimilation into the biomass.

3) Assume 1 mg/L of the effluent TKN is refractory or non-biodegradable.

4) Standard oxygen demands and credits are as follows:

Parameter	Value
BOD Oxidation Demand	
Minimum to evaluate future design conditions	1.1 pound of oxygen per pound of BOD removed
Maximum to evaluate current design minimum conditions	1.0 pound of oxygen per pound of BOD removed
TKN Oxidation Demand	4.2 pounds of oxygen per pound of ammonia nitrogen removed
Denitrification Credit	2.86 pounds of oxygen per pound of nitrate nitrogen removed without carbon addition

h. Design the Blower system to provide flow for channel mixing – See requirements in the schedules provided in Section 11391B.

5. Mixer Design Criteria

a. Provide Mixers for each zone requiring mixing in accordance with Section 11391C – IFAS Treatment System Slow Speed Submersible Mixers.

6. IMLR Pump Design Criteria

a. Although not provided as part of the IFAS Treatment System, Seller shall be responsible for determining the required range of IMLR flow rates to be achieved by the pumps necessary for the Process Performance Guarantee. In addition, Seller is invited to provide other reasonable and applicable design recommendations regarding the pump design and selection.

b. IMLR pump flow rate shall be selected to provide nitrate rich flow stream to the anoxic zones at a low dissolved oxygen concentration in order to meet the design objectives.

c. Unless otherwise requested by Seller, Seller shall assume that RAS pumps will only be operated to manage solids' storage in secondary clarifiers to a minimum level (at least 50% RAS flow rate, up to the maximum RAS capacity of 8 MGD).

7. IFAS Media Migration Design Criteria:

a. Design the IFAS Treatment System to prevent the migration of media across the oxic zone containing IFAS Media and to prevent media from leaving the oxic zone containing IFAS Media.

b. Provide recommended design criteria for the inlet weir gates (and/or other required inlets structures that are also capable of isolating the tank

for maintenance) into the oxic zone containing IFAS Media to prevent media from leaving the oxic zone containing IFAS Media by backflowing through the Tank influent while minimizing the headloss into the zone.

c. Design the approach velocity to the IFAS Media Retention Screens to be low enough to prevent media migration when combined with the mixing and scouring provided by the Aeration System and in no case shall it be greater than 110 feet per hour. These criteria can be met by designing the control system to slow down and if necessary stop the IMLR pumps during high flows as long as those high flows are in excess of the Future Design Maximum Day flows.

d. Design the control system to prevent the flow from exceeding the approach velocity limit using two algorithms:

1) A main algorithm that monitors the plant flow, RAS flow, and estimates of the IMLR flow based on the IMLR pump speed and load and adjusts the speed of the IMLR pumps as needed to limit the approach velocity.

2) A backup emergency algorithm will shut off the IMLR pump if level sensors located within the Tanks furnished by the Seller indicate excessive (operator adjustable) high water level in the entrance to the IFAS zone. The algorithm can start the pump after a preset delay if plant flows drop 5% from the flows measured at the time the high water level was triggered

e. Mechanical media return systems that return media from the vicinity of the media retention screen to the influent zone of the system will not be allowed.

8. Scum Management Design Criteria

a. Design the IFAS Media Retention wall to pass scum. Provide IFAS Media Retention Screens to pass scum through each wall, each at a minimum of 3 feet wide and 18-inches tall.

b. Design the screens to work with spray nozzles (not in the scope of supply) that utilize plant water to entrain scum while encouraging it to pass out of the IFAS zone and through the screened openings.

c. Allow space in the process just after the IFAS Media Retention Wall to allow for Buyer to install Telescoping Scum Weirs to allow for surface wasting of scum and foam from the zones. Similarly allow for spaces at the ends of Tanks 1 & 2 and 3 &4. These weirs may or may not be installed and the installation (or lack thereof) shall have no bearing on the performance guarantee.

9. Tank Maintenance Design Criteria

a. Design the IFAS Treatment System so that any one of the six Tanks can be taken off line and drained for maintenance while the others remain in service (at a reduced level of overall system performance). This means

that the IFAS Treatment System will operate without interfering with the following:

1) Isolation gates (or possibly weirs) at the entrance and exit of each Tank.

2) Isolation valves on the IMLR pump piping

3) Slide rails and piping in the north end of each Tank that will allow for a portable submersible pump to be installed temporarily (in a zone that does not contain IFAS Media) and operated to pump MLSS from any Tank into the adjacent Tank. Adjacent tanks are Tank #1 & #2, Tanks #3 and #4, and Tanks #5 & #6.

4) The pump will be sized to allow any Tank to be filled or drained in less than 24 hours.

5) If Tank #5 or Tank #6 is taken out of service, then the MLSS in the oxic zone containing IFAS Media shall drain through IFAS Media Retention Screens located at the bottom of the IFAS Media Retention wall.

6) If Tank #5 or Tank #6 is placed back into service, then MLSS entering the downstream or upstream of the IFAS Media Retention zone will fill in though the IFAS Media Retention Screens located at the bottom of the IFAS Media Retention wall.

b. Provide a minimum of three drainage screens, each a minimum of 1 foot wide by 1 foot tall per IFAS Media Retention Wall in each Tank to limit headloss across the screens to less than one foot during draining or filling the tanks as described above with the screens 50% blinded.

c. No special provisions are required for removing Media from the IFAS Zones except as follows:

1) Provide design criteria only for a pump capable of pumping IFAS Media from one tank into another. This may be an adjacent tank or Tank #3 or #4 if it is taken out of service and mixers shut off.

G. Design the IFAS Treatment System Dissolved Oxygen Control System to meet the following design criteria:

1. Design a flow-based (not pressure based) Dissolved Oxygen (DO) control system in which the output of each zone's DO loop is an airflow requirement in SCFM. Design the system so this airflow requirement is cascaded to each zone's flow control loop. Each DO control loop shall be able to be placed into one of the following modes:

a. Manual Position Mode – the operator enters desired valve position and the valve moves to that position.

b. Automatic Flow Control Mode - the operator enters an air flow setpoint and the control loop modulates the air flow control valve to achieve the desired air flow rate at the air flow meter for that zone.

c. Automatic D.O. Control Mode - the operator (or the Ammonia Based D.O. Setpoint Controller) will determine a D.O. setpoint for that zone and the control loop modulates the air flow control valve to achieve the desired D.O. setpoint for that zone (subject to user adjustable minimum and maximum air flow setpoints that are necessary to provide minimum flows to the diffusers for even mixing and to prevent in damage to diffuser membranes).

d. Provide each automatic mode with dead-band, hysteresis and time-delays in the control strategy to minimize wear from modulating the air flow control valves.

2. The total airflow requirement (calculated as a summation of each Aeration Zone's air requirements) will be sent to the Blower System Master Control Panel.

3. Design the control system based on the Aeration System manufacturers and Aeration Blower System's manufacturer requirements. Reference Section 11391B for design requirements of Blower System Master Control Panel.

4. Provide a Most-Open-Valve (MOV) control strategy based on DO error (and not valve position) so that the Aeration Zone with the largest error shall be considered the MOV and the air flow control valve for that zone forced full open. Provide dead-band, hysteresis and time-delays in the control strategy before switching to the next MOV.

5. Alternative methods of control shall be submitted to Engineer for review and approval.

1.4 SELLER'S PROCESS PERFORMANCE GUARANTEE

A. The Seller shall provide a Process Performance Guarantee for the complete IFAS Treatment System, including all equipment as specified in this Section and the equipment in the Related Sections. The Process Performance Guarantee shall be considered satisfied if the Process Performance Test specified in Paragraph 3.6 of this Section and Performance Tests specified in the Related Sections are successful.

B. Should the System fail to meet the Performance Requirements during the Process Performance Test, then the Process Performance Guarantee shall require that the Seller comply with the following:

1. If the Performance Requirements in Paragraph 1.3 are not met, the Seller shall immediately, upon notice from the Engineer, make changes to the equipment such that process performance as guaranteed is obtained at no additional cost. Such changes may include but not necessarily be limited to modification of chemical dosages (such as supplemental carbon as glycerin or magnesium hydroxide alkalinity), adjustment of the aeration system, providing additional media to increase the percent fill, instrumentation and control adjustments, or other actions that may be deemed necessary.

2. If, after the necessary corrective measures are implemented, the System cannot pass the Process Performance Testing as described in Paragraph 3.6 after three attempts, the Seller shall remove the System and reimburse the Owner for all payments made and forfeit rights to all remaining payments under the Contract

with the Buyer, and not contest the Owner's claim to pursue the Seller's Performance Bond.

3. If the System can pass the Performance Testing but cannot demonstrate through the Operation & Maintenance Guarantee Testing, that they have achieved the Seller's guaranteed Operations and Maintenance criteria, the Seller shall pay an O&M Performance Penalty. The amount of the O&M Performance Penalty shall be equal to the present worth value over a twenty-year period of the calculated difference between the costs calculated by the Engineer for operation and maintenance (which are based on the guaranteed O&M values as discussed in Section 00410) and the actual (measured during the Operation & Maintenance Guarantee Testing performance tests). The calculations will be performed in the same manner as O&M annual cost calculations used in the bid evaluation to select the Seller during pre-procurement.

4. If the difference between the actual and guaranteed annual operation and maintenance costs (based on the Seller's guarantee values and Actual value) are less than 20%, then no O&M Performance Penalty will be assessed.

C. The maximum value of the penalties assessed under this guarantee shall be in accordance with the limits specified in the Agreement (Section 00520 Article 11)

1.5 SUBMITTALS DURING CONSTRUCTION

A. General

1. Provide submittals in accordance with Section 01330.

2. Coordinate submittals with the Buyer and deliver when directed by the Buyer, unless indicated otherwise below.

3. Provide submittals in a timely manner to ensure approval, fabrication and delivery of all equipment and appurtenances as required by the Construction Contractor schedule requirements.

4. Should the submittal include any items not in compliance with these specifications and/or the Drawings, provide a full description of the non-complying aspects.

5. In addition to submittal requirements listed in this Section, Seller is also responsible for submitting the information required in the Related Sections.

B. Seller Certifications

1. Seller shall review the IMLR pumps design, chemical feed system designs (including supplemental carbon as glycerin, if needed), and any other ancillary systems provided by Others but required for the complete operation of the IFAS Treatment System, if needed, in the construction contract and submit signed certifications that the proposed systems in the construction contract are fully acceptable and will in no way void the Performance Guarantee requirements of this Section.

C. As specified in Section 01330, submit certifications indicating compliance with applicable American Iron and Steel requirements.

D. Shop Drawings

1. Detailed project-specific scaled drawings showing the layout of the IFAS Treatment System and all its components, including those specified in Related Sections, Seller shall provide electronic version of layout in AutoCAD format.

2. Process Flow Diagram – Provide a one-sheet diagram that illustrates the wastewater flow through the System process. This diagram shall include a table of design criteria.

3. Piping and Instrumentation Diagram – Provide a Piping and Instrumentation Diagram that illustrates the interconnecting piping, valves, instruments and equipment associated with the IFAS Treatment System and all of its components specified in other Sections.

4. Installation Drawings – Provide installation drawings for equipment and piping assemblies, including media retention screens. These drawings shall illustrate equipment dimensions, locations and sizes, loads, foundation and anchor bolt plans, anchor bolt sizing, materials of construction, and critical clearance requirements.

5. All shop drawings submitted by the Seller shall be updated to reflect as-built conditions based on modifications, if any, that have been made to the System by the Seller at installation and startup.

6. See control and electrical system submittals below for additional shop drawing requirements.

E. Design Data

1. Complete process calculations, including but not limited to:

   a. Sizing of process oxic and anoxic volumes.

   b. Selection of design MLSS concentration under future and current conditions subject to maximum loads specified herein.

   c. Selection of design solids retention time under future and current conditions subject to maximum loads specified herein.

   d. Selection of gross yield at various design conditions.

   e. Selection of IMLR rate.

   f. Selection of media type, quantity and percent fill.

   g. Design of aeration system, determination of process air required and determination of air required for mixing.

   h. Reports of process simulation model output, including a summary of kinetic rates used for both the fixed-film and suspended growth.

   i. Influent alkalinity requirements. Alkalinity adjustment will be available as part of the overall WPCF upgrade utilizing magnesium hydroxide ($Mg(OH)_2$).

j. Supplemental carbon requirements in pounds of COD per day, if required by the IFAS Treatment System to meet the Performance Guarantee. Provide these requirements under Design Current and Design Future conditions. Supplemental carbon chemical feed will be provided by the Buyer, if needed per the recommendation of the Seller, as part of the overall WPCF upgrade.

k. Basis for equipment recommendations to be provided by others, including IMLR pumps and Tank isolation gates (or other inlets as required to prevent media migration).

2. Hydraulic calculations developed to demonstrate compliance with the allowable head loss through the IFAS basin, media retention screens and other devices designed to prevent media migration downstream or upstream of the IFAS zone.

F. Product Data

1. IFAS Treatment System Operations and Maintenance requirements – Provide list of routine maintenance requirements; necessary maintenance equipment; special tools required for checking, testing, parts replacement, and maintenance; special handling instructions; and storage and protection requirements prior to installation for all equipment provided as part of the System by the Seller.

2. Material and Equipment List - Provide a complete list of equipment and materials (with ASTM UL/CSA, IEC designations, etc.), including manufacturer's descriptive data and technical literature, product specific drawings, performance charts and curves, catalog cuts, utility requirements, paint system, including coating materials, surface preparation, and workmanship, and installation manuals with detailed instructions on the procedures and practices used by the Buyer for the all components, including, but not limited to the following:

a. IFAS Media Retention Screens

b. IFAS Media

1) Submit minimum of one half cubic foot of IFAS Media to be supplied.

2) Quality control procedures to be employed by the manufacturer to ensure that the media produced and furnished is uniform and conforms the project specifications.

c. Field Instruments

1) Complete equipment specifications, manufacturer recommended details of connections, wiring, range, and dimensions. Submittals consisting of only general sales literature will not be acceptable.

2) Submit detailed information for each instrument or control device, including manufacturer's descriptive literature and a specific data sheet for each device which shall include (a) product (item) name used herein and Tag numbers as shown on the Contract Drawings,

(b) manufacturers complete model number, (c) location of the device, input - output characteristics, (d) range, size, and graduations, (e) physical size with dimensions, enclosure NEMA classification and mounting details, and (f) materials of construction of all components.

3) Manufacturer's data regarding operational range, intended service condition, installation requirements, materials of construction, and maintenance procedures for all instruments.

3. See control system submittals below for additional product data requirements.

G. Structural Design Calculations

1. Submit, in accordance with Section 11000, a structural design certification with structural calculations both signed by a Professional Engineer licensed in Connecticut for the following components:

a. IFAS Media Retention Screens

b. IFAS Media Retention Screen Supports

c. Exterior Mounted Blower Packages

2. The structural design certification shall state that equipment components and anchoring systems comply with the building code and will be able restrain the equipment from all applicable forces (gravity, seismic, liquid sloshing, wind (if applicable), and snow (if applicable)) without damage to the equipment/materials and support structures. Attach to the certification all supporting stamped calculations and all applicable stamped design details as specified in Section 11000.

H. Control and Electrical Systems Submittals

1. Control and electrical system submittals shall provide complete documentation of the proposed hardware, including but not limited to control panel hardware, circuit breakers, control panel layout, Programmable Logic Controllers (PLCs), input/output (I/O) modules, Operator Interface Terminals (OITs), computers if required, communication equipment, cables, peripherals, etc.). A complete Bill of Materials (BOM) listing all hardware equipment shall be provided.

2. System Block Diagrams

a. Complete schematic system block diagram(s) showing the interconnections between major hardware components.

b. The block diagram(s) shall reflect the total integration of all control devices in the System and any OIT locations. Location of all components shall be clearly identified with appropriate cross-references.

c. Diagrams shall reference all interconnecting cabling requirements for digital components of the System including any data communication links.

d. Block diagram(s) shall reflect the integration of the Seller's control system in the WPCF wide SCADA system. Location and division of responsibility shall be clearly identified.

3. Data Sheets

a. A data sheet for all major hardware components listing all model numbers, options, auxiliary and ancillary devices that are being provided.

b. The data sheets shall be provided with an index, proper identification and cross referencing. They shall include, but not be limited to, the following information:

1) Product (item) name used herein and on the Contract Drawings.

2) Supplier's complete model number.

3) Location of the device.

4) Input/output characteristics.

5) Range, size, and graduations.

6) Physical size with dimensions, enclosure NEMA classification, and mounting details.

7) Materials of construction of all components.

8) Power supply device sizing calculations where applicable.

4. System Input / Output

a. Submit a complete Input / Output (I/O) list for devices connected to the control system under this Contract. The I/O list shall be submitted in a Microsoft Excel readable electronic file format and an 8-1/2-in by 11-in hard copy. The I/O list shall include, but not be limited to, the following information:

1) Tag number(s).

2) Description.

3) Physical location.

4) Physical point address.

5) I/O type.

6) Range & Engineering Units (for Analog I/O).

b. Where multiple mechanical components are provided for process redundancy, their field connections to I/O modules shall be arranged such that a failure of a single I/O module will not disable all mechanical components of the redundant system.

5. Control Panel Layout and Wiring Drawings

a. Panel Layout Drawings: Drawings shall be furnished for all panels, consoles, and equipment enclosures. Panel assembly and elevation drawings shall be drawn to scale and detail all equipment in or on the panel. Panel drawings shall be 8.5”x11” or 11”x17” in size. As a minimum, the panel drawings shall include the following:

1) Interior and exterior panel elevation drawings to scale.

2) Nameplate schedule.

3) Conduit access locations.

4) Panel construction details.

5) Cabinet assembly and layout drawings to scale. The assembly drawing shall include a bill of material on the drawing with each panel component clearly defined. The bill of material shall be cross-referenced to the assembly drawing so that a non-technical person can readily identify any component of the assembly by supplier and model number.

6) Fabrication and painting specifications including color (or color samples).

7) Heating and cooling calculations for each panel supplied indicating conformance with cooling requirements of the supplied equipment and environmental conditions. If cooling or heating equipment is provided, provide calculations to justify the sizing of the equipment.

8) Submit evidence that all control panels shall be constructed in conformance with UL 508 and bear the UL seal confirming the construction. Specify if UL compliance and seal application shall be accomplished at the fabrication location or by field inspection by UL inspectors.

9) Submit dimensional drawings of blower room floor layout and Tank layout including location plans for control panel (to be established by the Engineer), wiring external to panel, work that requires dimensional coordination with other trades, conduit routing, working clearances, and operator controls.

b. Panel Wiring Diagrams: Panel wiring diagrams depicting wiring within and on the panel as well as all connections to external devices. Panel wiring diagrams shall include power and signal connections, UPS and normal power sources, all panel ancillary equipment, protective devices, wiring and wire numbers, and terminal blocks and numbering. Field device wiring shall include the device ISA-tag and a unique numeric identifier. The diagrams shall identify all device terminal points that the system connects to, including terminal points where I/O wiring lands on equipment not supplied by the Seller. I/O wiring shall be numbered with rack number, slot number, and point number. Two-wire and four-wire equipment shall be clearly identified and power sources noted. Submit final wire numbering scheme.

6. Control System Standards and Conventions Submittal

   a. Seller shall coordinate with the Plant Control System Programmer (PCSP) and provide a control system that is in accordance with the standards and conventions established by the PCSP for the WPCF's SCADA system. Since the WPCF already has an existing SCADA system, the PCSP will be responsible for aligning these standards and conventions with the existing SCADA system as agreed to by the Owner. In addition to coordination required during shop drawings review, Seller shall allow for a minimum of three two-hour conference calls for coordination. Note that the Plant Control System Supplier (PCSS) will be responsible for providing the plant's new control system hardware, software, and licensing (except for control panels furnished as part of a Seller's equipment package), and the PCSP will be responsible for programming the plant's new control system hardware and software (except for control panels furnished as part of a Seller's equipment package) and coordinating the tags and tag addressing for all equipment.

   b. This submittal shall include the standards and conventions used to organize, develop and provide a consistent control system with the plant SCADA system. Standards shall be developed for the following as a minimum:

      1) Naming conventions.

      2) Operator interface, set point entry, equipment control, display navigation.

      3) Graphic standards, colors, equipment symbols, etc.

      4) System security.

      5) Alarming.

7. Plant Network Topology

   a. Allocate space within panel for installation of (2) copper Ethernet patch ports (Phoenix Contact CADIN1IG or equal) by others. Each port shall be terminus of copper cables from Plant Network. One port shall be connected to Seller's PLC with patch cable provided by Seller. Other port shall be spare and available for Plant Control System Programmer's access to Plant Network.

   b. All Seller-supplied control panels requiring ethernet connections beyond that of just the PLC and Plant Network Connection shall be designed to be on a Control Network which is separate from the Plant Network. Use of NAT (network address translation) or a 'converged' network is an exception to a separate network and must be reviewed and approved by Engineer. Exceptions will be granted on a case-by-case basis and require coordination of IP addresses and use of a managed switch. Managed switch shall match Plant Network switches provided elsewhere in this project.

8. Operator Interface

a. Provide a printout with a screen shot of each proposed screen on the Operator Interface Display touch screen, with a description of the proposed functionality of each of the buttons and a description of the meaning of each output.

b. This submittal shall cover the specific system control schemes as well as the details of the process graphic displays.

c. The submittal shall contain the semifinal details of all logs, reports, and process graphic displays. The specifics of what shall appear on each display and what calculations are required to support them shall be developed and submitted.

d. A complete listing of all signals to be collected for long term historical information shall be provided. This listing shall include frequency of data sampling and duration for which the data shall be immediately accessible.

e. A complete listing of all signals to be collected for trend display shall be provided. This listing shall include frequency of data sampling and duration for which the data shall be immediately accessible.

9. Process Control Strategy

a. Provide a process control narrative that describes the overall IFAS Treatment System, sequence of control for normal, alternate (such as manual), and emergency operations, interlocks, data collection and recording, alarms, and set points.

b. The process control schemes shall be developed in ladder logic diagram (unless alternative language is approved by Engineer) based on information from the Specifications. Included with each diagram shall be:

1) Brief scope of the Control Function

2) Listing of all scanned inputs to the control function

3) A narrative of the control strategy

4) Any assumptions made in developing the program

5) I/O database listing showing all field inputs and outputs (i.e., AI, DI, AO, DO) associated with the control function.

6) Cross reference list of all I/O showing to which I/O modules or software modules they are linked

7) Listing of all operator inputs/outputs to and from the control function. Any special displays related to the function shall be illustrated. A description of the operation of any panels shall be described as it relates to the control function.

8) Listing of alarms

9) Descriptions of how alarms will be handled and affect the process

c. This submittal shall cover all of the associated logic developed under this Contract required to implement the control functions specified.

d. Submit annotated PLC logic in 8-1/2-in by 11-in format. In addition, each network or rung shall be annotated so that a person can read and easily comprehend what control function the rung or network is performing.

10. Coordination Submittals

a. Seller shall contact and coordinate with the PCSP to ensure compatible configuration of the Seller's PLC(s) and related devices in order to match the Plant Network. Seller shall configure the Seller's equipment network addresses, IP addresses, and Subnet mask in their equipment to match the addresses determined by the PCSP. Software communication shall be provided in contiguous registers.

I. Plans

1. Pre-Commissioning, Commissioning, Startup Testing, and Performance Testing Plans – Submit plans for Commissioning, Startup Testing and Demonstration, and Performance Testing at least 60 calendar days before initiating Commissioning. The Plans shall address all testing required in Part 3 of this Section. The plans shall also include the forms that will be used to record data in the field. The Plans shall include test schedules, sample locations, test procedures, and verification of laboratory certification.

2. Training Program – Provide a written training course curriculum and training instructions 14 days prior to the start of training.

J. Test Reports and Certificates

1. Factory test reports for all 3-phase motors 20 HP and larger. Test reports shall include:

a. No load current.

b. Full load current.

c. Breakdown torque.

d. Locked rotor (starting) current.

e. Locked rotor torque.

f. Hi-potential test.

2. Startup Testing – Provide written certification that the equipment is installed correctly and in accordance with Seller's requirements.

3. Performance Testing – Provide a memorandum that summarizes the results of the Performance Testing. The results of any failed tests shall be included along with a description of the corrective actions taken.

4. Test reports including background data, calculations, operational WPCF data, and other information showing the development of the proposed design and demonstrating that it will conform to all specified requirements.

K. Operation and Maintenance Data

1. Provide complete operation and maintenance manuals specifically for this overall IFAS Treatment System installation that include instructions, procedures, and illustrations for both normal operating conditions and emergency conditions in accordance with Section 01770.

2. Provide complete operation and maintenance manuals for all individual pieces of equipment provided by the Seller that includes drawings, equipment lists, descriptions, instructions, procedures, and illustrations to instruct operation and maintenance personnel with each specific piece of equipment.

L. Certificates

1. Submit a written statement that the Seller has examined all factors affecting the performance of the IFAS Treatment System, including all mechanical equipment and related piping and appurtenances that the Seller is supplying, and that the Seller is satisfied that the performance criteria as specified herein will be met.

2. During final design, Seller shall review the design of the supplemental carbon (if needed) chemical feed systems, and IMLR pumping systems in the construction contract and submit signed certifications that the proposed equipment and systems in the construction contract are fully acceptable and will in no way void the Performance Guarantee requirements of this Section. The Seller shall not be held responsible for reliability, robustness, or physical performance of any equipment not directly furnished by the Seller.

M. Closeout Submittals

1. Provide as-delivered drawings of major equipment upon completion of installation. Provide an electronic copy.

2. Provide special warranty information.

3. Provide closeout submittals in accordance with Section 01770.

N. Installation diagrams for the equipment furnished under this Section. Control data including:

1. Motor data shall include: function, horsepower, phase, frequency, voltage, approximate full load current, service factor, nominal RPM, frame size, NEMA speed torque design, and insulation class.

2. A control schematic diagram shall be provided that shows power and control circuits in sufficient detail to evaluate the control system design.

O. Statements of Qualifications

1. Submit qualifications of personnel designated to assist the Buyer during installation and start-up.

2. Submit qualifications of personnel designated to train operating personnel.

1.6 REFERENCE STANDARDS

A. American Society for Testing and Materials (ASTM)

B. National Electrical Manufacturers Association (NEMA)

C. Occupational Safety and Health Act (OSHA)

D. American National Standards Institute (ANSI)

E. Institute of Electrical and Electronics Engineers (IEEE)

F. Where reference is made to standards of one of the above, or other organizations, the version of the standard in effect at the time of the Bid Proposal opening shall apply.

1.7 WARRANTY

A. Unless otherwise indicated in this Section, the Seller shall provide a warrantee on the IFAS Treatment System components specified in this Section for a minimum period of 12 months from substantial completion to be free from defects in design, material, and workmanship. If the manufacturer's standard warrantee is longer than 12 months from substantial completion, this longer period shall apply. Substantial completion shall be defined as equipment having met commissioning requirements as specified herein and beneficial use of the equipment by the Owner.

B. Parts and products manufactured by others (e.g., Aeration System, Aeration Blowers, and Mixers) and provided by the Seller shall be warranted to the extent of the manufacturer's original warranty which shall be no less than that specified above.

C. During this warranty period, the Seller shall within 30 days of the receipt of a notice from the Buyer regarding defective components, material, or workmanship make good all defective material and workmanship without any additional cost to the Buyer. Owner will make a reasonable effort to make the defective Goods available to the Seller.

1.8 SPARE PARTS AND SPECIAL TOOLS

A. Provide the spare parts recommended by the manufacturers of the IFAS Treatment System as specified in this Section 11391, the IFAS Treatment System Aeration System as specified in Section 11391A, the IFAS Treatment System Aeration Blowers as specified in Section 11391B, and the IFAS Treatment System Mixers as specified in Section 11391A as listed in their respective O&M manuals and recommended to have on-hand during the first year of operation.

B. At a minimum, these spare parts for the IFAS Treatment System as specified in this Section 11391 shall include the following items:

1. One year's supply of lubricant for all equipment that requires routine lubrication.

2. One of each type of float switch or level sensor provided

3. Instrumentation and controls spare parts as required by instrumentation equipment manufacturers for one year of service.

4. Control Panel Spare Parts

   a. One spare CPU of each type supplied.

   b. One spare I/O module of each type supplied.

   c. One spare specialty interface modules of each type supplied.

   d. One spare remote I/O communication modules of each type supplied.

   e. One spare communications module of each type supplied.

   f. One spare power supply of each type supplied.

   g. One spare type of each communication cable supplied.

5. Special Tools

   a. Furnish one set of all special tools required for normal operation and maintenance of the equipment including one complete set of tools required for maintenance or disassembly of the system components.

   b. Tools shall be furnished in a suitable steel case, clearly and indelibly marked on the exterior to indicate the equipment for which the tools are intended

C. Spare parts shall be packed in suitable containers or boxes bearing labels clearly designating the contents and the piece of equipment for which they are intended.

1.9 QUALITY ASSURANCE

A. The Seller shall demonstrate successful experience in the design, production, and installation of IFAS Treatment Systems. The materials, method of construction, controls, etc., must be approved by the Engineer, as specified herein, and supported by a minimum of 3 full-scale IFAS plants operating for a minimum of 3 years on municipal domestic waste streams where nitrification of wastewater was the desired objective and the maximum-month design capacity was 1 MGD or higher.

B. Unit Responsibility: All the equipment specified in this Section and the equipment in Related Sections shall be furnished by the Seller. Seller shall be responsible for the coordination and proper function of all the equipment, as an integrated system. Seller is responsible for delivery of equipment and supplies required under these specifications. The use of word “responsible” relating to the Seller is in no way intended to relieve the Buyer (Construction Contractor) from ultimate responsibility for equipment coordination, installation, operation, and guarantee. The Buyer shall bear ultimate responsibility for equipment coordination, installation, operation, and guarantees.

C. Shop Inspection: The Buyer and Engineer reserve the right to witness the fabrication process to monitor compliance with the specifications. The Buyer and/or Engineer may witness the progress of the System component fabrication through one or more separate shop inspections. Travel costs for shop inspections will be paid for by the Buyer.

D. Provide the services of a trained full-time employee of the Seller on the project site as the Seller’s representative as required during the installation, commissioning, startup, training, and testing of the System as specified herein. In addition, Seller

shall be responsible for coordinating representatives from the respective manufacturer of the all equipment furnished by Seller within the IFAS Treatment System as required for installation commissioning, startup, training and testing, as specified in the equipment specific sub-Sections. All representatives shall have complete knowledge of the equipment provided, including its proper installation, operation and maintenance. All representatives shall be factory direct personnel regularly engaged in overseeing equipment installations, and not the local manufacturer's sales representatives.

1.10 PERFORMANCE BOND

A. As required in Article 4 of the General Conditions and Supplementary Conditions, the Seller shall provide a Performance Bond guaranteeing that the Seller completes the obligations specified in this Section and Related Sections, including achieving the Performance Requirements specified in Paragraph 1.3 and the completion of the Seller's obligations under the Process Performance Guarantee specified in Paragraph 1.4.

1.11 SELLER'S SERVICE AGREEMENT

A. The Seller shall provide a Service Agreement including continuing technical and operational support on the IFAS Treatment System and IFAS Treatment System Blowers (as specified in Section 11391B for two (2) years following Substantial Completion and successful completion of the Performance Test. Provide this cost, which shall include all expenses, as a separate item as listed in the Bid Form (Section 00410).

B. Service Agreement shall include as needed telephone support and a minimum of two site visits during the first year following substantial completion and successful performance testing and two site visits the year thereafter. Each site visit shall be no less than two (2) consecutive full days on site. A full day is from 7 AM to 3 PM.

C. This technical and operational support shall be independent of any technical support required to resolve warranty-related systems or equipment problems.

1.12 SHIPMENT AND DELIVERY

A. Preparation for Shipment

1. Factory assemble products. Mark or tag separate parts and assemblies to facilitate field assembly. Cover machined and unpainted parts that may be damaged by the elements with a strippable protective coating.

2. Package materials and equipment to facilitate handling and protect from damage during shipping, handling and storage. Mark or tag outside of each package or crate to indicate its purchase order number, bill of lading number, contents by name, name of Project and Seller, equipment number and approximate weight. Include complete packing lists and bills of materials with each shipment.

3. Seller shall prepare all equipment, with the exception of IFAS Media, for long term storage outdoors.

4. Buyer is responsible for coordinating delivery and storage of IFAS Media on-site until such time that it is to be installed in accordance with the following criteria:

   a. IFAS Media must be stored out of the sun and rain in a weather proof container on-site.

   b. Stacking of the IFAS Media storage containers is in accordance with the Seller's requirements.

B. Delivery and Inspection

1. Deliver products in accordance with the requirements of the Buyer to avoid conflict with the construction work.

PART 2 PRODUCTS

2.1 MANUFACTURERS

A. The IFAS Treatment System specified in this Section shall be designed, furnished, and serviced by:

1. Veolia Water Technologies (I. Kruger, Inc.) with HYBAS™

2. Suez Treatment Solutions, Inc. with METEOR™;

3. World Water Works with Ideal IFAS;

4. or equal.

2.2 SCOPE OF SUPPLY

A. The scope of supply for the Seller is summarized in the following table. During the bid for the Construction Contract, the Buyer (construction contractor) shall confirm the exact scope of supply and services directly with the Seller.

DESCRIPTION	FURNISHED BY[1]
Influent Fine Screen (6mm)	Buyer
Primary Clarification	Buyer
Primary Effluent Composite Sampler	Buyer
Vertical Mixer for the Scrubber Channel	Buyer
Coarse Bubble Diffusers in the Existing West Distribution Channel	Buyer - (Existing)
Aeration Tank Gates (including flow split, tank isolation, and weir gates (or other devices recommended by seller) entering the oxic zone containing IFAS Media)	Buyer
Concrete work, piping, as well as bypass pumping required to modify the existing Aeration Tanks and channels into the new	Buyer

IFAS Treatment System process zones – This includes Baffle Walls and IFAS Media Retention Screen Walls	
Secondary sludge handling systems	Buyer
IFAS Treatment System Aeration Systems (including Coarse Bubble Diffusers for oxic zones containing IFAS Media and Fine Bubble Diffusers for other zones)	Seller[2]
IFAS Treatment System Blowers (with blower package control panel and blower system master control panel)	Seller[3]
IFAS Treatment System Mixers (for Anaerobic and Anoxic Zones - Slow Speed Type with VFDs, Controls, Mounting Systems and Hoists)	Seller[4]
IFAS Media	Seller
IFAS Media Retention Screens	Seller
Screen Air Scour System (for cleaning IFAS Media Retention Screens)	Seller
Spray Nozzles (for pushing scum and foam through IFAS Media Retention Screens)	Buyer
Telescoping Scum Weirs (to allow for surface wasting of scum and foam from the zones just after the IFAS Media Retention wall and possibly the ends of Tanks 1 & 2 and 3 &4.	Buyer
IMLR Pumps, Piping, Valves, and VFDs	Buyer
IMLR Flow Meter	Buyer
IFAS Treatment System Main Control Panel (ITSMCP)	Seller
Ammonia Based D.O Setpoint Controller with Instrumentation	Seller
D.O. Sensors and Transmitters	Seller
Air Flow Control Valves	Seller
Air Flow Meters	Seller
Aeration Piping between Blowers and Aeration System Drop-legs	Buyer
Air Piping between Screen Air Scour System Blowers and Screen Air Scour System in tank Air piping flange connection.	Buyer
RAS Pumps and Piping	Buyer
RAS Flow Meter	Buyer
Supplemental Carbon (Glycerin) Chemical Feed System (if needed)	Buyer

Chemical Feed Systems (for adding Magnesium Hydroxide alkalinity) and performing chemical phosphorus removal)	Buyer
Wiring and conduit between equipment furnished by the IFAS Treatment System Supplier.	Buyer
MCCs to Provide Power for all equipment	Buyer
Piping, fittings, manual valves, and pipe supports to equipment furnished under this Section except where indicated otherwise.	Buyer

Notes:

1. "Seller" indicates items that shall be furnished by the IFAS Treatment System supplier. "Buyer" indicates that the Construction Contractor shall furnish and install the indicated item.
2. Selected and furnished by the Seller in accordance with the requirements of Section 11391A – IFAS Treatment System Aeration Systems.
3. Selected and furnished by the Seller in accordance with the requirements of Section 11391B – IFAS Treatment System Blower System.
4. Selected and furnished by the Seller in accordance with the requirements of Section 11391C – IFAS Treatment System Mixers.

2.3 GENERAL REQUIREMENTS

A. Part 2 is intended to give a general description of what is required, but does not cover all details which may vary in accordance with the exact requirements of the equipment as offered. All items shall be designed for 24 hour per day, 365 day per year, 20-year continuous service. All equipment shall be designed and proportioned to have more than adequate strength, stability and stiffness to withstand all forces and stresses resulting from fabrication, shipment, erection, and operation, and to be especially adapted for the intended service.

B. Painting and Finishing: Manufactured goods such as pump bodies and mixers shall be factory primed and finished coated in accordance with the manufacturer's standard minimum two coat epoxy finish systems.

C. Design mechanical components, systems, and their attachments in accordance with Section 11000. Anchor bolts shall be in accordance with Section 11000. The Seller shall be responsible for providing design and sizing of anchor bolts associated with equipment provided under their scope of supply, but these items will be purchased and installed by the Buyer in accordance with the Seller's recommendations, except for IFAS Media Retention Screens which shall be furnished by the Seller.

D. Safety – The IFAS Treatment System must be safe to operate and must not pose any public health or safety hazards to the community. All equipment must be designed to OSHA standards for operator safety.

E. Reliability (Process and Equipment Reliability) - The equipment provided must perform reliably and evidence must be provided, upon request when evaluating

bidders, to demonstrate that the system can recover quickly enough from system upsets to ensure continuous permit compliance for other parameters.

F. Like items of materials/equipment shall be the end products of one manufacturer in order to provide standardization for appearance, operation, maintenance, spare parts and manufacturer's service.

G. System supplier shall furnish all templates, guides, etc., or whatever is necessary for proper installation of its equipment. The supplier shall demonstrate the proper use of these items prior to construction.

2.4 IFAS MEDIA

A. Design and provide IFAS Media in the quantity, configuration, and with characteristics necessary to comply with the performance requirements stated herein.

B. Provide media that comply with the following:

1. The media shall have a minimum of 122 square feet of protected surface area for biological growth per cubic foot of media volume (400 m^2/m^3).

2. The specific weight of the media elements in bulk shall be a minimum of 6.5 pounds per cubic foot. The specific gravity of the media shall be between 0.94 to 0.96.

3. The media shall be formed as elements with a cross-sectional dimension in the range of 9 to 25 mm, and a longitudinal dimension in the range of 4 mm to 17 mm.

4. The media shall be free of foreign inclusions, air bubbles, cracking, pimples, and delamination that will prohibit the media from properly performing its function.

5. The media shall be 100% virgin high-density polyethylene and provide a minimum service life of 20 years.

6. Moving porous or fixed media is not acceptable.

2.5 IFAS MEDIA RETENTION SCREENS

A. Design and provide IFAS Media Retention Screens in the sizes, quantity, configuration, and with characteristics necessary to comply with the performance requirements and minimum criteria stated herein. Media retention screens sizing and placement shall be designed to:

1. retain all media within each oxic zone containing IFAS Media while allowing for activated sludge and scum to pass through uniformly up to the peak instantaneous design flow rate.

2. be constantly scoured by the media to keep them free from debris.

3. minimize the bulk approach velocity of the tank contents to the screens, within the constraints of the tankage arrangement.

B. Provide IFAS Media Retention Screens that comply with the following:

1. Provide screens, screen flanges, mating screen flanges, screen supports, and screen stiffeners, and related screen components using Type 304 stainless steel construction unless otherwise specified.

2. Design screens and screen supports to be submerged within the tank without any deformation due to loads imparted on the screen with the tank empty or full. Provide stiffeners and supports at all locations required.

3. Provide cylindrical media retention screens in a horizontal orientation to pass a majority of the flow. Each cylindrical screen shall be secured to the IFAS Media Retention Wall by a wall pipe flange provided by the Seller, which shall be of the same material of the screen and embedded into the IFAS Media Retention Wall during construction by Buyer. Seller to provide additional screen supports independent of the wall pipe flange. All associated hardware shall be 18-8 grade stainless steel and be provided by the Seller.

4. Provide flat media retention screens where required to pass scum and allow for draining the tank. Each screen shall mount directly to the IFAS Media Retention Wall. Provide the minimum number of openings and minimum sizes of each type specified in the Design Criteria Section above. All associated hardware shall be 18-8 grade stainless steel and be provided by the Seller.

5. Design screen openings to be sufficiently small to prevent media pass-through. Provide sufficient surface area so that total screen surface area shall be 150 percent of that necessary to maintain a head loss at or below the maximum specified in Paragraph 1.3.F. Provide each opening with a minimum slot width of 1/4” to ensure impinged media does not blind screens.

2.6 SCREEN AIR SCOUR SYSTEM

A. Design and provide a dedicated screen air scour system at all cylindrical IFAS Media Retention Screens with the characteristics necessary to comply with the performance requirements stated herein.

B. The screen air scour system shall operate independently of the main process aeration system including a dedicated blower system to provide air flow at the pressure required for the system

C. The screen air scour system shall include, at a minimum, diffusers specifically designed for this purpose, air piping extending to a flange connection three feet above the water level in the tank, motorized airflow control valves, and two dedicated blowers. Air scour piping shall include droplegs, air distribution manifolds, and the necessary supports and anchoring systems. All piping between the top of the droplegs to the blower system shall be provided by others.

D. The screen air scour system shall diffuse air uniformly along the length of each cylindrical screen throughout each aeration basin.

E. Construct the screen air scour system with the following materials of construction:

1. Piping shall be of Type 304 stainless steel and rated for continuous operation.

2. Hardware shall be 18-8 stainless steel, unless otherwise indicated.

3. Gaskets shall be neoprene, Type A Durometer 45 to 55, tested in accordance with ASTM 52240.

F. The screen air scour system shall be connected to and controlled by the ITSMCP and be able to be operated under the following operation modes:

1. Manual Operation: Operators can manually control when the screen air scour system is operated, for durations up to and including continuous operation.

2. Automatic timed operation: The screen air scour system is automatically initiated at specified intervals for a specified duration, which can be modified by the user at the ITSMCP.

3. Automatic tank surface water level: The screen air scour system shall run when the tank water surface level exceeds a level setpoint to clear media or debris building up on the media retention screen surfaces.

4. Provide, at a minimum, one air flow control valve per oxic zone containing IFAS Media. Control valve shall be controlled by the ITSMCP based on the operating modes detailed above.

G. The screen air scour system shall include two (2) dedicated blowers (1 duty, and 1 standby) that meet the following design criteria:

1. Provide the appropriate air flow and pressure as determined by the IFAS Treatment System Seller to meet the process performance criteria specified herein.

2. Be rated for outdoor installation and have a weather resistant sound enclosure that reduces noise to approximately 70 dBA, and be designed to withstand wind and snow loads as specified in Section 11000.

3. Include a 3-phase, 480V electric motor, with VFD speed control, and local control panel that indicates blower on/off status, motor speed, and control switch for on/off/auto operation.

4. The blower is provided by the same manufacturer as the blowers in Section 11391B generally confirms with the requirements of that sections except as follows:

a. The Blower System Master Control Panel is not required.

b. The Blower Package is designed for outdoor installation and provided with a VFD to be installed remote from the package blower indoors.

c. The blower inlet is ambient air and Seller shall provide an inlet filter silencer.

d. The blower style, due to the lower pressure and flow required may vary from the high efficient style specified.

e. Certified blower curves shall be required.

2.7 MOTORIZED AIR FLOW CONTROL VALVES

A. The valve operation shall be motorized and equipped with open/close limit switches, position transmitter, and a local/remote control station. The valve actuator shall be designed for modulating valve service. Valves shall be controlled by the ITSMCP.

B. Provide color code of indicator lights consistent with the following (which may change):

1. Amber Alarm
2. Red = Run, Open
3. Green = Off, Closed

C. Control valves shall provide near linear control over the operating range.

D. Resilient Seated Butterfly Valves:

1. Valve shall be rated at 250 psi and minimum of 250°F
2. Ductile iron body with lug-type for dead end services or wafer style for all other installations with ANSI Class 125 or 150 flanges
3. Single-offset disc to provide uninterrupted 360 degree seating edge. Disc and shaft shall be 316 stainless steel. Shaft diameter shall meet AWWA C504, class 75B standard.
4. Discs shall employ a positive machined drive utilizing a rectangular drive connection. Pins or bolts are not allowed for attaching the discs to the valve stems.
5. EPDM resilient seats shall be bi-directional and fully line the valve body with integral flange seals so gaskets are not required. Seats shall be hard-backed cartridge style to be field replaceable with hand tools.
6. The upper stem shall be guided by two self-lubricating bronze bearings, and the lower stem for valve size 14 inches and greater shall be guided by a single self-lubricating bronze bearing.
7. Manufacturer – DeZurik - BOS, Pratt or equal with modulating motorized actuator.

E. Motorized Actuator

1. Motorized actuator shall include the motor, operator unit gearing, limit switch gearing, limit switches, torque switches, stem nut for rising stem valves, declutch lever or knob, and auxiliary handwheel as a self-contained unit.
2. Enclosure
   a. All electrical enclosures shall be weatherproof, NEMA 4, as a minimum.
   b. Provide space heaters in motor enclosure and limit switch compartment.
3. Motor
   a. The motor shall be specifically designed for valve actuator service and shall be of high torque, totally enclosed, non-ventilated construction, with motor leads brought into the limit switch compartment. Motor

insulation shall be NEMA Class B with a maximum continuous temperature rating of 120 degrees C (rise + ambient). Selection and design shall be based on Class B temperature rise.

b. The motor shall be of sufficient size to open or close the valve against the maximum expected differential pressure when voltage to the motor terminals is 10% above or below nominal voltage. The motor duty rating shall be sufficient for one complete open to close to open (or reverse) cycle or 15 minutes, whichever is greater, without exceeding its temperature rating. The motor shall be pre-lubricated and all bearings shall be of the anti-friction type.

c. Provide internal motor thermal overloads to protect against motor overloads. The motor shall be an independent sub-assembly such that the power gearing shall not be an integral part of the motor assembly.

d. The motor shall operate on 120 VAC power (from the ITSMCP) and control shall be 120 VAC power.

e. Actuator shall be sized to provide a minimum of 150% of the required valve seating torque or 200% of the required dynamic torque, whichever is greater.

f. All motors shall be designed, constructed, and tested in accordance with applicable IEEE, NEA, and ANSI standards.

4. Operating Unit Gearing

a. The actuator shall be a double reduction unit with the capability of quickly changing the output speed with a simple gear change. The power gearing shall consist of generated spur or helical gears of heat-treated steel, and worm gearing. The worm shall be of hardened alloy steel and the worm gear shall be of alloy bronze accurately cut with a hobbing machine. All power gearing shall be grease-lubricated. Ball or roller bearings shall be used throughout. Preference will be given to units having a minimum number of gears and moving parts.

b. All rotating power train components shall be immersed in grease with provisions for inspection and re-lubrication without disassembly. Lubricants shall be suitable for ambient conditions of -20 degrees F to +150 degrees F.

5. Controls

a. The control system shall include limit switches, reversing contactor consisting of two mechanically interlocked contactors with two additional electric contacts, local 3-button control station O/C/S, local/remote selector switch, and valve position indicator, all housed in a NEMA 4 enclosure.

b. For modulating type actuators, provide an actuator capable of position control with local potentiometer and remote position control with 4 to 20 mA DC input. Actuator shall convert a 4 to 20 mA signal to phase reversing AC power for the valve operator. Operators for modulating

service shall be suitably derated to maintain dependability. Provisions shall be made in the controller to allow connections to terminal strips.

6. Limit Switch and Limit Switch Gearing

   a. Limit switches and associated gearing shall be an integral part of the valve actuator. Limit switch gearing shall be of the intermittent type, totally enclosed in its own gear case to prevent dirt and foreign matter from entering the gear train, grease-lubricated, and shall be made of bronze or stainless steel. Limit switches shall be of the adjustable type capable of being set to trip at any point of valve travel between fully open and fully closed, and not be subject to breakage or slippage due to overtravel.

   b. Limit switches shall be of the heavy duty, 600V silver plated contacts with rotary wiping action. Microswitches or similar switch configurations are not acceptable.

   c. Each valve actuator shall have a minimum of two rotor-type switch assemblies and a minimum of eight heavy duty contacts. Contacts shall be convertible between N.O. and N.C.

   d. The switches shall provide for visual verification of switch position without disassembly.

7. Torque Switch

   a. Each valve actuator shall be equipped with a double torque switch which is responsive to loads encountered in either the opening or closing direction. Each side of the switch shall have a numbered dial and shall be adjustable. A calibration tag shall be mounted near each switch correlating dial setting with unit output torque.

   b. The torque switch shall operate during the complete valve cycle without the use of auxiliary relays, linkages, latches, or other devices. The torque switch shall be wired to shut off the actuator motor in the event that excessive torque is being generated in either direction of travel.

8. Stem nut

   a. Valve actuators shall have a stem nut of high tensile bronze or other material, compatible with the valve stem and suited to the application. The nut arrangement, where possible, shall be of the two-piece type to simplify field replacement.

   b. The stem nut for rising stem valves must be capable of being removed from the top of the actuator without removing the actuator from the valve, disconnecting the electrical wiring, or disassembling any of the gearing within the actuator.

9. Manual Operation

   a. Provide a handwheel for manual operation. The handwheel shall not rotate during motor operation nor shall a frozen motor prevent manual operation.

b. When in the manual operating position, the unit will remain in this position until motor is energized at which time the valve operator will automatically return to electric operation and shall remain in motor position until handwheel operation is desired. This movement from motor operation shall be accomplished by a positive declutching lever which will disengage the motor and motor gearing mechanically but not electrically.

c. Hand operation must be reasonably fast and require no more than 100 lbs of rim effort at a maximum required torque. It shall not be possible for the unit to be simultaneously in manual and motor operation.

10. Manufacturer

a. Rotork

b. Limitorque

c. Or Equal

2.8 IFAS TREATMENT SYSTEM MAIN CONTROL PANEL

A. Provide an IFAS Treatment System Main Control Panel (ITSMCP) to monitor and control associated equipment for the complete IFAS Treatment System and in accordance with the design criteria provided. Supply all instrumentation and controls that are required to reliably operate the system in a safe and efficient manner.

B. The ITSMCP shall include, but not be limited to, programmable logic controller (PLC), Operator Interface Terminal (OIT), and Uninterruptible Power Supply (UPS).

C. ITSMCP shall be able to operate the individual controlled elements in the IFAS Treatment System in either manual and automatic modes. In automatic mode, the PLC shall monitor and control operations with setpoint adjustments and operation initiated by the operator through an operator interface terminal (OIT) on the system control panel. In manual mode, the operator shall bypass the PLC control loop for that piece of equipment s and be able to manually adjust the control of the equipment through the OIT (or SCADA). This is in addition to manual controls that may be possible though the local controls for devices if they are taken out of Auto (Remote control via PLC) and placed into Hand (Local control) at the VFD or local valve actuator.

D. Design the ITSMCP to interface with the WPCF's SCADA System, the Ammonia Based Dissolved Oxygen Setpoint Controller, the Blower System Master Control Panel (See Section 11391B), the Mixer VFDs and Mixer Monitoring (See Section 11391C), and all related field instrumentation specified herein. A summary of the anticipated control strategy for all equipment for the complete IFAS Treatment System is provided as follows:

1. The ITSMCP shall monitor and control the following hardwired I/O at a minimum, furnished by the Seller and furnished by others but required for the complete operation of the IFAS Treatment System:

a. Analytical Instruments. The following instruments will be provided under this section and may be communicated digitally to PLC:

1) pH Analyzers – One analog input per sensor provided.

2) Dissolved Oxygen Analyzes – One analog input per sensor provided.

3) Ammonium Analyzers – One analog input per sensor provided.

4) Nitrate Analyzers – one analog input per sensor provided.

b. Air Flow Meters – One analog input per sensor provided.

c. Ultrasonic Level Sensors - One analog input per sensor provided.

d. Air Flow Control Valves - One Set of I/O per valve (for each Aeration Zones) provided

1) Analog Input – Valve Position

2) Analog Output – Valve Position Command

3) Digital Inputs - Auto, Fault, Running

e. Screen Air Scour System Aeration Control Valve – one set of I/O for each control valve provided

1) Digital Inputs – Control Valve open and closed Position Status

2) Digital Output – Control Valve open/closed Position Command

3) Digital Inputs - Auto, Fault, Running

f. Screen Air Scour System Blowers:

1) Analog Input – VFD Speed

2) Analog Output – VFD Speed Command

3) Digital Output – VFD Start/Stop

4) Digital Inputs – Auto, Fault, Running

g. IMLR Pumps & Flow – One Set of I/O for each of the two pumps (provided by others):

1) Analog Input – VFD Speed

2) Analog Input –IMLR Flow

3) Analog Output – VFD Speed command

4) Digital Output – VFD Start/Stop

5) Digital Inputs – Auto, Fault, Running, Leak, Motor Temperature

h. Anaerobic and Anoxic Zone Mixers (See Section 11391C) – The following I/O per mixer will be provided under Section 11391C and communicated digitally to the PLC from the Mixer Control System:

1) Analog Input – VFD Speed

2) Analog Output – VFD Speed Command

3) Digital Output – VFD Start/Stop

4) Digital Inputs – Auto, Fault, Running, Leak Detection Fault, Motor Temperature Fault

i. Blower System Master Control Panel (See Section 11391B)

1) Analog Output – Total Air Flow Required from the Blowers.

(Note – This is in addition to digital data available from the Master Control Panel – See Section 11391B)

j. Vertical Mixer in the Influent Scrubber Channel (No Automatic Speed Control Loop)

1) Analog Input – VFD Speed

2) Analog Output – VFD Speed command

3) Digital Output – VFD Start/Stop

4) Digital Inputs – Auto, Fault, Running

k. Supplemental Carbon Chemical Feed System

1) Analog Output – Pump Speed Command

2) Digital Inputs – Auto, Fault, Running

2. The following Systems, but not limited to, will be controlled and monitored by other PLCs but the data will be communicated to the ITSMCP from the SCADA system as required by the IFAS Treatment System Seller:

a. WPCF Influent flow

b. RAS flow rate

c. WAS flow rate

d. Alkalinity chemical feed systems – Estimate of Chemical Flow Rate (gph)

e. Supplemental Carbon chemical feeds systems – Estimate of Chemical Flow Rate (gph)

3. No PLC will directly monitor the following status and as a result, the ITSMCP will need to rely on manual entries (at the OIT or via SCADA) stored in the PLC from the operator to determine the following:

a. Aeration Tanks on/off line status based on isolation gate positions (Typical of six aeration tanks)

b. Step Feed Mode Status (Gate positions at Scrubber Bypass channel)

c. Swing Zone Status (Valve positions for IMLR Piping)

4. As a minimum, the following data from the ITSMCP shall be communicated to and from the Ammonia Based Dissolved Oxygen Setpoint Controller.

a. All D.O. Sensor Readings and Default D.O. Setpoints

b. All Air Flows

c. All Ammonia & Nitrate Sensor Readings

d. Plant Flows

e. RAS Flows

f. IMLR Flows

g. Swing Zone Status

h. On-Line Tank Status

i. Step Feed Mode Status

j. Optimized D.O. Sensor Setpoints – Output

E. IFAS Treatment System Main Control Panel (ITSMCP) shall be designed to provide the following functionality at a minimum:

1. Alarms shall be generated to notify operations that maintenance attention is required or an extreme condition in which the performance may be jeopardized. Provide separate lists (at OIT) for current alarms and alarm history. Coordinate with the Engineer and Owner to prioritize alarms for remote annunciation (within the WPCF and/or offsite). The 70 most recent alarms shall be recorded in an alarm history register and displayed when prompted.

2. Provisions shall be made to connect the ITSMCP to the WPCF SCADA system. Data exchange includes, but is not limited to, alarms, setpoints, process values, and process states, permissives. All alarms, setpoints, and monitoring and control parameters available at the ITSMCP OIT shall also be available and designed for duplication at the main WPCF SCADA HMI system.

3. The Seller shall be responsible for providing all necessary hardware within the provided ITSMCP necessary to connect the ITSMCP to the WPCF SCADA TCP/IP based network. This includes at a minimum, but not limited to: Ethernet switches, industrial communication protocol convertors, media convertors, fiber optic convertors, and software drivers.

4. The Seller shall be responsible for coordinating this connection with the Plant Control System Programmer (PCSP) during construction. The Seller shall ensure the PLC and OIT IP addresses are configured to be compatible with the WPCF's SCADA system. The Buyer shall be responsible for furnishing necessary cables, installation, interconnection, and SCADA programming related to the network compatibility and connection.

5. Display alarm and run status using panel lights and OIT displays color coded as directed by the PCSP. This following convention may change:

a. Amber Alarm

b. Red = Run, Open

c. Green = Off, Closed

6. Prior to leaving the site, the Seller shall ensure that any devices or programming computers that the Owner will use to maintain the system can monitor the control processors on-line, make on-line changes, upload, and download the processors to ensure proper communication has been set up and that programming software versions are compatible with the processors provided.

7. The ITSMCP shall include capabilities for remote monitoring by means of a high-speed Ethernet TCP/IP based connection to the plant SCADA system. All monitoring functions available at the ITSMCP OIT shall be designed for duplication in the plant SCADA system for display at the SCADA HMI. The Seller shall be responsible for coordinating with the Buyer, the PCSP, and the Plant Control System Supplier during construction.

8. The ITSMCP shall generate an alarm warning operators to shut the valve to the West Distribution Channel mixing diffusor grid if the Process Aeration Demand cannot be otherwise met by the Blower System.

F. PLC hardware requirements

1. Provide microprocessor-based PLCs as detailed herein. The PLC shall be capable of use in a stand-alone configuration and also be capable of being networked into a larger system. It shall be specifically suitable for use in a TCP/IP based network. The PLC shall be programmable in standard ladder logic.

2. The PLC shall be of modular design with a common plug-in “rack” in which the CPU and I/O cards are placed. The system shall be capable to add racks in order to add I/O cards. Empty slots shall have slot fillers.

3. The PLC Central Process Unit (CPU) shall be programmable in standard ladder logic. The CPU shall have a minimum of 32 MB of user memory and include a non-volatile Electrically Erasable Programmable Read Only Memory (EEPROM) unit that shall store the program and set points. The PLC CPU shall have the capability to have “On-Line” programming modifications made.

4. The power supply for the PLC shall accept 120 VAC as input voltage and provide 10A at 5VDC to backplane output.

5. The PLC panel shall have at a minimum 25 percent active spares of each I/O type for future use. In addition, each PLC rack shall include rack space for 25 percent I/O modules for future use. Active points shall be defined as points physically configured in the PLC, all wiring between the I/O module and terminal block complete, and sufficient power supply capacity available to immediately put a point into service by connecting the field wires at the terminal block.

6. Where multiple mechanical components are provided for process redundancy, their field connections to I/O modules shall be arranged such that a failure of a single I/O module will not disable all mechanical components of the redundant system.

   a. Discrete input cards shall be available in 16 channel configurations. The cards shall be rated for 120 VAC with each point individually isolated. The cards shall have easily visible LED indicators showing the status of

each input channel (LED ON = INPUT PRESENT). Cards shall have a removable terminal strip.

b. Discrete output cards shall be a Form-A dry contact rated at 2.0 amp minimum continuous, with maximum inrush of 10 amps for 16 milliseconds. Discrete outputs shall be supplied with interposing relays for all NEMA 3 and larger starter loads. Interposing relays shall have a minimum contact rating of 10 amps at 125VDC and shall be DPDT configuration. Discrete output modules shall be 8 outputs per module.

c. Analog input cards shall be available in 8 channel configurations. The analog input modules shall accept 4-20 mA DC differential inputs. All analog input signals shall be individually isolated.

d. Analog output cards shall be available in 4 output channel configurations. Outputs shall be 4-20 mA DC analog output. The output digital to analog converter shall have 16-bit resolution. The cards shall source the loop with 24 VDC. The cards shall have a removable terminal strip.

7. Provide sufficient I/O for the proposed system functionality based on the minimum requirements specified herein.

8. All PLC discrete and relay outputs shall be individually fused. Fused terminal blocks shall be knife disconnect type.

9. The PLC, including all cards and accessories as detailed in these Specifications, shall be same as the PLC provided by the UV Disinfection System and Cloth Media Filters.

10. All software and software licenses required to achieve the functionality described in the Specifications shall be provided. Licenses and software are to be turned over to the Buyer at the conclusion of the project.

11. All necessary ancillary devices (hardware, drivers, software, etc.) needed for communication to be established from the ITSMCP PLC to the plant SCADA system shall be included.

G. Operator Interface Terminal (OIT)

1. The OIT shall be a combination resistive 12-inch minimum, diagonal, color flat panel industrial unit with keypad and touch screen. The OIT shall be compatible with the PLC specified herein. The unit shall be supplied with system software as specified by the manufacturer.

2. The OIT shall communicate with the PLC via a communication protocol used with the supplied PLC. The vendor shall provide the terminal, enclosure, graphics software, communication cable, and all configurations required to perform the functions indicated in the Specifications. The OIT shall be mounted on the door of the ITSMCP enclosure and be rated NEMA 4X. The OIT shall be same as the PLC provided by the UV Disinfection System and Cloth Media Filters.

H. Uninterruptible Power Supply

1. The Uninterruptible Power Supply (UPS) shall be double conversion online. The UPS shall be sized by the Seller to provide power to the vendor PLC, OIT, DC power supplies, and all loop powered process control instrumentation. All ancillary equipment within the ITSMCP (e.g., lights, power receptacles) shall not be powered from the UPS. The UPS shall provide 18 minutes of backup power at half load. The UPS shall have an internal automatic static bypass switch such that an overload condition shall transfer load to incoming line power. An external maintenance (make-before-break) bypass switch shall be installed in order to service the UPS without losing power to the control panel components. The following UPS status/alarms shall be wired to the PLC and transmitted to the SCADA system: external maintenance bypass status, static bypass status, common alarm, and power failure. The UPS shall be Sola/Hevi-Duty, American Power Conversion, or equal.

I. Control Panels, Enclosures, and Cabinets

1. The following paragraphs describe general fabrication requirements of control panels, enclosures, consoles and cabinets. All control panel assemblies shall be UL listed and fabricated in accordance with National Electric Code, Article 409 – Industrial Control Panels. The Seller shall be responsible for ensuring final enclosure sizing and panel arrangements accommodate all required equipment for a fully integrated and operational system as specified herein.

2. Wiring

a. Conduit shall be sized for adequate spare capacity. All conduit unions and fittings shall be solvent cemented in accordance with instructions from the manufacturer. All conduits shall be supported at maximum 3 foot intervals.

b. All interconnecting wiring shall be of annealed, 98 percent conductivity, soft drawn copper and have 600-volt insulation and be rated for not less than 90 degrees Celsius.

c. Power distribution wiring on the line side of fuses shall be 12 AWG minimum. Control wiring on the secondary side of fuses shall be 16 AWG minimum. Electronic analog circuits shall utilize 18 AWG shielded, twisted pair, cable insulated for not less than 600 volts.

d. Power and low voltage DC wiring systems shall be routed in separate wireways. Crossing of power and low voltage wires shall be at right angles. Power and low voltage wires routed parallel to each other shall be separated by at least 6 inches. Different wiring systems shall terminate on separate terminal blocks. Wiring troughs shall not be filled to more than 60 percent visible fill. Provide separate wireways for both field and panel wiring.

e. All wiring shall terminate in a master terminal board, where each terminal is uniquely and sequentially numbered. Direct interlock wiring between equipment will not be allowed. The master terminal board shall have a minimum of 25 percent spares. Terminal blocks shall be arranged in vertical rows and separated into groups (power, AC control, DC signal). Terminal blocks shall be the compression type.

1) Discrete inputs and outputs (DI and DO) shall have two terminals per point with adjacent terminal assignments. All active and spare points shall be wired to terminal blocks.

2) Analog inputs/outputs (AI and AO) shall have three terminals per shielded pair connection with adjacent terminal assignments for each point. The third terminal is for shielded ground connection for cable pairs. Ground the shielded signal cable at the PLC cabinet for all analog signals that are sourced at the panel. All active and spare points shall be wired to terminal blocks Provide surge arrestors for Analog I/O which may also serve as the I/O block.

3) Terminal blocks for analog circuits shall have test terminals and bypasses for testing and troubleshooting.

4) Wire and tube markers shall be the sleeve type with heat impressed letters and numbers.

5) Only one side of a terminal block row shall be used for internal wiring. The field wiring side of the terminal shall not be within 6 inches of the side panel or adjacent terminal or within 12 inches of the bottom of the panel.

6) Terminal blocks shall be single-tiered and have permanent labels indicating the terminal block numbers.

f. All wiring to hand switches, etc., which are live circuits independent of the panel's normal circuit breaker protection shall be clearly identified as such.

g. All wiring shall be clearly tagged on both ends and color coded. All tag numbers and color coding shall correspond to the panel wiring diagrams and loop drawings. All power wiring, control wiring, grounding, and DC wiring shall utilize different color insulation for each wiring system used. The color coding scheme shall be:

1) Incoming 120 VAC Hot – Black

2) 120 VAC Hot wiring downstream of panel circuit breaker – Red

3) 120 VAC neutral – White

4) Ground – Green

5) DC wiring – Blue

6) Foreign voltage – Yellow

3. Provide transient voltage surge suppression device (SPD) on the incoming line to the ITSMCP. SPD shall be heavy duty including lightning arrestors, surge capacitors and EMI/RFI noise filtering. SPD for the ITSMCP shall be 120/240V, singe phase, 3 wire (or as required to protect the main incoming panel power) and have a 100kA crest surge current rating. Units shall be

provided with blown fuse indicator lights and disconnect switch. SPD shall be UL listed

4. Each field instrument shall have a separate power distribution circuit with circuit breaker or fuse with a blown fuse indication. Provide 24 VDC power supplies as required to power field instruments and panel devices.

5. Circuit power from the control cabinet out to field devices (switches, etc.) that are used as discrete inputs to the PLC input cards shall be isolated with an isolating switch terminal block with flip cover that is supplied with a dummy fuse. Isolation switch block shall be an Allen Bradley, Square D, Phoenix Contact, or equal.

6. All PLC outputs to the field shall be isolated with an isolating fuse switch terminal block with a flip cover and a neon blown fuse indicator. The single circuit fusible terminal block shall be an Allen Bradley, Square D, Phoenix Contact, or equal.

7. Provide individual surge device protection for any 4-20 mA signal and 120VAC power to an instrument or equipment mounted outside of the building or facility housing. Instruments shall be housed in a grounded metallic case. Device surge protectors shall be mounted within the instrument enclosure or a separate junction box coupled to the enclosure. Provide gas tube or metal oxide varisters (MOVs) surge protection.

8. Equipment Mounting/Arrangement

   a. All components shall be mounted in a manner that shall permit servicing, adjustment, testing and removal without disconnecting, moving or removing any other component. Components mounted on the inside of panels shall be mounted on removable plates and not directly to the enclosure. Mounting shall be rigid and stable unless shock mounting is required otherwise by the manufacturer to protect equipment from vibration. Components mounting shall be oriented in accordance with the internal components and shall be identified with suitable plastic or metal engraved tags attached with drive pins adjacent to (not on) each component identifying the component in accordance with the drawing, specifications, and vendor's data.

   b. All exterior panel mounted equipment shall be installed with suitable gaskets, faceplates, etc., required to maintain the NEMA rating of the panel.

   c. Use ISA Recommended Practice RP60.3 as a guide in layout and arrangement of panels and panel mounted components.

9. Nameplates

   a. All panels and panel devices shall be supplied with suitable nameplates, which identify the panel and individual devices as required. Each device nameplate shall include up to three lines with the first line containing the device tag number, the second line containing a functional description (e.g., Module No. 1), and the third line containing a functional control description (e.g., Start).

b. Nameplates shall be a minimum of 3/32 inch thick, black and white, Lamacoid with engraved inscriptions. The letters shall be black against a white background. Edges of the nameplates shall be beveled and smooth. Nameplates with chipped or rough edges will not be acceptable. Nameplates shall be affixed to the panels using 4-40 thread stainless steel button head hex screws.

10. Control Panels or Computer Consoles

a. Control panels and computer consoles shall be of NEMA Type 4X stainless steel construction and shall be labeled by Underwriters Laboratories. The panels shall be constructed of 12-gauge thick 304 Stainless steel, suitably braced internally for structural rigidity and strength. All exposed welds, seams, or edges shall be ground smooth. Front panels or panels containing instruments shall be reinforced to prevent warping or distortion.

b. Panels shall be provided with front access doors only as shown on the panel details. Front access doors with mounted instruments, control devices or operating interface terminals shall be of sufficient width to permit door opening without interference from flush mounted instruments or terminals. All doors shall be mounted with strong, continuous, stainless steel piano type hinges and be provided with lockable door handles and three point latches.

c. Provide overhead switched lighting in each panel.

d. The panel shall be suitable for top or bottom conduit entry as approved by the Engineer. For top mounted conduit entry, the panel top shall be provided with nominal one foot square conduit entry area which may be drilled to accommodate conduit and cable penetrations. All conduit and cable penetrations shall be provided with ground bushings, hubs, gasketed locknuts, or other accessories as required maintaining the NEMA rating of the panel and electrical rating of the conduit system.

e. Low voltage (less than 120 VAC or DC) digital or 4-20 mA DC analog control devices and circuits or PLC components shall be compartmentalized with full height isolation barriers between the low voltage and 480-volt power devices within the panel.

11. Additional heating, cooling, dehumidifying, and filtering devices shall be incorporated in control panels, enclosures, and cabinets as required maintaining internal ambient conditions within the equipment's environmental operating range without violating the cabinet's NEMA rating. Minimum cabinet temperature shall not drop below 45 degrees Fahrenheit or exceed 104 degrees Fahrenheit under any conditions for cabinets that have a UPS located inside.

12. Each control enclosure assembly shall be provided with corrosion inhibitors to protect interior electrical components from damage caused by high humidity. The corrosion inhibitors shall be installed prior to shipment to provide protection during shipment and storage of the enclosure. The corrosion inhibitor shall contain a chemical combination that vaporizes and condenses on all surfaces in an enclosed area. Vapors shall redeposit as needed in the event of

condensation of moisture on surfaces. These vapors shall reach every part on the enclosure, protecting all interior surfaces. The emitters shall have additional red-metal inhibitors. Enclosures shall be reasonably sealed.

J. Managed Ethernet Switches

1. Ethernet switch(s) shall be a managed switch. The switch shall have the following physical features

   a. Copper ports: 10/100 TX RJ45 ports, minimum 2 spare ports

   b. Operating temperature: -10°C to 70°C

   c. Power: 24 VDC redundant power supply inputs

   d. Enclosure: DIN-rail mountable

2. The switch shall have the following features

   a. Full duplex on all port

   b. Auto negotiation and manual configurable speed and duplex

   c. Wire speed switching fabric

   d. IEEE 802.1w RSTP

   e. IGMP snooping

   f. IGMP filtering

   g. Configuration password protected

   h. Configuration backup capability required

   i. SNMP V3

   j. Lock port function for blocking unauthorized access based on MAC address.

3. The switch shall have the following additional features

   a. The converter shall come equipped with a dry contact rated for 120 VAC 5A that shall be used for common trouble alarm. The alarm shall be programmable. If the contact cannot use 120 VAC 5A, provide the necessary 24 VDC power from the PLC panel and provide interposing relays in the PLC panel.

4. Switches installed in the Plant Network shall match manufacturer and series of plant switches provided elsewhere in this project.

5. Acceptable Manufacturers

   1) Moxa

   2) N-Tron

   3) Allen-Bradley

   4) Or equal

2.9 AMMONIA BASED D.O. SETPOINT CONTROLLER

A. Provide an ammonia based dissolved oxygen (D.O.) setpoint controller with related instrumentation that is designed to model the system performance and send revised system dissolved oxygen set points to the Blower System Master Control Panel.

B. The controller shall be suited for the specified conditions as previously listed and include an industrial personal computer (PC) with powerful processing software that will allow for the modelling of the IFAS/activated sludge system kinetics and provide modified dissolved oxygen setpoints to the aeration tank Oxic Zones in a manner that will optimize energy use, minimize dissolved oxygen entering anoxic and Anaerobic Zones, better utilize the influent carbon for denitrification and biological phosphorus removal, while still achieving the desired level of nitrification.

2.10 FIELD ANALYTICAL INSTRUMENTATION

A. General

1. Field analytical instrumentation shall include, but is not necessarily limited to, a minimum of the following:

   a. One Dissolved Oxygen (DO) sensor, monitor/controller, and mounting hardware for each Aeration Zone in the aeration tanks as required by the Seller.

   b. One pH Analyzer sensor to be located in the effluent.

   c. One Ammonium Analyzer in the primary effluent

   d. Nitrate Analyzer - one per treatment train

2. All field instrumentation, local controllers, and instrumentation communication systems shall be provided by One Manufacturer:

   a. Hach with SC-1000s

   b. YSI with IQ Sensor Net and Model 2020

   c. or equal.

3. Provide a complete and integrated networked (hardwired via ethernet/Modbus/profibus) system to monitor all field analytical instruments (and if appropriate, other instruments within the scope of supply) and communicate the readings to the ITSMCP.

   a. Provide sufficient probe modules for all field instruments. More than one field instrument per probe module is allowed as long as the probe module is located within 15 feet of the field instrument probe, the wire for the probe does not cross a walkway. Leave spare capacity for another instrument at each module location.

   b. Instead of fixed displays at each instrument, provide a minimum of four portable displays suitable for taking local readings of individual sensors and performing all local calibrations, monitoring, and troubleshooting.

c. Provide other displays and controllers as required to maintain full functionality of the system when all portable displays have been disconnected.

d. Each probe module location shall be provided with a sunshade the portable display and protect it from sunlight while allowing operators to operate it. Sunshade shall be FRP, sized to properly shade control panel, and have coordinated mounting with the control panel and be by Intertec, Tracom, or equal.

B. Dissolved Oxygen Analyzer

1. The same manufacturer shall manufacture the dissolved oxygen sensor and digital controller.

2. Sensor

a. Description: Sensor shall be an optical type sensor that does not require membranes, cartridges, fill solutions, or replaceable membrane caps as these types of designs are not acceptable. The sensor shall not be damaged by exposure to direct or indirect sunlight nor will exposure to sunlight affect the calibration.

b. Performance:

1) Measurement range: 0.01 to 20.00 mg/L

2) Accuracy: less than one ppm: ± 0.1 ppm; greater than one ppm: ± 0.2 ppm

3) Resolution: 0.01 mg/L below 4.0 ppm

4) Repeatability: ± 0.05 ppm

5) Response time: less than 40 seconds to 90% at 20°C and less than 60 seconds to 95% at 20°C

6) Operating Temperature: 0 to 50 °C

7) Relative humidity: 95% non-condensing

c. Physical Criteria

1) All parts of the sensor shall be corrosion-resistant and fully-immersible.

2) The sensor shall provide electrolyte-free operation without the requirement of sample conditioning.

3) The operation of the analyzer shall not be affected by H_2S, pH, K^{+1}, Na^{+1}, Mg^{+2}, Ca^{+2}, NH_4^{+1}, Al^{+3}, Pb^{+2}, Cd^{+2}, Zn^{+2}, Cr(total), Fe^{+2}, Fe^{+3}, Mx^{+2}, Cu^{+2}, Mi^{+2}, Co^{+2}, CN^{-1}, $NO3^{-1}$, $SO4^{-2}$, S^{-2}, $PO4^{+3}$, Cl^{-1}, anion active tensides, crude oils, or Cl_2^{-1}.

d. Manufacturer:

1) HACH - LDO Series

2) YSI Model FDO 700-701 IQ

3) Or equal.

3. Accessories:

a. Provide pole mounting kit to mount to rail for each sensor and controller

b. For sensors installed within oxic zones containing IFAS Media, provide articulated arm to mount sensor to ease access for routine maintenance. In addition, provide non-corroding polymer guard to protect the sensor probe from IFAS Media. Guards shall allow free flow of fluids and allow for the escape for any air bubbles. The Guards shall be removable by hand without the use of tools to facilitate routine inspection, cleaning, and servicing of the instrument.

c. Cleaning device and High Output Blast Cleaning Compressor for each sensor.

d. Provide extension cables to extend the distance between the sensor and controller.

e. Provide one spare cap for each sensor.

C. Process pH Analyzers

1. Sensor

a. Type:

1) pH-sensitive glass membrane electrode, double or triple-junction reference electrode and ground electrode with integral preamplifier.

2) For submersion or flow-through application.

b. Function/Performance:

1) Range: 0 to 14.

2) Temperature Compensation: Temperature element integral to sensor for temperature compensation.

3) Environmental conditions: -5 to 105 degrees C.

c. Physical:

1) Flat glass or shrouded pH electrode.

2) Sensor assembly constructed of PVDF, Tefzel, or similar material.

3) Sealed electrodes.

d. Accessories Required:

1) Manufacturer's cable for connection of sensor to transmitter. Length as required by the installation.

2) One year's supply of consumables for calibration.

3) Handrail mounting kit where appropriate.

e. Manufacturer(s):

1) HACH pHD Sensor

2) YSI SensoLyt pH Sensor

3) Or Equal

D. Ammonium Analyzer

1. Sensor:

a. Quantity: Provide digital ammonium sensors for continuously monitoring ammonium nitrogen in the aeration tanks.

b. The same manufacturer shall manufacture ammonium sensor and digital controller.

c. Ammonium sensor shall be a continuous-reading sensor that utilizes Ion-Selective Electrode (ISE) technology for ammonium and potassium with pH reference electrode and temperature sensor.

d. Performance:

1) Measurement range: 0.2 to 1000 mg/L NH4-N

2) Accuracy: 5% of measured value ±0.2 mg/L (with standard solution)

3) Detection limit: 0.2 mg/L

4) Response time: less than three minutes

e. Operating criteria

1) Operating Temperature: -4 to 113°F

2) Sample temperature: 35 to 104°F

3) Sample pH: 5 to 9

4) Immersion depth: 1 to 10 feet

5) Sample pressure: 4.4 psi maximum

f. The sensor body shall be 316 stainless steel with ends made of ASA. All parts of the sensor shall be corrosion resistant and fully-immersible.

g. The sensor shall be factory calibrated with all electrodes calibrated to each other and integrated in a one-piece design.

h. The sensor shall compensate for interference effects of potassium and temperature.

i. The sensor shall operate without the requirement of sample conditioning.

j. The sensor shall be capable of performing a one or two-point inline matrix correction to adapt the sensor to the wastewater matrix.

k. Manufacturers:

1) Hach Company, AISE sc Ammonium Sensor.

2) YSI AmmoLyt ISE Sensor

3) Or equal

2. Accessories:

a. Provide handrail mounting hardware for each ammonium sensor which shall be include an articulated arm to facilitate removal from the tanks.

b. Cleaning device and High Output Blast Cleaning Compressor for each sensor.

E. Nitrate Analyzer

1. The same manufacturer shall manufacture the nitrate sensor and digital controller.

2. Sensor

a. Description: The nitrate sensor shall be a continuous-reading sensor that utilizes a ultra-violet absorption technology with a minimum of 1 mm path length. The measurement beam has a wavelength of either 210 nm and the reference beam has a wavelength of 350 nm, or utilizes 256 beam absorbance technology.

b. Performance

1) Measurement range: 0.1 to 50.0 mg/L NO2/3-N

2) Accuracy: ±3% of the mean ±0.5

3) Resolution: 0.1 mg/L

4) Response time: one minute

5) Operating Temperature: 36 to 104°F

6) Operating Pressure: 7.2 psi maximum

7) The measurement interval shall be user-selectable greater than two minutes with the ability to average up to 12 signals

8) The sensor shall compensate for interference effects of turbidity and organic contamination up to 150 mg/L.

c. Sensor shall be stainless steel with double seal.

d. The sensor shall provide reagent-free operation without the requirement of sample conditioning.

e. The sensor shall be self-cleaning via a wiper or ultrasonic cleaning and retain a life-long factory calibration.

f. Manufacturers:

1) Hach Nitratax sc Plus

2) YSI NitraVis 701

3) Or Equal

3. Accessories:

a. Provide handrail mounting hardware for each sensor which shall be include an articulated arm to facilitate removal from the tanks.

b. Provide extension cables for sensors, as needed.

2.11 OTHER INSTRUMENTATION

A. General

1. Provide the following additional instrumentation.

a. Air flow Meters – One per Aeration Zone and one for existing diffusor grid within the west distribution channel for channel mixing.

b. One ultrasonic level sensor/transmitter per IFAS Zone to be located in the upstream side of the oxic zone containing IFAS Media and one in the influent channel just prior to both oxic zones containing IFAS Media. (3 Total)

B. Air Flow Meters (Thermal Mass Flowmeter type)

1. Flow Element

a. Each air flow meter shall be a thermal dispersion type complete with insertion probe into the air stream, suitable for high temperature discharge and be corrosion resistant design.

b. Instrument shall measure current required to maintain a constant temperature difference between the reference source and process heated thermal sensors. Constant power anemometer type instruments are not permitted.

c. Heated probe and sensing probe each fitted with RTD temperature sensing.

d. Provide hot tap assembly including a ball valve and packing gland that will allow removal of the sensor without shutdown of the process. The hot tap assembly shall be installed in a welded fitting on the pipe.

e. Wetted parts to be Type 316L stainless steel.

f. Function/Performance:

1) Flow Range: 0 to 20,000 SFPS.

2) Process Operating Temperature: -40 to 500 degrees F.

3) Process Maximum Operating Pressure: 300 psig.

2. Transmitter

a. Function/Performance:

1) Accuracy (including flow element): Plus or minus 1 percent of reading, plus 0.5% of full scale reading.

2) Repeatability (including flow element): Plus or minus 0.5 percent of reading.

3) Turn Down: 100:1

4) Operating (Ambient) Temperature: -20 to 120 degrees F.

b. Provide self-diagnostic circuitry that automatically detects bad data from sensing points and disregards such data.

c. Output: One isolated 4-20 mA output and two alarm contacts rated 0.5 A at 24V AC/DC, adjustable over the full instrument range in scfm. Control wiring and signals shall report to/from the ITSMCP.

d. The flow transmitter shall have terminals for input signals of sensing points, calibration capabilities, and be provided with temperature compensation.

e. Display: Digital indicator displaying flow in SCFM. Provide a sunshield for each display.

f. Thermal dispersion sensor and transmitter are integral within same electronics enclosure. Enclosure shall be NEMA 4 (IP67). Provide mounting hardware for probe and transmitter for local mounting on the aeration tank handrail.

g. Transmitter shall be 120VAC powered instrument (from the ITSMCP). Transmitter shall power flow sensor.

h. Manufacturer(s):

1) Kurz Instruments, Inc. Series 454FTB;

2) Endress+Hauser Proline t-mass 65I;

3) Sierra Instruments Steel-Mass™ Model 640S;

4) or Equal.

C. Ultrasonic Level Sensor & Transmitters

1. Transducer

a. Type

1) Non-contact, ultrasonic level transducer.

b. Function/Performance

1) Measuring Range: Transducer range shall be suitable for the installation indicated on the Drawings, up to 50 feet (15 m).

2) Temperature Range: -20 to 60 degrees C.

3) Relative Humidity: Zero to 100 percent.

4) Temperature Compensation: Transducers shall be provided with integral temperature sensors for temperature compensation at above temperature ranges.

c. Physical

1) Transducers shall be potted/encapsulated in a Kynar or other chemical and corrosion-resistant housing.

2) The surface of transducers shall be Teflon-coated where mounted on chemical tanks and exposed to vapors in the tanks that are not compatible with the transducer material.

3) Transducers shall be capable of being completely submerged without damage.

4) Transducers shall be suitable for surface, pipe, or flange mounting as indicated on the Drawings or Instrument Device Schedule. Appropriate mounting hardwired shall be provided. Flanges shall be 6 inches (150 mm) and resistant to attack by the medium being metered or, where required, shall be protected by corrosion-resistant coatings and facings.

d. Options/Accessories Required

1) Transducers located in areas where freezing condensation may occur shall be provided with special heaters or other type of transducer protection designed to prevent sensor icing.

2) Signal cable as recommended by the manufacturer, for installation between the transducer(s) and the transmitter. Length, up to 1,000 feet (300 m), shall be as required for proper installation.

e. Manufacturer(s)

1) Siemens-Milltronics;

2) Pulsar;

3) or equal.

2. Transmitter/Converter

a. Type

1) Microprocessor based compatible with the transducer(s) provided.

b. Functional/Performance

1) Resolution (including transducer): Plus or minus 0.1 percent of range or 0.08 inches (2 mm), whichever is greater.

2) Accuracy (including transducer): Plus or minus 0.25 percent of range or 0.24 inches (6 mm).

3) Range: As required by the installation indicated on the Drawings.

4) Temperature Range: -20 to 50 degrees C.

5) Output: Minimum one isolated 4-20 mA output and minimum four alarm contacts (number of contacts above 4 required of each device to be determined by signals required as shown on the drawings adjustable to trip at any point in the instrument range. Output contacts shall be rated 5 A at 230 VAC.

6) Temperature Compensation: Compensation over the temperature range of the sensor.

7) Display: Digital indicator displaying level/differential level or volume in engineering units or percent as indicated on the Drawings or in the Instrument Device Schedule.

8) Diagnostics: On-screen instructions and display of self-diagnostics.

9) Loss of Signal: Transmitter shall ignore momentary loss-of-echo signals and shall indicate loss of echo on the transmitter unit.

10) Configuration Protection: Programmable parameters shall be protected using E2PROM. Battery backup protection is not acceptable.

c. Physical

1) Transmitter shall be suitable for surface or pipe stand mounting.

2) Enclosure shall be NEMA 4X (IP65).

3) Unit shall be designed for 120 VAC, 60 Hz power.

d. Accessories Required

1) Hand-held programmer where required for configuration and calibration of the instrument.

e. Manufacturer(s)

1) Siemens Model HydroRanger 200;

2) Pulsar;

3) or equal.

PART 3 EXECUTION

3.1 GENERAL

A. Seller shall deliver all IFAS Treatment System Goods to the project site where and when directed to by the Buyer. These goods include all goods specified in this Section and specified in Section 11391A – IFAS Treatment System Aeration Systems, Section 11391B – IFAS Treatment System Rotary Screw Blower System, and Section 11391C – IFAS Treatment System Slow Speed Submersible Mixers.

B. Buyer shall unload and thoroughly inspect Goods upon arrival at the project site and report observed damage immediately to the Seller and Engineer in writing. Seller shall repair to as-new condition or replace damaged equipment. Any repair work shall be approved by the Engineer and performed by a factory-trained technician associated with the Seller.

C. Buyer is responsible for providing safe storage of Goods at the site, which includes, but it not limited to, protection of equipment from sunlight, precipitation, wind, flooding, and damage from construction activities. See Paragraph 1.12 for delivery and storage requirements.

D. Seller shall provide a representative to attend a minimum of two pre-installation meetings with the Buyer and Engineer to review general procedures, erection and installation instructions, and installation sequence. This shall include coordinating Control System connections with the plant's SCADA system.

E. Buyer shall install Goods in accordance with Seller's shop drawings, instructions and recommendations, as well as drawings and specifications for the Construction Contractor's Contract Drawings.

F. Buyer shall provide finish painting of Goods with a shop prime coat and touch-up painting of those areas damaged during installation.

G. Seller shall provide a representative to inspect and verify in writing that the installation of the Goods are in accordance with Seller's shop drawings, instructions and recommendations, as well as drawings and specifications for the Construction Contractor's (Buyer's) Contract Drawings. Report deviations to the Buyer and Engineer in writing. Buyer to coordinate the schedule of this inspection with the Seller so that the inspection and needed corrective actions are completed prior to Buyer proceeding with testing activities.

H. Buyer shall provide and coordinate the on-site assistance and coordination necessary for the Seller to complete the various inspections and various testing requirements specified in this Section and make adjustments, repairs, or replacements required to make the system pass all testing requirements.

I. Until such time as the installation of the Goods are complete and performance testing of the installed Goods is successfully completed, the responsibility of costs associated with operating the Goods shall be as follows:

1. Electrical Power – Buyer

2. Supplemental Alkalinity – Buyer

3. Supplemental Carbon Source – Buyer

4. Treated Effluent – Buyer

After performance testing is successfully completed, the above costs shall be borne by the Owner.

3.2 INSTALLATION (TO BE PERFORMED BY BUYER)

A. Buyer shall install the IFAS Treatment System in phases to allow for maintenance of plant operations during construction following the Preliminary Sequence of

Construction as detailed in Paragraph 1.3.C above and in accordance with Seller's design, and the equipment installation criteria specified herein.

B. Buyer shall install IFAS Treatment System Aeration Systems, Rotary Screw Blower System, and Slow-Speed Submersible Mixers in accordance with Related Sections 11391A, 11391B, and 11391C, respectively and to allow for maintenance of plant operations during construction following the Preliminary Sequence of Construction as detailed in Paragraph 1.3.C above and in accordance with Seller's design, and the equipment installation criteria specified herein.

C. Media Retention Screens Assemblies and Supports

1. Grout all support baseplates as required to provide a level mounting surface.

D. IFAS Media

1. Placement of the IFAS Media into the respective IFAS Aeration Zones shall take place once the following conditions are met:

a. installation of all other tank equipment is complete, including IFAS Media Retention Screens,

b. all equipment has successfully passed start-up testing requirements specified herein,

c. the Zimpro PACT-WAR process has been offline for the minimum period required in Paragraph 1.3 and Seller certifies that remaining impacts from the PACT-WAR System will not invalidate the IFAS Treatment System performance guarantee

d. approval is received from the Engineer

2. IFAS Media shall only be installed in one treatment train until successful completion of the Performance Testing requirements or Engineer's approval.

3.3 SELLER'S FIELD SERVICES AND PERFORMANCE TESTING

A. Installation, Commissioning, and Startup

1. Services of a Seller's representative who is experienced in the installation, adjustment, and operation of the specified equipment shall be provided.

2. Services of a Seller's representative shall be provided as necessary to inspect the installation, and to supervise the commissioning and startup of the IFAS Treatment System, but this shall be no less than fifteen (15) days over up to five separate trips. Days shall be 8-hours on-site and be exclusive of travel time.

B. Training

1. Training shall be scheduled after copies of operation and maintenance manuals specified in Section 01770 have been delivered and be scheduled at least 10 days in advance with the Buyer.

2. Provide a minimum of 40 hours of training consisting of five sessions, each session being eight hours long. Each session must be on separate days, and sessions shall not be on consecutive days.

3. At least two training sessions on the IFAS Treatment System shall occur prior to the conversion of the aeration tanks from the parallel train, nitrification removal mode into the IFAS Treatment System, BNR mode configuration. One training session shall occur after the BNR mode conversion is complete and shall focus on step feed mode operations, seasonal variations in the process configuration, and the Ammonia Based D.O. Setpoint Controller.

4. A training outline shall be submitted to the Engineer for approval prior to scheduling the training session including the credentials of the training staff.

   a. Training agenda shall include operations, maintenance, and recommended process control strategies for each mode of operation, including but not limited to the following modes of Operation:

      1) Maintenance of Plant Operations During Construction

      2) BNR Mode – 5-stage configuration

      3) Winter Operations - (No Phosphorus Removal)

      4) Summer Operation - (Enhanced Biological Removal)

      5) High Flow - (Step Feed Mode)

   b. Operating Strategies shall include, but not be limited to:

      1) Setting RAS Flow Rates

      2) Setting WAS Flow Rates and Daily Wasting Targets

      3) Managing MLSS inventory and Aerobic Suspended Growth solids residence times

      4) Alkalinity Addition (if necessary)

      5) Supplemental Carbon Addition (if necessary)

      6) Process Optimization Strategies

   c. Additional Training Topics shall include, but not be limited to:

      1) Theory of Operation

      2) Mechanical Maintenance

      3) Instrumentation and Electrical Maintenance

      4) Troubleshooting

5. At a minimum training shall consist of combined classroom and hands-on instruction with separate sessions for operations training and maintenance training

C. Performance Testing

1. Provide services required to complete the testing as described herein.

D. The actual number of days on site shall be increased above the minimum specified as necessary, without additional cost to the Buyer, as necessary to comply with this specification.

E. Seller's field services listed herein are in addition to the field services required for the equipment furnished by Seller and are specified in the Related Sections 11391A, 11391B, and 11391C. IFAS Treatment System Seller responsible for coordinating field services required per these Related Sections.

3.4 COMMISSIONING REQUIREMENTS

A. Commissioning Team: The commissioning team shall consist of the Engineer, Buyer and Seller personnel capable of testing and adjusting electrical, mechanical, instrumentation, and controls equipment and systems.

B. The startup testing and Performance Tests shall be aborted if any system deficiency prevents the successful completion of the test. Pre-commissioning check, and commissioning shall be aborted if a required commissioning team member is not present for the test.

C. Seller shall coordinate scheduling of the Start-up and Commissioning of the IFAS Treatment System with Buyer in accordance with the Sequence of Construction as specified in Paragraph 1.3.C above. This includes inspection, start-up testing, and commissioning of the Goods following installation within each Tank but prior to putting Tank back into service.

D. In addition, Seller shall coordinate start-up and commissioning requirements of equipment furnished by Seller in accordance with the requirements specified in the Related Sections: 11391A, 11391B, and 11391C.

E. Pre-Commissioning

1. Test and verify the installation of the IFAS Treatment System equipment and ancillary systems prior to startup, using plant water for all tests requiring fluids. Correct deficiencies discovered during these checks and re-test until commissioning is complete. Pre-commissioning testing for various pieces of equipment furnished by the IFAS Treatment System shall occur based on the preliminary schedule below:

a. ITSMCP: completed prior to installation of equipment controlled and monitored by the ITSMCP.

b. Equipment related to each individual aeration tank, including but not limited to air flow control valves, air flow meters, process instrumentation, and equipment provided in Related Sections, shall be completed during following conversion of each individual Aeration Tank, taken offline for modification one at a time, and prior to bringing each tank back online.

c. IMLR pumps and piping: complete prior to conversion of Aeration Tanks into IFAS Treatment System BNR Mode.

d. IFAS Screens and IFAS Media: complete prior to Hydraulic Testing and Biomass Acclimation Period.

2. The pre-commissioning tests shall include, but not necessarily be limited to:

a. As-built documents: verify that treatment process piping, valves and equipment are consistent with the design.

b. General: Inspect the installed Goods for proper alignment, correct operation, proper connection, and satisfactory function of all components, including ground fault circuit interrupters and a safety inspection of wet cable connectors. Approve the installation and provide a written certification that the system components have been installed correctly and are ready for operation.

c. Inspect equipment and systems provided by others but still required for the proper operation of the IFAS Treatment System, including but not limited to, IMLR pumps and piping, alkalinity and supplemental chemical feed systems, and provide certification that these systems are in accordance with the Seller's requirements and that the use of these systems will not void Seller's performance guarantee.

d. Certify that media retention screens are installed properly to achieve the required performance criteria for mitigating media migration.

e. Instruments: Calibrate field instruments that are not factory-calibrated. Check the calibration of all instruments using process conditions where possible, or simulated conditions where operating the process would be impractical.

f. Control System: Confirm electrical continuity between field instruments, equipment, and control system and confirm inputs and outputs are correctly wired. Coordination with the Buyer and provide loop test sheets to document that each physical signal in accordance with the P&IDs and Electrical Drawings has been correctly landed and each control loop is tested as being programmed in accordance with the requirements herein.

g. SCADA Coordination: Prove the Ethernet interface with monitoring and control functions between the ITSMCP and the plant control system. Coordinate with the Plant Control System Programmer (PCSP) during the interface test.

h. Electrical: Buyer to verify continuity in accordance with Division 16 – Electrical of the Buyer's Construction Contract.

F. Commissioning:

1. Demonstrate that the system and related control system operate in accordance with the specifications, including all operating, monitoring, and shutdown functions and remote "call in" alarm functionality is operable.

2. If, in the opinion of the Engineer, the commissioning tests do not meet the requirements specified herein, performance testing will not begin until the

Seller has made such adjustments, changes, and/or additions as necessary to correct the equipment that they furnished, and demonstrated this by a satisfactory commissioning test as specified above.

3. If, in the opinion of the Engineer and the Seller's representative, the system meets the requirements specified herein, the system will advance to startup testing.

G. Startup Testing – Prior to IFAS Media Addition:

1. The startup testing shall be aborted if any system deficiency prevents the successful completion of the test.

2. Startup the IFAS Treatment System shall occur directly following the successful conversion of the IFAS Treatment System into its four or five stage BNR mode configuration. Startup testing shall also follow completion of the pre-commissioning and commissioning tests, and after the construction phasing conditions are met as specified in Paragraph 1.3.C.

3. The Startup Testing period shall last a minimum of five days for each Process Treatment Train and the Startup Testing period shall end only after the tests listed below have been completed for each train followed by three consecutive days of alarm-free operation.

4. During the Startup Testing period, the Seller's representatives shall test all Goods furnished by the Seller as well as certify that equipment provided by others, but necessary to operate the complete IFAS Treatment System, are fully acceptable and will in no way void the Process Performance Guarantee. The Seller shall be responsible for all process tests and operational adjustments during the Startup Testing period. During Startup Testing, the following tests shall be performed:

a. Confirm alarms are initiated by alarm conditions, are annunciated correctly, and terminated in accordance with the design requirements.

b. Test process control loops to confirm correct response of process equipment to changing conditions, including control systems specified in the Related Sections 11391A, 11931B, and 11391C.

c. Test safety features

d. Test manual operations.

e. Test setpoint adjustments.

H. Hydraulic Performance Testing – After IFAS Media Addition

1. After adding IFAS Media and installing the IFAS Media Retention Screens within one treatment train, demonstrate that the system can pass half of the maximum design hydraulic capacity (including future peak hourly flow rate, RAS flow rate, and IMLR flow rate) as specified on the Bid Form.

a. Half of the Maximum Total Flow Rate for test can be achieved by increasing the IMLR and RAS flow rates and/or temporary bypass pumping across the IFAS Treatment System provided by Buyer.

b. Test duration shall be a minimum of one (1) hour and be conducted no sooner than one month after the IFAS Media has been added.

c. Given the consequences of failure of this test, especially with regard to media migration, Seller, Buyer, and Engineer shall be present during test to monitor IFAS Treatment System for signs of excessive media migration that may lead to failure of the System and take appropriate action to alleviate such situations in accordance with emergency protocol to be developed among all Parties.

2. Hydraulic testing shall be deemed successful if the System meets the guaranteed headloss through the oxic zone containing IFAS Media provided by the IFAS Treatment System Seller on the Bid Form without any equipment failures.

3.5 BIOMASS ACCLIMATION PERIOD

A. Once all Start-up and Commissioning requirements are achieved, and satisfactory to the Engineer and Owner, continue to operate the IFAS Treatment System in the BNR Mode through one treatment train for sufficient time for biomass growth on the IFAS Media and Biomass to acclimate to the influent wastewater conditions. At a minimum, acclimation period shall last for duration as specified in Performance Requirements (Paragraph 1.3.C)

B. During acclimation period, Owner shall be responsible for plant operations, including costs for operations and maintenance, given that Seller has completed the Training requirement. Seller to provide troubleshooting assistance to Buyer during acclimation period, as needed.

C. Seller to provide certification that biofilms once, in the Seller's opinion, the biofilms are sufficiently built up to achieve the design performance criteria.

3.6 PROCESS PERFORMANCE TESTING

A. Submit proposed Process Performance Test Procedures which at a minimum shall address the following:

1. Seller's representative schedule to be on-site during performance test.

2. A sampling plan to verify the primary effluent fractionation. Based on the results of the sampling plan, provide recommended plan for operating one treatment train during performance to match influent criteria loading to the extent possible without chemical addition. Seller may take supplemental primary effluent samples at any point following the decommissioning of the Zimpro PACT-WAR system, at their own cost, to verify primary effluent composition.

3. Seller's recommended sampling plan to verify performance criteria.

B. Process Performance Testing shall include Effluent Quality Testing (per Paragraph 3.6.F) and Operation & Maintenance Guarantee Testing conducted at the same time. A Seller's representative shall supervise the performance testing, analyze data, and certify the system's performance during the testing. Tests shall be documented during continuous operation of the system, and the Seller shall submit to the Engineer a

complete report containing all data, calculations, lab report sheets, and a description of the performance testing procedures and results for review.

C. The guaranteed effluent quality shall only be considered to be achieved when both the Effluent Quality Test and Operation & Maintenance Guarantee Testing demonstrate that the system meets the performance requirements of this specification.

D. Performance test shall be initiated after successful completion of the start-up testing and receipt of certification from Seller that acclimation of the biofilm is sufficient.

E. The Buyer shall furnish all power, facilities, labor, materials, supplies, and test instruments required to conduct the performance test.

F. Performance test shall include the following:

1. The performance test shall run for a minimum of 90 days, during which at least 30 of the 90 days shall incorporate the design minimum wastewater temperature specified herein (if conditions so enable).

2. During the performance testing period, the system influent flow and loads are anticipated to be equivalent to future design maximum month conditions as specified herein if only one treatment train (and three of the five clarifiers) are operated. Given the actual plant flows and loads at the time of the performance test, the following strategies shall be used to achieve or come close to the design IFAS Treatment System influent conditions as specified in the Process Performance Guarantee for performance testing:

   a. Performance testing shall be performed with only one treatment train online.

   b. If the actual influent loading is less than 50% of the future design maximum month load conditions, the performance test can be conducted on a single treatment train and the other taken out of service temporarily.

   c. The second, out of service treatment train would be used only in the event of a high flow event where the secondary influent that exceeds the future design peak instantaneous flow rate.

   d. The use of supplemental chemicals to artificially raise the influent loadings shall not be considered.

   e. In the case that influent loads to one treatment train are less than 25% of the targeted future design maximum month loading, Seller shall determine MLSS concentration and/or percent of IFAS Media fill which represents an equivalent aerobic SRT, given the available influent load, to the future maximum month design conditions. Seller shall provide calculations to Engineer for approval prior to operating under this mode.

   f. If the actual influent loading is greater than 50% of the future design maximum month load conditions, then the second treatment train shall be used to treat the proportion of the flow and loads that are in exceedance of the future design maximum month load of one train. An adjustable flow split is available at the entrance of Tanks 1 and 2, to serve this purpose.

g. Other performance testing alternatives may be submitted for consideration and Engineer's approval.

3. During the performance testing period, the system mixed liquor suspended solids (MLSS) concentration within the tested treatment train shall not exceed10 percent of the maximum-allowable value specified herein.

4. Throughout the Process Performance Test, samples of the primary effluent and secondary clarifier effluent will be collected to verify the performance requirements. At a minimum, the sampling program shall consist of the following:

   a. When composite samples are required, collect and analyze composite samples from the primary effluent and secondary clarifier effluent. Seller shall provide refrigerated composite samplers with time based sampling, where needed.

   b. When grab samples are required, collect and analyze grab samples from the primary effluent and secondary clarifier effluent. At the time when the samples are collected, log the time, pH, chemical dose rates, polymer dose rates, and effluent flow rates.

   c. The Owner samples and analyzes in-house the following parameters at the given frequency at the primary effluent as part of their standard operating procedure:

      1) 24-hour Composite Samples:

         a) Total Suspended Solids (mg/L) – three times per week

         b) BOD, 5-day (mg/L) – three times per week

         c) Ammonia – Nitrogen (mg/L as N) – once per week

         d) TKN (mg/L as N) – once per week

         e) Nitrate and Nitrite (mg/L as N) – once per week

         f) Total Nitrogen (mg/L as N) – once per week

         g) Total Phosphorus (mg/L as P) – once per week

         h) Ortho Phosphorus (mg/L as P) – once per week

      2) Grab Samples

         a) pH – daily (work days)

         b) Alkalinity (mg/L as CaCO3) – monthly

      3) Daily Total Influent Flow

      4) This sampling data will be provided to Seller, upon request throughout the Process Performance Test at no additional cost to the Seller.

   d. Seller is responsible for establishing a sampling point and providing a suitable composite sampler to collect secondary clarifier effluent from

the IFAS Treatment System. At a minimum, Owner will collect samples at the same frequency as listed above for the primary effluent location and analyze samples for the same parameters as the primary effluent.

e. If the routine sampling performed by the WPCF staff is not sufficient for Seller to verify performance guarantee, additional data is needed for process control, or the Seller wishes to split samples, Seller may perform any sampling, at Seller's own cost. Supplemental sampling shall meet the follow requirements:

1) All laboratory analyses necessary to complete the performance testing shall be conducted by an independent, third-party laboratory approved by the Owner and certified by the State of Connecticut in accordance with "Standard Methods for the Examination of Water and Wastewater," latest edition, and paid for by the Seller.

2) Results of the analyses shall be made available to the Engineer and Buyer for inspection in a log sheet and provided as a submittal upon completion of the performance testing.

3) Suggested additional analytical tests for verifying the process performance guarantee include:

a) Soluble (filterable through a 0.45 micron filter) BOD (mg/L)

b) Soluble TKN (mg/L)

c) Aerobic SRT (days)

d) Gross Yield (lb TSS wasted / lb of BOD removed)

4) Seller shall coordinate the collection of any supplemental samples with Owner. Furthermore, Seller may elect to request Owner to collect requested samples and send them out to a third-party laboratory for analysis; however, Seller shall be responsible for laboratory analysis fees.

G. Operation & Maintenance Guarantee

1. Throughout the Process Performance Test, the Operation and Maintenance parameters guaranteed in the Sellers Bid (including those for supplemental carbon dose rate, if necessary) shall be measured, recorded, and to the extent possible, maintained below the guaranteed level.

2. Chemical (alkalinity and supplemental carbon, if necessary) consumption shall be measured and reported for each Routine Testing day based on the drop in storage tank levels or by other means as approved by the Engineer.

3. Totalized RAS, WAS, and IMLR pumped flows will be recorded from the WPCF SCADA on a daily basis during the performance test.

4. Dry pounds of WAS wasted from the IFAS Treatment System will be measured as a weekly average in dry pounds per day.

5. In addition to the above data, Seller to provide supporting evidence that demonstrates that they are in compliance with the O&M Guarantees as indicated on the Bid Form despite variations in primary effluent flow and loads.

H. Criteria for Completion of Process Performance Testing

1. The Process Performance Tests will be considered to be successful if Effluent Quality Testing following the IFAS Treatment System complies with the performance requirements specified herein when operated in a manner consistent with the Seller's Operational & Maintenance Guarantee and when Influent Criteria are as close to the Future Design Maximum Month Conditions as feasible following the requirements specified herein.

2. Upon completion of the performance test, submit a total of five copies of a test report to the Owner and Engineer. The report shall include an operational data summary including influent loading, operational parameters and effluent performance during the test period, comparing these with the performance requirements specified herein.

3. If, in the opinion of the Engineer, the system meets the performance requirements specified herein, the Engineer will recommend, by letter, the official acceptance of the performance test and partial substantial completion of the system at the time the successful testing period was initiated. If, in the opinion of the Engineer, the performance test results do not meet the requirements specified herein, the Engineer will notify the Seller and the Buyer in writing of the unacceptable performance and amounts of payment due to Seller upon successful completion of the performance test will be withheld until the system is corrected and retesting has been completed.

I. Criteria for Resolving Unacceptable Performance Testing (Effluent Quality Testing)

1. If the Seller demonstrates to the satisfaction of the Engineer that the Performance Test is unsuccessful due to a failure in the IMLR pumps or other equipment not provided by the Seller, then the data associated with those failures may be excluded from the evaluation.

2. In the case of unacceptable performance, the Seller shall note this in the test report. Seller shall determine the reason(s) for the noncompliance and shall propose any supplemental testing, equipment adjustment, changes or additions and to request an additional retest of the unacceptable system. Seller shall have 60 calendar days in which to perform operational modifications to the IFAS Treatment System, at the Seller's sole expense.

3. After making adjustments, Seller shall repeat the Effluent Quality Testing at no additional cost. Up to three attempts will be permitted. The entire test shall be repeated unless Engineer approved a shorter test based on suitable documentation provided by the Seller demonstrating cause for a shorter test duration.

4. Should the System fail to meet the required operating conditions after the necessary corrective measures are implemented, then the Seller's shall comply with the requirements specified in the Seller's Performance Guarantee in Paragraph 1.4 of this Section.

3.7 TWO-YEAR TECHNICAL AND OPERATIONAL SUPPORT

A. The Seller shall provide continuing technical and operational support as specified in Paragraph 1.11 of this Section.

END OF SECTION

SECTION 11391A

IFAS TREATMENT SYSTEM AERATION SYSTEMS

PART 1 GENERAL

1.1 SUMMARY

A. Section Includes

1. Coarse Bubble Diffuser Aeration Systems
2. Fine Bubble Diffuser Aeration Systems

B. General

1. This Section is intended to give a general description of what is required, but does not cover all details which will vary in accordance with the requirements of the equipment furnished. It is intended to cover the furnishing and testing of everything required for a complete, efficient aeration systems. All necessary accessory equipment shall be furnished, whether specifically mentioned in this Section or not, as required for a proper installation of a complete system.
2. With the exception of any coarse or fine bubble aeration system routinely manufactured by or for the IFAS Treatment System Seller all the equipment specified under this Section shall be furnished by a single aeration system manufacturer (the aeration system manufacturer) fully experienced, reputable, and qualified in the manufacture of the equipment specified.

1.2 RELATED SECTIONS

A. 01330 – Submittal Procedures

B. 11000 – Equipment General

C. 11391 – IFAS Treatment System

D. 11393B – IFAS Treatment System Blowers

E. 11391C – IFAS Treatment System Mixers

1.3 REFERENCES

A. ASCE 2-91 Measurement Of Oxygen Transfer In Clean Water, 1992 or latest edition.

B. ASTM A240 - Standard Specification for Chromium and Chromium-Nickel Stainless Steel Plate, Sheet, and Strip for Pressure Vessels and for General Applications.

C. ASTM A276 - Standard Specification for Stainless Steel Bars and Shapes.

D. ASTM A380 - Practice for Cleaning and Descaling Stainless Steel Parts, Equipment, and Systems.

E. ASTM A554 - Standard Specification for Welded Stainless Steel Mechanical Tubing.

F. ASTM A774 - Standard Specification for As-Welded Wrought Austenitic Stainless Steel Fittings for General Corrosive Service at Low and Moderate Temperatures.

G. ASTM A778 - Standard Specification for Welded, Unannealed Austenitic Stainless Steel Tubular Products.

H. ASTM D395 - Standard Test Methods for Rubber Property—Compression Set

I. ASTM D412 - Test Methods for Vulcanized Rubber and Thermoplastic Rubbers and Thermoplastic Elastomers - Tension.

J. ASTM D573 - Test Methods for Rubber - Deterioration in an Air Oven.

K. ASTM D1171 - Test Method for Rubber Deterioration - Surface Ozone Cracking Outdoors or Chamber (Triangular Specimens).

L. ASTM D1784 - Specification for Rigid Poly (Vinyl Chloride) (PVC) Compounds and Chlorinated Poly (Vinyl Chloride) (CPVC) Compounds.

M. ASTM D1785 - Specification for Poly (Vinyl Chloride) (PVC) Plastic Pipe, Schedules 40, 80 and 120.

N. ASTM D2240 - Test Methods for Rubber Property - Durometer Hardness.

O. ASTM D2466 - Specification for Poly (Vinyl Chloride) (PVC) Plastic Pipe Fittings, Schedule 40.

P. ASTM D3034 - Specification for Type PSM Poly (Vinyl Chloride) (PVC) Sewer Pipe and Fittings.

Q. ASTM D3915 - Specification for Poly (Vinyl Chloride) (PVC) and Related Plastic Pipe and Fitting Compounds for Pressure Applications.

1.4 SUBMITTALS

A. Provide submittals in accordance with the requirements of Section 01330.

B. All Systems

1. Aeration piping schematic detailing fabrication, erection and adjoining of equipment interfaces for the equipment furnished under this Section. Provide aeration piping schematic including but not limited to the following details:

a. Layout of the location of each drop pipe connection point to the main air supply header.

b. Piping, fixed joints, guide joints, expansion joints, piping supports, pipe taps.

c. Valves, diffusers, and other ancillary appearances

2. Literature and drawings describing in sufficient detail, including parts list and materials of construction, to indicate full conformance with the specifications including but not limited to the following:

a. Plan, elevations and cross sections of the equipment.

b. Component details of the aeration equipment showing diffusers, diffuser holders, gaskets, retainer rings, supports, threaded union and/or flanged joints and purge systems.

c. Piping, fixed joints, guide joints, expansion joints, piping supports, pipe taps.

d. Anchoring system for manifolds and distribution laterals for the aeration system.

e. The weights of the equipment including the weight of the largest item or component.

3. Dimensional drawings of each item of equipment and auxiliary apparatus to be furnished.

4. Complete bill of materials for all equipment.

5. Design Conditions

a. Headloss calculations for the equipment from the top of each drop pipe to the farthest bubble release point.

b. Provide minimum, design, and peak process air required and of air required for mixing.

1) Provide complete oxygen transfer calculations based on performance specified in the IFAS Treatment System Aeration System Schedules.

2) Provide complete mixing energy calculations based on performance specified in the IFAS Treatment System Aeration System Schedules.

6. Standard operating procedure describing the recommended cleaning method after installation prior to operation and startup.

7. Operation and Maintenance Manuals

a. Provide Operation and Maintenance Manuals and Equipment Start-up Reports in accordance with Sections 01330 and 01700.

b. Provide installation, operation, and start-up procedures, operating and maintenance instructions, list of spare parts, and lubrication requirements. Include blower manufacturer's recommendation of summer and winter grades of lubricants and alternative manufacturers of oil, complete with their reference numbers.

c. Provide bill of materials for all equipment with the O&M manual.

d. Provide name, address, and telephone number of the nearest competent service representative who can furnish parts and technical service.

e. Provide descriptive literature, including illustrations, covering the operational features of the equipment, specific for the particular installation, with all inapplicable information omitted or marked out.

f. Provide operating, maintenance, and troubleshooting information.

g. Provide assembly drawings for the electric motors, as well as bearing data including replacement sizes, and lubrication instructions.

h. Provide complete connection, interconnecting, and assembly diagrams.

i. Provide copies of approved Shop Drawings.

j. List of recommended spare parts with current pricing.

k. Certified copies of the results of all tests required in this Section.

8. Aeration System Manufacturer's Certification (where aeration system is installed in tanks that include mechanical mixers)

a. Aeration System Manufacturer's certification that the aeration system has been designed for use in the aeration tanks containing mechanical mixers. The certification shall indicate that the aeration system has been designed to withstand the forces presented by the mixers to be included in the aerated zones. The Certification shall include references to and copies of correspondence with the Mixer Manufacturer that contains the mixer design criteria including mixer horsepower, tip speed, flow velocities and other applicable design criteria associated with mechanical mixing located within the aerated zones.

b. Aeration System Manufacturer's certification that all factory welding has been performed in accordance with ASTM standards.

C. Coarse Bubble Aeration Systems

a. Aeration System Manufacturer's certification that the coarse bubble aeration system has been designed for use in the aeration tanks containing IFAS media to the maximum allowable fill.

b. Coarse bubble aeration system shall be designed to withstand the full weight of IFAS media at maximum allowable fill in addition to the weight of associated biological solids.

c. The Certification shall include references to and copies of correspondence with the IFAS media supplier containing the estimated weights, bearing pressure, and other applicable design criteria associated with the IFAS media to be located within the IFAS zones.

D. Fine Bubble Aeration Systems

1. Oxygen Transfer Performance Curve(s)

a. Certified oxygen transfer performance curves to demonstrate capability of the fine bubble aeration equipment proposed in the design and performance specified in the IFAS Treatment System Aeration System Schedules. Factory oxygen transfer testing is acceptable.

b. Plot of standard condition pounds of oxygen transferred per day per 1000 cubic feet of tank volume versus standard condition cubic feet of air per minute per 1000 cubic feet of tank volume. (lbs-O_2/day/1000 cubic feet-tank) vs. (SCFM/1000 cubic feet-tank)

1) Standard conditions of oxygen transfer are defined as 68°F, 1 atmosphere ambient pressure, clean water with 0 ppm DO.

2) Standard air is defined as 68°F, 1 atmosphere, 36% R.H., containing 23% oxygen by weight.

c. Disc diffuser typical Standard Oxygen Transfer Efficiency (SOTE) curve. Plot of SOTE (%) vs. Airflow Rate (SCFM/diffuser)

d. Submit fine bubble aeration optimization plot.

1) Plot of Standard oxygen transfer efficiency (SOTE) versus number of diffusers per aeration zone. (%) vs. (#)

2) Plot of Airflow per tank versus number of diffusers per aeration zone. (scfm) vs (#)

e. Base oxygen transfer curves on previously conducted oxygen transfer performance test reports

f. Stamp all curves by a Professional Engineer. Engineer shall be registered in the state of the project or the state where the aeration system is manufactured.

E. Testing

1. Certification documenting that the specified oxygen transfer efficiency is not affected by the IFAS media and is appropriate for the suspended biological solids content.

1.5 QUALITY ASSURANCE

A. The Aeration System Manufacturer(s) shall have a minimum of five-years experience in the design, manufacturing, supplying and commissioning aeration equipment of the type specified. The equipment quoted shall be of a proven design and shall be referenced by at least five installations of similar size and type, all having been in successful operation for a period of not less than one year. Experience shall demonstrate successful performance with the diffusers specified. Dome type, tubular type, ceramic type and porous plastic type fine bubble diffuser experience will not be considered nor allowed.

1.6 WARRANTY

A. Aeration System Manufacturer shall provide a warranty for its usual and customary warrantee period, but in no case shall these requirements be less stringent than as required in Section 11391 Paragraph 1.7. The warranty shall stipulate that the equipment furnished is suitable for the purpose intended and free from defects of material and workmanship for the duration of the warranty. In the event the equipment fails to perform as specified, the Contractor shall promptly repair or replace the defective equipment without additional cost to the Owner. This warranty shall include all system components including membrane diffusers.

1.7 SPARE PARTS

A. Provide the following spare parts for Coarse Bubble Aeration Systems:

1. Air diffuser piping gaskets: 5 percent of the total provided

2. Nuts/Bolts/U-Bolts for Installation: 5 percent of the total provided.

3. Provide one set of special tools that are required for normal operation and maintenance. Tools shall be packaged in a steel case, clearly and indelibly marked on the exterior to indicate equipment for which tools are intended.

4. Sufficient material to repair 5 percent of all expansion joints supplied under this Contract.

B. Provide the following spare parts for Fine Bubble Aeration Systems:

1. Fine bubble diffusers and ancillary equipment equal to one eighth the number of diffusers. This shall include diffusers, gaskets, replaceable air flow control orifices, and all required bolts, hold-down rings, nuts and gaskets.

2. Four percent of pipe supports, including required nuts and bolts, furnished. Spare lateral distribution piping supplied shall include two complete laterals with diffuser holders for the minimum spacing of diffusers supplied.

3. Sufficient orifice plugs for the blanks provided and a minimum of one eighth the number of diffuser assemblies installed.

4. Four repair couplings of each size of manifolds and laterals supplied.

C. Spare parts shall be furnished packed in suitable containers and clearly labeled designating the contents and the unit for which they are intended.

D. Furnish all special tools required for the operation and maintenance of the equipment.

E. Lubricants - Prior to testing and acceptance, furnish a one year's supply of all lubricants recommended by the Aeration System Manufacturers of each component of the equipment furnished and installed.

PART 2 PRODUCTS

2.1 MANUFACTURERS

A. ITT Flygt/Sanitaire

B. EDI

C. Or equal

2.2 GENERAL

A. Design each aeration system specified in this Section to convey the air under pressure to each of the aeration zones as necessary to provide both suitable mixing for the process (keep all biological solids and IFAS media, if present, in suspension) and transfer of oxygen into the specified media being aerated in accordance with the requirements stated in the schedules at the end of this Section. In zones containing IFAS media, design the coarse bubble aeration system to provide sufficient agitation of the carrier elements against the IFAS media retention screens and to keep biofouling-related headloss to a minimum.

B. Design the aeration system to withstand the forces and flows present in the aeration zone, the characteristics of the aerated media, and the location of the site. This includes, but is not limited to, a range of biological solids (total and volatile) concentrations in the ranges specified in the schedule, IFAS media present in the zone

(if any), mechanical mixers present in the zone (if any), temperatures, and oxygen present in the atmosphere and anticipated oxygen saturation.

C. The limit of the scope of supply for all aeration systems is the plate flange connection at the top of the stainless steel drop pipe located 3-ft above the water surface elevation at each aeration zone.

2.3 STAINLESS STEEL

A. Unless otherwise indicated, welded parts and assemblies specified as stainless steel shall be fabricated from sheets and plates of 304L stainless steel with a 2D finish conforming to ASTM A240. Non-welded parts and flanges shall be made from sheets, plates or bars of 304 stainless steel conforming to ASTM A240 or ASTM A276.

B. All nuts, bolts and washers, including anchor bolts shall be furnished in Type 316 series stainless steel.

C. Welding on this equipment shall be completed in the factory. Field welding shall not be permitted. All welding shall be by the MIG, TIG or plasma-arc welding inert gas methods. Filler wire shall be added to all welds to provide for a cross section of weld metal equal to, or greater than, the parent metal. Butt welds shall have full penetration to the interior surface and gas shielding shall be provided to the interior and exterior of the joint.

D. Interior weld beads shall be smooth, evenly distributed, with an interior projection not exceeding 1/16-in beyond the I.D. of the pipe or fittings.

E. Both sides of face rings and flanges shall be weld continuously to eliminate potential for crevice corrosion.

F. Pre-cleaning

1. After all fabrication and welding is complete, components shall be precleaned by a solvent cleaning process.

2. Solvent cleaning shall be used to remove contaminants from metal surfaces by spraying or swabbing with common organic solvents such as the aliphatic petroleums, chlorinated hydrocarbons, or blends of these two classes of solvents.

3. Solvent cleaning shall be performed at or slightly above room temperature.

G. Descaling

1. All stainless steel mill products used in this fabrication shall be supplied in the descaled condition. Any localized scale/heat tint resulting from welding shall be removed utilizing methods from ASTM A-380-06

2. Mechanical descaling methods include abrasive blasting, power brushing, sanding, grinding, and chipping.

3. Surfaces to be descaled may have to be pre-cleaned. Particular care must be taken to avoid damage by mechanical methods when descaling thin sections, polished surfaces, and close-tolerance parts. After mechanical descaling, surfaces should be cleaned by scrubbing with hot water and fiber brushes, followed by rinsing with clean, hot water.

4. Grinding wheels and sanding materials should not contain iron, iron oxide, zinc or other undesirable materials that may cause contamination of the metal surface. Grinding wheels, sanding materials and wire brushes previously used on other metals should not be used on stainless steel. Wire brushes should be of a stainless steel which is equal in corrosion resistance to the material being worked on.

H. Passivation

1. All welded parts shall be acid passivated after pre-cleaning and descaling.

2. Passivation will be carried out per ASTM A-967-05, paragraph 7.1.1.3 for smaller fittings and weldments and paragraph 7.1.1-4 for larger weldments which will be spray coated with acid.

3. Acid solution will be min. 10% by weight and contain a surfactant to enhance wetting and prevent spotting in the rinse stage.

I. Rinse

1. Immediately after removal from the passivating solution, the parts shall be rinsed using spray wash utilizing a rinse water with a maximum total solids content of 200 ppm and a maximum total chloride content of 50 ppm.

2. After passivation and rinsing, all parts shall be inspected per ASTM A-380-06

J. During manufacture, fabrication and handling, extreme care is taken to avoid contact with any ferrous or other harmful materials. All saws, drills, files, wire brushes, etc., shall be used for stainless steel piping only. Pipe storage and fabrication racks are stainless steel or clad with non-metallic strips. Only nylon slings, alloy chains and cable, or straps are to be used for handling stainless steel piping.

K. All gaskets for use with stainless steel assemblies shall be neoprene, Type A Durometer 45 to 55, tested in accordance with ASTM D2240. Gasket composition shall be suitable for air to 230 degrees F. Gasket material shall be suitable for long term immersion in wastewater.

L. Provide all stainless steel products conforming to ASTM A554 and fabrication procedures in accordance to ASTM A774 and A778.

2.4 PVC

A. Produce all PVC components from PVC compound with a minimum tensile strength of 7000 psi.

B. Provide PVC components with a minimum Schedule 40 wall for 6-inch diameter and larger and SDR 33.5 for 4-inch diameter sizes and SDR 26 for 3-inch diameter sizes. Schedule 40 material shall comply with ASTM specification D1784, D1785 and D2466. SDR 33.5 material shall comply with ASTM D3915 and D3034.

C. Design PVC components to withstand 130° F mean wall temperature.

D. Add average two parts by weight of titanium dioxide per 100 parts of resin to PVC compounds for PVC components to minimize ultraviolet light degradation.

E. Factory solvent weld all PVC joints and fittings. Field solvent welding will NOT be permitted.

2.5 COARSE BUBBLE AERATION SYSTEMS

A. General

1. Coarse Bubble Aeration Systems shall be installed in all aeration zones that include IFAS media.

2. Each coarse bubble aeration system is made up of the number of aeration zones as specified in the attached Schedule11391A-1 that includes, but is not necessarily limited to drop pipe, aeration zone headers, aeration grids, diffuser laterals with coarse bubble orifices, purge system, fittings, supports, and anchorages.

3. The coarse bubble aeration system shall be designed to provide uniform distribution of air to each lateral in a given zone and allow for a turn down of 50% of the design airflow of that zone without loss of equal distribution of air to each lateral in that zone.

4. The aeration system shall operate within the manufacturer's design range at full capacity and at lower air flow ranges required to meet minimum process air requirements or minimum mixing requirements (of 20 scfm per 1000 cubic feet of Aeration Zone Volume), whichever is less.

B. Drop Pipes

1. Provide stainless steel drop pipes to convey the air supply from the top connection (provided by others), 3 feet above water surface, to within 2 feet of the aeration zone header.

2. Drop pipes shall be provided with a flanged style 125 lb ANSI bolt pattern for top and bottom connections. Drop pipes shall be provided with band clamps to connect aeration system to the header.

3. Top flange connection gasket is not included in the Scope of Supply.

C. Aeration Zone Headers

1. Provide a stainless steel aeration zone header between the drop pipe and the aeration grids as required in each aeration zone. The aeration zone header shall be pre-assembled to the maximum extent possible, and it shall connect to the drop pipe and aeration grid with 125-lb plate flange with ANSI bolting pattern. Each aeration zone header shall be supplied with all necessary gaskets and hardware.

2. Provide stainless steel eccentric reducers for changes in diameter to level invert elevation. Aeration zone headers with 8-inch diameter and smaller shall be coupled with removable end caps and headers with 10-inch diameter and larger shall have welded end caps.

D. Aeration Grids and Diffuser Laterals

1. Provide aeration grids that are pre-assembled to the maximum extent possible. They shall consist of stainless steel aeration grid manifolds and stainless steel

diffuser laterals that are designed to be leveled to plus or minus 1/8-in. All aeration grid manifolds and diffuser laterals shall be capable of being leveled to this tolerance and remaining level under all conditions of operation whether the aeration tanks are full, partially full, or empty.

2. The diffuser laterals shall be uniformly spaced along the length of the aeration grid manifold and connect to the side centerline of the aeration grid manifold. If flanged connections are used, provide type 316 stainless steel nuts and bolts, gaskets, backing flange and other accessories.

3. Design diffuser laterals for a hydrostatic design stress rating of 2,000 psi minimum.

4. Diffuser laterals shall contain orifices suitably spaced and sized along the length of the diffuser lateral to perform the intended function while resisting fouling from rags, debris, and IFAS media.

5. Diffuser laterals and supports for use in Aeration Zones with IFAS Media shall be suitably designed for the intended purpose and constructed of 304 or 316 stainless steel. The diffusers shall be of a proven design and selected by the manufacturer. The manufacturer shall submit details and proof of the suitability and function of the diffusers in aeration tanks containing IFAS media.

    a. The design shall prevent the entry of IFAS media while allow for purging of liquid form the laterals and aeration grids.

    b. Pipe provided with all required gaskets and hardware.

E. Purge System

1. Provide the coarse bubble diffusers with an integrated system to continuously drain liquids from the submerged aeration system piping. Size piping to accommodate the level of liquids that may remain in the piping after purging.

F. Supports and Anchor Bolts

1. Design and provide all support systems for a factor of safety of 4 or greater against calculated buoyant forces when installed. Design and provide all anchor bolts for a factor of safety of 10 or greater against calculated buoyant forces when installed.

2. Supports shall be stainless steel and anchored to the tank with Type 316 stainless steel anchor bolts, selected, sized and provided under this Section Each anchorage shall be designed to withstand at least 450 pounds of withdrawal force, unless otherwise specified.

3. Provide anchorage bolts and support rods for fixed supports with a minimum diameter of 3/8 inches diameter and anchorage bolts and support rods for guide supports with a minimum diameter of 5/16 inches.

4. Drop Pipe Supports

    a. Design and provide drop pipe supports to be anchored to the concrete tank wall. Provide all interconnecting stainless steel hardware required to secure the pipe.

b. Design drop pipe supports to maintain a plumb position so that lateral loads are not imposed on the aeration zone manifold.

c. Provide supports for the entire (including upper portion) drop legs pipes.

5. Aeration Zone Manifold Supports

a. Design and provide stainless steel aeration zone manifold supports anchored to the tank floor with anchoring systems.

b. Supports shall include manifold hold down and supporting structure.

c. Supports shall be designed to resist the following uplift without exceeding 24,000 psi design stress.

Manifold Diameter (Inches)	Uplift Force Per Support Pounds
≤ 4	195
6 and 8	325
10 and 12	543

d. Provide supports with a mechanism to provide for plus or minus 2-in vertical and 1/2-in lateral adjustment for alignment of the aeration zone manifold in the field.

6. Aeration Grid Supports

a. Diffuser laterals shall include an expansion-contraction system consisting of fixed joints and guide supports or fixed supports with U-bolt guide supports.

b. Guide supports shall allow longitudinal movement for expansion-contraction of the laterals. Stainless steel supports shall be supplied and be anchored to the concrete tank floor. All interconnecting stainless steel hardware required to secure the pipe shall be provided. Field welding shall not be allowed. Supports shall:

1) Provide proper bracing and means for accurate field alignment and adjustment of piping vertically and longitudinally. Each lateral section shall have at least two supports and support spacing shall not exceed 9 feet. Sections of lateral piping shall be joined with fixed joints which prevent joint blow-apart and rotation of one pipe section with respect to another.

2) Provide for any expansion or contraction of the laterals resulting from temperature change by using guide supports. Expansion joints shall not be used for joining pipe sections. Expansion couplings shall operate at an average force of 50 lbs or greater as determined by the aeration system manufacturer.

3) Expansion or contraction system for all submerged aeration system piping shall be designed for temperature range of 130° F consisting of simple and fixed supports and expansion joints.

c. Fixed supports shall consist of a hold-down mechanism and self-limiting clamp device.

1) The stainless steel hold-down mechanism and clamp shall provide a wide contoured bearing surface for the lateral.

2) The stainless steel clamping device shall be self-limiting to prevent over-stressing the lateral if the clamp is over-tightened.

d. Intermediate guide supports shall consist of a self-limiting hold-down and sliding mechanism.

1) The hold-down and sliding mechanism shall provide a contoured bearing surface with chamfered leading edges to minimize binding of the lateral.

2) The sliding mechanism shall provide minimum resistance to movement of the lateral under full buoyant uplift load. The mechanism shall provide 1/8-in clearance around the lateral and be self-limiting if the mechanism is over-tightened.

3) A maximum horizontal thrust of 20 lbs or less shall be sufficient to initiate movement of the lateral relative to the mechanism under full buoyant uplift load.

2.6 FINE BUBBLE AERATION SYSTEM

A. GENERAL

1. Fine Bubble Aeration Systems shall be installed in all aeration zones except those that include IFAS media.

2. Each fine bubble aeration system is made up of the number of aeration zones as specified in the attached Schedule11391A-1 that includes, but is not necessarily limited to, a drop pipe, aeration zone header, aeration manifold, membrane diffuser assemblies, purge system, fittings, and related supports and anchorages.

3. Provide stainless steel drop pipes to supply air from the top connection to the aeration zone header.

a. Drop pipes shall be provided with a flanged style 125 ANSI bolt pattern for top connection. The top connection shall extend 3 feet above water surface level.

b. Provide a stainless steel gasketed band clamp coupling for connection of the lower drop pipe to the aeration zone header.

c. Top flange connection gasket is not included in the Scope of Supply.

4. Provide PVC aeration zone headers to supply air from the drop pipe to the aeration manifolds.

a. Support aeration zone header with a minimum of two stainless steel supports. Maximum spacing between supports shall not exceed 8 feet.

b. Design aeration zone header, connections and supports to resist thrust generated by expansion or contraction of the aeration manifolds.

c. Furnish aeration zone headers for long term exposure to 130°F average wall temperatures. Fabricate aeration zone headers with fixed joint connection to each aeration manifold.

5. Provide PVC aeration manifolds perpendicular to the aeration zone header.

a. Design aeration manifolds with centerline spacing not to exceed 4 feet to maximize oxygen transfer efficiency and mixing efficiency to minimize solids deposition between aeration manifolds.

b. Join sections of aeration manifolds with positive fixed threaded union or flange type joints to prevent blow apart. All underwater joints shall be positive locking type.

c. Fabricate aeration manifolds with diffuser element holders factory solvent welded to the crown of the header or by use of a mechanical saddle for complete air seal and mechanical strength. Mechanical Saddle attachment shall include air inlet port and positive locking mechanism to locate and lock the assembly to the aeration manifold. Attach membrane diffuser assemblies to the aeration manifolds to resist a dead load of 200 lbs. applied vertically to the outer most edge of the membrane diffuser assembly.

d. Provide threaded removable end caps complete with gasket, threaded coupling and end plate for clean out at the end of each aeration manifold.

6. Design aeration system with air diffuser centerline spacing not to exceed 4 feet from any adjacent diffuser, wall or obstruction to maximize oxygen transfer efficiency and to minimize solids deposition.

7. Design aeration system to within the manufacturer's design range at full capacity and at lower air flow ranges required to meet minimum process air requirements or minimum mixing requirements (of 0.12 scfm per square foot of the Aeration Zone floor space), whichever is less.

B. MEMBRANE DIFFUSER MATERIALS AND FABRICATION

1. Manufacture circular membrane diffuser discs with integral O-ring of EPDM synthetic rubber compound with precision die formed slits. Thermoplastic materials (i.e. plasticized PVC or polyurethane) are not acceptable.

2. Add carbon black to the material for resistance to ultraviolet light.

3. Design diffuser as one piece injection molded part with a minimum thickness of 0.080 inches and a 9-inch diameter. Compression molded diffuser elements are not acceptable.

4. Limit the maximum tensile strength of the diffuser to 10 psi when operating at 2.4 SCFM/ft^2 of material.

5. Produce diffusers free of tears, voids, bubbles, creases or other structural defects.

6. Furnish membrane diffuser material to meet the following:

Item	Nominal Value/Units	ASTM
Base Polymer	EPDM	D573
UV Resistance	Carbon Black	
Specific Gravity	1.25 or less	
Durometer – Shore A	58 units	D2240
Modulus of Elasticity @ 300%	500 psi	D412
Ozone Resistance 72 hrs: 40°C pphm)	No cracks @ 2X magnification	D1171 Test Method A
Tensile Strength (unperforated)	1200 psi	D412
Accl. Aging Compression Set		D395
at 22 hours @ 23°C	20%	
at 22 hours @ 70°C	40%	
Elongation - %		
Retained 70 hrs @ 100°C	75% Max	D573
At Break	350% Min	D412

7. Provide an independent test report demonstrating compliance with the specified values. The report shall include information on the following diffuser membrane characteristics which shall not vary but more than the specified amount:

   a. Durometer (+/- 5 units)

   b. Specific gravity (+/- 10% of specified value

   c. Tensile strength+/- 5% of initial value

   d. Dimensional Uniformity (effective flux ratio) of 1.00 to 1.30.

8. Furnish diffuser membranes with uniform distribution of air bubble release across the active surface of the diffuser element when submerged in water. Manufacture membrane discs with integral sealing gasket.

9. Furnish diffuser membranes to meet or exceed the following criteria:

   a. Membrane shall collapse and seal when aeration system air is turned off.

   b. Membrane shall be able to collapse onto support base when air is not being diffused.

C. MEMBRANE DIFFUSER ASSEMBLIES

1. Membrane diffuser assemblies consist of a diffuser membrane, diffuser holder, air flow control orifice and retaining device.

2. Fabricate aeration manifolds with single diffuser holders solvent welded to the crown of aeration manifold or by use of a mechanical saddle for complete air

seal and mechanical strength. Mechanical saddle attachment shall include air inlet port and positive locking mechanism to locate and lock the assembly to the aeration manifold for complete air seal and strength. Provide minimum solvent weld area of 15 square inches.

3. Design diffuser holders to resist a dead load of 200 lbs (90 kgs) applied vertically to the outer edge of the diffuser holder.

4. Incorporate an integral check valve into the membrane diffuser assemblies.

5. Furnish plugs for diffuser holder orifices that will not be operated.

6. Furnish retaining device to securely hold and seal the diffuser membrane to the diffuser holder.

   a. Design membrane diffuser assembly and retaining device to prevent air escape at the diffuser element sealing gasket interface. Make gasket integral with diffuser membrane.

   b. Provide a method to vary the applied sealing force between the sealing gasket and membrane diffuser. Sealing method or retaining device shall generate a minimum of 50 pounds per inch of circumference of the sealing gasket to provide a long term positive seal and prevent air escape except through the active area of the diffuser membrane.

   c. Provide screw on retainer rings with a positive o-ring seat and a minimum of 2½ complete threads for engagement. Threads shall have a minimum cross section of 1/8-inch.

D. Purge System

1. Provide a purge system of the type indicated on the schedule to drain liquids from the submerged aeration system piping.

   a. Manual purge system shall consist of a manually operated valve on a pipe connected to each aeration zone header complete with all pipe and fittings.

E. AERATION MANIFOLD AND AERATION ZONE HEADER CONNECTION JOINTS

1. Join aeration manifold sections with positive locking fixed threaded union or flange type joints for all submerged manifold joints to prevent blow apart and rotation.

2. Bell and spigot, slip on or expansion type joints are not acceptable for submerged joints.

3. Design threaded union joints with spigot section connected to one end of the aeration manifold, a threaded socket section connected to the aeration manifold, an O-ring gasket and a threaded screw on retainer ring. Solvent welding shall be done in the factory.

4. Fixed joints shall be designed to resist a minimum of 80 ft-lb (5.5 kg-m) torque without joint movement or failure.

5. All fixed joints shall have interlocking splines and grooves to prevent rotation of the aeration manifolds. All rotational forces shall be transferred through the interlocking splines. Joints that require the o-ring to transfer rotational forces between the splines are not acceptable. If positive locking fixed joints are not used, all aeration manifold connections shall be 125 lb flanges.

6. Design flanged joints with a 125 lb drilling angle face ring, follower flange and stainless steel hardware. Flanged joints for aeration zone header and aeration manifold shall be follower type with standard 125 lb. bolt pattern and stainless steel hardware. Aeration manifolds shall employ either a threaded union joint or adjustable flange suitable for the intended service.

F. SUPPORTS

1. Design all support systems with a factor of safety of 4 or greater against calculated buoyant forces when installed. Design all anchor bolts with a factor of safety of 10 or greater against calculated buoyant forces when installed.

2. Provide each section of aeration zone header and aeration manifold with a minimum of two (2) supports.

3. Limit maximum support spacing to 8 feet.

4. Design all supports to allow for thermal expansion and contraction forces over a temperature range of 130° F and to minimize stress build up in the piping system.

5. Design supports to be adjustable without removing the aeration manifold from the support.

6. Drop Pipe Supports

   a. Drop pipe supports shall be supplied and be anchored to the concrete tank wall. Provide interconnecting hardware required to secure the drop pipe.

   b. Support drop pipe to maintain a plumb position so that lateral loads are not imposed on the aeration manifold.

   c. Provide supports for the entire (including upper portion) of the drop legs pipes.

7. Aeration Zone Header – 6 inch diameter and larger

   a. Design supports to include hold down guide straps, support structure and anchor bolts.

   b. Design guide straps with a 2 inch minimum width to eliminate point load on manifold and minimize binding.

   c. Design support for 2 inches plus or minus vertical adjustment for leveling of manifold.

   d. Attach supports to tank floor with two stainless steel anchor bolts.

8. Aeration Zone Header and Aeration Manifold Supports – minimum 3-inch diameter.

a. Design supports with hold down straps, support structure and anchor bolt.

b. Design support for 1 1/2 inch(plus or minus) vertical adjustment for leveling aeration manifolds to plus or minus 1/4 inch.

c. Guide support

1) Guide straps to have 1 1/2 inch wide top and bottom contoured bearing surface with chamfered edges to minimize binding and resistance to movement of aeration manifolds under full buoyant uplift load.

2) Design strap with 1/8 inch clearance around aeration manifolds so strap is self-limiting and cannot be over tightened.

d. Fixed supports

1) Fixed straps to have 1-1/2 inch wide top and bottom contoured bearing surface with punched burrs to positively grip the aeration manifold when tightened.

2) Design strap to be self-limiting to prevent stressing the aeration manifold if the clamp is over tightened.

e. Attach supports to tank floor with one stainless steel anchor bolt.

G. JOINTS

1. Provide positive type connection joints of bolted flanged or threaded union type for all submerged aeration manifold and aeration zone header joints.

2. Threaded union joints shall consist of a spigot section solvent welded to one end of aeration manifold, a threaded socket section solvent welded to the mating aeration manifold, an "O" ring gasket and a threaded screw on retainer ring. Solvent welding shall be done in the factory. Flanged joints shall be of follower type with stainless steel hardware and shall have standard 125 lb. drilling. Flanged joints for subheader and manifold piping shall be follower type with standard 125 lb. bolt pattern and stainless steel hardware. Aeration manifold shall employ either a threaded union joint or adjustable flange suitable for the intended service

PART 3 EXECUTION

3.1 GENERAL

A. All work in the Part 3 Execution will be performed by the Buyer unless reference is made to the “manufacturer” in which case it shall be the responsibility of the manufacturer. If the paragraph title has “manufacturer” in it, them all items listed in the paragraph shall be the responsibility of the “manufacturer”. All equipment referenced shall be considered “Goods” and all other items of work performed by the manufacturer shall be considered “Special Services”.

B. Unload and thoroughly inspect the equipment upon arrival at the project site and report observed damage immediately to the manufacturer and to the Engineer in writing. The manufacturer shall repair to as-new condition or replace damaged equipment.

Any repair work shall be approved by the Engineer and performed by the manufacturer's factory-trained technician.

C. Install the equipment in accordance with the manufacturer's shop drawings, instructions, and recommendations, and in accordance with the contract drawings and specifications.

D. The manufacturer shall provide a representative to inspect and verify in writing that the installation of the equipment is in accordance with the manufacturer's shop drawings, instructions and recommendations. The manufacturer shall report deviations to the Contractor and to the Engineer in writing. Coordinate the schedule of this inspection with the manufacturer so that the inspection and needed corrective actions are completed prior to proceeding with testing activities.

E. Provide on-site assistance and coordination necessary for the manufacturer to complete the various inspections and various testing requirements specified in this section and make the necessary adjustments, repairs, or replacements required to make the system pass all testing requirements.

3.2 SPECIAL INSTALLATION REQUIREMENTS

A. Prior to installation of the diffusers, the air piping from the blower discharge through the main air header, drop pipe, aeration zone header, aeration manifold and laterals shall be thoroughly cleaned of oil, grease, dust, dirt and other debris using a method as recommended by the diffuser manufacturer and as approved by the Engineer.

B. Follow equipment manufacturer's recommendations for sequencing of equipment installation.

1. Layout and install supports in accordance with manufacturer's instructions and anchor setting plan.

2. Level aeration system such that all diffusers are within 1/8" of a common horizontal plane.

C. Install orifice plugs in lieu of diffusers as directed by the Engineer. Provide containers suitable for storage of un-installed diffusers.

3.3 MANUFACTURER'S FIELD SERVICES

A. Pre-Installation

1. Not Required

B. Installation, Commissioning, and Start-Up

1. Provide the services of the manufacturer's factory-trained technician, who is experienced in the installation, adjustment, and operation of the specified equipment.

2. Provide manufacturer's services as necessary to inspect the installation, and to supervise the commissioning and startup of the System, but this shall be no less than:

a. The manufacturer shall furnish six (6) trips each consisting of one (1) 8-hour days of on-site service (exclusive of travel time), for installation and start-up and begin commissioning including field quality control tests.

b. The manufacturer shall furnish six (6) trips each consisting of one (1) 8-hour days of on-site service (exclusive of travel time), to complete the commissioning including field quality control tests.

c. This is based on starting up one tank at a time in order to maintain plant operations as the tanks are converted one-by-one.

3. Manufacturer's authorized representative shall verify proper installation, electrical connections, and equipment alignment prior to start-up.

4. Commissioning each zone shall not be conducted until such time that the entire installation for each zone is complete and ready for testing and the manufacturer has certified the installation of their equipment is satisfactory and is ready for operation.

C. Training

1. Training shall be scheduled after copies of operation and maintenance manuals have been delivered. Training shall be scheduled at least 10 days in advance with the Owner.

2. The manufacturer shall provide the services of a factory-trained technician to train the Owner on the operation, calibration and maintenance of equipment supplied under this Section in accordance with the requirements of Section 11000.

3. Training shall consist of 2 hours of classroom training using the actual approved Operation and Maintenance Manual for reference, and 2 hours of hands-on training.

D. Performance Testing

1. None – Field Quality Control testing is included in Installation, Commissioning, and Start-Up

E. The actual number of days on site shall be increased above the minimum specified as necessary, without additional cost to the Owner, as necessary to comply with this specification.

3.4 COMMISSIONING REQUIREMENTS

A. Commissioning Team: The commissioning team shall consist of the Engineer, the Contractor, and the manufacturer personnel capable of testing and adjusting the equipment and systems.

B. Commissioning:

1. General: Inspect the installed equipment for proper alignment, correct operation, proper connection, and satisfactory function of all components, including ground fault circuit interrupters and a safety inspection of wet cable connectors. Approve the installation and provide a written certification that the system components have been installed correctly and are ready for operation.

2. As-built documents: verify that process piping, valves and equipment are consistent with the design.

3. Complete Field Quality Control Tests

3.5 FIELD QUALITY CONTROL TESTS

A. Mounting Tests

1. Support and tie-down provisions of the PVC piping shall be tested to ensure that they have a factor of safety of 10 against calculated buoyant forces.

2. Upon installation of the supports and prior to installation of the piping, test all of the supports of each type. Testing shall include no less than 10% of the supports of each type, chosen at random to be witness tested by the Engineer. Each support chosen for test shall be attached to a lever which shall be placed on a fulcrum. A static load shall be applied to the opposite end producing a vertical extracting force on the anchor bolt of 10 times the calculated buoyant force to which the anchor bolt will be subjected in normal operation as detailed above. A static load shall be applied in a similar manner to the entire pipe support to produce an extracting force of 4 times the calculated buoyant load.

B. Inspection of Piping

1. Inspect the piping for proper joints, supports and tie-downs, end plugs and drain relief valves.

C. Level Test

1. Flood each aeration tank with clear water to the top of the diffusers. The level of the diffusers shall then be checked to see that they are at the same elevation within 1/8”. Should it be necessary to correct the elevation of any diffuser assembly as a result of this check, take such action prior to proceeding further.

D. Uniformity and Leakage Test

1. Flood each aeration tank with clear water to a depth of one foot above the diffusers. The air supply will be turned on to air flow rates as approved by the Engineer and air supplied evenly to all headers. The surface of the water will then be visually inspected to see that air flow is uniformly distributed across the tanks and that no air leaks are present within the piping system. If in the opinion of the Engineer, there are areas of consistent low or high air quantity release, or leaks within the piping system, make all necessary adjustments to correct these deficiencies.

3.6 FINAL ACCEPTANCE

A. Upon satisfactorily completion of field quality control testing as provided hereinbefore, but prior to acceptance by the Owner. Prepare "final, as-approved" drawings for the complete system and all components furnished hereunder. Drawings shall include equipment and piping layouts and elevations, piping schematics, and all other drawings reasonably required in the opinion of the Engineer.

B. Successful completion of the installation and field quality control testing of the aeration system shall be the basis for acceptance by the Owner.

11391A – 1 – IFAS Treatment System Aeration System Aeration Zones Schedule					
Aeration Zone[1] No.	*Fine or Coarse Bubble[1]*	*Length (ft)*	*Width (ft)*	*Water Depth (ft) [1]*	*Volume (MG)*
TBD[2]	TBD[2]	TBD[2]	TBD[2]	TBD[2]	TBD[2]
TBD[2]	TBD[2]	TBD[2]	TBD[2]	TBD[2]	TBD[2]
TBD[2]	TBD[2]	TBD[2]	TBD[2]	TBD[2]	TBD[2]
TBD[2]	TBD[2]	TBD[2]	TBD[2]	TBD[2]	TBD[2]
TBD[2]	TBD[2]	TBD[2]	TBD[2]	TBD[2]	TBD[2]
TBD[2]	TBD[2]	TBD[2]	TBD[2]	TBD[2]	TBD[2]
TBD[2]	TBD[2]	TBD[2]	TBD[2]	TBD[2]	TBD[2]
TBD[2]	TBD[2]	TBD[2]	TBD[2]	TBD[2]	TBD[2]
TBD[2]	TBD[2]	TBD[2]	TBD[2]	TBD[2]	TBD[2]
TBD[2]	TBD[2]	TBD[2]	TBD[2]	TBD[2]	TBD[2]
TBD[2]	TBD[2]	TBD[2]	TBD[2]	TBD[2]	TBD[2]
TBD[2]	TBD[2]	TBD[2]	TBD[2]	TBD[2]	TBD[2]
Total					TBD[2]

Notes:

(1) Aeration Zones shall be numbers based on the treatment zone number determined by the IFAS Treatment System Bidder. Provide coarse bubble diffusers in zones containing IFAS media Only. List identical zones (from each treatment train) in the same row. Calculate water depth based on water elevation based on effluent weir height at Tanks 5 and 6.

(2) As determined by (and as indicated on the Bid Form of) the IFAS Treatment System Bidder.

11391A – 2 – IFAS Treatment System Aeration System General Design Conditions Schedule	
Parameter	*Value*
Influent Wastewater Temperature	
Minimum Month	10 °C
Annual Average	16 °C
Maximum Month	22 °C
Maximum Allowable MLSS Concentration (under normal conditions)	3,200 mg/L
Maximum Allowable MLSS Concentration	5,000 mg/L
Site Elevation	230 feet
Atmospheric Pressure	14.57 psia
Relative Humidity	
Typical	60%
Maximum	100%
Implied Oxygen percentage in Air	21%
Standard Oxygen Correction Factors	
Alpha (coarse bubble diffusers)	0.9
Alpha (fine bubble diffusers)	0.5
Beta	0.95
Theta	1.024
Atm Pressure	14.7 psia
Water Temp	20 °C
C^*_{sat20}	10.52 mg/l
C_{surfT}	9.07 g/l
Purge Systems required	
Coarse Bubble Diffuerss	As Noted
Fine Bubble Diffusers	Manual

11391A – 3 – IFAS Treatment System Aeration System Coarse Bubble Schedule [1]			
This schedule is for Aeration Zone(s)[1]		TBD[2]	
Coarse Bubble Standard Oxygen Correction (AOR/SOR) (-)		TBD[3]	
Number of Aeration Grids in Zone (#)-		TBD[2]	
Total Number of Diffuser Laterals per Aeration Grid (#)		TBD[2]	
Number of Orifices per Diffuser lateral (#)		TBD[2]	
Total Number of Operating Orifices (#)		TBD[2]	
Drop Pipe Diameter (inches)		TBD[2]	
Aeration Zone Header Diameter (inches)		TBD[2]	
Aeration Grid Manifold Diameter (inches)		TBD[2]	
Diffuser Lateral Type (with Pipe Diameter (inches) if applicable)		TBD[2]	
Orifice Density (% floor)		TBD[2]	
Minimum Air Flow Requirement for Mixing (scfm)		TBD[2]	
Actual Oxygen transfer at Min Requirement for Mixing (lbs/day)		TBD[2]	
Process Requirement for Each Zone Indicated Above	***Minimum***	***Current***	***Maximum***
Dissolved Oxygen (O2) Concentration (mg/L)	TBD[2]	TBD[2]	TBD[2]
Actual O2 Required this Zone [SOR] (lbs/day)[4]	TBD[2,3]	TBD[2,3]	TBD[2,3]
Actual O2 Required All Zones [SOR] (lbs/day) [4]	TBD[2,3]	TBD[2,3]	TBD[2,3]
% of O2 delivered in this Zone (%)[4]	TBD[2,3]	TBD[2,3]	TBD[2,3]
Standard O2 Required this Zone [SOR] (lbs/day)	TBD[3]	TBD[3]	TBD[3]
Standard O2 Transfer Efficiency [SOTE][5] (%)	TBD[3]	TBD[3]	TBD[3]
Air Flow Required for Oxygen Transfer (scfm)	TBD[3]	TBD[3]	TBD[3]
Air Flow Normalized to Zone Area (scfm/sf)	TBD[3]	TBD[3]	TBD[3]
Air Flow Normalized to Zone Volume (scfm/1000 cf)	TBD[3]	TBD[3]	TBD[3]
Total Air Flow Required for Oxygen Transfer (scfm)	TBD[3]	TBD[3]	TBD[3]
Submergence of Diffuser Orifices (ft)[6]	TBD[3]	TBD[3]	TBD[3]
Pressure at Top of Drop Pipe (psig) [6]	TBD[3]	TBD[3]	TBD[3]

Notes:

(1) Complete One Schedule per Aeration Zone or provide the requested information in a separate document on Aeration System manufactures letterhead. - Provide coarse bubble diffusers in zones containing IFAS Media Only. List identical Aeration Zones (from each treatment train) in the same Schedule. When reference is made to "this zone" it shall refer to each Aeration Zone individually. This means that the total system requirements (for air flow, oxygen transfer, etc) is the number listed in this schedule multiplied by the number of identical zones listed in the schedule.

(2) As determined by (and as indicated on the Bid Form of) the IFAS Treatment System Bidder. Base air flow capacities on the Actual Oxygen Requirements specified for the IFAS System and the IFAS Treatment System Seller's design of the aeration zone).

(3) As determined by the Aeration System Manufacturer (and as indicated on the attachment to Bid Form of) the IFAS Treatment System Bidder. Design based on Alpha, Beta, Theta and all other Standard Oxygen Correction Factors provided herein.

(4) Actual Oxygen required over all Aeration Zones in process including those with coarse and fine bubble diffusers to be distributed into individual zones to satisfy the requirements of both the Aeration System Manufacturer (as specified in this Section) and the IFAS Treatment System Bidder (design calculations based on the flows and loads specified in Section 11391). "% of O2 delivered" is the ratio of the two prior entries in the schedule.

(5) Clean water oxygen transfer efficiencies shall be measured at Standard Conditions, at the specified average diffuser submergence, and by test procedures and conditions as specified in ASCE 2-91. Standard Conditions are defined as 14.7 psia, 68 degrees F, and 36-percent relative humidity.

(6) Minimum pressure shall be based on low aeration tanks levels (Tank Depth listed in Schedule 11391A-1) and low air demand. Maximum Pressure shall be based on high aeration tank levels (Tank Depth listed in Schedule 11391A-1 plus either 8 inches of water column due to the change in the hydraulic profile at high flows in Tanks 5 and 6 or 14 inches of water column due to the change in the hydraulic profile at high flows in Tanks 3 and 4) and high air demands.

11391A – 4 – IFAS Treatment System Aeration System Fine Bubble Schedule [1]			
This schedule is for Aeration Zone(s)[1]		TBD[2]	
Fine Bubble Standard Oxygen Correction (AOR/SOR) (-)		TBD[3]	
Number of Aeration Manifolds in Zone (#)-		TBD[2]	
Total Number of Orifices/Diffuser Assemblies per manifold (#)		TBD[2]	
Total Number of Orifices/Diffusers Assemblies in Zone (#)		TBD[2]	
Total Number of Operating Orifices/Membrane Diffusers in Zone(#)		TBD[2]	
Drop Pipe Diameter (inches)		TBD[2]	
Aeration Zone Header Diameter (inches)		TBD[2]	
Aeration Manifold Diameter (inches)		TBD[2]	
Orifice/Diffuser Membrane Density (% floor)		TBD[2]	
Minimum Air Flow Requirement for Mixing (scfm)		TBD[2]	
Actual Oxygen transfer at Min Requirement for Mixing (lbs/day)		TBD[2]	
Process Requirement for Each Zone Indicated Above	***Minimum***	***Current***	***Maximum***
Dissolved Oxygen (O2) Concentration (mg/L)	TBD[2]	TBD[2]	TBD[2]
Actual O2 Required this Zone [SOR] (lbs/day)[4]	TBD[2,3]	TBD[2,3]	TBD[2,3]
Actual O2 Required All Zones [SOR] (lbs/day) [4]	TBD[2,3]	TBD[2,3]	TBD[2,3]
% of O2 delivered in this Zone (%)[4]	TBD[2,3]	TBD[2,3]	TBD[2,3]
Standard O2 Required this Zone [SOR] (lbs/day)	TBD[3]	TBD[3]	TBD[3]
Standard O2 Transfer Efficiency [SOTE][5] (%)	TBD[3]	TBD[3]	TBD[3]
Air Flow Required for Oxygen Transfer (scfm)	TBD[3]	TBD[3]	TBD[3]
Air Flow per Orifice/Diffuser (scfm)	TBD[3]	TBD[3]	TBD[3]
Air Flow Normalized to Zone Area (scfm/sf)	TBD[3]	TBD[3]	TBD[3]
Air Flow Normalized to Zone Volume (scfm/1000 cf)	TBD[3]	TBD[3]	TBD[3]
Total Air Flow Required for Oxygen Transfer (scfm)	TBD[3]	TBD[3]	TBD[3]
Submergence of Orifices (ft)[6]	TBD[3]	TBD[3]	TBD[3]
Pressure at Top of Drop Pipe (psig) [6]	TBD[3]	TBD[3]	TBD[3]

Notes:

(1) Complete One Schedule per Aeration Zone or provide the requested information in a separate document on Aeration System manufactures letterhead. - Provide coarse bubble diffusers in zones containing IFAS Media Only. List identical Aeration Zones (from each treatment train) in the same Schedule. When reference is made to "this zone" it shall refer to each Aeration Zone individually. This means that the total system requirements (for air flow, oxygen transfer, etc) is the number listed in this schedule multiplied by the number of identical zones listed in the schedule.

(2) As determined by (and as indicated on the Bid Form of) the IFAS Treatment System Bidder. (Air Flow Capacities shall be based on the Actual Oxygen Requirements specified for the IFAS System and the IFAS Treatment System Seller's design of the aeration zone).
(3) As determined by the Aeration System Manufacturer (and as indicated on the attachment to Bid Form of) the IFAS Treatment System Bidder. Design based on Alpha, Beta, Theta and all other Standard Oxygen Correction Factors provided herein.
(4) Actual Oxygen required over all Aeration Zones in process including those with Coarse and fine bubble diffusers to be distributed into individual zones to satisfy the requirements of both the Aeration System Manufacturer (as specified in this Section) and the IFAS Treatment System Bidder (design calculations based on the flows and loads specified in Section 11391). "% of O2 delivered" is the ratio of the two prior entries in the schedule.
(5) Clean water oxygen transfer efficiencies shall be measured at Standard Conditions, at the specified average diffuser submergence, and by test procedures and conditions as specified in ASCE 2-91 . Standard Conditions are defined as 14.7 psia, 68 degrees F, and 36-percent relative humidity.
(6) Minimum pressure shall be based on low aeration tanks levels (Tank Depth listed in Schedule 11391A-1) and low air demand. Maximum Pressure shall be based on high aeration tank levels (Tank Depth listed in Schedule 11391A-1 plus either 8 inches of water column due to the change in the hydraulic profile at high flows in Tanks 5 and 6 or 14 inches of water column due to the change in the hydraulic profile at high flows in Tanks 3 and 4) and high air demands.

END OF SECTION

J:\V\V0037 Vernon WWTP\005 WPCF Design\Design\Specifications\Preselection\IFAS\11391-A Aeration Systems.docx

SECTION 11391B

IFAS TREATMENT SYSTEM BLOWERS

PART 1 GENERAL

1.1 SUMMARY

A. Section Includes

1. Provide a Blower System containing several Blower Package(s) to provide oil-free air for mixing and aeration. Each Blower Package contains a positive displacement rotary screw blower, motor, drive, weather and sound enclosure, operator control panel and appurtenances.

2. The Blower Package appurtenances shall include, but not be limited to, inlet filter and silencer, discharge silencer, flexible connectors, relief valve, check valves, thermometers and other instrumentation/monitoring sensors, suitable structural steel base, and all other necessary appurtenances to provide a complete operating system.

3. Provide each Blower Package with a variable frequency drive, in accordance with the requirements of this Section.

4. The Blower System shall also include a Blower System Master Control Panel.

5. All the equipment specified under this Section shall be furnished by a single manufacturer (the Blower Manufacturer) fully experienced, reputable, and qualified in the manufacture of the equipment specified.

B. Related Sections

1. Section 01140 – Work Restrictions

2. Section 11000 – Equipment – General

3. Section 11391 – IFAS Treatment System

4. Division 15 - Mechanical

5. Division 16 – Electrical

C. Summary of Existing Treatment Plant Processes

1. The existing aeration system includes three single-stage geared centrifugal blowers manufactured by Roots, including sound enclosures, inlet nozzles, and external inlet filters. These blowers are to be replaced with blowers furnished and installed in accordance with this Section.

1.2 REFERENCES

A. American Society of Testing and Materials (ASTM)

B. National Electrical Manufacturers Association (NEMA)

C. Occupational Safety and Health Act (OSHA)

D. National Electrical Code (NEC)

E. American Gear Manufacturers Association (AGMA)

F. American Bearing Manufacturers Association (ABMA)

G. Compressed Air & Gas Institute (CAGI)

H. International Organization of Standardization (ISO)

I. Machinery Directive 2006/42/EC

1.3 SUBMITTALS

A. Submit shop drawings showing details of fabrication, erection, and adjoining equipment interfaces for all equipment furnished under this Section.

B. Provide literature and drawings describing the equipment in sufficient detail, including parts list and materials of construction, to indicate full conformance with the detail specifications.

C. Provide certified dimensional drawings of each item of equipment and auxiliary apparatus to be furnished.

D. Provide the total weight of the equipment, individual weights of the major components, and design loading information necessary to allow evaluation of structural impacts of loads and forces.

E. Provide certified bearing life calculations based on the specified operating conditions, and demonstrating conformance of the bearing life requirements.

F. Provide heat output of each proposed Blower Package at full and minimum operating speeds.

G. Provide foundation and anchor bolt plans and details.

H. Provide manufacturers certificates for:

1. ISO-8573-1 Class Zero Oil Free Air

2. ISO-9001 Quality Management System 2008 or 2015

I. For motors over 100 HP, provide certified motor test data indicating factory test results, including: no load current, full load current, breakdown torque, locked rotor (starting) current, locked rotor torque, and hi-potential test.

J. Provide motor data including: no load current, full load current, breakdown torque, locked rotor (starting) current, locked rotor torque, and hi-potential test.

K. Provide schematic instrumentation/electrical wiring and piping diagrams.

L. Provide list of recommended spare parts, categorized into on-shelf parts and long-term parts for 2 years' operation and 3-5 years' operation.

M. Provide information on prime and finish painting systems.

N. Provide declaration of compliance with Machinery Directive 2006/42/EC, Annex II, No. 1 A. standards for sound and performance certificate.

O. Factory/Field Testing and Field Services

1. Provide test plans, procedures, and description of equipment to be used for factory and field performance testing, that shall satisfy the requirements of this Section.

2. Provide certified factory performance test data and results, including performance curves for each Blower, per ISO 1217 and in accordance with the requirements of this Section. Date of tests and test points and results are required. Slip test results are unacceptable as an alternate. Blower Manufacturer must provide documented results for each Blower furnished as specified in this Section. Typical or average data is not acceptable.

3. Provide qualifications of the Blower Manufacturer's representative that will be present on site as required during the installation, commissioning, startup, training, and testing of the equipment.

4. Provide written certification that the equipment is installed correctly and in accordance with the Blower Manufacturer's requirements, and that the complete installation will operate as expected.

5. Provide certified written field test / start-up report after completion of installation and testing, listing the results of the inspection, operation, adjustments, tests, and information per Section 11000.

P. Operation and Maintenance Manuals

1. Provide Operation and Maintenance Manuals and Equipment Start-up Reports in accordance with Section 01700.

2. Provide installation, operation, and start-up procedures, operating and maintenance instructions, list of spare parts, and lubrication requirements. Include Blower Manufacturer's recommendation of summer and winter grades of lubricants and alternative manufacturers of oil, complete with their reference numbers.

3. Provide bill of materials for all equipment with the O&M manual.

4. Provide name, address, and telephone number of the nearest competent service representative who can furnish parts and technical service.

5. Provide descriptive literature, including illustrations, covering the operational features of the equipment, specific for the particular installation, with all inapplicable information omitted or marked out.

6. Provide operating, maintenance, and troubleshooting information.

7. Provide assembly drawings for the electric motors, as well as bearing data including replacement sizes, and lubrication instructions.

8. Provide complete connection, interconnecting, and assembly diagrams.

9. Provide copies of approved Shop Drawings.

Q. In the event that it is impossible to conform to certain details of the specifications due to different manufacturing techniques, describe completely all non-conforming aspects.

1.4 DELIVERY, STORAGE, AND HANDLING

A. Coordinate delivery of the equipment to minimize the period of time the equipment is on site prior to installation.

B. Deliver all equipment completely factory assembled, skid mounted, crated, and delivered to protect against damage during shipment. Supply Blower Package with all appurtenances mounted, or if required, shipped loose for field mounting to provide a complete operating system.

C. Protect all parts so that no damage or deterioration will occur from the time of shipment until installation is completed and the equipment is ready for operation. Cover and seal all exposed flanges with shrink-wrap to prevent the entrance of moisture or debris. Protect finished iron or steel surfaces not painted to prevent rust and corrosion.

D. Store, temporarily support, and safeguard equipment, material, and spare parts prior to installation in accordance with Blower Manufacturer's recommendations and instructions. Protect all exposed surfaces.

E. At a minimum, protect the equipment from being contaminated by dust, dirt, vibration, and moisture. Store Blower Packages in weather-tight buildings, trailers, or storage sheds, which have a raised concrete or wooden floor, a roof, and fully closed walls on all sides. If used, support tarps and any other coverings placed over the equipment shall be supported above the stored equipment to provide ventilation under the tarp or covering and to minimize condensation. Arrange tarps and coverings to prevent ponding of water.

F. The Contractor shall be responsible for proper storage of the equipment so as to remain in "as shipped" condition. If the equipment remains in storage at the job site for longer than four (4) months before installation and startup, the Contractor shall provide factory service personnel for a complete inspection of the equipment. Any work necessary to restore the equipment to "as shipped" condition shall be the responsibility of the Contractor.

1.5 QUALITY ASSURANCES

A. To assure unity of responsibility, the Blower System containing a number of Blower Packages shall be furnished and coordinated as a package by the manufacturer of the Blower. The Contractor and Blower Manufacturer shall assume responsibility for the satisfactory installation and operation of the entire system including blower, motor, base, acoustical enclosure, VFD, and appurtenances.

B. The Blower, Blower Packages, and Blower System covered by these Specifications is intended to be equipment of proven ability as manufactured by a reputable Blower Manufacturer having a minimum five years of experience in the production of Blowers, Blower Packages, and Blower System of the type being offered. In lieu of compliance with the specified experience period, submit a bond or cash deposit (in the form of an irrevocable letter of credit) in the amount of the contract value to guarantee replacement in the event of failure which shall remain in effect for five years following substantial completion.

C. The equipment shall be adequately and safely designed and constructed for heavy duty use and continuous operation in air scouring service at the pressures and under all conditions of service to which they may be subjected. The Blowers, Blower Packages, and Blower System furnished shall be designed, constructed and installed

in accordance with the best practice and methods, and shall operate satisfactorily when installed.

1.6 WARRANTY

A. The Blower Manufacturer shall provide its standard full mechanical warranty on the complete Blower Package and Blower System Master Control Panel per its usual and customary warrantee period, but in no case shall these requirements be less stringent than as required in Section 11391 Paragraph 1.7.

1.7 PERFORMANCE GUARANTEE

A. The blower performance provided by the Blower Manufacturer shall be tested and guaranteed per ISO 1217, Annex B, and the performance data and blower specific energy performance (kw/100-cfm) of the Blower Package shall be guaranteed to provide performance to ISO 1217, Annex C, with a tolerance of +/- 5% on volume flow and +/- 5% on package horsepower.

1. The blower shall be tested at the maximum operating pressure, flow velocity, and speed permissible of the blower design.

2. Provide performance data for each blower element and Blower Package furnished.

3. Blower Package performance must account for pressure loss through all items provided in the package including, but not limited to, a clean inlet filter / silencer, the exhaust silencer, and the check valve.

B. The Blower Packages shall, when performance tested in the factory, meet or be less than the noise requirements specified Schedule 11391B-2 - Blower Package Schedule of this Section. Blower Package sound level shall be guaranteed in accordance with ISO 2151, plus/minus 3 dB(A) at 3 feet, free field conditions. Sound data shall be compliant with a Declaration of Conformity assessment standard.

C. When operating together as a system and performance tested in the field in accordance with Paragraph 3.4.F, the Blower Packages and Blower Master Controller shall demonstrate that they can achieve the range of air flow conditions specified in Schedule 11391B-1 - Blower System Schedule and can efficiently select blower operating speeds and number of blowers operating.

D. During this period, the Blower Manufacturer guarantees the following:

1. The Blower Packages meet or exceed the Performance Requirements in Paragraph 1.8 of this Section.

E. Should the equipment fail to meet the required Performance Requirements, then the Performance Guarantee shall require that the Blower Manufacturer and the Contractor comply with the following:

1. Make changes to the equipment such that the performance as guaranteed is obtained at no additional cost.

2. If, after two attempts at implementing corrective measures, it cannot be demonstrated that the equipment can consistently meet the Performance Requirements, the Contractor and the Blower Manufacturer shall remove the

defective equipment and replace it with equipment that shall meet the performance requirements at no additional cost.

1.8 DESIGN CRITERIA

A. Performance Requirements

1. Performance of the equipment provided in this Section shall meet the criteria specified in the schedules included at the end of this Section:

a. **Schedule 11391B-1 - Blower System Schedule**: provide a Blower System containing the minimum number of Blower Packages specified in the Blower System Schedule.

b. **Schedule 11391B-2 - Blower Package (one fully assembled unit) Schedule**: design the Blower Packages in accordance with the Blower Package Schedule. Design the Blower Packages for continuous 24 hour/day service under the design loading conditions listed.

2. Design the Blower System, Blower Packages, and Blower to meet the range of design loading conditions listed in the Blower System Schedule, when using a number of blowers ranging from one blower up to the specified number of duty blowers listed in the Blower System Schedule.

1.9 SPARE PARTS

A. Furnish with each Blower Package, the Blower Manufacturer's standard set of spare parts including at a minimum the following:

1. One (1) set of matched V-belts (if providing belt driven blowers).

2. One (1) set of inlet air filter elements for inlet filter/silencer.

3. One (1) set of oil demister filter elements

4. One (1) printed circuit board control card of each type furnished

5. Six (6) fuses of each type furnished

6. Any other spare parts recommended by the Blower Manufacturer.

B. Furnish spare parts packed in suitable containers and clearly labeled designating the contents and the unit for which they are intended.

C. Furnish all special tools required for the operation and maintenance of the equipment.

D. Lubricants - Prior to testing and acceptance, furnish a one year's supply (minimum of one oil change) of all lubricants recommended by the manufacturers of each component of the equipment furnished and installed.

1.10 MANUFACTURER'S SERVICE AGREEMENT

A. The Blower System Manufacturer shall provide a Service Agreement including continuing technical and operational support on the Blower System for two (2) years following Substantial Completion and successful completion of the Performance Test. Provide this cost, which shall include all expenses, as a separate item as listed in the Bid Form (Section 00410).

B. Service Agreement shall include as needed telephone support and a minimum of two site visits during the first year following substantial completion and successful performance testing and two site visits the year thereafter. Each site visit shall be no less than two (2) consecutive full days on site. A full day is from 7 AM to 3 PM.

C. This technical and operational support shall be independent of any technical support required to resolve warranty-related systems or equipment problems.

PART 2 PRODUCTS

2.1 BLOWER CONSTRUCTION

A. The Blower shall be factory mounted into the Blower Package, and the type of blower shall be an oil-free positive displacement blower of either the rotary screw type, Kaeser DBS/EBS/FBS Series, or rotary lobe compressor type, Aerzen Hybrid Delta Series, but regardless of the type, the casing shall have the following features:

1. The Blower casing shall be of one-piece construction, with separate side plates that are bolted and pinned to the housing, or with side head plates that are integral to the housing and separate gear side located with pins.

2. Materials shall be close-grained cast iron, ASTM A48 or equivalent, suitably ribbed to prevent distortion under the specified operating conditions and facilitate cooling.

3. The vibration level as measured at the casing, in the X/Y planes of the bearings, shall not exceed 0.3 inches / sec RMS when operating at the specified operating pressure and speed. The vibration level shall be checked at start-up and documented in the field start up report.

4. Stage assemblies must have a ISO-8573-1 Class Zero Oil Free Air Certificate.

B. Rotors

1. Rotors shall operate without rubbing or liquid seals or lubricants. No wear-prone surface coating shall be allowed.

2. The rotors shall be machined with precision tolerance and sealing strips to ensure consistent rotor clearance and stable volumetric efficiency.

3. Open rotors and coated rotors are not acceptable. The rotor must be solid or closed-end to prevent build-up of contaminants inside the rotor causing imbalance. The rotors shall operate without rubbing, liquid seals or lubrication in the air chamber. No wear-prone surface coating shall be allowed.

4. Rotors and shaft shall be either:

a. Drop forged in one single piece of AISI 1043 or equivalent. The female rotor shall be driven by the drive motor and the male rotor shall be driven by the timing gear set.

b. Or, the primary rotor shall be machined out of a one-piece casting made of EN GJL-250 or equivalent material. The secondary rotor and shaft shall be machined out of a one-piece casting made of EN GJS-500

or equivalent material. The shaft of the primary rotor shall be press fit and machined out of C45 or equivalent shaft material.

5. Rotors shall be statically and dynamically balanced per ISO 1940/1 / ANSI S2.19, G2.5. Modifications to the face of the rotors for balancing purposes are not acceptable.

C. Bearings

1. Each rotor/shaft shall be supported by anti-friction bearings, and fixed to control the axial location of the rotor/shaft in the unit. A double sealing arrangement shall be provided to prevent lubrication from contaminating the air stream. Lip type seals are not acceptable.

2. Bearing fits shall be precision machined to ensure accurate positioning of the rotors in the casing.

3. The applied design conditions shall yield a bearing load and minimum L-10 bearing life calculation of 100,000 hrs. At max speed, the minimum L-10 bearing life shall be 40,000 hours. Calculated bearing life shall be submitted, based on specified operating conditions.

4. Regardless of theoretical bearing life calculations, the bearings shall be sized for a minimum expected life of 5 years between overhauls.

D. Timing Gears

1. The blowers shall be timed by precision machined gears with hardened and ground teeth.

2. Timing gears shall be a pair of single helical AGMA 12 gears, with a minimum AGMA service factor of 1.70.

3. Gears shall be mounted on the shafts with a tapered interference fit, and secured by a locknut.

4. Each timing gear shall be straight cut and beveled to quality standard 5f 21. The timing gear set shall be taper-mounted on the rotors.

5. Each timing gear shall be manufactured in accordance with DIN 3960, Specifications for Spur Gear Sets, DIN 3961 & DIN 3962 Tolerances for Spur Gear Mesh, and DIN 3964 Specifications for Shaft Centering.

E. Fasteners

1. Anchor bolts, washers, hex nuts, and all other fastening hardware shall be stainless steel and supplied by the Contractor. High strength fasteners shall be used.

F. Lubrication

1. Timing gears and bearings shall be oil splash lubricated. Grease lubrication is not acceptable.

2. Oil sight glasses shall be provided on the exterior of the enclosure to easily view the oil level, or each oil chamber shall have domed designed sight

glasses which will allow visual inspection of oil level and oil condition viewable from the front of the blower.

G. Seal Assemblies

1. Seal shall be designed to prevent lubrication from leaking into the air stream as well as to prevent oil from leaking out of the machine.

2. Each rotor shall include one seal assembly on each end, four assemblies in total per blower. Seal assemblies shall not require an additional vacuum pump or electric oil mist separator for a sealing effect.

3. Rotary lobe type blowers shall be provided with:

   a. Seal consisting of two rotary slip rings mounted in a retainer with an atmospheric air gap in the center.

   b. Rotor shaft protected by a shaft sleeve.

   c. An O-ring under the shaft sleeve to prevent oil migration along the shaft into the air conveying chamber.

4. Rotary screw type blowers shall be provided with:

   a. Rotor seal assemblies consisting of

      1) Oil splash guard ring

      2) Shaft guide wear sleeve with vent holes located between the air and oil seals. Wear sleeve to protect the blower casing.

      3) Two piston ring type labyrinth seals made from heat treated GG/42CrMo4 material shall be located on the air side and two spiral sealing seals shall be located on the oil side of the rotor sleeve.

   b. Input drive shaft seal assembly consisting of

      1) A sliding ring type mechanical seal that will prevent oil leakage from where the input shaft goes thru the drive end cover plate.

      2) Mechanical seal assembly shall consist of a replaceable wear sleeve on the input drive shaft, cover plate with a machined sealing surface and mechanical sliding ring seal.

      3) The input shaft seal design must allow for the mechanical seal assembly to be replaced without removing the drive end cover plate.

5. Provisions shall be made to vent the rotor side of the oil seal to atmosphere to eliminate possible carry-over of lubricant into the air stream. Internal rubber lip seals are not permitted.

2.2 MOTORS

A. Motor shall be supplied in accordance with the requirements of the Blower Package Schedule, and shall be mounted and aligned by the Blower Manufacturer.

B. The motor and related drive system shall operate the Blower at the range of speeds required to achieve the range of capacities specified in the Blower System Schedule and Blower Package Schedule.

C. Motors shall be belt driven and mounted on a pivoting swing base to provide automatic tensioning of the belts, or shall be directly coupled to the blower via an integrated gear drive. Motor to be supplied, mounted, and aligned by the blower package manufacturer.

D. Blower Manufacturer shall be responsible for coordinating the starting torque requirement of the blower and motor. The Blower Manufacturer shall provide an automatic-type, mechanically operated valve, requiring no electrical connections, if required to start the motor under the starting conditions noted.

E. Design for continuous operation in 40°C (104°F) environment, and for temperature rise NEMA Class B, insulation system NEMA Class F or better, Class H applied varnish, constant torque, water tight and dust tight enclosure. Motors shall include fail-safe motor protection circuit to protect motor from thermal overload. Provide a minimum of one thermal sensor per phase.

F. Motors must be domestic NEMA TEFC frame sizes. IEC imported frame sizes shall not be accepted.

G. Provide visible nameplate, indicating motor horsepower, voltage, phase, cycles, RPM, full load amps, locked rotor amps, frame size, manufacturer's name and model number, Service Factor, Power Factor, efficiency, ABMA bearing numbers, and manufacture date. Provide stainless steel nameplate attached with stainless steel pins.

H. Provide electrical connection meeting oversized, diagonally split, cast-iron junction boxes with gaskets. Box provided with threaded conduit connection. Box shall be adjustable to all four mounting positions.

2.3 VARIABLE FREQUENCY DRIVES (VFD)

A. Blower Manufacturer shall provide each Blower Package with a constant torque, AC variable frequency drive.

B. Unless otherwise indicated in the Schedule, the VFD shall be mounted to the exterior of the Blower Package weather and sound enclosure. If mounted on the blower package, the VFD shall be pre-wired to the motor and control wiring connected to the Blower Package Operator Control Panel so that only one power feed is required for the entire package. If the VFD is remotely mounted, the VFD shall be wired so that only one power feed is required to the VFD and the VFD provides power to all items in the Blower Package including the Blower Package Operator Control Panel, ventilation fans, and the blower motor.

C. The blower VFD shall convert the input power specified on the Blower Package Schedule to an adjustable AC frequency and voltage for controlling the speed of AC squirrel cage motors. The converter shall use a diode bridge rectifier to convert incoming AC power to a constant DC voltage bus. The inverter section shall be a voltage source design with a sine-weighted pulse-width modulated output. The output voltage is to vary proportionally with the output frequency to maintain a constant volts/hertz value up to 60 hz.

D. Include in the controller, power conversion components, power control logic devices and regulator circuitry. Provide full digital control of frequency and voltage.

E. The drive shall also include as functional components: capacitors for DC bus, single control logic board, terminal blocks for connection of incoming power, motor terminations, operator controls and transient suppressor.

F. Include motor current overload protection.

G. The VFD shall be mounted in the blower package enclosure, with hand controls and local keypad mounted on the door of the VFD enclosure for use when needed. All user interface with the blower package shall be through the Blower Package Operator Control Panel.

H. Provide a 3-position Hand-Off-Auto Switch on the door of the VFD enclosure.

I. Unless otherwise specified in the Schedule, provide power conditioning with all VFDs.

1. For motors less than 100 HP, provide a 5% line reactor

2. If a Harmonic Input filter is not called for in the Schedule, for motors 100 HP and larger, provide an extra set of dry contacts to interface with a Low Harmonic Input Filter (to be provided by others upstream of the VFD). The filter provided by others will be interlocked with the VFD to shut down the filter capacitors when the VFD is not driving the motor.

3. If the schedule calls for a Harmonic Input Filter, Provide a Low Harmonic Input Filter upstream of the VFD in the VFD enclosure. The filter shall be designed so that harmonics injected in the electrical system do not exceed 7%. Provide power contactors interlocked with the VFD to shut down the filter capacitors when they are not in use. Provide a type HG7 by TCI, equivalent by MTE, or equal.

J. The VFD and all associated equipment shall have a short circuit current rating (SCCR) of 65,000 AIC minimum.

K. Provide a fused surge protection device for VFD power; the surge protection device rating shall be as recommended by the VFD manufacturer.

2.4 BLOWER ACCESSORIES

A. The blower shall be driven by the drive motor through a V-belt drive assembly or by a direct coupled gear driven system:

1. V-Belt Drive Assemblies

a. These shall be of the high capacity type, designed for high rotational speeds, oil and heat resistant. Drive shall have a minimum 1.4 service factor based on the maximum blower operating power (bHP) or 1.1 service factor based on the motor nameplate HP, whichever is greater.

b. Belt tensioning shall be automatic without the use of any spring devices or interaction on the part of the operator. Slide rails and load adjusting springs shall not be used. Sheaves shall be dynamically balanced at all operating speeds.

c. Provide a perforated galvanized carbon steel OSHA approved guard. Portions of the guard shall be removable to allow for belt inspection and replacement.

d. The automatic tensioning system shall yield a v-belt life of 16,000 hours of operation.

2. Direct Coupled Gear Drive Assembly

a. These shall be robust slip-free gear drive systems, requiring no additional oil chambers, oil pumps, or additional bearings.

b. Drive gears shall be integrated into the blower drive side oil chamber. No additional oil pump, oil reservoir, or heat exchangers shall be used.

c. Provide drive motor with flanged direct mount face. Drive motor shall use grease-filled bearings.

d. Provide heavy duty mechanical blower/drive shaft seal with drain system towards motor face.

e. Integrated motor shaft grounding system for VFD use shall be included to prevent shaft current damages to blower.

B. Inlet Filter / Silencer

1. Supply each Blower Package with one combination inlet filter and silencer. The filter media efficiency must meet the requirements of ASHRAE 52.2 MERV7 50-70% @ 3-10 microns corresponding to EN779 G4.

2. The inlet filter silencer shall be mounted directly to the inlet flange of the blower. Filter element shall be washable and removable without disconnecting the inlet duct/pipe.

3. Silencer shall be located upstream of the inlet filter. The inlet silencer shall be lined with replaceable polyether absorptive material.

4. Filter and silencer losses (clean element) shall be included by the Blower Manufacturer in the Blower Package performance calculations.

C. Base Frame / Discharge Silencer

1. Each blower shall be supplied with one combination base frame and discharge silencer. The silencer shall be designed for maximum sound attenuation.

2. The silencer shall be rated at a minimum of 1.65 times the pressure setting of the pressure safety valve.

3. The discharge silencer shall have a machined flanged inlet connection and bolt directly to the discharge flange of the blower, or the discharge silencer shall mount to the blower discharge port via a flexible tube type connector.

4. Discharge silencer performance losses shall be included by the Blower Manufacturer in the blower performance calculation.

5. The base frame shall be constructed from welded carbon steel or cast iron, designed to maintain alignment of the blower internal components and the

drive during operation. The base frame and discharge silencer combination shall be designed to resist distortion while being installed on vibration isolating mounts.

6. Provide the Blower Package in a manner that allows the entire unit to be grounded/bonded from a single location. Provide with a stainless steel grounding lug fully welded to the base, or a grounding wire between the blower base and the sound enclosure base.

D. Vibration Isolators

1. Provide each Blower package with vibration isolators to prevent transmission of vibration from the blower package to the base or to the piping/duct system.

E. Flexible Connectors

1. Provide each Blower Package with flexible connectors to isolate the connection of the Blower Package to the self-supporting piping/duct system.

2. Provide flexible connectors located downstream of the discharge silencer, and upstream of the inlet filter/silencer if specified in the Blower Package Schedule.

3. Flexible connectors shall prevent the transmission of noise and vibrations from the blower package into the piping/ductwork.

4. Size the flexible connectors for standard ANSI pipe/flange dimensions and drilling pattern. The flexible connectors shall be suitable for the maximum operating temperature and pressure ratings of the equipment in the air stream.

F. Pressure Relief Safety Valve

1. Provide each Blower Package with a single pressure relief safety valve on the discharge side of the blower mounted downstream of the discharge silencer and upstream of the check valve.

2. The valve shall be spring loaded and sized to pass 100% of the design flow. The safety valve shall be set to protect the blower from exceeding its maximum pressure rating.

3. The valve shall be housed within the sound enclosure, and shall relieve into a segmented and sealed section of the sound enclosure or vented out of the sound enclosure without the need for external piping. Weighted valves shall not be acceptable.

4. The valve shall be PED (Pressure Equipment Directive) certified.

G. Check Valve

1. Provide each Blower Package with one factory assembled and factory installed check valve installed on the discharge line. The valve shall not be installed in the discharge piping, and shall be removable without disturbing the field-installed piping that is connected to the flexible connector on the Blower Package discharge.

2. The check valve shall be of the full-bore, low pressure-drop, flapper type design, with a steel body and steel flap embedded in EPDM or high

temperature silicone elastomer with full-contact seal. The check valve capacity shall exceed the blower package's maximum discharge pressure and temperature.

3. The check valve pressure drop shall be included by the Blower Manufacturer in the Blower Package performance calculation.

H. Monitoring Sensors

1. Provide each Blower Package with inlet and discharge pressure transducers, discharge temperature sensors, motor temperature sensors, oil temperature sensor, and other sensors as recommended by the Blower Manufacturer.

2. The system operational parameters listed above shall be monitored by the Blower Package Operator Control Panel, which shall include alarming and shutdown sequences.

2.5 SOUND ENCLOSURE

A. Provide each Blower Package with a sound enclosure to reduce the noise level and meet the sound level specified. The enclosure shall cover the entire blower package and shall be designed for easy inspection and maintenance of all blower package components.

B. Design the enclosure to be installed on concrete housekeeping pads.

C. Design the enclosure for side-by-side installation with all maintenance done from the front or back of the package. Provide removable panels or doors for quick and easy access for routine maintenance of the blower and the package components. Panels shall be less than 50 pounds, and meet OSHA weight requirements.

D. Construct the enclosure of galvanized steel sheet that is internally and externally powder coated.

E. Sound enclosure acoustic material shall comply with UL-94 HF1 for fire-retardant, self-extinguishing, non-dripping materials, or shall comply to FMVSS 302 with a burning rate B or lower than 100 mm/min.

F. Provide a motor driven ventilation fan as a factory prewired system for cooling the sound enclosure, including the fan motor, motor starter, temperature controls, and wiring to the Blower Package Operator Control Panel. The fan shall be sized for sufficient heat removal from the sound enclosure at all blower operating speeds. Electric motor shall be 460 V / 3-ph / 60 Hz. Note: A 120 V single phase motor for this application will not be acceptable, as the current draw and motor operating temperature are too high. Forced ventilation of the enclosure must be performed using a dedicated enclosure cooling fan. Utilizing the TEFC drive motor to draw or circulate the enclosure cooling air shall not be allowed.

G. Provide the Blower Package with the enclosure and the blower both mounted on a skid / oil-drip pan designed for meeting environment protection standards and for easy transportation and installation. The Blower Package base shall include fork lift guides.

H. Provide a grounding strap between the blower base and the packaged skid to bypass any vibration isolating mounts for grounding continuity.

I. Do not mount electrical components, instrumentation and instrument connections on removable panels or in a manner that will interfere with the removable panels of the sound enclosure.

J. Pipe oil sumps at a location that allows for easy maintenance. Mount an oil level indicator on the outside of the enclosure to provide an accurate oil level indication while the blower is in operation. If sight glasses are not visible from outside the enclosure, provide oil level monitors to monitor oil level from the Blower Package Operator Control Panel while blower is in operation, and also provide domed designed sight glasses on each oil chamber for visual inspection of oil level and oil condition viewable from the front of the blower.

2.6 BLOWER PACKAGE OPERATOR CONTROL PANEL

A. Provide the Blower Manufacturer's standard Blower Package Operator Control Panel to provide local controls and monitoring for each Blower Package. Factory install the operator control panel on each Blower Package and complete all wiring to the equipment within the blower enclosure.

B. The operator control panel shall be suited for the specified conditions listed in this specification and in the attached schedules, and include: 1) an industrial controller with powerful processing software that will allow for the control, regulation, and monitoring of the blower package, 2) a touch screen operator interface terminal allowing for the display and modification of machine settings, and 3) external communication using Ethernet IP, Modbus RTU, or Modbus TCP, and/or hardwired.

C. The controller shall include digital and analog inputs/outputs for controlling and/or monitoring the blower package.

D. The controller shall shut down the blower package in the event of a main drive motor thermal overload, enclosure cooling fan thermal overload, high differential pressure across the inlet filter, high blower discharge temperature, high blower discharge pressure, high oil temperature, high sound enclosure temperature if required for shutdown sequence (unless the Blower Package operator control panel contains a permissive that will not allow the blower to run unless the enclosure fan is able to run), or external failure signal. Incorrect rotation and loss of drive shall be detected by the VFD, and communicated to the Blower Package operator control panel for shutdown sequence. The controller shall have a programmable and selectable auto re-start after loss of power.

E. The controller shall display sensor and transducer readings, common alarm, common fault, run hours, and remaining times of maintenance intervals.

2.7 BLOWER SYSTEM MASTER CONTROL PANEL

A. Provide the Blower Manufacturer's standard Blower System Master Control panel to schedule the starting and stopping of each Blower Package in a manner that delivers the required range of air flows at the resultant system pressures specified on the Blower System Schedule in an energy efficient manner.

B. The master control panel shall be suited for the specified conditions listed in this specification and in the attached schedules, and include an industrial PLC with powerful processing software that will allow for the control, regulation, and

monitoring of the Blower Packages, along with allowing the display and modification of machine settings and external communication.

C. The master controller shall communicate with the Blower Package Operator Control Panels over Ethernet IP, Modbus RTU, Modbus TCP, and may also be hardwired.

D. The master controller shall contain an operator interface and display power usage, alarms, warnings, and maintenance requirements. It shall determine the most efficient grouping of units available and the required speeds of the units to achieve the commanded air flow, received via a 4-20 ma input signal.

E. Power supply 120V single phase 60 Hz.

2.8 SURFACE PREPARATION AND PAINTING

A. Provide surface preparation, prime painting, and finish painting in accordance with the Blower Manufacturer's standard systems, and in conformance with the following criteria:

1. Field painting of blower equipment or supplying components that are only prime painted is not acceptable.

2. Except for machined sealing and machined mounting surfaces, the blower package shall be painted with the Blower Manufacturer's standard colors.

3. Aluminum, stainless steel and brass shall not be painted.

4. The motor shall not be over sprayed and will be supplied with the motor manufacture's standard protection and paint color.

5. Painted cast iron and carbon steel shall be an Alkyd Resin Prime and Finish coat with total dry film thickness of 70 microns. Surface preparation shall be SSPC-10 or better.

6. Galvanized components shall be prime and finish coated as listed above, only after appropriate surface preparation.

7. The weather and sound enclosure shall be powder-coated polyester base with a total dry film thickness of 80 microns.

PART 3 EXECUTION

3.1 GENERAL

A. All work in the Part 3 Execution will be performed by the Buyer unless reference is made to the "manufacturer," in which case it shall be the responsibility of the Blower Manufacturer. If the paragraph title has "manufacturer" in it, then all items listed in the paragraph shall be the responsibility of the "Blower Manufacturer". All equipment referenced shall be considered "Goods" and all other items of work performed by the manufacturer shall be considered "Special Services".

B. Unload and thoroughly inspect the equipment upon arrival at the project site and report observed damage immediately to the shipping company, the manufacturer, and to the Engineer in writing. The manufacturer shall repair to as-new condition or replace damaged equipment. Any repair work shall be approved by the Engineer and performed by the manufacturer's factory-trained technician.

C. Install the equipment in accordance with the manufacturer's shop drawings, instructions, and recommendations, and in accordance with the contract drawings and specifications.

D. Provide finish painting of items with a shop prime coat and touch-up painting of those areas damaged during installation.

E. The manufacturer shall provide a representative to inspect and verify in writing that the installation of the equipment is in accordance with the manufacturer's shop drawings, instructions and recommendations. The manufacturer shall report deviations to the Contractor and to the Engineer in writing. Coordinate the schedule of this inspection with the manufacturer so that the inspection and needed corrective actions are completed prior to proceeding with testing activities.

F. Provide on-site assistance and coordination necessary for the manufacturer to complete the various inspections and various testing requirements specified in this Section and make the necessary adjustments, repairs, or replacements required to make the system pass all testing requirements.

3.2 FACTORY PERFORMANCE TESTING BY MANUFACTURER

A. Provide a certified factory performance test for the Blower Package (one fully assembled unit) in accordance with ISO 1217 standards to confirm performance compliance with these specifications, and to confirm that the design of the Blower System and Blower Packages meet the range of design loading conditions listed in the Blower System Schedule. A slip test shall not be acceptable. Average data for the manufactured size shall not be acceptable. The acceptance criteria are as specified under the Performance Guarantee (Paragraph 1.7) and Performance Requirements (Paragraph 1.8).

1. Performance data shall be provided at the maximum operating pressure, flow velocity, and speed permissible of the blower design.

2. Provide data sheets and certified test results demonstrating the energy consumption of the proposed blowers, and indicating airflow capacity (in standard cubic feet per minute (scfm) and inlet cubic feet per minute (icfm)), specific energy performance (kw/100-cfm), actual blower operating speed (rpm), percent of maximum rated speed, and discharge pressure.

3. Complete performance data shall also include design inlet conditions, pressure, temperature and relative humidity (%); discharge pressure; dB(A) noise pressure level; and horsepower for the blower shaft, motor, and blower package.

B. Submit free field noise data for the complete blower package using an ISO 2151 method of measurement. The acceptance criteria are as specified under the Performance Requirements (Paragraph 1.8).

3.3 MANUFACTURER'S FIELD SERVICES

A. Pre-Installation

1. Manufacturer shall provide a representative to attend a minimum of two pre-installation meetings via conference call of up to 4 hours each to review general procedures, erection and installation instructions, and installation

sequence. This shall include coordinating Control System connections with the plant's SCADA system.

B. Installation, Commissioning, and Start-Up

1. Provide the services of the manufacturer's factory-trained technician, who is experienced in the installation, adjustment, and operation of the specified equipment.

2. Provide manufacturer's services as necessary to inspect the installation, and to supervise the commissioning and startup of the System, but this shall be no less than:

   a. For each Blower Package, the manufacturer shall furnish one (1) trip consisting of two (2) 8-hour days of on-site service (exclusive of travel time), for installation, start-up, and field performance testing each Blower Package.

   b. Each Blower Package shall be checked and tested at the time the installation of each Blower Package is complete for a total number of separate trips corresponding to the total number of Blower Packages. This is required to maintain plant operations as the blowers are placed on-line one-by-one.

3. Manufacturer's authorized representative shall verify proper installation, electrical connections, and equipment alignment prior to start-up.

4. Commissioning shall not be conducted until such time that the entire installation is complete and ready for testing and the manufacturer has certified the installation of their equipment is satisfactory and is ready for operation.

C. Training

1. Training shall be scheduled after copies of operation and maintenance manuals have been delivered. Training shall be scheduled at least 10 days in advance with the Owner.

2. The manufacturer shall provide the services of a factory-trained technician to train the Owner on the operation, calibration and maintenance of equipment supplied under this Section in accordance with the requirements of Section 11000.

3. After successful startup and field testing, the manufacturer shall provide one (1) trip for a total of one (1) 8 hour day for end user training.

   a. For the Blower Packages, training shall consist of 2 hours of classroom training using the actual approved Operation and Maintenance Manual for reference, and 2 hours of hands-on training at the Blower package.

   b. For the Blower System Control Panel, training shall consist of 1 hour of classroom training using the actual approved Operation and Maintenance Manual for reference, and 1 hour of hands-on training at the Blower package.

   c. Remaining training time shall be used at the Owner's discretion.

D. Field Performance Testing - Blower System Master Control Panel

1. Provide services of a factory trained technician for a minimum of one 8-hour days for the Blower System Master Control Panel to complete the testing as described herein.

E. The actual number of days on site shall be increased above the minimum specified as necessary, without additional cost to the Owner, as necessary to comply with this specification.

3.4 COMMISSIONING REQUIREMENTS

A. Commissioning Team: The commissioning team shall consist of the Engineer, the Contractor, and the manufacturer personnel capable of testing and adjusting electrical, mechanical, instrumentation, and controls equipment and systems.

B. The startup of the equipment shall be aborted if any system deficiency prevents the successful completion of the test. Pre-commissioning check and commissioning shall be aborted if a required commissioning team member is not present for the test.

C. Pre-Commissioning: Test and verify the installation of the equipment and ancillary systems prior to startup. Correct deficiencies discovered during these checks and re-test until commissioning is complete. The tests shall include, but not necessarily be limited to:

1. General: Inspect the installed equipment for proper alignment, correct operation, proper connection, and satisfactory function of all components, including ground fault circuit interrupters and a safety inspection of wet cable connectors. Approve the installation and provide a written certification that the system components have been installed correctly and are ready for operation.

2. As-built documents: verify that process piping, valves and equipment are consistent with the design.

3. Rotation: Test rotation of motors to confirm they operate in accordance with design.

4. Vibration: Operate rotating equipment and demonstrate it does not vibrate in excess of manufacturers' recommendations.

5. Control System: Confirm electrical continuity between field instruments, equipment, and control system and confirm inputs and outputs are correctly wired. Coordinate with the Blower Manufacturer and provide loop test sheets to document that each physical signal in accordance with the P&IDs and Electrical Drawings has been correctly landed and each control loop is tested as being programmed in accordance with the requirements herein.

6. Instruments: Calibrate field instruments that are not factory-calibrated. Check the calibration of all instruments using process conditions where possible, or simulated conditions where operating the process would be impractical.

7. SCADA Coordination: Manufacturer to prove the Ethernet interface with monitoring and control functions between the blower control panel and the

plant control system. Manufacturer to coordinate with the Plant Control System Programmer (PCSP) during the interface test.

8. Piping: Pressure test piping in accordance with requirements of the Construction Contract.

9. Electrical: Verify continuity in accordance with Division 16 – Electrical.

D. Commissioning:

1. Demonstrate that the system and related control system operate in accordance with the specifications, including all operating, monitoring, and shutdown functions and remote "call in" alarm functionality is operable.

2. If, in the opinion of the Engineer, the commissioning tests do not meet the requirements specified herein, performance testing will not begin until the manufacturer has made such adjustments, changes, and/or additions as necessary to correct the system, and demonstrated this by a satisfactory commissioning test as specified above.

3. If, in the opinion of the Engineer and the manufacturer's representative, the equipment and related systems meets the requirements specified herein, the equipment and related systems will advance to startup testing.

E. Startup Testing:

1. The startup testing shall be aborted if any system deficiency prevents the successful completion of the test.

2. Startup the equipment following successful completion of the pre-commissioning and commissioning tests.

3. The manufacturer's representative shall perform a physical check of the equipment installation, perform safety checks, power-up the equipment, and perform the functional testing.

4. During Startup Testing, the following tests shall be performed:

a. Confirm alarms are initiated by alarm conditions, are annunciated correctly, and terminated in accordance with the design requirements.

b. Test process control loops to confirm correct response of process equipment to changing conditions.

c. Test safety

d. Test manual operations.

e. Test setpoint adjustments.

F. Field Performance Testing – Blower Packages

1. Conduct field performance tests under actual operating conditions. The performance tests shall consist of 4 hours of operation of each blower, with vibration, temperature, and pressure readings, as well as motor amp readings, all taken and recorded at 60-minute intervals.

2. The tests shall demonstrate fitness for the service specified and the ability of the Blower Packages to operate without vibration or overheating when operated to meet the performance requirements specified. Operate the blower over the entire specified operating range to demonstrate the turndown requirements.

3. Make all adjustments necessary to place the equipment in satisfactory working order at the time of the above tests. If the blower does not meet the performance requirements in Paragraph 1.8 of these specifications, take corrective measures or remove the Blower Packages and replace them with Blower Packages that do satisfy the performance requirements.

G. Field Performance Testing – Blower System Master Control Panel

1. After all Blower Packages have been field performance tested, operate the Blower System Master Control Panel over a four (4) hour period in a manner to demonstrate that the energy efficiency of the Blower System is optimized with the Blower System Master Control Panel selecting the appropriate number of Blower Packages to run and their appropriate speed.

2. During testing, manipulate the blower system to ramp up and down the air flow requirements while logging the power usage of all of the blower packages. Confirm that optimal energy usage has been achieved by overriding the controls to obtain the same air delivery using different blower and speed combinations for a least 2 points per duty blower package specified.

3.5 MANUFACTURER'S TECHNICAL AND OPERATIONAL SUPPORT

A. Provide one 8-hour day service inspection during first year of actual operation, for use at Owner's request, exclusive of repair, malfunction, or other troubleshooting service call.

3.6 SUBSTANTIAL COMPLETION AND FINAL ACCEPTANCE

A. Substantial completion and final acceptance of all equipment furnished under these Specifications will be withheld until after the installation and successful completion of the specified field performance testing.

11391B-1 - Blower System Schedule	
Description	IFAS System Blowers
Number of Units	3 Duty + 1 Spare Standby
Blower System – Turn Down Minimum Air Flow (Current) Maximum Air Flow (Future) Discharge Pressure – Low Discharge Pressure – High	 TBD(1) scfm Total TBD(1) scfm Total TBD(1) psi TBD(1) psi (Specified air flows shall be achieved over specified range of discharge pressures and temperatures specified in the Blower Package Schedule)
Current Design Conditions 5th percentile Air Flow 20th percentile Air Flow 50th percentile Air Flow 80th percentile Air Flow 95th percentile Air Flow Nominal Discharge Pressure=	**System Delivered Air Flow / Blower System Power Requirements** TBD(1) SCFM / TBD(2) KW TBD(1) SCFM / TBD(2) KW TBD(1) SCFM / TBD(2) KW TBD(1) SCFM / TBD(2) KW TBD(1) SCFM / TBD(2) KW TBD(1) psi
Future Design Conditions 5th percentile Air Flow 20th percentile Air Flow 50th percentile Air Flow 80th percentile Air Flow 95th percentile Air Flow Nominal Discharge Pressure=	**System Delivered Air Flow / Blower System Power Requirements** TBD(1) SCFM / TBD(2) KW TBD(1) SCFM / TBD(2) KW TBD(1) SCFM / TBD(2) KW TBD(1) SCFM / TBD(2) KW TBD(1) SCFM / TBD(2) KW TBD(1) psi
Starting Conditions	Design the Blower System to slowly increase air flow and pressure to flush water out of the air diffuser system piping upon startup. Startup one Blower Package at a time after a power outage.
Other Service Conditions	As noted on the Blower Package Schedule
Control Strategy	The Blower System Master Controller will 1) select the number of Blower Packages and each Blower Package speed to achieve the desired air flow rates at the system pressure required for maximum energy efficiency.

11391B-1 - Blower System Schedule

Notes:

(1) As determined by (and indicated on the Bid Form of) the IFAS Treatment System Bidder based on the following design constraints:

a. Air Flow Capacities shall be based on the Actual Oxygen Requirements specified for the IFAS Treatment System, the IFAS Treatment System Bidder's design of the aeration tanks and fine and coarse bubble air diffuser systems. Note: During normal operation, the air supplied by the blower will also supply air for mixing to the existing west distribution channel - Allow for 80 scfm min (5th and 20th percentile), 200 scfm average (50th percentile), and 320 SCFM maximum (80th and 95th percentile) for supply to existing coarse bubble diffusers in the existing west distribution channel. Blower size shall not be increased by these air flow rates, and during times of peak air demand this air will be manually shut off based on an alarm from the IFAS Treatment System Main Control Panel.

b. Design pressures shall include a 0.5 psi pressure drop allowance at maximum air flow capacities for piping and fittings provided by others, plus all pressure drops for equipment included in the IFAS Treatment System Bidder's scope of supply.

c. Low pressure shall be based on low aeration tanks levels (at low flows) and low air demand and High pressure shall be based on high aeration tank levels (at design maximum month flows) and high air demands.

(2) As determined by the Blower Manufacturer and IFAS Treatment System Bidder based on conditions provided by the IFAS Treatment System Bidder and as indicated on the Bidder's Bid Form. The "Blower System Power Requirement" for each condition given shall be determined by the Blower Manufacturer by estimating the project specific "wire to air" power requirement as follows:

a. Determine the most efficient number of blowers to be operated to satisfy the specified conditions and the required flow(s) and pressure(s) to be delivered by each Blower Package.

b. Utilize manufacturer's power performance curves for the Blower Packages that are required for the specified conditions to determine the power requirements. The power requirements shall be derived from and be consistent with and directly traceable to the blower specific energy performance guaranteed in the process performance guarantee specified above per ISO 1217 Annex C.

c. Apply efficiency factors for the proposed motor based on the manufacturers data for the NEMA MG-1 routine test results.

d. Apply efficiency factors for the proposed VFD based on the VFD manufacturer's specific published data on efficiency at full load.

e. Add in the power requirement for the blower cooling fan(s) and other motors included for the operating Blower Packages.

f. Air flow rates and energy demands for Channel Mixing within the West Distribution Channel shall be excluded from the Operations and Maintenance Life Cycle Analysis.

11391B-2 - Blower Package Schedule	
Description	IFAS System Aeration Blowers
Location	Indoor Installation (Existing Blower Building)
Standard Conditions for SCFM	
Temperature	68°F
Pressure	14.7 psia
Relative humidity	36%
Design Site Conditions for ICFM	
Site elevation	220 feet
Design inlet air temperature, min-max	-10 – 100°F
Design inlet pressure	14.49 psia
Design relative humidity	80% (at max inlet temperature)
Ambient blower room air temp, min-max	40 – 100°F
Capacity of Duty Blowers	
Maximum Air Flow Capacity	As required – See the Blower System Schedule.
Minimum Air Flow Capacity	As required – See the Blower System Schedule.
Design Discharge Pressure Max	As required – See the Blower System Schedule.
Design Discharge Pressure Min	As required – See the Blower System Schedule.
Maximum Blower Speed	TBD(2) rpm
Blower Package Power Requirements	Discharge Pressure = Design (Max + Min)/2
Operating Point #1 (at Min Air Flow Capacity)	As required – See the Blower System Schedule
Operating Point #2 (at (#1+ #3)/2)	As required – See the Blower System Schedule
Operating Point #3 (at (#1+ #4)/2)	As required – See the Blower System Schedule
Operating Point #4 (at (#3 + #5)/2)	As required – See the Blower System Schedule
Operating Point #5 (at Max Air Flow Capacity)	As required – See the Blower System Schedule
Service Conditions	
Electrical Classification	Unclassified Area
Transported Material	Process Air
Noise Requirements (w/enclosure)	TBD(2) (Manufacturer's Rated Noise Level with Standard Enclosure but no more than 88 dBA)
Piped/Ducted Connections	
Inlet	Piped/Ducted Inlet
Discharge	Flanged (piped)
Blower Motor & Motor Drive	
Motor Size (Min.)	TBD(2) HP
Enclosure	NEMA TEFC
Volts, Phase, Cycles	460, 3, 60
Speed (maximum)	3600 rpm
Service Factor	1.15 (Across the line) 1.0 Inverter driven
Efficiency	NEMA MG-1 Premium Efficient
Drive	Variable Frequency Drive
Variable Frequency Drive	
Location	TBD(2) – Remote from Blower Package unless it is clearly demonstrated that there is room to install new blowers while removing existing blowers one at a time. For the purposes of Bidding, assume Bidder to provide remote VFDs with NEMA 12 enclosures.
Accessories	Harmonic Filter

11391B-2 - Blower Package Schedule	
Accessories/Appurtenances to be included	
Ducted Inlet with Flexible Connector	High Temperature Shutdown
Inlet Filter/Silencer	High Pressure Shutdown
Discharge Silencer	Inlet/Discharge Pressure Transducers
Discharge Flexible Connectors	Inlet/Discharge Temperature Sensor
Pressure Safety Valve	Weatherproof Acoustical Enclosure w/ Cooling Fan
Check Valve	Variable Frequency Drive
Operator Control Panel	
Notes:	
(1) As determined by (and as indicated on the Bid Form of) the IFAS Treatment System Bidder.	
(2) As determined by the Blower Manufacturer (and as indicated on the attachment to Bid Form of) the IFAS Treatment System Bidder) based on conditions provided by the IFAS Treatment System Bidder.	

END OF SECTION

\\SRV\Projects\V\V0037 Vernon WWTP\005 WPCF Design\Design\Specifications\Preselection\IFAS\11391B - Rotary Screw Blowers.Doc

SECTION 11391C

IFAS TREATMENT SYSTEM MIXERS

PART 1 GENERAL

1.1 SUMMARY

A. Work under this Section includes furnishing of all labor, materials, tools, equipment and incidentals required and installation, start-up, testing and operator training for slow speed submersible mixers and accessories. This include, but is not limited to:

1. Mixers
2. Mixer Mounts
3. Hoists
4. Mixer Local Control Panels with Mixer Monitors
5. Variable Frequency Drives

B. Materials provided shall include all connection adapters, support pads, electrical and plumbing connections, and appurtenant equipment to provide a workable system as required by the system and specified herein.

1.2 RELATED SECTIONS

A. 11000 – Equipment – General

B. 11391 – IFAS Treatment System

C. 11391A – IFAS Treatment System Aeration Systems

1.3 REFERENCES

A. American Bearing Manufacturers Association (ABMA) Standards

B. American Gear Manufacturers Association (AGMA) Standards

C. American National Standards Institute (ANSI) Standards

D. American Society for Testing Materials (ASTM) Standards

E. International Electrotechnical Commission (IEC/EN) Standard 60034-30-1

F. Standards of the Hydraulic Institute (HI) Standards

G. Standards of the National Electrical Manufacturers Association (NEMA) Standards

H. Occupational Safety and Health Administration (OSHA) Standards

I. Mine Safety and Health Administration (MSHA)

J. ISO 21630:2007

K. Where reference is made to the above standards, the revisions in effect of the time of bid opening shall apply.

1.4 SUBMITTALS

A. Descriptive literature, bulletins and catalogs cut sheets of the equipment.

B. Certified shop and installation drawings showing details of construction, dimensions, and anchor bolt locations.

C. Provide performance data including the following:

1. Data on the characteristics and performance of the mixers, including input speed, output speed, impeller tip speed, AGMA rating, reducer service factor, agitator critical speed, bending moment, and reaction torque.

2. Data, assumptions, and calculations used to size and select the mixer.

3. Material data for all equipment, including shaft material, bearing type and material, and propeller size, type, and material.

4. Structural calculations to demonstrate the structural integrity of the combined mixer/mixer mounting system. Calculations shall account for the maximum mixer thrust and working loads over a specified mast length.

5. A structural Bill of Materials shall be provided that shall include properties such as yield strength of the mixer mast components. Dimensions and wall thickness of the manufacturer’s mast system shall be provided and included in the calculations.

6. Minimum ABMA B-10 bearing life calculations.

7. Design calculations demonstrating the mixer sizing and the equipment process design requirements are met.

8. Copies of the ISO 21630 Thrust performance test report for each mixer shall be submitted to the Engineer for approval prior to shipment. The mixer shall be tested complete with the specified Variable Frequency Drive.

9. Certification indicating that the mixing equipment has been designed to provide adequate mixing within tanks that include aeration diffusor systems without damaging the diffusers. Certification shall include mixer design criteria including mixer horsepower, tip speed, flow velocities and other applicable design criteria necessary to coordinate with the IFAS Treatment System Aeration System Manufacturer providing diffusers located within the aerated zones.

10. Complete data on electrical motors and Variable Frequency Drives (VFDs) including size, type, manufacturer, model, rated power, rated input power, power consumption versus operating speed (rpm) curve, and wiring diagrams.

11. Complete data on Local Control Panels including size, type, manufacturer, model, components and wiring diagrams.

D. The weight of each component including: motor, gearbox, shaft, and impeller.

E. List of manufacturer's recommended spare parts with the manufacturer's current price for each item.

F. Total bill of materials for all equipment.

G. Description of surface preparation and shop prime painting, including certification that the paint to be used to shop prime the equipment is compatible with the finish coat paint to be applied to the equipment.

H. Operation and maintenance manuals for each size mixer and include required cuts, drawings, equipment lists, descriptions, necessary to instruct operating and maintenance personnel with each specific piece of equipment.

I. Mixer Manufacturer's warranty for the equipment.

J. Factory test reports

K. Start-up, Commissioning, and Performance Testing Reports and Certifications

1.5 QUALITY ASSURANCE

A. All equipment furnished under this Section shall be the product of a single manufacturer who is fully experienced, reputable, and qualified in the manufacture of the equipment to be furnished.

B. The manufacturer shall have at least 5 years of experience in the manufacture of mixer drives, shafts, and impellers for similar service conditions and a minimum of 25 installations at equivalent applications as those described in this Section.

C. The mixing equipment shall be adequately and safely designed and constructed for heavy-duty use and continuous operation at the pressures and under all conditions of service to which they may be subjected.

D. The mixing equipment specified herein shall be designed, fabricated, and tested by a single manufacturer, which shall guarantee the performance of each mixer have sole source responsibility for said equipment.

E. Equipment shall be fabricated, assembled, erected, tested, and placed in proper operating condition in full conformity with the Drawings, Specifications, instructions and recommendations of the equipment manufacturer.

F. Mixer Manufacturer shall conduct factory testing and verification of the equipment prior to shipment. A report of factory testing shall be submitted to the Engineer.

G. The work of this Section shall be completely coordinated with Section 11391 IFAS Treatment System and Section 11391A IFAS Treatment System Aeration System. Verify at the site both the dimensions and work of other trades adjoining items of work in this Section before fabrication and installation of items herein specified. Field measurements shall be taken at the site to insure proper fitting of all items.

1.6 DELIVERY, STORAGE, AND HANDLING

A. Each unit shall receive a vapor phase inhibitor sprayed into the reducer housing interior at the factory to guard against internal corrosion during field storage of the equipment.

B. Finished iron and steel surfaces not painted shall be properly protected to prevent rust and corrosion.

C. All equipment delivered and placed in storage shall be stored with protection from inclement weather, humidity and temperature variations, dirt and dust, or other contaminants.

D. The equipment should be stored away from construction traffic and areas of debris.

E. If, for any reason, the equipment cannot be installed immediately upon receipt, it shall be stored indoors the manufacturer's instructions. If this is not possible, ensure that the components are adequately protected from exposure to weather in accordance with the manufacturer's instructions.

1.7 WARRANTY

A. The Mixer Manufacturer shall provide its standard full mechanical warranty for all equipment specified herein per its usual and customary warrantee period, but in no case shall these requirements be less stringent than as required in Section 11391 Paragraph 1.7.

MAINTENANCE AND SPARE PARTS

B. Spare Mixer: Provide one spare mixer (complete motor, mixer blade assembly, cable, mounting bracket) for each size of mixer provided.

C. Furnish one complete set of bearings, seals, and shims necessary for the operation of each mixer design. Suitably package or box and label all spare parts for storage and clearly labeled designating the contents and the unit for which they are intended.

D. Furnish one set of special tools required for normal operation and maintenance of the equipment.

E. Renewable/replacement parts shall be kept in stock and available for delivery in no more than 24 hours from receipt of request.

F. Lubricants - Prior to testing and acceptance, furnish a one year's supply of all lubricants recommended by the manufacturers of each component of the equipment furnished and installed.

1.8 PERFORMANCE REQUIREMENTS

A. The slow speed submersible mixers, with their appurtenances and cables, shall be designed in accordance with the requirements of Mixer Schedule 11391C-1 – Mixer Design Requirements located at the end of this Section.

B. The mixers shall be designed to thoroughly mix the entire tank in which they are installed to maintain the mixed liquor solids in suspension without the introduction of air. Suspension is defined as maintaining a minimum velocity so that the suspended solids concentration varies no more than +/- 10% from the average solids concentration in the tank.

C. Design Mixers in accordance with the process requirements of Mixer Schedule 11391C-2 – Mixer Process Design Requirements at the end of this Section.

PART 2 PRODUCTS

2.1 GENERAL

A. All parts shall be so designed and proportioned as to have liberal strength, stability, and stiffness especially adapted for the service application.

B. Provide foundation bolts, plates, nuts, and washers for the equipment. Nuts, bolts, and anchor bolts shall be made of Type 316 stainless steel or better. Provide each mixer with a flat base.

C. Brass, stainless steel or aluminum nameplates giving the name of the Mixer Manufacturer, model number and serial number, capacity, and other pertinent data shall be attached to each item of equipment. Materials chosen shall be compatible with the environment of this application.

2.2 MANUFACTURERS

A. Mixer Manufacturer – Subject to compliance with requirements, provide slow speed submersible mixers from one of the following:

1. Xylem-Flygt, Rye Brook, NY 10573

2. Wilo, Rosemont, IL 60018

3. or Equal

2.3 MIXERS

A. Each slow speed submersible mixer shall consist of a propeller assembly, propeller shaft, speed reducer gear unit, submersible electric motor and mixer related components.

B. Major mixer components, including mixer housing and cable entry, but excluding stand and propeller blades, shall be of grey cast iron, ASTM A-48 Class 35B, with smooth surfaces devoid of blow holes or other irregularities.

C. Propeller Assembly

1. Each propeller assembly shall consist of fiberglass reinforced polyurethane blades each integrated with stainless steel shaft for mounting in a cast iron hub.

2. Each propeller blade shall be removable for ease of installation & mounted into a socket in the side of the hub.

3. The propeller blade shape shall be a clogging-resistant, swept-back profile design which starts at the hub leaving no part of the shaft exposed.

4. The propeller shall be smooth, finished throughout, and shall be free from sharp edges.

5. The propeller assembly shall be designed to produce completely balanced loads on the vertical shaft.

6. The fabrication and erection details shall permit accurate field erection of the equipment and permit installation within the existing basins.

7. Stress in any propeller component except bolting shall not exceed 11,000 psi.

D. Propeller Shaft

1. The propeller shaft shall be made of stainless steel ASTM/AISI 431 or better.

2. The propeller shaft shall be bolted axially to the hub.

3. The propeller shaft shall be removable from the speed reducer gear unit without disturbing the internals of the speed reducer. Steady bearings will not be allowed.

E. Speed Reducer Gear Unit

1. The mixer manufacturer shall design and manufacture its own speed reducers. The design shall account for the fluid force extremes and overhung loads normally experienced in a fluid mixing environment.

2. The speed reducer shall be capable of 24 hr per day continuous operation in an outdoor environment. The mechanical rating of the speed reducer shall be at least 1.5 times the motor nameplate horsepower at full speed.

3. All gearing shall be AGMA Quality 10, per AGMA Standard 390.03, as a minimum.

4. The thermal rating of the speed reducer shall exceed the design mechanical rating to eliminate the need for external cooling. External cooling devices shall not be allowed.

5. The replacement of tank sealing devices, all anti-friction bearings, all oil seals, and lubricant maintenance shall not require removal of the speed reducer housing from its foundation. The speed reducer shall be provided with lifting lugs.

6. The speed reducing gear unit shall be designed such that with regular oil changes, no further maintenance should be required during the life of the submersible mixer in the installation.

7. The motor shall drive the submersible mixer propeller using a speed reducing gear unit, which shall be a two-stage helical type equipped with high precision, low loaded gears or a planetary gear reduction drive system. Worm gears, belts, and/or chain drives shall not be acceptable.

8. For two-staged helical gear reducing units:

   a. The motor shaft shall be provided with an integral driving gear.

   b. The intermediate shaft shall rotate in two spherical roller bearings and contain a second driving gear. The propeller shaft shall contain the second driven gear and rotate in one single row and one double row angular contact ball bearing or roller bearing.

9. For planetary style gear reducing units:

   a. The motor shaft shall be fitted with a keyed sun gear that uses high efficiency straight cut teeth to engage the planetary gear section.

   b. The sun gear system shall be custom matched to the planetary gear system to allow for propeller speed changes in the field by a simple exchange of the sun gear and the planetary gear plate.

c. The planetary gear section shall consist of a minimum of three identical gears spaced 120 degrees around the central sun gear and mounted on a stainless steel backing plate designed to withstand 100% lock stress from the propeller without gear or bearing damage.

d. Each planetary gear shall be supplied with precision needle bearings, which are lubricated by the gear lubricant in the gear chamber.

e. The planetary gear section shall also engage a ring gear mounted in the outer surface of the gear chamber which shall cause the motor rotation to also rotate the planetary gear plate which shall be fitted to the output propeller shafting by the use of a straight splined connection.

f. The planetary gear plate shall be retained on the output propeller shaft by the use of a snap ring and snap ring groove in the output shaft.

F. Submersible Electric Motor

1. The mixer shall have a high efficiency synchronous speed, inverter duty motor. The motor efficiency shall be equivalent to IEC IE4 (Super Premium Efficiency) levels or NEMA Premium Efficiency.

2. The drive shall monitor temperature and current and stop the mixer in case of overload.

3. The stator windings and stator leads shall be insulated with moisture resistant Class H (180 °C) insulation. The stator shall be trickle impregnated with Class H varnish and shall be force fitted into the stator housing.

4. The motor may be equipped with an integrated Variable Frequency Drive (VFD) suitable for severe duty service if it is housed in an air filled and watertight chamber and adjustable via remote communications from a separate local control panel.

G. Mixer Related Components

1. Bearings

a. Furnish each mixer with a minimum of four (4) sets of bearings spaced to minimize shaft deflection to offer maximum bearing life. At a minimum, at least two sets of the bearings shall be of double row design.

b. A minimum of two sets of bearings shall support the propeller shaft (shaft from gear box to the propeller). Designs where the propeller shaft is supported solely by the gearbox shall not be acceptable.

c. Bearing design shall provide a minimum ABMA B-10 life of 100,000 hours minimum at design point. Bearings shall be sealed, grease lubricated and maintenance-free.

2. Mechanical Seals

a. Each slow speed submersible mixer shall have an oil chamber for the shaft sealing system, and a second separate oil chamber for the gearbox. Plugs for drainage and inspection of the oil shall be easily accessible from the outside.

b. Each mixer shall be provided with three seals to separate the various parts of the mixer. The outer seal on the propeller shaft shall be a mechanical seal made of corrosion resistant cemented carbide (WCCR).

c. The seals shall operate in an oil reservoir that hydrodynamically lubricates the seal faces at a constant rate. Only the seal faces of the outer seal shall be exposed to the mixed media. The inner seal on the propeller shaft shall be a nitrile rubber lip seal isolating the propeller shaft oil chamber from the gearbox oil chamber. The third seal shall be a Viton rubber lip seal mounted on the motor shaft to isolate the gearbox oil chamber from the stator housing. The seals shall require neither maintenance nor adjustment.

d. The mechanical seal design shall have no provisions to change the oil within the first (3) three months of service.

3. Oil

a. The lubrication shall be such that start-up in highly variable climates, or extremely cold climates, shall require no priming, heaters, or other special effort or equipment.

b. Shaft seal oil chamber shall be filled with a medical white oil of paraffin type. The oil shall be free from aromatic hydrocarbons and be approved according to FDA 172.878.

c. Gearbox chamber shall be filled with a gear oil of type Mobilgear 630, Shell OMALA 220, or equal.

d. A single oil drain shall be provided at the low point of the speed reducer to allow oil drainage and leave a maximum residual of oil of no more than ¼″ in the drive housing.

4. Guards

a. All rotating shafts above platform level shall be supplied with guards in accordance with OSHA Standards.

5. Cable Entry

a. The cable entry seal shall consist of cylindrical elastomer bushings, without epoxies, silicones, or other secondary sealing systems. The use of Sikaflex 11FC or equivalent is strictly prohibited.

6. Power and Control Cables

a. Power and control cables shall be furnished in lengths to run un-spliced from each mixer to the proposed location of the Local Control Panel but in no case shall the length of the cable be less than 50 feet. Cables shall terminate with conductor sleeves that bundle the entire group of strands of each phase to improve termination at the Local Control Panel. The sleeves shall be provided to confirm that all strands of each conductor are terminated properly.

b. Cables shall be heavy duty rubber of the "NSSHOU" type and shall be approved by the MSHA for use in hazardous locations and shall conform to industry standards for loads, resistance under submersion against sewage, and be of stranded construction.

2.4 MIXER MOUNT ASSEMBLY

A. Each mixer shall be provided with a mount assembly, which shall allow the mixer to be raised, lowered, and easily removed for inspection or service without the need for personnel to enter the tank being mixed. The mixers shall have the capability to be repositioned at any elevation along the mast assemblies without draining the tanks.

B. The mount assembly shall consist of a square guide bar system installed in the tank using guide bar holders and a sliding guide bracket which is an integral part of the mixer. The mount assembly shall be designed to handle the entire weight of the mixer and all thrusts created by the mixer.

C. The mount assembly (guide bar system and guide bar holders) shall be of Type 316 stainless steel. All guide bar holders shall be identical in construction and interchangeable.

D. Provide 316 stainless steel anchorage devices and fasteners where required and approved for securing the mixer mount assembly to the existing aeration tanks including threaded fasteners for concrete inserts, through-bolts, and other required connectors.

2.5 HOIST SYSTEM

A. Provide hoist system with a portable power winch to be used for raising and lowering the submersible mixers which shall consist of portable davit cranes, pedestal base mounts, lifting cable assemblies, adhesive concrete anchors with PE Anchor Design in accordance with Section 11000 and wire rope keepers all provided from the same manufacturer.

B. The hoist system shall be designed, constructed, and installed in accordance with the best practice and methods, and shall operate satisfactorily when installed allowing operators to lift the mixer out of the tank and allow the blades to clear the top of tank level.

C. Provide the number of Portable Davit Cranes indicated on Schedule 11211 B – Mixer process Requirements at the end of this Section.

D. Provide a pedestal base mount, base cover, wire rope lifting cable assemblies, and wire rope keeper bracket with each mixer.

E. Base mounts and all mounting hardware shall be entirely stainless steel. Coordinate the type of base mounts with the installation requirements at each of the base mount locations.

F. Davit crane boom, mast, lifting winch, and base shall be fabricated from AISI 304 stainless steel, with electro-polish finish and allow the mast and the boom to rotate 360 deg. in the base.

G. Wire rope construction shall be 7×19 type 304 stainless steel cable with adequate lift rating and of sufficient length to meet the required lift below the mounting level for

raising and lowering the mixers. Wire rope lifting cables assemblies shall be equipped with a swaged ball fitting on one end to work with the quick disconnect anchor on the davit crane winch and on the other end a heat treated drop forged type 304 stainless steel oval hook for connection to the mixer and provided with sufficient length for lifting of the mixer. Wire rope keepers shall be stainless steel and designed to hold free ball fitting end of the wire rope lifting cable assembly when it is detached from crane. Base cover shall be a plastic cover that fits in the mast hole in the pedestal base to help keep water from collecting inside the base when the davit crane is removed.

H. The davit crane shall have a total weight not to exceed 150-pounds and a fixed lift capacity of 650-pound at all boom positions. The davit crane shall have an ultimate design factor greater than 3:1 for all components including the lifting winch and base. In the pedestal mount configuration:

1. The boom specified herein shall have a minimum hook reach of 42 inches measured from mast center to hook center, when boom is fully extended.

2. Hook height shall be adjustable to two positions, one at 50 degree and the other at 60 degree boom elevation from horizontal. At 50 degrees the minimum hook height shall be 79 inches and at maximum boom elevation, a minimum hook height of 83 inches.

I. Power winch shall meet the following requirements:

1. Attach to the portable davit crane and be compatible with the wire rope lifting cable assemblies.

2. Electrical components: 115V, single phase, 60 Hz electric motor with a pendant control with a minimum of 6 feet of cord.

3. Winch shall not exceed 90 lbs total weight.

2.6 MIXER MONITORING SYSTEMS

A. For each Mixer, provide manufacturer's standard control and monitoring system to monitor the mixer. At a minimum, the following functionality shall be provided:

1. Sensors located within the submersible mixer body:

a. Leak sensors

b. Motor temperatures

2. A monitoring device that displays sensor status, and that can be configured to send an alarm and turn off the mixer if conditions warrant it.

B. The monitoring system shall have a user interface which is suitable for panel mounting in a Local Control Panel with suitable access by the operator.

2.7 CONTROLS FOR MIXERS WITH INTEGRATED VFD'S

A. Note this Paragraph 2.7 only applies to mixers with integrated variable frequency drives (VFDs). If mixers without an integrated VFD are provided, refer to Paragraph 2.8 which requires a scope of supply with similar functionality.

B. Each Mixer integrated VFD shall be programmed to perform the following functions:

1. Soft start and soft stop of the mixers.
2. Detect mixer overload and clear the overload by reversing the mixers.
3. If overload still exists, give an alarm and stop the mixers.
4. Phase correction to ensure correct rotation of the mixer blades.

C. For each mixer, the mixer manufacturer shall provide one NEMA 4X UL508 Local Control Panel with one 480V 60Hz three phase power feed that provides power to the mixer, mixer monitor equipment and a separate operator interface terminal (OIT) that shall be installed on an inner dead front door of the Local Control Panel all designed to provide the required functionality.

D. Each OIT shall monitor the following items:

1. Real-time power utilization in kWh.
2. Mixer rotational speed.
3. Mixer seal leak status and alarm.
4. Mixer motor load status.

E. Each Local Control Panel and OIT shall have the following functionality at a minimum:

1. Allow the operators to change the rotation speed of the mixers.
2. Communicate all locally monitored information to the PLC provided with the IFAS Treatment System and from there to the SCADA system for remote monitoring and control of the mixers via a serial communication protocol that is compatible with all equipment. At a minimum, this shall include:
   a. Analog Input – VFD Speed
   b. Analog Output – VFD Speed Command
   c. Digital Output – VFD Start/Stop
   d. Digital Inputs – Auto, Fault, Running, Leak Detection Fault, Motor Temperature Fault
3. Shut down the mixer as recommended by the manufacturer to protect the mixer based on the status of the pump monitor.
4. Display alarm and run status using panel lights and OIT displays color coded as directed by the PCSP. This following convention may change:
   a. Amber Alarm
   b. Red = Run, Open
   c. Green = Off, Closed

F. Mixer Manufacturer shall provide the required accessories in the Local Control Panel to connect the OIT to the Mixer with integrated VFD, communicate with the mixers monitoring system, and communicate to the PLC provided with the IFAS Treatment

System. The accessories in the Local Control Panels shall include, at a minimum, main circuit breaker, surge protective devices, control power transformers, 120-VAC surge suppressors, power supply for operator interface panel with battery backup, terminal blocks for mixer power and signal connections, and terminals for serial communications to and equipment provided by others (external SCADA system and PLCs).

G. Local Control Panel shall be designed to shade the OIT and protect it from sunlight while allowing operators to observe the OIT. Provide additional sunshades for the Local Control Panel to meet this requirement. Sunshade shall be FRP, sized to properly shade control panel, and have coordinated mounting with the control panel and be by Intertec, Tracom, or equal.

2.8 CONTROLS FOR MIXERS WITHOUT INTEGRATED VFDS

A. Note this Paragraph 2.8 only applies to mixers without integrated variable frequency drives (VFDs). If mixers with an integrated VFD are provided, refer to Paragraph 2.7 which requires a scope of supply with similar functionality.

B. Each Mixer without integrated VFD shall be provided with an external remotely located VFD programmed (with additional logic as necessary) to perform the following functions:

1. Soft start and soft stop of the mixers.

2. Detect mixer overload and clear the overload by reversing the mixers.

3. If overload still exists, give an alarm and stop the mixers.

4. Phase correction to ensure correct rotation of the mixer blades.

C. For each mixer, the mixer manufacturer shall provide one NEMA 4X UL508 Local Control Panel with one 120V single phase power feed (and an isolated junction box with junction terminals for the variable frequency/voltage 480V 60 Hz three phase power feed from the VFD to mixer) that provides power to the mixer monitor equipment and a separate operator interface terminal (OIT) that shall be installed on an inner dead front door of the Local control Panel all designed to provide the required functionality.

D. Each OIT shall monitor the following items:

1. Real-time power utilization in kWh.

2. Mixer rotational speed.

3. Mixer seal leak status and alarm.

4. Mixer motor load status.

E. Each Local Control Panel and OIT shall have the following functionality at a minimum:

1. Allow the operators to change the rotation speed of the mixers.

2. Communicate all locally monitored information to a PLC provided with the IFAS Treatment System and from there to the SCADA system for remote

monitoring and control of the mixers via a serial communication protocol that is compatible with all equipment. At a minimum, this shall include:

a. Analog Input – VFD Speed

b. Analog Output – VFD Speed Command

c. Digital Output – VFD Start/Stop

d. Digital Inputs – Auto, Fault, Running, Leak Detection Fault, Motor Temperature Fault

3. Communicate all required information to the external VFD via a serial communication protocol that is compatible with all equipment.

4. Shut down the mixer as recommended by the manufacturer to protect the mixer based on the status of the pump monitor.

5. Display alarm and run status using panel lights and OIT displays color coded as directed by the PCSP. This following convention may change:

a. Amber Alarm

b. Red = Run, Open

c. Green = Off, Closed

F. Mixer Manufacturer shall provide the required accessories in the Local Control Panel to connect the OIT to the external remotely located VFD, communicate with the mixers monitoring system, and communicate to the PLC provided with the IFAS Treatment System. The accessories in the Local Control Panels shall include, at a minimum, main circuit breaker, surge protective devices, control power transformers (if required), 120-VAC surge suppressors, power supply for operator interface panel with battery backup, terminal blocks for mixer power (in a separate isolated area), and signal connections, and terminals for serial communications to the remote VFDs and equipment provided by other (external SCADA system and PLCs).

G. Local Control Panel shall be designed to shade the OIT and protect it from sunlight while allowing operators to observe the OIT. Provide additional sunshades for the Local Control Panel to meet this requirement. Sunshade shall be FRP, sized to properly shade control panel, and have coordinated mounting with the control panel and be by Intertec, Tracom, or equal.

H. Furnish a wall mounted NEMA 12 rated VFD for each mixer suitable for external remote mounting inside the nearby blower building:

1. The external VFDs shall be Allen Bradley PowerFlex 700, ABB ACS880 Series, Cutler Hammer SVX9000 or equal and be provided with a DV/DT output filter and a 5% line reactor.

2. Installing multiple VFDs in a single control panel is not allowed for safety reasons.

I. Factory test each mixer with its paired VFD and Local Control Panel as a matched set prior to shipment to the job site and demonstrate all of the above specified functionality.

2.9 MIXER FINISHES

A. All fabricated steel (excluding stainless steel), and cast iron shall be factory prepared, factory primed, and factory finished painted. Surface preparation shall be per SSPC-SP6 commercial blast followed by the manufacturer's standard painting system. Touch-up paint and field touch-up services shall be provided by the manufacturer as specified to restore integrity of coating system that may be damaged during construction.

B. All cast iron surfaces coming in contact with the mixed liquid shall be protected by a factory applied spray top coat of oxiranesther (Duasolid) paint finish on the exterior of the mixer.

2.10 SAMPLER

A. Provide an EPA compliant stainless steel Bomb Sampler with a 500mL capacity that that can be filled when contact is made with any hard surface or by pulling up on a separate pull line at any desired depth. Sampler is designed so that retrieving the sampler or releasing the pull line reseals the sampler. Provide sampler with Unit remains completely sealed until activated. Provide with 50 feet of nylon cord for lift line and 50 feet of nylon cord pull line with a different color.

B. Provide a 20 foot long extension Aluminum Telescopic Pole (3 section design – collapsible to 90 inches) with connect and clean Locking Cone and PRO Locking Collar. Provide and mount stainless steel band clamps a pully to secure lift line and pull line to pole to allow for collection samples up to 10 feet away from the edge of the tank.

PART 3 EXECUTION

3.1 MANUFACTURER'S FACTORY TESTS

A. Inspect and test the mixers in accordance with the Mixer Manufacturer's standard quality control procedures to ensure the quality of materials used in the manufacture of the units and workmanship conform to the specified requirements and highest industry practice, the units operate properly, and the units have been correctly and adequately prepared for shipment, long term site storage and initial operation.

B. As a minimum, perform the following inspections and tests on each unit before shipment and provide a written report including all test procedures and results to the Engineer as a submittal prior to shipment:

1. Test motor and cable insulation for moisture content or defects.

2. Run mixer dry prior to submergence to establish correct rotation and mechanical integrity.

3. Run mixer for 30 minutes submerged a minimum of twelve ft. under water.

4. Test motor and cable insulation for moisture content or defects after completing the prior tests.

3.2 GENERAL

A. All work in the Part 3 Execution will be performed by the Buyer unless reference is made to the "manufacturer" in which case it shall be the responsibility of the

manufacturer. If the paragraph title has "manufacturer" in it, them all items listed in the paragraph shall be the responsibility of the "manufacturer". All equipment referenced shall be considered "Goods" and all other items of work performed by the manufacturer shall be considered "Special Services".

B. Unload and thoroughly inspect the equipment upon arrival at the project site and report observed damage immediately to the manufacturer and to the Engineer in writing. The manufacturer shall repair to as-new condition or replace damaged equipment. Any repair work shall be approved by the Engineer and performed by the manufacturer's factory-trained technician.

C. Install the equipment in accordance with the manufacturer's shop drawings, instructions, and recommendations, and in accordance with the contract drawings and specifications.

D. Provide finish painting of items with a shop prime coat and touch-up painting of those areas damaged during installation.

E. The manufacturer shall provide a representative to inspect and verify in writing that the installation of the equipment is in accordance with the manufacturer's shop drawings, instructions and recommendations. The manufacturer shall report deviations to the Contractor and to the Engineer in writing. Coordinate the schedule of this inspection with the manufacturer so that the inspection and needed corrective actions are completed prior to proceeding with testing activities.

F. Provide on-site assistance and coordination necessary for the manufacturer to complete the various inspections and various testing requirements specified in this Section and make the necessary adjustments, repairs, or replacements required to make the system pass all testing requirements.

G. Coordinate the location of the pedestal base mounting location mount guide system to allow for proper operation while raising and lowering the mixers

3.3 MANUFACTURER'S FIELD SERVICES

A. Pre-Installation

1. Manufacturer shall provide a representative to attend a minimum of two pre-installation meetings via conference call of up to 4 hours each to review general procedures, erection and installation instructions, and installation sequence. This shall include coordinating Control System connections with the plant's SCADA system.

B. Installation, Commissioning and Startup:

1. Provide the services of a manufacturer's representative who is experienced in the installation, adjustment, and operation of the specified equipment shall be provided.

2. Mixer Manufacturer's representative shall assist in installation and aligning of mixer and in coordinating electrical connections or any other miscellaneous coordination.

3. Final adjustment: Check and readjust operating items, leaving items undamaged and in complete and proper operating order.

4. The manufacturer's technician shall prepare a written report specifying that the equipment is installed according to the manufacturer's recommendations and is ready for permanent operation. The report shall also confirm that nothing in the installation will render the manufacturer's warranty null and void.

5. The Mixer manufacturer shall furnish four (4) trips each consisting of one (1) 8-hour days of on-site service (exclusive of travel time), for inspection of the installed mixer mount equipment. This is based on installing equipment within Tanks #3, #4, #5, & #6 one at a time in order to maintain plant operations as the tanks are converted one-by-one.

6. The manufacturer shall furnish two (2) trips each consisting of one (3) 8-hour days of on-site service (exclusive of travel time), for installation and start-up and commissioning including field quality control tests of all mixers.

7. In the event the mechanisms fail to meet the requirements specified above, the necessary changes shall be made and the mechanisms retested. Make all required adjustments to each unit as directed by the equipment manufacturer representative.

8. If the mechanisms remain unable to meet the specified requirements to the satisfaction of the Owner, the mechanisms shall be removed and replaced with satisfactory mechanisms at no cost to the Owner.

C. Training

1. Training shall be scheduled after copies of operation and maintenance manuals specified in Section 01770 have been delivered and be scheduled at least 10 days in advance with the Buyer.

2. The manufacturer shall provide the services of a factory-trained representative to train the Owner on the operation and maintenance of equipment supplied under this Section in accordance with the requirements of Section 11000.

3. Provide a minimum of 8 hours of training consisting of two sessions, each session being four hours long. Each session must be on separate days, and sessions shall not be on consecutive days.

D. Performance Testing

1. Provide services of a factory trained technician for a minimum of three 8-hour days to complete the testing as described herein.

2. Manufacturer services does not include paying for the first round of laboratory analyses required during performance testing.

E. The actual number of days on site shall be increased above the minimum specified as necessary, without additional cost to the Owner, as necessary to comply with this specification.

3.4 INSTALLATION (TO BE PERFORMED BY BUYER)

A. Buyer shall install the mixers in phases to allow for maintenance of plant operations during construction following the Preliminary Sequence of Construction as detailed in

Section 11391 and in accordance with Seller's design, and the equipment installation criteria specified herein.

B. Mixer Mounts

1. Installation of mixer mounts shall be completed within Tanks #3, #4, #5, and #6 as these tanks are taken offline one-by-one for tank conversion and equipment installation. Buyer to coordinate with IFAS Treatment System Seller for installation schedule.

2. Installation of mixer mounts within Tanks #1 & #2 shall be coordinated with the IFAS Treatment System Seller to occur when these tanks are converted into the IFAS Treatment System configuration and equipment installed.

3. Following installation of mounts, manufacturer's representative shall inspect and certify that mixer mounts are properly installed.

4. Shelf-spare mixer, if purchased, shall be installed and used for testing mixer mounts within each tank.

C. Mixers

1. Installation of mixers within all tanks shall occur only once the following have been completed:

a. IFAS Treatment Equipment (exclusive of the IFAS Media and IFAS media Retention Screens) within all aeration tanks have been installed and met commissioning requirements.

b. Zimpro PACT-WAR system is turned off, the acceptable time period has elapsed for removal of Zimpro PACT-WAR impacts, and Seller certifies that any remaining impacts from the PACT-WAR System will not invalidate the IFAS Treatment System performance guarantee.

c. The aeration tanks are ready to be converted to the five-stage BNR configuration.

2. Following installation of all mixers, manufacturer's representative shall perform all pre-commissioning and commissioning requirements.

D. The warrantee period shall commence at the completion of the mixer commissioning, which is expected to occur six to eighteen months after certification that the mixer mounts are properly installed.

3.5 COMMISIONING REQUIREMENTS

A. Commissioning Team: The commissioning team shall consist of the Engineer, the Contractor, and the manufacturer personnel capable of testing and adjusting electrical, mechanical, instrumentation, and controls equipment and systems.

B. The startup of the equipment shall be aborted if any system deficiency prevents the successful completion of the test. Pre-commissioning check and commissioning shall be aborted if a required commissioning team member is not present for the test.

C. Pre-Commissioning: Test and verify the installation of the equipment and ancillary systems prior to startup, Correct deficiencies discovered and re-test until commissioning is complete. The tests shall include, but not necessarily be limited to:

1. General: Inspect the installed Goods for proper alignment, correct operation, proper connection, and satisfactory function of all components, including ground fault circuit interrupters and a safety inspection of wet cable connectors. Approve the installation and provide a written certification that the system components have been installed correctly and are ready for operation.

2. As-built documents: verify that equipment are consistent with the design.

3. Rotation: Test rotation of motors to confirm they operate in accordance with design.

4. Vibration: Operate rotating equipment and demonstrate it does not vibrate in excess of manufacturers' recommendations.

5. Control System: Confirm electrical continuity between equipment and control system and confirm inputs and outputs are correctly wired. Coordinate with the Buyer, and provide loop test sheets to document that each physical signal in accordance with the P&IDs and Electrical Drawings has been correctly landed and each control loop is tested as being programmed in accordance with the requirements herein.

6. Instruments: Calibrate field instruments that are not factory-calibrated. Check the calibration of all instruments using process conditions where possible, or simulated conditions where operating the process would be impractical.

7. SCADA Coordination: Manufacturer to prove the Ethernet interface with monitoring and control functions between the Control Panel and the plant control system. Manufacturer to coordinate with the Plant Control System Programmer (PCSP) during the interface test.

8. Electrical: Verify continuity in accordance with Division 16 – Electrical of the Buyer's Construction Contract.

9. Other: Test mixers in tank filled with plant water for commissioning tests.

D. Commissioning:

1. Upon completion of pre-commissioning and just prior to the conversion of the aeration tanks in into the five-stage BNR configuration, the Contractor, in the presence of the Engineer and a qualified manufacturer's representative, shall perform a preliminary test on each mixer to ensure the functioning of all component parts to the satisfaction of the Engineer.

2. Demonstrate that the system and related control system operate in accordance with the specifications, including all operating, monitoring, and shutdown functions and remote "call in" alarm functionality is operable.

3. All mixers shall be checked with amperage and voltage measurements to assure that each is operating at the same power draw at full speed for a minimum of one hour. With all units operating, the transient power consumption of each

size mixer as recorded by the wattmeter shall not vary more than plus/minus 5 percent from the average value for the two (2) units.

4. Reduce speed to manufacturer recommended speed for the mixer and continue operating the mixer for 24 hours without overheating, excessive vibration, or overloading.

5. If, in the opinion of the Engineer, the commissioning tests do not meet the requirements specified herein, performance testing will not begin until the manufacturer has made such adjustments, changes, and/or additions as necessary to correct the system, and demonstrated this by a satisfactory commissioning test as specified above.

6. If, in the opinion of the Engineer and the manufacturer's representative, the system meets the requirements specified herein, the system will advance to startup testing.

3.6 PERFORMANCE TESTING

A. Conduct performance tests after the entire installation is complete, the tank is in operation for its intended use, and ready for testing.

B. Perform a Suspended Solids Concentration Test in one of each uniquely sized process tank in which the submersible mixers have been installed (one of each sized anaerobic selector zone, one pre-anoxic aerobic swing zone, and one post-anoxic zone). The Suspended Solids Concentration Test shall verify that the submersible mixers as designed are capable of achieving complete mixed conditions within the tank they are installed (suspended solids concentration varies no more than +/- 10% from the average solids concentration in the tank). The following test procedures shall be followed:

1. The tank which is being tested shall be placed in service (flow-through operation) for a minimum of 48 hours prior to commencement of a test with a mixture of wastewater and activated sludge. The mixed liquor suspended solids concentration shall be representative of typical operating conditions.

2. Collect samples at the end of the 30-minute test period with the mixer running at the mixer design speed or identified on the Bid Form throughout the duration of the test.

3. If the mixer being tested is located in a zone with air diffusers, then no air addition is allowed during testing.

4. Collect a minimum of four samples for each tank tested.

5. Samples shall be taken at locations as determined by the Engineer with sampling equipment provided with the mixers. In general, samples shall be equally spaced horizontally and vertically within each zone and not be taken from existing platforms within 1 feet of either a tank wall, baffle wall, tank bottom, or water surface elevation.

6. Contract with an environmental laboratory certified by the State of Connecticut. to analyze the total suspended solids concentration in each sample utilizing standard methods for wastewater analysis.

7. The results of the Suspended Solids Concentration Test shall be assembled in a report that demonstrates compliance with the minimum mixing requirements specified herein. The report shall be provided to the Engineer within three weeks of the test and shall include the certified results from the laboratory.

C. Should any portion of the system fail to meet the requirements specified, then make any and all necessary modifications such that the system does meet the requirement of this Section, at no additional cost to the Owner.

D. In the event the equipment fails to meet the test requirements, the necessary changes shall be made and the equipment retested. If the equipment remains unable to meet the test requirements to the satisfaction of the Engineer, it shall be removed and replaced with satisfactory equipment at no expense to the owner.

Mixer Schedule 11391C-1 – General Mixer Design Requirements	
Parameter	**Design**
Submersible Mixer Rating	Continuous submergence under water, without loss of watertight integrity, to a depth of 130 ft.
Liquid Being Mixed	Municipal Wastewater Treatment Plant Mixed Liquor and/or Return Activated Sludge
Solids Concentration Range	1,000 – 20,000 mg/L
Minimum SVI of MLSS	60 mL/g
Duty	Continuous; Designed for a minimum of ten starts per hour across the line; Designed for unlimited number starts per hour when operated with a variable speed drive
Voltage	460-V, 3-ph, 60-Hz
Motor Inverter Duty Rated	Yes
Other	Provide slow speed submersible mixers in all anaerobic, anoxic, and the appropriate swing zones, as required by the IFAS Treatment System Seller to completely mix the zones in which they are installed. Unless otherwise specified, all mixers shall be same model and size for all process zones to promote interchangeability of and minimizing spare parts. VFDs will be used to control the speed of the mixers in zones where less mixing is required.

Mixer Schedule 11391C-2 – Process Design Requirements

Location [1]	Anaerobic/Anoxic Selectors			Pre-Anoxic Zone[4]	Anoxic / Aerobic Swing Zone [4]	Post-Anoxic Zone[4]
	#1	#2	#3			
Number of Trains (#)	2	2	2	2	2	2
Number of Zones per Train (#)	1	1	1	TBD[2]	TBD[2]	TBD[2]
Zone Width (ft)	TBD[2]	TBD[2]	TBD[2]	TBD[2]	TBD[2]	TBD[2]
Zone Length (ft)	TBD[2]	TBD[2]	TBD[2]	TBD[2]	TBD[2]	TBD[2]
Zone Side Water Depth (ft)	TBD[2]	TBD[2]	TBD[2]	TBD[2]	TBD[2]	TBD[2]
Number of Mixers per Zone (#)	TBD[3]	TBD[3]	TBD[3]	TBD[3]	TBD[3]	TBD[3]
Thrust per Mixer (Newtons)	TBD[3]	TBD[3]	TBD[3]	TBD[3]	TBD[3]	TBD[3]
Propeller & Motor						
Diameter (in)	TBD[3]	TBD[3]	TBD[3]	TBD[3]	TBD[3]	TBD[3]
No. of Blades (#)	TBD[3]	TBD[3]	TBD[3]	TBD[3]	TBD[3]	TBD[3]
Maximum Design Mixer Speed (rpm)	TBD[3]	TBD[3]	TBD[3]	TBD[3]	TBD[3]	TBD[3]
Motor Rated Power (HP)	TBD[3]	TBD[3]	TBD[3]	TBD[3]	TBD[3]	TBD[3]
Number of Davit Cranes	3 (one per each pair of aeration tanks)					

Notes:

(1) Zones defined herein are minimum requirements for the IFAS Treatment System scope of supply. As needed by the IFAS Treatment System Bidder, additional zones may be required. Amend table as necessary to incorporate all zones requiring mixing to meet the IFAS Treatment System Performance Guarantee as specified.

(2) As determined by (and as indicated on the Bid Form of) the IFAS Treatment System Bidder.

(3) As determined by the Mixer Manufacturer and the IFAS Treatment System Bidder (and as indicated on the attachment to Bid Form of) the IFAS Treatment System Bidder. Parameter to be determined for each unique tank size and configuration.

(4) Mixers in these Zones shall be designed to mix tank contents with diffused air aeration system at bottom of tank but with no air flow. During aeration periods, mixer shall be able to withstand forces from diffused aeration system with mixer off. Coordinate with IFAS Treatment System Aeration System Manufacturer.

END OF SECTION

J:\V\V0037 Vernon WWTP\005 WPCF Design\Design\Specifications\Preselection\IFAS\11391C - Mixers.docx

APPENDIX A

Drawings

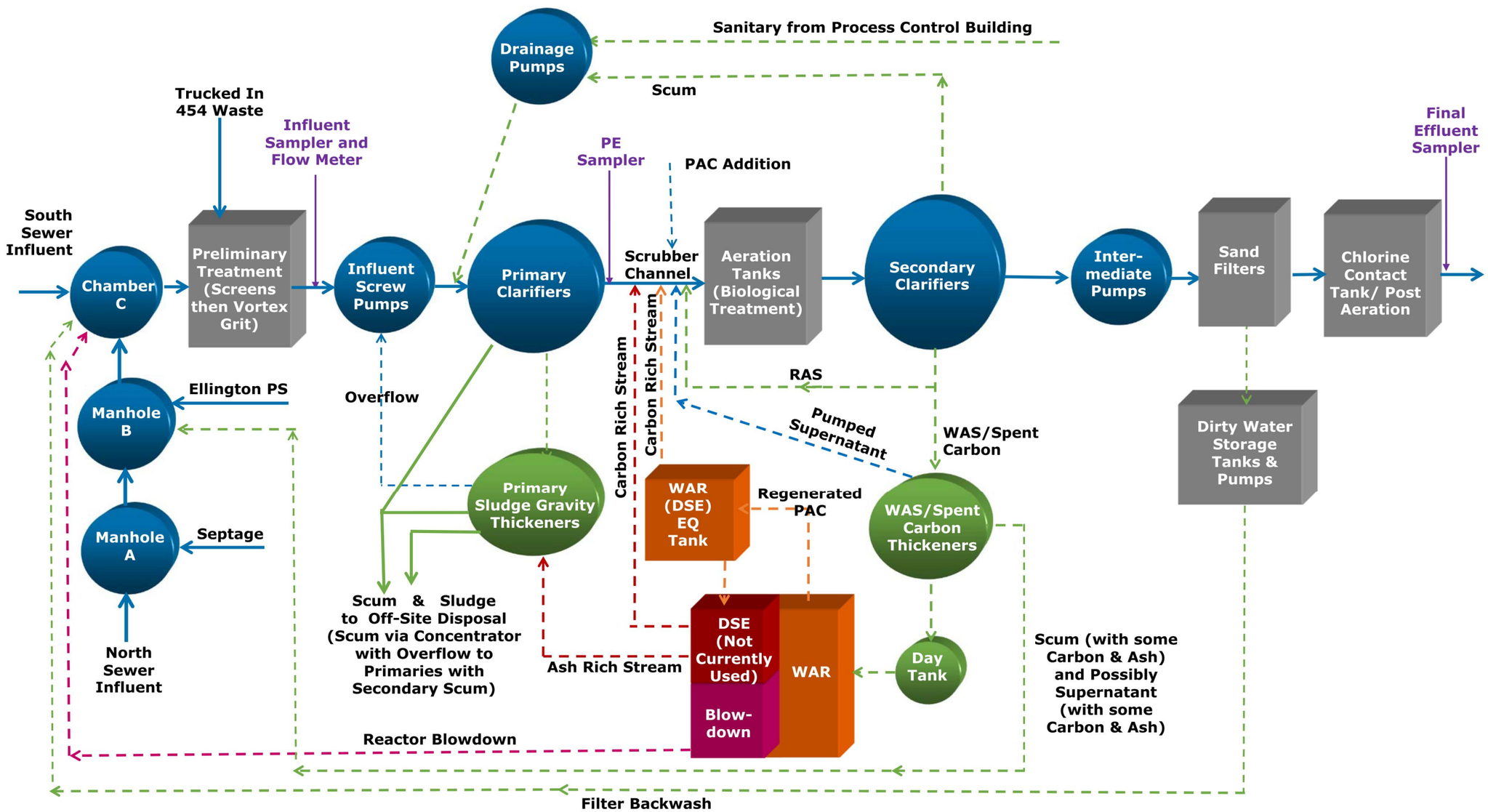

Vernon WWTF Schematic – Existing Processes

Tighe&Bond
www.tighebond.com

Equipment Preselection

Town of Vernon, Connecticut

MARK	DATE	DESCRIPTION

PROJECT NO:	V0037
DATE:	SEPTEMBER 2017
FILE:	V0037-05-Figures 1 and 2.dwg
DRAWN BY:	ADW/FAM
CHECKED:	IBC
APPROVED:	SES

EXISTING PROCESS FLOW DIAGRAM

SCALE: NO SCALE

FIGURE 1

Last Saved: 9/25/2017
Plotted On:Sep 25, 2017-3:15pm By: ASpaeth
Tighe & Bond, Inc. J:\V\V0037 Vernon WWTP\05 - WPCF Design\Drawings_Figures\AutoCAD\Sheet\V0037-05-Figures 1 and 2.dwg

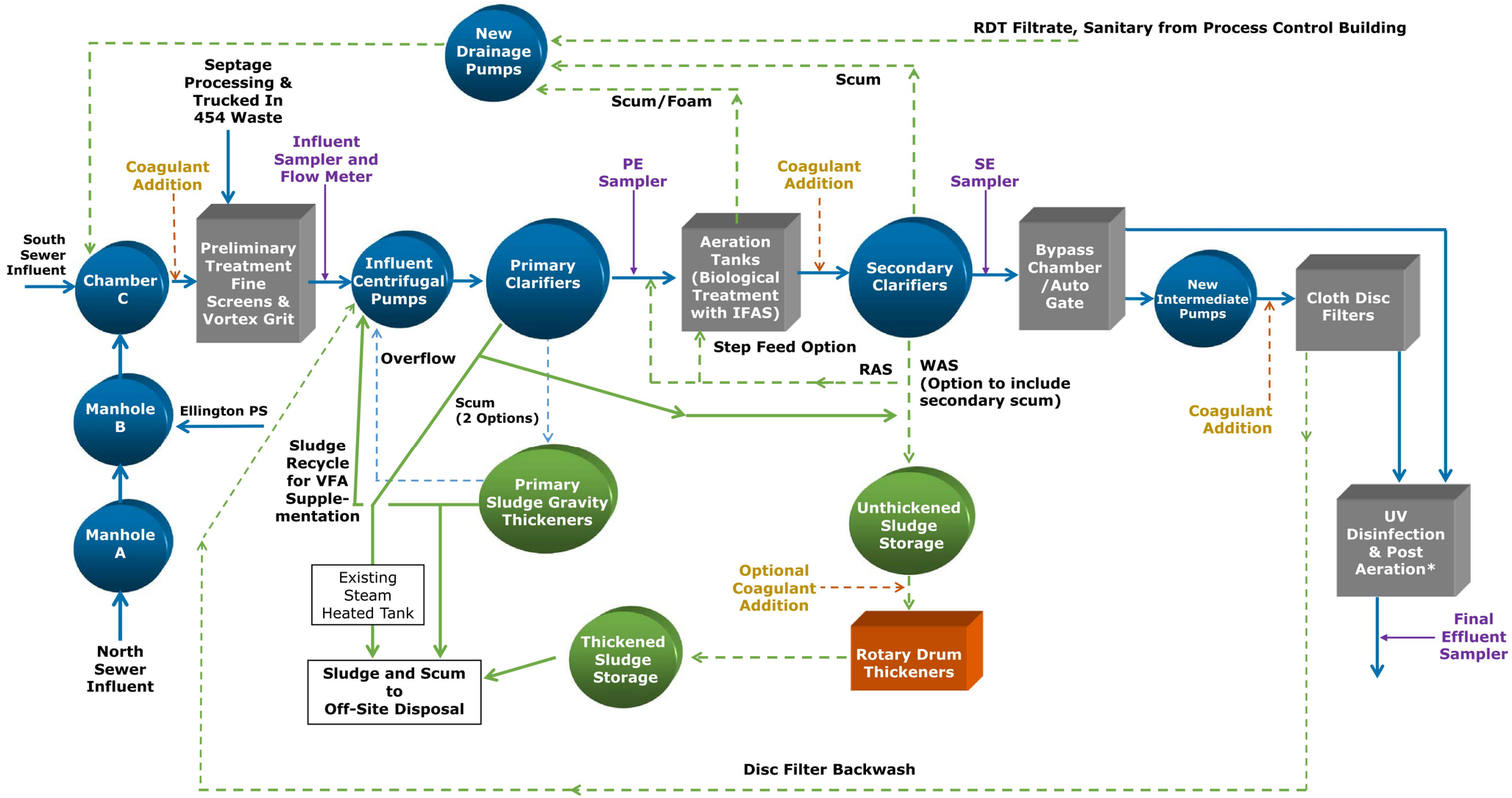

Tighe&Bond
www.tighebond.com

Equipment Preselection

Town of Vernon, Connecticut

MARK	DATE	DESCRIPTION

PROJECT NO:	V0037
DATE:	SEPTEMBER 2017
FILE:	V0037-05-Figures 1 and 2.dwg
DRAWN BY:	ADW/FAM
CHECKED:	IBC
APPROVED:	SES

PROPOSED PROCESS FLOW DIAGRAM

SCALE: NO SCALE

FIGURE 2

Last Saved: 9/25/2017
Plotted On:Oct 06, 2017-4:55pm By: ASignelli
Tighe & Bond, Inc. J:\V\V0037 Vernon WWTP\05 - WPCF Design\Drawings_Figures\AutoCAD\Sheet\V0037-05-Figures 1 and 2.dwg

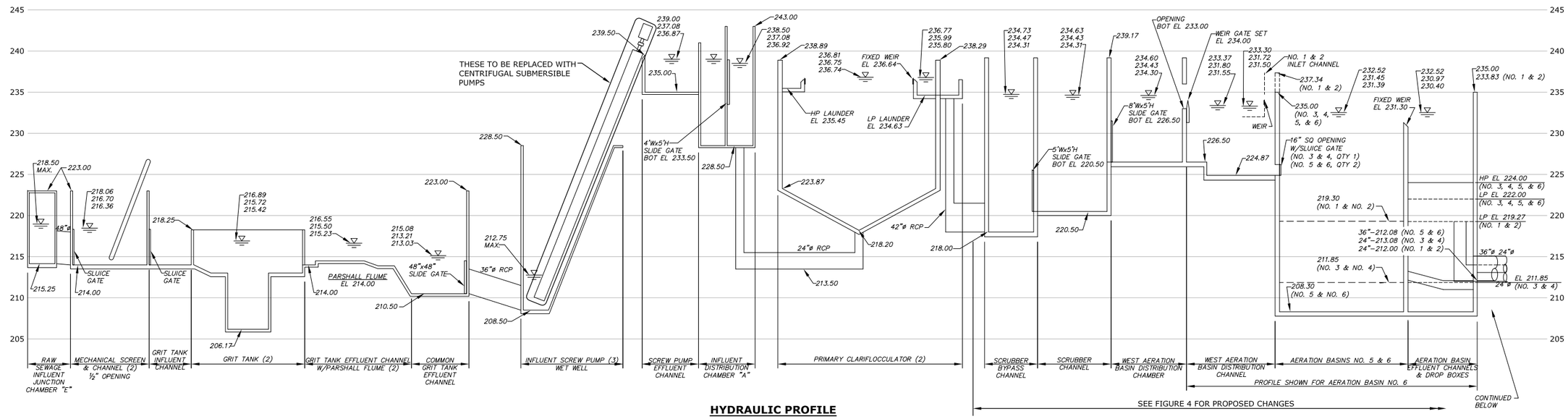

HYDRAULIC PROFILE

SCALE: HORIZ: NONE
VERT: ¾"=5'-0"

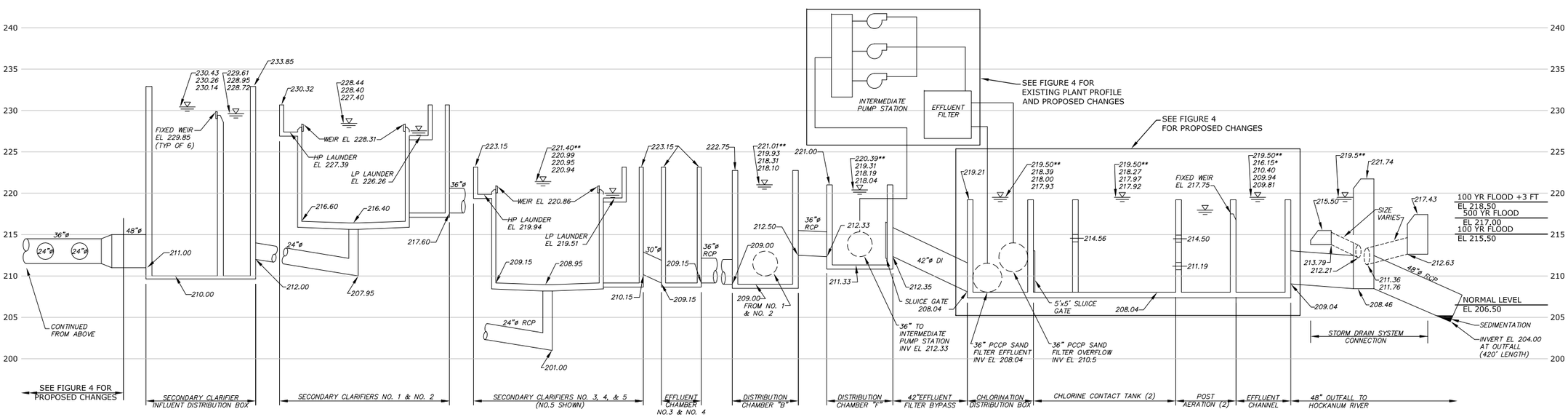

HYDRAULIC PROFILE

SCALE: HORIZ: NONE
VERT: ¾"=5'-0"

LEGEND

EL PEAK HOUR (*, ** SEE NOTES)
EL MAX DAY
EL AVERAGE DAY

BASIS OF EXISTING HYDRAULIC PROFILE

FLOW CONDITION	INFLUENT FLOW (MGD)	RETURN SLUDGE FLOW (MGD)	UNITS OUT OF SERVICE
PEAK HOUR	22.0	8.0	(1) SECONDARY CLARIFIER
MAXIMUM DAY	9.7	8.0	(1) SECONDARY CLARIFIER
AVERAGE DAY	7.1	3.5	(1) GRIT TANK, FLUME

1. AN * INDICATES PEAK PROFILE CALCULATED FROM STARTING WATER SURFACE EL 215.50 IN THE HOCKANUM RIVER.
2. AN ** INDICATES PEAK PROFILE CALCULATED FROM STARTING WATER SURFACE EL 218.50 IN HOCKANUM RIVER.
3. ALL OTHER PROFILES CALCULATED FROM STARTING WATER SURFACE EL 206.50 IN THE HOCKANUM RIVER WITH 6.7 MGD OF FLOW FROM 25-YR STORM AND CCT OVERTOPPING.
4. ALL PROFILES CALCULATED BYPASSING THE EFFLUENT SAND FILTERS.
5. THE VERTICAL DATUM REFERENCES NGVD29.
6. NUMBER OF UNITS FOR EACH PROCESS SHOWN IN PROFILE (#).

Tighe&Bond
www.tighebond.com

Equipment Preselection

Town of Vernon, Connecticut

MARK	DATE	DESCRIPTION

PROJECT NO:	V0037
DATE:	SEPTEMBER 2017
FILE:	V0037-Figure 3.dwg
DRAWN BY:	REJ, AJS
CHECKED:	SHB
APPROVED:	FAM, SES

EXISTING PLANT HYDRAULIC PROFILE

SCALE: AS SHOWN

FIGURE 3
SHEET 1 OF 2

Last Saved: 10/3/2017
Plotted On:Oct 03, 2017-8:55am By: ASpinelli
Tighe & Bond, Inc. J:\V\V0037 Vernon WWTP\05 - WPCF Design\Drawings_Figures\AutoCAD\Sheet\V0037-Figure 3.dwg

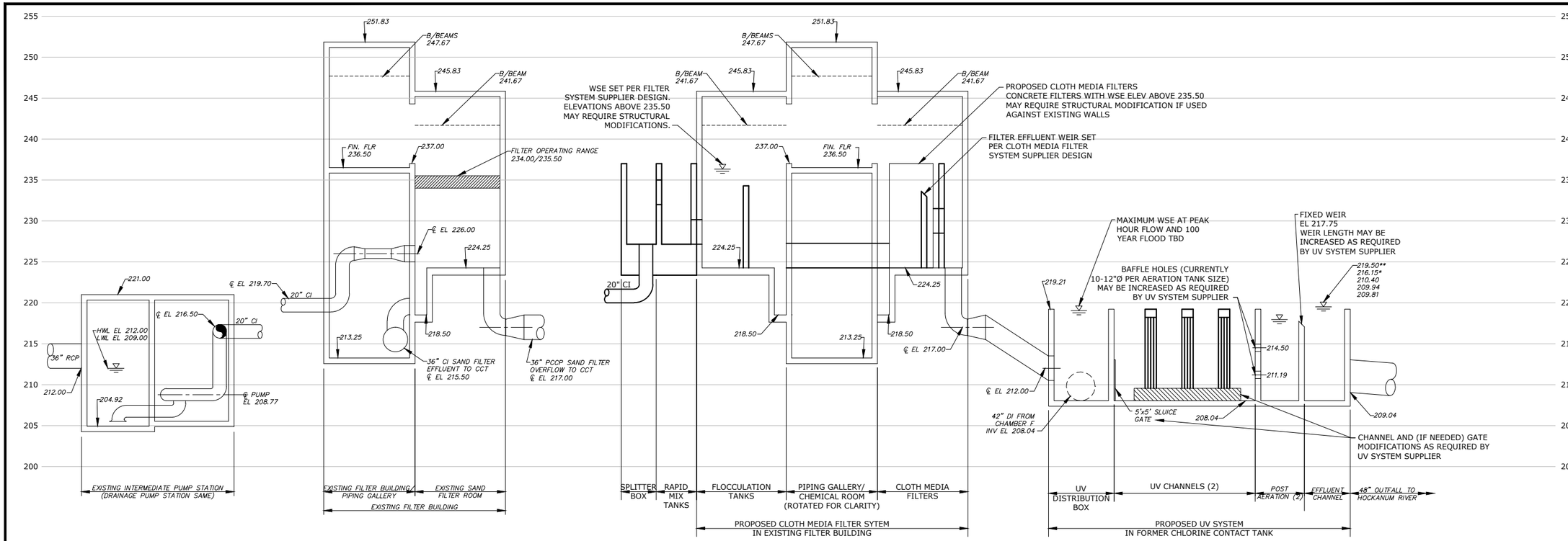

HYDRAULIC PROFILE

SCALE: HORIZ: NONE
VERT: ¾"=5'-0"

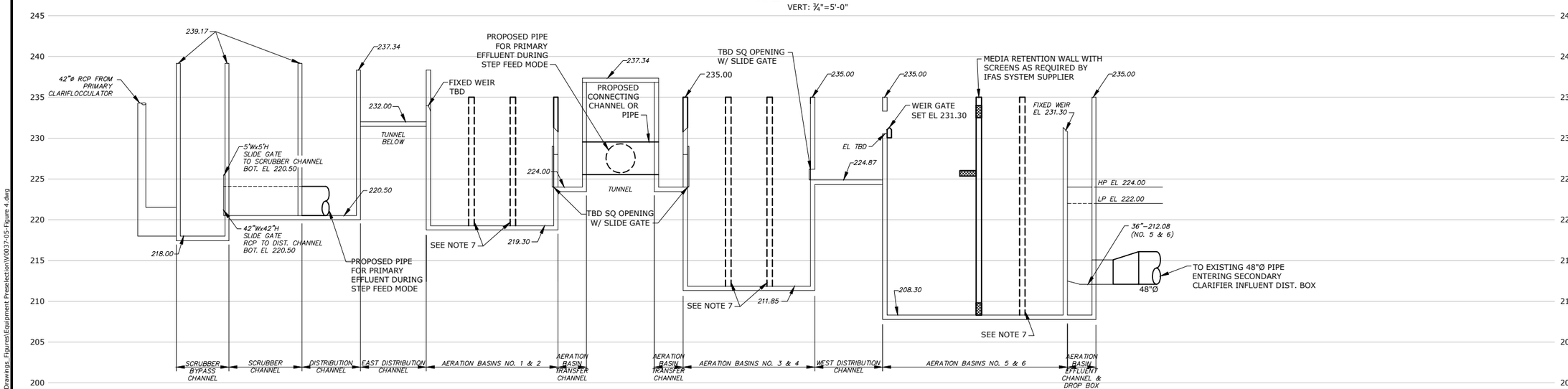

HYDRAULIC PROFILE

SCALE: HORIZ: NONE
VERT: ¾"=5'-0"

BASIS OF PROPOSED HYDRAULIC PROFILE

FLOW CONDITION	INFLUENT FLOW (MGD)	RETURN SLUDGE FLOW (MGD)	MLSS RECYCLE FLOW	CLOTH MEDIA FILTER RECYCLE (MGD)	UNITS OUT OF SERVICE
PEAK HOUR	22.0	8.0	TBD AS REQUIRED BY IFAS TREATMENT SYSTEM SUPPLIER	TBD AS REQUIRED BY CLOTH MEDIA FILTER SYSTEM SUPPLIER	NONE
MAXIMUM DAY	9.7	8.0	TBD AS REQUIRED BY IFAS TREATMENT SYSTEM SUPPLIER	TBD AS REQUIRED BY CLOTH MEDIA FILTER SYSTEM SUPPLIER	(1) SECONDARY CLARIFIER
AVERAGE DAY	7.1	3.5	TBD AS REQUIRED BY IFAS TREATMENT SYSTEM SUPPLIER	TBD AS REQUIRED BY CLOTH MEDIA FILTER SYSTEM SUPPLIER	(1) GRIT TANK, FLUME

1. AN * INDICATES PEAK PROFILE CALCULATED FROM STARTING WATER SURFACE EL 215.50 IN THE HOCKANUM RIVER.
2. AN ** INDICATES PEAK PROFILE CALCULATED FROM STARTING WATER SURFACE EL 218.50 IN HOCKANUM RIVER.
3. ALL OTHER PROFILES CALCULATED FROM STARTING WATER SURFACE EL 206.50 IN THE HOCKANUM RIVER WITH 6.7 MGD OF FLOW FROM 25-YR STORM AND CCT OVERTOPPING.
4. ALL PROFILES EXCEPT INTERMEDIATE PUMP STATION AND FILTER BUILDING ARE CALCULATED BASED ON BYPASSING THE INTERMEDIATE PUMP STATION AND CLOTH MEDIA FILTERS.
5. THE VERTICAL DATUM REFERENCES NGVD29.
6. NUMBER OF UNITS FOR EACH PROCESS SHOWN IN PROFILE (#).
7. BAFFLES TO CREATE SELECTORS AND REQUIRED ZONES AS REQUIRED BY IFAS SYSTEM SUPPLIER (TYP) (NOT ALL ARE SHOWN).

Tighe&Bond
www.tighebond.com

Equipment Preselection

Town of Vernon, Connecticut

MARK	DATE	DESCRIPTION

PROJECT NO:	V0037
DATE:	SEPTEMBER 2017
FILE: V0037-05-Figure 4.dwg	
DRAWN BY:	REJ, AJS
CHECKED:	SHB
APPROVED:	FAM, SES

EXISTING PLANT AND PROPOSED CHANGES HYDRAULIC PROFILE

SCALE: AS SHOWN

FIGURE 4
SHEET 2 OF 2

Last Saved: 11/15/2017
Plotted On:Nov 15, 2017-7:50am By: ASzyrell
Tighe & Bond, Inc. J:\V\V0037\Vernon WWTP\005 WPCF Design\Drawings_Figures\Equipment Preselection\V0037-05-Figure 4.dwg

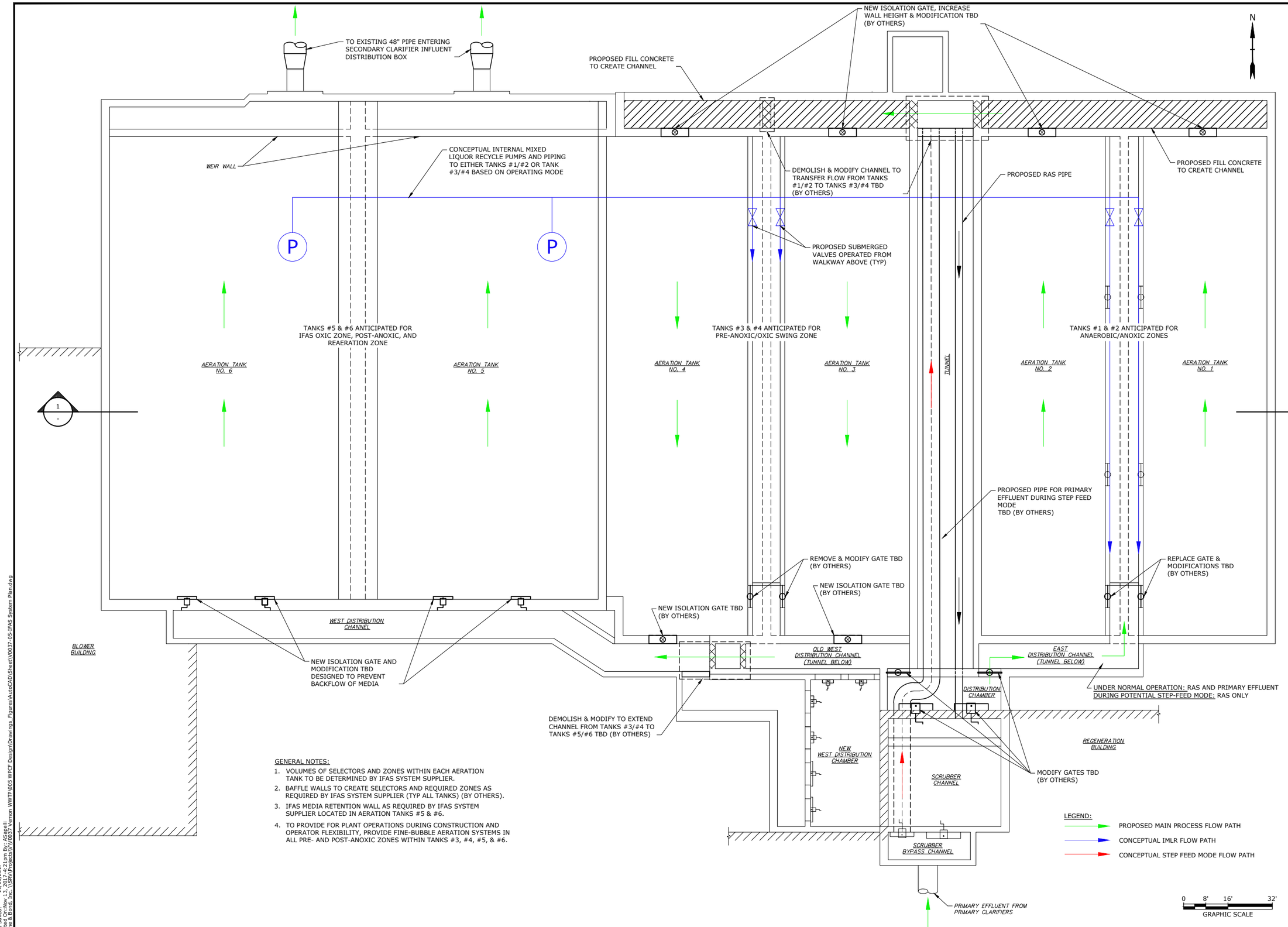

GENERAL NOTES:

1. VOLUMES OF SELECTORS AND ZONES WITHIN EACH AERATION TANK TO BE DETERMINED BY IFAS SYSTEM SUPPLIER.
2. BAFFLE WALLS TO CREATE SELECTORS AND REQUIRED ZONES AS REQUIRED BY IFAS SYSTEM SUPPLIER (TYP ALL TANKS) (BY OTHERS).
3. IFAS MEDIA RETENTION WALL AS REQUIRED BY IFAS SYSTEM SUPPLIER LOCATED IN AERATION TANKS #5 & #6.
4. TO PROVIDE FOR PLANT OPERATIONS DURING CONSTRUCTION AND OPERATOR FLEXIBILITY, PROVIDE FINE-BUBBLE AERATION SYSTEMS IN ALL PRE- AND POST-ANOXIC ZONES WITHIN TANKS #3, #4, #5, & #6.

Tighe&Bond
www.tighebond.com

Equipment Preselection

Town of Vernon, Connecticut

MARK	DATE	DESCRIPTION

PROJECT NO:	V0037
DATE:	SEPTEMBER 2017
FILE:	V0037-05-IFAS System Plan.dwg
DRAWN BY:	AJS
CHECKED:	ADW
APPROVED:	FAM

IFAS SYSTEM PLAN

SCALE: 1/16"=1'-0"

FIGURE 5

SHEET 1 OF 1

Last Saved: 11/13/2017
Plotted On:Nov 13, 2017-3:21pm By: ASpinelli
Tighe & Bond, Inc. (:\SRV\Projects\W\V\V0037\Vernon WWTP\005 WPCF Design\Drawings_Figures\AutoCAD\Sheet\V0037-05-IFAS System Plan.dwg

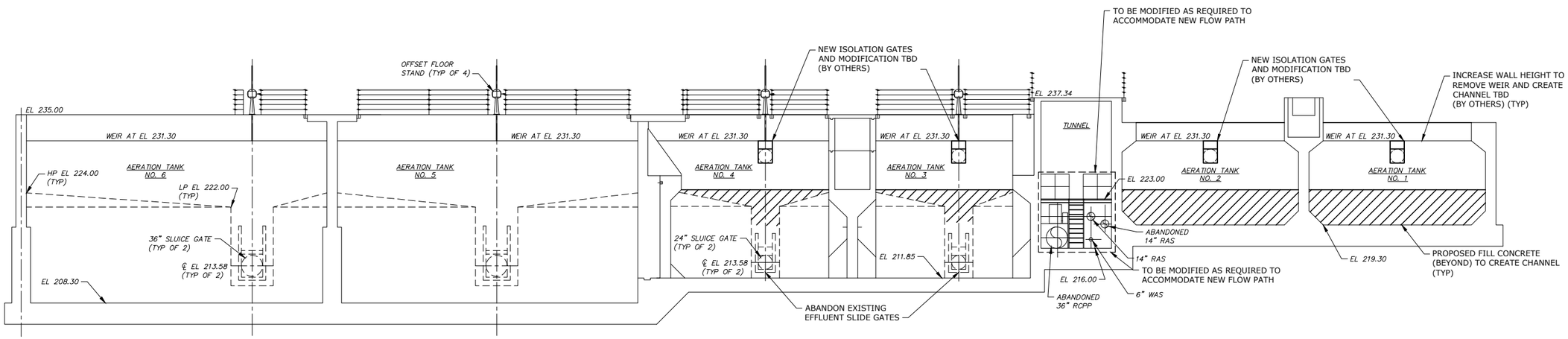

0 8' 16' 32'
GRAPHIC SCALE

Tighe&Bond
www.tighebond.com

Equipment Preselection

Town of Vernon, Connecticut

MARK	DATE	DESCRIPTION

PROJECT NO:	V0037
DATE:	SEPTEMBER 2017
FILE:	V0037-05-IFAS System Section.dwg
DRAWN BY:	AJS
CHECKED:	ADW
APPROVED:	FAM

IFAS SYSTEM SECTION

SCALE: 1/16"=1'-0"

FIGURE 6
SHEET 1 OF 1

Last Saved: 11/13/2017
Plotted On:Nov 13, 2017-9:43am By: AGiarelli
Tighe & Bond, Inc. J:\V\V0037\Vernon WWTP\005 WPCF Design\Drawings_Figures\AutoCAD\Sheet\V0037-05-IFAS System Section.dwg

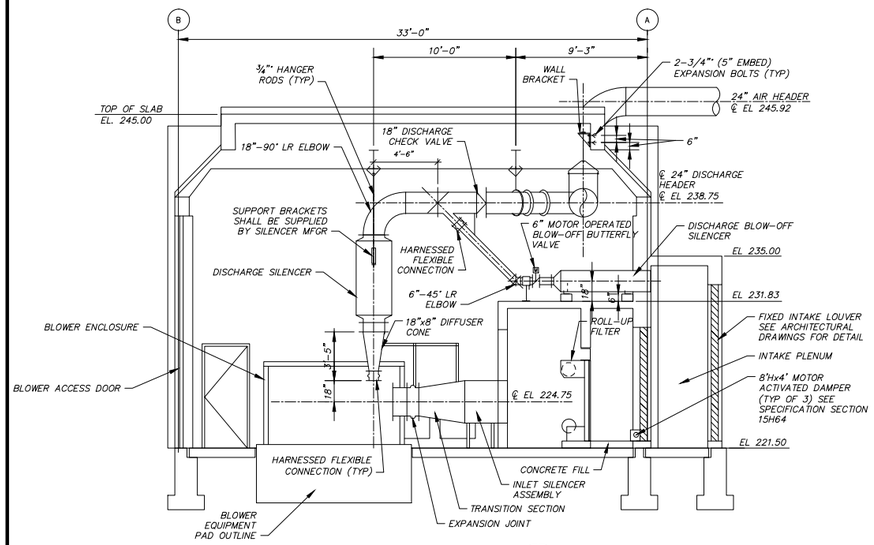

SECTION 1 / -
3/16"=1'-0"

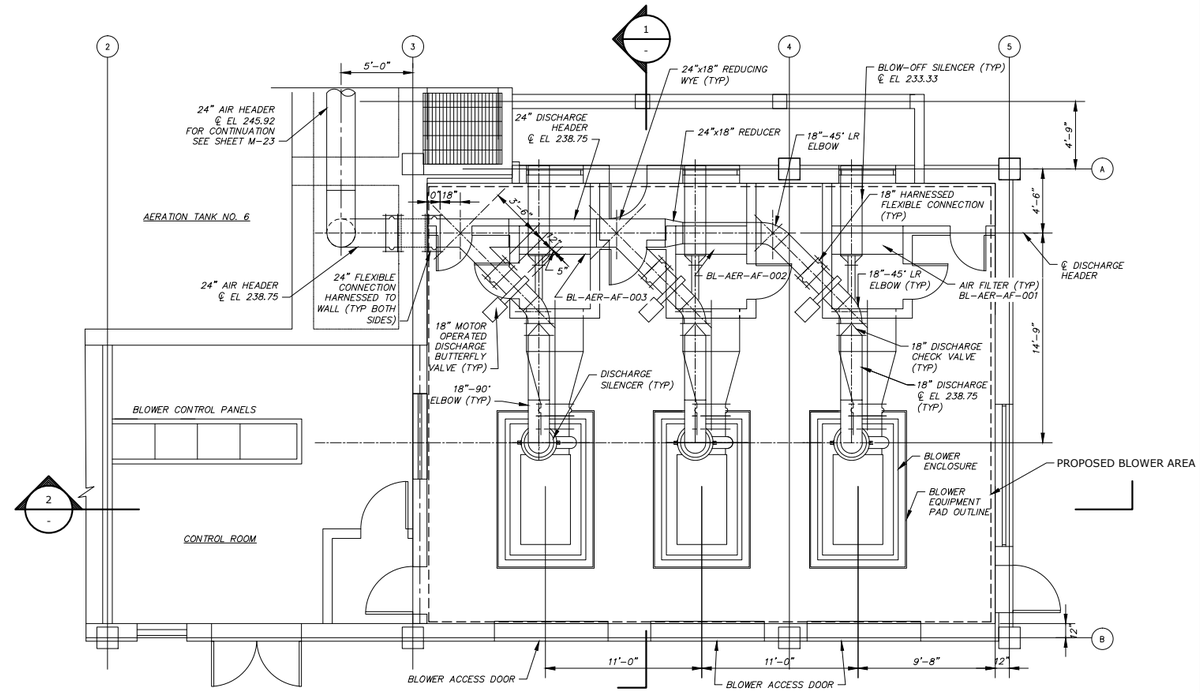

BLOWER BUILDING PLAN

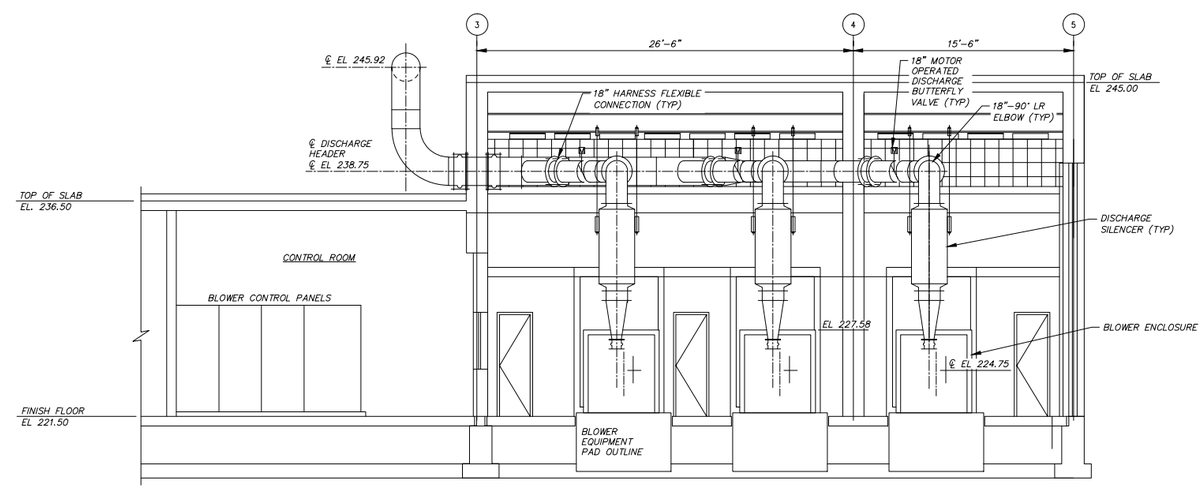

SECTION 2 / -
3/16"=1'-0"

NOTES:

1. ROOM TO BE MODIFIED TO ACCOMMODATE 4 NEW BLOWERS WHILE MAINTAINING PLANT OPERATIONS.
2. NEW BLOWER CONTROL PANELS SHALL BE LOCATED IN CONTROL ROOM.
3. CLEAR SPACE OF A MINIMUM OF 42" SHALL BE PROVIDED IN FRONT OF VFD'S AND CONTROL PANELS.

Tighe&Bond
www.tighebond.com

Equipment Preselection

Town of Vernon, Connecticut

MARK	DATE	DESCRIPTION

PROJECT NO:	V0037
DATE:	SEPTEMBER 2017
FILE:	V0037-05-Blower Building Plan and Sections.dwg
DRAWN BY:	AJS
CHECKED:	ADW
APPROVED:	FAM

BLOWER BUILDING PLAN & SECTIONS

SCALE: 3/16"=1-0"

FIGURE 7
SHEET 1 OF 1

Last Saved: 10/9/2017
Last Plotted: 09-29-2017 Plotted By: ASpaeth
Tighe & Bond, Inc. J:\V\V0037 Vernon WWTP\005 WPCF Design\Drawings, Figures\AutoCAD\Sheet\V0037-05-Blower Building Plan and Sections.dwg

APPENDIX B

Existing Plant Data

Note: The following data are excerpted from the existing WPCF historical data observed from September 1st, 2013 through August 31st, 2016. Data are provided for informational purposes only. Data shall not be used as design criteria and may not be representative of future conditions. Influent conditions include septage and recycle streams (filter backwash, WAR blowdown, and spent carbon thickener scum). Significant changes to the WPCF processes are proposed including changes to recycle flows that influence WPCF influent samples.

Date	Daily Flow			BOD (5-day)	Suspended Solids	pH	TKN	Total P	Temp.	Alkalinity
										Prim.
	Max.	Min.	Total	Inf.	Inf.	Inf.	Inf.	Inf.	Inf.	Eff.
	mgd			mg/l	mg/l	S. U.	mg/l	mg/l	° F	mg/l
	Daily			Daily	Daily	Work Day	Weekly	Weekly	Work Day	Monthly
1/1/2013	5.52	1.15	3.62	34	5					
1/2/2013	6.70	1.18	2.93	520	497	7.60	40.20		54.8	
1/3/2013	6.39	1.30	3.16	490	535	7.65			51.9	
1/4/2013	5.27	1.23	3.16			7.57			55.3	
1/5/2013	5.68	1.00	3.07							
1/6/2013	5.39	1.01	3.30							
1/7/2013	5.43	1.07	3.25	550	630	7.64			55.9	
1/8/2013	4.95	1.20	3.42	360	437	7.44			55.7	
1/9/2013	4.97	1.17	2.62	460	563	7.60			55.1	
1/10/2013	5.26	1.11	3.02			7.55			55.7	
1/11/2013	5.32	0.95	2.93			7.38			55.0	
1/12/2013	5.60	1.10	3.11							
1/13/2013	5.80	1.03	3.32							
1/14/2013	5.09	1.13	3.38	330	389	7.65			56.2	
1/15/2013	5.28	1.44	3.58	368	430	7.65			54.8	
1/16/2013	5.68	1.38	3.46	440	598	7.59			54.7	
1/17/2013	5.48	1.36	2.89			7.65			54.3	
1/18/2013	5.18	1.17	3.33			7.42			55.3	
1/19/2013	5.15	1.18	2.74							
1/20/2013	5.43	0.96	3.16							
1/21/2013	6.89	0.92	3.12							
1/22/2013	4.74	0.98	3.12	450	528	7.43			55.0	
1/23/2013	4.67	1.05	3.11	293	309	7.45			52.5	
1/24/2013	5.40	1.08	2.89	340	373	7.55			51.8	
1/25/2013	7.48	1.02	2.69			7.62			51.8	
1/26/2013	4.95	0.84	2.89							
1/27/2013	5.14	0.81	2.82							
1/28/2013	5.17	0.85	2.85	410	525	7.65			53.7	
1/29/2013	5.50	0.86	2.98	420	416	7.64			53.5	
1/30/2013	5.44	1.10	3.12	300	302	7.45			54.8	158
1/31/2013	5.65	1.53	3.33			7.40			55.7	
2/1/2013	4.91	1.16	2.86			7.63			53.0	
2/2/2013	5.39	1.10	2.99							
2/3/2013	5.10	1.05	3.04							
2/4/2013	5.58	0.99	3.03	308	335	8.00			50.4	
2/5/2013	4.70	1.14	3.06	338	363	7.71			52.1	
2/6/2013	4.78	1.04	2.81	360	421	7.45			53.1	
2/7/2013	4.50	0.92	2.91			7.60			52.1	
2/8/2013	5.30	0.76	2.60			7.68			51.5	
2/9/2013	3.88	0.82	2.60							
2/10/2013	4.70	0.70	2.72							
2/11/2013	4.85	0.79	3.24	353	363	7.62			52.0	
2/12/2013	4.57	1.09	2.96	368	324	7.85			53.3	
2/13/2013	4.85	1.08	3.06	338	272	7.34			53.2	
2/14/2013	4.69	1.08	2.72			7.54			52.9	
2/15/2013	4.35	1.05	2.98			8.20			54.0	
2/16/2013	5.30	1.09	3.02							
2/17/2013	5.16	0.90	3.02							
2/18/2013	5.40	1.01	3.15							
2/19/2013	4.90	1.10	3.20	330	324	7.59			52.2	
2/20/2013	4.99	1.32	3.19	440	423	7.45			52.7	
2/21/2013	4.72	1.29	3.10	338	305	7.68			51.9	
2/22/2013	4.81	1.04	2.98			7.72			51.6	
2/23/2013	4.76	1.13	3.02							
2/24/2013	5.55	1.07	3.41							
2/25/2013	5.35	0.83	3.08	278	299	7.71			52.8	
2/26/2013	5.31	1.45	3.61	248	265	7.66			53.4	168
2/27/2013	7.58	1.83	5.26	270	260	7.62			52.5	
2/28/2013	7.67	3.32	5.26			7.45			51.5	
3/1/2013	7.09	3.17	4.97			7.52			52.8	
3/2/2013	7.62	3.16	4.97							
3/3/2013	7.08	2.86	5.11							
3/4/2013	6.77	2.58	4.84	240	280	7.63			51.6	
3/5/2013	6.48	2.58	4.30	255	293	7.48			52.3	
3/6/2013	6.64	2.53	4.99	345	350	7.26			52.1	
3/7/2013	8.11	2.37	3.82			7.96			52.1	
3/8/2013	5.85	2.16	4.25			7.36			51.4	
3/9/2013	6.42	2.18	4.06							
3/10/2013	6.72	2.23	4.51							
3/11/2013	6.77	2.52	5.17	263	284	7.62			52.1	
3/12/2013	9.50	3.13	6.84	218	294	7.39			53.0	
3/13/2013	9.49	4.95	6.17	195	198	7.35			51.0	
3/14/2013	9.90	4.45	6.07			7.43			51.0	
3/15/2013	7.91	3.99	5.86			7.47			51.4	
3/16/2013	7.60	3.42	5.23							
3/17/2013	7.28	3.10	4.98							
3/18/2013	7.08	2.75	5.10	233	260	7.47			49.6	
3/19/2013	7.41	2.81	5.00	270	335	7.26			51.2	
3/20/2013	7.47	2.66	5.09	248	285	7.39			50.9	
3/21/2013	9.69	2.60	4.42			7.24			51.4	
3/22/2013	8.21	2.53	4.39			7.23			51.4	
3/23/2013	11.97	2.41	4.43							
3/24/2013	6.65	2.24	4.60							
3/25/2013	7.06	2.28	4.20	233	291	7.37			52.5	
3/26/2013	11.98	2.42	4.38	293	331	7.56			52.9	
3/27/2013	11.98	2.24	4.17	390	441	7.48			52.5	
3/28/2013	6.63	2.13	4.02			7.44			52.4	161
3/29/2013	6.39	1.88	4.09							
3/30/2013	6.74	1.80	3.82							
3/31/2013	6.70	1.79	3.90							
4/1/2013	10.39	1.80	4.12	370	538	7.79			53.4	
4/2/2013	7.40	1.77	3.28	360	434	7.60			52.6	
4/3/2013	6.45	1.78	3.83	315	335	7.52			53.1	
4/4/2013	5.78	1.78	3.68			7.46			52.3	
4/5/2013	5.50	1.59	3.34			7.40			54.3	
4/6/2013	6.01	1.46	3.52							
4/7/2013	5.59	1.33	3.64							
4/8/2013	5.28	1.40	3.59	360	388	7.73			54.6	
4/9/2013	6.81	1.41	3.42	340	334	7.56			55.7	
4/10/2013	5.40	1.61	3.41	360	407	7.56			56.1	

Date	Daily Flow			BOD (5-day)	Suspended Solids	pH	TKN	Total P	Temp.	Alkalinity
										Prim.
	Max.	Min.	Total	Inf.	Inf.	Inf.	Inf.	Inf.	Inf.	Eff.
	mgd			mg/l	mg/l	S. U.	mg/l	mg/l	° F	mg/l
	Daily			Daily	Daily	Work Day	Weekly	Weekly	Work Day	Monthly
4/11/2013	5.34	1.41	3.34			7.48			54.6	
4/12/2013	5.95	1.19	3.31			7.39			54.9	
4/13/2013	5.56	1.50	3.43							
4/14/2013	5.34	1.32	3.31							
4/15/2013	5.91	1.26	2.40	380	420	7.85			54.7	
4/16/2013	5.23	1.18	3.21	340	313	7.48			55.5	
4/17/2013	5.11	1.16	2.51	323	298	7.61			56.2	
4/18/2013	5.33	1.08	3.02			7.33			56.8	
4/19/2013	5.76	1.19	2.94			7.44			56.8	142
4/20/2013	5.25	1.36	3.16							
4/21/2013	5.27	1.10	3.25							
4/22/2013	5.05	1.16	3.21			7.53			56.0	
4/23/2013	4.81	1.17	3.16	330	373	7.58			55.7	
4/24/2013	5.43	1.20	3.02	360	359	7.60			56.2	
4/25/2013	5.54	1.14	3.07	420	298	7.51			56.8	
4/26/2013	5.39	1.01	2.84			7.35			57.7	
4/27/2013	5.81	1.02	2.92							
4/28/2013	5.23	0.98	3.22							
4/29/2013	5.69	0.98	3.15	450	456	7.65			58.3	
4/30/2013	5.24	1.39	3.05	450	462	7.71			58.3	
5/1/2013	5.16	1.13	2.87	480	378	7.51	37.30	10	59.0	
5/2/2013	4.92	1.07	2.99			7.91			58.4	
5/3/2013	5.14	1.10	2.60			7.95			59.2	
5/4/2013	5.07	0.90	2.69							
5/5/2013	5.30	0.85	3.04							
5/6/2013	4.93	0.88	3.04	465	538	7.72			58.9	
5/7/2013	5.08	1.13	2.96	420	453	7.78	44.70	17.2	60.6	
5/8/2013	5.99	1.03	3.33	400	463	7.85			62.9	
5/9/2013	5.38	1.13	2.77			7.56			62.2	
5/10/2013	5.20	0.92	2.72			7.87			61.7	
5/11/2013	4.94	0.98	2.92							
5/12/2013	5.05	0.92	2.97							
5/13/2013	5.14	0.89	2.89	410	448	7.48			60.0	
5/14/2013	4.82	0.92	2.97	430	527	7.46	46.90	10	59.9	
5/15/2013	4.87	0.89	2.65	470	445	7.48			59.9	
5/16/2013	4.73	0.88	2.68			7.58			60.7	172
5/17/2013	5.11	0.77	2.62			7.70			61.4	
5/18/2013	4.88	0.79	2.71							
5/19/2013	4.80	0.81	3.04							
5/20/2013	4.95	0.84	2.94	490	687	7.37			61.6	
5/21/2013	5.14	0.98	2.92	480	517	7.76	45.00	15	64.5	
5/22/2013	7.22	0.99	2.93	440	590	7.42			62.2	
5/23/2013	4.81	0.84	3.33			7.42			63.1	
5/24/2013	5.62	1.51	2.63			7.42			62.5	
5/25/2013	5.32	1.24	3.46							
5/26/2013	5.46	1.37	3.16							
5/27/2013	5.39	1.29	3.55							
5/28/2013	5.89	1.29	4.53	370	480	7.79			61.3	
5/29/2013	5.08	1.54	2.41	440	462	7.68	43.60	15.7	62.3	
5/30/2013	5.52	1.66	3.44	285	280	7.64			63.5	
5/31/2013	5.39	1.44	3.20			7.57			63.4	
6/1/2013	5.30	1.33	3.22							
6/2/2013	5.30	1.30	3.26							
6/3/2013	5.43	1.21	3.51	340	358	7.60			63.2	
6/4/2013	5.59	1.03	3.08	380	365	7.87	39.70	8.9	62.2	
6/5/2013	4.79	1.03	2.93	430	505	7.80			63.7	
6/6/2013	5.45	0.94	2.98			7.36			62.8	
6/7/2013	6.54	1.06	4.70			7.78			62.2	
6/8/2013	8.44	4.23	5.95							
6/9/2013	7.57	3.49	5.27							
6/10/2013	7.99	2.97	5.38	186	225	7.26			62.8	
6/11/2013	7.82	3.51	5.89	156	219	7.18	21.00	7.3	62.1	
6/12/2013	8.10	3.67	6.23	144	196	7.17			62.0	
6/13/2013	8.23	3.28	6.23			7.22			61.7	
6/14/2013	11.98	6.56	9.57			7.07			60.7	
6/15/2013	11.20	6.93	8.11							
6/16/2013	9.49	5.30	7.91							
6/17/2013	8.84	4.50	5.71	165	248	7.10			63.9	
6/18/2013	9.05	4.19	5.81	130	187	7.13	21.20	4.76	62.4	
6/19/2013	11.29	2.19	5.62	218	291	7.17			62.3	
6/20/2013	7.56	3.48	5.03			7.22			63.0	
6/21/2013	8.91	2.93	4.91			7.28			63.3	
6/22/2013	6.69	2.65	4.29							
6/23/2013	6.18	2.29	4.49							
6/24/2013	8.12	2.24	4.46	225	268	7.19			64.6	140
6/25/2013	6.58	2.24	4.16	353	388	7.24	30.30	12.8	65.0	
6/26/2013	6.36	2.18	4.16	338	359	7.26			65.6	
6/27/2013	6.06	0.84	3.85			7.31			65.0	
6/28/2013	6.85	2.03	3.97			7.50			66.2	
6/29/2013	5.62	1.98	3.72							
6/30/2013	5.90	1.79	3.68							
7/1/2013	5.60	1.64	3.71	330	328	7.31			65.7	
7/2/2013	5.43	0.70	3.91	290	299	7.10	36.50	6.37	66.1	
7/3/2013	5.85	1.31	2.88			7.13			65.7	
7/4/2013	5.23	1.52	3.23	222	248					
7/5/2013	5.14	1.36	3.23			7.52			67.3	
7/6/2013	5.24	1.34	3.12							
7/7/2013	5.13	1.25	3.29							
7/8/2013	5.97	1.23	3.43	330	437	7.38			67.9	
7/9/2013	5.30	1.28	3.15	278	358	7.34	34.20	10.4	67.8	
7/10/2013	6.93	1.27	2.42	270	361	7.24			67.0	
7/11/2013	5.54	1.46	3.64			7.41			67.1	
7/12/2013	5.57	1.40	2.89			7.59			67.2	
7/13/2013	5.66	1.22	3.38							
7/14/2013	5.25	1.47	3.56							
7/15/2013	5.84	1.48	3.49	460	548	7.21			68.8	
7/16/2013	5.84	1.36	3.34	263	310	7.38	30.80	9.1	68.2	
7/17/2013	5.20	1.45	2.86	230	295	7.39			68.9	
7/18/2013	4.54	0.97	2.65			7.20			71.5	
7/19/2013	5.89	0.95	2.73			7.18			69.3	

Date	Daily Flow			BOD (5-day)	Suspended Solids	pH	TKN	Total P	Temp.	Alkalinity
										Prim.
	Max.	Min.	Total	Inf.	Inf.	Inf.	Inf.	Inf.	Inf.	Eff.
	mgd			mg/l	mg/l	S. U.	mg/l	mg/l	° F	mg/l
	Daily			Daily	Daily	Work Day	Weekly	Weekly	Work Day	Monthly
7/20/2013	4.93	0.87	2.69							
7/21/2013	5.44	0.85	2.83							
7/22/2013	7.49	0.86	2.73	410	613	7.38			69.7	
7/23/2013	5.42	0.96	2.92	460	632	7.43	45.90	16.3	70.0	184
7/24/2013	6.73	0.96	3.00	420	510	7.68			69.4	
7/25/2013	5.14	0.87	3.00			7.18			69.2	
7/26/2013	5.41	0.86	2.35			7.15			68.3	
7/27/2013	11.98	0.97	2.78							
7/28/2013	5.58	0.82	3.02							
7/29/2013	4.93	0.94	2.63	530	677	7.12			70.4	
7/30/2013	5.45	0.84	2.84	440	498	7.36	43.90	11.6	68.3	
7/31/2013	5.65	0.87	2.64	370	505	7.22			68.8	
8/1/2013	5.78	0.91	2.78			7.42			69.8	
8/2/2013	5.29	1.15	2.70			7.43			70.4	
8/3/2013	4.92	0.92	2.86							
8/4/2013	5.09	0.82	2.74							
8/5/2013	5.56	0.86	2.64	430	497	7.50			69.4	
8/6/2013	5.13	0.79	2.69	630	772	7.23	59.90	13.9	69.7	
8/7/2013	5.05	0.81	2.56	430	542	7.53			69.0	
8/8/2013	4.66	0.79	2.67			7.52			70.3	
8/9/2013	6.33	0.81	3.01			7.13			70.3	
8/10/2013	5.48	1.01	2.75							
8/11/2013	5.34	0.86	3.23							
8/12/2013	5.50	0.77	2.94	510	702	7.38			70.8	
8/13/2013	6.08	1.07	2.89	600	748	7.54	52.50	17.9	70.2	
8/14/2013	4.89	1.00	3.18	460	523	7.57			70.9	
8/15/2013	5.70	1.04	2.40			6.84			70.6	
8/16/2013	4.71	0.76	2.50			7.37			68.9	
8/17/2013	5.29	0.76	2.46							
8/18/2013	5.17	0.68	2.76							
8/19/2013	5.15	0.71	2.72	610	765	7.49			70.5	
8/20/2013	5.87	0.88	2.98	440	595	7.23	45.10	15.4	70.7	
8/21/2013	4.72	0.95	2.73	340	402	7.55			70.9	
8/22/2013	5.38	0.83	2.76			7.33			70.5	194
8/23/2013	4.56	0.77	2.50			7.73			70.8	
8/24/2013	5.69	0.68	2.50							
8/25/2013	5.03	0.64	2.68							
8/26/2013	5.21	0.48	2.97	340	410	7.58			71.4	
8/27/2013	5.53	1.56	2.89	330	430	7.21	44.00	15.8	70.9	
8/28/2013	4.71	0.93	2.92	340	420	7.22			71.2	
8/29/2013	4.49	0.92	2.56			7.63			71.4	
8/30/2013	6.40	0.76	2.56			7.49			70.7	
8/31/2013	4.86	0.62	2.58							
9/1/2013	4.68	0.91	2.62							
9/2/2013	5.18	0.75	2.91							
9/3/2013	5.86	0.73	2.77	400	466	7.75			72.0	
9/4/2013	6.26	0.59	2.71	310	321	7.34	41.61	17.5	70.9	
9/5/2013	4.75	0.81	2.76	420	547	7.53			69.6	
9/6/2013	4.91	0.69	2.38			7.92			69.8	
9/7/2013	5.48	0.67	2.57							
9/8/2013	5.02	0.62	2.72							
9/9/2013	5.39	0.59	2.62	350	420	7.68			69.0	
9/10/2013	4.84	0.62	2.63	353	397	7.52	46.20	12.1	70.0	
9/11/2013	5.28	0.78	2.63	320	348	7.88			70.5	
9/12/2013	6.48	0.63	2.54			7.24			71.3	
9/13/2013	5.84	0.68	2.63			7.27			71.2	
9/14/2013	5.50	0.71	2.71							
9/15/2013	7.72	0.65	2.71							
9/16/2013	5.63	0.71	2.70	490	608	7.70			69.3	
9/17/2013	8.67	0.94	2.74	460	567	7.74	49.85	15.8	70.0	
9/18/2013	5.91	0.84	3.08	310	403	7.82			70.3	
9/19/2013	5.22	0.82	2.20			7.65			69.4	
9/20/2013	6.38	0.61	2.48			7.47			68.7	198
9/21/2013	4.98	0.60	2.62							
9/22/2013	5.33	0.81	2.79							
9/23/2013	4.99	0.61	2.71	460	552	7.64			68.2	
9/24/2013	6.49	0.89	2.98	370	432	7.45	43.20	15.7	67.5	
9/25/2013	5.31	0.53	2.64	410	472	7.63			68.7	
9/26/2013	5.34	0.69	2.49			7.27			68.9	
9/27/2013	4.36	0.49	1.91			7.77			68.5	
9/28/2013	4.20	0.41	2.17							
9/29/2013	4.96	0.37	2.28							
9/30/2013	5.85	0.40	2.62	590	797	7.54			68.2	
10/1/2013	5.39	0.61	2.60	660	776	7.56	57.58	17.2	69.0	
10/2/2013	6.84	0.77	2.69	930	1475	7.51			68.2	
10/3/2013	5.03	0.69	2.77			7.63			68.9	
10/4/2013	5.83	0.48	1.99			8.18			67.6	
10/5/2013	4.74	0.56	2.47							
10/6/2013	5.33	0.61	3.23							
10/7/2013	5.37	0.65	2.32	400	535	7.84			69.1	
10/8/2013	6.32	0.67	2.90	410	528	7.75	48.11	14.7	67.7	
10/9/2013	4.94	0.79	2.69	390	460	7.67			67.9	
10/10/2013	6.33	0.80	2.70			7.46			66.8	
10/11/2013	5.32	0.64	2.40			7.94			67.8	
10/12/2013	5.19	0.66	2.59							
10/13/2013	5.84	0.70	2.72							
10/14/2013	5.20	0.67	2.61							
10/15/2013	5.77	0.57	2.58	530	563	7.67			68.1	
10/16/2013	4.95	0.52	2.74	650	540	7.25	47.61	10.9	67.0	
10/17/2013	4.83	0.63	2.22	550	563	7.42			67.7	
10/18/2013	4.89	0.62	2.51			7.40			67.4	190
10/19/2013	5.09	0.75	2.51							
10/20/2013	5.21	0.67	2.73							
10/21/2013	5.62	0.62	2.81	510	698	7.73			66.1	
10/22/2013	4.73	0.72	2.99	510	657	7.30	53.60	15	67.5	
10/23/2013	4.93	0.75	2.32	660	762	7.39			64.8	
10/24/2013	4.79	0.71	2.85			8.00			65.2	
10/25/2013	4.90	0.57	2.05			7.55			65.4	
10/26/2013	4.95	0.55	2.38							
10/27/2013	5.72	0.52	2.87							

Date	Daily Flow			BOD (5-day)	Suspended Solids	pH	TKN	Total P	Temp.	Alkalinity
										Prim.
	Max.	Min.	Total	Inf.	Inf.	Inf.	Inf.	Inf.	Inf.	Eff.
	mgd			mg/l	mg/l	S. U.	mg/l	mg/l	° F	mg/l
	Daily			Daily	Daily	Work Day	Weekly	Weekly	Work Day	Monthly
10/28/2013	8.31	0.53	2.40	400	508	7.79			63.6	
10/29/2013	5.05	0.73	2.47	495	602	7.72	53.99	16.8	65.4	
10/30/2013	4.77	0.70	2.68	360	388	7.48			65.3	
10/31/2013	5.75	0.61	2.46			7.66			64.9	
11/1/2013	4.98	0.59	2.32			7.50			66.7	
11/2/2013	4.70	0.45	2.44							
11/3/2013	5.32	0.50	2.71							
11/4/2013	5.19	0.46	2.60	560	775	7.54			64.1	
11/5/2013	4.71	0.65	2.51	500	615	7.85	57.04	16.2	64.3	
11/6/2013	4.71	0.68	2.36	510	650	7.95			64.8	
11/7/2013	5.49	0.59	2.54			7.45			65.8	
11/8/2013	4.51	0.54	2.16			8.17			65.0	
11/9/2013	4.55	0.54	2.39							
11/10/2013	5.03	0.48	2.46							
11/11/2013	4.79	0.49	2.72							
11/12/2013	4.48	0.70	2.51	450	473	7.73			61.8	
11/13/2013	5.05	0.61	2.44	410	460	7.76	49.56	18.2	62.0	
11/14/2013	5.42	0.65	2.42	640	616	7.56			62.6	
11/15/2013	4.87	0.55	2.42			7.50			63.0	
11/16/2013	4.92	0.54	2.47							
11/17/2013	5.56	0.54	3.14							
11/18/2013	4.83	0.57	2.75	615	708	8.11			64.0	
11/19/2013	4.88	0.80	2.14	520	607	7.64	51.76	19.4	63.4	
11/20/2013	4.90	0.75	2.59	735	584	7.58			62.7	
11/21/2013	7.50	0.76	2.48			8.09			61.3	
11/22/2013	5.51	0.62	2.22			7.35			61.5	
11/23/2013	5.86	0.61	2.57							
11/24/2013	4.90	0.65	3.01	390	353					
11/25/2013	5.45	0.62	2.27	750	838	7.62	55.65	11.5	60.9	186
11/26/2013	5.45	0.55	2.98	750	780	7.41			61.4	
11/27/2013	5.70	0.83	2.22			7.34			58.8	
11/28/2013	5.39	0.74	2.63							
11/29/2013	4.77	0.67	2.34							
11/30/2013	4.83	0.61	2.46							
12/1/2013	4.80	0.70	2.99							
12/2/2013	6.05	0.68	2.79	440	545	7.70	52.39	16.5	58.0	
12/3/2013	6.06	0.87	2.35	480	578	7.77			60.1	
12/4/2013	5.14	0.63	2.40	390	402	7.43			59.7	
12/5/2013	4.58	0.50	2.83			7.45			59.8	
12/6/2013	6.01	0.66	2.03			8.13			61.2	
12/7/2013	5.09	0.66	2.54							
12/8/2013	5.32	0.65	3.12							
12/9/2013	6.51	0.69	2.84	370	406	7.54			53.6	
12/10/2013	5.42	0.82	2.50	380	384	8.09	43.70	14.4	59.1	
12/11/2013	4.50	0.82	2.87	370	308	7.62			57.7	200
12/12/2013	4.63	0.64	2.35			7.65			58.0	
12/13/2013	7.36	0.54	2.37			7.53			56.4	
12/14/2013	5.63	0.62	2.58							
12/15/2013	5.76	0.64	3.19							
12/16/2013	5.74	0.57	2.34	340	359	7.73	46.46	11.7	55.9	
12/17/2013	6.08	0.82	2.71	380	349	7.57			54.5	
12/18/2013	5.20	0.85	2.67	470	437	7.50			54.7	
12/19/2013	6.21	0.81	2.66			8.08			56.9	
12/20/2013	6.00	0.78	2.66			7.45			57.3	
12/21/2013	5.97	0.75	2.81							
12/22/2013	5.93	0.80	2.93							
12/23/2013	7.23	0.87	3.40	323	306	7.61			58.0	
12/24/2013	7.22	1.12	3.16			7.26			55.6	
12/25/2013	5.64	1.19	2.99	285	254		42.86	7		
12/26/2013	6.51	1.03	3.29	360	360	7.83			54.7	
12/27/2013	5.52	1.09	2.56			7.62			52.8	
12/28/2013	6.29	0.94	2.84							
12/29/2013	5.81	0.67	3.85							
12/30/2013	6.92	1.25	3.51	390	361	7.78			55.7	
12/31/2013	6.74	1.28	2.72			7.46			55.6	
1/1/2014	5.19	1.16	3.48	323	254		43.88	7.7		
1/2/2014	6.10	1.11	2.84			7.92			52.7	
1/3/2014	5.68	1.14	2.95			7.53			49.9	
1/4/2014	6.17	1.13	3.01							
1/5/2014	6.35	0.97	3.38							
1/6/2014	8.02	1.16	3.56	260	272	7.40			55.4	
1/7/2014	6.40	1.52	3.67	270	312	7.56			52.2	
1/8/2014	6.76	1.50	3.60	330	435	7.66	38.71	11.6	52.9	
1/9/2014	6.12	1.52	3.44			7.56			52.8	
1/10/2014	6.25	1.33	2.85			7.37			55.0	
1/11/2014	6.23	1.40	3.44							
1/12/2014	7.11	1.38	3.68							
1/13/2014	5.89	1.25	4.03	300	387	8.39			54.4	
1/14/2014	6.81	1.42	3.15	440	468	7.42			55.6	
1/15/2014	6.76	1.80	4.40	285	322	7.52	30.72	10.5	55.0	
1/16/2014	6.65	1.72	3.35			7.38			55.1	
1/17/2014	7.68	1.80	3.72			7.65			53.8	150
1/18/2014	6.26	1.70	3.60							
1/19/2014	6.51	1.56	3.82							
1/20/2014	6.80	1.55	3.74							
1/21/2014	6.37	1.51	3.87	310	373	7.78			53.4	
1/22/2014	6.39	1.53	3.31	350	361	7.61	37.80	10.5	49.7	
1/23/2014	6.85	1.25	3.56	315	292	7.55			50.3	
1/24/2014	6.24	1.36	2.86			7.51			51.5	
1/25/2014	6.04	1.21	3.27							
1/26/2014	6.01	1.10	3.61							
1/27/2014	7.28	1.17	3.33	360	451	7.78			53.6	
1/28/2014	5.56	1.28	3.20	600	383	7.53	37.13	11.6	51.3	
1/29/2014	6.23	1.37	3.15	470	568	7.47			53.4	
1/30/2014	6.20	1.23	3.08			7.91			52.1	
1/31/2014	7.56	1.11	3.04			8.06			53.8	
2/1/2014	5.68	1.00	2.97							
2/2/2014	6.01	1.08	3.58							
2/3/2014	5.96	0.98	2.51	360	391	8.40			54.4	
2/4/2014	5.37	0.99	3.25	370	477	8.07	44.10	11.5	52.9	

Date	Daily Flow			BOD (5-day)	Suspended Solids	pH	TKN	Total P	Temp.	Alkalinity
										Prim.
	Max.	Min.	Total	Inf.	Inf.	Inf.	Inf.	Inf.	Inf.	Eff.
	mgd			mg/l	mg/l	S. U.	mg/l	mg/l	° F	mg/l
	Daily			Daily	Daily	Work Day	Weekly	Weekly	Work Day	Monthly
2/5/2014	5.55	1.22	2.89	340	358	7.47			52.4	
2/6/2014	6.11	1.10	2.83			7.61			50.3	
2/7/2014	6.04	0.90	2.87			7.88			52.3	
2/8/2014	6.34	0.85	2.90							
2/9/2014	6.39	0.86	3.17							
2/10/2014	5.81	0.82	2.90	380	410	7.45			52.2	
2/11/2014	6.54	1.03	2.92	370	398	8.00	43.31	14.7	53.4	
2/12/2014	5.05	1.11	2.79	430	467	7.73			50.4	
2/13/2014	5.43	0.89	3.14			7.63			50.7	
2/14/2014	6.00	0.99	2.51			7.75			51.1	
2/15/2014	6.24	0.84	2.79							
2/16/2014	5.98	0.88	2.90							
2/17/2014	6.48	0.85	2.94							
2/18/2014	5.17	0.77	3.05	420	460	7.64			49.5	
2/19/2014	5.38	1.10	2.91	380	398	7.33	45.06	11.8	50.2	
2/20/2014	5.96	1.02	3.14	370	370	7.68			52.8	
2/21/2014	5.58	1.05	2.93			7.88			53.5	
2/22/2014	6.18	1.02	3.17							
2/23/2014	6.59	1.20	3.54							
2/24/2014	8.69	1.16	3.38	390	404	7.90			52.2	142
2/25/2014	6.61	1.47	3.52	290	324	7.73	46.27	12.8	53.3	
2/26/2014	6.00	1.42	3.30	310	337	7.52			53.3	
2/27/2014	6.43	1.07	3.14			7.59			51.3	
2/28/2014	6.32	1.28	3.24			7.62			49.4	
3/1/2014	6.69	1.25	3.50							
3/2/2014	6.07	1.19	3.50							
3/3/2014	5.63	1.11	2.89			7.79			51.5	
3/4/2014	5.64	1.23	3.23	300	378	7.78			49.9	
3/5/2014	6.18	1.38	3.25	350	345	7.47			52.7	
3/6/2014	6.29	1.32	3.93	400	437	8.14	42.62	12.4	50.1	
3/7/2014	6.16	1.13	2.11			7.50			50.5	
3/8/2014	7.25	1.04	2.90							
3/9/2014	5.49	0.93	3.18							
3/10/2014	6.71	0.96	3.14	320	353	7.93			52.4	
3/11/2014	6.78	1.18	3.29	290	318	7.68			53.6	
3/12/2014	6.79	1.30	4.10	280	314	7.49	31.94	12.4	52.7	
3/13/2014	5.66	1.81	3.22			7.72			50.1	
3/14/2014	6.41	1.47	3.46			7.78			50.9	
3/15/2014	6.39	1.54	3.48							
3/16/2014	6.56	1.55	4.30							
3/17/2014	6.63	1.65	3.30	260	273	7.75			50.6	
3/18/2014	6.42	1.66	3.71	320	300	7.49	32.39	9.3	51.1	
3/19/2014	6.19	1.55	3.87	280	268	7.39			52.6	
3/20/2014	6.89	2.10	3.90			7.41			52.0	
3/21/2014	6.93	1.89	3.82			7.20			53.0	130
3/22/2014	6.56	1.85	3.85							
3/23/2014	6.80	1.80	4.04							
3/24/2014	6.45	1.61	3.87	310	379	7.70			51.3	
3/25/2014	6.83	1.73	4.25	270	307	7.59			51.6	
3/26/2014	6.84	1.61	3.36	320	314	7.68	30.17	9.55	53.2	
3/27/2014	7.39	1.65	3.54			7.61			52.5	
3/28/2014	5.82	1.51	3.25			7.35			53.0	
3/29/2014	6.10	1.33	4.36							
3/30/2014	10.35	3.50	6.85							
3/31/2014	10.90	4.70	7.64			7.19			50.7	
4/1/2014	10.49	5.01	6.82	180	294	7.30			50.9	
4/2/2014	10.70	4.47	6.26	138	152	7.19	18.82	5.7	50.8	
4/3/2014	8.70	4.01	5.88	158	131	7.31			51.0	
4/4/2014	9.99	2.24	5.39			7.27			52.5	
4/5/2014	8.57	3.33	5.14							
4/6/2014	9.00	2.98	5.88							
4/7/2014	7.88	2.86	4.79	210	249	7.30			53.9	
4/8/2014	7.41	3.07	4.67	210	245	7.21	24.16	6.65	54.4	
4/9/2014	7.86	2.26	4.64	255	216	7.39			52.7	
4/10/2014	8.38	2.60	4.30			7.35			52.2	
4/11/2014	6.72	2.48	4.23			7.70			53.4	
4/12/2014	7.58	2.34	4.26							
4/13/2014	6.87	2.26	5.15							
4/14/2014	7.43	2.09	3.70	188	233	7.79			55.5	
4/15/2014	8.04	2.33	5.70	330	411	7.36	36.40	10.35	55.2	
4/16/2014	8.25	3.30	4.77	204	194	7.41			53.7	
4/17/2014	7.97	3.16	5.00			7.48			52.5	
4/18/2014	7.87	2.95	5.05							
4/19/2014	7.50	2.73	4.58							
4/20/2014	8.69	2.50	5.02							
4/21/2014	7.54	2.47	4.53	278	290	7.68			55.9	
4/22/2014	7.62	2.33	4.44	240	288	7.43	30.75	9.7	55.3	
4/23/2014	6.60	2.49	4.37	285	294	7.42			55.5	
4/24/2014	6.94	2.30	4.13			7.66			54.5	132
4/25/2014	6.82	1.99	3.97			7.70			55.7	
4/26/2014	6.54	2.02	4.03							
4/27/2014	7.40	2.17	4.48							
4/28/2014	6.87	2.04	3.84	293	335	7.84			55.3	
4/29/2014	6.69	2.07	4.19	360	415	7.65	29.59	7	56.5	
4/30/2014	6.76	1.99	5.00	255	320	7.56			54.8	
5/1/2014	9.50	3.72	5.77			7.22			54.8	
5/2/2014	11.44	3.48	5.75			7.24			55.1	
5/3/2014	8.36	3.32	5.16							
5/4/2014	7.87	3.10	5.29							
5/5/2014	7.73	2.82	4.91	233	290	7.41			55.4	
5/6/2014	8.59	2.91	4.84	338	473	7.37	31.51	12.2	56.2	
5/7/2014	8.21	2.58	4.69	280	329	7.38			56.3	
5/8/2014	7.21	2.46	4.39			7.51			56.7	
5/9/2014	7.87	2.24	4.28			7.26			56.4	
5/10/2014	7.53	2.26	4.55							
5/11/2014	7.29	2.34	4.66							
5/12/2014	6.76	2.07	4.19	240	308	7.57			58.7	
5/13/2014	7.32	2.20	4.02	263	350	7.60	29.99	10	59.5	
5/14/2014	7.05	2.12	4.39	270	359	7.48			57.9	
5/15/2014	6.42	1.83	3.47			7.45			59.2	148

Date	Daily Flow			BOD (5-day)	Suspended Solids	pH	TKN	Total P	Temp.	Alkalinity
										Prim.
	Max.	Min.	Total	Inf.	Inf.	Inf.	Inf.	Inf.	Inf.	Eff.
	mgd			mg/l	mg/l	S. U.	mg/l	mg/l	° F	mg/l
	Daily			Daily	Daily	Work Day	Weekly	Weekly	Work Day	Monthly
5/16/2014	6.28	1.87	4.24			7.28			58.2	
5/17/2014	7.31	2.20	4.50							
5/18/2014	8.14	2.24	4.77							
5/19/2014	8.39	2.24	4.26	350	466	7.41			58.7	
5/20/2014	7.24	2.23	4.60	370	457	7.50	33.22	12.4	58.8	
5/21/2014	6.82	2.06	3.95	248	271	7.31			59.0	
5/22/2014	6.82	2.02	4.07			7.28			59.0	
5/23/2014	8.28	1.98	4.42			7.34			59.7	
5/24/2014	8.53	2.84	4.91							
5/25/2014	7.76	2.94	5.07							
5/26/2014	8.34	2.66	5.53							
5/27/2014	7.66	2.60	4.72	250	343	7.47	24.80	9.6	61.2	
5/28/2014	7.73	2.53	4.09	255	340	7.48			59.3	
5/29/2014	7.12	2.55	4.25	400	540	7.47			59.7	
5/30/2014	6.63	2.17	4.09			7.47			60.0	
5/31/2014	6.60	2.01	3.88							
6/1/2014	7.32	1.73	4.34						61.6	
6/2/2014	7.05	1.81	4.10	308	405	7.45			63.1	
6/3/2014	7.23	1.78	3.92	340	423	7.36	34.41	12.1	62.3	
6/4/2014	6.70	1.83	4.09	260	308	7.37			62.3	
6/5/2014	6.57	1.72	3.30			7.61			62.2	132
6/6/2014	5.72	1.55	3.52			7.70				
6/7/2014	6.37	1.46	3.26							
6/8/2014	6.24	1.36	3.59						63.0	
6/9/2014	6.10	1.27	3.59	340	413	7.64			63.5	
6/10/2014	5.97	1.51	3.63	360	458	7.60	36.33	15.4	62.5	
6/11/2014	6.20	1.62	3.53	330	400	7.78			61.6	
6/12/2014	7.41	1.37	3.40			7.44			63.9	
6/13/2014	5.33	1.31	3.14			7.80				
6/14/2014	5.76	1.24	3.27							
6/15/2014	5.76	1.24	3.35						64.0	
6/16/2014	6.34	1.21	3.32	320	445	7.47			63.7	
6/17/2014	6.17	1.21	3.34	320	464	7.42	36.12	19	63.9	
6/18/2014	5.88	1.32	2.75	430	583	7.37			65.6	
6/19/2014	5.50	1.09	3.63			7.58			63.2	
6/20/2014	7.16	1.05	2.70			7.25				
6/21/2014	5.65	0.98	2.87							
6/22/2014	5.63	0.95	3.54						64.6	
6/23/2014	6.54	0.87	2.57	370	475	7.42			64.8	
6/24/2014	5.14	0.93	2.81	400	501	7.33	41.75	10.8	65.8	
6/25/2014	5.55	0.88	2.82	400	493	7.35			65.0	
6/26/2014	5.04	1.11	2.82			7.66			65.0	
6/27/2014	5.68	0.86	2.80			7.64				
6/28/2014	5.02	0.85	2.66							
6/29/2014	5.49	0.80	2.82						67.1	
6/30/2014	4.79	0.80	2.40	360	468	7.35			66.2	
7/1/2014	5.31	1.01	2.69	410	590	7.58	37.29	14.1	68.1	
7/2/2014	6.29	0.96	2.92	460	598	7.82			66.7	
7/3/2014	6.25	0.81	2.82			7.24				
7/4/2014	5.11	0.93	2.78							
7/5/2014	5.51	0.92	2.71							
7/6/2014	5.48	0.93	3.09						67.3	
7/7/2014	5.35	0.85	2.74	500	640	7.73			68.7	
7/8/2014	5.87	1.04	2.92	495	750	7.45	47.08	17.8	67.6	
7/9/2014	4.95	0.99	2.80	490	698	7.55			66.7	
7/10/2014	4.74	0.86	2.58			7.76			67.9	186
7/11/2014	4.52	0.83	2.42			7.86				
7/12/2014	5.49	0.98	2.50							
7/13/2014	4.92	0.69	2.96						68.3	
7/14/2014	5.02	0.79	2.56	410	581	7.62			69.0	
7/15/2014	4.95	0.98	2.85	300	416	7.51	35.15	16.1	68.1	
7/16/2014	6.87	1.06	3.21	310	338	7.41			69.6	
7/17/2014	6.06	0.97	2.76			8.07			68.2	
7/18/2014	5.87	0.89	2.58			7.74				
7/19/2014	4.96	0.75	2.39							
7/20/2014	4.78	0.74	2.57						69.5	
7/21/2014	7.38	0.64	2.80	400	518	7.88			69.5	
7/22/2014	4.52	0.88	2.64	350	458	7.40	43.57	17.1	69.9	
7/23/2014	5.31	1.89	2.72	320	370	7.36			69.1	
7/24/2014	5.00	0.89	2.53			7.76			68.1	
7/25/2014	5.20	0.62	2.44			7.46				
7/26/2014	4.85	0.59	2.25							
7/27/2014	5.38	0.65	2.59						69.0	
7/28/2014	6.06	0.66	2.55	1005	1236	7.67			68.7	
7/29/2014	4.56	1.74	2.39	400	432	7.51	47.18	11.7	68.9	
7/30/2014	4.38	0.61	2.34	320	338	7.88			69.5	
7/31/2014	4.83	0.63	2.31			7.57			70.3	
8/1/2014	4.73	0.58	2.25			7.77				
8/2/2014	4.48	0.64	2.27							
8/3/2014	4.74	0.55	2.42						68.6	
8/4/2014	4.98	0.64	2.46	310	297	7.74			69.3	
8/5/2014	3.95	0.58	2.33	430	382	7.43			70.5	
8/6/2014	4.51	0.61	2.22	500	386	7.02	56.66	15.8	69.7	178
8/7/2014	4.88	0.56	2.41			7.61			68.1	
8/8/2014	4.58	0.57	2.26			7.00				
8/9/2014	4.15	0.55	2.20							
8/10/2014	3.93	0.52	2.28						69.3	
8/11/2014	4.35	1.74	2.64	490	598	7.66			69.8	
8/12/2014	4.12	0.50	2.31	340	309	7.90	46.42	23.9	69.4	
8/13/2014	5.40	0.71	2.68	360	357	7.39			69.9	
8/14/2014	5.14	0.85	2.70			7.41			68.9	
8/15/2014	4.67	0.67	2.32			7.81				
8/16/2014	4.60	0.53	2.28							
8/17/2014	4.46	0.58	2.33						69.0	
8/18/2014	4.95	0.56	2.54	380	332	7.79			70.0	
8/19/2014	4.31	0.80	2.52	610	613	7.97	47.95	16.6	70.1	
8/20/2014	4.13	0.72	2.37	330	305	7.28			70.2	
8/21/2014	4.33	0.77	2.37			7.58			69.5	
8/22/2014	4.63	0.56	2.21			7.37				
8/23/2014	4.35	0.46	2.11							

Date	Daily Flow			BOD (5-day)	Suspended Solids	pH	TKN	Total P	Temp.	Alkalinity
										Prim.
	Max.	Min.	Total	Inf.	Inf.	Inf.	Inf.	Inf.	Inf.	Eff.
	mgd			mg/l	mg/l	S. U.	mg/l	mg/l	° F	mg/l
	Daily			Daily	Daily	Work Day	Weekly	Weekly	Work Day	Monthly
8/24/2014	4.49	0.47	2.41						69.9	
8/25/2014	4.92	0.49	2.50	270	369	7.85			71.2	
8/26/2014	5.01	0.65	2.48	330	350	7.55	47.15	16	71.4	
8/27/2014	5.24	0.62	2.54	310	308	7.42			70.4	
8/28/2014	4.90	0.66	2.29			7.60			71.2	
8/29/2014	5.37	0.56	2.23			8.02				
8/30/2014	4.50	0.45	2.25							
8/31/2014	4.27	0.44	2.27							
9/1/2014	5.82	0.48	2.88						72.5	
9/2/2014	4.89	0.51	2.12	260	263	7.97			71.6	
9/3/2014	4.99	0.65	2.51	360	325	7.30	45.16	14.1	72.9	
9/4/2014	5.23	0.65	2.34	370	330	7.17			71.2	
9/5/2014	5.83	0.46	2.19			7.37				
9/6/2014	4.99	0.51	2.18							
9/7/2014	5.48	0.45	2.46						71.2	
9/8/2014	5.31	0.47	2.45	300	372	7.62			71.2	
9/9/2014	5.07	0.57	2.23	400	393	7.85	51.40	14.6	70.6	
9/10/2014	4.68	0.49	2.27	320	365	7.27			70.8	
9/11/2014	4.36	0.58	2.13			7.34			70.2	
9/12/2014	4.98	0.41	2.12			7.35				
9/13/2014	4.56	0.48	2.23							
9/14/2014	4.86	0.45	2.49						68.9	
9/15/2014	4.64	0.36	2.73	330	432	7.52	49.50	15.6	68.4	
9/16/2014	5.03	0.65	2.29	370	410	7.60			67.4	
9/17/2014	6.69	0.62	2.17	380	400	7.38			69.7	
9/18/2014	4.54	0.65	2.93			7.17			68.2	
9/19/2014	5.17	0.49	1.55			7.80				
9/20/2014	4.91	0.44	2.20							
9/21/2014	5.31	0.69	2.56						69.8	
9/22/2014	5.11	0.47	2.29	370	523	7.86			68.4	
9/23/2014	4.87	0.46	2.34	330	387	7.72			67.5	
9/24/2014	5.34	0.47	2.34	380	346	7.87	46.26	9.3	68.8	204
9/25/2014	5.19	0.39	2.17			7.51			68.4	
9/26/2014	4.22	0.41	2.10			7.26				
9/27/2014	4.68	0.46	2.18							
9/28/2014	4.40	0.41	2.28						68.9	
9/29/2014	5.43	0.44	2.45	450	510	7.77			69.4	
9/30/2014	4.99	0.41	2.16	460	434	7.86			69.4	
10/1/2014	4.86	0.46	2.25	330	354	7.99	44.61	8.4	69.2	
10/2/2014	4.77	0.47	2.17			7.71			67.8	
10/3/2014	4.93	0.40	2.18			7.85				
10/4/2014	4.48	0.45	2.25							
10/5/2014	5.30	0.43	2.53						67.7	
10/6/2014	5.59	0.45	2.40	440	571	8.08			68.7	
10/7/2014	4.36	0.65	2.30	450	478	7.79	51.26	16.6	69.8	
10/8/2014	4.44	0.66	2.44	420	360	7.63			66.8	
10/9/2014	4.35	0.59	2.14			7.28			67.6	
10/10/2014	4.99	0.48	2.14			8.32				
10/11/2014	5.08	0.49	2.25							
10/12/2014	4.49	0.43	2.25							
10/13/2014	4.60	0.40	2.44						68.6	
10/14/2014	4.70	1.19	2.41	390	390	7.84			69.2	208
10/15/2014	4.10	0.43	2.19	490	413	7.76	47.85	4.97	66.9	
10/16/2014	4.16	0.38	2.36	370	328	7.05			67.4	
10/17/2014	4.34	0.44	2.05			7.81				
10/18/2014	5.01	0.53	2.22							
10/19/2014	4.47	0.46	2.47						63.4	
10/20/2014	4.70	0.33	2.50	410	526	7.80			65.4	
10/21/2014	4.51	0.57	2.30	420	556	7.78			65.8	
10/22/2014	4.62	0.59	2.39	440	480	7.52	57.09	13.5	65.7	
10/23/2014	5.21	0.46	2.50			7.53			65.5	
10/24/2014	4.84	0.48	2.20			7.83				
10/25/2014	4.70	0.48	2.26							
10/26/2014	5.11	0.50	2.38						65.6	
10/27/2014	4.76	0.46	2.33	450	552	7.31			65.3	
10/28/2014	5.12	0.63	2.42	460	550	7.22			67.2	
10/29/2014	4.73	0.49	2.70	410	486	7.56	55.64	13.2	65.5	
10/30/2014	4.85	0.35	1.76			7.85			64.5	
10/31/2014	4.36	0.46	2.16			7.79				
11/1/2014	4.32	0.38	2.04							
11/2/2014	4.85	0.39	2.47						64.7	
11/3/2014	6.48	0.45	2.39	405	648	7.81			64.6	
11/4/2014	4.91	0.63	2.32	435	533	8.31	52.88	15.1	65.3	
11/5/2014	4.50	0.44	2.16	450	498	8.00			64.1	
11/6/2014	5.09	0.47	2.32			7.76			63.9	
11/7/2014	4.13	0.51	1.95			7.53				
11/8/2014	6.55	0.40	2.22							
11/9/2014	5.03	0.44	2.44						64.5	
11/10/2014	5.00	0.41	2.22			7.83				
11/11/2014	5.05	0.39	2.18	430	483				64.1	
11/12/2014	4.68	0.42	2.21	460	552	7.79			63.2	
11/13/2014	4.83	0.41	2.13	420	494	8.11	63.39	11.4	62.3	
11/14/2014	4.52	0.39	2.07			8.09				
11/15/2014	5.03	0.38	2.23							
11/16/2014	4.81	0.42	2.40						59.8	
11/17/2014	5.07	0.48	2.67	350	460	8.24			62.0	
11/18/2014	4.42	0.66	2.46	460	492	7.54	46.95	14.3	61.4	
11/19/2014	4.96	0.64	2.37	440	438	7.78			59.4	
11/20/2014	5.64	0.50	2.25			7.82			60.8	
11/21/2014	5.57	0.48	2.25			8.00				
11/22/2014	5.34	0.41	2.31							
11/23/2014	4.92	0.42	2.45	323	313				62.1	
11/24/2014	5.14	0.42	2.58	900	1138	7.32	75.22	18.4	61.6	
11/25/2014	4.30	0.65	2.35	570	766	7.81			60.0	180
11/26/2014	4.69	0.49	2.60			7.51				
11/27/2014	5.37	0.66	2.21							
11/28/2014	4.95	0.56	2.57							
11/29/2014	5.03	0.55	2.20							
11/30/2014	4.90	0.55	2.76						60.7	
12/1/2014	5.99	0.61	2.62	520	720	7.91			60.0	

Date	Daily Flow			BOD (5-day)	Suspended Solids	pH	TKN	Total P	Temp.	Alkalinity
										Prim.
	Max.	Min.	Total	Inf.	Inf.	Inf.	Inf.	Inf.	Inf.	Eff.
	mgd			mg/l	mg/l	S. U.	mg/l	mg/l	° F	mg/l
	Daily			Daily	Daily	Work Day	Weekly	Weekly	Work Day	Monthly
12/2/2014	5.07	0.84	2.62	550	602	7.46	52.52	16.3	59.7	
12/3/2014	5.91	0.90	2.63	540	578	7.88			59.8	
12/4/2014	5.03	0.67	2.49			8.07			59.1	134
12/5/2014	4.42	0.58	2.32			8.39				
12/6/2014	4.97	0.75	2.83							
12/7/2014	4.78	0.83	2.91						58.7	
12/8/2014	5.69	1.66	2.61	450	542	7.39			57.2	
12/9/2014	7.04	0.66	4.19	330	412	8.09			56.5	
12/10/2014	6.38	2.94	3.97	270	309	7.53	32.20	5.8	60.6	
12/11/2014	6.14	1.83	3.52			7.39			58.0	
12/12/2014	6.21	1.61	3.43			7.84				
12/13/2014	6.14	1.66	3.24							
12/14/2014	5.78	1.31	3.70						58.2	
12/15/2014	6.34	1.23	3.15	330	422	7.73			57.9	
12/16/2014	5.28	1.28	3.38	320	455	7.60	37.40		57.9	
12/17/2014	5.29	1.63	3.28	340	352	7.81			57.5	
12/18/2014	5.46	1.39	3.20			7.62			57.0	
12/19/2014	6.28	2.12	3.01			7.54				
12/20/2014	5.76	1.12	2.99							
12/21/2014	5.86	1.06	3.53	230	234				56.3	
12/22/2014	5.48	0.98	2.74	280	348	7.57	40.30	8.4	56.9	
12/23/2014	4.85	1.09	2.89	330	296	8.01			55.7	
12/24/2014	5.35	1.05	3.08			7.60				
12/25/2014	5.05	1.16	2.95						55.8	
12/26/2014	5.42	1.14	3.04			7.50				
12/27/2014	5.42	1.10	3.08							
12/28/2014	6.05	1.15	3.16	246	227				55.2	
12/29/2014	5.47	1.14	3.18	340	306	7.41			55.8	
12/30/2014	5.39	1.08	3.03	350	250	7.30	37.30	6.1	54.8	
12/31/2014	5.40	1.07	3.01			8.01				
1/1/2015	5.45	1.06	2.92						55.2	
1/2/2015	4.81	1.08	2.65			7.78				
1/3/2015	5.67	0.97	2.91							
1/4/2015	5.88	1.14	3.73						56.2	
1/5/2015	5.11	1.05	2.69	390	460	8.36			55.1	
1/6/2015	6.82	1.11	3.54	320	333	7.35	37.70	12.5	54.7	
1/7/2015	5.20	1.19	3.12	380	369	7.67			53.6	
1/8/2015	4.92	1.03	2.81			7.66			54.3	
1/9/2015	4.64	0.94	2.66			8.03				
1/10/2015	5.29	0.97	2.83							
1/11/2015	6.04	0.80	3.02						55.0	
1/12/2015	5.85	0.87	3.06	280	339	7.42			52.8	
1/13/2015	5.27	1.05	3.06	300	399	7.84	39.87	11.8	54.0	
1/14/2015	4.88	1.03	2.81	320	330	7.53			53.7	
1/15/2015	5.02	0.86	2.72			7.72			55.3	
1/16/2015	5.33	0.81	2.63			7.82				
1/17/2015	5.51	0.70	2.65							
1/18/2015	7.99	0.73	3.68							
1/19/2015	5.55	1.15	3.36						54.1	
1/20/2015	5.19	1.08	2.81	320	319	7.61			53.8	
1/21/2015	5.73	0.89	3.02	310	306	7.64	35.92	9.9	55.3	
1/22/2015	5.17	1.18	2.84	310	293	7.77			54.5	
1/23/2015	5.61	1.02	2.90			7.50				
1/24/2015	5.96	0.92	2.72							
1/25/2015	5.81	0.84	3.10						49.7	
1/26/2015	5.21	0.83	2.70			7.50			49.5	
1/27/2015	5.01	0.86	2.68	233	248	7.50			46.8	
1/28/2015	5.20	0.81	2.86	240	283	7.88	38.05	10	51.6	
1/29/2015	5.03	0.93	2.75	330	396	7.95			53.6	
1/30/2015	4.99	0.98	2.57			7.79				
1/31/2015	5.73	0.75	2.72							
2/1/2015	6.16	0.69	2.73						49.7	
2/2/2015	5.28	0.76	2.93	290	328	7.79			49.4	
2/3/2015	5.10	0.84	2.93	310	355	7.88	37.65	10.7	51.9	
2/4/2015	5.50	0.86	2.52	340	357	7.63			53.3	
2/5/2015	4.88	0.89	2.69			7.30			51.5	
2/6/2015	4.57	0.75	2.47			7.73				
2/7/2015	5.57	0.62	2.47							
2/8/2015	5.16	0.62	2.67						49.6	184
2/9/2015	4.65	0.66	2.69	330	370	7.76			51.8	
2/10/2015	5.68	0.77	2.62	400	404	8.11	43.18	11.2	49.8	
2/11/2015	5.15	0.82	2.64	330	365	7.63			54.1	
2/12/2015	5.14	0.87	2.93			7.65			51.6	
2/13/2015	4.56	0.56	2.03			8.07				
2/14/2015	5.33	0.62	2.51							
2/15/2015	5.36	0.67	2.63							
2/16/2015	5.34	0.64	2.60						50.1	
2/17/2015	5.18	0.77	2.70	390	426	7.69			50.2	
2/18/2015	5.38	0.74	2.74	370	364	7.40	38.16	12	52.6	
2/19/2015	5.25	0.85	2.59	380	343	7.86			51.6	
2/20/2015	4.81	0.59	2.44			7.83				
2/21/2015	5.39	0.58	2.29							
2/22/2015	5.63	0.47	2.61						50.5	
2/23/2015	5.21	0.57	2.60	360	392	8.10			51.1	
2/24/2015	5.12	0.75	2.59	350	440	7.91	42.80	13.6	51.1	
2/25/2015	4.76	0.72	2.67	390	407	7.67			52.9	
2/26/2015	4.92	0.67	2.46			7.42			49.9	
2/27/2015	5.14	0.47	2.30			7.71				
2/28/2015	5.56	0.56	2.41							
3/1/2015	5.37	0.47	2.62						53.9	
3/2/2015	4.92	0.56	2.73	360	333	8.32			52.9	
3/3/2015	4.89	0.53	2.33	320	275	8.27	40.00	7	52.0	
3/4/2015	6.31	0.89	2.83	340	303	7.73			52.8	
3/5/2015	4.62	0.62	2.54			7.89			50.9	
3/6/2015	5.16	0.64	2.42			7.59				
3/7/2015	5.36	0.61	2.50							
3/8/2015	5.45	0.63	2.88						52.2	
3/9/2015	5.48	0.56	2.79	320	320	7.69			51.8	
3/10/2015	5.57	0.78	3.09	320	343	7.67	35.20	11.1	52.3	
3/11/2015	6.19	1.14	3.16	280	241	7.50			51.0	

Date	Daily Flow			BOD (5-day)	Suspended Solids	pH	TKN	Total P	Temp.	Alkalinity
										Prim.
	Max.	Min.	Total	Inf.	Inf.	Inf.	Inf.	Inf.	Inf.	Eff.
	mgd			mg/l	mg/l	S. U.	mg/l	mg/l	° F	mg/l
	Daily			Daily	Daily	Work Day	Weekly	Weekly	Work Day	Monthly
3/12/2015	5.98	1.23	3.16			7.68			51.2	
3/13/2015	6.23	1.23	3.24			7.61				
3/14/2015	5.56	1.29	3.90							
3/15/2015	*	*	4.33						50.4	
3/16/2015	6.87	3.42	4.18	240	209	7.37			51.3	
3/17/2015	6.14	2.14	4.54	248	224	7.50	25.70	6.9	49.8	
3/18/2015	7.22	2.55	4.30	240	239	7.34			49.7	98
3/19/2015	6.81	2.34	4.22			7.34			52.1	
3/20/2015	6.96	1.92	3.66			7.64				
3/21/2015	7.17	1.88	4.02							
3/22/2015	6.91	1.92	4.14						51.7	
3/23/2015	6.98	1.79	3.93	440	321	7.69			51.7	
3/24/2015	5.95	2.01	3.72	300	335	7.49	30.50	7.1	50.0	
3/25/2015	6.50	1.87	4.23	310	244	7.42			51.9	
3/26/2015	6.56	1.94	4.55			7.64			50.5	
3/27/2015	8.61	2.94	5.32			7.30				
3/28/2015	8.69	3.26	5.30							
3/29/2015	8.49	3.00	5.46						49.6	
3/30/2015	8.66	2.90	5.16	260	261	7.42			49.8	
3/31/2015	8.27	3.08	6.17	290	281	7.32			51.0	
4/1/2015	7.84	3.12	4.27	280	239	7.34	23.76	7.8	50.8	
4/2/2015	7.81	3.02	5.20			7.28				
4/3/2015	11.98	3.31	5.33							
4/4/2015	9.38	3.67	6.10							
4/5/2015	8.58	3.68	5.99						49.7	
4/6/2015	9.37	3.48	5.71	210	304	7.33			51.0	
4/7/2015	7.87	3.51	5.40	173	219	7.36	41.27	5.9	51.2	
4/8/2015	8.32	3.27	6.26	218	234	6.94			52.5	
4/9/2015	7.81	3.59	4.63			7.40			51.1	
4/10/2015	8.61	3.58	5.95			7.35				
4/11/2015	8.32	3.63	5.36							
4/12/2015	7.96	3.30	5.84						52.0	
4/13/2015	9.42	3.13	5.82	190	276	7.40			51.2	
4/14/2015	7.47	2.87	4.34	290	306	7.23	26.50	6.15	52.2	
4/15/2015	7.37	2.65	4.34	218	274	7.42			52.9	
4/16/2015	7.27	2.36	4.14			7.57			52.2	80
4/17/2015	7.16	2.50	4.14			7.24				
4/18/2015	7.89	2.24	4.46							
4/19/2015	7.31	2.20	4.62						54.3	
4/20/2015	8.20	2.07	4.89	230	344	7.52			54.0	
4/21/2015	8.76	2.93	5.40	230	294	7.46	33.98	8	53.8	
4/22/2015	7.76	0.48	4.83	200	238	7.47			53.4	
4/23/2015	6.85	2.58	4.90			7.53			52.9	
4/24/2015	7.63	2.55	4.04			7.28				
4/25/2015	6.93	2.39	4.45							
4/26/2015	7.68	2.24	4.36						53.6	
4/27/2015	6.79	2.11	4.39	370	543	7.45			55.1	
4/28/2015	7.18	2.28	4.59	370	503	7.70	31.91	9.2	55.2	
4/29/2015	6.55	1.73	4.25	320	387	7.35			55.0	
4/30/2015	9.38	1.72	3.34			7.28			55.8	
5/1/2015	7.23	1.50	3.42			7.52				
5/2/2015	6.44	1.46	3.62							
5/3/2015	6.16	1.49	3.77						57.1	
5/4/2015	6.53	1.43	4.15	360	563	7.54			57.7	
5/5/2015	8.06	1.90	3.48	360	498	7.64	32.51	9.8	57.7	
5/6/2015	6.56	1.03	3.36	360	412	7.26			56.7	136
5/7/2015	6.62	1.28	3.26			7.51			57.9	
5/8/2015	5.46	1.25	3.13			7.41				
5/9/2015	5.76	1.17	3.23							
5/10/2015	5.92	1.05	3.36						59.8	
5/11/2015	5.85	1.09	3.43	360	580	7.38			61.0	
5/12/2015	6.03	1.17	3.25	420	548	7.70	45.60	12.9	59.3	
5/13/2015	5.67	1.25	3.37	400	548	7.72			57.8	
5/14/2015	6.00	1.07	3.34			7.37			58.5	
5/15/2015	7.99	1.15	2.98			7.40				
5/16/2015	5.41	0.91	2.93							
5/17/2015	5.81	0.82	2.97						60.9	
5/18/2015	5.32	0.82	3.27	410	623	7.69			60.3	
5/19/2015	5.50	0.96	3.06	340	482	7.23	37.71	11.5	59.8	
5/20/2015	5.57	0.98	3.02	390	477	7.48			59.8	
5/21/2015	10.74	0.97	2.84			7.17			59.3	
5/22/2015	5.11	0.79	2.72			7.12				
5/23/2015	5.61	0.67	2.66							
5/24/2015	5.03	0.70	2.64							
5/25/2015	5.79	0.63	2.63	310	445				62.3	
5/26/2015	5.54	0.73	2.95	420	642	7.78	42.51	11.7	63.3	
5/27/2015	6.32	0.51	2.90	390	526	7.31			62.8	
5/28/2015	5.52	0.88	2.69			7.20			64.3	
5/29/2015	5.49	0.65	2.48			7.38				
5/30/2015	5.29	0.61	2.60							
5/31/2015	5.17	0.81	2.86						61.8	
6/1/2015	5.81	0.84	3.62	260	405	7.63			61.2	
6/2/2015	5.59	1.84	3.39	380	498	7.43	38.68	12	61.2	
6/3/2015	6.58	1.26	3.47	360	495	7.40			61.9	
6/4/2015	5.32	1.17	3.02			7.13			61.6	
6/5/2015	5.73	0.93	2.85			7.39				
6/6/2015	5.31	0.93	2.75							
6/7/2015	5.36	0.75	3.69						62.3	
6/8/2015	5.11	0.83	2.27	420	673	7.86			64.3	
6/9/2015	5.52	0.98	3.01	410	594	7.94	41.57	12.2	63.6	
6/10/2015	5.32	0.96	2.86	370	570	7.44			63.4	
6/11/2015	5.13	0.83	2.76			7.48			65.6	
6/12/2015	5.21	0.76	2.57			7.87				
6/13/2015	4.95	0.66	2.56							
6/14/2015	4.76	0.58	3.07						64.1	
6/15/2015	5.88	0.63	2.81	290	503	7.56			64.2	
6/16/2015	4.91	0.91	2.88	410	570	7.55	42.74	14.4	65.7	
6/17/2015	5.46	0.92	2.91	400	528	7.48			63.8	
6/18/2015	3.67	0.98	2.63			7.33			64.6	
6/19/2015	6.00	1.91	2.61			7.38				

Date	Daily Flow			BOD (5-day)	Suspended Solids	pH	TKN	Total P	Temp.	Alkalinity
										Prim.
	Max.	Min.	Total	Inf.	Inf.	Inf.	Inf.	Inf.	Inf.	Eff.
	mgd			mg/l	mg/l	S. U.	mg/l	mg/l	° F	mg/l
	Daily			Daily	Daily	Work Day	Weekly	Weekly	Work Day	Monthly
6/20/2015	5.60	0.76	2.75							
6/21/2015	5.87	1.06	3.37						65.4	
6/22/2015	5.51	0.95	2.80	340	532	7.66			67.3	
6/23/2015	5.77	1.03	3.24	370	568	7.60	43.31	11.2	66.6	
6/24/2015	4.89	1.10	2.80	440	472	7.64			65.3	
6/25/2015	5.30	0.86	2.57			7.37			64.7	130
6/26/2015	5.70	0.88	2.57			7.57				
6/27/2015	5.16	0.86	2.98							
6/28/2015	5.35	1.09	2.68	240	321				64.1	
6/29/2015	5.28	0.96	3.04	320	438	7.65	41.95	9.2	64.6	
6/30/2015	5.27	0.90	2.89	380	465	7.49			64.9	
7/1/2015	5.01	0.49	2.97			7.43			64.9	
7/2/2015	5.26	1.91	2.63			7.29			64.8	
7/3/2015	5.29	0.89	2.68							
7/4/2015	4.86	0.76	2.33							
7/5/2015	5.06	0.73	2.65							
7/6/2015	5.30	0.79	2.82	290	438	7.63			66.3	
7/7/2015	5.32	0.84	2.80	300	395	7.26	35.79	10	67.4	
7/8/2015	5.21	0.86	2.78	300	411	7.51			68.2	
7/9/2015	4.92	0.43	2.62			7.27			66.2	
7/10/2015	4.68	0.92	2.39			7.13			67.7	
7/11/2015	5.77	0.58	2.50							
7/12/2015	4.91	0.61	2.54							
7/13/2015	5.47	0.67	2.67	240	383	7.78			67.3	
7/14/2015	4.96	0.79	2.61	410	487	7.73	43.84	13.7	68.7	
7/15/2015	4.94	0.77	2.54	410	404	7.30			70.1	
7/16/2015	4.73	0.59	2.40			7.70			68.6	
7/17/2015	4.80	0.48	2.29			7.15			67.1	132
7/18/2015	4.67	0.54	2.34							
7/19/2015	5.50	0.70	2.76							
7/20/2015	5.43	1.73	2.25	300	406	7.62			68.6	
7/21/2015	5.27	0.54	2.43	300	358	7.29	37.69	12	68.6	
7/22/2015	4.07	0.55	2.42	420	364	7.20			68.0	
7/23/2015	4.49	0.46	2.14			7.51			68.7	
7/24/2015	4.51	0.55	2.28			7.94			68.8	
7/25/2015	4.57	0.58	2.15							
7/26/2015	4.66	0.46	2.42							
7/27/2015	5.26	1.62	2.85	310	361	7.34			69.2	
7/28/2015	5.59	0.61	2.62	280	433	7.04	45.52	20	70.5	
7/29/2015	4.46	0.60	2.32	290	368	7.35			72.2	
7/30/2015	5.77	0.54	2.47			7.92			70.4	
7/31/2015	4.14	0.45	2.05			7.46			69.6	
8/1/2015	4.60	0.43	2.25							
8/2/2015	4.85	0.44	2.18							
8/3/2015	4.89	0.38	2.64	320	440	7.32			70.9	
8/4/2015	4.23	0.46	1.81	380	441	7.21	46.10	8.3	70.4	
8/5/2015	5.07	0.38	2.32	270	316	7.43			69.3	
8/6/2015	4.52	0.38	2.06			7.61			68.5	
8/7/2015	5.08	0.38	2.24			7.91			69.7	188
8/8/2015	4.69	0.41	2.05							
8/9/2015	4.45	0.35	2.38							
8/10/2015	5.26	0.39	2.29	310	465	7.40			71.0	
8/11/2015	5.27	0.55	2.54	370	450	7.47	43.16	21	70.7	
8/12/2015	5.20	0.54	2.28	380	415	7.31			71.0	
8/13/2015	4.67	0.44	2.13			7.86			70.7	
8/14/2015	4.75	0.36	2.11			7.75			70.2	
8/15/2015	5.12	0.42	2.19							
8/16/2015	4.17	0.45	2.28							
8/17/2015	5.14	0.41	2.64	360	453	7.76			70.8	
8/18/2015	5.28	0.46	2.17	370	498	7.44	40.99	13.4	71.5	
8/19/2015	5.05	0.46	2.35	300	414	7.64			72.7	
8/20/2015	4.69	0.31	2.21			7.41			71.4	
8/21/2015	4.04	0.26	2.02			7.55			72.9	
8/22/2015	4.45	0.35	2.16							
8/23/2015	4.72	0.36	2.48							
8/24/2015	4.43	0.37	2.30	290	429	7.56			71.4	
8/25/2015	4.74	1.67	2.34	320	410	7.20	41.21	11.7	71.7	
8/26/2015	5.12	0.51	2.44	300	400	7.40			71.3	
8/27/2015	4.24	0.38	2.09			7.57			70.2	
8/28/2015	4.44	0.33	2.21			7.15			71.5	
8/29/2015	4.58	0.25	2.07							
8/30/2015	5.33	0.36	2.40							
8/31/2015	4.96	0.32	2.44			7.94			72.0	
9/1/2015	4.96	0.49	2.28	330	477	7.27	51.15	24.1	72.3	
9/2/2015	4.59	0.51	2.30	320	405	7.71			72.2	
9/3/2015	5.25	0.53	2.15			7.39			71.9	
9/4/2015	4.27	0.29	2.00			7.45			71.6	178
9/5/2015	4.42	0.23	2.00							
9/6/2015	4.40	0.22	1.92							
9/7/2015	4.97	0.33	2.31							
9/8/2015	4.34	0.29	2.35	310	467	7.87			71.7	
9/9/2015	4.65	0.45	2.23	330	562	7.69	47.49	17.9	72.7	
9/10/2015	5.26	0.41	2.62	390	593	7.54			71.4	
9/11/2015	4.47	0.80	2.16			7.48			69.3	
9/12/2015	4.56	0.36	2.18							
9/13/2015	5.64	0.41	2.42							
9/14/2015	5.25	0.37	2.36	390	472	7.52			70.8	
9/15/2015	4.98	0.54	2.36	340	418	7.17	43.80	13.8	70.9	
9/16/2015	4.17	1.30	2.18	340	335	7.15			69.8	
9/17/2015	5.18	0.31	2.14			7.75			70.1	
9/18/2015	4.21	0.34	2.36			7.34			71.2	
9/19/2015	4.24	0.40	1.84							
9/20/2015	4.33	0.32	2.44							
9/21/2015	4.34	0.31	2.11	330	455	8.02			69.4	
9/22/2015	4.64	0.30	2.59	340	440	7.68	51.40	11.2	68.4	
9/23/2015	4.52	0.36	1.87	280	327	8.21			69.2	
9/24/2015	4.64	0.49	2.15			7.51			69.8	
9/25/2015	4.04	0.34	2.15			7.32			70.2	
9/26/2015	5.57	0.38	2.23							
9/27/2015	4.37	0.29	2.16							

Date	Daily Flow			BOD (5-day)	Suspended Solids	pH	TKN	Total P	Temp.	Alkalinity
										Prim.
	Max.	Min.	Total	Inf.	Inf.	Inf.	Inf.	Inf.	Inf.	Eff.
	mgd			mg/l	mg/l	S. U.	mg/l	mg/l	° F	mg/l
	Daily			Daily	Daily	Work Day	Weekly	Weekly	Work Day	Monthly
9/28/2015	5.25	0.39	2.33	270	415	7.90			69.2	
9/29/2015	4.14	1.52	2.53	280	390	7.37	42.85	15.4	70.9	
9/30/2015	7.02	0.64	2.53	280	382	7.44			71.3	
10/1/2015	4.30	0.53	2.24			7.39			69.5	
10/2/2015	4.71	0.40	2.18			7.74			67.9	194
10/3/2015	4.79	0.41	2.25							
10/4/2015	4.65	0.42	2.39							
10/5/2015	4.42	0.36	2.42	350	501	8.08			65.6	
10/6/2015	4.99	0.59	2.46	410	602	7.61	51.39	13.1	68.2	
10/7/2015	4.64	0.51	2.24	530	598	8.2			68.4	
10/8/2015	4.45	0.73	2.20			7.52			66	
10/9/2015	4.34	0.34	2.12			7.83			68	
10/10/2015	5.02	0.43	2.20							
10/11/2015	4.81	0.37	2.21							
10/12/2015	5.14	0.41	2.58							
10/13/2015	5.30	0.55	2.20	370	523	7.79			68	
10/14/2015	5.63	0.53	2.30	360	663	7.73	51.8	15.1	66.7	
10/15/2015	4.39	0.39	2.15	500	602	7.83			65.6	
10/16/2015	4.85	0.34	2.57			7.52			65.6	
10/17/2015	5.48	0.34	1.72							
10/18/2015	4.93	0.29	2.31							
10/19/2015	4.72	0.24	2.22	330	381	7.66			63.1	
10/20/2015	4.56	0.32	2.09	390	495	7.36	52.2	8.90	64.3	
10/21/2015	5.08	0.32	2.15	380	410	8.2			66.1	
10/22/2015	4.24	0.35	2.06			8.15			66.3	
10/23/2015	5.47	0.31	2.30			8.27			66.9	
10/24/2015	4.44	0.22	1.80							
10/25/2015	4.77	0.43	2.27							
10/26/2015	4.73	0.38	2.16	340	463	8.27			64.1	
10/27/2015	5.34	0.55	2.53	320	363	7.73	47.22	12.90	63.4	
10/28/2015	6.15	0.83	3.02	300	356	8.04			64.9	
10/29/2015	5.73	1.05	2.63			8.54			66.1	
10/30/2015	6.41	0.70	2.55			7.9			64.8	
10/31/2015	5.84	0.66	2.67							
11/1/2015	5.47	0.57	2.86							
11/2/2015	5.36	0.61	2.71	400	488	7.74			63.4	
11/3/2015	5.30	0.79	2.40	350	453	7.98	42.11	14.70	64.3	
11/4/2015	6.45	0.43	2.35	300	373	7.83			65	
11/5/2015	4.44	0.50	2.07			7.77			65.2	
11/6/2015	5.20	0.37	2.03			7.54			66	176
11/7/2015	4.85	0.27	2.13							
11/8/2015	5.87	0.28	2.30							
11/9/2015	4.61	0.32	2.16	310	380	8.19			64	
11/10/2015	5.74	0.34	2.24			7.86			64.1	
11/11/2015	5.32	0.32	2.68	340	381		45.84	8.60		
11/12/2015	5.26	0.36	1.81	370	361	7.42			62.9	
11/13/2015	5.85	0.33	2.09			8.03			63.6	
11/14/2015	5.19	0.40	2.17							
11/15/2015	5.65	0.31	2.49							
11/16/2015	5.69	0.38	2.43	310	393	8.31			62.6	
11/17/2015	5.10	0.52	2.23	280	363	7.67	44.22	14.50	61.7	
11/18/2015	4.99	0.44	2.27	300	329	8.09			63	
11/19/2015	5.29	0.45	1.87			7.55			63	
11/20/2015	4.69	0.70	2.08			7.72			63.1	
11/21/2015	5.14	0.42	2.28							
11/22/2015	5.26	0.39	2.47	353	268					
11/23/2015	5.53	0.42	2.28	500	454	8.26	51.47	10.90	61.6	
11/24/2015	5.16	0.27	2.20	390	362	7.53			60.4	
11/25/2015	5.26	0.32	2.29			7.52			59.9	
11/26/2015	5.95	0.35	2.18							
11/27/2015	5.11	0.31	2.26							
11/28/2015	5.34	0.38	2.15							
11/29/2015	*	*	2.48							
11/30/2015	5.20	1.50	2.33	218	355	7.88			61	
12/1/2015	5.20	0.50	2.47	320	352	8.36	45.34	11.82	59.3	
12/2/2015	5.81	1.16	2.39	340	355	7.59			61.4	
12/3/2015	4.98	1.51	2.43			7.67			60.5	
12/4/2015	5.44	0.42	1.96			8.19			60	
12/5/2015	5.73	0.33	2.24							
12/6/2015	5.68	0.32	2.49							
12/7/2015	5.68	0.38	2.38	320	469	8.14			59.6	
12/8/2015	5.18	0.48	2.33	360	408	7.72	48.10	13.10	59.9	
12/9/2015	5.51	0.59	2.54	330	351	7.73			60.8	210
12/10/2015	5.07	0.34	1.92			7.71			61.1	
12/11/2015	5.82	0.38	2.15			7.51			58.2	
12/12/2015	5.72	0.39	2.33							
12/13/2015	5.12	0.38	2.48							
12/14/2015	5.89	0.36	2.54	300	411	7.69			60.3	
12/15/2015	5.34	0.68	2.74	320	400	7.79	47.00	10.00	60.6	
12/16/2015	5.91	0.57	2.31	360	315	8.03			60.6	
12/17/2015	6.01	0.71	2.84			7.43			59.6	
12/18/2015	5.51	0.80	2.52			7.36			60.4	
12/19/2015	6.51	0.72	2.71							
12/20/2015	5.85	0.69	3.00							
12/21/2015	6.32	0.67	2.72	345	336	7.54			57.9	
12/22/2015	5.75	0.58	2.66	345	300	7.95	46.30	6.50	60.3	
12/23/2015	5.88	0.76	2.95	293	313	7.64			60.3	
12/24/2015	6.51	0.92	2.95			7.64			58.7	
12/25/2015	5.89	0.84	2.66							
12/26/2015	6.17	0.76	2.83							
12/27/2015	11.55	0.80	2.94							
12/28/2015	5.65	0.79	3.09	360	395	7.79			59.8	
12/29/2015	6.06	1.00	3.11	360	398	7.21	51.60	12.50	57.5	
12/30/2015	6.11	1.07	3.40	430	421	7.65			57.7	
12/31/2015	5.93	0.98	2.69			8.19			58.7	
1/1/2016	6.41	0.92	2.80							
1/2/2016	6.70	0.87	2.99							
1/3/2016	7.07	0.92	3.26							
1/4/2016	5.76	0.84	2.99	290	391	7.44			55.9	
1/5/2016	6.43	1.02	3.09	330	361	7.62	41.70	11.10	56	

Date	Daily Flow			BOD (5-day)	Suspended Solids	pH	TKN	Total P	Temp.	Alkalinity
										Prim.
	Max.	Min.	Total	Inf.	Inf.	Inf.	Inf.	Inf.	Inf.	Eff.
	mgd			mg/l	mg/l	S. U.	mg/l	mg/l	° F	mg/l
	Daily			Daily	Daily	Work Day	Weekly	Weekly	Work Day	Monthly
1/6/2016	6.02	1.03	2.98	310	361	7.83			56.5	
1/7/2016	6.34	0.51	2.66			8.2			56.9	
1/8/2016	5.29	0.45	2.28			7.81			57.4	
1/9/2016	5.54	0.45	2.45							
1/10/2016	6.07	0.47	3.01							
1/11/2016	5.36	0.58	2.70	300	385	8.1			56.9	
1/12/2016	5.46	0.76	2.63	340	295	7.77	37.10	9.19	56.4	
1/13/2016	4.84	0.79	2.54	390	304	7.82			56.1	
1/14/2016	4.85	0.58	2.50			7.94			55.7	
1/15/2016	4.84	0.58	2.40			7.31			56.3	
1/16/2016	5.75	0.61	2.69							
1/17/2016	6.02	0.31	2.74							
1/18/2016	5.24	0.63	2.88							
1/19/2016	5.22	0.30	1.89	350	270	7.67			56.4	
1/20/2016	5.37	0.82	2.66	290	305	7.47	37.80	9.94	55.4	
1/21/2016	5.22	0.60	2.45	390	275	7.32			55.6	168
1/22/2016	5.00	0.51	2.34			8			55.2	
1/23/2016	4.97	0.57	2.45							
1/24/2016	5.46	0.50	2.64							
1/25/2016	5.06	0.47	2.43	290	254	7.62			55.5	
1/26/2016	5.26	0.51	2.64	360	288	7.24	39.30	5.50	55.2	
1/27/2016	4.92	0.82	2.56	330	253	7.73			55.6	
1/28/2016	5.02	0.55	2.39			7.57			55.7	
1/29/2016	4.81	0.48	2.38			7.4			55.8	
1/30/2016	5.28	0.45	2.75							
1/31/2016	5.12	1.70	2.26							
2/1/2016	5.12	0.42	2.51	290	269	8			56.1	
2/2/2016	5.55	0.61	2.65	330	332	7.93	42.80	10.30	55.8	
2/3/2016	5.21	0.60	2.44	330	302	7.65			56	
2/4/2016	4.74	0.60	2.44			7.5			56.3	
2/5/2016	4.86	0.49	2.42			7.66			53.2	
2/6/2016	5.71	0.50	2.54							
2/7/2016	5.22	0.57	2.79							
2/8/2016	5.29	0.57	2.72	285	249	7.67			54	
2/9/2016	4.92	0.71	2.67	255	187	7.68	45.70	8.17	54.9	
2/10/2016	5.14	0.75	2.63	383	281	7.64			55	
2/11/2016	4.73	0.84	2.38			7.84			54.6	
2/12/2016	5.09	0.62	2.38			7.56			54.4	
2/13/2016	5.31	0.64	2.57							
2/14/2016	5.47	0.63	2.71							
2/15/2016	5.38	0.57	3.01							
2/16/2016	6.18	0.87	3.32	300	295	7.3			54.2	
2/17/2016	7.40	1.19	3.01	285	244	7.77	20.20	5.77	54.7	140
2/18/2016	5.65	0.98	2.96	240	211	7.96			53.9	
2/19/2016	5.70	0.99	2.83			7.52			54.1	
2/20/2016	5.84	0.93	2.93							
2/21/2016	5.96	0.87	3.15							
2/22/2016	5.63	0.87	2.97	135	110	7.77			55	
2/23/2016	5.33	0.93	3.00	248	283	7.61			52.7	
2/24/2016	6.60	1.19	4.45	203	253	8	31.70	7.88	54.7	
2/25/2016	9.16	2.39	4.61			7.26			53.4	
2/26/2016	7.23	2.59	4.61			7.73			52	
2/27/2016	11.98	2.31	4.30							
2/28/2016	7.82	1.80	4.53							
2/29/2016	7.65	2.04	4.04	323	251	7.66			53.7	
3/1/2016	6.63	1.99	3.95	204	213	7.64	27.00	6.09	52.2	
3/2/2016	7.18	0.94	3.70	203	279	7.37			53.8	
3/3/2016	6.81	1.74	4.28			7.64			52.4	
3/4/2016	6.41	1.70	3.55			7.36			53.9	
3/5/2016	6.64	1.54	3.67							
3/6/2016	6.47	1.45	3.69							
3/7/2016	5.91	1.43	3.62	210	270	7.39			54.1	
3/8/2016	5.85	1.42	3.56	240	273	7.51	28.00	8.41	54.7	
3/9/2016	6.23	1.46	3.40	218	278	7.21			54.8	
3/10/2016	6.59	1.24	3.34			7.64			55.3	
3/11/2016	5.74	1.25	3.18			7.55			54.8	
3/12/2016	6.15	1.11	3.40							
3/13/2016	5.82	1.15	3.40							
3/14/2016	5.53	1.01	3.08	218	294	7.63			56.1	
3/15/2016	5.29	1.38	3.26	203	233	7.65	3.70	4.08	54.4	
3/16/2016	5.97	1.15	3.19	270	261	7.71			54.9	
3/17/2016	6.02	1.05	3.07			7.49			55.1	
3/18/2016	6.21	1.06	3.10			7.5			55.1	130
3/19/2016	6.31	0.95	3.09							
3/20/2016	6.10	0.89	3.25							
3/21/2016	5.95	0.90	3.33	290	354	7.57			54.3	
3/22/2016	5.49	1.12	3.21	315	390	7.49	31.50	7.37	55.6	
3/23/2016	5.82	1.06	2.88	285	328	7.7			56.2	
3/24/2016	6.18	0.91	2.99			7.58			55.4	
3/25/2016	5.98	0.93	3.09							
3/26/2016	6.18	0.87	3.03							
3/27/2016	5.97	0.75	2.97							
3/28/2016	6.11	0.86	3.58	255	365	7.69			55.3	
3/29/2016	6.38	1.06	3.49	285	449	7.87	38.20	10.30	54.7	
3/30/2016	6.00	1.00	3.02	270	370	7.34			54.8	
3/31/2016	5.87	0.98	3.14			7.68			56.1	
4/1/2016	6.37	1.23	3.22			7.32			57.4	
4/2/2016	5.85	1.17	3.17							
4/3/2016	6.27	1.12	3.49							
4/4/2016	6.39	1.30	3.54	270	325	7.96			54.7	
4/5/2016	6.54	1.44	4.31	338	350	7.55	36.50	8.71	53.9	
4/6/2016	5.86	1.46	3.03	323	501	7.45			54.3	116
4/7/2016	6.81	1.43	4.20			7.43			55.7	
4/8/2016	6.62	1.97	4.12			7.73			55.3	
4/9/2016	7.19	1.89	4.20							
4/10/2016	6.76	1.65	4.25							
4/11/2016	6.95	1.68	4.00	290	438	7.47			55	
4/12/2016	7.55	1.76	4.37	240	341	7.61	28.20	9.44	56	
4/13/2016	11.98	1.76	3.46			7.41			55.3	
4/14/2016	7.06	1.67	3.71	248	293	7.48			55.3	

Date	Daily Flow			BOD (5-day)	Suspended Solids	pH	TKN	Total P	Temp.	Alkalinity
										Prim.
	Max.	Min.	Total	Inf.	Inf.	Inf.	Inf.	Inf.	Inf.	Eff.
	mgd			mg/l	mg/l	S. U.	mg/l	mg/l	° F	mg/l
	Daily			Daily	Daily	Work Day	Weekly	Weekly	Work Day	Monthly
4/15/2016	6.06	1.53	3.30			7.34			55.5	
4/16/2016	6.23	1.39	3.58							
4/17/2016	6.45	1.38	3.58							
4/18/2016	6.52	1.27	3.92	280	414	7.46			56.6	
4/19/2016	6.03	1.38	3.38	310	380	7.51	31.70	11.40	57	
4/20/2016	6.48	1.35	3.28	310	363	7.5			57	
4/21/2016	6.68	1.13	3.88			7.6			56.9	
4/22/2016	5.88	1.06	2.60			7.21			58.1	
4/23/2016	6.28	1.20	3.36							
4/24/2016	6.03	1.03	3.24							
4/25/2016	6.45	1.03	3.61	290	405	7.58			57.5	
4/26/2016	5.61	1.14	3.01			7.56			57.6	
4/27/2016	5.14	1.31	3.46	260	311	7.48	31.90	3.75	57.9	
4/28/2016	6.43	1.15	2.93	340	379	7.55			58.2	
4/29/2016	5.16	0.98	3.02			7.66			58.5	
4/30/2016	5.83	0.85	2.94							
5/1/2016	5.55	0.82	3.49							
5/2/2016	6.18	0.86	2.83	280	325	7.72			58.5	
5/3/2016	6.03	1.02	3.20	250	258	7.43	32.90	37.40	58.7	
5/4/2016	5.83	1.04	3.29	270	303	7.4			57.7	
5/5/2016	5.97	0.93	3.00			7.44			58.4	
5/6/2016	6.34	1.01	2.95			7.7			58.3	
5/7/2016	5.20	0.97	3.09							
5/8/2016	5.94	0.98	3.33							
5/9/2016	5.80	0.98	3.25	270	316	7.69			59.8	
5/10/2016	5.97	1.00	3.28	250	270	7.59	32.00	35.70	59.5	
5/11/2016	5.81	1.11	3.05	280	256	7.52			59.7	
5/12/2016	5.93	1.56	3.26			7.85			58.5	172
5/13/2016	6.22	0.98	2.74			7.32			60.6	
5/14/2016	5.90	0.99	2.85							
5/15/2016	6.28	0.85	3.23							
5/16/2016	6.27	0.83	3.06	290	328	7.67			58.5	
5/17/2016	6.17	0.95	3.15	300	323	7.68	32.00	10.60	60.8	
5/18/2016	5.62	1.05	2.91			7.52			60.3	
5/19/2016	6.08	0.73	2.82	320	272	7.32			61.1	
5/20/2016	6.50	0.65	2.77			7.46			59.9	
5/21/2016	5.83	0.73	2.67							
5/22/2016	5.64	0.72	2.98							
5/23/2016	5.96	0.66	2.95	300	372	7.86			62.2	
5/24/2016	6.18	0.85	2.98	450	420	7.44	38.20	11.20	62.2	
5/25/2016	5.62	0.82	2.66	410	366	7.57			62.9	
5/26/2016	5.10	0.49	2.75			7.29			63.6	
5/27/2016	5.16	0.57	2.47			7.4			66.3	
5/28/2016	5.18	0.65	2.59							
5/29/2016	5.45	0.51	2.39							
5/30/2016	5.86	0.57	3.29							
5/31/2016	5.99	0.53	2.28	280	340	7.78			64.6	
6/1/2016	5.55	0.78	2.95	410	406	7.45	34.20	13.80	64.2	
6/2/2016	5.75	0.72	2.81	460	419	7.57			64.1	
6/3/2016	5.91	0.96	2.63			7.51			63.6	
6/4/2016	5.33	0.57	2.47							
6/5/2016	5.97	0.56	3.28							
6/6/2016	6.40	0.60	2.58	390	543	7.64			64.9	194
6/7/2016	5.46	0.74	2.71	310	388	7.52	37.60	42.50	65.7	
6/8/2016	5.32	0.71	2.53	400	375	7.65			64.4	
6/9/2016	5.96	0.57	3.00			7.65			63.3	
6/10/2016	6.04	0.78	2.65			7.76			64.1	
6/11/2016	5.79	0.66	2.84							
6/12/2016	5.56	0.73	2.76							
6/13/2016	5.84	0.79	3.45	350	430	7.23			65.4	
6/14/2016	5.45	0.85	2.60	370	502	7.5	41.70	16.20	65.5	
6/15/2016	5.83	0.79	3.07	510	515	7.64			65.3	
6/16/2016	5.04	0.43	2.75			7.43			65.3	
6/17/2016	5.32	0.65	2.63			7.8			65.7	
6/18/2016	5.68	0.64	2.67							
6/19/2016	5.30	0.58	2.65							
6/20/2016	6.03	0.66	3.08	330	445	8.04			66.2	
6/21/2016	5.32	0.87	2.76	500	595	7.32	43.60	15.10	67.7	
6/22/2016	4.95	0.43	2.58	340	431	7.89			67.1	
6/23/2016	5.62	0.74	2.39			7.53			66.6	
6/24/2016	5.52	0.54	2.33			7.26			66.4	
6/25/2016	5.69	0.52	2.25							
6/26/2016	4.22	0.48	2.47							
6/27/2016	5.49	0.56	2.70	390	546	7.57			67.5	
6/28/2016	4.25	0.81	2.68	350	438	7.22	44.50	15.00	67.7	
6/29/2016	6.57	0.81	2.65	410	415	7.57			69	
6/30/2016	4.32	0.66	2.44			7.81			67.5	
7/1/2016	4.65	0.65	2.48			7.24			68.5	
7/2/2016	4.36	0.72	2.39							
7/3/2016	4.43	0.64	2.27							
7/4/2016	4.41	0.62	2.45							
7/5/2016	4.55	0.84	2.56	390	533	7.59			67.3	
7/6/2016	4.47	0.68	2.46	360	370	7.77	49.60	8.83	67.7	
7/7/2016	4.79	0.52	2.53	390	439	7.68			68.8	
7/8/2016	4.80	0.67	2.54			7.7			67.7	
7/9/2016	4.57	0.58	2.51							
7/10/2016	5.45	0.71	2.73							
7/11/2016	4.78	0.67	2.72	470	595	7.7			68.6	
7/12/2016	5.09	0.88	2.78	440	588	7.4	49.20	16.20	69.2	
7/13/2016	5.14	0.82	2.63	480	565	7.25			69	
7/14/2016	5.49	0.72	2.75			6.82			70.5	
7/15/2016	4.72	0.65	2.43			7.82			70	
7/16/2016	5.65	0.65	2.42							
7/17/2016	5.56	0.62	2.54							
7/18/2016	5.67	0.60	2.64	1260	1497	7.65			71.1	
7/19/2016	5.62	0.83	2.68	500	613	7.53	47.10	14.50	71.1	
7/20/2016	6.00	0.80	2.54	560	566	7.64			69.8	
7/21/2016	6.45	0.60	2.45			7.54			70	
7/22/2016	5.67	0.62	2.50			7.4			70	240
7/23/2016	6.19	0.55	2.42							

Date	Daily Flow			BOD (5-day)	Suspended Solids	pH	TKN	Total P	Temp.	Alkalinity
										Prim.
	Max.	Min.	Total	Inf.	Inf.	Inf.	Inf.	Inf.	Inf.	Eff.
	mgd			mg/l	mg/l	S. U.	mg/l	mg/l	° F	mg/l
	Daily			Daily	Daily	Work Day	Weekly	Weekly	Work Day	Monthly
7/24/2016	5.19	0.54	2.47							
7/25/2016	5.77	0.63	2.53	300	398	7.5			70	
7/26/2016	5.36	0.61	2.77	390	388	7.46	51.40	8.41	72.6	
7/27/2016	6.01	1.10	2.90	360	566	7.4			71.4	
7/28/2016	4.81	0.86	2.64			7.42			71.9	
7/29/2016	6.77	0.67	2.46			7.4			71.6	
7/30/2016	4.42	0.59	2.41							
7/31/2016	4.54	0.59	2.63							
8/1/2016	5.16	0.65	2.50	370	383	7.68			71	
8/2/2016	5.11	0.61	2.52	450	525	7.72	55.8	11.2	71	
8/3/2016	4.37	0.57	2.45	460	346	7.7			71.2	
8/4/2016	4.69	0.66	2.55			7.68			70.5	
8/5/2016	4.37	0.57	2.44			7.4			71.2	196
8/6/2016	5.05	0.67	2.51							
8/7/2016	5.37	0.56	2.43							
8/8/2016	5.95	0.60	2.51	470	360	7.65			71.1	
8/9/2016	6.04	0.68	2.48	540	502	7.33	54.7	7.86	70.8	
8/10/2016	5.90	0.62	2.69	560	465	7.17			71.1	
8/11/2016	5.12	0.68	2.65			7.37			71.4	
8/12/2016	5.04	0.75	2.56			7.51			71.3	
8/13/2016	7.38	0.67	2.70							
8/14/2016	5.24	0.79	2.58							
8/15/2016	5.52	0.71	2.79	300	460	7.7			71.9	
8/16/2016	5.30	0.86	2.68	390	407	7.77	49.9	21.6	72.7	
8/17/2016	6.52	0.80	2.85	380	481	7.18			71.8	
8/18/2016	6.67	0.92	2.82			7.65			73.3	
8/19/2016	5.63	0.75	2.64			8.07			74.2	
8/20/2016	4.58	0.65	2.47							
8/21/2016	6.23	0.65	2.92							
8/22/2016	6.88	0.81	2.85	420	647	7.4			74.1	
8/23/2016	6.83	0.92	2.85	380	557	7.36	53.8	13.4	71.8	
8/24/2016	6.24	0.86	2.90	840	1,240	7.3			72.4	
8/25/2016	6.11	0.72	2.62			7.78			71.9	
8/26/2016	5.20	0.66	2.56			7.14			71.8	
8/27/2016	4.53	0.61	2.48							
8/28/2016	4.80	0.60	2.61							
8/29/2016	4.96	0.63	2.66	390	618	7.7			74	
8/30/2016	4.74	0.91	2.85	350	490	7.48	59	22.3	73.1	
8/31/2016	6.17	1.56	2.82	330	390	7.46			73.3	