WATERBURY PUBLIC SCHOOLS
Meeting Agenda

Group/Team:	BOE Building & School Facilities Committee		
Location: Virtual Meeting via ZOOM 1-646-876-9923 Meeting ID: 94794190623	**Date of Meeting:** Tuesday January 19, 2021	**Start Time:** 5:30 p.m.	**Finish Time:**

Team Norms:

1. All meetings will start on time
2. All issues will be approached with a positive attitude
3. A specific agenda will be set for all meetings
4. All team members will agree to stay on specific agenda topics
5. Decisions regarding future directions will be based upon actual data

Purpose of Meeting – Instructional Focus:

Agenda Items – (Items should reflect next steps from previous meeting.)

	Agenda Item	Time Allotted	Person Responsible
1.	Wendell Cross Project review/update including Good Jobs compliance update.		W. Clark, et al.
2.	Review and approval of Final Plans, Form SCG-042/Phase 4, Play Equipment Final Documents/Cost Estimate for the Wendell Cross ES Project.		W. Clark, et al.
3.	Review and approval of Final Plans, Form SCG-042/Phase 5, Furniture, Fixtures, Equipment and Technology Final Documents/Cost Estimate for the Wendell Cross ES Project.		W. Clark, et al.

DEPARTMENT OF ADMINISTRATIVE SERVICES (DAS)
Office of School Construction Grants & Review (OSCG&R)

REQUEST FOR REVIEW OF FINAL PLANS
FORM SCG-042

STATUTORY REF.: C.G.S. Sections 10-282, 10-283, 10-291, 10-294, 10-292

DISTRICT NAME:	FACILITY NAME AND ADDRESS:	STATE PROJECT NUMBER:
Waterbury	Wendell Cross Elementary School 1255 Hamilton Ave Waterbury, CT 06706	151-0295 EA/RR
		PHASE NUMBER: Five of Five

Estimated date* to begin construction July 2021 Estimated date to complete construction August 2021

*** NOTE: Construction must begin within 2 years of grant commitment date to maintain grant eligibility.**

Certification of Approval dates:

	Final Plans & Prof. Cost Estimate	Site Approval (if applicable)
Local Board of Education	1/21/21	/ /
School Building Committee	1/19/21	/ /

We hereby certify that these **final plans and project manual(s)** as prepared for bidding and dated **12/1/20**, and the **professional cost estimate**, completed in accordance with Level 3 of ASTM International Standard E1557, Standard Classification of Building Elements and Related Sitework-UNIFORMAT II for this project, dated **12/1/20**, have been reviewed and approved for this project on the dates shown above.

For the Town or Regional Board of Education:

Charles E. Pagano, Jr. | | **

Chairperson's Name (Type or print) | Signature | Date

For the School Building Committee:

Ann M. Sweeney | | **

Chairperson's Name (Type or print) | Signature | Date

**** Signature dates cannot precede the date on the submitted plans.**

For the Project Architect/Engineering Firm:

Friar Architecture Inc. | | 860.678.1291

Firm Name (Type or print) | Signature | Telephone No.

We hereby request a review of the final Project Plans, Project Manual, Ineligible and Limited Eligible Costs Worksheet (ICW) FORM SCG-4000, and professional cost estimate as noted above. Copies of all the above referenced documents are either attached, or available.

Dr. Verna D. Ruffin | |

Superintendent's Name (Type or print) | Signature | Date

NOTE: NO PHASE OF THIS SCHOOL CONSTRUCTION PROJECT SHALL GO OUT TO BID, AND NO PURCHASE ORDER OVER $10,000.00 SHALL BE ISSUED, UNTIL YOU HAVE RECEIVED WRITTEN NOTIFICATION FROM THE STATE DEPARTMENT OF ADMINISTRATIVE SERVICES (DAS) INDICATING APPROVAL OF FINAL PLANS, PROJECT MANUAL, AND COST ESTIMATE.

N: Website migration\SCG-042 Request for review of plans
FORM SCG-042 Rev. 7/20/17 KD

FORM SCG-042 Request for Review of Final Plans

State Project No. 151-0295 EA/RR

Project Name: Wendell Cross Elementary School

Name of Contact Person:	Telephone:	Date:
Bryce Sens	860.678.1291	1/1/21

Certifications of Local Approval:

I certify that I have local jurisdiction over the **State Building Code** and that the plans and project manual dated 12/1/20 for the above referenced project comply with all applicable building codes.

Gil Graveline

Local Building Official's Name Signature Date

I certify that I have local jurisdiction over the **State Fire Safety Code** and that the plans and project manual dated 12/1/20 for the above referenced project comply with all applicable fire codes.

Michael Achlioptas

Local Fire Marshal's Name Signature Date

I certify that I have local jurisdiction over the **State Health Code** and that the plans and project manual dated 12/1/20 for the above referenced project comply with all applicable health codes.

William Quinn

Local Health Official's Name Signature Date

I certify that I have local jurisdiction over **Section 504 of the Rehabilitation Act of 1973**, and the Uniform Federal Accessibility Standards (UFAS). I further certify that the plans and project manual dated 12/1/20 for the above referenced project comply with all applicable accessibility codes.

Chris Harmon

Local Federal 504 Official's Name Signature Date

NOTES:

1.) THE CERTIFICATIONS OF LOCAL APPROVAL NOTED ABOVE MUST BE OBTAINED, AND ARE REQUIRED TO BE PROVIDED, PRIOR TO RECEIVING APPROVAL-TO-BID BY THE STATE DEPARTMENT OF ADMINISTRATIVE SERVICES (DAS) FOR THIS PROJECT. IF THESE CERTIFICATIONS CANNOT BE OBTAINED LOCALLY, PLEASE CONTACT THE DAS, OFFICE OF SCHOOL CONSTRUCTION GRANTS & REVIEW (OSCG&R) FOR ASSISTANCE.

2.) THE OFFICE OF SCHOOL CONSTRUCTION GRANTS & REVIEW (OSCG&R) APPROVED PROJECT PLANS, PROJECT MANUAL AND COST ESTIMATE MUST BE KEPT ON FILE AT THE LOCAL BOARD OF EDUCATION OFFICE UNTIL THE FINAL GRANT PAYMENT HAS BEEN MADE AND THE DAS AUDIT IS COMPLETE ON THIS PROJECT.

3.) ORIGINAL SIGNATURES ARE REQUIRED ON THIS FORM. IF ORIGINAL SIGNATURES ARE NOT AVAILABLE AT THE PLAN REVIEW MEETING, MAIL OR OVERNIGHT DELIVER THIS COMPLETED FORM TO:
The Office of School Construction Grants & Review
450 Columbus Blvd., Suite 1503
Hartford, CT 06103

architecture
interior design
master planning
FRIAR

Project: **Play Equipment at**
Wendell Cross Elementary School
1255 Hamilton Avenue, Waterbury, CT

1/1/21

Construction Costs

Trade Costs

Division	Description		%	Value
100000	General Conditions		18.53%	33,031.00
020000	Demolition		0.00%	0.00
030000	Concrete		0.00%	0.00
040000	Masonry		0.00%	0.00
050000	Metals		0.00%	0.00
060000	Wood & Plastics		0.00%	0.00
070000	Thermal & Moisture Protection		0.00%	0.00
080000	Doors, Frames, Hdwe		0.00%	0.00
090000	Finishes		0.00%	0.00
100000	Specialties		0.00%	0.00
110000	Equipment		53.96%	96,185.00
120000	Furnishings		0.00%	0.00
130000	Special Construction		0.00%	0.00
140000	Conveying Systems		0.00%	0.00
210000	Fire Suppression		0.00%	0.00
220000	Plumbing		0.00%	0.00
230000	HVAC		0.00%	0.00
260000	Electrical Systems (inc. data)		0.00%	0.00
270000	Communications		0.00%	0.00
280000	Security		0.00%	0.00
320000	Sitework		27.50%	49,020.00
		Sub - Total		178,236.00

Construction Contingencies & Fees

Haz Mat Contingency			0.00
Owners Contingency			16,000.00
Contractor OH&P			0.00
Permits			0.00
Insurance			0.00
	Sub - Total		16,000.00

Total Construction Costs	**194,236.00**

Other Costs

Moving costs			0.00
Design costs			0.00
Third Party Code Review			3,600.00
Testing/Inspections			1,000.00
	Sub - Total	0.00%	**4,600.00**

Total Other Costs	**4,600.00**

Project Costs

Total Construction Costs	194,236.00
Total Other Costs	4,600.00
Total Project Costs	**198,836.00**

WENDELL CROSS ELEMENTARY SCHOOL

1255 HAMILTON AVENUE

WATERBURY, CT 06706

PLAYSCAPE PLANS AND DETAILS

STATE PROJECT NO. 151-0295 EA/RR

PHASE IV

ISSUED FOR BID 1/1/2021

ARCHITECT

FRIAR ARCHITECTURE
21 TALCOTT NOTCH ROAD
FARMINGTON, CONNECTICUT 06032

MAYOR

NEIL M. O'LEARY

SUPERINTENDENT OF SCHOOLS

VERNA D. RUFFIN, Ed. D.

BUILDING COMMITTEE

JASON VAN STONE, CHAIRMAN
CATHERINE N. AWWAD
KAREN E. HARVEY
CHARLES PAGANO, VICE CHAIR
ANN M. SWEENEY

BOARD OF EDUCATION

MAYOR NEIL M. O'LEARY
CATHERINE N. AWWAD
ELIZABETH C. BROWN
KAREN E. HARVEY
JUANITA P. HERNANDEZ
CHARLES E. PAGANO
MELISSA SERRANO-ADORNO
CHARLES L. STANGO
ANN M. SWEENEY
JASON VAN STONE
THOMAS VAN STONE, SR.

INDEX OF DRAWINGS

DRAWINGS FOR REFERENCE ONLY

C-3.0	SITE LAYOUT PLAN
C-4.0	SITE GRADING PLAN
C-4.1	SITE DRAINAGE PLAN

PLAY EQUIPMENT

PE1.1	PLAY AREA LAYOUT
PE1.2	PLAY AREA SURFACING
PE2.0	FOOTING PLAN
PE3.1	PLAY AREA ELEVATIONS
PE4.1	PLAY AREA EQUIPMENT PERSPECTIVES

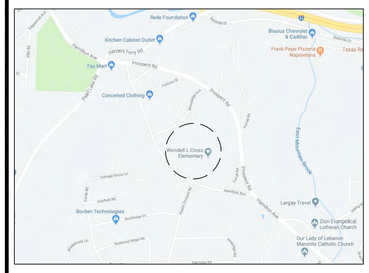

SITE LOCATION MAP

SET NUMBER

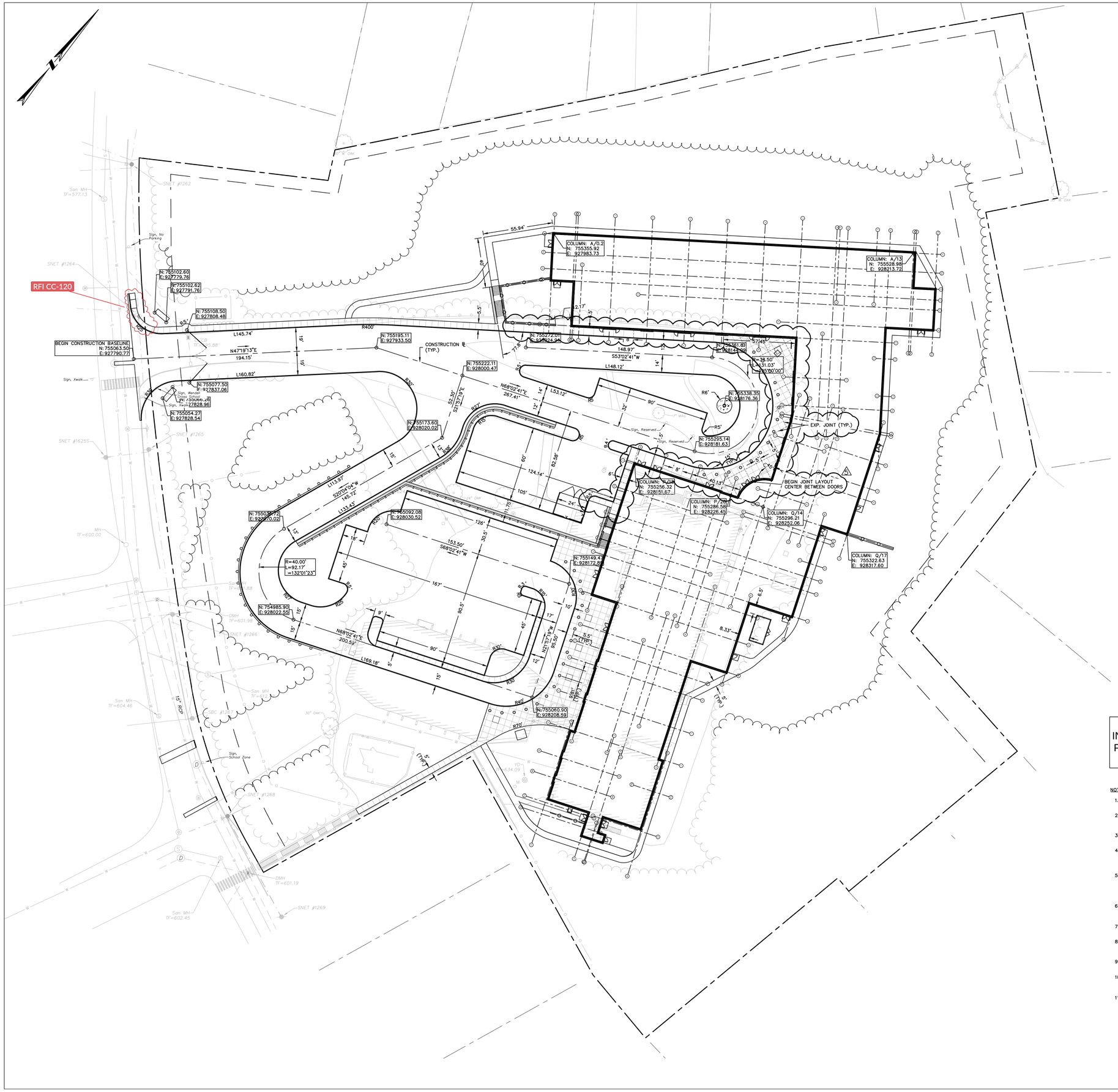

LEGEND

	– PROPERTY LINE
	– PROPERTY SETBACK
	– PROPOSED CURBING
BIT	– BITUMINOUS CONCRETE
CONC	– CONCRETE
BCLC	– BIT. CONC. LIP CURB
MCC	– MONOLITHIC CONC. CURB
CC	– CONC. CURB
EOP	– EDGE OF PAVEMENT
R	– CURVE RADIUS
L	– CURB LENGTH
SYL	– SINGLE YELLOW LINE
SWL	– SINGLE WHITE LINE
CLF	– CHAIN LINK FENCE
	– RETAINING WALL
	– BIT. CONC. SIDEWALK
	– CONC. PAVEMENT
	– LAWN
	– PLAY AREA WITH STONE BASE
	– PLANTED AREA
	– DETECTABLE WARNING
	– BIT. CONC. PAVEMENT (LIGHT DUTY)

THE WORK SHOWN IN THIS DRAWING IS BEING INSTALLED AS PART OF PHASE 2 OF THE CONSTRUCTION PROJECT. IT HAS BEEN INCLUDED AS PART OF THIS SET OF DRAWINGS **FOR REFERENCE ONLY**

NOTES:

1. NOTIFY "CALL BEFORE YOU DIG" (1–800–922–4455) AND VERIFY UTILITY MARK–OUT WITH THE OWNER PRIOR TO THE INITIATION OF ANY SITE DISTURBANCE.
2. THE CONTRACTOR IS SOLELY RESPONSIBLE FOR VERIFYING THE LOCATION AND NATURE OF ALL SUBSURFACE UTILITIES AT THE PROJECT WHICH MAY BE AFFECTED BY THE WORK. COORDINATE WITH RESPECTIVE UTILITY OWNERS AND PERFORM VERIFICATION OF TYPE, LOCATION AND INVERTS AS REQUIRED.
3. NOTIFY THE ENGINEER OF ANY AND ALL DISCREPANCIES BETWEEN EXISTING CONDITIONS AND THE CONTRACT DOCUMENTS BEFORE PROCEEDING WITH THAT PORTION OF THE WORK.
4. THE LOCATIONS OF EXISTING SITE FEATURES AS SHOWN HAVE BEEN OBTAINED FROM MAPS, SURVEYS, FIELD INSPECTIONS, AND OTHER AVAILABLE INFORMATION. THEY MUST BE CONSIDERED APPROXIMATE BOTH TO LOCATION, SIZE, AND AS–BUILT CONDITION AND ARE PROVIDED FOR INFORMATIONAL PURPOSES ONLY. THE CONTRACTOR IS SOLELY RESPONSIBLE FOR DETERMINING ACTUAL FIELD CONDITIONS.
5. THE DIMENSIONS SHOWN ON THE PLANS, INCLUDING THE INTENDED DIMENSIONS OF THE WORK, MAY VARY FROM ACTUAL EXISTING CONDITIONS IN THE FIELD. THE CONTRACTOR SHALL TAKE APPROPRIATE MEASUREMENTS TO VERIFY ALL DIMENSIONS SHOWN ON THE DRAWINGS AS WELL AS OTHER DIMENSIONS HE MAY DEEM APPROPRIATE TO FACILITATE THE COMPLETION OF THE WORK. NOTIFY THE ENGINEER OF ANY DISCREPANCIES BETWEEN EXISTING CONDITIONS AND THE CONTRACT DOCUMENTS BEFORE PROCEEDING WITH THAT PORTION OF THE WORK.
6. IMPLEMENTING WORKER SAFETY AND/OR HEALTH PROTOCOLS THAT ADDRESS COMPLIANCE WITH RULES, LAWS, AND REGULATIONS PERTAINING TO CONSTRUCTION SAFETY AND/OR THE POTENTIAL AND/OR ACTUAL RISK OF EXPOSURE TO SITE–SPECIFIC PHYSICAL OR CHEMICAL HAZARDS IS SOLELY THE RESPONSIBILITY OF THE CONTRACTOR.
7. THIS DRAWING IS INTENDED TO DEPICT THE LOCATION, LAYOUT, AND MATERIALS OF CONSTRUCTION AND IS INTENDED TO BE USED IN CONJUNCTION WITH THE DETAILS AND APPLICABLE SPECIFICATION SECTIONS.
8. ENGAGE A CONNECTICUT–LICENSED LAND SURVEYOR TO PERFORM LAND–SURVEYING SERVICES REQUIRED, INCLUDING, BUT NOT LIMITED TO VERIFICATION AND LAYOUT OF PROPOSED IMPROVEMENTS, DIMENSIONS, AND ELEVATIONS. REPORT DISCREPANCIES TO THE ENGINEER.
9. DIMENSIONS INDICATED ARE TO FACE OF CURB, PAVEMENT EDGE, EDGE OR CENTERLINE OF IMPROVEMENT, OR AS OTHERWISE NOTED.
10. PROVIDE FOR THE LAYOUT AND STAKING/MARKING OF THE PROPOSED LOCATION OF ALL PROPOSED SITE IMPROVEMENTS, INCLUDING FURNISHINGS. OBTAIN ENGINEER'S APPROVAL OF THE LAYOUT PRIOR TO PROCEEDING WITH THE WORK.
11. UNLESS OTHERWISE INDICATED, LINES ARE PARALLEL OR PERPENDICULAR TO LINE FROM WHICH THEY ARE MEASURED.

1" = 30'
0 15 30 60 FEET

DATE: OCTOBER 31, 2019
DRAWN BY: MRS
SCALE: 1" = 30'
REVIEWED BY: JSN
PROJECT NO. 151-0295

REVISIONS

NO.	DATE	DESCRIPTION
	11/25/19	ISSUED FOR BID
1	12/03/19	BID ADDENDUM #1
2	12/13/19	BID ADDENDUM #2
	12/27/19	ISSUED FOR PERMIT
3	02/24/20	ADDENDUM #5
4	04/27/20	PR #2
5	09/28/20	RFI #CC-148

SITE LAYOUT PLAN

STATE PROJECT NO. 151-0295 EA/RR
PHASE II: SITE, CONCRETE & STEEL
WENDELL CROSS ELEMENTARY SCHOOL
1255 HAMILTON AVENUE
WATERBURY, CT 06706

CONSULTANT'S SEAL

BSC GROUP
655 Winding Brook Drive
Glastonbury, CT 06033
860-652-8227
www.BSCGroup.com

ARCHITECT'S SEAL

21 Talcott Notch Road
Farmington, CT 06032

SHEET NO.
C-3.0

RFI CC-120

2020.03.27 Revised Drawings C-4.1 (catch basin CB-5 & CB-6).pdf

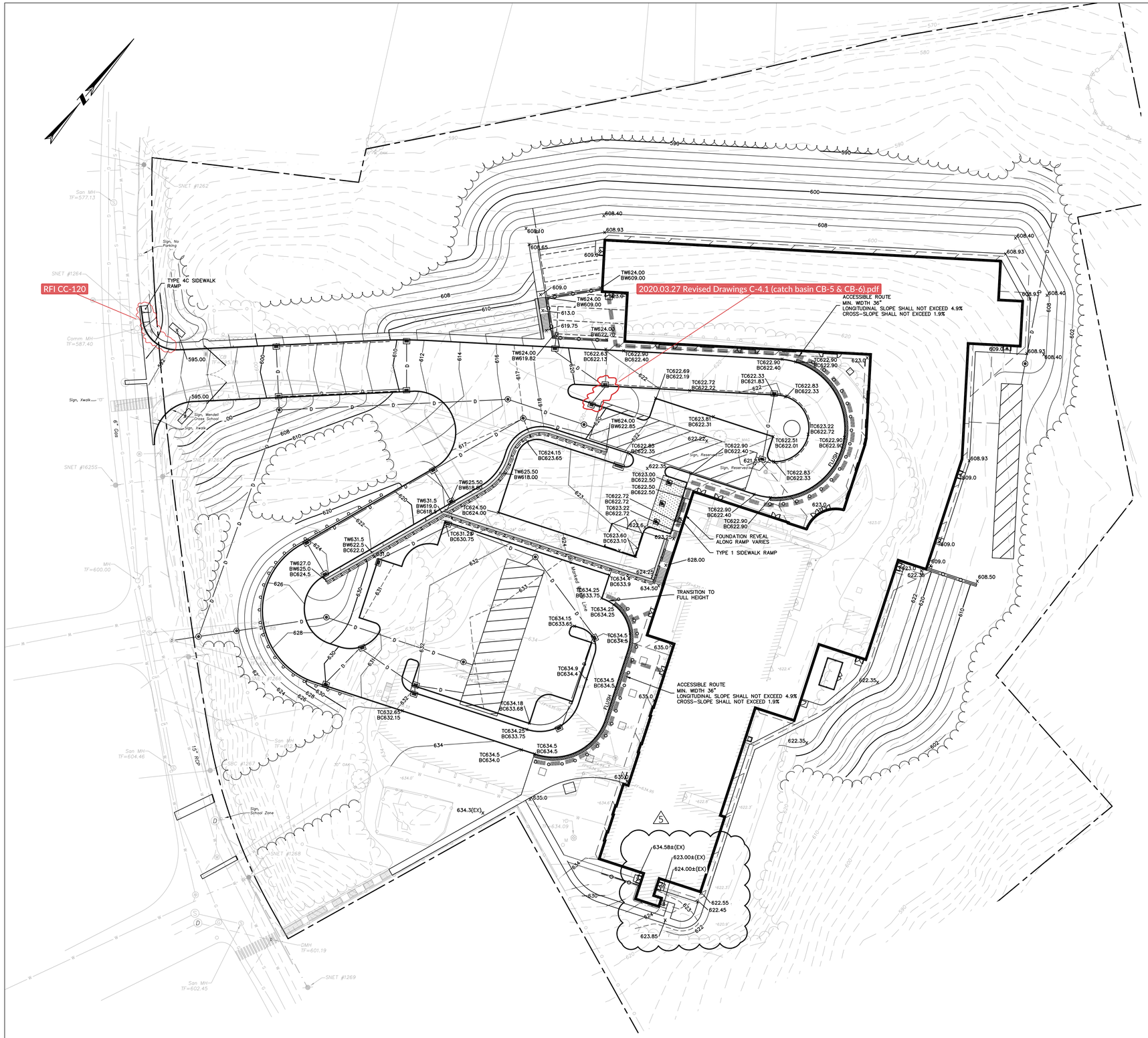

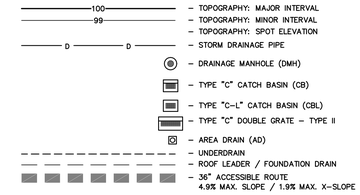

THE WORK SHOWN IN THIS DRAWING IS BEING INSTALLED AS PART OF PHASE 2 OF THE CONSTRUCTION PROJECT. IT HAS BEEN INCLUDED AS PART OF THIS SET OF DRAWINGS **FOR REFERENCE ONLY**

NOTES:

1. CONTRACTOR SHALL NOTIFY 'CALL BEFORE YOU DIG' (1-800-922-4455) AND VERIFY UTILITY MARK-OUT WITH THE OWNER PRIOR TO THE INITIATION OF ANY SITE DISTURBANCE.
2. THE CONTRACTOR IS SOLELY RESPONSIBLE FOR VERIFICATION OF THE LOCATION AND NATURE OF ALL SUBSURFACE UTILITIES AT THE PROJECT WHICH MAY BE AFFECTED BY THE WORK. COORDINATE WITH RESPECTIVE UTILITY OWNERS AND PERFORM VERIFICATION OF TYPE, LOCATION AND INVERTS AS REQUIRED.
3. THE CONTRACTOR SHALL NOTIFY THE ENGINEER OF ANY AND ALL DISCREPANCIES BETWEEN EXISTING CONDITIONS AND THE CONTRACT DOCUMENTS BEFORE PROCEEDING WITH THAT PORTION OF THE WORK.
4. THE LOCATIONS OF EXISTING SITE FEATURES AS SHOWN HAVE BEEN OBTAINED FROM MAPS, SURVEYS, FIELD INSPECTIONS, AND OTHER AVAILABLE INFORMATION. THEY MUST BE CONSIDERED APPROXIMATE BOTH TO LOCATION, SIZE, AND AS-BUILT CONDITION AND ARE PROVIDED FOR INFORMATIONAL PURPOSES ONLY. THE CONTRACTOR IS SOLELY RESPONSIBLE FOR DETERMINING ACTUAL FIELD CONDITIONS.
5. THE DIMENSIONS SHOWN ON THE PLANS, INCLUDING THE INTENDED DIMENSIONS OF THE WORK, MAY VARY FROM ACTUAL EXISTING CONDITIONS IN THE FIELD. THE CONTRACTOR SHALL TAKE APPROPRIATE MEASUREMENTS TO VERIFY ALL DIMENSIONS SHOWN ON THE DRAWINGS AS WELL AS OTHER DIMENSIONS HE MAY DEEM APPROPRIATE TO FACILITATE THE COMPLETION OF THE WORK.
6. ENGAGE A CONNECTICUT-LICENSED LAND SURVEYOR TO PERFORM LAND-SURVEYING SERVICES REQUIRED, INCLUDING, BUT NOT LIMITED TO VERIFICATION AND LAYOUT OF PROPOSED IMPROVEMENTS, DIMENSIONS, AND ELEVATIONS. REPORT DISCREPANCIES TO THE ENGINEER.
7. UNLESS OTHERWISE INDICATED, ALL DISTURBED AREAS SHALL BE RESTORED WITH SIX (6) INCHES OF LOAM, SEEDED, FERTILIZED, AND MULCHED. PROVIDE ADDITIONAL EROSION CONTROLS AS REQUIRED.
8. COMPLY WITH CONNECTICUT BUILDING CODE FOR ALL SITE CONSTRUCTION, INCLUDING HANDICAPPED ACCESSIBILITY.
9. THE CROSS-SLOPE OF ANY SIDEWALK, WALKWAY, OR OTHER PEDESTRIAN SURFACE SHALL NOT BE STEEPER THAN 1:48 (2%).
10. ACCESSIBLE ROUTES SHALL COMPLY WITH CONNECTICUT BUILDING CODE. THE RUNNING SLOPE OF WALKING SURFACES SHALL NOT BE STEEPER THAN 1:20 (5%). THE CROSS SLOPE OF A WALKING SURFACE SHALL NOT BE STEEPER THAN 1:48 (2%).
11. RAMPS SHALL COMPLY WITH CT BUILDING CODE, REF. 2012 IBC SECTION 1010 AND ICC/ANSI A117.1 2009 CHAPTER 4, SECTION 405.
12. VERIFY ALL GRADES AND SLOPES PRIOR TO CONCRETE PLACEMENT. REPORT DISCREPANCIES TO THE ENGINEER BEFORE PROCEEDING WITH THE WORK.
13. PROPOSED GRADES INDICATE DESIGN INTENT. VERIFY ELEVATIONS AND MAKE ADJUSTMENTS TO MEET FIELD CONDITIONS. DO NOT PROCEED WITH ANY ADJUSTMENT OR FIELD MODIFICATION UNTIL APPROVED BY THE ENGINEER.
14. GRADE TRANSITION BETWEEN TOPOGRAPHIC LINES AND SPOT GRADES SHALL BE UNIFORM UNLESS OTHERWISE INDICATED.
15. UNLESS OTHERWISE INDICATED, BLEND TRANSITIONS IN ELEVATION BETWEEN NEW WORK AND AREAS TO REMAIN AT A MAXIMUM SLOPE OF 1V:2H AND RESTORE WITH FOUR (4) INCHES OF LOAM AND SEED. PROVIDE ADDITIONAL EROSION CONTROLS AS REQUIRED. COORDINATE WITH ENGINEER IF DIMENSIONAL CONSTRAINTS REQUIRE STEEPER SLOPES.
16. UPON REACHING PROPOSED SUBGRADE ELEVATIONS WITHIN THE FIELD, ENGINEER WILL REVIEW SUBGRADE PRIOR TO INSTALLATION OF DRAINAGE SYSTEM. SEE SPECIFICATION SECTION 31 2310 – EARTHWORK.
17. ALL CATCH BASINS AND SHALLOW DROP INLETS SET AGAINST CURBS SHALL BE CONNDOT TYPE 'C'. ALL OTHERS SHALL BE CONNDOT TYPE 'C-L'.
18. ALL UNDERDRAINS SHALL BE 6-INCH PVC. SEE SPECIFICATIONS.
19. THE TOPS, RIMS, FRAMES, GRATES, AND COVERS (AS APPLICABLE) OF ALL UTILITY STRUCTURES THAT ARE TO REMAIN SHALL BE ADJUSTED TO MATCH FINAL GRADE IN A FLUSH CONDITION. ALL NEW UTILITY STRUCTURES SHALL BE INSTALLED WITH TOPS, RIMS, FRAMES, GRATES, AND COVERS (AS APPLICABLE) TO FINAL GRADE IN A FLUSH CONDITION.
20. AT THE CONCLUSION OF THE WORK, CONTRACTOR SHALL REMOVE ALL ACCUMULATED SEDIMENT MATERIAL FROM ALL PORTIONS OF THE STORM DRAINAGE SYSTEM, INCLUDING NEW WORK AND EXISTING WORK THAT REMAINS OR IS INCORPORATED INTO THE NEW SYSTEM.

1" = 30'
0 15 30 60 FEET

DATE: OCTOBER 31, 2019
DRAWN BY: MRS
SCALE: 1" = 30'
REVIEWED BY: RSN
PROJECT NO. 151-0295

REVISIONS

NO.	DATE	DESCRIPTION
	11/25/19	ISSUED FOR BID
1	12/09/19	ISSUED FOR PERMIT
	12/27/19	ISSUED FOR PERMIT
2	01/17/20	ISSUED FOR PERMIT
3	01/27/20	GRADING CLARIF.
4	08/07/20	REV. PER RFI CC-106
5	10/15/20	REV. PER RFI CC-149

SITE GRADING PLAN

STATE PROJECT NO. 151-0295 EA/RR
PHASE II: SITE, CONCRETE & STEEL
WENDELL CROSS ELEMENTARY SCHOOL
1255 HAMILTON AVENUE
WATERBURY, CT 06706

CONSULTANT'S SEAL

BSC GROUP
655 Winding Brook Drive
Glastonbury, CT 06033
860-652-8227
www.BSCGroup.com

ARCHITECT'S SEAL

21 Talcott Notch Road
Farmington, CT 06032

SHEET NO.
C-4.0

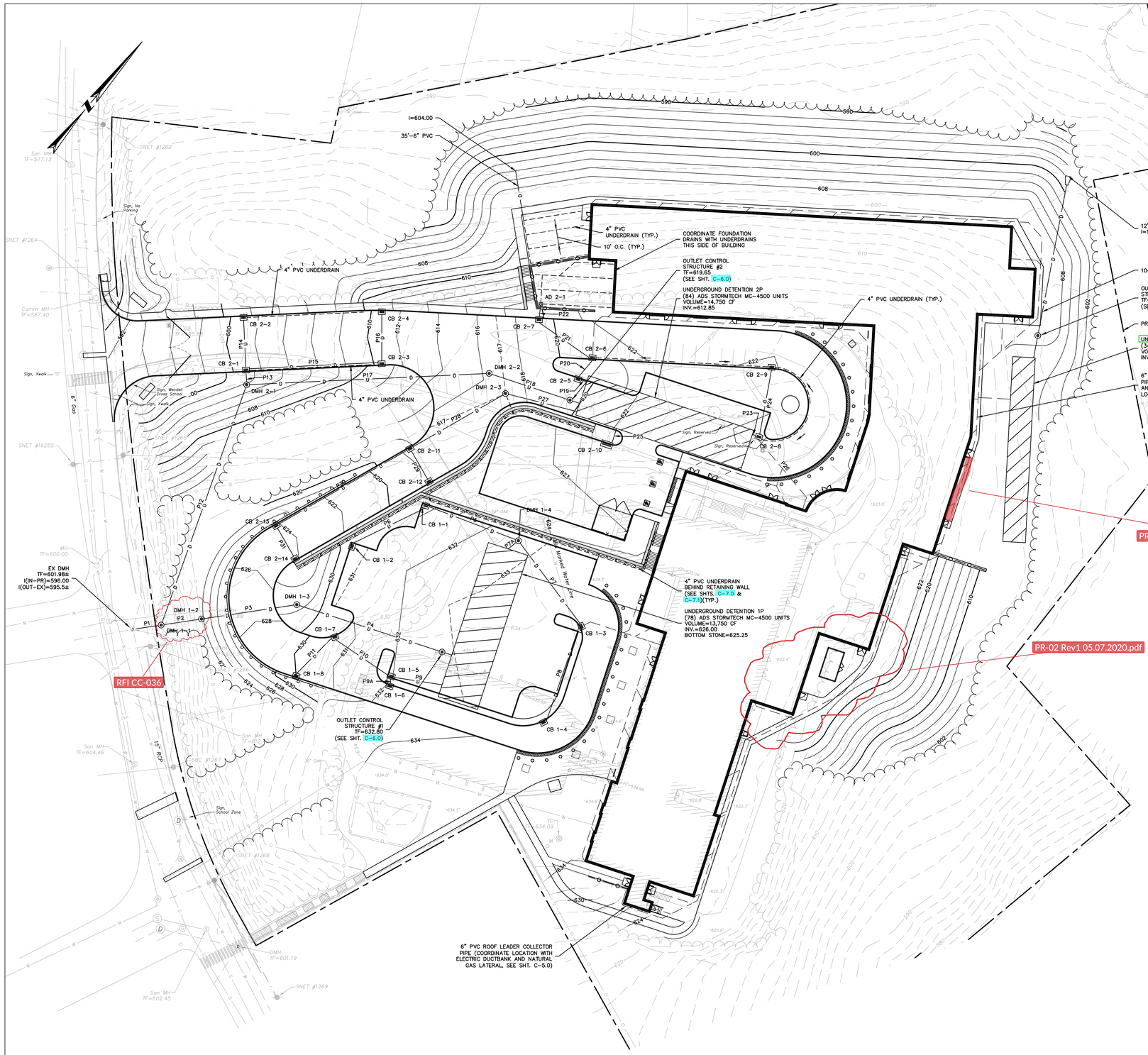

LEGEND

- PROPERTY LINE
- TOPOGRAPHY: MAJOR INTERVAL
- TOPOGRAPHY: MINOR INTERVAL
- TOPOGRAPHY: SPOT ELEVATION
- STORM DRAINAGE PIPE
- DRAINAGE MANHOLE (DMH)
- TYPE "C" CATCH BASIN (CB)
- TYPE "C-L" CATCH BASIN (CBL)
- TYPE "C" DOUBLE GRATE – TYPE II
- AREA DRAIN (AD)
- UNDERDRAIN
- ROOF LEADER / FOUNDATION DRAIN
- 36" ACCESSIBLE ROUTE 4.9% MAX. SLOPE / 1.9% MAX. X-SLOPE

DRAINAGE STRUCTURE TABLE

STR. #	STR. TYPE	TF ELEV.	INV. OUT	INV. IN	INV. IN
DMH 1-1	DMH	608.00	596.15	596.25 (ALL)	–
DMH 1-2	DMH	622.00	607.00	607.10	–
DMH 1-3	DMH	627.50	615.50	623.98	–
DMH 1-4	DMH	632.50	626.11	626.21 (ALL)	–
CB 1-1	"C" CB	630.75	626.85	626.95	–
CB 1-2	"C" CB	630.50	627.50	–	–
CB 1-3	"C" CB	633.50	629.52	629.62	–
CB 1-4	"C" CB	633.50	630.50	–	–
CB 1-5	"C" CB	631.93	626.52	626.62 (W)	628.94 (S)
CB 1-6	"C" CB	632.00	629.00	–	–
CB 1-7	"C" CB	630.50	627.06	627.16	–
CB 1-8	"C" CB	630.00	627.50	–	–
DMH 2-1	DMH	602.25	597.97	598.07 (NW)	598.75 (NE)
CB 2-1	"C" CB (4'S, HD)	601.00	598.14	598.24 (ALL)	–
CB 2-2	"C" CB (4'S, HD)	601.00	598.50	–	–
CB 2-3	"C" CB (4'S, HD)	611.00	607.26	607.36	–
CB 2-4	"C" CB (4'S, HD)	611.00	608.00	–	–
DMH 2-2	DMH	616.25	611.65	611.75	–
CB 2-5	"C" CB	619.60	615.09	615.19	–
CB 2-6	"C" CB	621.22	615.33	615.43	–
CB 2-7	"C" CB	619.25	615.90	617.43	–
AD 2-1	AREA DRAIN	622.37	617.50	617.60 (6")	621.0 (4"UD)
CB 2-8	"C" CB	621.75	617.83	617.93	–
CB 2-9	"C" CB	621.75	618.75	–	–
CB 2-10	"C" DBL – TYPE II	622.25	617.50	619.75	–
DMH 2-3	DMH	617.00	613.90	614.00	–
CB 2-11	"C" CB	617.75	614.65	614.75 (ALL)	–
CB 2-12	"C" CB	617.75	615.25	–	–
CB 2-13	"C" CB	624.14	620.60	620.70	–
CB 2-14	"C" CB	624.14	621.14	–	–

* 4'S, HD = 4-FOOT SUMP WITH HOOD

2020.01.17 BSC - Drainage Clarification.pdf

RFI CC-014

PIPE TABLE

PIPE #	MATERIAL	DIA.	LENGTH	SLOPE (%)
P1	RCP	18"	15'	1.00
P2	CORRUGATED HDPE	18"	24'	44.79
P3	CORRUGATED HDPE	18"	62'	13.55
P4	HDPE	18"	101'	2.00
P5	HDPE	12"	64'	1.00
P6	HDPE	12"	55'	1.00
P7	HDPE	12"	69'	4.80
P7A	HDPE	12"	7'	1.57
P8	HDPE	12"	68'	1.29
P9	HDPE	15"	33'	2.00
P9A	HDPE	12"	3'	2.00
P10	HDPE	12"	44'	1.00
P11	RCP	12"	34'	1.00
P12	RCP	18"	172'	1.00
P13	RCP	15"	6'	1.17
P14	RCP	12"	32'	0.80
P15	RCP	12"	89'	10.13
P16	RCP	12"	32'	2.00
P17	HDPE	18"	163'	7.91
P18	HDPE	18"	55'	2.00
P19	HDPE	12"	4'	1.00
P20	HDPE	12"	14'	1.00
P21	HDPE	12"	42'	1.12
P22	PVC	8"	7'	1.00
P23	HDPE	12"	3'	2.00
P24	HDPE	12"	45'	1.82
P25	HDPE	12"	10'	2.00
P26	PVC	6"	61'	1.00
P27	HDPE	15"	49'	2.00
P28	HDPE	15"	72'	0.90
P29	RCP	12"	22'	2.27
P30	HDPE	12"	102'	5.74
P31	HDPE	12"	22'	2.00

RFI CC-079

NOTES:

1. CONTRACTOR SHALL NOTIFY 'CALL BEFORE YOU DIG' (1-800-922-4455) AND VERIFY UTILITY MARK-OUT WITH THE OWNER PRIOR TO THE INITIATION OF ANY SITE DISTURBANCE.
2. THE CONTRACTOR IS SOLELY RESPONSIBLE FOR VERIFICATION OF THE LOCATION AND NATURE OF ALL SUBSURFACE UTILITIES AT THE PROJECT WHICH MAY BE AFFECTED BY THE WORK. COORDINATE WITH RESPECTIVE UTILITY OWNERS AND PERFORM VERIFICATION OF TYPE, LOCATION AND INVERTS AS REQUIRED.
3. THE CONTRACTOR SHALL NOTIFY THE ENGINEER OF ANY AND ALL DISCREPANCIES BETWEEN EXISTING CONDITIONS AND THE CONTRACT DOCUMENTS BEFORE PROCEEDING WITH THAT PORTION OF THE WORK.
4. THE LOCATIONS OF EXISTING SITE FEATURES AS SHOWN HAVE BEEN OBTAINED FROM MAPS, SURVEYS, FIELD INSPECTIONS, AND OTHER AVAILABLE INFORMATION. THEY MUST BE CONSIDERED APPROXIMATE BOTH TO LOCATION, SIZE, AND AS-BUILT CONDITION AND ARE PROVIDED FOR INFORMATIONAL PURPOSES ONLY. THE CONTRACTOR IS SOLELY RESPONSIBLE FOR DETERMINING ACTUAL FIELD CONDITIONS.
5. THE DIMENSIONS SHOWN ON THE PLANS, INCLUDING THE INTENDED DIMENSIONS OF THE WORK, MAY VARY FROM ACTUAL EXISTING CONDITIONS IN THE FIELD. THE CONTRACTOR SHALL TAKE APPROPRIATE MEASUREMENTS TO VERIFY ALL DIMENSIONS SHOWN ON THE DRAWINGS AS WELL AS OTHER DIMENSIONS HE MAY DEEM APPROPRIATE TO FACILITATE THE COMPLETION OF THE WORK.
6. ENGAGE A CONNECTICUT-LICENSED LAND SURVEYOR TO PERFORM LAND-SURVEYING SERVICES REQUIRED, INCLUDING, BUT NOT LIMITED TO VERIFICATION AND LAYOUT OF PROPOSED IMPROVEMENTS, DIMENSIONS, AND ELEVATIONS. REPORT DISCREPANCIES TO THE ENGINEER.
7. UNLESS OTHERWISE INDICATED, ALL DISTURBED AREAS SHALL BE RESTORED WITH SIX (6) INCHES OF LOAM, SEEDED, FERTILIZED, AND MULCHED. PROVIDE ADDITIONAL EROSION CONTROLS AS REQUIRED.
8. COMPLY WITH CONNECTICUT BUILDING CODE FOR ALL SITE CONSTRUCTION, INCLUDING HANDICAPPED ACCESSIBILITY.
9. THE CROSS-SLOPE OF ANY SIDEWALK, WALKWAY, OR OTHER PEDESTRIAN SURFACE SHALL NOT BE STEEPER THAN 1:48 (2%).
10. ACCESSIBLE ROUTES SHALL COMPLY WITH CONNECTICUT BUILDING CODE. THE RUNNING SLOPE OF WALKING SURFACES SHALL NOT BE STEEPER THAN 1:20 (5%). THE CROSS SLOPE OF A WALKING SURFACE SHALL NOT BE STEEPER THAN 1:48 (2%).
11. RAMPS SHALL COMPLY WITH CT BUILDING CODE, REF. 2012 IBC SECTION 1010 AND ICC/ANSI A117.1 2009 CHAPTER 4, SECTION 405.
12. VERIFY ALL GRADES AND SLOPES PRIOR TO CONCRETE PLACEMENT. REPORT DISCREPANCIES TO THE ENGINEER BEFORE PROCEEDING WITH THE WORK.
13. PROPOSED GRADES INDICATE DESIGN INTENT. VERIFY ELEVATIONS AND MAKE ADJUSTMENTS TO MEET FIELD CONDITIONS. DO NOT PROCEED WITH ANY ADJUSTMENT OR FIELD MODIFICATION UNTIL APPROVED BY THE ENGINEER.
14. GRADE TRANSITION BETWEEN TOPOGRAPHIC LINES AND SPOT GRADES SHALL BE UNIFORM UNLESS OTHERWISE INDICATED.
15. UNLESS OTHERWISE INDICATED, BLEND TRANSITIONS IN ELEVATION BETWEEN NEW WORK AND AREAS TO REMAIN AT A MAXIMUM SLOPE OF 1V:2H AND RESTORE WITH FOUR (4) INCHES OF LOAM AND SEED. PROVIDE ADDITIONAL EROSION CONTROLS AS REQUIRED. COORDINATE WITH ENGINEER IF DIMENSIONAL CONSTRAINTS REQUIRE STEEPER SLOPES.
16. UPON REACHING PROPOSED SUBGRADE ELEVATIONS WITHIN THE FIELD, ENGINEER WILL REVIEW SUBGRADE PRIOR TO INSTALLATION OF DRAINAGE SYSTEM. SEE SPECIFICATION SECTION 31 2310 – EARTHWORK.
17. ALL CATCH BASINS AND SHALLOW DROP INLETS SET AGAINST CURBS SHALL BE CONNDOT TYPE 'C'. ALL OTHERS SHALL BE CONNDOT TYPE 'C-L'.
18. ALL UNDERDRAINS SHALL BE 4-INCH PVC UNLESS OTHERWISE INDICATED ON THE PLANS. SEE SPECIFICATIONS.
19. THE TOPS, RIMS, FRAMES, GRATES, AND COVERS (AS APPLICABLE) OF ALL UTILITY STRUCTURES THAT ARE TO REMAIN SHALL BE ADJUSTED TO MATCH FINAL GRADE IN A FLUSH CONDITION. ALL NEW UTILITY STRUCTURES SHALL BE INSTALLED WITH TOPS, RIMS, FRAMES, GRATES, AND COVERS (AS APPLICABLE) TO FINAL GRADE IN A FLUSH CONDITION.
20. AT THE CONCLUSION OF THE WORK, CONTRACTOR SHALL REMOVE ALL ACCUMULATED SEDIMENT MATERIAL FROM ALL PORTIONS OF THE STORM DRAINAGE SYSTEM, INCLUDING NEW WORK AND EXISTING WORK THAT REMAINS OR IS INCORPORATED INTO THE NEW SYSTEM.

THE WORK SHOWN IN THIS DRAWING IS BEING INSTALLED AS PART OF PHASE 2 OF THE CONSTRUCTION PROJECT. IT HAS BEEN INCLUDED AS PART OF THIS SET OF DRAWINGS **FOR REFERENCE ONLY**

1" = 30'

0 15 30 60 FEET

DATE: OCTOBER 31, 2019
DRAWN BY: MRS
SCALE: 1" = 30'
REVIEWED BY: JSN
PROJECT NO. 151-0295

REVISIONS

NO.	DATE	DESCRIPTION
1	11/25/19	ISSUED FOR BID
2	01/27/20	ADD DMH 1-4
3	03/26/20	DRAINAGE REV.
4	04/27/20	PR #2
5	05/07/20	RFI CC-055
6	10/09/20	REV. PER RFI CC-169

2020.03.27 Revised Drawings C-4

SITE DRAINAGE PLAN

STATE PROJECT NO. 151-0295 EA/RR
PHASE II: SITE, CONCRETE & STEEL

WENDELL CROSS ELEMENTARY SCHOOL

1255 HAMILTON AVENUE
WATERBURY, CT 06706

CONSULTANT'S SEAL

BSC GROUP
655 Winding Brook Drive
Glastonbury, CT 06033
860-652-8227
www.BSCGroup.com

ARCHITECT'S SEAL

21 Talcott Notch Road
Farmington, CT 06032

SHEET NO.
C-4.1

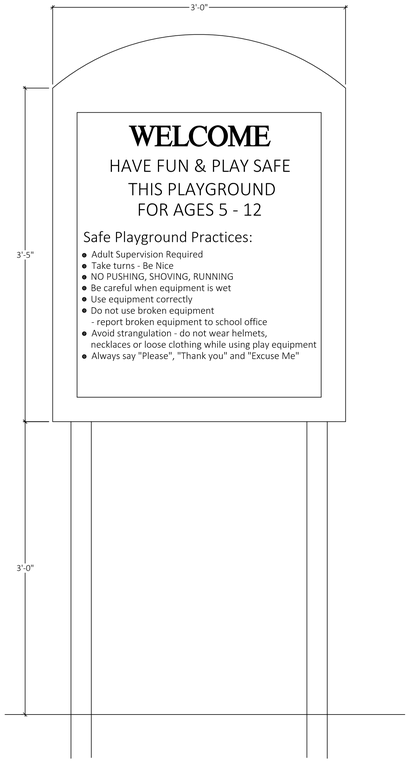

1 5 -12 PLAYGROUND SAFETY SIGN
SCALE: NOT TO SCALE

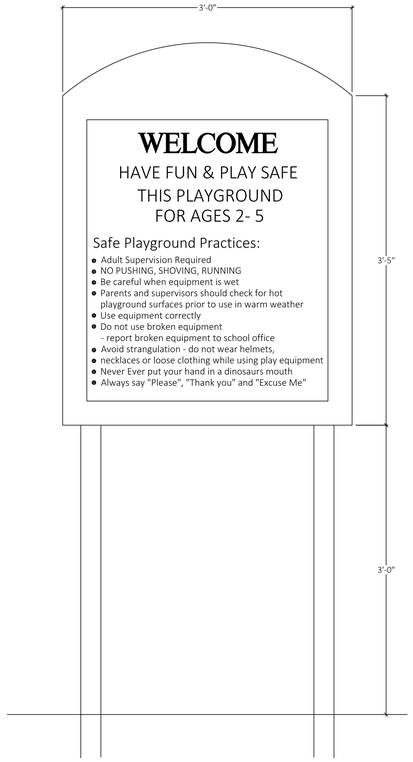

2 2 - 5 PLAYGROUND SAFETY SIGN
SCALE: NOT TO SCALE

ACCESSIBILITY CHART

Age Group: 5-12			
Elevated Play Activities Total:	7		
Elevated Play Activities Accessible By Transfer:	6	Req'd:	4
Elevated Play Activities Accessible By Ramp:	0	Req'd:	0
Ground Level Activity Type:	3	Req'd:	2
Ground Level Quantity:	5	Req'd:	2

Description	Elevation	Access	Type of Play	Qty
30" ID "S" TUBE SLIDE LH (12' DECK)	Elevated	None	SLIDE	1
BIG TIMBER HOLLOW LOG SLIDE (6'6" DK)	Elevated	Transfer	SLIDE	1
BRAIDED CLIMBER (8' DECK)	Elevated	Transfer	CLIMBER	1
COMMAND POST W/WHEEL	Elevated	Transfer	MANIPULATIVE_EQUIP	1
FULL ENCLOSURE W/SEAT	Elevated	Transfer	IMAGINATION_PANEL	1
TWISTED VINE CLIMBER (6'6" DECK)	Elevated	Transfer	CLIMBER	1
UPHILL CLIMBER (6'6" & 8' DECK)	Elevated	Transfer	CLIMBER	1
ELECTRONIC PIANO PANEL (BELOW DECK)	Ground	Ground	SOUND_EQUIP	1
KC INTERACTIVE PANEL (BELOW DECK)	Ground	Ground	MANIPULATIVE_EQUIP	1
LOOP SEAT	Ground	Ground	IMAGINATION_PANEL	1
SPACE SHIP PANEL (BELOW DECK)	Ground	Ground	IMAGINATION_PANEL	1
TIC-TAC-TOE PANEL (BELOW DECK)	Ground	Ground	MANIPULATIVE_EQUIP	1

Age Group: 2-5			
Elevated Play Activities Total:	7		
Elevated Play Activities Accessible By Transfer:	7	Req'd:	4
Elevated Play Activities Accessible By Ramp:	0	Req'd:	0
Ground Level Activity Type:	3	Req'd:	2
Ground Level Quantity:	11	Req'd:	2

Description	Elevation	Access	Type of Play	Qty
6'2" TYP II SLIDE 360 DEG DOMED WAVE (5' DK)	Elevated	Transfer	SLIDE	1
BUMP & GLIDE SLIDE, ONE PIECE (4' DECK)	Elevated	Transfer	SLIDE	1
BUMPER LADDER (5' DECK)	Elevated	Transfer	CLIMBER	1
COMMAND POST W/WHEEL	Elevated	Transfer	MANIPULATIVE_EQUIP	1
HONEYCOMB CLIMBER (5' DECK)	Elevated	Transfer	CLIMBER	1
KC INTERACTIVE PANEL	Elevated	Transfer	MANIPULATIVE_EQUIP	1
MAGIC BALL POPPER PANEL	Elevated	Transfer	MANIPULATIVE_EQUIP	1
CALYPSO 2 DRUM 1/2 PANEL (BELOW DECK)	Ground	Ground	SOUND_EQUIP	1
CRAWL THRU PANEL (BELOW DECK)	Ground	Ground	IMAGINATION_PANEL	1
ELECTRONIC PIANO PANEL (BELOW DECK)	Ground	Ground	SOUND_EQUIP	1
MC_Playhouse_Imaginative	Ground	Ground	IMAGINATION_PANEL	3
MC_Playhouse_Manipulative	Ground	Ground	MANIPULATIVE_EQUIP	3
PUPPET STAGE PANEL (BELOW DECK ONLY)	Ground	Ground	IMAGINATION_PANEL	1
SLIDING TILE PANEL (BELOW DECK)	Ground	Ground	MANIPULATIVE_EQUIP	1

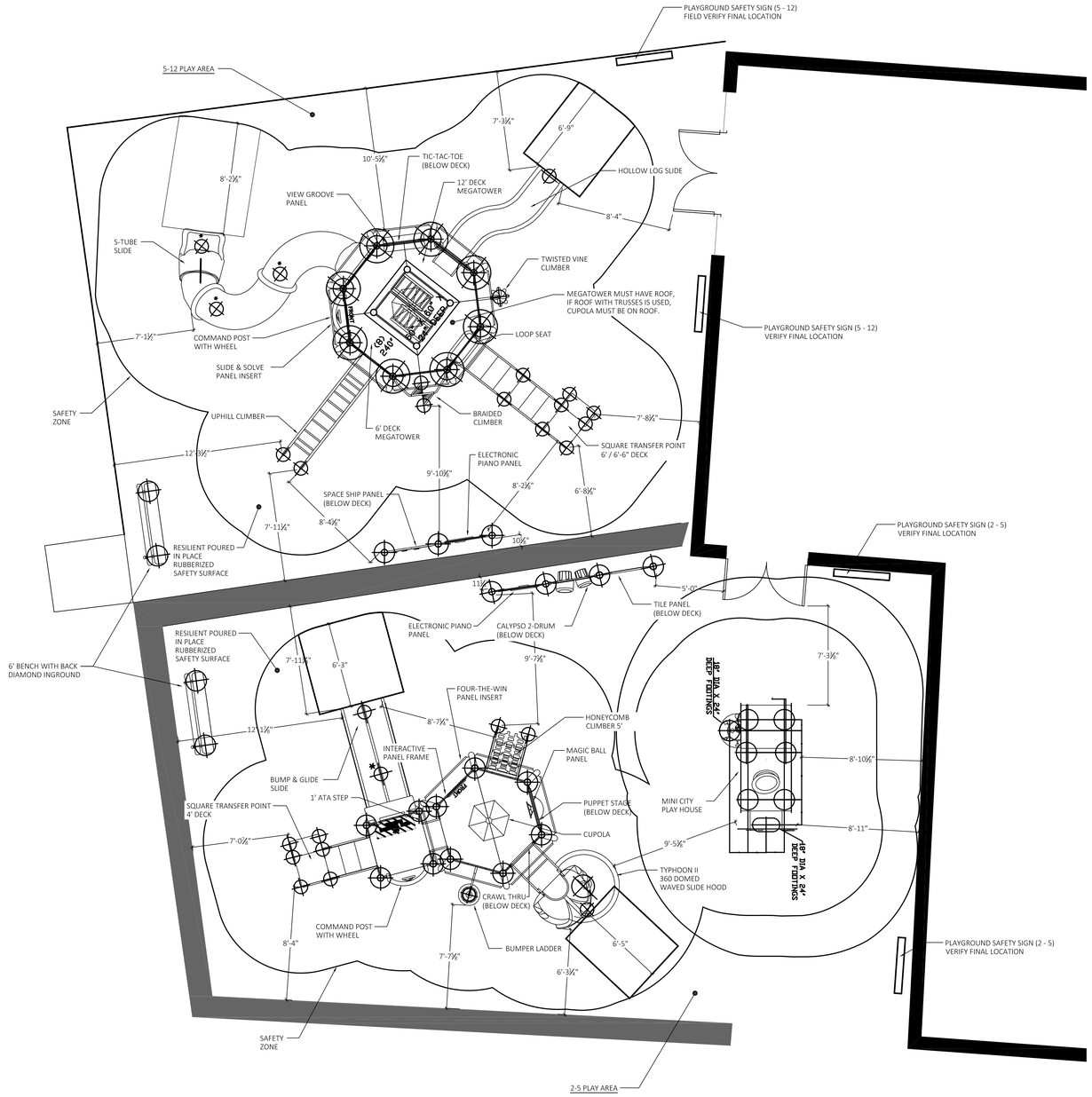

PLAY AREA LAYOUT
SCALE: 1/4" = 1' - 0"

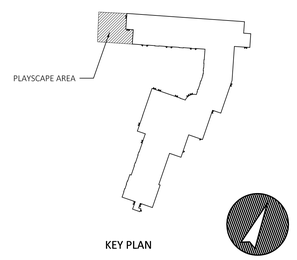

DATE: 7/1/2021
DRAWN BY: JJM
SCALE: NOTED
REVIEWED BY: BKS
PROJECT NO. 2018-115A
XREF - PLAYSCAPE

REVISIONS

NO.	DATE	DESCRIPTION

PLAY AREA LAYOUT

STATE PROJECT NO. 151-0295 EA/RR
PHASE IV - PLAYSCAPE CONSTRUCTION
WENDELL CROSS ELEMENTARY SCHOOL
1255 HAMILTON AVENUE
WATERBURY, CT 06706

CONSULTANT'S SEAL

ARCHITECT'S SEAL

FRIAR
21 Talcott Notch Road
Farmington, CT 06032

SHEET NO.
PE1.1

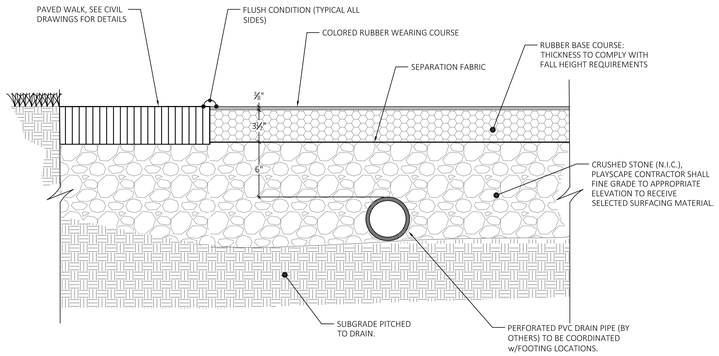

RESILIENT SAFETY SURFACE

SCALE: NOT TO SCALE

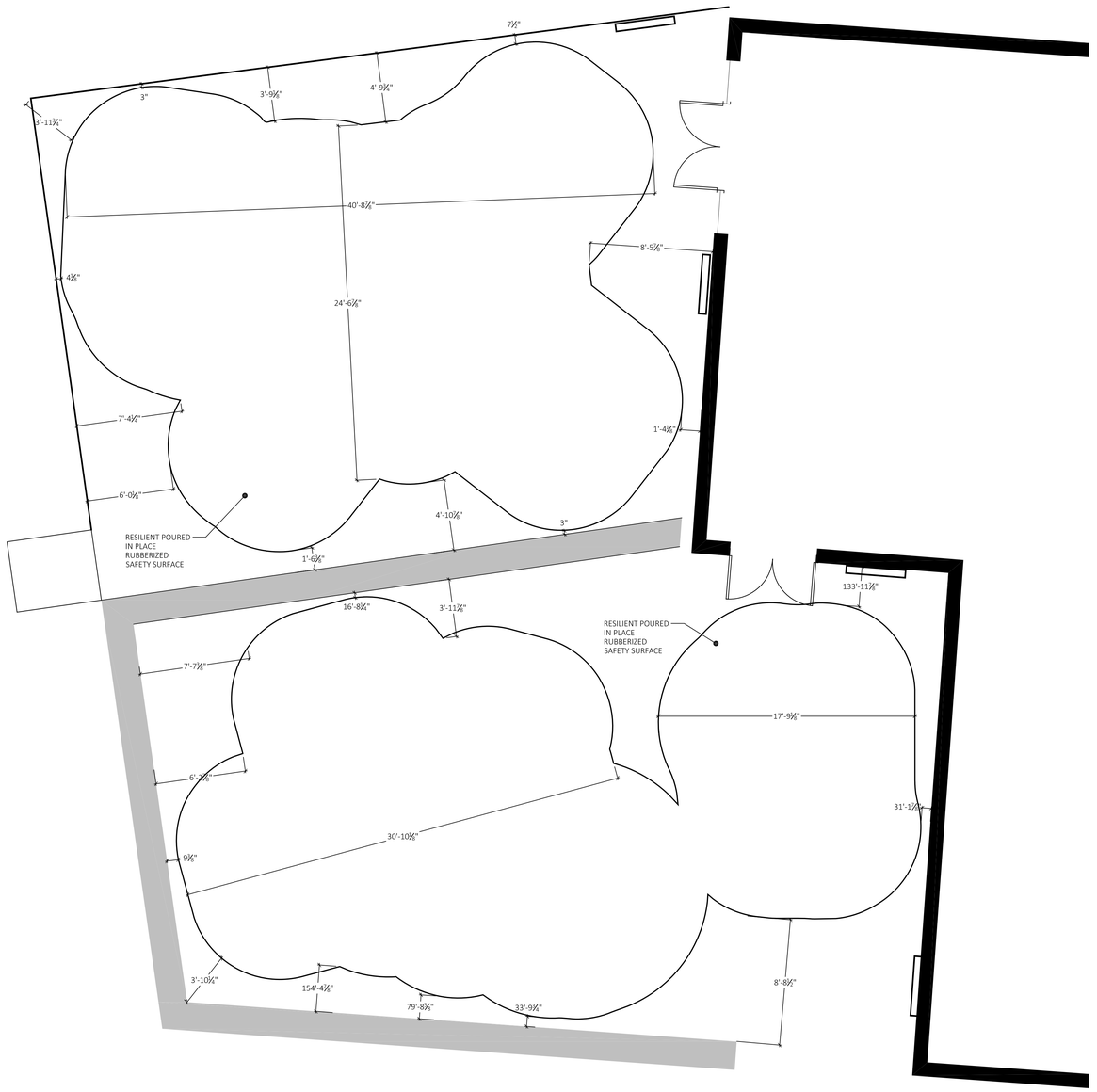

PLAY AREA SURFACING PLAN

SCALE: 1/4" = 1 - 0"

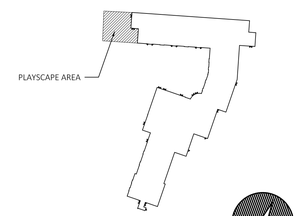

KEY PLAN

DATE: 3/1/2021
DRAWN BY: JJM
SCALE: NOTED
REVIEWED BY: BRS
PROJECT NO. 2018-115A
XREF - PLAYSCAPE

REVISIONS

NO.	DATE	DESCRIPTION

PLAY AREA

SURFACING PLAN

STATE PROJECT NO. 151-0295 EA/RR
PHASE IV - PLAYSCAPE CONSTRUCTION

WENDELL CROSS ELEMENTARY SCHOOL

1255 HAMILTON AVENUE
WATERBURY, CT 06706

CONSULTANT'S SEAL

ARCHITECT'S SEAL

FRIAR
21 Talcott Notch Road
Farmington, CT 06032

SHEET NO.
PE-1.2

FOOTING INFORMATION

PAGE 5 OF 5

POST LOCATION:

FOOTING	MODEL	POST LENGTH
A.	714-520	144" & 136" POSTS.
B.	714-576	204" POST.
C.	714-571	108" POST.
D.	714-551	108" POST.
E.	714-552	136" POST.
F.	714-553	160" POST.
G.	714-554	178" POST.
H.	714-555	76" POST.
I.	714-556	196" POST.
J.	714-563	157" ARCH ROOF.
K.	714-565	181" ARCH ROOF.
L.	714-566	199" ARCH ROOF.
M.	714-572	144" POST.
N.	714-573	168" POST.
O.	714-574	188" POST.
P.	714-575	196" POST.
Q.	714-578	137" ARCH.
R.	714-583	157" ARCH.
S.	714-585	181" ARCH.
T.	714-586	199" ARCH.

FOOTING SCHEDULE:

A. 30" DIA. X 26" DEEP.
B-T. 18" DIA. X 24" DEEP.
U. 36" DIA. X 18" DEEP.
V. 42" DIA. X 18" DEEP.
W. 48" DIA. X 18" DEEP.
X. 18" DIA. X 24" DEEP.
Y. 12" DIA. X 18" DEEP.
Z. 20" DIA. X 42" DEEP.

* LOCATIONS DETERMINED ON SITE. SEE INSTALLATION INSTRUCTIONS FOR SPECIFIC FOOTING SIZE AND LOCATION.

FOOTING NOTES:

1. SOME EQUIPMENT LEGS MAY NOT REACH TO BOTTOM OF FOOTINGS.
2. ALLOW FOR BLOCK THICKNESS BY INCREASING FOOTING DEPTH WHEN APPLICABLE.

DECK & COMPONENT FOOTING DETAIL

SCALE: NONE

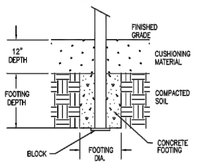

CENTER STAGE FOOTING DETAIL

SCALE: NONE

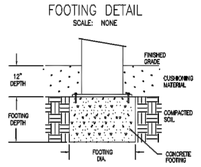

D60029 Rev. B

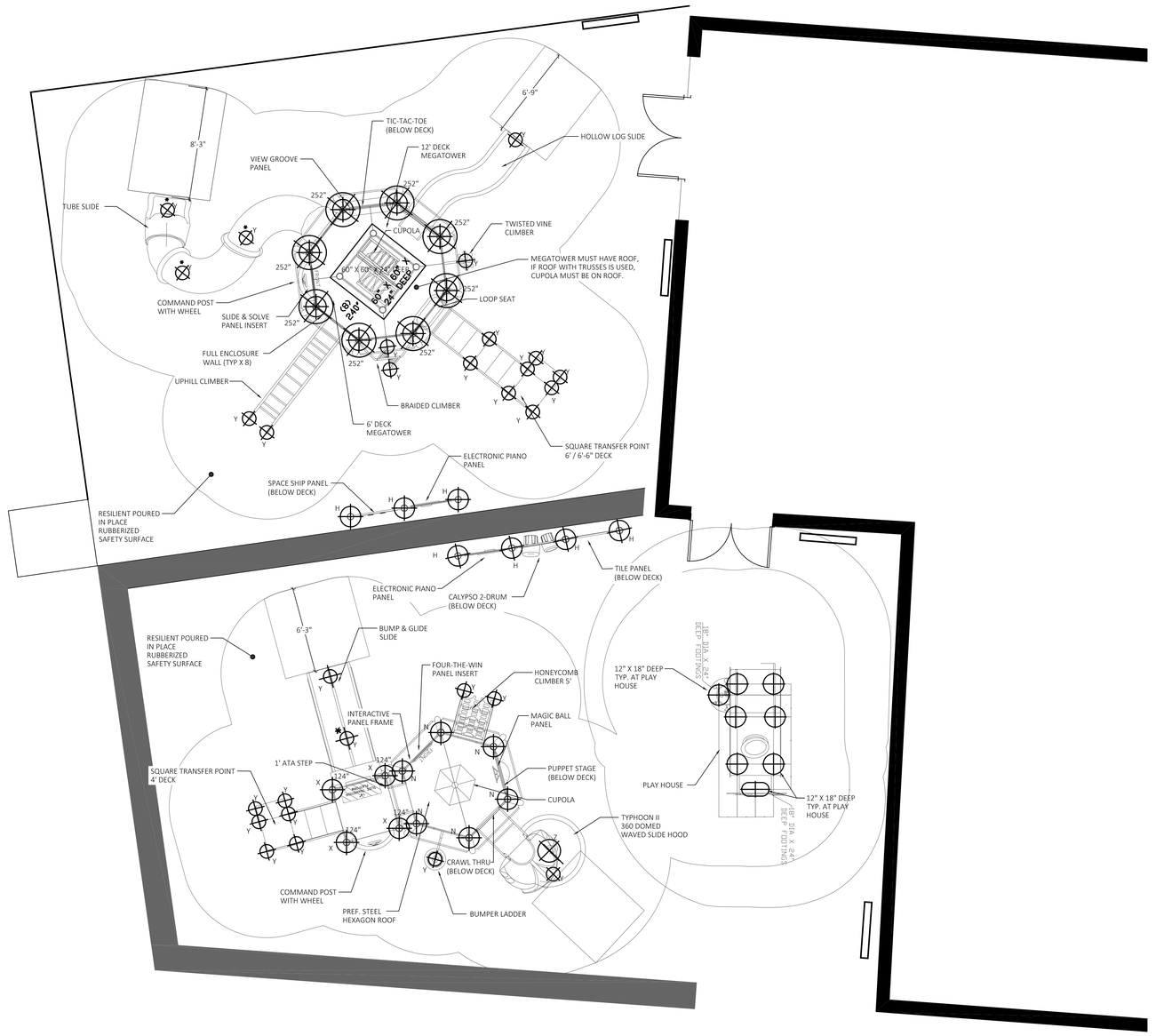

PLAY AREA
FOOTING LAYOUT

SCALE: 1/4" = 1' - 0"

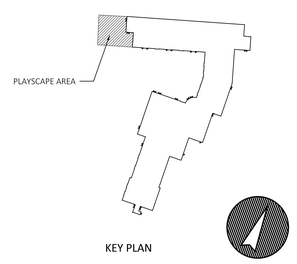

DATE: 3/1/2021
DRAWN BY: JJM
SCALE: NOTED
REVIEWED BY: BRS
PROJECT NO. 2018-115A
XREF - PLAYSCAPE

REVISIONS

NO.	DATE	DESCRIPTION

STATE PROJECT NO. 151-0295 EA/RR
PHASE IV - PLAYSCAPE CONSTRUCTION

WENDELL CROSS ELEMENTARY SCHOOL

1255 HAMILTON AVENUE
WATERBURY, CT 06706

CONSULTANT'S SEAL

ARCHITECT'S SEAL

FRIAR
21 Talcott Notch Road
Farmington, CT 06032

SHEET NO.
PE-2.0

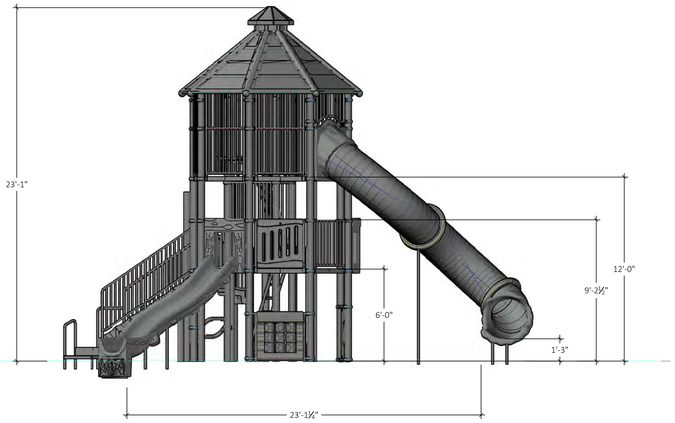

SOUTH ELEVATION

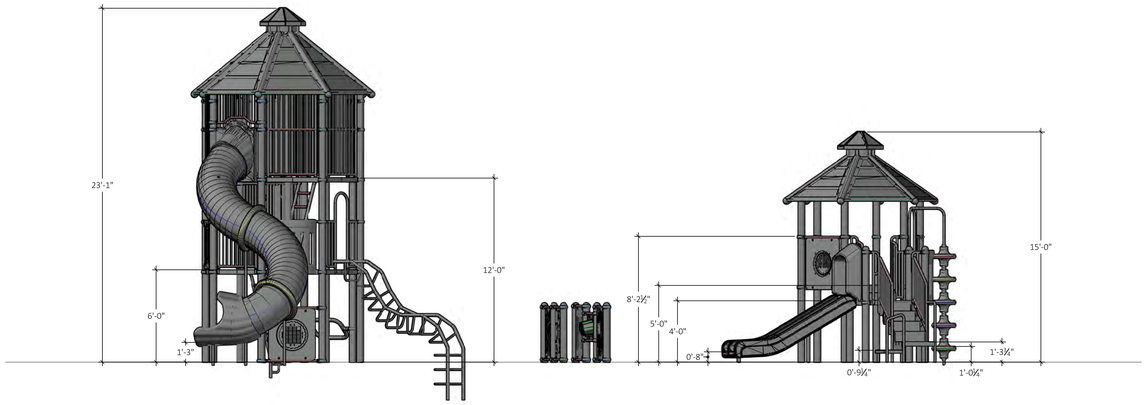

EAST ELEVATION

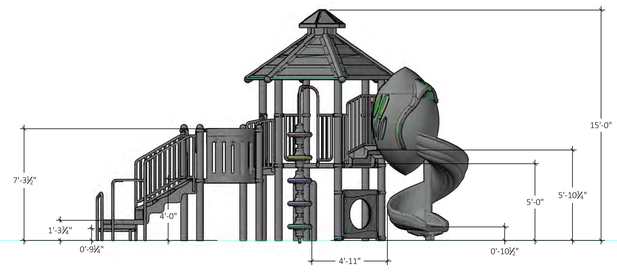

NORTH ELEVATION

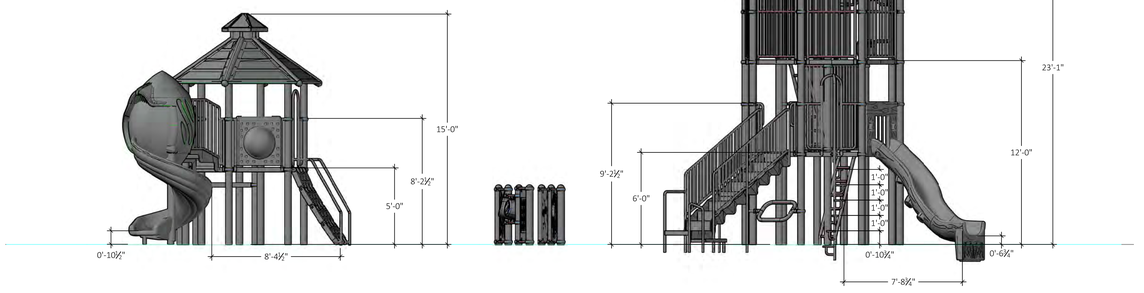

WEST ELEVATION

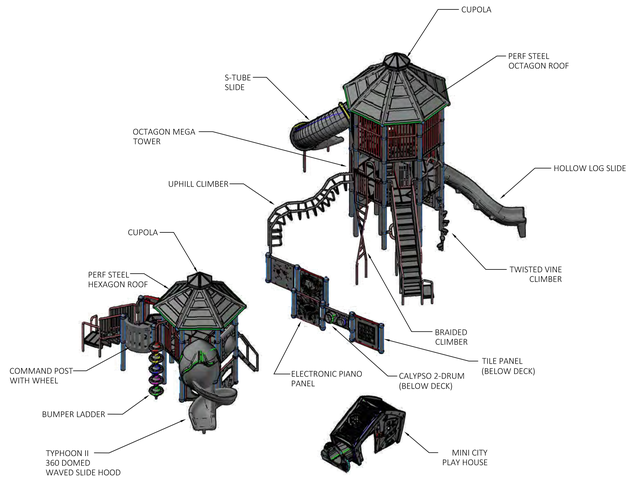

SOUTHEAST ELEVATION

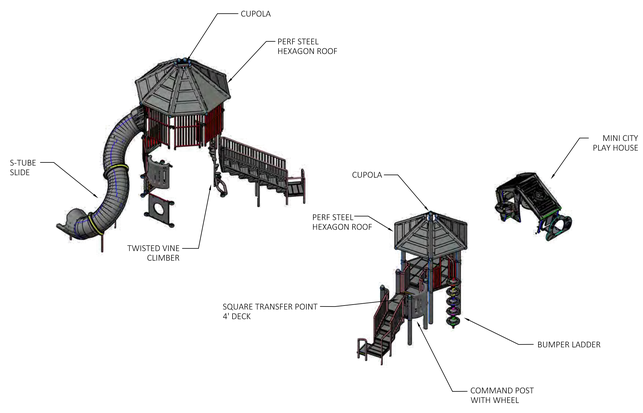

SOUTHWEST ELEVATION

PLAY AREA ELEVATIONS

SCALE: 1/4" = 1' - 0"

DATE: 1/1/2021
DRAWN BY: JJM
SCALE: NOTED
REVIEWED BY: BRS
PROJECT NO. 2018-115A
XREF - PLAYSCAPE

REVISIONS

NO.	DATE	DESCRIPTION

PLAY AREA

ELEVATIONS

STATE PROJECT NO. 151-0295 EA/RR
PHASE IV - PLAYSCAPE CONSTRUCTION

WENDELL CROSS ELEMENTARY SCHOOL

1255 HAMILTON AVENUE
WATERBURY, CT 06706

CONSULTANT'S SEAL

ARCHITECT'S SEAL

FRIAR
21 Talcott Notch Road
Farmington, CT 06032

SHEET NO.
PE-3.1



EQUIPMENT PERSPECTIVES

SCALE: NOT TO SCALE



EQUIPMENT PERSPECTIVES

SCALE: NOT TO SCALE

DATE: 3/1/2021
DRAWN BY: JJM
SCALE: NOTED
REVIEWED BY: BRS
PROJECT NO. 2018-115A
XREF - PLAYSCAPE

REVISIONS

NO.	DATE	DESCRIPTION

PLAY AREA

PRESPECTIVES

STATE PROJECT NO. 151-0295 EA/RR
PHASE IV - PLAYSCAPE CONSTRUCTION

WENDELL CROSS ELEMENTARY SCHOOL

1255 HAMILTON AVENUE
WATERBURY, CT 06706

CONSULTANT'S SEAL

ARCHITECT'S SEAL

FRIAR
21 Talcott Notch Road
Farmington, CT 06032

SHEET NO.
PE-4.1

Play Equipment

Wendell Cross Elementary School
1255 Hamilton Avenue
Waterbury, Connecticut

State Project No 151-0295 EA/RR

Phase 4 of 5 – Play Equipment

PROJECT MANUAL

1/1/2021

ARCHITECT
Friar Architecture Inc.
21 Talcott Notch Road
Farmington, CT 06032

ARCHITECT'S PROJECT # 2018-115A

Building Official: _____ (Print Name)	(Signature)	_____ (Date)
Fire Marshal: _____ (Print Name)	(Signature)	_____ (Date)
Section 504 Official: _____ (Print Name)	(Signature)	_____ (Date)
Health Inspector: _____ (Print Name)	(Signature)	_____ (Date)

Division	Section Title	Pages
GENERAL		
	Drawing List	1
DIVISION 01 – GENERAL REQUIREMENTS		
007000	General Conditions	11
011000	Summary	4
012600	Contract Modification Procedures	2
013100	Project Management and Coordination	7
013200	Construction Progress Documentation	5
013300	Submittal Procedures	6
014000	Quality Requirements	7
015000	Temporary Facilities and Controls	5
015639	Temporary Tree and Plant Protection	6
016000	Product Requirements	6
017300	Execution	8
017700	Closeout Procedures	4
017823	Operation and Maintenance Data	5
017839	Project Record Documents	3
017900	Demonstration and Training	4
DIVISION 03 – CONCRETE		
033000	Cast-In-Place Concrete	17
DIVISION 11 – EQUIPMENT		
116800	Play Field Equipment and Structures	14
DIVISION 32 – EARTH IMPROVEMENTS		
321000	Poured-In-Place Rubber TBV Surfacing for Playgrounds	5

Building Official: _____ (Print Name)	_____ (Signature)	_____ (Date)
Fire Marshal: _____ (Print Name)	_____ (Signature)	_____ (Date)
Section 504 Official: _____ (Print Name)	_____ (Signature)	_____ (Date)
Health Inspector: _____ (Print Name)	_____ (Signature)	_____ (Date)

COVER SHEET

DRAWINGS FOR REFERENCE ONLY

C-3.0	SITE LAYOUT PLAN (FOR REFERENCE ONLY)
C-4.0	SITE GRADING PLAN (FOR REFERENCE ONLY)
C-4.1	SITE DRAINAGE PLAN (FOR REFERENCE ONLY)

PLAY EQUIPMENT

PE1.1	PLAY AREA LAYOUT
PE1.2	PLAY AREA SURFACING
PE2.0	PLAY ATEA FOOTINGS
PE3.1	ELEVATIONS
PE4.1	PERSPECTIVES

END OF DRAWING LIST

GENERAL CONDITIONS
FOR
PLAYGROUND EQUIPMENT AND SURFACING

The following Instructions and General Conditions shall apply and govern all suppliers and contractors and their subcontractors in matters of furnishing and installing of playground equipment and surfacing for this project.

ARTICLE 1: CONTRACT DOCUMENTS

The contract of the parties includes the General Conditions, Certification and Representations, the Contract, Drawings, and Specifications. These documents are to be considered as one, and whatever is called for by one shall be as binding as if called for by all. Any discrepancies or questions as to quantities of any items listed in the specifications shall be immediately brought to the attention of the Consultant, for correction by addenda. Any such discrepancies determined by the Contractor and not corrected by addenda shall be resolved on the basis of furnishing the greater quantity without change in contract price.

ARTICLE 2: INTENT

It is the intent of these contract documents to include labor, materials, accessories, integration and services of every kind necessary to properly execute the work and to cover the terms and conditions of payment thereof, and to establish minimum acceptable requirements for equipment design and construction and contract performance to assure fulfillment of the educational purpose.

ARTICLE 3: QUALIFICATIONS

The Constructor must certify that they meet the following conditions:

a. That the constructor has an existing supply relationship with a manufacturer adequate for and devoted to the production of the equipment which it proposes to furnish and has the necessary specialized support staff and tools to provide the proper service, integration, hardware and accessories.

b. The constructor must have been engaged in the supplying of similar equipment as that specified for a period of not less than five (5) years and shall have a suitable organization to deliver and install the equipment, all in accordance with the Construction Documents, and the Constructor shall have completed five or more installations of the kind and size contemplated by the specification and proposal within the past two years which have proven satisfactory under similar conditions.

c. The constructor must have financial and personnel resources of sufficient scope to assure prompt and satisfactory performance in the execution of the total conditions of the Construction Documents and in the production, delivery and installation of all equipment specified so as not to delay the progress of the work.

d. Constructor must be an authorized factory distributor or manufacturer's representative for any item bid. Constructor must include in their submittal documentation evidencing this authorization. Constructor must be authorized manufacturer's warranty and service provider.

e. In addition, the authorized dealer information must provide warranty information offered by the manufacturer, and the constructor must provide at least one year warranty on parts and labor offered by manufacturer or dealer or as specified, whichever is of greater duration. Constructor must include in their bids written instructions regarding all steps necessary, by end users, to effect warranty repairs.

ARTICLE 4: MATERIALS, TOOLS, AND EMPLOYEES

Except as otherwise directed by the Contract Documents, the Contractor shall provide and pay for all materials, labor, tools, power, and such other items required to complete the work involved. All equipment and accessories shall be new, unused, and of the recent manufacture, unless otherwise noted. All installation work shall be properly managed and supervised by technicians or employees who are thoroughly trained and experienced in the work involved.

ARTICLE 5: ROYALTIES AND PATENTS

The Contractor shall pay all royalties and license fees on products furnished. He shall defend all suits and claims for infringement of any patent rights and shall save the Owner from loss or inconvenience resulting there from.

ARTICLE 6: PERMITS AND COMPLIANCE WITH CODES

The Contractor shall obtain and pay for all necessary permits and all equipment, appliances and work shall conform to applicable safety and fire codes. All equipment specified herein, and furnished to this project shall be designed and manufactured to meet Occupational Safety and Health Administration standards.

ARTICLE 7: PROTECTION OF WORK AND PROPERTY

The Contractor shall take all required precautions to protect his equipment against damage, theft, and deterioration on the site. He shall respect the work of others and any accidental damage incurred to the work of others shall be promptly repaired or replaced at the expense of the Contractor. All equipment shall be left in the proper location within the building and installed as required with all manufacturer's directions and maintenance manuals, either attached or delivered to the Owner's representative in duplicate.

ARTICLE 8: RESPONSIBILITY AND LIABILITY TO RELATED CONTRACTORS

The Contractor is cautioned that all other Contractors of all trades for the entire project bid work to conform to the Specifications and drawings issued for public bidding, and the Contractor shall be fully liable for any and all additional charges to the Owner resulting from changes required to accommodate any item of equipment not furnished in strict accordance to the specifications and other Bid Documents or as otherwise approved by the consultant.

ARTICLE 9: CHANGES IN EQUIPMENT OR WORK

The Architect, at the direction of the Owner, may order changes in the equipment or work in writing, the contract sum being adjusted accordingly. All changes for additional equipment or work must be submitted in advance to the architect for approval by owner, architect, and Office of School Construction Grants and Review.

ARTICLE 10: POSSIBLE DISCREPANCIES IN SPECIFICATIONS

Any inadvertent errors, omissions or discrepancies in the applicable specifications should be brought to the attention of the Consultant who shall then send written instructions to all bidders in order to effect the correction and clarification of the Project Documents. Failure of any bidder to receive any such addendum shall NOT relieve the bidder from any obligation under his bid as submitted.

For changes in the work the contractor is entitled to a maximum of 10% on the net cost for the overhead and profit for work performed by their forces and 5% for work performed by a subcontractor. For changes to the work a subcontractor is entitled to a maximum of 10% for work performed by their forces.

ARTICLE 11: GENERAL INSTRUCTIONS.

(a) Any changes “or approved equals” to the specified products, manufacturer or design in any way must be approved by the Architect and Office of School Construction Grants and Review. The contractor is responsible for providing all materials and documentation required for such approval as well as the cost for all work required by the Architect or the City during approval process.

(b) All prices to be per the State Contract

(c) Prices must be based on delivery, specified installation, connection, training and documentation testing.

(d) Contractor must clearly state the terms and conditions of the manufacturer's and/or dealer's warranty and guarantee

ARTICLE 12: CONTRACTOR'S RESPONSIBILITY FOR SPECIFICATIONS

Any measurements, calculations or estimates included herein are believed to be correct, but Contractor conduct a thorough examination of the project, since no allowance will be made because of any inaccuracy that inadvertently appears within the context of the Construction Documents. The failure of the contractor to acquaint themselves with conditions as they actually exist shall not relieve them from any obligations and responsibilities inherent within the Construction Documents.

ARTICLE 13: INSTALLATION

Installation is defined as the receiving, assembly and placement of all finished goods to their respective room and/or area, including delivery to the building, unpacking, assembly, setting in place, leveling, as may be required. Additionally, installation shall include miscellaneous wiring, connection, powering up, loading of software, configuration of images, applications and systems and demonstration of proper operation of the equipment. Trash removal is also included and shall consist of complete removal of all package, trash, boxes and related materials including the provision and removal of dumpsters. The dumpsters and all related costs, personnel, permits, fees, coordination with the project construction general contractor are also included.

Installation costs shall be included as part of the Total Contract Amount.

Warehousing: It shall be the responsibility of the Contractor to provide storage/warehousing for its products until its assigned installation time.

Trash and Dumpsters: This Contractor shall remove trash daily. Dumpsters will not be provided by the Owner. Trash shall be removed from the project daily. Dumpsters must be covered to contain trash at all times and emptied when full (not over filled). This contractor is to provide their own dumpsters and coordinate placement on the job with the project contact.

Cleaning: This Contractor shall pick up and dispose of all packing materials, scraps, waste and other trash.

The Contractor shall be responsible for its installation crew. The time of installation is stated in these Construction Documents. The Awarding Authority reserves the right to change the timetable due to unforeseen conditions.

All existing site amenities and buildings must be protected during installation. Any damage to the facility, as a result of the installation shall be the financial responsibility of and restored by this Contractor.

ARTICLE 14: OPERATING AND MAINTENANCE INSTRUCTIONS

Upon completion of furnishing and installation of Playground Equipment provide complete operating, maintenance and instruction/documentation for equipment to the architects for distribution to the Owner. These shall consist of sufficient demonstration and verbal instructions as well as brochures of instructions, to thoroughly acquaint the persons designated, with the equipment. Provide three (3) copies of Operating and Maintenance Instruction Manuals in printed form and bound into hard-covered loose-leaf binders, with pages set into plastic page covers. Each manual shall have index, page tabs, and be neatly edited in alphanumerical order to reflect the order of the contract documents, item by item.

Information in the manual shall be grouped by section of equipment. The entire contents shall be printed or typed and contain the following:

1. Complete operating instructions and recommendations as to parts to be used in or within the item. Step-by-step procedures shall be outlined.
2. Manufacturer's complete data sheets.
3. Complete cleaning instructions including recommended cleaning materials.

The time and place for instruction and demonstration shall be as designated by the Owner. Instruction manuals shall be provided at substantial completion.

ARTICLE 15: WARRANTY AND GUARANTEES

A. Special Project Warranty

Submit in writing a written warranty, executed by the Contractor, agreeing to repair or replace project components which fail in materials or workmanship within the specified warranty period set forth in paragraph B below or as specified for specific items and/or systems. This warranty shall be in addition to and not a limitation of other rights the Owner may have against the Contractor under these contract documents.

B. Guarantees

All fixtures, equipment, materials and workmanship furnished and installed under this contract shall be new and be guaranteed against defects under normal usage.

The Contractor shall be responsible for all defects, faulty materials and workmanship, which may develop or be found in any of the equipment furnished by him/her under this contract. Upon receipt of notice from the Owner, the Contractor shall immediately replace or repair and make good, without additional expense to the Owner, all such defective and faulty equipment during a period of not less than one (1) years from date of final acceptance and payment of the equipment, except when a specific guarantee for a longer period of time is elsewhere specified. This article notwithstanding, manufacturer's standard guarantee or warranties for longer periods of time shall remain in full force and effect.

For purposes of warranty and guarantees, final acceptance shall be the starting date of guarantee period, except for work items noted as incomplete or unsatisfactory. Warranty and guarantee of such incomplete or unsatisfactory work shall start on final correction and acceptance of such work.

ARTICLE 16: CONTRACTOR'S LIABILITY INSURANCE

The Contractor and its Subcontractors shall each maintain such insurance as will protect him from claims under Workmen's Compensation Acts and Public Liability Laws while his employees are on the Project property. Certificates of such insurance shall be submitted to the Awarding Authority. Personal injury limits shall be as provided in the contract form included in the Bid Documents.

ARTICLE 17: SAMPLES

On request, and without cost to the Awarding Authority, the Contractor shall submit such full size samples of the equipment which in the opinion of the Awarding Authority, Consultant and/or Architect are necessary to judge adequately the character, quality and construction of his product, and failure to comply within the time prescribed shall be deemed sufficient grounds for rejection of the bid.

Samples submitted by a resulting successful bidder may be impounded by the Awarding Authority for the period of the contract for comparison of materials delivered to the job site to assure they conform in every aspect to the approved samples submitted. Materials delivered that fail to conform to the approved samples shall be rejected.

ARTICLE 18: SHOP DRAWINGS

The Contractor shall promptly furnish within five (5) days after notification of award of contract complete one line and system interconnection drawings. Drawings shall clearly show the layout, configuration and interconnection of each item and/or system. Submit detailed cut sheets for each item clearly marked to show each specification item/model/part. Clearly show quantity of each item being provided.

The Contractor shall furnish detailed installation drawings and test results upon substantial completion of the installation. The installation drawings are to show the exact configuration of each installed item.

ARTICLE 19: EQUALITY OF MATERIALS

The words "or equal" are understood to follow all names of proprietary products, trade names, catalog numbers and detailed descriptions and shall be interpreted to mean any material, article, assembly or system, which in the opinion of the Owner is at least equal in quality, durability, appearance, strength, and design to the equipment specified and will perform at least equally the functions imposed by the general design. The words "or equal' shall not be construed to permit substantial departure from the detailed requirements of specifications. Any item believed to be “or equal” must be approved by the Office of School Construction Grants and Review at the contractor’s expense.

ARTICLE 20: PAYMENTS

The Owner may approve the Contractor's invoices for payments of materials delivered and work completed of up to ninety five percent (95%) of the contract price upon initial review and approval of Consultant; the balance of five percent (5%) being withheld until final approval and acceptance of installation.

Applications for payment shall be submitted to the office of the consultant on the American Institute of Architects application for payment form, AIA G702. Submit the original and six copies. The office of the consultant will review the application for payment and forward to the owner with recommendations. Use AIA G703 backup sheets for additional and supporting information.

Prior to the submission of any applications for payment, submit a detailed scheduled of values for all aspects of the work, totaling the full value of the contract.

The successful bidder shall pass all decreases in equipment and/or software costs onto the owner, in full value.

Materials stored on behalf of this project may be invoiced for up to 80% of scheduled value as long as a valid certification of insurance for the entire value of stored equipment and a valid Transfer of Title is provided with the application for payment.

ARTICLE 21: SCHEDULE

Delivery and installation of the equipment shall occur as indicated. Exact dates and delivery procedures will be given to Contractor after signing of Contract Documents, and/or as required throughout the installation.

ARTICLE 22: WORK BY OWNER OR BY SEPARATE CONTRACTORS

a. The owner reserves the right to perform work related to the project with the owner’s own forces, and to award separate contracts in connection with other portions of the project or other work on the site under these or similar conditions of the contract.

b. When separate contracts are awarded for different portions of the project or other work on the site, the term contractor in the contract documents in each case shall mean the contractor who executes each separate owner-contractor agreement.

c. The owner will provide for the coordination of the work of the owner's own forces and of each separate contractor with the work of the contractor, who shall cooperate therewith as provided in Paragraph b.

d. The contractor shall afford the owner, the construction manager and separate contractors reasonable opportunity for the introduction and storage of their materials and equipment and the execution of their work, and shall connect and coordinate the work with theirs as required by the contract documents.

e. If any part of the contractor's work depends on proper execution or results upon the work of the owner or any separate contractor, the contractor shall, prior to proceeding with the work, promptly report to the designated representative of the owner, the consultant and construction manager any apparent discrepancies or defects in such other work that render it unsuitable for such proper execution and results. Failure of the contractor to report shall constitute an acceptance of the owner's or separate contractor's work as fit and proper to receive the work, except as to defects, which may subsequently become apparent in such work by others.

f. Any costs caused by defective or ill-timed work shall be borne by the party responsible therefore.

g. Should the contractor wrongfully cause damage to the work or property of the owner, or to other work or property on the site, the contractor shall promptly remedy such damage.

h. Should the contractor wrongfully delay or cause damage to the work or property of any separate contractor, the contractor shall, upon due notice, promptly attempt to settle with such other contractor by agreement, or otherwise to resolve the dispute. If such separate contractor sues the owner on account of any delay or damage alleged to have been caused by the contractor, the owner shall notify the contractor who shall defend such proceedings at the owner's expense, and if any judgment or award against the owner arises there from, the contractor shall pay or satisfy it and shall reimburse the owner for all attorneys' fees and court or arbitration costs which the owner has incurred.

i. If a dispute arises between the contractor and separate contractors as to their responsibility for cleaning up as required, the owner may clean up and charge the cost thereof to the contractors responsible therefore as the construction manager shall determine to be just.

ARTICLE 30: REPORTING

The contractor will submit weekly written progress reports to the consultant by the end of the day every Thursday or on a day designated for this purpose. The reports may be submitted by fax or e-mail. Each report shall clearly state work completed during that week, overall project status, work planned for the following week and any questions or issues. The consultant will notify the contractor regarding the start date for this reporting requirement. Notification to the contrary not withstanding, the contractor will provide reports starting the week that the first order is placed and ending at receipt of full payment.

The contractor will ensure that their project manager for this project will be available and will meet with the consultant and other parties on a weekly basis. All efforts will be

made to establish a fixed weekly meeting time, but the contractor will remain flexible and will accommodate the owner's schedule.

ARTICLE 31: EQUAL OPPORTUNITY EMPLOYEMENT

Sec. 7-3 Contract Provisions Required Pertaining to Equal Opportunity in Employment

A. Every Contract made by or on behalf of the Owner for the design, construction, lease, alteration or repair of any public building or public work, or for the purchase, manufacture, sale or distribution of materials, equipment or supplies shall contain provisions providing for equal opportunity in employment.

B. Every contract for the construction, alteration or repair of any public building or public work shall contain the following provisions:

1. The Contractor agrees and warrants that in the performance of this contract he will not discriminate or permit discrimination against any person or group of persons on the grounds of race, color, religious creed, age, marital status, national origin, sex, sexual orientation, mental retardation or physical disability, including but not limited to blindness, unless it is shown by such contractor that such disability prevents performance of the work involved, in any manner prohibited by the laws of the United States, the State of Connecticut, or the Owner. The Contractor also agrees to provide the Owner with such information that they may request concerning the employment practices and procedures of the contractor as related to the provisions of this section.

2. The aforesaid provision shall include, but not be limited to, the following: advertising, recruitment, layoff, termination, rates of pay or other forms of compensation, conditions or privileges of employment, selection for apprenticeship, selection or retention of subcontractors, or in the procurement of materials, equipment or services.

3. The Contractor shall hereinafter post on the project site, in conspicuous places available for employees and applicants for employment, notices setting forth its non-discrimination requirements.

4. In all contracts between Contractor and any subcontractor or supplier either for work to be performed under a subcontract or the procurement of materials, equipment or services, each subcontractor or supplier shall be notified in writing by the Contractor of the Contractor's obligation under this contract relative to non-discrimination, and each subcontractor or supplier, by his contracting agent, shall agree to and be bound by the terms of this contract.

5. Nothing herein is intended to relieve any contractor from compliance with all applicable federal, state and municipal legislation or provision concerning equal employment opportunity, affirmative action, non-discrimination and related subjects during the term of its contract on this project.

ARTICLE 32: INSURANCE REQUIREMENTS

A. GENERAL REQUIREMENTS

The Contractor shall be responsible for maintaining insurance coverage in force for the life of the contract of the kinds and adequate amounts to secure all of the Contractor's obligations under this contract with an insurance company(ies) with an AM Best Rating of A- VIII or better licensed to write such insurance in the State of Connecticut and acceptable to the Owner.

The insurer shall provide the Owner with Certificates of Insurance signed by an authorized representative of the insurance company(ies) prior to the performance of this contract describing the coverage and providing that the insurer shall give the Owner written notice of at least thirty (30) days in advance of any termination, expiration, non-renewal or any and all changes in coverage.

Such insurance or renewals or replacements thereof shall remain in force during the Landscape Architect's responsibility under this contract.

At the Contractor own cost and expense, shall procure and maintain all insurances required and shall include the Owner as Additional Insured on all contracts, except Workers' Compensation and Professional Errors and Omissions coverage.

In order to facilitate this requirement for insurance, it is recommended that the Contractor forward a copy of these requirements to the Contractor's insurance representative(s).

B. SPECIFIC REQUIREMENTS

(1) Workers' Compensation Insurance

The Contractor shall provide statutory Workers' Compensation Insurance, including Employer's Liability with limits of:

$100,000 Each Accident $500,000 Disease,
Policy Limit $100,000 Disease, Each Employee

(2) Commercial General Liability Insurance

The Contractor shall carry Commercial General Liability insurance. A per occurrence limit of ***$1,000,000 combined single limit bodily injury and property damage is required.*** The Aggregate limit will not be less than $2,000,000. Any deviations from the standard unendorsed form will be noted on the Certificate of Insurance.

(3) Business Automobile Liability Insurance

The Contractor shall carry Business Automobile Liability Insurance. A per occurrence limit ***of $1,000,000 combined single limit bodily injury and property dam-***

age is required. "Any Auto" (symbol 1 or equivalent) is required. Any deviations from the standard unendorsed form will be noted on the Certificate of Insurance.

(4) Professional Liability Insurance

The Contractor shall carry Professional Liability Insurance, in the amount of $2,000,000 per claim/aggregate basis with a deductible no greater than $75,000 and shall have a retroactive date, if any, prior to commencement of services on the project. The Owner may request to have the base policy supplemented with a rider on a project specific basis, with an additional $3,000,000 per claim/aggregate. The Owner may request that coverage provided by the rider continue, on annual basis for a period of at least seven (7) years after substantial completion of the project.

(5) Excess Umbrella Liability Insurance

The Contractor shall carry excess umbrella liability insurance in the amount of at least $5,000,000 overlaying employers liability, commercial general liability (including completed operations), and business automobile liability coverage.

C. SUBCONTRACTOR REQUIREMENTS

The Contractor shall require that any subcontractors and independent contractors hired by the Contractor carry sufficient amounts of insurance and to obtain Certificates of Insurance before subcontractors and independent contractors are permitted to begin work.

The Contractor shall require that Owner be included as Additional Insured on all subcontractors and independent contractors insurance before permitted to begin work.

The Contractor and all subcontractors and independent contractors and their insurers shall waive all rights of subrogation against the Owner, and their offices, agents, servants and employees for losses arising from work performed by each on this contract.

D. OTHER DATA

The OWNER reserves the right to amend amounts of coverage required and types of coverage provided based on work or service to be performed.

E. INDEMNIFICATION

The Contractor shall, at all times, defend, indemnify, protect and save harmless the City of Waterbury and their respective officers, agents and employees (collectively, the "Indemnitees") from and against any and all liabilities, actions, claims, damages, losses, judgments, workers' compensation payments, costs and expenses (including but not limited to attorneys' fees) arising out of injuries to the person including death, property damage or other damages sustained by any of the Indemnitees, Architect, or any other person, part or entity, to the extent any such injuries, damage or damages, are caused or alleged to

have been caused in whole or in part by the acts, omissions, errors or negligence of Contractor or any of its officers agents representatives, employees or subcontractors. The expenses, covered by the foregoing indemnification shall include those to investigate, defend and settle any claim, judgment or payment of any legal liability. Upon demand of the Indemnitees, the Contractor shall immediately pay to the City of Waterbury the amount of any expenses incurred by any of the Indemnitees that is covered by the foregoing indemnification. The obligations of the Contractor under this indemnification shall survive the termination or expiration of this Agreement. The existence of insurance shall in no way limit the scope of this indemnification.

CURRENT PREVAILING WAGE RATES

COMPLYING WITH SECTION 31-53 CGS

SHALL BE INSERTED

PRIOR TO RELEASE FOR BIDDING

IF REQUIRED

ANNUAL ADJUSTMENT OF WAGE RATES

WILL BE ADJUSTED AS REQUIRED

PER SECTION 31-55a CGS

SECTION 011000 - SUMMARY

PART 1 - GENERAL

1.1 RELATED DOCUMENTS

A. Drawings and general provisions of the Contract, including General and Supplementary Conditions and other Division 01 Specification Sections, apply to this Section.

1.2 SUMMARY

A. Section Includes:

1. Project information.
2. Work covered by Contract Documents.
3. Coordination with occupants.
4. Work restrictions.

B. Related Requirements:

1. Section 015000 "Temporary Facilities and Controls" for limitations and procedures governing temporary use of Owner's facilities.

1.3 PROJECT INFORMATION

A. Project Identification: New Construction of Wendell Cross Elementary School

1. Project Location (new address): 1255 Hamilton, Waterbury, CT
   Use this address for deliveries.

B. Owner: The City of Waterbury

C. Architect: Friar Architecture inc., 21 Talcott Notch Rd., Farmington, CT (860) 678-1291.

D. Play Equipment Manufacturer: Creative Recreation/Miracle, P.O. Box 330235, West Hartford, CT

E. The Work consists of the following:

The following is the project scope for phase 4 of 5 of the aforementioned project: Installation of new play equipment and playground safety surfacing.

1.4 PURCHASE CONTRACTS

A. General: Owner will procure material and equipment to be incorporated into the Work through DAS approved state contract. Include costs for purchasing, receiving, handling, storage if required, and installation of material and equipment in the Contract Sum.

1.5 USE OF PREMISES

A. General: Contractor shall have limited use of premises for construction operations as indicated on Drawings by the Contract limits.

B. Use of Site: Limit use of premises to work in areas indicated. Do not disturb portions of Project site beyond areas in which the Work is indicated.

1. Limits: Confine constructions operations to building areas where work is required.
2. Owner Occupancy: Allow for Owner occupancy of Project site and use by the public.
3. Driveways and Entrances: Keep driveways and entrances serving premises clear and available to Owner, Owner's employees, and emergency vehicles at all times. Do not use these areas for parking or storage of materials.

    a. Schedule deliveries to minimize use of driveways and entrances.
    b. Schedule deliveries to minimize space and time requirements for storage of materials and equipment on-site.

1.6 COORDINATION WITH OCCUPANTS

A. Construction Manager and Owner Occupancy: CM and Owner may occupy site and building(s) during entire construction period. Cooperate with CM and Owner during construction operations to minimize conflicts and facilitate CM and Owner usage. Perform the Work so as not to interfere with CM and Owner's day-to-day operations. Maintain existing exits unless otherwise indicated.

1. Maintain access to existing walkways, corridors, and other adjacent occupied or used facilities. Do not close or obstruct walkways, corridors, or other occupied or used facilities without written permission from Owner and approval of authorities having jurisdiction.
2. Notify CM and Owner not less than 72 hours in advance of activities that will affect CM and Owner's operations.

1.7 WORK RESTRICTIONS

A. Work Restrictions, General: Comply with restrictions on construction operations.

1. Comply with limitations on use of public streets and with other requirements of authorities having jurisdiction.

B. On-Site Work Hours: Limit work in the existing building to normal business working hours of 7 a.m. to 6 p.m., Monday through Friday, unless otherwise indicated.

C. Existing Utility Interruptions: Do not interrupt utilities serving facilities occupied by Owner or others unless permitted under the following conditions and then only after providing temporary utility services according to requirements indicated:

1. Notify Owner not less than two days in advance of proposed utility interruptions.
2. Obtain Owner's written permission before proceeding with utility interruptions.

D. Noise, Vibration, and Odors: Coordinate operations that may result in high levels of noise and vibration, odors, or other disruption to Owner occupancy with Owner.

1. Notify Owner not less than two days in advance of proposed disruptive operations.
2. Obtain Owner's written permission before proceeding with disruptive operations.

E. Nonsmoking Building: Smoking is not permitted within the building or on school property.

F. Controlled Substances: Use of tobacco products and other controlled substances on Project site is not permitted.

1.8 SPECIFICATION FORMATS AND CONVENTIONS

A. Specification Format: The Specifications are organized into Divisions and Sections using the 50-division format and CSI/CSC's "MasterFormat" numbering system.

1. Section Identification: The Specifications use Section numbers and titles to help cross-referencing in the Contract Documents. Sections in the Project Manual are in numeric sequence; however, the sequence is incomplete because all available Section numbers are not used. Consult the table of contents at the beginning of the Project Manual to determine numbers and names of Sections in the Contract Documents.
2. Division 01: Sections in Division 01 govern the execution of the Work of all Sections in the Specifications.

B. Specification Content: The Specifications use certain conventions for the style of language and the intended meaning of certain terms, words, and phrases when used in particular situations. These conventions are as follows:

1. Abbreviated Language: Language used in the Specifications and other Contract Documents is abbreviated. Words and meanings shall be interpreted as appropriate. Words implied, but not stated, shall be inferred as the sense requires. Singular words shall be interpreted as plural and plural words shall be interpreted as singular where applicable as the context of the Contract Documents indicates.
2. Imperative mood and streamlined language are generally used in the Specifications. Requirements expressed in the imperative mood are to be performed by Contractor. Occasionally, the indicative or subjunctive mood may be used in the Section Text for clarity to describe responsibilities that must be fulfilled indirectly by Contractor or by others when so noted.

    a. The words "shall," "shall be," or "shall comply with," depending on the context, are implied where a colon (:) is used within a sentence or phrase.

PART 2 - PRODUCTS (Not Used)

PART 3 - EXECUTION (Not Used)

END OF SECTION 011000

SECTION 012600 - CONTRACT MODIFICATION PROCEDURES

PART 1 - GENERAL

1.1 RELATED DOCUMENTS

A. Drawings and general provisions of the Contract, including General and Supplementary Conditions and other Division 01 Specification Sections, apply to this Section.

1.2 SUMMARY

A. This Section specifies administrative and procedural requirements for handling and processing Contract modifications.

B. Related Sections include the following:
   1. Division 01 Section "Product Requirements" for administrative procedures for handling requests for substitutions made after Contract award.

1.3 MINOR CHANGES IN THE WORK

A. Architect will issue supplemental instructions authorizing Minor Changes in the Work, not involving adjustment to the Contract Sum or the Contract Time, on AIA Document G710, "Architect's Supplemental Instructions."

1.4 PROPOSAL REQUESTS

A. Owner-Initiated Proposal Requests: Architect will issue a detailed description of proposed changes in the Work that may require adjustment to the Contract Sum or the Contract Time. If necessary, the description will include supplemental or revised Drawings and Specifications.

   1. Proposal Requests issued by Architect are for information only. Do not consider them instructions either to stop work in progress or to execute the proposed change.
   2. Within 20 days after receipt of Proposal Request, submit a quotation estimating cost adjustments to the Contract Sum and the Contract Time necessary to execute the change.

      a. Include a list of quantities of products required or eliminated and unit costs, with total amount of purchases and credits to be made. If requested, furnish survey data to substantiate quantities.
      b. Indicate applicable taxes, delivery charges, equipment rental, and amounts of trade discounts.
      c. Include costs of labor and supervision directly attributable to the change.

d. Include an updated Contractor's Construction Schedule that indicates the effect of the change, including, but not limited to, changes in activity duration, start and finish times, and activity relationship. Use available total float before requesting an extension of the Contract Time.

B. Contractor-Initiated Proposals: If latent or unforeseen conditions require modifications to the Contract, Contractor may propose changes by submitting a request for a change to Architect.

1. Include a statement outlining reasons for the change and the effect of the change on the Work. Provide a complete description of the proposed change. Indicate the effect of the proposed change on the Contract Sum and the Contract Time.
2. Include a list of quantities of products required or eliminated and unit costs, with total amount of purchases and credits to be made. If requested, furnish survey data to substantiate quantities.
3. Indicate applicable taxes, delivery charges, equipment rental, and amounts of trade discounts.
4. Include costs of labor and supervision directly attributable to the change.
5. Include an updated Contractor's Construction Schedule that indicates the effect of the change, including, but not limited to, changes in activity duration, start and finish times, and activity relationship. Use available total float before requesting an extension of the Contract Time.
6. Comply with requirements in Division 01 Section "Product Requirements" if the proposed change requires substitution of one product or system for product or system specified.

C. Proposal Request Form: Use AIA Document G709 for Proposal Requests.

1.5 CHANGE ORDER PROCEDURES

A. On Owner's approval of a Proposal Request, Architect will issue a Change Order for signatures of Owner and Contractor on AIA Document G701.

PART 2 - PRODUCTS (Not Used)

PART 3 - EXECUTION (Not Used)

END OF SECTION 012600

SECTION 013100 - PROJECT MANAGEMENT AND COORDINATION

PART 1 - GENERAL

1.1 RELATED DOCUMENTS

A. Drawings and general provisions of the Contract, including General and Supplementary Conditions and other Division 01 Specification Sections, apply to this Section.

1.2 SUMMARY

A. This Section includes administrative provisions for coordinating construction operations on Project including, but not limited to, the following:

1. Coordination Drawings.
2. Administrative and supervisory personnel.
3. Project meetings.
4. Requests for Interpretation (RFIs).

B. Each contractor shall participate in coordination requirements. Certain areas of responsibility will be assigned to a specific contractor.

C. Related Sections include the following:

1. Division 01 Section "Construction Progress Documentation" for preparing and submitting Contractor's Construction Schedule.
2. Division 01 Section "Execution" for procedures for coordinating general installation and field-engineering services, including establishment of benchmarks and control points.
3. Division 01 Section "Closeout Procedures" for coordinating closeout of the Contract.

1.3 DEFINITIONS

A. RFI: Request from Contractor seeking interpretation or clarification of the Contract Documents.

1.4 COORDINATION

A. Coordination: Coordinate construction operations included in different Sections of the Specifications to ensure efficient and orderly installation of each part of the Work. Coordinate construction operations, included in different Sections, that depend on each other for proper installation, connection, and operation.

1. Schedule construction operations in sequence required to obtain the best results where installation of one part of the Work depends on installation of other components, before or after its own installation.
2. Coordinate installation of different components with other contractors to ensure maximum accessibility for required maintenance, service, and repair.
3. Make adequate provisions to accommodate items scheduled for later installation.
4. Where availability of space is limited, coordinate installation of different components to ensure maximum performance and accessibility for required maintenance, service, and repair of all components, including mechanical and electrical.

B. Prepare memoranda for distribution to each party involved, outlining special procedures required for coordination. Include such items as required notices, reports, and list of attendees at meetings.

1. Prepare similar memoranda for Owner and separate contractors if coordination of their Work is required.

C. Administrative Procedures: Coordinate scheduling and timing of required administrative procedures with other construction activities and activities of other contractors to avoid conflicts and to ensure orderly progress of the Work. Such administrative activities include, but are not limited to, the following:

1. Preparation of Contractor's Construction Schedule.
2. Preparation of the Schedule of Values.
3. Installation and removal of temporary facilities and controls.
4. Delivery and processing of submittals.
5. Progress meetings.
6. Preinstallation conferences.
7. Project closeout activities.
8. Startup and adjustment of systems.
9. Project closeout activities.

D. Conservation: Coordinate construction activities to ensure that operations are carried out with consideration given to conservation of energy, water, and materials.

1. Salvage materials and equipment involved in performance of, but not actually incorporated into, the Work. Refer to other Sections for disposition of salvaged materials that are designated as Owner's property.

1.5 SUBMITTALS

A. Coordination Drawings: Prepare Coordination Drawings if limited space availability necessitates maximum utilization of space for efficient installation of different components or if coordination is required for installation of products and materials fabricated by separate entities.

1. Content: Project-specific information, drawn accurately to scale. Do not base Coordination Drawings on reproductions of the Contract Documents or standard printed data. Include the following information, as applicable:

    a. Indicate functional and spatial relationships of components of architectural, structural, civil, mechanical, and electrical systems.
    b. Indicate required installation sequences.
    c. Indicate dimensions shown on the Contract Drawings and make specific note of dimensions that appear to be in conflict with submitted equipment and minimum clearance requirements. Provide alternate sketches to Architect for resolution of such conflicts. Minor dimension changes and difficult installations will not be considered changes to the Contract.

2. Sheet Size: At least 8-1/2 by 11 inches, but no larger than 30 by 40 inches.
3. Number of Copies: Submit two opaque copies of each submittal. Architect will return one copy.
4. Refer to individual Sections for Coordination Drawing requirements for Work in those Sections.

B. Key Personnel Names: Within 15 days of starting construction operations, submit a list of key personnel assignments, including superintendent and other personnel in attendance at Project site. Identify individuals and their duties and responsibilities; list addresses and telephone numbers, including home and office telephone numbers. Provide names, addresses, and telephone numbers of individuals assigned as standbys in the absence of individuals assigned to Project.

1. Post copies of list in Project meeting room, in temporary field office, and by each temporary telephone. Keep list current at all times.

1.6 ADMINISTRATIVE AND SUPERVISORY PERSONNEL

A. General: In addition to Project superintendent, provide other administrative and supervisory personnel as required for proper performance of the Work.

1.7 PROJECT MEETINGS

A. General: Schedule and conduct meetings and conferences at Project site, unless otherwise indicated.

1. Attendees: Inform participants and others involved, and individuals whose presence is required, of date and time of each meeting. Notify Owner and Architect of scheduled meeting dates and times.
2. Agenda: Prepare the meeting agenda. Distribute the agenda to all invited attendees.
3. Minutes: Record significant discussions and agreements achieved. Distribute the meeting minutes to everyone concerned, including Owner and Architect, within three days of the meeting.

B. Preconstruction Conference: Schedule a preconstruction conference before starting construction, at a time convenient to Owner and Architect, but no later than 15 days after execution of the Agreement. Hold the conference at Project site or another convenient location. Conduct the meeting to review responsibilities and personnel assignments.

1. Attendees: Authorized representatives of Owner, Architect, and their consultants; Contractor and its superintendent; major subcontractors; suppliers; and other concerned parties shall attend the conference. All participants at the conference shall be familiar with Project and authorized to conclude matters relating to the Work.
2. Agenda: Discuss items of significance that could affect progress, including the following:

    a. Tentative construction schedule.
    b. Procedures for processing field decisions and Change Orders.
    c. Procedures for RFIs.
    d. Procedures for processing Applications for Payment.
    e. Submittal procedures.
    f. Preparation of Record Documents.
    g. Use of the premises and existing building.
    h. Work restrictions.
    i. Owner's occupancy requirements.
    j. Parking availability.
    k. Office, work, and storage areas.
    l. Equipment deliveries and priorities.
    m. Progress cleaning.
    n. Working hours.

3. Minutes: Record and distribute meeting minutes.

C. Preinstallation Conferences: Conduct a preinstallation conference at Project site before each construction activity that requires coordination with other construction.

1. Attendees: Installer and representatives of manufacturers and fabricators involved in or affected by the installation and its coordination or integration with other materials and installations that have preceded or will follow, shall attend the meeting. Advise Architect of scheduled meeting dates.
2. Agenda: Review progress of other construction activities and preparations for the particular activity under consideration, including requirements for the following:

    a. Possible conflicts.
    b. Time schedules.
    c. Weather limitations.
    d. Manufacturer's written recommendations.
    e. Acceptability of substrates.
    f. Protection of adjacent work.

3. Record significant conference discussions, agreements, and disagreements, including required corrective measures and actions.

4. Reporting: Distribute minutes of the meeting to each party present and to parties who should have been present.
5. Do not proceed with installation if the conference cannot be successfully concluded. Initiate whatever actions are necessary to resolve impediments to performance of the Work and reconvene the conference at earliest feasible date.

D. Progress Meetings: Conduct progress meetings at regular intervals. Coordinate dates of meetings with preparation of payment requests.

1. Attendees: In addition to representatives of Owner and Architect, each contractor, subcontractor, supplier, and other entity concerned with current progress or involved in planning, coordination, or performance of future activities shall be represented at these meetings. All participants at the conference shall be familiar with Project and authorized to conclude matters relating to the Work.
2. Agenda: Review and correct or approve minutes of previous progress meeting. Review other items of significance that could affect progress. Include topics for discussion as appropriate to status of Project.

    a. Contractor's Construction Schedule: Review progress since the last meeting. Determine whether each activity is on time, ahead of schedule, or behind schedule, in relation to Contractor's Construction Schedule. Determine how construction behind schedule will be expedited; secure commitments from parties involved to do so. Discuss whether schedule revisions are required to ensure that current and subsequent activities will be completed within the Contract Time.

        1) Review schedule for next period.

    b. Review present and future needs of each entity present, including the following:

        1) Status of submittals.
        2) Deliveries.
        3) Progress cleaning.
        4) Quality and work standards.
        5) Field observations.
        6) RFIs.
        7) Status of proposal requests.
        8) Pending changes.
        9) Status of Change Orders.

3. Minutes: Record the meeting minutes.
4. Reporting: Distribute minutes of the meeting to each party present and to parties who should have been present.

    a. Schedule Updating: Revise Contractor's Construction Schedule after each progress meeting where revisions to the schedule have been made or recognized. Issue revised schedule concurrently with the report of each meeting.

1.8 REQUESTS FOR INTERPRETATION (RFIs)

A. Procedure: Immediately on discovery of the need for interpretation of the Contract Documents, and if not possible to request interpretation at Project meeting, prepare and submit an RFI in the form specified.

1. RFIs shall originate with Contractor. RFIs submitted by entities other than Contractor will be returned with no response.
2. Coordinate and submit RFIs in a prompt manner so as to avoid delays in Contractor's work or work of subcontractors.

B. Content of the RFI: Include a detailed, legible description of item needing interpretation and the following:

1. Project name.
2. Date.
3. Name of Contractor.
4. Name of Architect.
5. RFI number, numbered sequentially.
6. Specification Section number and title and related paragraphs, as appropriate.
7. Drawing number and detail references, as appropriate.
8. Field dimensions and conditions, as appropriate.
9. Contractor's suggested solution(s). If Contractor's solution(s) impact the Contract Time or the Contract Sum, Contractor shall state impact in the RFI.
10. Contractor's signature.
11. Attachments: Include drawings, descriptions, measurements, photos, Product Data, Shop Drawings, and other information necessary to fully describe items needing interpretation.

    a. Supplementary drawings prepared by Contractor shall include dimensions, thicknesses, structural grid references, and details of affected materials, assemblies, and attachments.

C. Software-Generated RFIs: Software-generated form with substantially the same content as indicated above.

1. Attachments shall be electronic files in Adobe Acrobat PDF format.

D. Architect’s Action: Architect will review each RFI, determine action required, and return it. Allow seven working days for Architect's response for each RFI. RFIs received after 1:00 p.m. will be considered as received the following working day.

1. The following RFIs will be returned without action:

    a. Requests for approval of submittals.
    b. Requests for approval of substitutions.
    c. Requests for coordination information already indicated in the Contract Documents.
    d. Requests for adjustments in the Contract Time or the Contract Sum.

e. Requests for interpretation of Architect's actions on submittals.
f. Incomplete RFIs or RFIs with numerous errors.

2. Architect's action may include a request for additional information, in which case Architect's time for response will start again.
3. Architect's action on RFIs that may result in a change to the Contract Time or the Contract Sum may be eligible for Contractor to submit Change Proposal according to Division 01 Section "Contract Modification Procedures."

a. If Contractor believes the RFI response warrants change in the Contract Time or the Contract Sum, notify Architect in writing within 10 days of receipt of the RFI response.

E. On receipt of Architect's action, update the RFI log and immediately distribute the RFI response to affected parties. Review response and notify Architect within seven days if Contractor disagrees with response.

F. RFI Log: Prepare, maintain, and submit a tabular log of RFIs organized by the RFI number.

1. Project name.
2. Name and address of Contractor.
3. Name and address of Architect.
4. RFI number including RFIs that were dropped and not submitted.
5. RFI description.
6. Date the RFI was submitted.
7. Date Architect’s response was received.
8. Identification of related Minor Change in the Work, Construction Change Directive, and Proposal Request, as appropriate.
9. Identification of related Field Order, Work Change Directive, and Proposal Request, as appropriate.

PART 2 - PRODUCTS (Not Used)

PART 3 - EXECUTION (Not Used)

END OF SECTION 013100

SECTION 013200 - CONSTRUCTION PROGRESS DOCUMENTATION

PART 1 - GENERAL

1.1 RELATED DOCUMENTS

A. Drawings and general provisions of the Contract, including General and Supplementary Conditions and other Division 01 Specification Sections, apply to this Section.

1.2 SUMMARY

A. Section includes administrative and procedural requirements for documenting the progress of construction during performance of the Work, including the following:

1. Startup construction schedule.
2. Contractor's construction schedule.
3. Construction schedule updating reports.
4. Daily construction reports.
5. Material location reports.

B. Related Requirements:
1. Section 013300 "Submittal Procedures" for submitting schedules and reports.
2. Section 014000 "Quality Requirements" for submitting a schedule of tests and inspections.

1.3 INFORMATIONAL SUBMITTALS

A. Format for Submittals: Submit required submittals in the following format:
1. PDF electronic file.
2. Three paper copies for any sheets larger that 11”x17” format.

B. Startup construction schedule.

1. Approval of startup construction schedule will not constitute approval of schedule of values for cost-loaded activities.

C. Contractor's Construction Schedule: Initial schedule, of size required to display entire schedule for entire construction period.

1. Submit a working electronic copy of schedule, using software indicated, and labeled to comply with requirements for submittals. Include type of schedule (initial or updated) and date on label.

D. Construction Schedule Updating Reports: Submit with Applications for Payment.

E. Daily Construction Reports: Submit at weekly intervals.

F. Material Location Reports: Submit at weekly intervals.

1.4 COORDINATION

A. Coordinate preparation and processing of schedules and reports with performance of construction activities and with scheduling and reporting of separate contractors.

B. Coordinate Contractor's construction schedule with the schedule of values, list of subcontracts, submittal schedule, progress reports, payment requests, and other required schedules and reports.

1. Secure time commitments for performing critical elements of the Work from entities involved.
2. Coordinate each construction activity in the network with other activities and schedule them in proper sequence.

PART 2 - PRODUCTS

2.1 CONTRACTOR'S CONSTRUCTION SCHEDULE, GENERAL

A. Time Frame: Extend schedule from date established for the Notice to Proceed to date of final completion.

1. Contract completion date shall not be changed by submission of a schedule that shows an early completion date, unless specifically authorized by Change Order.

B. Activities: Treat each separate area as a separate numbered activity for each main element of the Work. Comply with the following:

1. Activity Duration: Define activities so no activity is longer than 20 days, unless specifically allowed by Architect.
2. Procurement Activities: Include procurement process activities for the following long lead items and major items, requiring a cycle of more than 60 days, as separate activities in schedule. Procurement cycle activities include, but are not limited to, submittals, approvals, purchasing, fabrication, and delivery.

3. Submittal Review Time: Include review and resubmittal times indicated in Section 013300 "Submittal Procedures" in schedule. Coordinate submittal review times in Contractor's construction schedule with submittal schedule.
4. Substantial Completion: Indicate completion in advance of date established for Substantial Completion, and allow time for Architect's administrative procedures necessary for certification of Substantial Completion.
5. Punch List and Final Completion: Include not more than 30 days for completion of punch list items and final completion.

C. Constraints: Include constraints and work restrictions indicated in the Contract Documents and as follows in schedule, and show how the sequence of the Work is affected.

1. Products Ordered in Advance: Include a separate activity for each product. Include delivery date indicated in Section 011000 "Summary." Delivery dates indicated stipulate the earliest possible delivery date.
2. Work Restrictions: Show the effect of the following items on the schedule:

    a. Limitations of continued occupancies.
    b. Use of premises restrictions.

3. Work Stages: Indicate important stages of construction for each major portion of the Work, including, but not limited to, the following:

    a. Submittals.
    b. Purchases.
    c. Fabrication.
    d. Deliveries.
    e. Installation.

4. Construction Areas: Identify each major area of construction for each major portion of the Work. Indicate where each construction activity within a major area must be sequenced or integrated with other construction activities to provide for the following:

    a. Temporary enclosure and space conditioning.
    b. Substantial Completion.

D. Milestones: Include milestones indicated in the Contract Documents in schedule, including, but not limited to, the Notice to Proceed, Substantial Completion, and final completion.

E. Upcoming Work Summary: Prepare summary report indicating activities scheduled to occur or commence prior to submittal of next schedule update. Summarize the following issues:

1. Unresolved issues.
2. Unanswered Requests for Information.
3. Rejected or unreturned submittals.
4. Notations on returned submittals.
5. Pending modifications affecting the Work and Contract Time.

F. Recovery Schedule: When periodic update indicates the Work is 14 or more calendar days behind the current approved schedule, submit a separate recovery schedule indicating means by which Contractor intends to regain compliance with the schedule. Indicate changes to working hours, working days, crew sizes, and equipment required to achieve compliance, and date by which recovery will be accomplished.

2.2 STARTUP CONSTRUCTION SCHEDULE

A. Bar-Chart Schedule: Submit startup, horizontal, bar-chart-type construction schedule within seven days of date established for commencement of the Work.

B. Preparation: Indicate each significant construction activity separately. Identify first workday of each week with a continuous vertical line. Outline significant construction activities for first 30 days of construction. Include skeleton diagram for the remainder of the Work and a cash requirement prediction based on indicated activities.

2.3 CONTRACTOR'S CONSTRUCTION SCHEDULE (GANTT CHART)

A. Gantt-Chart Schedule: Submit a comprehensive, fully developed, horizontal, Gantt-chart-type, Contractor's construction schedule within 15 days of date established forthe Notice to Proceed. Base schedule on the startup construction schedule and additional information received since the start of Project.

B. Preparation: Indicate each significant construction activity separately. Identify first workday of each week with a continuous vertical line.

2.4 REPORTS

A. Daily Construction Reports: Prepare a daily construction report recording the following information concerning events at Project site:

1. List of subcontractors at Project site.
2. Approximate count of personnel at Project site.
3. Material deliveries.
4. Accidents.
5. Meetings and significant decisions.
6. Unusual events (see special reports).
7. Stoppages, delays, shortages, and losses.
8. Emergency procedures.
9. Orders and requests of authorities having jurisdiction.
10. Change Orders received and implemented.
11. Construction Change Directives received and implemented.
12. Substantial Completions authorized.

B. Material Location Reports: At weekly intervals, prepare and submit a comprehensive list of materials delivered to and stored at Project site. List shall be cumulative, showing materials previously reported plus items recently delivered. Include with list a statement of progress on and delivery dates for materials or items of equipment fabricated or stored away from Project site. Indicate the following categories for stored materials:

1. Material stored prior to previous report and remaining in storage.
2. Material stored prior to previous report and since removed from storage and installed.
3. Material stored following previous report and remaining in storage.

PART 3 - EXECUTION

3.1 CONTRACTOR'S CONSTRUCTION SCHEDULE

A. Contractor's Construction Schedule Updating: At monthly intervals, update schedule to reflect actual construction progress and activities. Issue schedule one week before each regularly scheduled progress meeting.

1. Revise schedule immediately after each meeting or other activity where revisions have been recognized or made. Issue updated schedule concurrently with the report of each such meeting.
2. Include a report with updated schedule that indicates every change, including, but not limited to, changes in logic, durations, actual starts and finishes, and activity durations.
3. As the Work progresses, indicate final completion percentage for each activity.

B. Distribution: Distribute copies of approved schedule to Architect, Owner, separate contractors, testing and inspecting agencies, and other parties identified by Contractor with a need-to-know schedule responsibility.

1. Post copies in Project meeting rooms and temporary field offices.
2. When revisions are made, distribute updated schedules to the same parties and post in the same locations. Delete parties from distribution when they have completed their assigned portion of the Work and are no longer involved in performance of construction activities.

END OF SECTION 013200

SECTION 013300 - SUBMITTAL PROCEDURES

PART 1 - GENERAL

1.1 RELATED DOCUMENTS

A. Drawings and general provisions of the Contract, including General and Supplementary Conditions and other Division 01 Specification Sections, apply to this Section.

1.2 SUMMARY

A. This Section includes administrative and procedural requirements for submitting Shop Drawings, Product Data, Samples, and other submittals.

B. Related Sections include the following:

1. Division 01 Section "Payment Procedures" for submitting Applications for Payment and the Schedule of Values.
2. Division 01 Section "Project Management and Coordination" for submitting and distributing meeting and conference minutes and for submitting Coordination Drawings.
3. Division 01 Section "Construction Progress Documentation" for submitting schedules and reports, including Contractor's Construction Schedule and the Submittals Schedule.
4. Division 01 Section "Quality Requirements" for submitting test and inspection reports and for mockup requirements.
5. Division 01 Section "Closeout Procedures" for submitting warranties.
6. Division 01 Section "Project Record Documents" for submitting Record Drawings, Record Specifications, and Record Product Data.
7. Division 01 Section "Operation and Maintenance Data" for submitting operation and maintenance manuals.
8. Divisions 02 through 49 Sections for specific requirements for submittals in those Sections.

1.3 DEFINITIONS

A. Action Submittals: Written and graphic information that requires Architect's responsive action.

1.4 SUBMITTAL PROCEDURES

A. Coordination: Coordinate preparation and processing of submittals with performance of construction activities.

1. Coordinate each submittal with fabrication, purchasing, testing, delivery, other submittals, and related activities that require sequential activity.
2. Coordinate transmittal of different types of submittals for related parts of the Work so processing will not be delayed because of need to review submittals concurrently for coordination.

    a. Architect reserves the right to withhold action on a submittal requiring coordination with other submittals until related submittals are received.

B. Submittals Schedule: Comply with requirements in Division 01 Section "Construction Progress Documentation" for list of submittals and time requirements for scheduled performance of related construction activities.

C. Processing Time: Allow enough time for submittal review, including time for resubmittals, as follows. Time for review shall commence on Architect's receipt of submittal. No extension of the Contract Time will be authorized because of failure to transmit submittals enough in advance of the Work to permit processing, including resubmittals.

1. Initial Review: Allow 15 days for initial review of each submittal. Allow additional time if coordination with subsequent submittals is required. Architect will advise Contractor when a submittal being processed must be delayed for coordination.
2. Intermediate Review: If intermediate submittal is necessary, process it in same manner as initial submittal.
3. Resubmittal Review: Allow 15 days for review of each resubmittal.
4. Sequential Review: Where sequential review of submittals by Architect's consultants, Owner, or other parties is indicated, allow 21 days for initial review of each submittal.

D. Identification: Place a permanent label or title block on each submittal for identification.

1. Indicate name of firm or entity that prepared each submittal on label or title block.
2. Provide a space approximately 6 by 8 inches (150 by 200 mm) on label or beside title block to record Contractor's review and approval markings and action taken by Architect.
3. Include the following information on label for processing and recording action taken:

    a. Project name.
    b. Date.
    c. Name and address of Architect.
    d. Name and address of Contractor.
    e. Name and address of subcontractor.
    f. Name and address of supplier.
    g. Name of manufacturer.
    h. Submittal number or other unique identifier, including revision identifier.

        1) Submittal number shall use Specification Section number followed by a decimal point and then a sequential number (e.g., 061000.01). Resubmittals shall include an alphabetic suffix after another decimal point (e.g., 061000.01.A).

i. Number and title of appropriate Specification Section.
j. Drawing number and detail references, as appropriate.
k. Location(s) where product is to be installed, as appropriate.

E. Deviations: Encircle or otherwise specifically identify deviations from the Contract Documents on submittals.

F. Additional Copies: Unless additional copies are required for final submittal, and unless Architect observes noncompliance with provisions in the Contract Documents, initial submittal may serve as final submittal.

1. Submit one copy of submittal to concurrent reviewer in addition to specified number of copies to Architect.
2. Additional copies submitted for maintenance manuals will not be marked with action taken and will be returned.

G. Transmittal: Package each submittal individually and appropriately for transmittal and handling. Transmit each submittal using a transmittal form. Architect will return submittals, without review, received from sources other than Contractor.

1. Transmittal Form: Use AIA Document G810.
2. On an attached separate sheet, prepared on Contractor's letterhead, record relevant information, requests for data, revisions other than those requested by Architect on previous submittals, and deviations from requirements in the Contract Documents, including minor variations and limitations. Include same label information as related submittal.

H. Resubmittals: Make resubmittals in same form and number of copies as initial submittal.

1. Note date and content of previous submittal.
2. Note date and content of revision in label or title block and clearly indicate extent of revision.

I. Distribution: Furnish copies of final submittals to manufacturers, subcontractors, suppliers, fabricators, installers, authorities having jurisdiction, and others as necessary for performance of construction activities. Show distribution on transmittal forms.

1.5 CONTRACTOR'S USE OF ARCHITECT'S CAD FILES

A. General: At Contractor's written request, copies of Architect's CAD files will be provided to Contractor for Contractor's use in connection with Project.

PART 2 - PRODUCTS

2.1 ACTION SUBMITTALS

A. General: Prepare and submit Action Submittals required by individual Specification Sections.

1. Submit electronic submittals directly to extranet specifically established for Project.

B. Product Data: Collect information into a single submittal for each element of construction and type of product or equipment.

1. If information must be specially prepared for submittal because standard printed data are not suitable for use, submit as Shop Drawings, not as Product Data.
2. Mark each copy of each submittal to show which products and options are applicable.
3. Include the following information, as applicable:

a. Manufacturer's product specifications.
b. Manufacturer's installation instructions.
c. Standard color charts.
d. Compliance with specified referenced standards.
e. Testing by recognized testing agency.

4. Submit Product Data before or concurrent with Samples.
5. Number of Copies: Submit three copies of Product Data, unless otherwise indicated. Architect will return two copies. Mark up and retain one returned copy as a Project Record Document.

C. Shop Drawings: Prepare Project-specific information, drawn accurately to scale. Do not base Shop Drawings on reproductions of the Contract Documents or standard printed data**,** unless submittal of Architect's CAD Drawings are otherwise permitted.

1. Preparation: Fully illustrate requirements in the Contract Documents. Include the following information, as applicable:

a. Dimensions.
b. Fabrication and installation drawings.
c. Design calculations.
d. Compliance with specified standards.
e. Relationship to adjoining construction clearly indicated.
f. Seal and signature of professional engineer if specified.
g. Wiring Diagrams: Differentiate between manufacturer-installed and field-installed wiring.

2. Sheet Size: Except for templates, patterns, and similar full-size drawings, submit Shop Drawings on sheets at least 8-1/2 by 11 inches (215 by 280 mm) but no larger than 30 by 40 inches (750 by 1000 mm).
3. Number of Copies: Submit three opaque copies of each submittal, unless copies are required for operation and maintenance manuals. Submit five copies where copies are required for operation and maintenance manuals. Architect will retain two copies; remainder will be returned. Mark up and retain one returned copy as a Project Record Drawing.

D. Samples: Submit Samples for review of kind, color, pattern, and texture for a check of these characteristics with other elements and for a comparison of these characteristics between submittal and actual component as delivered and installed.

1. Transmit Samples that contain multiple, related components such as accessories together in one submittal package.
2. Identification: Attach label on unexposed side of Samples that includes the following:

    a. Generic description of Sample.
    b. Product name and name of manufacturer.
    c. Sample source.
    d. Number and title of appropriate Specification Section.

3. Disposition: Maintain sets of approved Samples at Project site, available for quality-control comparisons throughout the course of construction activity. Sample sets may be used to determine final acceptance of construction associated with each set.

    a. Samples not incorporated into the Work, or otherwise designated as Owner's property, are the property of Contractor.

4. Samples for Initial Selection: Submit manufacturer's color charts consisting of units or sections of units showing the full range of colors, textures, and patterns available.

    a. Number of Samples: Submit one full set(s) of available choices where color, pattern, texture, or similar characteristics are required to be selected from manufacturer's product line. Architect will return submittal with options selected.

5. Samples for Verification: Submit full-size units or Samples of size indicated, prepared from same material to be used for the Work, cured and finished in manner specified, and physically identical with material or product proposed for use, and that show full range of color and texture variations expected. Samples include, but are not limited to, the following: partial sections of manufactured or fabricated components; small cuts or containers of materials; complete units of repetitively used materials; swatches showing color, texture, and pattern; color range sets; and components used for independent testing and inspection.

    a. Number of Samples: Submit three sets of Samples. Architect will retain two Sample sets; remainder will be returned. Mark up and retain one returned Sample set as a Project Record Sample.

        1) Submit a single Sample where assembly details, workmanship, fabrication techniques, connections, operation, and other similar characteristics are to be demonstrated.
        2) If variation in color, pattern, texture, or other characteristic is inherent in material or product represented by a Sample, submit at least three sets of paired units that show approximate limits of variations.

E. Application for Payment: Comply with requirements specified in Division 01 Section "Payment Procedures."

F. Schedule of Values: Comply with requirements specified in Division 01 Section "Payment Procedures."

PART 3 - EXECUTION

3.1 CONTRACTOR'S REVIEW

A. Review each submittal and check for coordination with other Work of the Contract and for compliance with the Contract Documents. Note corrections and field dimensions. Mark with approval stamp before submitting to Architect.

B. Approval Stamp: Stamp each submittal with a uniform, approval stamp. Include Project name and location, submittal number, Specification Section title and number, name of reviewer, date of Contractor's approval, and statement certifying that submittal has been reviewed, checked, and approved for compliance with the Contract Documents.

3.2 ARCHITECT'S ACTION

A. General: Architect will not review submittals that do not bear Contractor's approval stamp and will return them without action.

B. Action Submittals: Architect will review each submittal, make marks to indicate corrections or modifications required, and return it. Architect will stamp each submittal with an action stamp and will mark stamp appropriately to indicate action taken.

C. Partial submittals are not acceptable, will be considered nonresponsive, and will be returned without review.

D. Submittals not required by the Contract Documents may not be reviewed and may be discarded.

END OF SECTION 013300

SECTION 014000 - QUALITY REQUIREMENTS

PART 1 - GENERAL

1.1 RELATED DOCUMENTS

A. Drawings and general provisions of the Contract, including General and Supplementary Conditions and other Division 01 Specification Sections, apply to this Section.

1.2 SUMMARY

A. This Section includes administrative and procedural requirements for quality assurance and quality control.

B. Testing and inspecting services are required to verify compliance with requirements specified or indicated. These services do not relieve Contractor of responsibility for compliance with the Contract Document requirements.

1. Specific quality-assurance and -control requirements for individual construction activities are specified in the Sections that specify those activities. Requirements in those Sections may also cover production of standard products.
2. Specified tests, inspections, and related actions do not limit Contractor's other quality-assurance and -control procedures that facilitate compliance with the Contract Document requirements.
3. Requirements for Contractor to provide quality-assurance and -control services required by Architect, Owner, or authorities having jurisdiction are not limited by provisions of this Section.

C. Related Sections include the following:
1. Division 01 Section "Construction Progress Documentation" for developing a schedule of required tests and inspections.
2. Divisions 02 through 49 Sections for specific test and inspection requirements.

1.3 DEFINITIONS

A. Quality-Assurance Services: Activities, actions, and procedures performed before and during execution of the Work to guard against defects and deficiencies and substantiate that proposed construction will comply with requirements.

B. Quality-Control Services: Tests, inspections, procedures, and related actions during and after execution of the Work to evaluate that actual products incorporated into the Work and completed construction comply with requirements. Services do not include contract enforcement activities performed by Architect.

C. Preconstruction Testing: Tests and inspections that are performed specifically for the Project before products and materials are incorporated into the Work to verify performance or compliance with specified criteria.

D. Product Testing: Tests and inspections that are performed by an NRTL, an NVLAP, or a testing agency qualified to conduct product testing and acceptable to authorities having jurisdiction, to establish product performance and compliance with industry standards.

E. Source Quality-Control Testing: Tests and inspections that are performed at the source, i.e., plant, mill, factory, or shop.

F. Field Quality-Control Testing: Tests and inspections that are performed on-site for installation of the Work and for completed Work.

G. Testing Agency: An entity engaged to perform specific tests, inspections, or both. Testing laboratory shall mean the same as testing agency.

H. Installer/Applicator/Erector: Contractor or another entity engaged by Contractor as an employee, Subcontractor, or Sub-subcontractor, to perform a particular construction operation, including installation, erection, application, and similar operations.

1. Using a term such as "carpentry" does not imply that certain construction activities must be performed by accredited or unionized individuals of a corresponding generic name, such as "carpenter." It also does not imply that requirements specified apply exclusively to trades people of the corresponding generic name.

I. Experienced: When used with an entity, "experienced" means having successfully completed a minimum of five previous projects similar in size and scope to this Project; being familiar with special requirements indicated; and having complied with requirements of authorities having jurisdiction.

1.4 CONFLICTING REQUIREMENTS

A. General: If compliance with two or more standards is specified and the standards establish different or conflicting requirements for minimum quantities or quality levels, comply with the most stringent requirement. Refer uncertainties and requirements that are different, but apparently equal, to Architect for a decision before proceeding.

B. Minimum Quantity or Quality Levels: The quantity or quality level shown or specified shall be the minimum provided or performed. The actual installation may comply exactly with the minimum quantity or quality specified, or it may exceed the minimum within reasonable limits. To comply with these requirements, indicated numeric values are minimum or maximum, as appropriate, for the context of requirements. Refer uncertainties to Architect for a decision before proceeding.

1.5 SUBMITTALS

A. Reports: Prepare and submit certified written reports that include the following:

1. Date of issue.
2. Project title and number.
3. Name, address, and telephone number of testing agency.
4. Dates and locations of samples and tests or inspections.
5. Names of individuals making tests and inspections.
6. Description of the Work and test and inspection method.
7. Identification of product and Specification Section.
8. Complete test or inspection data.
9. Test and inspection results and an interpretation of test results.
10. Record of temperature and weather conditions at time of sample taking and testing and inspecting.
11. Comments or professional opinion on whether tested or inspected Work complies with the Contract Document requirements.
12. Name and signature of laboratory inspector.
13. Recommendations on retesting and reinspecting.

1.6 QUALITY ASSURANCE

A. General: Qualifications paragraphs in this Article establish the minimum qualification levels required; individual Specification Sections specify additional requirements.

B. Installer Qualifications: A firm or individual experienced in installing, erecting, or assembling work similar in material, design, and extent to that indicated for this Project, whose work has resulted in construction with a record of successful in-service performance.

C. Manufacturer Qualifications: A firm experienced in manufacturing products or systems similar to those indicated for this Project and with a record of successful in-service performance, as well as sufficient production capacity to produce required units.

D. Fabricator Qualifications: A firm experienced in producing products similar to those indicated for this Project and with a record of successful in-service performance, as well as sufficient production capacity to produce required units.

E. Professional Engineer Qualifications: A professional engineer who is legally qualified to practice in jurisdiction where Project is located and who is experienced in providing engineering services of the kind indicated. Engineering services are defined as those performed for installations of the system, assembly, or product that are similar to those indicated for this Project in material, design, and extent.

F. Specialists: Certain sections of the Specifications require that specific construction activities shall be performed by entities who are recognized experts in those operations. Specialists shall satisfy qualification requirements indicated and shall be engaged for the activities indicated.

1. Requirement for specialists shall not supersede building codes and regulations governing the Work.

G. Testing Agency Qualifications: An NRTL, an NVLAP, or an independent agency with the experience and capability to conduct testing and inspecting indicated, as documented according to ASTM E 548; and with additional qualifications specified in individual Sections; and where required by authorities having jurisdiction, that is acceptable to authorities.

1. NRTL: A nationally recognized testing laboratory according to 29 CFR 1910.7.
2. NVLAP: A testing agency accredited according to NIST's National Voluntary Laboratory Accreditation Program.

H. Factory-Authorized Service Representative Qualifications: An authorized representative of manufacturer who is trained and approved by manufacturer to inspect installation of manufacturer's products that are similar in material, design, and extent to those indicated for this Project.

1.7 QUALITY CONTROL

A. Quality-Control Plan, General: Submit quality-control plan within 10 days of Notice of Award, and not less than five days prior to preconstruction conference. Submit in format acceptable to Architect. Identify personnel, procedures, controls, instructions, tests, records, and forms to be used to carry out Contractor's quality-assurance and quality-control responsibilities. Coordinate with Contractor's construction schedule.

B. Quality-Control Personnel Qualifications: Engage qualified full-time personnel trained and experienced in managing and executing quality-assurance and quality-control procedures similar in nature and extent to those required for Project.

1. Project quality-control manager may also serve as Project superintendent.

C. Submittal Procedure: Describe procedures for ensuring compliance with requirements through review and management of submittal process. Indicate qualifications of personnel responsible for submittal review.

D. Testing and Inspection: In quality-control plan, include a comprehensive schedule of Work requiring testing or inspection, including the following:

1. Contractor-performed tests and inspections including subcontractor-performed tests and inspections. Include required tests and inspections and Contractor-elected tests and inspections.
2. Special inspections required by authorities having jurisdiction and indicated on the "Statement of Special Inspections."
3. Owner-performed tests and inspections indicated in the Contract Documents.

E. Continuous Inspection of Workmanship: Describe process for continuous inspection during construction to identify and correct deficiencies in workmanship in addition to testing and

inspection specified. Indicate types of corrective actions to be required to bring work into compliance with standards of workmanship established by Contract requirements and approved mockups.

F. Monitoring and Documentation: Maintain testing and inspection reports including log of approved and rejected results. Include work Architect has indicated as nonconforming or defective. Indicate corrective actions taken to bring nonconforming work into compliance with requirements. Comply with requirements of authorities having jurisdiction.

1.8 REPORTS AND DOCUMENTS

A. Test and Inspection Reports: Prepare and submit certified written reports specified in other Sections. Include the following:

1. Date of issue.
2. Project title and number.
3. Name, address, and telephone number of testing agency.
4. Dates and locations of samples and tests or inspections.
5. Names of individuals making tests and inspections.
6. Description of the Work and test and inspection method.
7. Identification of product and Specification Section.
8. Complete test or inspection data.
9. Test and inspection results and an interpretation of test results.
10. Record of temperature and weather conditions at time of sample taking and testing and inspecting.
11. Comments or professional opinion on whether tested or inspected Work complies with the Contract Document requirements.
12. Name and signature of laboratory inspector.
13. Recommendations on retesting and reinspecting.

B. Manufacturer's Technical Representative's Field Reports: Prepare written information documenting manufacturer's technical representative's tests and inspections specified in other Sections. Include the following:

1. Name, address, and telephone number of technical representative making report.
2. Statement on condition of substrates and their acceptability for installation of product.
3. Statement that products at Project site comply with requirements.
4. Summary of installation procedures being followed, whether they comply with requirements and, if not, what corrective action was taken.
5. Results of operational and other tests and a statement of whether observed performance complies with requirements.
6. Statement whether conditions, products, and installation will affect warranty.
7. Other required items indicated in individual Specification Sections.

C. Factory-Authorized Service Representative's Reports: Prepare written information documenting manufacturer's factory-authorized service representative's tests and inspections specified in other Sections. Include the following:

1. Name, address, and telephone number of factory-authorized service representative making report.
2. Statement that equipment complies with requirements.
3. Results of operational and other tests and a statement of whether observed performance complies with requirements.
4. Statement whether conditions, products, and installation will affect warranty.
5. Other required items indicated in individual Specification Sections.

D. Permits, Licenses, and Certificates: For Owner's records, submit copies of permits, licenses, certifications, inspection reports, releases, jurisdictional settlements, notices, receipts for fee payments, judgments, correspondence, records, and similar documents, established for compliance with standards and regulations bearing on performance of the Work.

1.9 QUALITY ASSURANCE

A. General: Qualifications paragraphs in this article establish the minimum qualification levels required; individual Specification Sections specify additional requirements.

B. Manufacturer Qualifications: A firm experienced in manufacturing products or systems similar to those indicated for this Project and with a record of successful in-service performance, as well as sufficient production capacity to produce required units.

C. Fabricator Qualifications: A firm experienced in producing products similar to those indicated for this Project and with a record of successful in-service performance, as well as sufficient production capacity to produce required units.

D. Installer Qualifications: A firm or individual experienced in installing, erecting, or assembling work similar in material, design, and extent to that indicated for this Project, whose work has resulted in construction with a record of successful in-service performance.

E. Professional Engineer Qualifications: A professional engineer who is legally qualified to practice in jurisdiction where Project is located and who is experienced in providing engineering services of the kind indicated. Engineering services are defined as those performed for installations of the system, assembly, or product that are similar in material, design, and extent to those indicated for this Project.

F. Testing Agency Qualifications: An NRTL, an NVLAP, or an independent agency with the experience and capability to conduct testing and inspecting indicated, as documented according to ASTM E 329; and with additional qualifications specified in individual Sections; and, where required by authorities having jurisdiction, that is acceptable to authorities.

1. NRTL: A nationally recognized testing laboratory according to 29 CFR 1910.7.
2. NVLAP: A testing agency accredited according to NIST's National Voluntary Laboratory Accreditation Program.

G. Manufacturer's Technical Representative Qualifications: An authorized representative of manufacturer who is trained and approved by manufacturer to observe and inspect

installation of manufacturer's products that are similar in material, design, and extent to those indicated for this Project.

H. Factory-Authorized Service Representative Qualifications: An authorized representative of manufacturer who is trained and approved by manufacturer to inspect installation of manufacturer's products that are similar in material, design, and extent to those indicated for this Project.

PART 2 - PRODUCTS (Not Used)

PART 3 - EXECUTION

3.1 TEST AND INSPECTION LOG

A. Prepare a record of tests and inspections. Include the following:

1. Date test or inspection was conducted.
2. Description of the Work tested or inspected.
3. Date test or inspection results were transmitted to Architect.
4. Identification of testing agency or special inspector conducting test or inspection.

B. Maintain log at Project site. Post changes and modifications as they occur. Provide access to test and inspection log for Architect’s reference during normal working hours.

3.2 REPAIR AND PROTECTION

A. General: On completion of testing, inspecting, sample taking, and similar services, repair damaged construction and restore substrates and finishes.

1. Provide materials and comply with installation requirements specified in other Specification Sections. Restore patched areas and extend restoration into adjoining areas with durable seams that are as invisible as possible.
2. Comply with Contract Document requirements Division 01 Section "Cutting and Patching."

B. Protect construction exposed by or for quality-control service activities.

C. Repair and protection are Contractor's responsibility, regardless of the assignment of responsibility for quality-control services.

END OF SECTION 014000

SECTION 015000 - TEMPORARY FACILITIES AND CONTROLS

PART 1 - GENERAL

1.1 SUMMARY

A. This Section includes requirements for temporary utilities, support facilities, and security and protection facilities.

B. See Division 1 Section "Execution Requirements" for progress cleaning requirements.

C. See Divisions 2 through 28 Sections for temporary heat, ventilation, and humidity requirements for products in those Sections.

1.2 DEFINITIONS

A. Permanent Enclosure: As determined by Architect, permanent or temporary roofing is complete, insulated, and weathertight; exterior walls are insulated and weathertight; and all openings are closed with permanent construction or substantial temporary closures.

1.3 USE CHARGES

A. General: Cost or use charges for temporary facilities shall be included in the Contract Sum. Allow other entities to use temporary services and facilities without cost, including, but not limited to, Owner's construction forces, Architect, occupants of Project, testing agencies, and authorities having jurisdiction.

B. Water Service: Water from Owner's existing water system is available for use without metering and without payment of use charges. Provide connections and extensions of services as required for construction operations.

C. Electric Power Service: Electric power from Owner's existing system is available for use without metering and without payment of use charges. Provide connections and extensions of services as required for construction operations.

1.4 SUBMITTALS

A. Site Plan: Show temporary facilities, utility hookups, staging areas, and parking areas for construction personnel.

1.5 PROJECT CONDITIONS

A. Temporary Use of Permanent Facilities: Installer of each permanent service shall assume responsibility for operation, maintenance, and protection of each permanent service during its use as a construction facility before Owner's acceptance, regardless of previously assigned responsibilities.

PART 2 - PRODUCTS

2.1 MATERIALS

A. Lumber and Plywood: Comply with requirements in Division 6 Section "Miscellaneous Carpentry."

B. Gypsum Board: Minimum 1/2 inch thick by 48 inches wide by maximum available lengths; regular-type panels with tapered edges. Comply with ASTM C 36/C 36M.

2.2 TEMPORARY FACILITIES

A. Storage and Fabrication Sheds: Provide sheds sized, furnished, and equipped to accommodate materials and equipment for construction operations.

2.3 EQUIPMENT

A. Fire Extinguishers: Portable, UL rated; with class and extinguishing agent as required by locations and classes of fire exposures.

PART 3 - EXECUTION

3.1 INSTALLATION, GENERAL

A. Locate facilities where they will serve Project adequately and result in minimum interference with performance of the Work. Relocate and modify facilities as required by progress of the Work.

B. Provide each facility ready for use when needed to avoid delay. Do not remove until facilities are no longer needed or are replaced by authorized use of completed permanent facilities.

3.2 TEMPORARY UTILITY INSTALLATION

A. Water Service: Use of Owner's existing water service facilities will be permitted, as long as facilities are cleaned and maintained in a condition acceptable to Owner. At Substantial Completion, restore these facilities to condition existing before initial use.

1. Where installations below an outlet might be damaged by spillage or leakage, provide a drip pan of suitable size to minimize water damage. Drain accumulated water promptly from pans.

B. Sanitary Facilities: Provide temporary toilets, wash facilities, and drinking water for use of construction personnel. Comply with authorities having jurisdiction for type, number, location, operation, and maintenance of fixtures and facilities.

C. Electric Power Service: Use of Owner's existing electric power service will be permitted, as long as equipment is maintained in a condition acceptable to Owner.

D. Lighting: Provide temporary lighting with local switching that provides adequate illumination for construction operations, observations, inspections, and traffic conditions.

1. Install and operate temporary lighting that fulfills security and protection requirements without operating entire system.

3.3 SUPPORT FACILITIES INSTALLATION

A. General: Comply with the following:

1. Provide incombustible construction for offices, shops, and sheds located within construction area or within 30 feet of building lines. Comply with NFPA 241.
2. Maintain support facilities until near Substantial Completion. Remove before Substantial Completion. Personnel remaining after Substantial Completion will be permitted to use permanent facilities, under conditions acceptable to Owner.

B. Project Identification and Temporary Signs: Provide Project identification and other signs. Install signs where indicated to inform public and individuals seeking entrance to Project. Unauthorized signs are not permitted.

1. Provide temporary, directional signs for construction personnel and visitors.
2. Maintain and touchup signs so they are legible at all times.

C. Waste Disposal Facilities: Provide waste-collection containers in sizes adequate to handle waste from construction operations. Comply with requirements of authorities having jurisdiction. Comply with Division 1 Section "Execution Requirements" for progress cleaning requirements. Dumpsters shall be empted every Friday for the duration of the project.

3.4 SECURITY AND PROTECTION FACILITIES INSTALLATION

A. Environmental Protection: Provide protection, operate temporary facilities, and conduct construction in ways and by methods that comply with environmental regulations and that minimize possible air, waterway, and subsoil contamination or pollution or other undesirable effects.

B. Security Enclosure and Lockup: Install substantial temporary enclosure around partially completed areas of construction. Provide lockable entrances to prevent unauthorized entrance, vandalism, theft, and similar violations of security.

C. Barricades, Warning Signs, and Lights: Comply with requirements of authorities having jurisdiction for erecting structurally adequate barricades, including warning signs and lighting.

D. Temporary Enclosures: Provide temporary enclosures for protection of construction, in progress and completed, from exposure, foul weather, other construction operations, and similar activities. Provide temporary weathertight enclosure for building exterior.

1. Where heating or cooling is needed and permanent enclosure is not complete, insulate temporary enclosures.

E. Temporary Partitions: Provide floor-to-ceiling dustproof partitions to limit dust and dirt migration and to separate areas occupied by Owner from fumes and noise.

1. Construct dustproof partitions with 2 layers of 3-mil polyethylene sheet on each side. Cover floor with 2 layers of 3-mil polyethylene sheet, extending sheets 18 inches up the sidewalls. Overlap and tape full length of joints.
2. Protect air-handling equipment.
3. Provide walk-off mats at each entrance through temporary partition.

F. Temporary Fire Protection: Install and maintain temporary fire-protection facilities of types needed to protect against reasonably predictable and controllable fire losses. Comply with NFPA 241.

1. Prohibit smoking in construction areas.
2. Supervise welding operations, combustion-type temporary heating units, and similar sources of fire ignition according to requirements of authorities having jurisdiction.
3. Develop and supervise an overall fire-prevention and -protection program for personnel at Project site. Review needs with local fire department and establish procedures to be followed. Instruct personnel in methods and procedures. Post warnings and information.

3.5 OPERATION, TERMINATION, AND REMOVAL

A. Supervision: Enforce strict discipline in use of temporary facilities. To minimize waste and abuse, limit availability of temporary facilities to essential and intended uses.

B. Maintenance: Maintain facilities in good operating condition until removal.

1. Maintain operation of temporary enclosures on a 24-hour basis where required to achieve indicated results and to avoid possibility of damage.

C. Temporary Facility Changeover: Do not change over from using temporary security and protection facilities to permanent facilities until Substantial Completion.

D. Termination and Removal: Remove each temporary facility when need for its service has ended, when it has been replaced by authorized use of a permanent facility, or no later than Substantial Completion. Complete or, if necessary, restore permanent construction that may have been delayed because of interference with temporary facility. Repair damaged Work, clean exposed surfaces, and replace construction that cannot be satisfactorily repaired.

1. Materials and facilities that constitute temporary facilities are property of Contractor. Owner reserves right to take possession of Project identification signs.
2. At Substantial Completion, clean and renovate permanent facilities used during construction period. Comply with final cleaning requirements specified in Division 1 Section "Closeout Procedures."

END OF SECTION 015000

SECTION 015639 - TEMPORARY TREE AND PLANT PROTECTION

PART 1 - GENERAL

1.1 RELATED DOCUMENTS

A. Drawings and general provisions of the Contract, including General and Supplementary Conditions and other Division 01 Specification Sections, apply to this Section.

1.2 SUMMARY

A. Section includes general protection and pruning of existing trees and plants that are affected by execution of the Work, whether temporary or permanent construction.

B. Related Sections:

1. Section 015000 "Temporary Facilities and Controls" for temporary site fencing.

1.3 DEFINITIONS

A. Caliper: Diameter of a trunk measured by a diameter tape at 6 inches above the ground for trees up to, and including, 4-inch size; and 12 inches above the ground for trees larger than 4-inch size.

B. Plant-Protection Zone: Area surrounding individual trees, groups of trees, shrubs, or other vegetation to be protected during construction, and indicated on Drawings.

C. Tree-Protection Zone: Area surrounding individual trees or groups of trees to be protected during construction, and defined by a circle concentric with each tree with a radius 1.5 times the diameter of the drip line unless otherwise indicated.

D. Vegetation: Trees, shrubs, groundcovers, grass, and other plants.

1.4 ACTION SUBMITTALS

A. Product Data: For each type of product indicated.

1.5 INFORMATION SUBMITTALS

A. Qualification Data: For qualified arborist and tree service firm.

B. Certification: From arborist, certifying that trees indicated to remain have been protected during construction according to recognized standards and that trees were promptly and properly treated and repaired when damaged.

C. Existing Conditions: Documentation of existing trees and plantings indicated to remain, which establishes preconstruction conditions that might be misconstrued as damage caused by construction activities.

1. Use sufficiently detailed photographs or videotape.
2. Include plans and notations to indicate specific wounds and damage conditions of each tree or other plants designated to remain.

1.6 QUALITY ASSURANCE

A. Arborist Qualifications: Certified Arborist as certified by ISA or licensed arborist in jurisdiction where Project is located.

B. Tree Service Firm Qualifications: An experienced tree service firm that has successfully completed temporary tree and plant protection work similar to that required for this Project and that will assign an experienced, qualified arborist to Project site during execution of the Work.

1.7 PROJECT CONDITIONS

A. The following practices are prohibited within protection zones:

1. Storage of construction materials, debris, or excavated material.
2. Parking vehicles or equipment.
3. Foot traffic.
4. Erection of sheds or structures.
5. Impoundment of water.
6. Excavation or other digging unless otherwise indicated.
7. Attachment of signs to or wrapping materials around trees or plants unless otherwise indicated.

B. Do not direct vehicle or equipment exhaust toward protection zones.

C. Prohibit heat sources, flames, ignition sources, and smoking within or near protection zones and organic mulch.

PART 2 - PRODUCTS

2.1 MATERIALS

A. Topsoil: Natural or cultivated top layer of the soil profile or manufactured topsoil; containing organic matter and sand, silt, and clay particles; friable, pervious, and black or a darker shade

of brown, gray, or red than underlying subsoil; reasonably free of subsoil, clay lumps, gravel, and other objects more than 2 inches in diameter; and free of weeds, roots, and toxic and other nonsoil materials.

1. Obtain topsoil only from well-drained sites where topsoil is 4 inches deep or more; do not obtain from bogs or marshes.

B. Protection-Zone Fencing: Fencing fixed in position and meeting one of the following requirements.

1. Wood Protection-Zone Fencing: Constructed of two 2-by-4-inch horizontal rails, with 4-by-4-inch preservative-treated wood posts spaced not more than 8 feet apart, and lower rail set halfway between top rail and ground.

   a. Height: 4 feet.

2. Plastic Protection-Zone Fencing: Plastic construction fencing constructed of high-density extruded and stretched polyethylene fabric with 2-inch maximum opening in pattern and weighing a minimum of 0.4 lb/ft.; remaining flexible from minus 60 to plus 200 deg F; inert to most chemicals and acids; minimum tensile yield strength of 2000 psi and ultimate tensile strength of 2680 psi; secured with plastic bands or galvanized-steel or stainless-steel wire ties; and supported by tubular or T-shape galvanized-steel posts spaced not more than 8 feet apart.

   a. Height: 4 feet.
   b. Color: High-visibility orange, nonfading.

3. Gates: Single swing access gates matching material and appearance of fencing, to allow for maintenance activities within protection zones; leaf width 36 inches.

PART 3 - EXECUTION

3.1 EXAMINATION

A. Erosion and Sedimentation Control: Examine the site to verify that temporary erosion- and sedimentation-control measures are in place. Verify that flows of water redirected from construction areas or generated by construction activity do not enter or cross protection zones.

B. For the record, prepare written report, endorsed by arborist, listing conditions detrimental to tree and plant protection.

3.2 PREPARATION

A. Locate and clearly identify trees, shrubs, and other vegetation to remain. Flag each tree trunk at 54 inches above the ground.

B. Protect tree root systems from damage caused by runoff or spillage of noxious materials while mixing, placing, or storing construction materials. Protect root systems from ponding, eroding, or excessive wetting caused by dewatering operations.

C. Tree-Protection Zones: Mulch areas inside tree-protection zones and other areas indicated by Landscape Architect.

3.3 TREE- AND PLANT-PROTECTION ZONES

A. Protection-Zone Fencing: Install protection-zone fencing along edges of protection zones before materials or equipment are brought on the site and construction operations begin in a manner that will prevent people from easily entering protected area except by entrance gates. Construct fencing so as not to obstruct safe passage or visibility at vehicle intersections where fencing is located adjacent to pedestrian walkways or in close proximity to street intersections, drives, or other vehicular circulation.

1. Posts: Set or drive posts into ground one-third the total height of the fence without concrete footings. Where a post is located on existing paving or concrete to remain, provide appropriate means of post support acceptable to Architect.
2. Access Gates: Adjust to operate smoothly, easily, and quietly, free of binding, warp, excessive deflection, distortion, nonalignment, misplacement, disruption, or malfunction, throughout entire operational range. Confirm that latches and locks engage accurately and securely without forcing or binding.

B. Protection-Zone Signage: Install protection-zone signage in visibly prominent locations in a manner approved by Architect. Install one sign spaced approximately every 20 feet on protection-zone fencing, but no fewer than four signs with each facing a different direction.

C. Maintain protection zones free of weeds and trash.

D. Repair or replace trees, shrubs, and other vegetation indicated to remain or be relocated that are damaged by construction operations, in a manner approved by Architect.

E. Maintain protection-zone fencing and signage in good condition as acceptable to Architect and remove when construction operations are complete and equipment has been removed from the site.

1. Do not remove protection-zone fencing, even temporarily, to allow deliveries or equipment access through the protection zone.
2. Temporary access is permitted subject to preapproval in writing by arborist if a root buffer effective against soil compaction is constructed as directed by arborist. Maintain root buffer so long as access is permitted.

3.4 EXCAVATION

A. General: Excavate at edge of protection zones and for trenches indicated within protection zones according to requirements in Section 312000 "Earth Moving."

B. Redirect roots in backfill areas where possible. If encountering large, main lateral roots, expose roots beyond excavation limits as required to bend and redirect them without breaking. If encountered immediately adjacent to location of new construction and redirection is not practical, cut roots approximately 3 inches back from new construction and as required for root pruning.

C. Do not allow exposed roots to dry out before placing permanent backfill. Provide temporary earth cover or pack with peat moss and wrap with burlap. Water and maintain in a moist condition. Temporarily support and protect roots from damage until they are permanently relocated and covered with soil.

3.5 FIELD QUALITY CONTROL

A. Inspections: Engage a qualified arborist to direct plant-protection measures in the vicinity of trees, shrubs, and other vegetation indicated to remain and to prepare inspection reports.

3.6 REPAIR AND REPLACEMENT

A. General: Repair or replace trees, shrubs, and other vegetation indicated to remain or be relocated that are damaged by construction operations, in a manner approved by Architect.

1. Submit details of proposed root cutting and tree and shrub repairs.
2. Have arborist perform the root cutting, branch pruning, and damage repair of trees and shrubs.
3. Treat damaged trunks, limbs, and roots according to arborist's written instructions.
4. Perform repairs within 24 hours.
5. Replace vegetation that cannot be repaired and restored to full-growth status, as determined by Architect.

B. Trees: Remove and replace trees indicated to remain that are more than 25 percent dead or in an unhealthy condition before the end of the corrections period or are damaged during construction operations that Architect determines are incapable of restoring to normal growth pattern.

1. Provide one new tree(s) of 6-inch caliper size for each tree being replaced that measures more than 4 inches in caliper size.

    a. Species: Species selected by Architect.

2. Plant and maintain new trees as specified in Section 329300 "Plants."

C. Soil Aeration: Where directed by Architect, aerate surface soil compacted during construction. Aerate 10 feet beyond drip line and no closer than 36 inches to tree trunk. Drill 2-inch-diameter holes a minimum of 12 inches deep at 24 inches o.c. Backfill holes with an equal mix of augered soil and sand.

3.7 DISPOSAL OF SURPLUS AND WASTE MATERIALS

A. Disposal: Remove excess excavated material, displaced trees, trash and debris, and legally dispose of them off Owner's property.

END OF SECTION 015639

SECTION 016000 - PRODUCT REQUIREMENTS

PART 1 - GENERAL

1.1 RELATED DOCUMENTS

A. Drawings and general provisions of the Contract, including General and Supplementary Conditions and other Division 01 Specification Sections, apply to this Section.

1.2 SUMMARY

A. This Section includes administrative and procedural requirements for selection of products for use in Project; product delivery, storage, and handling; manufacturers' standard warranties on products; special warranties; product substitutions; and comparable products.

B. Related Sections include the following:
   1. Division 01 Section "References" for applicable industry standards for products specified.
   2. Division 01 Section "Closeout Procedures" for submitting warranties for Contract closeout.
   3. Divisions 02 through 32 Sections for specific requirements for warranties on products and installations specified to be warranted.

1.3 DEFINITIONS

A. Products: Items purchased for incorporating into the Work, whether purchased for Project or taken from previously purchased stock. The term "product" includes the terms "material," "equipment," "system," and terms of similar intent.

   1. Named Products: Items identified by manufacturer's product name, including make or model number or other designation shown or listed in manufacturer's published product literature, that is current as of date of the Contract Documents.
   2. New Products: Items that have not previously been incorporated into another project or facility, except that products consisting of recycled-content materials are allowed, unless explicitly stated otherwise. Products salvaged or recycled from other projects are not considered new products.

B. Substitutions: Changes in products, materials, equipment, and methods of construction from those required by the Contract Documents and proposed by Contractor.

1.4 SUBMITTALS

A. Product List: Submit a list, in tabular from, showing specified products. Include generic names of products required. Include manufacturer's name and proprietary product names for each product.

1. Coordinate product list with Contractor's Construction Schedule and the Submittals Schedule.
2. Form: Tabulate information for each product under the following column headings:

    a. Specification Section number and title.
    b. Proprietary name, model number, and similar designations.
    c. Manufacturer's name and address.
    d. Supplier's name and address.
    e. Installer's name and address.
    f. Projected delivery date or time span of delivery period.
    g. Identification of items that require early submittal approval for scheduled delivery date.

3. Initial Submittal: Within 30 days after date of commencement of the Work, submit 3 copies of initial product list. Include a written explanation for omissions of data and for variations from Contract requirements.

    a. At Contractor's option, initial submittal may be limited to product selections and designations that must be established early in Contract period.

4. Completed List: Within 60 days after date of commencement of the Work, submit 3 copies of completed product list. Include a written explanation for omissions of data and for variations from Contract requirements.
5. Architect's Action: Architect will respond in writing to Contractor within 15 days of receipt of completed product list. Architect's response will include a list of unacceptable product selections and a brief explanation of reasons for this action. Architect's response, or lack of response, does not constitute a waiver of requirement to comply with the Contract Documents.

B. Substitution Requests: Submit three copies of each request for consideration. Identify product or fabrication or installation method to be replaced. Include Specification Section number and title and Drawing numbers and titles.

1. Substitution Request Form: Use CSI Form 13.1A.
2. Documentation: Show compliance with requirements for substitutions and the following, as applicable:

    a. Statement indicating why specified material or product cannot be provided.
    b. Coordination information, including a list of changes or modifications needed to other parts of the Work and to construction performed by Owner and separate contractors, that will be necessary to accommodate proposed substitution.
    c. Detailed comparison of significant qualities of proposed substitution with those of the Work specified. Significant qualities may include attributes such as performance, weight, size, durability, visual effect, and specific features and requirements indicated.

d. Product Data, including drawings and descriptions of products and fabrication and installation procedures.
e. Samples, where applicable or requested.
f. List of similar installations for completed projects with project names and addresses and names and addresses of architects and owners.
g. Material test reports from a qualified testing agency indicating and interpreting test results for compliance with requirements indicated.
h. Research/evaluation reports evidencing compliance with building code in effect for Project, from a model code organization acceptable to authorities having jurisdiction.
i. Detailed comparison of Contractor's Construction Schedule using proposed substitution with products specified for the Work, including effect on the overall Contract Time. If specified product or method of construction cannot be provided within the Contract Time, include letter from manufacturer, on manufacturer's letterhead, stating lack of availability or delays in delivery.
j. Cost information, including a proposal of change, if any, in the Contract Sum.
k. Contractor's certification that proposed substitution complies with requirements in the Contract Documents and is appropriate for applications indicated.
l. Contractor's waiver of rights to additional payment or time that may subsequently become necessary because of failure of proposed substitution to produce indicated results.

3. Architect's Action: If necessary, Architect will request additional information or documentation for evaluation within 7 days of receipt of a request for substitution. Architect will notify Contractor of acceptance or rejection of proposed substitution within 15 days of receipt of request, or 7 days of receipt of additional information or documentation, whichever is later.

a. Form of Acceptance: Change Order.
b. Use product specified if Architect cannot make a decision on use of a proposed substitution within time allocated.

1.5 QUALITY ASSURANCE

A. Compatibility of Options: If Contractor is given option of selecting between two or more products for use on Project, product selected shall be compatible with products previously selected, even if previously selected products were also options.

1.6 PRODUCT DELIVERY, STORAGE, AND HANDLING

A. Deliver, store, and handle products using means and methods that will prevent damage, deterioration, and loss, including theft. Comply with manufacturer's written instructions.

B. Delivery and Handling:

1. Schedule delivery to minimize long-term storage at Project site and to prevent overcrowding of construction spaces.

2. Coordinate delivery with installation time to ensure minimum holding time for items that are flammable, hazardous, easily damaged, or sensitive to deterioration, theft, and other losses.
3. Deliver products to Project site in an undamaged condition in manufacturer's original sealed container or other packaging system, complete with labels and instructions for handling, storing, unpacking, protecting, and installing.
4. Inspect products on delivery to ensure compliance with the Contract Documents and to ensure that products are undamaged and properly protected.

C. Storage:

1. Store products to allow for inspection and measurement of quantity or counting of units.
2. Store materials in a manner that will not endanger Project structure.
3. Store products that are subject to damage by the elements, under cover in a weathertight enclosure above ground, with ventilation adequate to prevent condensation.
4. Store cementitious products and materials on elevated platforms.
5. Store foam plastic from exposure to sunlight, except to extent necessary for period of installation and concealment.
6. Comply with product manufacturer's written instructions for temperature, humidity, ventilation, and weather-protection requirements for storage.
7. Protect stored products from damage and liquids from freezing.
8. Provide a secure location and enclosure at Project site for storage of materials and equipment by Owner's construction forces. Coordinate location with Owner.

1.7 PRODUCT WARRANTIES

A. Warranties specified in other Sections shall be in addition to, and run concurrent with, other warranties required by the Contract Documents. Manufacturer's disclaimers and limitations on product warranties do not relieve Contractor of obligations under requirements of the Contract Documents.

1. Manufacturer's Warranty: Preprinted written warranty published by individual manufacturer for a particular product and specifically endorsed by manufacturer to Owner.
2. Special Warranty: Written warranty required by or incorporated into the Contract Documents, either to extend time limit provided by manufacturer's warranty or to provide more rights for Owner.

B. Special Warranties: Prepare a written document that contains appropriate terms and identification, ready for execution. Submit a draft for approval before final execution.

1. Manufacturer's Standard Form: Modified to include Project-specific information and properly executed.
2. Refer to Divisions 02 through 49 Sections for specific content requirements and particular requirements for submitting special warranties.

C. Submittal Time: Comply with requirements in Division 01 Section "Closeout Procedures."

PART 2 - PRODUCTS

2.1 PRODUCT SELECTION PROCEDURES

A. General Product Requirements: Provide products that comply with the Contract Documents, that are undamaged and, unless otherwise indicated, that are new at time of installation.

1. Provide products procured by the Owner through DAS approved state contract complete with accessories, trim, finish, fasteners, and other items needed for a complete installation and indicated use and effect.
2. Standard Products: If available, and unless custom products or nonstandard options are specified, provide standard products of types that have been produced and used successfully in similar situations on other projects.
3. Owner reserves the right to limit selection to products with warranties not in conflict with requirements of the Contract Documents.
4. Where products are accompanied by the term "as selected," Architect will make selection.
5. Where products are accompanied by the term "match sample," sample to be matched is Architect's.
6. Descriptive, performance, and reference standard requirements in the Specifications establish "salient characteristics" of products.
7. Or Equal: Where products are specified by name and accompanied by the term "or equal" or "or approved equal" or "or approved," comply with provisions in Part 2 "Comparable Products" Article to obtain approval for use of an unnamed product.

B. Product Selection Procedures:

1. Products: Where Specifications include a list of names of both products and manufacturers, provide one of the products listed that complies with requirements.
2. Manufacturers: Where Specifications include a list of manufacturers' names, provide a product by one of the manufacturers listed that complies with requirements.

2.2 PRODUCT SUBSTITUTIONS

A. Timing: Architect will consider requests for substitution if received within 60 days after commencement of the Work. Requests received after that time may be considered or rejected at discretion of Architect.

B. Conditions: Architect will consider Contractor's request for substitution when the following conditions are satisfied. If the following conditions are not satisfied, Architect will return requests without action, except to record noncompliance with these requirements:

1. Requested substitution offers Owner a substantial advantage in cost, time, energy conservation, or other considerations, after deducting additional responsibilities Owner

must assume. Owner's additional responsibilities may include compensation to Architect for redesign and evaluation services, increased cost of other construction by Owner, and similar considerations.

2. Requested substitution does not require extensive revisions to the Contract Documents.
3. Requested substitution is consistent with the Contract Documents and will produce indicated results.
4. Substitution request is fully documented and properly submitted.
5. Requested substitution will not adversely affect Contractor's Construction Schedule.
6. Requested substitution has received necessary approvals of authorities having jurisdiction.
7. Requested substitution is compatible with other portions of the Work.
8. Requested substitution has been coordinated with other portions of the Work.
9. Requested substitution provides specified warranty.

PART 3 - EXECUTION (Not Used)

END OF SECTION 016000

SECTION 017300 - EXECUTION

PART 1 - GENERAL

1.1 RELATED DOCUMENTS

A. Drawings and general provisions of the Contract, including General and Supplementary Conditions and other Division 01 Specification Sections, apply to this Section.

1.2 SUMMARY

A. Section includes general administrative and procedural requirements governing execution of the Work including, but not limited to, the following:

1. Installation of the Work.
2. Cutting and patching.
3. Progress cleaning.
4. Starting and adjusting.
5. Protection of installed construction.

B. Related Requirements:
1. Section 017700 "Closeout Procedures" for submitting final property survey with Project Record Documents, recording of Owner-accepted deviations from indicated lines and levels, and final cleaning.

1.3 DEFINITIONS

A. Cutting: Removal of in-place construction necessary to permit installation or performance of other work.

B. Patching: Fitting and repair work required to restore construction to original conditions after installation of other work.

1.4 INFORMATIONAL SUBMITTALS

A. Cutting and Patching Plan: Submit plan describing procedures at least 5 days prior to the time cutting and patching will be performed. Include the following information:

1. Extent: Describe reason for and extent of each occurrence of cutting and patching.
2. Changes to In-Place Construction: Describe anticipated results. Include changes to structural elements and operating components as well as changes in building appearance and other significant visual elements.

3. Products: List products to be used for patching and firms or entities that will perform patching work.
4. Dates: Indicate when cutting and patching will be performed.
5. Utilities and Mechanical and Electrical Systems: List services and systems that cutting and patching procedures will disturb or affect. List services and systems that will be relocated and those that will be temporarily out of service. Indicate length of time permanent services and systems will be disrupted.

    a. Include description of provisions for temporary services and systems during interruption of permanent services and systems.

1.5 QUALITY ASSURANCE

A. Cutting and Patching: Comply with requirements for and limitations on cutting and patching of construction elements.

1. Construction Elements: Do not cut and patch construction elements or components in a manner that could change their load-carrying capacity, which results in reducing their capacity to perform as intended, or that result in increased maintenance or decreased operational life or safety. Construction elements include but are not limited to the following:

    a. Water, moisture, or vapor barriers.
    b. Membranes and flashings.
    c. Insulation.
    d. Sprayed fire-resistive material.
    e. Equipment supports.
    f. Piping, ductwork, vessels, and equipment.
    g. Roof Deck.

2. Visual Elements: Do not cut and patch construction in a manner that results in visual evidence of cutting and patching. Do not cut and patch exposed construction in a manner that would, in Architect's opinion, reduce the building's aesthetic qualities. Remove and replace construction that has been cut and patched in a visually unsatisfactory manner.

B. Cutting and Patching Conference: Before proceeding, meet at Project site with parties involved in cutting and patching, including mechanical and electrical trades. Review areas of potential interference and conflict. Coordinate procedures and resolve potential conflicts before proceeding.

C. Manufacturer's Installation Instructions: Obtain and maintain on-site manufacturer's written recommendations and instructions for installation of products and equipment.

PART 2 - PRODUCTS

2.1 MATERIALS

A. General: Comply with requirements specified in other Sections.

B. In-Place Materials: Use materials for patching identical to quality and performance of in-place materials. For exposed surfaces, use materials that visually match in-place adjacent surfaces to the fullest extent possible.

1. If identical materials are unavailable or cannot be used, use materials that, when installed, will provide a match acceptable to Architect for the visual and functional performance of in-place materials.

PART 3 - EXECUTION

3.1 EXAMINATION

A. Existing Conditions: The existence and location of utilities and construction indicated as existing are not guaranteed. Before beginning work, investigate and verify the existence and location of utilities and other construction affecting the Work.

B. Examination and Acceptance of Conditions: Before proceeding with each component of the Work, examine substrates, areas, and conditions, with Installer or Applicator present where indicated, for compliance with requirements for installation tolerances and other conditions affecting performance. Record observations.

1. Examine walls and windows for suitable conditions where products and systems are to be installed.
   a. Comply with requirements of Section 085113 “Aluminum Windows".

2. Verify compatibility with and suitability of substrates, including compatibility with existing finishes or primers.

C. Written Report: Where a written report listing conditions detrimental to performance of the Work is required by other Sections, include the following:

1. Description of the Work.
2. List of unacceptable installation tolerances.
3. Recommended corrections.

D. If deck surface is unsuitable for receiving new roofing or if structural integrity of deck is suspect, immediately notify Architect and Structural Engineer. Do not proceed with installation until directed by Architect.

3.2 PREPARATION

A. Existing Utility Information: Furnish information to Owner that is necessary to adjust, move, or relocate existing utility structures, utility poles, lines, services, or other utility appurtenances located in or affected by construction. Coordinate with authorities having jurisdiction.

B. Field Measurements: Take field measurements as required to fit the Work properly. Recheck measurements before installing each product. Where portions of the Work are indicated to fit to other construction, verify dimensions of other construction by field measurements before fabrication. Coordinate fabrication schedule with construction progress to avoid delaying the Work.

C. Space Requirements: Verify space requirements and dimensions of items shown diagrammatically on Drawings.

D. Review of Contract Documents and Field Conditions: Immediately on discovery of the need for clarification of the Contract Documents caused by differing field conditions outside the control of Contractor, submit a request for information to Architect according to requirements in Section 013100 "Project Management and Coordination."

3.3 INSTALLATION

A. General: Locate the Work and components of the Work accurately, in correct alignment and elevation, as indicated.

1. Make vertical work plumb and make horizontal work level.
2. Where space is limited, install components to maximize space available for maintenance and ease of removal for replacement.

B. Comply with manufacturer's written instructions and recommendations for installing products in applications indicated.

C. Install products at the time and under conditions that will ensure the best possible results. Maintain conditions required for product performance until Substantial Completion.

D. Conduct construction operations so no part of the Work is subjected to damaging operations or loading in excess of that expected during normal conditions of occupancy.

E. Sequence the Work and allow adequate clearances to accommodate movement of construction items on site and placement in permanent locations.

F. Tools and Equipment: Do not use tools or equipment that produce harmful noise levels.

G. Templates: Obtain and distribute to the parties involved templates for work specified to be factory prepared and field installed. Check Shop Drawings of other work to confirm that adequate provisions are made for locating and installing products to comply with indicated requirements.

H. Attachment: Provide blocking and attachment plates and anchors and fasteners of adequate size and number to securely anchor each component in place, accurately located and aligned with other portions of the Work. Where size and type of attachments are not indicated, verify size and type required for load conditions.

1. Mounting Heights: Where mounting heights are not indicated, mount components at heights directed by Architect.
2. Allow for building movement, including thermal expansion and contraction.
3. Coordinate installation of anchorages. Furnish setting drawings, templates, and directions for installing anchorages, including sleeves, concrete inserts, anchor bolts, and items with integral anchors, that are to be embedded in concrete or masonry. Deliver such items to Project site in time for installation.

I. Joints: Make joints of uniform width. Where joint locations in exposed work are not indicated, arrange joints for the best visual effect. Fit exposed connections together to form hairline joints.

J. Hazardous Materials: Use products, cleaners, and installation materials that are not considered hazardous.

3.4 CUTTING AND PATCHING

A. Cutting and Patching, General: Employ skilled workers to perform cutting and patching. Proceed with cutting and patching at the earliest feasible time, and complete without delay.

1. Cut in-place construction to provide for installation of other components or performance of other construction, and subsequently patch as required to restore surfaces to their original condition.

B. Existing Warranties: Remove, replace, patch, and repair materials and surfaces cut or damaged during installation or cutting and patching operations, by methods and with materials so as not to void existing warranties.

C. Temporary Support: Provide temporary support of work to be cut.

D. Protection: Protect in-place construction during cutting and patching to prevent damage. Provide protection from adverse weather conditions for portions of Project that might be exposed during cutting and patching operations.

E. Adjacent Occupied Areas: Where interference with use of adjoining areas or interruption of free passage to adjoining areas is unavoidable, coordinate cutting and patching with Owner and Architect.

F. Cutting: Cut in-place construction by sawing, drilling, breaking, chipping, grinding, and similar operations, including excavation, using methods least likely to damage elements retained or adjoining construction. If possible, review proposed procedures with original Installer; comply with original Installer's written recommendations.

1. In general, use hand or small power tools designed for sawing and grinding, not hammering and chopping. Cut holes and slots neatly to minimum size required, and with minimum disturbance of adjacent surfaces. Temporarily cover openings when not in use.
2. Finished Surfaces: Cut or drill from the exposed or finished side into concealed surfaces.
3. Concrete and Masonry: Cut using a cutting machine, such as an abrasive saw or a diamond-core drill.
4. Proceed with patching after construction operations requiring cutting are complete.

G. Patching: Patch construction by filling, repairing, refinishing, closing up, and similar operations following performance of other work. Patch with durable seams that are as invisible as practicable. Provide materials and comply with installation requirements specified in other Sections, where applicable.

1. Inspection: Where feasible, test and inspect patched areas after completion to demonstrate physical integrity of installation.
2. Exposed Finishes: Restore exposed finishes of patched areas and extend finish restoration into retained adjoining construction in a manner that will minimize evidence of patching and refinishing.

    a. Clean piping, conduit, and similar features before applying paint or other finishing materials.
    b. Restore damaged pipe covering to its original condition.

3. Floors and Walls: Where walls or partitions that are removed extend one finished area into another, patch and repair floor and wall surfaces in the new space. Provide an even surface of uniform finish, color, texture, and appearance. Remove in-place floor and wall coverings and replace with new materials, if necessary, to achieve uniform color and appearance.

    a. Where patching occurs in a painted surface, prepare substrate and apply primer and intermediate paint coats appropriate for substrate over the patch, and apply final paint coat over entire unbroken surface containing the patch. Provide additional coats until patch blends with adjacent surfaces.

4. Ceilings: Patch, repair, or rehang in-place ceilings as necessary to provide an even-plane surface of uniform appearance.
5. Exterior Building Enclosure: Patch components in a manner that restores enclosure to a weathertight condition and ensures thermal and moisture integrity of building enclosure.

H. Cleaning: Clean areas and spaces where cutting and patching are performed. Remove paint, mortar, oils, putty, and similar materials from adjacent finished surfaces.

3.5 PROGRESS CLEANING

A. General: Clean Project site and work areas daily, including common areas. Enforce requirements strictly. Dispose of materials lawfully.

1. Comply with requirements in NFPA 241 for removal of combustible waste materials and debris.
2. Do not hold waste materials more than seven days during normal weather or three days if the temperature is expected to rise above 80 deg F (27 deg C).
3. Containerize hazardous and unsanitary waste materials separately from other waste. Mark containers appropriately and dispose of legally, according to regulations.

    a. Use containers intended for holding waste materials of type to be stored.

4. Coordinate progress cleaning for joint-use areas where Contractor and other contractors are working concurrently.

B. Site: Maintain Project site free of waste materials and debris.

C. Work Areas: Clean areas where work is in progress to the level of cleanliness necessary for proper execution of the Work.

1. Remove liquid spills promptly.
2. Where dust would impair proper execution of the Work, broom-clean or vacuum the entire work area, as appropriate.

D. Installed Work: Keep installed work clean. Clean installed surfaces according to written instructions of manufacturer or fabricator of product installed, using only cleaning materials specifically recommended. If specific cleaning materials are not recommended, use cleaning materials that are not hazardous to health or property and that will not damage exposed surfaces.

E. Exposed Surfaces in Finished Areas: Clean exposed surfaces and protect as necessary to ensure freedom from damage and deterioration at time of Substantial Completion.

F. Waste Disposal: Do not bury or burn waste materials on-site. Do not wash waste materials down sewers or into waterways. Comply with waste disposal requirements in Section 015000 "Temporary Facilities and Controls." Dumpsters shall be emptied every Friday during the course of the project.

G. During handling and installation, clean and protect construction in progress and adjoining materials already in place. Apply protective covering where required to ensure protection from damage or deterioration at Substantial Completion.

H. Clean and provide maintenance on completed construction as frequently as necessary through the remainder of the construction period. Adjust and lubricate operable components to ensure operability without damaging effects.

I. Limiting Exposures: Supervise construction operations to assure that no part of the construction, completed or in progress, is subject to harmful, dangerous, damaging, or otherwise deleterious exposure during the construction period.

3.6 STARTING AND ADJUSTING

A. Manufacturer's Field Service: Comply with qualification requirements in Section 014000 "Quality Requirements."

3.7 PROTECTION OF INSTALLED CONSTRUCTION

A. Provide final protection and maintain conditions that ensure installed Work is without damage or deterioration at time of Substantial Completion.

B. Comply with manufacturer's written instructions for temperature and relative humidity.

END OF SECTION 017300

SECTION 017700 - CLOSEOUT PROCEDURES

PART 1 - GENERAL

1.1 RELATED DOCUMENTS

A. Drawings and general provisions of the Contract, including General and Supplementary Conditions and other Division 01 Specification Sections, apply to this Section.

1.2 SUMMARY

A. This Section includes administrative and procedural requirements for contract closeout, including, but not limited to, the following:

1. Inspection procedures.
2. Warranties.
3. Final cleaning.

B. Related Sections include the following:

1. Division 01 Section "Execution" for progress cleaning of Project site.
2. Division 01 Section "Project Record Documents" for submitting Record Drawings, Record Specifications, and Record Product Data.
3. Division 01 Section "Operation and Maintenance Data" for operation and maintenance manual requirements.
4. Divisions 02 through 49 Sections for specific closeout and special cleaning requirements for the Work in those Sections.

1.3 SUBSTANTIAL COMPLETION

A. Preliminary Procedures: Before requesting inspection for determining date of Substantial Completion, complete the following. List items below that are incomplete in request.

1. Prepare a list of items to be completed and corrected (punch list), the value of items on the list, and reasons why the Work is not complete.
2. Submit specific warranties, workmanship bonds, maintenance service agreements, final certifications, and similar documents.
3. Prepare and submit Project Record Documents, operation and maintenance manuals, damage or settlement surveys, property surveys, and similar final record information.
4. Complete startup testing of systems.
5. Terminate and remove temporary facilities from Project site, along with mockups, construction tools, and similar elements.
6. Complete final cleaning requirements, including touchup painting.

7. Touch up and otherwise repair and restore marred exposed finishes to eliminate visual defects.

B. Inspection: Submit a written request for inspection for Substantial Completion. On receipt of request, Architect will either proceed with inspection or notify Contractor of unfulfilled requirements. Architect will prepare the Certificate of Substantial Completion after inspection or will notify Contractor of items, either on Contractor's list or additional items identified by Architect, that must be completed or corrected before certificate will be issued.

1. Reinspection: Request reinspection when the Work identified in previous inspections as incomplete is completed or corrected.
2. Results of completed inspection will form the basis of requirements for Final Completion.

1.4 FINAL COMPLETION

A. Preliminary Procedures: Before requesting final inspection for determining date of Final Completion, complete the following:

1. Submit a final Application for Payment and Certified Payroll according to Division 01 Section "Payment Procedures."
2. Submit certified copy of Architect's Substantial Completion inspection list of items to be completed or corrected (punch list), endorsed and dated by Architect. The certified copy of the list shall state that each item has been completed or otherwise resolved for acceptance.
3. Instruct Owner's personnel in operation, adjustment, and maintenance of products, equipment, and systems.

B. Inspection: Submit a written request for final inspection for acceptance. On receipt of request, Architect will either proceed with inspection or notify Contractor of unfulfilled requirements. Architect will prepare a final Certificate for Payment after inspection or will notify Contractor of construction that must be completed or corrected before certificate will be issued.

1. Reinspection: Request reinspection when the Work identified in previous inspections as incomplete is completed or corrected.

1.5 LIST OF INCOMPLETE ITEMS (PUNCH LIST)

A. Preparation: Submit three copies of list. Include name and identification of each space and area affected by construction operations for incomplete items and items needing correction including, if necessary, areas disturbed by Contractor that are outside the limits of construction.

1. Organize list of spaces in sequential order.
2. Organize items applying to each space by major element, including categories for ceiling, individual walls, floors, equipment, and building systems.

3. Include the following information at the top of each page:
   a. Project name.
   b. Date.
   c. Name of Architect.
   d. Name of Contractor.
   e. Page number.

1.6 WARRANTIES

A. Submittal Time: Submit written warranties on request of Architect for designated portions of the Work where commencement of warranties other than date of Substantial Completion is indicated.

B. Organize warranty documents into an orderly sequence based on the table of contents of the Project Manual.

1. Bind warranties and bonds in heavy-duty, 3-ring, vinyl-covered, loose-leaf binders, thickness as necessary to accommodate contents, and sized to receive 8-1/2-by-11-inch (215-by-280-mm) paper.
2. Provide heavy paper dividers with plastic-covered tabs for each separate warranty. Mark tab to identify the product or installation. Provide a typed description of the product or installation, including the name of the product and the name, address, and telephone number of Installer.
3. Identify each binder on the front and spine with the typed or printed title "WARRANTIES," Project name, and name of Contractor.

C. Provide additional copies of each warranty to include in operation and maintenance manuals.

PART 2 - PRODUCTS

2.1 MATERIALS

A. Cleaning Agents: Use cleaning materials and agents recommended by manufacturer or fabricator of the surface to be cleaned. Do not use cleaning agents that are potentially hazardous to health or property or that might damage finished surfaces.

PART 3 - EXECUTION

3.1 FINAL CLEANING

A. General: Provide final cleaning. Conduct cleaning and waste-removal operations to comply with local laws and ordinances and Federal and local environmental and antipollution regulations.

B. Cleaning: Employ experienced workers or professional cleaners for final cleaning. Clean each surface or unit to condition expected in an average commercial building cleaning and maintenance program. Comply with manufacturer's written instructions.

1. Complete the following cleaning operations before requesting inspection for certification of Substantial Completion for entire Project or for a portion of Project:

a. Clean Project site, yard, and grounds, in areas disturbed by construction activities, including landscape development areas, of rubbish, waste material, litter, and other foreign substances.
b. Sweep paved areas broom clean. Remove petrochemical spills, stains, and other foreign deposits.
c. Rake grounds that are neither planted nor paved to a smooth, even-textured surface.
d. Remove tools, construction equipment, machinery, and surplus material from Project site.
e. Clean exposed exterior and interior hard-surfaced finishes to a dirt-free condition, free of stains, films, and similar foreign substances. Avoid disturbing natural weathering of exterior surfaces. Restore reflective surfaces to their original condition.
f. Remove debris and surface dust from limited access spaces, including roofs, plenums, shafts, trenches, equipment vaults, manholes, attics, and similar spaces.
g. Touch up and otherwise repair and restore marred, exposed finishes and surfaces. Replace finishes and surfaces that cannot be satisfactorily repaired or restored or that already show evidence of repair or restoration.

1) Do not paint over "UL" and similar labels, including mechanical and electrical nameplates.

h. Replace parts subject to unusual operating conditions.
i. Replace disposable air filters and clean permanent air filters. Clean exposed surfaces of diffusers, registers, and grills.
j. Clean ducts, blowers, and coils if units were operated without filters during construction.
k. Clean light fixtures, lamps, globes, and reflectors to function with full efficiency. Replace burned-out bulbs, and those noticeably dimmed by hours of use, and defective and noisy starters in fluorescent and mercury vapor fixtures to comply with requirements for new fixtures.
l. Leave Project clean and ready for occupancy.

C. Comply with safety standards for cleaning. Do not burn waste materials. Do not bury debris or excess materials on Owner's property. Do not discharge volatile, harmful, or dangerous materials into drainage systems. Remove waste materials from Project site and dispose of lawfully.

END OF SECTION 017700

SECTION 017823 - OPERATION AND MAINTENANCE DATA

PART 1 - GENERAL

1.1 RELATED DOCUMENTS

A. Drawings and general provisions of the Contract, including General and Supplementary Conditions and other Division 01 Specification Sections, apply to this Section.

1.2 SUMMARY

A. This Section includes administrative and procedural requirements for preparing operation and maintenance manuals, including the following:

1. Maintenance manuals for the care and maintenance of products, materials, finishes, and systems and equipment.

B. Related Sections include the following:

1. Division 01 Section "Submittal Procedures" for submitting copies of submittals for operation and maintenance manuals.
2. Division 01 Section "Closeout Procedures" for submitting operation and maintenance manuals.
3. Divisions 02 through 49 Sections for specific operation and maintenance manual requirements for the Work in those Sections.

1.3 DEFINITIONS

A. System: An organized collection of parts, equipment, or subsystems united by regular interaction.

B. Subsystem: A portion of a system with characteristics similar to a system.

1.4 SUBMITTALS

A. Final Submittal: Submit one copy of each manual in final form at least 15 days before final inspection. Architect will return copy with comments within 15 days after final inspection.

1. Correct or modify each manual to comply with Architect's comments. Submit 3 copies of each corrected manual within 15 days of receipt of Architect's comments.

1.5 COORDINATION

A. Where operation and maintenance documentation includes information on installations by more than one factory-authorized service representative, assemble and coordinate information furnished by representatives and prepare manuals.

PART 2 - PRODUCTS

2.1 MANUALS, GENERAL

A. Organization: Unless otherwise indicated, organize each manual into a separate section for each system and subsystem, and a separate section for each piece of equipment not part of a system. Each manual shall contain the following materials, in the order listed:

1. Title page.
2. Table of contents.
3. Manual contents.

B. Title Page: Enclose title page in transparent plastic sleeve. Include the following information:

1. Subject matter included in manual.
2. Name and address of Project.
3. Name and address of Owner.
4. Date of submittal.
5. Name, address, and telephone number of Contractor.
6. Name and address of Architect.
7. Cross-reference to related systems in other operation and maintenance manuals.

C. Table of Contents: List each product included in manual, identified by product name, indexed to the content of the volume, and cross-referenced to Specification Section number in Project Manual.

1. If operation or maintenance documentation requires more than one volume to accommodate data, include comprehensive table of contents for all volumes in each volume of the set.

D. Manual Contents: Organize into sets of manageable size. Arrange contents alphabetically by system, subsystem, and equipment. If possible, assemble instructions for subsystems, equipment, and components of one system into a single binder.

1. Binders: Heavy-duty, 3-ring, vinyl-covered, loose-leaf binders, in thickness necessary to accommodate contents, sized to hold 8-1/2-by-11-inch (215-by-280-mm) paper; with clear plastic sleeve on spine to hold label describing contents and with pockets inside covers to hold folded oversize sheets.

a. If two or more binders are necessary to accommodate data of a system, organize data in each binder into groupings by subsystem and related components. Cross-reference other binders if necessary to provide essential information for proper operation or maintenance of equipment or system.

b. Identify each binder on front and spine, with printed title "OPERATION AND MAINTENANCE MANUAL," Project title or name, and subject matter of contents. Indicate volume number for multiple-volume sets.

2. Dividers: Heavy-paper dividers with plastic-covered tabs for each section. Mark each tab to indicate contents. Include typed list of products and major components of equipment included in the section on each divider, cross-referenced to Specification Section number and title of Project Manual.
3. Protective Plastic Sleeves: Transparent plastic sleeves designed to enclose diagnostic software diskettes for computerized electronic equipment.
4. Supplementary Text: Prepared on 8-1/2-by-11-inch (215-by-280-mm) white bond paper.
5. Drawings: Attach reinforced, punched binder tabs on drawings and bind with text.

a. If oversize drawings are necessary, fold drawings to same size as text pages and use as foldouts.
b. If drawings are too large to be used as foldouts, fold and place drawings in labeled envelopes and bind envelopes in rear of manual. At appropriate locations in manual, insert typewritten pages indicating drawing titles, descriptions of contents, and drawing locations.

2.2 PRODUCT MAINTENANCE MANUAL

A. Content: Organize manual into a separate section for each product, material, and finish. Include source information, product information, maintenance procedures, repair materials and sources, and warranties and bonds, as described below.

B. Source Information: List each product included in manual, identified by product name and arranged to match manual's table of contents. For each product, list name, address, and telephone number of Installer or supplier and maintenance service agent, and cross-reference Specification Section number and title in Project Manual.

C. Product Information: Include the following, as applicable:

1. Product name and model number.
2. Manufacturer's name.
3. Color, pattern, and texture.
4. Material and chemical composition.
5. Reordering information for specially manufactured products.

D. Maintenance Procedures: Include manufacturer's written recommendations and the following:

1. Inspection procedures.
2. Types of cleaning agents to be used and methods of cleaning.
3. List of cleaning agents and methods of cleaning detrimental to product.
4. Schedule for routine cleaning and maintenance.
5. Repair instructions.

E. Repair Materials and Sources: Include lists of materials and local sources of materials and related services.

F. Warranties and Bonds: Include copies of warranties and bonds and lists of circumstances and conditions that would affect validity of warranties or bonds.

1. Include procedures to follow and required notifications for warranty claims.

2.3 SYSTEMS AND EQUIPMENT MAINTENANCE MANUAL

A. Content: For each system, subsystem, and piece of equipment not part of a system, include source information, manufacturers' maintenance documentation, maintenance procedures, maintenance and service schedules, spare parts list and source information, maintenance service contracts, and warranty and bond information, as described below.

B. Source Information: List each system, subsystem, and piece of equipment included in manual, identified by product name and arranged to match manual's table of contents. For each product, list name, address, and telephone number of Installer or supplier and maintenance service agent, and cross-reference Specification Section number and title in Project Manual.

C. Manufacturers' Maintenance Documentation: Manufacturers' maintenance documentation including the following information for each component part or piece of equipment:

1. Drawings, diagrams, and instructions required for maintenance, including disassembly and component removal, replacement, and assembly.

D. Maintenance Procedures: Include the following information and items that detail essential maintenance procedures:

1. Test and inspection instructions.
2. Troubleshooting guide.
3. Precautions against improper maintenance.
4. Aligning, adjusting, and checking instructions.

E. Maintenance and Service Schedules: Include service and lubrication requirements, list of required lubricants for equipment, and separate schedules for preventive and routine maintenance and service with standard time allotment.

1. Scheduled Maintenance and Service: Tabulate actions for daily, weekly, monthly, quarterly, semiannual, and annual frequencies.
2. Maintenance and Service Record: Include manufacturers' forms for recording maintenance.

F. Spare Parts List and Source Information: Include lists of replacement and repair parts, with parts identified and cross-referenced to manufacturers' maintenance documentation and local sources of maintenance materials and related services.

G. Warranties and Bonds: Include copies of warranties and bonds and lists of circumstances and conditions that would affect validity of warranties or bonds.

1. Include procedures to follow and required notifications for warranty claims.

PART 3 - EXECUTION

3.1 MANUAL PREPARATION

A. Product Maintenance Manual: Assemble a complete set of maintenance data indicating care and maintenance of each product, material, and finish incorporated into the Work.

B. Operation and Maintenance Manuals: Assemble a complete set of operation and maintenance data indicating operation and maintenance of each system, subsystem, and piece of equipment not part of a system.

1. Engage a factory-authorized service representative to assemble and prepare information for each system, subsystem, and piece of equipment not part of a system.
2. Prepare a separate manual for each system and subsystem, in the form of an instructional manual for use by Owner's operating personnel.

C. Manufacturers' Data: Where manuals contain manufacturers' standard printed data, include only sheets pertinent to product or component installed. Mark each sheet to identify each product or component incorporated into the Work. If data include more than one item in a tabular format, identify each item using appropriate references from the Contract Documents. Identify data applicable to the Work and delete references to information not applicable.

1. Prepare supplementary text if manufacturers' standard printed data are not available and where the information is necessary for proper operation and maintenance of equipment or systems.

D. Drawings: Prepare drawings supplementing manufacturers' printed data to illustrate the relationship of component parts of equipment and systems and to illustrate control sequence and flow diagrams. Coordinate these drawings with information contained in Record Drawings to ensure correct illustration of completed installation.

1. Do not use original Project Record Documents as part of operation and maintenance manuals.
2. Comply with requirements of newly prepared Record Drawings in Division 01 Section "Project Record Documents."

E. Comply with Division 01 Section "Closeout Procedures" for schedule for submitting operation and maintenance documentation.

END OF SECTION 017823

SECTION 017839 - PROJECT RECORD DOCUMENTS

PART 1 - GENERAL

1.1 RELATED DOCUMENTS

A. Drawings and general provisions of the Contract, including General and Supplementary Conditions and other Division 01 Specification Sections, apply to this Section.

1.2 SUMMARY

A. This Section includes administrative and procedural requirements for Project Record Documents, including the following:

1. Record Drawings.
2. Record Product Data.

B. Related Sections include the following:

1. Division 01 Section "Closeout Procedures" for general closeout procedures.
2. Division 01 Section "Operation and Maintenance Data" for operation and maintenance manual requirements.
3. Divisions 02 through 49 Sections for specific requirements for Project Record Documents of the Work in those Sections.

1.3 SUBMITTALS

A. Record Drawings: Comply with the following:

1. Number of Copies: Submit one set of marked-up Record Prints.

B. Record Product Data: Submit one copy of each Product Data submittal.

1. Where Record Product Data is required as part of operation and maintenance manuals, submit marked-up Product Data as an insert in manual instead of submittal as Record Product Data.

PART 2 - PRODUCTS

2.1 RECORD DRAWINGS

A. Record Prints: Maintain one set of blue- or black-line white prints of the Contract Drawings and Shop Drawings.

1. Preparation: Mark Record Prints to show the actual installation where installation varies from that shown originally. Require individual or entity who obtained record data, whether individual or entity is Installer, subcontractor, or similar entity, to prepare the marked-up Record Prints.

    a. Give particular attention to information on concealed elements that would be difficult to identify or measure and record later.
    b. Accurately record information in an understandable drawing technique.
    c. Record data as soon as possible after obtaining it. Record and check the markup before enclosing concealed installations.

2. Content: Types of items requiring marking include, but are not limited to, the following:

    a. Dimensional changes to Drawings.
    b. Revisions to details shown on Drawings.
    c. Locations and depths of underground utilities.
    d. Revisions to routing of piping and conduits.
    e. Revisions to electrical circuitry.
    f. Actual equipment locations.
    g. Locations of concealed internal utilities.
    h. Field records for variable and concealed conditions.

3. Mark the Contract Drawings or Shop Drawings, whichever is most capable of showing actual physical conditions, completely and accurately. If Shop Drawings are marked, show cross-reference on the Contract Drawings.
4. Mark record sets with erasable, red-colored pencil. Use other colors to distinguish between changes for different categories of the Work at same location.
5. Mark important additional information that was either shown schematically or omitted from original Drawings.
6. Note Construction Change Directive numbers, alternate numbers, Change Order numbers, and similar identification, where applicable.

B. Record Drawings: Immediately before inspection for Certificate of Substantial Completion, review marked-up Record Prints with Architect.

C. Newly Prepared Record Drawings: Prepare new Drawings instead of preparing Record Drawings where Architect determines that neither the original Contract Drawings nor Shop Drawings are suitable to show actual installation.

1. New Drawings may be required when a Change Order is issued as a result of accepting an alternate, substitution, or other modification.

D. Format: Identify and date each Record Drawing; include the designation "PROJECT RECORD DRAWING" in a prominent location.

1. Record Prints: Organize Record Prints and newly prepared Record Drawings into manageable sets. Bind each set with durable paper cover sheets. Include identification on cover sheets.

2. Record CAD Drawings: Organize CAD information into separate electronic files that correspond to each sheet of the Contract Drawings. Name each file with the sheet identification. Include identification in each CAD file.
3. Identification: As follows:

    a. Project name.
    b. Date.
    c. Designation "PROJECT RECORD DRAWINGS."
    d. Name of Architect.
    e. Name of Contractor.

2.2 RECORD PRODUCT DATA

A. Preparation: Mark Product Data to indicate the actual product installation where installation varies substantially from that indicated in Product Data submittal.

1. Give particular attention to information on concealed products and installations that cannot be readily identified and recorded later.
2. Include significant changes in the product delivered to Project site and changes in manufacturer's written instructions for installation.
3. Note related Change Orders and Record Drawings where applicable.

2.3 MISCELLANEOUS RECORD SUBMITTALS

A. Assemble miscellaneous records required by other Specification Sections for miscellaneous record keeping and submittal in connection with actual performance of the Work. Bind or file miscellaneous records and identify each, ready for continued use and reference.

PART 3 - EXECUTION

3.1 RECORDING AND MAINTENANCE

A. Recording: Maintain one copy of each submittal during the construction period for Project Record Document purposes. Post changes and modifications to Project Record Documents as they occur; do not wait until the end of Project.

B. Maintenance of Record Documents and Samples: Store Record Documents and Samples in the field office apart from the Contract Documents used for construction. Do not use Project Record Documents for construction purposes. Maintain Record Documents in good order and in a clean, dry, legible condition, protected from deterioration and loss. Provide access to Project Record Documents for Architect’s reference during normal working hours.

END OF SECTION 017839

SECTION 017839 – DEMONSTRATION AND TRAINING

PART 1 - GENERAL

1.1 RELATED DOCUMENTS

A. Drawings and general provisions of the Contract, including General and Supplementary Conditions and other Division 01 Specification Sections, apply to this Section.

1.2 SUMMARY

A. Section includes administrative and procedural requirements for instructing Owner's personnel, including the following:

1. Demonstration of operation of systems, subsystems, and equipment.
2. Training in operation and maintenance of systems, subsystems, and equipment.
3. Demonstration and training video recordings.

1.3 QUALITY ASSURANCE

A. Facilitator Qualifications: A firm or individual experienced in training or educating maintenance personnel in a training program similar in content and extent to that indicated for this Project, and whose work has resulted in training or education with a record of successful learning performance.

B. Instructor Qualifications: A factory-authorized service representative, complying with requirements in Section 014000 "Quality Requirements," experienced in operation and maintenance procedures and training.

1.4 COORDINATION

A. Coordinate instruction schedule with Owner's operations. Adjust schedule as required to minimize disrupting Owner's operations and to ensure availability of Owner's personnel.

B. Coordinate instructors, including providing notification of dates, times, length of instruction time, and course content.

C. Coordinate content of training modules with content of approved emergency, operation, and maintenance manuals. Do not submit instruction program until operation and maintenance data has been reviewed and approved by Architect.

PART 2 - PRODUCTS

2.1 INSTRUCTION PROGRAM

A. Program Structure: Develop an instruction program that includes individual training modules for each system and for equipment not part of a system, as required by individual Specification Sections.

B. Training Modules: Develop a learning objective and teaching outline for each module. Include a description of specific skills and knowledge that participant is expected to master. For each module, include instruction for the following as applicable to the system, equipment, or component:

1. Basis of System Design, Operational Requirements, and Criteria: Include the following:

a. System, subsystem, and equipment descriptions.
b. Performance and design criteria if Contractor is delegated design responsibility.
c. Operating standards.
d. Regulatory requirements.
e. Equipment function.
f. Operating characteristics.
g. Limiting conditions.
h. Performance curves.

2. Documentation: Review the following items in detail:

a. Emergency manuals.
b. Operations manuals.
c. Maintenance manuals.
d. Project record documents.
e. Identification systems.
f. Warranties and bonds.
g. Maintenance service agreements and similar continuing commitments.

3. Operations: Include the following, as applicable:

a. Startup procedures.
b. Equipment or system break-in procedures.
c. Routine and normal operating instructions.
d. Regulation and control procedures.
e. Control sequences.
f. Safety procedures.
g. Instructions on stopping.
h. Normal shutdown instructions.
i. Operating procedures for emergencies.
j. Operating procedures for system, subsystem, or equipment failure.
k. Seasonal and weekend operating instructions.
l. Required sequences for electric or electronic systems.
m. Special operating instructions and procedures.

4. Adjustments: Include the following:

a. Alignments.
b. Checking adjustments.
c. Noise and vibration adjustments.
d. Economy and efficiency adjustments.

5. Maintenance: Include the following:

a. Inspection procedures.
b. Types of cleaning agents to be used and methods of cleaning.
c. List of cleaning agents and methods of cleaning detrimental to product.
d. Procedures for routine cleaning
e. Procedures for preventive maintenance.
f. Procedures for routine maintenance.
g. Instruction on use of special tools.

6. Repairs: Include the following:

a. Diagnosis instructions.
b. Repair instructions.
c. Disassembly; component removal, repair, and replacement; and reassembly instructions.
d. Instructions for identifying parts and components.
e. Review of spare parts needed for operation and maintenance.

PART 3 - EXECUTION

3.1 PREPARATION

A. Assemble educational materials necessary for instruction, including documentation and training module. Assemble training modules into a training manual organized in coordination with requirements in Section 017823 "Operation and Maintenance Data."

B. Set up instructional equipment at instruction location.

3.2 INSTRUCTION

A. Facilitator: Engage a qualified facilitator to prepare instruction program and training modules, to coordinate instructors, and to coordinate between Contractor and Owner for number of participants, instruction times, and location.

B. Engage qualified instructors to instruct Owner's personnel to adjust, operate, and maintain systems, subsystems, and equipment not part of a system.

1. Architect will furnish an instructor to describe basis of system design, operational requirements, criteria, and regulatory requirements.
2. Owner will furnish an instructor to describe Owner's operational philosophy.

3. Owner will furnish Contractor with names and positions of participants.

C. Scheduling: Provide instruction at mutually agreed on times. For equipment that requires seasonal operation, provide similar instruction at start of each season.

1. Schedule training with Owner with at least seven days' advance notice.

D. Training Location and Reference Material: Conduct training on-site in the completed and fully operational facility using the actual equipment in-place. Conduct training using final operation and maintenance data submittals.

E. Cleanup: Collect used and leftover educational materials and give to Owner. Remove instructional equipment. Restore systems and equipment to condition existing before initial training use.

END OF SECTION 017900

SECTION 033000 - CAST-IN-PLACE CONCRETE

PART 1 - GENERAL

1.1 RELATED DOCUMENTS

A. Drawings and general provisions of the Contract, including General and Supplementary Conditions and Division 01 Specification Sections, apply to this Section.

1.2 SUMMARY

A. Section includes cast-in-place concrete, including formwork, reinforcement, concrete materials, mixture design, placement procedures, and finishes, for the following:

1. Footings.

B. Related Sections:
1. Section 321000 "Playground Protective Surfacing" for poured in place playground surfacing.

1.3 DEFINITIONS

A. Cementitious Materials: Portland cement alone or in combination with one or more of the following: blended hydraulic cement, fly ash and other pozzolans, ground granulated blast-furnace slag, and silica fume; subject to compliance with requirements.

1.4 ACTION SUBMITTALS

A. Product Data: For each type of product indicated.

B. Design Mixtures: For each concrete mixture. Submit alternate design mixtures when characteristics of materials, Project conditions, weather, test results, or other circumstances warrant adjustments.

1. Indicate amounts of mixing water to be withheld for later addition at Project site.

C. Construction Joint Layout: Indicate proposed construction joints required to construct the structure.

1. Location of construction joints is subject to approval of the Architect.

1.5 INFORMATIONAL SUBMITTALS

A. Qualification Data: For manufacturer.

B. Material Certificates: For each of the following, signed by manufacturers:

1. Cementitious materials.
2. Form materials and form-release agents.
3. Steel reinforcement and accessories.
4. Curing compounds.
5. Bonding agents.
6. Adhesives.
7. Semirigid joint filler.
8. Joint-filler strips.
9. Repair materials.

C. Material Test Reports: For the following, from a qualified testing agency, indicating compliance with requirements:

1. Aggregates. Include service record data indicating absence of deleterious expansion of concrete due to alkali aggregate reactivity.

D. Field quality-control reports.

E. Minutes of preinstallation conference.

1.6 QUALITY ASSURANCE

A. Installer Qualifications: A qualified installer who employs on Project personnel qualified as ACI-certified Flatwork Technician and Finisher and a supervisor who is an ACI-certified Concrete Flatwork Technician.

B. Manufacturer Qualifications: A firm experienced in manufacturing ready-mixed concrete products and that complies with ASTM C 94/C 94M requirements for production facilities and equipment.

1. Manufacturer certified according to NRMCA's "Certification of Ready Mixed Concrete Production Facilities."

C. Testing Agency Qualifications: An independent agency, acceptable to authorities having jurisdiction, qualified according to ASTM C 1077 and ASTM E 329 for testing indicated.

1. Personnel conducting field tests shall be qualified as ACI Concrete Field Testing Technician, Grade 1, according to ACI CP-1 or an equivalent certification program.
2. Personnel performing laboratory tests shall be ACI-certified Concrete Strength Testing Technician and Concrete Laboratory Testing Technician - Grade I. Testing Agency laboratory supervisor shall be an ACI-certified Concrete Laboratory Testing Technician - Grade II.

D. Source Limitations: Obtain each type or class of cementitious material of the same brand from the same manufacturer's plant, obtain aggregate from single source, and obtain admixtures from single source from single manufacturer.

E. ACI Publications: Comply with the following unless modified by requirements in the Contract Documents:

1. ACI 301, "Specifications for Structural Concrete,"
2. ACI 117, "Specifications for Tolerances for Concrete Construction and Materials."

F. Concrete Testing Service: Engage a qualified independent testing agency to perform material evaluation tests and to design concrete mixtures.

G. Preinstallation Conference: Conduct conference at Project site.

1. Before submitting design mixtures, review concrete design mixture and examine procedures for ensuring quality of concrete materials. Require representatives of each entity directly concerned with cast-in-place concrete to attend, including the following:

a. Contractor's superintendent.
b. Independent testing agency responsible for concrete design mixtures.
c. Ready-mix concrete manufacturer.
d. Concrete subcontractor.
e. Special concrete finish subcontractor.

2. Review special inspection and testing and inspecting agency procedures for field quality control, cold- and hot-weather concreting procedures, curing procedures, forms and form removal limitations, steel reinforcement installation, concrete repair procedures, and concrete protection.

1.7 DELIVERY, STORAGE, AND HANDLING

A. Steel Reinforcement: Deliver, store, and handle steel reinforcement to prevent bending and damage. Avoid damaging coatings on steel reinforcement.

PART 2 - PRODUCTS

2.1 FORM-FACING MATERIALS

A. Smooth-Formed Finished Concrete: Form-facing panels that will provide continuous, true, and smooth concrete surfaces. Furnish in largest practicable sizes to minimize number of joints.

1. Plywood, metal, or other approved panel materials.
2. Exterior-grade plywood panels, suitable for concrete forms, complying with DOC PS 1, and as follows:

a. High-density overlay, Class 1 or better.

b. Medium-density overlay, Class 1 or better; mill-release agent treated and edge sealed.
c. Structural 1, B-B or better; mill oiled and edge sealed.
d. B-B (Concrete Form), Class 1 or better; mill oiled and edge sealed.

B. Rough-Formed Finished Concrete: Plywood, lumber, metal, or another approved material. Provide lumber dressed on at least two edges and one side for tight fit.

C. Chamfer Strips: Wood, metal, PVC, or rubber strips, 3/4 by 3/4 inch (19 by 19 mm), minimum.

D. Rustication Strips: Wood, metal, PVC, or rubber strips, kerfed for ease of form removal.

E. Form-Release Agent: Commercially formulated form-release agent that will not bond with, stain, or adversely affect concrete surfaces and will not impair subsequent treatments of concrete surfaces.

1. Formulate form-release agent with rust inhibitor for steel form-facing materials.

F. Form Ties: Factory-fabricated, removable or snap-off metal or glass-fiber-reinforced plastic form ties designed to resist lateral pressure of fresh concrete on forms and to prevent spalling of concrete on removal.

1. Furnish units that will leave no corrodible metal closer than 1 inch (25 mm) to the plane of exposed concrete surface.
2. Furnish ties that, when removed, will leave holes no larger than 1 inch (25 mm) in diameter in concrete surface.
3. Furnish ties with integral water-barrier plates to walls indicated to receive dampproofing or waterproofing.

2.2 STEEL REINFORCEMENT

A. Galvanized Reinforcing Bars: ASTM A 615/A 615M, Grade 60 (Grade 420), deformed bars, ASTM A 767/A 767M, zinc coated after fabrication and bending.

2.3 REINFORCEMENT ACCESSORIES

A. Epoxy Repair Coating: Liquid, two-part, epoxy repair coating; compatible with epoxy coating on reinforcement and complying with ASTM A 775/A 775M.

B. Zinc Repair Material: ASTM A 780, zinc-based solder, paint containing zinc dust, or sprayed zinc.

C. Bar Supports: Bolsters, chairs, spacers, and other devices for spacing, supporting, and fastening reinforcing bars and welded wire reinforcement in place. Manufacture bar supports from steel wire, plastic, or precast concrete according to CRSI's "Manual of Standard Practice," of greater compressive strength than concrete and as follows:

1. For concrete surfaces exposed to view where legs of wire bar supports contact forms, use CRSI Class 1 plastic-protected steel wire or CRSI Class 2 stainless-steel bar supports.
2. For epoxy-coated reinforcement, use epoxy-coated or other dielectric-polymer-coated wire bar supports.
3. For zinc-coated reinforcement, use galvanized wire or dielectric-polymer-coated wire bar supports.

2.4 CONCRETE MATERIALS

A. Cementitious Material: Use the following cementitious materials, of the same type, brand, and source, throughout Project:

1. Portland Cement: ASTM C 150, Type I or Type II.

a. Fly Ash: ASTM C 618, Class F or C.

B. Normal-Weight Aggregates: ASTM C 33, coarse aggregate or better, graded. Provide aggregates from a single source with documented service record data of at least 10 years' satisfactory service in similar applications and service conditions using similar aggregates and cementitious materials.

1. Maximum Coarse-Aggregate Size: 1-1/2 inches (38 mm) nominal.
2. Fine Aggregate: Free of materials with deleterious reactivity to alkali in cement.

C. Water: ASTM C 94/C 94M and potable.

2.5 CURING MATERIALS

A. Absorptive Cover: AASHTO M 182, Class 2, burlap cloth made from jute or kenaf, weighing approximately 9 oz./sq. yd. (305 g/sq. m) when dry.

B. Moisture-Retaining Cover: ASTM C 171, polyethylene film or white burlap-polyethylene sheet.

C. Water: Potable.

2.6 RELATED MATERIALS

A. Expansion- and Isolation-Joint-Filler Strips: ASTM D 1751, asphalt-saturated cellulosic fiber or ASTM D 1752, cork or self-expanding cork.

B. Semirigid Joint Filler: Two-component, semirigid, 100 percent solids, epoxy resin with a Type A shore durometer hardness of 80 per ASTM D 2240.

C. Bonding Agent: ASTM C 1059/C 1059M, Type II, non-redispersible, acrylic emulsion or styrene butadiene.

D. Epoxy Bonding Adhesive: ASTM C 881, two-component epoxy resin, capable of humid curing and bonding to damp surfaces, of class suitable for application temperature and of grade to suit requirements, and as follows:

1. Types IV and V, load bearing, for bonding hardened or freshly mixed concrete to hardened concrete.

E. Dovetail Anchor Slots: Hot-dip galvanized-steel sheet, not less than 0.034 inch (0.85 mm) thick, with bent tab anchors. Temporarily fill or cover face opening of slots to prevent intrusion of concrete or debris.

2.7 REPAIR MATERIALS

A. Repair Underlayment: Cement-based, polymer-modified, self-leveling product that can be applied in thicknesses from 1/8 inch (3.2 mm) and that can be feathered at edges to match adjacent floor elevations.

1. Cement Binder: ASTM C 150, portland cement or hydraulic or blended hydraulic cement as defined in ASTM C 219.
2. Primer: Product of underlayment manufacturer recommended for substrate, conditions, and application.
3. Aggregate: Well-graded, washed gravel, 1/8 to 1/4 inch (3.2 to 6 mm) or coarse sand as recommended by underlayment manufacturer.
4. Compressive Strength: Not less than 4100 psi (29 MPa) at 28 days when tested according to ASTM C 109/C 109M.

B. Repair Overlayment: Cement-based, polymer-modified, self-leveling product that can be applied in thicknesses from 1/4 inch (6.4 mm) and that can be filled in over a scarified surface to match adjacent floor elevations.

1. Cement Binder: ASTM C 150, portland cement or hydraulic or blended hydraulic cement as defined in ASTM C 219.
2. Primer: Product of topping manufacturer recommended for substrate, conditions, and application.
3. Aggregate: Well-graded, washed gravel, 1/8 to 1/4 inch (3.2 to 6 mm) or coarse sand as recommended by topping manufacturer.
4. Compressive Strength: Not less than 3,000 psi (34.5 MPa) at 28 days when tested according to ASTM C 109/C 109M.

2.8 CONCRETE MIXTURES, GENERAL

A. Prepare design mixtures for each type and strength of concrete, proportioned on the basis of laboratory trial mixture or field test data, or both, according to ACI 301.

1. Use a qualified independent testing agency for preparing and reporting proposed mixture designs based on laboratory trial mixtures.

B. Cementitious Materials: Limit percentage, by weight, of cementitious materials other than portland cement in concrete as follows:

1. Fly Ash: 25 percent.
2. Combined Fly Ash and Pozzolan: 25 percent.

C. Limit water-soluble, chloride-ion content in hardened concrete to 0.06 percent by weight of cement.

D. Admixtures: Use admixtures according to manufacturer's written instructions.

1. Use water-reducing or admixture in concrete, as required, for placement and workability.
2. Use water-reducing and retarding admixture when required by high temperatures, low humidity, or other adverse placement conditions.
3. Use water-reducing admixture in pumped concrete, concrete for heavy-use industrial slabs and parking structure slabs, concrete required to be watertight, and concrete with a water-cementitious materials ratio below 0.50.
4. Use corrosion-inhibiting admixture in concrete mixtures where indicated.

E. Color Pigment: Add color pigment to concrete mixture according to manufacturer's written instructions and to result in hardened concrete color consistent with approved mockup.

2.9 CONCRETE MIXTURES FOR BUILDING ELEMENTS

A. Footings: Proportion normal-weight concrete mixture as follows:

1. Minimum Compressive Strength: 3,000 psi (34.5 MPa) at 28 days.
2. Maximum Water-Cementitious Materials Ratio: 0.50.
3. Slump Limit: 4 inches (100 mm), plus or minus 1 inch (25 mm).
4. Air Content: 5.5 percent, plus or minus 1.5 percent at point of delivery for 1-1/2-inch (38-mm) nominal maximum aggregate size.

2.10 FABRICATING REINFORCEMENT

A. Fabricate steel reinforcement according to CRSI's "Manual of Standard Practice."

2.11 CONCRETE MIXING

A. Project-Site Mixing: Measure, batch, and mix concrete materials and concrete according to ASTM C 94/C 94M. Mix concrete materials in appropriate drum-type batch machine mixer.

1. For mixer capacity of 1 cu. yd. (0.76 cu. m) or smaller, continue mixing at least 1-1/2 minutes, but not more than 5 minutes after ingredients are in mixer, before any part of batch is released.

2. For mixer capacity larger than 1 cu. yd. (0.76 cu. m), increase mixing time by 15 seconds for each additional 1 cu. yd. (0.76 cu. m).
3. Provide batch ticket for each batch discharged and used in the Work, indicating Project identification name and number, date, mixture type, mixture time, quantity, and amount of water added. Record approximate location of final deposit in structure.

PART 3 - EXECUTION

3.1 FORMWORK

A. Design, erect, shore, brace, and maintain formwork, according to ACI 301, to support vertical, lateral, static, and dynamic loads, and construction loads that might be applied, until structure can support such loads.

B. Construct formwork so concrete members and structures are of size, shape, alignment, elevation, and position indicated, within tolerance limits of ACI 117.

C. Limit concrete surface irregularities, designated by ACI 347 as abrupt or gradual, as follows:

1. Class A, 1/8 inch (3.2 mm) for smooth-formed finished surfaces.
2. Class B, 1/4 inch (6 mm) for rough-formed finished surfaces.

D. Construct forms tight enough to prevent loss of concrete mortar.

E. Fabricate forms for easy removal without hammering or prying against concrete surfaces. Provide crush or wrecking plates where stripping may damage cast concrete surfaces. Provide top forms for inclined surfaces steeper than 1.5 horizontal to 1 vertical.

1. Install keyways, reglets, recesses, and the like, for easy removal.
2. Do not use rust-stained steel form-facing material.

F. Set edge forms, bulkheads, and intermediate screed strips for slabs to achieve required elevations and slopes in finished concrete surfaces. Provide and secure units to support screed strips; use strike-off templates or compacting-type screeds.

G. Provide temporary openings for cleanouts and inspection ports where interior area of formwork is inaccessible. Close openings with panels tightly fitted to forms and securely braced to prevent loss of concrete mortar. Locate temporary openings in forms at inconspicuous locations.

H. Chamfer exterior corners and edges of permanently exposed concrete.

I. Form openings, chases, offsets, sinkages, keyways, reglets, blocking, screeds, and bulkheads required in the Work. Determine sizes and locations from trades providing such items.

J. Clean forms and adjacent surfaces to receive concrete. Remove chips, wood, sawdust, dirt, and other debris just before placing concrete.

K. Retighten forms and bracing before placing concrete, as required, to prevent mortar leaks and maintain proper alignment.

L. Coat contact surfaces of forms with form-release agent, according to manufacturer's written instructions, before placing reinforcement.

3.2 EMBEDDED ITEMS

A. Place and secure anchorage devices and other embedded items required for adjoining work that is attached to or supported by cast-in-place concrete. Use setting drawings, templates, diagrams, instructions, and directions furnished with items to be embedded.

3.3 REMOVING AND REUSING FORMS

A. General: Formwork for sides of beams, walls, columns, and similar parts of the Work that does not support weight of concrete may be removed after cumulatively curing at not less than 50 deg F (10 deg C) for 24 hours after placing concrete. Concrete has to be hard enough to not be damaged by form-removal operations and curing and protection operations need to be maintained.

1. Leave formwork for beam soffits, joists, slabs, and other structural elements that supports weight of concrete in place until concrete has achieved at least 70 percent of its 28-day design compressive strength.
2. Remove forms only if shores have been arranged to permit removal of forms without loosening or disturbing shores.

B. Clean and repair surfaces of forms to be reused in the Work. Split, frayed, delaminated, or otherwise damaged form-facing material will not be acceptable for exposed surfaces. Apply new form-release agent.

C. When forms are reused, clean surfaces, remove fins and laitance, and tighten to close joints. Align and secure joints to avoid offsets. Do not use patched forms for exposed concrete surfaces unless approved by Architect.

3.4 SHORES AND RESHORES

A. Comply with ACI 318 (ACI 318M) and ACI 301 for design, installation, and removal of shoring and reshoring.

1. Do not remove shoring or reshoring until measurement of slab tolerances is complete.

B. In multistory construction, extend shoring or reshoring over a sufficient number of stories to distribute loads in such a manner that no floor or member will be excessively loaded or will induce tensile stress in concrete members without sufficient steel reinforcement.

C. Plan sequence of removal of shores and reshore to avoid damage to concrete. Locate and provide adequate reshoring to support construction without excessive stress or deflection.

3.5 STEEL REINFORCEMENT

A. General: Comply with CRSI's "Manual of Standard Practice" for placing reinforcement.

1. Do not cut or puncture vapor retarder. Repair damage and reseal vapor retarder before placing concrete.

B. Clean reinforcement of loose rust and mill scale, earth, ice, and other foreign materials that would reduce bond to concrete.

C. Accurately position, support, and secure reinforcement against displacement. Locate and support reinforcement with bar supports to maintain minimum concrete cover. Do not tack weld crossing reinforcing bars.

D. Set wire ties with ends directed into concrete, not toward exposed concrete surfaces.

E. Zinc-Coated Reinforcement: Repair cut and damaged zinc coatings with zinc repair material according to ASTM A 780. Use galvanized steel wire ties to fasten zinc-coated steel reinforcement.

3.6 JOINTS

A. General: Construct joints true to line with faces perpendicular to surface plane of concrete.

B. Construction Joints: Install so strength and appearance of concrete are not impaired, at locations indicated or as approved by Architect.

1. Place joints perpendicular to main reinforcement. Continue reinforcement across construction joints unless otherwise indicated. Do not continue reinforcement through sides of strip placements of floors and slabs.
2. Form keyed joints as indicated. Embed keys at least 1-1/2 inches (38 mm) into concrete.
3. Locate joints for beams, slabs, joists, and girders in the middle third of spans. Offset joints in girders a minimum distance of twice the beam width from a beam-girder intersection.
4. Locate horizontal joints in walls and columns at underside of floors, slabs, beams, and girders and at the top of footings or floor slabs.
5. Space vertical joints in walls as indicated. Locate joints beside piers integral with walls, near corners, and in concealed locations where possible.
6. Use a bonding agent at locations where fresh concrete is placed against hardened or partially hardened concrete surfaces.
7. Use epoxy-bonding adhesive at locations where fresh concrete is placed against hardened or partially hardened concrete surfaces.

3.7 CONCRETE PLACEMENT

A. Before placing concrete, verify that installation of formwork, reinforcement, and embedded items is complete and that required inspections have been performed.

B. Do not add water to concrete during delivery, at Project site, or during placement unless approved by Architect.

C. Before test sampling and placing concrete, water may be added at Project site, subject to limitations of ACI 301.

1. Do not add water to concrete after adding high-range water-reducing admixtures to mixture.

D. Deposit concrete continuously in one layer or in horizontal layers of such thickness that no new concrete will be placed on concrete that has hardened enough to cause seams or planes of weakness. If a section cannot be placed continuously, provide construction joints as indicated. Deposit concrete to avoid segregation.

1. Deposit concrete in horizontal layers of depth to not exceed formwork design pressures and in a manner to avoid inclined construction joints.
2. Consolidate placed concrete with mechanical vibrating equipment according to ACI 301.
3. Do not use vibrators to transport concrete inside forms. Insert and withdraw vibrators vertically at uniformly spaced locations to rapidly penetrate placed layer and at least 6 inches (150 mm) into preceding layer. Do not insert vibrators into lower layers of concrete that have begun to lose plasticity. At each insertion, limit duration of vibration to time necessary to consolidate concrete and complete embedment of reinforcement and other embedded items without causing mixture constituents to segregate.

E. Deposit and consolidate concrete for floors and slabs in a continuous operation, within limits of construction joints, until placement of a panel or section is complete.

1. Consolidate concrete during placement operations so concrete is thoroughly worked around reinforcement and other embedded items and into corners.
2. Maintain reinforcement in position on chairs during concrete placement.
3. Screed slab surfaces with a straightedge and strike off to correct elevations.
4. Slope surfaces uniformly to drains where required.
5. Begin initial floating using bull floats or darbies to form a uniform and open-textured surface plane, before excess bleedwater appears on the surface. Do not further disturb slab surfaces before starting finishing operations.

F. Cold-Weather Placement: Comply with ACI 306.1 and as follows. Protect concrete work from physical damage or reduced strength that could be caused by frost, freezing actions, or low temperatures.

1. When average high and low temperature is expected to fall below 40 deg F (4.4 deg C) for three successive days, maintain delivered concrete mixture temperature within the temperature range required by ACI 301.

2. Do not use frozen materials or materials containing ice or snow. Do not place concrete on frozen subgrade or on subgrade containing frozen materials.
3. Do not use calcium chloride, salt, or other materials containing antifreeze agents or chemical accelerators unless otherwise specified and approved in mixture designs.

G. Hot-Weather Placement: Comply with ACI 301 and as follows:

1. Maintain concrete temperature below 90 deg F (32 deg C) at time of placement. Chilled mixing water or chopped ice may be used to control temperature, provided water equivalent of ice is calculated to total amount of mixing water. Using liquid nitrogen to cool concrete is Contractor's option.
2. Fog-spray forms, steel reinforcement, and subgrade just before placing concrete. Keep subgrade uniformly moist without standing water, soft spots, or dry areas.

3.8 FINISHING FORMED SURFACES

A. Rough-Formed Finish: As-cast concrete texture imparted by form-facing material with tie holes and defects repaired and patched. Remove fins and other projections that exceed specified limits on formed-surface irregularities.

B. Smooth-Formed Finish: As-cast concrete texture imparted by form-facing material, arranged in an orderly and symmetrical manner with a minimum of seams. Repair and patch tie holes and defects. Remove fins and other projections that exceed specified limits on formed-surface irregularities.

C. Related Unformed Surfaces: At tops of walls, horizontal offsets, and similar unformed surfaces adjacent to formed surfaces, strike off smooth and finish with a texture matching adjacent formed surfaces. Continue final surface treatment of formed surfaces uniformly across adjacent unformed surfaces unless otherwise indicated.

3.9 MISCELLANEOUS CONCRETE ITEMS

A. Filling In: Fill in holes and openings left in concrete structures after work of other trades is in place unless otherwise indicated. Mix, place, and cure concrete, as specified, to blend with in-place construction. Provide other miscellaneous concrete filling indicated or required to complete the Work.

B. Curbs: Provide monolithic finish to interior curbs by stripping forms while concrete is still green and by steel-troweling surfaces to a hard, dense finish with corners, intersections, and terminations slightly rounded.

C. Equipment Bases and Foundations:

1. Coordinate sizes and locations of concrete bases with actual equipment provided.
2. Construct concrete bases 6 inches (150 mm) high unless otherwise indicated; and extend base not less than 6 inches (150 mm) in each direction beyond the maximum

dimensions of supported equipment unless otherwise indicated or unless required for seismic anchor support.

3. Minimum Compressive Strength: 3,000 psi (34.5 MPa) at 28 days.
4. For supported equipment, install epoxy-coated anchor bolts that extend through concrete base, and anchor into structural concrete substrate.
5. Prior to pouring concrete, place and secure anchorage devices. Use setting drawings, templates, diagrams, instructions, and directions furnished with items to be embedded.
6. Cast anchor-bolt insert into bases. Install anchor bolts to elevations required for proper attachment to supported equipment.

3.10 CONCRETE PROTECTING AND CURING

A. General: Protect freshly placed concrete from premature drying and excessive cold or hot temperatures. Comply with ACI 306.1 for cold-weather protection and ACI 301 for hot-weather protection during curing.

B. Formed Surfaces: Cure formed concrete surfaces, including underside of beams, supported slabs, and other similar surfaces. If forms remain during curing period, moist cure after loosening forms. If removing forms before end of curing period, continue curing for the remainder of the curing period.

C. Unformed Surfaces: Begin curing immediately after finishing concrete. Cure unformed surfaces, including floors and slabs, concrete floor toppings, and other surfaces.

D. Cure concrete according to ACI 308.1, by one or a combination of the following methods:

1. Moisture Curing: Keep surfaces continuously moist for not less than seven days with the following materials:

    a. Water.
    b. Continuous water-fog spray.
    c. Absorptive cover, water saturated, and kept continuously wet. Cover concrete surfaces and edges with 12-inch (300-mm) lap over adjacent absorptive covers.

2. Moisture-Retaining-Cover Curing: Cover concrete surfaces with moisture-retaining cover for curing concrete, placed in widest practicable width, with sides and ends lapped at least 12 inches (300 mm), and sealed by waterproof tape or adhesive. Cure for not less than seven days. Immediately repair any holes or tears during curing period using cover material and waterproof tape.

    a. Moisture cure or use moisture-retaining covers to cure concrete surfaces to receive floor coverings.
    b. Moisture cure or use moisture-retaining covers to cure concrete surfaces to receive penetrating liquid floor treatments.
    c. Cure concrete surfaces to receive floor coverings with either a moisture-retaining cover or a curing compound that the manufacturer certifies will not interfere with bonding of floor covering used on Project.

3.11 LIQUID FLOOR TREATMENTS

A. Sealing Coat: Uniformly apply a continuous sealing coat of curing and sealing compound to hardened concrete by power spray or roller according to manufacturer's written instructions.

3.12 JOINT FILLING

A. Prepare, clean, and install joint filler according to manufacturer's written instructions.

1. Defer joint filling until concrete has aged at least one month(s). Do not fill joints until construction traffic has permanently ceased.

B. Remove dirt, debris, saw cuttings, curing compounds, and sealers from joints; leave contact faces of joint clean and dry.

C. Install semirigid joint filler full depth in saw-cut joints and at least 2 inches (50 mm) deep in formed joints. Overfill joint and trim joint filler flush with top of joint after hardening.

3.13 CONCRETE SURFACE REPAIRS

A. Defective Concrete: Repair and patch defective areas when approved by Architect. Remove and replace concrete that cannot be repaired and patched to Architect's approval.

B. Patching Mortar: Mix dry-pack patching mortar, consisting of one part portland cement to two and one-half parts fine aggregate passing a No. 16 (1.18-mm) sieve, using only enough water for handling and placing.

C. Repairing Formed Surfaces: Surface defects include color and texture irregularities, cracks, spalls, air bubbles, honeycombs, rock pockets, fins and other projections on the surface, and stains and other discolorations that cannot be removed by cleaning.

1. Immediately after form removal, cut out honeycombs, rock pockets, and voids more than 1/2 inch (13 mm) in any dimension to solid concrete. Limit cut depth to 3/4 inch (19 mm). Make edges of cuts perpendicular to concrete surface. Clean, dampen with water, and brush-coat holes and voids with bonding agent. Fill and compact with patching mortar before bonding agent has dried. Fill form-tie voids with patching mortar or cone plugs secured in place with bonding agent.
2. Repair defects on surfaces exposed to view by blending white portland cement and standard portland cement so that, when dry, patching mortar will match surrounding color. Patch a test area at inconspicuous locations to verify mixture and color match before proceeding with patching. Compact mortar in place and strike off slightly higher than surrounding surface.
3. Repair defects on concealed formed surfaces that affect concrete's durability and structural performance as determined by Architect.

D. Repairing Unformed Surfaces: Test unformed surfaces, such as floors and slabs, for finish and verify surface tolerances specified for each surface. Correct low and high areas. Test surfaces sloped to drain for trueness of slope and smoothness; use a sloped template.

1. Repair finished surfaces containing defects. Surface defects include spalls, popouts, honeycombs, rock pockets, crazing and cracks in excess of 0.01 inch (0.25 mm) wide or that penetrate to reinforcement or completely through unreinforced sections regardless of width, and other objectionable conditions.
2. After concrete has cured at least 14 days, correct high areas by grinding.
3. Correct localized low areas during or immediately after completing surface finishing operations by cutting out low areas and replacing with patching mortar. Finish repaired areas to blend into adjacent concrete.
4. Correct other low areas scheduled to receive floor coverings with a repair underlayment. Prepare, mix, and apply repair underlayment and primer according to manufacturer's written instructions to produce a smooth, uniform, plane, and level surface. Feather edges to match adjacent floor elevations.
5. Correct other low areas scheduled to remain exposed with a repair topping. Cut out low areas to ensure a minimum repair topping depth of 1/4 inch (6 mm) to match adjacent floor elevations. Prepare, mix, and apply repair topping and primer according to manufacturer's written instructions to produce a smooth, uniform, plane, and level surface.
6. Repair defective areas, except random cracks and single holes 1 inch (25 mm) or less in diameter, by cutting out and replacing with fresh concrete. Remove defective areas with clean, square cuts and expose steel reinforcement with at least a 3/4-inch (19-mm) clearance all around. Dampen concrete surfaces in contact with patching concrete and apply bonding agent. Mix patching concrete of same materials and mixture as original concrete except without coarse aggregate. Place, compact, and finish to blend with adjacent finished concrete. Cure in same manner as adjacent concrete.
7. Repair random cracks and single holes 1 inch (25 mm) or less in diameter with patching mortar. Groove top of cracks and cut out holes to sound concrete and clean off dust, dirt, and loose particles. Dampen cleaned concrete surfaces and apply bonding agent. Place patching mortar before bonding agent has dried. Compact patching mortar and finish to match adjacent concrete. Keep patched area continuously moist for at least 72 hours.

E. Perform structural repairs of concrete, subject to Architect's approval, using epoxy adhesive and patching mortar.

F. Repair materials and installation not specified above may be used, subject to Architect's approval.

3.14 FIELD QUALITY CONTROL

A. Testing and Inspecting: Engage a qualified testing and inspecting agency to perform tests and inspections and to submit reports.

B. Inspections:

1. Steel reinforcement placement.
2. Steel reinforcement welding.
3. Headed bolts and studs.
4. Verification of use of required design mixture.
5. Concrete placement, including conveying and depositing.
6. Curing procedures and maintenance of curing temperature.
7. Verification of concrete strength before removal of shores and forms from beams and slabs.

C. Concrete Tests: Testing of composite samples of fresh concrete obtained according to ASTM C 172 shall be performed according to the following requirements:

1. Testing Frequency: Obtain one composite sample for each day's pour of each concrete mixture exceeding 5 cu. yd. (4 cu. m), but less than 25 cu. yd. (19 cu. m), plus one set for each additional 50 cu. yd. (38 cu. m) or fraction thereof.
2. Testing Frequency: Obtain at least one composite sample for each 100 cu. yd. (76 cu. m) or fraction thereof of each concrete mixture placed each day.

    a. When frequency of testing will provide fewer than five compressive-strength tests for each concrete mixture, testing shall be conducted from at least five randomly selected batches or from each batch if fewer than five are used.

3. Slump: ASTM C 143/C 143M; one test at point of placement for each composite sample, but not less than one test for each day's pour of each concrete mixture. Perform additional tests when concrete consistency appears to change.
4. Air Content: ASTM C 231, pressure method, for normal-weight concrete;one test for each composite sample, but not less than one test for each day's pour of each concrete mixture.
5. Concrete Temperature: ASTM C 1064/C 1064M; one test hourly when air temperature is 40 deg F (4.4 deg C) and below and when 80 deg F (27 deg C) and above, and one test for each composite sample.
6. Compression Test Specimens: ASTM C 31/C 31M.

    a. Cast and laboratory cure two sets of two standard cylinder specimens for each composite sample.
    b. Cast and field cure two sets of two standard cylinder specimens for each composite sample.

7. Compressive-Strength Tests: ASTM C 39/C 39M; test one set of two laboratory-cured specimens at 7 days and one set of two specimens at 28 days.

    a. Test one set of two field-cured specimens at 7 days and one set of two specimens at 28 days.
    b. A compressive-strength test shall be the average compressive strength from a set of two specimens obtained from same composite sample and tested at age indicated.

8. When strength of field-cured cylinders is less than 85 percent of companion laboratory-cured cylinders, Contractor shall evaluate operations and provide corrective procedures for protecting and curing in-place concrete.
9. Strength of each concrete mixture will be satisfactory if every average of any three consecutive compressive-strength tests equals or exceeds specified compressive strength and no compressive-strength test value falls below specified compressive strength by more than 500 psi (3.4 MPa).
10. Test results shall be reported in writing to Architect, concrete manufacturer, and Contractor within 48 hours of testing. Reports of compressive-strength tests shall contain Project identification name and number, date of concrete placement, name of concrete testing and inspecting agency, location of concrete batch in Work, design compressive strength at 28 days, concrete mixture proportions and materials, compressive breaking strength, and type of break for both 7- and 28-day tests.
11. Nondestructive Testing: Impact hammer, sonoscope, or other nondestructive device may be permitted by Architect but will not be used as sole basis for approval or rejection of concrete.
12. Additional Tests: Testing and inspecting agency shall make additional tests of concrete when test results indicate that slump, air entrainment, compressive strengths, or other requirements have not been met, as directed by Architect. Testing and inspecting agency may conduct tests to determine adequacy of concrete by cored cylinders complying with ASTM C 42/C 42M or by other methods as directed by Architect.
13. Additional testing and inspecting, at Contractor's expense, will be performed to determine compliance of replaced or additional work with specified requirements.
14. Correct deficiencies in the Work that test reports and inspections indicate do not comply with the Contract Documents.

3.15 PROTECTION OF LIQUID FLOOR TREATMENTS

A. Protect liquid floor treatment from damage and wear during the remainder of construction period. Use protective methods and materials, including temporary covering, recommended in writing by liquid floor treatments installer.

END OF SECTION 033000

PLAY EQUIPMENT SPECIFICATIONS - WENDELL CROSS 2-5

SAFETY STANDARDS & GUIDELINES All public playground equipment supplied shall meet all applicable provisions of the current "Handbook for Public Playground Safety" published by the Consumer Product Safety Commission (CPSC), and of ASTM F1487-17 "Standard Consumer Safety Performance Specification for Playground Equipment for Public Use," published by the American Society for Testing and Materials (ASTM). Products bearing the certification seal of the International Play Equipment Manufacturers Association (IPEMA) have received written validation of compliance with ASTM F1487-17.

TRADEMARKS Aquarius (R), Big Kahuna (R), Big Timber (R), Bongo (TM), Boulder Ridge (R), Bug Bites (R), Camel Back (TM), Center Stage (R), Chameleon (TM), Coil Curler (TM), Connexion (R), Dupli-Gator (R), Flex Jet (R), Flippo (TM), Flippopotamus (R), Fun Fone (TM), Fun Tunnel (R), Funnel Tunnel (TM), Funshades (TM), Gator Grip (R), Gemini (TM), Gravity (TM), Grizz-Lee Bear (R), Groove (TM), Groove II (R) Slide, Hang-A-Round (R), Interaxion (TM), JAX (R), Kidrox (R), Kids' Choice (R), Kids' Perch (TM), Libra (R), Linkz (TM), Loopz (TM), Mega Tower (R), Miracle (R), Miracle Recreation (R), Mira-Cote (R), Mira-Lam (TM), Mira-Lene (TM), Mira-Therm2 (TM), Mogul (TM), Mountain Trail (R), N-Dure Cycle (R), Nexus (R), Observation Deck (R), Offspring (TM), OrbX (R), Pegasus (R), Perma-Guard (TM), Perseus (TM), Phyzics (R), Play Cover (R), Play Terrain (R), Power Pedaler (TM), Pull Up!Lift (R), Reflex (R), Relay Racer (R), Rock-ite (R), Rodeo Rocky (TM), Serpent Trek (TM), Sneak-A-View (TM), Sun Sparkle (TM), Surfer (R), Tensile Tough (TM), Tensile Tower (TM), Thunder Tunnel (TM), Timber Topper (TM), Toboggan (TM), Toddlers' Choice (R), Tots' Choice (R), Tots' Choice (R) Expansion, Tots' Choice (TM) for Toddlers, Trim Timber (R), Triple Play (TM), Typhoon (TM), Versalok (R), View Groove (TM), Wavy Waffle Wall Walker (TM), Webscapes (R), Whirlwind (TM), Xcalator (R), and X-Cavator (TM) are trademarks of Miracle Recreation Equipment Company. Tornado (TM), Multi-Pondo (TM), and Pirouette (TM) are trademarks of HAGS (TM). Miracle and HAGS are divisions of PlayPower, Inc. PlayPower (R) is a trademark of PlayPower, Inc.

QUALITY SYSTEM CERTIFICATION The manufacturer's quality system is certified to ISO 9001 since December 1998.

PRODUCT CHANGES At Miracle Recreation Equipment Company, we strive for the utmost in quality and safety in our entire product line. Therefore, in order to honor this commitment to you, our customers, we reserve the right to make changes on any product released and/or published in our annual catalog and other promotional or technical literature.

WARRANTY

Miracle Recreation Equipment Company warrants its products against structural failure due to defects in materials and workmanship for the warranty periods and material categories prescribed below.

1. **LIMITED WARRANTY FOR AS LONG AS YOU OWN THE PRODUCT:** Aluminum deck posts, steel deck posts, VersaLok (R) fastening system and associated fastening hardware.

2. **LIMITED FIFTEEN (15) YEAR WARRANTY:** All rigid steel playground components, decks, steps, and weldments, rotationally molded and sheet plastic components, plastic lumber, roof panels, and stainless-steel slides, except as otherwise specified below.

3. **LIMITED TEN (10) YEAR WARRANTY:** Fabric shade steel frames, and Shadesure ™ fabrics (Note Exception: Limited Five (5) Year Warranty on Shadesure ™ fabrics in colors Red, Yellow, Electric Purple, Zesty Lime, Cinnamon, and Olive.)

4. **LIMITED EIGHT (8) YEAR WARRANTY:**

- Fiberglass signage, accessible swing seats, precast PolyFiberCrete or precast concrete products.
- Play Terrain Synthetic Turf safety surfacing against deterioration of specified attenuation performance and appearance.
- Shade fabric and components against rot, UV deterioration and defects in materials and workmanship (Note Exception: Limited Three (3) Year Warranty for fabric in shades of red).

5. **LIMITED FIVE (5) YEAR WARRANTY:**

- Heavy duty diamond barrier mesh and Kidrox™ Climbing Rocks.
- Miratherm™ PVC coating against cracking or peeling.
- Park and Site Amenities (i.e. benches, tables, trash receptacles, etc.).
- Steel core cable nets and rope fittings and connections (Note Exception: Warranty does not cover normal wear and tear such as fraying or facing of cable coating).

6. **LIMITED THREE (3) YEAR WARRANTY:** Flexible belting, plastic border timbers and accessories, and electronic panel speakers, sound chips, and circuit boards.

7. **LIMITED ONE (1) YEAR WARRANTY:**

- GFRP (Glass Fiber Reinforced Polymer) Products, Slashproof Swing Seats, 360° Bucket Tot Swing Seats and Tuff Net no climbing mesh.
- Pool slide support structures, stairways, landings and railings.
- All other products and components that are not specifically listed above, including, without limitation, all moving parts, such as swing hangers and bearings, swivels, chains, whirls, springs and flexible components, and all high wear items, such as trolleys, cables, wheels, and bumper stops related to rail and cable ride products.

BUYER'S REMEDY: If any products prove defective or non-conforming under normal use and within the above-prescribed warranty periods and material categories, Buyer must promptly notify Miracle in writing at 878 E. Hwy 60, Monett, MO 65708 USA. Miracle may elect to inspect the alleged defect at Buyer's site or at Miracle's facility. Buyer shall not return products to Miracle unless authorized by Miracle to do so. Authorized returns must be properly packaged and shipped prepaid and insured, at Buyer's expense. Upon verification of warranty coverage, Miracle may elect, in its sole discretion, to repair defective or non-conforming products, or replace them by delivering products or part(s) free of charge to the site. Miracle's limited warranties do not cover the cost of labor to remove defective or non -conforming part(s) or to install repaired or replacement part(s). By use of these limited warranties, Buyer accepts their terms and limitations, and waives any rights it would otherwise have to claim or assert that such warranties fail of their essential purpose. Buyer agrees that venue for any court action to enforce these limited warranties shall be in Barry or Greene Counties in the State of Missouri.

LIMITATIONS: All warranty periods begin on the date of Miracle's invoice. Repaired and/or replacement part(s) are warranted only for the balance of the original limited warranty period. Warranties extend only to the original Buyer/end user for products purchased from Miracle or a Miracle authorized reseller and are not transferrable.
Warranties apply only to Miracle products that are erected and installed in conformance with Miracle's installation instructions, and that are maintained and inspected in conformance with Miracle maintenance and operational instructions.

Warranties specifically do not cover Miracle products:

- For cosmetic damage or flaws occurring under normal use, such as surface scratches, minor chips, hairline cracks, dents, marring, efflorescence, color fade (except for shade fabric as noted above), discoloration, corrosion, fraying, or warping of recycled plastic lumber;
- That have been modified, altered, or repaired by unauthorized third parties;
- That have not been used as designed or intended, or misused;
- To which non-Miracle parts have been added or substituted;
- That have been removed from their original location and re-installed elsewhere, without pre-approval by Miracle;
- Or that have been damaged due to excessive wear and tear, vandalism, abnormal use, abuse, negligence, environmental factors (such as wind-blown sand, salt spray, or airborne emissions from industrial sources), extreme weather (such as hail, flooding, lightning, tornados, sandstorms, earthquakes, or wind storms), and acts of God.

THE FOREGOING LIMITED WARRANTY IS THE SOLE AND EXCLUSIVE WARRANTY FOR SELLER'S PRODUCTS, AND IS INLIEU OF ALL OTHER WARRANTIES, EXPRESS OR IMPLIED, IN LAW OR IN FACT. SELLER SPECIFICALLY DISCLAIMS ALL OTHER WARRANTIES, EXPRESS OR IMPLIED, INCLUDING, WITHOUT LIMITATION, ALL IMPLIED WARRANTIES OF MERCHANTABILITY AND FITNESS FOR A PARTICULAR USE OR PURPOSE, AND ANY IMPLIED WARRANTIES ARISING OUT OF COURSE OF DEALING OR PERFORMANCE OR TRADE USAGE. SELLER SHALL NOT BE LIABLE FOR ANY INCIDENTAL, CONSEQUENTIAL, EXEMPLARY, SPECIAL, OR PUNITIVE DAMAGES, OR ANY LOSS OF REVENUE, PROFICT OR USE, ARISING OUT OF A BREACH OF THIS WARRANTY OR IN CONNECTION WITH THE SALE, INSTALLAITON, MAINTENANCE, USE, OPERATION OR REPAIR OF ANY PRODUCT. IN NO EVENT WILL SELLER BE LIABLE FOR ANY AMOUNT GREATER THAN THE PURCHASE PRICE OF A DEFECTIVE PRODUCT.

Consult Miracle's "Glossary of Technical Data for Materials, Processes and Finishes"
for specifications of items listed in bold type.

- **KIDS' CHOICE MIRA-THERM2 DECKS:** The deck models in the 714-50X-9 series shall consist of a (3) sided equilateral triangle deck: Model # 714-501-9, with a *deck top surface area of 7 sq. ft. (1008 sq. in.);* a (4) sided square deck: Model # 714-502-9, with a *deck top surface area of 16 sq. ft. (2304 sq. in.);* (4) sided (3) opening half hex decks: Model #s 714-503-9 and 714-504-9, with a *deck top surface area of 21 sq. ft. (3024 sq. in.);* (4) sided (6) opening rectangular decks: Model #s 714-508-9, 714-509-9 and 714-510-9, with a *deck top surface area of 32 sq. ft. (4608 sq. in.);* a (5) sided pentagon deck: Model # 714-512-9, with a *deck top surface area of 23.8 sq. ft.. (3427 sq. in.);* an (8) sided octagon deck: Model # 714-519-9, with a *deck top surface area of 60 sq. ft. (8640 sq. in.);* (; and a (7) sided heptagon deck: Model # 714-517-9, with a *deck top surface area of 55 sq. ft. (7,920 sq. in.).*Model # 714-511-9 shall be an isosceles triangle split deck (single section) designed to serve as a step platform for lower deck heights: 18" or lower for 2-5 year olds, and 30" or lower for 5-12 year olds. All other Model # 714-511-X9 split decks shall feature two triangular deck sections which shall be mounted between four posts at different heights so that a 6", 12", 18", or 24" (X) rise shall be formed along the hypotenuse between two posts. Models which rise greater than 6" shall contain a riser plate; models which rise greater than 12" shall also contain an arched enclosure assembly. *The deck top surface area of split deck models shall be 8 sq. ft. each for both sections, or total 16 sq. ft.* Riser plates shall be constructed of 11 ga. **A-60 Galvannealed** sheet; risers for 18" and 24" rises shall contain a rung and vertical supports of **1" tube**, solid **welded**, all finished in **Mira-Cote**. The arch enclosure assembly accompanying models which rise 18" and 24" shall comprise top and bottom supports and an arched upright constructed of **1" pipe**, drilled, formed and mashed, all solid **welded**, and vertical rungs of **1" tube**, with **plastic pipe plugs** inserted in open ends, and finished in **Mira-Cote**. Decks shall be designed for maximum flexibility in height of deck surface, from 0" to (in 6" increments,) though 3', 5' and 6'-6" shall be considered standard heights. Decks shall be designed on a 48" center-to-center spacing on 5" deck posts, at equal or varied heights. All deck-to-post connections shall be made with a deck support clamp. All deck connections shall be made beneath deck with no exposed fasteners on deck perimeter. Decks with 8' wide open side shall be designed to attach to another deck with 8' wide open side at same deck height, or to a Model # 714-770-6 Flippopotamus Slide/Climber. All decks shall be constructed with folded 11 ga. steel sheet forming 3" tall sides. Decking sheets shall be perforated with a staggered pattern of 3/8" diameter holes (5/16" after dipping) at 5/8" apart center-to-center. The decking shall have 7 ga. by 2" flat steel braces and corner braces of 7 ga. steel. The entire assembly shall be solid **welded** prior to polyvinyl coating. Each assembly shall contain **Versalok Fasteners** and **Fastener Style A** hardware. All deck surfaces shall be coated in **Mira-Therm2** or **Mira-Therm2 PE**.

- **KIDS' CHOICE POSTS: STEEL POSTS:** The steel posts each shall be constructed of **5" tube, 11 ga.** with a **5" round end cap** pressed into its top end. Post and end cap shall have a **Mira-Cote** finish.

- **END CLIMBER** shall be constructed of **1" pipe**, formed, measuring 63" x 48" (*except Tots' Choice models which shall be constructed of* **1" tube***, formed, measuring 63" x 42".)* The entire assembly shall be solid **welded**.

- **HONEYCOMB CLIMBERS (KIDS' CHOICE & TOTS' CHOICE)** shall consist of handrails and a climber assembly which shall connect to the deck with a bracket. The Kids' Choice models shall feature an arched deck enclosure. The Tots' Choice models shall feature a handhold. The rails and archway of the Kids' Choice arched enclosure shall be constructed of **1" pipe**, with vertical rungs of **3/4" x 1" oval tube**, solid **welded**. The handhold on the Tots' Choice models shall be constructed of **1" tube**. The handrails, which also serve as legs, shall be constructed of **1" pipe**, drilled, with 3/8" aluminum inserts in the top ends. On Kids' Choice handrails for 5' and 6'-6" decks, a drilled stub of **1" pipe, 12 ga.** is **welded**. The climber assembly shall consist of Honeycomb segments constructed of **Rockite** and rungs made of **1" pipe**, drilled, with either **plastic pipe plugs** or threaded aluminum inserts factory-installed. The deck-climber bracket shall be constructed of 3" x 3" x 3/16" angle, 7 ga. black HR CQ steel and 780 series Plastisol resin. The enclosure or handhold, handrails, and fasteners shall have a **Mira-Cote** finish. The bracket shall have a **Mira-Therm2** or **Mira-Therm2 PE** finish. The Honeycomb segments shall have molded-in color.

- **ELECTRONIC PANELS** shall be deck-mounting electronic activity panels are designed to enhance imagination and creative play. Panels play either music or animal noises to incorporate sound and learning into any playground theme. The panels shall be constructed of **Mira-Lene** with a design routed in the front and back. The rung brackets shall be constructed of **1" pipe** with bolting tabs of 11 ga. **A-60 Galvannealed** sheet, all solid **welded**. Each assembly shall contain three (3) "D" size alkaline batteries. Each assembly shall contain **Versalok Fasteners** and **Fastener Style A** hardware. The rung brackets and clamps shall have a **Mira-Cote** finish.

- **HALF-PANELS** for below deck or freestanding installation shall feature two-color schemes, routed designs, and steering wheels, and when mounted at suggested heights, will permit wheelchair access. The Roller Racer models shall also feature an interactive ball game which user operates by turning a knob to raise and release enclosed balls into routed pathways (the balls then re-enter the lift mechanism). Half-panels shall be constructed of **Mira-Lene** with all corners rounded, measuring 36-1/2" x 15-1/2", except Calypso 2-Drum panel, which shall measure 36-1/2" x 20". Calypso 2-Drum panel shall also contain 2 rotational molded drums of low-density polyethylene resin. Each drum shall be attached to the panel through a cover plate constructed of 11 ga. galvanized sheet steel with a **Mira-Cote** Rung brackets shall be constructed of **1" pipe** *(except Tots' Choice models which shall be* **1" tube***)* with tabs of 11 ga. **A-60 Galvannealed** sheet, solid **welded**. The Roller Racer models shall be constructed as above and shall also have a clear polycarbonate cover fastened to enclose various contents. A black high-density polyethylene gear handle mounted outside the cover shall turn on a bronze bushing to drive a 1/4" thick polyethylene gear behind the cover, which shall carry 1/2" steel balls and release them in routed channels. The steering wheel shall be constructed of a high-density polyethylene produced from high performance, U.V. stabilized rotational molding grade resins with a comprehensive additive package. These resins shall be tested in accordance with ASTM testing procedures D-1505, D-1248, D-1693 (b), D-638, D-790 and D-746. Resin's properties shall exhibit a balance of toughness, rigidity, environmental stress crack resistance, and excellent low temperature impact performance. Wall thickness shall be 1/8". The steering wheel hub cover shall be constructed of injection molded polypropylene which shall contain U.V. light stabilizers. Each assembly shall contain **Fastener Style A** hardware and **Versalok Fasteners**. Half-panels and steering wheels shall have molded-in color. Rung brackets and clamps shall have a **Mira-Cote** finish.

- **IMAGINATION PANELS** and Activity Panels shall be constructed of **Mira-Lene** and shall measure 36-1/2" x 40" with all corners rounded. The panels shall have routered designs, including themes of a space ship panel, general store counter, a barn wall panel, a barn door panel, a barn window panel, a bank teller window, a television front, a puppet stage, a window, a computer screen, a door, a park ranger, a fire truck, a police car, a train engine, a taxi cab, two airplanes (both containing two steering wheel assemblies, one also containing a clear polycarbonate window mechanically fastened to panel), a race car, an alphabet finger maze, an abstract finger maze, a calculator, a bus stop/bench, a rest stop/bench, jump height measurements for a 3' and 5' deck, a sign language alphabet, a Spanish-English translation, a Chinese-English translation, Braille alphabet with riddles, a drum panel, welcome and age appropriate messages, interconnected gears, gear-driven pistons, and sliding tiles. Rung brackets shall be constructed of **1" pipe** and 11 ga. **A-60 Galvannealed** tabs solid **welded** *(except Tots' Choice models which shall have brackets constructed of* **1" tube** *and 11 ga.* **A-60 Galvannealed** *tabs solid* **welded***.)* The star brackets for the space ship panel shall be constructed of 11 ga. HRPO steel and powder coat painted. The steering wheel(s) on vehicle themed panels shall be constructed of a high-density blow molded polyethylene produced from high performance, U.V. stabilized resins with a comprehensive additive package. These resins shall be tested in accordance with ASTM testing procedures D-1505, D-1248, D-1693(b), D- 638, D-790 and D-746. Resin's properties shall exhibit a balance of toughness, rigidity, environmental stress crack resistance and excellent low temperature impact performance. Wall thickness shall be 1/8". The steering wheel hub cover shall be constructed of injection molded polypropylene which shall contain U.V. light stabilizers. The Piston panel and Gear panel each shall contain a clear polycarbonate cover mechanically fastened over sets of 1/4" thick gears (drive gears not covered by window). The gears shall be constructed of high-density polyethylene, which shall turn on nylon bushings, except for the black nylon handles and drive gears which shall turn on bronze bushings. The piston panel shall also contain connecting rod and piston shapes of 1/4" thick high-density polyethylene. The reverse side of both panels shall contain routered text and/or designs. The Sliding Tile panel shall contain 15 movable, tongue-and-groove tiles with routed numerals to be constructed of 1/4" thick high-density polyethylene. The panels and steering wheel shall have molded in color with each panel assembly having a laminated, two-color scheme. Calypso drum panel shall contain 3 rotational molded drums of low-density polyethylene resin. Each drum shall be attached to the panel through a cover plate constructed of 11 ga. galvanized steel sheet with a **Mira-Cote** finish. Each assembly shall include **Fastener Style A** hardware and **Versalok Fasteners**. Panels and steering wheels shall have color molded in, and rung brackets and clamps shall be finished in **Mira-Cote**.

- **ACTIVITY PANEL INSERTS** available for Kids' Choice, Tots' Choice and Tots' Choice Expansion. Inserts shall be constructed from a combination of 1/2" thick high-density polyethylene, 3/4" thick high-density polyethylene, 3/16" thick polycarbonate, linear low-density polyethylene caps and stainless-steel ball bearings. The inserts shall have interactive, sensory and inclusive play for kids of all abilities including funhouse insert, very buried insert, a-maze-ing insert, four-the-win insert, magical music insert, hypnotize insert and slide & solve insert.

- **LOOKOUT TOWER/COMMAND POST** shall be curved deck extensions/overhangs and enclosure components for deck systems, designed to stimulate imaginative play. Panels for both models shall be constructed of **Rockite**, with wall thickness approximately 1/4", formed to extend the deck surface in a semi-circle (approximately 40" long with a radius of 9-7/16") and also formed to serve as an enclosure. The panels shall have four 3/8" threaded inserts factory-installed along bottom of deck edge and a top rung of **1" pipe** inserted at the factory for field attachment to deck and posts respectively. The panels shall contain five 2" wide view slots evenly spaced, with all corners rounded. The steering wheel shall be constructed of a high-density blow-molded polyethylene produced from high performance, U.V. stabilized resins with a comprehensive additive package. These resins shall be tested in accordance with ASTM testing procedures D-1505, D-1248, D-1693(b), D- 638, D-790 and D-746. Resin's properties shall exhibit a balance of toughness, rigidity, environmental stress crack resistance and excellent low temperature impact performance. Wall thickness shall be 1/8". The steering wheel hub cover shall be constructed of injection-molded polypropylene which shall contain U.V. light stabilizers. All **Versalok Fasteners** for deck and component attachment shall be **aluminum alloy**, and hardware shall be **Fastener Style A**. The **Rockite** panel shall have color molded in. The top rung and **Versalok Fasteners** shall have a **Mira-Cote** finish.

- **MAGIC BALL POPPER PANEL** shall contain a clear bubble on one side and on the other a clear sheet and steering wheel which shall turn an internal paddle and a quantity of multi-colored balls. The Magic Ball Popper Panel shall be constructed of **Rockite** measuring 36" x 38" x 15" with all corners rounded. One side shall contain a clear bubble as described above. The other side shall contain a window of clear polycarbonate sheet. Both shall be fastened to the panel at the factory using tamper-proof screws and flat washers. The window shall hold a steering wheel constructed of H.D.P.E. Black with mounting bracket of hot rolled steel strip, which shall drive a shaft of zinc coated cold finished steel round to be mounted to the bubble, facilitating turns of a paddle device of polyethylene inside the assembly. The paddle shall contain two 4" holes allowing for stirring, spinning, balancing and passage of 3" diameter polyurethane balls of several colors. All hardware shall be **Fastener Style A**. All **Versalok Fasteners** for deck and component attachment shall be **aluminum alloy**. The panels shall have molded-in color. The enclosure uprights and **Versalok Fasteners** shall have a **Mira-Cote** finish.

- **ROCKITE BUBBLE PANEL/ROCKITE PANEL WITH HOLE/VIEW GROOVE PANEL/30 DEGREE LOOK-OUT PANEL** shall be constructed of **Rockite** with all corners rounded. The 30-degree Look-Out panel shall have a molded in 30-degree extension. The enclosure shall consist of uprights and support bars, all constructed of **1" pipe**, drilled and formed (*except Tots' Choice models which shall have an enclosure consisting of a top rail of* **1" tube** *with two tabs and two brackets of 11 ga. galvanized sheet, solid* **welded***)*. The bubble shall be vacuum formed from clear polycarbonate sheet. The spherical bubble shall measure 24" in diameter and shall be attached to the panel in the factory using tamper proof screws and flat washers. The view groove panel shall have six 2" view slots evenly spaced at 5-1/4" with slant of 20 degrees from vertical. Horizontal rungs shall have a **Mira-Cote** finish. **Rockite** panels shall have color molded in.

- **MIRA-THERM2 SQUARE TRANSFER POINTS** shall be designed to assist disabled users gain access to and egress from a deck system. The stair assembly shall be constructed of 11 ga. steel stringers solid **welded** to 11 ga. steel sheet decking that is perforated in a staggered pattern of 3/8" diameter holes at 5/8" apart center-to-center. Approximate dimensions of stair assembly shall be 26" overall width, 14" deep step tread and 8" high step rise. The 26" square (approximate) transfer point shall be constructed of 11 ga. steel sheet folded to form approximately 3" high sidewalls. The decking shall be perforated as described above. It shall be reinforced with cross braces of 3/16" x 2" HR flat solid **welded**. The bottom step shall be constructed of 11 ga. steel sheet (with folded edges) perforated as described above. The step shall be approximately 26" wide by 14" deep by 6-1/2" high. Kids' Choice deck enclosures shall be constructed of formed **1" pipe**, including a **welded** upright of the same material. Tots' Choice deck enclosures shall be constructed of **1" pipe** and a formed and **welded** upright of **1" tube**. Each deck enclosure assembly shall be drilled for field assembly of a stair handrail and shall have its bottom end mashed and punched for field assembly to deck. Stair handrail assemblies shall be **welded** upper and lower handrails of formed **1" pipe**. Closed handrails shall contain vertical uprights of **3/4" x 1" oval tube welded** within. Swaged handrail extensions for field assembly to handrails shall be constructed of **1" pipe**. A transfer deck handrail constructed of formed **1" pipe** shall be field assembled to one handrail newel upright and transfer point deck edge. Models designed for assembly to 5' and 6' or 6'-6" decks shall contain handrail sleeve supports constructed of **1-1/4" pipe, 10 ga.** The "U"-shaped transfer step handrail shall be formed **1" pipe**, drilled for field assembly to transfer point deck and bottom step. Its apex shall be 36-1/8" from finished grade. The rung leg shall be **1" pipe** with ends mashed and punched for field assembly to bottom step. The assembly shall contain **Versalok Fasteners** and **Fastener Style A** hardware. The stairs, bottom step, and transfer point deck shall be finished in **Mira-Therm2** or **Mira-Therm2 PE**. The deck enclosures, handrails, extensions, sleeves, leg and clamps shall be finished in **Mira-Cote**.

- **CUPOLA FOR HEX ROOF** shall be designed to cap the open top of standard "Roof for Hexagon Deck" models. Model # 714-862-6CF shall feature a flag pole with mounting brackets for a customer-provided flag (24" maximum height). The hexagonal, peaked cupola roof top halves, when fastened together, shall measure 31-5/8" wide by 13-1/2" high with a 51-degree slope. Each half shall be constructed of 14 ga. HRPO black, perforated with 3/16" holes spaced 1/2" apart center-to-center in a staggered pattern, and shall be punched and solid **welded**. The hexagonal soffit shall measure 31-1/2" O.D. (after bending to create bolting tabs on perimeter) with a 15" I.D. opening, and shall be constructed of 11 ga. sheet, plasma cut and formed, with 3/8" weldnuts on its bottom side. Extension trusses each shall comprise a receiver of 4-11/16" O.D. by 3/16" thick tube with flange of 11 ga. **A-60 Galvannealed** sheet solid **welded** to a stub of **1-1/2" pipe** capped by a 1-3/4" O.D. by 3/8" thick CRS threaded insert. Interior wall shall be constructed of 24 ga. 304 SS sheet and shall measure 9-1/4" high by 76-15/16" wide (laid flat), punched and formed. The flag pole mounting plate shall comprise an 8" high receiver of **2" Sch 40 pipe** with 3/8" weldnuts and gussets of 11 ga. black sheet on a 19" O.D. plate of 7 ga. black, all solid **welded**. The 72" flag pole shall be constructed of **1-1/2" pipe** with cross plates of 7 ga. black sheet, formed and punched, **welded** to its top end and links of **4/0 straight link coil chain** solid **welded** to its side. When assembled, the top of the flag pole shall extend approximately 65-1/2" above the cupola's peak. The assembly shall contain **Fastener Style A** hardware.

Cupola top, soffit, extension trusses, flag pole, and flag pole mounting plate shall be finished in **Mira-Cote**. The interior wall shall have a stainless-steel finish.

- **ROOFS WITH PERF STEEL, RECYCLED PLASTIC OR HYBRID PANELS** with open tops for square, pentagon, heptagon hexagon and octagon decks shall offer superior durability in most environmental conditions. The steel roof panels shall be constructed of 16 ga. **A-60 Galvannealed** sheet perforated with 3/16" holes in a pattern, with a formed "lip" at the panel's top edge to provide additional stability during installation. A length of **1" pipe** shall be **welded** to the panel bottom. The recycled roof panels shall be constructed of 100% post consumer recycled plastic and approximately 3/4" thick. A panel mount formed of 11 ga. **G-90 galvanized** shall be field assembled to trusses and roof panels. Roof truss assemblies shall be constructed of a roof mount stub of either **5" tube** for Kids' Choice or **3-1/2" tube** for Tots' Choice Expansion, solid **welded** at a 54-degree angle to truss of **5" tube** containing bolting tabs on both sides of 11 ga. **G-90 galvanized**. **5" round end caps** shall close open ends of trusses. All hardware shall be **Fastener Style A**. The steel roof panels and trusses shall have a **Mira-Cote** finish. The recycled panels shall have a natural finish. The panel mounts shall have a galvanized finish. Note that a hybrid model (with alternating recycled plastic and perf steel roof panels) is not available for heptagon or pentagon decks due to the odd number of panels.

- **BUMP AND GLIDE SLIDES** shall be double bedway, **Rockite** slides available for 4' and 5' decks, with one bedway mogul-style and the other groove-style. Each slide shall be constructed of **Rockite** with threaded fasteners incorporated for assembly. The dimensions shall be: bedway width, 16-1/4"; outside overall, 40"; inside rail width, 1-1/4"; outside rail widths, 1-1/2"; top of bedway to top of rail, 7-1/2" to 8-1/2"; bedway thickness, 4-1/2" to 5-1/2", and bedway length, approximately 8' (714-728-4) and 10' (714-728-5). The front and middle legs shall each consist of an upright and a top. The upright shall be constructed of **2" pipe** with a 1-1/4" x 3-1/4" channel top constructed of 11 ga. sheet, **welded** to the upright in a "T" configuration. The canopy shall be constructed of **Rockite** with threaded fasteners incorporated for assembly. The canopy shall have an inside width of 39" and an outside width of 44" and shall be slanted at 37 degrees. It shall be field attached to the posts via clamps and a 41-1/2" rung of **1" pipe**. The assembly shall contain **Versalok Fasteners** and **Fastener Style A** hardware. The **Rockite** slide and canopy shall have color molded in. The legs, rung, and clamps shall have a **Mira-Cote** finish.

- **TYPHOON II SLIDES WITH DOMED WAVE HOOD** shall be one-piece open bedway slides, with 6'-2" platform, domed wave hood and step or ramp assembly, designed for attachment to 4', 5' and 6'-6" decks. The slide bedway shall be constructed of 1/4" to 5/16" wall **Rockite**. The slide bedway shall be 30" wide with a 15" high side wall. The center post shall be constructed of **4-1/2" tube**. The step assembly shall be constructed of 11 ga. steel sheet folded and perforated with a staggered pattern of 3/8" diameter holes at 5/8" apart center-to-center, solid **welded** to stringers of 11 ga. black steel. The handrail assembly shall consist of a top and bottom rail and newel post formed, constructed of **1" pipe** with infill of **3/4" x 1" oval tube**. The step enclosure assembly shall be solid **welded**. **Plastic pipe plugs** shall close open ends. The deck enclosures shall consist of a vertical rail, and top and bottom rail, formed, constructed of **1" pipe** with an upright of **3/4" x 1" oval tube**, and 3/8" aluminum inserts in the rail ends for attachment to the step enclosures. The deck enclosure assemblies shall be solid **welded**. The slide hood shall be **Rockite**. The hood shall have molded-in view grooves for viewing children. The back-up plates used to connect the step assembly and the barrel shall be constructed of 1/4" x 1" x 4-1/2" flat steel. The front leg shall be constructed of **2" pipe** and shall be attached to the slide using a channel constructed of 7 ga. sheet. The assembly shall contain **Versalok Fasteners** and **Fastener Style A** hardware. The **Rockite** slide and slide hood shall have color molded in. The step shall be finished in **Mira-Therm**. The handrail assemblies, deck enclosures, front leg, and clamps shall have a **Mira-Cote** finish. The back-up plate shall have a zinc plate finish.

- **MIRA-THERM2 ATA STAIRS BETWEEN DECKS** shall be stair assemblies, with spoked or open handrails, designed to connect decks of different heights. The steps shall be constructed of 7 ga. steel stringers with treads constructed of 11 ga. steel sheet perforated with a staggered pattern of 3/8" diameter holes at 5/8" apart center-to-center, solid **welded**, with polyvinyl coating. The braces shall be constructed of 11 ga. black. The spoked handrails shall consist of a top and bottom rail and newel post, all of **1" pipe**, and uprights constructed of **3/4" x 1" oval tube**, all solid **welded**, with **plastic pipe plugs** inserted in open ends. Top rails shall have 3/8" aluminum inserts. The open handrails shall consist of a top and bottom rail and newel post of **1" pipe**, all solid **welded**, with **plastic pipe plugs** inserted in open ends. Top rails shall have 3/8" aluminum inserts. The top deck enclosure shall consist of enclosure rails and an upright, both to be constructed of **1" pipe**, drilled and solid **welded**, with one end of upright mashed for field attachment to deck. The bottom deck enclosure shall consist of horizontal rails and an upright of **1" pipe**, drilled and solid **welded**, and a spoke upright of **3/4" x 1" oval tube**. The upright shall be mashed on one end for field attachment to deck. Inserted in open ends will be **plastic pipe plugs**. The assembly shall include **Fastener Style A** hardware and **Versalok Fasteners**. The step assemblies shall be finished in **Mira-Therm2** or **Mira-Therm2 PE**. The deck enclosures, handrails, and clamps shall be finished in **Mira-Cote**.

- **MINI CITY PLAYHOUSES** are designed to be enjoyed by children of all abilities, including autism, developmental delays and those that use mobility devices. Children can use their imagination, improve strength, agility and mobility. The steel frame shall be constructed from **2" square tubing**, 16-gage galvanized steel tubing, 1/4" steel plates. The steel frame (sensory garden wall, traffic light) shall be constructed from 12-gage and 14-gage galvanized steel. The steel roof/end walls shall be constructed from 12-gage galvanized steel plate. The stairs shall be constructed from 12-gage steel coated with durable, thermoplastic coating. The deck platform shall be constructed from 12-gage steel coated with durable, thermoplastic coating. The rope shall be 16mm rope with aluminum connector. The steel crawl tube shall be constructed from 14-gage galvanized steel, 8-gage galvanized steel, **1-1/4" pipe**, 13-gage galvanized steel tubing. The steel climber shall be constructed from **1-1/2" pipe**, 13-gage galvanized steel tubing, 8-gage and 1/4" steel plate. The plastic slide shall be **1/2" HDPE** bedway, **3/4" HDPE** sides. The platic steps/seat shall be **3/4" textured HDPE**. The plastic walls/ends/panels shall be **3/4" HDPE**. The plastic tire shall be rotationally molded LLDPE.The skylight (chattery) shall be 1/4" **Koda** XT. The skylight (playhouse, chattery) shall be 3/16" screen printed Lexan. The castings shall be 319 aluminum. The finishes shall be in **Mira-Cote**. All fastening hardware shall be **Fastener Style A**. The shelves shall be constructed from 12-gage steel. The graphic panels shall be 1/4" **fiberglass** signs. The dog door/belt bridge shall be 3/8" **Flextread**. The colored lenses shall be 1/8" acrylic colored panels with 3/16" Lexan covers.

- **RISK MANAGEMENT SIGN** is intended to inform the parents and children that adult supervision is recommended, along with smart play on the equipment in the play area. Sign shall be constructed of aluminum 3003-H14 .08" thick powder coated white with screen printed overlay. Steel frame shall be 2 3/8" OD 12 ga. galvanized steel tube. Extension Tube shall be 2.375 12GA GLV-IL X 24' tube round. Hardware use **Fastener Style A** hardware. Frame shall have a **Mira-Cote** finish.

Technical Data for Processes and Finishes of the Highlighted Items

- **aluminum alloy** conforms to the following: ASTM 356, ANSI 322, Chrysler MS 2417 and General Motors GM 4323-M. Parts or components constructed of aluminum alloy are either *sand cast* or *die cast. Sand cast aluminum alloy* is 319 with tensile strength of 27,000 p.s.i. and yield strength of 18,000 p.s.i. *Die cast aluminum alloy* is 383.1 with tensile strength of 45,000 p.s.i. and yield strength of 22,000 p.s.i.

- **4/0 straight link coil chain** is trivalent zinc finish with a 670-pound working load limit. All chain shall be manufactured to ASTM A467-86A Class CS specifications.

- **Mira-Therm2 coated chain** is a **welded** chain with links sufficiently wide to allow them to pass one another freely, eliminating the tendency to kink. The links are low carbon zinc plated steel with a polyvinyl chloride coating.

- **Versalok Fasteners** (R) are cast **aluminum alloy**. Each fastener consists of two die cast **aluminum alloy** "half ring" pieces, which were designed to fasten onto the round posts by use of a male/female interlock. For 3-1/2" post, outside dimension of the completed fastener (joined "half-rings") is 5". For 5" post, outside dimension of the completed fastener is 6-1/2". *Rungs and components* connect to clamps on posts by means of die cast **aluminum alloy**, two-piece socket receptors which may be assembled to a previously-installed clamp ring and secured to the clamp and component by set screws (and tek screws in some cases). *Decks* connect to clamps on posts by means of die cast **aluminum alloy**, one-piece deck support castings. The clamp assembly and socket receptor have a **Mira-Cote** finish. Kids' Choice components with **2" pipe** mounting points attach to 5" posts using **aluminum alloy** sand cast header supports.

- **5" round end cap** is die cast **aluminum alloy**.

- **Fastener Style A** is a corrosion resistant, 18-8, stainless steel, vandal resistant fastener.

- **fiberglass** components are sprayed-up isophthalic molding resin with fiberglass reinforcements. The resins and fiberglass are tested in accordance with ASTM D-790, D-38-0651 and D-638. All sprayed up fiberglass components have a **Gelcoat** finish which is molded in during the spray up process.

- **Flextread** is a .375" (.95cm) thick, 2-ply performance-woven mesh with a high-quality rubber/nitrile blend. Breaking strength of 21,120 lbs. (9579kg) per 12" width. Non-marking, odorless and textured for excellent grip when wet.

- **Koda XT** is a polycarbonate resin designed for exterior architecture and featuring superior impact strength, formability and high-temperature resistance.

- **G-90 galvanized** indicates that a coating of .90 ounces of zinc per square foot has been applied on each surface side.

- **A-60 Galvannealed** indicates that a coating of .60 ounces of zinc per square foot alloyed with substrate steel has been applied on each surface side.

- **Mira-Cote** (TM) is a Super Durable formulation of a polyester powder coating finish that is applied to a thickness of 3-5 mil. This finish gives metal parts long term protection from chipping, fading and peeling. Miracle's finishing system washes the metal parts with detergent and etches the metal for optimum adhesion. The part is then rinsed clean with water. Next the part is coated with a non-chromic sealer and dried. The Mira-Cote powder is then applied electrostatically to the metal part. The metal parts are then baked at a high temperature to fuse a hard, smooth durable finish to the metal. Mira-Cote has an impact value of 160 in. lbs., flexibility value of 180 degree-1/4" mandrel, shore hardness value H and a crosshatch adhesion of 100%. Mira-Cote is tested in accordance with ASTM D-792, D-523, D-2794, D-1737, D-3363, D-3359 (b), B117 and D-2247.

- **Mira-Lene** (TM) is compression-molded, 3/4" thick, high density polyethylene that has been specifically formulated for optimum U.V. stability and color retention. Compression-molded products have a density of .952 g/cm3 per ASTM D1505 and tensile strength of 3900 PSI per ASTM D638.

- **Mira-Therm2 PE** is a non-toxic copolymer polyethylene coating applied to a thickness of 1/16". Mira-Therm2 PE contains U.V. light stabilizers, anti-microbial additives and color pigments. Mira-Therm2 PE contains no orthopthalates or other banned substances. Mira-Therm2 PE is a proprietary brand of PE coating. Materials are tested in accordance with ASTM D-638, ASTM D-412, ASTM D-2240 and ASTM D-1004. Mira-Therm2 PE meets the FMVS 302 flammability rating, the requirements of California State Law and the 2008 CPSI Act.

- **Perma-Guard** (TM) is an acrylic polyurethane, two component ultra-violet radiation inhibited coating. Three U.V. inhibitors and antioxidants work synergistically to provide protection from all climate and environmental conditions. Perma-Guard's hard, smooth surface makes it impact resistant and able to withstand heavy traffic and abuse. Graffiti can be removed with a suitable solvent. For metal parts, Miracle's finishing system washes the metal parts with detergent and etches the metal for optimum adhesion. The part is then rinsed clean with water. Next the part is coated with a non-chromic sealer and dried. Perma-Guard is applied and either air-dried or baked-on in an oven at 180 degrees F to form a hard, smooth, durable finish.

- **pipe sized tube** is 1010 hot rolled, **Flo-Coat**, galvanized pipe manufactured from steel, cold formed and high frequency induction **welded** continuously. It conforms to ASTM A-135 and ASTM A-500 and is tested in accordance with ASTM E-8.

- **schedule 40 galvanized** pipe consists of a hot dip process of coating the pipe inside and out with not less than 1.6 ounces per square foot with an average of 1.8 ounces per square foot. Schedule 40 pipe conforms to ASTM standards A-53.

- **1" pipe** is **GATOR GRIP** embossed 14 ga., 1" **pipe sized tube** (1.315" OD; approx. 1-5/16" OD.)
- **1" pipe, 10 ga.** is 10 ga., 1" **pipe sized tube** (1.315" OD; approx. 1-5/16" OD.)
- **1" pipe, 12 ga.** is 12 ga., 1" **pipe sized tube** (1.315" OD; approx. 1-5/16" OD.)
- **1-1/4" pipe** is 13 ga., 1-1/4" **pipe sized tube** (1.660" OD; approx. 1-11/16" OD.)
- **1-1/4" pipe, 10 ga.** is 10 ga., 1-1/4" **pipe sized tube** (1.660" OD; approx. 1-11/16" OD.)
- **1-1/2" pipe** is 13 ga., 1-1/2" **pipe sized tube** (1.900" OD; approx. 1-7/8" OD.)
- **2" pipe** is 12 ga., 2" **pipe sized tube** (2.197" OD approx.) galvanized
- **1-1/2" Sch 40 pipe** is 1-1/2" **schedule 40 galvanized** pipe (1.875" OD; approx. 1-7/8" OD.)
- **2" Sch 40 pipe** is 2" **schedule 40 galvanized** pipe (2.375" OD; approx. 2-3/8" OD.)
- **2-1/2" Sch 40 pipe** is 2-1/2" **schedule 40 galvanized** pipe (2.875" OD; approx. 2-7/8" OD.)

- **plastic pipe plugs** are injection molded polypropylene containing U.V. light stabilizers.

- **Rockite** (R) (Rotational Molded Polyethylene) is a low-density polyethylene produced from high performance, U.V. stabilized rotational molding grade resins with a comprehensive additive package. These resins are tested in accordance with ASTM testing procedures D-1505, D-1248, D-1693(b), D- 638, D-790 and D-746. Resin's properties exhibit a balance of toughness, rigidity, environmental stress crack resistance and excellent low temperature impact performance. Wall thickness of molded components is 3/16" to 1/4".

- **360 Degree Slashproof Tot Seat** is a flexible seat fabricated into a configuration of a wide strap under and through the bottom, a wide strap running completely around at the top, and two (2) interconnecting straps at the front and rear of the seat for complete enclosure of the small user. The exterior surface is blue EPDM rubber. Models with chain have two segments of **4/0 straight link coil chain** to suspend the swing from a swing frame header. The 360-degree tot seat is constructed of a one-piece die cut 0.020" thick, martinsitic spring steel insert with 70 durometer blue EPDM rubber, 1/4" thick, molded to the insert. The main seat strap is 5" wide, the back strap is 4" wide, and the front strap is 2" wide. The two (2) places where the straps are interconnected and form the suspension points for the seat are held by a clip and grommet system. The clip is 4" wide 16 ga. galvanized steel. There are two grommets per clip, each of which is 3/4" O.D. by 14 ga. wall galvanized steel tube, flared to securely attach the clip to the seat. The two (2) mounting triangles are secured to the seat by clips and are made from 3/8" steel round stock, formed and galvanized. For Model # 299-74, the lower 30" of the chain is finished in **Mira-Therm2**.

- **5" aluminum tube** is a 5" O.D. (.125 wall) aluminum post that receives a five-stage oxidation wash prior to painting. This 6005-T5 alloy and temper extruded aluminum tube conforms to ASTM-B-221 and QQ-A-200/8 with yield strength of 35,000 p.s.i. and tensile strength of 38,000 p.s.i.

- **3/4" x 1" oval tube** is 15 ga. wall. It is fabricated of 1008 hot rolled, **Flo-Coat**, galvanized tube manufactured from steel, cold formed and high frequency induction **welded** continuously. It conforms to ASTM A-135 and ASTM A-500 and is tested in accordance with ASTM E-8. The minimum mechanical properties of the tube are yield strength of 50,000 p.s.i. and tensile strength of 55,000 p.s.i.

- **1" tube** is 1" OD, 15 ga. fluted **round tube**. It conforms to ASTM A-500.
- **2-3/4" tube** is 2-3/4" OD, 11 ga. **round tube**. It conforms to ASTM A-500
- **3-1/2" tube** is 3-1/2" OD, 13 ga. **round tube**. It conforms to ASTM A-500.
- **4-1/2" tube** is 4-1/2" OD, 7 ga. **round tube**. It conforms to ASTM A-500.
- **5" tube** is 5" OD, 13 ga. **round tube**. It conforms to ASTM A-500.
- **5" tube, 11 ga.** is 5" OD, 11 ga. **round tube**. It conforms to ASTM A-500.

- **welded** refers to welds that are made by certified welders, tested in accordance with AWS D1.1-94, structural welding code specifications for steel. Welds conform to AWS A5.17 ASME SFA-5.17 EML3K and AWS A-5.18ER70S-3 ASME SFA-5.18 ER70s-3 LE332- C and LE-559-L.

- **Specification Policy: Specifications were current at the time of publication. Miracle Recreation Equipment Company has a policy of ongoing product improvement and therefore reserves the right to modify specifications or discontinue products without notice.**

PLAY EQUIPMENT SPECIFICATIONS – WENDELL CROSS 5-12

SAFETY STANDARDS & GUIDELINES All public playground equipment supplied shall meet all applicable provisions of the current "Handbook for Public Playground Safety" published by the Consumer Product Safety Commission (CPSC), and of ASTM F1487-17 "Standard Consumer Safety Performance Specification for Playground Equipment for Public Use," published by the American Society for Testing and Materials (ASTM). Products bearing the certification seal of the International Play Equipment Manufacturers Association (IPEMA) have received written validation of compliance with ASTM F1487-17.

TRADEMARKS Aquarius (R), Big Kahuna (R), Big Timber (R), Bongo (TM), Boulder Ridge (R), Bug Bites (R), Camel Back (TM), Center Stage (R), Chameleon (TM), Coil Curler (TM), Connexion (R), Dupli-Gator (R), Flex Jet (R), Flippo (TM), Flippopotamus (R), Fun Fone (TM), Fun Tunnel (R), Funnel Tunnel (TM), Funshades (TM), Gator Grip (R), Gemini (TM), Gravity (TM), Grizz-Lee Bear (R), Groove (TM), Groove II (R) Slide, Hang-A-Round (R), Interaxion (TM), JAX (R), Kidrox (R), Kids' Choice (R), Kids' Perch (TM), Libra (R), Linkz (TM), Loopz (TM), Mega Tower (R), Miracle (R), Miracle Recreation (R), Mira-Cote (R), Mira-Lam (TM), Mira-Lene (TM), Mira-Therm2 (TM), Mogul (TM), Mountain Trail (R), N-Dure Cycle (R), Nexus (R), Observation Deck (R), Offspring (TM), OrbX (R), Pegasus (R), Perma-Guard (TM), Perseus (TM), Phyzics (R), Play Cover (R), Play Terrain (R), Power Pedaler (TM), Pull Up!Lift (R), Reflex (R), Relay Racer (R), Rock-ite (R), Rodeo Rocky (TM), Serpent Trek (TM), Sneak-A-View (TM), Sun Sparkle (TM), Surfer (R), Tensile Tough (TM), Tensile Tower (TM), Thunder Tunnel (TM), Timber Topper (TM), Toboggan (TM), Toddlers' Choice (R), Tots' Choice (R), Tots' Choice (R) Expansion, Tots' Choice (TM) for Toddlers, Trim Timber (R), Triple Play (TM), Typhoon (TM), Versalok (R), View Groove (TM), Wavy Waffle Wall Walker (TM), Webscapes (R), Whirlwind (TM), Xcalator (R), and X-Cavator (TM) are trademarks of Miracle Recreation Equipment Company. Tornado (TM), Multi-Pondo (TM), and Pirouette (TM) are trademarks of HAGS (TM). Miracle and HAGS are divisions of PlayPower, Inc. PlayPower (R) is a trademark of PlayPower, Inc.

QUALITY SYSTEM CERTIFICATION The manufacturer's quality system is certified to ISO 9001 since December 1998.

PRODUCT CHANGES At Miracle Recreation Equipment Company, we strive for the utmost in quality and safety in our entire product line. Therefore, in order to honor this commitment to you, our customers, we reserve the right to make changes on any product released and/or published in our annual catalog and other promotional or technical literature.

WARRANTY

Miracle Recreation Equipment Company warrants its products against structural failure due to defects in materials and workmanship for the warranty periods and material categories prescribed below.

1. **LIMITED WARRANTY FOR AS LONG AS YOU OWN THE PRODUCT:** Aluminum deck posts, steel deck posts, VersaLok (R) fastening system and associated fastening hardware.

2. **LIMITED FIFTEEN (15) YEAR WARRANTY:** All rigid steel playground components, decks, steps, and weldments, rotationally molded and sheet plastic components, plastic lumber, roof panels, and stainless-steel slides, except as otherwise specified below.

3. **LIMITED TEN (10) YEAR WARRANTY:** Fabric shade steel frames, and Shadesure ™ fabrics (Note Exception: Limited Five (5) Year Warranty on Shadesure ™ fabrics in colors Red, Yellow, Electric Purple, Zesty Lime, Cinnamon, and Olive.)

4. **LIMITED EIGHT (8) YEAR WARRANTY:**

- Fiberglass signage, accessible swing seats, precast PolyFiberCrete or precast concrete products.
- Play Terrain Synthetic Turf safety surfacing against deterioration of specified attenuation performance and appearance.
- Shade fabric and components against rot, UV deterioration and defects in materials and workmanship (Note Exception: Limited Three (3) Year Warranty for fabric in shades of red).

5. **LIMITED FIVE (5) YEAR WARRANTY:**

- Heavy duty diamond barrier mesh and Kidrox™ Climbing Rocks.
- Miratherm™ PVC coating against cracking or peeling.
- Park and Site Amenities (i.e. benches, tables, trash receptacles, etc.).
- Steel core cable nets and rope fittings and connections (Note Exception: Warranty does not cover normal wear and tear such as fraying or facing of cable coating).

6. **LIMITED THREE (3) YEAR WARRANTY:** Flexible belting, plastic border timbers and accessories, and electronic panel speakers, sound chips, and circuit boards.

7. **LIMITED ONE (1) YEAR WARRANTY:**

- GFRP (Glass Fiber Reinforced Polymer) Products, Slashproof Swing Seats, 360° Bucket Tot Swing Seats and Tuff Net no climbing mesh.
- Pool slide support structures, stairways, landings and railings.
- All other products and components that are not specifically listed above, including, without limitation, all moving parts, such as swing hangers and bearings, swivels, chains, whirls, springs and flexible components, and all high wear items, such as trolleys, cables, wheels, and bumper stops related to rail and cable ride products.

BUYER'S REMEDY: If any products prove defective or non-conforming under normal use and within the above-prescribed warranty periods and material categories, Buyer must promptly notify Miracle in writing at 878 E. Hwy 60, Monett, MO 65708 USA. Miracle may elect to inspect the alleged defect at Buyer's site or at Miracle's facility. Buyer shall not return products to Miracle unless authorized by Miracle to do so. Authorized returns must be properly packaged and shipped prepaid and insured, at Buyer's expense. Upon verification of warranty coverage, Miracle may elect, in its sole discretion, to repair defective or non-conforming products, or replace them by delivering products or part(s) free of charge to the site. Miracle's limited warranties do not cover the cost of labor to remove defective or non -conforming part(s) or to install repaired or replacement part(s). By use of these limited warranties, Buyer accepts their terms and limitations, and waives any rights it would otherwise have to claim or assert that such warranties fail of their essential purpose. Buyer agrees that venue for any court action to enforce these limited warranties shall be in Barry or Greene Counties in the State of Missouri.

LIMITATIONS: All warranty periods begin on the date of Miracle's invoice. Repaired and/or replacement part(s) are warranted only for the balance of the original limited warranty period. Warranties extend only to the original Buyer/end user for products purchased from Miracle or a Miracle authorized reseller and are not transferrable.
Warranties apply only to Miracle products that are erected and installed in conformance with Miracle's installation instructions, and that are maintained and inspected in conformance with Miracle maintenance and operational instructions.

Warranties specifically do not cover Miracle products:

- For cosmetic damage or flaws occurring under normal use, such as surface scratches, minor chips, hairline cracks, dents, marring, efflorescence, color fade (except for shade fabric as noted above), discoloration, corrosion, fraying, or warping of recycled plastic lumber;
- That have been modified, altered, or repaired by unauthorized third parties;
- That have not been used as designed or intended, or misused;
- To which non-Miracle parts have been added or substituted;
- That have been removed from their original location and re-installed elsewhere, without pre-approval by Miracle;
- Or that have been damaged due to excessive wear and tear, vandalism, abnormal use, abuse, negligence, environmental factors (such as wind-blown sand, salt spray, or airborne emissions from industrial sources), extreme weather (such as hail, flooding, lightning, tornados, sandstorms, earthquakes, or wind storms), and acts of God.

THE FOREGOING LIMITED WARRANTY IS THE SOLE AND EXCLUSIVE WARRANTY FOR SELLER'S PRODUCTS, AND IS INLIEU OF ALL OTHER WARRANTIES, EXPRESS OR IMPLIED, IN LAW OR IN FACT. SELLER SPECIFICALLY DISCLAIMS ALL OTHER WARRANTIES, EXPRESS OR IMPLIED, INCLUDING, WITHOUT LIMITATION, ALL IMPLIED WARRANTIES OF MERCHANTABILITY AND FITNESS FOR A PARTICULAR USE OR PURPOSE, AND ANY IMPLIED WARRANTIES ARISING OUT OF COURSE OF DEALING OR PERFORMANCE OR TRADE USAGE. SELLER SHALL NOT BE LIABLE FOR ANY INCIDENTAL, CONSEQUENTIAL, EXEMPLARY, SPECIAL, OR PUNITIVE DAMAGES, OR ANY LOSS OF REVENUE, PROFICT OR USE, ARISING OUT OF A BREACH OF THIS WARRANTY OR IN CONNECTION WITH THE SALE, INSTALLAITON, MAINTENANCE, USE, OPERATION OR REPAIR OF ANY PRODUCT. IN NO EVENT WILL SELLER BE LIABLE FOR ANY AMOUNT GREATER THAN THE PURCHASE PRICE OF A DEFECTIVE PRODUCT.

Consult Miracle's "Glossary of Technical Data for Materials, Processes and Finishes"
for specifications of items listed in bold type.

- **KIDS' CHOICE 6-12 OCTAGON MEGA TOWER** comprises 6' and 12' octagonal decks on common posts with an enclosed center climber for ascending to upper level. Model requires a roof as well as barriers or other play components. Eight-sided decks shall consist of a center deck section (24" x 48" rectangle on both levels to create opening for ladder access) surrounded by four hexagon shaped deck sections to form a single octagon deck with a deck top surface area of 69.3 square feet. The deck length shall be 125.4" post to opposite post and 116" flat edge to flat edge. The deck frame shall be constructed with folded 11 ga. steel sheet forming 3" tall sides. Decking sheets shall be perforated with a staggered pattern of 3/8" diameter holes at 5/8" apart center-to-center. Each shall contain deck support members of 3/16" x 2" flat and decking supports of 1/4" x 1" flat. Each section shall be solid **welded**. Post assemblies shall be constructed of **5" tube, 11 ga.** The assembly shall contain four **5" round end caps** for field assembly to the four center posts. The remaining posts shall be uncapped in readiness for roof attachment. A center climber shall comprise a ladder and enclosure assembly. The ladder shall be constructed of two **1-1/2" pipe** side rails with seven horizontal **1" pipe** rungs solid **welded** between them. Two vertical spokes of **3/4" x 1" oval tube** shall be solid **welded** to bottom rung. Top ends of the rails shall contain 3/8" threaded inserts for field attachment to upper deck. Bottom end of ladder shall have a 7 ga. steel sheet punched mounting plate for field assembly to lower deck. The overall width of the ladder assembly shall be 17-1/16". The angle of ascent shall be 69 degrees. The enclosure assembly shall comprise two parts: a main enclosure and a side enclosure. Each shall be constructed of top and bottom rails of formed **1" pipe** with uprights of **3/4" x 1" oval tube**, solid **welded**. The main enclosure shall have three uprights of **1" pipe**, solid **welded**, in addition to oval uprights. Both enclosures shall be 66-5/16" from top of top rail to bottom of bottom rail. The assembly shall contain **Versalok Fasteners** and **Fastener Style A**. The decks shall be finished in **Mira-Therm2**. The center climber, posts, caps, and clamps shall be finished in **Mira-Cote**.

- **KIDS' CHOICE POSTS: STEEL POSTS:** The steel posts each shall be constructed of **5" tube, 11 ga.** with a **5" round end cap** pressed into its top end. Post and end cap shall have a **Mira-Cote** finish.

- **BRAIDED CLIMBER** shall be a twisting, vertical climbing challenge rising to an 8' deck height with arch enclosure. Climber shall comprise two uprights with coped plugs inserted into top ends, and eight rungs. The uprights and rungs shall be constructed of **1" pipe**, **Gator Grip**. Upright shall measure 174-1/16" in length and shall be solid **welded** to rungs. Top support shall be comprised of **1" pipe**, **Gator Grip**, solid **welded**. The arch enclosure shall comprise top supports and an arched upright of **1" pipe** and spoked infill of **1" tube**, all solid **welded**. For models that have the Nature Arch enclosure, enclosure shall comprise two top supports and arched upright of **1" pipe** solid **welded**. Brackets of 11 ga. galvanized sheet steel are stitch **welded** to the **1" pipe** frame. Boards of 1" x 5.5" recycled plastic and wood composite are fastened to the frame with **Fastener Style A** hardware. All models shall contain **Fastener Style A** hardware.

- **CURVED LOOP CLIMBERS/UPHILL CLIMBER** shall be ground-to-deck climbers, or uphill climber may also be used as a deck-to-deck model, rising either 6' or 8'. The side rails shall be curved **1-1/2" pipe** with blind fasteners inside top end, with curved rungs constructed of **1" tube**, die formed and **welded** to side rails (*except Tots' Choice curved loop climber models which shall have side rails of curved* **1" pipe***).* The deck enclosure assembly for Kids' Choice models shall consist of top supports, a bottom support, an outer upright, and an arched upright, which shall be constructed of **1" pipe**, formed, mashed and punched, and vertical rungs which shall be constructed of **3/4" x 1" oval tube** with bolting tabs of 11 ga. sheet. The enclosure assembly for Tots' Choice models shall consist of top supports and an arched upright, which shall be constructed of **1" tube** formed, mashed and punched. For all systems, the deck enclosure shall be solid **welded**. Loop climber and handholds shall have a **Mira-Cote** finish.

- **VINE CLIMBERS AND TWISTED VINE CLIMBERS** shall feature horizontal rungs on a vertical rail field-assembled to an arched entry deck enclosure. The rungs shall contain a routed leaf design and shall ascend the climber on opposite sides of the rail for Vine Climbers, or slightly offset to wind upward around the rail for Twisted Vine Climbers. The climber rail shall be constructed of **1-1/4" pipe, 10 ga.** with mounting plate support tubes of **1" tube** solid **welded** and mounting plates of 7 ga. galvanized also solid **welded**. Closing support stub ends shall be **plastic pipe plugs**. The rail's top end shall be swaged and shall have a threaded aluminum insert factory-installed. Leaf pads shall be constructed of **Mira-Lene** and routed with an oak leaf design. The arch enclosure assembly shall comprise top supports, an arched upright, and extension tube sleeve, all constructed of **1" pipe**, drilled, formed and mashed, and vertical rungs constructed of **3/4" x 1" oval tube**, all solid **welded**. Kids' Choice arch enclosure for split decks shall consist of top rails, a receiver tube, an arched upright and outer upright, which shall be constructed of **1" pipe**, drilled, formed and mashed, and vertical spokes which shall be constructed of **3/4" x 1" oval tube**. Tots' Choice enclosure shall comprise an arched upright constructed **1"pipe**, drilled, formed and mashed, receiver tube constructed of 1-**1-1/4" pipe** and vertical and horizontal rungs constructed of **1"** tube, all solid welded. The enclosure assembly shall be solid welded. Enclosure shall measure 55" in width and 62" in height. The Nature Arch Enclosure shall comprise two top supports and arched upright of **1" pipe** solid **welded**. Brackets of 11 ga. galvanized sheet steel are stitch **welded** to the **1" pipe** frame. Boards of 1" x 5.5" recycled plastic and wood composite are fastened to the frame with **Fastener Style A** hardware. The sleeve support shall be constructed of **1-1/4" pipe, 10 ga.**, solid **welded** to the arch. The assembly shall contain **Versalok Fasteners** and **Fastener Style A** hardware. The climber rail with support tubes and mounting plates and arched entry enclosure shall be finished in **Mira-Cote**. The leaf pads shall have color molded in.

- **ELECTRONIC PANELS** shall be deck-mounting electronic activity panels are designed to enhance imagination and creative play. Panels play either music or animal noises to incorporate sound and learning into any playground theme. The panels shall be constructed of **Mira-Lene** with a design routed in the front and back. The rung brackets shall be constructed of **1" pipe** with bolting tabs of 11 ga. **A-60 Galvannealed** sheet, all solid **welded**. Each assembly shall contain three (3) "D" size alkaline batteries. Each assembly shall contain **Versalok Fasteners** and **Fastener Style A** hardware. The rung brackets and clamps shall have a **Mira-Cote** finish.

- **CYLINDER PANELS** shall contain nine cylinders in rows and columns of three which spin independently of one another. Each cylinder shall contain two molded-in graphic images on opposite sides which may be aligned with other cylinders to complete a larger image, a series, a word, or an academic exercise. Kids' Choice models shall include enclosures. The panel shall be constructed of **Rockite** with all corners rounded and shall have cylinder assembly's factory-installed using tamper-proof hardware. The panel assemblies for the Tots' Choice above-deck models shall contain three mounting tabs of 11 ga. **A-60 Galvannealed welded** to the assembly for field attachment to decks. Each cylinder shall be constructed of **Rockite** with molded-in graphics on two "sides." Cylinder axles shall be constructed of **1" pipe**. Enclosures for Kids' Choice models shall each consist of a vertical upright and horizontal stub of **1" pipe** solid **welded**, drilled and formed. All **Versalok Fasteners** for deck and component attachment shall be **aluminum alloy**. All hardware shall be **Fastener Style A**. The **Rockite** panel and cylinders shall have color molded in. The **Versalok Fasteners**, enclosures and panel tabs shall have a **Mira-Cote** finish.

- **FULL ENCLOSURE WITH SEAT** (or without) for 14' level of Mega Tower 3-Level Deck shall be designed to fully enclose the area between deck posts, deck and roof (an approximate height of 6'). The enclosure shall comprise **welded** horizontal and vertical rungs and a seat assembly. The outer uprights, top, middle and bottom rungs and formed seat rails shall be constructed of **1" pipe**. The outer uprights shall have mashed and punched bottom ends for field attachment to deck. The inner spokes shall be constructed of **3/4" x 1" oval tube**. The seat rails shall have formed and punched bolting brackets of 3/16" x 1-1/4" HR flat. The 19" wide seat shall be constructed of formed 11 ga. sheet perforated with a staggered pattern of 3/8" diameter holes at 5/8" apart center-to-center. When enclosure is assembled to deck, the seat surface shall be approximately 14" from the deck surface. The assembly shall contain **Versalok Fasteners** and **Fastener Style A** hardware. The enclosure assembly and clamps shall be finished in **Mira-Cote**. The seat shall be finished in **Mira-Therm2** or **Mira-Therm2 PE**.

- **IMAGINATION PANELS** and Activity Panels shall be constructed of **Mira-Lene** and shall measure 36-1/2" x 40" with all corners rounded. The panels shall have routered designs, including themes of a space ship panel, general store counter, a barn wall panel, a barn door panel, a barn window panel, a bank teller window, a television front, a puppet stage, a window, a computer screen, a door, a park ranger, a fire truck, a police car, a train engine, a taxi cab, two airplanes (both containing two steering wheel assemblies, one also containing a clear polycarbonate window mechanically fastened to panel), a race car, an alphabet finger maze, an abstract finger maze, a calculator, a bus stop/bench, a rest stop/bench, jump height measurements for a 3' and 5' deck, a sign language alphabet, a Spanish-English translation, a Chinese-English translation, Braille alphabet with riddles, a drum panel, welcome and age appropriate messages, interconnected gears, gear-driven pistons, and sliding tiles. Rung brackets shall be constructed of **1" pipe** and 11 ga. **A-60 Galvannealed** tabs solid **welded** *(except Tots' Choice models which shall have brackets constructed of* **1" tube** *and 11 ga.* **A-60 Galvannealed** *tabs solid* **welded***.)* The star brackets for the space ship panel shall be constructed of 11 ga. HRPO steel and powder coat painted. The steering wheel(s) on vehicle themed panels shall be constructed of a high-density blow molded polyethylene produced from high performance, U.V. stabilized resins with a comprehensive additive package. These resins shall be tested in accordance with ASTM testing procedures D-1505, D-1248, D-1693(b), D- 638, D-790 and D-746. Resin's properties shall exhibit a balance of toughness, rigidity, environmental stress crack resistance and excellent low temperature impact performance. Wall thickness shall be 1/8". The steering wheel hub cover shall be constructed of injection molded polypropylene which shall contain U.V. light stabilizers. The Piston panel and Gear panel each shall contain a clear polycarbonate cover mechanically fastened over sets of 1/4" thick gears (drive gears not covered by window). The gears shall be constructed of high-density polyethylene, which shall turn on nylon bushings, except for the black nylon handles and drive gears which shall turn on bronze bushings. The piston panel shall also contain connecting rod and piston shapes of 1/4" thick high-density polyethylene. The reverse side of both panels shall contain routered text and/or designs. The Sliding Tile panel shall contain 15 movable, tongue-and-groove tiles with routed numerals to be constructed of 1/4" thick high-density polyethylene. The panels and steering wheel shall have molded in color with each panel assembly having a laminated, two-color scheme. Calypso drum panel shall contain 3 rotational molded drums of low-density polyethylene resin. Each drum shall be attached to the panel through a cover plate constructed of 11 ga. galvanized steel sheet with a **Mira-Cote** finish. Each assembly shall include **Fastener Style A** hardware and **Versalok Fasteners**. Panels and steering wheels shall have color molded in, and rung brackets and clamps shall be finished in **Mira-Cote**.

- **ACTIVITY PANEL INSERTS** available for Kids' Choice, Tots' Choice and Tots' Choice Expansion. Inserts shall be constructed from a combination of 1/2" thick high-density polyethylene, 3/4" thick high-density polyethylene, 3/16" thick polycarbonate, linear low-density polyethylene caps and stainless-steel ball bearings. The inserts shall have interactive, sensory and inclusive play for kids of all abilities including funhouse insert, very buried insert, a-maze-ing insert, four-the-win insert, magical music insert, hypnotize insert and slide & solve insert.

- **LOOKOUT TOWER/COMMAND POST** shall be curved deck extensions/overhangs and enclosure components for deck systems, designed to stimulate imaginative play. Panels for both models shall be constructed of **Rockite**, with wall thickness approximately 1/4", formed to extend the deck surface in a semi-circle (approximately 40" long with a radius of 9-7/16") and also formed to serve as an enclosure. The panels shall have four 3/8" threaded inserts factory-installed along bottom of deck edge and a top rung of **1" pipe** inserted at the factory for field attachment to deck and posts respectively. The panels shall contain five 2" wide view slots evenly spaced, with all corners rounded. The steering wheel shall be constructed of a high-density blow-molded polyethylene produced from high performance, U.V. stabilized resins with a comprehensive additive package. These resins shall be tested in accordance with ASTM testing procedures D-1505, D-1248, D-1693(b), D- 638, D-790 and D-746. Resin's properties shall exhibit a balance of toughness, rigidity, environmental stress crack resistance and excellent low temperature impact performance. Wall thickness shall be 1/8". The steering wheel hub cover shall be constructed of injection-molded polypropylene which shall contain U.V. light stabilizers. All **Versalok Fasteners** for deck and component attachment shall be **aluminum alloy**, and hardware shall be **Fastener Style A**. The **Rockite** panel shall have color molded in. The top rung and **Versalok Fasteners** shall have a **Mira-Cote** finish.

- **ROCKITE BUBBLE PANEL/ROCKITE PANEL WITH HOLE/VIEW GROOVE PANEL/30 DEGREE LOOK-OUT PANEL** shall be constructed of **Rockite** with all corners rounded. The 30-degree Look-Out panel shall have a molded in 30-degree extension. The enclosure shall consist of uprights and support bars, all constructed of **1" pipe**, drilled and formed (*except Tots' Choice models which shall have an enclosure consisting of a top rail of* **1" tube** *with two tabs and two brackets of 11 ga. galvanized sheet, solid* **welded***)*. The bubble shall be vacuum formed from clear polycarbonate sheet. The spherical bubble shall measure 24" in diameter and shall be attached to the panel in the factory using tamper proof screws and flat washers. The view groove panel shall have six 2" view slots evenly spaced at 5-1/4" with slant of 20 degrees from vertical. Horizontal rungs shall have a **Mira-Cote** finish. **Rockite** panels shall have color molded in.

- **HANDHOLD FOR TRANSFER DECK, WALL ENCLOSURES, RECYCLED PLASTIC ENCLOUSRE, WIRE MESH ENCLOSURE, TREEHOUSE WALL AND ENCLOSURE WALL W/STEERING WHEEL** shall be barrier assemblies. Model 714-811 Handhold for Transfer Deck, is a support rail to assist wheelchair users with access to a 12" to 18" transfer point deck. Model 714-816R Recycled Plastic Enclosure, Model 714-816 Wall Enclosure and Model 714-816-1 Wire Mesh Enclosure, are designed to be a barrier on any open side of a deck. Model 714-816-45 Wall Enclosure, Wide Side is designed to be a barrier on the hypotenuse of a right triangle (split) deck. Model 714-817 Treehouse Wall w/Seat is an enclosure with a PVC-dipped steel seat for use on 6-sided and 8-sided decks only. Model 714-900 Wall Enclosure w/Steering Wheel is designed to be a barrier designed to enhance imaginative play. The wall enclosure and wire mesh enclosure supports shall consist of a solid **welded** handrail assembly with top, side and bottom rails constructed of **1" pipe** and spoked infill of **3/4" x 1" oval tube**. Wire mesh shall be 3 ga. resistance **welded** at each intersection,. The steering wheel mounting bracket shall be 7 ga. **G-90 Galvanized** sheet steel **welded** to the wall enclosure. The recycled plastic enclosure shall consist of top and bottom support rails constructed of **1" pipe** and uprights constructed of 3-1/2 x 2-1/2" recycled plastic timbers. The wall enclosure with seat shall comprise a top and bottom rail and end uprights constructed of **1" pipe** and spoked infill of **3/4" x 1" oval tube** and a seat assembly, all solid **welded**. The seat assembly shall comprise a frame of **1" pipe** with bolting brackets of sheet 7 ga. black HR CQ and a factory-assembled 19" wide seat constructed of 11 ga. sheet, perforated with a staggered pattern of 3/8" diameter holes at 5/8" apart center-to-center. The seat surface shall be approximately 14" from the deck surface. The steering wheel shall be constructed of a high density polyethylene produced from high performance, U.V. stabilized rotational molding grade resins with a comprehensive additive package. These resins are tested in accordance with ASTM testing

procedures D-1505, D-1248, D-1693(b), D638, D-790 and D-746. Resin's properties shall exhibit a balance of toughness, rigidity, environmental stress crack resistance, and excellent low temperature impact performance. Wall thickness shall be 1/8". The steering wheel hub cover shall be constructed of injection-molded polypropylene with U.V. light stabilizers. The assembly shall contain **Versalok Fasteners** and **Fastener Style A** hardware. The wall enclosure assemblies, handhold and clamps shall have a **Mira-Cote** finish. The seat shall be finished in **Mira-Therm**. The steering wheel and plastic timbers shall have color molded in.

- **UPPER ENCLOSURE FOR TUBE SLIDE** for 14' level of Mega Tower 3-Level Deck shall be designed to fully enclose the area between deck posts, deck and roof (an approximate height of 6'). The tube slide shall not be included in this assembly. The enclosure shall comprise **welded** horizontal and vertical rungs. The outer uprights and top and bottom rungs shall be constructed of **1" pipe**. The inner spokes shall be constructed of **3/4" x 1" oval tube**. The bottom rung shall be formed to accommodate the shape of a tube slide assembly's entry panel. The assembly shall contain **Versalok Fasteners** and **Fastener Style A** hardware. The enclosure assembly and clamps shall be finished in **Mira-Cote**.

- **MIRA-THERM2 SQUARE TRANSFER POINTS** shall be designed to assist disabled users gain access to and egress from a deck system. The stair assembly shall be constructed of 11 ga. steel stringers solid **welded** to 11 ga. steel sheet decking that is perforated in a staggered pattern of 3/8" diameter holes at 5/8" apart center-to-center. Approximate dimensions of stair assembly shall be 26" overall width, 14" deep step tread and 8" high step rise. The 26" square (approximate) transfer point shall be constructed of 11 ga. steel sheet folded to form approximately 3" high sidewalls. The decking shall be perforated as described above. It shall be reinforced with cross braces of 3/16" x 2" HR flat solid **welded**. The bottom step shall be constructed of 11 ga. steel sheet (with folded edges) perforated as described above. The step shall be approximately 26" wide by 14" deep by 6-1/2" high. Kids' Choice deck enclosures shall be constructed of formed **1" pipe**, including a **welded** upright of the same material. Tots' Choice deck enclosures shall be constructed of **1" pipe** and a formed and **welded** upright of **1" tube**. Each deck enclosure assembly shall be drilled for field assembly of a stair handrail and shall have its bottom end mashed and punched for field assembly to deck. Stair handrail assemblies shall be **welded** upper and lower handrails of formed **1" pipe**. Closed handrails shall contain vertical uprights of **3/4" x 1" oval tube welded** within. Swaged handrail extensions for field assembly to handrails shall be constructed of **1" pipe**. A transfer deck handrail constructed of formed **1" pipe** shall be field assembled to one handrail newel upright and transfer point deck edge. Models designed for assembly to 5' and 6' or 6'-6" decks shall contain handrail sleeve supports constructed of **1-1/4" pipe, 10 ga.** The "U"-shaped transfer step handrail shall be formed **1" pipe**, drilled for field assembly to transfer point deck and bottom step. Its apex shall be 36-1/8" from finished grade. The rung leg shall be **1" pipe** with ends mashed and punched for field assembly to bottom step. The assembly shall contain **Versalok Fasteners** and **Fastener Style A** hardware. The stairs, bottom step, and transfer point deck shall be finished in **Mira-Therm2** or **Mira-Therm2 PE**. The deck enclosures, handrails, extensions, sleeves, leg and clamps shall be finished in **Mira-Cote**.

- **CUPOLA FOR OCTAGON ROOF** and Cupola with Flag Pole for Octagon Roof shall cap the open top of standard "Roof for Octagon Decks" models. Model # 714-862-8CF shall feature a flag pole with mounting brackets for a customer-provided flag (24" maximum height). The octagonal, peaked cupola roof top halves, when fastened together, shall measure 36-1/4" O.D. by 13-3/4" high with a 54-degree slope. Each half shall be constructed of 14 ga. HRPO black, perforated with 3/16" holes spaced 1/2" apart center-to-center in a staggered pattern, and shall be punched and solid **welded**. The octagonal soffit shall measure 33" O.D. (after bending to create bolting tabs on perimeter) with an 18" I.D. opening, and shall be constructed of 11 ga. sheet, punched and formed, with 3/8" weldnuts on its bottom side. Extension trusses each shall comprise a receiver of 4.6875" O.D. by 0.188" thick tube with flange of 11 ga. **A-60 Galvannealed** sheet solid **welded** to a stub of **1-1/2" pipe** capped by a 1-3/4" by 3/8" thick CRS threaded insert. The interior wall shall be constructed of 24 ga. 304 SS sheet measuring 9-1/4" high by 76-7/8" wide (laid flat), punched and formed. The flag pole mounting plate shall comprise an 8" high receiver of **2" Sch 40 pipe** with 3/8" weldnuts and gussets of 11 ga. black sheet on a 21-1/4" O.D. plate of 7 ga. black, all solid **welded**. The 72" flag pole shall be constructed of **1-1/2" pipe** with cross plates of 7 ga. black sheet, formed and punched, **welded** to its top end and links of **4/0 straight link coil chain** solid **welded** to its side. When assembled, the top of the flag pole shall extend approximately 65-1/2" above the cupola's peak. The assembly shall contain **Fastener Style A** hardware and **Fastener Style B** hardware. The cupola top, soffit, extension trusses, flag pole, and flag pole mounting plate shall be finished in **Mira-Cote**. The interior wall shall have a stainless-steel finish.

- **ROOFS WITH PERF STEEL, RECYCLED PLASTIC OR HYBRID PANELS** with open tops for square, pentagon, heptagon hexagon and octagon decks shall offer superior durability in most environmental conditions. The steel roof panels shall be constructed of 16 ga. **A-60 Galvannealed** sheet perforated with 3/16" holes in a pattern, with a formed "lip" at the panel's top edge to provide additional stability during installation. A length of **1" pipe** shall be **welded** to the panel bottom. The recycled roof panels shall be constructed of 100% post consumer recycled plastic and approximately 3/4" thick. A panel mount formed of 11 ga. **G-90 galvanized** shall be field assembled to trusses and roof panels. Roof truss assemblies shall be constructed of a roof mount stub of either **5" tube** for Kids' Choice or **3-1/2" tube** for Tots' Choice Expansion, solid **welded** at a 54-degree angle to truss of **5" tube** containing bolting tabs on both sides of 11 ga. **G-90 galvanized**. **5" round end caps** shall close open ends of trusses. All hardware shall be **Fastener Style A**. The steel roof panels and trusses shall have a **Mira-Cote** finish. The recycled panels shall have a natural finish. The panel mounts shall have a galvanized finish. Note that a hybrid model (with alternating recycled plastic and perf steel roof panels) is not available for heptagon or pentagon decks due to the odd number of panels.

- **BIG TIMBER HOLLOW LOG SLIDE** shall resemble natural wood in color, form and texture and shall contain molded-in graphics to enhance imaginative play. It shall be designed for assembly to 6'-6" deck systems and shall contain an entry panel. The entry panel and one-piece slide shall be constructed of **Rockite** with all corners rounded. The slide shall have 6" high side rails, an overall width of 25", and an 18" wide sliding surface. A rung of **1" pipe** shall be field assembled to the entry panel for attachment to clamps and deck posts. The entry panel shall measure 38-15/16" wide by 42-5/8" high by 2-7/8" thick with an opening 18-5/8" wide by 28-13/16" high. The front leg shall comprise a length of **2" pipe** solid **welded** to an 11 ga. **A-60 Galvannealed** mounting bracket. The assembly shall contain **Versalok Fasteners** and **Fastener Style A** hardware. The rung, clamps, and front leg shall be finished in **Mira-Cote**. The slide and entry panel shall have color and graphic images molded in.

- **TUBE SLIDES FOR 12' DECK** shall be 30" I.D. tube slides designed to exit a 12' high deck system such as the Mega Tower 2-Level Deck. Bedway length for Model # 714-742-12 (Right Turn) shall be 25'-11". Bedway length for Model # 714-742-121 (Straight) shall be 21'-3". Bedway length for model # 714-742-123R and # 714-742-123S ("S") shall be 22'-7". All pieces shall be **Rockite** with a 30" inner diameter. Tube-to-tube connections shall have a **Rockite** flange cover. Flange brackets shall be constructed of 7 ga. sheet. The bedway shall have no exposed internal fasteners. The exit section shall be constructed of double-wall **Rockite** with a 25" centerline radius. All slide pieces shall be constructed with a 1/4" to 3/8" wall thickness. The tube joints shall be externally flanged and overlapping, with a 1" wide flange. The slide entry panels shall be **Rockite** and shall measure 47" x 38" x 3" with a molded-in 30 degrees extension and shall be supported by a horizontal rung of **1" pipe**. Support legs of various lengths shall be die-formed of **1-1/4" pipe** or **2" pipe**. Brackets shall be constructed of 7 ga. sheet. The front leg shall comprise an upright and a bolting plate. The upright shall be constructed of **2" pipe**. The bolting plate shall be constructed of 11 ga. sheet **A-60 Galvannealed** measuring 7" x 7", **welded** to the upright. The Slide Warning sign shall comprise a **Mira-Lene** sign panel and two support posts constructed of 2-3/8" OD tube, 12 ga. The assembly shall contain **Versalok Fasteners** and **Fastener Style** hardware. The slide assembly shall have color molded in. The support legs, front leg and clamps shall have a **Mira-Cote** finish.

- **LOOP SEAT** is an inventive way for kids to rest between play. The Loop Seat shall install between existing deck posts and is situated at a 45-degree angle to create a combination seat and back rest. The Loop Seat shall consist of two loop halves constructed of **2" pipe**, solid **welded** to each other to create one Loop Seat. Each loop half shall measure 32-5/8" in length and 14-13/16" in height. Two 4-3/8" stubs shall be solid **welded** to short sides of Loop Seat and shall be constructed of **2" pipe**. The assembly shall contain **Versalok Fasteners** and **Fastener Style A** hardware. The Loop Seat shall be finished in **Mira-Cote**.

- **RISK MANAGEMENT SIGN** is intended to inform the parents and children that adult supervision is recommended, along with smart play on the equipment in the play area. Sign shall be constructed of aluminum 3003-H14 .08" thick powder coated white with screen printed overlay. Steel frame shall be 2 3/8" OD 12 ga. galvanized steel tube. Extension Tube shall be 2.375 12GA GLV-IL X 24' tube round. Hardware use **Fastener Style A** hardware. Frame shall have a **Mira-Cote** finish.

Technical Data for Processes and Finishes of the Highlighted Items

- **aluminum alloy** conforms to the following: ASTM 356, ANSI 322, Chrysler MS 2417 and General Motors GM 4323-M. Parts or components constructed of aluminum alloy are either *sand cast* or *die cast. Sand cast aluminum alloy* is 319 with tensile strength of 27,000 p.s.i. and yield strength of 18,000 p.s.i. *Die cast aluminum alloy* is 383.1 with tensile strength of 45,000 p.s.i. and yield strength of 22,000 p.s.i.

- **4/0 straight link coil chain** is trivalent zinc finish with a 670-pound working load limit. All chain shall be manufactured to ASTM A467-86A Class CS specifications.

- **Mira-Therm2 coated chain** is a **welded** chain with links sufficiently wide to allow them to pass one another freely, eliminating the tendency to kink. The links are low carbon zinc plated steel with a polyvinyl chloride coating.

- **Versalok Fasteners** (R) are cast **aluminum alloy**. Each fastener consists of two die cast **aluminum alloy** "half ring" pieces, which were designed to fasten onto the round posts by use of a male/female interlock. For 3-1/2" post, outside dimension of the completed fastener (joined "half-rings") is 5". For 5" post, outside dimension of the completed fastener is 6-1/2". *Rungs and components* connect to clamps on posts by means of die cast **aluminum alloy**, two-piece socket receptors which may be assembled to a previously-installed clamp ring and secured to the clamp and component by set screws (and tek screws in some cases). *Decks* connect to clamps on posts by means of die cast **aluminum alloy**, one-piece deck support castings. The clamp assembly and socket receptor have a **Mira-Cote** finish. Kids' Choice components with **2" pipe** mounting points attach to 5" posts using **aluminum alloy** sand cast header supports.

- **5" round end cap** is die cast **aluminum alloy**.
- **Fastener Style A** is a corrosion resistant, 18-8, stainless steel, vandal resistant fastener.
- **Fastener Style B** is an all aluminum blind rivet or aluminum drive rivet with stainless steel pin. Both are corrosion resistant and vandal resistant fasteners.
- **GATOR GRIP** (TM) is a three-dimensional textured pattern exclusive to Miracle, embossed in steel to a depth of .014" to .017".
- **G-90 galvanized** indicates that a coating of .90 ounces of zinc per square foot has been applied on each surface side.
- **A-60 Galvannealed** indicates that a coating of .60 ounces of zinc per square foot alloyed with substrate steel has been applied on each surface side.

- **Mira-Cote** (TM) is a Super Durable formulation of a polyester powder coating finish that is applied to a thickness of 3-5 mil. This finish gives metal parts long term protection from chipping, fading and peeling. Miracle's finishing system washes the metal parts with detergent and etches the metal for optimum adhesion. The part is then rinsed clean with water. Next the part is coated with a non-chromic sealer and dried. The Mira-Cote powder is then applied electrostatically to the metal part. The metal parts are then baked at a high temperature to fuse a hard, smooth durable finish to the metal. Mira-Cote has an impact value of 160 in. lbs., flexibility value of 180 degree-1/4" mandrel, shore hardness value H and a crosshatch adhesion of 100%. Mira-Cote is tested in accordance with ASTM D-792, D-523, D-2794, D-1737, D-3363, D-3359 (b), B117 and D-2247.

- **Mira-Lene** (TM) is compression-molded, 3/4" thick, high density polyethylene that has been specifically formulated for optimum U.V. stability and color retention. Compression-molded products have a density of .952 g/cm3 per ASTM D1505 and tensile strength of 3900 PSI per ASTM D638.

- **Mira-Therm2 PE** is a non-toxic copolymer polyethylene coating applied to a thickness of 1/16". Mira-Therm2 PE contains U.V. light stabilizers, anti-microbial additives and color pigments. Mira-Therm2 PE contains no orthopthalates or other banned substances. Mira-Therm2 PE is a proprietary brand of PE coating. Materials are tested in accordance with ASTM D-638, ASTM D-412, ASTM D-2240 and ASTM D-1004. Mira-Therm2 PE meets the FMVS 302 flammability rating, the requirements of California State Law and the 2008 CPSI Act.

- **1" pipe** is **GATOR GRIP** embossed 14 ga., 1" **pipe sized tube** (1.315" OD; approx. 1-5/16" OD.)
- **1-1/4" pipe** is 13 ga., 1-1/4" **pipe sized tube** (1.660" OD; approx. 1-11/16" OD.)
- **1-1/4" pipe, 10 ga.** is 10 ga., 1-1/4" **pipe sized tube** (1.660" OD; approx. 1-11/16" OD.)
- **1-1/2" pipe** is 13 ga., 1-1/2" **pipe sized tube** (1.900" OD; approx. 1-7/8" OD.)
- **2" pipe** is 12 ga., 2" **pipe sized tube** (2.197" OD approx.) galvanized
- **2" Sch 40 pipe** is 2" **schedule 40 galvanized** pipe (2.375" OD; approx. 2-3/8" OD.)
- **plastic pipe plugs** are injection molded polypropylene containing U.V. light stabilizers.

- **Rockite** (R) (Rotational Molded Polyethylene) is a low-density polyethylene produced from high performance, U.V. stabilized rotational molding grade resins with a comprehensive additive package. These resins are tested in accordance with ASTM testing procedures D-1505, D-1248, D-1693(b), D- 638, D-790 and D-746. Resin's properties exhibit a balance of toughness, rigidity, environmental stress crack resistance and excellent low temperature impact performance. Wall thickness of molded components is 3/16" to 1/4".

- **3/4" x 1" oval tube** is 15 ga. wall. It is fabricated of 1008 hot rolled, **Flo-Coat**, galvanized tube manufactured from steel, cold formed and high frequency induction **welded** continuously. It conforms to ASTM A-135 and ASTM A-500 and is tested in accordance with ASTM E-8. The minimum mechanical properties of the tube are yield strength of 50,000 p.s.i. and tensile strength of 55,000 p.s.i.

- **1" tube** is 1" OD, 15 ga. fluted **round tube**. It conforms to ASTM A-500.
- **3-1/2" tube** is 3-1/2" OD, 13 ga. **round tube**. It conforms to ASTM A-500.
- **5" tube** is 5" OD, 13 ga. **round tube**. It conforms to ASTM A-500.
- **5" tube, 11 ga.** is 5" OD, 11 ga. **round tube**. It conforms to ASTM A-500.

- **welded** refers to welds that are made by certified welders, tested in accordance with AWS D1.1-94, structural welding code specifications for steel. Welds conform to AWS A5.17 ASME SFA-5.17 EML3K and AWS A-5.18ER70S-3 ASME SFA-5.18 ER70s-3 LE332- C and LE-559-L.

- **Specification Policy: Specifications were current at the time of publication. Miracle Recreation Equipment Company has a policy of ongoing product improvement and therefore reserves the right to modify specifications or discontinue products without notice.**

POURED-IN-PLACE RUBBER TPV SURFACING FOR PLAYGROUNDS

PART 1 – GENERAL

1.01 WORK INCLUDED

This work includes furnishing and installing the No Fault Safety Surface. The surfacing Manufacturer/installer shall be responsible for all labor, materials, tools, and equipment to perform all work and services for the installation of the surface.

1.02 DESCRIPTION OF SYSTEM & GENERAL CONDITIONS

No Fault Safety Surface shall be poured-in-place and trowelled to provide for a resilient, seamless rubber surface installed over the specified rigid base. No Fault Safety Surface is comprised of an SBR base mat and TPV colored cap, with both layers being mixed with a non-flammable, non-shrinking, one part moisture cured polyurethane adhesive as recommended by the Manufacturer and capable of bonding to concrete, asphalt or compacted stone. No Fault Safety Surface shall be stable and slip resistant to comply with, meet or exceed all requirements set forth in the Americans with Disabilities Act (ADA) and the American Standard Testing Methods (ASTM and Consumer Products Safety Commission (CPSC) for manufactured Safety Surfaces as detailed below.

1.03 QUALITY ASSURANCE

A. Applicable Standards
   1. Impact Attenuation - ASTM F 1292: Surfacing within playground equipment use zones shall meet or exceed the performance requirements of CPSC, ASTM F 1292 and/or CSA Z614-98 that a surface yield both a peak deceleration of no more than 200 g's and a Head Injury Criteria (HIC) value of no more than 1,000 for a head-first fall from the highest accessible portion of play equipment being installed as shown on drawings.
   2. Coefficient of Friction - ASTM D2047
   3. Surface Frictional Properties & Skid Resistance – ASTM E303
   4. Permeability – ASTM D2047
   5. Flammability of Finished Floor Cover - ASTM D2859
   6. Accessibility of Surface Systems – ASTM F1951
   7. Tear Strength – ASTM D624 Standard Test Method for Tear Strength of Conventional Vulcanized Rubber and Thermoplastic
   8. Tensile Strength – ASTM D412 Standard Test Methods for Vulcanized Rubber Elastomers and Thermoplastic Elastomers: Tensile Strength must be equal to or greater than 80 Psi.
   9. Solar Reflective Index (SRI) – ASTM C-1959 and E-903
   10. IPEMA Certification Required

B. Installer Qualifications
   1. All materials under this section shall be installed by the Manufacturer or its Certified Installers. The playground surfacing installation shall not be performed by anyone other than the product Manufacturer or its Certified Installers.
   2. The installation crew will include at least one member that has completed the OSHA 10 Hour Training course and received certification

C. Contractor Pre-Qualifications
   1. All bidders must have a current Connecticut Contractor's License at or before the time of bid opening date.
   2. A list of twenty five (25) surfacing projects completed with a similar product. List shall include names of project representatives and respective telephone numbers. At least five (5) of these projects must be at least five (5) years old. This list shall also contain projects which require the same level of difficulty, size of project, type of project, e.g. color transitions and special graphics.
   3. All bidders must also submit Material Safety Data sheets (MSDS) and Product Data Sheets on all materials.

1.04 SUBMITTALS

A. One original hard copy of the submittal package will be supplied with additional copies on individual CD's. Upon request only hard copies shall be supplied.
B. Manufacturer's descriptive data and installation instructions.
C. Manufacturer's details showing depths of wear surface and sub-base materials, anchoring systems and edge details.
D. A list of all materials and components to be installed, including Manufacturer's name, storage requirements, and precautions, and shall state chemical composition and test results to which material has been subjected in compliance with these specifications.
E. Test results to substantiate that the product meets or exceeds all ASTM & ADA requirements for each standard listed in Section 1.03 Quality Assurance. Test must be performed and certified by an independent laboratory.
F. Copy of IPEMA Certification.
G. Documentation of Contractor Pre-Qualification as stated in Section 1.03 Quality Assurance.
H. Documentation of Insurance Requirements as stated in Section 1.03 Quality Assurance.
I. Statement signed by the Manufacturer of the synthetic safety surfacing attesting that all materials under this section shall be installed by the Manufacturer or its Certified Installers.
J. A listing of at least twenty five (25) installations where products similar to those proposed for use have been installed and have been in successful service for a minimum period of three (3) years. This list shall include Owner or purchaser, address of installation, date of installation, contact person, and phone number.
K. Upon request, a sample specimen of safety surface proposed for this project.
L. Upon request, a list of all organizations and affiliations of the company offering the product(s).

1.05 DELIVERY, STORAGE and HANDLING:

Materials and equipment shall be delivered and/or stored in accordance with the Manufacturer's recommendations.

1.06 PROJECT SITE CONDITIONS:

A. Synthetic safety surfacing shall be installed on a dry subsurface, with no prospect of rain within the initial drying period, at temperatures recommended by the Manufacturer.
B. Installation in weather condition of extreme heat, temperatures less than 40 degrees (F), and/or high humidity may impact cure time, and/or the structural integrity of the final product. Immediate surroundings of the site shall be reasonably free of dust conditions and poor particulate air quality will impact the final surface look.
C. The Manufacturer's installation manager shall reserve the right to control the project schedule installation based on such factor without penalty to No Fault Sport Group, LLC.

D. Safety surfacing shall be installed after the playground equipment is installed unless otherwise noted.
E. Surface installation shall be coordinated by the project manager or designated individual of playground equipment and sub-base installation, with No Fault Sport Group's local production manager and in accordance with No Fault's sub-base requirements.

1.07 WARRANTY:

Surfacing shall maintain required impact attenuation characteristics for a period of three (3) years and guaranteed against defects in workmanship and material for a period of no less than five (5) years or as specified and agreed upon per contract.

PART 2 – PRODUCTS

Product shall be **No Fault Safety Surface** as manufactured and sold by No Fault Sport Group, LLC. No Fault Safety Surface shall consist of synthetic poured-in-place safety surfacing meeting the requirements of this specification and comprised of SBR, TPV and polyurethane binder. It shall be manufactured and installed by No Fault Sport Group, LLC (866-637-7678 www.nofault.com) and its certified installation crews.

NOTE – Other products will be allowed only if prior approved as per Section 2.02 Product Substitutions & Approved Equals

2.01 MATERIALS

A. Polyurethane Binder
   1. Polyurethane Binder for safety surfacing shall be specifically designed for use with rubber granule material for outdoor installations.
   2. No toluene diphenyl isocyanate (TDI) shall be used.
   3. No filler materials shall be used in urethane such as plasticizers and the catalyzing agent shall contain no heavy metals.
   4. Weight of polyurethane shall be no less than 8.5 lbs/gal (1.02 Kg/1) and no more than 9.5 lbs/gal (1.14 Kg/1)
   5. COLOR TINTED BINDER WILL NOT BE ALLOWED.
   6. Aromatic or Aliphatic Polyurethane Binder may be used.

B. SBR (Impact Layer)
   1. Only 100% shredded styrene butadiene rubber may be used
   2. Strands of SBR may vary from 0.5 mm – 2.0 mm in thickness by 3.0 mm – 20 mm in length.

C. TPV (Wear Surface)
   1. TPV material shall be angular granules with a Shore A Hardness of 65°A ± 5, a Tensile Strength equal to or greater than 3.0 Mpa, and an Elongation at Break greater than 400%.
   2. Size of TPV particles shall be not less than 1.00 mm, or greater than 4.0 mm across.
   3. STRAND, SHAVED, CHIPPED OR SHREDDED MATERIAL OF ANY TYPE IS NOT ACCEPTABLE.

2.02 PRODUCT SUBSTITUTIONS & APPROVED EQUALS

A. All product substitutions must be submitted for preapproval at least fourteen (14) days prior to bid opening date. A complete submittal package, as outlined in Section 1.03 Submittals, must be provided before a substitute product will be considered for preapproval. If the product submitted for preapproval cannot meet all requirements of the submittal package, it will not be considered.

B. Once all products submitted for substitution have been reviewed, a list of the approved substitutes will be circulated and made available to bidders.

PART 3 – EXECUTION

3.01 SUB-BASE REQUIRMENTS

A. Owner or Owner's representative shall provide sub-surface in accordance with Manufacturer's recommendation for the project location and application.

B. The base shall be concrete, asphalt, or compacted stone installed in accordance with Manufacturer's written specifications.

C. The base shall have the specific minimum slope (2%) and shall vary no more than 1/8" when measured in any direction with a 10' foot straight edge. Verify that sub-surfacing drainage, if required, has been installed to provide positive drainage.

D. Tolerance of concrete or bitumininous subsurface shall be within 1/8 inch (3.0 mm) in 10 feet (3050 mm). Tolerance of aggregate subsurface shall be within 3/8 inch (10mm) in 10 ft (3050 mm).

E. Verify that aggregate subsurface has been fully compacted to 90- 95 percent or greater.

F. Asphalt base shall be allowed to cure a minimum of fourteen (14) days and new concrete shall be allowed to cure a minimum of seven (7) days prior to commencement of surfacing.

G. All sub-bases shall be approved by Owner or Owner's Representative prior to installation of the safety surface.

H. Alternate sub-base material must have prior approval from Manufacturer.

3.02 PREPARATION

A. Scheduling – No Fault Safety Surface shall be installed after other sub-contractors are complete; the area is free from pedestrian traffic, and under the conditions as outlined in Section 1.06 Project Site Conditions.
B. Cleaning - The entire subsurface shall be clean, dry and free from any foreign and loose material.

3.03 INSTALLATION

A. SBR Cushion Layer
   1. Polyurethane binder and SBR will be mixed on site in a rotating tumbler to ensure components are thoroughly mixed and are in accordance with manufactures recommendations.
   2. Binder shall be not less than 14 percent (14%), nor more than 22 percent (22%), of the total weight of rubber, and shall provide 100 percent (100%) coating of the particles.
   3. The SBR and binder mixture will then be poured-in-place by means of screeding, and hand-trowelled to maintain a seamless application.
   4. Installation method shall use a measured screed rod 1/16” thicker than the required depth.
   5. Whenever practical, SBR cushion layer shall be installed in one continuous pour on the same day. When a second pour is required, fully coat the edge of the previous work with polyurethane binder to ensure 100 percent bond with new work. Apply adhesive in small quantities so that new SBR mixture can be placed before the adhesive dries.
   6. Total depth of the safety surface system throughout the playground equipment use zone shall be as required to meet the applicable critical fall height requirements or as specified by Owner or Architect.
      Therefore, thickness of the SBR cushion layer will be total depth less 3/8” or ½” (minimum required thickness of the TPV wear course layer).
   7. Edges - Surface edges shall be flush with edge of adjacent area or tapered to provide safe transition. When connecting to a concrete curb or border the hardened edge shall be primed with adhesive.
   8. The SBR cushion layer surface shall be porous.

B. TPV Wear Course Layer
   1. Polyurethane binder and TPV will be mixed on site in a rotating tumbler to ensure components are thoroughly mixed and are in accordance with manufactures recommendations.
   2. The polyurethane binder shall be not less than 20 percent (20%) of total weight of rubber used in the wear surface, and shall provide 100 percent (100%) coating of the particles.
   3. The TPV and polyurethane binder mixture will then be poured-in-place by means of screeding, and hand-trowelled to maintain a seamless application.
   4. Installation method shall use a measured screed rod 1/16” thicker than the required depth.
   5. The cap will have a minimum weight of 2.2 pounds per square foot for 3/8” and 2.9 pounds per square foot for ½”.
   6. Thickness of wear surface shall be a minimum 3/8” or ½”.
   7. The wear layer shall be porous.
   8. If graphic designs and color transitions are used, they shall be full wear course depth. Color(s) to be determined by architect.
   9. Edges - Surface edges shall be flush with edge of adjacent area or tapered to provide safe transition.
   10. Large Areas - All areas in excess of 2,000 sq. ft. or that require adjacent color pours will have a cold joint or seam due to the nature of the installation process. Although seldom visible, large areas or adjacent colors require the No Fault Safety Surface material to be installed on separate days.
   11. Color: The wear course shall be a blend of 50% Black and 50% Standard Color (Terra Cotta Red, Tan, Blue or Green) chosen by the architect or Owner during the submittal process, unless otherwise stated on plans.

3.04 PROTECTION

A. The synthetic safety surface shall be allowed to fully cure in accordance with Manufacturer’s instructions. The surface shall be protected by the Owner from all traffic during the curing period of 48 to 72 hours after surface installation is complete, or as instructed by the Manufacturer.

B. Surface installation crew shall be responsible for the protection of No Fault Safety Surface during the installation process. Owner or General Contractor shall be responsible for the protection of the surface during the crew's off hours and during the curing period upon completion of the installation.

3.05 CLEAN UP

A. Manufacturer's installers shall not leave adhesive on adjacent surface or play equipment. Spills of excess adhesive shall be promptly cleaned.
B. Manufacturer's installers shall properly dispose of all material and packing waste before leaving the job site.
C. Owner or contractor shall be responsible for supplying a dumpster at job site for all waste associated with installation of the safety surface.

FOR INDIVIDUAL PROJECT SPECIFICATIONS OR OTHER INFORMATION INCLUDING FALL HEIGHT REQUIREMENTS PLEASE CONTACT
NO FAULT SPORT GROUP, LLC
866-637-7678 (toll free)
WWW.NOFAULT.COM

DEPARTMENT OF ADMINISTRATIVE SERVICES (DAS)
Office of School Construction Grants & Review (OSCG&R)

REQUEST FOR REVIEW OF FINAL PLANS
FORM SCG-042

STATUTORY REF.: C.G.S. Sections 10-282, 10-283, 10-291, 10-294, 10-292

DISTRICT NAME:	FACILITY NAME AND ADDRESS:	STATE PROJECT NUMBER:
Waterbury	Wendell Cross Elementary School 1255 Hamilton Ave Waterbury, CT 06706	151-0295 EA/RR
		PHASE NUMBER: Five of Five

Estimated date* to begin construction July 2021 Estimated date to complete construction August 2021

*** NOTE: Construction must begin within 2 years of grant commitment date to maintain grant eligibility.**

Certification of Approval dates:

	Final Plans & Prof. Cost Estimate	Site Approval (if applicable)
Local Board of Education	1/21/21	/ /
School Building Committee	1/19/21	/ /

We hereby certify that these **final plans and project manual(s)** as prepared for bidding and dated **12/1/20**, and the **professional cost estimate**, completed in accordance with Level 3 of ASTM International Standard E1557, Standard Classification of Building Elements and Related Sitework-UNIFORMAT II for this project, dated **12/1/20**, have been reviewed and approved for this project on the dates shown above.

For the Town or Regional Board of Education:

Charles E. Pagano, Jr. | | **

Chairperson's Name (Type or print) | Signature | Date

For the School Building Committee:

Ann M. Sweeney | | **

Chairperson's Name (Type or print) | Signature | Date

**** Signature dates cannot precede the date on the submitted plans.**

For the Project Architect/Engineering Firm:

Friar Architecture Inc. | | 860.678.1291

Firm Name (Type or print) | Signature | Telephone No.

We hereby request a review of the final Project Plans, Project Manual, Ineligible and Limited Eligible Costs Worksheet (ICW) FORM SCG-4000, and professional cost estimate as noted above. Copies of all the above referenced documents are either attached, or available.

Dr. Verna D. Ruffin | |

Superintendent's Name (Type or print) | Signature | Date

NOTE: NO PHASE OF THIS SCHOOL CONSTRUCTION PROJECT SHALL GO OUT TO BID, AND NO PURCHASE ORDER OVER $10,000.00 SHALL BE ISSUED, UNTIL YOU HAVE RECEIVED WRITTEN NOTIFICATION FROM THE STATE DEPARTMENT OF ADMINISTRATIVE SERVICES (DAS) INDICATING APPROVAL OF FINAL PLANS, PROJECT MANUAL, AND COST ESTIMATE.

N: Website migration\SCG-042 Request for review of plans
FORM SCG-042 Rev. 7/20/17 KD

FORM SCG-042 Request for Review of Final Plans

State Project No. 151-0295 EA/RR

Project Name: Wendell Cross Elementary School

Name of Contact Person:	Telephone:	Date:
Bryce Sens	860.678.1291	1/1/21

Certifications of Local Approval:

I certify that I have local jurisdiction over the **State Building Code** and that the plans and project manual dated 12/1/20 for the above referenced project comply with all applicable building codes.

Gil Graveline

Local Building Official's Name Signature Date

I certify that I have local jurisdiction over the **State Fire Safety Code** and that the plans and project manual dated 12/1/20 for the above referenced project comply with all applicable fire codes.

Michael Achlioptas

Local Fire Marshal's Name Signature Date

I certify that I have local jurisdiction over the **State Health Code** and that the plans and project manual dated 12/1/20 for the above referenced project comply with all applicable health codes.

William Quinn

Local Health Official's Name Signature Date

I certify that I have local jurisdiction over **Section 504 of the Rehabilitation Act of 1973**, and the Uniform Federal Accessibility Standards (UFAS). I further certify that the plans and project manual dated 12/1/20 for the above referenced project comply with all applicable accessibility codes.

Chris Harmon

Local Federal 504 Official's Name Signature Date

NOTES:

1.) THE CERTIFICATIONS OF LOCAL APPROVAL NOTED ABOVE MUST BE OBTAINED, AND ARE REQUIRED TO BE PROVIDED, PRIOR TO RECEIVING APPROVAL-TO-BID BY THE STATE DEPARTMENT OF ADMINISTRATIVE SERVICES (DAS) FOR THIS PROJECT. IF THESE CERTIFICATIONS CANNOT BE OBTAINED LOCALLY, PLEASE CONTACT THE DAS, OFFICE OF SCHOOL CONSTRUCTION GRANTS & REVIEW (OSCG&R) FOR ASSISTANCE.

2.) THE OFFICE OF SCHOOL CONSTRUCTION GRANTS & REVIEW (OSCG&R) APPROVED PROJECT PLANS, PROJECT MANUAL AND COST ESTIMATE MUST BE KEPT ON FILE AT THE LOCAL BOARD OF EDUCATION OFFICE UNTIL THE FINAL GRANT PAYMENT HAS BEEN MADE AND THE DAS AUDIT IS COMPLETE ON THIS PROJECT.

3.) ORIGINAL SIGNATURES ARE REQUIRED ON THIS FORM. IF ORIGINAL SIGNATURES ARE NOT AVAILABLE AT THE PLAN REVIEW MEETING, MAIL OR OVERNIGHT DELIVER THIS COMPLETED FORM TO:
The Office of School Construction Grants & Review
450 Columbus Blvd., Suite 1503
Hartford, CT 06103

Wendell Cross ES - Technology Cost Estimate

State Proect No. 151-0295 EA/RR

Date: 12/1/20

Model No	Description	Qty	Unit Cost	Total Cost	Eligible Cost	Ineligible Cost
hromebooks/Related Equipment						
M720q Tiny	Computer Lab Computer	54	$ 525.00	$ 28,350.00	$ 28,350.00	$ -
T2224d	Computer Lab Monitor	54	$ 119.00	$ 6,426.00	$ 6,426.00	$ -
BE106000-06-CM	Surge Protector	24	$ 15.00	$ 360.00	$ 360.00	$ -
M920z	Interactive Board Computer	54	$ 925.00	$ 49,950.00	$ 49,950.00	$ -
DP2HDMI	DisplayPort to HDMI Adapter	54	$ 21.00	$ 1,134.00	$ 1,134.00	$ -
BE106000-06-CM	Surge Protector	54	$ 15.00	$ 810.00	$ 810.00	$ -
M720q Tiny	Office Computer	18	$ 700.00	$ 12,600.00	$ -	$ 12,600.00
T27h	Office Computer Monitor	32	$ 279.00	$ 8,928.00	$ -	$ 8,928.00
BE106000-06-CM	Surge Protector	18	$ 15.00	$ 270.00	$ 270.00	$ -
M920z	Student Computer	5	$ 925.00	$ 4,625.00	$ 925.00	$ 3,700.00
BE106000-06-CM	Surge Protector	3	$ 15.00	$ 45.00	$ 45.00	$ -
M920z	POS Food Services Computer	1	$ 1,100.00	$ 1,100.00	$ 1,100.00	$ -
VB554A-BL1616	POS Food Services Computer Cash Drawer	1	$ 150.00	$ 150.00	$ 150.00	$ -
Mini term 910-RJ	POS Food Services Pin Pad	1	$ 250.00	$ 250.00	$ 250.00	$ -
BE106000-06-CM	Surge Protector	1	$ 15.00	$ 15.00	$ 15.00	$ -
ThinkPad T495	Laptop (teacher/staff)	53	$ 750.00	$ 39,750.00	$ -	$ 39,750.00
T495	Laptop Carry Case	53	$ 20.00	$ 1,060.00	$ -	$ 1,060.00
Connect 36	30-Chromebook Charging Station	32	$ 1,200.00	$ 38,400.00	$ 38,400.00	$ -
ThinkPad 13	Student Chromebook w/ Touchscreen	677	$ 475.00	$ 321,575.00	$ -	$ 321,575.00
B210	Student Chromebook Rugged Carry Case	677	$ 22.00	$ 14,894.00	$ -	$ 14,894.00
477mdn	Multifunction Printer	3	$ 388.00	$ 1,164.00	$ 1,164.00	$ -
m653n	Color Laser Printer	2	$ 1,797.00	$ 3,594.00	$ 3,594.00	$ -
Service	Computers/Laptops/Carts/Related Equipmer	1	$ 32,000.00	$ 32,000.00	$ 32,000.00	$ -
not used	not used		**Subtotal:**	**$ 567,450.00**	**$ 164,943.00**	**$ 402,507.00**
ital Signage/Related Equipment						
IPF7750	75" Interactive Board	54	$ 2,837.00	$ 153,198.00	$ 153,198.00	$ -
BalanceBox 400-70	Adjustable wall mount	6	$ 750.00	$ 4,500.00	$ 4,500.00	$ -
TBD	AV Cabling Package	54	$ 300.00	$ 16,200.00	$ 16,200.00	$ -
F8V234	Audio Stereo Cable	54	$ 4.00	$ 216.00	$ 216.00	$ -
65UN7300PUF	Digital Signage Display	2	$ 700.00	$ 1,400.00	$ 1,400.00	$ -
WMK-047-2	Wall Mount	2	$ 75.00	$ 150.00	$ 150.00	
Service	INTBD/Audio Visual Installation	1	$ 22,000.00	$ 22,000.00	$ 22,000.00	$ -
not used	not used		**Subtotal:**	**$ 197,664.00**	**$ 197,664.00**	**$ -**
C9500-24Y4C-A	Network Core Switch	2	$ 11,500.00	$ 23,000.00	$ 23,000.00	$ -
CON-SNT-C95024YA	Cisco Smartnet service	2	$ 2,500.00	$ 5,000.00	$ -	$ 5,000.00
PWR-C4-950WAC-R/2	Secondary Power Supply	2	$ 1,050.00	$ 2,100.00	$ 2,100.00	$ -
C9500-DNA-L-A-3Y	Network Switch Operating Software	2	$ 4,100.00	$ 8,200.00	$ -	$ 8,200.00
CAB-TA-NA	Power Cable	4	$ 39.00	$ 156.00	$ 156.00	$ -
QSFP-H40G-CU1M=	Stacking Cable	2	$ 150.00	$ 300.00	$ 300.00	$ -
SFP-H10GB-CU1M=	1M Optics Cable	1	$ 55.00	$ 55.00	$ 55.00	
SFP-10GB-SR-S=	SFP Modules	13	$ 155.00	$ 2,015.00	$ 2,015.00	$ -
SFP-H10GB-CU3M=	3M Optics Cable	4	$ 60.00	$ 240.00	$ 240.00	$ -
AIR-AP1562I-B-K9	Outdoor WAP	4	$ 975.00	$ 3,900.00	$ 3,900.00	$ -
CON-SNT-AIRAPBPI	Cisco Smartnet service	4	$ 49.00	$ 196.00	$ 196.00	$ -
AIR-ACC1530-PMK1	Outdoor WAP Mount kit	4	$ 80.00	$ 320.00	$ -	$ 320.00
Service	Installation of Network Equipment	1	$ 30,000.00	$ 30,000.00	$ 30,000.00	
not used	not used		**Subtotal:**	**$ 75,482.00**	**$ 61,962.00**	**$ 13,520.00**
6920 IP Phone	Telephone	62	$ 295.00	$ 18,290.00	$ 18,290.00	$ -
6900/6905	Wall Mount Telephone	21	$ 290.00	$ 6,090.00	$ 6,090.00	$ -
6940 IP Phone	Telephone (Receptionist)	1	$ 550.00	$ 550.00	$ 550.00	$ -
6970 IP	Conference Room Phone	2	$ 825.00	$ 1,650.00	$ 1,650.00	$ -
3300 CX(i) II Controller	Telephone System Gateway	1	$ 5,500.00	$ 5,500.00	$ 5,500.00	$ -
Labor and Install	Phone system installation	1	$ 4,000.00	$ 4,000.00	$ 4,000.00	
not used	not used	0	$ -	$ -	$ -	$ -
			Subtotal:	**$ 36,080.00**	**$ 36,080.00**	**$ -**
PE R540	Network Server	1	$ 3,800.00	$ 3,800.00	$ 3,800.00	$ -
			Subtotal:	**$ 3,800.00**	**$ 3,800.00**	**$ -**
					$ 464,449.00	$ 416,027.00

Grand Total	**$ 880,476.00**

FF&E- Estimate

Project Number: 051-0295 EA/RR
Date: 12/1/20
Project Name: Wendell Cross Elementary School
Project Phase: 5 of 5

Category	Description		Eligible	Ineligible	Total
	FIXTURES, FURNISHINGS & EQUIPMENT				
BC, C, D, EQ, ST, T	Classroom Furniture		$ 620,129.85	$ -	$ 620,129.85
T	Cafeteria Furniture		$ 43,000.00	$ -	$ 43,000.00
C, D, F, ST, T	Administrative Furniture		$ 70,489.33	$ -	$ 70,489.33
ST	Storage/ Custodial Closets		$ 5,000.00	$ -	$ 5,000.00
EQ	Residential Appliances		$ 7,000.00	$ -	$ 7,000.00
EQ	Flags, Flag Poles, Area Rugs		$ 900.00	$ 9,300.00	$ 10,200.00
KITCH	Kitchen Smallwares		$ -	$ 6,217.75	$ 6,217.75
EQ	Nurse Equipment			$ 1,577.00	$ 1,577.00
CUST	Custodial Equipment		$ 62,322.99	$ 20,562.82	$ 82,885.81
	Subtotal FF&E		$ 808,842.17	$ 37,657.57	$ 846,499.74
	Soft Costs FF&E (Included in Phase 1)		$ -	$ -	$ -
	Total FF&E		$ 808,842.17	$ 37,657.57	**$ 846,499.74**

Wendell Cross Elementary School

1255 Hamilton Avenue
Waterbury, CT

Furniture, Fixtures & Equipment

Friar Project # 2018-115A
State Project No. 151-0295 EA/RR
Phase 5 of 5
December 1, 2020

Volume 2
Bid

Friar Architecture
21 Talcott Notch Rd
Farmington, CT 06032



"INVITATION FOR BID"

"Volume 2- Custodial Equipment"

SPECIFICATIONS AND BID FORMS
FOR THE

Wendell Cross Elementary School
1255 Hamilton Avenue
Waterbury, CT 06706

State Project # 151-0295 EA/RR, Phase 5 of 5

ANY INQUIRIES CONCERNING THE SPECIFICATIONS
SHOULD BE DIRECTED TO:

Chris Harmon: charmon@waterbury.k12.ct.us
Rosh Maghfour: rmaghfour@waterbury.k12.ct.us

SEALED BIDS WILL BE RECEIVED NO LATER THAN
Month XX, 2021 at 11:00am

Waterbury City Hall Building
Attn: Kevin McCaffery, Director of Purchasing
235 Grand Street 1rst Floor
Waterbury, CT 06702

MARK SEALED PROPOSAL ENVELOPE CLEARLY:

A Bid for
"Custodial Equipment".

THE CITY OF WATERBURY

INSERT TITLE

INVITATION TO BID

Sealed Bids for **INSERT TITLE** will be received by the City of Waterbury at the office of the Director of Purchasing, Room 103, City Hall Building, 235 Grand Street, Waterbury, CT 06702 until **XX a.m.** on **XX XX, 2015** and at that time and place will be publicly opened and read aloud. No bids will be received after **XX a.m**. on the day the bids are to be opened.

The Work (**or Item(s) to be procured**) consist(s) of: **INSERT DESCRIPTION OF WORK OR ITEM(S) TO BE PROCURED.**

Bids must be enclosed in an opaque sealed envelope and plainly marked with the name of the Project Title **("INSERT TITLE")** and shall contain the name and address of the Bidder on the envelope.

{AS APPLICABLE – MANDATORY WHEN ESTIMATE IS OVER $50,000.00, OPTIONAL WHEN ESTIMATE IS EQUAL TO OR LESS THAN $50,000.00} = Each Bid shall be submitted in accordance with the Instructions to Bidders and be accompanied by a Bid Security in the amount of **ten (10) percent** of the Total Bid Price.

The Bidder to whom a contract is offered, must furnish to the City, if that contract has a total cost greater than $50,000.00, a 100 percent Performance Bond with a surety, and in a form, acceptable to the City. In the City's sole discretion, it may also require a 100 percent Payment Bond and/or other additional security with a surety, and in a form, acceptable to the City.

Complete instructions for filing Bids are included in the Instructions to Bidders.

After review of the factors set forth in the Instructions to Bidders, the City reserves the right to reject any and all Bids, to make an award, or to decline to make an award.

{AS APPLICABLE} A mandatory pre-bid conference will be held at XXXX at XX:00 a.m/p.m. on XX, 2015. Attendance at the pre-bid conference by a representative of each Bidder is mandatory.

{AS APPLICABLE} This contract is subject to state set-aside and contract compliance requirements.

{AS APPLICABLE} State funding for this contract is anticipated to be $XXX,XXX.XX {or X%}.

Contact Rocco Orso, Director of Purchasing, at 203-574-6748 for further information.

END OF SECTION

THE CITY OF WATERBURY

INSERT TITLE

TABLE OF CONTENTS

SECTION 00100 - INSTRUCTIONS TO BIDDERS

SECTION 00300 – ADDENDUM ACKNOWLEDGEMENT

SECTION 00400 – BID FORM

SECTION 00500 – TECHNICAL SPECIFICATIONS

THE CITY OF WATERBURY

INSERT TITLE

SECTION 00100

INSTRUCTIONS TO BIDDERS

ARTICLE 1. QUALIFICATIONS OF BIDDERS

1.1 In evaluating Bids, the City of Waterbury ("the CITY") will consider the qualifications of only those Bidders whose Bids, among other factors, are in compliance with the requirements set forth elsewhere in the Bid Documents.

ARTICLE 2. COPIES OF BID DOCUMENTS

2.1 Complete sets of Bid Documents shall be used in preparing Bids; neither the CITY nor it's representative assume any responsibility for errors or misinterpretations resulting from the use of incomplete sets of Bid Documents.

2.2 The CITY and its representative in making copies of Bid Documents available do so only for the purpose of obtaining Bids on the Work and do not confer a license or grant for any other use.

ARTICLE 3. EXAMINATION OF BID DOCUMENTS AND SITE

3.1 Before submitting a Bid, each Bidder must (a) examine the Bid Documents thoroughly, (b) familiarize itself with all Federal, State and local laws, ordinances, rules and regulations that may in any manner affect cost, progress or performance of the Work; and (c) study and carefully correlate the Bidder's observations and findings with the requirements of the Bid Documents.

3.2 The submission of a Bid will constitute an incontrovertible representation by the Bidder that it has complied with every requirement of this Article 3 and that the Bid Documents are sufficient in scope and detail to indicate and convey all terms and conditions necessary for the Bidder's proposed performance of the Work.

ARTICLE 4. INTERPRETATIONS

4.1 All questions about the meaning or intent of the Bid Documents must be submitted to the CITY's eProcurement website **by (DATE, TIME)**. [NOTE TO USING AGENCY – CHANGE THIS TIME FRAME AS NECESSARY. THIS DATE SHOULD BE AFTER THE PRE-BID MEETING}

4.2 The CITY will issue written clarifications or interpretations by Addenda online at the CITY's eProcurement website not later than **(DATE, TIME)**. [NOTE TO USING AGENCY – CHANGE THIS TIME FRAME AS NECESSARY. THIS DATE SHOULD PROVIDE ENOUGH TIME FOR BIDDERS TO REVIEW AND SUBMIT BID}
Only information issued by such City written Addenda will be binding. Oral and other clarifications or interpretations will not be binding and will be without legal effect.

4.3 Each Bidder shall be responsible for determining that it has received all Addenda issued and shall acknowledge receipt of all Addenda on the Addendum Acknowledgment Form and the Bidder shall list therein all written Addenda number(s) issued by the CITY.

ARTICLE 5. PRE-BID CONFERENCE {IF APPLICABLE – OTHERWISE – NOT USED}

5.1 **A mandatory pre-bid conference will be held at the time and place indicated in the Invitation to Bid to discuss the requirements of the Bid Documents. Attendance at the pre-bid conference is mandatory by a representative of each perspective Bidder.**

ARTICLE 6. BID FORM

6.1 Each Bid shall be submitted on the Bid Form included in Section 00400 of the Bid Documents. The Bid Form shall be removed from the Bid Documents, filled in as required below, and submitted to the CITY. Bidders must fill in all blank spaces on the Bid Form for Bid prices, including without limitation unit prices, extended prices and total price or the Bid will not be considered and shall be void

6.2 Bid Forms shall be completed in ink. The Bid price of each item on the form shall be stated in words and in figures. If unit prices are required on the Bid Form, discrepancies between unit prices and their respective total amounts will be resolved in favor of the unit prices. Discrepancies between the indicated sum of any column of figures and the correct sum thereof will be resolved in favor of the correct sum.

6.3 All names shall be typed or printed below the signature.

6.4 The name and address to which communications regarding the Bid are to be directed shall be shown.

6.5 One (1) original, **one (1) paper copy {as needed}**, as well as a copy of the original Bid in pdf format on a CD or flash drive, Each Bid shall be submitted in a sealed opaque envelope bearing on the outside the name of Bidder, its address, and the Project Title for which the Bid is submitted. (If forwarded by mail, Bid and sealed envelope marked as described above shall be enclosed in another envelope with the notation "BID ENCLOSED" on the face and addressed as indicated in the Invitation to Bid.)

ARTICLE 7. RECEIPT OF BIDS

7.1 Sealed Bids for the Work of this Project will be received at the time and place indicated in the Invitation to Bid.

7.2 The CITY, in its sole discretion, may refuse to consider any Bid not prepared and/or not submitted in accordance with the Bid Documents. **Bids will not be received or accepted by the CITY from perspective Bidders who did not attend a mandatory pre-bid conference.**

7.3 Bidders are cautioned that it is the responsibility of each individual Bidder to assure that its Bid is in the possession of Rocco Orso, Director of Purchasing, or an alternate designated by him, prior to the stated time and at the place of the Bid Opening. The CITY is not responsible for Bids delayed by mail and/or delivery services of any nature.

ARTICLE 8. MODIFICATION AND WITHDRAWAL OF BIDS

8.1 Bids may be modified only by an appropriate document duly executed in the same manner that a Bid must be executed and delivered to the place where Bids are to be submitted prior to that time scheduled by the CITY for the opening of Bids.

8.2 A Bid may be withdrawn by the Bidder prior to the scheduled time (or authorized postponement thereof by the CITY) for the opening of Bids.

8.3 **Any Bid received after the time and date specified as the time for the CITY's opening of Bids shall not be considered. Once bids are opened by the CITY, no Bidder may withdraw its Bid for a period of ninety (90) days {as needed}, excluding Saturdays, Sundays and legal holidays, after the actual date of the CITY's opening of the Bids.**

ARTICLE 9. LOWEST RESPONSIBLE BIDDER

9.1 A contract may be awarded to the Lowest Responsible Bidder. The term "Lowest Responsible Bidder" as used herein shall mean the Bidder whose Total Bid Price is the lowest of those Bidders possessing, without limitation, the skill, ability, expertise, experience, qualifications and integrity necessary for the faithful performance of the Work, as determined by the CITY.

9.2 After review of these and other factors, including without limitation, responsiveness, qualifications and price, the CITY reserves the right to reject any and all Bids, to decline to make an award, to waive any and all informalities if it is in the CITY's best interest to do so. The CITY reserves the right to disregard all nonconforming, nonresponsive, conditional Bids, and Bids taking exception(s) to the Bid Documents.

9.3 A Bid which includes, for any Item(s), a Bid Price that is abnormally low or high may be rejected in its entirety.

9.4 The CITY reserves the right to reject the Bid of any Bidder that the CITY considers not to possess the qualities set forth in Article 11.1 herein.

ARTICLE 10. PURCHASE ORDER ISSUANCE/AWARD AND EXECUTION OF CONTRACT (AS APPLICABLE)

10.1 If a purchase order(s) is to be issued, it will be issued within ninety (90) calendar days, excluding Saturdays, Sundays, and legal holidays, after the actual date of the opening of the Bids.

10.2 If a contract is to be awarded, the CITY will give the Lowest Responsible Bidder a Notice of Award within ninety (90) calendar days, excluding Saturdays, Sundays, and legal holidays, after the actual date of the opening of the Bids.

10.3 Subsequent to a Notice of Award, if any, to the Lowest Responsible Bidder (hereinafter “Contractor”), multiple unsigned copies of a contract and all other applicable contract documents will be made available to the Lowest Responsible Bidder for its execution. Within five (5) calendar days {as needed}, excluding Saturdays, Sundays and legal holidays, thereafter, Contractor shall sign and return all copies of the contract and all other applicable contract documents, including without limitation, all required bonds and

certificates of insurance to the CITY. Thereafter, upon all required reviews, approvals, and the CITY's signature, the CITY will deliver one fully signed copy of the contract to Contractor. The CITY shall incur no obligations, contractual or otherwise, unless and until the CITY signs a contract, delivers a signed copy of the contract to the Contractor, and the CITY delivers to the Contractor the CITY's written notice to proceed.

ARTICLE 11. ACCESS TO SITE

11.1 Representatives of the State and any local or federal agencies having an interest in the Work shall have access to the Work wherever it is in preparation or progress and the Contractor shall provide proper facilities for such access and inspection.

ARTICLE 12. SALES TAX

12.1 The goods and services to be provided under any contract or purchase order awarded pursuant to this Invitation to Bid is exempt from the sales taxes of the State of Connecticut.

ARTICLE 13. INSURANCE

13.1. The Contractor shall not commence work under this Contract until all insurance required under this Section 13 has been obtained by the Contractor and such insurance has been approved by the City. The Contractor shall not allow any subcontractor to commence work on any subcontract until all insurance required of any such subcontractor has been so obtained and approved by the City. Insurance shall be provided by insurers, satisfactory to the City and authorized to do business in the State of Connecticut, an "A-" Best's Rating and at least a Class V3 or better financial size category as shown in the most current A.M. Best Company ratings.

13.2. At no additional cost to the City, the Contractor shall purchase and maintain the insurance coverages set forth below which shall protect the City from claims which may arise out of or result from the Contractor's obligation under this Contract, whether such obligations are the Contractor's or subcontractor or person or entity directly or indirectly employed by said Contractor or subcontractor, or by any person or entity for whose acts said Contractor or subcontractor may be liable.

13.3. Each insurance policy shall state that the insurance company shall agree to investigate and defend the insured against all claims for damages, even if groundless. If any insurance required herein is to be issued or renewed on a claims made form as opposed to an occurrence form, the retroactive date for coverage shall be no later than the commencement date of this Contract and shall provide that in the event of cancellation or non-renewal, the discovery period for insurance claims ("Tail Coverage") shall be available for at least 60 months.

13.4. The following policies with stated limits shall be maintained, in full force and effect, at all times during which the services are to be performed by the Contractor:

13.4.1 General Liability Insurance: $1,000,000.00 per occurrence, **$2,000,000.00** aggregate and **$2,000,000.00** Products and completed operations aggregate

Providing coverage to protect the City for all damages arising out of bodily injuries, sickness to or death of all persons in any one accident or occurrence and for all damages arising out of destruction of property in any one accident or occurrence.

13.4.2 Automobile Liability Insurance: **$1,000,000.00** combined single limit (CSL)
Providing coverage to protect the City with respect to claims for damage for bodily injury and or property damage arising out of ownership, maintenance, operation, use or loading and unloading of any auto including hired & non-owned autos.

13.4.3 Workers' Compensation: Statutory Limits within the State of Connecticut: Employers' Liability:
EL Each Accident **$500,000.00**
EL Disease Each Employee **$500,000.00**
EL Disease Policy Limit **$500,000.00**

Contractor shall comply with all State of Connecticut statutes as it relates to workers' compensation.

13.4.4 Excess/Umbrella Liability Insurance: Excess or Umbrella insurance coverage that follows form or sits over General Liability, Automobile Liability and Workers Compensation insurances. **$1,000,000.00** each occurrence and **$1,000,000.00** Aggregate.

13.4.5 Builder's Risk Insurance: coverage equaling $_____, the monetary value of the construction component of the Project.
"All Risk" Builders Risk insurance (also know as "course of construction") coverage with limits equal to or better than the maximum possible loss of all materials of construction used or contemplated under this Contract, including all materials in transit and all materials in storage wherever stored and the value of any and all subsequent Contract changes. This insurance shall include the interests of the City, the Contractor and any and all subcontractors. If deemed necessary by the City's Risk Manager, this insurance shall also include coverage for the total value of the Project's constructed property and shall be valid until a certificate of occupancy is issued. Upon the issuance of said certificate, the City will assume responsibility for insuring said property.

13.4.6 Contractors Pollution Liability Insurance: $1,000,000.00 each claim, **$2,000,000.00** aggregate coverage.
The foregoing per claim coverage plus appropriate aggregate coverage depending on the size of the job for contractor caused pollution events such as asbestos or lead abatement, but not limited to only these pollution causes of loss.

13.5. Failure to Maintain Insurance: In the event the Contractor fails to maintain the minimum required coverage as set forth herein, the City may at its option purchase same, and offset the Contractor's invoices for the cost of said insurance.

13.6. Cancellation: The City of Waterbury shall receive written notice of cancellation from the Contractor at least thirty (30) calendar days prior to the date of actual cancellation, regardless of the reason for such cancellation.

13.7. Certificates of Insurance: The Contractor's General, Automobile, Builder's Risk and Excess/Umbrella Liability Insurance policies shall be endorsed to add the City and _____as an additional insured and provide waiver of subrogation on all policies except Builder's Risk and Pollution Liability. The insurance afforded the additional insured shall be primary and non-contributory insurance and the coverage and limits provided under the Contractor's policies shall not be reduced or prorated by the existence of any other insurance applicable to any loss the additional insured may have suffered. Prior to the execution of this Contract by the City, the Contractor shall furnish to the City, subject to City approval, certificate(s) of insurance and Additional Insured Endorsement and Waiver of Subrogation Endorsement verifying the above coverages, including the naming of the City of Waterbury, as follows: **"The City of Waterbury and _____ are listed as additional insured on all lines of coverage except Pollution Liability and waiver of subrogation applies to all lines of coverage except Pollution Liability and Builder's Risk as their interest may appear".** The City's Invitation to Bid Number must be shown on the certificate of insurance to assure correct filing. The Contractor must supply replacement/renewal certificates at least 30 days prior to the expiration of the policy(ies). Said certificates shall contain a provision that coverage afforded under the policies shall not be cancelled or reduced for any reasons unless notice of than thirty (30) calendar days has been mailed to the City's Using Agency and a copy to the City's Office of Corporation Counsel, 235 Grand Street, Waterbury, CT 06702.

13.8. No later than thirty (30) calendar days after receipt by the Contractor, the Contractor shall deliver to the City a copy of the Contractor's insurance policies and endorsements and riders.

ARTICLE 14. PURCHASE ORDER/CONTRACT TIME

14.1 BIDDER agrees and covenants that the Contract Time shall commence upon delivery of the CITY's written notice to proceed, which shall occur after contract execution by both parties. {IF CONTRACT – OTHERWISE NOT USED}

14.2 BIDDER agrees and covenants that the purchase order time shall commence upon issuance and terminate on **????**, unless the purchase order provides otherwise. {IF PURCHASE ORDER – OTHERWISE NOT USED}

ARTICLE 15. BID DOCUMENTS.

15.1 Bid Documents shall be any and all sections, terms, conditions, forms, drawings, data, etc., listed in the Table of Contents of the Bid Documents.

ARTICLE 16. Federal, State and Local Employment Requirements.

16.1 Contractors, if applicable, shall be obligated to fully comply with the attached Hiring of Waterbury Residents on Certain Publicly-Funded Construction Projects, i.e. City of Waterbury Ordinances Chapter 34 ("Good Jobs Ordinance"), Federal Davis-Bacon Act, Federal American Recovery and Reinvestment Act of 2009, and the Housing and Urban Development Section 3 Clause, all as further specified in the attached City of Waterbury

Contract form. Also attached hereto, is a full copy of the aforesaid City of Waterbury Ordinance, commonly referred to as the "Good Jobs Ordinance".

16.2 The contractor who is selected to perform this municipal public works project, funded in whole or part by the State, must comply with CONN. GEN. STAT. §§ 4a-60, 4a-60a, 4a-60g, and 46a-68b through 46a-68f, inclusive, as amended by June 2015 Special Session Public Act 15-5. An Affirmative Action Plan must be filed with and approved by the Commission on Human Rights and Opportunities prior to the commencement of construction.

State law requires a minimum of twenty-five (25%) percent of the state-funded portion of the contract for award to subcontractors holding current certification from the Connecticut Department of Administrative Services ("DAS") under the provisions of CONN. GEN. STAT. § 4a-60g, as amended. (25% of the work with DAS certified Small and Minority owned businesses and 25% of that work with DAS certified Minority, Women and/or Disabled owned businesses.) The contractor must demonstrate good faith effort to meet the 25% set-aside goals.

For municipal public works contracts, the contractor must file a written or electronic non-discrimination certification with the Commission on Human Rights and Opportunities. Forms can be found at http://www.ct.gov/opm/cwp/view.asp?a=2982&q=390928&opmNav_GID=1806.

END OF SECTION

THE CITY OF WATERBURY

INSERT TITLE

SECTION 00300

ADDENDUM ACKNOWLEDGEMENT FORM

NOTE: The Bidder is to complete, sign and date this form. The completed form shall be submitted with the BID FORM in accordance with ARTICLE 6 of the INSTRUCTIONS TO BIDDERS.

The undersigned, as Bidder's Authorized Representative, acknowledges receipt of the following Addenda and that the modifications to the Bid Documents noted therein have been considered and all costs related thereto are included in the Bid Prices:

Addendum # _____ Dated Issued _____

Addendum # _____ Dated Issued _____

Addendum # _____ Dated Issued _____

Addendum # _____ Dated Issued _____

Addendum # _____ Dated Issued _____

Addendum # _____ Dated Issued _____

Business Name of Bidder: _____
(Print or Type)

By Bidder's Authorized Representative:

Signature: _____

Name: _____
(Print or Type)

Title: _____
(Print or Type)

Date: _____
(Print or Type)

END OF SECTION

THE CITY OF WATERBURY

INSERT TITLE

SECTION 00400

BID ITEMS (EXAMPLE ONLY, COMPLETE AS APPROPRIATE FOR THE PROJECT)

BID ITEM	AMOUNT BID IN WORDS	AMOUNT BID IN NUMBERS
1.0	Removal of Existing Concrete Dam _____ _____ Lump Sum	$ .00
2.0	Removal of Existing Flood Control Wall _____ _____ Lump Sum	$ .00
3.0	Class "B" Soil Excavation 510 CY at _____ _____ per CY	$ .00
4.0	Miscellaneous Work to be Completed _____ _____ Lump Sum	$ .00
Sub Total Bid Items 1.0 – 4.0 (in words) _____ _____		**$ .00**

5.0	Allowance for Changes; 5% of Sub Total Bid Items 1.0 – 4.0 (in words) _____ _____ ALLOWANCE	$ .00
TOTAL BID PRICE ITEMS 1.0 – 5.0 (in words) _____ _____		**$ .00**

In the event of mathematically incorrect calculations of individual items or totals, the mathematically correct amount using the estimated quantities and unit prices (in words) shall govern in determining the TOTAL BID PRICE.

The undersigned also agrees that the quantities indicated are for Bid comparison purposes only and are not represented to be actual quantities for completion of the Work.

The undersigned hereby certifies under the penalties of perjury that this Bid is in all respects bona fide, fair and made without collusion or fraud with any other person. As used in this section, the work "person" shall mean any natural person, joint venture, partnership, corporation, or other business or legal entity.

_____
Social Security Number
or Federal Identification Number

Signature of Individual or
Corporate Name:

_____
Corporate Officer
(if applicable)

Notice of acceptance should be mailed, telegraphed or delivered to the (undersigned Bidder at the following address):

_____
(Name)

By:_____
(Title)

_____
(Business Address)

_____
(City, State, Zip Code)

Date: _____

Note: If the Bidder is a corporation, indicate State of incorporation under signature, and affix corporate seal; if a partnership, give full names and residential addresses, if different from business address.

The following documents are attached to and made a condition of the Bid:

a. Instructions to Bidders – Section 00100
b. Addendum Acknowledgement – Section 00300
c. Bid Form – Section 00400
d. Technical Specifications – Section 00500

END OF SECTION

THE CITY OF WATERBURY

INSERT TITLE

SECTION 00500

TECHNICAL SPECIFICATIONS

Bid Recap- Category Summary Sheet

Wendell Cross Elementary School

State Project No.: 151-0295-EA/RR Phase 5 of 5
Custodial Equipment

Name of Bidder:_____

****NOTE: Bidder must bid entire category**

Category Item #	Total Quantity	Product Description	Bid Unit Price	Bid Total Price
CUST-1	2	Snow Blower	$	$
CUST-2	1	Compact Utility Loader	$	$
CUST-3	1	Force Blower	$	$
CUST-4	1	Ride on Lawnmower	$	$
CUST-5	1	Self Propelled Mower	$	$
CUST-6	2	Weedwacker	$	$
CUST-7	1	Backpack Blower	$	$
CUST-8	2	Handheld leaf blowers	$	$
CUST-9A	1	KombiSystem bristle Brush attachment	$	$
CUST-9B	1	KombiSystem pole prunerattachment	$	$
CUST-9C	1	KombiSystem straight hedge trimmer atachment	$	$
CUST-9	1	KombiSystem PWRHD	$	$
CUST-10	1	Floor Cleaner Machine	$	$
CUST-11	1	Floor Scrubber	$	$
CUST-12	1	All Purpose Cleaner	$	$
CUST-13	1	Platform Truck	$	$
CUST-14	1	Floor Machine 20”	$	$
CUST-15	2	Floor Burnisher	$	$
CUST-16	4	12” Upright Vacuum	$	$
CUST-17	2	Backpack Vacuum	$	$
CUST-18	1	Portable Extractor	$	$
CUST-19	1	3200 PSI Powerwasher	$	$
CUST-20	2	HEPA Backpack Vacuum	$	$

CUST-21	1	Standard Bucket	$	$
CUST-21A	1	Dingo adjustable forks	$	$
CUST-22	1	Single Wheel Sulky	$	$
CUST-23	6	Janitor's Cart	$	$
CUST-24	4	Pro Carpet Dryer	$	$
CUST-25	2	Desk Lift	$	$
CUST-26	2	Plastic Tilt Truck	$	$
CUST-27	150	10 Gallon Trash Cans	$	$
CUST-28	20	55 Gallon Trash Pails	$	$
CUST-29	20	Quite Dollies	$	$
			$	$
			$	$
			$	$
			$	$
			$	$
			$	$
			$	$
			$	$
			$	$
			$	$
			$	$
			$	$
			$	$
			$	$
			$	$
			$	$
			$	$
			$	$
			$	$
			$	$
			$	$
			$	$
			$	$
			$	$
			$	$
			$	$
			$	$

Bid Total Price $_____

Written Amount: _____

Combination Bid for the following Bid Package Categories: If bidding more than one complete category and the combination of categories will be discounted further than individual categories, include discounted combined total in the "Form of Proposal".

ROOM NAME/NUMBER	ITEM ID	QTY	MANUFACTURER	DESCRIPTION	MODEL NUMBER	COLOR	SIZE	STATE CONTRACT #
EXTERIOR / B221	CUST-1	2	Ariens	Snowblower 21" SSR PRO	Mfr: 926077 SKU: 926077	Orange	21"	BID
EXTERIOR / B221	CUST-2	1	Toro	Compact Utility Loader	TX 525 SKU:Z22324	Red		BID
EXTERIOR / B221	CUST-3	1	Billy Goat	Force Blower	F1302SPH SKU:ZF1302SPH	Orange		BID
EXTERIOR / B221	CUST-4	1	Exmark	Ride on Lawn Mower	Turfe Tracer SKU:TTS600GKA523E0	Red	52"	BID
EXTERIOR / B221	CUST-5	1	Toro	Self Proepelled Mower	20334 SKU:Z20332	Red		BID
EXTERIOR / B221	CUST-6	2	Shindaiwa	Weedwacker	ZT262 SKU:ZT262	Red		BID
EXTERIOR / B221	CUST-7	1	Echo	Backpack Blower	PB8010T	Orange		BID
EXTERIOR / B221	CUST-8	2	Echo	Handheld leaf blower	PB-2620	Orange		BID
CUST / C246	CUST-9A	1	Stihl	KombiSystem bristle Brush attachment	KB-KM SKU:Z46017404901			BID
CUST / C246	CUST-9B	1	Stihl	KombiSystem pole prunerattachment	HT-KM SKU:Z41822000158			BID
CUST / C246	CUST-9C	1	Stihl	kombiSystem straight hedge trimmer atachment	HL-KM SKU:Z42437405001			BID
CUST / C246	CUST-9	1	Stihl	KombiSystem PWRHD	KM131			BID
CUST / B242	CUST-10	1	Clarke	Floor Cleaner Machine	Clark CA60 Scrubber	Blue with AGM Batteries		BID
CUST / B242	CUST-11	1	Clarke	Floor Scrubber	Focus II Microrider with AGM batteries	Blue		BID
CUST / B242	CUST-12	1	Clarke	All Purpose Cleaner	TFC 400	Blue		BID
CUST / B242	CUST-13	1	Rubbermade	Platform Truck	RB-4436			BID
CUST / C246	CUST-14	1	Clarke	Floor Machine 20"	CLARKE2015HD			BID
CUST / B242	CUST-15	2	Clarke	Floor Burnisher	clarke1500 Ultraspeed Pro	Blue		BID
CUST / B242 & 246 (2 IN EACH)	CUST-16	4	Sanitaire	12" Upright Vacuum W/ 7 AMP MOTR.	EK-SC886E	Red		BID
CUST / B242 & 246 (1 IN EACH)	CUST-17	2	Ultimate Solutions	Backpack vaccum	Mercury Ace Backpack 88-88888			BID
CUST / B242	CUST-18	1	Clarke	Portable Extractor	EX20			BID
EXTERIOR / B221	CUST-19	1	Mi-T-M	3200 PSI Powerwasher	016977175047 SKU:189105	Black		BID
CUST / B242 & 246 (1 IN EACH)	CUST-20	2	Clarke	6 Qaurts HEPA comfort Backpack vaccum	CK-9060610010			BID
EXTERIOR / B317	CUST-21	1	Toro	Standard Bucket	Z22409	Red		BID
EXTERIOR / B317	CUST-21A	1	Toro	Dingo adjustable forks	Z22341	black		BID
EXTERIOR / B317	CUST-22	1	EXMARK	Singhle Wheel Sulky	Z116-7223	Grey		BID
B242 / B245/ B222 / C246 / C124 / B317	CUST-23	6	Rubbermaid	Janitor Cart 2000 w/ Zippered Yellow Vinyl Bag	RB-6173	BLCK		BID

ROOM NAME/NUMBER	ITEM ID	QTY	MANUFACTURER	DESCRIPTION	MODEL NUMBER	COLOR	SIZE	STATE CONTRACT #
CUST / C124	CUST-24	4	Direct Air	Pro Carpet Dryer	AM2400D			BID
GYM STORAGE/ B222	CUST-25	2	Raymond Products	Mighty King -Desk Lift	Mfr. Model: 2300	Red	Depth: 16" Width: 32" Casters:3"	BID
GYM STORAGE/ B222	CUST-26	2	Rubbermaind	Structural Foam Plastic Tilt Truck	FG-9T1300BLA	Black	13.5 cu. Ft., 450 lb. capacity	BID
1 PER ROOM	CUST-27	150	Brute Trash Cans	10 gal	RB-2610	Gray	10 Gallon	BID
CAFETERIA / B229	CUST-28	20	Brute Trash Cans	55 gal pails	RB-2655	Gray	55 Gallon	BID
CAFETERIA / B229	CUST-29	20	Rubbermaind	Brute Quiet Dollies	RB-2640	Black	250 lb capacity	BID

Wendell Cross Elementary School

1255 Hamilton Avenue
Waterbury, CT

Furniture, Fixtures & Equipment

Friar Project # 2018-115A
State Project No. 151-0295 EA/RR
Phase 5 of 5
December 1, 2020

Volume 1
State Contract

Friar Architecture
21 Talcott Notch Rd
Farmington, CT 06032



SHEET	ROOM NAME/NUMBER	ITEM ID	QTY	MANUFACTURER	DESCRIPTION	MODEL NUMBER	FINISH/COLOR	DIMENSIONS	STATE CONTRACT #
A13.1	ART STUDIO/B111	C-15	28	Virco	Adjustable Stool	1201927SG	Navy Seat w/ Chrome Legs	19"-27" seat height	16PSX0190 09/30/2022
A13.1	ART STUDIO/B111	T-9	8	Virco/Diversified	Hieght Adj.Art Table	ART4260ADJ	Grey Glace with matching edge	42" x 60", 27-42"h	16PSX0190 09/30/2022
A13.1	ART STUDIO/B111	C-8	1	Virco	Teachers Art Stool w/ Back & foot rung.	ANLAB-UGLIDE	Black	19"-26" adj. height	16PSX0190 09/30/2022
A13.1	ART STUDIO/B111	D-6	1	Virco	Presentation Station	TEPS	Top: Dry Creek Plum Tree Frame: Silver Mist	48"x24" x 26-34"h	16PSX0190 09/30/2022
A13.1	ART STUDIO/B111	EQ-2	1 set	Virco	Flag & Flag Bracket	FLAGIN1624 & FLAGHOLD	N/A	16" x 24" Flag	16PSX0190 09/30/2022
A13.1	RESOURCE ROOM/B112	C-20	1	Sit-On-It	Task Chair	1123 BK2 Y AR4 FG3 CS6 CH1 MB MC45 FC13 YCC03 LA5 BT1 BC4 KD	Mesh: Ash Frame: Fog Y Support: Fog Accent Color: Electric Blue Base Color: Fog Textile: Sit on it, Burst, Nickel	Fully adjustable	15PSX0041 07/30/2023
A13.1	RESOURCE ROOM/B112	D-3	1	Virco	Teacher's Desk	T3060	Top: Dry Creek Plum Tree Frame: Silver Mist	30" x 60"	16PSX0190 09/30/2022
A13.1	RESOURCE ROOM/B112	D-1	24	Virco	Boomerang Desk	ZBOOMTTM	Top: Dry Creek Plum Tree Frame: Silver Mist	22" x 34" hight adj. desk top	16PSX0190 09/30/2022
A13.1	RESOURCE ROOM/B112	C-4	24	Virco	4-Leg Classroom Chair	AN18	Navy BLU51	18" high	16PSX0190 09/30/2022
A13.1	RESOURCE ROOM/B112	T-1	2	Virco	Computer Table	FTT2460	Top: Dry Creek Plum Tree Edge: Golden Frame: Silver Mist	24" x 60", 24"-34" adj. height	16PSX0190 09/30/2022
A13.1	RESOURCE ROOM/B112	C-17	4	Safco	Ball Chair with Legs	4757	Royal Blue Vinyl	17" seat height	15PSX0041 07/2023
A13.1	RESOURCE ROOM/B112	EQ-2	1 set	Virco	Flag & Flag Bracket	FLAGIN1624 & FLAGHOLD	N/A	16" x 24" Flag	16PSX0190 09/30/2022
A13.1	KILN ROOM/B113	BC-9	4	Safco	Industrial Metal Shelving	6269	Light Grey	18"d x 36"w x 84"h	15PSX0041 07/2023

SHEET	ROOM NAME/NUMBER	ITEM ID	QTY	MANUFACTURER	DESCRIPTION	MODEL NUMBER	FINISH/COLOR	DIMENSIONS	STATE CONTRACT #
A13.1	STORAGE/B114	ST-2	3	Virco	Metal Storage Cabinet	FILING-53CAB361872	Silver Mist	18"d x 36"w x 72"h	16PSX0190 09/30/2022
A13.1	STORAGE/B114	ST-1	1	Virco	Utility Cart	KLIB1836C	Blue	20"d x 37"w x 43"h	16PSX0190 09/30/2022
A13.1	MEDIA CENTER/C111	BC-5	11	Virco/ Russwood	Library bookcase (adder)	LS2A362442 / LS2P3642	Medium Oak on Maple	36"W x 42"H X 24"D	16PSX0190 09/30/2022
A13.1	MEDIA CENTER/C111	BC-7	2	Virco/ Russwood	Library bookcase (starter)	LSS371282	Medium Oak on Maple	36"w x 12"d x 82"h	16PSX0190 09/30/2022
A13.1	MEDIA CENTER/C111	BC-6	5	Virco/ Russwood	Library bookcase (starter)	LS2S372442/ LS2P3642	Medium Oak on Maple	36"w x 24"d x 42"h	16PSX0190 09/30/2022
A13.1	MEDIA CENTER/C111	BC-8	11	Virco/ Russwood	Library bookcase (adder)	LSA361282	Medium Oak on Maple	36"w x 12"d x 82"h	16PSX0190 09/30/2022
A13.1	MEDIA CENTER/C111	T-15	8	Virco	Library Table	503672	Top: Fusion Maple Edge: Maple Frame: Silver Mist	36" x 72" 24"-34"adj.	16PSX0190 09/30/2022
A13.1	MEDIA CENTER/C111	C-21	24	Virco	Student Chair-MS	SG-1	Graphite GRY41	18" seat	16PSX0190 09/30/2022
A13.1	MEDIA CENTER/C111	C-18	24	Virco	Student Chair-ES	SG-415	Graphite GRY41	15" Seat	16PSX0190 09/30/2022
A13.1	MEDIA CENTER/C111	ST-3	2	Virco	Tote Tray Cabinet	2703MBTT/ (4) TT12812/ (20) TT12182 (2)TT12186	Fusion Maple/ Silver Mist	56" x 48"h x 22"	16PSX0190 09/30/2022
A13.1	MEDIA CENTER/C111	T-24	2	Virco	Computer Table	FTT2472	Fusion Maple w/ maple edge & Silver Mist frame	24" x 72" x adj. height	16PSX0190 09/30/2022
A13.1	MEDIA CENTER/C111	C-12	4	Virco	Task Chair	ANTASK18	Navy BLU51	16"-20" seat hieght	16PSX0190 09/30/2022
A13.1	MEDIA CENTER/C111	C-32	3	Artcobell	Round Ottoman	SSRD14	(1) Marine (1) Basil (1) Mandarin	14" seat	16PSX0190 09/30/2022
A13.1	MEDIA CENTER/C111	C-33	4	Artcobell	Round Ottoman	SSRD18	(1) Marine (1) Imperial (1) Mandarin (1) Basil	18" seat	16PSX0190 09/30/2022
A13.1	MEDIA CENTER/C111	C-20	2	Sit-On-It	Task Chair	1123 BK2 Y AR4 FG3 CS6 CH1 MB MC45 FC13 YCC03 LA5 BT1 BC4 KD	Mesh: Ash Frame: Fog Y Support: Fog Accent Color: Electric Blue Base Color: Fog Textile: Sit on it, Burst, Nickel	Fully adjustable	15PSX0041 07/30/2023
A13.1	MEDIA CENTER/C111	C-34	4	Artcobell	2 Step Seating	SS-ST230	Marine	3' x 3' square	15PSX0041 07/30/2023
A13.1	MEDIA CENTER/C111	EQ-9	1	ANNIN	Complete Mounting Set for 3' x 5'	27602	N/A	8' Pole	17PSX0012

SHEET	ROOM NAME/NUMBER	ITEM ID	QTY	MANUFACTURER	DESCRIPTION	MODEL NUMBER	FINISH/COLOR	DIMENSIONS	STATE CONTRACT #
A13.1	MEDIA CENTER/C111	EQ-10	1	ANNIN	Connecticut Flag	23336	N/A	3' x 5'	17PSX0012
A13.1	MEDIA CENTER/C111	EQ-11	1	ANNIN	USA Flag on Stand	864633	N/A	3' x 5'	17PSX0012
A13.1	WORK ROOM/C112	C-20	1	Sit-On-It	Task Chair	1123 BK2 Y AR4 FG3 CS6 CH1 MB MC45 FC13 YCC03 LA5 BT1 BC4 KD	Mesh: Ash Frame: Fog Y Support: Fog Accent Color: Electric Blue Base Color: Fog Textile: Sit on it, Burst, Nickel	Fully adjustable	15PSX0041 07/30/2023
A13.1	WORK ROOM/C112	D-3	1	Virco	Teacher's Desk	T3060	Top: Dry Creek Plum Tree Frame: Silver Mist Edge: Golden	30" x 60"	16PSX0190 09/30/2022
A13.1	COMPUTER LAB/C118	T-16	26	Virco	Computer Table	FTT2436	Top: LooksLikeTre Edge: Adobe BRN42 Frame: Silver Mist	24" x 36" x 24"-34"h	16PSX0190 09/30/2022
A13.1	COMPUTER LAB/C118	T-1	1	Virco	Computer Table	FTT2460	Top: LooksLikeTre Edge: Adobe BRN42 Frame: Silver Mist	24" x 60" x 24-34"h	16PSX0190 09/30/2022
A13.1	COMPUTER LAB/C118	C-26	28	Virco	Student Chair	ANTASK16/UGLIDE	Top: Dry Creek Plum Tree Frame: Silver Mist Edge: Golden	Hieght Adjustable 12.5"-15.5"	16PSX0190 09/30/2022
A13.1	COMPUTER LAB/C118	EQ-2	1 set	Virco	Flag & Flag Bracket	FLAGIN1624 & FLAGHOLD	N/A	16" x 24" Flag	16PSX0190 09/30/2022
A13.1	RESOURCE ROOM/C119	C-20	1	Sit-On-It	Task Chair	1123 BK2 Y AR4 FG3 CS6 CH1 MB MC45 FC13 YCC03 LA5 BT1 BC4 KD	Mesh: Ash Frame: Fog Y Support: Fog Accent Color: Electric Blue Base Color: Fog Textile: Sit on it, Burst, Nickel	Fully adjustable	15PSX0041 07/30/2023
A13.1	RESOURCE ROOM/C119	D-3	1	Virco	Teacher's Desk	T3060	Top: Dry Creek Plum Tree Frame: Silver Mist Edge: Golden	30" x 60"	16PSX0190 09/30/2022

SHEET	ROOM NAME/NUMBER	ITEM ID	QTY	MANUFACTURER	DESCRIPTION	MODEL NUMBER	FINISH/COLOR	DIMENSIONS	STATE CONTRACT #
A13.1	RESOURCE ROOM/C119	D-1	8	Virco	Boomerang Desk	ZBOOMTTM	Top: Dry Creek Plum Tree Frame: Silver Mist	22" x 34" hight adj. desk top	16PSX0190 09/30/2022
A13.1	RESOURCE ROOM/C119	C-26	8	Virco	Student Chair	ANTASK16/UGLIDE	Navy BLU51	Hieght Adjustable 12.5"-15.5"	16PSX0190 09/30/2022
A13.1	RESOURCE ROOM/C119	C-16	4	Safco	Ball chair with feet only	4757	Royal Blue Vinyl	13.5" seat w/ feet only.	15PSX0041 07/2023
A13.1	RESOURCE ROOM/C119	T-3	1	Virco	Cooperative Table	48COOP72	Top: Dry Creek Plum Edge: Golden Frame:Silver Mist	36" x 72" x 22-30"h	16PSX0190 09/30/2022
A13.1	RESOURCE ROOM/C119	EQ-2	1 set	Virco	Flag & Flag Bracket	FLAGIN1624 & FLAGHOLD	N/A	16" x 24" Flag	16PSX0190 09/30/2022
A13.1	THIRD GRADE CLASSROOM/C121	C-20	1	Sit-On-It	Task Chair	1123 BK2 Y AR4 FG3 CS6 CH1 MB MC45 FC13 YCC03 LA5 BT1 BC4 KD	Mesh: Ash Frame: Fog Y Support: Fog Accent Color: Electric Blue Base Color: Fog Textile: Sit on it, Burst, Nickel	Fully adjustable	15PSX0041 07/30/2023
A13.1	THIRD GRADE CLASSROOM/C121	D-3	1	Virco	Teacher's Desk	T3060	Top: Dry Creek Plum Tree Frame: Silver Mist Edge: Golden	30" x 60"	16PSX0190 09/30/2022
A13.1	THIRD GRADE CLASSROOM/C121	D-1	25	Virco	Boomerang Desk	ZBOOMTTM	Top: Dry Creek Plum Tree Frame: Silver Mist	22" x 34" hight adj. desk top	16PSX0190 09/30/2022
A13.1	THIRD GRADE CLASSROOM/C121	C-3	25	Virco	4-Leg Student Chair	AN16	Navy BLU51	16" high seat	16PSX0190 09/30/2022
A13.1	THIRD GRADE CLASSROOM/C121	T-3	1	Virco	Cooperative Table	48COOP72	Top: Dry Creek Plum Edge: Golden Frame:Silver Mist	36" x 72" x 22-30"h	16PSX0190 09/30/2022
A13.1	THIRD GRADE CLASSROOM/C121	C-17	4	Safco	Ball chair with legs	4757	Royal Blue Vinyl	17" seat hieght with legs	15PSX0041 07/2023
A13.1	THIRD GRADE CLASSROOM/C121	T-1	2	Virco	Computer Table	FTT2460	Top: Dry Creek Plum Edge: Golden Frame:Silver Mist	24" x 60" x 24"-34" high	16PSX0190 09/30/2022
A13.1	THIRD GRADE CLASSROOM/C121	C-23	4	School Specialty/Classro	Motion Stool	5000845	Paprika	Adj height 14.5"-20.5"	17PSX0012
A13.1	THIRD GRADE CLASSROOM/C121	EQ-2	1 set	Virco	Flag & Flag Bracket	FLAGIN1624 & FLAGHOLD	N/A	16" x 24" Flag	16PSX0190 09/30/2022

SHEET	ROOM NAME/NUMBER	ITEM ID	QTY	MANUFACTURER	DESCRIPTION	MODEL NUMBER	FINISH/COLOR	DIMENSIONS	STATE CONTRACT #
A13.1	THRID GRADE CLASSROOM/C122	C-20	1	Sit-On-It	Task Chair	1123 BK2 Y AR4 FG3 CS6 CH1 MB MC45 FC13 YCC03 LA5 BT1 BC4 KD	Mesh: Ash Frame: Fog Y Support: Fog Accent Color: Electric Blue Base Color: Fog Textile: Sit on it, Burst, Nickel	Fully adjustable	15PSX0041 07/30/2023
A13.1	THRID GRADE CLASSROOM/C122	D-3	1	Virco	Teacher's Desk	T3060	Top: Dry Creek Plum Tree Frame: Silver Mist Edge: Golden	30" x 60"	16PSX0190 09/30/2022
A13.1	THRID GRADE CLASSROOM/C122	D-1	25	Virco	Boomerang Desk	ZBOOMTTM	Top: Dry Creek Plum Tree Frame: Silver Mist	22" x 34" hight adj. desk top	16PSX0190 09/30/2022
A13.1	THRID GRADE CLASSROOM/C122	C-3	25	Virco	4-Leg Student Chair	AN16	Navy BLU51	16" high seat	16PSX0190 09/30/2022
A13.1	THRID GRADE CLASSROOM/C122	T-3	1	Virco	Cooperative Table	48COOP72	Top: Dry Creek Plum Edge: Golden Frame:Silver Mist	36" x 72" x 22-30"h	16PSX0190 09/30/2022
A13.1	THRID GRADE CLASSROOM/C122	C-17	4	Safco	Ball chair with legs	4757	Royal Blue Vinyl	17" seat hieght with legs	15PSX0041 07/2023
A13.1	THRID GRADE CLASSROOM/C122	T-1	2	Virco	Computer Table	FTT2460	Top: Dry Creek Plum Tree Frame: Silver Mist Edge: Golden	24" x 60" x 24"-34" high	16PSX0190 09/30/2022
A13.1	THRID GRADE CLASSROOM/C122	C-23	4	School Specialty/Classro	Motion Stool	5000845	Paprika	Adj height 14.5"-20.5"	17PSX0012
A13.1	THRID GRADE CLASSROOM/C122	EQ-2	1 set	Virco	Flag & Flag Bracket	FLAGIN1624 & FLAGHOLD	N/A	16" x 24" Flag	16PSX0190 09/30/2022
A13.1	THRID GRADE CLASSROOM/C123	C-20	1	Sit-On-It	Task Chair	1123 BK2 Y AR4 FG3 CS6 CH1 MB MC45 FC13 YCC03 LA5 BT1 BC4 KD	Mesh: Ash Frame: Fog Y Support: Fog Accent Color: Electric Blue Base Color: Fog Textile: Sit on it, Burst,Nickel	Fully adjustable	15PSX0041 07/30/2023
A13.1	THRID GRADE CLASSROOM/C123	D-3	1	Virco	Teacher's Desk	T3060	Top: Dry Creek Plum Tree Frame: Silver Mist Edge: Golden	30" x 60"	16PSX0190 09/30/2022
A13.1	THRID GRADE CLASSROOM/C123	D-1	25	Virco	Boomerang Desk	ZBOOMTTM	Top: Dry Creek Plum Tree Frame: Silver Mist	22" x 34" hight adj. desk top	16PSX0190 09/30/2022
A13.1	THRID GRADE CLASSROOM/C123	C-3	25	Virco	4-Leg Student Chair	AN16	Navy BLU51	16" high seat	16PSX0190 09/30/2022

SHEET	ROOM NAME/NUMBER	ITEM ID	QTY	MANUFACTURER	DESCRIPTION	MODEL NUMBER	FINISH/COLOR	DIMENSIONS	STATE CONTRACT #
A13.1	THRID GRADE CLASSROOM/C123	T-3	1	Virco	Cooperative Table	48COOP72	Top: Dry Creek Plum Edge: Golden Frame:Silver Mist	36" x 72" x 22-30"h	16PSX0190 09/30/2022
A13.1	THRID GRADE CLASSROOM/C123	C-17	4	Safco	Ball chair with legs	4757	Royal Blue Vinyl	17" seat hieght with legs	15PSX0041 07/2023
A13.1	THRID GRADE CLASSROOM/C123	T-1	2	Virco	Computer Table	FTT2460 / (2) FTTCPU	Top: Dry Creek Plum Tree Frame: Silver Mist Edge: Golden	24" x 60" x 24"-34" high	16PSX0190 09/30/2022
A13.1	THRID GRADE CLASSROOM/C123	C-23	4	School Specialty/Classro	Motion Stool	5000845	Paprika	Adj height 14.5"-20.5"	17PSX0012
A13.1	THRID GRADE CLASSROOM/C123	EQ-2	1 set	Virco	Flag & Flag Bracket	FLAGIN1624 & FLAGHOLD	N/A	16" x 24" Flag	16PSX0190 09/30/2022
A13.2	CUSTODIAN/C124	BC-9	2	Safco	Industrial Metal Shelving	6269	Light Grey	18"d x 36"w x 84"h	15PSX0041 07/2023
A13.2	FOURTH GRADE CLASSROOM/D111	C-20	1	Sit-On-It	Task Chair	1123 BK2 Y AR4 FG3 CS6 CH1 MB MC45 FC13 YCC03 LA5 BT1 BC4 KD	Mesh: Ash Frame: Fog Y Support: Fog Accent Color: Electric Blue Base Color: Fog Textile: Sit on it, Burst, Nickel	Fully adjustable	15PSX0041 07/30/2023
A13.2	FOURTH GRADE CLASSROOM/D111	D-3	1	Virco	Teacher's Desk	T3060	Top: Dry Creek Plum Tree Frame: Silver Mist Edge: Golden	30" x 60"	16PSX0190 09/30/2022
A13.2	FOURTH GRADE CLASSROOM/D111	D-1	28	Virco	Boomerang Desk	ZBOOMTTM	Top: Dry Creek Plum Tree Frame: Silver Mist	22" x 34" hight adj. desk top	16PSX0190 09/30/2022
A13.2	FOURTH GRADE CLASSROOM/D111	C-3	28	Virco	4-Leg Student Chair	AN16	Navy BLU51	16" high seat	16PSX0190 09/30/2022
A13.2	FOURTH GRADE CLASSROOM/D111	C-4	1	Virco	4-Leg Student Chair	AN18	Navy BLU51	18" high seat	16PSX0190 09/30/2022
A13.2	FOURTH GRADE CLASSROOM/D111	T-3	1	Virco	Cooperative Table	48COOP72	Top: Dry Creek Plum Tree Frame: Silver Mist Edge: Golden	36" x 72" x 22-30"h	16PSX0190 09/30/2022
A13.2	FOURTH GRADE CLASSROOM/D111	C-17	4	Safco	Ball chair with legs	4757	Royal Blue Vinyl	17" seat hieght with legs	15PSX0041 07/2023

SHEET	ROOM NAME/NUMBER	ITEM ID	QTY	MANUFACTURER	DESCRIPTION	MODEL NUMBER	FINISH/COLOR	DIMENSIONS	STATE CONTRACT #
A13.2	FOURTH GRADE CLASSROOM/D111	T-1	2	Virco	Computer Table	FTT2460	Top: Dry Creek Plum Tree Frame: Silver Mist Edge: Golden	24" x 60" x 24"-34" high	16PSX0190 09/30/2022
A13.2	FOURTH GRADE CLASSROOM/D111	C-23	4	School Specialty/Classro	Motion Stool	5000845	Paprika	Adj height 14.5"-20.5"	17PSX0012
A13.1	FOURTH GRADE CLASSROOM/D111	EQ-2	1 set	Virco	Flag & Flag Bracket	FLAGIN1624 & FLAGHOLD	N/A	16" x 24" Flag	16PSX0190 09/30/2022
A13.2	FOURTH GRADE CLASSROOM/D112	C-20	1	Sit-On-It	Task Chair	1123 BK2 Y AR4 FG3 CS6 CH1 MB MC45 FC13 YCC03 LA5 BT1 BC4 KD	Mesh: Ash Frame: Fog Y Support: Fog Accent Color: Electric Blue Base Color: Fog Textile: Sit on it, Burst, Nickel	Fully adjustable	15PSX0041 07/30/2023
A13.2	FOURTH GRADE CLASSROOM/D112	D-3	1	Virco	Teacher's Desk	T3060	Top: Dry Creek Plum Tree Frame: Silver Mist Edge: Golden	30" x 60"	16PSX0190 09/30/2022
A13.2	FOURTH GRADE CLASSROOM/D112	D-1	28	Virco	Boomerang Desk	ZBOOMTTM	Top: Dry Creek Plum Tree Frame: Silver Mist	22" x 34" hight adj. desk top	16PSX0190 09/30/2022
A13.2	FOURTH GRADE CLASSROOM/D112	C-3	28	Virco	4-Leg Student Chair	AN16	Navy BLU51	16" high seat	16PSX0190 09/30/2022
A13.2	FOURTH GRADE CLASSROOM/D112	C-4	1	Virco	4-Leg Student Chair	AN18	Navy BLU51	18" high seat	16PSX0190 09/30/2022
A13.2	FOURTH GRADE CLASSROOM/D112	T-3	1	Virco	Cooperative Table	48COOP72	Top: Dry Creek Plum Tree Frame: Silver Mist Edge: Golden	36" x 72" x 22-30"h	16PSX0190 09/30/2022
A13.2	FOURTH GRADE CLASSROOM/D112	C-17	4	Safco	Ball chair with legs	4757	Royal Blue Vinyl	17" seat hieght with legs	15PSX0041 07/2023
A13.2	FOURTH GRADE CLASSROOM/D112	T-1	2	Virco	Computer Table	FTT2460	Top: Dry Creek Plum Tree Frame: Silver Mist Edge: Golden	24" x 60" x 24"-34" high	16PSX0190 09/30/2022
A13.2	FOURTH GRADE CLASSROOM/D112	C-23	4	School Specialty/Classro	Motion Stool	5000845	Paprika	Adj height 14.5"-20.5"	17PSX0012
A13.1	FOURTH GRADE CLASSROOM/D112	EQ-2	1 set	Virco	Flag & Flag Bracket	FLAGIN1624 & FLAGHOLD	N/A	16" x 24" Flag	16PSX0190 09/30/2022

SHEET	ROOM NAME/NUMBER	ITEM ID	QTY	MANUFACTURER	DESCRIPTION	MODEL NUMBER	FINISH/COLOR	DIMENSIONS	STATE CONTRACT #
A13.2	FOURTH GRADE CLASSROOM/D113	C-20	1	Sit-On-It	Task Chair	1123 BK2 Y AR4 FG3 CS6 CH1 MB MC45 FC13 YCC03 LA5 BT1 BC4 KD	Mesh: Ash Frame: Fog Y Support: Fog Accent Color: Electric Blue Base Color: Fog Textile: Sit on it, Burst, Nickel	Fully adjustable	15PSX0041 07/30/2023
A13.2	FOURTH GRADE CLASSROOM/D113	D-3	1	Virco	Teacher's Desk	T3060	Top: Dry Creek Plum Tree Frame: Silver Mist Edge: Golden	30" x 60"	16PSX0190 09/30/2022
A13.2	FOURTH GRADE CLASSROOM/D113	D-1	28	Virco	Boomerang Desk	ZBOOMTTM	Top: Dry Creek Plum Tree Frame: Silver Mist	22" x 34" hight adj. desk top	16PSX0190 09/30/2022
A13.2	FOURTH GRADE CLASSROOM/D113	C-3	28	Virco	4-Leg Student Chair	AN16	Navy BLU51	16" high seat	16PSX0190 09/30/2022
A13.2	FOURTH GRADE CLASSROOM/D113	C-4	1	Virco	4-Leg Student Chair	AN18	Navy BLU51	18" high seat	16PSX0190 09/30/2022
A13.2	FOURTH GRADE CLASSROOM/D113	T-3	1	Virco	Cooperative Table	48COOP72	Top: Dry Creek Plum Tree Frame: Silver Mist Edge: Golden	36" x 72" x 22-30"h	16PSX0190 09/30/2022
A13.2	FOURTH GRADE CLASSROOM/D113	C-17	4	Safco	Ball chair with legs	4757	Royal Blue Vinyl	17" seat hieght with legs	15PSX0041 07/2023
A13.2	FOURTH GRADE CLASSROOM/D113	T-1	2	Virco	Computer Table	FTT2460	Top: Dry Creek Plum Tree Frame: Silver Mist Edge: Golden	24" x 60" x 24"-34" high	16PSX0190 09/30/2022
A13.2	FOURTH GRADE CLASSROOM/D113	C-23	4	School Specialty/Classro	Motion Stool	5000845	Paprika	Adj height 14.5"-20.5"	17PSX0012
A13.1	FOURTH GRADE CLASSROOM/D113	EQ-2	1 set	Virco	Flag & Flag Bracket	FLAGIN1624 & FLAGHOLD	N/A	16" x 24" Flag	16PSX0190 09/30/2022
A13.2	FIFTH GRADE CLASSROOM/D114	C-20	1	Sit-On-It	Task Chair	1123 BK2 Y AR4 FG3 CS6 CH1 MB MC45 FC13 YCC03 LA5 BT1 BC4 KD	Mesh: Ash Frame: Fog Y Support: Fog Accent Color: Electric Blue Base Color: Fog Textile: Sit on it, Burst,Nickel	Fully adjustable	15PSX0041 07/30/2023
A13.2	FIFTH GRADE CLASSROOM/D114	D-3	1	Virco	Teacher's Desk	T3060	Top: Dry Creek Plum Tree Frame: Silver Mist Edge: Golden	30" x 60"	16PSX0190 09/30/2022
A13.2	FIFTH GRADE CLASSROOM/D114	D-1	28	Virco	Boomerang Desk	ZBOOMTTM	Top: Dry Creek Plum Tree Frame: Silver Mist	22" x 34" hight adj. desk top	16PSX0190 09/30/2022

SHEET	ROOM NAME/NUMBER	ITEM ID	QTY	MANUFACTURER	DESCRIPTION	MODEL NUMBER	FINISH/COLOR	DIMENSIONS	STATE CONTRACT #
A13.2	FIFTH GRADE CLASSROOM/D114	C-4	29	Virco	4-Leg Student Chair	AN18	Navy BLU51	18" high seat	16PSX0190 09/30/2022
A13.2	FIFTH GRADE CLASSROOM/D114	T-3	1	Virco	Cooperative Table	48COOP72	Top: Dry Creek Plum Tree Frame: Silver Mist Edge: Golden	36" x 72" x 22-30"h	16PSX0190 09/30/2022
A13.2	FIFTH GRADE CLASSROOM/D114	C-17	4	Safco	Ball chair with legs	4757	Royal Blue Vinyl	17" seat hieght with legs	15PSX0041 07/2023
A13.2	FIFTH GRADE CLASSROOM/D114	T-1	2	Virco	Computer Table	FTT2460	Top: Dry Creek Plum Tree Frame: Silver Mist Edge: Golden	24" x 60" x 24"-34" high	16PSX0190 09/30/2022
A13.2	FIFTH GRADE CLASSROOM/D114	C-23	4	School Specialty/Classro	Motion Stool	5000845	Paprika	Adj height 14.5"-20.5"	17PSX0012
A13.1	FIFTH GRADE CLASSROOM/D114	EQ-2	1 set	Virco	Flag & Flag Bracket	FLAGIN1624 & FLAGHOLD	N/A	16" x 24" Flag	16PSX0190 09/30/2022
A13.2	FIFTH GRADE CLASSROOM/D115	C-20	1	Sit-On-It	Task Chair	1123 BK2 Y AR4 FG3 CS6 CH1 MB MC45 FC13 YCC03 LA5 BT1 BC4 KD	Mesh: Ash Frame: Fog Y Support: Fog Accent Color: Electric Blue Base Color: Fog Textile: Sit on it, Burst, Nickel	Fully adjustable	15PSX0041 07/30/2023
A13.2	FIFTH GRADE CLASSROOM/D115	D-3	1	Virco	Teacher's Desk	T3060	Top: Dry Creek Plum Tree Frame: Silver Mist Edge: Golden	30" x 60"	16PSX0190 09/30/2022
A13.2	FIFTH GRADE CLASSROOM/D115	D-1	28	Virco	Boomerang Desk	ZBOOMTTM	Top: Dry Creek Plum Tree Frame: Silver Mist	22" x 34" hight adj. desk top	16PSX0190 09/30/2022
A13.2	FIFTH GRADE CLASSROOM/D115	C-4	29	Virco	4-Leg Student Chair	AN18	Navy BLUE51	18" high seat	16PSX0190 09/30/2022
A13.2	FIFTH GRADE CLASSROOM/D115	T-3	1	Virco	Cooperative Table	48COOP72	Top: Dry Creek Plum Tree Frame: Silver Mist Edge: Golden	36" x 72" x 22-30"h	16PSX0190 09/30/2022
A13.2	FIFTH GRADE CLASSROOM/D115	C-17	4	Safco	Ball chair with legs	4757	Royal Blue Vinyl	17" seat hieght with legs	15PSX0041 07/2023
A13.2	FIFTH GRADE CLASSROOM/D115	T-1	2	Virco	Computer Table	FTT2460	Top: Dry Creek Plum Tree Frame: Silver Mist Edge: Golden	24" x 60" x 24"-34" high	16PSX0190 09/30/2022
A13.2	FIFTH GRADE CLASSROOM/D115	C-23	4	School Specialty/Classro	Motion Stool	5000845	Paprika	Adj height 14.5"-20.5"	17PSX0012
A13.1	FIFTH GRADE CLASSROOM/D115	EQ-2	1 set	Virco	Flag & Flag Bracket	FLAGIN1624 & FLAGHOLD	N/A	16" x 24" Flag	16PSX0190 09/30/2022

SHEET	ROOM NAME/NUMBER	ITEM ID	QTY	MANUFACTURER	DESCRIPTION	MODEL NUMBER	FINISH/COLOR	DIMENSIONS	STATE CONTRACT #
A13.2	FIFTH GRADE CLASSROOM/D116	C-20	1	Sit-On-It	Task Chair	1123 BK2 Y AR4 FG3 CS6 CH1 MB MC45 FC13 YCC03 LA5 BT1 BC4 KD	Mesh: Ash Frame: Fog Y Support: Fog Accent Color: Electric Blue Base Color: Fog Textile: Sit on it, Burst,Nickel	Fully adjustable	15PSX0041 07/30/2023
A13.2	FIFTH GRADE CLASSROOM/D116	D-3	1	Virco	Teacher's Desk	T3060	Top: Dry Creek Plum Tree Frame: Silver Mist Edge: Golden	30" x 60"	16PSX0190 09/30/2022
A13.2	FIFTH GRADE CLASSROOM/D116	D-1	28	Virco	Boomerang Desk	ZBOOMTTM	Top: Dry Creek Plum Tree Frame: Silver Mist	22" x 34" hight adj. desk top	16PSX0190 09/30/2022
A13.2	FIFTH GRADE CLASSROOM/D116	C-4	29	Virco	4-Leg Student Chair	AN18	Navy BLU51	18" high seat	16PSX0190 09/30/2022
A13.2	FIFTH GRADE CLASSROOM/D116	T-3	1	Virco	Cooperative Table	48COOP72	Top: Dry Creek Plum Tree Frame: Silver Mist Edge: Golden	36" x 72" x 22-30"h	16PSX0190 09/30/2022
A13.2	FIFTH GRADE CLASSROOM/D116	C-17	4	Safco	Ball chair with legs	4757	Royal Blue Vinyl	17" seat hieght with legs	15PSX0041 07/2023
A13.2	FIFTH GRADE CLASSROOM/D116	T-1	2	Virco	Computer Table	FTT2460	Top: Dry Creek Plum Tree Frame: Silver Mist Edge: Golden	24" x 60" x 24"-34" high	16PSX0190 09/30/2022
A13.2	FIFTH GRADE CLASSROOM/D116	C-23	4	School Specialty/Classro	Motion Stool	5000845	Paprika	Adj height 14.5"-20.5"	17PSX0012
A13.1	FIFTH GRADE CLASSROOM/D116	EQ-2	1 set	Virco	Flag & Flag Bracket	FLAGIN1624 & FLAGHOLD	N/A	16" x 24" Flag	16PSX0190 09/30/2022
A13.3	COMPUTER LAB/A211	T-16	25	Virco	Computer Table	FTT2436 / FTTCPU	Top: LooksLikaTre Edge: Adobe BRN42 Frame: Silver Mist	24" x 36" x 24"-34"h	16PSX0190 09/30/2022
A13.3	COMPUTER LAB/A211	T-1	2	Virco	Computer Table	FTT2460	Top: LooksLikaTre Edge: Adobe BRN42 Frame: Silver Mist	24" x 60" x 24-34"h	16PSX0190 09/30/2022
A13.3	COMPUTER LAB/A211	C-12	29	Virco	Student Chair	ANTASK18/UGLIDE	Navy BLU51	Hieght Adjustable 16"-20.5"	16PSX0190 09/30/2022
A13.1	COMPUTER LAB/A211	EQ-2	1 set	Virco	Flag & Flag Bracket	FLAGIN1624 & FLAGHOLD	N/A	16" x 24" Flag	16PSX0190 09/30/2022

SHEET	ROOM NAME/NUMBER	ITEM ID	QTY	MANUFACTURER	DESCRIPTION	MODEL NUMBER	FINISH/COLOR	DIMENSIONS	STATE CONTRACT #
A13.3	SPECIAL ED ROOM/A213	D-3	1	Virco	Teacher's Desk	T3060	Top: Dry Creek Plum Tree Frame: Silver Mist Edge: Golden	30" x 60"	16PSX0190 09/30/2022
A13.3	SPECIAL ED ROOM/A213	C-20	1	Sit-On-It	Task Chair	1123 BK2 Y AR4 FG3 CS6 CH1 MB MC45 FC13 YCC03 LA5 BT1 BC4 KD	Mesh: Ash Frame: Fog Y Support: Fog Accent Color: Electric Blue Base Color: Fog Textile: Sit on it, Burst, Nickel	Fully adjustable	15PSX0041 07/30/2023
A13.3	SPECIAL ED ROOM/A213	T-3	1	Virco	Cooperative Table	48COOP72	Top: Dry Creek Plum Tree Frame: Silver Mist Edge: Golden	36" x 72" x 22-30"h	16PSX0190 09/30/2022
A13.3	SPECIAL ED ROOM/A213	C-23	4	School Specialty/Classro	Motion Stool	5000845	Paprika	Adj height 14.5"-20.5"	17PSX0012
A13.3	SPECIAL ED ROOM/A213	D-1	2	Virco	Boomerang Desk	ZBOOMTTM	Top: Dry Creek Plum Tree Frame: Silver Mist	22" x 34" hight adj. desk top	16PSX0190 09/30/2022
A13.3	SPECIAL ED ROOM/A213	D-2	2	Virco	Stand Up- Boomerang Desk	ZBOOMSUTTM	Top: Dry Creek Plum Tree Frame: Silver Mist	31"-41" desk top height	16PSX0190 09/30/2022
A13.3	SPECIAL ED ROOM/A213	C-12	3	Virco	Student Chair	ANTASK18/UGLIDE	Navy BLU51	Hieght Adjustable 16"-20.5"	16PSX0190 09/30/2022
A13.3	SPECIAL ED ROOM/A213	C-8	2	Virco	Lab Chair	ANLAB/UGLIDE	Navy BLU51	19"-26" Adj. Hieght	16PSX0190 09/30/2022
A13.1	SPECIAL ED ROOM/A213	EQ-2	1 set	Virco	Flag & Flag Bracket	FLAGIN1624 & FLAGHOLD	N/A	16" x 24" Flag	16PSX0190 09/30/2022
A13.3	SPECIAL ED ROOM/A215	D-3	1	Virco	Teacher's Desk	T3060	Top: Dry Creek Plum Tree Frame: Silver Mist Edge: Golden	30" x 60"	16PSX0190 09/30/2022
A13.3	SPECIAL ED ROOM/A215	C-20	1	Sit-On-It	Task Chair	1123 BK2 Y AR4 FG3 CS6 CH1 MB MC45 FC13 YCC03 LA5 BT1 BC4 KD	Mesh: Ash Frame: Fog Y Support: Fog Accent Color: Electric Blue Base Color: Fog Textile: Sit on it, Burst, Nickel	Fully adjustable	15PSX0041 07/30/2023

SHEET	ROOM NAME/NUMBER	ITEM ID	QTY	MANUFACTURER	DESCRIPTION	MODEL NUMBER	FINISH/COLOR	DIMENSIONS	STATE CONTRACT #
A13.3	SPECIAL ED ROOM/A215	T-3	1	Virco	Cooperative Table	48COOP72	Top: Dry Creek Plum Tree Frame: Silver Mist Edge: Golden	36" x 72" x 22-30"h	16PSX0190 09/30/2022
A13.3	SPECIAL ED ROOM/A215	C-23	4	School Specialty/Classro	Motion Stool	5000845	Paprika	Adj height 14.5"-20.5"	17PSX0012
A13.3	SPECIAL ED ROOM/A215	D-1	2	Virco	Boomerang Desk	ZBOOMTTM	Top: Dry Creek Plum Tree Frame: Silver Mist	22" x 34" hight adj. desk top	16PSX0190 09/30/2022
A13.3	SPECIAL ED ROOM/A215	D-2	2	Virco	Stand Up- Boomerang Desk	ZBOOMSUTTM	Top: Dry Creek Plum Tree Frame: Silver Mist	31"-41" desk top height	16PSX0190 09/30/2022
A13.3	SPECIAL ED ROOM/A215	C-12	3	Virco	Student Chair	ANTASK18/UGLIDE	Navy BLU51	Hieght Adjustable 16"-20.5"	16PSX0190 09/30/2022
A13.3	SPECIAL ED ROOM/A215	C-8	2	Virco	Lab Chair	ANLAB/UGLIDE	Navy BLU51	19"-26" Adj. Hieght	16PSX0190 09/30/2022
A13.1	SPECIAL ED ROOM/A215	EQ-2	1 set	Virco	Flag & Flag Bracket	FLAGIN1624 & FLAGHOLD	N/A	16" x 24" Flag	16PSX0190 09/30/2022
A13.3	RESOURCE ROOM/A216	T-4	1	Virco	Rectangle Table	483072	Top: Dry Creek Plum Tree Frame: Silver Mist Edge: Golden	30" x 72" x 22"-30"h adj.	16PSX0190 09/30/2022
A13.3	RESOURCE ROOM/A216	C-4	4	Virco	4-Leg Chair	AN18	Navy BLU51	18" high seat	16PSX0190 09/30/2022
A13.3	SIX GRADE CLASSROOM/A217	D-3	1	Virco	Teacher's Desk	T3060	Top: Dry Creek Plum Tree Frame: Silver Mist Edge: Golden	30" x 60"	16PSX0190 09/30/2022
A13.3	SiX GRADE CLASSROOM/A217	C-20	1	Sit-On-It	Task Chair	1123 BK2 Y AR4 FG3 CS6 CH1 MB MC45 FC13 YCC03 LA5 BT1 BC4 KD	Mesh: Ash Frame: Fog Y Support: Fog Accent Color: Electric Blue Base Color: Fog Textile: Sit on it, Burst, Nickel	Fully adjustable	15PSX0041 07/30/2023
A13.3	SIX GRADE CLASSROOM/A217	T-3	1	Virco	Cooperative Table	48COOP72	Top: Dry Creek Plum Tree Frame: Silver Mist Edge: Golden	36" x 72" x 22-30"h	16PSX0190 09/30/2022
A13.3	SIX GRADE CLASSROOM/A217	C-23	4	School Specialty/Classro	Motion Stool	5000845	Paprika	Adj height 14.5"-20.5"	17PSX0012
A13.3	SIX GRADE CLASSROOM/A217	D-1	28	Virco	Boomerang Desk	ZBOOMTTM	Top: Dry Creek Plum Tree Frame: Silver Mist	22" x 34" hight adj. desk top	16PSX0190 09/30/2022

SHEET	ROOM NAME/NUMBER	ITEM ID	QTY	MANUFACTURER	DESCRIPTION	MODEL NUMBER	FINISH/COLOR	DIMENSIONS	STATE CONTRACT #
A13.3	SIX GRADE CLASSROOM/A217	C-4	29	Virco	4-Leg Chair	AN18	Navy BLU51	18" high seat	16PSX0190 09/30/2022
A13.3	SIX GRADE CLASSROOM/A217	C-17	4	Safco	Ball chair w/ legs	4757	Royal Blue Vinyl	17" seat hieght	15PSX0041 07/2023
A13.3	SIX GRADE CLASSROOM/A217	T-1	2	Virco	Computer Table	FTT2460	Top: Dry Creek Plum Tree Frame: Silver Mist Edge: Golden	24" x 60" x 24"-34" high	16PSX0190 09/30/2022
A13.1	SiX GRADE CLASSROOM/A217	EQ-2	1 set	Virco	Flag & Flag Bracket	FLAGIN1624 & FLAGHOLD	N/A	16" x 24" Flag	16PSX0190 09/30/2022
A13.3	SIX GRADE CLASSROOM/A218	D-3	1	Virco	Teacher's Desk	T3060	Top: Dry Creek Plum Tree Frame: Silver Mist Edge: Golden	30" x 60"	16PSX0190 09/30/2022
A13.3	SIX GRADE CLASSROOM/A218	C-20	1	Sit-On-It	Task Chair	1123 BK2 Y AR4 FG3 CS6 CH1 MB MC45 FC13 YCC03 LA5 BT1 BC4 KD	Mesh: Ash Frame: Fog Y Support: Fog Accent Color: Electric Blue Base Color: Fog Textile: Sit on it, Burst, Nickel	Fully adjustable	15PSX0041 07/30/2023
A13.3	SIX GRADE CLASSROOM/A218	T-3	1	Virco	Cooperative Table	48COOP72	Top: Dry Creek Plum Tree Frame: Silver Mist Edge: Golden	36" x 72" x 22-30"h	16PSX0190 09/30/2022
A13.3	SIX GRADE CLASSROOM/A218	C-23	4	School Specialty/Classro	Motion Stool	5000845	Paprika	Adj height 14.5"-20.5"	17PSX0012
A13.3	SIX GRADE CLASSROOM/A218	D-1	28	Virco	Boomerang Desk	ZBOOMTTM	Top: Dry Creek Plum Tree Frame: Silver Mist	22" x 34" hight adj. desk top	16PSX0190 09/30/2022
A13.3	SIX GRADE CLASSROOM/A218	C-4	29	Virco	4-Leg Chair	AN18	Navy BLU51	18" high seat	16PSX0190 09/30/2022
A13.3	SIX GRADE CLASSROOM/A218	C-17	4	Safco	Ball chair w/ legs	4757	Royal Blue Vinyl	17" seat hieght	15PSX0041 07/2023
A13.3	SIX GRADE CLASSROOM/A218	T-1	2	Virco	Computer Table	FTT2460	Top: Dry Creek Plum Tree Frame: Silver Mist Edge: Golden	24" x 60" x 24"-34" high	16PSX0190 09/30/2022
A13.1	SIX GRADE CLASSROOM/A218	EQ-2	1 set	Virco	Flag & Flag Bracket	FLAGIN1624 & FLAGHOLD	N/A	16" x 24" Flag	16PSX0190 09/30/2022
A13.3	SIX GRADE CLASSROOM/A219	D-3	1	Virco	Teacher's Desk	T3060	Top: Dry Creek Plum Tree Frame: Silver Mist Edge: Golden	30" x 60"	16PSX0190 09/30/2022

SHEET	ROOM NAME/NUMBER	ITEM ID	QTY	MANUFACTURER	DESCRIPTION	MODEL NUMBER	FINISH/COLOR	DIMENSIONS	STATE CONTRACT #
A13.3	SIX GRADE CLASSROOM/A219	C-20	1	Sit-On-It	Task Chair	1123 BK2 Y AR4 FG3 CS6 CH1 MB MC45 FC13 YCC03 LA5 BT1 BC4 KD	Mesh: Ash Frame: Fog Y Support: Fog Accent Color: Electric Blue Base Color: Fog Textile: Sit on it, Burst, Nickel	Fully adjustable	15PSX0041 07/30/2023
A13.3	SIX GRADE CLASSROOM/A219	T-3	1	Virco	Cooperative Table	48COOP72	Top: Dry Creek Plum Tree Frame: Silver Mist Edge: Golden	36" x 72" x 22-30"h	16PSX0190 09/30/2022
A13.3	SIX GRADE CLASSROOM/A219	C-23	4	School Specialty/Classroom Select	Motion Stool	5000845	Paprika	Adj height 14.5"-20.5"	17PSX0012
A13.3	SIX GRADE CLASSROOM/A219	D-1	28	Virco	Boomerang Desk	ZBOOMTTM	Top: Dry Creek Plum Tree Frame: Silver Mist	22" x 34" hight adj. desk top	16PSX0190 09/30/2022
A13.3	SIX GRADE CLASSROOM/A219	C-4	29	Virco	4-Leg Chair	AN18	Navy BLU51	18" high seat	16PSX0190 09/30/2022
A13.3	SIX GRADE CLASSROOM/A219	C-17	4	Safco	Ball chair w/ legs	4757	Royal Blue Vinyl	17" seat hieght	15PSX0041 07/2023
A13.3	SIX GRADE CLASSROOM/A219	T-1	2	Virco	Computer Table	FTT2460	Top: Dry Creek Plum Tree Frame: Silver Mist Edge: Golden	24" x 60" x 24"-34" high	16PSX0190 09/30/2022
A13.1	SIX GRADE CLASSROOM/A219	EQ-2	1 set	Virco	Flag & Flag Bracket	FLAGIN1624 & FLAGHOLD	N/A	16" x 24" Flag	16PSX0190 09/30/2022
A13.4	CUSTODIAL OFFICE/B211	D-3	1	Virco	Teacher's Desk	T3060	Top: Dry Creek Plum Tree Frame: Silver Mist Edge: Golden	30" x 60"	16PSX0190 09/30/2022
A13.4	CUSTODIAL OFFICE/B211	C-20	1	Sit-On-It	Task Chair	1123 BK2 Y AR4 FG3 CS6 CH1 MB MC45 FC13 YCC03 LA5 BT1 BC4 KD	Mesh: Ash Frame: Fog Y Support: Fog Accent Color: Electric Blue Base Color: Fog Textile: Sit on it, Burst, Nickel	Fully adjustable	15PSX0041 07/30/2023
A13.4	CUSTODIAL OFFICE/B211	ST-2	1	Virco	Storage Cabinet	FILING-53CAB361872	Silver Mist	18"d x 36"w x 72"h	16PSX0190 09/30/2022

SHEET	ROOM NAME/NUMBER	ITEM ID	QTY	MANUFACTURER	DESCRIPTION	MODEL NUMBER	FINISH/COLOR	DIMENSIONS	STATE CONTRACT #
A13.4	OFFICE/B218	D-3	1	Virco	Teacher's Desk	T3060	Top: Dry Creek Plum Tree Frame: Silver Mist Edge: Golden	30" x 60"	16PSX0190 09/30/2022
A13.4	OFFICE/B218	C-20	1	Sit-On-It	Task Chair	1123 BK2 Y AR4 FG3 CS6 CH1 MB MC45 FC13 YCC03 LA5 BT1 BC4 KD	Mesh: Ash Frame: Fog Y Support: Fog Accent Color: Electric Blue Base Color: Fog Textile: Sit on it, Burst,Nickel	Fully adjustable	15PSX0041 07/30/2023
A13.4	EXTERIOR STORAGE/ B221	BC-9	2	Safco	Industrial Metal Shelving	6269	Light Grey	18"d x 36"w x 84"h	15PSX0041 07/30/2023
A13.4	GYM STORAGE/ B222	BC-9	5	Safco	Industrial Metal Shelving	6269	Light Grey	18"d x 36"w x 84"h	15PSX0041 07/30/2023
A13.4	COACH'S OFFICE/B225	D-3	2	Virco	Teacher's Desk	T3060	Top: Dry Creek Plum Tree Frame: Silver Mist Edge: Golden	30" x 60"	16PSX0190 09/30/2022
A13.4	COACH'S OFFICE/B225	C-20	2	Sit-On-It	Task Chair	1123 BK2 Y AR4 FG3 CS6 CH1 MB MC45 FC13 YCC03 LA5 BT1 BC4 KD	Mesh: Ash Frame: Fog Y Support: Fog Accent Color: Electric Blue Base Color: Fog Textile: Sit on it, Burst, Nickel	Fully adjustable	15PSX0041 07/30/2023
A13.4	COACH'S OFFICE/B225	ST-2	1	Virco	Storage Cabinet	FILING-53CAB361872	Silver Mist	18"d x 36"w x 72"h	16PSX0190 09/30/2022
A13.4	COACH'S OFFICE/B225	ST-6	1	Virco	4-Drawer File Cab.	FILING-53LF364D	Silver Mist	36" x 18" x 52"	16PSX0190 09/30/2022
A13.4	PLATFORM/B231	T-25	6	Amtab	Cafeteria Tables	ACB8	Table Top: Formica, White Twill Table Edge: Dyna Rock Beige Metal: MetallicTitanium Paint Bench: Formica, Denim Twill Bench Edge: Dyna Rock Navy	8' long / 15" seat 27" table	16PSX0190 09/30/2022
A13.4	PLATFORM/B231	EQ-9	1	Annin	Complete mounting set for flag	27602	Oak	8' pole	17PSX0012

SHEET	ROOM NAME/NUMBER	ITEM ID	QTY	MANUFACTURER	DESCRIPTION	MODEL NUMBER	FINISH/COLOR	DIMENSIONS	STATE CONTRACT #
A13.4	PLATFORM/B231	EQ-10	1	Annin	Connecticut Flag	23336	N/A	3' x 5'	17PSX0012
A13.4	PLATFORM/B231	EQ-11	1	Annin	USA Flag on Stand	864633	N/A	3' x 5'	17PSX0012
A13.4	CAFETERIA/B229	T-26	36	Amtab	Cafeteria Tables	ACB8	Table Top: Formica, White Twill Table Edge: Dyna Rock Beige Metal: MetallicTitanium Paint Bench: Formica, Denim Twill Bench Edge: Dyna Rock Navy	8' long / 17" seat 29" table	16PSX0190 09/30/2022
A13.4	MAIN OFFICE/B232	C-20	2	Sit-On-It	Task Chair	1123 BK2 Y AR4 FG3 CS6 CH1 MB MC45 FC13 YCC03 LA5 BT1 BC4 KD	Mesh: Ash Frame: Fog Y Support: Fog Accent Color: Electric Blue Base Color: Fog Textile: Sit on it, Burst, Nickel	Fully adjustable	15PSX0041 07/30/2023
A13.4	MAIN OFFICE/B232	ST-6	2	Virco	4-Drawer File Cab.	FILING-53LF364D	Silver Mist	36" x 18" x 52"	16PSX0190 09/30/2022
A13.4	MAIN OFFICE/B232	C-30	1	Coalesse	4 Seat Lounge	460-4	Legs: Platinum Metallic Upholstery: Brisa, Cambridge Blue BR11	30"D X 88"W X 27"H	15PSX0041
A13.4	DOCUMENT STORAGE/B233	ST-6	10	Virco	4-Drawer File Cab.	FILING-53LF364D	Silver Mist	36" x 18" x 52"	16PSX0190 09/30/2022
A13.4	PARENT LIAISON/B234	D-5	1	Kimball	L Shape Desk	53K2442WBSL3/ 53K3028SLOSP/ 53K3060WBSL/ 53K5412PSR/ 53K60SRUP/ 53K7216SOSMG2L/ 53KE2415PUBBFSL/	Laminate: Tuscan Walnut Metal: Silver Pearl Pulls: Studio/Silver Pearl Modesty: Mist TBD: Kimball, Universe, Mica	30" x 66" desk / 24" x 42" return	15PSX0041 6/30/2020
A13.4	PARENT LIAISON/B234	F-1	1	Kimball	3-Drawer File	FND18363/ FNDACW/	Silver Pearl w/Tuscan Walnut top	36"W X 18"D	15PSX0041 6/30/2020

SHEET	ROOM NAME/NUMBER	ITEM ID	QTY	MANUFACTURER	DESCRIPTION	MODEL NUMBER	FINISH/COLOR	DIMENSIONS	STATE CONTRACT #
A13.4	PARENT LIAISON/B234	C-27	1	Kimball	Task Chair	K56TMUFA	Seat: Kimball, Moxie, Melange, Night Sky Back: Black Mesh Frame: Black Base: Aluminum	26" X 26"	15PSX0041 6/30/2020
A13.4	PARENT LIAISON/B234	C-28	2	Kimball	Guest Chair	K53S1AUCOU	Legs: Tuscan Walnut Seat/Back: Mayer Fabrics, Spokes, Quartz	24"W X 25"D X 31"H	15PSX0041 6/30/2020
A13.4	CONFERENCE ROOM/B235	T-20	1	Kimball	Conference Table	74K48144RTL/ 74K2410228BL/ KCU0810ELPDCH	Top: Tuscan Walnut Legs: Silver Pearl & Tuscan Pearl	48"D x 144"w x 30"h	15PSX0041 6/30/2020
A13.4	CONFERENCE ROOM/B235	C-24	10	Kimball	Conference Chair	K56TMUCFFALH	Arms: Chrome w/ Tuscan Walnut Base: Polished Aluminum Back Mesh: White Frame: White Seat:Momentum, Lens, Navy	26" x 26"	15PSX0041 6/30/2020
A13.4	CONFERENCE ROOM/B235	ST-7	1	Kimball	Credenza	72K217236CBDRDWRLL	Tuscan Walnut	18"d x 72"w x 36"h	15PSX0041 6/30/2020
A13.4	PRINCIPALS OFFICE/B236	D-5	1	Kimball	L Shape Desk	53K2442WBSL3/ 53K3028SLOSP/ 53K3060WBSL/ 53K5412PSR/ 53K60SRUP/ 53K7216SOSMG2L/ 53KE2415PUBBFSL/ 53KPSBSP/ KAC7222TBKW	Laminate: Tuscan Walnut Metal: Silver Pearl Pulls: Studio/Silver Pearl Modesty: Mist TBD: Kimball, Universe, Mica	30" x 66" desk / 24" x 42" return	15PSX0041 6/30/2020
A13.4	PRINCIPALS OFFICE/B236	C-27	1	Kimball	Task Chair	K56TMUFA	Seat: Kimball, Moxie, Melange, Night Sky Back: Black Mesh Frame: Black Base: Aluminum	26" X 26"	15PSX0041 6/30/2020
A13.4	PRINCIPALS OFFICE/B236	C-28	4	Kimball	Guest Chair	K53S1AUCOU	Legs: Tuscan Walnut Seat/Back: Mayer Fabrics, Spokes, Quartz	24"W X 25"D X 31"H	15PSX0041 6/30/2020

SHEET	ROOM NAME/NUMBER	ITEM ID	QTY	MANUFACTURER	DESCRIPTION	MODEL NUMBER	FINISH/COLOR	DIMENSIONS	STATE CONTRACT #
A13.4	PRINCIPALS OFFICE/B236	T-19	1	Kimball	Table	53K3672WBSL/ 53K3628SLOSP/ 53K72SBUP	Top: Tuscan Walnut Legs: Silver Pearl	36"D x 72"w x 29"h	15PSX0041 6/30/2020
A13.4	PRINCIPALS OFFICE/B236	F-1	2	Kimball	3-Drawer File	FND18363/ FNDACW/	Silver Pearl w/Tuscan Walnut top	36"W X 18"D	15PSX0041 6/30/2020
A13.4	WORK ROOM/B237	D-3	1	Virco	Teacher's Desk	T3060	Top: Dry Creek Plum Tree Frame: Silver Mist Edge: Golden	30" x 60"	16PSX0190 09/30/2022
A13.4	WORK ROOM/B237	C-20	1	Sit-On-It	Task Chair	1123 BK2 Y AR4 FG3 CS6 CH1 MB MC45 FC13 YCC03 LA5 BT1 BC4 KD	Mesh: Ash Frame: Fog Y Support: Fog Accent Color: Electric Blue Base Color: Fog Textile: Sit on it, Burst,Nickel	Fully adjustable	15PSX0041 07/30/2023
A13.4	BAND/B241	C-22	40	National Public Seating	Posture Chairs	8200 Series	Black	17 1/2" h seat	16PSX0190 09/30/2022
A13.4	BAND/B241	EQ-1	40	National Public Seating	Music Stands	82MS	Black	Hieght Adj. 24"-46"	16PSX0190 09/30/2022
A13.4	BAND/B241	D-3	1	Virco	Teacher's Desk	T3060	Top: Dry Creek Plum Tree Frame: Silver Mist Edge: Golden	30" x 60"	16PSX0190 09/30/2022
A13.4	BAND/B241	C-20	1	Sit-On-It	Task Chair	1123 BK2 Y AR4 FG3 CS6 CH1 MB MC45 FC13 YCC03 LA5 BT1 BC4 KD	Mesh: Ash Frame: Fog Y Support: Fog Accent Color: Electric Blue Base Color: Fog Textile: Sit on it, Burst, Nickel	Fully adjustable	15PSX0041 07/30/2023
A13.4	BAND/B241	EQ-17	1	National Public Seating	Conductors Stand	566200	Grey	43"w x 38"d x 48"h	16PSX0190 09/30/2022
A13.4	BAND/B241	EQ-2	1 set	Virco	Flag & Flag Bracket	FLAGIN1624 & FLAGHOLD	N/A	16" x 24" Flag	16PSX0190 09/30/2022
A13.5	CUSTODIAN/B242	BC-9	1	Safco	Industrial Metal Shelving	6269	Light Grey	18"d x 36"w x 84"h	15PSX0041 07/30/2023
A13.4	CHORAL/B243	EQ-1	40	National Public Seating	Music Stands	82MS	Black	Hieght Adj. 24"-46"	16PSX0190 09/30/2022

SHEET	ROOM NAME/NUMBER	ITEM ID	QTY	MANUFACTURER	DESCRIPTION	MODEL NUMBER	FINISH/COLOR	DIMENSIONS	STATE CONTRACT #
A13.4	CHORAL/B243	D-3	1	Virco	Teacher's Desk	T3060	Top: Dry Creek Plum Tree Frame: Silver Mist Edge: Golden	30" x 60"	16PSX0190 09/30/2022
A13.4	CHORAL/B243	C-20	1	Sit-On-It	Task Chair	1123 BK2 Y AR4 FG3 CS6 CH1 MB MC45 FC13 YCC03 LA5 BT1 BC4 KD	Mesh: Ash Frame: Fog Y Support: Fog Accent Color: Electric Blue Base Color: Fog Textile: Sit on it, Burst, Nickel	Fully adjustable	15PSX0041 07/30/2023
A13.4	CHORAL/B243	EQ-17	1	National Public Seating	Conductors Stand	566200	Grey	43"w x 38"d x 48"h	16PSX0190 09/30/2022
A13.4	CHORAL/B243	C-29	40	Norwood Commercial Furniture	Stacking Stool	NOR-STOOLACP-SO	Assorted	17 3/4" high	16PSX0190 09/30/2022
A13.4	CHORAL/B243	EQ-2	1 set	Virco	Flag & Flag Bracket	FLAGIN1624 & FLAGHOLD	N/A	16" x 24" Flag	16PSX0190 09/30/2022
A13.5	STORAGE/B245	BC-9	3	Safco	Industrial Metal Shelving	6269	Light Grey	18"d x 36"w x 84"h	15PSX0041 07/30/2023
A13.5	STORAGE/B246	BC-9	3	Safco	Industrial Metal Shelving	6269	Light Grey	18"d x 36"w x 84"h	15PSX0041 07/30/2023
A13.5	TEACHER DINING/C211	T-2	6	Virco	Square Table	66129 / U3636	Top: Dry Creek Plum Tree Frame: Silver Mist Edge: Golden	36" x 36" x 29"h	16PSX0190 09/30/2022
A13.5	TEACHER DINING/C211	C-13	14	Steelcase	Move Chair	490412P	Seat: Picasso Back: White Frame: Platinum Mettalic	18" seat	15PSX0041
A13.5	TEACHER DINING/C211	EQ-14	1	Sharp	Microwave	SMC2242DS	Stainless	2.2 CU FT	17PSX0073
A13.5	TEACHER DINING/C211	EQ-15	2	GE	Side By Side Ref.	GZS22IYNFS	Stainless	36" w x 28" d x 69 7/8" h	17PSX0073
A13.5	WAITING AREA/C212	D-3	1	Virco	Teacher's Desk	T3060	Top: Dry Creek Plum Tree Frame: Silver Mist Edge: Golden	30" x 60"	16PSX0190 09/30/2022

SHEET	ROOM NAME/NUMBER	ITEM ID	QTY	MANUFACTURER	DESCRIPTION	MODEL NUMBER	FINISH/COLOR	DIMENSIONS	STATE CONTRACT #
A13.5	WAITING AREA/C212	C-20	1	Sit-On-It	Task Chair	1123 BK2 Y AR4 FG3 CS6 CH1 MB MC45 FC13 YCC03 LA5 BT1 BC4 KD	Mesh: Ash Frame: Fog Y Support: Fog Accent Color: Electric Blue Base Color: Fog Textile: Sit on it, Burst, Nickel	Fully adjustable	15PSX0041 07/30/2023
A13.5	WAITING AREA/C212	EQ-15	1	GE	Side By Side Ref.	GZS22IYNFS	Stainless	36" w x 28" d x 69 7/8" h	17PSX0073
A13.5	WAITING AREA/C212	EQ-12	1	Frididaire	Electric Washer/Dryer	FFLE3900UW	White	27"w x 31 1/2"d x 76"h	17PSX0073
A13.5	WAITING AREA/C212	EQ-13	1	Summit	Ice Maker	BIM44GADA	Stainless	14 7/8" w x 25 3/8"d x 34 3/8"h	17PSX0073
A13.5	TOILET/C213	EQ-7	1	Whitney Brothers	Changing Table	WB0648	Birch	45.50"w x 24.75"d x 37.50"h	16PSX0190 09/30/2022
A13.5	EXAM ROOM/C214	B-1	1	Virco	Recovery Cots	FABEDPD	Blue	27"w x 72"l x 20"h	16PSX0190 09/30/2022
A13.5	COTS/C215	B-1	3	Virco	Recovery Cots	FABEDPD	Blue	27"w x 72"l x 20"h	16PSX0190 09/30/2022
A13.5	COTS/C215	C-3	3	Virco	4 Leg Chair	AN16	Navy BLU51	16" seat	16PSX0190 09/30/2022
A13.5	COTS/C215	EQ-8	1	Virco	Digital Scale	DFASCALE	Silver	7' tall	16PSX0190 09/30/2022
A13.5	NURSE'S OFFICE/C216	D-3	1	Virco	Teacher's Desk	T3060	Top: Dry Creek Plum Tree Frame: Silver Mist Edge: Golden	30" x 60"	16PSX0190 09/30/2022
A13.5	NURSE'S OFFICE/C216	C-20	1	Sit-On-It	Task Chair	1123 BK2 Y AR4 FG3 CS6 CH1 MB MC45 FC13 YCC03 LA5 BT1 BC4 KD	Mesh: Ash Frame: Fog Y Support: Fog Accent Color: Electric Blue Base Color: Fog Textile: Sit on it, Burst, Nickel	Fully adjustable	15PSX0041 07/30/2023

SHEET	ROOM NAME/NUMBER	ITEM ID	QTY	MANUFACTURER	DESCRIPTION	MODEL NUMBER	FINISH/COLOR	DIMENSIONS	STATE CONTRACT #
A13.5	NURSE'S OFFICE/C216	C-5	2	Virco	Guest Chair	AN18ELP	Shell: Horizon BLU14 Seat: Navy Upholstery	18" seat	16PSX0190 09/30/2022
A13.5	NURSE'S OFFICE/C216	ST-6	3	Virco	4-Drawer File Cab.	FILING-53LF364D	Silver Mist	36" x 18" x 52"	16PSX0190 09/30/2022
A13.5	NURSE'S OFFICE/C216	EQ-22	1	School Health	Wheelchair	1006241	Black	16" x 18" seat	Direct Purchase
A13.5	NURSE'S OFFICE/C216	EQ-23	1	School Health	Syhymomanometer w/ Stethoscope	56331	Burgundy	N/A	Direct Purchase
A13.5	NURSE'S OFFICE/C216	EQ-24	1	School Health	Deluxe Universal Floor Stand for Insta-line ESV1200	52366	N/A	N/A	Direct Purchase
A13.5	NURSE'S OFFICE/C216	EQ-25	1	School Health	Specular Occluder	1005613	black	N/A	Direct Purchase
A13.5	NURSE'S OFFICE/C216	EQ-26	1 pack	School Health	Steroacuity Screening Tiger-pack of 2	52682	Tiger	N/A	Direct Purchase
A13.5	NURSE'S OFFICE/C216	EQ-27	1	School Health	Portable Audiometer	1005426	White/Blue	N/A	Direct Purchase
A13.5	STORAGE/C217	ST-2	2	Virco	Storage Cabinet	FILOING-53CAB361872	Silver Mist	18"d x 36"w x 72"h	16PSX0190 09/30/2022
A13.5	STORAGE/C217	EQ-21	1	School Health	Narcodic Cabinet	24555	Beige	18"w x 8"d x 30"h	Direct Purchase
A13.5	WAITING ROOM/C218	C-5	3	Virco	Guest Chair	AN18ELP	Shell: Horizon BLU14 Seat: Navy Upholstery	18" seat	16PSX0190 09/30/2022
A13.5	CONFERENCE ROOM/C219	ST-7	1	Kimball	Credenza	72K217236CBDRDWRLL	Tuscan Walnut	18"D x 72"w x 36"	15PSX0041 6/30/2020
A13.5	CONFERENCE ROOM/C219	ST-2	2	Virco	Storage Cabinet	FILING-53CAB361872	Silver Mist	18"d x 36" x 72"	16PSX0190 09/30/2022
A13.5	CONFERENCE ROOM/C219	C-31	16	Sit On It	Mobile Task Chair	1141 FT4 SC27 US MB AR1 FG3 CS5 MC24 AC	Mesh Back: Electric Blue Frame & Shell: Fog Seat: DesignTex, Gamut, Pewter	300 lb limit	15PSX0041 6/30/2020
A13.5	CONFERENCE ROOM/C219	T-18	8	Kimball	Flip Top Mobile Table	75K3060RTL / 75K266028CFFTM	Tuscan Walnut / Silver Pearl	30" x 60"	15PSX0041 6/30/2020
A13.5	TESTING ROOM/C220	ST-2	2	Virco	Storage Cabinet	FILOING-53CAB361872	Silver Mist	18"d x 36"w x 72"h	16PSX0190 09/30/2022

SHEET	ROOM NAME/NUMBER	ITEM ID	QTY	MANUFACTURER	DESCRIPTION	MODEL NUMBER	FINISH/COLOR	DIMENSIONS	STATE CONTRACT #
A13.5	TESTING ROOM/C220	C-4	2	Virco	4 Leg Chair	AN18	Navy BLU51	18" h seat	16PSX0190 09/30/2022
A13.5	TESTING ROOM/C220	C-3	2	Virco	4 Leg Chair	AN16	Navy BLU51	16" h seat	16PSX0190 09/30/2022
A13.5	TESTING ROOM/C220	T-4	1	Virco	Table	483672	Top: Dry Creek Plum Tree Edge Band: Golden Frame: Silver Mist	36" x 72" x 22"-30"h	16PSX0190 09/30/2022
A13.5	PSYCH. OFFICE/C221	D-5	1	Kimball	L Shape Desk	53K2442WBSL3/ 53K3028SLOSP/ 53K3060WBSL/ 53K5412PSR/ 53K60SRUP/ 53K7216SOSMG2L/ 53KE2415PUBBFSL/ 53KPSBSP/ KAC7222TBKW	Laminate: Tuscan Walnut Metal: Silver Pearl Pulls: Studio/Silver Pearl Modesty: Mist TBD: Kimball, Universe, Mica	30" x 66" desk / 24" x 42" return	15PSX0041 6/30/2020
A13.5	PSYCH. OFFICE/C221	C-27	1	Kimball	Task Chair	K56TMUFA	Seat: Kimball, Moxie, Melange, Night Sky Back: Black Mesh Frame: Black Base: Aluminum	26" X 26"	15PSX0041 6/30/2020
A13.5	PSYCH. OFFICE/C221	C-28	2	Kimball	Guest Chair	K53S1AUCOU	Legs: Tuscan Walnut Seat/Back: Mayer Fabrics, Spokes, Quartz	24"W X 25"D X 31"H	15PSX0041 6/30/2020
A13.5	PSYCH. OFFICE/C221	F-1	2	Kimball	Lateral File-3 high	FND18363/ FNDACW/ SS1836LFTL	Silver Pearl w/ Tuscan Walnut laminate top	36"w x 18"d x 3 high	15PSX0041 6/30/2020
A13.5	SOCIAL WORKER OFFICE/C222	D-5	1	Kimball	L Shape Desk	53K2442WBSL3/ 53K3028SLOSP/ 53K3060WBSL/ 53K5412PSR/ 53K60SRUP/ 53K7216SOSMG2L/ 53KE2415PUBBFSL/ 53KPSBSP/ KAC7222TBKW	Laminate: Tuscan Walnut Metal: Silver Pearl Pulls: Studio/Silver Pearl Modesty: Mist TBD: Kimball, Universe, Mica	30" x 66" desk / 24" x 42" return	15PSX0041 6/30/2020

SHEET	ROOM NAME/NUMBER	ITEM ID	QTY	MANUFACTURER	DESCRIPTION	MODEL NUMBER	FINISH/COLOR	DIMENSIONS	STATE CONTRACT #
A13.5	SOCIAL WORKER OFFICE/C222	C-27	1	Kimball	Task Chair	K56TMUFA	Seat: Kimball, Moxie, Melange, Night Sky Back: Black Mesh Frame: Black Base: Aluminum	26" X 26"	15PSX0041 6/30/2020
A13.5	SOCIAL WORKER OFFICE/C222	C-28	2	Kimball	Guest Chair	K53S1AUCOU	Legs: Tuscan Walnut Seat/Back: Mayer Fabrics, Spokes, Quartz	24"W X 25"D X 31"H	15PSX0041 6/30/2020
A13.5	SOCIAL WORKER OFFICE/C222	F-1	2	Kimball	Lateral File-3 high	FND18363/ FNDACW/ SS1836LFTL	Silver Pearl w/ Tuscan Walnut laminate top	36"w x 18"d x 3 high	15PSX0041 6/30/2020
A13.5	SPEECH PATHOLOGIST/C223	D-3	1	Virco	Teacher's Desk	T3060	Top: Dry Creek Plum Tree Edge Band: Golden Frame: Silver Mist	30" x 60"	16PSX0190 09/30/2022
A13.5	SPEECH PATHOLOGIST/C223	C-20	1	Sit-On-It	Task Chair	1123 BK2 Y AR4 FG3 CS6 CH1 MB MC45 FC13 YCC03 LA5 BT1 BC4 KD	Mesh: Ash Frame: Fog Y Support: Fog Accent Color: Electric Blue Base Color: Fog Textile: Sit on it, Burst, Nickel	Fully adjustable	15PSX0041 07/30/2023
A13.5	SPEECH PATHOLOGIST/C223	ST-6	1	Virco	4 Drawer File	FILING-53LF364D	Silver Mist	36" x 18" x 52"	16PSX0190 09/30/2022
A13.5	SPEECH PATHOLOGIST/C223	T-5	2	Virco	Table	483060	Top: Dry Creek Plum Tree Edge Band: Golden Frame: Silver Mist	30" x 60" x 22"-30"	16PSX0190 09/30/2022
A13.5	SPEECH PATHOLOGIST/C223	C-4	4	Virco	Student Chair	AN18	Navy BLU51	18" high chair	16PSX0190 09/30/2022
A13.5	SPEECH PATHOLOGIST/C223	C-3	2	Virco	Student Chair	AN16	Navy BLU51	16" high chair	16PSX0190 09/30/2022
A13.5	SPEECH PATHOLOGIST/C223	C-2	2	Virco	Student Chair	AN14	Navy BLU51	14" CHAIR	16PSX0190 09/30/2022
A13.5	GUIDENCE COUNSELOR /C224	D-5	1	Kimball	L Shape Desk	53K2442WBSL3/ 53K3028SLOSP/ 53K3060WBSL/ 53K5412PSR/ 53K60SRUP/ 53K7216SOSMG2L/ 53KE2415PUBBFSL/ 53KPSBSP/ KAC7222TBKW	Laminate: Tuscan Walnut Metal: Silver Pearl Pulls: Studio/Silver Pearl Modesty: Mist TBD: Kimball, Universe, Mica	30" x 66" desk / 24" x 42" return	15PSX0041 6/30/2020

SHEET	ROOM NAME/NUMBER	ITEM ID	QTY	MANUFACTURER	DESCRIPTION	MODEL NUMBER	FINISH/COLOR	DIMENSIONS	STATE CONTRACT #
A13.5	GUIDENCE COUNSELOR /C224	C-27	1	Kimball	Task Chair	K56TMUFA	Seat: Kimball, Moxie, Melange, Night Sky Back: Black Mesh Frame: Black Base: Aluminum	26" X 26"	15PSX0041 6/30/2020
A13.5	GUIDENCE COUNSELOR /C224	C-28	2	Kimball	Guest Chair	K53S1AUCOU	Legs: Tuscan Walnut Seat/Back: Mayer Fabrics, Spokes, Quartz	24"W X 25"D X 31"H	15PSX0041 6/30/2020
A13.5	GUIDENCE COUNSELOR /C224	F-1	2	Kimball	Lateral File-3 high	FND18363/ FNDACW/ SS1836LFTL	Silver Pearl w/ Tuscan Walnut laminate top	36"w x 18"d x 3 high	15PSX0041 6/30/2020
A13.5	OT/PT/C229	D-3	2	Virco	Teacher's Desk	T3060	Top: Dry Creek Plum Tree Edge: Golden Frame: Silver Mist	30" x 60"	16PSX0190 09/30/2022
A13.5	OT/PT/C229	C-20	2	Sit-On-It	Task Chair	1123 BK2 Y AR4 FG3 CS6 CH1 MB MC45 FC13 YCC03 LA5 BT1 BC4 KD	Mesh: Ash Frame: Fog Y Support: Fog Accent Color: Electric Blue Base Color: Fog Textile: Sit on it, Burst, Nickel	Fully adjustable	15PSX0041 07/30/2023
A13.5	OT/PT/C229	EQ-2	1 Set	Virco	Flag & Wall Bracket	FLAGIN1624 & FLAGHOLD	N/A	16" X 24"	16PSX0190 09/30/2022
A13.5	OT STORAGE/C229A	BC-9	1	Safco	Industrial Metal Shelving	6269	Light Grey	18"d x 36"w x 84"h	15PSX0041 07/30/2023
A13.6	PT STORAGE/C229B	BC-9	1	Safco	Industrial Metal Shelving	6269	Light Grey	18"d x 36"w x 84"h	15PSX0041 07/30/2023
A13.5	ART STUDIO/C230	D-3	1	Virco	Teacher's Desk	T3060	Top: Dry Creek Plum Tree Edge: Golden Frame: Silver Mist	30" x 60"	16PSX0190 09/30/2022
A13.5	ART STUDIO/C230	C-20	1	Sit-On-It	Task Chair	1123 BK2 Y AR4 FG3 CS6 CH1 MB MC45 FC13 YCC03 LA5 BT1 BC4 KD	Mesh: Ash Frame: Fog Y Support: Fog Accent Color: Electric Blue Base Color: Fog Textile: Sit on it, Burst, Nickel	Fully adjustable	15PSX0041 07/30/2023
A13.5	ART STUDIO/C230	T-4	6	Virco	Hieght Adj. Table	483672	Top: Looksikeatre Edge: Adobe BRN42 Frame: Silver Mist	36" x 72", 22-30"h	16PSX0190 09/30/2022
A13.5	ART STUDIO/C230	C-26	28	Virco	Adjust Hieght Chair	ANTASK16/UGLIDE	Navy BLU51	13"-16" adj. seat hieght	16PSX0190 09/30/2022

SHEET	ROOM NAME/NUMBER	ITEM ID	QTY	MANUFACTURER	DESCRIPTION	MODEL NUMBER	FINISH/COLOR	DIMENSIONS	STATE CONTRACT #
A13.5	ART STUDIO/C230	EQ-2	1 Set	Virco	Flag & Wall Bracket	FLAGIN1624 & FLAGHOLD	N/A	16" X 24"	16PSX0190 09/30/2022
A13.5	MATH RESOURCE CENTER/C231	T-5	1	Virco	Table	483060	Top: Dry Creek Plum Tree Edge: Golden Frame: Silver Mist	30"x60" x 22"-30"H	16PSX0190 09/30/2022
A13.5	MATH RESOURCE CENTER/C231	D-3	1	Virco	Teacher's Desk	T3060	Top: Dry Creek Plum Tree Edge: Golden Frame: Silver Mist	30" x 60"	16PSX0190 09/30/2022
A13.5	MATH RESOURCE CENTER/C231	C-20	1	Sit-On-It	Task Chair	1123 BK2 Y AR4 FG3 CS6 CH1 MB MC45 FC13 YCC03 LA5 BT1 BC4 KD	Mesh: Ash Frame: Fog Y Support: Fog Accent Color: Electric Blue Base Color: Fog Textile: Sit on it, Burst, Nickel	Fully adjustable	15PSX0041 07/30/2023
A13.5	MATH RESOURCE CENTER/C231	ST-3	1	Virco	Tote Tray Storage Cab.	2703MBTT/ (4)TT121812 / (20) TT12183 / (2)TT12186	Top: Dry Creek Plum Tree Frame: Silver Mist	56"w x 48"hx 22"d	16PSX0190 09/30/2022
A13.5	MATH RESOURCE CENTER/C231	C-5	4	Virco	Chair with Upholstered Seat	AN18ELP	Shell: Horizon BLU14 Seat: Navy Upholstery	18" High	16PSX0190 09/30/2022
A13.5	PREK STORAGE/C236	BC-13	6	Safco	Deep Industrial Metal Shelving	6247	Black	24"d x 36"w x 72"h	15PSX0041 07/30/2023
A13.5	SPECIAL ED ROOM/C237	D-3	1	Virco	Teacher's Desk	T3060	Top: Dry Creek Plum Tree Edge: Golden Frame: Silver Mist	30" x 60"	16PSX0190 09/30/2022
A13.5	SPECIAL ED ROOM/C237	C-20	1	Sit-On-It	Task Chair	1123 BK2 Y AR4 FG3 CS6 CH1 MB MC45 FC13 YCC03 LA5 BT1 BC4 KD	Mesh: Ash Frame: Fog Y Support: Fog Accent Color: Electric Blue Base Color: Fog Textile: Sit on it, Burst, Nickel	Fully adjustable	15PSX0041 07/30/2023
A13.5	SPECIAL ED ROOM/C237	T-3	1	Virco	Cooperative Table	48COOP72	Top: Dry Creek Plum Tree Edge: Golden Frame: Silver Mist	36" x 72" x 22-30"h	16PSX0190 09/30/2022
A13.5	SPECIAL ED ROOM/C237	C-23	4	School Specialty/Classroom Select	Motion Stool	5000845	Paprika	Adj height 14.5"-20.5"	17PSX0012
A13.5	SPECIAL ED ROOM/C237	D-1	6	Virco	Boomerang Desk	ZBOOMTTM	Top: Dry Creek Plum Tree Frame: Silver Mist	22" x 34" hight adj. desk top	16PSX0190 09/30/2022
A13.5	SPECIAL ED ROOM/C237	C-26	7	Virco	Student Chair	ANTASK18/UGLIDE	Navy BLU51	Hieght Adjustable 16"-20.5"	16PSX0190 09/30/2022

SHEET	ROOM NAME/NUMBER	ITEM ID	QTY	MANUFACTURER	DESCRIPTION	MODEL NUMBER	FINISH/COLOR	DIMENSIONS	STATE CONTRACT #
A13.5	SPECIAL ED ROOM/C237	EQ-2	1 Set	Virco	Flag & Wall Bracket	FLAGIN1624 & FLAGHOLD	N/A	16" X 24"	16PSX0190 09/30/2022
A13.5	SPECIAL ED ROOM/C239	D-3	1	Virco	Teacher's Desk	T3060	Top: Dry Creek Plum Tree Edge: Golden Frame: Silver Mist	30" x 60"	16PSX0190 09/30/2022
A13.5	SPECIAL ED ROOM/C239	C-20	1	Sit-On-It	Task Chair	1123 BK2 Y AR4 FG3 CS6 CH1 MB MC45 FC13 YCC03 LA5 BT1 BC4 KD	Mesh: Ash Frame: Fog Y Support: Fog Accent Color: Electric Blue Base Color: Fog Textile: Sit on it, Burst, Nickel	Fully adjustable	15PSX0041 07/30/2023
A13.5	SPECIAL ED ROOM/C239	T-3	1	Virco	Cooperative Table	48COOP72	Top: Dry Creek Plum Tree Edge: Golden Frame: Silver Mist	36" x 72" x 22-30"h	16PSX0190 09/30/2022
A13.5	SPECIAL ED ROOM/C239	C-23	4	School Specialty/Classroom Select	Motion Stool	5000845	Paprika	Adj height 14.5"-20.5"	17PSX0012
A13.5	SPECIAL ED ROOM/C239	D-1	6	Virco	Boomerang Desk	ZBOOMTTM	Top: Dry Creek Plum Tree Frame: Silver Mist	22" x 34" hight adj. desk top	16PSX0190 09/30/2022
A13.5	SPECIAL ED ROOM/C239	C-26	7	Virco	Student Chair	ANTASK18/UGLIDE	Navy BLU51	Hieght Adjustable 16"-20.5"	16PSX0190 09/30/2022
A13.5	SPECIAL ED ROOM/C239	EQ-2	1 Set	Virco	Flag & Wall Bracket	FLAGIN1624 & FLAGHOLD	N/A	16" X 24"	16PSX0190 09/30/2022
A13.5	RESOURCE ROOM/C240	T-4	1	Virco	Rectangle Table	483672	Top: Dry Creek Plum Tree Edge: Golden Frame: Silver Mist	30" x 72" x 22"-30"h adj.	16PSX0190 09/30/2022
A13.5	RESOURCE ROOM/C240	C-26	6	Virco	Student Chair	ANTASK18/UGLIDE	Navy BLU51	Hieght Adjustable 16"-20.5"	16PSX0190 09/30/2022
A13.5	ESL ROOM/C241	D-3	1	Virco	Teacher's Desk	T3060	Top: Dry Creek Plum Tree Edge: Golden Frame: Silver Mist	30" x 60"	16PSX0190 09/30/2022
A13.5	ESL ROOM/C241	C-20	1	Sit-On-It	Task Chair	1123 BK2 Y AR4 FG3 CS6 CH1 MB MC45 FC13 YCC03 LA5 BT1 BC4 KD	Mesh: Ash Frame: Fog Y Support: Fog Accent Color: Electric Blue Base Color: Fog Textile: Sit on it, Burst, Nickel	Fully adjustable	15PSX0041 07/30/2023
A13.5	ESL ROOM/C241	T-3	1	Virco	Cooperative Table	48COOP72	Top: Dry Creek Plum Tree Edge: Golden Frame: Silver Mist	36" x 72" x 22-30"h	16PSX0190 09/30/2022

SHEET	ROOM NAME/NUMBER	ITEM ID	QTY	MANUFACTURER	DESCRIPTION	MODEL NUMBER	FINISH/COLOR	DIMENSIONS	STATE CONTRACT #
A13.5	ESL ROOM/C241	C-23	4	School Specialty/Classroom Select	Motion Stool	5000845	Paprika	Adj height 14.5"-20.5"	17PSX0012
A13.5	ESL ROOM/C241	ST-6	1	Virco	4 Drawer Lateral File	FILING-53LF364D	Silver Mist	36" X 18" X 52"	16PSX0190 09/30/2022
A13.5	ESL ROOM/C241	D-1	6	Virco	Boomerang Desk	ZBOOMTTM	Top: Dry Creek Plum Tree Frame: Silver Mist	22" x 34" hight adj. desk top	16PSX0190 09/30/2022
A13.5	ESL ROOM/C241	C-12	4	Virco	Student Chair	ANTASK18/UGLIDE	Navy BLU51	Hieght Adjustable 16"-20.5"	16PSX0190 09/30/2022
A13.5	ESL ROOM/C241	C-26	3	Virco	Student Chair	ANTASK16/UGLIDE	Navy BLU51	Hieght Adjustable 12.5"-15.5"	16PSX0190 09/30/2022
A13.5	ESL ROOM/C241	EQ-2	1 Set	Virco	Flag & Wall Bracket	FLAGIN1624 & FLAGHOLD	N/A	16" X 24"	16PSX0190 09/30/2022
A13.5	BOOK ROOM/C242	BC-14	7	Virco	Metal Bookcase	BOOKCASE-BCM3672-GRY05	Silver Mist	36"X 12"D X 72"H	16PSX0190 09/30/2022
A13.5	BOOK ROOM/C242	ST-1	1	Virco	Book Cart	KLIB1836C	Blue	20"D x 37"W x 43"h	16PSX0190 09/30/2022
A13.5	READING ROOM/C244	D-3	1	Virco	Teacher's Desk	T3060	Top: Dry Creek Plum Tree Edge: Golden Frame: Silver Mist	30" x 60"	16PSX0190 09/30/2022
A13.5	READING ROOM/C244	C-20	1	Sit-On-It	Task Chair	1123 BK2 Y AR4 FG3 CS6 CH1 MB MC45 FC13 YCC03 LA5 BT1 BC4 KD	Mesh: Ash Frame: Fog Y Support: Fog Accent Color: Electric Blue Base Color: Fog Textile: Sit on it, Burst, Nickel	Fully adjustable	15PSX0041 07/30/2023
A13.5	READING ROOM/C244	T-3	1	Virco	Cooperative Table	48COOP72	Top: Dry Creek Plum Tree Edge: Golden Frame: Silver Mist	36" x 72" x 22-30"h	16PSX0190 09/30/2022
A13.5	READING ROOM/C244	C-23	4	School Specialty/Classroom Select	Motion Stool	5000845	Paprika	Adj height 14.5"-20.5"	17PSX0012
A13.5	READING ROOM/C244	C-26	6	Virco	Student Chair	ANTASK16/UGLIDE	Navy BLU51	Hieght Adjustable 12.5"-15.5"	16PSX0190 09/30/2022
A13.5	READING ROOM/C244	T-4	1	Virco	Table	483672	Top: Dry Creek Plum Tree Edge: Golden Frame: Silver Mist	36" x 72" x 22"-30"h	16PSX0190 09/30/2022
A13.5	READING ROOM/C244	EQ-2	1 Set	Virco	Flag & Wall Bracket	FLAGIN1624 & FLAGHOLD	N/A	16" X 24"	16PSX0190 09/30/2022

SHEET	ROOM NAME/NUMBER	ITEM ID	QTY	MANUFACTURER	DESCRIPTION	MODEL NUMBER	FINISH/COLOR	DIMENSIONS	STATE CONTRACT #
A13.5	LITERACY OFFICE/C245	D-5	1	Kimball	L Shape Desk	53K2442WBSL3/ 53K3028SLOSP/ 53K3060WBSL/ 53K5412PSR/ 53K60SRUP/ 53K7216SOSMG2L/ 53KE2415PUBBFSL/ 53KPSBSP/ KAC7222TBKW	Laminate: Tuscan Walnut Metal: Silver Pearl Pulls: Studio/Silver Pearl Modesty: Mist TBD: Kimball, Universe, Mica	30" x 66" desk / 24" x 42" return	15PSX0041 6/30/2020
A13.5	LITERACY OFFICE/C245	C-27	1	Kimball	Task Chair	K56TMUFA	Seat: Kimball, Moxie, Melange, Night Sky Back: Black Mesh Frame: Black Base: Aluminum	26" X 26"	15PSX0041 6/30/2020
A13.5	LITERACY OFFICE/C245	C-28	2	Kimball	Guest Chair	K53S1AUCOU	Legs: Tuscan Walnut Seat/Back: Mayer Fabrics, Spokes, Quartz	24"W X 25"D X 31"H	15PSX0041 6/30/2020
A13.5	LITERACY OFFICE/C245	F-1	1	Kimball	Lateral File-3 high	FND18363/ FNDACW/ SS1836LFTL	Silver Pearl w/ Tuscan Walnut laminate top	36"w x 18"d x 3 high	15PSX0041 6/30/2020
A13.6	PRE-K CLASSROOM/D211	D-3	1	Virco	Teacher's Desk	T3060	Top: Dry Creek Plum Tree Edge: Golden Frame: Silver Mist	30" x 60"	16PSX0190 09/30/2022
A13.6	PRE-K CLASSROOM/D211	C-20	1	Sit-On-It	Task Chair	1123 BK2 Y AR4 FG3 CS6 CH1 MB MC45 FC13 YCC03 LA5 BT1 BC4 KD	Mesh: Ash Frame: Fog Y Support: Fog Accent Color: Electric Blue Base Color: Fog Textile: Sit on it, Burst, Nickel	Fully adjustable	15PSX0041 07/30/2023
A13.6	PRE-K CLASSROOM/D211	EQ-3	1 Set	Virco	Play Kitchen	ECKTCHN	Natural Birch	See item ID sheet	16PSX0190 09/30/2022
A13.6	PRE-K CLASSROOM/D211	ST-5	1	Virco	Dress Up Center	ECCDRESS	Natural Birch	32" x 31" x 15"	16PSX0190 09/30/2022
A13.6	PRE-K CLASSROOM/D211	ST-4	1 Set	Virco	Block Storage & Blocks	ECBLOCKBIN / ECBLOCKS183	Natural Birch	24" x 24"	16PSX0190 09/30/2022
A13.6	PRE-K CLASSROOM/D211	EQ-5	1	Virco	Sand & Water Table	ECSWT4617	Natural Birch	46" x 17" x 24"	16PSX0190 09/30/2022
A13.6	PRE-K CLASSROOM/D211	T-22	3	Virco	Slide Table	48SL3054LO	Natural Birch	30" x 54" x 17"-25"	16PSX0190 09/30/2022
A13.6	PRE-K CLASSROOM/D211	T-23	2	Virco	Nest Table	48NEST54	Top: Dry Creek Plum Tree Edge: Golden Frame: Silver Mist	54" x 22-30"	16PSX0190 09/30/2022

SHEET	ROOM NAME/NUMBER	ITEM ID	QTY	MANUFACTURER	DESCRIPTION	MODEL NUMBER	FINISH/COLOR	DIMENSIONS	STATE CONTRACT #
A13.6	PRE-K CLASSROOM/D211	C-1	18	Virco	Student Chair	AN12	Navy BLU51	12" high	16PSX0190 09/30/2022
A13.6	PRE-K CLASSROOM/D211	BC-3	1	Virco	Book Display	ECBKRAK6BRD	Natural Birch	29" x 34" x 25"	16PSX0190 09/30/2022
A13.6	PRE-K CLASSROOM/D211	EQ-6	1	Virco	Puppet Theater	ECTHEATER	Natural Birch	48" x 45" x 6"	16PSX0190 09/30/2022
A13.6	PRE-K CLASSROOM/D211	BC-4	1	Virco	Storage Unit	ECSTORTTCL12	Natural Birch	21" x 33" x 14"	16PSX0190 09/30/2022
A13.6	PRE-K CLASSROOM/D211	BC-1	2	Virco	Storage Unit	ECCUB364818	Natural Birch	36" x 48" x 18"	16PSX0190 09/30/2022
A13.6	PRE-K CLASSROOM/D211	T-21	1	Virco	Cooperative Table	48COOP72LO	Top: Dry Creek Plum Tree Edge: Golden	36" x 72" x 17"-25"	16PSX0190 09/30/2022
A13.6	PRE-K CLASSROOM/D211	BC-2	1	Virco	Folding Storage Unit	ECCUB309615	Natural Birch	96" x 15"x 30"	16PSX0190 09/30/2022
A13.6	PRE-K CLASSROOM/D211	C-6	4	Virco	Floor Rocker	ANFLROCK15	Sea Mist GRN07	15"	16PSX0190 09/30/2022
A13.6	PRE-K CLASSROOM/D211	T-12	1 Set	Virco	table & two chair set	ECCH12/ ECT2424LO18	Natural Birch	12" seat 24" x 24" table	16PSX0190 09/30/2022
A13.6	PRE-K CLASSROOM/D211	C-23	4	School Specialty/Classroom Select	Motion Stool	5000845	Paprika	Adj height 14.5"-20.5"	17PSX0012
A13.6	PRE-K CLASSROOM/D211	C-9	4	Virco	Rocking Student Chair	ANROCK14FG	Sea Mist GRN07	13" seat	16PSX0190 09/30/2022
A13.6	PRE-K CLASSROOM/D211	T-1	2	Virco	Computer Table	FTT2460	Top: Dry Creek Plum Tree Edge: Golden Frame: Silver Mist	24" x 60", 24"-34" adj. height	16PSX0190 09/30/2022
A13.5	PRE-K CLASSROOM/D211	EQ-2	1 Set	Virco	Flag & Wall Bracket	FLAGIN1624 & FLAGHOLD	N/A	16" X 24"	16PSX0190 09/30/2022
A13.5	PRE-K CLASSROOM/D211	EQ-16	1	School Specialty	Area Rug	679226	N/A	8'4" x 13'-4"	17PSX0012
A13.5	PRE-K CLASSROOM/D211	EQ-18	1	School Specialty	Area Rug	7009155	Midnight Blue	6'x9'	17PSX0012
A13.5	PRE-K CLASSROOM/D211	EQ-19	1	School Specialty	Area Rug	2003787	N/A	4' x 6'	17PSX0012
A13.5	PRE-K CLASSROOM/D211	C-4	1	Virco	Chair	AN18	Navy BLU51	18" high	16PSX0190 09/30/2022
A13.6	PRE-K CLASSROOM/D213	C-20	1	Sit-On-It	Task Chair	1123 BK2 Y AR4 FG3 CS6 CH1 MB MC45 FC13 YCC03 LA5 BT1 BC4 KD	Mesh: Ash Frame: Fog Y Support: Fog Accent Color: Electric Blue Base Color: Fog Textile: Sit on it, Burst,Nickel	Fully adjustable	15PSX0041 07/30/2023

SHEET	ROOM NAME/NUMBER	ITEM ID	QTY	MANUFACTURER	DESCRIPTION	MODEL NUMBER	FINISH/COLOR	DIMENSIONS	STATE CONTRACT #
A13.6	PRE-K CLASSROOM/D213	D-3	1	Virco	Teacher's Desk	T3060	Top: Dry Creek Plum Tree Edge: Golden Frame: Silver Mist	30" x 60"	16PSX0190 09/30/2022
A13.6	PRE-K CLASSROOM/D213	EQ-3	1 Set	Virco	Play Kitchen	ECKTCHN	Natural Birch	See item ID sheet	16PSX0190 09/30/2022
A13.6	PRE-K CLASSROOM/D213	ST-5	1	Virco	Dress Up Center	ECCDRESS	Natural Birch	32" x 31" x 15"	16PSX0190 09/30/2022
A13.6	PRE-K CLASSROOM/D213	ST-4	1 Set	Virco	Block Storage & Blocks	ECBLOCKBIN / ECBLOCKS183	Natural Birch	24" x 24"	16PSX0190 09/30/2022
A13.6	PRE-K CLASSROOM/D213	EQ-5	1	Virco	Sand & Water Table	ECSWT4617	Natural Birch	46" x 17" x 24"	16PSX0190 09/30/2022
A13.6	PRE-K CLASSROOM/D213	T-22	3	Virco	Slide Table	48SL3054LO	Natural Birch	30" x 54" x 17"-25"	16PSX0190 09/30/2022
A13.6	PRE-K CLASSROOM/D213	T-23	2	Virco	Nest Table	48NEST54	Top: Dry Creek Plum Tree Edge: Golden Frame: Silver Mist	54" x 22-30"	16PSX0190 09/30/2022
A13.6	PRE-K CLASSROOM/D213	C-1	18	Virco	Student Chair	AN12	Navy BLU51	12" high	16PSX0190 09/30/2022
A13.6	PRE-K CLASSROOM/D213	BC-3	1	Virco	Book Display	ECBKRAK6BRD	Natural Birch	29" x 34" x 25"	16PSX0190 09/30/2022
A13.6	PRE-K CLASSROOM/D213	EQ-6	1	Virco	Puppet Theater	ECTHEATER	Natural Birch	48" x 45" x 6"	16PSX0190 09/30/2022
A13.6	PRE-K CLASSROOM/D213	BC-4	1	Virco	Storage Unit	ECSTORTTCL12	Natural Birch	21" x 33" x 14"	16PSX0190 09/30/2022
A13.6	PRE-K CLASSROOM/D213	BC-1	2	Virco	Storage Unit	ECCUB364818	Natural Birch	36" x 48" x 18"	16PSX0190 09/30/2022
A13.6	PRE-K CLASSROOM/D213	T-21	1	Virco	Cooperative Table	48COOP72LO	Top: Dry Creek Plum Tree Edge: Golden Frame: Silver Mist	36" x 72" x 17"-25"	16PSX0190 09/30/2022
A13.6	PRE-K CLASSROOM/D213	BC-2	1	Virco	Folding Storage Unit	ECCUB309615	Natural Birch	96" x 15"x 30"	16PSX0190 09/30/2022
A13.6	PRE-K CLASSROOM/D213	C-6	4	Virco	Floor Rocker	ANFLROCK15	Sea Mist GRN07	15"	16PSX0190 09/30/2022
A13.6	PRE-K CLASSROOM/D213	T-12	1 Set	Virco	table & two chair set	ECCH12/ ECT2424LO18	Natural Birch	12" seat 24" x 24" table	16PSX0190 09/30/2022
A13.6	PRE-K CLASSROOM/D213	C-23	4	School Specialty/Classroom Select	Motion Stool	5000845	Paprika	Adj height 14.5"-20.5"	17PSX0012
A13.6	PRE-K CLASSROOM/D213	C-9	4	Virco	Rocking Student Chair	ANROCK14FG	Sea Mist GRN07	13" seat	16PSX0190 09/30/2022
A13.6	PRE-K CLASSROOM/D213	T-1	2	Virco	Computer Table	FTT2460	Top: Dry Creek Plum Tree Edge: Golden Frame: Silver Mist	24" x 60", 24"-34" adj. height	16PSX0190 09/30/2022
A13.5	PRE-K CLASSROOM/D213	EQ-2	1 Set	Virco	Flag & Wall Bracket	FLAGIN1624 & FLAGHOLD	N/A	16" X 24"	16PSX0190 09/30/2022

SHEET	ROOM NAME/NUMBER	ITEM ID	QTY	MANUFACTURER	DESCRIPTION	MODEL NUMBER	FINISH/COLOR	DIMENSIONS	STATE CONTRACT #
A13.5	PRE-K CLASSROOM/D213	EQ-16	1	School Specialty	Area Rug	679226	N/A	8'4" x 13'-4"	17PSX0012
A13.5	PRE-K CLASSROOM/D213	EQ-18	1	School Specialty	Area Rug	7009155	Midnight Blue	6'x9'	17PSX0012
A13.5	PRE-K CLASSROOM/D213	EQ-19	1	School Specialty	Area Rug	2003787	N/A	4' x 6'	17PSX0012
A13.5	PRE-K CLASSROOM/D213	C-4	1	Virco	Chair	AN18	Navy BLU51	18" high	16PSX0190 09/30/2022
A13.6	PRE-K CLASSROOM/D215	D-3	1	Virco	Teacher's Desk	T3060	Top: Dry Creek Plum Tree Edge: Golden Frame: Silver Mist	30" x 60"	16PSX0190 09/30/2022
A13.6	PRE-K CLASSROOM/D215	C-20	1	Sit-On-It	Task Chair	1123 BK2 Y AR4 FG3 CS6 CH1 MB MC45 FC13 YCC03 LA5 BT1 BC4 KD	Mesh: Ash Frame: Fog Y Support: Fog Accent Color: Electric Blue Base Color: Fog Textile: Sit on it, Burst, Nickel	Fully adjustable	15PSX0041 07/30/2023
A13.6	PRE-K CLASSROOM/D215	EQ-3	1 Set	Virco	Play Kitchen	ECKTCHN	Natural Birch	See item ID sheet	16PSX0190 09/30/2022
A13.6	PRE-K CLASSROOM/D215	ST-5	1	Virco	Dress Up Center	ECCDRESS	Natural Birch	32" x 31" x 15"	16PSX0190 09/30/2022
A13.6	PRE-K CLASSROOM/D215	ST-4	1 Set	Virco	Block Storage & Blocks	ECBLOCKBIN / ECBLOCKS183	Natural Birch	24" x 24"	16PSX0190 09/30/2022
A13.6	PRE-K CLASSROOM/D215	EQ-5	1	Virco	Sand & Water Table	ECSWT4617	Natural Birch	46" x 17" x 24"	16PSX0190 09/30/2022
A13.6	PRE-K CLASSROOM/D215	T-22	3	Virco	Slide Table	48SL3054LO	Natural Birch	30" x 54" x 17"-25"	16PSX0190 09/30/2022
A13.6	PRE-K CLASSROOM/D215	T-23	2	Virco	Nest Table	48NEST54	Top: Dry Creek Plum Tree Edge: Golden Frame: Silver Mist	54" x 22-30"	16PSX0190 09/30/2022
A13.6	PRE-K CLASSROOM/D215	C-1	18	Virco	Student Chair	AN12	Navy BLU51	12" high	16PSX0190 09/30/2022
A13.6	PRE-K CLASSROOM/D215	BC-3	1	Virco	Book Display	ECBKRAK6BRD	Natural Birch	29" x 34" x 25"	16PSX0190 09/30/2022
A13.6	PRE-K CLASSROOM/D215	EQ-6	1	Virco	Puppet Theater	ECTHEATER	Natural Birch	48" x 45" x 6"	16PSX0190 09/30/2022
A13.6	PRE-K CLASSROOM/D215	BC-4	1	Virco	Storage Unit	ECSTORTTCL12	Natural Birch	21" x 33" x 14"	16PSX0190 09/30/2022
A13.6	PRE-K CLASSROOM/D215	BC-1	2	Virco	Storage Unit	ECCUB364818	Natural Birch	36" x 48" x 18"	16PSX0190 09/30/2022
A13.6	PRE-K CLASSROOM/D215	T-21	1	Virco	Cooperative Table	48COOP72LO	Top: Dry Creek Plum Tree Edge: Golden Frame: Silver Mist	36" x 72" x 17"-25"	16PSX0190 09/30/2022
A13.6	PRE-K CLASSROOM/D215	BC-2	1	Virco	Folding Storage Unit	ECCUB309615	Natural Birch	96" x 15"x 30"	16PSX0190 09/30/2022

SHEET	ROOM NAME/NUMBER	ITEM ID	QTY	MANUFACTURER	DESCRIPTION	MODEL NUMBER	FINISH/COLOR	DIMENSIONS	STATE CONTRACT #
A13.6	PRE-K CLASSROOM/D215	C-6	4	Virco	Floor Rocker	ANFLROCK15	Sea Mist GRN07	15"	16PSX0190 09/30/2022
A13.6	PRE-K CLASSROOM/D215	T-12	1 Set	Virco	table & two chair set	ECCH12/ ECT2424LO18	Natural Birch	12" seat 24" x 24" table	16PSX0190 09/30/2022
A13.6	PRE-K CLASSROOM/D215	C-23	4	School Specialty/Classroom Select	Motion Stool	5000845	Paprika	Adj height 14.5"-20.5"	17PSX0012
A13.6	PRE-K CLASSROOM/D215	C-9	4	Virco	Rocking Student Chair	ANROCK14FG	Sea Mist GRN07	13" seat	16PSX0190 09/30/2022
A13.6	PRE-K CLASSROOM/D215	T-1	2	Virco	Computer Table	FTT2460	Top: Dry Creek Plum Tree Edge: Golden Frame: Silver Mist	24" x 60", 24"-34" adj. height	16PSX0190 09/30/2022
A13.5	PRE-K CLASSROOM/D215	EQ-2	1 Set	Virco	Flag & Wall Bracket	FLAGIN1624 & FLAGHOLD	N/A	16" X 24"	16PSX0190 09/30/2022
A13.5	PRE-K CLASSROOM/D215	EQ-16	1	School Specialty	Area Rug	679226	N/A	8'4" x 13'-4"	17PSX0012
A13.5	PRE-K CLASSROOM/D215	EQ-18	1	School Specialty	Area Rug	7009155	Midnight Blue	6'x9'	17PSX0012
A13.5	PRE-K CLASSROOM/D215	EQ-19	1	School Specialty	Area Rug	2003787	N/A	4' x 6'	17PSX0012
A13.5	PRE-K CLASSROOM/D215	C-4	1	Virco	Chair	AN18	Navy BLU51	18" high	16PSX0190 09/30/2022
A13.6	KINDERGARTEN CLASSROOM/D219	D-3	1	Virco	Teacher's Desk	T3060	Top: Dry Creek Plum Tree Edge: Golden Frame: Silver Mist	30" x 60"	16PSX0190 09/30/2022
A13.6	KINDERGARTEN CLASSROOM/D219	C-20	1	Sit-On-It	Task Chair	1123 BK2 Y AR4 FG3 CS6 CH1 MB MC45 FC13 YCC03 LA5 BT1 BC4 KD	Mesh: Ash Frame: Fog Y Support: Fog Accent Color: Electric Blue Base Color: Fog Textile: Sit on it, Burst,Nickel	Fully adjustable	15PSX0041 07/30/2023
A13.6	KINDERGARTEN CLASSROOM/D219	T-1	2	Virco	Computer Table	FTT2460	Top: Dry Creek Plum Tree Edge: Golden Frame: Silver Mist	24" x 60", 24"-34" adj. height	16PSX0190 09/30/2022
A13.6	KINDERGARTEN CLASSROOM/D219	C-23	4	School Specialty/Classroom Select	Motion Stool	5000845	Paprika	Adj height 14.5"-20.5"	17PSX0012
A13.6	KINDERGARTEN CLASSROOM/D219	T-3	1	Virco	Cooperative Table	48COOP72	Top: Dry Creek Plum Tree Edge: Golden Frame: Silver Mist	36" x 72" x 20"-30"	16PSX0190 09/30/2022
A13.6	KINDERGARTEN CLASSROOM/D219	C-9	4	Virco	Rocking Student Chair	ANROCK14FG	Sea Mist GRN07	13" seat	16PSX0190 09/30/2022
A13.6	KINDERGARTEN CLASSROOM/D219	C-6	4	Virco	Floor Rocker	ANFLROCK15	Sea Mist GRN07	15"	16PSX0190 09/30/2022
A13.6	KINDERGARTEN CLASSROOM/D219	C-2	18	Virco	Student Chair	AN14	Navy BLU51	14"	16PSX0190 09/30/2022

SHEET	ROOM NAME/NUMBER	ITEM ID	QTY	MANUFACTURER	DESCRIPTION	MODEL NUMBER	FINISH/COLOR	DIMENSIONS	STATE CONTRACT #
A13.6	KINDERGARTEN CLASSROOM/D219	T-11	2	Virco	Swerve Table	48SWV54	Top: Dry Creek Plum Tree Edge: Golden Frame: Silver Mist	54" x 54" x 17"-30"h	16PSX0190 09/30/2022
A13.6	KINDERGARTEN CLASSROOM/D219	BC-3	1	Virco	Book Display	ECBKRAK6BRD	Natural Birch	29" x 34" x 25"	16PSX0190 09/30/2022
A13.6	KINDERGARTEN CLASSROOM/D219	BC-2	1	Virco	Folding Storage Unit	ECCUB309615	Natural Birch	96" x 15"x 30"	16PSX0190 09/30/2022
A13.6	KINDERGARTEN CLASSROOM/D219	BC-12	1	Virco	Mobile Storage	ECCUB4836TT30	Natural Birch	54" x 15" x 36"h	16PSX0190 09/30/2022
A13.6	KINDERGARTEN CLASSROOM/D219	ST-3	1	Virco	Tote Tray Cabinet	2703MBTT/ (4) TT12812/ (20) TT12183 (2)TT12186	Top: Dry Creek Plum Tree Frame: Silver Mist	56" x 48"h x 22"	16PSX0190 09/30/2022
A13.6	KINDERGARTEN CLASSROOM/D219	BC-1	1	Virco	Storage Unit	ECCUB364818	Natural Birch	36" x 48" x 18"	16PSX0190 09/30/2022
A13.6	KINDERGARTEN CLASSROOM/D219	BC-11	1	Virco	Storage Unit	ECCUB304818	Natural Birch	48"w x 18"d x 30"h	16PSX0190 09/30/2022
A13.6	KINDERGARTEN CLASSROOM/D219	T-17	4	Virco	Trap Table	48TRAP60	Top: Dry Creek Plum Tree Edge: Golden Frame: Silver Mist	30" x 30" x 30" x 60" x 22"-30"h	16PSX0190 09/30/2022
A13.6	KINDERGARTEN CLASSROOM/D219	BC-4	1	Virco	Storage Unit	ECSTORTTCL12	Natural Birch	21" x 33" x 14"	16PSX0190 09/30/2022
A13.6	KINDERGARTEN CLASSROOM/D219	BC-10	1	Virco	Storage Unit	ECCUB2436TTC	Natural Birch	36"h x 24"w x 15"d	16PSX0190 09/30/2022
A13.5	KINDERGARTEN CLASSROOM/D219	EQ-2	1 Set	Virco	Flag & Wall Bracket	FLAGIN1624 & FLAGHOLD	N/A	16" X 24"	16PSX0190 09/30/2022
A13.5	KINDERGARTEN CLASSROOM/D219	EQ-16	1	School Specialty	Area Rug	679226	N/A	8'4" x 13'-4"	17PSX0012
A13.5	KINDERGARTEN CLASSROOM/D219	C-4	1	Virco	Chair	AN18	Navy BLU51	18" high	16PSX0190 09/30/2022
A13.6	KINDERGARTEN CLASSROOM/D221	D-3	1	Virco	Teacher's Desk	T3060	Top: Dry Creek Plum Tree Edge: Golden Frame: Silver Mist	30" x 60"	16PSX0190 09/30/2022
A13.6	KINDERGARTEN CLASSROOM/D221	C-20	1	Sit-On-It	Task Chair	1123 BK2 Y AR4 FG3 CS6 CH1 MB MC45 FC13 YCC03 LA5 BT1 BC4 KD	Mesh: Ash Frame: Fog Y Support: Fog Accent Color: Electric Blue Base Color: Fog Textile: Sit on it, Burst,Nickel	Fully adjustable	15PSX0041 07/30/2023
A13.6	KINDERGARTEN CLASSROOM/D221	T-1	2	Virco	Computer Table	FTT2460	Top: Dry Creek Plum Tree Edge: Golden Frame: Silver Mist	24" x 60", 24"-34" adj. height	16PSX0190 09/30/2022
A13.6	KINDERGARTEN CLASSROOM/D221	C-23	4	School Specialty/Classroom Select	Motion Stool	5000845	Paprika	Adj height 14.5"-20.5"	17PSX0012

SHEET	ROOM NAME/NUMBER	ITEM ID	QTY	MANUFACTURER	DESCRIPTION	MODEL NUMBER	FINISH/COLOR	DIMENSIONS	STATE CONTRACT #
A13.6	KINDERGARTEN CLASSROOM/D221	T-3	1	Virco	Cooperative Table	48COOP72	Top: Dry Creek Plum Tree Edge: Golden Frame: Silver Mist	36" x 72" x 20"-30"	16PSX0190 09/30/2022
A13.6	KINDERGARTEN CLASSROOM/D221	C-9	4	Virco	Rocking Student Chair	ANROCK14FG	Sea Mist GRN07	13" seat	16PSX0190 09/30/2022
A13.6	KINDERGARTEN CLASSROOM/D221	C-6	4	Virco	Floor Rocker	ANFLROCK15	Sea Mist GRN07	15"	16PSX0190 09/30/2022
A13.6	KINDERGARTEN CLASSROOM/D221	C-2	18	Virco	Student Chair	AN14	Navy BLU51	14"	16PSX0190 09/30/2022
A13.6	KINDERGARTEN CLASSROOM/D221	T-11	2	Virco	Swerve Table	48SWV54	Top: Dry Creek Plum Tree Edge: Golden Frame: Silver Mist	54" x 54" x 17"-30"h	16PSX0190 09/30/2022
A13.6	KINDERGARTEN CLASSROOM/D221	BC-3	1	Virco	Book Display	ECBKRAK6BRD	Natural Birch	29" x 34" x 25"	16PSX0190 09/30/2022
A13.6	KINDERGARTEN CLASSROOM/D221	BC-2	1	Virco	Folding Storage Unit	ECCUB309615	Natural Birch	96" x 15"x 30"	16PSX0190 09/30/2022
A13.6	KINDERGARTEN CLASSROOM/D221	BC-12	1	Virco	Mobile Storage	ECCUB4836TT30	Natural Birch	54" x 15" x 36"h	16PSX0190 09/30/2022
A13.6	KINDERGARTEN CLASSROOM/D221	ST-3	1	Virco	Tote Tray Cabinet	2703MBTT/ (4) TT12812/ (20) TT12183 (2)TT12186	Top: Dry Creek Plum Tree Frame: Silver Mist	56" x 48"h x 22"	16PSX0190 09/30/2022
A13.6	KINDERGARTEN CLASSROOM/D221	BC-1	1	Virco	Storage Unit	ECCUB364818	Natural Birch	36" x 48" x 18"	16PSX0190 09/30/2022
A13.6	KINDERGARTEN CLASSROOM/D221	BC-11	1	Virco	Storage Unit	ECCUB304818	Natural Birch	48"w x 18"d x 30"h	16PSX0190 09/30/2022
A13.6	KINDERGARTEN CLASSROOM/D221	T-17	4	Virco	Trap Table	48TRAP60	Top: Dry Creek Plum Tree Edge: Golden Frame: Silver Mist	30" x 30" x 30" x 60" x 22"-30"h	16PSX0190 09/30/2022
A13.6	KINDERGARTEN CLASSROOM/D221	BC-4	1	Virco	Storage Unit	ECSTORTTCL12	Natural Birch	21" x 33" x 14"	16PSX0190 09/30/2022
A13.6	KINDERGARTEN CLASSROOM/D221	BC-10	1	Virco	Storage Unit	ECCUB2436TTC	Natural Birch	36"h x 24"w x 15"d	16PSX0190 09/30/2022
A13.5	KINDERGARTEN CLASSROOM/D221	EQ-2	1 Set	Virco	Flag & Wall Bracket	FLAGIN1624 & FLAGHOLD	N/A	16" X 24"	16PSX0190 09/30/2022
A13.5	KINDERGARTEN CLASSROOM/D221	EQ-16	1	School Specialty	Area Rug	679226	N/A	8'4" x 13'-4"	17PSX0012
A13.5	KINDERGARTEN CLASSROOM/D221	C-4	1	Virco	Chair	AN18	Navy BLU51	18" high	16PSX0190 09/30/2022
A13.6	KINDERGARTEN CLASSROOM/D223	D-3	1	Virco	Teacher's Desk	T3060	Top: Dry Creek Plum Tree Edge: Golden Frame: Silver Mist	30" x 60"	16PSX0190 09/30/2022

SHEET	ROOM NAME/NUMBER	ITEM ID	QTY	MANUFACTURER	DESCRIPTION	MODEL NUMBER	FINISH/COLOR	DIMENSIONS	STATE CONTRACT #
A13.6	KINDERGARTEN CLASSROOM/D223	C-20	1	Sit-On-It	Task Chair	1123 BK2 Y AR4 FG3 CS6 CH1 MB MC45 FC13 YCC03 LA5 BT1 BC4 KD	Mesh: Ash Frame: Fog Y Support: Fog Accent Color: Electric Blue Base Color: Fog Textile: Sit on it, Burst, Nickel	Fully adjustable	15PSX0041 07/30/2023
A13.6	KINDERGARTEN CLASSROOM/D223	T-1	2	Virco	Computer Table	FTT2460	Top: Dry Creek Plum Tree Edge: Golden Frame: Silver Mist	24" x 60", 24"-34" adj. height	16PSX0190 09/30/2022
A13.6	KINDERGARTEN CLASSROOM/D223	C-23	4	School Specialty/Classroom Select	Motion Stool	5000845	Paprika	Adj height 14.5"-20.5"	17PSX0012
A13.6	KINDERGARTEN CLASSROOM/D223	T-3	1	Virco	Cooperative Table	48COOP72	Top: Dry Creek Plum Tree Edge: Golden Frame: Silver Mist	36" x 72" x 20"-30"	16PSX0190 09/30/2022
A13.6	KINDERGARTEN CLASSROOM/D223	C-9	4	Virco	Rocking Student Chair	ANROCK14FG	Sea Mist GRN07	13" seat	16PSX0190 09/30/2022
A13.6	KINDERGARTEN CLASSROOM/D223	C-6	4	Virco	Floor Rocker	ANFLROCK15	Sea Mist GRN07	15"	16PSX0190 09/30/2022
A13.6	KINDERGARTEN CLASSROOM/D223	C-2	18	Virco	Student Chair	AN14	Navy BLU51	14"	16PSX0190 09/30/2022
A13.6	KINDERGARTEN CLASSROOM/D223	T-11	2	Virco	Swerve Table	48SWV54	Top: Dry Creek Plum Tree Edge: Golden Frame: Silver Mist	54" x 54" x 17"-30"h	16PSX0190 09/30/2022
A13.6	KINDERGARTEN CLASSROOM/D223	BC-3	1	Virco	Book Display	ECBKRAK6BRD	Natural Birch	29" x 34" x 25"	16PSX0190 09/30/2022
A13.6	KINDERGARTEN CLASSROOM/D223	BC-2	1	Virco	Folding Storage Unit	ECCUB309615	Natural Birch	96" x 15"x 30"	16PSX0190 09/30/2022
A13.6	KINDERGARTEN CLASSROOM/D223	BC-12	1	Virco	Mobile Storage	ECCUB4836TT30	Natural Birch	54" x 15" x 36"h	16PSX0190 09/30/2022
A13.6	KINDERGARTEN CLASSROOM/D223	ST-3	1	Virco	Tote Tray Cabinet	2703MBTT/ (4) TT12812/ (20) TT12183 (2)TT12186	Top: Dry Creek Plum Tree Frame: Silver Mist	56" x 48"h x 22"	16PSX0190 09/30/2022
A13.6	KINDERGARTEN CLASSROOM/D223	BC-1	1	Virco	Storage Unit	ECCUB364818	Natural Birch	36" x 48" x 18"	16PSX0190 09/30/2022
A13.6	KINDERGARTEN CLASSROOM/D223	BC-11	1	Virco	Storage Unit	ECCUB304818	Natural Birch	48"w x 18"d x 30"h	16PSX0190 09/30/2022
A13.6	KINDERGARTEN CLASSROOM/D223	T-17	4	Virco	Trap Table	48TRAP60	Top: Dry Creek Plum Tree Edge: Golden Frame: Silver Mist	30" x 30" x 30" x 60" x 22"-30"h	16PSX0190 09/30/2022
A13.6	KINDERGARTEN CLASSROOM/D223	BC-4	1	Virco	Storage Unit	ECSTORTTCL12	Natural Birch	21" x 33" x 14"	16PSX0190 09/30/2022
A13.6	KINDERGARTEN CLASSROOM/D223	BC-10	1	Virco	Storage Unit	ECCUB2436TTC	Natural Birch	36"h x 24"w x 15"d	16PSX0190 09/30/2022

SHEET	ROOM NAME/NUMBER	ITEM ID	QTY	MANUFACTURER	DESCRIPTION	MODEL NUMBER	FINISH/COLOR	DIMENSIONS	STATE CONTRACT #
A13.5	KINDERGARTEN CLASSROOM/D223	EQ-2	1 Set	Virco	Flag & Wall Bracket	FLAGIN1624 & FLAGHOLD	N/A	16" X 24"	16PSX0190 09/30/2022
A13.5	KINDERGARTEN CLASSROOM/D223	EQ-16	1	School Specialty	Area Rug	679226	N/A	8'4" x 13'-4"	17PSX0012
A13.5	KINDERGARTEN CLASSROOM/D223	C-4	1	Virco	Chair	AN18	Navy BLU51	18" high	16PSX0190 09/30/2022
A13.6	FIRST GRADE CLASSROOM/D225	D-3	1	Virco	Teacher's Desk	T3060	Top: Dry Creek Plum Tree Edge: Golden Frame: Silver Mist	30" x 60"	16PSX0190 09/30/2022
A13.6	FIRST GRADE CLASSROOM/D225	C-20	1	Sit-On-It	Task Chair	1123 BK2 Y AR4 FG3 CS6 CH1 MB MC45 FC13 YCC03 LA5 BT1 BC4 KD	Mesh: Ash Frame: Fog Y Support: Fog Accent Color: Electric Blue Base Color: Fog Textile: Sit on it, Burst, Nickel	Fully adjustable	15PSX0041 07/30/2023
A13.6	FIRST GRADE CLASSROOM/D225	T-3	1	Virco	Cooperative Table	48COOP72	Top: Dry Creek Plum Tree Edge: Golden Frame: Silver Mist	36" x 72" x 20"-30"	16PSX0190 09/30/2022
A13.6	FIRST GRADE CLASSROOM/D225	C-16	4	Safco	Ball chair with feet only	4757	Royal Blue Vinyl	13.5" seat w/ feet only.	15PSX0041 07/2023
A13.6	FIRST GRADE CLASSROOM/D225	D-1	25	Virco	Boomerang Desk	ZBOOMTTM	Top: Dry Creek Plum Tree Frame: Silver Mist	22" x 34" hight adj. desk top	16PSX0190 09/30/2022
A13.6	FIRST GRADE CLASSROOM/D225	C-2	25	Virco	Student Chair	AN14	Navy BLU51	14"	16PSX0190 09/30/2022
A13.6	FIRST GRADE CLASSROOM/D225	C-23	4	School Specialty/Classroom Select	Motion Stool	5000845	Paprika	Adj height 14.5"-20.5"	17PSX0012
A13.6	FIRST GRADE CLASSROOM/D225	T-1	2	Virco	Computer Table	FTT2460	Top: Dry Creek Plum Tree Edge: Golden Frame: Silver Mist	24" x 60", 24"-34" adj. height	16PSX0190 09/30/2022
A13.5	FIRST GRADE CLASSROOM/D225	EQ-2	1 Set	Virco	Flag & Wall Bracket	FLAGIN1624 & FLAGHOLD	N/A	16" X 24"	16PSX0190 09/30/2022
A13.5	FIRST GRADE CLASSROOM/D225	EQ-20	1	School Specialty/Classroom Select	Area Rug	2003752	N/A	8' x 12'	17PSX0012
A13.6	FIRST GRADE CLASSROOM/D226	D-3	1	Virco	Teacher's Desk	T3060	Top: Dry Creek Plum Tree Edge: Golden Frame: Silver Mist	30" x 60"	16PSX0190 09/30/2022

SHEET	ROOM NAME/NUMBER	ITEM ID	QTY	MANUFACTURER	DESCRIPTION	MODEL NUMBER	FINISH/COLOR	DIMENSIONS	STATE CONTRACT #
A13.6	FIRST GRADE CLASSROOM/D226	C-20	1	Sit-On-It	Task Chair	1123 BK2 Y AR4 FG3 CS6 CH1 MB MC45 FC13 YCC03 LA5 BT1 BC4 KD	Mesh: Ash Frame: Fog Y Support: Fog Accent Color: Electric Blue Base Color: Fog Textile: Sit on it, Burst, Nickel	Fully adjustable	15PSX0041 07/30/2023
A13.6	FIRST GRADE CLASSROOM/D226	T-3	1	Virco	Cooperative Table	48COOP72	Top: Dry Creek Plum Tree Edge: Golden Frame: Silver Mist	36" x 72" x 20"-30"	16PSX0190 09/30/2022
A13.6	FIRST GRADE CLASSROOM/D226	C-16	4	Safco	Ball chair with feet only	4757	Royal Blue Vinyl	13.5" seat w/ feet only.	15PSX0041 07/2023
A13.6	FIRST GRADE CLASSROOM/D226	D-1	25	Virco	Boomerang Desk	ZBOOMTTM	Top: Dry Creek Plum Tree Frame: Silver Mist	22" x 34" hight adj. desk top	16PSX0190 09/30/2022
A13.6	FIRST GRADE CLASSROOM/D226	C-2	25	Virco	Student Chair	AN14	Navy BLU51	14"	16PSX0190 09/30/2022
A13.6	FIRST GRADE CLASSROOM/D226	C-23	4	School Specialty/Classroom Select	Motion Stool	5000845	Paprika	Adj height 14.5"-20.5"	17PSX0012
A13.6	FIRST GRADE CLASSROOM/D226	T-1	2	Virco	Computer Table	FTT2460	Top: Dry Creek Plum Tree Edge: Golden Frame: Silver Mist	24" x 60", 24"-34" adj. height	16PSX0190 09/30/2022
A13.5	FIRST GRADE CLASSROOM/D226	EQ-2	1 Set	Virco	Flag & Wall Bracket	FLAGIN1624 & FLAGHOLD	N/A	16" X 24"	16PSX0190 09/30/2022
A13.5	FIRST GRADE CLASSROOM/D226	EQ-20	1	School Specialty/Classroom Select	Area Rug	2003752	N/A	8' x 12'	17PSX0012 09/30/2022
A13.6	FIRST GRADE CLASSROOM/D227	D-3	1	Virco	Teacher's Desk	T3060	Top: Dry Creek Plum Tree Edge: Golden Frame: Silver Mist	30" x 60"	16PSX0190 09/30/2022
A13.6	FIRST GRADE CLASSROOM/D227	C-20	1	Sit-On-It	Task Chair	1123 BK2 Y AR4 FG3 CS6 CH1 MB MC45 FC13 YCC03 LA5 BT1 BC4 KD	Mesh: Ash Frame: Fog Y Support: Fog Accent Color: Electric Blue Base Color: Fog Textile: Sit on it, Burst,Nickel	Fully adjustable	15PSX0041 07/30/2023
A13.6	FIRST GRADE CLASSROOM/D227	T-3	1	Virco	Cooperative Table	48COOP72	Top: Dry Creek Plum Tree Edge: Golden Frame: Silver Mist	36" x 72" x 20"-30"	16PSX0190 09/30/2022
A13.6	FIRST GRADE CLASSROOM/D227	C-16	4	Safco	Ball chair with feet only	4757	Royal Blue Vinyl	13.5" seat w/ feet only.	15PSX0041 07/2023
A13.6	FIRST GRADE CLASSROOM/D227	D-1	25	Virco	Boomerang Desk	ZBOOMTTM	Top: Dry Creek Plum Tree Frame: Silver Mist	22" x 34" hight adj. desk top	16PSX0190 09/30/2022
A13.6	FIRST GRADE CLASSROOM/D227	C-2	25	Virco	Student Chair	AN14	Navy BLU51	14"	16PSX0190 09/30/2022

SHEET	ROOM NAME/NUMBER	ITEM ID	QTY	MANUFACTURER	DESCRIPTION	MODEL NUMBER	FINISH/COLOR	DIMENSIONS	STATE CONTRACT #
A13.6	FIRST GRADE CLASSROOM/D227	C-23	4	School Specialty/Classroom Select	Motion Stool	5000845	Paprika	Adj height 14.5"-20.5"	17PSX0012
A13.6	FIRST GRADE CLASSROOM/D227	T-1	2	Virco	Computer Table	FTT2460	Top: Dry Creek Plum Tree Edge: Golden Frame: Silver Mist	24" x 60", 24"-34" adj. height	16PSX0190 09/30/2022
A13.5	FIRST GRADE CLASSROOM/D227	EQ-2	1 Set	Virco	Flag & Wall Bracket	FLAGIN1624 & FLAGHOLD	N/A	16" X 24"	16PSX0190 09/30/2022
A13.5	FIRST GRADE CLASSROOM/D227	EQ-20	1	Virco	Area Rug	2003752	N/A	8' x 12'	17PSX0012
A13.6	SECOND GRADE CLASSROOM/D228	D-3	1	Virco	Teacher's Desk	T3060	Top: Dry Creek Plum Tree Edge: Golden Frame: Silver Mist	30" x 60"	16PSX0190 09/30/2022
A13.6	SECOND GRADE CLASSROOM/D228	C-20	1	Sit-On-It	Task Chair	1123 BK2 Y AR4 FG3 CS6 CH1 MB MC45 FC13 YCC03 LA5 BT1 BC4 KD	Mesh: Ash Frame: Fog Y Support: Fog Accent Color: Electric Blue Base Color: Fog Textile: Sit on it, Burst, Nickel	Fully adjustable	15PSX0041 07/30/2023
A13.6	SECOND GRADE CLASSROOM/D228	T-3	1	Virco	Cooperative Table	48COOP72	Top: Dry Creek Plum Tree Edge: Golden Frame: Silver Mist	36" x 72" x 20"-30"	16PSX0190 09/30/2022
A13.6	SECOND GRADE CLASSROOM/D228	C-16	4	Safco	Ball chair with feet only	4757	Royal Blue Vinyl	13.5" seat w/ feet only.	15PSX0041 07/2023
A13.6	SECOND GRADE CLASSROOM/D228	D-1	25	Virco	Boomerang Desk	ZBOOMTTM	Top: Dry Creek Plum Tree Frame: Silver Mist	22" x 34" hight adj. desk top	16PSX0190 09/30/2022
A13.6	SECOND GRADE CLASSROOM/D228	C-3	25	Virco	Student Chair	AN16	Navy BLU51	16"	16PSX0190 09/30/2022
A13.6	SECOND GRADE CLASSROOM/D228	C-23	4	School Specialty/Classroom Select	Motion Stool	5000845	Paprika	Adj height 14.5"-20.5"	17PSX0012
A13.6	SECOND GRADE CLASSROOM/D228	T-1	2	Virco	Computer Table	FTT2460	Top: Dry Creek Plum Tree Edge: Golden Frame: Silver Mist	24" x 60", 24"-34" adj. height	16PSX0190 09/30/2022
A13.5	SECOND GRADE CLASSROOM/D228	EQ-2	1 Set	Virco	Flag & Wall Bracket	FLAGIN1624 & FLAGHOLD	N/A	16" X 24"	16PSX0190 09/30/2022
A13.6	SECOND GRADE CLASSROOM/D229	D-3	1	Virco	Teacher's Desk	T3060	Top: Dry Creek Plum Tree Edge: Golden Frame: Silver Mist	30" x 60"	16PSX0190 09/30/2022

SHEET	ROOM NAME/NUMBER	ITEM ID	QTY	MANUFACTURER	DESCRIPTION	MODEL NUMBER	FINISH/COLOR	DIMENSIONS	STATE CONTRACT #
A13.6	SECOND GRADE CLASSROOM/D229	C-20	1	Sit-On-It	Task Chair	1123 BK2 Y AR4 FG3 CS6 CH1 MB MC45 FC13 YCC03 LA5 BT1 BC4 KD	Mesh: Ash Frame: Fog Y Support: Fog Acce nt Color: Electric Blue Base Color: Fog Textile: Sit on it, Burst, Nickel	Fully adjustable	15PSX0041 07/30/2023
A13.6	SECOND GRADE CLASSROOM/D229	T-3	1	Virco	Cooperative Table	48COOP72	Top: Dry Creek Plum Tree Edge: Golden Frame: Silver Mist	36" x 72" x 20"-30"	16PSX0190 09/30/2022
A13.6	SECOND GRADE CLASSROOM/D229	C-16	4	Safco	Ball chair with feet only	4757	Royal Blue Vinyl	13.5" seat w/ feet only.	15PSX0041 07/2023
A13.6	SECOND GRADE CLASSROOM/D229	D-1	25	Virco	Boomerang Desk	ZBOOMTTM	Top: Dry Creek Plum Tree Frame: Silver Mist	22" x 34" hight adj. desk top	16PSX0190 09/30/2022
A13.6	SECOND GRADE CLASSROOM/D229	C-3	25	Virco	Student Chair	AN16	Navy BLU51	16"	16PSX0190 09/30/2022
A13.6	SECOND GRADE CLASSROOM/D229	C-23	4	School Specialty/Classroom Select	Motion Stool	5000845	Paprika	Adj height 14.5"-20.5"	17PSX0012
A13.6	SECOND GRADE CLASSROOM/D229	T-1	2	Virco	Computer Table	FTT2460	Top: Dry Creek Plum Tree Edge: Golden Frame: Silver Mist	24" x 60", 24"-34" adj. height	16PSX0190 09/30/2022
A13.5	SECOND GRADE CLASSROOM/D229	EQ-2	1 Set	Virco	Flag & Wall Bracket	FLAGIN1624 & FLAGHOLD	N/A	16" X 24"	16PSX0190 09/30/2022
A13.6	SECOND GRADE CLASSROOM/D230	D-3	1	Virco	Teacher's Desk	T3060	Top: Dry Creek Plum Tree Edge: Golden Frame: Silver Mist	30" x 60"	16PSX0190 09/30/2022
A13.6	SECOND GRADE CLASSROOM/D230	C-20	1	Sit-On-It	Task Chair	1123 BK2 Y AR4 FG3 CS6 CH1 MB MC45 FC13 YCC03 LA5 BT1 BC4 KD	Mesh: Ash Frame: Fog Y Support: Fog Accent Color: Electric Blue Base Color: Fog Textile: Sit on it, Burst, Nickel	Fully adjustable	15PSX0041 07/30/2023
A13.6	SECOND GRADE CLASSROOM/D230	T-3	1	Virco	Cooperative Table	48COOP72	Top: Dry Creek Plum Tree Edge: Golden Frame: Silver Mist	36" x 72" x 20"-30"	16PSX0190 09/30/2022
A13.6	SECOND GRADE CLASSROOM/D230	C-16	4	Safco	Ball chair with feet only	4757	Royal Blue Vinyl	13.5" seat w/ feet only.	15PSX0041 07/2023
A13.6	SECOND GRADE CLASSROOM/D230	D-1	25	Virco	Boomerang Desk	ZBOOMTTM	Top: Dry Creek Plum Tree Frame: Silver Mist	22" x 34" hight adj. desk top	16PSX0190 09/30/2022
A13.6	SECOND GRADE CLASSROOM/D230	C-3	25	Virco	Student Chair	AN16	Navy BLU51	16"	16PSX0190 09/30/2022
A13.6	SECOND GRADE CLASSROOM/D230	C-23	4	School Specialty/Classroom Select	Motion Stool	5000845	Paprika	Adj height 14.5"-20.5"	17PSX0012

SHEET	ROOM NAME/NUMBER	ITEM ID	QTY	MANUFACTURER	DESCRIPTION	MODEL NUMBER	FINISH/COLOR	DIMENSIONS	STATE CONTRACT #
A13.6	SECOND GRADE CLASSROOM/D230	T-1	2	Virco	Computer Table	FTT2460	Top: Dry Creek Plum Tree Edge: Golden Frame: Silver Mist	24" x 60", 24"-34" adj. height	16PSX0190 09/30/2022
A13.5	SECOND GRADE CLASSROOM/D230	EQ-2	1 Set	Virco	Flag & Wall Bracket	FLAGIN1624 & FLAGHOLD	N/A	16" X 24"	16PSX0190 09/30/2022
A13.7	SCIENCE LAB/A311	C-8	29	Virco	Science Stool	ABLAB/UGLIDE	Navy BLU51	hieght adj.	16PSX0190 09/30/2022
A13.7	SCIENCE LAB/A311	D-3	1	Virco	Teacher's Desk	T3060	Top: Dry Creek Plum Tree Edge: Golden Frame: Silver Mist	30" x 60"	16PSX0190 09/30/2022
A13.7	SCIENCE LAB/A311	C-20	1	Sit-On-It	Task Chair	1123 BK2 Y AR4 FG3 CS6 CH1 MB MC45 FC13 YCC03 LA5 BT1 BC4 KD	Mesh: Ash Frame: Fog Y Support: Fog Accent Color: Electric Blue Base Color: Fog Textile: Sit on it, Burst,Nickel	Fully adjustable	15PSX0041 07/30/2023
A13.5	SCIENCE LAB/A311	EQ-2	1 Set	Virco	Flag & Wall Bracket	FLAGIN1624 & FLAGHOLD	N/A	16" X 24"	16PSX0190 09/30/2022
A13.7	SCIENCE LAB/A312	C-8	29	Virco	Science Stool	ABLAB/UGLIDE	Navy BLU51	hieght adj.	16PSX0190 09/30/2022
A13.7	SCIENCE LAB/A312	D-3	1	Virco	Teacher's Desk	T3060	Top: Dry Creek Plum Tree Edge: Golden Frame: Silver Mist	30" x 60"	16PSX0190 09/30/2022
A13.7	SCIENCE LAB/A312	C-20	1	Sit-On-It	Task Chair	1123 BK2 Y AR4 FG3 CS6 CH1 MB MC45 FC13 YCC03 LA5 BT1 BC4 KD	Mesh: Ash Frame: Fog Y Support: Fog Accent Color: Electric Blue Base Color: Fog Textile: Sit on it, Burst, Nickel	Fully adjustable	15PSX0041 07/30/2023
A13.5	SCIENCE LAB/A312	EQ-2	1 Set	Virco	Flag & Wall Bracket	FLAGIN1624 & FLAGHOLD	N/A	16" X 24"	16PSX0190 09/30/2022
A13.7	PREP ROOM/A313	ST-1	1	Virco	Utility Cart	KLIB1836C	Blue	20" d x 37"w x 43"h	16PSX0190 09/30/2022
A13.7	PREP ROOM/A313	ST-1	1	Virco	Utility Cart	KLIB1836C	Blue	20" d x 37"w x 43"h	16PSX0190 09/30/2022

SHEET	ROOM NAME/NUMBER	ITEM ID	QTY	MANUFACTURER	DESCRIPTION	MODEL NUMBER	FINISH/COLOR	DIMENSIONS	STATE CONTRACT #
A13.7	ASSISTANT PRINCIPAL/A315	D-5	1	Kimball	L Shape Desk	53K2442WBSL3/ 53K3028SLOSP/ 53K3060WBSL/ 53K5412PSR/ 53K60SRUP/ 53K7216SOSMG2L/ 53KE2415PUBBFSL/ 53KPSBSP/ KAC7222TBKW	Laminate: Tuscan Walnut Metal: Silver Pearl Pulls: Studio/Silver Pearl Modesty: Mist TBD: Kimball, Universe, Mica	30" x 66" desk / 24" x 42" return	15PSX0041 6/30/2020
A13.7	ASSISTANT PRINCIPAL/A315	C-27	1	Kimball	Task Chair	K56TMUFA	Seat: Kimball, Moxie, Melange, Night Sky Back: Black Mesh Frame: Black Base: Aluminum	26" X 26"	15PSX0041 6/30/2020
A13.7	ASSISTANT PRINCIPAL/A315	C-28	2	Kimball	Guest Chair	K53S1AUCOU	Legs: Tuscan Walnut Seat/Back: Mayer Fabrics, Spokes, Quartz	24"W X 25"D X 31"H	15PSX0041 6/30/2020
A13.7	ASSISTANT PRINCIPAL/A315	F-1	2	Kimball	3-Drawer File	FND18363/ FNDACW/ SS1836LFTL	Silver Pearl with Tuscan Walnut top	36"W X 18"D	15PSX0041 6/30/2020
A13.7	SEVENTH GRADE CLASSROOM/A321	D-3	1	Virco	Teacher's Desk	T3060	Top: Dry Creek Plum Tree Edge: Golden Frame: Silver Mist	30" x 60"	16PSX0190 09/30/2022
A13.7	SEVENTH GRADE CLASSROOM/A321	C-20	1	Sit-On-It	Task Chair	1123 BK2 Y AR4 FG3 CS6 CH1 MB MC45 FC13 YCC03 LA5 BT1 BC4 KD	Mesh: Ash Frame: Fog Y Support: Fog Accent Color: Electric Blue Base Color: Fog Textile: Sit on it, Burst,Nickel	Fully adjustable	15PSX0041 07/30/2023
A13.7	SEVENTH GRADE CLASSROOM/A321	C-4	29	Virco	Student Chair	AN18	Navy BLU51	18" high	16PSX0190 09/30/2022
A13.7	SEVENTH GRADE CLASSROOM/A321	T-3	1	Virco	Cooperative Table	48COOP72	Top: Dry Creek Plum Tree Edge: Golden Frame: Silver Mist	36" x 72" x 22-30"h	16PSX0190 09/30/2022
A13.7	SEVENTH GRADE CLASSROOM/A321	C-23	4	School Specialty/Classroom Select	Motion Stool	5000845	Paprika	Adj height 14.5"-20.5"	17PSX0012
A13.7	SEVENTH GRADE CLASSROOM/A321	D-1	28	Virco	Boomerang Desk	ZBOOMTTM	Top: Dry Creek Plum Tree Frame: Silver Mist	22" x 34" hight adj. desk top	16PSX0190 09/30/2022
A13.7	SEVENTH GRADE CLASSROOM/A321	C-17	4	Safco	Ball chair w/ legs	4757	Royal Blue Vinyl	17" seat hieght	15PSX0041 07/2023

SHEET	ROOM NAME/NUMBER	ITEM ID	QTY	MANUFACTURER	DESCRIPTION	MODEL NUMBER	FINISH/COLOR	DIMENSIONS	STATE CONTRACT #
A13.7	SEVENTH GRADE CLASSROOM/A321	T-1	2	Virco	Computer Table	FTT2460	Top: Dry Creek Plum Tree Edge: Golden Frame: Silver Mist	24" x 60" x 24"-34" high	16PSX0190 09/30/2022
A13.5	SEVENTH GRADE CLASSROOM/A321	EQ-2	1 Set	Virco	Flag & Wall Bracket	FLAGIN1624 & FLAGHOLD	N/A	16" X 24"	16PSX0190 09/30/2022
A13.7	EIGHTH GRADE CLASSROOM/A322	D-3	1	Virco	Teacher's Desk	T3060	Top: Dry Creek Plum Tree Edge: Golden Frame: Silver Mist	30" x 60"	16PSX0190 09/30/2022
A13.7	EIGHTH GRADE CLASSROOM/A322	C-20	1	Sit-On-It	Task Chair	1123 BK2 Y AR4 FG3 CS6 CH1 MB MC45 FC13 YCC03 LA5 BT1 BC4 KD	Mesh: Ash Frame: Fog Y Support: Fog Accent Color: Electric Blue Base Color: Fog Textile: Sit on it, Burst,Nickel	Fully adjustable	15PSX0041 07/30/2023
A13.7	EIGHTH GRADE CLASSROOM/A322	C-4	29	Virco	Student Chair	AN18	Navy BLU51	18" high	16PSX0190 09/30/2022
A13.7	EIGHTH GRADE CLASSROOM/A322	T-3	1	Virco	Cooperative Table	48COOP72	Top: Dry Creek Plum Tree Edge: Golden Frame: Silver Mist	36" x 72" x 22-30"h	16PSX0190 09/30/2022
A13.7	EIGHTH GRADE CLASSROOM/A322	C-23	4	School Specialty/Classroom Select	Motion Stool	5000845	Paprika	Adj height 14.5"-20.5"	17PSX0012
A13.7	EIGHTH GRADE CLASSROOM/A322	D-1	28	Virco	Boomerang Desk	ZBOOMTTM	Top: Dry Creek Plum Tree Frame: Silver Mist	22" x 34" hight adj. desk top	16PSX0190 09/30/2022
A13.7	EIGHTH GRADE CLASSROOM/A322	C-17	4	Safco	Ball chair w/ legs	4757	Royal Blue Vinyl	17" seat hieght	15PSX0041 07/2023
A13.7	EIGHTH GRADE CLASSROOM/A322	T-1	2	Virco	Computer Table	FTT2460	Top: Dry Creek Plum Tree Edge: Golden Frame: Silver Mist	24" x 60" x 24"-34" high	16PSX0190 09/30/2022
A13.5	EIGHTH GRADE CLASSROOM/A322	EQ-2	1 Set	Virco	Flag & Wall Bracket	FLAGIN1624 & FLAGHOLD	N/A	16" X 24"	16PSX0190 09/30/2022
A13.7	EIGHTH GRADE CLASSROOM/A324	D-3	1	Virco	Teacher's Desk	T3060	Top: Dry Creek Plum Tree Edge: Golden Frame: Silver Mist	30" x 60"	16PSX0190 09/30/2022
A13.7	EIGHTH GRADE CLASSROOM/A324	C-20	1	Sit-On-It	Task Chair	1123 BK2 Y AR4 FG3 CS6 CH1 MB MC45 FC13 YCC03 LA5 BT1 BC4 KD	Mesh: Ash Frame: Fog Y Support: Fog Accent Color: Electric Blue Base Color: Fog Textile: Sit on it, Burst, Nickel	Fully adjustable	15PSX0041 07/30/2023
A13.7	EIGHTH GRADE CLASSROOM/A324	C-4	29	Virco	Student Chair	AN18	Navy BLU51	18" high	16PSX0190 09/30/2022

SHEET	ROOM NAME/NUMBER	ITEM ID	QTY	MANUFACTURER	DESCRIPTION	MODEL NUMBER	FINISH/COLOR	DIMENSIONS	STATE CONTRACT #
A13.7	EIGHTH GRADE CLASSROOM/A324	T-3	1	Virco	Cooperative Table	48COOP72	Top: Dry Creek Plum Tree Edge: Golden Frame: Silver Mist	36" x 72" x 22-30"h	16PSX0190 09/30/2022
A13.7	EIGHTH GRADE CLASSROOM/A324	C-23	4	School Specialty/Classroom Select	Motion Stool	5000845	Paprika	Adj height 14.5"-20.5"	17PSX0012
A13.7	EIGHTH GRADE CLASSROOM/A324	D-1	28	Virco	Boomerang Desk	ZBOOMTTM	Top: Dry Creek Plum Tree Frame: Silver Mist	22" x 34" hight adj. desk top	16PSX0190 09/30/2022
A13.7	EIGHTH GRADE CLASSROOM/A324	C-17	4	Safco	Ball chair w/ legs	4757	Royal Blue Vinyl	17" seat hieght	15PSX0041 07/2023
A13.7	EIGHTH GRADE CLASSROOM/A324	T-1	2	Virco	Computer Table	FTT2460	Top: Dry Creek Plum Tree Edge: Golden Frame: Silver Mist	24" x 60" x 24"-34" high	16PSX0190 09/30/2022
A13.5	EIGHTH GRADE CLASSROOM/A324	EQ-2	1 Set	Virco	Flag & Wall Bracket	FLAGIN1624 & FLAGHOLD	N/A	16" X 24"	16PSX0190 09/30/2022
A13.7	SEVENTH GRADE CLASSROOM/A325	D-3	1	Virco	Teacher's Desk	T3060	Top: Dry Creek Plum Tree Edge: Golden Frame: Silver Mist	30" x 60"	16PSX0190 09/30/2022
A13.7	SEVENTH GRADE CLASSROOM/A325	C-20	1	Sit-On-It	Task Chair	1123 BK2 Y AR4 FG3 CS6 CH1 MB MC45 FC13 YCC03 LA5 BT1 BC4 KD	Mesh: Ash Frame: Fog Y Support: Fog Accent Color: Electric Blue Base Color: Fog Textile: Sit on it, Burst, Nickel	Fully adjustable	15PSX0041 07/30/2023
A13.7	SEVENTH GRADE CLASSROOM/A325	C-4	29	Virco	Student Chair	AN18	Navy BLU51	18" high	16PSX0190 09/30/2022
A13.7	SEVENTH GRADE CLASSROOM/A325	T-3	1	Virco	Cooperative Table	48COOP72	Top: Dry Creek Plum Tree Edge: Golden Frame: Silver Mist	36" x 72" x 22-30"h	16PSX0190 09/30/2022
A13.7	SEVENTH GRADE CLASSROOM/A325	C-23	4	School Specialty/Classroom Select	Motion Stool	5000845	Paprika	Adj height 14.5"-20.5"	17PSX0012
A13.7	SEVENTH GRADE CLASSROOM/A325	D-1	28	Virco	Boomerang Desk	ZBOOMTTM	Top: Dry Creek Plum Tree Frame: Silver Mist	22" x 34" hight adj. desk top	16PSX0190 09/30/2022
A13.7	SEVENTH GRADE CLASSROOM/A325	C-17	4	Safco	Ball chair w/ legs	4757	Royal Blue Vinyl	17" seat hieght	15PSX0041 07/2023
A13.7	SEVENTH GRADE CLASSROOM/A325	T-1	2	Virco	Computer Table	FTT2460	Top: Dry Creek Plum Tree Edge: Golden Frame: Silver Mist	24" x 60" x 24"-34" high	16PSX0190 09/30/2022
A13.5	SEVENTH GRADE CLASSROOM/A325	EQ-2	1 Set	Virco	Flag & Wall Bracket	FLAGIN1624 & FLAGHOLD	N/A	16" X 24"	16PSX0190 09/30/2022

SHEET	ROOM NAME/NUMBER	ITEM ID	QTY	MANUFACTURER	DESCRIPTION	MODEL NUMBER	FINISH/COLOR	DIMENSIONS	STATE CONTRACT #
A13.7	EIGHTH GRADE CLASSROOM/A326	D-3	1	Virco	Teacher's Desk	T3060	Top: Dry Creek Plum Tree Edge: Golden Frame: Silver Mist	30" x 60"	16PSX0190 09/30/2022
A13.7	EIGHTH GRADE CLASSROOM/A326	C-20	1	Sit-On-It	Task Chair	1123 BK2 Y AR4 FG3 CS6 CH1 MB MC45 FC13 YCC03 LA5 BT1 BC4 KD	Mesh: Ash Frame: Fog Y Support: Fog Accent Color: Electric Blue Base Color: Fog Textile: Sit on it, Burst, Nickel	Fully adjustable	15PSX0041 07/30/2023
A13.7	EIGHTH GRADE CLASSROOM/A326	C-4	29	Virco	Student Chair	AN18	Navy BLU51	18" high	16PSX0190 09/30/2022
A13.7	EIGHTH GRADE CLASSROOM/A326	T-3	1	Virco	Cooperative Table	48COOP72	Top: Dry Creek Plum Tree Edge: Golden Frame: Silver Mist	36" x 72" x 22-30"h	16PSX0190 09/30/2022
A13.7	EIGHTH GRADE CLASSROOM/A326	C-23	4	School Specialty/Classroom Select	Motion Stool	5000845	Paprika	Adj height 14.5"-20.5"	17PSX0012
A13.7	EIGHTH GRADE CLASSROOM/A326	D-1	28	Virco	Boomerang Desk	ZBOOMTTM	Top: Dry Creek Plum Tree Frame: Silver Mist	22" x 34" hight adj. desk top	16PSX0190 09/30/2022
A13.7	EIGHTH GRADE CLASSROOM/A326	C-17	4	Safco	Ball chair w/ legs	4757	Royal Blue Vinyl	17" seat hieght	15PSX0041 07/2023
A13.7	EIGHTH GRADE CLASSROOM/A326	T-1	2	Virco	Computer Table	FTT2460	Top: Dry Creek Plum Tree Edge: Golden Frame: Silver Mist	24" x 60" x 24"-34" high	16PSX0190 09/30/2022
A13.5	EIGHTH GRADE CLASSROOM/A326	EQ-2	1 Set	Virco	Flag & Wall Bracket	FLAGIN1624 & FLAGHOLD	N/A	16" X 24"	16PSX0190 09/30/2022
A13.7	SEVENTH GRADE CLASSROOM/A327	D-3	1	Virco	Teacher's Desk	T3060	Top: Dry Creek Plum Tree Edge: Golden Frame: Silver Mist	30" x 60"	16PSX0190 09/30/2022
A13.7	SEVENTH GRADE CLASSROOM/A327	C-20	1	Sit-On-It	Task Chair	1123 BK2 Y AR4 FG3 CS6 CH1 MB MC45 FC13 YCC03 LA5 BT1 BC4 KD	Mesh: Ash Frame: Fog Y Support: Fog Accent Color: Electric Blue Base Color: Fog Textile: Sit on it, Burst, Nickel	Fully adjustable	15PSX0041 07/30/2023
A13.7	SEVENTH GRADE CLASSROOM/A327	C-4	29	Virco	Student Chair	AN18	Navy BLU51	18" high	16PSX0190 09/30/2022
A13.7	SEVENTH GRADE CLASSROOM/A327	T-3	1	Virco	Cooperative Table	48COOP72	Top: Dry Creek Plum Tree Edge: Golden Frame: Silver Mist	36" x 72" x 22-30"h	16PSX0190 09/30/2022
A13.7	SEVENTH GRADE CLASSROOM/A327	C-23	4	School Specialty/Classroom Select	Motion Stool	5000845	Paprika	Adj height 14.5"-20.5"	17PSX0012

SHEET	ROOM NAME/NUMBER	ITEM ID	QTY	MANUFACTURER	DESCRIPTION	MODEL NUMBER	FINISH/COLOR	DIMENSIONS	STATE CONTRACT #
A13.7	SEVENTH GRADE CLASSROOM/A327	D-1	28	Virco	Boomerang Desk	ZBOOMTTM	Top: Dry Creek Plum Tree Frame: Silver Mist	22" x 34" hight adj. desk top	16PSX0190 09/30/2022
A13.7	SEVENTH GRADE CLASSROOM/A327	C-17	4	Safco	Ball chair w/ legs	4757	Royal Blue Vinyl	17" seat hieght	15PSX0041 07/2023
A13.7	SEVENTH GRADE CLASSROOM/A327	T-1	2	Virco	Computer Table	FTT2460	Top: Dry Creek Plum Tree Edge: Golden Frame: Silver Mist	24" x 60" x 24"-34" high	16PSX0190 09/30/2022
A13.5	SEVENTH GRADE CLASSROOM/A327	EQ-2	1 Set	Virco	Flag & Wall Bracket	FLAGIN1624 & FLAGHOLD	N/A	16" X 24"	16PSX0190 09/30/2022

Project Name: Wendell Cross Elementary School

State Project: #151-0295 EA/RR Phase: 5 Of 5



Item ID: B-1
Item Description: First Aid Bed
Manufacturer: Virco
Model #: FABEDPD
Dimensions: 27”W x 72”L x 20”H
Color: Blue

Total Quantity: 4

Detailed Description: Equipped with a convenient paper dispenser, Virco’s 20” high first-aid bed has sturdy chromed legs, 2” of foam padding, durable vinyl upholstery and an adjustable headrest for extra comfort.

Room Name	Room Number	Quantity	Room Name	Room Number	Quantity
Cots	C215	3	Exam Room	C214	1

Disclaimer: The furniture shown in the photograph above does not represent the specified colors or fabric selections. This photo is for general reference indicating shape, size and general construction. Note: See Furniture Floor Plans for layout.

Project Name: Wendell Cross Elementary School

State Project: #151-0295 EA/RR Phase: 5 Of 5



Item ID: BC-1
Item Description: Pre-K Storage
Manufacturer: Virco
Model #: ECCUB364818
Dimensions: 36”H x 48”W x 18”D

Color: Birch (WOD622)

Total Quantity: 9

Detailed Description: A 36” high, 18” deep mobile unit with heavy-duty casters gives you the added storage space of eight interior compartments.

Room Name	Room Number	Quantity	Room Name	Room Number	Quantity
Pre-K	D211	2	Pre-K	D213	2
Pre-K	D215	2	Kindergarten	D219	1
Kindergarten	D221	1	Kindergarten	D223	1

Disclaimer: The furniture shown in the photograph above does not represent the specified colors or fabric selections. This photo is for general reference indicating shape, size and general construction. Note: See Furniture Floor Plans for layout.

Project Name: Wendell Cross Elementary School

State Project: #151-0295 EA/RR Phase: 5 Of 5



Item ID: BC-2
Item Description: Mobile folding Storage unit
Manufacturer: Virco
Model #: ECCUB309615
Dimensions: 96"W x 15"D x 30"H

Color: Natural Birch

Total Quantity: 6

Detailed Description: Hard wood mobile folding storage unit

Room Name	Room Number	Quantity	Room Name	Room Number	Quantity
Pre-K	D211	1	Pre-K	D213	1
Pre-K	D215	1	Kindergarten	D219	1
Kindergarten	D221	1	Kindergarten	D223	1

Disclaimer: The furniture shown in the photograph above does not represent the specified colors or fabric selections. This photo is for general reference indicating shape, size and general construction. Note: See Furniture Floor Plans for layout.

Project Name: Wendell Cross Elementary School

State Project: #151-0295 EA/RR Phase: 5 Of 5





reverse side storage and markerboard

ECBKRAK6BRD

This unit has six front shelves that can accommodate approximately 30 children's books and a rear-side markerboard with two additional shelves. 29½"H x 34"W x 25"D.

Color: Birch (WOD622)

Item ID: BC-3
Item Description: Book Display
Manufacturer: Virco
Model #: ECBKRAK6BRD
Dimensions: 29 ½" H x 34" W x 25" D

Color: Natural Birch

Total Quantity: 6

Detailed Description: This unit has six front shelves that can accommodate approximately 30 children's books and a rear-side markerboard with two additional shelves

Room Name	Room Number	Quantity	Room Name	Room Number	Quantity
Pre-K	D211	1	Pre-K	D213	1
Pre-K	D215	1	Kindergarten	D219	1
Kindergarten	D221	1	Kindergarten	D223	1

Disclaimer: The furniture shown in the photograph above does not represent the specified colors or fabric selections. This photo is for general reference indicating shape, size and general construction. Note: See Furniture Floor Plans for layout.

Project Name: Wendell Cross Elementary School

State Project: #151-0295 EA/RR Phase: 5 Of 5



Item ID: BC-4
Item Description: Pre-K Storage Unit
Manufacturer: Virco
Model #: ECSTORTTCL12
Dimensions: 21”H x 33”W x 14”D

Color: Birch (WOD622)

Total Quantity: 6

Detailed Description: See-all storage unit with three shelves and 12 clear trays.

Room Name	Room Number	Quantity	Room Name	Room Number	Quantity
Pre-K	D211	1	Pre-K	D213	1
Pre-K	D215	1	Kindergarten	D219	1
Kindergarten	D221	1	Kindergarten	D223	1

Disclaimer: The furniture shown in the photograph above does not represent the specified colors or fabric selections. This photo is for general reference indicating shape, size and general construction. Note: See Furniture Floor Plans for layout.

Project Name: Wendell Cross Elementary School

State Project: #151-0295 EA/RR Phase: 5 Of 5



Item ID: BC-5
Item Description: Library Bookcase (adder)
Manufacturer: Virco / Russwood
Model #: LS2A362442 / LS2P3642
Dimensions: 36” x 42”
Color: Medium Oak on Maple

Total Quantity: 11

Detailed Description: Solid one-piece oak cornice board, 1/4-inch-thick veneer plywood back, 1-inch-thick vertical uprights — no particle board, ever! 3/4-inch-thick solid oak adjustable shelves Solid one-piece oak toe kick. The exclusive Russwood® pin is designed to trap the flange between the shelf and the upright making it sag proof and nearly tamper proof.

Room Name	Room Number	Quantity	Room Name	Room Number	Quantity
Media Center	C111	11			

Disclaimer: The furniture shown in the photograph above does not represent the specified colors or fabric selections. This photo is for general reference indicating shape, size and general construction. Note: See Furniture Floor Plans for layout.

Project Name: Wendell Cross Elementary School

State Project: #151-0295 EA/RR Phase: 5 Of 5



Item ID: BC-6
Item Description: Library Bookcase (starter)
Manufacturer: Virco / Russwood
Model #: LS2S372442 / LS2P3642
Dimensions: 36”W x 24”D x 42”H
Color: Medium Oak on Maple

Total Quantity: 5



Detailed Description: Solid one-piece oak cornice board, 1/4-inch-thick veneer plywood back, 1-inch-thick vertical uprights — no particle board, ever! 3/4-inch-thick solid oak adjustable shelves Solid one-piece oak toe kick. The exclusive Russwood® pin is designed to trap the flange between the shelf and the upright making it sag proof and nearly tamper proof.

Room Name	Room Number	Quantity	Room Name	Room Number	Quantity
Media Center	C111	5			

Disclaimer: The furniture shown in the photograph above does not represent the specified colors or fabric selections. This photo is for general reference indicating shape, size and general construction. Note: See Furniture Floor Plans for layout.

Project Name: Wendell Cross Elementary School

State Project: #151-0295 EA/RR Phase: 5 Of 5



Item ID: BC-7
Item Description: Library Bookcase (starter)
Manufacturer: Virco / Russwood
Model #: LSS371282
Dimensions: 36”W x 12”D x 82”H
Color: Medium Oak on Maple

Total Quantity: 2



Detailed Description: Virco’s library shelving solutions include this single-faced 82" high starter with six shelves (five adjustable). 37"W x 12"D x 82"H.

Room Name	Room Number	Quantity	Room Name	Room Number	Quantity
Media Center	C111	2			

Secure Attachment of FF&E Items:

To ensure proper attachment of fixtures, Furnishings & Equipment items, including Technology items, where items are attached to wall, ceiling, overhead structure and or floor, contractor shall provide information adequate for architect to verify items, attaching to wall, ceiling, and/or floor are attached securely and per manufacturer's recommendations. Contractor shall provide struts, hangers, fasteners, safety harnesses, channels, bolts, screws, rods, etc. to securely attach items to existing structure as required to meet field conditions and meet applicable codes.

Disclaimer: The furniture shown in the photograph above does not represent the specified colors or fabric selections. This photo is for general reference indicating shape, size and general construction. Note: See Furniture Floor Plans for layout.

Project Name: Wendell Cross Elementary School

State Project: #151-0295 EA/RR Phase: 5 Of 5



Item ID: BC-8
Item Description: Library Bookcase (adder)
Manufacturer: Virco / Russwood
Model #: LSA361282
Dimensions: 36”W x 12”D x 82”H
Color: Medium Oak on Maple

Total Quantity: 11



Detailed Description: Virco’s library shelving solutions include this single-faced 82" high starter with six shelves (five adjustable). 37"W x 12"D x 82"H.

Room Name	Room Number	Quantity	Room Name	Room Number	Quantity
Media Center	C111	11			

Secure Attachment of FF&E Items:

To ensure proper attachment of fixtures, Furnishings & Equipment items, including Technology items, where items are attached to wall, ceiling, overhead structure and or floor, contractor shall provide information adequate for architect to verify items, attaching to wall, ceiling, and/or floor are attached securely and per manufacturer's recommendations. Contractor shall provide struts, hangers, fasteners, safety harnesses, channels, bolts, screws, rods, etc. to securely attach items to existing structure as required to meet field conditions and meet applicable codes.

Disclaimer: The furniture shown in the photograph above does not represent the specified colors or fabric selections. This photo is for general reference indicating shape, size and general construction. Note: See Furniture Floor Plans for layout.

Project Name: Wendell Cross Elementary School

State Project: #151-0295 EA/RR Phase: 5 of 5



Item ID: BC-9

Item Description: Industrial Metal Shelving

Manufacturer: Safco

Model #: 6269

Dimensions: 18"d x 36"w x 84"h

Color: Light Grey

Total Quantity: 22

Detailed Description:

Industrial Metal Shelving

Room Name	Room Number	Quantity	Room Name	Room Number	Quantity
Kiln Room	B113	4	Custodian	C124	2
Storage	B246	3	Gym Storage	B222	5
Outdoor Stor.	B221	2	Custodian	B242	1
Storage	B245	3	OT Storage	C229A	1
PT Storage	C229B	1			

Secure Attachment of FF&E Items:

To ensure proper attachment of fixtures, Furnishings & Equipment items, including Technology items, where items are attached to wall, ceiling, overhead structure and or floor, contractor shall provide information adequate for architect to verify items, attaching to wall, ceiling, and/or floor are attached securely and per manufacturer's recommendations. Contractor shall provide struts, hangers, fasteners, safety harnesses, channels, bolts, screws, rods, etc. to securely attach items to existing structure as required to meet field conditions and meet applicable codes.

Disclaimer: The furniture shown in the photograph above does not represent the specified colors or fabric selections. This photo is for general reference indicating shape, size and general construction. Note: See Furniture Floor Plans for layout.

Project Name: Wendell Cross Elementary School

State Project: #151-0295 EA/RR Phase: 5 of 5



Item ID: BC-10
Item Description: Storage Unit
Manufacturer: Virco
Model #: ECCUB2436TTC
Dimensions: 36”H x 24”W x 15”D

Color: Natural Birch

Total Quantity: 3

Detailed Description: One-sided storage unit with 10-clear trays and cubbies and heavy-duty casters.

Room Name	Room Number	Quantity	Room Name	Room Number	Quantity
Kindergarten	D219	1	Kindergarten	D221	1
Kindergarten	D223	1			

Disclaimer: The furniture shown in the photograph above does not represent the specified colors or fabric selections. This photo is for general reference indicating shape, size and general construction. Note: See Furniture Floor Plans for layout.

Project Name: Wendell Cross Elementary School

State Project: #151-0295 EA/RR Phase: 5 Of 5



Item ID: BC-11
Item Description: Storage unit
Manufacturer: Virco
Model #: ECCUB304818
Dimensions: 48”W x 18”D x 30”H

Color: Natural Birch

Total Quantity: 3

Detailed Description: Extra-deep mobile one-sided storage unit with two shelves and five compartments

Room Name	Room Number	Quantity	Room Name	Room Number	Quantity
Kindergarten	D219	1	Kindergarten	D221	1
Kindergarten	D223	1			

Disclaimer: The furniture shown in the photograph above does not represent the specified colors or fabric selections. This photo is for general reference indicating shape, size and general construction. Note: See Furniture Floor Plans for layout.

Project Name: Wendell Cross Elementary School

State Project: #151-0295 EA/RR Phase: 5 Of 5



Item ID: BC-12
Item Description: Mobile Storage Cubbies
Manufacturer: Virco
Model #: ECCUB4836TT30
Dimensions: 54”W x 15”D x 36”H

Color: Natural Birch

Total Quantity: 3

Detailed Description: One-sided storage unit with 30 trays and cubbies and heavy-duty casters.

Room Name	Room Number	Quantity	Room Name	Room Number	Quantity
Kindergarten	D219	1	Kindergarten	D221	1
Kindergarten	D223	1			

Disclaimer: The furniture shown in the photograph above does not represent the specified colors or fabric selections. This photo is for general reference indicating shape, size and general construction. Note: See Furniture Floor Plans for layout.

Project Name: Wendell Cross Elementary School

State Project: #151-0295 EA/RR Phase: 5 of 5



Item ID: BC-13

Item Description: Industrial Metal Shelving

Manufacturer: Safco

Model #: 6247

Dimensions: 24"d x 36"w x 72"h

Color: Black

Total Quantity: 6

Detailed Description:

Industrial Metal Shelving

Room Name	Room Number	Quantity	Room Name	Room Number	Quantity
PreK Storage	C236	6			

Secure Attachment of FF&E Items:

To ensure proper attachment of fixtures, Furnishings & Equipment items, including Technology items, where items are attached to wall, ceiling, overhead structure and or floor, contractor shall provide information adequate for architect to verify items, attaching to wall, ceiling, and/or floor are attached securely and per manufacturer's recommendations. Contractor shall provide struts, hangers, fasteners, safety harnesses, channels, bolts, screws, rods, etc. to securely attach items to existing structure as required to meet field conditions and meet applicable codes.

Disclaimer: The furniture shown in the photograph above does not represent the specified colors or fabric selections. This photo is for general reference indicating shape, size and general construction. Note: See Furniture Floor Plans for layout.

Project Name: Wendell Cross Elementary School

State Project: #151-0295 EA/RR Phase: 5 Of 5



Item ID: BC-14
Item Description: Metal Bookcase
Manufacturer: Virco
Model #: BOOKCASE-BCM3672-GRY05
Dimensions: 36” x 12” x 72” Five Shelves
Color: SILVER MIST
Total Quantity: 7

Room Name	Room Number	Quantity	Room Name	Room Number	Quantity
Book Room	C242	*7*			

Secure Attachment of FF&E Items:

To ensure proper attachment of fixtures, Furnishings & Equipment items, including Technology items, where items are attached to wall, ceiling, overhead structure and or floor, contractor shall provide information adequate for architect to verify items, attaching to wall, ceiling, and/or floor are attached securely and per manufacturer's recommendations. Contractor shall provide struts, hangers, fasteners, safety harnesses, channels, bolts, screws, rods, etc. to securely attach items to existing structure as required to meet field conditions and meet applicable codes.

Disclaimer: The furniture shown in the photograph above does not represent the specified colors or fabric selections. This photo is for general reference indicating shape, size and general construction. Note: See Furniture Floor Plans for layout.

Project Name: Wendell Cross Elementary School

State Project: #151-0295 EA/RR Phase: 5 Of 5



Item ID: C-1
Item Description: 4-leg Stack Chair
Manufacturer: Virco
Model #: AN12
Dimensions: 12" high
Color: Navy BLU51

Total Quantity: 54

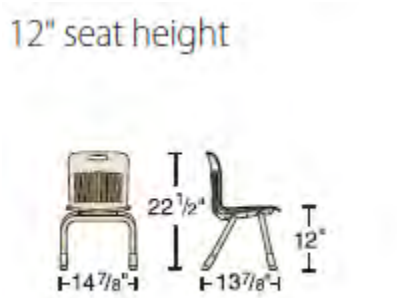

Detailed Description:
With an ergonomically contoured shell and an extensive range of seating choices for K-12 schools, the Analogy® Series offers educators yet another high-value Virco classroom furniture solution. Traditional 4-leg chair models range in size from 12" to 18" seat heights. There's also an 181/2" seat-height Analogy chair with an extra-large (EL) shell for high schools, community colleges, trade and technical schools, and related settings.

Room Name	Room Number	Quantity	Room Name	Room Number	Quantity
Pre-K	D211	18	Pre-K	D213	18
Pre-K	D215	18			

Disclaimer: The furniture shown in the photograph above does not represent the specified colors or fabric selections. This photo is for general reference indicating shape, size and general construction. Note: See Furniture Floor Plans for layout.

Project Name: Wendell Cross Elementary School

State Project: #151-0295 EA/RR Phase: 5 Of 5



Item ID: C-2
Item Description: 4-leg Stack Chair
Manufacturer: Virco
Model #: AN14
Dimensions: 14” High Seat
Color: Navy BLUE51

Total Quantity: 131

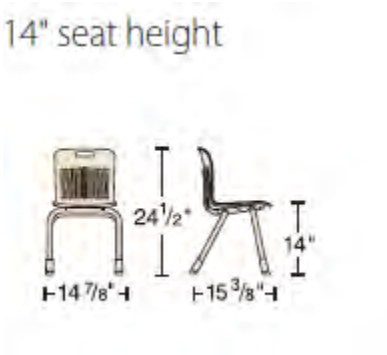

Detailed Description:
With an ergonomically contoured shell and an extensive range of seating choices for K-12 schools, the Analogy® Series offers educators yet another high-value Virco classroom furniture solution. Traditional 4-leg chair models range in size from 12” to 18” seat heights. There’s also an 181/2” seat-height Analogy chair with an extra-large (EL) shell for high schools, community colleges, trade and technical schools, and related settings.

Room Name	Room Number	Quantity	Room Name	Room Number	Quantity
Kindergarten	D219	18	Kindergarten	D223	18
Kindergarten	D221	18	First Grade	D227	25
First Grade	D225	25	First Grade	D226	25
Speech	C223	2			

Disclaimer: The furniture shown in the photograph above does not represent the specified colors or fabric selections. This photo is for general reference indicating shape, size and general construction. Note: See Furniture Floor Plans for layout.

Project Name: Wendell Cross Elementary School

State Project: #151-0295 EA/RR Phase: 5 Of 5



Item ID: C-3
Item Description: 4-leg Stack Chair
Manufacturer: Virco
Model #: AN16
Dimensions: 16" high seat
Color: Navy BLU51

Total Quantity: 243



Detailed Description:
With an ergonomically contoured shell and an extensive range of seating choices for K-12 schools, the Analogy® Series offers educators yet another high-value Virco classroom furniture solution. Traditional 4-leg chair models range in size from 12" to 18" seat heights. There's also an 181/2" seat-height Analogy chair with an extra-large (EL) shell for high schools, community colleges, trade and technical schools, and related settings.

Room Name	Room Number	Quantity	Room Name	Room Number	Quantity
Third Grade	C121	25	Third Grade	C122	25
Third Grade	C123	25	Fourth Grade	D111	28
Fourth Grade	D112	28	Fourth Grade	D113	28
Cots	C215	3	Testing Room	C220	2
Speech	C223	2	Second Grade	D228	25
Second Grade	D229	25	Second Grade	D230	25

Disclaimer: The furniture shown in the photograph above does not represent the specified colors or fabric selections. This photo is for general reference indicating shape, size and general construction. Note: See Furniture Floor Plans for layout.

Project Name: Wendell Cross Elementary School

State Project: #151-0295 EA/RR Phase: 5 Of 5



Item ID: C-4
Item Description: 4-leg Classroom Chair
Manufacturer: Virco
Model #: AN18
Dimensions: 18” high seat
Color: Navy BLU51

Total Quantity: 415



Detailed Description:
With an ergonomically contoured shell and an extensive range of seating choices for K-12 schools, the Analogy® Series offers educators yet another high-value Virco classroom furniture solution. Traditional 4-leg chair models range in size from 12” to 18” seat heights. There’s also an 181/2” seat-height Analogy chair with an extra-large (EL) shell for high schools, community colleges, trade and technical schools, and related settings.

Room Name	Room Number	Quantity	Room Name	Room Number	Quantity
6th Grade	A217	29	6th Grade	A218	29
6th Grade	A219	29	7th Grade	A321	29
8th Grade	A322	29	8th Grade	A324	29
7th Grade	A325	29	8th Grade	A326	29
7th Grade	A327	29	Grade 4	D113	1
Grade 4	D111	1	Resource	B112	24

Disclaimer: The furniture shown in the photograph above does not represent the specified colors or fabric selections. This photo is for general reference indicating shape, size and general construction. Note: See Furniture Floor Plans for layout.

Project Name: Wendell Cross Elementary School

State Project: #151-0295 EA/RR Phase: 5 Of 5

Room Name	Room Number	Quantity	Room Name	Room Number	Quantity
Testing	C220	2	Grade 4	D112	1
Resource Rm.	A216	4	Speech	C223	4
5th Grade	D114	29	5th Grade	D115	29
5th Grade	D116	29	Resource Rm	B112	24
Pre-k	D211	1	Pre-K	D213	1
Pre-K	D215	1	Kindergarten	D219	1
Kindergarten	D221	1	Kindergarten	D223	1

Disclaimer: The furniture shown in the photograph above does not represent the specified colors or fabric selections. This photo is for general reference indicating shape, size and general construction. Note: See Furniture Floor Plans for layout.

Project Name: Wendell Cross Elementary School

State Project: #151-0295 EA/RR Phase: 5 Of 5



Item ID: C-5
Item Description: 4-leg Classroom Chair
Manufacturer: Virco
Model #: AN18ELP
Dimensions: 18 ½”seat height
Color: Shell: Horizon BLU14 w/ Navy upholstered seat

Total Quantity: 9

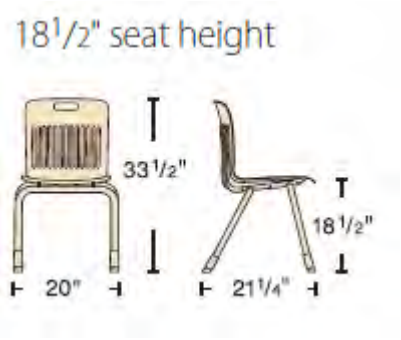

Detailed Description:
With an ergonomically contoured shell and an extensive range of seating choices for K-12 schools, the Analogy® Series offers educators yet another high-value Virco classroom furniture solution. Traditional 4-leg chair models range in size from 12” to 18” seat heights. There’s also an 181/2” seat-height Analogy chair with an extra-large (EL) shell for high schools, community colleges, trade and technical schools, and related settings.

Room Name	Room Number	Quantity	Room Name	Room Number	Quantity
Nurses Office	C216	2	Waiting Room	C218	3
Math Resource	C231	4			

Disclaimer: The furniture shown in the photograph above does not represent the specified colors or fabric selections. This photo is for general reference indicating shape, size and general construction. Note: See Furniture Floor Plans for layout.

Project Name: Wendell Cross Elementary School

State Project: #151-0295 EA/RR Phase: 5 Of 5



Item ID: C-6
Item Description: Elem. Floor Rocker
Manufacturer: Virco
Model #: ANFLROCK15
Dimensions:
Color: Sea Mist GRN07

Total Quantity: 24

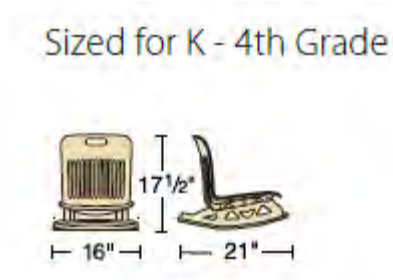

Detailed Description:
Analogy Series floor rockers feature an ergonomic seat atop a sturdy, one-piece rocking base with a non-marring pad for smooth, quiet movement. With subtle back-and-forth motion, floor rockers offer an ergonomic alternative to floor seating.

Room Name	Room Number	Quantity	Room Name	Room Number	Quantity
Pre-K	D211	4	Pre-K	D213	4
Pre-K	D215	4	Kindergarten	D219	4
Kindergarten	D221	4	Kindergarten	D223	4

Disclaimer: The furniture shown in the photograph above does not represent the specified colors or fabric selections. This photo is for general reference indicating shape, size and general construction. Note: See Furniture Floor Plans for layout.

Project Name: Wendell Cross Elementary School

State Project: #151-0295 EA/RR Phase: 5 Of 5



Item ID: C-8
Item Description: Lab Chair (No Casters)
Manufacturer: Virco
Model #: ANLAB / UGLIDE
Dimensions: 19”-26” Ad. Height
Color: Navy BLU51

Total Quantity: 63

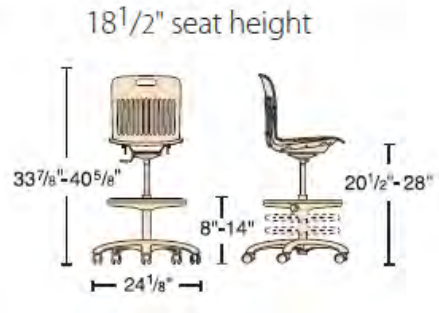

Detailed Description:
Analogy Series mobile lab chairs and lab stools feature an adjustable and comfortable, ergonomically contoured polypropylene shell and a pneumatic mechanism for easy seat height adjustment. Chairs swivel 360 degrees and feature five 2" diameter, dual wheel, hooded swivel casters. Lab stools offer a foot-ring that adjusts in height from 8" to 14".

Room Name	Room Number	Quantity	Room Name	Room Number	Quantity
Science	A311	29	Science	A312	29
Art Studio	B111	1	Special Ed	A215	2
Special Ed	A213	2			

Disclaimer: The furniture shown in the photograph above does not represent the specified colors or fabric selections. This photo is for general reference indicating shape, size and general construction. Note: See Furniture Floor Plans for layout.

Project Name: Wendell Cross Elementary School

State Project: #151-0295 EA/RR Phase: 5 Of 5



Item ID: C-9
Item Description: Classroom Rocking Chair
Manufacturer: Virco
Model #: ANROCK14FG
Dimensions:
Color: Sea Mist GRN07

Total Quantity: 24

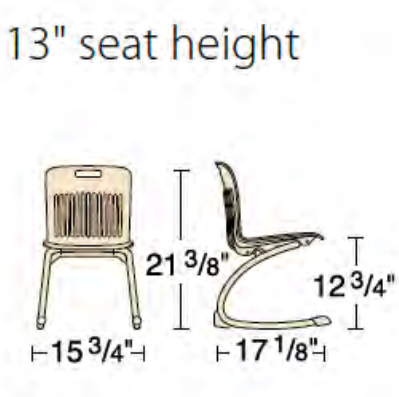

Detailed Description:
Rocking chairs in the classroom; this may seem counterintuitive to creating a more productive learning environment, but more and more educators are discovering that, for some kids, movement in the classroom has a calming effect. See page 12 for information about the benefits of healthy movement in the classroom.

Room Name	Room Number	Quantity	Room Name	Room Number	Quantity
Pre-K	D211	4	Pre-K	D213	4
Pre-K	D215	4	Kindergarten	D219	4
Kindergarten	D221	4	Kindergarten	D223	4

Disclaimer: The furniture shown in the photograph above does not represent the specified colors or fabric selections. This photo is for general reference indicating shape, size and general construction. Note: See Furniture Floor Plans for layout.

Project Name: Wendell Cross Elementary School

State Project: #151-0295 EA/RR Phase: 5 Of 5



Item ID: C-12
Item Description: Analogy Task Chair **(NO CASTERS)**
Manufacturer: Virco
Model #: ANTASK18
Dimensions:
Color: Navy BLU51

Total Quantity: 43

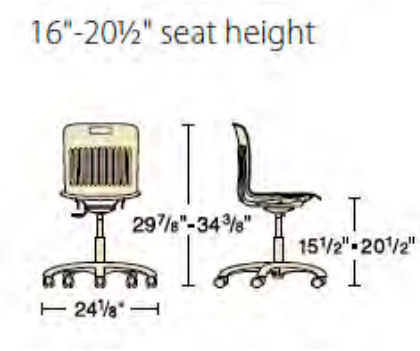

Detailed Description:
Analogy Series mobile task chairs and lab stools feature an adjustable and comfortable, ergonomically contoured polypropylene shell and a pneumatic mechanism for easy seat height adjustment. Chairs swivel 360 degrees. Lab stools offer a foot-ring that adjusts in height from 8" to 14". NO CASTERS

Room Name	Room Number	Quantity	Room Name	Room Number	Quantity
SPED	A213	3	SPED	A215	3
Media Centr.	C111	4	Computer Lab	A211	29
ESL	C241	4			

Disclaimer: The furniture shown in the photograph above does not represent the specified colors or fabric selections. This photo is for general reference indicating shape, size and general construction. Note: See Furniture Floor Plans for layout.

Project Name: Wendell Cross Elementary School

State Project: #151-0295 EA/RR Phase: 5 Of 5



Item ID: C-13
Item Description: Move Chair with arms
Manufacturer: Steelcase
Model #: 490412P
Dimensions: 18” seat height
Color: Plastic Seat & Back: Picasso
Frame: Platinum Metallic

Total Quantity: 14

Room Name	Room Number	Quantity	Room Name	Room Number	Quantity
Teacher Dining	C211	14			

Disclaimer: The furniture shown in the photograph above does not represent the specified colors or fabric selections. This photo is for general reference indicating shape, size and general construction. Note: See Furniture Floor Plans for layout.

Project Name: Wendell Cross Elementary School

State Project: #151-0295 EA/RR Phase: 5 Of 5



Item ID: C-15
Item Description: Adjustable Stool
Manufacturer: Virco
Model #: 1201927SG
Dimensions: 19”-27” seat height
Color: Navy Seat w/ Chrome Legs



Total Quantity: 28

Detailed Description:
120 Series Stools 18", 24" and 30" high stools with a tubular steel frame and soft plastic seat. Nylon glides

Room Name	Room Number	Quantity	Room Name	Room Number	Quantity
B111	Art	28			

Disclaimer: The furniture shown in the photograph above does not represent the specified colors or fabric selections. This photo is for general reference indicating shape, size and general construction. Note: See Furniture Floor Plans for layout.

Project Name: Wendell Cross Elementary School

State Project: #151-0295 EA/RR Phase: 5 Of 5



Item ID: C-16
Item Description: Ball Chair with feet only
Manufacturer: Safco
Model #: 4757
Dimensions: 13 ½” seat height with feet only
Color: Royal Blue Vinyl

Total Quantity: 28

Detailed Description:

This Ball chair encourages active movement as well as posture and balance. It is Specifically designed for children. It is supported by four legs to provide a sturdy base during movement. The Legs are powder coated for long lasting durability and to provide resistance against chipping and scratching. Pump is included. The Weight limit is 250 pounds.

Room Name	Room Number	Quantity	Room Name	Room Number	Quantity
Resource Rm.	C119	4	First Grade	D225	4
First Grade	D226	4	First Grade	D227	4
Second Grade	D228	4	Second Grade	D229	4
Second Grade	D230	4			

Disclaimer: The furniture shown in the photograph above does not represent the specified colors or fabric selections. This photo is for general reference indicating shape, size and general construction. Note: See Furniture Floor Plans for layout.

Project Name: Wendell Cross Elementary School

State Project: #151-0295 EA/RR Phase: 5 Of 5



1201927SG

Item ID: C-17
Item Description: Ball Chair with legs
Manufacturer: Safco
Model #: 4757
Dimensions: 17” seat height
Color: Royal Blue Vinyl
Total Quantity: 76

Detailed Description:
This Ball chair encourages active movement as well as posture and balance. It is Specifically designed for children. It is supported by four legs to provide a sturdy base during movement. The Legs are powder coated for long lasting durability and to provide resistance against chipping and scratching. Pump is included. The Weight limit is 250 pounds.

Room Name	Room Number	Quantity	Room Name	Room Number	Quantity
Resource Rm.	B112	4	Grade 3	C121	4
Grade 3	C122	4	Grade 3	C123	4
Fourth Grade	D111	4	Fourth Grade	D112	4
Fourth Grade	D113	4	Fifth Grade	D114	4
Fifth Grade	D115	4	Fifth Grade	D116	4
Sixth Grade	A217	4	Sixth Grade	A218	4
Sixth Grade	A219	4	Seventh Grade	A321	4
Seventh Grade	A325	4	Seventh Grade	A327	4
Eighth Grade	A322	4	Eighth Grade	A324	4
Eighth Grade	A326	4			

Disclaimer: The furniture shown in the photograph above does not represent the specified colors or fabric selections. This photo is for general reference indicating shape, size and general construction. Note: See Furniture Floor Plans for layout.

Project Name: Wendell Cross Elementary School

State Project: #151-0295 EA/RR Phase: 5 Of 5



Item ID: C-18
Item Description: Media Center Chair (child size)
Manufacturer: Virco
Model #: SG415
Dimensions: 15" seat height

Color: Graphite GRY41

Total Quantity: 24

Detailed Description: From this basic chair to the more fully outfitted units below, every Sage Contract model gives you the comfort and elegance of a precision-molded shell. Its uniquely ribbed back strengthens the shell while allowing it to flex with the user's movement. *Arm Kit - Tubular steel arms with molded armrests are available for selected models.*

Room Name	Room Number	Quantity	Room Name	Room Number	Quantity
Media Center	C111	24			

Disclaimer: The furniture shown in the photograph above does not represent the specified colors or fabric selections. This photo is for general reference indicating shape, size and general construction. Note: See Furniture Floor Plans for layout.

Project Name: Wendell Cross Elementary School

State Project: #151-0295 EA/RR Phase: 5 Of 5



Item ID: C-20
Item Description: Task Chair
Manufacturer: Sit On It
Model #: Focus 2.0
Dimensions:
Color: Mesh Color: Ash
Frame Color: Fog
Y Support: Fog
Accent Color: Electric Blue
Base color: Fog
Textile: Sit on It, Burst, Nickel

Total Quantity: 59

Detailed Description: Focus 2.0 is more than a makeover. It's a modernization. It's driving dependable design forward with innovative mesh, enhanced (and expanded) customization, advanced functionality and a slimmer silhouette that offers superior comfort from integrated lumbar support and cutting-edge ergonomics. Focus 2.0 is everything you loved in the first generation and more.

Room Name	Room Number	Quantity	Room Name	Room Number	Quantity
Resource Rm.	B112	1	Resource Rm.	C119	1
Work Rm.	C112	1	Third Grade	C121	1
Third Grade	C122	1	Third Grade	C123	1
Fourth Grade	D111	1	Fourth Grade	D112	1

Disclaimer: The furniture shown in the photograph above does not represent the specified colors or fabric selections. This photo is for general reference indicating shape, size and general construction. Note: See Furniture Floor Plans for layout.

Project Name: Wendell Cross Elementary School

State Project: #151-0295 EA/RR Phase: 5 Of 5

Fourth Grade	D113	1	Fifth Grade	D114	1
Fifth Grade	D115	1	Fifth Grade	D116	1
Special Ed.	A213	1	SPED	A215	1
Sixth Grade	A217	1	Sixth Grade	A218	1
Sixth Grade	A218	1	Custodial Off.	B211	1
Office	B218	1	Coach’s Office	B225	2
Work Room	B237	1	Band	B241	1
Choral	B243	1	Main Office	B232	2
Waiting Area	C212	1	Nurses Office	C216	1
OT/PT	C229	2	Art Studio	C230	1
Math Resource	C231	1	Special Ed	C237	1
Special Ed	C239	1	ESL	241	1
Reading Room	C244	1	Speech	C223	1
Pre-k	D211	1	Pre-K	D213	1
Pre-K	D215	1	Kindergarten	D219	1
Kindergarten	D221	1	Kindergarten	D223	1
First Grade	D225	1	First Grade	D226	1
First Grade	D227	1	Second Grade	D228	1
Second Grade	D229	1	Second Grade	D230	1
Science Lab	A311	1	Science Lab	A312	1
Seventh Grade	A321	1	Seventh Grade	A325	1
Seventh Grade	A327	1	Eighth Grade	A322	1
Eighth Grade	A324	1	Eighth Grade	A326	1
Media Centr	C111	2			

Disclaimer: The furniture shown in the photograph above does not represent the specified colors or fabric selections. This photo is for general reference indicating shape, size and general construction. Note: See Furniture Floor Plans for layout.

Project Name: Wendell Cross Elementary School

State Project: #151-0295 EA/RR Phase: 5 Of 5



Item ID: C-21
Item Description: Media Center Chair
Manufacturer: Virco
Model #: SG1
Dimensions: 17 ½" seat height 19"W x 32 ¾"H

Color: Graphite GRY41



Total Quantity: 24

Detailed Description: From this basic chair to the more fully outfitted units below, every Sage Contract model gives you the comfort and elegance of a precision-molded shell. Its uniquely ribbed back strengthens the shell while allowing it to flex with the user's movement. *Arm Kit - Tubular steel arms with molded armrests are available for selected models.*

Room Name	Room Number	Quantity	Room Name	Room Number	Quantity
Media Center	C111	24			

Disclaimer: The furniture shown in the photograph above does not represent the specified colors or fabric selections. This photo is for general reference indicating shape, size and general construction. Note: See Furniture Floor Plans for layout.

Project Name: Wendell Cross Elementary School

State Project: #151-0295 EA/RR Phase: 5 Of 5



Item ID: C-22

Item Description: Music Posture Chair
Manufacturer: National Public Seating
Model #: 8200 Series
Dimensions: 17 ½” high seat
Color: Black

Total Quantity: 40

Detailed Description:
Music posture chair stacks 18” high. Polypropylene seat

Room Name	Room Number	Quantity	Room Name	Room Number	Quantity
Band	B241	40			

Disclaimer: The furniture shown in the photograph above does not represent the specified colors or fabric selections. This photo is for general reference indicating shape, size and general construction. Note: See Furniture Floor Plans for layout.

Project Name: Wendell Cross Elementary School

State Project: #151-0295 EA/RR Phase: 5 Of 5



Item ID: C-23

Item Description: Adj. Height Motion Stool
Manufacturer: School Specialty/Classroom Select
Model #: 5000845
Dimensions: Adj. height seat 14.5"-20.5"
Color: Paprika
Total Quantity: 144

Detailed Description:
NeoRok Adjustable motion stool focuses on movement. The unique rounded base design allows a student to rock and tilt in all directions. Gentle movement forward, backward or side to side provides a calming effect that improves focus and encourages learning. NeoRok stools are ergonomically designed, lightweight, easily transported and Greenguard Gold certified. The easy press handle located under the seat top allows a simple transition between 14.5" – 20.5" height.

Room Name	Room Number	Quantity	Room Name	Room Number	Quantity
Third Grade	C121	4	Third Grade	C122	4
Third Grade	C123	4	Fourth Grade	D111	4
Fourth Grade	D112	4	Fourth Grade	D113	4
Fifth Grade	D114	4	Fifth Grade	D115	4
Fifth Grade	D116	4	Special Ed.	A213	4
Special Ed.	A215	4	Sixth Grade	A217	4
Sixth Grade	A218	4	Sixth Grade	A219	4
Special Ed.	C237	4	Special Ed.	C239	4
ESL	C241	4	Reading Room	C244	4

Disclaimer: The furniture shown in the photograph above does not represent the specified colors or fabric selections. This photo is for general reference indicating shape, size and general construction. Note: See Furniture Floor Plans for layout.

Project Name: Wendell Cross Elementary School

State Project: #151-0295 EA/RR Phase: 5 Of 5

Pre-K	D211	4	Pre-K	D213	4
Pre-K	D215	4	Kindergarten	D219	4
Kindergarten	D221	4	Kindergarten	D223	4
First Grade	D225	4	First Grade	D226	4
First Grade	D227	4	Second Grade	D228	4
Second Grade	D229	4	Second Grade	D230	4
Seventh Grade	A321	4	Seventh Grade	A325	4
Seventh Grade	A327	4	Eighth grade	A322	4
Eighth Grade	A324	4	Eighth Grade	A326	4

Disclaimer: The furniture shown in the photograph above does not represent the specified colors or fabric selections. This photo is for general reference indicating shape, size and general construction. Note: See Furniture Floor Plans for layout.

Project Name: Wendell Cross Elementary School

State Project: #151-0295 EA/RR Phase: 5 of 5



Navy



Item ID: C-24

Item Description: Joya Task Chair

Manufacturer: Kimball

Model #: K56TMUCFFALH

Dimensions: 26” x 26”

Color: Arms: Chrome w/ Tuscan Walnut

Base: Polished Aluminum

Back Mesh: White

Frame: White

Seat: Momentum, Lens, Navy

Total Quantity: 10

Detailed Description:

Durable cross woven nylon back that provides ergonomic lumbar support. This chair has a standard adjustable seat height, depth and a self balancing 1 position tilt. It has fixed C-arms and hard casters for carpet.

Room Name	Room Number	Quantity	Room Name	Room Number	Quantity
Conference	B235	10			

Disclaimer: The furniture shown in the photograph above does not represent the specified colors or fabric selections. This photo is for general reference indicating shape, size and general construction. Note: See Furniture Floor Plans for layout.

Project Name: Wendell Cross Elementary School

State Project: #151-0295 EA/RR Phase: 5 Of 5



Item ID: C-26
Item Description: Elementary Height Adj. Chair
Manufacturer: Virco
Model #: ANTASK16/UGLIDE (no casters)
Dimensions: 13" –16" adj. seat height

Color: See Room by Room

Total Quantity: 93

Detailed Description: Comfortable, easily adjustable Analogy® task chairs and lab stools give you additional Healthy Movement furniture choices for your students. Field-installed soft-wheel casters or fixed glides are available for all lab stools and task chairs.

Room Name	Room Number	Quantity	Room Name	Room Number	Quantity
Computer Rm	C118	28	Art Studio	C230	28
Resource Rm.	C119	8	Special Ed	C237	7
Special Ed.	C239	7	ESL	C241	3
Reading Room	C244	6	Resource Rm	C240	6

Disclaimer: The furniture shown in the photograph above does not represent the specified colors or fabric selections. This photo is for general reference indicating shape, size and general construction. Note: See Furniture Floor Plans for layout.

Project Name: Wendell Cross Elementary School

State Project: #151-0295 EA/RR Phase: 5 of 5





Item ID: C-27
Item Description: Joya Task Chair
Manufacturer: Kimball
Model #: K56TMUFA
Dimensions: 26" x 26"
Color: Seat: Kimball, Moxie, Melange, Night Sky
Back: Black mesh
Frame: Black
Base: Aluminum
Total Quantity: 7

Detailed Description:
Durable cross woven nylon back that provides ergonomic lumbar support. This chair has a standard adjustable seat height, depth and a self balancing **4 position tilt**. It also has adjustable **3d arms**. **Hard casters for carpet.**

Room Name	Room Number	Quantity	Room Name	Room Number	Quantity
Parent Liaison	B234	1	Principals Off.	B236	1
Guidance Off.	C224	1	SW Office	C222	1
Psych. Office	C221	1	Literacy Office	C245	1
Assistant Principal	A315	1			

Disclaimer: The furniture shown in the photograph above does not represent the specified colors or fabric selections. This photo is for general reference indicating shape, size and general construction. Note: See Furniture Floor Plans for layout.

Project Name: Wendell Cross Elementary School

State Project: #151-0295 EA/RR Phase: 5 of 5



Item ID: C-28

Item Description: Upholstered Guest Chair W/ ARMS

Manufacturer: Kimball

Model #: K53S1AUCOU

Dimensions: 24”w x 25”d x 31”h

Color: Legs: Tuscan Walnut

Seat/Back: Mayer Fabrics, Spokes, Quartz

Total Quantity: 16

Detailed Description:
Upholstered Guest chair with arms, and Beech wood frame Wood legs

Room Name	Room Number	Quantity	Room Name	Room Number	Quantity
Parent Liaison	B234	2	Principal’s Off.	B236	4
Guidance Off.	C224	2	SW Office	C222	2
Psych. Office	C221	2	Literacy Office	C245	2
Assistant Principal	A315	2			

Disclaimer: The furniture shown in the photograph above does not represent the specified colors or fabric selections. This photo is for general reference indicating shape, size and general construction. Note: See Furniture Floor Plans for layout.

Project Name: Wendell Cross Elementary School

State Project: #151-0295 EA/RR Phase: 5 of 5



Item ID: C-29

Item Description: Stacking Stool

Manufacturer: Norwood Commercial Furniture/School Outfitters

Model #: NOR-STOOLACP-SO

Dimensions: 17 3/4” high

Color: Assorted

Total Quantity: 40

Detailed Description:

Lightweight, flexible seating perfect for schools. Stacks 10 high. Powder coated finish protects against scratches.

Room Name	Room Number	Quantity	Room Name	Room Number	Quantity
Choral	B243	40			

Disclaimer: The furniture shown in the photograph above does not represent the specified colors or fabric selections. This photo is for general reference indicating shape, size and general construction. Note: See Furniture Floor Plans for layout.

Project Name: Wendell Cross Elementary School

State Project: #151-0295 EA/RR Phase: 5 of 5



Item ID: C-30

Item Description: 4 Seat Lounge

Manufacturer: Coalesse

Model #: 460-4

Dimensions: 30”d x 88”w x 27”h

Color: Legs: Platinum Metallic

Upholstery: Brisa, Cambridge Blue BR11

Total Quantity: 1

Detailed Description: 4 seat lounge peice.

Room Name	Room Number	Quantity	Room Name	Room Number	Quantity
Main Office	B232	1			

Disclaimer: The furniture shown in the photograph above does not represent the specified colors or fabric selections. This photo is for general reference indicating shape, size and general construction. Note: See Furniture Floor Plans for layout.

Project Name: Wendell Cross Elementary School

State Project: #151-0295 EA/RR Phase: 5 of 5



Item ID: C-31

Item Description: QWiz Chair

Manufacturer: Sit on It

Model #: 1141 FT4 SC27 US MB AR1 FG3 CS5 MC24 AC

Dimensions: 300 lb limit

Color: Mesh Back: Electric Blue

Frame & Shell: Fog

Seat: Designtex, Gamut, Pewter

Total Quantity: 16

Detailed Description:

Mobile Chair

Room Name	Room Number	Quantity	Room Name	Room Number	Quantity
			Conference	C219	16

Disclaimer: The furniture shown in the photograph above does not represent the specified colors or fabric selections. This photo is for general reference indicating shape, size and general construction. Note: See Furniture Floor Plans for layout.

Project Name: Wendell Cross Elementary School

State Project: #151-0295 EA/RR Phase: 5 of 5



Item ID: C-32

Item Description: Round Soft Seating

Manufacturer: Artcobell

Model #: SSRD-14

Dimensions: 14” high

Color: (1) Marine (1) Mandarine (1) Basil

Total Quantity: 3

Detailed Description:

Round Ottoman

Room Name	Room Number	Quantity	Room Name	Room Number	Quantity
Media Center	C111	3			

Disclaimer: The furniture shown in the photograph above does not represent the specified colors or fabric selections. This photo is for general reference indicating shape, size and general construction. Note: See Furniture Floor Plans for layout.

Project Name: Wendell Cross Elementary School

State Project: #151-0295 EA/RR Phase: 5 of 5



Item ID: C-33

Item Description: Round Soft Seating

Manufacturer: Artcobell

Model #: SSRD-18

Dimensions: 18” high

Color: (1) Marine (1) Imperial (1) Mandarin (1) Basil

Total Quantity: 4

Detailed Description:

Round Ottoman

Room Name	Room Number	Quantity	Room Name	Room Number	Quantity
Media Center	C111	4			

Disclaimer: The furniture shown in the photograph above does not represent the specified colors or fabric selections. This photo is for general reference indicating shape, size and general construction. Note: See Furniture Floor Plans for layout.

Project Name: Wendell Cross Elementary School

State Project: #151-0295 EA/RR Phase: 5 of 5



Item ID: C-34

Item Description: 2 Step Soft Seating

Manufacturer: Artcobell

Model #: SS-ST230

Dimensions: 3’ x 3’ square

Color: Marine 521

Total Quantity: 4

Detailed Description:

2 Step Ottoman

Room Name	Room Number	Quantity	Room Name	Room Number	Quantity
Media Center	C111	4			

Disclaimer: The furniture shown in the photograph above does not represent the specified colors or fabric selections. This photo is for general reference indicating shape, size and general construction. Note: See Furniture Floor Plans for layout.

Project Name: Wendell Cross Elementary School

State Project: #151-0295 EA/RR Phase: 5 Of 5



Item ID: D-1
Item Description: Boomerang Desk
Manufacturer: Virco
Model #: ZBOOMTTM
Dimensions: 22”-34” desk top height
Color: **Top:** Dry Creek Plum Tree
Frame: Silver Mist

Total Quantity: 699

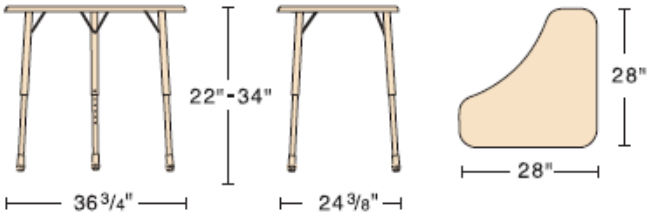

Detailed Description:

ZBOOM Collaborative Learning Desks with Integrated Tote-Tray Storage System. Easily grouped in four-desk collaborative clusters, new ZUMA ZBOOM desks come in 22" to 34" adjustable-height models, as well as stand-up models with a 31" to 41" top-height range. Optional accessories include a removable 3" deep plastic tote tray that can be moved from desk to desk as students rotate between collaborative groups. Hard Plastic Top, Nylon glides

Room Name	Room Number	Quantity	Room Name	Room Number	Quantity
6th Grade	A217	28	6th Grade	A218	28
6th Grade	A219	28	7th Grade	A321	28
8th Grade	A322	28	8th Grade	A324	28
8th Grade	A326	28	7th Grade	A327	28
7th Grade	A325	28	3rd Grade	C121	25
3rd Grade	C122	25	3rd Grade	C123	25
4th Grade	D111	28	4th Grade	D112	28
4th Grade	D113	28	5th Grade	D114	28

Disclaimer: The furniture shown in the photograph above does not represent the specified colors or fabric selections. This photo is for general reference indicating shape, size and general construction. Note: See Furniture Floor Plans for layout.

Project Name: Wendell Cross Elementary School

State Project: #151-0295 EA/RR Phase: 5 Of 5

Room Name	Room Number	Quantity	Room Name	Room Number	Quantity
5th Grade	D115	28	5th Grade	D116	28
1st Grade	D225	25	1st Grade	D226	25
1st Grade	D227	25	2nd Grade	D228	25
2nd Grade	D228	25	2nd Grade	D230	25
Resource Rm.	B112	24	Resource Rm.	C119	8
Special Ed.	A213	2	Special Ed.	A215	2
Special Ed.	C237	6	Special Ed.	C239	6
ESL	C241	6			

Disclaimer: The furniture shown in the photograph above does not represent the specified colors or fabric selections. This photo is for general reference indicating shape, size and general construction. Note: See Furniture Floor Plans for layout.

Project Name: Wendell Cross Elementary School

State Project: #151-0295 EA/RR Phase: 5 Of 5



Item ID: D-2
Item Description: Boomerang Desk
Manufacturer: Virco
Model #: ZBOOMSUTTM
Dimensions: 31”-41” desk top height
Color: Top: Dry Creek Plum Tree
Frame: Silver Mist

Total Quantity: 4

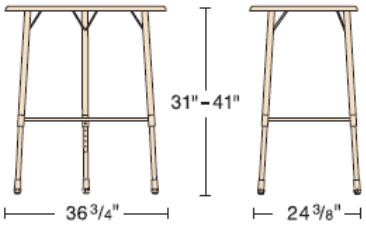

Detailed Description:

ZBOOM Collaborative Learning Desks with Integrated Tote-Tray Storage System. Easily grouped in four-desk collaborative clusters, new ZUMA ZBOOM desks come in 22" to 34" adjustable-height models, as well as stand-up models with a 31" to 41" top-height range. Optional accessories include a removable 3" deep plastic tote tray that can be moved from desk to desk as students rotate between collaborative groups. Hard Plastic Top, Nylon glides

Room Name	Room Number	Quantity	Room Name	Room Number	Quantity
SPED	A213	2	SPED	A215	2

Disclaimer: The furniture shown in the photograph above does not represent the specified colors or fabric selections. This photo is for general reference indicating shape, size and general construction. Note: See Furniture Floor Plans for layout.

Project Name: Wendell Cross Elementary School

State Project: #151-0295 EA/RR Phase: 5 Of 5



Item ID: D-3
Item Description: Teacher Desk
Manufacturer: Virco
Model #: T3060
Dimensions: 30”x60” top
Color: Top: Dry Creek Plum Tree
Frame: Silver Mist

Total Quantity: 55

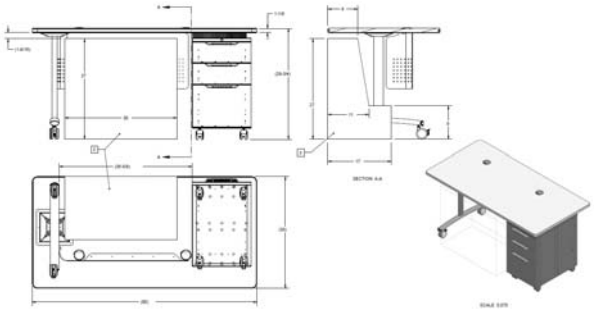

Detailed Description: **ADA compliant.** Textameter® Series desks combine design elements from Virco’s TEXT® and Parameter® collections, including a hanging storage pedestal and a T-leg with a fixed-height of 28¾". Additional standard features include a center drawer, gang locking on all pedestal drawers, a perforated steel modesty panel, two desktop grommets for wire management and locking casters for mobility.

Room Name	Room Number	Quantity	Room Name	Room Number	Quantity
6th Grade	A217	1	6th Grade	A218	1
6th Grade	A219	1	Science	A311	1
Science	A312	1	7th Grade	A321	1
8th Grade	A322	1	8th Grade	A324	1
7th Grade	A325	1	8th Grade	A326	1
7th Grade	A327	1	Resource Rm.	B112	1
Special Ed	A215	1	3rd Grade	C121	1
3rd Grade	C122	1	3rd Grade	C123	1
Math Resource	C231	1	SPED	C237	1
SPED	C239	1	ESL	C241	1
Resource Rm	C119	1	Work Room	C112	1

Disclaimer: The furniture shown in the photograph above does not represent the specified colors or fabric selections. This photo is for general reference indicating shape, size and general construction. Note: See Furniture Floor Plans for layout.

Project Name: Wendell Cross Elementary School

State Project: #151-0295 EA/RR Phase: 5 Of 5

Room Name	Room Number	Quantity	Room Name	Room Number	Quantity
5th Grade	D114	1	5th Grade	D115	1
5th Grade	D116	1	Pre-K	D211	1
Pre-K	D213	1	Pre-K	D215	1
Kindergarten	D219	1	Kindergarten	D221	1
Kindergarten	D223	1	1st Grade	D225	1
1st Grade	D226	1	1st Grade	D227	1
2nd Grade	D228	1	2nd Grade	D229	1
2nd Grade	D230	1			
SPED	A213	1	4th Grade	D111	1
4th Grade	D112	1	4th Grade	D113	1
Custodial	B211	1	Office	B218	1
Coach’s Office	B225	2	Work Room	B237	1
Band	B241	1	Choral	B243	1
Waiting Area	C212	1	Nurses Office	C216	1
OT/PT	C229A	2	Art Studio	C230	1
Reading Room	C244	1	Speech	C223	1

Disclaimer: The furniture shown in the photograph above does not represent the specified colors or fabric selections. This photo is for general reference indicating shape, size and general construction. Note: See Furniture Floor Plans for layout.

DATE	REV. BY	DESCRIPTION	E.C.A. NO.	REV.
03/16/20	S.F.	ADA REFERENCE DIMENSIONS		1

D-3

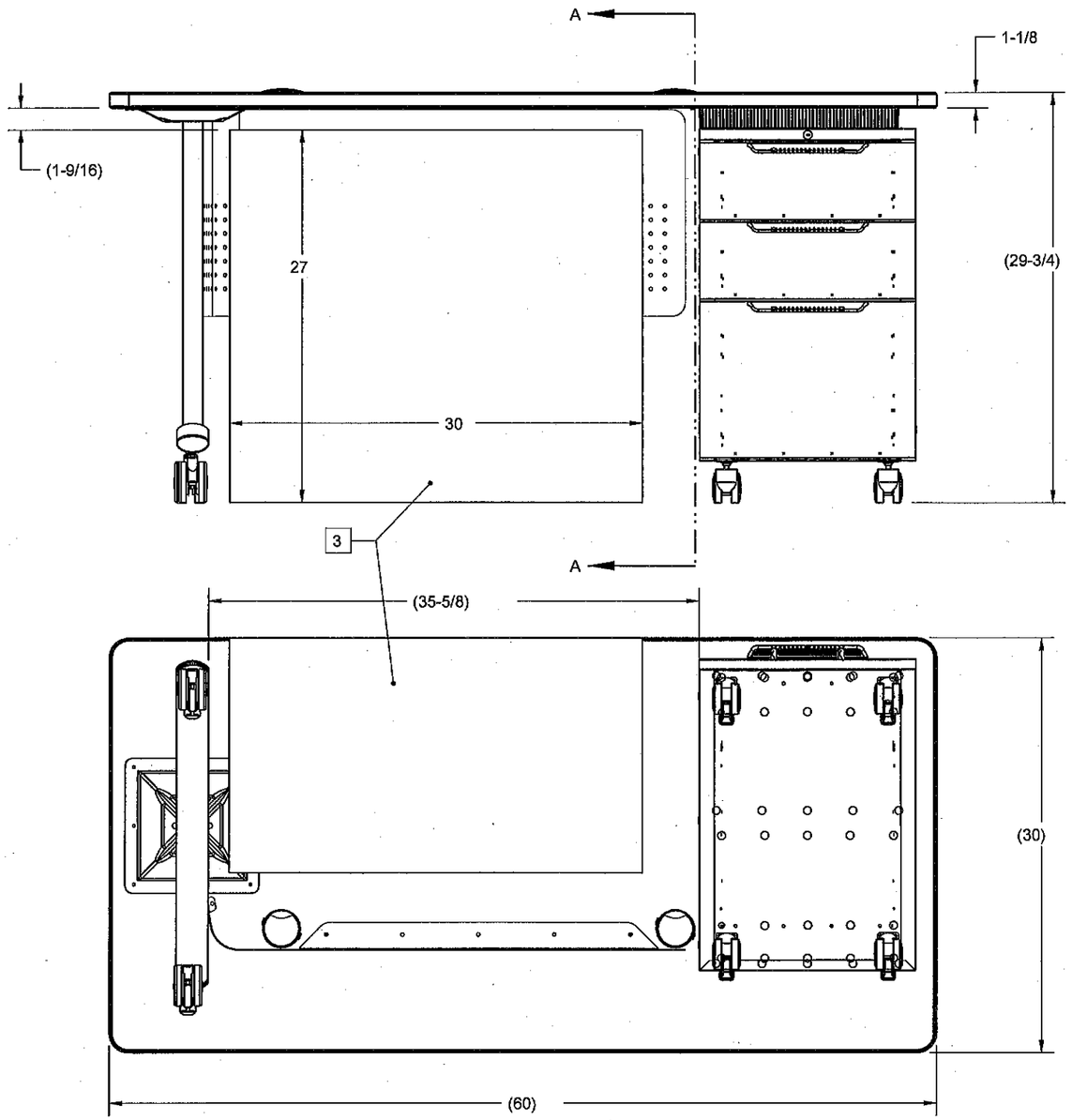

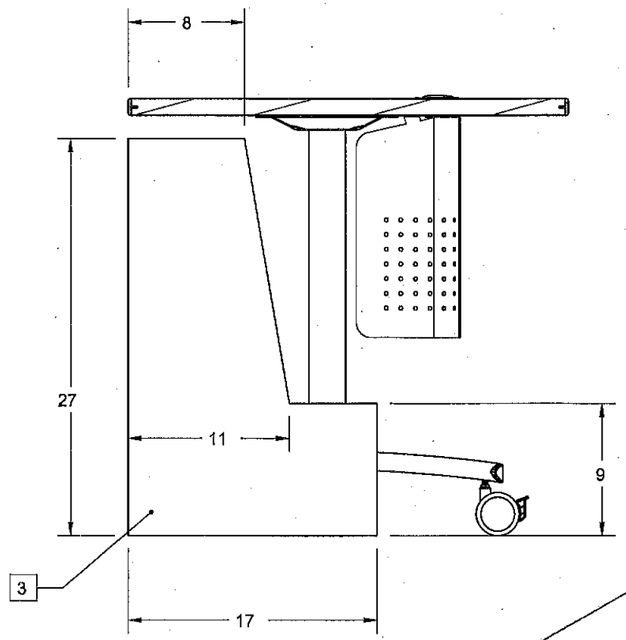

SECTION A-A

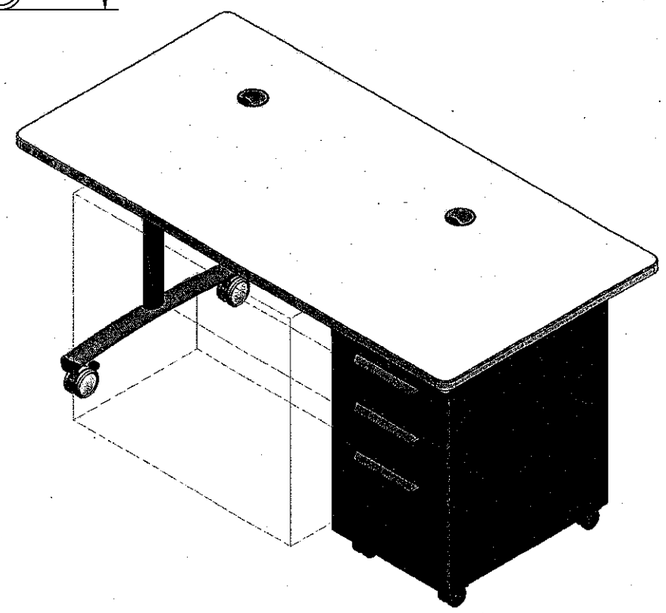

SCALE 0.070

4. PENCIL DRAWER REMOVED TO MEET ADA CLEARANCE

3 ADA CLEARANCE (BOX) SHOWN PER 2010 ADA STANDARD FOR ACCESSIBLE DESIGN

2. RIGHT-HAND PEDESTAL SHOWN

1. PRO-E FILE, SCALE FACTOR: 0.100

NOTES: Unless otherwise specified.

VIRCO®

VIRCO MFG. CORPORATION

TORRANCE, CA

THIS DRAWING EMBODIES A CONFIDENTIAL, PROPRIETARY DESIGN OWNED BY VIRCO MFG. CORPORATION. THIS DRAWING IS SUBMITTED UNDER A CONFIDENTIAL RELATIONSHIP FOR A SPECIFIED PURPOSE AND RECIPIENT AGREES NOT TO DISCLOSE OR USE IT FOR ANY OTHER PURPOSE WITHOUT THE PRIOR WRITTEN CONSENT OF VIRCO MFG. CORPORATION.

DRAWN BY	CHECKED BY	APPROVED BY
S.FLETCHER		
DATE 03/16/2020	DATE	DATE

TOL. UNLESS OTHERWISE SPEC. FRAC:±1/8 DEC:±.05 ANGLE:±1/2°

NO	DESCRIPTION	PART NO.	DRAWING NO.	QTY.

TITLE: TEXTAMETER DESK 30" X 60" WITH ADA DIMENSIONS

MATERIAL: SEE BILL OF MATERIALS

DRAWING NO: T3060-ADA

PRO-E NO: TXTR-3060-01

REV. 1

SHEET 1 OF 1

Project Name: Wendell Cross Elementary School

State Project: #151-0295 EA/RR Phase: 5 Of 5



Item ID: D-5

Item Description: Priority L-Shape Desk w/ wall mounted Overhead, and bbf

Manufacturer: Kimball

Model #: 53K2442WBSL3/ 53K3028SLOSP/ 53K3060WBSL/ 53K5412PSR/ 53K60SRUP/ 53K7216SOSMG2L/ 53KE2415PUBBFSL/ 53KPSBSP/ KAC7222TBKW

Dimensions: 30”X66” DESK WITH 24”X42” RETURN

Color: Laminate: Tuscan Walnut

Metal: Silver Pearl

Modesty: Mist

Pulls: Studio/ Silver mist

TB: Kimball, Universe, Mica

Total Quantity: *7*

Detailed Description:
L shape laminate desk with (1) BBF, open legs with privacy panel and wire management. Includes wall hung overhead storage with writable glass door. Laminate finish.

Disclaimer: The furniture shown in the photograph above does not represent the specified colors or fabric selections. This photo is for general reference indicating shape, size and general construction. Note: See Furniture Floor Plans for layout.

Project Name: Wendell Cross Elementary School

State Project: #151-0295 EA/RR Phase: 5 Of 5

Room Name	Room Number	Quantity	Room Name	Room Number	Quantity
Assistant Principal Office (left return)	A315	1	Parent Liaison (Right Return)	B234	1
Principal Office (Right return)	B236	1	Psych. Office (Left return)	C221	1
SW Office (right return)	C222	1	GC Office (left return)	C224	1
Literacy Office (left return)	C245	1			

Secure Attachment of FF&E Items:

To ensure proper attachment of fixtures, Furnishings & Equipment items, including Technology items, where items are attached to wall, ceiling, overhead structure and or floor, contractor shall provide information adequate for architect to verify items, attaching to wall, ceiling, and/or floor are attached securely and per manufacturer's recommendations. Contractor shall provide struts, hangers, fasteners, safety harnesses, channels, bolts, screws, rods, etc. to securely attach items to existing structure as required to meet field conditions and meet applicable codes.

Disclaimer: The furniture shown in the photograph above does not represent the specified colors or fabric selections. This photo is for general reference indicating shape, size and general construction. Note: See Furniture Floor Plans for layout.

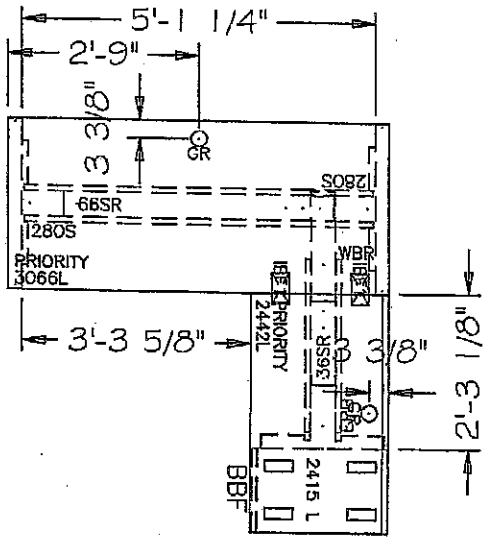

3D VIEW

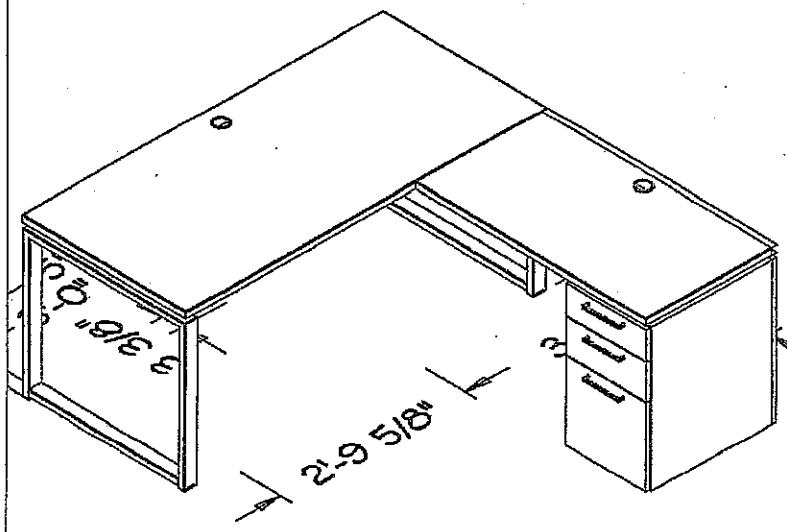

DATE BY	REVISION
- -	- -
- -	- -
- -	- -
- -	- -
- -	- -
- -	- -
- -	- -

THIS DRAWING WAS PREPARED BASED ON INFORMATION THAT WAS PROVIDED BY THE DEALER AND/OR END USER. IT IS THE RESPONSIBILITY OF THAT DEALER AND/OR END USER TO VERIFY THE CONTENT AND ACCURACY OF THIS DRAWING AND ITS SPECIFICATION. THIS DRAWING IS THE PROPERTY OF KIMBALL OFFICE, CREATED FOR THE SOLE USE OF KIMBALL OFFICE OR ITS AUTHORIZED DEALER AND SHALL NOT BE REPRODUCED OR USED TO SOLICIT BIDS OR QUOTES FROM NON-KIMBALL OFFICE ENTITIES OR DEALERS.

Kimball®

PRODUCT LINE(S): - -

SCALE: 3/8" = 1'-0"

DATE: 04/05/19

SPECIFIED BY: JT

CHECKED BY: -

OPPORTUNITY # 70010 1901

PAGE: 1 of 1

3D VIEW

2'-3 1/8"

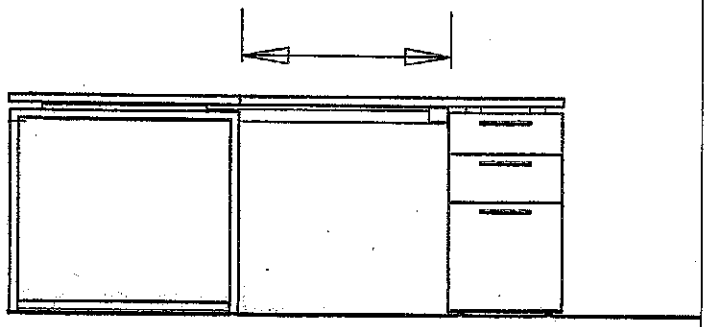

3D VIEW

2'-9 5/8"

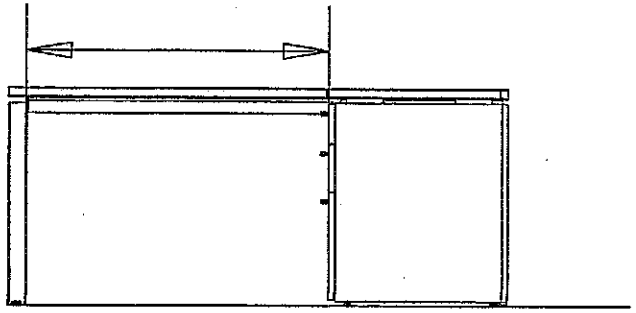

Project Name: Wendell Cross Elementary School

State Project: #151-0295 /EA RR Phase: 5 of 5



Item ID: D-6

Item Description: TEXT Presentation Station

Manufacturer: Virco

Model #: TEPS

Dimensions: 48”X24” x 26”-34” high

Color: Top: Dry Creek Plum Tree

Frame: Silver Mist

Total Quantity: 1

Detailed Description:

Table with two grommets, modesty panel, wire mgmt., and plastic pencil drawer.

Room Name	Room Number	Quantity	Room Name	Room Number	Quantity
Art Studio	B111	1			

Disclaimer: The furniture shown in the photograph above does not represent the specified colors or fabric selections. This photo is for general reference indicating shape, size and general construction. Note: See Furniture Floor Plans for layout.

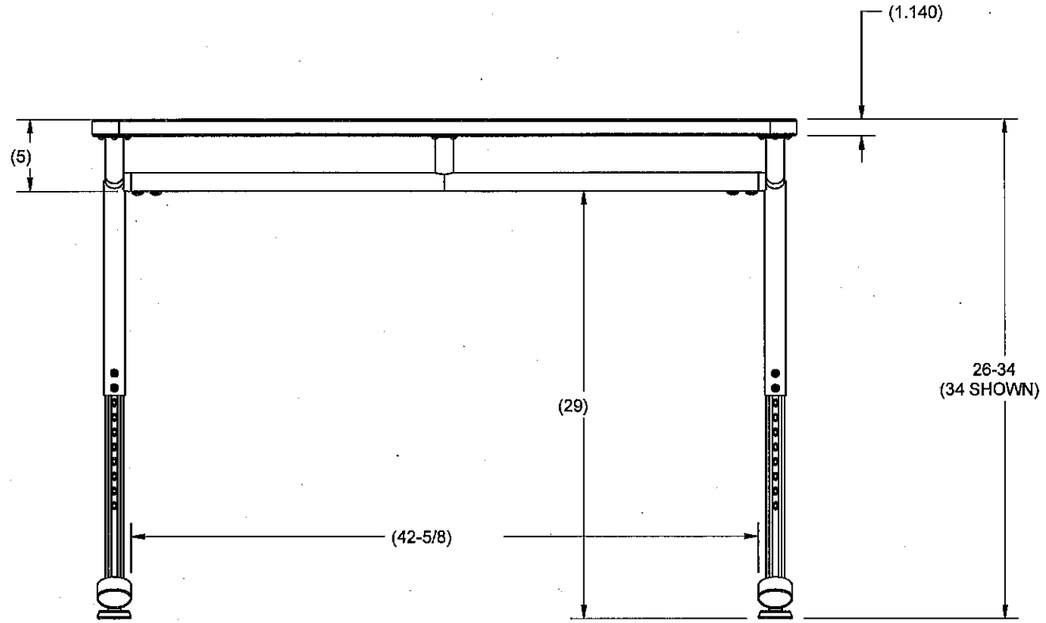

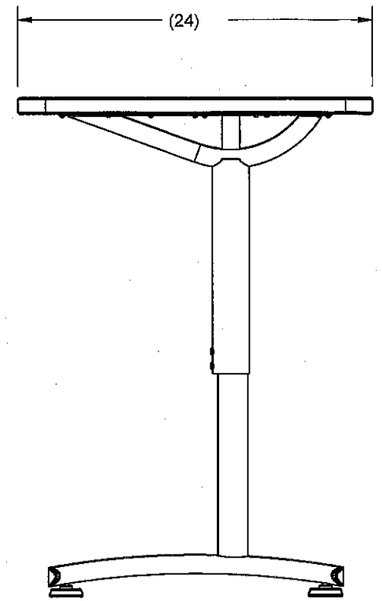

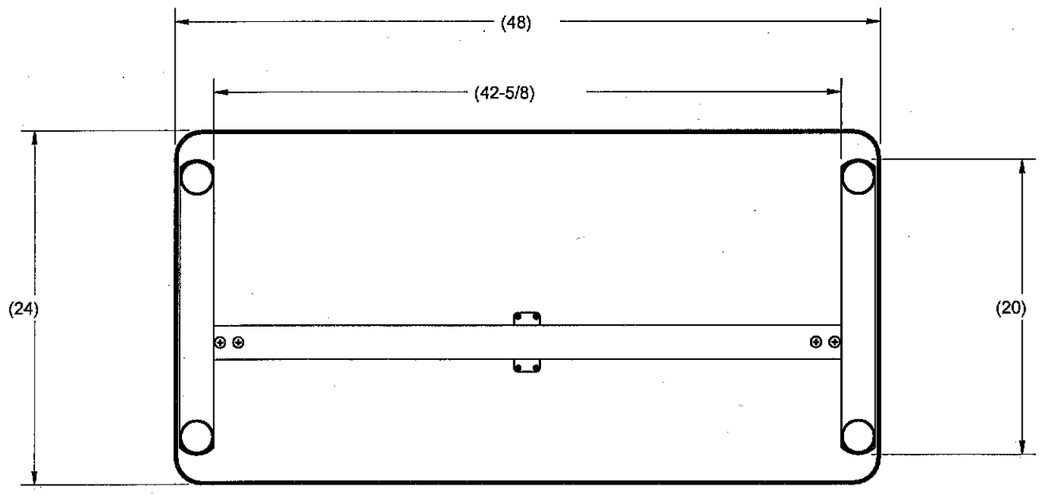

D-6

1. PRO-E FILE, SCALE FACTOR: 0.100
NOTES: Unless otherwise specified.

VIRCO MFG. CORPORATION
TORRANCE, CA

THIS DRAWING EMBODIES A CONFIDENTIAL, PROPRIETARY DESIGN OWNED BY VIRCO MFG. CORPORATION. THIS DRAWING IS SUBMITTED UNDER A CONFIDENTIAL RELATIONSHIP FOR A SPECIFIED PURPOSE AND RECIPIENT AGREES NOT TO DISCLOSE OR USE IT FOR ANY OTHER PURPOSE WITHOUT THE PRIOR WRITTEN CONSENT OF VIRCO MFG. CORPORATION.

DRAWN BY	CHECKED BY	APPROVED BY
S.FLETCHER		
DATE 09/15/2014	DATE	DATE

TOL. UNLESS OTHERWISE SPEC. FRAC:±1/16 DEC:±.03 ANGLE:±1/2°

TITLE: TS24488YADJ (ADA REFERENCE DIMENSIONS)

MATERIAL:

DRAWING NO: TS24488YADJ

PRO-E NO: TEXT-2448

REV. 1

SHEET 1 OF 1

Project Name: Wendell Cross Elementary School

State Project: #151-0295 EA/RR Phase: 5 Of 5



Item ID: EQ-1

Item Description: Music Stand
Manufacturer: National Public Seating
Model #: 82MS
Dimensions: Height adjustable 24”-46”
Color: Black

Total Quantity: 80

Detailed Description:
Height adjustable music stand.

Room Name	Room Number	Quantity	Room Name	Room Number	Quantity
Band	B241	40	Choral	B243	40

Disclaimer: The furniture shown in the photograph above does not represent the specified colors or fabric selections. This photo is for general reference indicating shape, size and general construction. Note: See Furniture Floor Plans for layout.

Project Name: Wendell Cross Elementary School

State Project: #151-0295 EA/RR Phase: 5 Of 5



Item ID: EQ-2
Item Description: Classroom American Flag w/ flag staff holder
Manufacturer: Virco
Model #: FLAGIN1624 & FLAGHOLD
Dimensions: 16” x 24”
Color: As shown

Total Quantity: 47 sets

Detailed Description:
16” x 24” US Flag mounted on a 7/16” x 48” staff w/ a steel flagstaff holder.

Room Name	Room Number	Quantity	Room Name	Room Number	Quantity
Art Studio	B111	1 Set	Resource Rm	B112	1 Set
Computer Lab	C118	1 Set	Resource Rm	C119	1 Set
Third Grade	C121	1 Set	Third Grade	C122	1 Set
Third Grade	C123	1 Set	Fourth Grade	D111	1 Set
Fourth Grade	D112	1 Set	Fourth Grade	D113	1 Set
Fifth Grade	D114	1 Set	Fifth Grade	D115	1 Set
Fifth Grade	D116	1 Set	Sixth Grade	A219	1 Set
Sixth Grade	A218	1 Set	Sixth Grade	A217	1 Set

Disclaimer: The furniture shown in the photograph above does not represent the specified colors or fabric selections. This photo is for general reference indicating shape, size and general construction. Note: See Furniture Floor Plans for layout.

Project Name: Wendell Cross Elementary School

State Project: #151-0295 EA/RR Phase: 5 Of 5

Special Ed	A215	1 Set	Special Ed	A213	1 Set
Computer Lab	A211	1 Set	Band	B241	1 Set
Choral	B243	1 Set	Art Studio	C230	1 Set
Special Ed	C237	1 Set	Special Ed	C239	1 Set
ESL	C241	1 Set	Reading	C244	1 Set
OT/PT	C229	1 Set	Second Grade	D230	1 Set
Second Grade	D229	1 Set	Second Grade	D228	1 Set
First Grade	D227	1 Set	First Grade	D226	1 Set
First Grade	D225	1 Set	Kindergarten	D223	1 Set
Kindergarten	D221	1 Set	Kindergarten	D219	1 Set
Pre-K	D215	1 Set	Pre-K	D213	1 Set
Pre-K	D211	1 Set	Seventh Grade	A327	1 Set
Seventh Grade	A325	1 Set	Seventh Grade	A321	1 Set
Science	A311	1 Set	Science	A312	1 Set
Eighth Grade	A322	1 Set	Eighth Grade	A324	1 Set
Eighth Grade	A326	1 Set			

Disclaimer: The furniture shown in the photograph above does not represent the specified colors or fabric selections. This photo is for general reference indicating shape, size and general construction. Note: See Furniture Floor Plans for layout.

Project Name: Wendell Cross Elementary School

State Project: #151-0295 EA/RR Phase: 5 Of 5



Item ID: EQ-3
Item Description: Play Kitchen
Manufacturer: Virco
Model #: ECKTCHN
Dimensions: Hutch 36”H x 20”W x 15”D
Range 24"H x 20"W x 15"D
Sink 24"H x 20"W x 15"D
Refrigerator 36"H x 20"W x 15"D
Color: Natural Birch

Total Quantity: 3

Detailed Description: Set of four appliances in natural birch.

Room Name	Room Number	Quantity	Room Name	Room Number	Quantity
Pre-K	D211	1	Pre-K	D213	1
Pre-K	D215	1			

Disclaimer: The furniture shown in the photograph above does not represent the specified colors or fabric selections. This photo is for general reference indicating shape, size and general construction. Note: See Furniture Floor Plans for layout.

Project Name: Wendell Cross Elementary School

State Project: #151-0295 EA/RR Phase: 5 Of 5



Item ID: EQ-5
Item Description: Sand and water table
Manufacturer: Virco
Model #: ECSWT4617
Dimensions: 46"L x 17"W x 24"H

Color: Natural Birch

Total Quantity: 3

Detailed Description: With a wood frame, a 6" deep plastic liner, a drain plug, and casters on two legs, this sand and water table enables creative activities in early learning environments.

Room Name	Room Number	Quantity	Room Name	Room Number	Quantity
Pre-K	D211	1	Pre-K	D213	1
Pre-K	D215	1			

Disclaimer: The furniture shown in the photograph above does not represent the specified colors or fabric selections. This photo is for general reference indicating shape, size and general construction. Note: See Furniture Floor Plans for layout.

Project Name: Wendell Cross Elementary School

State Project: #151-0295 EA/RR Phase: 5 Of 5



Item ID: EQ-6
Item Description: Puppet Theater
Manufacturer: Virco
Model #: ECTHEATER
Dimensions: 48"H x 45"W x 6"D; base support 18"

Color: Natural Birch

Total Quantity: 3

Detailed Description: What better way to help youngsters stretch their imaginations than with an exciting puppet theater? This deluxe unit includes curtains, a curtain rod and two writable chalkboard surfaces. Puppets are not included.

Room Name	Room Number	Quantity	Room Name	Room Number	Quantity
Pre-K	D211	1	Pre-K	D213	1
Pre-K	D215	1			

Disclaimer: The furniture shown in the photograph above does not represent the specified colors or fabric selections. This photo is for general reference indicating shape, size and general construction. Note: See Furniture Floor Plans for layout.

Project Name: Wendell Cross Elementary School

State Project: #151-0295 EA/RR Phase: 5 Of 5





Item ID: EQ-7

Item Description: Step Up Changing Table
Manufacturer: Whitney Brothers
Model #: WB0648
Dimensions: 45.50”w x 24.75”d x 37.50”h
Color: Birch

Total Quantity: 1

Detailed Description:
Step Up Toddler Changing Table

Room Name	Room Number	Quantity	Room Name	Room Number	Quantity
Toilet	C213	1			

Disclaimer: The furniture shown in the photograph above does not represent the specified colors or fabric selections. This photo is for general reference indicating shape, size and general construction. Note: See Furniture Floor Plans for layout.

Project Name: Wendell Cross Elementary School

State Project: #151-0295 EA/RR Phase: 5 Of 5



Item ID: EQ-8
Item Description: Scale
Manufacturer: Virco
Model #: DFASCALE
Dimensions: 7' tall
Color: As shown

Total Quantity: 1

Detailed Description:
Digital first aid scale that measures students up to 7' tall. In addition to accurately registering the weight of your students, Virco's balance-beam scale can also measure students who are up to 6'6" tall. 350lbs x 1/4lb or 160kg x 100gr.

Room Name	Room Number	Quantity	Room Name	Room Number	Quantity
Cots	C215	1			

Disclaimer: The furniture shown in the photograph above does not represent the specified colors or fabric selections. This photo is for general reference indicating shape, size and general construction. Note: See Furniture Floor Plans for layout.

Project Name: Wendell Cross Elementary School

State Project: #151-0295 EA/RR Phase: 5 of 5



Item ID: EQ-9
Item Description: Complete Mounting Set for 3’x5’ Flag
Manufacturer: Annin
Model #:027602
Dimensions: 8’ pole
Color: Oak pole

Total Quantity: 2

Detailed Description:
Mounting set for 3’ x 5’ flags contains a gold base, 8’ oak pole, cord with 5” tassels. Suitable for Auditorium or classroom use.

Room Name	Room Number	Quantity	Room Name	Room Number	Quantity
Media Center	C111	1	Platform	B231	1

Disclaimer: The furniture shown in the photograph above does not represent the specified colors or fabric selections. This photo is for general reference indicating shape, size and general construction. Note: See Furniture Floor Plans for layout.

Project Name: Wendell Cross Elementary School

State Project: #151-0295 EA/RR Phase: 5 of 5



Item ID: EQ-10
Item Description: Connecticut Flag
Manufacturer: Annin
Model #:023336
Dimensions: 3 x 5
Color: Blue

Total Quantity: 2

Detailed Description:
3’ x 5’ Indoor CT flag made from 100% Nylon.

Room Name	Room Number	Quantity	Room Name	Room Number	Quantity
Media Center	C111	1	Platform	B231	1

Disclaimer: The furniture shown in the photograph above does not represent the specified colors or fabric selections. This photo is for general reference indicating shape, size and general construction. Note: See Furniture Floor Plans for layout.

Project Name: Wendell Cross Elementary School

State Project: #151-0295 EA/RR Phase: 5 of 5



Item ID: EQ-11
Item Description: USA FLAG ON STAND
Manufacturer: Annin
Model #: 864633
Dimensions: 3 x 5
Color: N/A

Total Quantity: 2

Detailed Description:
3’ x 5’ Indoor CT flag made from 100% Nylon.

Room Name	Room Number	Quantity	Room Name	Room Number	Quantity
Media Center	C111	1	Platform	B231	1

Disclaimer: The furniture shown in the photograph above does not represent the specified colors or fabric selections. This photo is for general reference indicating shape, size and general construction. Note: See Furniture Floor Plans for layout.

Project Name: Wendell Cross Elementary School

State Project: #151-0295 EA/RR Phase: 5 of 5



Item ID: EQ-12
Item Description: Electric Washer/Dryer Laundry Center
Manufacturer: Frigidaire
Model #: FFLE3900UW
Dimensions: 27”w x 31 ½” d x 76”h
Color: White

Total Quantity: 1

Detailed Description:
Stacking Washer/Dryer

Room Name	Room Number	Quantity	Room Name	Room Number	Quantity
Waiting Area	C212	1			

Disclaimer: The furniture shown in the photograph above does not represent the specified colors or fabric selections. This photo is for general reference indicating shape, size and general construction. Note: See Furniture Floor Plans for layout.

Project Name: Wendell Cross Elementary School

State Project: #151-0295 EA/RR Phase: 5 of 5



Item ID: EQ-13
Item Description: Ice Machine
Manufacturer: Summit
Model #: BIM44GADA
Dimensions: 14.5” w x 25.5” d x 32.38” h
Color: Stainless

Total Quantity: 1

Detailed Description:
UC ADA ice maker

Room Name	Room Number	Quantity	Room Name	Room Number	Quantity
Waiting Area	C212	1			

Disclaimer: The furniture shown in the photograph above does not represent the specified colors or fabric selections. This photo is for general reference indicating shape, size and general construction. Note: See Furniture Floor Plans for layout.

Project Name: Wendell Cross Elementary School

State Project: #151-0295 EA/RR Phase: 5 of 5



Item ID: EQ-14
Item Description: Countertop Microwave
Manufacturer: Sharp
Model #: SMC2242DS
Dimensions: 2.2 CU FT
Color: Stainless Steel

Total Quantity: 1

Detailed Description:
1200 Watt Microwave with 16” carousel

Room Name	Room Number	Quantity	Room Name	Room Number	Quantity
Teacher Dining	C211	1			

Disclaimer: The furniture shown in the photograph above does not represent the specified colors or fabric selections. This photo is for general reference indicating shape, size and general construction. Note: See Furniture Floor Plans for layout.

Project Name: Wendell Cross Elementary School

State Project: #151-0295 EA/RR Phase: 5 of 5



Item ID: EQ-15
Item Description: Side by Side Refrigerator
Manufacturer: GE
Model #: GZS22IYNFS
Dimensions: 36”w x 28.5”D x 69 7/8”h
Color: Stainless Steel

Total Quantity: 3

Detailed Description:

Room Name	Room Number	Quantity	Room Name	Room Number	Quantity
Teacher Dining	C211	2	Waiting Area	C212	1

Disclaimer: The furniture shown in the photograph above does not represent the specified colors or fabric selections. This photo is for general reference indicating shape, size and general construction. Note: See Furniture Floor Plans for layout.

Project Name: Wendell Cross Elementary School

State Project: #151-0295 EA/RR Phase: 5 Of 5



Item ID: EQ-16
Item Description: Classroom Rug
Manufacturer: School Specialty/ Carpets for Kids
Model #: 679226
Dimensions: 8’4” x 13’4”
Color: As shown

Total Quantity: 6

Detailed Description:
Cute phonics images will make this a fun place for children to learn.

Room Name	Room Number	Quantity	Room Name	Room Number	Quantity
Pre-K	D215	1	Pre-K	D211	1
Pre-K	D213	1	Kindergarten	D223	1
Kindergarten	D221	1	Kindergarten	D219	1

Disclaimer: The furniture shown in the photograph above does not represent the specified colors or fabric selections. This photo is for general reference indicating shape, size and general construction. Note: See Furniture Floor Plans for layout.

Project Name: Wendell Cross Elementary School

State Project: #151-0295 EA/RR Phase: 5 Of 5

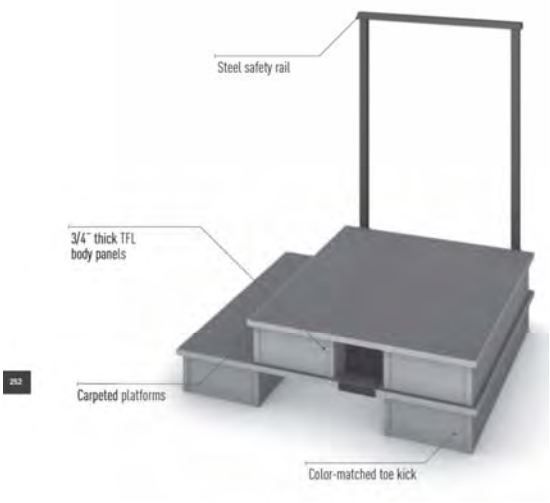

Item ID: EQ-17

Item Description: Conductors Stand
Manufacturer: National Public Seating
Model #: 566200
Dimensions: 43” w x 38”d x 48” h
Color: Grey

Total Quantity: 2

Detailed Description:
Height adjustable music stand.

Room Name	Room Number	Quantity	Room Name	Room Number	Quantity
Band	B241	1	Choral	B243	1

Disclaimer: The furniture shown in the photograph above does not represent the specified colors or fabric selections. This photo is for general reference indicating shape, size and general construction. Note: See Furniture Floor Plans for layout.

Project Name: Wendell Cross Elementary School

State Project: #151-0295 EA/RR Phase: 5 Of 5



Item ID: EQ-18
Item Description: Classroom Rug
Manufacturer: School Specialty/ Carpets for Kids
Model #: 7009155
Dimensions: 6’x9’
Color: Midnight Blue

Total Quantity: 3

Detailed Description:
Cute phonics images will make this a fun place for children to learn.

Room Name	Room Number	Quantity	Room Name	Room Number	Quantity
Pre-K	D215	1	Pre-K	D211	1
Pre-K	D213	1			

Disclaimer: The furniture shown in the photograph above does not represent the specified colors or fabric selections. This photo is for general reference indicating shape, size and general construction. Note: See Furniture Floor Plans for layout.

Project Name: Wendell Cross Elementary School

State Project: #151-0295 EA/RR Phase: 5 Of 5



Item ID: EQ-19
Item Description: Classroom Rug
Manufacturer: School Specialty/ Carpets for Kids
Model #: 2003787
Dimensions: 4’x6’
Color: As shown

Total Quantity: 3

Detailed Description:
Childcraft carpets are 25” thicker and heavier than other leading educational carpets

Meets or exceeds Class 1 Fire rating

Room Name	Room Number	Quantity	Room Name	Room Number	Quantity
Pre-K	D215	1	Pre-K	D211	1
Pre-K	D213	1			

Disclaimer: The furniture shown in the photograph above does not represent the specified colors or fabric selections. This photo is for general reference indicating shape, size and general construction. Note: See Furniture Floor Plans for layout.

Project Name: Wendell Cross Elementary School

State Project: #151-0295 EA/RR Phase: 5 Of 5



Item ID: EQ-20
Item Description: Classroom Rug
Manufacturer: School Specialty/ Carpets for Kids
Model #: 2003752
Dimensions: 8'x12'
Color: As shown

Total Quantity: 3

Detailed Description:
Childcraft carpets are 25" thicker and heavier than other leading educational carpets

Meets or exceeds Class 1 Fire rating

Room Name	Room Number	Quantity	Room Name	Room Number	Quantity
First Grade	D227	1	First Grade	D226	1
First Grade	D225	1			

Disclaimer: The furniture shown in the photograph above does not represent the specified colors or fabric selections. This photo is for general reference indicating shape, size and general construction. Note: See Furniture Floor Plans for layout.

Project Name: Wendell Cross Elementary School

State Project: #151-0295 EA/RR Phase: 5 Of 5



Item ID: EQ-21
Item Description: Narcodics Cabinet
Manufacturer: School Health
Model #: 24555
Dimensions: 18”w x 8”d x 30” high
Color: As shown

Total Quantity: 1

Detailed Description:
2 shelf narcodics cabinet to secure narcotics to ensure only authorized personnel have access.

Room Name	Room Number	Quantity	Room Name	Room Number	Quantity
Storage	C217	1			

Disclaimer: The furniture shown in the photograph above does not represent the specified colors or fabric selections. This photo is for general reference indicating shape, size and general construction. Note: See Furniture Floor Plans for layout.

Project Name: Wendell Cross Elementary School

State Project: #151-0295 EA/RR Phase: 5 Of 5



Item ID: EQ-22
Item Description: Aluminum Transport Chair w/ 12” Rear Wheel
Manufacturer: School Health
Model #: 1006241
Dimensions: 16” x 18” seat
Color: As shown

Total Quantity: 1

Detailed Description:
Wheelchair with hand brakes and seatbelt. 12” back wheels allow you to transport with stability. 300 lb. capacity.

Room Name	Room Number	Quantity	Room Name	Room Number	Quantity
Storage	C217	1			

Disclaimer: The furniture shown in the photograph above does not represent the specified colors or fabric selections. This photo is for general reference indicating shape, size and general construction. Note: See Furniture Floor Plans for layout.

Project Name: Wendell Cross Elementary School

State Project: #151-0295 EA/RR Phase: 5 of 5



Item ID: F-1

Item Description: Universal Lateral File

Manufacturer: Kimball

Model #: FND18363/ FNDACW/ SS1836LFTL

Dimensions: 36”W x 18”D x 3 drawers high

Color: Silver Pearl with Tuscan Walnut Laminate Top

Total Quantity: 11

Detailed Description:

3 drawer Lateral File

Room Name	Room Number	Quantity	Room Name	Room Number	Quantity
Parent Liaison	B234	1	Principals Off	B236	2
Guidance Off.	C224	2	Social Worker	C222	2
Psych. Office	C221	2	Literacy Office	C245	1
Assistant Principal	A315	1			

Disclaimer: The furniture shown in the photograph above does not represent the specified colors or fabric selections. This photo is for general reference indicating shape, size and general construction. Note: See Furniture Floor Plans for layout.

Project Name: Wendell Cross Elementary School

State Project: #151-0295 EA/RR Phase: 5 Of 5



Item ID: ST-1
Item Description: Utility Cart
Manufacturer: Virco
Model #: KLIB1836C
Dimensions: 201/4"D x 37"W x 431/8"H.

Color: Blue

Total Quantity: 4

Detailed Description: With two walled shelves – each of which has multiple compartments that can be adjusted in 41/2" increments – this cart is great for moving quantities of small items around a library.

Room Name	Room Number	Quantity	Room Name	Room Number	Quantity
Storage	B114	1	Book Room	C242	1
Prep Room	A313	1	Prep Room	A314	1

Disclaimer: The furniture shown in the photograph above does not represent the specified colors or fabric selections. This photo is for general reference indicating shape, size and general construction. Note: See Furniture Floor Plans for layout.

Project Name: Wendell Cross Elementary School

State Project: #151-0295 EA/RR Phase: 5 Of 5



Item ID: ST-2

Item Description: Metal Storage Cabinet
Manufacturer: Virco
Model #: FILING-53CAB361872
Dimensions: 18”d x 36”w x 72”h
Color: Silver mist
Total Quantity: 11

Room Name	Room Number	Quantity	Room Name	Room Number	Quantity
Storage	B114	3	Custodial Off.	B211	1
Coach’s Office	B225	1	Storage	C217	2
Testing Room	C220	2	Conference	C219	2

Secure Attachment of FF&E Items:

To ensure proper attachment of fixtures, Furnishings & Equipment items, including Technology items, where items are attached to wall, ceiling, overhead structure and or floor, contractor shall provide information adequate for architect to verify items, attaching to wall, ceiling, and/or floor are attached securely and per manufacturer's recommendations. Contractor shall provide struts, hangers, fasteners, safety harnesses, channels, bolts, screws, rods, etc. to securely attach items to existing structure as required to meet field conditions and meet applicable codes.

Disclaimer: The furniture shown in the photograph above does not represent the specified colors or fabric selections. This photo is for general reference indicating shape, size and general construction. Note: See Furniture Floor Plans for layout.

Project Name: Wendell Cross Elementary School

State Project: #151-0295 EA/RR Phase: 5 Of 5





Item ID: ST-3
Item Description: Tote Tray cabinet w/ doors, marker board
Manufacturer: Virco
Model #: 2703MBTT / (4) TT121812 / (20) TT12183 / (2) TT12186
Dimensions: 561/16"W x 22"D x 477/16"H
Color: See Room by Room Listing

Total Quantity: 6

Detailed Description: Mobile Storage Cabinets with Optional Tote Trays. Mobile storage cabinets with optional tote trays feature a steel frame, laminated panel surfaces, tote tray rails and clear plastic tote trays (sold separately). These cabinets can accommodate up to forty – 3" tote trays; or twenty – 6" tote trays; or eight – 12" tote trays; or a combination of the various sizes. Cabinets are equipped with two 5" swivel casters with a tread lock brake and two 5" swivel casters without a brake.

Room Name	Room Number	Quantity	Room Name	Room Number	Quantity
Kindergarten	D219	1	Kindergarten	D223	1
Kindergarten	D221	1	Math Resource	C231	1
Media Cntr.	C211	2			

Disclaimer: The furniture shown in the photograph above does not represent the specified colors or fabric selections. This photo is for general reference indicating shape, size and general construction. Note: See Furniture Floor Plans for layout.

Project Name: Wendell Cross Elementary School

State Project: #151-0295 EA/RR Phase: 5 Of 5





Item ID: ST-4
Item Description: Block Set & Storage Bin
Manufacturer: Virco
Model #: (1) ECBLOCKBIN / (1) ECBLOCKS183
Dimensions: 30” x 30”
Color: Natural Birch

Total Quantity: 3 sets

Detailed Description: Block Storage Bin and 183 piece Block set.

Room Name	Room Number	Quantity	Room Name	Room Number	Quantity
Pre-K	D211	1 Set	Pre-K	D213	1 Set
Pre-K	D215	1 Set			

Disclaimer: The furniture shown in the photograph above does not represent the specified colors or fabric selections. This photo is for general reference indicating shape, size and general construction. Note: See Furniture Floor Plans for layout.

Project Name: Wendell Cross Elementary School

State Project: #151-0295 EA/RR Phase: 5 Of 5



Item ID: ST-5
Item Description: Dress Up Center
Manufacturer: Virco
Model #: ECCDRESS
Dimensions: 32"H x 31"W x 15"D

Color: Natural Birch

Total Quantity: 3

Detailed Description: Dress-up center that's complete with garment hooks for fancy clothes and costumes, an upper shelf for hats, a lower shelf for shoes and slippers, and an integral mirror to see how everything looks. Items pictured in the unit are not included.

Room Name	Room Number	Quantity	Room Name	Room Number	Quantity
Pre-K	D211	1	Pre-K	D213	1
Pre-K	D215	1			

Disclaimer: The furniture shown in the photograph above does not represent the specified colors or fabric selections. This photo is for general reference indicating shape, size and general construction. Note: See Furniture Floor Plans for layout.

Project Name: Wendell Cross Elementary School

State Project: #151-0295 EA/RR Phase: 5 Of 5



Item ID: ST-6
Item Description: Four Drawer Lateral File Cabinet
Manufacturer: Virco
Model #: FILING-53LF364D
Dimensions: 36” x 18” x 52” Four Drawer
Color: Silver Mist
Total Quantity: 18

Room Name	Room Number	Quantity	Room Name	Room Number	Quantity
Coach’s Office	B225	1	Document Stor	B233	10
Main Office	B232	2	Nurses Office	C216	3
ESL	C241	1	Speech	C223	1

Secure Attachment of FF&E Items:

To ensure proper attachment of fixtures, Furnishings & Equipment items, including Technology items, where items are attached to wall, ceiling, overhead structure and or floor, contractor shall provide information adequate for architect to verify items, attaching to wall, ceiling, and/or floor are attached securely and per manufacturer's recommendations. Contractor shall provide struts, hangers, fasteners, safety harnesses, channels, bolts, screws, rods, etc. to securely attach items to existing structure as required to meet field conditions and meet applicable codes.

Disclaimer: The furniture shown in the photograph above does not represent the specified colors or fabric selections. This photo is for general reference indicating shape, size and general construction. Note: See Furniture Floor Plans for layout.

Project Name: Wendell Cross Elementary School

State Project: #151-0295 EA/RR Phase: 5 of 5



Item ID: ST-7
Item Description: Credenza
Manufacturer: Kimball
Model #:72K217236CBDRDWRLL
Dimensions: 18”D x 72 in W x 36” H
Color: Tuscan Walnut
Total Quantity: 2

Detailed Description:
Laminate Credenza

Room Name	Room Number	Quantity	Room Name	Room Number	Quantity
Conference	B235	1	Conference	C219	1

Disclaimer: The furniture shown in the photograph above does not represent the specified colors or fabric selections. This photo is for general reference indicating shape, size and general construction. Note: See Furniture Floor Plans for layout.

Project Name: Wendell Cross Elementary School

State Project: #151-0295 EA/RR Phase: 5 Of 5



Item ID: T-1
Item Description: Computer Table
Manufacturer: Virco
Model #: FTT2460
Dimensions: 24”x60”, 24”-34”h
Color: See Room by Room

Total Quantity: 65

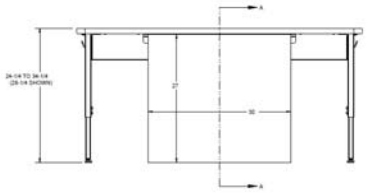



Detailed Description: ADA compliant**.** In response to educator requests for furniture with easily accessible wire management, new Flip-Top Technology tables feature a 6" deep locking flip-top compartment that secures cables, surge protectors and wires beneath the work surface. Flip-Top Technology tables let educators and technicians resolve connectivity issues without having to move tables or crawl beneath work surfaces. A generous port at each end of the flip-top compartment allows tables to be networked with power and data lines. With rectangular high-pressure laminate top sizes that range from 30" wide to 84" wide, Flip-Top Technology tables can accommodate one-, two- and three-student applications: there’s also a pair of single-student corner units. Models are available with two top depth configurations: 24" (18" work surface plus 6" flip-top) and 30" (24" work surface plus 6" flip-top). Top height adjusts from 24" to 34" for elementary, intermediate and high school settings. With handy Virco accessories like a surge protector, keyboard/mouse tray, CPU holder and backpack hanger, Flip-Top Technology tables can be readily outfitted to meet the needs of your school or district.

Room Name	Room Number	Quantity	Room Name	Room Number	Quantity
Computer	A211	2	6th Grade	A217	2
6th Grade	A218	2	6th Grade	A219	2
7th Grade	A321	2	8th Grade	A322	2
8th Grade	A324	2	7th Grade	A325	2
8th Grade	A326	2	7th Grade	A327	2
Resource Rm.	B112	2	3rd Grade	C122	2
Computer Lab	C118	1	3rd Grade	C121	2
3rd Grade	C123	2	4th Grade	D111	2

Disclaimer: The furniture shown in the photograph above does not represent the specified colors or fabric selections. This photo is for general reference indicating shape, size and general construction. Note: See Furniture Floor Plans for layout.

Project Name: Wendell Cross Elementary School

State Project: #151-0295 EA/RR Phase: 5 Of 5

4th Grade	D112	2	4th Grade	D113	2
5th Grade	D114	2	5th Grade	D115	2
5th Grade	D116	2	Pre-K	D213	2
Pre-K	D215	2	1st Grade	D225	2
1st Grade	D226	2	1st Grade	D227	2
2nd Grade	D228	2	2nd Grade	D229	2
2nd Grade	D230	2	Pre-K	D211	2
Kindergarten	D219	2	Kindergarten	D221	2
Kindergarten	D223	2			

Disclaimer: The furniture shown in the photograph above does not represent the specified colors or fabric selections. This photo is for general reference indicating shape, size and general construction. Note: See Furniture Floor Plans for layout.

DATE	REV. BY	DESCRIPTION	E.C.A. NO.	REV.
08/06/2012	K.L.	PRODUCTION RELEASE	-	A

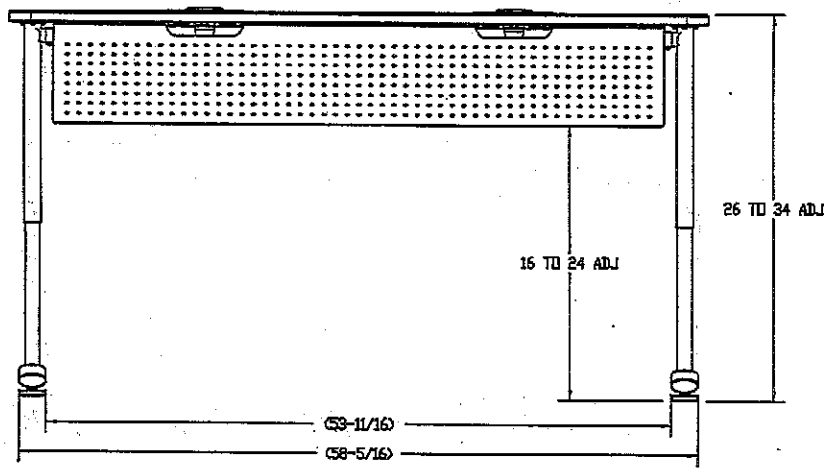

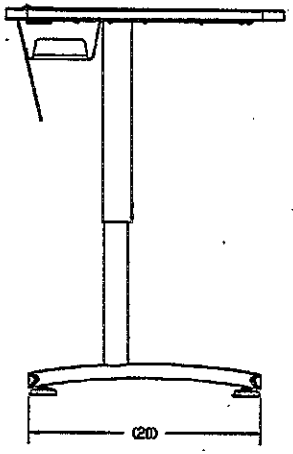

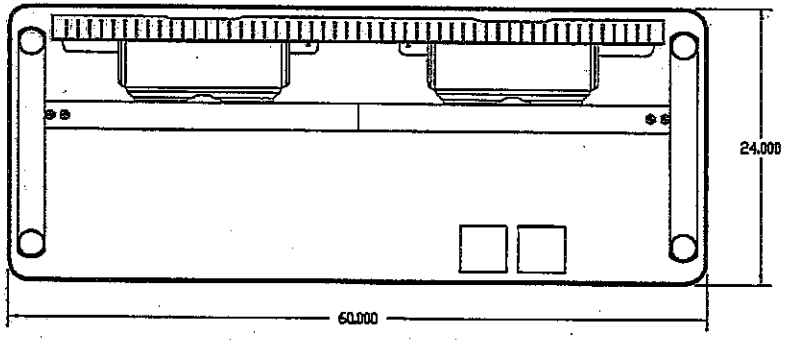

1. PRO-E FILE, SCALE FACTOR: 0.100
NOTES: Unless otherwise specified.

VIRCO MFG. CORPORATION
TORRANCE, CA

THIS DRAWING EMBODIES A CONFIDENTIAL, PROPRIETARY DESIGN OWNED BY VIRCO MFG. CORPORATION. THIS DRAWING IS SUBMITTED UNDER A CONFIDENTIAL RELATIONSHIP FOR A SPECIFIED PURPOSE AND RECIPIENT AGREES NOT TO DISCLOSE OR USE IT FOR ANY OTHER PURPOSE WITHOUT THE PRIOR WRITTEN CONSENT OF VIRCO MFG. CORPORATION.

DRAWN BY	CHECKED BY	APPROVED BY
K. LAM		
DATE 08/03/2012	DATE	DATE

TOL. UNLESS OTHERWISE SPEC. FRAC±1/8 DEC±.030 ANGLE±1/2°

NO	DESCRIPTION	PART NO.	DRAWING NO.	QTY.

TITLE

DRAWING NO: TTS24607TADJ

PRO-E NO: TTS24607TADJ REV. A

MATERIAL: SEE BILL OF MATERIALS

SHEET 1 OF 1

T-1

Project Name: Wendell Cross Elementary School

State Project: #151-0295 EA/RR Phase: 5 Of 5



Base Sold Separately



Item ID: T-2
Item Description: Cooperative Table
Manufacturer: Virco
Model #: 66129 / U3636
Dimensions: 36”x36” 29”h
Color: **Top:** Drycreek Plum Tree
Edge: Golden
Frame: Silver mist

Total Quantity: 6

Detailed Description: High-Pressure Laminate Café Tops Every 11⁄8" Virco cafe top on this page comes with protective T-mold banding, as well as a backing sheet to help prevent warping. Lunada® table bases neatly combine contemporary styling with easy assembly. Lunada’s elegant x-shaped profile features a clean, precise lap-joint foot connection complemented by playful oversized ABS glides. Sleek bipoint model. Sturdy die-cast aluminum foot Lunada’s durable ABS glides adjust in a 1/2" range to help level bases on uneven floors.

Room Name	Room Number	Quantity	Room Name	Room Number	Quantity
Teacher Dining	C211	6			

Disclaimer: The furniture shown in the photograph above does not represent the specified colors or fabric selections. This photo is for general reference indicating shape, size and general construction. Note: See Furniture Floor Plans for layout.

Project Name: Wendell Cross Elementary School

State Project: #151-0295 EA/RR Phase: 5 Of 5



Item ID: T-3
Item Description: Cooperative Table
Manufacturer: Virco
Model #: 48COOP72
Dimensions: 36”x72”, 22”-30”h
Color: **Top:** Dry Creek Plum Tree
Edge: Golden
Frame: Silver Mist

Total Quantity: 34

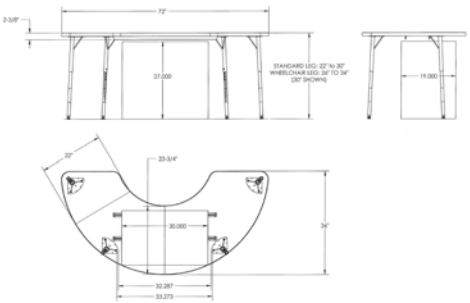

VIRCO 48COOP72 with ADA DIMENSIONS (30"Wx19"Dx27"H)

Detailed Description: ADA Compliant. Sturdy 1⅛" thick table-tops feature a high-pressure laminate finish. Table edges are cushioned with protective T-mold banding. Standard tubular steel legs let you adjust top height from 22" to 30" in one-inch increments.

Room Name	Room Number	Quantity	Room Name	Room Number	Quantity
SPED	A213	1	SPED	A215	1
6th Grade	A217	1	6th Grade	A218	1
6th Grade	A219	1	7th Grade	A321	1
8th Grade	A322	1	8th Grade	A324	1
7th Grade	A325	1	8th Grade	A326	1
7th Grade	A327	1			
3rd Grade	C121	1	3rd Grade	C122	1
3rd Grade	C123	1	SPED	C237	1
SPED	C239	1	ESL	C241	1
Reading	C244	1	4th Grade	D111	1
4th Grade	D112	1	4th Grade	D113	1

Disclaimer: The furniture shown in the photograph above does not represent the specified colors or fabric selections. This photo is for general reference indicating shape, size and general construction. Note: See Furniture Floor Plans for layout.

Project Name: Wendell Cross Elementary School

State Project: #151-0295 EA/RR Phase: 5 Of 5

5th Grade	D114	1	5th Grade	D115	1
Room Name	Room Number	Quantity	Room Name	Room Number	Quantity
5th Grade	D116	1	Kindergarten	D219	1
Kindergarten	D221	1	Kindergarten	D223	1
1st Grade	D225	1	1st Grade	D226	1
1st Grade	D227	1	2nd Grade	D228	1
Resource Rm.	C119	1			
2nd Grade	D229	1	2nd Grade	D230	1

Disclaimer: The furniture shown in the photograph above does not represent the specified colors or fabric selections. This photo is for general reference indicating shape, size and general construction. Note: See Furniture Floor Plans for layout.

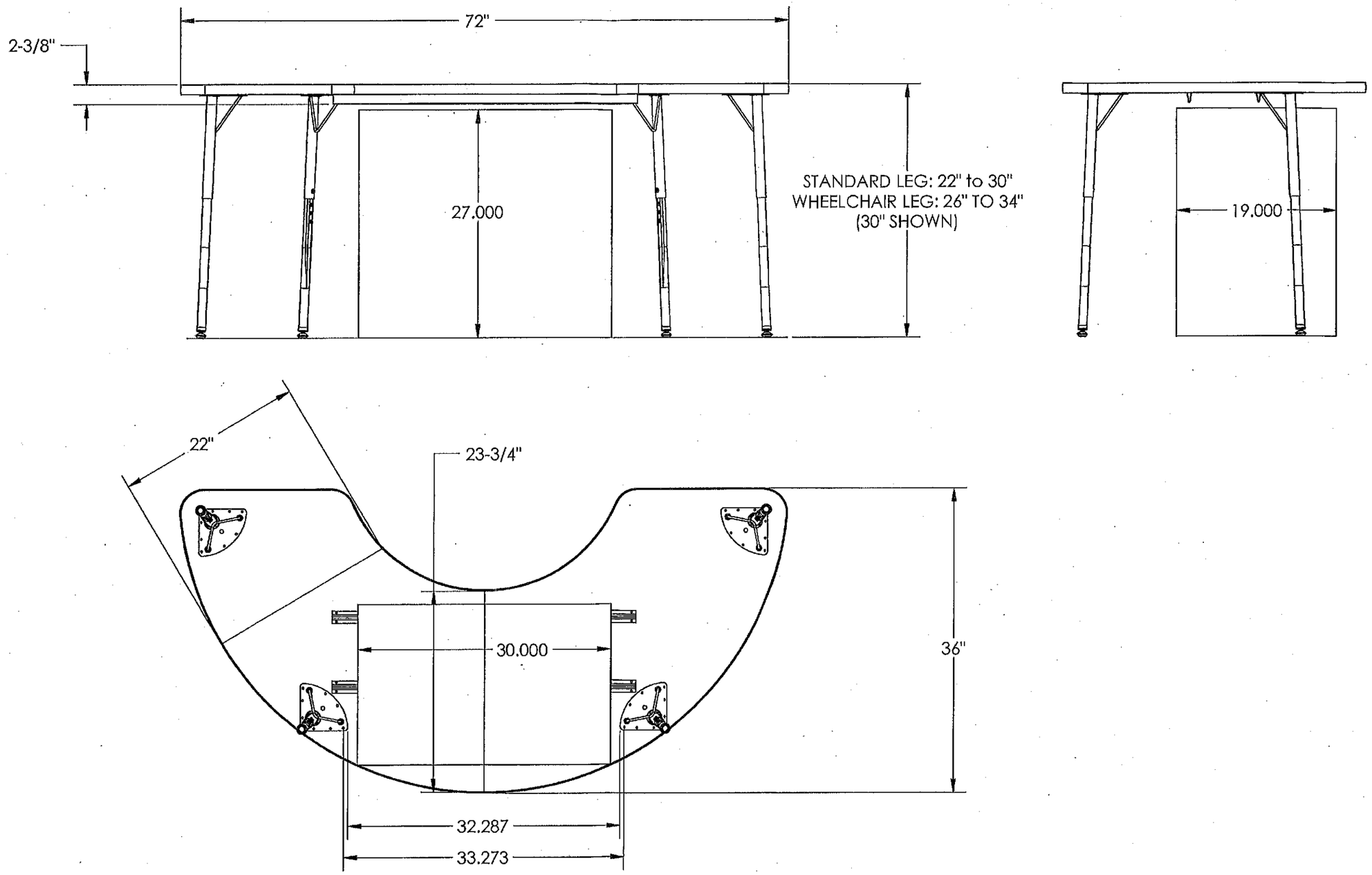

VIRCO 48COOP72 with ADA DIMENSIONS (30"Wx19"Dx27"H)

Project Name: Wendell Cross Elementary School

State Project: #151-0295 EA/RR Phase: 5 Of 5



Item ID: T-4
Item Description: Cooperative Table
Manufacturer: Virco
Model #: 483672
Dimensions: 36”x72”, 22”-30”h
Color: See Room by Room

Total Quantity:10

Detailed Description: ADA Compliant. Sturdy 1⅛" thick table-tops feature a high-pressure laminate finish. Table edges are cushioned with protective T-mold banding. Standard tubular steel legs let you adjust top height from 22" to 30" in one-inch increments.

Room Name	Room Number	Quantity	Room Name	Room Number	Quantity
Resource	A216	1	Testing Room	C220	1
Art Studio	C230	6	Resource	C240	1
Reading Room	C244	1			

Disclaimer: The furniture shown in the photograph above does not represent the specified colors or fabric selections. This photo is for general reference indicating shape, size and general construction. Note: See Furniture Floor Plans for layout.

DATE	REV. BY	DESCRIPTION	E.C.A. NO.	REV.
09/23/2020	R.R.	ADA REFERENCE	-	1

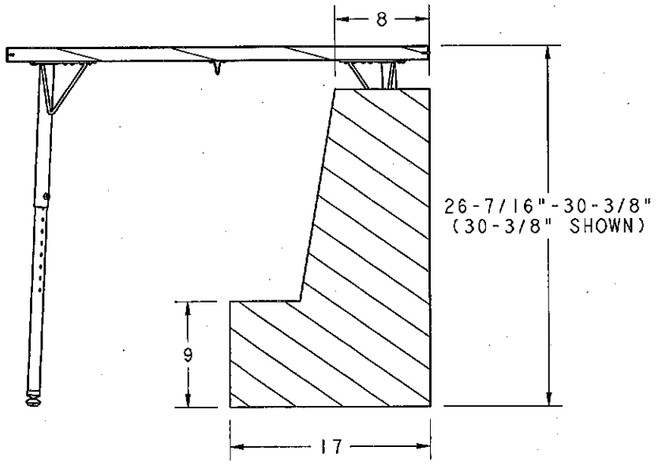

SECTION A-A

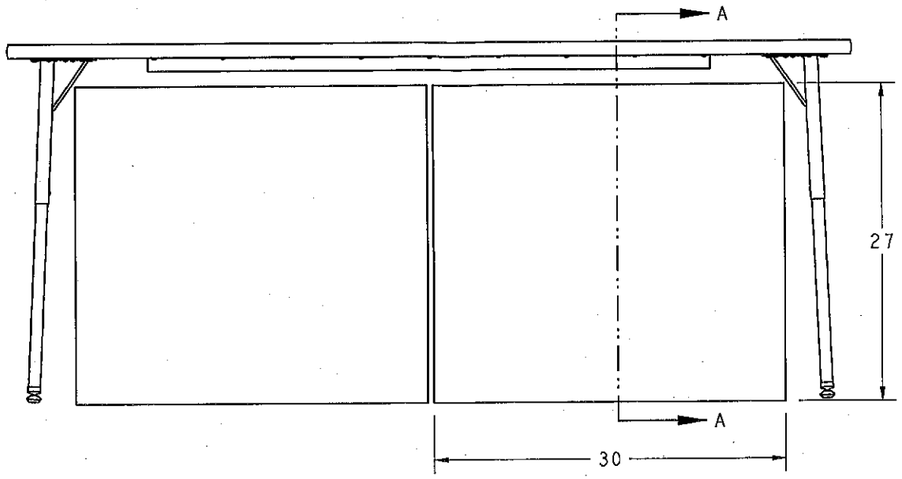

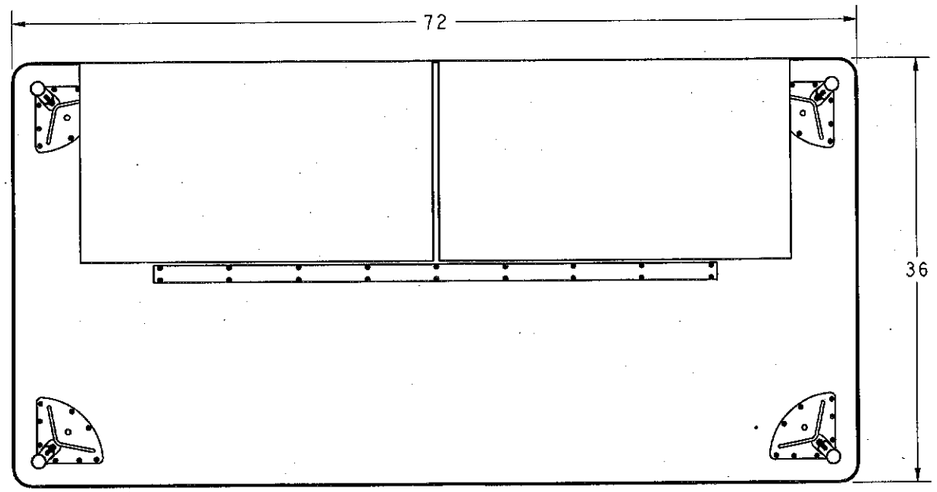

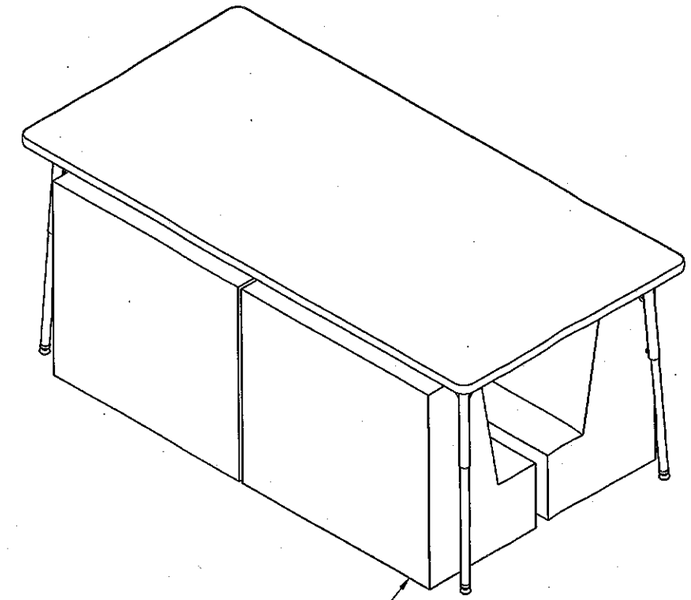

T-4

2 CLEAR SPACE PER 2010 ADA STANDARDS FOR ACCESSIBLE DESIGN

1. PRO-E FILE, SCALE FACTOR: 0.080

NOTES: Unless otherwise specified.

VIRCO MFG. CORPORATION
TORRANCE, CA

VIRCO®

THIS DRAWING EMBODIES A CONFIDENTIAL, PROPRIETARY DESIGN OWNED BY VIRCO MFG. CORPORATION. THIS DRAWING IS SUBMITTED UNDER A CONFIDENTIAL RELATIONSHIP FOR A SPECIFIED PURPOSE AND RECIPIENT AGREES NOT TO DISCLOSE OR USE IT FOR ANY OTHER PURPOSE WITHOUT THE PRIOR WRITTEN CONSENT OF VIRCO MFG. CORPORATION.

DRAWN BY	CHECKED BY	APPROVED BY
R.Rosales		
DATE 09/23/2020	DATE	DATE

TOL. UNLESS OTHERWISE SPEC. FRAC: ±1/8 DEC: ±.05 ANGLE: ±1/2°

NO	DESCRIPTION	PART NO.	DRAWING NO.	QTY.

TITLE:
4000 SERIES
36X72 FINAL ASSEMBLY
SHOWN WITH ADA CLEAR SPACE

MATERIAL: -

DRAWING NO: 483672-ADA

PRO-E NO: 483672-ADA

REV. 1

SHEET 1 OF 1

Project Name: Wendell Cross Elementary School

State Project: #151-0295 EA/RR Phase: 5 Of 5



Item ID: T-5
Item Description: Cooperative Table
Manufacturer: Virco
Model #: 483060
Dimensions: 30”x60”, 22”-30”h
Color: **Top:** Dry Creek Plum Tree
Edge: Golden
Frame: Silver Mist

Total Quantity: 3

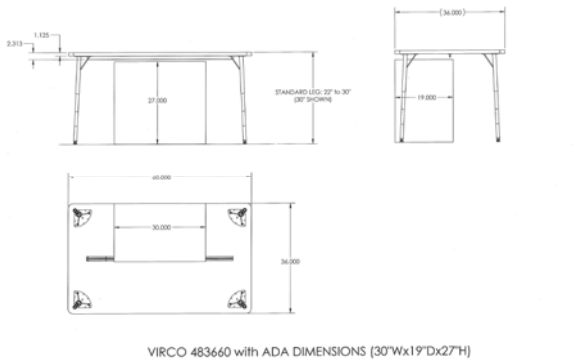

VIRCO 483660 with ADA DIMENSIONS (30"Wx19"Dx27"H)

Detailed Description: ADA Compliant. Sturdy 1⅛" thick table-tops feature a high-pressure laminate finish. Table edges are cushioned with protective T-mold banding. Standard tubular steel legs let you adjust top height from 22" to 30" in one-inch increments.

Room Name	Room Number	Quantity	Room Name	Room Number	Quantity
			Speech	C223	2
			Math Resource	C231	1

Disclaimer: The furniture shown in the photograph above does not represent the specified colors or fabric selections. This photo is for general reference indicating shape, size and general construction. Note: See Furniture Floor Plans for layout.

DATE	REV. BY	DESCRIPTION	E.C.A. NO.	REV.
09/23/2020	R.R.	ADA REFERENCE	-	1

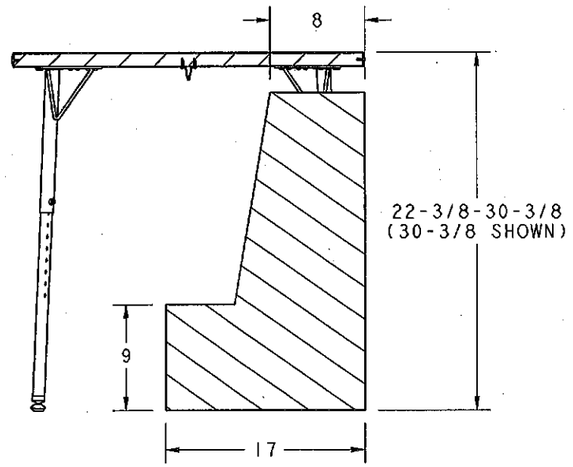

SECTION A-A

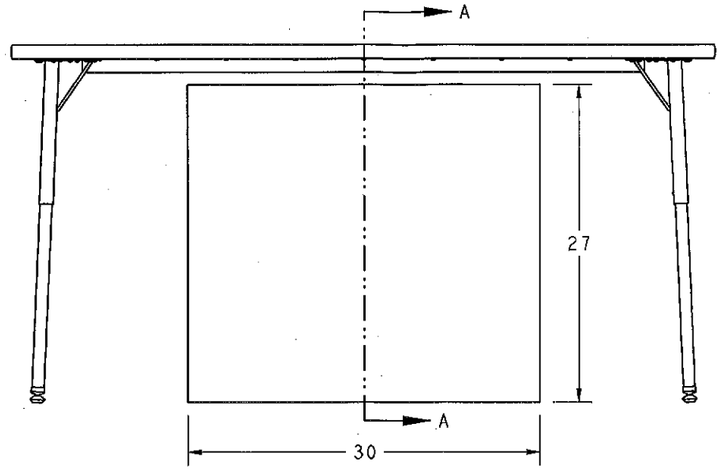

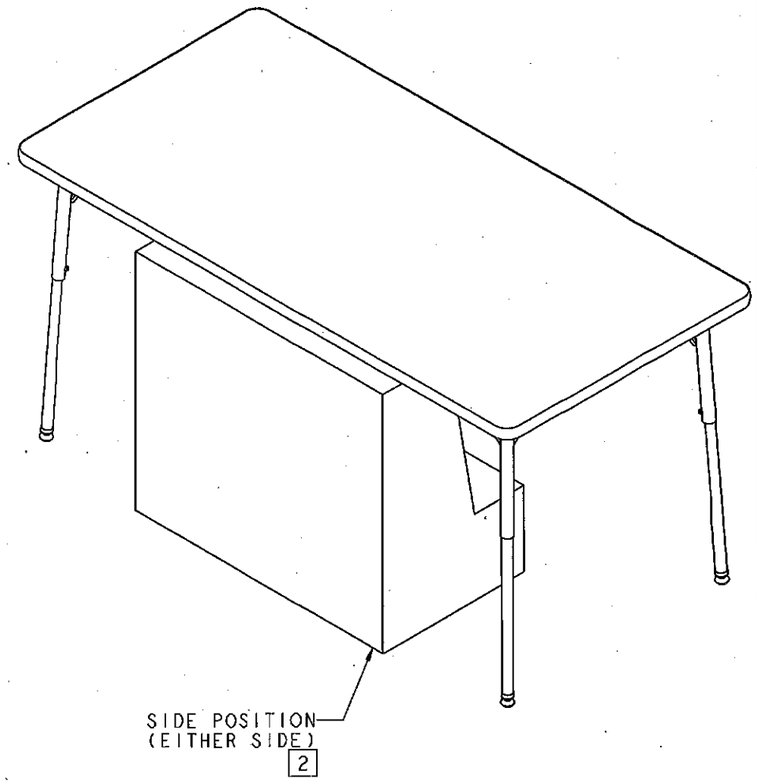

T-5

2 CLEAR SPACE PER 2010 ADA STANDARDS FOR ACCESSIBLE DESIGN

1. PRO-E FILE, SCALE FACTOR: 0.080

NOTES: Unless otherwise specified.

VIRCO MFG. CORPORATION
TORRANCE, CA

THIS DRAWING EMBODIES A CONFIDENTIAL, PROPRIETARY DESIGN OWNED BY VIRCO MFG. CORPORATION. THIS DRAWING IS SUBMITTED UNDER A CONFIDENTIAL RELATIONSHIP FOR A SPECIFIED PURPOSE AND RECIPIENT AGREES NOT TO DISCLOSE OR USE IT FOR ANY OTHER PURPOSE WITHOUT THE PRIOR WRITTEN CONSENT OF VIRCO MFG. CORPORATION.

DRAWN BY	CHECKED BY	APPROVED BY
R.Rosales		
DATE 09/23/2020	DATE	DATE

TOL. UNLESS OTHERWISE SPEC. FRAC:±1/8 DEC:±.05 ANGLE:±1/2°

NO	DESCRIPTION	PART NO.	DRAWING NO.	QTY.

TITLE:
4000 SERIES
30X60 FINAL ASSEMBLY
SHOWN WITH ADA CLEAR SPACE

MATERIAL: -

DRAWING NO: 483060-ADA

PRO-E NO: 483060-ADA

REV. 1

SHEET 1 OF 1

Project Name: Wendell Cross Elementary School

State Project: #151-0295 EA/RR Phase: 5 Of 5



Item ID: T-9
Item Description: Art Table
Manufacturer: Virco / Diversified
Model #: ART4260ADJ
Dimensions: 42”x60”, 27 ¾ - 42”h
Color: Top: Grey Glace w/ Grey Glace Edge

Total Quantity: 8



Detailed Description: ADA Compliant. For schools that require an easily adjustable art table, here’s an ultraconvenient model with a 273/4" - 42" top height range. One person can adjust the table in one-inch increments without using tools. Make different adjustments at each end, and you’ve got an incline table for special applications. The table has no apron, giving you 4" of extra clearance beneath its 11⁄4" plastic laminate top. Powder-coated legs and adjustable glides are standard.

Room Name	Room Number	Quantity	Room Name	Room Number	Quantity
Art Studio	B111	8			

Disclaimer: The furniture shown in the photograph above does not represent the specified colors or fabric selections. This photo is for general reference indicating shape, size and general construction. Note: See Furniture Floor Plans for layout.

IN HOUSE ASSEMBLY TEMPLATE

PROJECT YEAR: DEALER: PROJECT NAME:

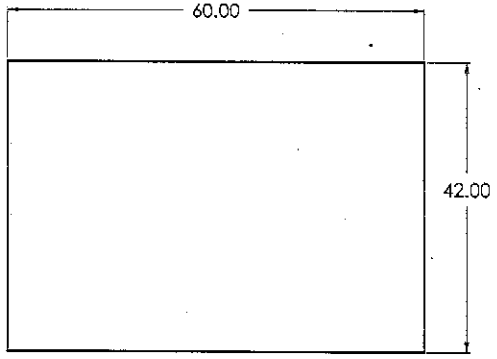

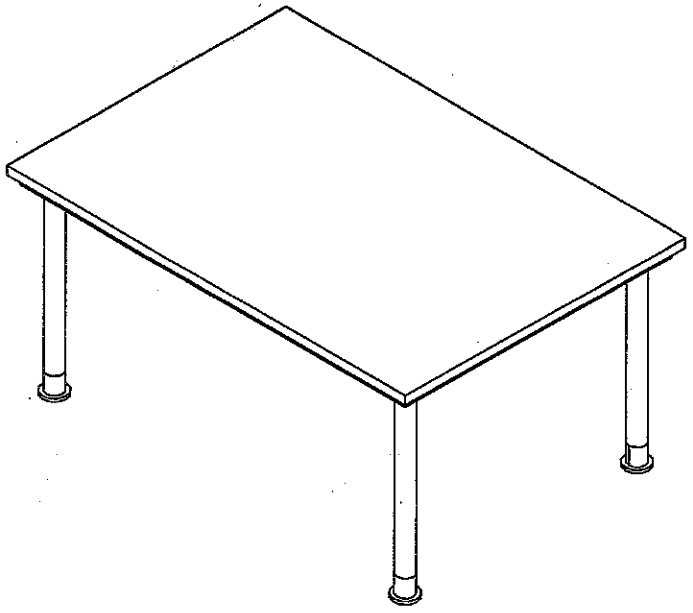

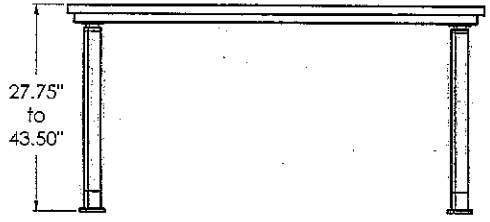

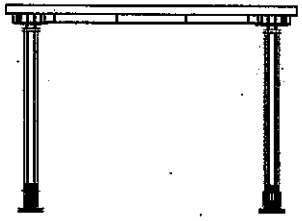

DWN BY:	SRI	DWN DATE:	5/1/12
APR BY:		DATE APR:	
APR BY:		DATE APR:	

UNLESS OTHERWISE SPECIFIED DIMENSION ARE IN INCHES
CABINET SQUARENESS ± .0625
FRACTIONAL VALUES ± 1/32"
- ALL VALUES ± OVERALL -

DIVERSIFIED WOODCRAFTS, INC.
300 South Krueger Street
Suring, WI 54174
diversifiedwoodcrafts.com

TITLE:
SHAIN ADJUSTABLE TABLE ASSEMBLY

REV.	DESCRIPTION	DATE	NAME	ECN NO.
A	-	-	-	-

REVISION LEVEL

THIS DRAWING IS THE SOLE PROPERTY OF DIVERSIFIED WOOD CRAFTS. IT MAY NOT BE ALTERED OR CHANGED WITHOUT PERMISSION

DRAWING NUMBER:	SCALE:	SHEET:	REVISION:
ALT - 6042GG		1	

T-9

Project Name: Wendell Cross Elementary School

State Project: #151-0295 EA/RR Phase: 5 Of 5



Item ID: T-11
Item Description: Activity Table
Manufacturer: Virco
Model #: 48SWV54
Dimensions: 54” x 54” x 17”-30”h
Color: **Top:** Dry Creek Plum Tree
Edge: Golden
Frame: Silver Mist

Total Quantity: 6

Detailed Description: ADA Compliant. Sturdy 1⅛" thick table-tops feature a high-pressure laminate finish. Table edges are cushioned with protective T-mold banding. LO height tubular steel legs let you adjust top height from 17”-25" in one-inch increments.

Room Name	Room Number	Quantity	Room Name	Room Number	Quantity
Kindergarten	D219	2	Kindergarten	D223	2
Kindergarten	D221	2			

Disclaimer: The furniture shown in the photograph above does not represent the specified colors or fabric selections. This photo is for general reference indicating shape, size and general construction. Note: See Furniture Floor Plans for layout.

DATE	REV. BY	DESCRIPTION	E.C.A. NO.	REV.
08/05/2020	R.R.	NEW	-	1

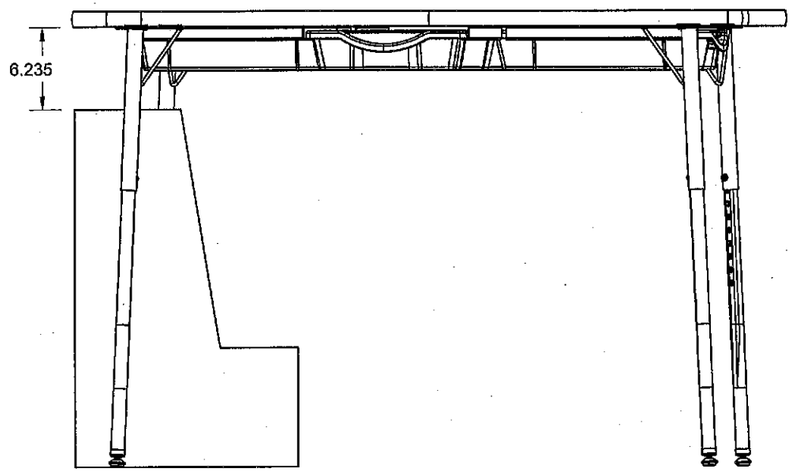

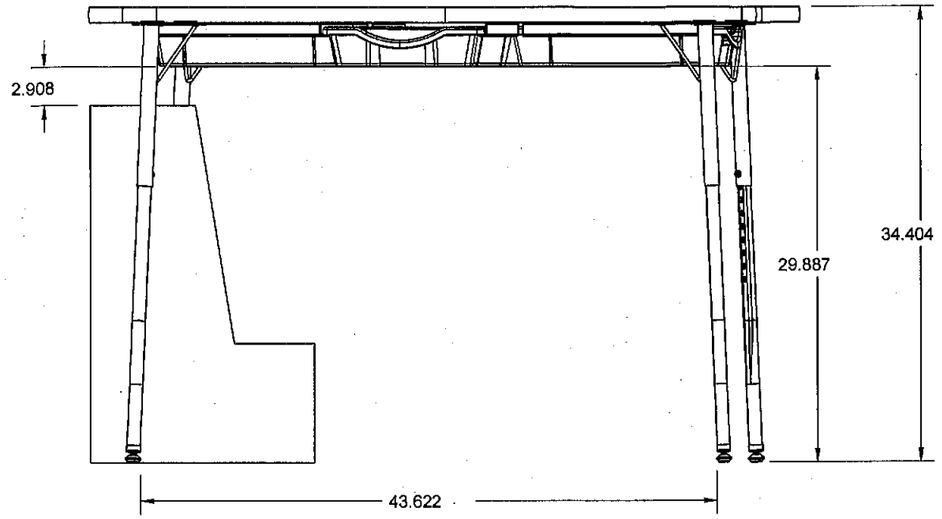

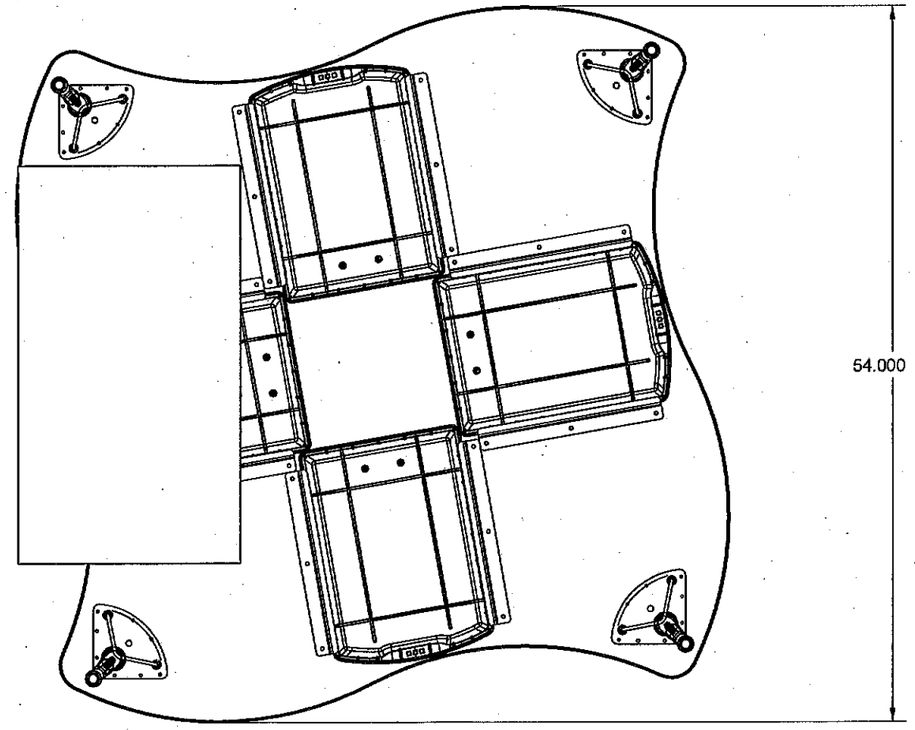

T-11

1. PRO-E FILE, SCALE FACTOR: 0.090
NOTES: Unless otherwise specified.

VIRCO®

VIRCO MFG. CORPORATION
TORRANCE, CA

THIS DRAWING EMBODIES A CONFIDENTIAL, PROPRIETARY DESIGN OWNED BY VIRCO MFG. CORPORATION. THIS DRAWING IS SUBMITTED UNDER A CONFIDENTIAL RELATIONSHIP FOR A SPECIFIED PURPOSE AND RECIPIENT AGREES NOT TO DISCLOSE OR USE IT FOR ANY OTHER PURPOSE WITHOUT THE PRIOR WRITTEN CONSENT OF VIRCO MFG. CORPORATION.

DRAWN BY	CHECKED BY	APPROVED BY
R.Rosales		
DATE 08/05/2020	DATE	DATE

TOL. UNLESS OTHERWISE SPEC. FRAC:±1/8 DEC:±.05 ANGLE:±1/2°

NO	DESCRIPTION	PART NO.	DRAWING NO.	QTY.

TITLE: 48SWV54

DRAWING NO: 48SWV54

PRO-E NO: 48SWV54

REV. 1

MATERIAL: -

SHEET 1 OF 1

Project Name: Wendell Cross Elementary School

State Project: #151-0295 EA/RR Phase: 5 Of 5



Item ID: T-12
Item Description: Pre-K table w/ two chairs set
Manufacturer: Virco
Model #: ECCH12 / ECT2424LO18
Dimensions: 12” seat-height 18”H x 24”W x 24”D

Color: Natural Birch

Total Quantity: 3 Sets

Detailed Description: One Table two chairs. Table with 18" legs these tables have 3/4" thick hardwood tops and 13/4" square hardwood legs. Wooden seating selections include 12" 4-leg chairs.

Room Name	Room Number	Quantity	Room Name	Room Number	Quantity
Pre-K	D211	1 set	Pre-K	D213	1 set
Pre-K	D215	1 set			

Disclaimer: The furniture shown in the photograph above does not represent the specified colors or fabric selections. This photo is for general reference indicating shape, size and general construction. Note: See Furniture Floor Plans for layout.

Project Name: Wendell Cross Elementary School

State Project: #151-0295 EA/RR Phase: 5 Of 5



Item ID: T-15
Item Description: Library Table
Manufacturer: Virco
Model #: 503672
Dimensions: 36”x72” 24”-34”H
Color: **Top:** Fusion Maple
Edge: Maple
Frame: Silver Mist

Total Quantity: 8

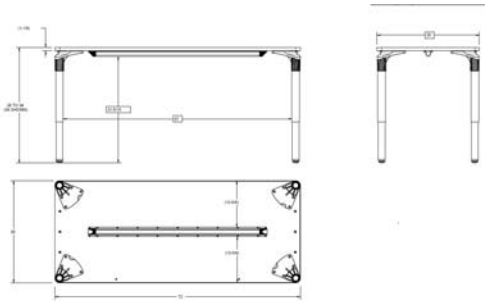

Detailed Description: ADA Compliant. Plateau Series tables were designed to create a collaborative environment in schools and in the workplace. Its “floating” tabletop design features rectangular and peninsula shaped models with standard fixed heights of 29", adjustable heights of 26"-34" or stand-up heights of 39".

Room Name	Room Number	Quantity	Room Name	Room Number	Quantity
Media Center	C111	8			

Disclaimer: The furniture shown in the photograph above does not represent the specified colors or fabric selections. This photo is for general reference indicating shape, size and general construction. Note: See Furniture Floor Plans for layout.

DATE	REV. BY	DESCRIPTION	E.C.A. NO.	REV.
09/23/2020	R.R.	ADA REFERENCE	-	1

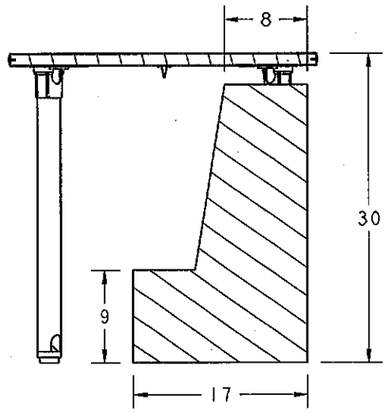

SECTION A-A

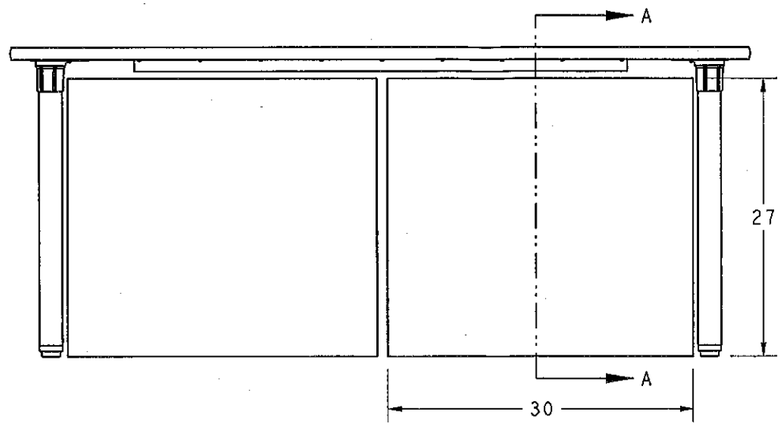

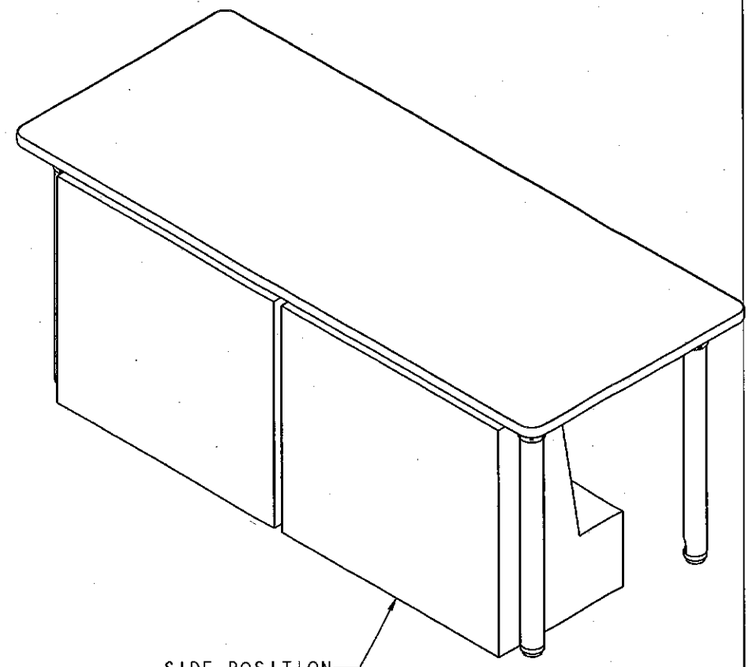

T-15

2 CLEAR SPACE PER 2010 ADA STANDARDS FOR ACCESSIBLE DESIGN

1. PRO-E FILE, SCALE FACTOR: 0.070

NOTES: Unless otherwise specified.

VIRCO MFG. CORPORATION
TORRANCE, CA

VIRCO®

THIS DRAWING EMBODIES A CONFIDENTIAL, PROPRIETARY DESIGN OWNED BY VIRCO MFG. CORPORATION. THIS DRAWING IS SUBMITTED UNDER A CONFIDENTIAL RELATIONSHIP FOR A SPECIFIED PURPOSE AND RECIPIENT AGREES NOT TO DISCLOSE OR USE IT FOR ANY OTHER PURPOSE WITHOUT THE PRIOR WRITTEN CONSENT OF VIRCO MFG. CORPORATION.

DRAWN BY	CHECKED BY	APPROVED BY
R.Rosales		
DATE 09/23/2020	DATE	DATE

TOL. UNLESS OTHERWISE SPEC. FRAC:±1/8 DEC:±.05 ANGLE:±1/2°

NO	DESCRIPTION	PART NO.	DRAWING NO.	QTY.

TITLE:
5000 SERIES
30X72 FINAL ASSEMBLY
SHOWN WITH ADA CLEAR SPACE

MATERIAL: -

DRAWING NO: 503072-ADA

PRO-E NO: 503072-ADA

REV. 1

SHEET 1 OF 1

Project Name: Wendell Cross Elementary School

State Project: #151-0295 EA/RR Phase: 5 Of 5



Item ID: T-16
Item Description: Computer Table
Manufacturer: Virco
Model #: FTT2436 / FTTCPU
Dimensions: 24”x36”, 24”-34”h
Color: **Top:** Looks LikaTre
Edge: Adobe BRN42
Frame: Silver Mist

Total Quantity: 51



Detailed Description: In response to educator requests for furniture with easily accessible wire management, new Flip-Top Technology tables feature a 6" deep locking flip-top compartment that secures cables, surge protectors and wires beneath the work surface. Flip-Top Technology tables let educators and technicians resolve connectivity issues without having to move tables or crawl beneath work surfaces. A generous port at each end of the flip-top compartment allows tables to be networked with power and data lines. With rectangular high-pressure laminate top sizes that range from 30" wide to 84" wide, Flip-Top Technology tables can accommodate one-, two- and three-student applications: there’s also a pair of single-student corner units. Models are available with two top depth configurations: 24" (18" work surface plus 6" flip-top) and 30" (24" work surface plus 6" flip-top). Top height adjusts from 24" to 34" for elementary, intermediate and high school settings. With handy Virco accessories like a surge protector, keyboard/mouse tray, CPU holder and backpack hanger, Flip-Top Technology tables can be readily outfitted to meet the needs of your school or district.

Room Name	Room Number	Quantity	Room Name	Room Number	Quantity
Computer	A211	25	Computer	C118	26

Disclaimer: The furniture shown in the photograph above does not represent the specified colors or fabric selections. This photo is for general reference indicating shape, size and general construction. Note: See Furniture Floor Plans for layout.

Project Name: Wendell Cross Elementary School

State Project: #151-0295 EA/RR Phase: 5 Of 5



Item ID: T-17
Item Description: Trap Activity Table
Manufacturer: Virco
Model #: 48TRAP60
Dimensions: 30”x30”x30”x60”, 22”-30”h
Color: **Top:** Dry Creek Plum Tree
Edge: Golden
Frame: Silver mist

Total Quantity: 12

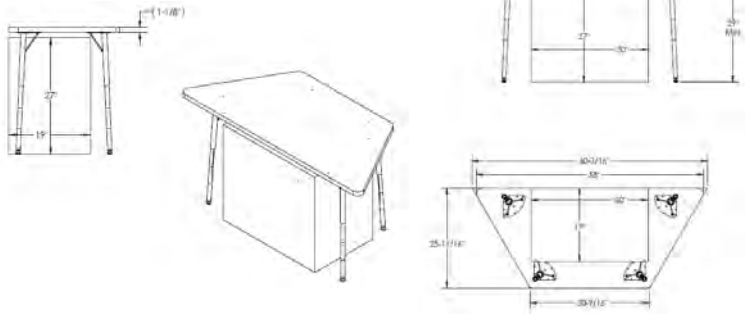

Detailed Description: ADA Compliant. Sturdy 1⅛" thick table-tops feature a high-pressure laminate finish. Table edges are cushioned with protective T-mold banding. Standard tubular steel legs let you adjust top height from 22" to 30" in one-inch increments.

Room Name	Room Number	Quantity	Room Name	Room Number	Quantity
Kindergarten	D219	4	Kindergarten	D221	4
Kindergarten	D219	4			

Disclaimer: The furniture shown in the photograph above does not represent the specified colors or fabric selections. This photo is for general reference indicating shape, size and general construction. Note: See Furniture Floor Plans for layout.

DATE	REV. BY	DESCRIPTION	E.C.A. NO.	REV.
–	–	–	–	–

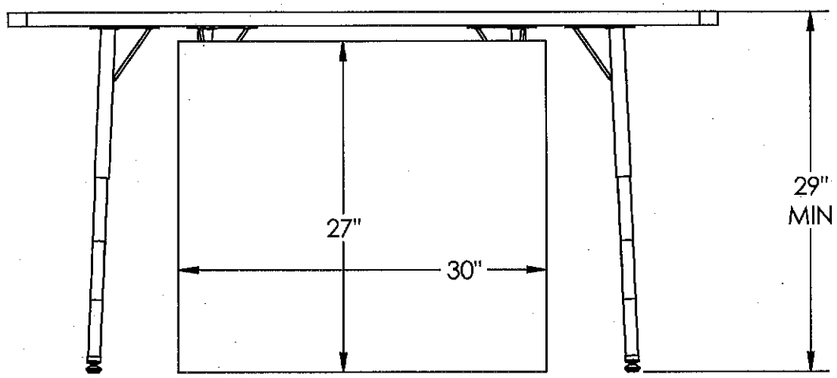

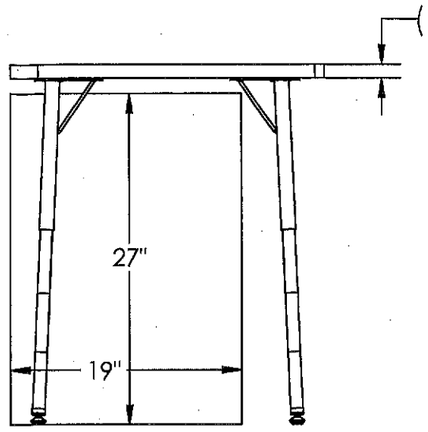

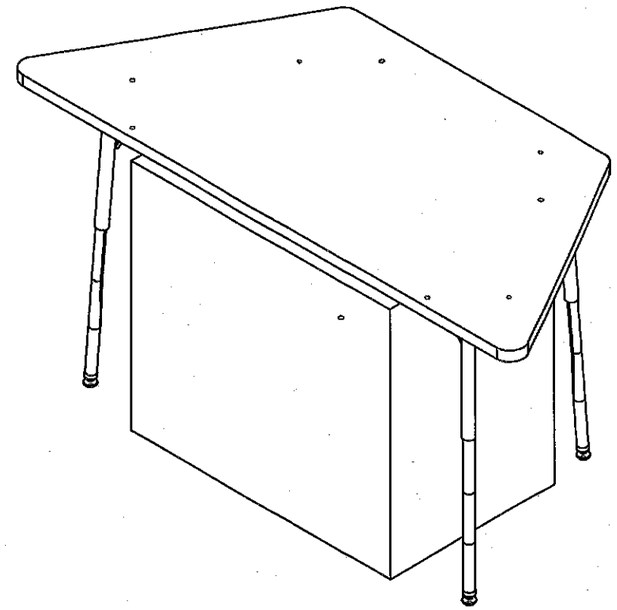

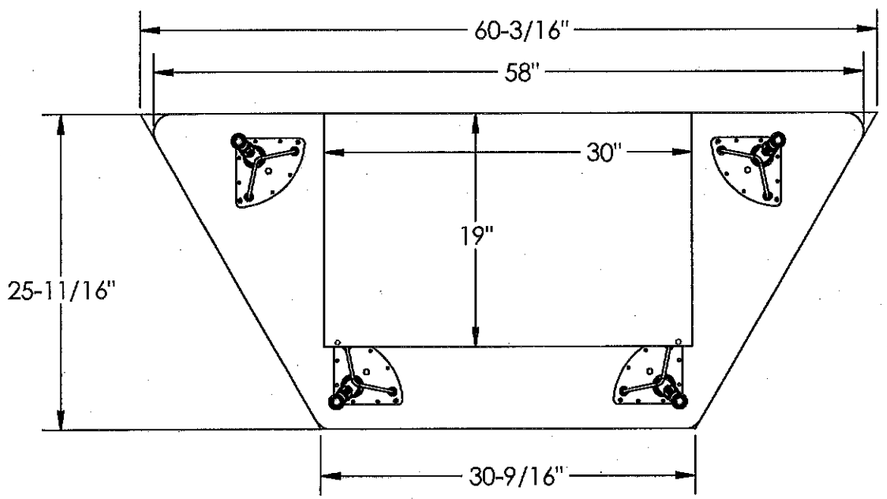

T-17

2. ADA MIN CLEARANCE: 27"H x 30"W x 19"D

1. SOLIDWORKS FILE, SCALE FACTOR:
NOTES: Unless otherwise specified.

VIRCO MFG. CORPORATION
TORRANCE, CA

THIS DRAWING EMBODIES A CONFIDENTIAL, PROPRIETARY DESIGN OWNED BY VIRCO MFG. CORPORATION. THIS DRAWING IS SUBMITTED UNDER A CONFIDENTIAL RELATIONSHIP FOR A SPECIFIED PURPOSE AND RECIPIENT AGREES NOT TO DISCLOSE OR USE IT FOR ANY OTHER PURPOSE WITHOUT THE PRIOR WRITTEN CONSENT OF VIRCO MFG. CORPORATION.

DRAWN	CHECKED	APPROVED
S.FLETCHER	–	–
DATE 10/05/12	DATE –	DATE –

TOL UNLESS OTHERWISE SPEC. FRAC: ± 1/8 DEC: ± .030 ANGLE: ± 1°

NO	DESCRIPTION	PART NO.	DRAWING NO.	QTY.

TITLE:
48TRAP60
WITH ADA REFERENCE DIMENSIONS

DRAWING NO: 48TRAP60_ADA

SOLIDWORKS FILE REF: –

REV. 1

MATERIAL:

SHEET 1 OF 1

Project Name: Wendell Cross Elementary School

State Project: #151-0295 EA/RR Phase: 5 Of 5



Item ID: T-18

Item Description: Dock Training Table
Manufacturer: Kimball
Model #: 75K3060RTL / 75K266028CFFTM
Dimensions: 30”x60”/29”h
Color: Tuscan Walnut / Silver Pearl

Total Quantity: 8

Detailed Description: Dock tables can be combined in flexible arrangements for any use. Create dynamic learning environments, training rooms, private offices, collaborative spaces, and cafes, then expand or rearrange as your demands change.

- Shared table legs minimize cost and maximize leg room when used for more permanent table applications
- Nesting legs with casters move easily to quickly set up room configurations to suit any meeting requirements

Room Name	Room Number	Quantity	Room Name	Room Number	Quantity
Conference	C219	8			

Disclaimer: The furniture shown in the photograph above does not represent the specified colors or fabric selections. This photo is for general reference indicating shape, size and general construction. Note: See Furniture Floor Plans for layout.

Project Name: Wendell Cross Elementary School

State Project: #151-0295 EA/RR Phase: 5 of 5



Item ID: T-19

Item Description: Conference Table with Fixed legs

Manufacturer: Kimball

Model #: 53K3672WBSL/ 53K3628SLOSP/ 53K72SRUP

Dimensions: 36”D x 72”W X 29”H

Color: Top: Tuscan Walnut

Legs: Silver Pearl

Total Quantity: 1

Detailed Description:

Table with PLAM top

Room Name	Room Number	Quantity	Room Name	Room Number	Quantity
Principals Off.	B236	1			

Disclaimer: The furniture shown in the photograph above does not represent the specified colors or fabric selections. This photo is for general reference indicating shape, size and general construction. Note: See Furniture Floor Plans for layout.

T-21

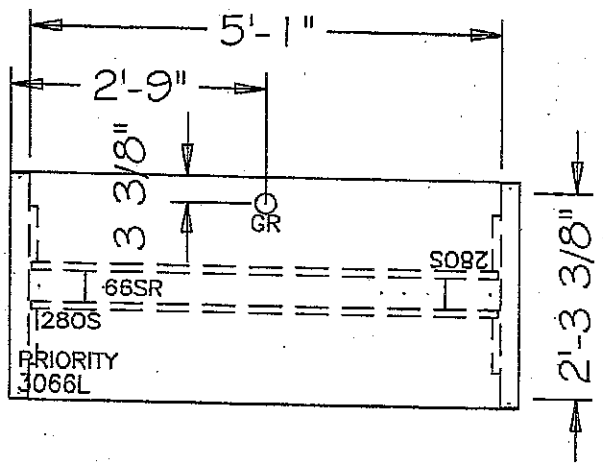

3D VIEW

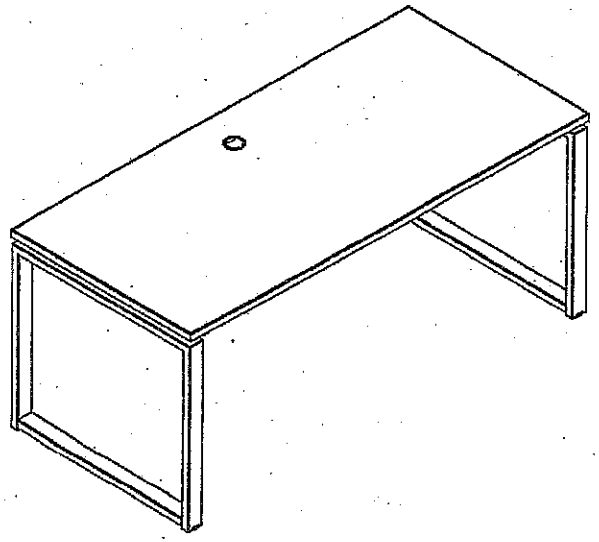

3D VIEW

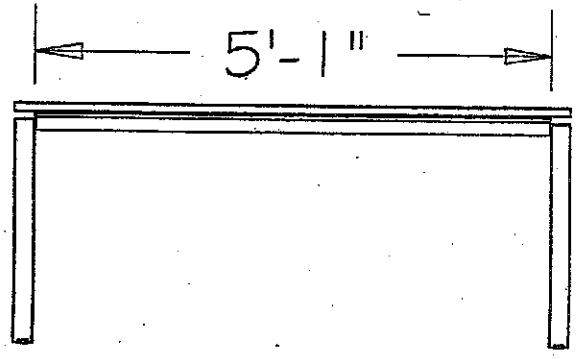

3D VIEW

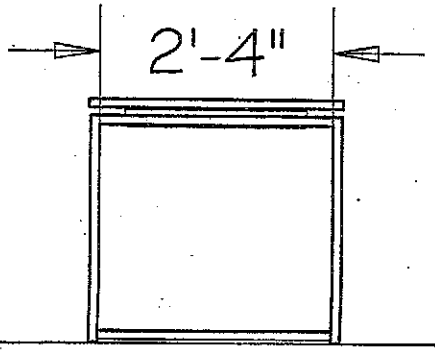

DATE	BY	REVISION

THIS DRAWING WAS PREPARED BASED ON INFORMATION THAT WAS PROVIDED BY THE DEALER AND/OR END USER. IT IS THE RESPONSIBILITY OF THAT DEALER AND/OR END USER TO VERIFY THE CONTENT AND ACCURACY OF THIS DRAWING AND ITS SPECIFICATION. THIS DRAWING IS THE PROPERTY OF KIMBALL OFFICE, CREATED FOR THE SOLE USE OF KIMBALL OFFICE OR ITS AUTHORIZED DEALER AND SHALL NOT BE REPRODUCED OR USED TO SOLICIT BIDS OR QUOTES FROM NON-KIMBALL OFFICE ENTITIES OR DEALERS.

PRODUCT LINE(S):
-
-

SCALE: 1/2" = 1'-0"

DATE: 04/05/19

SPECIFIED BY: JT

CHECKED BY: -

OPPORTUNITY #: 700101901

PAGE: 1 of 1

Kimball®

T-1

T-22

3D VIEW

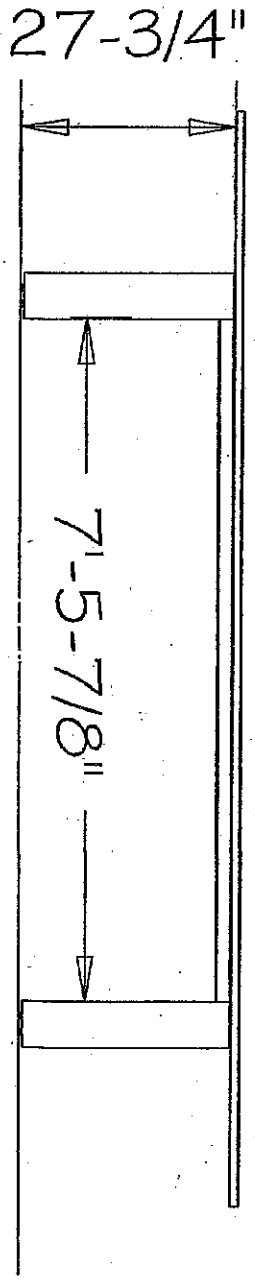

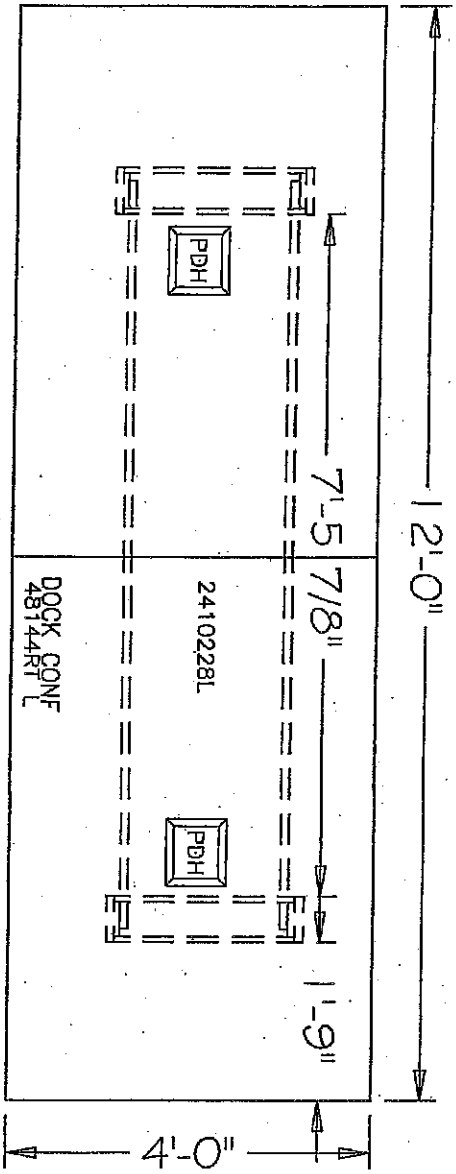

Kimball®	PRODUCT LINE(S): -	THIS DRAWING WAS PREPARED BASED ON INFORMATION THAT WAS PROVIDED BY THE DEALER AND/OR END USER. IT IS THE RESPONSIBILITY OF THAT DEALER AND/OR END USER TO VERIFY THE CONTENT AND ACCURACY OF THIS DRAWING AND ITS SPECIFICATION. THIS DRAWING IS THE PROPERTY OF KIMBALL OFFICE, CREATED FOR THE SOLE USE OF KIMBALL OFFICE OR ITS AUTHORIZED DEALER AND SHALL NOT BE REPRODUCED OR USED TO SOLICIT BIDS OR QUOTES FROM NON-KIMBALL OFFICE ENTITIES OR DEALERS.	DATE BY
A L	SCALE: 1/2"=1'-0"		
	DATE: 04/05/19		
	SPECIFIED BY: JT		REVISION
02-1	CHECKED BY: -		
	OPPORTUNITY # 70010901 / PAGE: 1 of 1		

Project Name: Wendell Cross Elementary School

State Project: #151-0295 EA/RR Phase: 5 of 5



Item ID: T-20

Item Description: Conference Table with Fixed legs

Manufacturer: Kimball

Model #: 74K48144RTL/ 74K2410228BL/ KCU0810ELPDCH

Dimensions: 48”D x 144”W X30”H

Color: Top: Tuscan Walnut

Legs: Silver Pearl & Tuscan Walnut

Total Quantity: 1

Detailed Description:

Conference Table with PLAM top, and power in the center of table.

Room Name	Room Number	Quantity	Room Name	Room Number	Quantity
Conference Room	B235	1			

Disclaimer: The furniture shown in the photograph above does not represent the specified colors or fabric selections. This photo is for general reference indicating shape, size and general construction. Note: See Furniture Floor Plans for layout.

Project Name: Wendell Cross Elementary School

State Project: #151-0295 EA/RR Phase: 5 Of 5



Item ID: T-21
Item Description: Cooperative Table
Manufacturer: Virco
Model #: 48COOP72LO
Dimensions: 36”x72”, 17”-25h”h
Color: **Top:** Dry Creek Plum Tree
Edge: Golden
Frame: Silver Mist

Total Quantity: 3

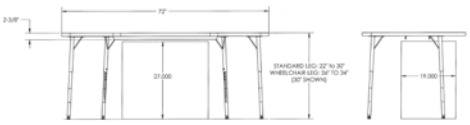

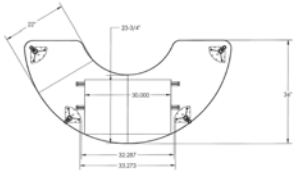

VIRCO 48COOP72 with ADA DIMENSIONS (30”Wx19”Dx27”H)

Detailed Description: ADA Compliant. Sturdy 1⅛" thick table-tops feature a high-pressure laminate finish. Table edges are cushioned with protective T-mold banding. LO height tubular steel legs let you adjust top height from 17”-25" in one-inch increments.

Room Name	Room Number	Quantity	Room Name	Room Number	Quantity
Pre-K	D211	1	Pre-K	D213	1
Pre-K	D215	1			

Disclaimer: The furniture shown in the photograph above does not represent the specified colors or fabric selections. This photo is for general reference indicating shape, size and general construction. Note: See Furniture Floor Plans for layout.

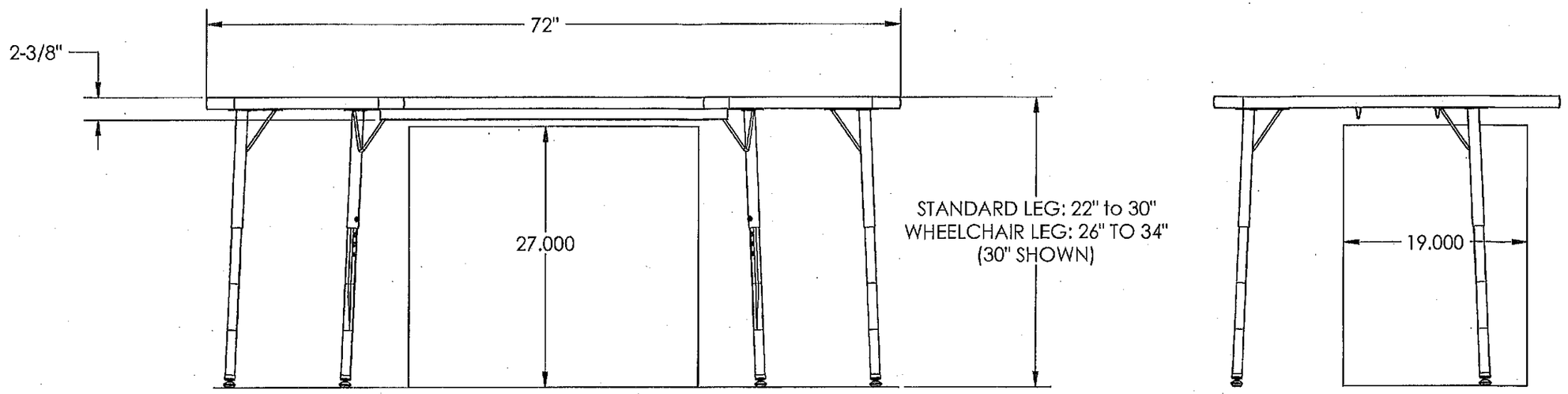

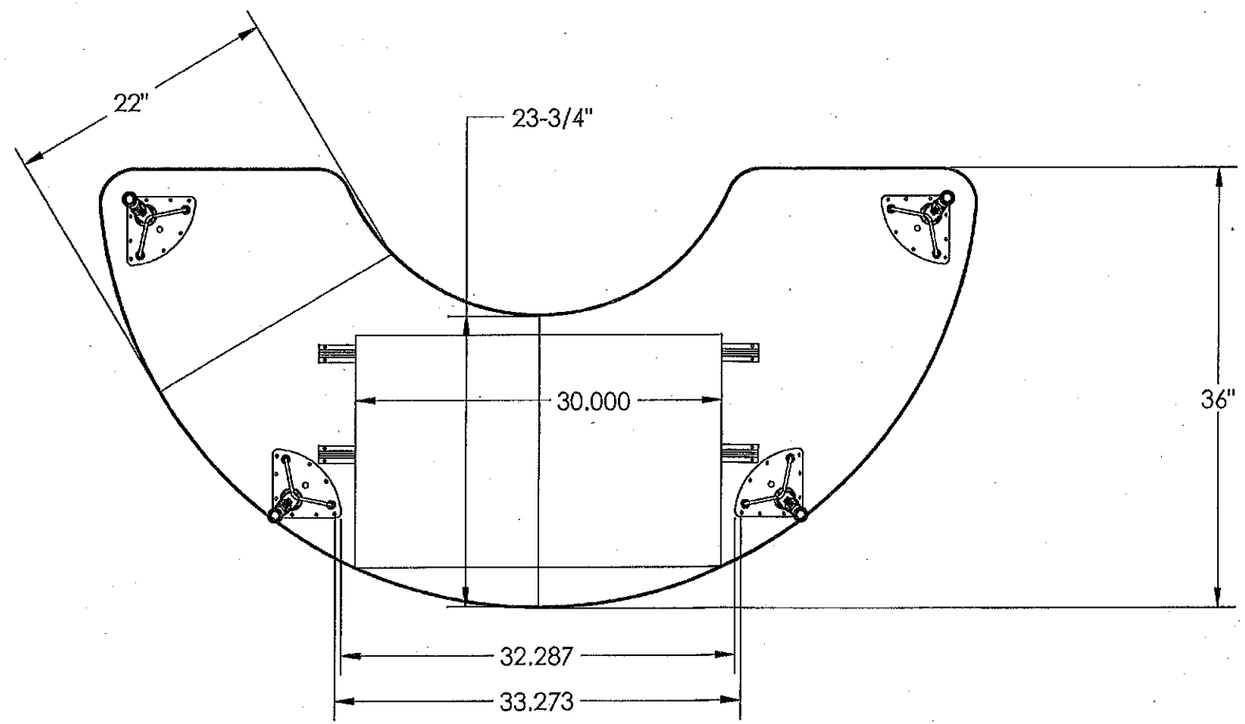

VIRCO 48COOP72 with ADA DIMENSIONS (30"Wx19"Dx27"H)

T-21

Project Name: Wendell Cross Elementary School

State Project: #151-0295 EA/RR Phase: 5 Of 5



Item ID: T-22
Item Description: Slide Activity Table
Manufacturer: Virco
Model #: 48SL3054LO
Dimensions: 30”x54”, 17”-25”h
Color: **Top:** Dry Creek Plum Tree
Edge: Golden
Frame: Silver Mist

Total Quantity: 9

Detailed Description: Sturdy 1⅛" thick table-tops feature a high-pressure laminate finish. Table edges are cushioned with protective T-mold banding. “LO” tubular steel legs let you adjust top height from 17” to 25" in one-inch increments.

Room Name	Room Number	Quantity	Room Name	Room Number	Quantity
Pre-K	D211	3	Pre-K	D213	3
Pre-K	D215	3			

Disclaimer: The furniture shown in the photograph above does not represent the specified colors or fabric selections. This photo is for general reference indicating shape, size and general construction. Note: See Furniture Floor Plans for layout.

DATE	REV. BY	DESCRIPTION	E.C.A. NO.	REV.
09/23/2020	R.R.	ADA REFERENCE	-	1

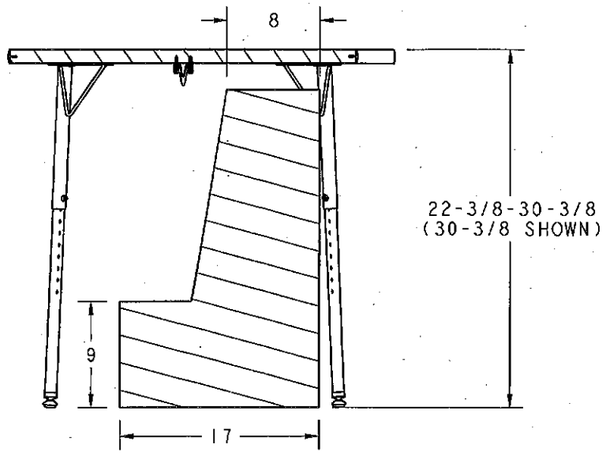

SECTION A-A

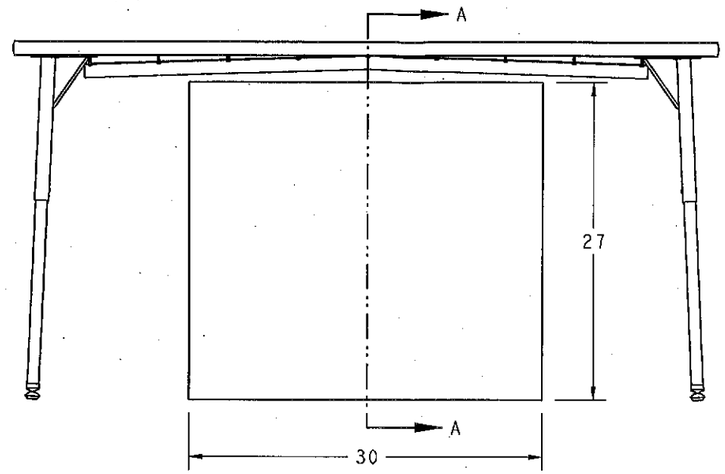

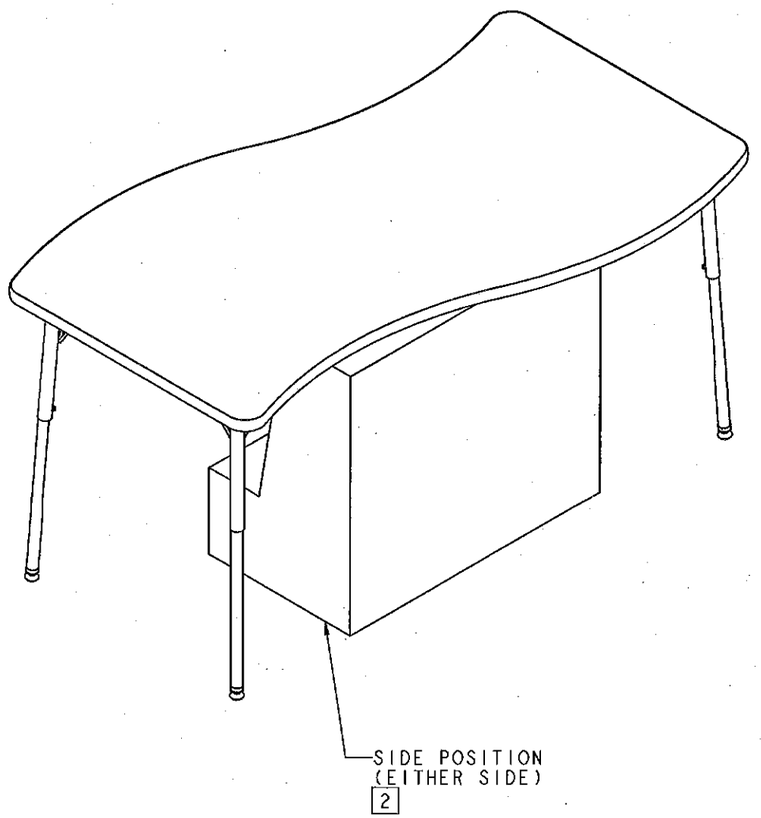

T-22

2 CLEAR SPACE PER 2010 ADA STANDARDS FOR ACCESSIBLE DESIGN

1. PRO-E FILE, SCALE FACTOR: 0.080

NOTES: Unless otherwise specified.

VIRCO MFG. CORPORATION
TORRANCE, CA

THIS DRAWING EMBODIES A CONFIDENTIAL, PROPRIETARY DESIGN OWNED BY VIRCO MFG. CORPORATION. THIS DRAWING IS SUBMITTED UNDER A CONFIDENTIAL RELATIONSHIP FOR A SPECIFIED PURPOSE AND RECIPIENT AGREES NOT TO DISCLOSE OR USE IT FOR ANY OTHER PURPOSE WITHOUT THE PRIOR WRITTEN CONSENT OF VIRCO MFG. CORPORATION.

DRAWN BY	CHECKED BY	APPROVED BY
R.Rosales		
DATE 09/23/2020	DATE	DATE

TOL. UNLESS OTHERWISE SPEC. FRAC:±1/8 DEC:±.05 ANGLE:±1/2°

NO	DESCRIPTION	PART NO.	DRAWING NO.	QTY.

TITLE:
4000 SERIES
30X60 SLIDE FINAL ASSEMBLY
SHOWN WITH ADA CLEAR SPACE

MATERIAL: -

DRAWING NO: 48SL3060

PRO-E NO: 48SL3060

REV. 1

SHEET 1 OF 1

Project Name: Wendell Cross Elementary School

State Project: #151-0295 EA/RR Phase: 5 Of 5



Item ID: T-23
Item Description: Nest Activity Table
Manufacturer: Virco
Model #: 48NEST54
Dimensions: 54”W, 22”-30”h
Color: **Top:** Dry Creek Plum Tree
Edge: Golden
Frame: Silver Mist

Total Quantity: 6

Detailed Description: Sturdy 1⅛" thick table-tops feature a high-pressure laminate finish. Table edges are cushioned with protective T-mold banding. “LO” tubular steel legs let you adjust top height from 1
22” to 30" in one-inch increments.

Room Name	Room Number	Quantity	Room Name	Room Number	Quantity
Pre-K	D215	2	Pre-K	D211	2
Pre-K	D213	2			

Disclaimer: The furniture shown in the photograph above does not represent the specified colors or fabric selections. This photo is for general reference indicating shape, size and general construction. Note: See Furniture Floor Plans for layout.

DATE	REV. BY	DESCRIPTION	E.C.A. NO.	REV.
09/23/2020	R.R.	ADA REFERENCE	-	1

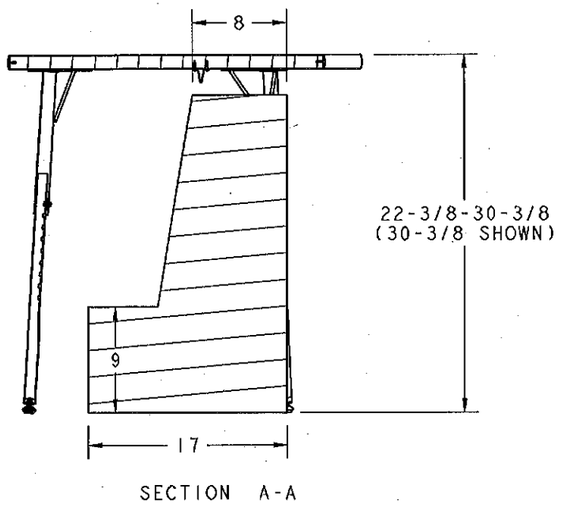

SECTION A-A

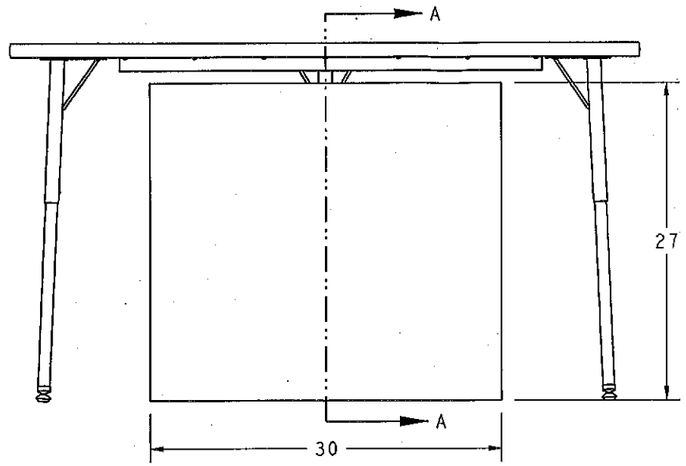

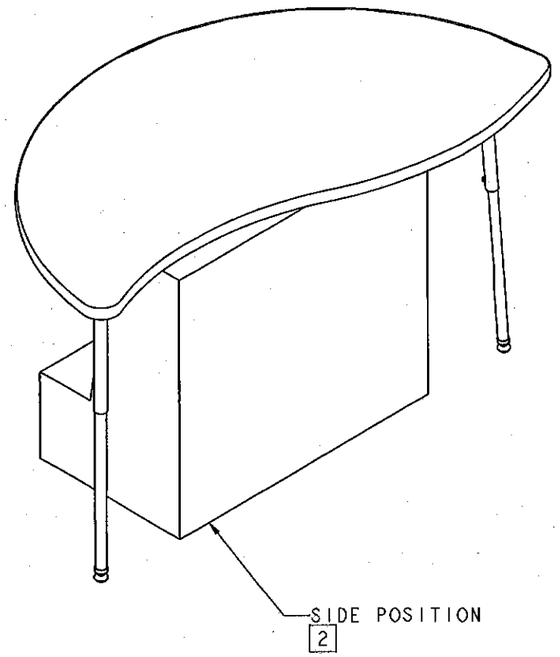

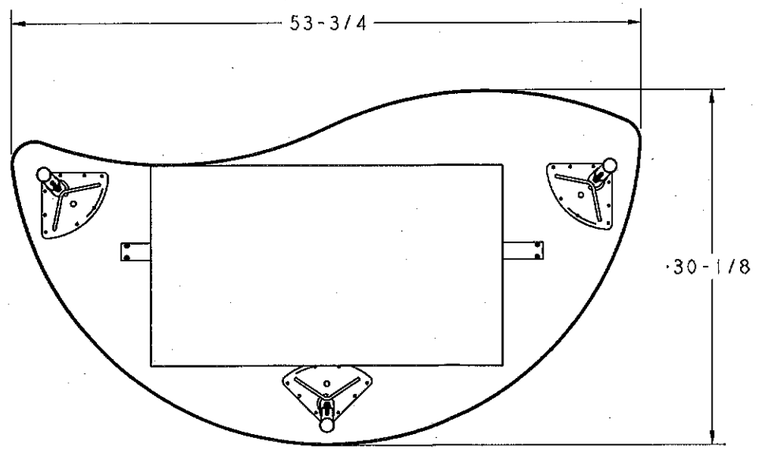

T-23

2 CLEAR SPACE PER 2010 ADA STANDARDS FOR ACCESSIBLE DESIGN

1. PRO-E FILE, SCALE FACTOR: 0.080

NOTES: Unless otherwise specified.

VIRCO MFG. CORPORATION
TORRANCE, CA

THIS DRAWING EMBODIES A CONFIDENTIAL, PROPRIETARY DESIGN OWNED BY VIRCO MFG. CORPORATION. THIS DRAWING IS SUBMITTED UNDER A CONFIDENTIAL RELATIONSHIP FOR A SPECIFIED PURPOSE AND RECIPIENT AGREES NOT TO DISCLOSE OR USE IT FOR ANY OTHER PURPOSE WITHOUT THE PRIOR WRITTEN CONSENT OF VIRCO MFG. CORPORATION.

DRAWN BY	CHECKED BY	APPROVED BY
R.Rosales		
DATE 09/23/2020	DATE	DATE

TOL. UNLESS OTHERWISE SPEC, FRAC:±1/8 DEC:±.05 ANGLE:±1/2°

NO	DESCRIPTION	PART NO.	DRAWING NO.	QTY.

TITLE:
4000 SERIES
54" HALF-ROUND FINAL ASSEMBLY
SHOWN WITH ADA CLEAR SPACE

MATERIAL: -

DRAWING NO: 48NEST54-ADA

PRO-E NO: 48NEST54-ADA

REV. 1

SHEET 1 OF 1

Project Name: Wendell Cross Elementary School

State Project: #151-0295 EA/RR Phase: 5 Of 5



Item ID: T-24
Item Description: Computer Table
Manufacturer: Virco
Model #: FTT2472
Dimensions: 24”x72”, 24”-34”h
Color: Top: Fusion Maple
Edge: Maple
Frame: Silver Mist

Total Quantity: 2

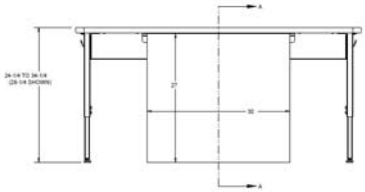



Detailed Description: ADA compliant**.** In response to educator requests for furniture with easily accessible wire management, new Flip-Top Technology tables feature a 6" deep locking flip-top compartment that secures cables, surge protectors and wires beneath the work surface. Flip-Top Technology tables let educators and technicians resolve connectivity issues without having to move tables or crawl beneath work surfaces. A generous port at each end of the flip-top compartment allows tables to be networked with power and data lines. With rectangular high-pressure laminate top sizes that range from 30" wide to 84" wide, Flip-Top Technology tables can accommodate one-, two- and three-student applications: there’s also a pair of single-student corner units. Models are available with two top depth configurations: 24" (18" work surface plus 6" flip-top) and 30" (24" work surface plus 6" flip-top). Top height adjusts from 24" to 34" for elementary, intermediate and high school settings. With handy Virco accessories like a surge protector, keyboard/mouse tray, CPU holder and backpack hanger, Flip-Top Technology tables can be readily outfitted to meet the needs of your school or district.

Room Name	Room Number	Quantity	Room Name	Room Number	Quantity
Media Center	C111	2			

Disclaimer: The furniture shown in the photograph above does not represent the specified colors or fabric selections. This photo is for general reference indicating shape, size and general construction. Note: See Furniture Floor Plans for layout.

DATE	REV. BY	DESCRIPTION	E.C.A. NO.	REV.
02/27/20	S.F.	SHOWN WITH ADA REFERENCE DIMENSIONS		1

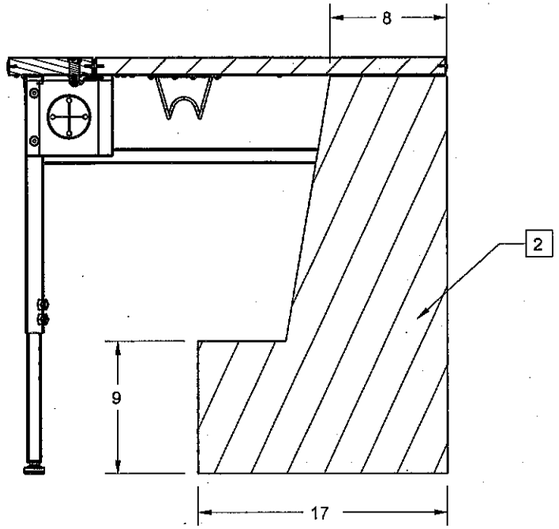

SECTION A-A

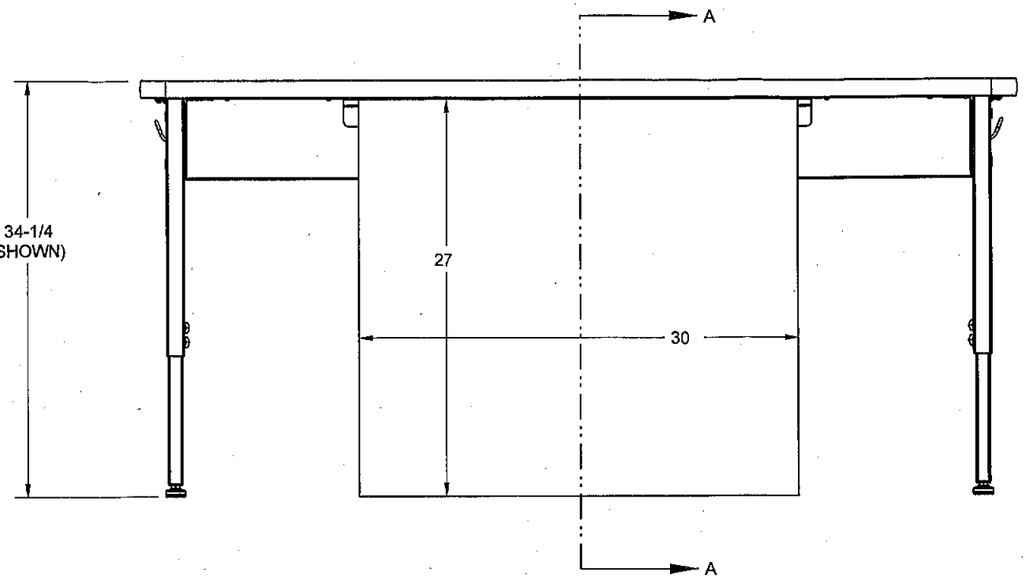

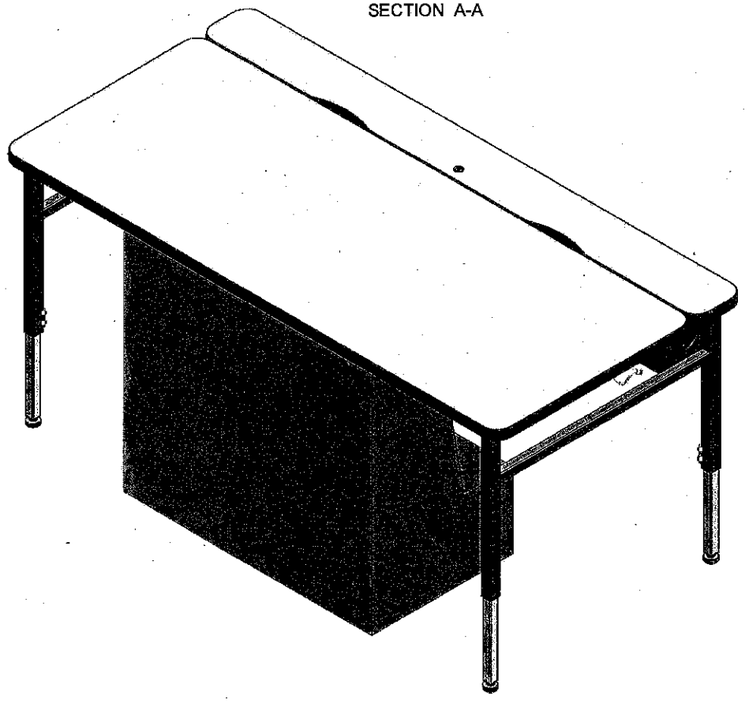

SCALE 0.080

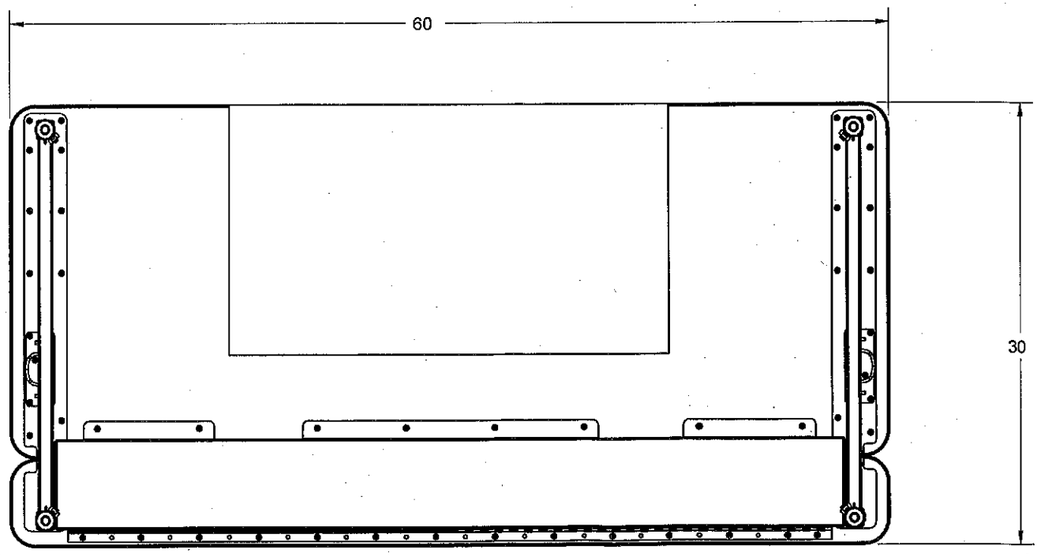

T-24

2 ADA CLEARANCE (BOX) SHOWN PER 2010 ADA STANDARDS FOR ACCESSIBLE DESIGN

1. PRO-E FILE, SCALE FACTOR: 0.100

NOTES: Unless otherwise specified.

VIRCO MFG. CORPORATION

TORRANCE, CA

THIS DRAWING EMBODIES A CONFIDENTIAL, PROPRIETARY DESIGN OWNED BY VIRCO MFG. CORPORATION. THIS DRAWING IS SUBMITTED UNDER A CONFIDENTIAL RELATIONSHIP FOR A SPECIFIED PURPOSE AND RECIPIENT AGREES NOT TO DISCLOSE OR USE IT FOR ANY OTHER PURPOSE WITHOUT THE PRIOR WRITTEN CONSENT OF VIRCO MFG. CORPORATION.

DRAWN BY	CHECKED BY	APPROVED BY
S.FLETCHER		
DATE 02/27/2020	DATE	DATE

TOL. UNLESS OTHERWISE SPEC. FRAC:±1/8 DEC:±.05 ANGLE:±1/2°

NO	DESCRIPTION	PART NO.	DRAWING NO.	QTY.

TITLE: TEXT 30" X 60" FLIP-TOP TABLE WITH ADA REFERENCE

MATERIAL: SEE BILL OF MATERIALS

DRAWING NO: FTT3060-ADA

PRO-E NO: FTT3060BH

REV. 1

SHEET 1 OF 1

Project Name: Wendell Cross Elementary School

State Project: #151-0295 EA/RR Phase: 5 of 5







Item ID: T-25
Item Description: All – In –one Convertible Bench
Manufacturer: AmTab
Model #:ACB8
Dimensions: (Each piece) 29” D x 96” L x 27” H / 15” High seats
Color: Table Top Laminate: Formica, White Twill 9285-58
Table Top Edges: Dyna -Rock, Beige
Metal: Metallic Titanium Paint
Bench Laminate: Formica, Denim Twill
Bench Edge:Dyna-Rock, Navy Blue

Total Quantity: 6

Detailed Description:
The All-In-One Mobile Convertible Bench can transform into a bench with a backrest, a singled sided table and bench or be added with a partner to make a picnic style double sided table and bench.

Room Name	Room Number	Quantity	Room Name	Room Number	Quantity
Platform	B231	6			

Disclaimer: The furniture shown in the photograph above does not represent the specified colors or fabric selections. This photo is for general reference indicating shape, size and general construction. Note: See Furniture Floor Plans for layout.

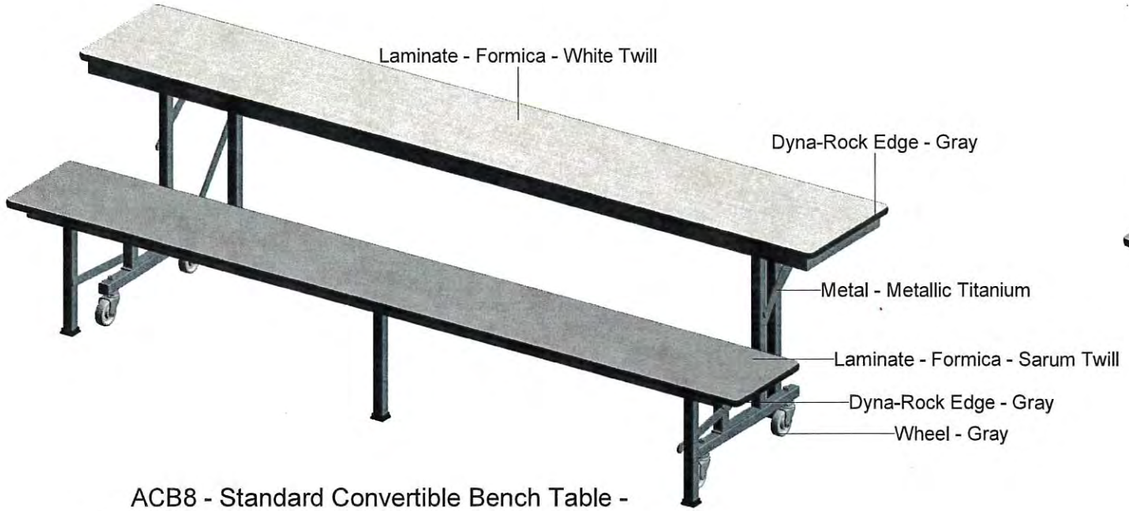

ACB8 - Standard Convertible Bench Table - 27"H

1

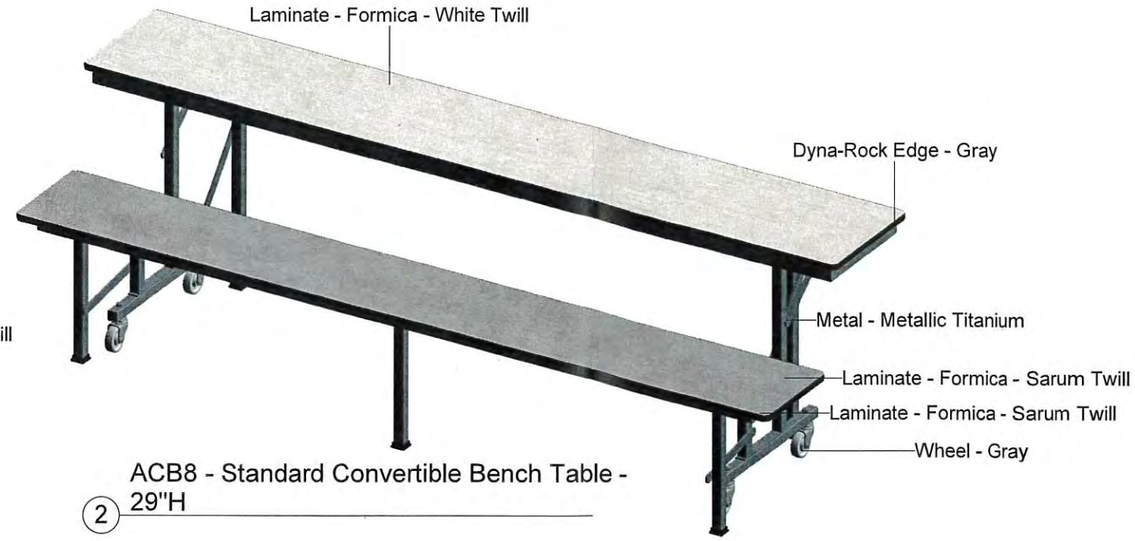

ACB8 - Standard Convertible Bench Table - 29"H

2



Laminate: Formica - White Twill

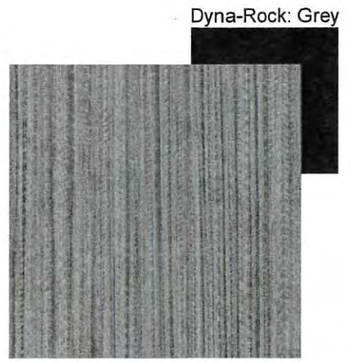

Laminate: Formica - Sarum Twill



Metal: Metallic Titanium

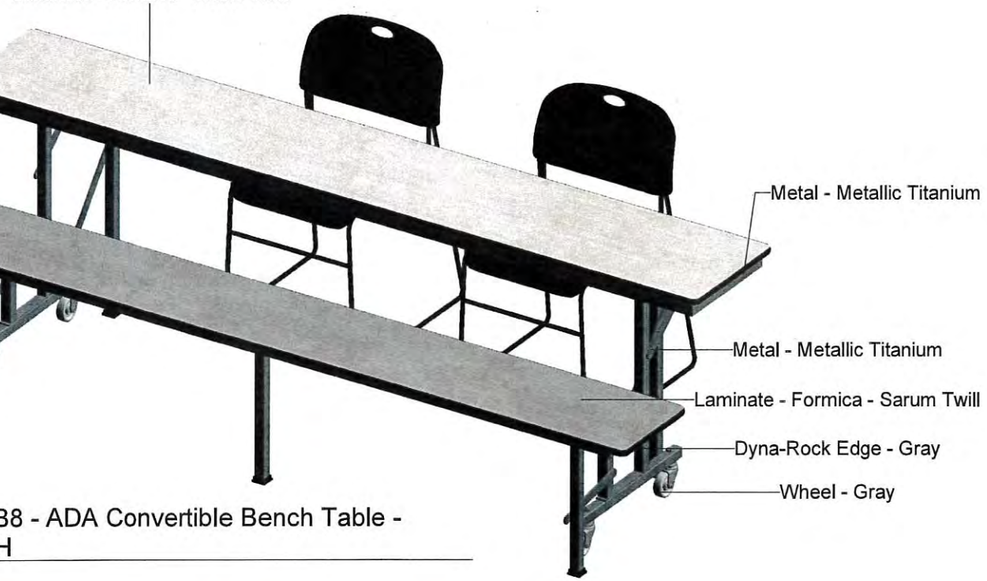

ACB8 - ADA Convertible Bench Table - 30"H

3

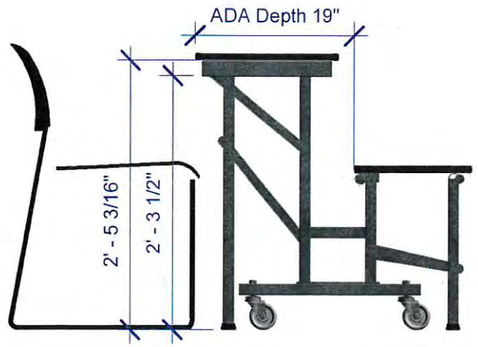

4 Elevation Left
3/4" = 1'-0"

AmTab®
Design • Manufacture • Furnish

Wendell Cross Elementary School	DATE: 05-08-2020	DRAWN BY: EMW	SCALE: 3/4" = 1'-0"	Product Details	PAGE NUMBER: 1

Project Name: Wendell Cross Elementary School

State Project: #151-0295 EA/RR Phase: 5 of 5





Item ID: T-26
Item Description: All – In –one Convertible Bench
Manufacturer: AmTab
Model #:ACB8
Dimensions: (Each piece) 29" D x 96" L x 29" H / 17" High seats
Color: Table Top Laminate: Formica, White Twill 9285-58
Table Top Edges: Dyna -Rock, Beige
Metal: Metallic Titanium Paint
Bench Laminate: Formica, Denim Twill
Bench Edge:Dyna-Rock, Navy Blue

Total Quantity: 36

Detailed Description:
The All-In-One Mobile Convertible Bench can transform into a bench with a backrest, a singled sided table and bench or be added with a partner to make a picnic style double sided table and bench.

Room Name	Room Number	Quantity	Room Name	Room Number	Quantity
Cafeteria	B229	36			

Disclaimer: The furniture shown in the photograph above does not represent the specified colors or fabric selections. This photo is for general reference indicating shape, size and general construction. Note: See Furniture Floor Plans for layout.

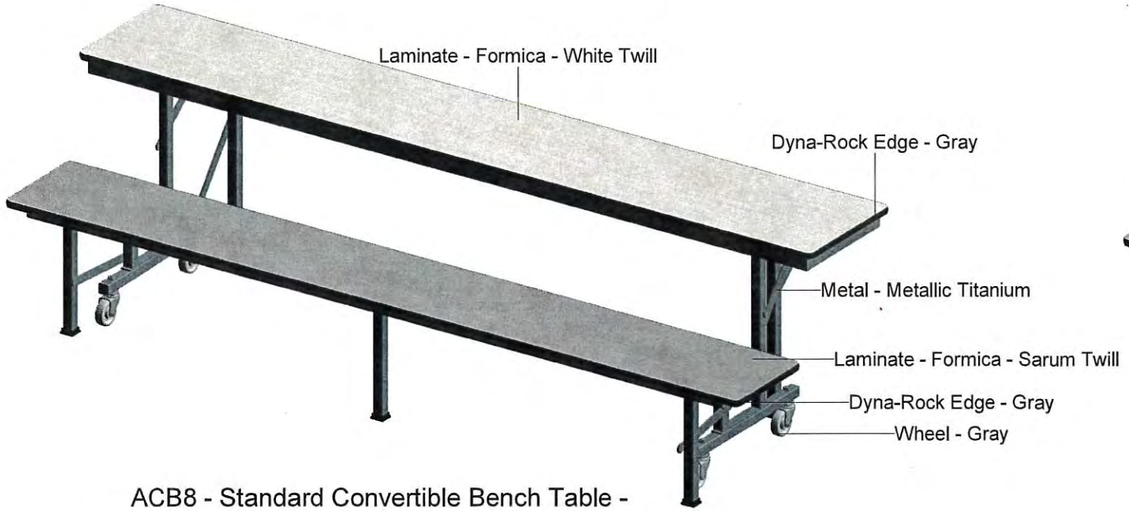

ACB8 - Standard Convertible Bench Table - 27"H

1

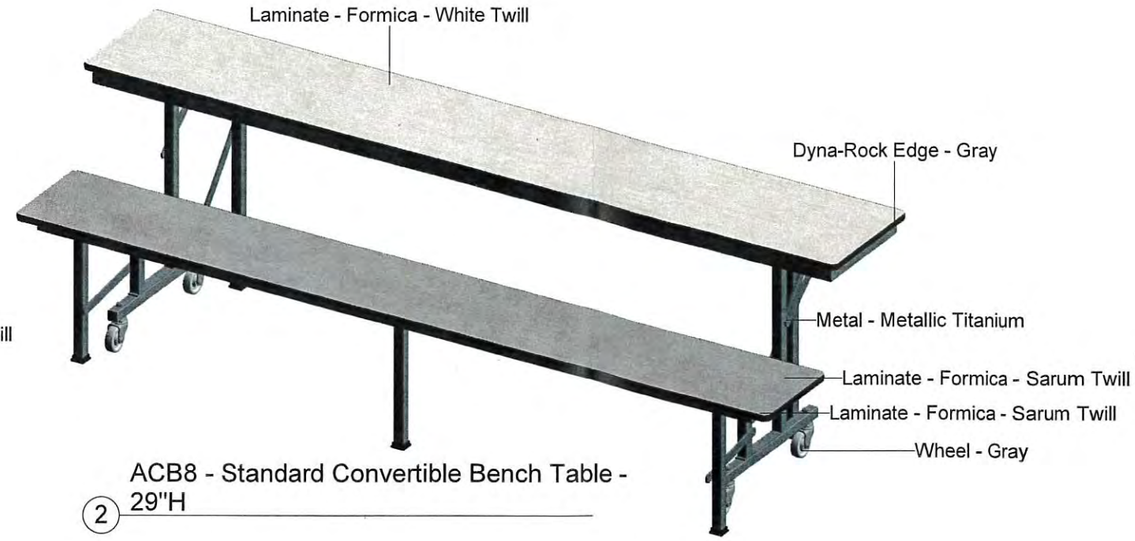

ACB8 - Standard Convertible Bench Table - 29"H

2



Laminate: Formica - White Twill

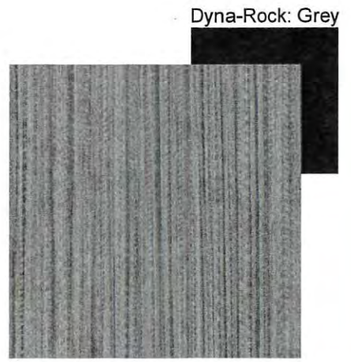

Laminate: Formica - Sarum Twill



Metal: Metallic Titanium

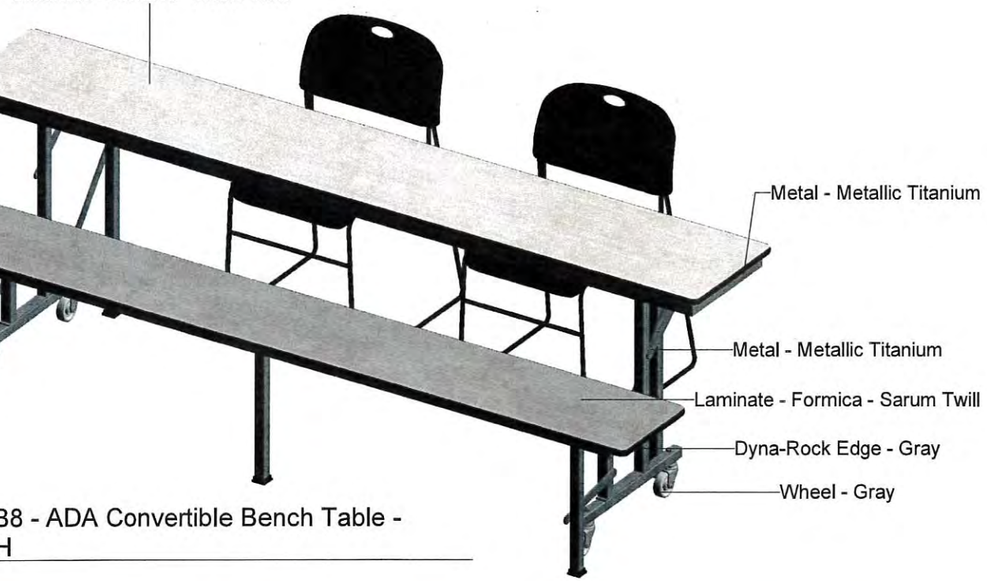

ACB8 - ADA Convertible Bench Table - 30"H

3

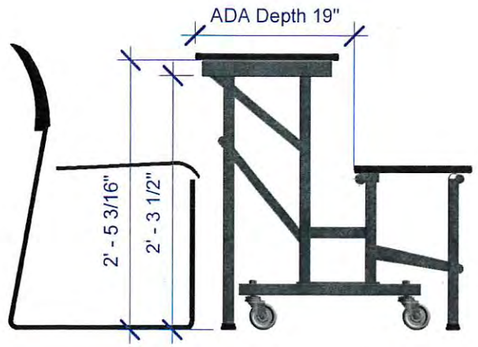

4 Elevation Left
3/4" = 1'-0"

AmTab®
Design • Manufacture • Furnish

Wendell Cross Elementary School	DATE: 05-08-2020	DRAWN BY: EMW	SCALE: 3/4" = 1'-0"	Product Details	PAGE NUMBER: 1

WENDELL CROSS
ELEMENTARY SCHOOL

1255 HAMILTON AVENUE
WATERBURY, CT 06706

PHASE V - FURNITURE, FIXTURES, EQUIPMENT & TECHNOLOGY

STATE PROJECT NO. 151-0295 EA/RR
12/1/2020

ARCHITECT

FRIAR ARCHITECTURE
21 TALCOTT NOTCH ROAD
FARMINGTON, CONNECTICUT

MAYOR

NEIL M. O'LEARY

SUPERINTENDENT OF SCHOOLS

VERNA D. RUFFIN, Ed. D.

BUILDING COMMITTEE

JASON VAN STONE, CHAIRMAN
KAREN E. HARVEY
ROCCO F. ORSO
MELISSA SERRANO-ADORNO
ANN M. SWEENEY, VICE CHAIR

BOARD OF EDUCATION

MAYOR NEIL M. O'LEARY
ELIZABETH C. BROWN
KAREN E. HARVEY
JUANITA P. HERNANDEZ
ROCCO F. ORSO
CHARLES E. PAGANO, JR.
MELISSA SERRANO-ADORNO
CHARLES L. STANGO
ANN M. SWEENEY
JASON VAN STONE
THOMAS VAN STONE, SR.

INDEX OF DRAWINGS

COVER SHEET
A13.1- LOWER LEVEL FURNITURE PLAN -AREA B & C
A13.2- LOWER LEVEL FURNITURE PLAN - AREA D
A13.3- MAIN LEVEL FURNITURE PLAN - AREA A
A13.4- MAIN LEVEL FURNITURE PLAN- AREA B
A13.5 - MAIN LEVEL FURNITURE PLAN - AREA C
A13.6 - MAN LEVEL FURNITURE PLAN - AREA D
A13.7- UPPER LEVEL FURNITURE PLAN - AREA A
A13.8- UPPER LEVEL FURNITURE PLAN - AREA B
TE1.0- TECHNOLOGY LEGEND
TE1.1- LOWER LEVEL TECHNOLOGY PLAN - AREA B & C
TE1.2- LOWER LEVEL TECHNOLOGY PLAN- AREA D
TE1.3- MAIN LEVEL TECHNOLOGY PLAN- AREA A
TE1.4- MAIN LEVEL TECHNOLOGY PLAN- AREA B
TE1.5- MAIN LEVEL TECHNOLOGY PLAN - AREA C
TE1.6- MAIN LEVEL TECHNOLOGY PLAN- AREA D
TE1.7 - UPPER LEVEL TECHNOLOGY PLAN- AREA A
TE1.8 - UPPER LEVEL TECHNOLOGY PLAN - AREA B

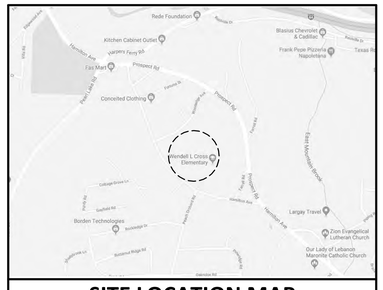

SITE LOCATION MAP

SET NUMBER

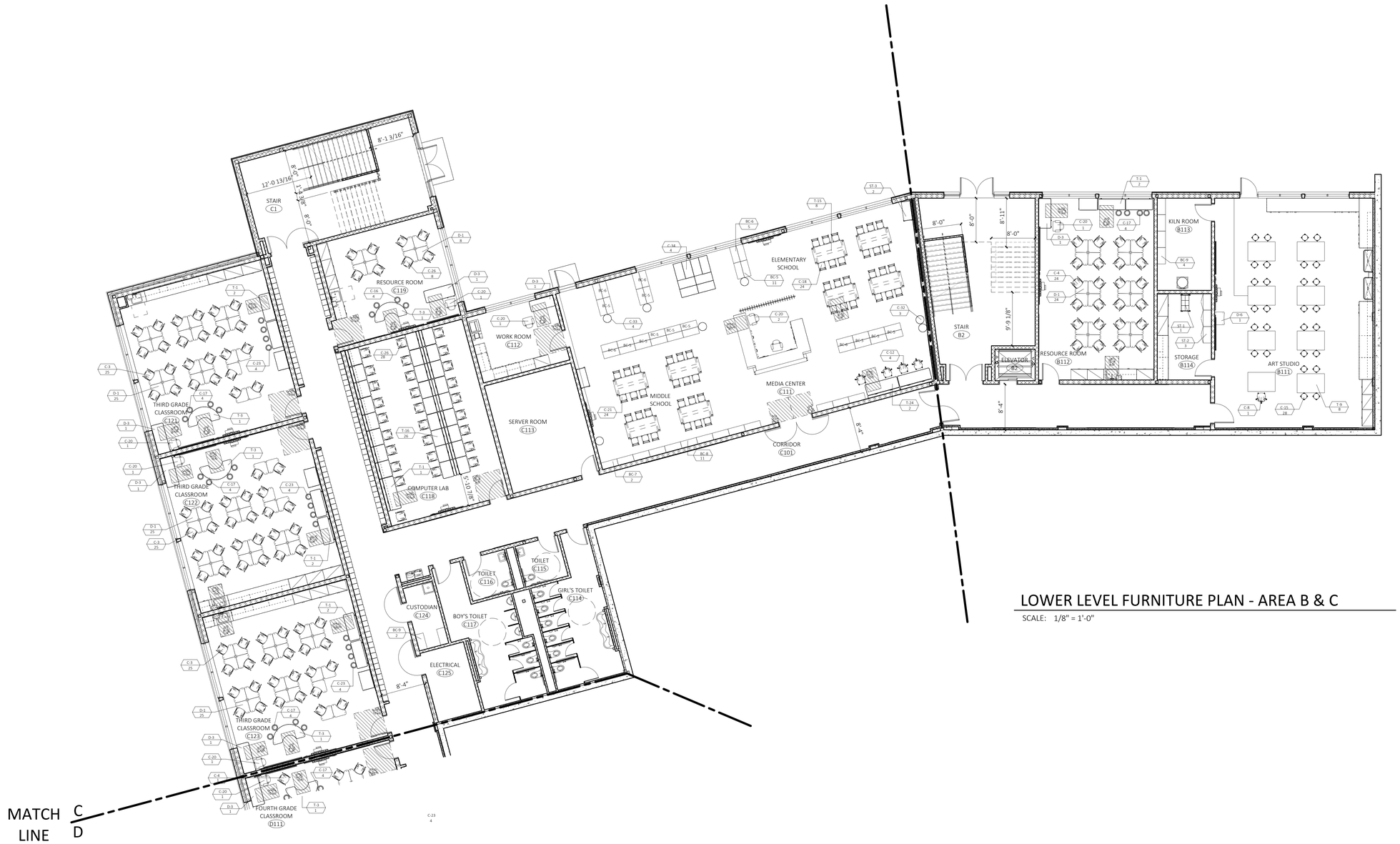

LOWER LEVEL FURNITURE PLAN - AREA B & C

SCALE: 1/8" = 1'-0"

GRAPHICS LEGEND

EXISTING FURNITURE TO BE MOVED & INSTALLED BY OWNER.

NEW FURNITURE

FURNITURE LEGEND

BC	BOOKCASE
C	CHAIR
D	DESK
EQ	EQUIPMENT
F	FILE CABINET
ST	STORAGE
T	TABLE

FURNITURE TAG:

FURNITURE TYPE
FURNITURE KEY
X-X
X
FURNITURE QUANTITY

EXISTING FURNITURE TO BE RELOCATED
EX-X
X
FURNITURE QUANTITY

CODE COMPLIANCE NOTE:

IN ORDER TO MEET THE NEEDS OF PERSONS WITH DISABILITIES, WHEN APPLICABLE ALL FIXTURES, FURNISHINGS, & EQUIPMENT ITEMS SHALL COMPLY WITH THE CURRENT CONNECTICUT STATE BUILDING CODE INCLUDING; 2009 ICC/ANSI A117.1, SECTION 504 REHABILITATION ACT 1973 INCLUDING CURRENT ADA STANDARDS FOR ACCESSIBLE DESIGN AND SECTION 504 REGULATIONS; AND THE AMERICANS WITH DISABILITIES ACT TITLE II INCLUDING THE CURRENT ADA STANDARDS FOR ACCESSIBLE DESIGN AND ADA REGULATIONS.

ACCESSIBLE KNEE CLEARANCES SHALL COMPLY WITH CURRENT ADA STANDARDS FOR ACCESSIBLE DESIGN, SECTION 306.

COMPLIANCE WITH THE CURRENT CONNECTICUT STATE FIRE SAFETY CODE AND CURRENT O.S.H.A. TITLE 29/LABOR IS ALSO REQUIRED.

THE ITEMS SHALL INCLUDE, BUT ARE NOT LIMITED TO FIXTURES, FURNISHINGS, EQUIPMENT, WORKSTATIONS (INCLUDING BUILT-INS), LABORATORY FUME HOODS, DARKROOM EQUIPMENT, WELDING STATIONS, SHOP EQUIPMENT, ETC.

SECURE ATTACHMENT OF FF&E & T ITEMS

TO ENSURE THE PROPER ATTACHMENT OF FFE & E ITEMS, INCLUDING TECHNOLOGY ITEMS, WHERE ITEMS ARE ATTACHED TO WALL, CEILING, OVERHEAD STRUCTURE, AND/OR FLOOR, CONTRACTOR TO PROVIDE INFORMATION ADEQUATE FOR ARCHITECT TO VERIFY ITEMS ATTACHED TO THE WALL, CIELING, AND/OR FLOOR ARE ATTACHED SECURELY AND PER THE MANUFACTURERS RECOMMENDATIONS. ARCHITECTS REVIEW MAY BE IMPLEMENTED DURING SUBMITTAL PROCESS.

CONTRACTOR TO PROVIDE STRUTS, HANGERS, FASTENERS, SAFETY HARNESSES, CHANNELS, BOLTS, SCREWS, RODS, ETC. TO SECURELY ATTACH ITEMS TO EXISTING STRUCTURE AS REQUIRED TO MEET FIELD CONDITIONS AND MEET APPLICABLE CODES.

CLEAR FLOOR SPACE (WITH ISA SYMBOL)



NOTE:
THIS RESPRESENTS A 30" X 48" CLEAR FLOOR SPACE FOR AN ADA WHEELCHAIR.

FURNITURE AND EQUIPMENT NOTES:

(THESE NOTES APPLY TO A13.1-A13.6)

NOTE 1: EX= EXISTING FURNITURE
NOTE 2: EQUIPMENT THAT REQUIRES FLOOR SPACE IS SHOWN ON THE FURNITURE PLANS. ALL OTHER EQUIPMENT IS LISTED IN VOLUME 1.

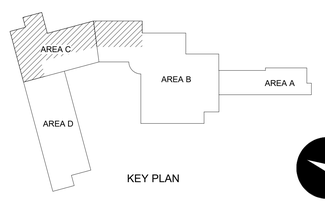

KEY PLAN

DATE: 2/26/2020
DRAWN BY: NN
SCALE: As indicated
REVIEWED BY: CA
PROJECT NO.18-115A

REVISIONS

NO.	DATE	DESCRIPTION
	1/29/2020	ISSUED FOR BID
	12/1/2020	

LOWER LEVEL FURNITURE PLAN - AREA B & C

STATE PROJECT NO. 151-0295 EA/RR
PHASE III - GENERAL BUILDING CONSTRUCTION
WENDELL CROSS
ELEMENTARY SCHOOL
1255 HAMILTON AVENUE
WATERBURY, CONNECTICUT

CONSULTANT'S SEAL

STATE OF CONNECTICUT
FRIAR ARCHITECTURE, INC.
CORPORATE PRACTICE of ARCHITECTURE
NO. 113

ARCHITECT'S SEAL

FRIAR
21 Talcott Notch Road
Farmington, CT 06032

SHEET NO.
A13.1

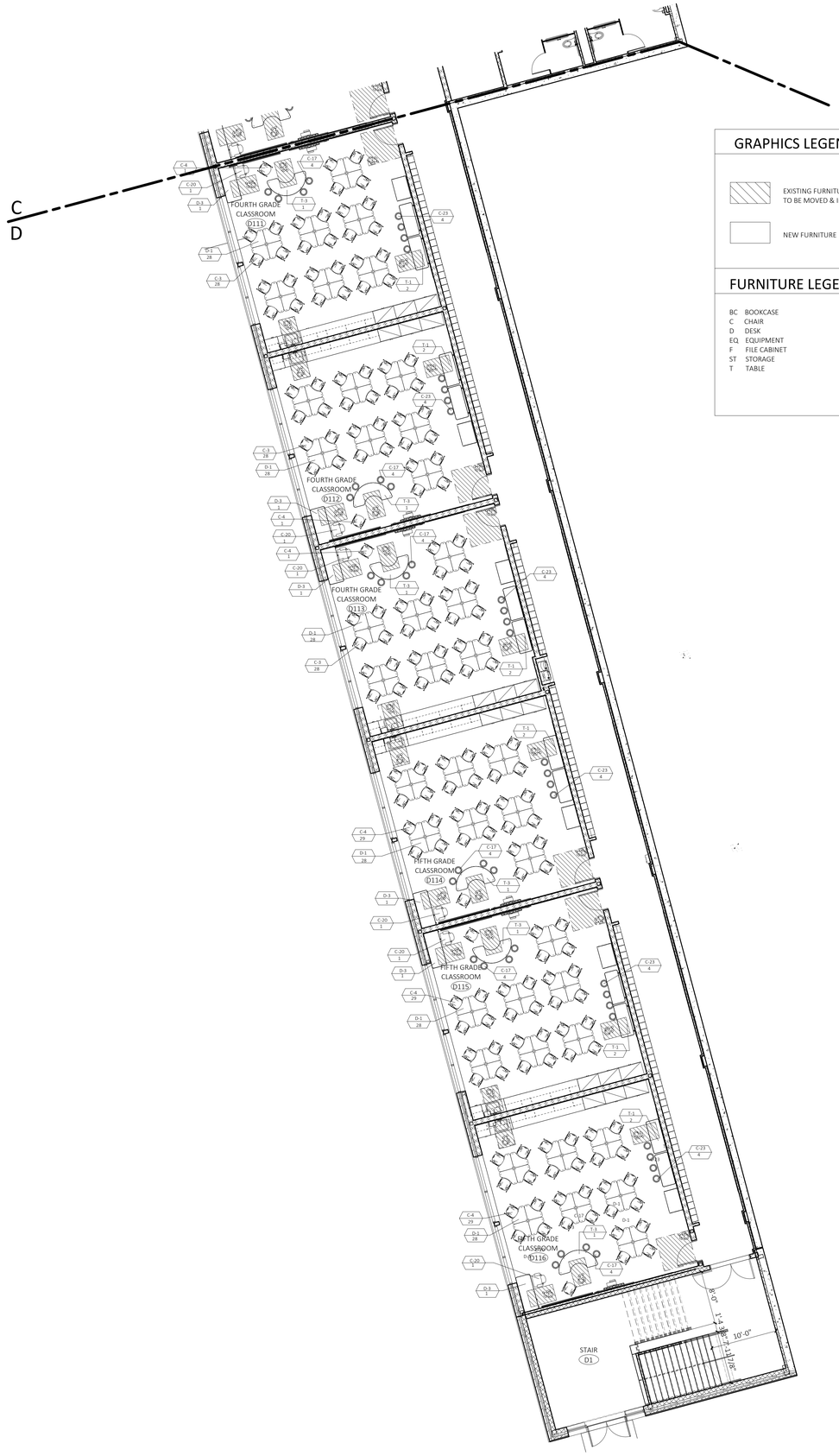

GRAPHICS LEGEND

EXISTING FURNITURE TO BE MOVED & INSTALLED BY OWNER.

NEW FURNITURE

FURNITURE LEGEND

BC	BOOKCASE
C	CHAIR
D	DESK
EQ	EQUIPMENT
F	FILE CABINET
ST	STORAGE
T	TABLE

FURNITURE TAG:

FURNITURE TYPE
FURNITURE KEY
X-X
X
FURNITURE QUANTITY

EXISTING FURNITURE TO BE RELOCATED
EX-X
X
FURNITURE QUANTITY

CODE COMPLIANCE NOTE:

IN ORDER TO MEET THE NEEDS OF PERSONS WITH DISABILITIES, WHEN APPLICABLE ALL FIXTURES, FURNISHINGS, & EQUIPMENT ITEMS SHALL COMPLY WITH THE CURRENT CONNECTICUT STATE BUILDING CODE INCLUDING; 2009 ICC/ANSI A117.1, SECTION 504 REHABILITATION ACT 1973 INCLUDING CURRENT ADA STANDARDS FOR ACCESSIBLE DESIGN AND SECTION 504 REGULATIONS; AND THE AMERICANS WITH DISABILITIES ACT TITLE II INCLUDING THE CURRENT ADA STANDARDS FOR ACCESSIBLE DESIGN AND ADA REGULATIONS.

ACCESSIBLE KNEE CLEARANCES SHALL COMPLY WITH CURRENT ADA STANDARDS FOR ACCESSIBLE DESIGN, SECTION 306.
COMPLIANCE WITH THE CURRENT CONNECTICUT STATE FIRE SAFETY CODE AND CURRENT O.S.H.A. TITLE 29/LABOR IS ALSO REQUIRED.

THE ITEMS SHALL INCLUDE, BUT ARE NOT LIMITED TO FIXTURES, FURNISHINGS, EQUIPMENT, WORKSTATIONS (INCLUDING BUILT-INS), LABORATORY FUME HOODS, DARKROOM EQUIPMENT, WELDING STATIONS, SHOP EQUIPMENT, ETC.

SECURE ATTACHMENT OF FF&E & T ITEMS

TO ENSURE THE PROPER ATTACHMENT OF FFE & E ITEMS, INCLUDING TECHNOLOGY ITEMS, WHERE ITEMS ARE ATTACHED TO WALL, CEILING, OVERHEAD STRUCTURE, AND/OR FLOOR, CONTRACTOR TO PROVIDE INFORMATION ADEQUATE FOR ARCHITECT TO VERIFY ITEMS ATTACHED TO THE WALL, CIELING, AND/OR FLOOR ARE ATTACHED SECURELY AND PER THE MANUFACTURERS RECOMMENDATIONS. ARCHITECTS REVIEW MAY BE IMPLEMENTED DURING SUBMITTAL PROCESS.

CONTRACTOR TO PROVIDE STRUTS, HANGERS, FASTENERS, SAFETY HARNESSES, CHANNELS, BOLTS, SCREWS, RODS, ETC. TO SECURELY ATTACH ITEMS TO EXISTING STRUCTURE AS REQUIRED TO MEET FIELD CONDITIONS AND MEET APPLICABLE CODES.

CLEAR FLOOR SPACE (WITH ISA SYMBOL)

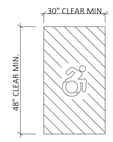

NOTE:
THIS RESPRESENTS A 30" X 48" CLEAR FLOOR SPACE FOR AN ADA WHEELCHAIR.

FURNITURE AND EQUIPMENT NOTES:

(THESE NOTES APPLY TO A13.1-A13.6)

NOTE 1: EX= EXISTING FURNITURE
NOTE 2: EQUIPMENT THAT REQUIRES FLOOR SPACE IS SHOWN ON THE FURNITURE PLANS. ALL OTHER EQUIPMENT IS LISTED IN VOLUME 1.

LOWER LEVEL FURNITURE PLAN - AREA D

SCALE: 1/8" = 1'-0"

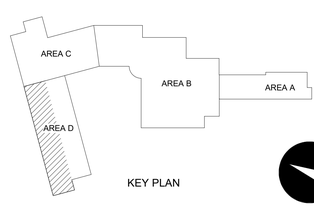

KEY PLAN

DATE: 2/26/2020
DRAWN BY: NN
SCALE: As indicated
REVIEWED BY: CA
PROJECT NO.18-115A

REVISIONS

NO.	DATE	DESCRIPTION
	1/29/2020	ISSUED FOR BID
	12/1/2020	

LOWER LEVEL FURNITURE PLAN - AREA D

STATE PROJECT NO. 151-0295 EA/RR
PHASE III - GENERAL BUILDING CONSTRUCTION
WENDELL CROSS ELEMENTARY SCHOOL
1255 HAMILTON AVENUE
WATERBURY, CONNECTICUT

CONSULTANT'S SEAL

STATE OF CONNECTICUT FRIAR ARCHITECTURE INC. NO. 113 CORPORATE PRACTICE of ARCHITECTURE

ARCHITECT'S SEAL

FRIAR
21 Talcott Notch Road
Farmington, CT 06032

SHEET NO.
A13.2

GRAPHICS LEGEND

EXISTING FURNITURE TO BE MOVED & INSTALLED BY OWNER.

NEW FURNITURE

FURNITURE LEGEND

BC	BOOKCASE
C	CHAIR
D	DESK
EQ	EQUIPMENT
F	FILE CABINET
ST	STORAGE
T	TABLE

FURNITURE TAG:

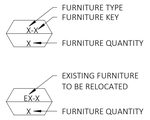

CODE COMPLIANCE NOTE:

IN ORDER TO MEET THE NEEDS OF PERSONS WITH DISABILITIES, WHEN APPLICABLE ALL FIXTURES, FURNISHINGS, & EQUIPMENT ITEMS SHALL COMPLY WITH THE CURRENT CONNECTICUT STATE BUILDING CODE INCLUDING; 2009 ICC/ANSI A117.1, SECTION 504 REHABILITATION ACT 1973 INCLUDING CURRENT ADA STANDARDS FOR ACCESSIBLE DESIGN AND SECTION 504 REGULATIONS; AND THE AMERICANS WITH DISABILITIES ACT TITLE II INCLUDING THE CURRENT ADA STANDARDS FOR ACCESSIBLE DESIGN AND ADA REGULATIONS.

ACCESSIBLE KNEE CLEARANCES SHALL COMPLY WITH CURRENT ADA STANDARDS FOR ACCESSIBLE DESIGN, SECTION 306.

COMPLIANCE WITH THE CURRENT CONNECTICUT STATE FIRE SAFETY CODE AND CURRENT O.S.H.A. TITLE 29/LABOR IS ALSO REQUIRED.

THE ITEMS SHALL INCLUDE, BUT ARE NOT LIMITED TO FIXTURES, FURNISHINGS, EQUIPMENT, WORKSTATIONS (INCLUDING BUILT-INS), LABORATORY FUME HOODS, DARKROOM EQUIPMENT, WELDING STATIONS, SHOP EQUIPMENT, ETC.

SECURE ATTACHMENT OF FF&E & T ITEMS

TO ENSURE THE PROPER ATTACHMENT OF FFE & E ITEMS, INCLUDING TECHNOLOGY ITEMS, WHERE ITEMS ARE ATTACHED TO WALL, CEILING, OVERHEAD STRUCTURE, AND/OR FLOOR, CONTRACTOR TO PROVIDE INFORMATION ADEQUATE FOR ARCHITECT TO VERIFY ITEMS ATTACHED TO THE WALL, CIELING, AND/OR FLOOR ARE ATTACHED SECURELY AND PER THE MANUFACTURERS RECOMMENDATIONS. ARCHITECTS REVIEW MAY BE IMPLEMENTED DURING SUBMITTAL PROCESS.

CONTRACTOR TO PROVIDE STRUTS, HANGERS, FASTENERS, SAFETY HARNESSES, CHANNELS, BOLTS, SCREWS, RODS, ETC. TO SECURELY ATTACH ITEMS TO EXISTING STRUCTURE AS REQUIRED TO MEET FIELD CONDITIONS AND MEET APPLICABLE CODES.

CLEAR FLOOR SPACE (WITH ISA SYMBOL)



NOTE:
THIS RESPRESENTS A 30" X 48" CLEAR FLOOR SPACE FOR AN ADA WHEELCHAIR.

FURNITURE AND EQUIPMENT NOTES:

(THESE NOTES APPLY TO A13.1-A13.6)

NOTE 1: EX= EXISTING FURNITURE
NOTE 2: EQUIPMENT THAT REQUIRES FLOOR SPACE IS SHOWN ON THE FURNITURE PLANS. ALL OTHER EQUIPMENT IS LISTED IN VOLUME 1.

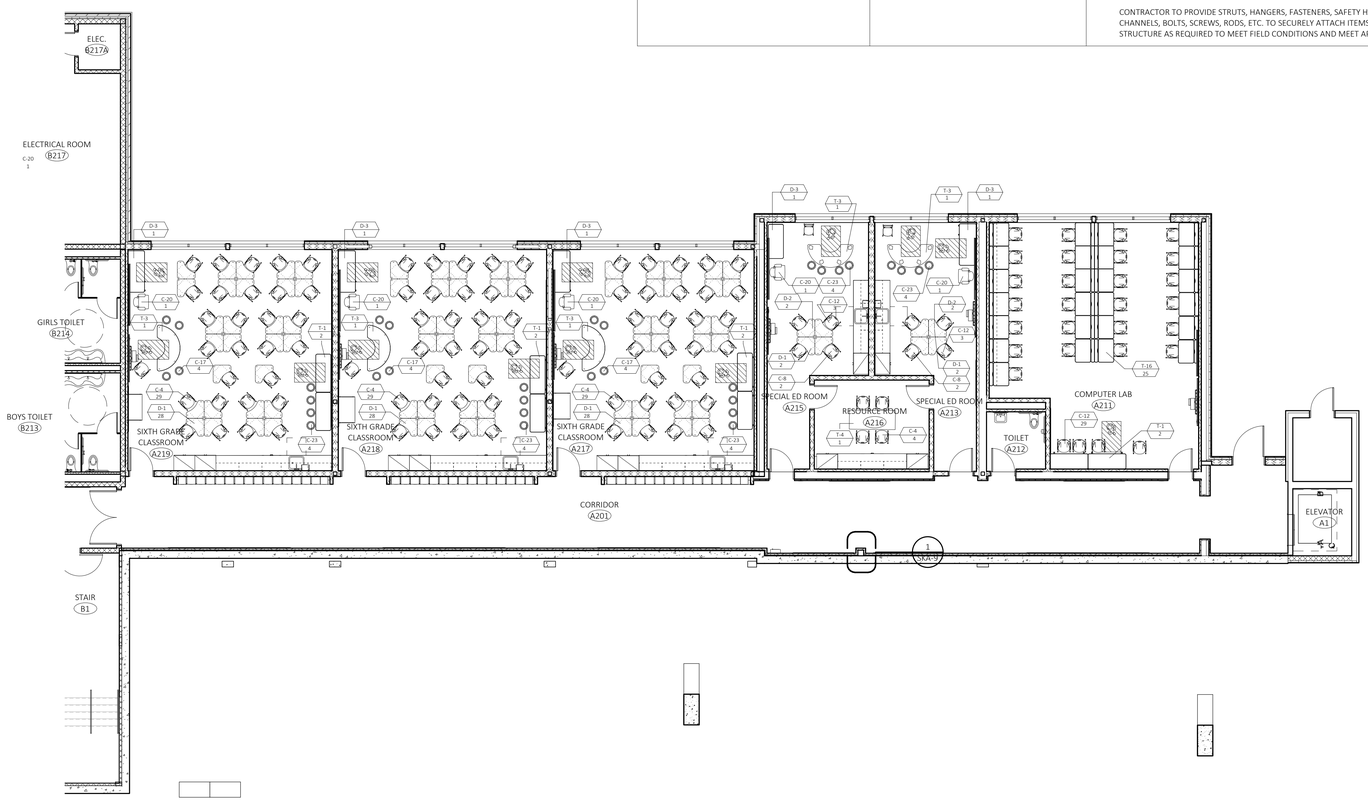

MAIN LEVEL FURNITURE - AREA A

SCALE: 1/8" = 1'-0"

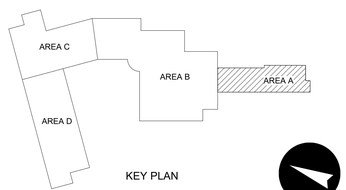

KEY PLAN

DATE: 2/26/2020
DRAWN BY: NN
SCALE: As indicated
REVIEWED BY: CA
PROJECT NO.18-115A

REVISIONS

NO.	DATE	DESCRIPTION
1	1/29/2020	ISSUED FOR BID
2	12/1/2020	

MAIN LEVEL FURNITURE PLAN - AREA A

STATE PROJECT NO. 151-0295 EA/RR
PHASE III - GENERAL BUILDING CONSTRUCTION
WENDELL CROSS ELEMENTARY SCHOOL
1255 HAMILTON AVENUE
WATERBURY, CONNECTICUT

CONSULTANT'S SEAL

STATE OF CONNECTICUT FRIAR ARCHITECTURE, INC. NO. 113 CORPORATE PRACTICE of ARCHITECTURE

ARCHITECT'S SEAL

FRIAR
21 Talcott Notch Road
Farmington, CT 06032

SHEET NO.
A13.3

GRAPHICS LEGEND

EXISTING FURNITURE
TO BE MOVED & INSTALLED BY OWNER.

NEW FURNITURE

FURNITURE LEGEND

BC BOOKCASE
C CHAIR
D DESK
EQ EQUIPMENT
F FILE CABINET
ST STORAGE
T TABLE

FURNITURE TAG:

FURNITURE TYPE
FURNITURE KEY
X-X
X
FURNITURE QUANTITY

EXISTING FURNITURE
TO BE RELOCATED
EX-X
X
FURNITURE QUANTITY

CODE COMPLIANCE NOTE:

IN ORDER TO MEET THE NEEDS OF PERSONS WITH DISABILITIES, WHEN APPLICABLE ALL FIXTURES, FURNISHINGS, & EQUIPMENT ITEMS SHALL COMPLY WITH THE CURRENT CONNECTICUT STATE BUILDING CODE INCLUDING; 2009 ICC/ANSI A117.1, SECTION 504 REHABILITATION ACT 1973 INCLUDING CURRENT ADA STANDARDS FOR ACCESSIBLE DESIGN AND SECTION 504 REGULATIONS; AND THE AMERICANS WITH DISABILITIES ACT TITLE II INCLUDING THE CURRENT ADA STANDARDS FOR ACCESSIBLE DESIGN AND ADA REGULATIONS.

ACCESSIBLE KNEE CLEARANCES SHALL COMPLY WITH CURRENT ADA STANDARDS FOR ACCESSIBLE DESIGN, SECTION 306.

COMPLIANCE WITH THE CURRENT CONNECTICUT STATE FIRE SAFETY CODE AND CURRENT O.S.H.A. TITLE 29/LABOR IS ALSO REQUIRED.

THE ITEMS SHALL INCLUDE, BUT ARE NOT LIMITED TO FIXTURES, FURNISHINGS, EQUIPMENT, WORKSTATIONS (INCLUDING BUILT-INS), LABORATORY FUME HOODS, DARKROOM EQUIPMENT, WELDING STATIONS, SHOP EQUIPMENT, ETC.

SECURE ATTACHMENT OF FF&E & T ITEMS

TO ENSURE THE PROPER ATTACHMENT OF FFE & E ITEMS, INCLUDING TECHNOLOGY ITEMS, WHERE ITEMS ARE ATTACHED TO WALL, CEILING, OVERHEAD STRUCTURE, AND/OR FLOOR, CONTRACTOR TO PROVIDE INFORMATION ADEQUATE FOR ARCHITECT TO VERIFY ITEMS ATTACHED TO THE WALL, CIELING, AND/OR FLOOR ARE ATTACHED SECURELY AND PER THE MANUFACTURERS RECOMMENDATIONS. ARCHITECTS REVIEW MAY BE IMPLEMENTED DURING SUBMITTAL PROCESS.

CONTRACTOR TO PROVIDE STRUTS, HANGERS, FASTENERS, SAFETY HARNESSES, CHANNELS, BOLTS, SCREWS, RODS, ETC. TO SECURELY ATTACH ITEMS TO EXISTING STRUCTURE AS REQUIRED TO MEET FIELD CONDITIONS AND MEET APPLICABLE CODES.

CLEAR FLOOR SPACE (WITH ISA SYMBOL)

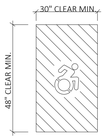

NOTE:
THIS RESPRESENTS A 30" X 48" CLEAR FLOOR SPACE FOR AN ADA WHEELCHAIR.

FURNITURE AND EQUIPMENT NOTES:

(THESE NOTES APPLY TO A13.1-A13.6)

NOTE 1: EX= EXISTING FURNITURE
NOTE 2: EQUIPMENT THAT REQUIRES FLOOR SPACE IS SHOWN ON THE FURNITURE PLANS. ALL OTHER EQUIPMENT IS LISTED IN VOLUME 1.

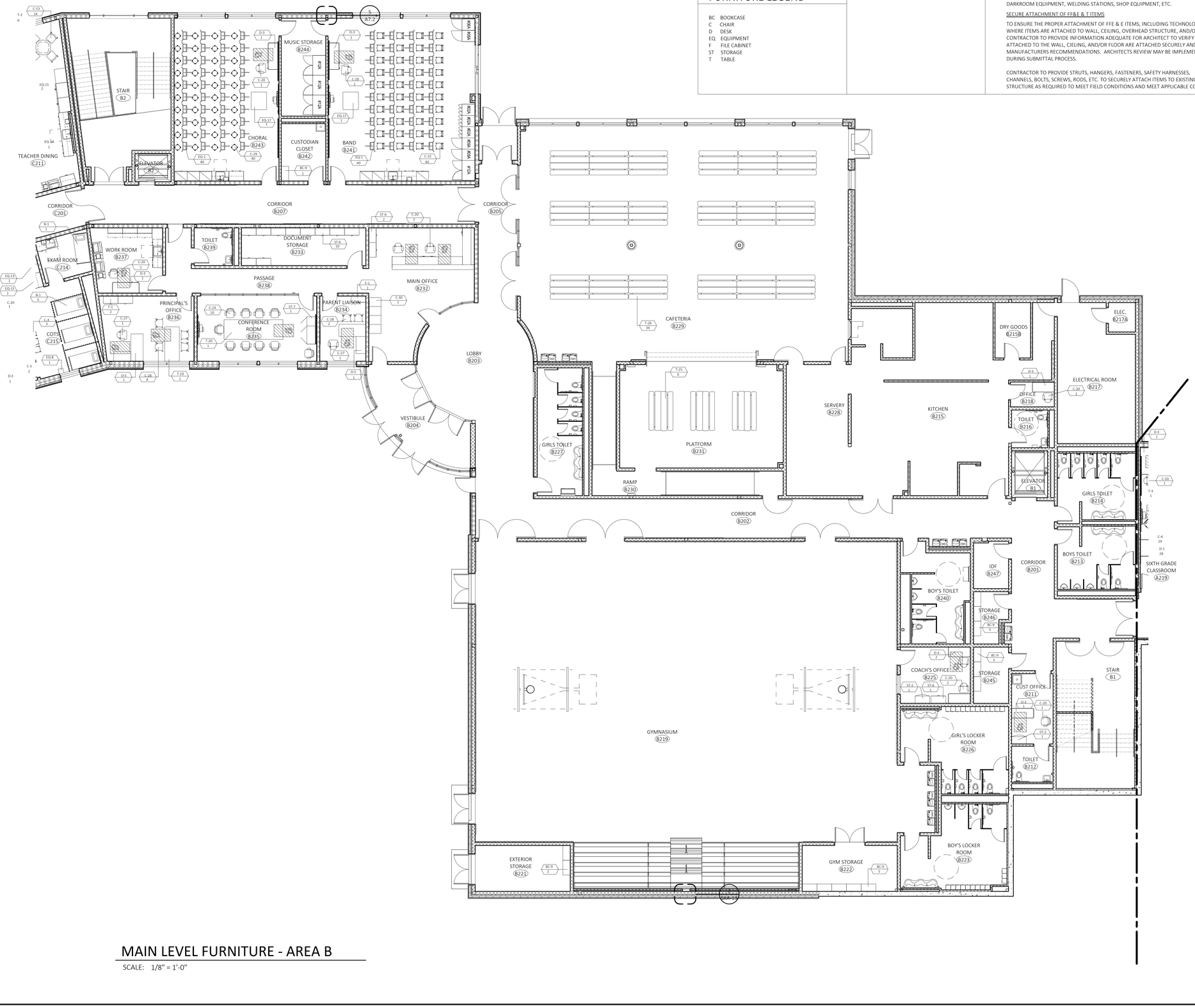

MAIN LEVEL FURNITURE - AREA B

SCALE: 1/8" = 1'-0"

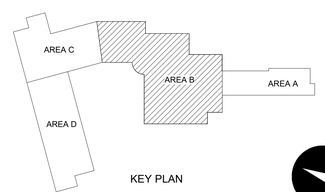

KEY PLAN

DATE: 2/26/2020
DRAWN BY: NN
SCALE: As indicated
REVIEWED BY: CA
PROJECT NO.18-115A

REVISIONS

NO.	DATE	DESCRIPTION
	1/29/2020	ISSUED FOR BID
	12/1/2020	

MAIN LEVEL FURNITURE PLAN - AREA B

STATE PROJECT NO. 151-0295 EA/RR
PHASE III - GENERAL BUILDING CONSTRUCTION
WENDELL CROSS
ELEMENTARY SCHOOL
1255 HAMILTON AVENUE
WATERBURY, CONNECTICUT

CONSULTANT'S SEAL

STATE OF CONNECTICUT
FRIAR ARCHITECTURE, INC.
NO. 113
CORPORATE PRACTICE of ARCHITECTURE

ARCHITECT'S SEAL

FRIAR
21 Talcott Notch Road
Farmington, CT 06032

SHEET NO.
A13.4



MAIN LEVEL FURNITURE - AREA C

SCALE: 1/8" = 1'-0"

GRAPHICS LEGEND

EXISTING FURNITURE TO BE MOVED & INSTALLED BY OWNER.

NEW FURNITURE

FURNITURE LEGEND

BC	BOOKCASE
C	CHAIR
D	DESK
EQ	EQUIPMENT
F	FILE CABINET
ST	STORAGE
T	TABLE

FURNITURE TAG:

X-X — FURNITURE TYPE / FURNITURE KEY

X — FURNITURE QUANTITY

EX-X — EXISTING FURNITURE TO BE RELOCATED

X — FURNITURE QUANTITY

CODE COMPLIANCE NOTE:

IN ORDER TO MEET THE NEEDS OF PERSONS WITH DISABILITIES, WHEN APPLICABLE ALL FIXTURES, FURNISHINGS, & EQUIPMENT ITEMS SHALL COMPLY WITH THE CURRENT CONNECTICUT STATE BUILDING CODE INCLUDING; 2009 ICC/ANSI A117.1, SECTION 504 REHABILITATION ACT 1973 INCLUDING CURRENT ADA STANDARDS FOR ACCESSIBLE DESIGN AND SECTION 504 REGULATIONS; AND THE AMERICANS WITH DISABILITIES ACT TITLE II INCLUDING THE CURRENT ADA STANDARDS FOR ACCESSIBLE DESIGN AND ADA REGULATIONS.

ACCESSIBLE KNEE CLEARANCES SHALL COMPLY WITH CURRENT ADA STANDARDS FOR ACCESSIBLE DESIGN, SECTION 306.

COMPLIANCE WITH THE CURRENT CONNECTICUT STATE FIRE SAFETY CODE AND CURRENT O.S.H.A. TITLE 29/LABOR IS ALSO REQUIRED.

THE ITEMS SHALL INCLUDE, BUT ARE NOT LIMITED TO FIXTURES, FURNISHINGS, EQUIPMENT, WORKSTATIONS (INCLUDING BUILT-INS), LABORATORY FUME HOODS, DARKROOM EQUIPMENT, WELDING STATIONS, SHOP EQUIPMENT, ETC.

SECURE ATTACHMENT OF FF&E & T ITEMS

TO ENSURE THE PROPER ATTACHMENT OF FFE & E ITEMS, INCLUDING TECHNOLOGY ITEMS, WHERE ITEMS ARE ATTACHED TO WALL, CEILING, OVERHEAD STRUCTURE, AND/OR FLOOR, CONTRACTOR TO PROVIDE INFORMATION ADEQUATE FOR ARCHITECT TO VERIFY ITEMS ATTACHED TO THE WALL, CIELING, AND/OR FLOOR ARE ATTACHED SECURELY AND PER THE MANUFACTURERS RECOMMENDATIONS. ARCHITECTS REVIEW MAY BE IMPLEMENTED DURING SUBMITTAL PROCESS.

CONTRACTOR TO PROVIDE STRUTS, HANGERS, FASTENERS, SAFETY HARNESSES, CHANNELS, BOLTS, SCREWS, RODS, ETC. TO SECURELY ATTACH ITEMS TO EXISTING STRUCTURE AS REQUIRED TO MEET FIELD CONDITIONS AND MEET APPLICABLE CODES.

CLEAR FLOOR SPACE (WITH ISA SYMBOL)



NOTE:
THIS RESPRESENTS A 30" X 48" CLEAR FLOOR SPACE FOR AN ADA WHEELCHAIR.

FURNITURE AND EQUIPMENT NOTES:

(THESE NOTES APPLY TO A13.1-A13.6)

NOTE 1: EX= EXISTING FURNITURE
NOTE 2: EQUIPMENT THAT REQUIRES FLOOR SPACE IS SHOWN ON THE FURNITURE PLANS. ALL OTHER EQUIPMENT IS LISTED IN VOLUME 1.

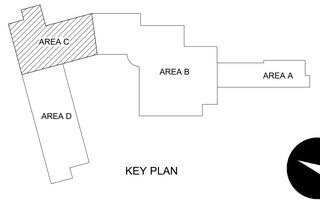

KEY PLAN

DATE: 2/26/2020
DRAWN BY: NN
SCALE: As indicated
REVIEWED BY: CA
PROJECT NO.18-115A

REVISIONS

NO.	DATE	DESCRIPTION
	1/29/2020	ISSUED FOR BID
	12/1/2020	

MAIN LEVEL FURNITURE PLAN - AREA C

STATE PROJECT NO. 151-0295 EA/RR
PHASE III - GENERAL BUILDING CONSTRUCTION
WENDELL CROSS ELEMENTARY SCHOOL
1255 HAMILTON AVENUE
WATERBURY, CONNECTICUT

CONSULTANT'S SEAL

STATE OF CONNECTICUT FRIAR ARCHITECTURE, INC. NO. 113 CORPORATE PRACTICE of ARCHITECTURE

ARCHITECT'S SEAL

FRIAR
21 Talcott Notch Road
Farmington, CT 06032

SHEET NO.
A13.5



GRAPHICS LEGEND

EXISTING FURNITURE TO BE MOVED & INSTALLED BY OWNER.

NEW FURNITURE

FURNITURE LEGEND

BC	BOOKCASE
C	CHAIR
D	DESK
EQ	EQUIPMENT
F	FILE CABINET
ST	STORAGE
T	TABLE

FURNITURE TAG:

FURNITURE TYPE
FURNITURE KEY
X-X
X
FURNITURE QUANTITY

EXISTING FURNITURE TO BE RELOCATED
EX-X
X
FURNITURE QUANTITY

CODE COMPLIANCE NOTE:

IN ORDER TO MEET THE NEEDS OF PERSONS WITH DISABILITIES, WHEN APPLICABLE ALL FIXTURES, FURNISHINGS, & EQUIPMENT ITEMS SHALL COMPLY WITH THE CURRENT CONNECTICUT STATE BUILDING CODE INCLUDING; 2009 ICC/ANSI A117.1, SECTION 504 REHABILITATION ACT 1973 INCLUDING CURRENT ADA STANDARDS FOR ACCESSIBLE DESIGN AND SECTION 504 REGULATIONS; AND THE AMERICANS WITH DISABILITIES ACT TITLE II INCLUDING THE CURRENT ADA STANDARDS FOR ACCESSIBLE DESIGN AND ADA REGULATIONS.

ACCESSIBLE KNEE CLEARANCES SHALL COMPLY WITH CURRENT ADA STANDARDS FOR ACCESSIBLE DESIGN, SECTION 306.

COMPLIANCE WITH THE CURRENT CONNECTICUT STATE FIRE SAFETY CODE AND CURRENT O.S.H.A. TITLE 29/LABOR IS ALSO REQUIRED.

THE ITEMS SHALL INCLUDE, BUT ARE NOT LIMITED TO FIXTURES, FURNISHINGS, EQUIPMENT, WORKSTATIONS (INCLUDING BUILT-INS), LABORATORY FUME HOODS, DARKROOM EQUIPMENT, WELDING STATIONS, SHOP EQUIPMENT, ETC.

SECURE ATTACHMENT OF FF&E & T ITEMS

TO ENSURE THE PROPER ATTACHMENT OF FFE & E ITEMS, INCLUDING TECHNOLOGY ITEMS, WHERE ITEMS ARE ATTACHED TO WALL, CEILING, OVERHEAD STRUCTURE, AND/OR FLOOR, CONTRACTOR TO PROVIDE INFORMATION ADEQUATE FOR ARCHITECT TO VERIFY ITEMS ATTACHED TO THE WALL, CELING, AND/OR FLOOR ARE ATTACHED SECURELY AND PER THE MANUFACTURERS RECOMMENDATIONS. ARCHITECTS REVIEW MAY BE IMPLEMENTED DURING SUBMITTAL PROCESS.

CONTRACTOR TO PROVIDE STRUTS, HANGERS, FASTENERS, SAFETY HARNESSES, CHANNELS, BOLTS, SCREWS, RODS, ETC. TO SECURELY ATTACH ITEMS TO EXISTING STRUCTURE AS REQUIRED TO MEET FIELD CONDITIONS AND MEET APPLICABLE CODES.

CLEAR FLOOR SPACE (WITH ISA SYMBOL)

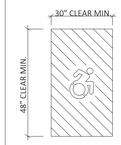

NOTE:
THIS RESPRESENTS A 30" X 48" CLEAR FLOOR SPACE FOR AN ADA WHEELCHAIR.

FURNITURE AND EQUIPMENT NOTES:

(THESE NOTES APPLY TO A13.1-A13.6)

NOTE 1: EX= EXISTING FURNITURE
NOTE 2: EQUIPMENT THAT REQUIRES FLOOR SPACE IS SHOWN ON THE FURNITURE PLANS. ALL OTHER EQUIPMENT IS LISTED IN VOLUME 1.

MAIN LEVEL FURNITURE - AREA D

SCALE: 1/8" = 1'-0"

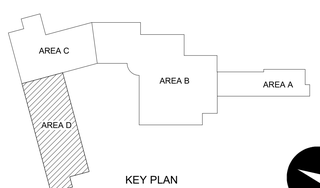

KEY PLAN

DATE: 2/26/2020
DRAWN BY: NN
SCALE: As indicated
REVIEWED BY: CA
PROJECT NO.18-115A

REVISIONS

NO.	DATE	DESCRIPTION
	1/29/2020	ISSUED FOR BID
	12/1/2020	

STATE PROJECT NO. 151-0295 EA/RR
PHASE III - GENERAL BUILDING CONSTRUCTION
WENDELL CROSS ELEMENTARY SCHOOL
1255 HAMILTON AVENUE
WATERBURY, CONNECTICUT

CONSULTANT'S SEAL

STATE OF CONNECTICUT FRIAR ARCHITECTURE LLC NO. 113 GRADUATE PRACTICE of ARCHITECTURE

STATE OF CONNECTICUT DAVID A. FRIAR FOUNDING LICENSED ARCHITECT

ARCHITECT'S SEAL

FRIAR
21 Talcott Notch Road
Farmington, CT 06032

SHEET NO.
A13.6

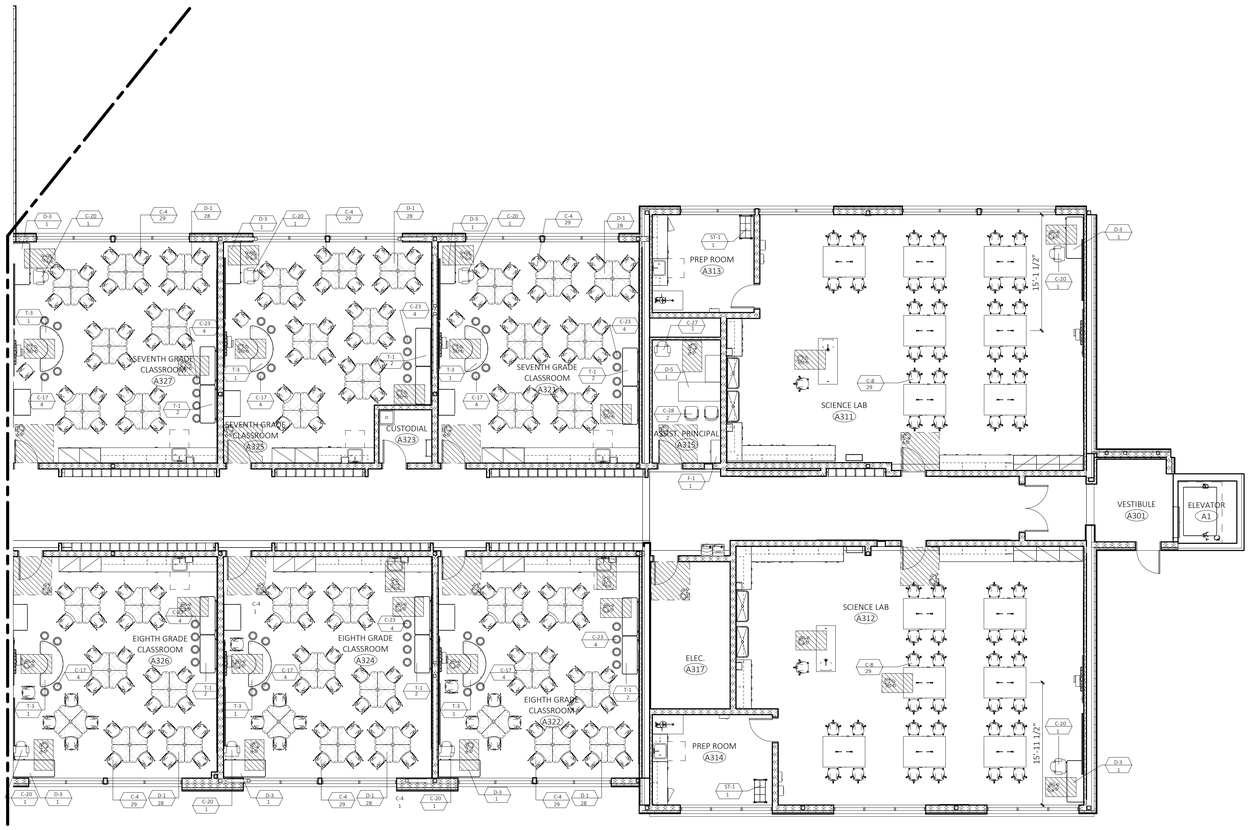

UPPER LEVEL FURNITURE PLAN - AREA A

SCALE: 1/8" = 1'-0"

GRAPHICS LEGEND

EXISTING FURNITURE TO BE MOVED & INSTALLED BY OWNER.

NEW FURNITURE

FURNITURE LEGEND

BC	BOOKCASE
C	CHAIR
D	DESK
EQ	EQUIPMENT
F	FILE CABINET
ST	STORAGE
T	TABLE

FURNITURE TAG:

FURNITURE TYPE
FURNITURE KEY
X-X
X
FURNITURE QUANTITY

EXISTING FURNITURE TO BE RELOCATED
EX-X
X
FURNITURE QUANTITY

CODE COMPLIANCE NOTE:

IN ORDER TO MEET THE NEEDS OF PERSONS WITH DISABILITIES, WHEN APPLICABLE ALL FIXTURES, FURNISHINGS, & EQUIPMENT ITEMS SHALL COMPLY WITH THE CURRENT CONNECTICUT STATE BUILDING CODE INCLUDING; 2009 ICC/ANSI A117.1, SECTION 504 REHABILITATION ACT 1973 INCLUDING CURRENT ADA STANDARDS FOR ACCESSIBLE DESIGN AND SECTION 504 REGULATIONS; AND THE AMERICANS WITH DISABILITIES ACT TITLE II INCLUDING THE CURRENT ADA STANDARDS FOR ACCESSIBLE DESIGN AND ADA REGULATIONS.

ACCESSIBLE KNEE CLEARANCES SHALL COMPLY WITH CURRENT ADA STANDARDS FOR ACCESSIBLE DESIGN, SECTION 306.

COMPLIANCE WITH THE CURRENT CONNECTICUT STATE FIRE SAFETY CODE AND CURRENT O.S.H.A. TITLE 29/LABOR IS ALSO REQUIRED.

THE ITEMS SHALL INCLUDE, BUT ARE NOT LIMITED TO FIXTURES, FURNISHINGS, EQUIPMENT, WORKSTATIONS (INCLUDING BUILT-INS), LABORATORY FUME HOODS, DARKROOM EQUIPMENT, WELDING STATIONS, SHOP EQUIPMENT, ETC.

SECURE ATTACHMENT OF FF&E & T ITEMS

TO ENSURE THE PROPER ATTACHMENT OF FFE & E ITEMS, INCLUDING TECHNOLOGY ITEMS, WHERE ITEMS ARE ATTACHED TO WALL, CEILING, OVERHEAD STRUCTURE, AND/OR FLOOR, CONTRACTOR TO PROVIDE INFORMATION ADEQUATE FOR ARCHITECT TO VERIFY ITEMS ATTACHED TO THE WALL, CIELING, AND/OR FLOOR ARE ATTACHED SECURELY AND PER THE MANUFACTURERS RECOMMENDATIONS. ARCHITECTS REVIEW MAY BE IMPLEMENTED DURING SUBMITTAL PROCESS.

CONTRACTOR TO PROVIDE STRUTS, HANGERS, FASTENERS, SAFETY HARNESSES, CHANNELS, BOLTS, SCREWS, RODS, ETC. TO SECURELY ATTACH ITEMS TO EXISTING STRUCTURE AS REQUIRED TO MEET FIELD CONDITIONS AND MEET APPLICABLE CODES.

CLEAR FLOOR SPACE (WITH ISA SYMBOL)



NOTE:
THIS RESPRESENTS A 30" X 48" CLEAR FLOOR SPACE FOR AN ADA WHEELCHAIR.

FURNITURE AND EQUIPMENT NOTES:

(THESE NOTES APPLY TO A13.1-A13.6)

NOTE 1: EX= EXISTING FURNITURE
NOTE 2: EQUIPMENT THAT REQUIRES FLOOR SPACE IS SHOWN ON THE FURNITURE PLANS. ALL OTHER EQUIPMENT IS LISTED IN VOLUME 1.

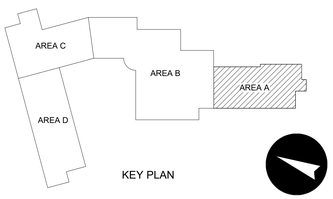

KEY PLAN

DATE: 2/26/2020
DRAWN BY: NN
SCALE: As indicated
REVIEWED BY: CA
PROJECT NO. 18-115A

REVISIONS

NO.	DATE	DESCRIPTION
	1/29/2020	ISSUED FOR BID
	12/1/2020	

UPPER LEVEL FURNITURE PLAN - AREA A

STATE PROJECT NO. 151-0295 EA/RR
PHASE III - GENERAL BUILDING CONSTRUCTION
WENDELL CROSS ELEMENTARY SCHOOL
1255 HAMILTON AVENUE
WATERBURY, CONNECTICUT

CONSULTANT'S SEAL

STATE OF CONNECTICUT FRIAR ARCHITECTURE, INC. NO. 113 CORPORATE PRACTICE of ARCHITECTURE

STATE OF CONNECTICUT MICHAEL A. SORANO LICENSED ARCHITECT

ARCHITECT'S SEAL

FRIAR
21 Talcott Notch Road
Farmington, CT 06032

SHEET NO.
A13.7

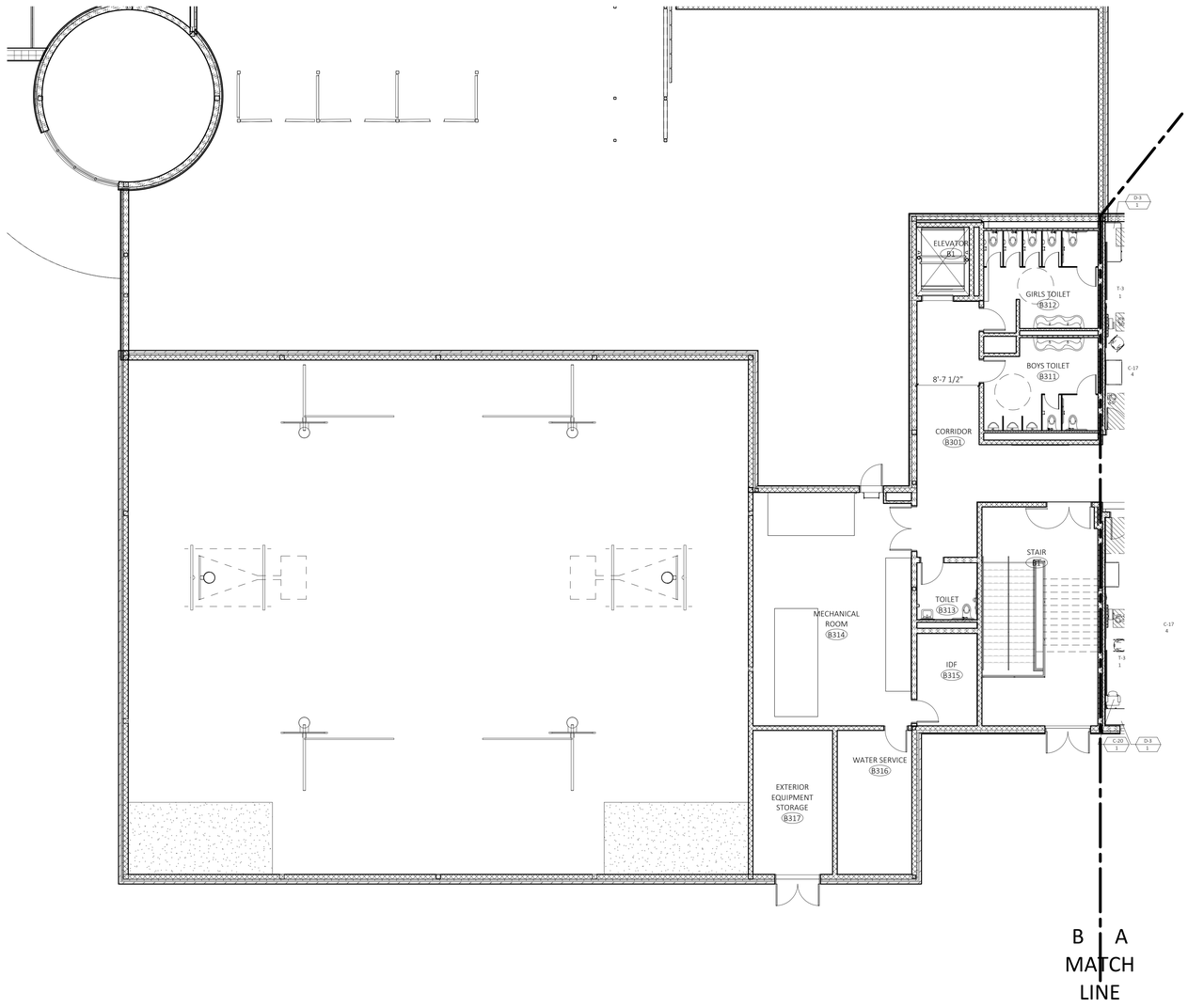

UPPER LEVEL FURNITURE PLAN - AREA B

SCALE: 1/8" = 1'-0"

GRAPHICS LEGEND

EXISTING FURNITURE TO BE MOVED & INSTALLED BY OWNER.

NEW FURNITURE

FURNITURE LEGEND

BC	BOOKCASE
C	CHAIR
D	DESK
EQ	EQUIPMENT
F	FILE CABINET
ST	STORAGE
T	TABLE

FURNITURE TAG:

X-X — FURNITURE TYPE / FURNITURE KEY
X — FURNITURE QUANTITY

EX-X — EXISTING FURNITURE TO BE RELOCATED
X — FURNITURE QUANTITY

CODE COMPLIANCE NOTE:

IN ORDER TO MEET THE NEEDS OF PERSONS WITH DISABILITIES, WHEN APPLICABLE ALL FIXTURES, FURNISHINGS, & EQUIPMENT ITEMS SHALL COMPLY WITH THE CURRENT CONNECTICUT STATE BUILDING CODE INCLUDING; 2009 ICC/ANSI A117.1, SECTION 504 REHABILITATION ACT 1973 INCLUDING CURRENT ADA STANDARDS FOR ACCESSIBLE DESIGN AND SECTION 504 REGULATIONS; AND THE AMERICANS WITH DISABILITIES ACT TITLE II INCLUDING THE CURRENT ADA STANDARDS FOR ACCESSIBLE DESIGN AND ADA REGULATIONS.

ACCESSIBLE KNEE CLEARANCES SHALL COMPLY WITH CURRENT ADA STANDARDS FOR ACCESSIBLE DESIGN, SECTION 306.

COMPLIANCE WITH THE CURRENT CONNECTICUT STATE FIRE SAFETY CODE AND CURRENT O.S.H.A. TITLE 29/LABOR IS ALSO REQUIRED.

THE ITEMS SHALL INCLUDE, BUT ARE NOT LIMITED TO FIXTURES, FURNISHINGS, EQUIPMENT, WORKSTATIONS (INCLUDING BUILT-INS), LABORATORY FUME HOODS, DARKROOM EQUIPMENT, WELDING STATIONS, SHOP EQUIPMENT, ETC.

SECURE ATTACHMENT OF FF&E & T ITEMS

TO ENSURE THE PROPER ATTACHMENT OF FFE & E ITEMS, INCLUDING TECHNOLOGY ITEMS, WHERE ITEMS ARE ATTACHED TO WALL, CEILING, OVERHEAD STRUCTURE, AND/OR FLOOR, CONTRACTOR TO PROVIDE INFORMATION ADEQUATE FOR ARCHITECT TO VERIFY ITEMS ATTACHED TO THE WALL, CIELING, AND/OR FLOOR ARE ATTACHED SECURELY AND PER THE MANUFACTURERS RECOMMENDATIONS. ARCHITECTS REVIEW MAY BE IMPLEMENTED DURING SUBMITTAL PROCESS.

CONTRACTOR TO PROVIDE STRUTS, HANGERS, FASTENERS, SAFETY HARNESSES, CHANNELS, BOLTS, SCREWS, RODS, ETC. TO SECURELY ATTACH ITEMS TO EXISTING STRUCTURE AS REQUIRED TO MEET FIELD CONDITIONS AND MEET APPLICABLE CODES.

CLEAR FLOOR SPACE (WITH ISA SYMBOL)

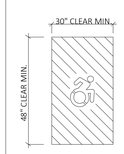

NOTE:
THIS RESPRESENTS A 30" X 48" CLEAR FLOOR SPACE FOR AN ADA WHEELCHAIR.

FURNITURE AND EQUIPMENT NOTES:

(THESE NOTES APPLY TO A13.1-A13.6)

NOTE 1: EX= EXISTING FURNITURE
NOTE 2: EQUIPMENT THAT REQUIRES FLOOR SPACE IS SHOWN ON THE FURNITURE PLANS. ALL OTHER EQUIPMENT IS LISTED IN VOLUME 1.

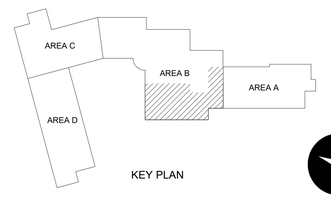

KEY PLAN

DATE: 2/26/2020
DRAWN BY: NN
SCALE: As indicated
REVIEWED BY: CA
PROJECT NO.18-115A

REVISIONS

NO	DATE	DESCRIPTION
	1/29/2020	ISSUED FOR BID
	12/1/2020	

UPPER LEVEL FURNITURE PLAN - AREA B

STATE PROJECT NO. 151-0295 EA/RR
PHASE III - GENERAL BUILDING CONSTRUCTION
WENDELL CROSS
ELEMENTARY SCHOOL
1255 HAMILTON AVENUE
WATERBURY, CONNECTICUT

CONSULTANT'S SEAL

STATE OF CONNECTICUT — FRIAR ARCHITECTURE INC. — NO. 113 — CORPORATE PRACTICE of ARCHITECTURE

STATE OF CONNECTICUT — JOSEPH A. FRIAR — LICENSED ARCHITECT

ARCHITECT'S SEAL

FRIAR
21 Talcott Notch Road
Farmington, CT 06032

SHEET NO.
A13.8

TECHNOLOGY GENERAL NOTES

1. TECHNOLOGY CONTRACTOR, HEREAFTER REFEREED TO AS TC, SHALL NOT PENETRATE ANY STAIRCASE OR ELEVATOR SHAFTS.
2. TC SHALL MAINTAIN AN UPDATED COMPLETE SET OF TECHNOLOGY DRAWINGS WITH CABLE NUMBERS SHOWN FOR EACH CABLE. IT IS THE RESPONSIBILITY OF THE TC TO ENSURE WORKING FROM THE MOST UPDATED SET OF TECHNOLOGY DRAWINGS.
3. TC SHALL ALSO MAINTAIN AND REFERENCE AN UPDATED COMPLETE SET OF THE ELECTRICAL DRAWINGS TO ENSURE PROPER COORDINATION OF SYSTEM INFRASTRUCTURE AND CONDUIT RELATED AREAS.
4. TC SHALL BE RESPONSIBLE FOR DAILY REMOVAL OF ALL DEBRIS, DIRT AND RUBBISH ACCUMULATED AS A RESULT OF THIS INSTALLATION AND MUST LEAVE THE PREMISES CLEAN AND READY FOR USE.
5. ALL LADDER RACKS AND DATA RACKS SHALL BE BONDED AND GROUNDED PER GROUNDING DETAILS. SEE SPECIFICATIONS, SECTION 26 & E DRAWINGS.
6. TC IS RESPONSIBLE FOR FIRE STOPPING IN ACCORDANCE WITH SPECIFICATIONS AND CODES. REFER TO SPECIFICATIONS FOR FURTHER DETAILS.
7. TECHNOLOGY CABLING SHALL NOT BE EXPOSED; ABOVE FINISHED FLOORS OR BELOW FINISHED CEILINGS.
8. CABLE TRAY, PLYWOOD, BACKBOARDS, SLEEVES, CONDUITS. RACEWAY AND TELECOMMUNICATIONS/DATA OUTLETS SHALL BE THE RESPONSIBILITY OF THE ELECTRICAL CONTRACTOR.
9. COORDINATE CAMERA LOCATIONS WITH EXIT SIGNS, ETC.
10. NUMBERING / LABELING OF DATA JACKS IN CLASSROOMS AND ALL OTHER AREAS, L TO R, ENDING WITH CEILING WAP LOCATIONS.
11. PROVIDE WALL CAGES FOR DEVICES IN GYMATORIUM WHERE APPROPRIATE.
12. ALL DATA LOCATIONS SHALL BE CAT6 AND ALL CABLE AND HARDWARE SHALL BE COLOR COORDINATED:
    - STUDENTS DATA = BLUE
    - VOICE (VOIP) = WHITE
    - SECURITY (CAMERAS) = RED
    - WIRELESS = GREEN
    - STAFF/ADMIN/ALL OTHER DATA = YELLOW
13. AT EACH SMARTBOARD LOCATION (SEE SB IN SYMBOLS) ONE (1) CAT 6 DATA SHALL BE PROVIDED AND TERMINATED BY TC.
14. IT IS THE TC'S RESPONSIBILITY TO ENSURE ALL DATA RUNS DO NOT EXCEED LIMIT LENGTHS, INCLUDING LENGTHS FOR PATCH PANEL CABLES AND STATION PATCH CABLES. IF A DISTANCE IS FOUND TO COMPROMISE EIA/TIA STANDARDS THE TC MUST PROVIDE AN ALTERNATIVE RUN AND/OR SUBMIT AN RFI FOR CLARIFICATION.
15. E.C. TO PROVIDE CONDUIT SLEEVES; (4) 4" FOR EACH MDF/IDF CLOSET; (1) 1" FOR ALL OFFICES, WORKROOMS, ALL ROOMS AND CLASSROOMS WITH LESS THAN 8 DATA JACKS; (1) 2" FOR ALL OTHER CLASSROOMS WITH MORE THAN 8 DATA JACKS; (1) 4" FOR COMPUTER LABS, MEDIA CENTER, CAFE, CORRIDORS, AND OTHER AREAS WITH MORE THAN 12 DATA JACKS. PROVIDE ADDITIONAL SLEEVES IF NECESSARY AND/OR IF SLEEVE IS MISSING/NOT SHOWN ON DRAWINGS.

TECHNOLOGY MOUNTING HEIGHTS

1. ALL DIMENSIONS ARE TO THE CENTER OF THE DEVICE UNLESS OTHERWISE NOTED. SEE ELECTRICAL DRAWINGS FOR TYPES AND LOCATIONS.
2. DATA/TELECOMMUNICATIONS OUTLETS: 18" A.F.F. (AT LOCATIONS ABOVE CASEWORK, MOUNT BOTTOM OF DATA/TELECOMMUNICATION OUTLETS AT 2" ABOVE BACKSPLASH. AT LOCATIONS BELOW CASEWORK MOUNT AT 24" A.F.F.)
3. WALL PHONE (INCLUDING PA HANDSETS), 48" A.F.F. TO CENTER OF EARPIECE, CONTRACTOR MUST COMPLY WITH ADA REQUIREMENTS.
4. SECURITY KEYPAD, 48" A.F.F.
5. MICROPHONE WALL JACK, 18" A.F.F.
6. WALL MOUNTED CLOCKS +/- 7'-6" A.F.F. COORDINATE WITH BLOCK COURSING AS OCCURS. CONSULT WITH ARCHITECT IF EXISTING CONDITIONS DIFFER.
7. AUDIO FACEPLATE IN GYMNASIUM AT 18" A.F.F. 1-1/2" CONDUIT DOUBLE GANG BACKBOX WITH DRAWSTRING PROVIDED BY DIV. 26
8. EXTERIOR PA SPEAKERS @ 15'-18' A.F.F OR PER MANUFACTURERS SPECIFICATIONS
9. EXTERIOR CAMERAS @ 12'-15' A.F.G.
10. WAPS IN GYMNASIUM AT 15' A.F.F.
11. VM LOCATIONS FOR VIDEO SECURITY MONITORS AT 60" A.F.F.

A/V NOTES

1. TC MUST COORDINATE AS NECESSARY WITH THE AUDIO VISUAL CONTRACTOR TO RESOLVE SMART BOARD DISPLAY AND OTHER AUDIO VISUAL EQUIPMENT CONFLICTS WITH: FIRE STROBES, LIGHTING CONTROL PANELS, CLOCKS, BELLS, WHITEBOARDS, CORK BOARDS, ETC.

ANALOG TELEPHONE LINES

1. TC TO PROVIDE AN ANALOG TELEPHONE LINE FOR THE ELEVATOR CONTROL ROOM WHICH SHALL BE A SINGLE CAT 6 CABLE RUN FROM THE CLOSEST IDF. PUNCHED DOWN IN THE 110 BLOCK ON THE WALL FIELD IN THE IDF AND 12' LEFT COILED IN CEILING, NOT TERMINATED IN THE ELEVATOR CONTROL ROOM. A 25 PAIR COPPER BACKBONE SHALL RUN BETWEEN ALL DATA CLOSETS AND BE TERMINATED / PUNCHED DOWN TO 110BLOCKS. PLEASE CONFIRM WITH ELEVATOR VENDOR / CONSULTANT REQUIREMENTS FOR PHONE CABLE.

SOUND SYSTEMS NOTES (PA, CLOCKS, LOCAL)

1. ALTHOUGH THE TECHNOLOGY DRAWINGS SHOW SPECIFIC PA SPEAKERS, ACTUAL QUANTITIES MAY VARY. THE SOUND SYSTEM CONTRACTOR SHOULD PROPOSE, INCLUDE AND PROVIDE AMPLE SOUND COVERAGE.

PHONE (VOICE OVER IP) SYSTEM NOTES

1. THE OWNER WILL BE INSTALLING AN IP PHONE SYSTEM. ALL VOICE LOCATIONS SHOULD BE COLOR COORDINATED: DATA CABLE, PATCH CABLES, PATCH PANEL JACKS AND WORKSTATION JACKS SHALL ALL BE WHITE.
2. COORDINATE THE WIREGUARD SIZE AND DIMENSION REQUIREMENTS FOR THE GYM WITH THE OWNER.

CAMERAS (SECURITY SURVEILLANCE) NOTES

1. REFER TO "E" DRAWINGS AND SITE LIGHTING PLAN FOR FURTHER DETAIL ON POLE MOUNTED CAMERA.
2. THERE IS ONE (1) POLE MOUNTED SECURITY SURVEILLANCE CAMERA. THE SECURITY CONTRACTOR SHALL INSTALL AND CONNECT THE CAMERA TO THE DATA NETWORK AND POWER. EC TO PROVIDE CONTINUOUS 110 POWER AT POLE LOCATION. SECURITY CONTRACTOR TO MAKE NECESSARY CONNECTIONS TO POWER PROVIDED BY EC.

SECURITY (ACCESS CONTROL AND INTRUSION DETECTION) NOTES

1. THE ACCESS CONTROL CONTRACTOR SHALL PROVIDE DOOR CONTROLS AT DC LOCATIONS INDICATED ON THE DRAWINGS FOR THE ACCESS CONTROL SYSTEM; AND
2. THE INTRUSION DETECTION CONTRACTOR SHALL PROVIDE DOOR CONTACTS AT DC LOCATIONS INDICATED ON THE DRAWINGS FOR THE INTRUSION DETECTION SYSTEM.
3. ALL EXTERIOR CARD READERS SHALL BE WEATHERPROOF.
4. THE ACCESS CONTROL CONTRACTOR TO PROVIDE CENTRALIZED POWER SUPPLIES TO DELIVER (24 VOLT) POWER TO THE DOORS, CONTACTS, CARD READERS, ETC AND MUST NOT EXCEED 300' FROM POWER SUPPLY TO DOORS. ELECTRICAL CONTRACTOR TO PROVIDE 120V POWER IN MDF/IDF'S FOR ACCESS CONTROL SYSTEM POWER SUPPLIES.
5. DOOR CONTRACTOR AND ELECTRICAL CONTRACTOR TO PROVIDE AT DOOR #21/STAIR D1 EXCEEDS 300' FROM POWER SUPPLY.

SECURITY LEGEND

DS	DOOR STRIKE
DC	DOOR CONTACT (ACCESS CONTROL AND INTRUSION DETECTION)
	MULTI-SENSOR VIDEO CAMERA, WITH MOUNTING HARDWARE.
	VIDEO CAMERA, WITH MOUNTING HARDWARE. 3 DATA (GREEN)
VM	VIDEO MONITOR, 1 DATA (RED). EC TO PROVIDE 120V POWER , DUPLEX RECEPTACLE, FLUSH MOUNT
VR	VIDEO RECORDER
IS M,S	VIDEO INTERCOM STATION - 'M' - MASTER OR 'S' - SUB
SPB	SECURITY PANIC BUTTON
PB	PUSH BUTTONS FOR DOOR RELEASE BUZZ-IN AT INTERCOM/VIDEO LOCATIONS
CR	CARD READER
K	KEYPAD - SECURITY ALARM SYSTEM (2 LOCATIONS)
M	MOTION DETECTOR/SENSOR FOR INTRUSION DETECTION SYSTEM

ABBREVIATIONS

SYMBOL	DESCRIPTION
A	AMPERE
C	CONDUIT
P	POLE
W	WIRE
T	TELEPHONE SERVICE
FA	FIRE ALARM
NF	NON-FUSED
WP	WEATHERPROOF
C/B	CIRCUIT BREAKER
AFF	ABOVE FINISHED FLOOR
AFG	ABOVE FINISHED GRADE
CIR	CIRCUIT
TX	TRANSFORMER
MD	MOTORIZED DAMPER
PE	PRIMARY ELECTRIC SERVICE
RTU	ROOFTOP UNIT
SE	SECONDARY ELECTRIC SERVICE
TCP	TEMPERATURE CONTROL PANEL
SD	SMOKE DAMPER
IG	ISOLATED GROUND
RMC	RIGID METALLIC CONDUIT
EMT	ELECTRIC METALLIC TUBING
FMC	FLEXIBLE METALLIC TUBING
TV	DISPLAY MONITOR
PVC	POLYVINYL CHLORIDE CONDUIT
EF	EXHAUST FAN
REF	ROOF EXHAUST FAN
AHU	AIR HANDLING UNIT
CUH	CABINET UNIT HEATER
EWC	ELECTRIC WATER COOLER
EWH	ELECTRIC WATER HEATER
GFI	GROUND FAULT INTERRUPTER
MAU	MAKE-UP AIR UNIT
WG	WIRE GUARD
S&P	SPACE AND PROVISION
E	EXISTING TO REMAIN
RE	REMOVE EXISTING
RL	RELOCATE EXISTING
NL	NEW LOCATION OF EXISTING RELOCATED
NR	NEW TO REPLACE EXISTING
RR	REMOVE AND REPLACE ON NEW SURFACE
AC	ABOVE COUNTER
T	TELEPHONE SERVICE
PTZ	PAN TILT ZOOM

TECHNOLOGY LEGEND

SYMBOL	DESCRIPTION
C	COMMUNICATIONS FLOOR MONUMENT WITH LFMC WHIP CONNECTION
	COMBINATION DATA/VOICE/OUTLET (BACKBOX AND CONDUIT STUBBED ABOVE FINISHED CEILING, DRAG LINE BY DIV. 26)
2/4	2 VOICE (VOICE OVER IP), 4 DATA.
1/2	1 VOICE (VOICE OVER IP), 2 DATA
1/2	COMBINATION 1 VOICE (VOICE OVER IP)/ 2 DATA FLOOR RECEPTACLE
2	2 DATA FLOOR RECEPTACLE
W	1 VOICE (VOICE OVER IP), WALL MOUNTED
T	DEDICATED PHONE LINE, ANALOG TELEPHONE JACK (PUTS LINE)
3	AT TEACHER (COMPUTER WORKSTATION). 3 DATA (2 YELLOW FOR STAFF/ADMIN VLAN AMD 1 WHITE FOR VOIP PHONE
WAP	2 DATA (GREEN) OUTLET FOR WIRELESS ACCESS POINT - CEILING MOUNTED
WAP	2 DATA (GREEN) OUTLET FOR WIRELESS ACCESS POINT - WALL MOUNTED
TV	2 DATA OUTLET (FOR VIDEO OVER IP) E.C. TO PROVIDE 120V POWER OUTLET (DUPLEX) FLUSH MOUNT
S	CEILING-MOUNTED, PA SPEAKER
S	CEILING-MOUNTED, CLASSROOM AUDIO AMPLIFICATION SYSTEM SPEAKER IN CENTER. TC TO PROVIDE AMPLIFICATION BASE UNIT FOR EACH SPEAKER. REFER TO BID SPECS. E.C. TO PROVIDE 120V POWER WITH WHIP CONNECTION
S, *	LOCAL SOUND SYSTEM PENDENT SPEAKER
	WALL-MOUNTED, PA SPEAKER
S *	CEILING-MOUNTED, LOCAL SOUND SYSTEM SPEAKER
*	WALL-MOUNTED, LOCAL SOUND SYSTEM SPEAKER
S * C	SUB/CENTER SPEAKER WALL MOUNT FOR LOCAL SOUND SYSTEM, TO BE MOUNTED ABOVE. MAY BE RAFTER SPEAKER. REFER TO ELEVATION ON ARCHITECTURAL DRAWINGS. COORDINATE EXACT LOCATION WITH ARCHITECT.
* D	REAR DELAY / FILL-IN SPEAKERS WALL MOUNT FOR LOCAL SOUND SYSTEM
VC	SOUND SYSTEM VOLUME CONTROLLER
M	SOUND SYSTEM BLANK DOUBLE GANG BOX WITH 1-1/2" CONDUIT STUBBED ABOVE CEILING AND PULL STRING FOR AV CABLING PROVIDED BY AV CONTRACTOR
	PA/SOUND SYSTEM ADMIN. WORKSTATION
C	WALL CLOCK WITH HANGER TYPE OUTLET
25	2 CAT6 DATA - BLUE (STUDENT NETWORK)
45	4 CAT6 DATA - BLUE (STUDENT NETWORK)
65	6 CAT6 DATA - BLUE (STUDENT NETWORK)
J AV1	2 USB PORTS, 1 VGA CONNECTION. AUDIO, HDMI
LCD	LCD PROJECTOR (REAR PROJECTION) LOCATION. MOUNT AND PROJECTOR TO BE PROVIDED BY AV CONTRACTOR. EC TO PROVIDE 120V POWER.
AVR	A/V RACK
AV	BLANK DOUBLE GANG BOX WITH 1-1/2" CONDUIT PULL STRING THAT GOES TO THE AV RACK LOCATIONIN THE GYM OFFICE. FOR FUTURE AV CABLING AND MIC INPUTS TO BE PROVIDED BY OTHERS.
AV L	LOWER AUDIO VISUAL BLANK DOUBLE GANG BOX @ 18" A.F.F. WITH 1-1/2" CONDUIT WITH PULL STRING THAT GOES ABOVE CEILING AND OVERHEAD TO THE AV RACK LOCATION IN THE GYM OFFICE. FOR FUTURE AV CABING AND AUDIO CONTROLS TO BE PROVIDED BY OTHERS.
AV T	BLANK SINGLE GANG WITH 1-1/2" CONDUIT PULL STRING STUBBED ABOVE CEILING (FOR AUDIO/VISUAL INPUT FACEPLATE WITH (1) ONE HDMI INPUT AND (1) ONE USB INPUT AT TEACHER'S COMPUTER LOCATION); SHOULD BE PLACED ADJACENT TO TEACHER'S DATA JACKS.
TP	BLANK DOUBLE GANG BOX WITH 1-1/2" CONDUIT AND PULL STRING THAT GOES TO AV RACK LOCATION (FOR TOUCH PANEL FOR AV CONTROLS INCLUDING VOLUME CONTROL FOR CAFE/AUD SYSTEMS.) 1-1/4" CONDUIT STUBBED ABOVE AND DOUBLE GANG BACKBOX PROVIDED BY DIV. 26
SB	SMART DISPLAY INTERACTIVE PANEL LOCATION: 1 (YELLOW) DATA AND RELATED CABLING. REFER TO DETAILS. EC TO PROVIDE 120V POWER OUTLET (DUPLEX) FLUSH MOUNT.
# # R,F,S	FLOOR BOX WITH POWER AND COMMUNICATION SERVICES: SUBLETTER "R" INDICATES RECESSED COVER. SUBLETTER "F" INDICATES FLUSH COVER. SUBLETTER "S" INDICATED SURFACE BACKBOX (MONUMENT); REFER TO "T" SERIES DWGS. FOR ACTUAL COMM. DEVICE REQUIREMENT. # INDICATES QUANTITY OF COMM. DEVICES. REFER TO E1.0 FOR BOX SPEC (BOX, CONDUITS & RECEPT. PROVIDED BY DIV. 26; COMM. DEVICES AND WIRING PROVIDED BY DIV. 27)

DATE: 12/31/2019
DRAWN BY: MK
SCALE: 12" = 1'-0"
REVIEWED BY: JG
PROJECT NO.18-115A

REVISIONS

NO.	DATE	DESCRIPTION
	1/29/2020	ISSUED FOR BID

TECHNOLOGY LEGEND AND NOTES

STATE PROJECT NO. 151-0295 EA/RR
PHASE III - GENERAL CONSTRUCTION
WENDELL CROSS ELEMENTARY SCHOOL
1255 HAMILTON AVENUE
WATERBURY, CONNECTICUT

CONSULTANT'S SEAL

STATE OF CONNECTICUT · FRIAR ARCHITECTURE, INC. · NO. 113 · DULY REGISTERED TO PRACTICE ARCHITECTURE

ARCHITECT'S SEAL

FRIAR
21 Talcott Notch Road
Farmington, CT 06032

SHEET NO.
T1.0

GRAPHICS LEGEND

EXISTING FURNITURE
TO BE MOVED & INSTALLED BY OWNER.

NEW FURNITURE

FURNITURE LEGEND

BC	BOOKCASE
C	CHAIR
D	DESK
EQ	EQUIPMENT
F	FILE CABINET
ST	STORAGE
T	TABLE

TECHNOLOGY TAG:

TECH TYPE
TECH KEY

TECHNOLOGY QUANTITY

CODE COMPLIANCE NOTE:

IN ORDER TO MEET THE NEEDS OF PERSONS WITH DISABILITIES, WHEN APPLICABLE ALL FIXTURES, FURNISHINGS, & EQUIPMENT ITEMS SHALL COMPLY WITH THE CURRENT CONNECTICUT STATE BUILDING CODE INCLUDING; 2009 ICC/ANSI A117.1, SECTION 504 REHABILITATION ACT 1973 INCLUDING CURRENT ADA STANDARDS FOR ACCESSIBLE DESIGN AND SECTION 504 REGULATIONS; AND THE AMERICANS WITH DISABILITIES ACT TITLE II INCLUDING THE CURRENT ADA STANDARDS FOR ACCESSIBLE DESIGN AND ADA REGULATIONS.

ACCESSIBLE KNEE CLEARANCES SHALL COMPLY WITH CURRENT ADA STANDARDS FOR ACCESSIBLE DESIGN, SECTION 306.

COMPLIANCE WITH THE CURRENT CONNECTICUT STATE FIRE SAFETY CODE AND CURRENT O.S.H.A. TITLE 29/LABOR IS ALSO REQUIRED.

THE ITEMS SHALL INCLUDE, BUT ARE NOT LIMITED TO FIXTURES, FURNISHINGS, EQUIPMENT, WORKSTATIONS (INCLUDING BUILT-INS), LABORATORY FUME HOODS, DARKROOM EQUIPMENT, WELDING STATIONS, SHOP EQUIPMENT, ETC.

SECURE ATTACHMENT OF FF&E & T ITEMS

TO ENSURE THE PROPER ATTACHMENT OF FFE & E ITEMS, INCLUDING TECHNOLOGY ITEMS, WHERE ITEMS ARE ATTACHED TO WALL, CEILING, OVERHEAD STRUCTURE, AND/OR FLOOR, CONTRACTOR TO PROVIDE INFORMATION ADEQUATE FOR ARCHITECT TO VERIFY ITEMS ATTACHED TO THE WALL, CIELING, AND/OR FLOOR ARE ATTACHED SECURELY AND PER THE MANUFACTURERS RECOMMENDATIONS. ARCHITECTS REVIEW MAY BE IMPLEMENTED DURING SUBMITTAL PROCESS.

CONTRACTOR TO PROVIDE STRUTS, HANGERS, FASTENERS, SAFETY HARNESSES, CHANNELS, BOLTS, SCREWS, RODS, ETC. TO SECURELY ATTACH ITEMS TO EXISTING STRUCTURE AS REQUIRED TO MEET FIELD CONDITIONS AND MEET APPLICABLE CODES.

CLEAR FLOOR SPACE (WITH ISA SYMBOL)



NOTE:
THIS RESPRESENTS A 30" X 48" CLEAR FLOOR SPACE FOR AN ADA WHEELCHAIR.

FURNITURE AND EQUIPMENT NOTES:

(THESE NOTES APPLY TO A13.1-A13.6)

NOTE 1: EX= EXISTING FURNITURE
NOTE 2: EQUIPMENT THAT REQUIRES FLOOR SPACE IS SHOWN ON THE FURNITURE PLANS. ALL OTHER EQUIPMENT IS LISTED IN VOLUME 1.

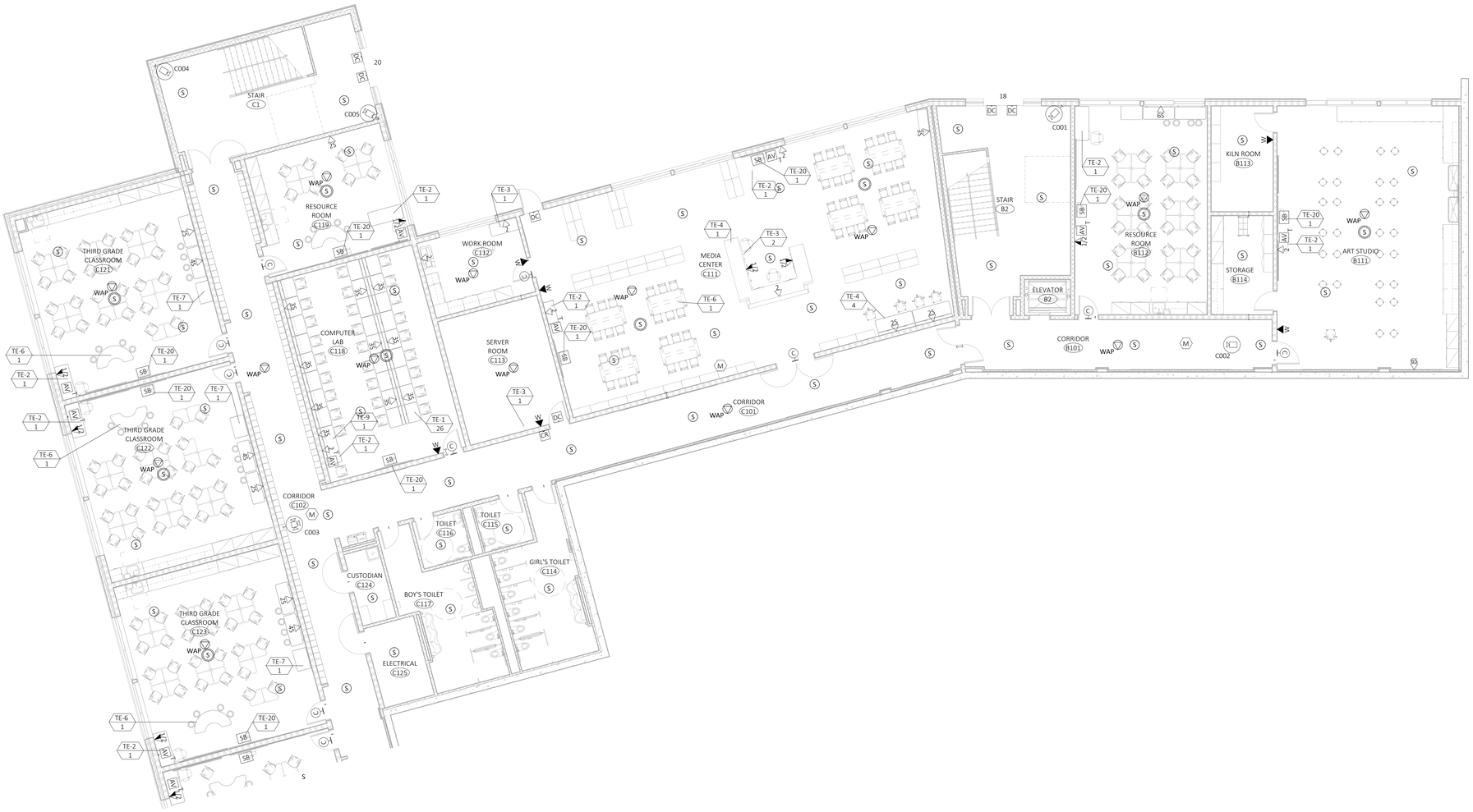

LOWER LEVEL AREA B & C - TECHNOLOGY

SCALE: 1/8" = 1'-0"

DATE: 12/31/2019
DRAWN BY: Author
SCALE: As indicated
REVIEWED BY: Checker
PROJECT NO.: 18-115A

REVISIONS

NO	DATE	DESCRIPTION
	12/1/2020	

LOWER LEVEL AREA B & C - TECHNOLOGY

STATE PROJECT NO. 151-0295 EA/RR
ADDITIONS AND ALTERATIONS
WENDELL CROSS ELEMENTARY SCHOOL
1255 HAMILTON AVENUE
WATERBURY, CONNECTICUT

CONSULTANT'S SEAL

STATE OF CONNECTICUT
FRIAR ARCHITECTURE INC
NO. 113
CORPORATE PRACTICE of ARCHITECTURE

ARCHITECT'S SEAL

FRIAR
21 Talcott Notch Road
Farmington, CT 06032

SHEET NO.
TE1.1

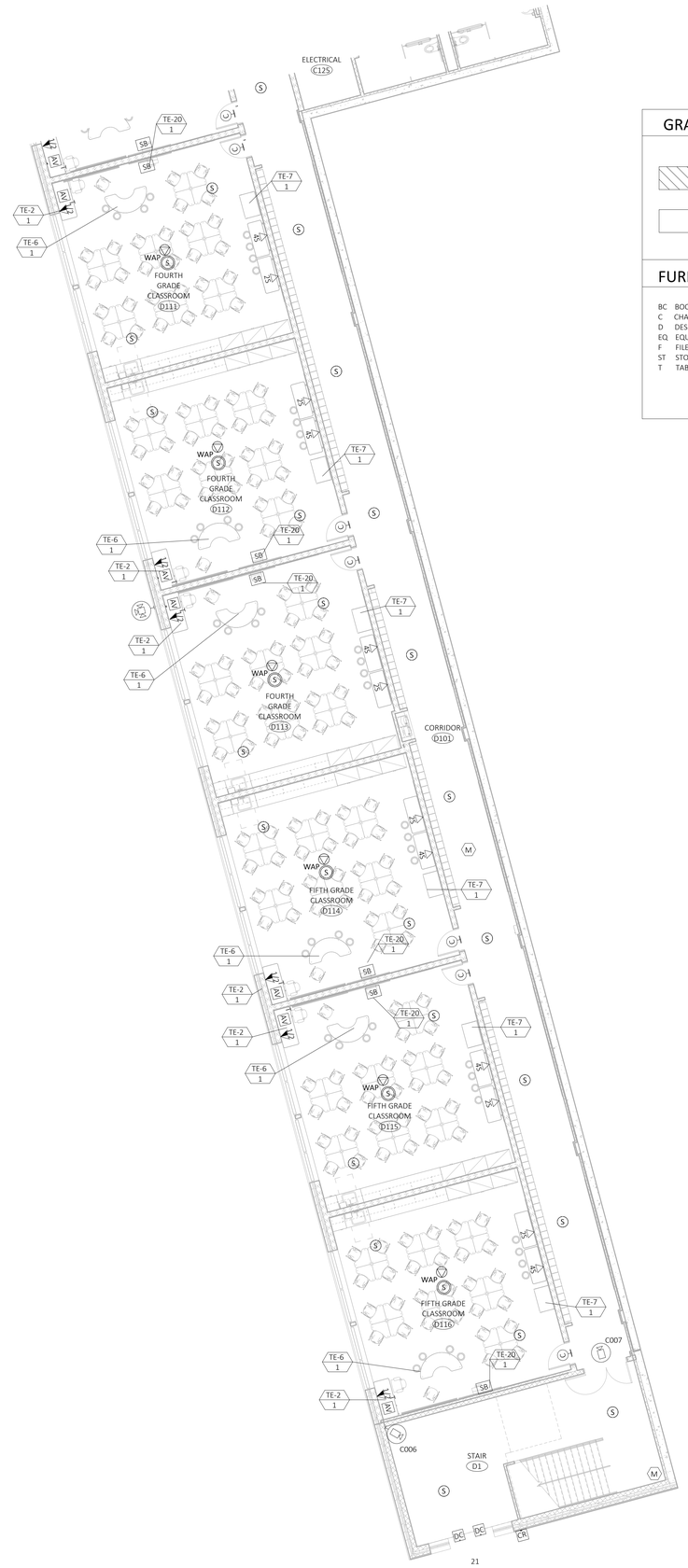

21

GRAPHICS LEGEND

EXISTING FURNITURE
TO BE MOVED & INSTALLED BY OWNER.

NEW FURNITURE

FURNITURE LEGEND

BC	BOOKCASE
C	CHAIR
D	DESK
EQ	EQUIPMENT
F	FILE CABINET
ST	STORAGE
T	TABLE

TECHNOLOGY TAG:

TECH TYPE
TECH KEY
X-X
X
TECHNOLOGY QUANTITY

CODE COMPLIANCE NOTE:

IN ORDER TO MEET THE NEEDS OF PERSONS WITH DISABILITIES, WHEN APPLICABLE ALL FIXTURES, FURNISHINGS, & EQUIPMENT ITEMS SHALL COMPLY WITH THE CURRENT CONNECTICUT STATE BUILDING CODE INCLUDING; 2009 ICC/ANSI A117.1, SECTION 504 REHABILITATION ACT 1973 INCLUDING CURRENT ADA STANDARDS FOR ACCESSIBLE DESIGN AND SECTION 504 REGULATIONS; AND THE AMERICANS WITH DISABILITIES ACT TITLE II INCLUDING THE CURRENT ADA STANDARDS FOR ACCESSIBLE DESIGN AND ADA REGULATIONS.

ACCESSIBLE KNEE CLEARANCES SHALL COMPLY WITH CURRENT ADA STANDARDS FOR ACCESSIBLE DESIGN, SECTION 306.
COMPLIANCE WITH THE CURRENT CONNECTICUT STATE FIRE SAFETY CODE AND CURRENT O.S.H.A. TITLE 29/LABOR IS ALSO REQUIRED.

THE ITEMS SHALL INCLUDE, BUT ARE NOT LIMITED TO FIXTURES, FURNISHINGS, EQUIPMENT, WORKSTATIONS (INCLUDING BUILT-INS), LABORATORY FUME HOODS, DARKROOM EQUIPMENT, WELDING STATIONS, SHOP EQUIPMENT, ETC.

SECURE ATTACHMENT OF FF&E & T ITEMS

TO ENSURE THE PROPER ATTACHMENT OF FFE & E ITEMS, INCLUDING TECHNOLOGY ITEMS, WHERE ITEMS ARE ATTACHED TO WALL, CEILING, OVERHEAD STRUCTURE, AND/OR FLOOR, CONTRACTOR TO PROVIDE INFORMATION ADEQUATE FOR ARCHITECT TO VERIFY ITEMS ATTACHED TO THE WALL, CIELING, AND/OR FLOOR ARE ATTACHED SECURELY AND PER THE MANUFACTURERS RECOMMENDATIONS. ARCHITECTS REVIEW MAY BE IMPLEMENTED DURING SUBMITTAL PROCESS.

CONTRACTOR TO PROVIDE STRUTS, HANGERS, FASTENERS, SAFETY HARNESSES, CHANNELS, BOLTS, SCREWS, RODS, ETC. TO SECURELY ATTACH ITEMS TO EXISTING STRUCTURE AS REQUIRED TO MEET FIELD CONDITIONS AND MEET APPLICABLE CODES.

CLEAR FLOOR SPACE (WITH ISA SYMBOL)

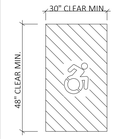

NOTE:
THIS RESPRESENTS A 30" X 48" CLEAR FLOOR SPACE FOR AN ADA WHEELCHAIR.

FURNITURE AND EQUIPMENT NOTES:

(THESE NOTES APPLY TO A13.1-A13.6)

NOTE 1: EX= EXISTING FURNITURE
NOTE 2: EQUIPMENT THAT REQUIRES FLOOR SPACE IS SHOWN ON THE FURNITURE PLANS. ALL OTHER EQUIPMENT IS LISTED IN VOLUME 1.

LOWER LEVEL AREA D - TECHNOLOGY

SCALE: 1/8" = 1'-0"

DATE: 12/31/2019
DRAWN BY: Author
SCALE: As indicated
REVIEWED BY: Checker
PROJECT NO.: 18-115A

REVISIONS

NO	DATE	DESCRIPTION
	12/1/2020	

LOWER LEVEL AREA D - TECHNOLOGY

STATE PROJECT NO. 151-0295 EA/RR
ADDITIONS AND ALTERATIONS
WENDELL CROSS
ELEMENTARY SCHOOL
1255 HAMILTON AVENUE
WATERBURY, CONNECTICUT

CONSULTANT'S SEAL

STATE OF CONNECTICUT
FRIAR ARCHITECTURE, INC.
NO. 113
CORPORATE PRACTICE OF ARCHITECTURE

ARCHITECT'S SEAL

FRIAR
21 Talcott Notch Road
Farmington, CT 06032

SHEET NO.
TE1.2

GRAPHICS LEGEND

EXISTING FURNITURE TO BE MOVED & INSTALLED BY OWNER.

NEW FURNITURE

FURNITURE LEGEND

BC	BOOKCASE
C	CHAIR
D	DESK
EQ	EQUIPMENT
F	FILE CABINET
ST	STORAGE
T	TABLE

TECHNOLOGY TAG:

TECH TYPE
TECH KEY
X-X
X
TECHNOLOGY QUANTITY

CODE COMPLIANCE NOTE:

IN ORDER TO MEET THE NEEDS OF PERSONS WITH DISABILITIES, WHEN APPLICABLE ALL FIXTURES, FURNISHINGS, & EQUIPMENT ITEMS SHALL COMPLY WITH THE CURRENT CONNECTICUT STATE BUILDING CODE INCLUDING; 2009 ICC/ANSI A117.1, SECTION 504 REHABILITATION ACT 1973 INCLUDING CURRENT ADA STANDARDS FOR ACCESSIBLE DESIGN AND SECTION 504 REGULATIONS; AND THE AMERICANS WITH DISABILITIES ACT TITLE II INCLUDING THE CURRENT ADA STANDARDS FOR ACCESSIBLE DESIGN AND ADA REGULATIONS.

ACCESSIBLE KNEE CLEARANCES SHALL COMPLY WITH CURRENT ADA STANDARDS FOR ACCESSIBLE DESIGN, SECTION 306.

COMPLIANCE WITH THE CURRENT CONNECTICUT STATE FIRE SAFETY CODE AND CURRENT O.S.H.A. TITLE 29/LABOR IS ALSO REQUIRED.

THE ITEMS SHALL INCLUDE, BUT ARE NOT LIMITED TO FIXTURES, FURNISHINGS, EQUIPMENT, WORKSTATIONS (INCLUDING BUILT-INS), LABORATORY FUME HOODS, DARKROOM EQUIPMENT, WELDING STATIONS, SHOP EQUIPMENT, ETC.

SECURE ATTACHMENT OF FF&E & T ITEMS

TO ENSURE THE PROPER ATTACHMENT OF FFE & E ITEMS, INCLUDING TECHNOLOGY ITEMS, WHERE ITEMS ARE ATTACHED TO WALL, CEILING, OVERHEAD STRUCTURE, AND/OR FLOOR, CONTRACTOR TO PROVIDE INFORMATION ADEQUATE FOR ARCHITECT TO VERIFY ITEMS ATTACHED TO THE WALL, CIELING, AND/OR FLOOR ARE ATTACHED SECURELY AND PER THE MANUFACTURERS RECOMMENDATIONS. ARCHITECTS REVIEW MAY BE IMPLEMENTED DURING SUBMITTAL PROCESS.

CONTRACTOR TO PROVIDE STRUTS, HANGERS, FASTENERS, SAFETY HARNESSES, CHANNELS, BOLTS, SCREWS, RODS, ETC. TO SECURELY ATTACH ITEMS TO EXISTING STRUCTURE AS REQUIRED TO MEET FIELD CONDITIONS AND MEET APPLICABLE CODES.

CLEAR FLOOR SPACE (WITH ISA SYMBOL)



NOTE:
THIS RESPRESENTS A 30" X 48" CLEAR FLOOR SPACE FOR AN ADA WHEELCHAIR.

FURNITURE AND EQUIPMENT NOTES:

(THESE NOTES APPLY TO A13.1-A13.6)

NOTE 1: EX= EXISTING FURNITURE
NOTE 2: EQUIPMENT THAT REQUIRES FLOOR SPACE IS SHOWN ON THE FURNITURE PLANS. ALL OTHER EQUIPMENT IS LISTED IN VOLUME 1.

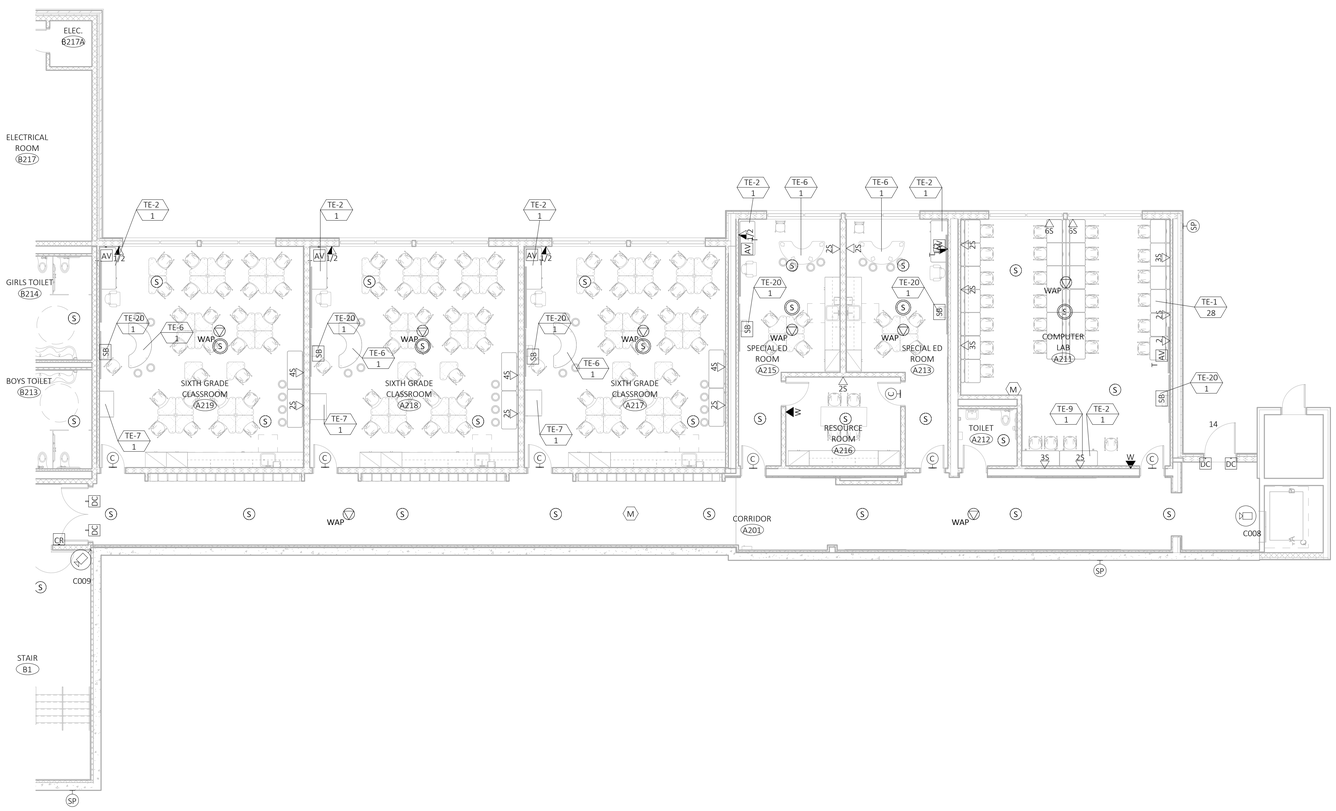

MAIN LEVEL AREA A - TECHNOLOGY

SCALE: 1/8" = 1'-0"

DATE: 12/31/2019
DRAWN BY: Author
SCALE: As indicated
REVIEWED BY: Checker
PROJECT NO. 18-115A

REVISIONS

NO.	DATE	DESCRIPTION
	12/1/2020	

MAIN LEVEL AREA A - TECHNOLOGY

STATE PROJECT NO. 151-0295 EA/RR
ADDITIONS AND ALTERATIONS
WENDELL CROSS
ELEMENTARY SCHOOL
1255 HAMILTON AVENUE
WATERBURY, CONNECTICUT

CONSULTANT'S SEAL

ARCHITECT'S SEAL

FRIAR
21 Talcott Notch Road
Farmington, CT 06032

SHEET NO.
TE1.3

GRAPHICS LEGEND

EXISTING FURNITURE
TO BE MOVED & INSTALLED BY OWNER.

NEW FURNITURE

FURNITURE LEGEND

BC	BOOKCASE
C	CHAIR
D	DESK
EQ	EQUIPMENT
F	FILE CABINET
ST	STORAGE
T	TABLE

TECHNOLOGY TAG:

TECH TYPE
TECH KEY
X-X
X
TECHNOLOGY QUANTITY

CODE COMPLIANCE NOTE:

IN ORDER TO MEET THE NEEDS OF PERSONS WITH DISABILITIES, WHEN APPLICABLE ALL FIXTURES, FURNISHINGS, & EQUIPMENT ITEMS SHALL COMPLY WITH THE CURRENT CONNECTICUT STATE BUILDING CODE INCLUDING; 2009 ICC/ANSI A117.1, SECTION 504 REHABILITATION ACT 1973 INCLUDING CURRENT ADA STANDARDS FOR ACCESSIBLE DESIGN AND SECTION 504 REGULATIONS; AND THE AMERICANS WITH DISABILITIES ACT TITLE II INCLUDING THE CURRENT ADA STANDARDS FOR ACCESSIBLE DESIGN AND ADA REGULATIONS.

ACCESSIBLE KNEE CLEARANCES SHALL COMPLY WITH CURRENT ADA STANDARDS FOR ACCESSIBLE DESIGN, SECTION 306.

COMPLIANCE WITH THE CURRENT CONNECTICUT STATE FIRE SAFETY CODE AND CURRENT O.S.H.A. TITLE 29/LABOR IS ALSO REQUIRED.

THE ITEMS SHALL INCLUDE, BUT ARE NOT LIMITED TO FIXTURES, FURNISHINGS, EQUIPMENT, WORKSTATIONS (INCLUDING BUILT-INS), LABORATORY FUME HOODS, DARKROOM EQUIPMENT, WELDING STATIONS, SHOP EQUIPMENT, ETC.

SECURE ATTACHMENT OF FF&E & T ITEMS

TO ENSURE THE PROPER ATTACHMENT OF FFE & E ITEMS, INCLUDING TECHNOLOGY ITEMS, WHERE ITEMS ARE ATTACHED TO WALL, CEILING, OVERHEAD STRUCTURE, AND/OR FLOOR, CONTRACTOR TO PROVIDE INFORMATION ADEQUATE FOR ARCHITECT TO VERIFY ITEMS ATTACHED TO THE WALL, CIELING, AND/OR FLOOR ARE ATTACHED SECURELY AND PER THE MANUFACTURERS RECOMMENDATIONS. ARCHITECTS REVIEW MAY BE IMPLEMENTED DURING SUBMITTAL PROCESS.

CONTRACTOR TO PROVIDE STRUTS, HANGERS, FASTENERS, SAFETY HARNESSES, CHANNELS, BOLTS, SCREWS, RODS, ETC. TO SECURELY ATTACH ITEMS TO EXISTING STRUCTURE AS REQUIRED TO MEET FIELD CONDITIONS AND MEET APPLICABLE CODES.

CLEAR FLOOR SPACE (WITH ISA SYMBOL)



NOTE:
THIS RESPRESENTS A 30" X 48" CLEAR FLOOR SPACE FOR AN ADA WHEELCHAIR.

FURNITURE AND EQUIPMENT NOTES:

(THESE NOTES APPLY TO A13.1-A13.6)

NOTE 1: EX= EXISTING FURNITURE
NOTE 2: EQUIPMENT THAT REQUIRES FLOOR SPACE IS SHOWN ON THE FURNITURE PLANS. ALL OTHER EQUIPMENT IS LISTED IN VOLUME 1.

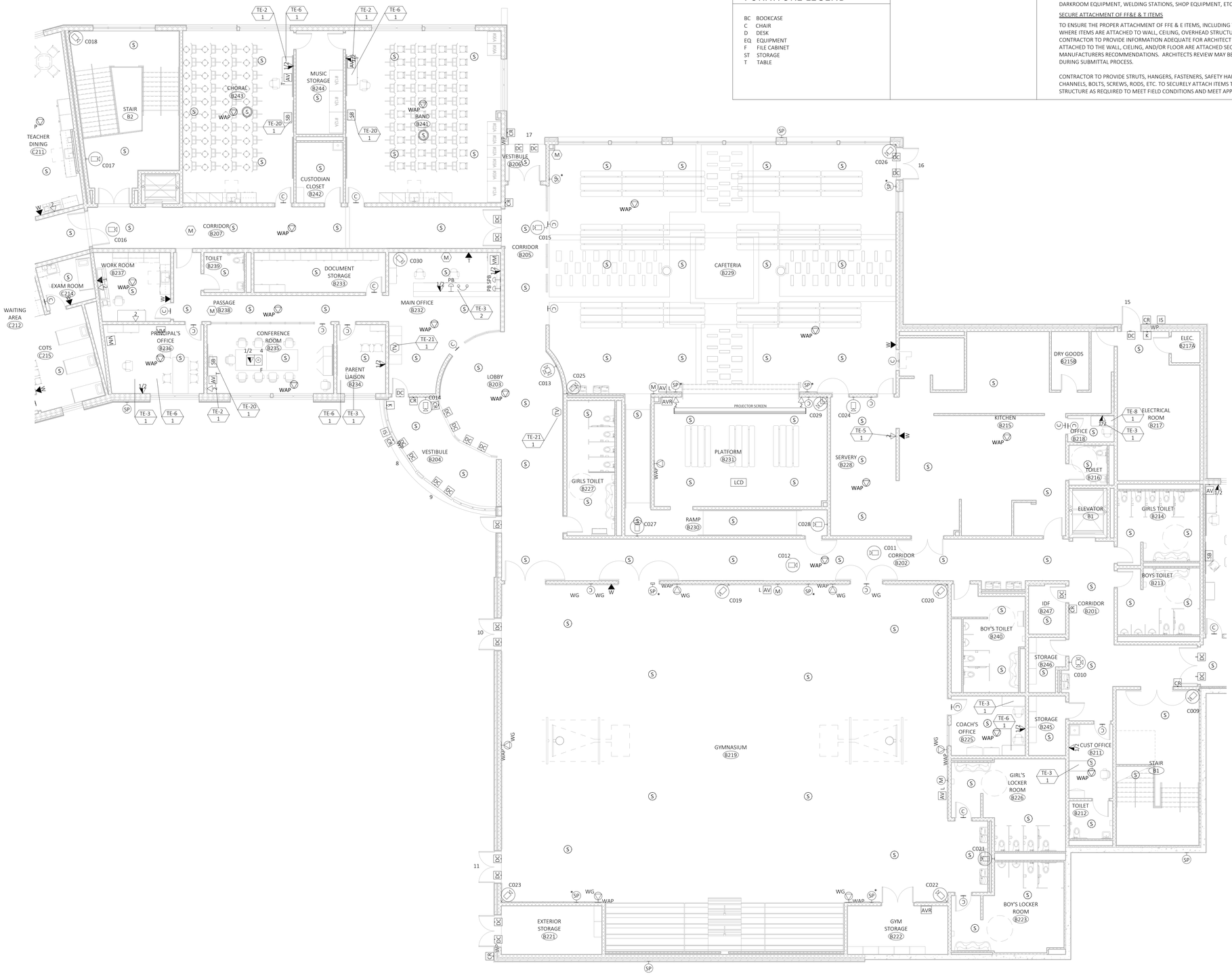

MAIN LEVEL AREA B - TECHNOLOGY

SCALE: 1/8" = 1'-0"

DATE: 12/31/2019
DRAWN BY: Author
SCALE: As indicated
REVIEWED BY: Checker
PROJECT NO.: 18-115A

REVISIONS

NO.	DATE	DESCRIPTION
	12/1/2020	

MAIN LEVEL AREA B - TECHNOLOGY

STATE PROJECT NO. 151-0295 EA/RR
ADDITIONS AND ALTERATIONS
WENDELL CROSS
ELEMENTARY SCHOOL
1255 HAMILTON AVENUE
WATERBURY, CONNECTICUT

CONSULTANT'S SEAL

STATE OF CONNECTICUT
FRIAR ARCHITECTURE, INC.
DOMESTIC PROFESSIONAL CORPORATE PRACTICE OF ARCHITECTURE
NO. 113

ARCHITECT'S SEAL

FRIAR
21 Talcott Notch Road
Farmington, CT 06032

SHEET NO.
TE1.4

GRAPHICS LEGEND

EXISTING FURNITURE
TO BE MOVED & INSTALLED BY OWNER.

NEW FURNITURE

FURNITURE LEGEND

BC	BOOKCASE
C	CHAIR
D	DESK
EQ	EQUIPMENT
F	FILE CABINET
ST	STORAGE
T	TABLE

TECHNOLOGY TAG:

TECH TYPE
TECH KEY
TECHNOLOGY QUANTITY

CODE COMPLIANCE NOTE:

IN ORDER TO MEET THE NEEDS OF PERSONS WITH DISABILITIES, WHEN APPLICABLE ALL FIXTURES, FURNISHINGS, & EQUIPMENT ITEMS SHALL COMPLY WITH THE CURRENT CONNECTICUT STATE BUILDING CODE INCLUDING; 2009 ICC/ANSI A117.1, SECTION 504 REHABILITATION ACT 1973 INCLUDING CURRENT ADA STANDARDS FOR ACCESSIBLE DESIGN AND SECTION 504 REGULATIONS; AND THE AMERICANS WITH DISABILITIES ACT TITLE II INCLUDING THE CURRENT ADA STANDARDS FOR ACCESSIBLE DESIGN AND ADA REGULATIONS.

ACCESSIBLE KNEE CLEARANCES SHALL COMPLY WITH CURRENT ADA STANDARDS FOR ACCESSIBLE DESIGN, SECTION 306.

COMPLIANCE WITH THE CURRENT CONNECTICUT STATE FIRE SAFETY CODE AND CURRENT O.S.H.A. TITLE 29/LABOR IS ALSO REQUIRED.

THE ITEMS SHALL INCLUDE, BUT ARE NOT LIMITED TO FIXTURES, FURNISHINGS, EQUIPMENT, WORKSTATIONS (INCLUDING BUILT-INS), LABORATORY FUME HOODS, DARKROOM EQUIPMENT, WELDING STATIONS, SHOP EQUIPMENT, ETC.

SECURE ATTACHMENT OF FF&E & T ITEMS

TO ENSURE THE PROPER ATTACHMENT OF FFE & E ITEMS, INCLUDING TECHNOLOGY ITEMS, WHERE ITEMS ARE ATTACHED TO WALL, CEILING, OVERHEAD STRUCTURE, AND/OR FLOOR, CONTRACTOR TO PROVIDE INFORMATION ADEQUATE FOR ARCHITECT TO VERIFY ITEMS ATTACHED TO THE WALL, CIELING, AND/OR FLOOR ARE ATTACHED SECURELY AND PER THE MANUFACTURERS RECOMMENDATIONS. ARCHITECTS REVIEW MAY BE IMPLEMENTED DURING SUBMITTAL PROCESS.

CONTRACTOR TO PROVIDE STRUTS, HANGERS, FASTENERS, SAFETY HARNESSES, CHANNELS, BOLTS, SCREWS, RODS, ETC. TO SECURELY ATTACH ITEMS TO EXISTING STRUCTURE AS REQUIRED TO MEET FIELD CONDITIONS AND MEET APPLICABLE CODES.

CLEAR FLOOR SPACE (WITH ISA SYMBOL)



NOTE:
THIS RESPRESENTS A 30" X 48" CLEAR FLOOR SPACE FOR AN ADA WHEELCHAIR.

FURNITURE AND EQUIPMENT NOTES:

(THESE NOTES APPLY TO A13.1-A13.6)

NOTE 1: EX= EXISTING FURNITURE
NOTE 2: EQUIPMENT THAT REQUIRES FLOOR SPACE IS SHOWN ON THE FURNITURE PLANS. ALL OTHER EQUIPMENT IS LISTED IN VOLUME 1.



MAIN LEVEL AREA C - TECHNOLOGY

SCALE: 1/8" = 1'-0"

DATE: 12/31/2019
DRAWN BY: Author
SCALE: As indicated
REVIEWED BY: Checker
PROJECT NO.: 18-115A

REVISIONS

NO	DATE	DESCRIPTION
	12/1/2020	

MAIN LEVEL AREA C - TECHNOLOGY

STATE PROJECT NO. 151-0295 EA/RR
ADDITIONS AND ALTERATIONS
WENDELL CROSS
ELEMENTARY SCHOOL
1255 HAMILTON AVENUE
WATERBURY, CONNECTICUT

CONSULTANT'S SEAL

STATE OF CONNECTICUT · FRIAR ARCHITECTURE, INC. · CORPORATE PRACTICE OF ARCHITECTURE · NO. 113

ARCHITECT'S SEAL

FRIAR
21 Talcott Notch Road
Farmington, CT 06032

SHEET NO.
TE1.5



GRAPHICS LEGEND

EXISTING FURNITURE
TO BE MOVED & INSTALLED BY OWNER.

NEW FURNITURE

FURNITURE LEGEND

BC	BOOKCASE
C	CHAIR
D	DESK
EQ	EQUIPMENT
F	FILE CABINET
ST	STORAGE
T	TABLE

TECHNOLOGY TAG:

TECH TYPE
TECH KEY
X-X
X
TECHNOLOGY QUANTITY

CODE COMPLIANCE NOTE:

IN ORDER TO MEET THE NEEDS OF PERSONS WITH DISABILITIES, WHEN APPLICABLE ALL FIXTURES, FURNISHINGS, & EQUIPMENT ITEMS SHALL COMPLY WITH THE CURRENT CONNECTICUT STATE BUILDING CODE INCLUDING; 2009 ICC/ANSI A117.1, SECTION 504 REHABILITATION ACT 1973 INCLUDING CURRENT ADA STANDARDS FOR ACCESSIBLE DESIGN AND SECTION 504 REGULATIONS; AND THE AMERICANS WITH DISABILITIES ACT TITLE II INCLUDING THE CURRENT ADA STANDARDS FOR ACCESSIBLE DESIGN AND ADA REGULATIONS.

ACCESSIBLE KNEE CLEARANCES SHALL COMPLY WITH CURRENT ADA STANDARDS FOR ACCESSIBLE DESIGN, SECTION 306.

COMPLIANCE WITH THE CURRENT CONNECTICUT STATE FIRE SAFETY CODE AND CURRENT O.S.H.A. TITLE 29/LABOR IS ALSO REQUIRED.

THE ITEMS SHALL INCLUDE, BUT ARE NOT LIMITED TO FIXTURES, FURNISHINGS, EQUIPMENT, WORKSTATIONS (INCLUDING BUILT-INS), LABORATORY FUME HOODS, DARKROOM EQUIPMENT, WELDING STATIONS, SHOP EQUIPMENT, ETC.

SECURE ATTACHMENT OF FF&E & T ITEMS

TO ENSURE THE PROPER ATTACHMENT OF FFE & E ITEMS, INCLUDING TECHNOLOGY ITEMS, WHERE ITEMS ARE ATTACHED TO WALL, CEILING, OVERHEAD STRUCTURE, AND/OR FLOOR, CONTRACTOR TO PROVIDE INFORMATION ADEQUATE FOR ARCHITECT TO VERIFY ITEMS ATTACHED TO THE WALL, CIELING, AND/OR FLOOR ARE ATTACHED SECURELY AND PER THE MANUFACTURERS RECOMMENDATIONS. ARCHITECTS REVIEW MAY BE IMPLEMENTED DURING SUBMITTAL PROCESS.

CONTRACTOR TO PROVIDE STRUTS, HANGERS, FASTENERS, SAFETY HARNESSES, CHANNELS, BOLTS, SCREWS, RODS, ETC. TO SECURELY ATTACH ITEMS TO EXISTING STRUCTURE AS REQUIRED TO MEET FIELD CONDITIONS AND MEET APPLICABLE CODES.

CLEAR FLOOR SPACE (WITH ISA SYMBOL)

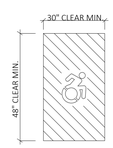

NOTE:
THIS RESPRESENTS A 30" X 48" CLEAR FLOOR SPACE FOR AN ADA WHEELCHAIR.

FURNITURE AND EQUIPMENT NOTES:

(THESE NOTES APPLY TO A13.1-A13.6)

NOTE 1: EX= EXISTING FURNITURE
NOTE 2: EQUIPMENT THAT REQUIRES FLOOR SPACE IS SHOWN ON THE FURNITURE PLANS. ALL OTHER EQUIPMENT IS LISTED IN VOLUME 1.

1 MAIN LEVEL AREA D - TECHNOLOGY
SCALE: 1/8" = 1'-0"

DATE: 12/31/2019
DRAWN BY: Author
SCALE: As indicated
REVIEWED BY Checker
PROJECT NO. 18-115A

REVISIONS

NO	DATE	DESCRIPTION
	12/1/2020	

MAIN LEVEL AREA D - TECHNOLOGY

STATE PROJECT NO. 151-0295 EA/RR
ADDITIONS AND ALTERATIONS
WENDELL CROSS
ELEMENTARY SCHOOL
1255 HAMILTON AVENUE
WATERBURY, CONNECTICUT

CONSULTANT'S SEAL

STATE OF CONNECTICUT
FRIAR ARCHITECTURE, INC.
NO. 113
REGISTERED PRACTICE of ARCHITECTURE

ARCHITECT'S SEAL

FRIAR
21 Talcott Notch Road
Farmington, CT 06032

SHEET NO.
TE1.6

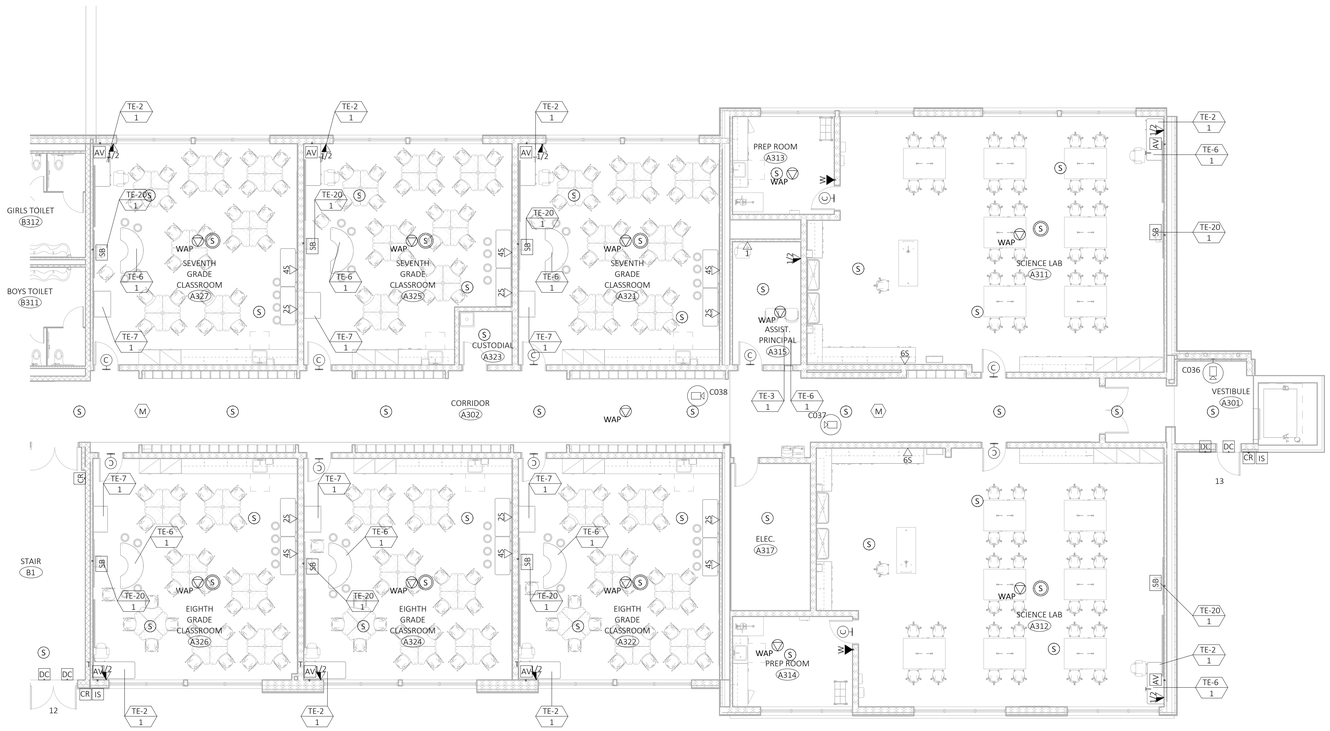

GRAPHICS LEGEND

EXISTING FURNITURE
TO BE MOVED & INSTALLED BY OWNER.

NEW FURNITURE

FURNITURE LEGEND

BC	BOOKCASE
C	CHAIR
D	DESK
EQ	EQUIPMENT
F	FILE CABINET
ST	STORAGE
T	TABLE

TECHNOLOGY TAG:

TECH TYPE
TECH KEY
X.X
X
TECHNOLOGY QUANTITY

CODE COMPLIANCE NOTE:

IN ORDER TO MEET THE NEEDS OF PERSONS WITH DISABILITIES, WHEN APPLICABLE ALL FIXTURES, FURNISHINGS, & EQUIPMENT ITEMS SHALL COMPLY WITH THE CURRENT CONNECTICUT STATE BUILDING CODE INCLUDING; 2009 ICC/ANSI A117.1, SECTION 504 REHABILITATION ACT 1973 INCLUDING CURRENT ADA STANDARDS FOR ACCESSIBLE DESIGN AND SECTION 504 REGULATIONS; AND THE AMERICANS WITH DISABILITIES ACT TITLE II INCLUDING THE CURRENT ADA STANDARDS FOR ACCESSIBLE DESIGN AND ADA REGULATIONS.

ACCESSIBLE KNEE CLEARANCES SHALL COMPLY WITH CURRENT ADA STANDARDS FOR ACCESSIBLE DESIGN, SECTION 306.

COMPLIANCE WITH THE CURRENT CONNECTICUT STATE FIRE SAFETY CODE AND CURRENT O.S.H.A. TITLE 29/LABOR IS ALSO REQUIRED.

THE ITEMS SHALL INCLUDE, BUT ARE NOT LIMITED TO FIXTURES, FURNISHINGS, EQUIPMENT, WORKSTATIONS (INCLUDING BUILT-INS), LABORATORY FUME HOODS, DARKROOM EQUIPMENT, WELDING STATIONS, SHOP EQUIPMENT, ETC.

SECURE ATTACHMENT OF FF&E & T ITEMS

TO ENSURE THE PROPER ATTACHMENT OF FFE & E ITEMS, INCLUDING TECHNOLOGY ITEMS, WHERE ITEMS ARE ATTACHED TO WALL, CEILING, OVERHEAD STRUCTURE, AND/OR FLOOR, CONTRACTOR TO PROVIDE INFORMATION ADEQUATE FOR ARCHITECT TO VERIFY ITEMS ATTACHED TO THE WALL, CIELING, AND/OR FLOOR ARE ATTACHED SECURELY AND PER THE MANUFACTURERS RECOMMENDATIONS. ARCHITECTS REVIEW MAY BE IMPLEMENTED DURING SUBMITTAL PROCESS.

CONTRACTOR TO PROVIDE STRUTS, HANGERS, FASTENERS, SAFETY HARNESSES, CHANNELS, BOLTS, SCREWS, RODS, ETC. TO SECURELY ATTACH ITEMS TO EXISTING STRUCTURE AS REQUIRED TO MEET FIELD CONDITIONS AND MEET APPLICABLE CODES.

CLEAR FLOOR SPACE (WITH ISA SYMBOL)

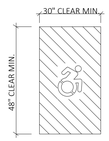

NOTE:
THIS RESPRESENTS A 30" X 48" CLEAR FLOOR SPACE FOR AN ADA WHEELCHAIR.

FURNITURE AND EQUIPMENT NOTES:

(THESE NOTES APPLY TO A13.1-A13.6)

NOTE 1: EX= EXISTING FURNITURE
NOTE 2: EQUIPMENT THAT REQUIRES FLOOR SPACE IS SHOWN ON THE FURNITURE PLANS. ALL OTHER EQUIPMENT IS LISTED IN VOLUME 1.

UPPER LEVEL AREA A - TECHNOLOGY

SCALE: 1/8" = 1'-0"

DATE: 12/31/2019
DRAWN BY: Author
SCALE: As indicated
REVIEWED BY Checker
PROJECT NO 18-115A

REVISIONS

NO	DATE	DESCRIPTION
	12/1/2020	

STATE PROJECT NO. 151-0295 EA/RR
ADDITIONS AND ALTERATIONS
WENDELL CROSS
ELEMENTARY SCHOOL
1255 HAMILTON AVENUE
WATERBURY, CONNECTICUT

CONSULTANT'S SEAL

STATE OF CONNECTICUT
FRIAR ARCHITECTURE, INC.
NO. 113
CORPORATE PRACTICE OF ARCHITECTURE

ARCHITECT'S SEAL

FRIAR
21 Talcott Notch Road
Farmington, CT 06032

SHEET NO.
TE1.7

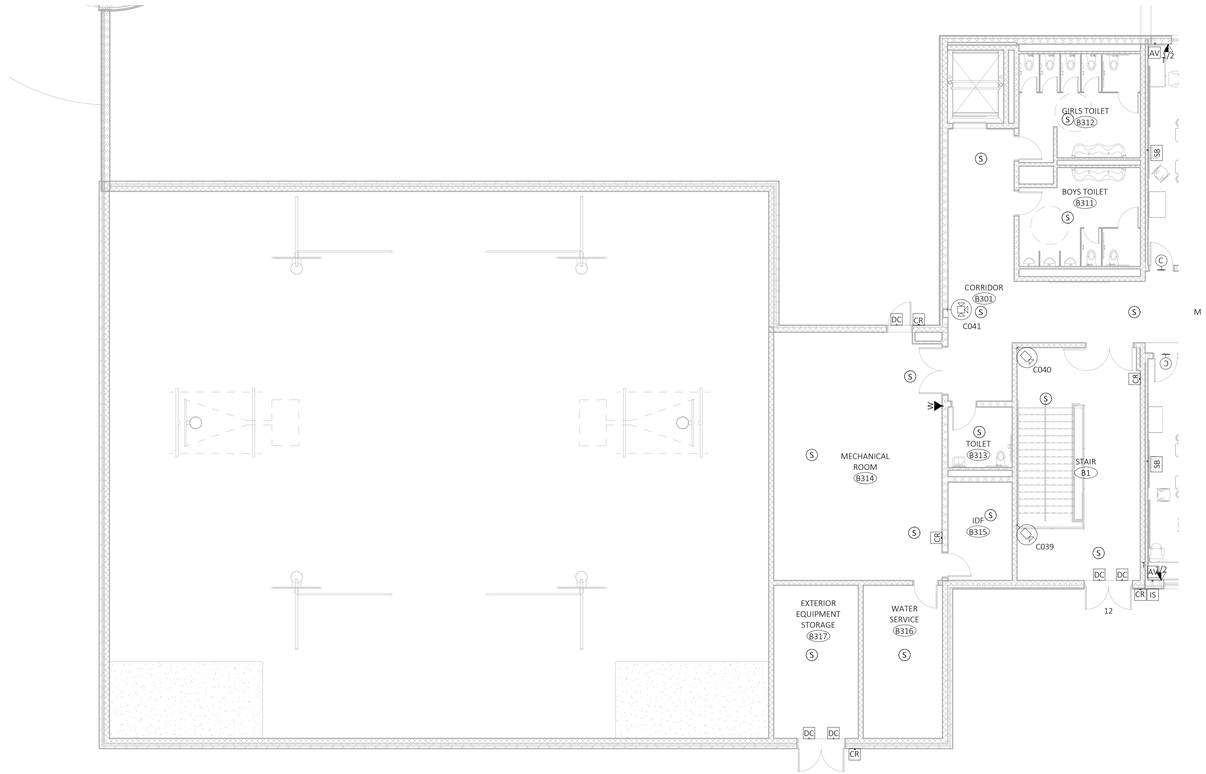

GRAPHICS LEGEND

EXISTING FURNITURE
TO BE MOVED & INSTALLED BY OWNER.

NEW FURNITURE

FURNITURE LEGEND

BC	BOOKCASE
C	CHAIR
D	DESK
EQ	EQUIPMENT
F	FILE CABINET
ST	STORAGE
T	TABLE

TECHNOLOGY TAG:

TECH TYPE
TECH KEY
X.X
X
TECHNOLOGY QUANTITY

CODE COMPLIANCE NOTE:

IN ORDER TO MEET THE NEEDS OF PERSONS WITH DISABILITIES, WHEN APPLICABLE ALL FIXTURES, FURNISHINGS, & EQUIPMENT ITEMS SHALL COMPLY WITH THE CURRENT CONNECTICUT STATE BUILDING CODE INCLUDING; 2009 ICC/ANSI A117.1, SECTION 504 REHABILITATION ACT 1973 INCLUDING CURRENT ADA STANDARDS FOR ACCESSIBLE DESIGN AND SECTION 504 REGULATIONS; AND THE AMERICANS WITH DISABILITIES ACT TITLE II INCLUDING THE CURRENT ADA STANDARDS FOR ACCESSIBLE DESIGN AND ADA REGULATIONS.

ACCESSIBLE KNEE CLEARANCES SHALL COMPLY WITH CURRENT ADA STANDARDS FOR ACCESSIBLE DESIGN, SECTION 306.

COMPLIANCE WITH THE CURRENT CONNECTICUT STATE FIRE SAFETY CODE AND CURRENT O.S.H.A. TITLE 29/LABOR IS ALSO REQUIRED.

THE ITEMS SHALL INCLUDE, BUT ARE NOT LIMITED TO FIXTURES, FURNISHINGS, EQUIPMENT, WORKSTATIONS (INCLUDING BUILT-INS), LABORATORY FUME HOODS, DARKROOM EQUIPMENT, WELDING STATIONS, SHOP EQUIPMENT, ETC.

SECURE ATTACHMENT OF FF&E & T ITEMS

TO ENSURE THE PROPER ATTACHMENT OF FFE & E ITEMS, INCLUDING TECHNOLOGY ITEMS, WHERE ITEMS ARE ATTACHED TO WALL, CEILING, OVERHEAD STRUCTURE, AND/OR FLOOR, CONTRACTOR TO PROVIDE INFORMATION ADEQUATE FOR ARCHITECT TO VERIFY ITEMS ATTACHED TO THE WALL, CIELING, AND/OR FLOOR ARE ATTACHED SECURELY AND PER THE MANUFACTURERS RECOMMENDATIONS. ARCHITECTS REVIEW MAY BE IMPLEMENTED DURING SUBMITTAL PROCESS.

CONTRACTOR TO PROVIDE STRUTS, HANGERS, FASTENERS, SAFETY HARNESSES, CHANNELS, BOLTS, SCREWS, RODS, ETC. TO SECURELY ATTACH ITEMS TO EXISTING STRUCTURE AS REQUIRED TO MEET FIELD CONDITIONS AND MEET APPLICABLE CODES.

CLEAR FLOOR SPACE (WITH ISA SYMBOL)



NOTE:
THIS RESPRESENTS A 30" X 48" CLEAR FLOOR SPACE FOR AN ADA WHEELCHAIR.

FURNITURE AND EQUIPMENT NOTES:

(THESE NOTES APPLY TO A13.1-A13.6)

NOTE 1: EX= EXISTING FURNITURE
NOTE 2: EQUIPMENT THAT REQUIRES FLOOR SPACE IS SHOWN ON THE FURNITURE PLANS. ALL OTHER EQUIPMENT IS LISTED IN VOLUME 1.

UPPER LEVEL AREA B - TECHNOLOGY

SCALE: 1/8" = 1'-0"

DATE: 12/31/2019
DRAWN BY: Author
SCALE: As indicated
REVIEWED BY Checker
PROJECT NO 18-115A

REVISIONS

NO	DATE	DESCRIPTION
	12/1/2020	

UPPER LEVEL AREA B - TECHNOLOGY

STATE PROJECT NO. 151-0295 EA/RR
ADDITIONS AND ALTERATIONS
WENDELL CROSS
ELEMENTARY SCHOOL
1255 HAMILTON AVENUE
WATERBURY, CONNECTICUT

CONSULTANT'S SEAL

STATE OF CONNECTICUT
FRIAR ARCHITECTURE, INC.
NO. 113
REGISTERED ARCHITECTURE

ARCHITECT'S SEAL

FRIAR
21 Talcott Notch Road
Farmington, CT 06032

SHEET NO.
TE1.8