HUENEME HIGH SCHOOL

RELOCATION OF 3-36'x40' PORTABLE CLRM. BUILDINGS

OXNARD UNION HIGH SCHOOL DISTRICT

OXNARD UNION HIGH SCHOOL DISTRICT

IDENTIFICATION STAMP
DIV. OF THE STATE ARCHITECT
APP: 03-121617 INC:
REVIEWED FOR
SS ☑ FLS ☑ ACS ☑
DATE: 08/02/2021

LEGEND

EXTERIOR ELEVATION NO.
EXTERIOR ELEVATION SYMBOL
SHEET NO.

INTERIOR ELEV. WALL SYMBOL

DETAIL NO.
DETAIL SYMBOL
SHEET NO.

DETAIL NO.
SECTION/DETAIL/ PHOTO
REFERENCE SYMBOL
SHEET NO.

CODE ANALYSIS

BUILDING DATA

BLDG.	DESCRIPTION	OCCUPANCY CONST. TYPE	TOTAL AREA	BASIC ALLOWABLE	ACTUAL < ALLOWABLE
(N) PB-01, 02, 03	(N) PORTABLES	E-VB	5,076 S.F.	9,500 S.F.	5,076 S.F. > 9,500 S.F.

BUILDING HEIGHT: ONE STORY
AUTOMATIC FIRE SPRINKLER: NO PROVISION NOT REQUIRED
OCCUPANCY LOAD: 85 x 3 = 255 STUDENTS

SS = 1.599 - MCER ground motion (period=0.2s)
S1 = 0.586 - MCER ground motion (period=1.0s)
SMS = 1.919 - Site-modified spectral acceleration value
SM1 = * null - Site-modified spectral acceleration value
SDS = 1.279 - Numeric seismic design value at 0.2s SA
SD1 = * null - Numeric seismic design value at 1.0s SA
WIND SPEED = 93 MPH
WIND EXPOSURE - C
SOIL BEARING VALUE = 1,000 PSF

CONSULTANTS

CLIENT	OXUHSD	POUL HANSON	TEL: 805-797-1126
CLIENT	OXUHSD	POUL HANSON	TEL: 805-718-2614
ARCHITECT	DC ARCHITECTS	RICHARD DUNCAN REG. # C 21818	820 N. MOUNTAIN AVE., STE. 200 UPLAND, CA 91786 TEL. 800-985-6939 FAX. 909-985-0864
MECHANICAL & PLUMBING ENGINEERS	ENGINEOUS GROUP INC.	BRADLEY SEVERSON REG. # M27963	751 NORTH OAKS AVE., SUITE 201 PASADENA, CA 91103 TEL. 626-696-3850
ELECTRICAL ENGINEERS	ENGINEOUS GROUP INC. .	SHANE FOSTER REG. # E21308	751 NORTH OAKS AVE., SUITE 201 PASADENA, CA 91103 TEL. 626-696-3850

SHEET INDEX

TOTAL = 74

ARCHITECTURAL TOTAL = 20

T-1 SCOPE OF WORKS, CODE ANALYSIS, VICINITY MAP, SIGNAGE AND NOTES
FM FEMA MAP
A-1.0 OVERALL SITE PLAN, ENLARGED PARTIAL DEMO SITE PLAN-ADA PARKING, BUILDING DATA, NOTES
A-1.1 OVERALL SITE PLAN - LOCAL FIRE AUTHORITY REVIEW, NOTES, BUILDING DATA
A-1.2 ENLARGED PARTIAL SITE PLAN - P.O.T. ILLUMINATION, REMODEL SITE PLAN - ADA PARKING
A-2.0 ENLARGED SITE PLAN - (E) UNIT 'A' ALL GENDERS, (E) UNIT 'C' BOYS/GIRLS TOILET FLOOR PLANS

PLUMBING

P-0.1 PLUMBING LEGENDS, NOTES AND FLOOR PLAN
P-1.0 PLUMBING FLOOR PLAN

ELECTRICAL

E-0.1 ELECTRICAL SYMBOLS AND NOTES
E-0.2 INSTALLATION AND DETAILS
E-0.3 SINGLE LINE DIAGRAM AND LOAD CALCULATION
E-1.0 ELECTRICAL SITE PLAN
E-2.1 ELECTRICAL ENLARGED FLOOR PLAN
E-4.0 DATE SITE PLAN
E-4.1 DATA ENLARGED FLOOR PLAN
FA-0,1 FIRE ALARM SYMBOLS AND NOTES
FA-0.2 RISER DIAGRAM, VOLTAGE DROP AND BATTERY CALCULATIONS
FA-0.3 FIRE WATCH NOTES
FA-1.0 FIRE ALARM SITE PLAN
FA-2.1 FIRE ALARM ENLARGED FLOOR PLAN

CLASS LEASING LLC STOCKPILE #04-119993 TOTAL = 50

A0.0 COVER SHEET
A0.0.1 PROJECT OPTIONS SCHEDULE
A0.1 TYPICAL KEY PLAN AND SCHEDULE GENERAL NOTES
A0.2 SIGNAGE AND SYMBOLS
A0.4 DSA-103 T & I, PLYWOOD FLOORS
A0.5 CALGREEN SPECIFICATIONS

A1.1 36x40 FLOOR PLAN
A2.1 ARCHITECTURAL DETAILS (WOOD) FRAMING SHEATHING FINISH
A2.9 ARCHITECTURAL DETAILS (FLOOR)
A3.1 SINGLE OCCUPANT BATHROOM
A3.2 RCP
A3.2.1 CEILING NOTES
A3.3 CEILING DETAILS (T-GRID)
A4.0.1 ROOF PLAN MONO SLOPE (STANDING SEAM)
A4.1 ROOF DETAILS (STANDING SEAM)
A5.0 SIDEWALL ELEVATION
A5.1 SIDEWALL ELEVATIONS
A5.2 INTERIOR ELEVATIONS
A6.0 SECTION STANDING SEAM (MONO)
A6.2 SECTION
A7.0 ADDITIONAL OPTION DETAILS
A7.1 ADDITIONAL OPTION DETAILS
A7.2 ADDITIONAL OPTION DETAILS

E1.2 ELECTRICAL PLAN 36x40
E1.3 ELECTRICAL SCHEDULES 36x40
E2.1 120'x40' T24 CZ 16 (WALL AC)
E2.2 120'x40' T24 CZ 16 (WALL AC)
E2.3 120'x40' T24 CZ 16 (WALL AC)

M0.1 MISCELLANEOUS NOTES AND DETAILS
M2.1 120'x40' T24 CZ 16 (WALL AC)
M2.2 120'x40' T24 CZ 16 (WALL AC)
M2.3 120'x40' T24 CZ 16 (WALL AC)
M2.4 120'x40' T24 CZ 16 (WALL AC)
M6.1 MECHANICAL CEILIG PLAN 36x40
P1.0 TYPICAL PLUMBING DETAILS

S0.1 STRUCTURAL GENERAL NOTES
S1.0.1 WOOD SHEATHING FLOOR FRAMING PLAN (50+15)
S1.2 STRUCTURAL DETAILS (FLOOR)
S3.0.1 MONO SLOPE ROOF FRAMING PLAN
S3.1 STRUCTURAL DETAILS (ROOF)
S3.3 ROOF PERIMETER TRUSS
S4.1 WOOD WALL FRAMING ELEVATIONS
S4.2 WALL DETAILS (WOOD FRAMING)
S4.4 TYPICAL FRAMING
S4.5 FRAMING SCHEDULE
S5.0 LONG SECTION (MONO)
ALT-01 ALTERATION
ALT-02 ALTERATION
ALT-03 ALTERATION
ALT-D1 ALTERATION

CLASS LEASING LLC PC#04-116504 TOTAL = 4

A0.0 COVER SHEET
F1.10 WOOD FOUNDATION NOTES SCHEDULE FOR BUILDING W/50+15
F1.11 WOOD FOUNDATION PLAN 24x40 BUILDING W/50+15
F1.40 WOOD FOUNDATION DETAILS

NOTE: CONTRACTOR SHALL FOLLOW ALL REQUIREMENTS AS SET FORTH PER CGS APPROVED LETTER AND SOILS REPORT BY EARTH SYSTEM AND EARTH SYSTEM'S LETTER DATED JUNE 27, 2022 FOR ALL OVER-EXCAVATION, PLACEMENT OF THE GEOGRID REINFORCED MAT AND RECOMMPACTION FOR THE ENTIRE PORTABLE BUILDING PERIMETER AND OR AS STATED IN THE SOILS REPORT AND JUNE 27, 2022 LETTER.

The design professional has exempted this ramp from special inspection requirements for material identification and structural welding. Ramp shall not be modified or have shims added causing the distance between the highest ramp walking surface and the adjacent grade to be more than 30 inches. If this condition is not met, structural testing and/or inspection will be required to verify materials and structural welding. This applies to scopes of work including new construction, alteration, or relocation of the ramp.

APPLICABLE CODES

PARTIAL LIST OF APPLICABLE CODES as of January 1, 2020

2019 Building Standards Administrative Code, Part 1, Title 24, C.C.R.
2019 California Building Code (CBC), Part 2, Title 24, C.C.R. (2018 International Building Code with 2019 California Amendments)
2019 California Electric Code (CEC), Part 3, Title 24, C.C.R. (2017 National Electric Code with 2019 California Amendments)
2019 California Mechanical Code (CMC), Part 4, Title 24, C.C.R. (2018 Uniform Mechanical Code with 2019 California Amendments)
2019 California Plumbing Code (CPC), Part 5, Title 24, C.C.R. (2018 Uniform Plumbing Code with 2019 California Amendments)
2019 California Energy Code (CEnC), Part 6, Title 24, C.C.R.
2019 California Fire Code (CFC), Part 9, Title 24, C.C.R. (2018 International Fire Code with 2019 California Amendments)
2019 California Referenced Standards Code, Part 12, Title 24, C.C.R. Regulations of the State Fire Marshal, C.C.R. Title 19

PARTIAL LIST OF FIRE LIFE SAFETY APPLICABLE STANDARDS

NFPA 13 Automatic Sprinkler Systems, 2016 edition (CA Amended)
NFPA 14 Standpipe & Hose Systems, 2016 edition (CA Amended)
NFPA 17 Dry Chemical Extinguishing Systems, 2017 edition
NFPA 17A Wet Chemical Extinguishing Systems, 2017 edition
NFPA 20 Stationary Fire Pumps for Fire Protection, 2016 edition
NFPA 24 Private Fire Service Mains, 2016 edition (CA Amended)
NFPA 25 Inspection, Testing and Maintenance of Water Based Fire Protection Systems, 2013 California Edition
NFPA 37 Installation and Use of Stationary Combustion Engines and Gas Turbines, 2015 edition
NFPA 72 National Fire Alarm and Signaling Code, 2016 edition (CA Amended)
NFPA 80 Fire Doors and other Opening Protectives, 2016 edition
NFPA 101 Life Safety Code, 2018 Edition
NFPA 110 Emergency and Standby Power Systems, 2016 edition
NFPA 170 Standard for Fire Safety and Emergency Symbols, 2018 edition
NFPA 221 Standard for High Challenge Fire Walls, Fire Walls, and Fire Barrier Walls, 2018
NFPA 2001 Clean Agent Fire Extinguishing Systems, 2015 edition
ICC 300 Standards on Bleachers, Folding and Telescopic Seating, and Grandstands 2017 edition
ICC-ES AC77 Acceptance Criteria for Smoke Containment Systems Used with Fire-resistance-rated Elevator Hoistway Doors and Frames
SFM Std. 12-10-1 Power Operated Exit Doors
SFM Std. 12-10-2 Single-Point Latching or Locking Devices
SFM Std. 12-10-3 Emergency Exit and Panic Hardware
SFM Std. 12-7A Materials and Construction Methods for Exterior Wildfire Exposure
UBC Std. 15-2 Test Standard for Determining the Fire Retardancy of Roof-Covering Materials
UL 38 Manual Operating Signal Boxes, 1999 edition w/ revisions through February 2, 2005 as amended.
UL 268 Smoke Detectors for Fire Protective Signaling Systems, 2009 edition
UL 268A Smoke Detectors Duct Applications, 1999 edition w/revisions through October 22, 2003
UL 294 Standard for Access Control System Units, 1999 edition w/revisions through February 2015
UL 305 Standard for Panic Hardware, 2012 edition
UL 346 Waterflow indicators for Fire Protective Signaling Systems, 2005 edition
UL 464 Audible Signal Appliances, 2003 edition
UL 521 Heat Detectors for Fire Protective Signaling Systems, 1999 edition, w/revisions through July 20, 2005
UL 864 Control Units for Fire Protective Signaling Systems, 2003 edition w/revisions through December 2014
UL 2034 Standard for Single- and Multiple Station Carbon Monoxide Alarms, 2017 edition

DSA DISCLAIMER

Statement of General Conformance

FOR ARCHITECTS/ENGINEERS WHO UTILIZE PLANS,
INCLUDING BUT NOT LIMITED TO SHOP DRAWINGS, PREPARED BY OTHER LICENSED DESIGN PROFESSIONALS AND/OR CONSULTANTS

(Application No. 03-121617 **File No.** 56-H4
[X] The drawings or sheets listed on the cover or index sheet.
[X] This drawing, page of specifications/calculations

This drawing, page of specifications/calculations, or the attached list of items has been prepared by other design professionals or consultants who are licensed and/or authorized to prepare such drawings in this state. It has been examined by me for:

1) design intent and appears to meet the appropriate requirements of Title 24, California Code of Regulations and the project specifications prepared by me, and
2) coordination with my plans and specifications and is acceptable for incorporation into the construction of this project.

The Statement of General Conformance "shall not be construed as relieving me of my rights, duties, and responsibilities under Sections 17302 and 81138 of the Education Code and Sections 4-336, 4-341 and 4-344" of Title 24, Part 1. *(Title 24, Part 1, Section 4-317 (b)*

I certfy that: [X] All drawings or sheets listed on the cover or index sheet
[X] This Drawing or page

[X] is/are in general conformance and [X] have been coordinated — [ ] is/are in general conformance and [ ] have been coordinated

Signature	Date	Signature	Date
(signed)	04-20-2021		

Print Name	Print Name
Richard D. Duncan	

License Number	Expiration Date	License Number	Expiration Date
C-21818	03-31-2023		

DRAWINGS INCLUDED:
PLUMBING: P-0.1, P-1.0
ELECTRICAL: E-0.1, E-0.2, E-0.3, E-1.0, E-2.1, E-4.0, E-4.1, FA-0.1, FA-0.2, FA-0.3, FA-1.0, FA-2.1
CLI STOCKPILE A#04-119993 -- A0.0, A0.0.1, A0.1, A0.2, A0.4, A0.5, A1.1, A2.1, A2.9, A3.1, A3.2, A3.2.1, A3.3, A4.01, A2.1, A2.9, A3.1, A3.2, A3.2.1, A3.3, A4.0.1, A4.1, A5.0, A4.1, A5.0, A5.1, A5.2, A6.0, A6.2, A7.0, A7.1, A7.2, E1.2, E1.3, E2.1, E2.2, E2.3, M0.1, M2.1, M2.2, M2.3, M2.4, M5.1, P1.0, S0.1, S1.0.1, S1.2, S3.01, S3.1, S3.3, S4.1, S4.2, S4.4, S4.5, S5.0, ALT-0.1, ALT-02, ALT-03, ALT-D1
CLI PC A#04-116504 -- A0.0,F1.10, F1.11, F1.40

VICINITY MAP

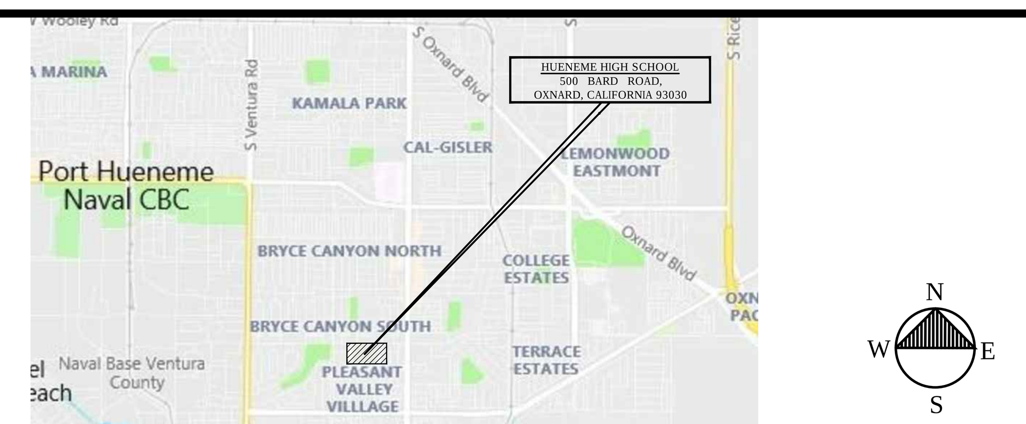

ABBREVIATIONS

@	AT THE RATE OF	CONC.	CONCRETE	FLR.	FLOOR	N.I.C.	NOT IN CONTRACT	S.V.	SHEET VINYL
A.C.	ASPHALTIC CONCRETE	CONT'R.	CONTRACTOR	F.O.C.	FACE OF CONCRETE	O.C.	ON CENTER	T.C.	TOP OF CONC. OR CURB
A.C.C.	ACCESSIBLE	CFCI	CONTRACTOR FURNISHED, CONTRACTOR INSTALLED	F.O.S.	FACE OF STUD	OFCI	OWNER FURNISHED, CONTRACTOR INSTALLED	T.O.R.	TOP OF RIDGE
ACT.	ACOUSTIC TILE	CPT.	CARPET	F.V	FIELD VERIFY	OFOI	OWNER FURNISHED, OWNER INSTALLED	T.O.S.	TOP OF SHEATHING
A.D.	AREA DRAIN	CT.	CERAMIC TILE	G.A.	GUAGE	O.F.D.	OVERFLOW DRAIN	TYP.	TYPICAL
ADJ.	ADJUSTABLE	DET.	DETAIL	GL.	GLASS	PH	PANIC HARDWARE ON DOORS	U.B.C.	UNIFORM BUILDING CODE
AFF	ABOVE FINISHED FLOOR	DIM.	DIMENSION	GYP.BD.	GYPSUM BOARD	PLY'WD.	PLYWOOD	UNO	UNLESS NOTED OTHERWISE
ALUM.	ALUMINUM	DR.	DOOR	H.C.	HOLLOW CORE	P.S.	PRESSED STEEL	V.T.	VINYL TILE
ANOD.	ANODIZED	D.S.	DOWNSPOUT	H.M.	HOLLOW METAL	PTD.	PAINTED	W/	WITH
ARCH.	ARCHITECT	DWG.	DRAWING	INSUL.	INSULATION	"R"	THERMAL VALUE	W.C.	WATER CLOSET
BC	BOOK CASE	EA.	EACH	LAV.	LAVATORY	R.B.	RUBBER BASE	WD.	WOOD
BD./BRD	BOARD	(E.)	EXISTING	L.P.	LAMINATED PLASTIC	R.D.	ROOF DRAIN	WDW.	WINDOW
B.M.	BENCH MARK	ELECT.	ELECTRICAL	MET.	METAL	S.A.T.	SUSPENDED ACOUSTICAL TILE	W.H.	WATER HEATER
CAB.	CABINET	EQ.	EQUAL	MFGR.	MANUFACTURER	S.C.	SOLID CORE	W.P.	WATERPROOF
CLG.	CEILING	F.D.	FLOOR DRAIN	MIN.	MINIMUM	S.D.	STORM DRAIN	W.R.	WATER RESISTANT
CER.T.	CERAMIC TILE	F.F.	FACTORY FINISH	MISC.	MISCELLANEOUS	S.S.	SERVICE SINK		
CL.	CENTER LINE	F.G.	FINISH GRADE	MTD.	MOUNTED				
C.O.	CLEAN OUT	FIN.	FINISH	MTL.	METAL				
COL.	COLUMN	FL.	FLOW LINE	(N.)	NEW				
CONT.	CONTINUOUS								

SCOPE OF WORK

RELOCATION OF 3 - 36' x 40' PORTABLE CLASSROOM BUILDINGS STOCKPILE #04-119993 SUPPORTED ON WOOD FOUNDATION BY MANUFACTURER, WITH PRIOR DSA APPROVAL TO THIS SITE. PROVIDE NEW ADA DOOR SIGNAGE, NEW ELECTRICAL DATA AND FIRE ALARM DEVICES. PARKING RE-STRIPPING, WHEEL STOPS AND SIGNS.

SUBMISSION/APPROVAL TO CGC IS DEFERRED APPROVAL

GENERAL NOTES

1. ALL WORK SHALL CONFORM TO 2019 EDITION TITLE 24, CALIFORNIA CODE OF REGULATIONS. (CCR).
2. CHANGES TO THE APPROVED DRAWINGS AND SPECIFICATIONS SHALL BE MADE BY AN ADDENDA OR CCD APPROVED BY THE DIVISION OF THE STATE OF ARCHITECT, AS REQUIRED BY SECTION 4-338, PART 1, TITLE 24, CCR.
3. A 'DSA CERTIFIED' PROJECT INSPECTOR EMPLOYED BY THE DISTRICT (OWNER) AND APPROVED BY THE DIVISION OF THE STATE ARCHITECT SHALL PROVIDE CONTINUOUS INSPECTION OF THE WORK THE DUTIES OF THE INSPECTOR ARE DEFINED IN SECTION 4-342, CALIFORNIA BUILDING STANDARDS ADMINISTRATION CODE (PART 1,TITLE 24 (CCR.)
4. A DSA INSPECTOR WITH CLASS 1 CERTIFICATION IS REQUIRED FOR THIS PROJECT.
5. THE INTENT OF THESE DRAWINGS AND SPECIFICATIONS IS THAT THE WORK OF THE ALTERATION, REHABILITATION OR RECONSTRUCTION IS TO BE IN ACCORDANCE WITH TITLE 24, CALIFORNIA CODE OF REGULATIONS. SHOULD ANY EXISTING CONDITIONS SUCH AS DETERIORATION OR NON-COMPLYING CONSTRUCTION BE DISCOVERED WHICH IS NOT COVERED BY THE CONTRACT DOCUMENTS WHEREIN THE FINISHED WORK WILL NOT COMPLY WITH TITLE 24, CALIFORNIA CODE OF REGULATIONS, A CHANGE ORDER, OR A SEPARATE SET OF PLANS AND SPECIFICATIONS, DETAILING AND SPECIFYING THE REQUIRED WORK SHALL BE SUBMITTED TO AND APPROVED BY THE DIVISION OF THE STATE ARCHITECT BEFORE PROCEEDING WITH THE WORK.
6. THE DESIGN PROFESSIONAL IN GENERAL RESPONSIBLE CHARGE SHALL VERIFY BY APPROPRIATE MEANS, SUBJECT TO DSA APPROVAL, AND SUBMIT A LETTER CERTIFYING THAT THE BUILDING CONFORMS TO THE ORIGINAL DSA-APPROVED PLANS AND SPECIFICATIONS AND HAS NOT SUFFERED STRUCTURAL DETERIORATION OR BEEN STRUCTURALLY ALTERED.
7. DETERIORATION OR EXISTING NON-COMPLIANT CONSTRUCTION: IF ANY CONDITION IS DISCOVERED WHICH, IF LEFT UNCORRECTED, WOULD MAKE THE BUILDING NON-COMPLIANT WITH THE REQUIREMEHNTS OF THE EDITION OF CBC IN FORCE AT THE TIME OF ORIGINAL CONSTRUCTION, THE CONDITION MUST BE CORRECTED IN ACCORDANCE WITH CURRENT CODE REQUIREMENTS. A CONSTRUCTION CHANGE DOCUMENT (CCD-TYPE A), OR A SEPARATE SET OF PLANS AND SPECIFICATIONS DETAILING AND SPECIFYING THE REQUIRED REPAIR WORK SHALL BE SUBMITTED TO AN APPROVED BY DSA BEFORE PROCEEDING WITH THE REPAIR WORK.
8. WORK SHALL COMPLY WITH THE PROVISIONS OF "CHAPTER 33 OF CBC AND CFC", FIRE SAFETY DURING CONSTRUCTION AND DEMOLITION.
9. A DSA ACCEPTED TESTING LABORATORY DIRECTLY EMPLOYED BY THE DISTRICT SHALL CONDUIT ALL THE REQUIRED TESTS AND INSPECTIONS FOR THIS PROJECTS.
10. WHENEVER DSA FINDS ANY CONSTRUCTION WORK IS BEING PERFORMED IN A MANNER CONTRARY TO THE PROVISIONS OF CALIFORNIA BUILDING CODE AND THAT WOULD COMPROMISE THE STRUCTURAL INTEGRITY OF THE BUILDING, THE DEPARTMENT OF GENERAL SERVICES, STATE OF CALIFORNIA, IS AUTHORIZED TO ISSUE A STOP WORK ORDER PER SECTION 4-334.1 CALIFORNIA ADMINISTRATIVE CODE (PART 1, TITLE 24, CCR)
11. GRADING PLANS, DRAINAGE IMPROVEMENTS, ROAD AND ACCESS REQUIREMENTS AND ENVIRONMENTAL HEALTH CONSIDERATIONS SHALL COMPLY WITH ALL LOCAL ORDINANCES.
12. TITLE 24, PART 1-5 AND 9 MUST BE KEPT ON SITE DURING CONSTRUCTION.
13. ALL STRUCTURAL, ARCHITECTURAL, MECHANICAL, ELECTRICAL AND PLUMBING MATERIALS INSTALLATION TO COMPLY WITH APPLICABLE CODES, STANDARDS AND MANUFACTURER'S RECOMMENDATIONS.
14. SITE PROJECT INSPECTOR TO VERIFY COMPLETED IN-PLANT INSPECTOR INSPECTION CARD / VERIFIED REPORT (DSA 152-IPI) FOR EACH RELOCATABLE BUILDING BEFORE INSTALLATION ON SITE.
15. THE PROJECT INSPECTION (PI) SHALL WITNESS AND VERIFY GROUNDING.

SIGNAGE & NOTES

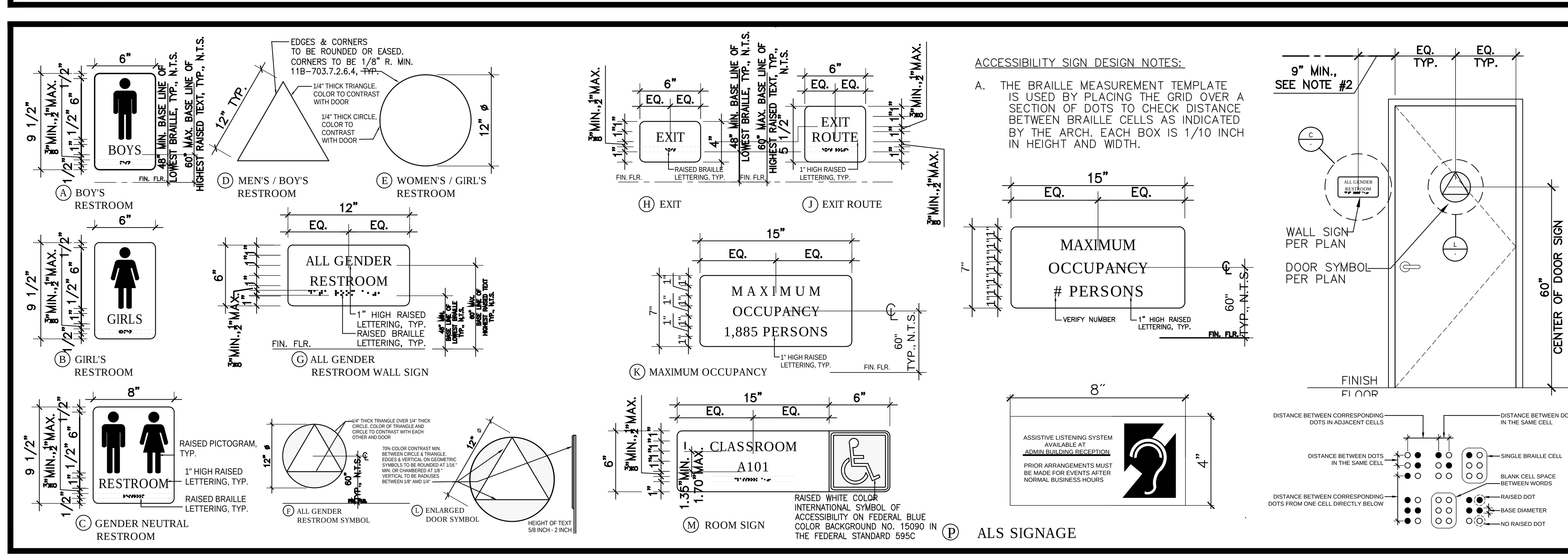

NOTES: (THESE NOTES APPLY TO THE DETAILS SHOWN ON THIS SHEET)

1. ANCHOR SIGNS TO SIDE OF DOOR W/ EXPOSED TAMPER RESISTANT SCREWS. (HEADS APPROX. 3/8")
2. SIGNS SHALL BE INSTALLED ON THE WALL ADJACENT TO THE LATCH OUTSIDE OF THE DOOR. SIGNS MUST NOT BE INSTALLED BEHIND OBSTRUCTIONS, AND READER MUST BE ABLE TO APPROACH SIGN WITHOUT BEING HIT BY THE SWING OF A DOOR.
3. WHERE THERE IS NO WALL SPACE ON THE LATCH SIDE, INCLUDING AT DOUBLE LEAF DOORS, SIGNS SHALL BE PLACE ON THE NEAREST ADJACENT WALL. PREFERABLY ON RIGHT
4. THE DISABILITY SIGNS SHOWN "MEN" & OR "WOMEN" SHALL READ "BOYS" & OR "GIRLS" WHERE SUCH TOILET ROOMS ARE INDICATED IN THE PLANS
5. LOCATE SIGNS PER PLANS.
6. REFER TO SPECIFICATIONS FOR MATERIAL TYPE FOR EXTERIOR AND INTERIOR SIGNS.

A. CHARACTER TYPE: CHARACTERS ON SIGNS SHALL BE RAISED 1/32-INCH (0.8 mm) MINIMUM AND SHALL BE SANS SERIF UPPERCASE CHARACTERS ACCOMPANIED BY CONTRACTED GRADE 2 BRAILLE.
B. CHARACTER SIZE: RAISED CHARACTERS SHALL BE A MINIMUM OF 5/8 INCH (15.9 mm) AND A MAXIMUM OF 2 INCHES (51 mm) HIGH.
C. FINISH AND CONTRAST: CHARACTERS, SYMBOLS AND THEIR BACKGROUNDS SHALL HAVE A NON-GLARE FINISH. CHARACTERS AND SYMBOLS SHALL CONTRAST WITH THEIR BACKGROUND, EITHER LIGHT CHARACTERS ON A DARK BACKGROUND OR DARK CHARACTERS ON A LIGHT BACKGROUND.
D. CHARACTER PROPORTIONS: CHARACTERS SHALL BE SELECTED FROM FONTS WHERE THE WIDTH OF THE UPPERCASE LETTER "O" IS 60 PERCENT MIN. AND 110 PERCENT MAX. OF THE HEIGHT OF THE UPPERCASE LETTER "I".
E. STROKE THICKNESS: STROKE THICKNESS OF THE UPPERCASE LETTER "I" SHALL BE 15 PERCENT MAX. OF THE HEIGHT OF THE CHARACTER.
F. BRAILLE: BRAILLE SHALL BE CONTRACTED GRADE 2 WITH DOMED OR ROUNDED SHAPE DOTS ND COMPLY WITH TABLE 11B-703.3.1.

TABLE 11B-703.3.1
BRAILLE DIMENSIONS

MEASUREMENT RANGE	MINIMUM IN INCHES / MAXIMUM IN INCHES
DOT BASE DIAMETER	0.059 (1.5 mm) TO 0.063 (1.6 mm)
DISTANCE BETWEEN TWO DOTS IN THE SAME CELL*	0.100 (2.5 mm)
DISTANCE BETWEEN CORRESPONDING DOTS IN ADJACENT CELLS*	0.300 (7.6 mm)
DOT HEIGHT	0.025 (0.6 mm) TO 0.037 (0.9 mm)
DISTANCE BETWEEN CORRESPONDING DOTS FROM ONE CELL DIRECTLY BELOW*	0.395 (10 mm) TO 0.400 (10.2 mm)

* MEASURED CENTER TO CENTER

REVISIONS

DC | ARCHITECTS

820 N. MOUNTAIN AVENUE
SUITE 200
UPLAND, CA. 91786
(909) 985 - 6939 OFFICE
(909) 985 - 0864 FAX

RELOCATION OF 3-PORT. CLRM. BLDGS.
HUENEME HIGH SCHOOL
500 W. BARD ROAD, OXNARD, CA 93033
OXNARD UNION HIGH SCHOOL DISTRICT

SCOPE OF WORKS, BUILDING DATA, GENERAL NOTES, VICINITY MAP

JOB NUMBER:	DRAWN BY:	DATE:	SCALE:
2020-024		03-2021	56-H4 03-121617

T-1

C:\DCA\2020-024-HEHS 3 Port_03-121617\2020-024_T1_he.dwg, 7/21/2021 10:27:24 AM, DWG To PDF.pc3

NOTES TO USERS

This map is for use in administering the National Flood Insurance Program. It does not necessarily identify all areas subject to flooding, particularly from local drainage sources of small size. The **community map repository** should be consulted for possible updated or additional flood hazard information.

To obtain more detailed information in areas where **Base Flood Elevations** (BFEs) and/or **floodways** have been determined, users are encouraged to consult the Flood Profiles and Floodway Data and/or Summary of Stillwater Elevations tables contained within the Flood Insurance Study (FIS) report that accompanies this FIRM. Users should be aware that BFEs shown on the FIRM represent rounded whole-foot elevations. These BFEs are intended for flood insurance rating purposes only and should not be used as the sole source of flood elevation information. Accordingly, flood elevation data presented in the FIS report should be utilized in conjunction with the FIRM for purposes of construction and/or floodplain management.

Coastal Base Flood Elevations shown on this map apply only landward of 0.0' North American Vertical Datum of 1988 (NAVD 88). Users of this FIRM should be aware that coastal flood elevations are also provided in the Summary of Stillwater Elevations tables in the Flood Insurance Study report for this jurisdiction. Elevations shown in the Summary of Stillwater Elevations tables should be used for construction and/or floodplain management purposes when they are higher than the elevations shown on this FIRM.

Boundaries of the **floodways** were computed at cross sections and interpolated between cross sections. The floodways were based on hydraulic considerations with regard to requirements of the National Flood Insurance Program. Floodway widths and other pertinent floodway data are provided in the Flood Insurance Study report for this jurisdiction.

Certain areas not in Special Flood Hazard Areas may be protected by **flood control structures**. Refer to Section 2.4 "Flood Protection Measures" of the Flood Insurance Study report for information on flood control structures for this jurisdiction.

The **projection** used in the preparation of this map was Universal Transverse Mercator (UTM) zone 11. The **horizontal datum** was NAD 83, GRS80 spheroid. Differences in datum, spheroid, projection or UTM zones used in the production of FIRMs for adjacent jurisdictions may result in slight positional differences in map features across jurisdiction boundaries. These differences do not affect the accuracy of this FIRM.

Flood elevations on this map are referenced to the North American Vertical Datum of 1988. These flood elevations must be compared to structure and ground elevations referenced to the same **vertical datum**. For information regarding conversion between the National Geodetic Vertical Datum of 1929 and the North American Vertical Datum of 1988, visit the National Geodetic Survey website at http://www.ngs.noaa.gov or contact the National Geodetic Survey at the following address:

Spatial Reference System Division
National Geodetic Survey, NOAA
Silver Spring Metro Center
1315 East-West Highway
Silver Spring, Maryland 20910
(301) 713-3191

To obtain current elevation, description, and/or location information for **bench marks** shown on this map, please contact the Information Services Branch of the National Geodetic Survey at **(301) 713-3242**, or visit its website at http://www.ngs.noaa.gov.

Base map information shown on this FIRM was derived from U.S. Geological Survey Digital Orthophoto Quadrangles produced at a scale of 1:12,000 from photography dated 1994 or later.

This map reflects more detailed and up-to-date **stream channel configurations** than those shown on the previous FIRM for this jurisdiction. The floodplains and floodways that were transferred from the previous FIRM may have been adjusted to conform to these new stream channel configurations. As a result, the Flood Profiles and Floodway Data tables in the Flood Insurance Study Report (which contains authoritative hydraulic data) may reflect stream channel distances that differ from what is shown on this map.

Corporate limits shown on this map are based on the best data available at the time of publication. Because changes due to annexations or de-annexations may have occurred after this map was published, map users should contact appropriate community officials to verify current corporate limit locations.

Please refer to the separately printed **Map Index** for an overview map of the county showing the layout of map panels; community map repository addresses; and a Listing of Communities table containing National Flood Insurance Program dates for each community as well as a listing of the panels on which each community is located.

Contact the **FEMA Map Service Center** at 1-800-358-9616 for information on available products associated with this FIRM. Available products may include previously issued Letters of Map Change, a Flood Insurance Study report, and/or digital versions of this map. The FEMA Map Service Center may also be reached by Fax at 1-800-358-9620 and its website at http://www.mcs.fema.gov.

If you have **questions about this map** or questions concerning the National Flood Insurance Program in general, please call **1-877-FEMA MAP** (1-877-336-2627) or visit the FEMA website at http://www.fema.gov.

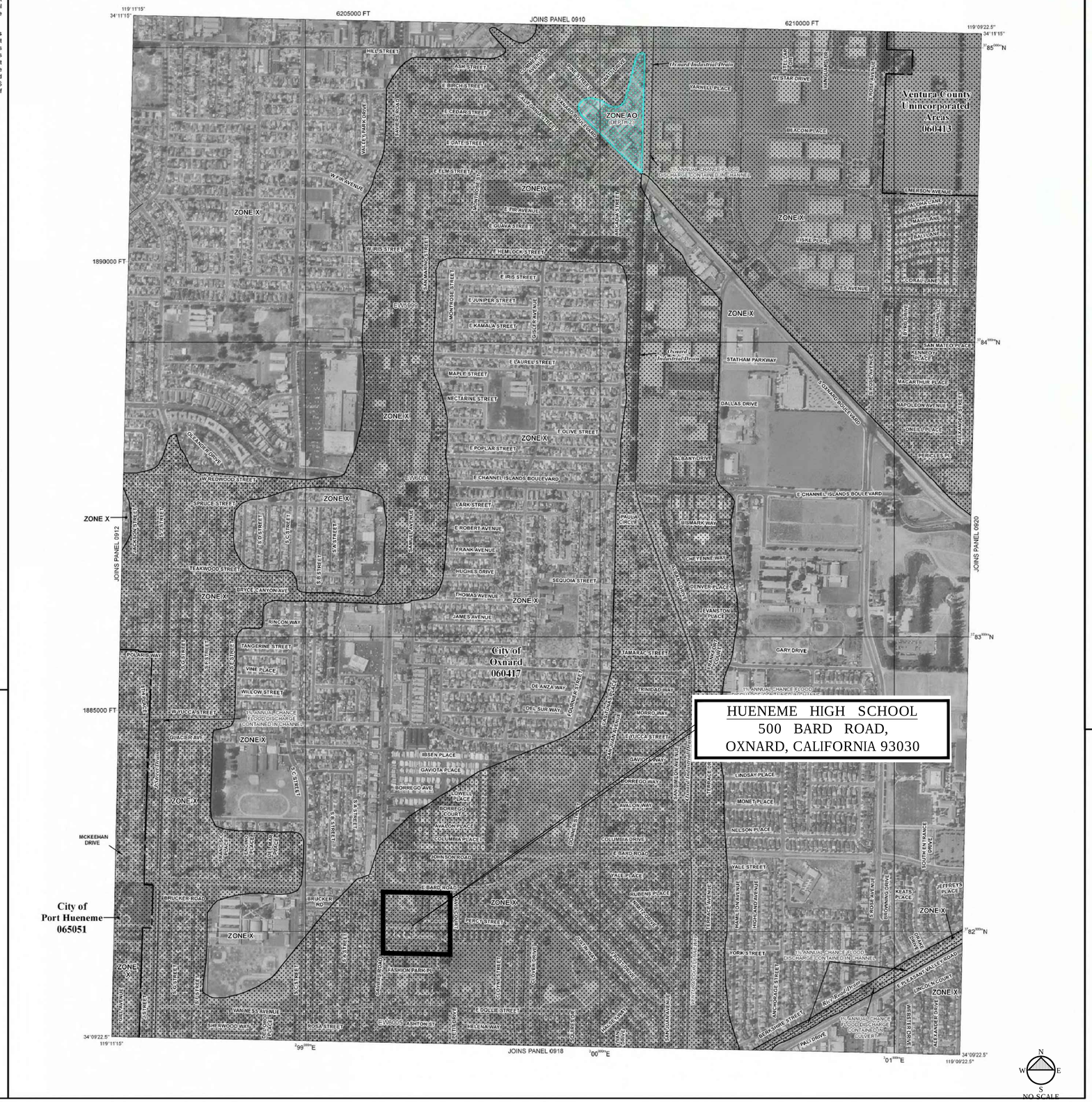

LEGEND

SPECIAL FLOOD HAZARD AREAS SUBJECT TO INUNDATION BY THE 1% ANNUAL CHANCE FLOOD

The 1% annual flood (100-year flood), also known as the base flood, is the flood that has a 1% chance of being equaled or exceeded in any given year. The Special Flood Hazard Area is the area subject to flooding by the 1% annual chance flood. Areas of Special Flood Hazard include Zones A, AE, AH, AO, AR, A99, V, and VE. The Base Flood Elevation is the water-surface elevation of the 1% annual chance flood.

ZONE A	No Base Flood Elevations determined.
ZONE AE	Base Flood Elevations determined.
ZONE AH	Flood depths of 1 to 3 feet (usually areas of ponding); Base Flood Elevations determined.
ZONE AO	Flood depths of 1 to 3 feet (usually sheet flow on sloping terrain); average depths determined. For areas of alluvial fan flooding, velocities also determined.
ZONE AR	Special Flood Hazard Area formerly protected from the 1% annual chance flood by a flood control system that was subsequently decertified. Zone AR indicates that the former flood control system is being restored to provide protection from the 1% annual chance or greater flood.
ZONE A99	Area to be protected from 1% annual chance flood by a Federal flood protection system under construction; no Base Flood Elevations determined.
ZONE V	Coastal flood zone with velocity hazard (wave action); no Base Flood Elevations determined.
ZONE VE	Coastal flood zone with velocity hazard (wave action); Base Flood Elevations determined.

FLOODWAY AREAS IN ZONE AE

The floodway is the channel of a stream plus any adjacent floodplain areas that must be kept free of encroachment so that the 1% annual chance flood can be carried without substantial increases in flood heights.

OTHER FLOOD AREAS

ZONE X — Areas of 0.2% annual chance flood; areas of 1% annual chance flood with average depths of less than 1 foot or with drainage areas less than 1 square mile; and areas protected by levees from 1% annual chance flood.

OTHER AREAS

ZONE X — Areas determined to be outside the 0.2% annual chance floodplain.

ZONE D — Areas in which flood hazards are undetermined, but possible.

COASTAL BARRIER RESOURCES SYSTEM (CBRS) AREAS

OTHERWISE PROTECTED AREAS (OPAs)

CBRS areas and OPAs are normally located within or adjacent to Special Flood Hazard Areas.

1% annual chance floodplain boundary

0.2% annual chance floodplain boundary

Floodway boundary

Zone D boundary

CBRS and OPA boundary

Boundary dividing Special Flood Hazard Area Zones and boundary dividing Special Flood Hazard Areas of different Base Flood Elevations, flood depths or flood velocities.

513	Base Flood Elevation line and value; elevation in feet*
(EL. 987)	Base Flood Elevation value where uniform within zone; elevation in feet*

* Referenced to the North American Vertical Datum of 1988

(A)———(A)	Cross section line
(23)- - - - -(23)	Transect line
87°07'45", 32°22'30"	Geographic coordinates referenced to the North American Datum of 1983 (NAD 83), Western Hemisphere
3778000mN	1000-meter Universal Transverse Mercator grid values, zone 11
600000 FT	5000-foot grid ticks: California State Plane coordinate system, zone V (FIPSZONE 0405), Lambert Conformal Conic projection
DX5510 ×	Bench mark (see explanation in Notes to Users section of this FIRM panel)
● M1.5	River Mile

MAP REPOSITORY
Refer to listing of Map Repositories on Map Index

EFFECTIVE DATE OF COUNTYWIDE
FLOOD INSURANCE RATE MAP
January 20, 2010

EFFECTIVE DATE(S) OF REVISION(S) TO THIS PANEL

For community map revision history prior to countywide mapping, refer to the Community Map History table located in the Flood Insurance Study report for this jurisdiction.

To determine if flood insurance is available in this community, contact your Insurance agent or call the National Flood Insurance Program at 1-800-638-6620.

MAP SCALE 1" = 500'

250 0 500 1000 FEET

150 0 150 300 METERS

NFIP

NATIONAL FLOOD INSURANCE PROGRAM

PANEL 0916E

FIRM
FLOOD INSURANCE RATE MAP

VENTURA COUNTY, CALIFORNIA
AND INCORPORATED AREAS

PANEL 916 OF 1275
(SEE MAP INDEX FOR FIRM PANEL LAYOUT)

CONTAINS:

COMMUNITY	NUMBER	PANEL	SUFFIX
OXNARD, CITY OF	060417	0916	E
PORT HUENEME, CITY OF	065051	0916	E
VENTURA COUNTY	060413	0916	E

Notice to User: The **Map Number** shown below should be used when placing map orders; the **Community Number** shown above should be used on insurance applications for the subject community.

MAP NUMBER
06111C0916E

EFFECTIVE DATE
JANUARY 20, 2010

Federal Emergency Management Agency

IDENTIFICATION STAMP
DIV. OF THE STATE ARCHITECT
APP: 03-121617 INC:
REVIEWED FOR
SS ☑ FLS ☑ ACS ☑
DATE: 08/02/2021

REVISIONS

D C | A R C H I T E C T S
820 N. MOUNTAIN AVENUE
SUITE 200
UPLAND, CA. 91786
(909) 985 - 6939 OFFICE
(909) 985 - 0864 FAX

RELOCATION OF 3-PORT. CLRM. BLDGS.
HUENEME HIGH SCHOOL
500 W. BARD ROAD, OXNARD, CA 93033
OXNARD UNION HIGH SCHOOL DISTRICT

FEMA MAP

JOB NUMBER: 2020-024
DRAWN BY:
DATE: 03-2021
SCALE: 56-84 03-121000

F-1

C:\DCA\2020-024-HEHS 3 Port\2020-024_F1_FMhe.dwg, 4/12/2021 11:39:40 AM, AutoCAD PDF (High Quality Print).pc3

BUILDING DATA

BLDG.	DESCRIPTION	OCCUPANCY CONST. TYPE	TOTAL AREA	BASIC ALLOWABLE	ACTUAL < ALLOWABLE
(N) P3-01, 02, 03	(N) PORTABLE	E-VB	1,692 S.F.x 3 =5,076 S.F.	9,500 S.F.	5,076 S.F. > 9,500 S.F.

BUILDING HEIGHT: ONE STORY
AUTOMATIC FIRE SPRINKLER: NO PROVISION NOT REQUIRED
OCCUPANCY LOAD: 85 x 3 = 255 STUDENTS

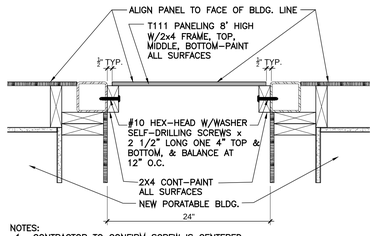

NOTES:
1. CONTRACTOR TO CONFIRM SCREW IS CENTERED ON STUD PRIOR TO INSTALLATION.
2. PAINT SURFACE TO MATCH NEW PORTABLE.

WOOD ENCLOSURER 1/2" = 1'-0" 8

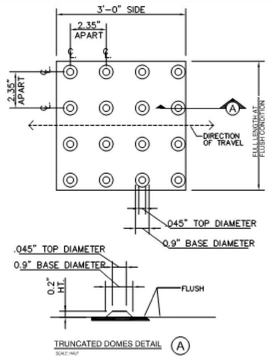

TRUNCATED DOMES NO SCALE 9

DESIGN PROFESSION IN GENERAL RESPONSIBLE CHARGE STATEMENT

THE POT IDENTIFIED IN THESE CONSTRUCTION DOCUMENTS MEETS THE REQUIREMENT OF THE CURRENT APPLICABLE CALIFORNIA BUILDING CODE (CBC) ACCESSIBILITY PROVISIONS FOR PATH OF TRAVEL REQUIREMENTS FOR ALTERATIONS, ADDITIONS AND STRUCTURAL REPAIRS. AS PART OF THE DESIGN OF THIS PROJECT, THE POT WAS EXAMINED AND ANY ELEMENTS, COMPONENTS OR PORTIONS OF THE POT THAT WERE DETERMINED TO BE NON-COMPLIANT WITH THE CBC HAVE BEEN IDENTIFIED AND THE CORRECTIVE WORK NECESSARY TO BRING THEM INTO COMPLIANCE HAS BEEN INCLUDED WITHIN THE SCOPE OF THIS PROJECT'S WORK THROUGH DETAILS, DRAWINGS AND SPECIFICATIONS INCORPORATED INTO THESE CONSTRUCTION DOCUMENT ANY NON-COMPLIANT ELEMENTS, COMPONENTS OR PORTIONS OF THE POT THAT WILL NOT BE CORRECTED BY THIS PROJECT BASED ON VALUATION THRESHOLD LIMITATIONS OR A FINDING OF UNREASONABLE HARDSHIP ARE SO INDICATED IN THESE CONSTRUCTION DOCUMENTS.

GENERAL NOTES

1. WHILE UNDERSTANDING THAT THE AMERICANS WITH DISABILITIES ACT (ADA) AND TITLE 24 ARE SUBJECT TO VARYING INTERPRETATIONS AND NUANCES, TO THE BEST OF MY KNOWLEDGE, AS THE DESIGN PROFESSIONAL IN GENERAL RESPONSIBLE CHARGE, THE FOLLOWING STATEMENT (REQUIRED BY THE DIVISION OF STATE ARCHITECT) IS TRUE AND CORRECT:
2. GATE IN PATH OF TRAVEL (POT) MUST COMPLY WITH DOOR REQUIREMENTS. PROVIDE LEVER HARDWARE WITH RETURN TO WITHIN $\frac{1}{2}$" OF THE GATE SURFACE AND LICL PLATES WITH REFERENCE TO DETAILS. SPECIFY 5 LBS OPERATION PRESSURE. PROVIDE AND REFERENCE AN ENLARGED PLAN DETAILS SHOWING LEVEL MANEUVERING CLEARANCE AREA AT ACCESSIBLE GATES WITH 2% MAXIMUM SLOPE IN ALL DIRECTIONS MATCHING CBC FIG. 11B-26A

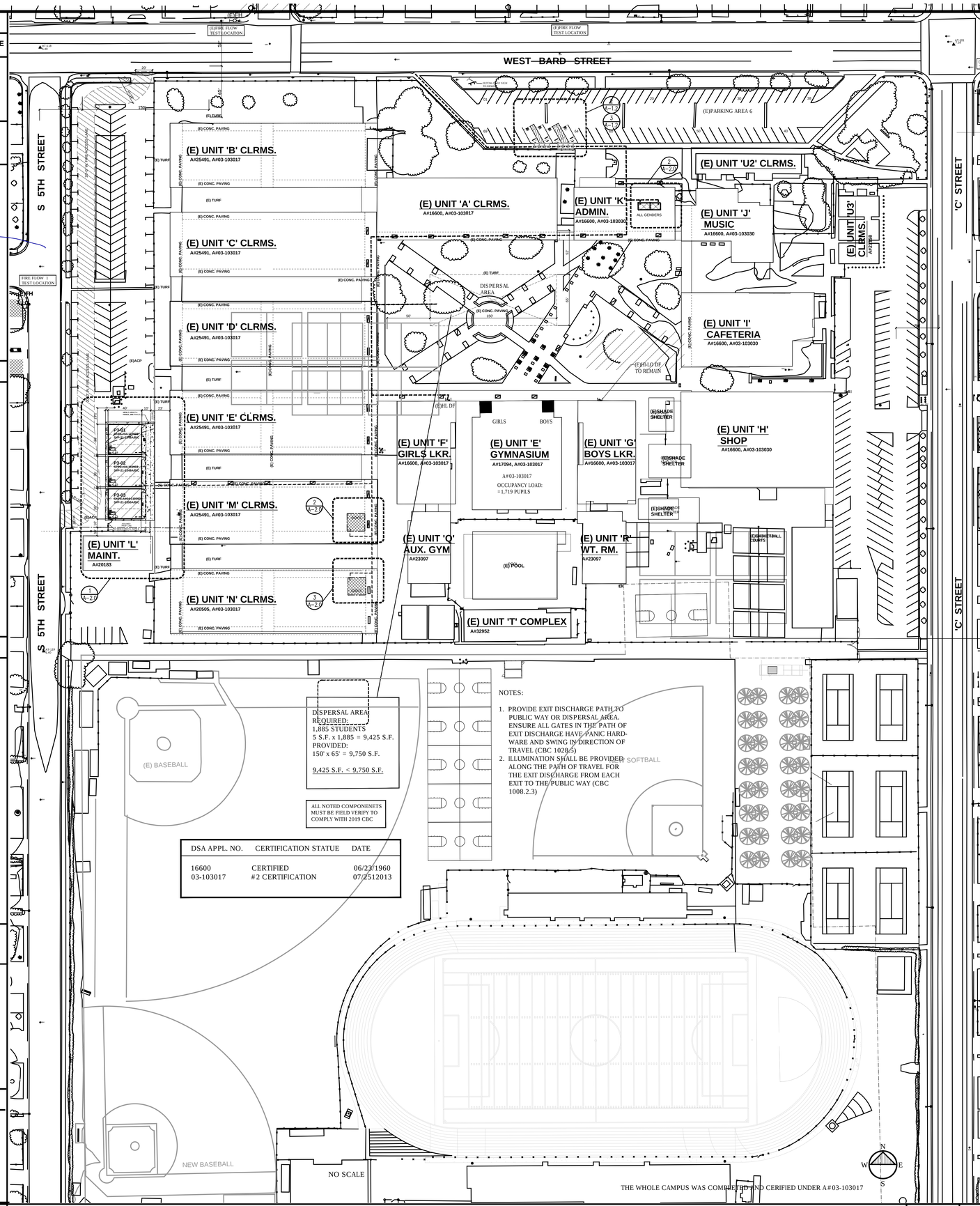

DSA APPL. NO.	CERTIFICATION STATUE	DATE
16600	CERTIFIED	06/23/1960
03-103017	#2 CERTIFICATION	07/25/2013

OVERALL SITE PLAN 1" = 50'-0" 1

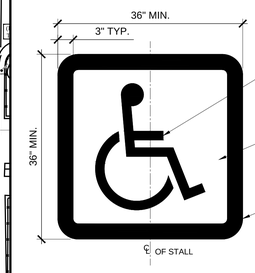

ACCESSIBILITY SYMBOL NO SCALE 4

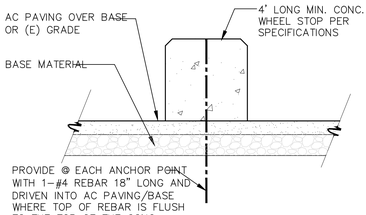

CONCRETE WHEELSTOP NO SCALE 5

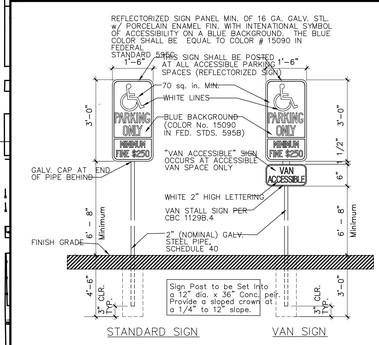

ADA SIGN MOUNT. HEIGHT NO SCALE 6

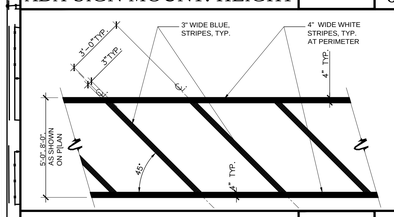

CROSS WALK NO SCALE 7

PARKING TABULATION

(E) PARKING AREA 6 (A#03-103017)

TOTAL (E) PARKING SPACES PROVIDED = 69
TOTAL ACCESSIBLE PARKING SPACES REQUIRED = 3
TOTAL ACCESSIBLE PARKING SPACES PROVIDED = 4
1 - 9' x 18' VAN ACCESSIBLE PARKING STALL
3 - 9' x 18' STANDARD ACCESSIBLE PARKING STALL

SCOPE OF WORK

RELOCATION OF 3 - 36' x 47' PORTABLE CLASSROOM BUILDINGS STOCKPILE #04-119993 SUPPORTED ON WOOD FOUNDATION BY MANUFACTURER, WITH PRIOR DSA APPROVAL TO THIS SITE. PROVIDE NEW ADA DOOR SIGNAGE, NEW ELECTRICAL DATA AND FIRE ALARM DEVICES. PARKING RE-STRIPPING, WHEEL STOPS AND SIGNS.

SITE LEGEND / NOTES

NEW PORTABLE BUILDING
EXISTING BUILDINGS
GENDER NEUTRAL (STAFF) TOILET
BOYS/GIRLS TOILET
ACCESSIBLE PATH OF TRAVEL (SEE POT NOTE)

IDENTIFICATION STAMP
DIV. OF THE STATE ARCHITECT
APP: 03-121617 INC:
REVIEWED FOR
SS ☑ FLS ☑ ACS ☑
DATE: 08/02/2021

REVISIONS

DC | ARCHITECTS
820 N. MOUNTAIN AVENUE
SUITE 200
UPLAND, CA. 91786
(909) 985 - 6939 OFFICE
(909) 985 - 0884 FAX

RELOCATION OF 3-PORT. CLRM. BLDGS.
HUENEME HIGH SCHOOL
500 W. BARD ROAD, OXNARD, CA 93033
OXNARD UNION HIGH SCHOOL DISTRICT

OVERALLSITE PLAN, ENLARGED PARTIAL SITE PLAN, BUILDING DATA, NOTES

JOB NUMBER: 2020-024
DRAWN BY:
DATE: 03-2021
SCALE: SS-H4 03-121617

A-1.0

C:\DCA\2020-024-HEHS 3 Port_03-121617\2020-024_A100_SPhe_071521.dwg, 7/21/2021 10:45:17 AM, AutoCAD PDF (High Quality Print).pc3

BUILDING DATA

BLDG.	DESCRIPTION	OCCUPANCY CONST. TYPE	TOTAL AREA	BASIC ALLOWABLE	ACTUAL < ALLOWABLE
(N) P3-01, 02, 03	(N) PORTABLE	E-VB	1,692 S.F.x 3 =5,076 S.F.	9,500 S.F.	5,076 S.F. > 9,500 S.F.

BUILDING HEIGHT: ONE STORY
AUTOMATIC FIRE SPRINKLER: NO PROVISION NOT REQUIRED
OCCUPANCY LOAD: 85 x 3 = 255 STUDENTS

DGS GENERAL SERVICES — DSA DIVISION OF THE STATE ARCHITECT

Home | Project Status eTracker | Inspectors | Accepted Labs | Plan Review Fee Calculator

Project Certification Status

Office ID: 03 Application #: 103017 File #: 56-H4

Project Name: Hueneme High School

Project Scope: Construction of ALTERATIONS TO 7 CLASSRM BLDGS, LIBRARY BLDG, 2 LOCKER BLDGS, SHOP BLDG, CAFETERIA BLDG, MUSIC BLDG, ADMIN BLDG, MAINTENANCE BLDG, GYM, 2 ACTIVITY BLDGS, FIELD BLDG, MECH EQUIP BLDG.

Field Engineer: Widjaja, Tjahjana

Engineer Recomm. Date: 8/30/2007 Void/Canceled Date:

90 Day Letter Date: 11/13/2007 90 Day Exp. Date: 2/11/2008

90 Day Ext. Date: Ext. 90 Day Exp. Date:

60 Day Letter Date: 60 Day Exp. Date:

60 Day Ext. Date: Ext. 60 Day Exp. Date:

Last Certification Date: 7/25/2013 Last Certification Letter Type: #2-Certification & Close of File Per EDU Code 17315(b) OR 81147(b)

VERIFY REPORT

PERMIT NO. 21-0188

CITY OF OXNARD FIREFLOW TEST DATA

RETURN COMPLETED FORM TO: BUILDING AND ENGINEERING DIVISION
NOTE: THIS FORM MUST BE SIGNED BY THE REGISTERED PROFESSIONAL (I.E., RCE OR C-16 CONTRACTOR) HAVING RESPONSIBILITY FOR THE TEST

BUILDING AND ENGINEERING DIVISION
214 S. C STREET
OXNARD, CA 93030

LOCATIONS OF HYDRANTS: 4401 S. F St.
PROJECT: Hueneme High School ADDRESS: 500 W. Bard Rd.
DEVELOPER: Oxnard Union High School District
INSPECTOR: Bobby Castaneda OBSERVERS: FIRM: City of Oxnard
ENGINEER/CONTRACTOR: Service-Pro Fire Protection, Inc LIC NO./TYPE: 817889 / C-16
FAX: 805-487-2975
PHONE: 805-487-1477

TEST NO.	LOCATION	DATE	TIME	DAY	C	DIA. (IN)	STATIC	PITOT	RESID-UAL	OBSER-VED	CALCULATED AT 20 psi
Flow 1	Gauge Hydrant #1 - H13	2.17.2021	10:00 am	Wed.			83 psi		75 psi		
	Flow Hydrant #2 - H7							39 psi		1,370 gpm	4,175 gpm

(TIME: DATE, TIME, DAY; PRESSURES (psi): STATIC, PITOT, RESIDUAL; FLOW RATES (gpm): OBSERVED, CALCULATED AT 20 psi)

(2) 1 3/4" pitotless nozzle flowing to open atmosphere.

The formula used to compute the discharge, Q in gpm from these measurements is:

$$Q=29.83cd^2(p)^{1/2}$$

where
c = is the coefficient of discharge
d = the diameter of the outlet in inches
p = the velocity pressure in psi.

Outlet square and projecting into barrel c = 0.70 | Outlet square and sharp c = 0.80 | Outlet smooth and rounded c = 0.90

If flow tubes (stream straighteners) are being utilized a "c" of 0.95 is suggested unless the coefficient of the tube is known.

The formula which is generally used to compute the discharge at the specified residual pressure or for any desired pressure drop is:

$$Q_r = Q_f \times \frac{H_r^{0.54}}{H_f^{0.54}}$$

Q_r = flow available at desired residual pressure
Q_f = flow during test
H_r = pressure drop to desired residual pressure
H_f = pressure drop during test

TESTING & CALCULATION CHECKED AND CERTIFIED — DATE 2.17.2021 — SEAL

WATER ATLAS GRID NO.

G:\FORMS\Civil Forms\Fire Flow Test Worksheet 11-25-09.xls Rev: 11/25/09

FIRE FLOW TEST REPORT

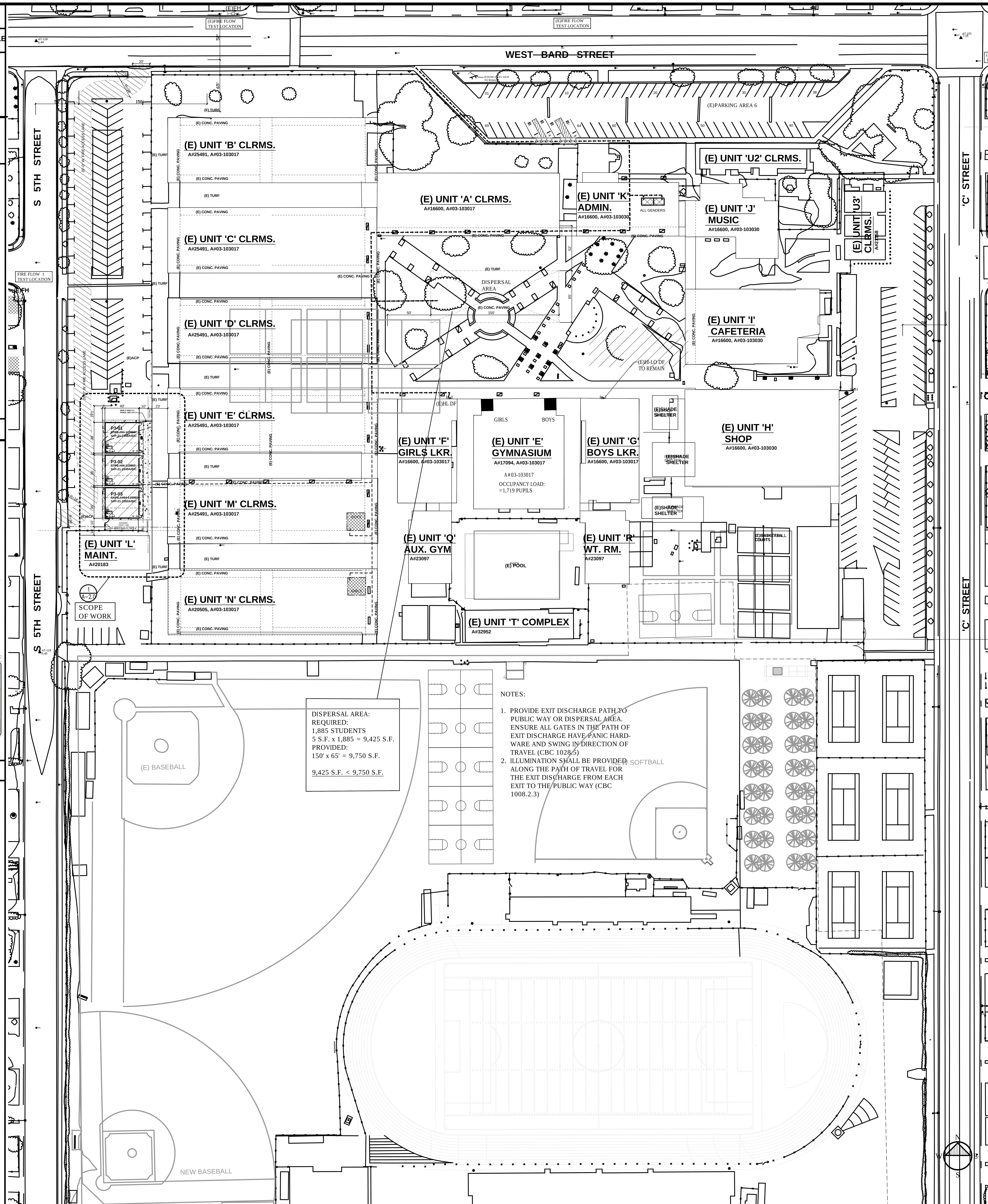

OVERALL SITE PLAN - LOCAL FIRE AUTHORITY | 1" = 50'-0" | 1

IDENTIFICATION STAMP
DIV. OF THE STATE ARCHITECT
APP: 03-121617 INC:
REVIEWED FOR
SS ☑ FLS ☑ ACS ☑
DATE: 08/02/2021

FIRE MARSHAL SITE NOTES

A. PLANS SHALL BE SUBMITTED FOR FIRE APPARATUS ACCESS ROADS FOR REVIEW AND APPROVAL PRIOR TO CONSTRUCTION, FOR EMERGENCY ACCESS AND FIRE FIGHTING PURPOSES. 20 FEET IS REQUIRED PRIOR, DURING CONSTRUCTION AND AFTER PORTABLE BUILDING FINAL, AND SHALL BE MAINTAINED AT ALL TIMES.

B. THE EXISTING ADDRESS IS PROVIDED ON THE ADMINISTRATION BUILDING WITH 12" NUMBERS PLAINLY VISIBLE AND LEGIBLE FROM THE STREET.

C. EXISTING SURFACE - FIRE APPARATUS ACCESS ROADS ARE DESIGNED AND MAINTAINED TO SUPPORT THE IMPOSED LOADS OF FIRE APPARATUS AND ARE PROVIDED WITH A SURFACE SO AS TO PROVIDE ALL-WEATHER DRIVING CAPABILITIES.

D. COMMERICAL DUMPSTERS OR CONTAINERS WITH AN INDIVIDUAL CAPACITY OF 1.5 CUBIC YARDS OR GREATER SHALL NOT BE STORED OR PLACED WITHIN FIVE FEET OF COMBUSTIBLE ROOF EAVE LINES UNLESS AREAS CONTAINING DUMPSTERS ARE PROTECTED BY AN APPROVED SPRINKLER SYSTEM. FIRE CODE CHAPTER 3.

E. EXISTING KNOX PAD LOCKS ON ALL FIRE DEPT. ACCESS GATES AS PER FIRE DEPARTMENT REQUIREMENTS, INSPECTOR WILL PLACE AT WALK THRU FOR BUILDING FINAL. A KNOX BOX IS REQUIRED AT THE MAIN BUILDING.

~~F. ALL FIRE HYDRANTS ARE EXISTING SUPER HYDRANTS 6"x4"x2½"x2½". HYDRANTS ARE INSTALLED PER SPECIFICATION OF CITY VENTURA WATER~~

G. THE EXISTING ALL WEATHER SURFACE ACCESSIBLE TO NEW PORTABLE CLASSROOMS SHALL BE PROVIDED AND MAINTAINED.

H. EXIT DOORS SHALL BE OPENABLE FROM THE INSIDE WITHOUT USE OF A KEY OR ANY SPECIAL KNOWLEDGE OR EFFORT. CBC 2019 TITLE 24 1008.

I. WIDTH AND HEIGHT OF REQUIRED EXIT DOORWAYS TO COMPLY WITH CBC 2019 TITLE 24 1003, 1005, 1008.

J. EXITS SHALL BE ILLUMINATED AT ANY TIME THE BUILDING IS OCCUPIED WITH LIGHT HAVING AN INTENSITY OF NOT LESS THAN (1) FIVE FOOT-CANDLES AT FLOOR LEVEL. CBC 2019 TITLE 24 1006.

K. FENCES AND GATES TO COMPLY WITH CBC 2010 TITLE 24 1008. LOCKING DEVICES TO COMPLY WITH CITY OF OXNARD STANDARDS.

L. FIRE RESISTANCE OF EXTERIOR WALLS SHALL COMPLY WITH C.B.C. SECTION 705.

SCOPE OF WORK

RELOCATION OF 3 - 36' x 40' PORTABLE CLASSROOM BUILDINGS STOCKPILE #04-119993 SUPPORTED ON WOOD FOUNDATION BY MANUFACTURER, WITH PRIOR DSA APPROVAL TO THIS SITE. PROVIDE NEW ADA DOOR SIGNAGE, NEW ELECTRICAL DATA AND FIRE ALARM DEVICES. PARKING RE-STRIPPING, WHEEL STOPS AND SIGNS.

SITE LEGEND / NOTES

- NEW PORTABLE BUILDING
- EXISTING BUILDINGS
- GENDER NEUTRAL (STAFF) TOILET
- BOYS/GIRLS TOILET
- ACCESSIBLE PATH OF TRAVEL (SEE POT NOTE)

LOCAL FIRE AUTHORITY REVIEW

DSA 810

FIRE & LIFE SAFETY SITE CONDITIONS SUBMITTAL

PROJECT INFORMATION
School District/Owner: OXNARD UNION HIGH SCHOOL
Project Name/School: HUENEME HIGH SCHOOOL
Project Address: 500, BARD ROAD, OXNARD CA 93030

FIRE & LIFE SAFETY INFORMATION

1.	Has a fire hydrant flow test been performed within the past 12 months? (If yes, provide a copy of the test data.)	Yes ☒	No ☐
2.	Was the fire hydrant water flow test performed as part of this LFA review?	Yes ☒	No ☐
3.	Is the project located within a designated fire hazard severity zone (FHSZ) as established by Cal-Fire? (If yes, indicate FHSZ classification below.)	Yes ☐	No ☒
	Refer to the following website for FHSZ locations: http://egis.fire.ca.gov/FHSZ/	Moderate ☐ High ☐	Very High ☐
	Wildland Interface Area (WIFA) (If any designations are checked, project design must meet the requirements of CBC Chapter 7A.)		WIFA ☐

CONDITION MEANS AND METHODS RESOLUTION		Yes	No	N/A	N/R
4.	Emergency vehicle access roadways do not meet CFC requirements.			X	
4a.	Acceptable Alternate: Emergency vehicle and personnel access as proposed by the project architect is acceptable for providing fire suppression and protection of life and property.				
5.	Fire Hydrants: Number and spacing does not meet CFC requirements.			X	
5a.	Acceptable Alternate: Number of fire hydrants and spacing as proposed by the project architect is acceptable for fire suppression and protection of life and property.				
6.	Fire Hydrants: Water flow and pressure are less than CFC minimum.			X	
6a.	Acceptable Alternate: The available flow and pressure is acceptable for providing fire suppression and protection of life and property.				
7.	Location of fire department connection(s) serving fire sprinkler systems or standpipe systems does not meet CFC requirements.			X	
7a.	Acceptable Alternate: The location of the department connection serving the fire sprinkler system and/or standpipe system is acceptable for providing fire suppression and protection of life and property.				

(Yes / No / N/A / N/R under ALTERNATE ACCEPTED)

School District Acceptance of Acceptable Design Alternates

By signing this form, the school district acknowledges and accepts the proposed design as an alternative to California Building Code (CBC) and California Fire Code (CFC) minimum requirements, as indicated by one or more of the conditions indicated at items 4a, 5a, 6a or 7a, for providing fire and life safety protection of life and property.

Accepted by: ______ Title: ______

Signature: ______ Date: ______

LOCAL FIRE AUTHORITY (LFA) INFORMATION
LFA Agency Name: City of Oxnard Fire Department
LFA Review Official: Stephen McNaughten
Title: Battalion Chief/Fire Marshal Work Phone: 805-385-7722
Work Email: Stephen.mcnaughten@oxnard.org
LFA Reviewer's Signature: [signature] Date: 7/21/2021

DGS DSA 810 (revised 01/30/20) DIVISION OF THE STATE ARCHITECT — DEPARTMENT OF GENERAL SERVICES — Page 2 of 4 STATE OF CALIFORNIA

REVISIONS

DC | ARCHITECTS
820 N. MOUNTAIN AVENUE
SUITE 200
UPLAND, CA. 91786
(909) 985 - 6939 OFFICE
(909) 985 - 0864 FAX

RELOCATION OF 3-PORT. CLRM. BLDGS.
HUENEME HIGH SCHOOL
500 W. BARD ROAD, OXNARD, CA 93033
OXNARD UNION HIGH SCHOOL DISTRICT

OVERALL SITE PLAN - LOCAL FIRE AUTHORITY ENLARGED PARTIAL SITE PLAN-ADA PARK DEMO.

JOB NUMBER: 2020-024 | DRAWN BY: | DATE: 03-2021 | SCALE: 56-H4 03-121617

A-1.1

C:\DCA\2020-024-HEHS 3 Port_03-121617\2020-024_A100_ SPhe_071521.dwg, 7/21/2021 10:46:34 AM, AutoCAD PDF (High Quality Print).pc3

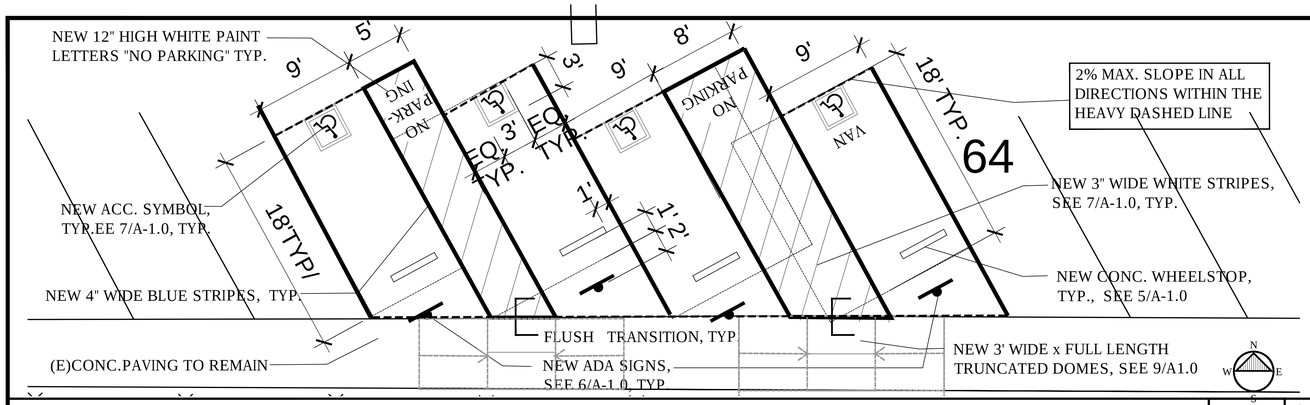

ENLARGED PARTIAL REMODEL SITE PLAN - ADA PARKING | 3/16" = 1'-0" | 3

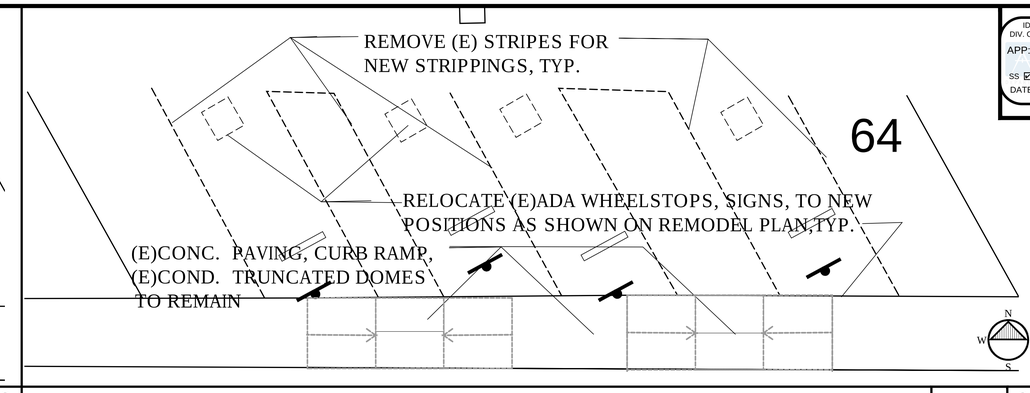

ENLARGED PARTIAL DEMO SITE PLAN - ADA PARKING | 3/16" = 1'-0" | 2

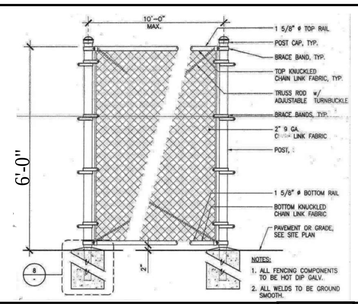

CHAIN LINK FENCE | NO SCALE | 7

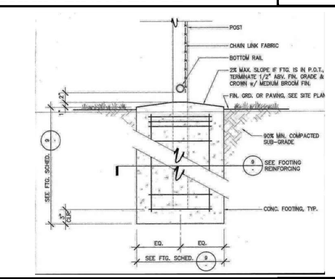

C.L. FENCE POST, FTG. | NO SCALE | 8

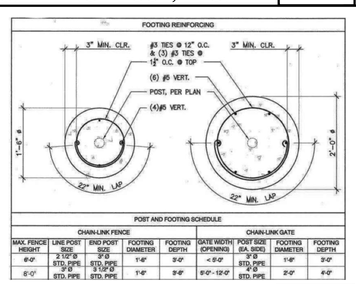

POST,FTG.,REINFORCEMT. | NO SCALE | 9

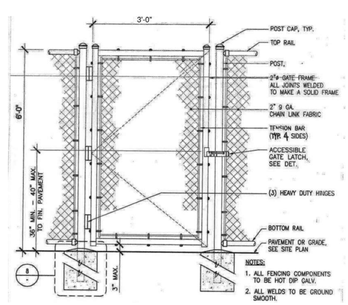

CHAIN LINK GATE | NO SCALE | 10

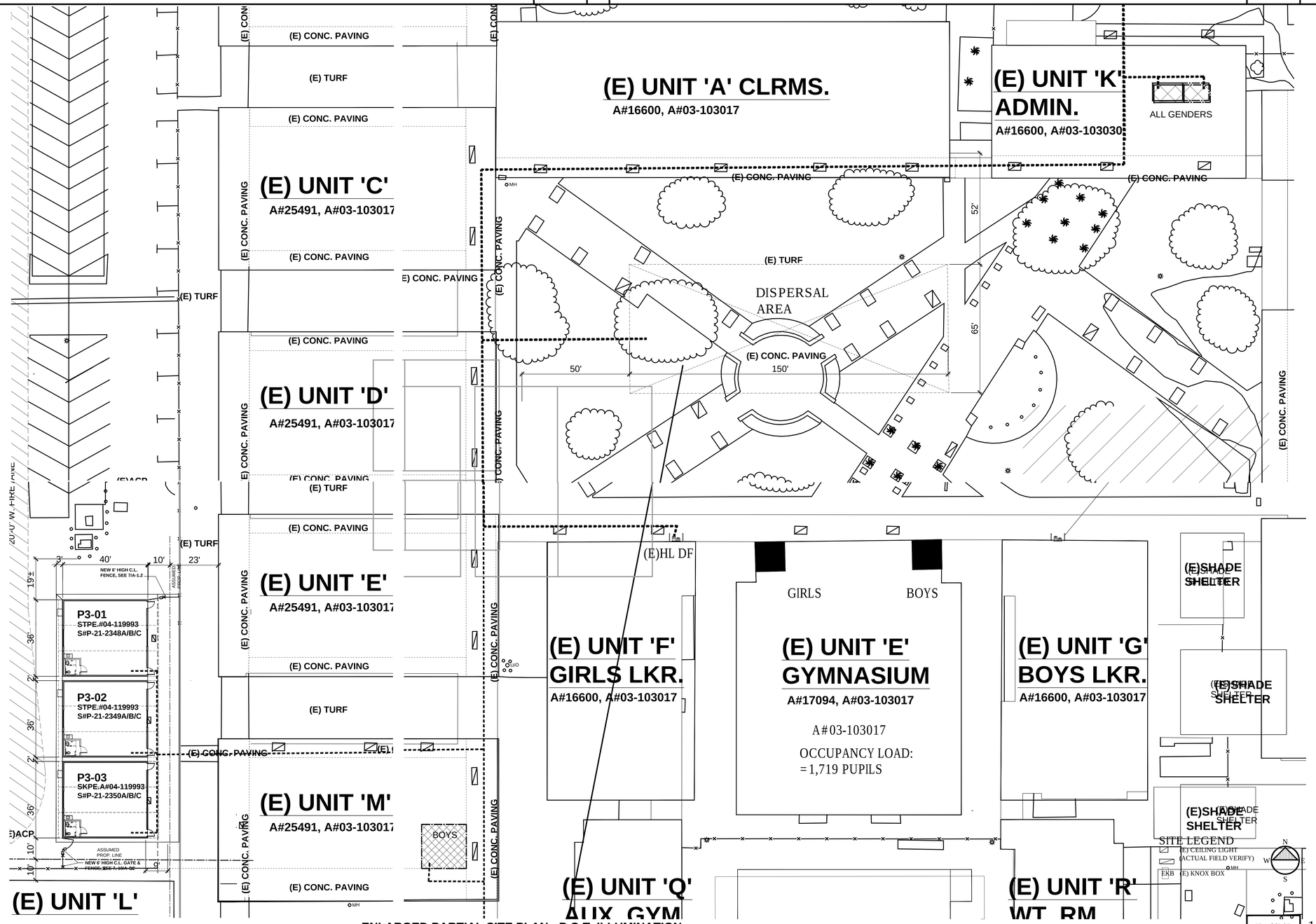

ENLARGED PARTIAL SITE PLAN - P.O.T. ILLUMINATION | 1

IDENTIFICATION STAMP
DIV. OF THE STATE ARCHITECT
APP: 03-121617 INC:
REVIEWED FOR
SS ☑ FLS ☑ ACS ☑
DATE: 08/02/2021

REVISIONS

DC | ARCHITECTS
820 N. MOUNTAIN AVENUE
SUITE 210
UPLAND, CA. 91786
(909) 985 - 6939 OFFICE
(909) 985 - 0854 FAX

RELOCATION OF 3-PORT. CLRM. BLDGS.

HUENEME HIGH SCHOOL
500 W. BARD ROAD, OXNARD, CA 93033
OXNARD UNION HIGH SCHOOL DISTRICT

ENLARG. PART.SITE PLAN
- P.O.T. ILLUMINATION
REMODEL SITE PLAN
- ADA PARKING

JOB NUMBER:	2020-024
DRAWN BY:	EKB
DATE:	03-2021
PLACE:	Sht#4 03-121617

A-1.2

C:\DCA\2020-024-HEHS 3 Port_03-121617\2020-024_A100_ SPhe_071521.dwg, 7/21/2021 11:07:49 AM, AutoCAD PDF (High Quality Print).pc3

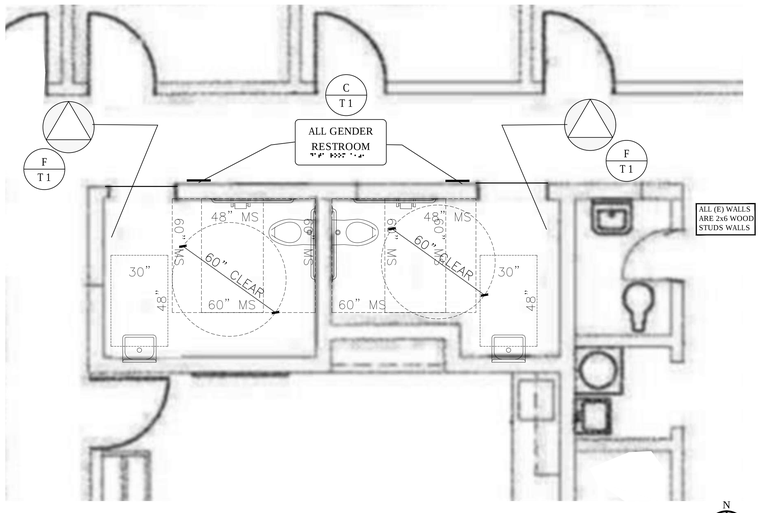

REFER TO DSA#03-103017

(E) UNIT 'K' ALL GENDERS TOILETS FLOOR PLAN | 3/8" = 1'-0" | 2

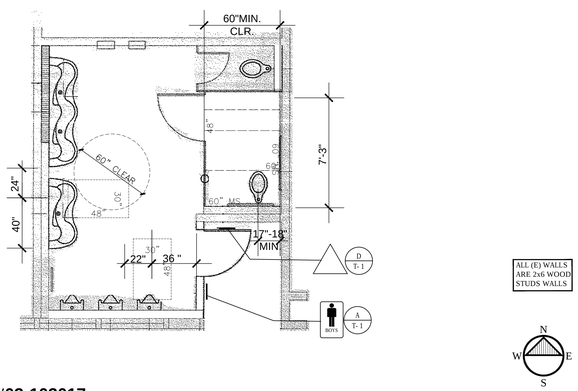

REFER TO DSA#03-103017

(E) UNIT 'M' BOYS TOILET FLOOR PLAN | 1/4" = 1'-0" | 3

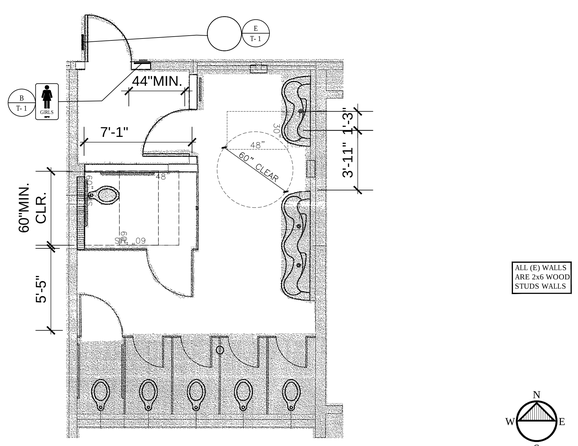

REFER TO DSA#03-103017

(E) UNIT 'N ' GIRLS TOILET FLOOR PLAN | 1/4" = 1'-0" | 4

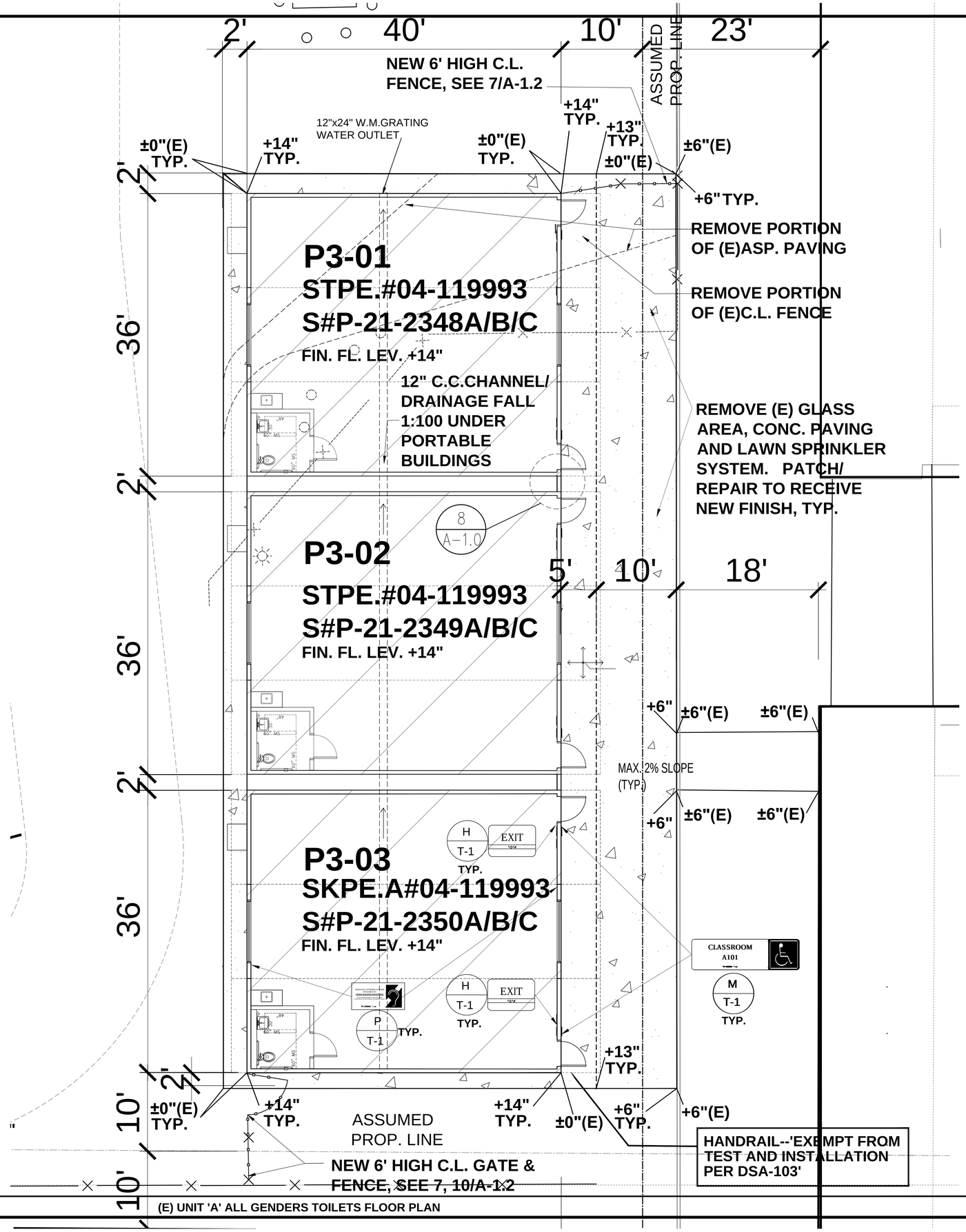

(E) UNIT 'A' ALL GENDERS TOILETS FLOOR PLAN | 3/16" = 1'-0" | 2

IDENTIFICATION STAMP
DIV. OF THE STATE ARCHITECT
APP: 03-121617 INC:
REVIEWED FOR
SS ☑ FLS ☑ ACS ☑
DATE: 08/02/2021

REVISIONS

D C | ARCHITECTS
820 N. MOUNTAIN AVENUE
SUITE 200
UPLAND, CA. 91786
(909) 985 - 6929 OFFICE
(909) 985 - 0864 FAX

RELOCATION OF 3-PORT. CLRM. BLDGS.
HUENEME HIGH SCHOOL
500 W. BARD ROAD, OXNARD, CA 93033
OXNARD UNION HIGH SCHOOL DISTRICT

PARTIAL ENLARGED SITE
PLAN - PORTABLE CLRM.,
(E)GENDER NEUTRAL,MEN/
WOMEN RESTRM.FL. PLANS

JOB NUMBER: 2020-024
REVIS NO:
DATE: 03-2021
SCALE: 56/14
03-121617

A-2.0

C:\DCA\2020-024-HEHS 3 Port_03-121617\2020-024_A100_SPlie_071521.dwg, 7/21/2021 10:40:53 AM, AutoCAD PDF (High Quality Print).pc3

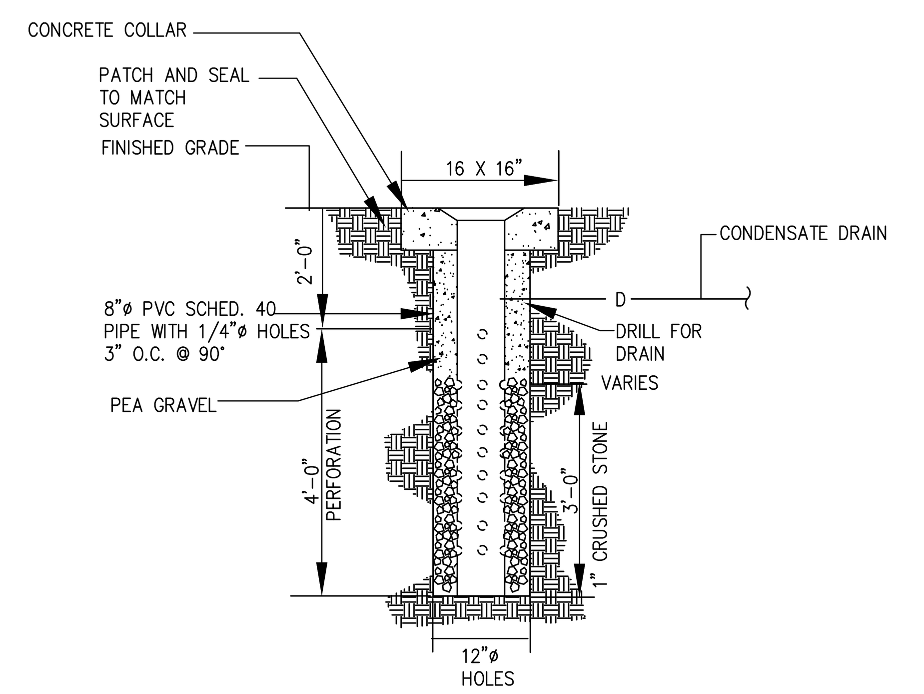

TYP DRYWELL DETAIL	SCALE NONE	1

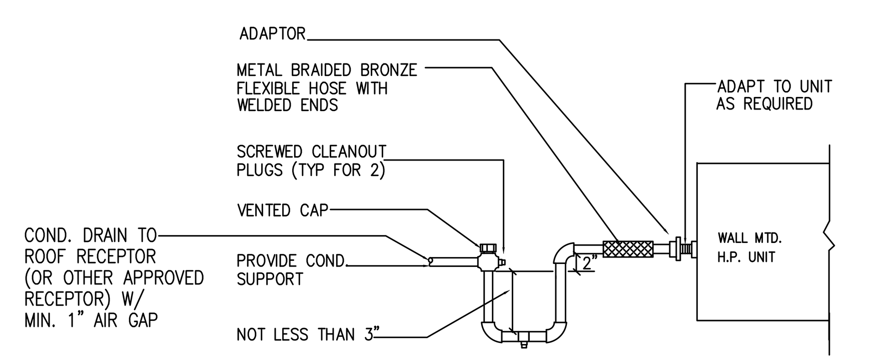

TYP COND DRAIN CONNECTION DETAIL	SCALE NONE	2

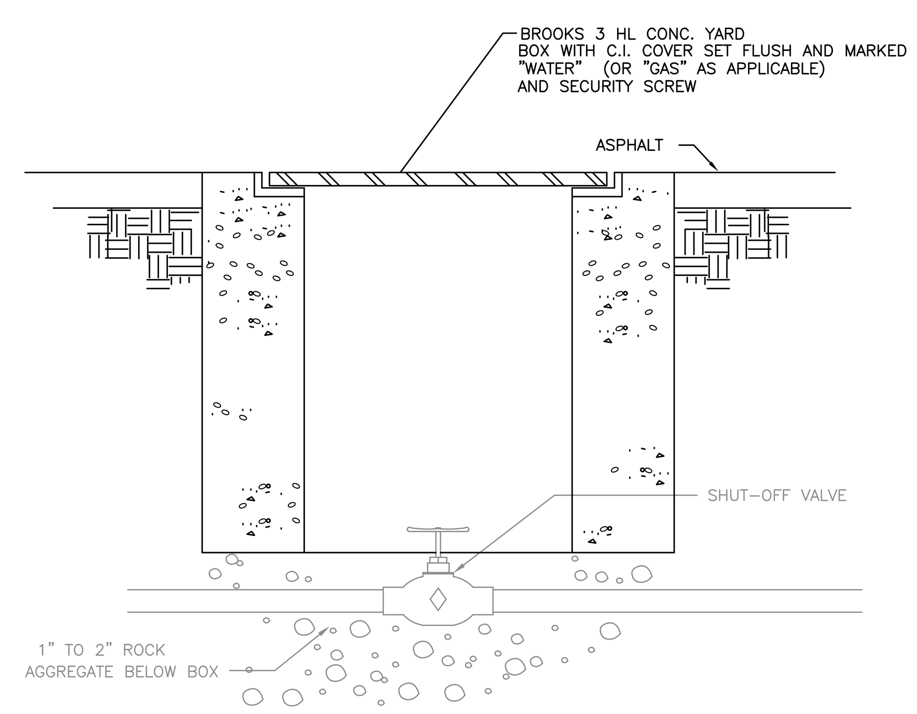

SHUT-OFF VALVE IN BOX DETAIL	SCALE NONE	3

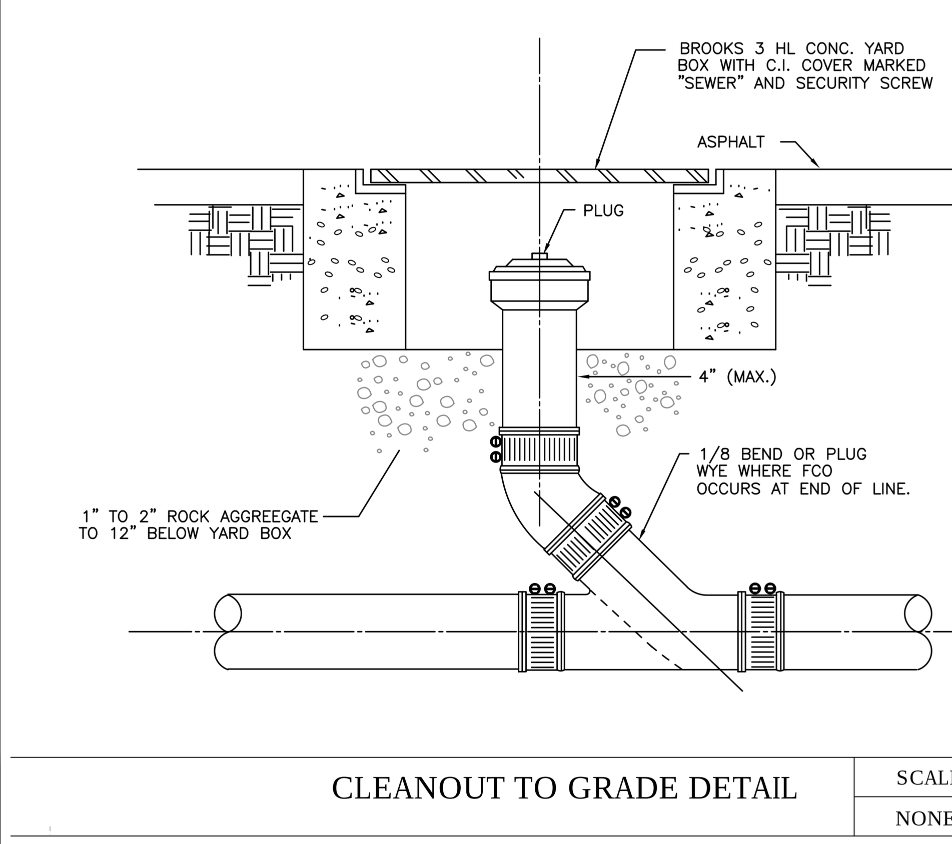

CLEANOUT TO GRADE DETAIL	SCALE NONE	4

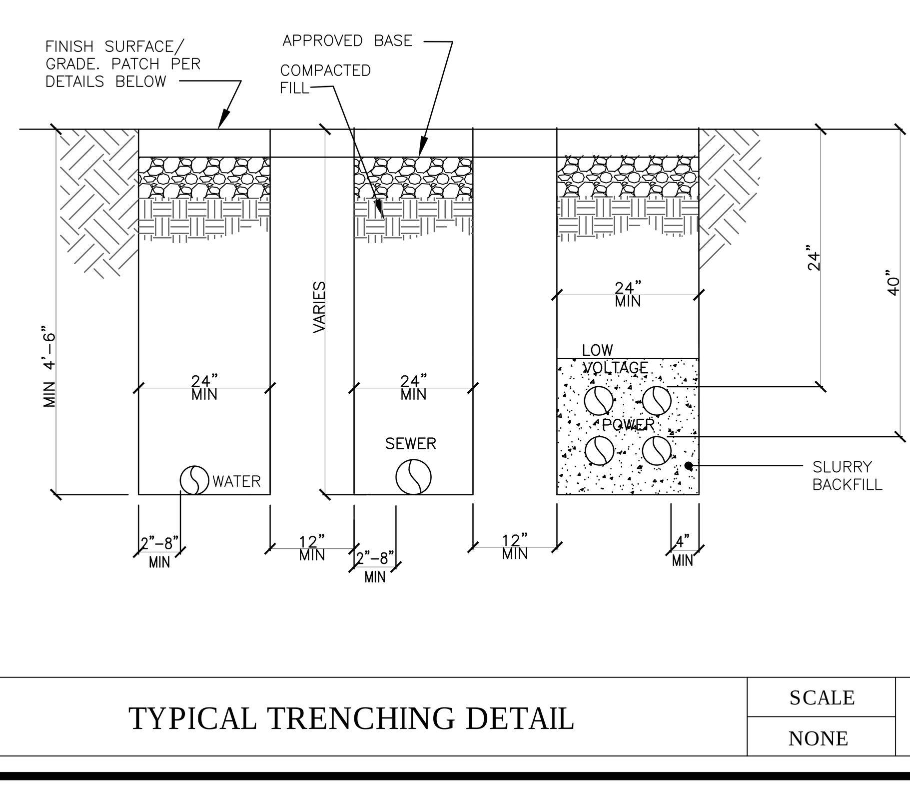

TYPICAL TRENCHING DETAIL	SCALE NONE	5

PLUMBING REQUIREMENTS

1. SCOPE OF WORK:

A. FURNISH ALL LABOR, SUPERVISION, MATERIALS, EQUIPMENT & FACILITIES NECESSARY TO FURNISH, FABRICATE, DELIVER, STORE AND INSTALL ALL WORK NOTED ON THE DRAWINGS AND/OR SPECIFIED HEREIN.

B. THE CONTRACTOR SHALL FURNISH AND INSTALL ALL WORK NECESSARY TO MAKE A COMPLETE SYSTEM WHETHER OR NOT SUCH DETAILS ARE MENTIONED IN THESE SPECIFICATIONS OR SHOWN ON THE PLANS, BUT WHICH ARE OBVIOUSLY NECESSARY TO MAKE A COMPLETE SYSTEM, EXCEPTING ONLY THOSE PORTIONS THAT ARE SPECIFICALLY MENTIONED HEREIN OR PLAINLY MARKED ON THE ACCOMPANYING DRAWINGS AS BEING INSTALLED UNDER ANOTHER SECTION OF THE SPECIFICATION.

2. WORKMANSHIP: THE WORK SHALL BE ACCOMPLISHED IN A THOROUGH & WORKMAN-LIKE MANNER SATISFACTORY TO AND MEETING THE APPROVAL OF THE OWNER AND ARCHITECT.

3. MATERIALS: ALL MATERIALS, APPLIANCES AND EQUIPMENT, SHALL BE NEW AND THE BEST OF THEIR RESPECTIVE KIND, FREE FROM ALL DEFECTS AND OF THE MAKE AND QUALITY SPECIFIED.

4. SITE INSPECTION: CONTRACTOR SHALL VISIT THE SITE OF WORK PRIOR TO SUBMISSION OF HIS BID AND THOROUGHLY FAMILIARIZE HIMSELF WITH THE WORKING CONDITIONS AND EXACT NATURE OF THE WORK. SUBMISSION OF A BID ACKNOWLEDGES FULL RESPONSIBILITY FOR FURNISHING A COMPLETE AND FUNCTIONAL SYSTEM. NO CHANGES IN CONTRACT WILL BE MADE TO ACCOMMODATE OR ALLOW EXTRA FUNDING FOR ANY OMISSIONS WHICH RESULTS FROM A FAILURE TO THOROUGHLY MAKE THE EXAMINATION.

5. CODES AND PERMITS: ALL MECHANICAL EQUIPMENT, INSTALLATION, ETC., SHALL CONFORM WITH ALL APPLICABLE CODES AND ORDINANCES AS INTERPRETED BY THE LOCAL AUTHORITY HAVING JURISDICTION, INCLUDING CALIFORNIA TITLE 24. CONTRACTOR SHALL OBTAIN AND PAY FOR ALL PERMITS & INSPECTIONS. COPIES OF ALL PERMITS AND INSPECTION REPORTS SHALL BE SUBMITTED TO THE ARCHITECT.

6. AS-BUILTS: CONTRACTOR SHALL PROVIDE A COMPLETE SET OF AS-BUILT TRANSPARENCIES WITH ALL CHANGES NOTED THEREON AT THE COMPLETION OF THE PROJECT AND PRIOR TO FINAL ACCEPTANCE AND PAYMENT.

7. GUARANTEE: CONTRACTOR SHALL UNCONDITIONALLY GUARANTEE ALL LABOR AND MATERIAL ON ALL WORK AGAINST DEFECTS IN WORKMANSHIP & MATERIALS FOR A PERIOD OF ONE YEAR AFTER COMPLETION.

8. SUBMITTALS: CATALOG INFORMATION AND CUTS OF ALL EQUIPMENT AND DEVICES SHALL BE SUBMITTED TO THE ARCHITECT FOR REVIEW (SIX COPIES OF EACH).

9. COORDINATION: THE DRAWINGS ARE DIAGRAMMATIC AND INTENDED TO SHOW SCOPE. CONTRACTOR SHALL COORDINATE HIS WORK WITH OTHER TRADES TO PROVIDE BEST ARRANGEMENT OF ALL PIPES, CONDUIT, ETC. LOCATION OF EXISTING PIPING SHOWN IS APPROXIMATE; CONTRACTOR SHALL VERIFY THEIR LOCATION PRIOR TO BEGINNING WORK OF THIS SECTION AND SHALL MAKE MODIFICATIONS AND ADJUSTMENTS REQUIRED TO INSTALL THE WORK OF THIS SECTION.

10. CUTTING AND PATCHING: ALL CUTTING AND PATCHING OF THE STRUCTURE (NEW OR EXISTING) SHALL BE PROVIDED UNDER OTHER SECTIONS OF THE WORK. PROVIDE ALL NECESSARY REQUIREMENTS TO THE PROJECT SUPERINTENDENT.

11. CLEANUP: UPON COMPLETION OF THE WORK UNDER THIS SECTION THE CONTRACTOR SHALL REMOVE ALL SURPLUS MATERIALS, EQUIPMENT AND DEBRIS INCIDENTAL TO THIS WORK AND LEAVE THE PREMISES CLEAN AND ORDERLY.

12. PIPING:

A. BUILDING AND YARD WASTE PIPING LESS THAN 2' BELOW GRADE SHALL BE STANDARD WEIGHT CAST IRON HUBLESS TYPE WITH GASKETS AND STAINLESS STEEL CLAMPS PER CISPI 310 - 85.

B. WASTE PIPING UNDER BUILDINGS SHALL BE COATED HUBLESS CAST IRON SOIL PIPE AND FITTINGS WITH MG CAST IRON COUPLINGS WITH STAINLESS STEEL BOLTS.

C. YARD SEWER PIPING SHALL BE BELL AND SPIGOT RUBBER RING POLYVINYL CHLORIDE GRAVITY SEWER PIPE AND FITTINGS, UNLESS CAST IRON IS SPECIFICALLY INDICATED ON THE SITE PLAN. PIPING WITH LESS THAN 24 INCH COVERAGE SHALL BE CAST IRON SOIL PIPE AND FITTINGS, AND SHALL BE ENCASED IN 4 INCH CONCRETE ENVELOPE.

D. CONNECTION BETWEEN CAST IRON SOIL PIPE AND PVC SEWER PIPE SHALL BE MADE WITH CALDER RUBBER COUPLINGS WITH STAINLESS STEEL CLAMPS. CLAMPS SHALL BE WRAPPED WITH 2 LAYERS OF 2" WIDE BLACK BUTYL RUBBER MOLDING TAPE WITH 1" LAP, AFTER TESTING IS COMPLETE.

E. BUILDING WATER PIPING SHALL BE TYPE "L" COPPER HARD DRAWN WITH WROUGHT COPPER FITTINGS. JOINTS SHALL BE SOLDERED WITH 95-5 OR SILVER SOLDER.

F. WATER PIPING UNDER BUILDINGS SHALL BE TYPE "L" HARD DRAWN COPPER PIPE WITH WROUGHT COPPER SOLDER FITTINGS AND COUPLINGS, AND SHALL BE WRAPPED.

G. YARD WATER PIPING SHALL BE SCHEDULE 80 N.S.F. AND I.A.P.M.O. LISTED PLAIN END POLYVINYL CHLORIDE PIPE WITH SCHEDULE 80 LISTED SOCKET END PVC FITTINGS AND COUPLINGS. PIPING SHALL BE PROVIDED IN ITS ENTIRE LENGTH WITH A CONTINUOUS ELECTRICALLY #14 PLASTIC COVER COPPER TRACER WIRE TYPE TW IN TRENCH ALONG PIPE. BACKFILLING OF PLASTIC PIPE SHALL NOT BE DONE WHEN PIPE IS IN EXPANDED POSITION.

H. TRANSITION BETWEEN PVC AND COPPER PIPE SHALL BE MADE WITH SCHEDULE 80 PVC SOCKET TO THREAD ADAPTER FOR 2" AND SMALLER PIPE, AND 150# PVC PLASTIC SOCKET END FLANGE AND 125# CAST BRASS SOLDER END FLANGE FOR 2-1/2" AND LARGER PIPE.

13. LAVATORIES IN RESTROOMS OF PUBLIC FACILITIES SHALL BE EQUIPPED WITH OUTLET DEVICES THAT LIMIT THE FLOW OF HOT WATER TO A MAXIMUM OF 0.5 GALLONS PER MINUTE, AND WITH CONTROLS TO LIMIT THE OUTLET TEMPERATURE TO 110 °F.

14. HORIZONTAL DRAINAGE PIPING SHALL BE RUN AT A UNIFORM SLOPE OF 1/4" PER FOOT TOWARD THE POINT OF DISPOSAL. WHERE APPROVED BY THE LOCAL AUTHORITY, DRAINAGE PIPING 4" OR LARGER SHALL BE RUN AT A UNIFORM SLOPE OF 1/8" PER FOOT. SEWER PIPE SHALL NEVER BE RUN AT A SLOPE GREATER THAN 1/4" PER FOOT UNLESS APPROVED BY ENGINEER OR ARCHITECT. CONTRACTOR SHALL INSTALL SEWER PIPING SUCH THAT FUTURE STUBOUT INVERTS ARE AS LOW AS POSSIBLE.

15. EACH PLUMBING VENT SHALL TERMINATE NOT LESS THAN TEN FEET FROM OR AT LEAST THREE FEET ABOVE ANY OPENABLE WINDOW, DOOR, OPENING, AIR INTAKE OR VENT SHAFT, AND SHALL TERMINATE NOT LESS THAN 6" ABOVE THE ROOF OR 1 FOOT FROM ANY VERTICAL SURFACE.

16. CLEAN-OUTS FOR C.I. PIPE SHALL HAVE CAST IRON BODY WITH COUNTERSUNK SLOTTED TAPERED THREAD BRONZE PLUG, AND SHALL BE INSTALLED AS PER SECTIONS 406 AND 1107 OF THE UNIFORM PLUMBING CODE. EXTERIOR CLEANOUTS SHALL BE PROVIDED IN ACCESS BOXES INSTALLED FLUSH WITH FINISHED GRADE. PVC CLEAN-OUTS SHALL BE SMITH 4283 ASSEMBLY WITH STAINLESS STEEL CLAMP COUPLINGS IN ACCESS BOX.

17. PROVIDE WATERTIGHT FLASHING WHEREVER PIPES PASS THRU EXTERIOR WALLS, ROOF AND FLOORS. IN ADDITION, SLEEVES SHALL BE PROVIDED FOR ALL PIPING PASSING THROUGH FOUNDATIONS, WALLS, AND FLOORS; HOWEVER, SLEEVES ARE NOT REQUIRED FOR SEWER PIPING PASSING THROUGH CONCRETE FLOORS ON GRADE. SLEEVES SHALL BE PROVIDED UNDER WALKWAYS, COVERED PASSAGES, AND WHERE INDICATED ON DRAWINGS. FOUNDATION SLEEVES SHALL BE SCHEDULE 40 PVC, WITH INSIDE DIAMETER 2" LARGER THAN PASSING PIPE, AND WALL SLEEVES SHALL BE RK INDUSTRIES 24 GAUGE GALVANIZED SHEET METAL ASSEMBLIES.

18. LOCATIONS OF EXISTING UTILITIES SHOWN ARE APPROXIMATE. CONTRACTOR SHALL VERIFY EXACT LOCATIONS AND DEPTHS OF EXISTING UTILITIES PRIOR TO STARTING WORK OF THIS SECTION. MAKE REQUIRED ADJUSTMENTS TO CONNECT TO EXISTING UTILITIES. IF INDICATED POINTS OF CONNECTION CANNOT BE MADE TO EXISTING UTILITIES AS FOUND, THE CONTRACTOR SHALL, BEFORE CONTINUING NOTIFY THE ARCHITECT PRIOR TO INSTALLING ANY WORK WHICH MAY BE AFFECTED.

19. BEFORE STARTING ANY WORK, THE CONTRACTOR FOR THIS SECTION OF THE WORK SHALL EXAMINE A COMPLETE SET OF DRAWINGS FOR ALL TRADES, INCLUDING ARCHITECTURAL, STRUCTURAL, HVAC, ELECTRICAL, FIRE PROTECTION AND PLUMBING. DIMENSIONS, SPACE REQUIREMENTS, AND POINTS OF CONNECTION TO ALL EQUIPMENT AND FIXTURES SHALL BE VERIFIED, AND ANY MINOR ADJUSTMENTS NECESSARY TO AVOID CONFLICT WITH THE BUILDING STRUCTURE AND THE WORK OF THE OTHER TRADES SHALL BE MADE. CONTRACTOR SHALL NOTIFY THE ARCHITECT IMMEDIATELY IF ANY MAJOR CONFLICTS OCCUR.

20. VALVES SHALL BE NIBCO, CRANE, WALWORTH, STOCKHAM OR EQUAL. SERVICE PRESSURE SHALL BE SUITABLE FOR SERVICE INTENDED. BELOW GROUND 2" AND SMALLER SHALL BE NIBCO T-585-70, 225° SCREWED BRONZE BALL VALVES. 2-1/2" AND LARGER SHALL BE WATEROUS 500 SERIES FLANGED CAST IRON GATE VALVES.

21. PROVIDE HANGERS, SUPPORTS AND INSULATION SADDLES AS REQUIRED AND PER ANSI REQUIREMENTS. PLUMBERS TAPE AND WIRE ARE NOT ACCEPTABLE.

22. CONTRACTOR SHALL AFFIX A MAINTENANCE LABEL TO ALL EQUIPMENT REQUIRING ROUTINE MAINTENANCE AND SHALL PROVIDE THREE COPIES OF MAINTENANCE AND OPERATING MANUALS TO THE OWNER.

23. CONTRACTOR SHALL ARRANGE FOR AND PAY FOR ALL UTILITY METERS AND UTILITY CONNECTIONS.

24. ROUGH-IN AND CONNECT EQUIPMENT PROVIDED UNDER OTHER SECTIONS OF THE WORK.

25. BACKFILL AND EXCAVATION:

A. PROVIDE EXCAVATING AND BACKFILLING NECESSARY TO INSTALL THE WORK. COMPLY WITH ALL STANDARD REQUIREMENTS FOR EXCAVATING AND BACKFILLING.

B. EXCAVATE TRENCHES SO EXTERIOR PIPES WILL BE PLACED NOT LESS THAN 24 INCHES BELOW FINISHED GRADE. WHERE ROCK IS ENCOUNTERED, EXCAVATE TO A GRADE THREE INCHES BELOW LOWEST PART OF PIPE, THEN BACKFILL WITH SELECT FILL TO REQUIRED GRADE. MAINTAIN MINIMUM 18" SEPARATION BETWEEN LINES. SEWER PIPING SHALL ALWAYS BE INSTALLED LOWER THAN WATER PIPING.

C. COMPACT GROUND UNDER PIPES. PROVIDE BELL HOLES AS REQUIRED SO PIPE BARREL WILL BE UNIFORMLY SUPPORTED.

D. BACKFILL EXCAVATIONS AFTER WORK HAS BEEN TESTED, INSPECTED AND ACCEPTED. USE SELECT SOIL, FREE OF ROCKS AND ROOTS. PNEUMATICALLY TAMP BACKFILL IN SIX INCH LAYERS TO SECURE A FIELD DENSITY RATIO OF NOT LESS THAN 90%.

26. COLD WATER LINES SHALL BE HYDROSTATICALLY TESTED AT 125 PSI AND THIS PRESSURE SHALL BE MAINTAINED FOR NOT LESS THAN 24 HOURS. ANY EQUIPMENT THAT MAY BE DAMAGED AT THIS PRESSURE SHALL BE DISCONNECTED FROM SYSTEM. SEWER, WASTE, AND VENT PIPING SHALL BE TESTED HYDROSTATICALLY UNDER 5 PSI PRESSURE FOR NOT LESS THAN ONE HOUR. SEWER PIPING SHALL BE COMPLETELY FLUSHED OUT AT CONCLUSION OF CONSTRUCTION AND PRIOR TO OCCUPANCY.

27. PROVIDE THRUST BLOCKING FOR PIPING AS REQUIRED. PLACE BLOCKING SUCH THAT FITTINGS WILL BE ACCESSIBLE FOR REPAIR.

28. AFTER COMPLETION OF TESTING, STERILIZE ENTIRE SYSTEM WITH A SOLUTION CONTAINING NOT LESS THAN 50 PARTS PER MILLION OF AVAILABLE CHLORINE. USE EITHER LIQUID CHLORINE, CALCIUM HYPOCHLORITE OR CHLORINATED LIME. AFTER STERILIZATION, FLUSH SOLUTION FROM SYSTEM WITH CLEAN WATER UNTIL RESILIENT CONTENT IS LESS THAN 0.2 PARTS PER MILLION.

29. CLOSING-IN OF UNINSPECTED WORK: THE CONTRACTOR SHALL NOT ALLOW OR CAUSE ANY OF THE WORK TO BE COVERED UP OR ENCLOSED UNTIL IT HAS BEEN TESTED BY THE CONTRACTOR, AND REVIEWED AND FOUND BY THE ARCHITECT AND INSPECTOR TO COMPLY WITH THE CONTRACT DOCUMENTS. SHOULD ANY WORK BE ENCLOSED OR COVERED UP BEFORE SUCH TEST AND REVIEW, THE CONTRACTOR SHALL, AT HIS OWN EXPENSE, UNCOVER THE WORK FOR SUCH TEST AND REVIEW, AND MAKE ANY NECESSARY REPAIRS OR MODIFICATIONS.

30. ACCESS BOXES SHALL BE BROOKS MODEL 3-RT OPEN BOTTOM CONCRETE BOXES WITH CAST IRON FRAME AND COVER WITH THE NAME OF THE SERVICE CAST IN COVER, OR EQUAL BY CHRISTY.

31. WATER PIPE SEISMIC CONNECTORS SHALL BE PROVIDED AT ALL LOCATIONS WHERE WATER PIPING CROSSES SEISMIC SEPARATIONS, AND SHALL BE METRAFLEX "METRALOOP" MLS SERIES, OR APPROVED EQUAL.

32. BURIED PIPE WRAPPING:

A. ALL COPPER AND STEEL PIPE FOR INSTALLATION BELOW GROUND SHALL BE SHOP WRAPPED.

B. PRIOR TO WRAPPING, PIPE SHALL BE CLEANED WITH A NON-OILY SOLVENT AND THEN CLEANED THOROUGHLY WITH A WIRE BRUSH.

C. AFTER CLEANING, PIPE SHALL BE SPIRALLY WRAPPED WITH 2" WIDE 20 MILS THICK MANVILLE TRANTEX VID-20 POLYVINYL CHLORIDE PRESSURE SENSITIVE TAPE WITH 1/2" LAP WITHOUT WRINKLES.

D. ALL FITTINGS AND FIELD JOINTS IN BURIED COPPER AND STEEL PIPING SHALL BE WRAPPED. PRIOR TO WRAPPING, FITTINGS AND FIELD JOINTS SHALL BE WASHED WITH A NON-OILY SOLVENT AND THEN CLEANED WITH A WIRE BRUSH. AFTER CLEANING, THEY SHALL BE COATED AND WRAPPED WITH A COAT OF KOPPERS "JET-SET" COAL TAP PRIMER, APPLIED UNIFORMLY TO DRY SURFACE. THEN APPLY TWO LAYERS OF 2" WIDE 35 MILS THICK POLYKEN 931 BLACK BUTYL RUBBER MOLDING TAPE WITH 1" LAP, COVERED WITH ONE LAYER OF 3/4" WIDE 15 MILS THICK POLYKEN 930 BLACK POLYETHYLENE PRESSURE SENSITIVE TAPE WITH 1/4" LAP. FIELD WRAPPING SHALL EXTEND 3 IN. OVER UNDISTURBED SHOP APPLIED PIPE COATING.

Applicable Code: 2019 CBC 02-25-2020 Revised: 02/14/2020

All mechanical, plumbing, and electrical components shall be anchored and installed per the details on the DSA approved construction documents. Where no detail is indicated, the following components shall be anchored or braced to meet the force and displacement requirements prescribed in the 2019 CBC Sections 1616A.1.18 through 1616A.1.26 and ASCE 7-16 Chapter 13, 26 and 30.

1. All permanent equipment and components.
2. Temporary, movable or mobile equipment that is permanently attached (e.g. hard wired) to the building utility services such as electricity, gas or water. "Permanently attached" shall include all electrical connections except plugs for 110/220 volt receptacles having a flexible cable.
3. Temporary, movable or mobile equipment which is heavier than 400 pounds or has a center of mass located 4 feet or more above the adjacent floor or roof level that directly support the component is required to be restrained in a manner approved by DSA.

The following mechanical and electrical components shall be positively attached to the structure but need not demonstrate design compliance with the references noted above. These components shall have flexible connections provided between the component and associated ductwork, piping, and conduit. Flexible connections must allow movement in both transverse and longitudinal directions:

A. Components weighing less than 400 pounds and have a center of mass located 4 feet or less above the adjacent floor or roof level that directly support the component.

B. Components weighing less than 20 pounds, or in the case of distributed systems, less than 5 pounds per foot, which are suspended from a roof or floor or hung from a wall.

The anchorage of all mechanical, electrical and plumbing components shall be subject to the approval of the design professional in general responsible charge or structural engineer delegated responsibility and acceptance by DSA. The project inspector will verify that all components and equipment have been anchored in accordance with the above requirements.

Piping, Ductwork, and Electrical Distribution System Bracing Note

Piping, ductwork, and electrical distribution systems shall be braced to comply with the forces and displacements prescribed in ASCE 7-16 Section 13.3. as defined in ASCE 7-16 Section 13.6.5.6, 13.6.7, 13.6.8; and 2019 CBC, Sections 1617A.1.24, 1617A.1.25 and 1617A.1.26.

The method of showing bracing and attachments to the structure for the identified distribution system are as noted below. When bracing and attachments are based on a preapproved installation guide (e.g., OSHPD OPM for 2013 CBC or later), copies of the bracing system installation guide or manual shall be available on the jobsite prior to the start of and during the hanging and bracing of the distribution systems. The Structural Engineer of Record shall verify the adequacy of the structure to support the hanger and brace loads.

Mechanical Piping (MP), Mechanical Ducts (MD), Plumbing Piping (PP), Electrical Distribution Systems (E):

MP☐ MD☐ PP☒ E☐ - Option 1 : Detailed on the approved drawings with project specific notes and details.

MP☐ MD☐ PP☐ E☐ - Option 2 : Shall comply with the applicable OSHPD Pre-Approval (OPM#) #________.

PLUMBING SYMBOLS AND ABBREVIATIONS

Symbol	Description	Abbreviation
	SOIL WASTE OR SEWER ABV GRADE	S OR W
	WASTE OR SEWER BELOW GRADE	S OR W
— SD —	STORM DRAIN	S.D
	SANITARY VENT	
	COLD WATER	C.W.
	HOT WATER	H.W.
	HOT WATER RETURN	H.W.R.
— T —	TEMPERED WATER	T.W.
— O2 —	OXYGEN	O2
— CA —	COMPRESSED AIR LINE	CA
— F —	FILTERED WATER	F
— G —	FUEL GAS (LOW PRESSURE)	G.
— XG —	FUEL GAS (MEDIUM PRESSURE)	XG
— DI —	DEIONIZED WATER	DI
— LV —	LAB VACUUM	LV
	SHUT-OFF VALVE	S.O.V.
	PRESSURE REDUCING VALVE	P.R.V.
	PRESSURE-TEMPERATURE RELIEF VALVE	P-T REL. V.
	CHECK VALVE	C.V.
	SHUT-OFF VALVE IN BOX	
	CLEAN OUT TO GRADE	C.O.T.G.
	WALL CLEANOUT	W.C.O.
	FLOOR CLEANOUT	F.C.O.
	HOSE BIBB	H.B.
	DROP	
	RISE	
	FIRE SPRINKLER HEAD	
	UNION	
G.C./S.O.C.	GAS COCK/SHUT OFF COCK	
BEH.	BEHIND	
V.T.R	VENT THRU ROOF	
	VALVE IN RISER	
F.H.	FIRE HYDRANT	
ABV.	ABOVE	
HDR	HEADER	
BEL.	BELOW	
A.F.F.	ABOVE FINISHED FLOOR	
CLG	CEILING	
DN	DOWN	
F.D.	FLOOR DRAIN	
F.S.	FLOOR SINK	
S.B.	SERVICE BASIN	
S.S.	SERVICE SINK	
U.N.O.	UNLESS NOTED OTHERWISE	
CLG.	CEILING	
A.B.	ACCESS BOX	
A.P.	ACCESS PANEL	
I.E.	INVERT ELEVATION	
L.K.S.	LOOSE KEY STOP	
P.O.C.	POINT OF CONNECTION	
F.G.	FINISHED GRADE	
N.I.C.	NOT IN CONTRACT	
R.I.& C.	ROUGH-IN & CONNECT	
U.O.S.	UNDER OTHER SECTION	
W.H.A.	WATER HAMMER ARRESTER	
G.P.R.	GAS PRESSURE REGULATOR	
R.D./O.D.	ROOF DRAIN/OVERFLOW DRAIN	
GD	GUTTER DRAIN	
TPS	TRAP PRIMER SUPPLY	
ASR	AUTOMATIC FIRE SPRINKLER RISER	
— GW —	GREASE WASTE	
— AW —	ACID WASTE	
— AV —	ACID VENT	
SF	EMERGENCY SHOWER & EYEWASH	
AVTR	ACID VENT THRU ROOF	
	POC	
GHV	GARDEN HOSE VALVE	
DS	DOWNSPOUT	
B.G.	BELOW GRADE	
TMV	THERMOSTATIC MIXING VALVE	

PIPE MATERIAL SPECIFICATIONS

PIPING SERVICE	SIZE	PIPING MATERIAL ABOVE GROUND	PIPING MATERIAL BELOW GROUND
CONDENSATE DRAIN	ALL SIZES	TYPE "L" COPPER WROUGHT FITTINGS	--

NOTE:
ALL PIPE, FITTINGS, FIXTURES, ETC. THAT CONTACT POTABLE WATER FOR HUMAN CONSUMPTION SHOW APPROVAL TO NSF 61. ANNEX G, CPC SECTION 604.10, AND HEALTH AND SAFETY CODE SECTION 116875. ABS PIPING INSTALLED WITHIN PLENUMS SHALL HAVE A FLAME-SPREAD INDEX OF A MAXIMUM OF 25 AND A SMOKE-DEV. INDEX OF NOT MORE THAN 50, PER CPC.

APPLICABLE CODES:

THE APPLICABLE CODES TO THIS PROJECT INCLUDE BUT ARE NOT LIMITED TO:
2019 CALIFORNIA PLUMBING CODE
2019 CALIFORNIA MECHANICAL CODE
2019 CALIFORNIA ENERGY CODE
2019 CALIFORNIA GREEN BUILDING CODE

IDENTIFICATION STAMP
DIV. OF THE STATE ARCHITECT
APP: 03-121617 INC:
REVIEWED FOR
SS ☑ FLS ☑ ACS ☑
DATE: 08/02/2021

REGISTERED PROFESSIONAL ENGINEER
BRADLEY E. SEVERSON
No. 27963
Exp. 6/30/22
MECHANICAL
STATE OF CALIFORNIA

Engineous Group, Inc.
751 N. Fair Oaks Ave., Suite 201
Pasadena, CA 91103
Phone: (626) 696-3850

REVISIONS

DC | ARCHITECTS
820 N. MOUNTAIN AVENUE
SUITE 200
UPLAND, CA. 91786
(909) 985 - 6939 OFFICE
(909) 985 - 0864 FAX

RELOCATION OF 3-PORT. CLRM. BLDGS.
HUENEME HIGH SCHOOL
500 W. BARD ROAD, OXNARD, CA 93033
OXNARD UNION HIGH SCHOOL DISTRICT

HUENEME HIGH SCHOOL
PLUMBING LEGENDS, NOTES AND FLOOR PLAN

JOB NUMBER: 2020-024
DRAWN BY: SAM
DATE: 03-2021
SCALE: 56-H4 03-121524

P-0.1

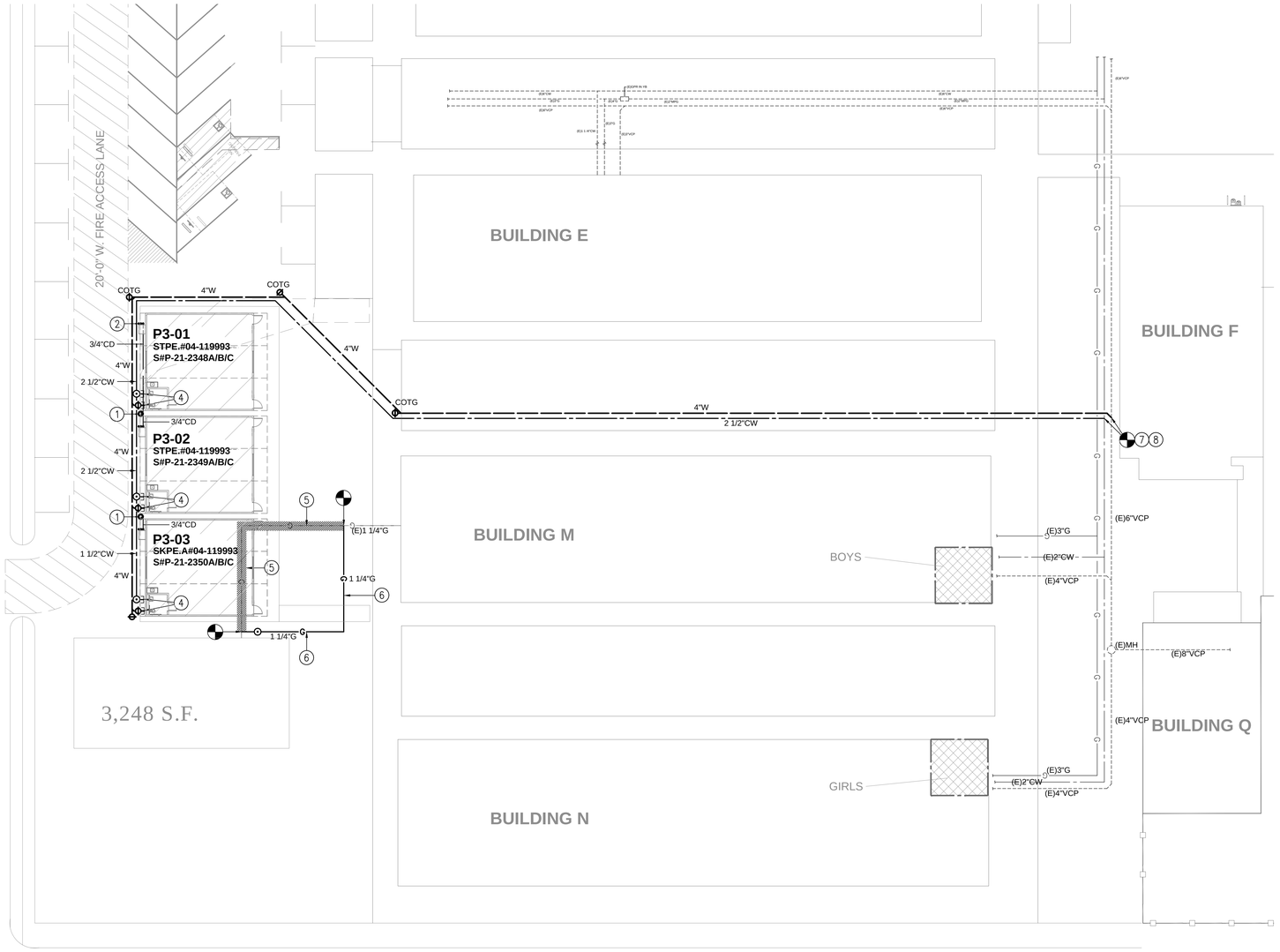

PLUMBING SITE PLAN

Scale 1" = 20'-0"

KEYNOTES:

1. CD TO SPILL TO DRYWELL. SEE DETAIL 1/P-0.1.
2. CONNECT CD PIPING TO WALL MOUNTED HP UNIT. SEE DETAIL 2/P-0.1.
3. CONTRACTOR TO VERIFY DEPTH AND LOCATION OF EXISTING WATER PIPING BELOW GRADE.
4. NEW 4" WASTE, 1 1/2" CW PIPING. STUB AND CAP FOR FUTURE CONNECTION TO NEW PORTABLE BUILDING.
5. REMOVE GAS PIPING FROM UNDERNEATH BUILDING FOOTPRINT.
6. CONNECT NEW GAS PIPING TO EXISTING GAS PIPING.
7. CONNECT NEW 4" WASTE PIPING TO EXISTING SITE WASTE PIPING 4" IN SIZE OR GREATER. CONTRACTOR TO FIELD VERIFY EXACT POINT OF CONNECTION.
8. CONNECT NEW 2 1/2" WATER PIPING TO EXISTING SITE WATER PIPING 2 1/2" IN SIZE OR GREATER. CONTRACTOR TO FIELD VERIFY EXACT POINT OF CONNECTION.

IDENTIFICATION STAMP
DIV. OF THE STATE ARCHITECT
APP: 03-121617 INC:
REVIEWED FOR
SS ☑ FLS ☑ ACS ☑
DATE: 08/02/2021

Exp. 6/30/22

Engineous Group, Inc.
752 N. Fair Oaks Ave., Suite 201
Pasadena, CA 91103
(626) 449-8888 (626) 449-8889

REVISIONS

DC | ARCHITECTS
820 N. MOUNTAIN AVENUE
SUITE 200
UPLAND, CA. 91786
(909) 985 - 6939 OFFICE
(909) 985 - 6004 FAX

RELOCATION OF 3-PORT. CLRM. BLDGS.

HUENEME HIGH SCHOOL
500 W. BARD ROAD, OXNARD, CA 93033
OXNARD UNION HIGH SCHOOL DISTRICT

HUENEME HIGH SCHOOL
PLUMBING FLOOR
PLAN

DCA NUMBER:	2020-024
DRAWN BY:	JLM
DATE:	03-2021
SCALE:	56-84 03-121524

P-1.0

SYMBOLS

SWITCHES & CONTROLS

Symbol	Description
$	SWITCH, SINGLE POLE +48" *
$DH	SWITCH, DIMMER, SIZE PER LOAD OR SPECIFICATION +48" *
$DO	SWITCH, DIMMER 0-10V +48" *
$3	SWITCH, 3 WAY, SINGLE POLE +48" *
$4	SWITCH, 4 WAY +48" *
$K	SWITCH, KEY +48" *
$P	SWITCH, PILOT LIGHT, SINGLE POLE +48" *
$T	SWITCH, TIMER, 2 HR. NO HOLD MANUEL TYPE UNLESS NOTED OTHERWISE +48" *
V	SWITCH, VACANCY DETECTOR +48" *
W I1	OCCUPANCY SENSOR SINGLE CIRCUIT WALL SWITCH +48" *
W I2	OCCUPANCY SENSOR DUAL CIRCUIT WALL SWITCH +48" *
W DH	OCCUPANCY SENSOR SINGLE CIRCUIT DIMMER 120V WALL SWITCH - LIKE LUTRON +48" *
W DL	OCCUPANCY SENSOR SINGLE CIRCUIT DIMMER 0-10V WALL SWITCH - LIKE LUTRON +48" *
$ U	CEILING MOUNTED MOTION SENSOR, ULTRA SOUND
$ I	CEILING MOUNTED MOTION SENSOR, INFRARED
$ U/I	CEILING MOUNTED MOTION SENSOR, COMBINATION ULTRA SOUND / INFRARED
RP	CEILING MOUNTED RELAY / POWER PACK FOR LOW VOLTAGE MOTION SENSORS, SIZE PER CIRCUIT AND SENSOR REQUIREMENTS
SP	CEILING MOUNTED RELAY SLAVE PACK FOR LOW VOLTAGE MOTION SENSOR, SIZE PER CIRCUIT AND SENSOR REQUIREMENTS
T	THERMOSTAT, +48" *
TC	TIME CLOCK, POLES AND VOLTAGE AS NEEDED OR SPECIFIED
P	EXTERIOR=PHOTO CELL, SIZE AND VOLTAGE PER CIRCUIT OR AS SPECIFIED INTERIOR=0-10V PHOTO SENSOR RE. DAYLIGHT CONTROLLER

POWER

Symbol	Description
	SERVICE DISCONNECT, FUSED OR NON FUSED PER DRAWING
	SERVICE DISCONNECT, MAGNETIC STARTER
VFD	SERVICE DISCONNECT, VFD
	OUTLET, SINGLE, 120V +18" * SIZE PER CIRCUIT AND LOCATION REQUIREMENTS
	OUTLET, DUPLEX, 120V +18" * SIZE PER CIRCUIT AND LOCATION REQUIREMENTS
	OUTLET, HALF HOT, HALF SWITCHED, 120V +18" * SIZE PER CIRCUIT AND LOCATION REQUIREMENTS
	OUTLET, DOUBLE DUPLEX, 120V +18" * SIZE PER CIRCUIT AND LOCATION REQUIREMENTS
	OUTLET, DOUBLE DUPLEX, HALF HOT, HALF SWITCHED, 120V +18" * SIZE PER CIRCUIT AND LOCATION REQUIREMENTS
	OUTLET, SINGLE, 240V SIZE PER CIRCUIT AND LOCATION REQUIREMENTS
	OUTLET, SINGLE, 120/240V SIZE PER CIRCUIT AND LOCATION REQUIREMENTS
	OUTLET, SINGLE, 3 PHASE SIZE AND TYPE PER CIRCUIT REQUIREMENTS OR SPECIFICATION
	OUTLET, DUPLEX, 120V, GFCI +18" * SIZE PER CIRCUIT AND LOCATION REQUIREMENTS
	OUTLET, DOUBLE DUPLEX, 120V, GFCI +18" * SIZE AND TYPE PER CIRCUIT REQUIREMENTS OR SPECIFICATION
	OUTLET, DUPLEX, 120V, FLOOR MOUNT SIZE PER CIRCUIT AND LOCATION REQUIREMENTS
	OUTLET, DOUBLE DUPLEX, 120V, FLOOR MOUNT SIZE PER CIRCUIT AND LOCATION REQUIREMENTS
	OUTLET, PEDOC, DUPLEX, 120V, GFCI * SIZE PER CIRCUIT AND LOCATION REQUIREMENTS
	OUTLET, PEDOC, DOUBLE DUPLEX, 120V, GFCI * SIZE AND TYPE PER CIRCUIT REQUIREMENTS OR SPECIFICATION
	OUTLET, PEDOC, SINGLE, 120/240V, GFCI * SIZE PER CIRCUIT AND LOCATION REQUIREMENTS
	OUTLET, SINGLE/2-PORT USB COMBO, 120V * SIZE PER CIRCUIT AND LOCATION REQUIREMENTS
	OUTLET, 4-PORT USB * SIZE PER CIRCUIT AND LOCATION REQUIREMENTS
	OUTLET, DUPLEX EM CIRCUIT, 120V +18" * SIZE PER CIRCUIT AND LOCATION REQUIREMENTS
J	JUNCTION BOX

LIGHTING/CEILING

Symbol	Description
	LIGHT, WALL MOUNTED, HEIGHT PER DRAWING, DETAILS PER FIXTURE SCHEDULE,
	LIGHT, WALL MOUNTED, HEIGHT PER DRAWING, DETAILS PER FIXTURE SCHEDULE, EMERGENCY LIGHT IF FILLED CENTER
	LIGHT, CEILING MOUNTED, DETAILS PER FIXTURE SCHEDULE
	LIGHT, CEILING MOUNTED, DETAILS PER FIXTURE SCHEDULE EMERGENCY LIGHT IF FILLED CENTER
	LIGHT, CEILING MOUNTED, PENDANT, DETAILS PER FIXTURE SCHEDULE
	LIGHT, CEILING MOUNTED, PENDANT, DETAILS PER FIXTURE SCHEDULE EMERGENCY LIGHT IF FILLED CENTER
	FLUSH MOUNTED DOWN LIGHT, DETAILS PER FIXTURE SCHEDULE
	FLUSH MOUNTED WALL WASH/ADJUSTABLE, DETAILS PER FIXTURE SCHEDULE
	IN-GRADE RECESSED UP-LIGHT, DETAILS PER FIXTURE SCHEDULE
	FLUSH MOUNTED DOWN LIGHT, SQUARE CAN, DETAILS PER FIXTURE SCHEDULE
	FLUSH MOUNTED WALL WASH/ADJUSTABLE, SQUARE CAN, DETAILS PER FIXTURE SCHEDULE
	LIGHT, xxxxxx, DETAILS PER FIXTURE SCHEDULE
	LIGHT, xxxxxx, DETAILS PER FIXTURE SCHEDULE
	LIGHT, xxxxxx, DETAILS PER FIXTURE SCHEDULE
	LIGHT, xxxxxx, DETAILS PER FIXTURE SCHEDULE
	VANITY WALL LIGHT, DETAILS PER FIXTURE SCHEDULE
	TRACK LIGHT, DETAILS PER FIXTURE SCHEDULE
XX	COVE LIGHT, DETAILS PER FIXTURE SCHEDULE
	LIGHT, POLE-ARM, DETAILS PER FIXTURE SCHEDULE
	LIGHT, POLE-CENTER, DETAILS PER FIXTURE SCHEDULE
	LIGHT, BOLLARD SQUARE, DETAILS PER FIXTURE SCHEDULE
	LIGHT, BOLLARD ROUND, DETAILS PER FIXTURE SCHEDULE
	LANDSCAPE UP OR DOWN LIGHT, DETAILS PER FIXTURE SCHEDULE
	EXIT SIGN, DARK SPOT INDICATES DIRECTION THE LIGHTED FACE IS TO BE VISIBLE FROM, ARROWS INDICATE DIRECTION OF ARROWS ON THE SIGN FACE
	EXIT SIGN, DARK SPOTS INDICATE DIRECTION THE LIGHTED FACES ARE TO BE VISIBLE FROM, ARROWS INDICATE DIRECTION OF ARROWS ON THE SIGN FACE
	COMBINATION EXIT SIGN, EMERGENCY LIGHT WITH BATTERY BACK UP
	EMERGENCY LIGHT, BATTERY POWERED
	STEP/NICHE LIGHT, DETAILS PER FIXTURE SCHEDULE
	LIGHT, WALL SMALL UP/DN-LIGHT, HEIGHT PER DRAWING, DETAILS PER FIXTURE SCHEDULE
	ALL LIGHT FIXTURES ABOVE ARE EMERGENCY LIGHT IF FILLED CENTER

COMMUNICATIONS/CONTROLS

Symbol	Description
T	THERMOSTAT, +48" *
H	HUMIDITY SENSOR
S	SPEAKER AND BOX PROVIDED BY OTHERS, BOX PIPED AND INSTALLED BY E. C.
	TELEPHONE OUTLET, +18" *
D	COMPUTOR OUTLET, +18" *
C	CABLE OUTLET, +18" *
	TELEPHONE OUTLET, FLOOR
D	COMPUTOR OUTLET, FLOOR
C	CABLE OUTLET, FLOOR
	COMBINATION TELEPHONE & COMPUTER OUTLET, +18" *
V	TELEVISION OUTLET, +18" *
B	DOOR BELL PUSH BUTTON
B	DOOR BELL CHIME
T	DOOR BELL TRANSFORMER
C	NURSES CALL LIGHT
N	NURSES CALL SWITCH WITH PULL CORD
E	ELECTRIC DOOR STRIKE RELEASE
AP	WIRELESS ACCESS POINT
IC	INTERCOM
KEY	KEY PAD

NOTES & MISC.

Symbol	Description
?	INDICATES PLAN KEYED NOTE
?	INDICATES PLAN KEYED NOTE
?	INDICATES PLAN KEYED NOTE
?	INDICATES REVISION
?	INDICATES FIXTURE TYPE
FC ?	INDICATES MECHANICAL FIXTURE TYPE
E0.1 1	INDICATES DETAIL
A	PANEL, MOUNTING ACCORDING TO PLACEMENT ON PLANS
Z	PANEL, CONTROL-LRG, MOUNTING ACCORDING TO PLACEMENT ON PLANS
1	PANEL, CONTROL-SML, MOUNTING ACCORDING TO PLACEMENT ON PLANS
	VALVE, ALARM CONTACT OR SOLENOID OPERATOR DEPENDING ON APPLICATION
	EYS FITTING. SIZE PER CONDUIT, LOCATE PER N.E.C.
	SMOKE DETECTOR, CEILING OR WALL MOUNTED PER PLANS
SCO	COMBINATION SMOKE DETECTOR AND CO SENSOR
	EXHAUST FAN
	CEILING FAN
	MOTOR
PS	POWER SUPPLY
PC 1	POWER CENTER
CL	CURRENT LIMITER

FIRE

Symbol	Description
SD	FIRE DUCT SMOKE DETECTOR
DD	FIRE DUCT DAMPENER
S	FIRE MINI STROBE
C	FIRE ALARM CHIME
S	FIRE STROBE & HORN
F	FIRE ALARM PULL BOX

WIRE TYPES

Symbol	Description
	HOME RUN IN CABLE OR CONDUIT (PER SPECIS AND CODE), CIRCUIT AND CIRCUIT & CONDUCTOR SIZE AS NOTED, CONDUIT PER NEC OR AS NOTED
------	EXISTING WIRING TO REMAIN
	EXISTING WIRING TO BE REMOVED
	NEW ABOVE FLOOR WIRING
------	NEW UNDER FLOOR WIRING
	STUB UP TO OR DOWN FROM NEXT FLOOR LEVEL
	STUB DOWN TO OR UP FROM THE NEXT FLOOR LEVEL

* STANDARD HEIGHT TO MEET STATE HANDICAP REQUIREMENTS AND PROVISIONS OF THE ADA IS 36" - 48" AFF FOR SWITCHES AND THERMOSTATS, 15" - 48" FOR OUTLETS. HEIGHT SHOWN IN SYMBOL LIST IS PREFERRED HEIGHT TO BE CHANGED ONLY IF PHYSICAL REQUIREMENTS OF THE STRUCTURE OR CASEWORK REQUIRE. CHANGES MUST MEET STANDARDS IF OUTLET OR SWITCH IS FOR GENERAL USAGE. OUTLET TO BE MOUNTED AT HEIGHT SHOWN ON PLAN WHEN SPECIAL PURPOSE.

SYMBOLS SCALE: NONE

GENERAL

1. ALL WORK IS TO BE PERFORMED PER THE 2019 ISSUE OF THE CALIFORNIA ELECTRICAL CODE AND THE 2019 CALIFORNIA ENERGY CODE AS ACCEPTED BY DSA AND ALL OTHER APPLICABLE NATIONAL, STATE AND LOCAL CODES AND LAWS PERTAINING TO ELECTRICAL WORK.
2. ALL WORK IN HAZARDOUS LOCATIONS SHALL COMPLY WITH CEC ART. 500 THROUGH 516 AS APPLICABLE.
3. NOTHING IN THESE NOTES SHALL BE CONSTRUED AS CIRCUMVENTING ANY MORE STRINGENT SPECIFICATION OR REQUIREMENT OF THE CONTRACT DOCUMENTS.
4. ELECTRICAL CONTRACTOR SHALL VISIT THE JOB SITE PRIOR TO BIDDING WORK AND INCLUDE IN HIS BID THE NECESSARY COSTS REQUIRED TO COMPLETE THIS PROJECT ACCORDING TO THE INTENT OF THE DRAWINGS.
5. ANY DISCREPANCIES BETWEEN SITE CONDITIONS AND DRAWINGS SHALL BE BROUGHT TO THE ATTENTION OF THE PROJECT COORDINATOR OR ARCHITECT PRIOR TO BID IF POSSIBLE.
6. ELECTRICAL WORK UNDER THIS CONTRACT SHALL INCLUDE ALL LABOR, MATERIALS AND EQUIPMENT NECESSARY TO COMPLETE THE INSTALLATION COVERED UNDER THE CONTRACT INCLUDING CONTROL CONDUIT AND WIRING AS DOCUMENTED OR INFERRED IN THE MECHANICAL DRAWINGS.
7. ALL MATERIAL AND EQUIPMENT FURNISHED AND OR INSTALLED UNDER THIS CONTRACT SHALL BE NEW, FREE FROM DEFECTS, AND SHALL BE GUARANTEED FOR A PERIOD OF ONE YEAR FROM THE DATE OF FINAL ACCEPTANCE BY OWNER OR HIS REPRESENTATIVE. SHOULD ANY PROBLEMS DEVELOP DURING THIS WARRANTY PERIOD DUE TO FAULTY WORKMANSHIP, MATERIAL DEFECTS OR EQUIPMENT DEFECTS OR FAILURE, THE ELECTRICAL CONTRACTOR SHALL CORRECT THE PROBLEM AND REPAIR OR REPLACE EQUIPMENT OR MATERIAL WITHOUT COST TO THE OWNERS. ALL WORK SHALL BE EXECUTED IN A ORKMANLIKE MANNER AND SHALL BE NEAT IN APPEARANCE AS WELL AS FUNCTIONAL WHEN COMPLETED.
8. UNLESS NOTED OTHERWISE OR COORDINATED WITH THE GENERAL CONTRACTOR, THE ELECTRICAL CONTRACTOR SHALL BE RESPONSIBLE FOR ALL DEMOLITION, CUTTING, AND PATCHING RELATING TO ELECTRICAL WORK.
9. STATE ACCESSIBILITY REQUIREMENTS ARE TO BE MET PER STANDARDS LISTED IN "SYMBOL LIST".
10. CUT SHEETS SHALL BE PROVIDED BY ELECTRICAL CONTRACTOR FOR ALL EQUIPMENT PROVIDED WITHIN CONTRACT SCOPE OF WORK.

MATERIAL AND INSTALLATION

1. ALL ELECTRICAL MATERIALS AND EQUIPMENT ARE TO BE UNDERWRITER'S LABORATORY LISTED OR LISTED BY AN EQUIVALENT NATIONALLY RECOGNIZED TESTING LABORATORY ACCEPTED BY THE CITY OF OXNARD. ALL MATERIALS SHALL BE APPROVED FOR THE INTENDED PURPOSE AND USED FOR SUCH PURPOSE.
2. ALL 600-VOLT INSULATED WIRE IN CONDUITS SHALL BE COPPER TYPE THHN/THWN-2 UNLESS NOTED OTHERWISE.
3. ALL CONDUCTORS SIZE AWG #12 AND SMALLER SHALL BE SOLID, ALL CONDUCTORS SIZE #10 AND LARGER SHALL BE STRANDED.
4. ALL JUNCTION BOXES SHALL BE MARKED (IN INK) WITH THE PANEL NUMBER, CIRCUIT NUMBERS, AND SYSTEM VOLTAGE CONTAIN WITHIN, ("MAGIC MARKERS" ARE ACCEPTABLE). I.E. 'LA'-1,3,5 277/480V OR 'RA'-2,4,6 120/208V ETC.
5. WHEN CONDUIT MUST CROSS TRAFFIC AREAS, THE CONDUIT SHALL CROSS PERPENDICULAR TO THE NORMAL TRAFFIC PATTERN.
6. ALL BALLASTS ARE TO BE CEC LISTED.
7. ALL OUTDOOR LIGHTING FIXTURES ARE TO BE LISTED FOR WET OR DAMP LOCATION DEPENDING ON TYPE OF EXPOSURE.
8. ALL DEVICES SHALL BE GROUNDED BY MEANS OF A SEPARATE GROUNDING CONDUCTOR AND EITHER A WIRE BOND FROM THE DEVICE STRAP TO THE BOX OR A SELF-GROUNDING SCREW.
9. EACH MULTIWIRE BRANCH CIRCUIT SHALL BE PROVIDED WITH A MEANS THAT WILL SIMULTANEOUSLY DISCONNECT ALL UNGROUNDED CONDUCTORS AT THE POINT WHERE THE BRANCH CIRCUIT ORIGINATES. (CEC 210.4(B))
10. THE UNGROUNDED AND GROUNDED CONDUCTORS OF EACH MULTIWIRE BRANCH CIRCUIT SHALL BE GROUPED BY WIRE TIES OR SIMILAR MEANS IN AT LEAST ONE LOCATION WITHIN THE PANELBOARD OR OTHER POINT OF ORIGINATION. (CEC 210.4(D))
11. ALL NEW OVERCURRENT DEVICES INSTALLED IN EXISTING PANELS / SWITCHBOARDS SHALL MATCH OR EXCEED THE MAKE, MODEL AND INTERRUPTING CAPACITY OF THE EXISTING OVERCURRENT DEVICES.

COMPLETION

1. UPON COMPLETION OF WORK, ELECTRICAL CONTRACTOR SHALL INSURE THE INSTALLATION TO BE FREE FROM SHORT CIRCUITS, PHASE GROUNDS AND NEUTRAL GROUNDS.
2. ALL FEEDERS SHALL HAVE INSULATION TESTED PRIOR TO ENERGIZATION.
3. ALL PANELS, TRANSFORMERS, DISTRIBUTION BOARDS, SWITCHES, ETC. SHALL BE LABELED PER SINGLE LINE DIAGRAM USING PLASTIC PLATES WITH 3/8" HIGH WHITE LETTERS ON BLACK BACKGROUNDS. LABEL SHALL INCLUDE ITEM NAME AND VOLTAGE PRESENT. TRANSFORMER LABEL SHALL INCLUDE BOTH PRIMARY AND SECONDARY VOLTAGES. LABEL SHALL BE PERMANENTLY ATTACHED USING AT LEAST (2) ROUND HEAD STAINLESS STEEL MACHINE SCREWS WITH MINIMUM THREAD SIZE 8-32.
4. ELECTRICAL CONTRACTOR SHALL FURNISH AS-BUILT DRAWINGS TO ARCHITECT UPON COMPLETION OF WORK.
5. ELECTRICAL CONTRACTOR SHALL BE AVAILABLE FOR NIGHT INSPECTION AND APPROVAL OF COMPLETED WORK.
6. PRIOR TO FINAL ENERGIZATION, NEUTRAL FEED SHALL BE DISCONNECTED FROM THE PANEL AND BUS WITH ALL LOAD NEUTRALS CONNECTED SHALL BE TESTED IN THE PRESENCE OF THE ELECTRICAL ENGINEER FOR FAULTS TO GROUND.
7. ALL CIRCUIT BREAKER, NEUTRAL AND GROUND LUG CONNECTIONS SHALL BE TORQUED PER MANUFACTURER'S SPECIFICATIONS IN THE PRESENCE OF THE ELECTRICAL INSPECTOR.
8. THE ISSUANCE OF A PERMIT SHALL NOT PREVENT THE BUILDING OFFICIAL FROM REQUIRING THE CORRECTION OF ERRORS ON THESE PLANS OR FROM PREVENTING ANY VIOLATION OF THE CODES ADOPTED BY THE CITY, RELEVANT LAWS, ORDINANCES, RULES AND/OR REGULATIONS.

NOTES SCALE: NONE

NOTES:

A. EXISTING ELECTRICAL SERVICE HAS BEEN INVESTIGATED AND FOUND TO HAVE ADEQUATE CAPACITY FOR THE PROPOSED LOAD ADDITION AS SHOWN ON THESE PLANS.

B. SITE INSPECTOR IS TO WITNESS AND VERIFY GROUNDING TEST.

ADDITIONAL NOTES SCALE: NONE

MEP Component Anchorage Note — February 14, 2020

All mechanical, plumbing, and electrical components shall be anchored and installed per the details on the DSA approved construction documents. The following components shall be anchored or braced to meet the force and displacement requirements prescribed in the 2019 CBC, Sections 1617A.1.18 through 1617A.1.26 and ASCE 7-16 Chapter 13, 26 and 30.

1. All permanent equipment and components.
2. Temporary or movable equipment that is permanently attached (e.g. hard wired) to the building utility services such as electricity, gas or water. "Permanently attached" shall include all electrical connections except plugs for 110/220 volt receptacles having a flexible cable.
3. Temporary, movable or mobile equipment which is heavier than 400 pounds or has a center of mass located 4 feet or more above the adjacent floor or roof level that directly support the component are required to be restrained in a manner approved by DSA.

The following mechanical and electrical components shall be positively attached to the structure, but need not demonstrate design compliance with the references noted above. These components shall have flexible connections provided between the component and associated ductwork, piping, and conduit. Flexible connections must allow movement in both transverse and longitudinal directions:

A. Components weighing less than 400 pounds and have a center of mass located 4 feet or less above the adjacent floor or roof level that directly support the component.

B. Components weighing less than 20 pounds, or in the case of distributed systems, less than 5 pounds per foot, which are suspended from a roof or floor or hung from a wall.

The anchorage of all mechanical, electrical, and plumbing components shall be subject to the approval of the design professional in general responsible charge or structural engineer delegated responsibility and the acceptance by DSA. The project inspector will verify that all components and equipment have been anchored in accordance with above requirements.

Piping, Ductwork, and Electrical Distribution System Bracing Note

Piping, ductwork, and electrical distribution systems shall be braced to comply with the forces and displacements prescribed in ASCE 7-16 Section 13.3. as defined in ASCE 7-16 Section 13.6.5, 13.6.6, 13.6.7, 13.6.8; and 2019 CBC, Sections 1617A.1.24, 1617A.1.25 and 1617A.1.26.

The method of showing bracing and attachments to the structure for the identified distribution system are as noted below. When bracing and attachments are based on a preapproved installation guide (e.g., SMACNA, OSHPD OPM for 2013 CBC or later), copies of the bracing system installation guide or manual shall be available on the jobsite prior to the start of and during the hanging and bracing of the distribution systems. The Structural Engineer of Record shall verify the adequacy of the structure to support the hanger and brace loads.

Mechanical Piping (MP), Mechanical Ducts (MD), Plumbing Piping (PP), Electrical Distribution Systems (E):

MP ☐ MD ☐ PP ☐ E ☒ - Option 1 : Detailed on the approved drawings with project specific notes and details.

MP ☐ MD ☐ PP ☐ E ☐ - Option 2 : Shall comply with the applicable OSHPD Pre-Approval (OPM#) #________.

MP ☐ MD ☐ PP ☐ - Option 3 : Shall comply with the SMACNA Seismic Restraint Manual, OSHPD Edition (2009), including any addenda. Fasteners and other attachments not specifically identified in the SMACNA Seismic Restraint Manual, OSHPD Edition, are detailed on the approved drawings with project specific notes and details. The details shall account for the applicable Seismic Hazard Level ______ and Connection Level ______ for the project and conditions.

MEP COMPONENT ANCHORAGE NOTE SCALE: NONE

IDENTIFICATION STAMP
DIV. OF THE STATE ARCHITECT
APP: 03-121617 INC:
REVIEWED FOR
SS ☑ FLS ☑ ACS ☑
DATE: 08/02/2021

REGISTERED PROFESSIONAL ENGINEER
SHANE MATTHEW FOSTER
E-21308
EXP. 09-2021
ELECTRICAL
STATE OF CALIFORNIA

Engineous Group, Inc.
751 N. Fair Oaks Ave., Suite 201
Pasadena, CA 91103
Phone: (626) 696-3850

REVISIONS

DC | ARCHITECTS
820 N. MOUNTAIN AVENUE
SUITE 200
UPLAND, CA. 91786
(909) 985 - 6939 OFFICE
(909) 985 - 0864 FAX

RELOCATION OF 3-PORT. CLRM. BLDGS.
HUENEME HIGH SCHOOL
500 W. BARD ROAD, OXNARD, CA 93033
OXNARD UNION HIGH SCHOOL DISTRICT

HUENEME HIGH SCHOOL
ELECTRICAL NOTES
AND SYMBOLS

JOB NUMBER: 2020-024
DRAWN BY: SAM
DATE: 03-2021
SCALE: 56-H4 03-121000

E-0.1

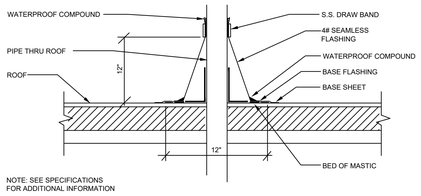

PIPE THRU ROOF DETAIL | 04 | NONE

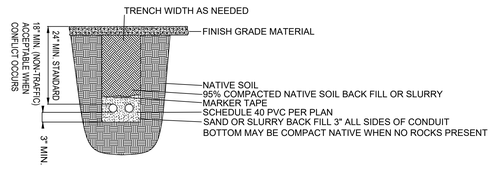

TYPICAL CONDUIT TRENCH - FLEXIBLE CONDITIONS | 03 | NONE

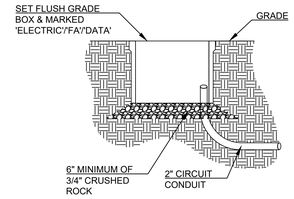

11 X 17 AND 16 X 24 GRADE BOX | 02 | NONE

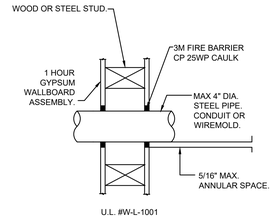

PENETRATION THRU GYPSUM BOARD

NOT TO SCALE

NOTE: DETAILS HERE ARE ALL 2016 EDITION OF THE UL FIRE RESISTANCE DIRECTORY.

FIRE STOP DETAIL | 01 | NONE

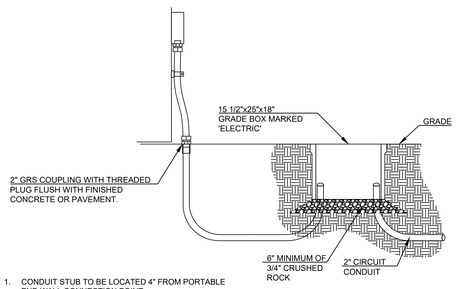

1. CONDUIT STUB TO BE LOCATED 4" FROM PORTABLE END WALL CONNECTION POINT.
2. PULL/SPLICE BOX TO BE LOCATED SOMEWHERE NEAR UTILITY CONNECTION POINT OUTSIDE OF NORMAL PEDESTRIAN PATHWAYS.
3. FINAL CONNECTION TO BE MADE USING SEAL TIGHT FLEX DIRECTLY TO PORTABLE CONNECTION BOX.
4. CONDUCTOR SPLICES AT GRADE BOX TO BE IN RATED WATERPROOF CONNECTORS OR EPOXY ENCAPSULATED.
5. UPON TRAILER REMOVAL, CONDUIT STUB CAN BE PLUGGED UNTIL NEEDED BY FUTURE OR REPLACEMENT PORTABLE BLDG.

PORTABLE CLASSROOM STUBS FROM GRADE BOXES | 08 | NONE

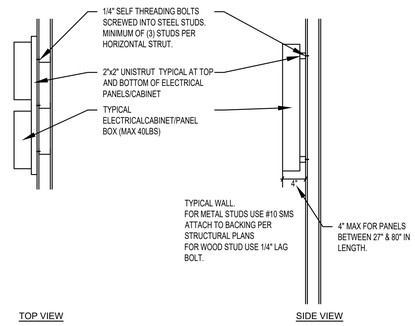

TYPICAL PANEL MOUNTING - SURFACE | 07 | NONE

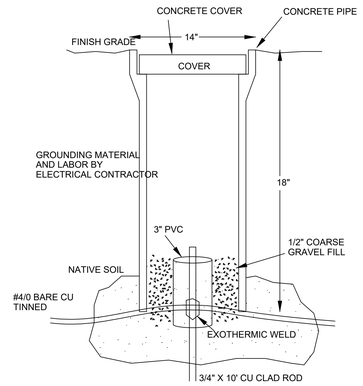

ACCESSIBLE GROUND ROD | 06 | NONE

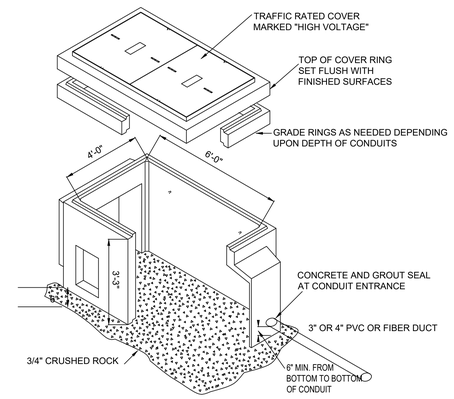

4 X 6 UNDERGROUND PULL BOX | 05 | NONE

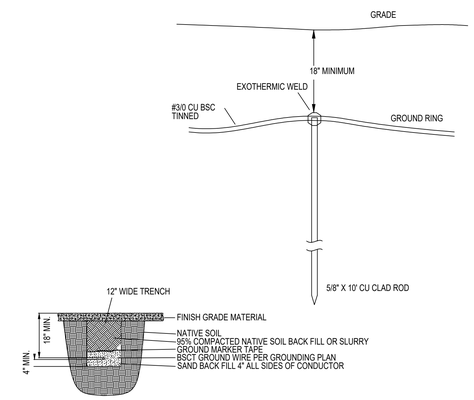

TRENCH GROUND ROD FOR UFER APPLICATION | 09 | NONE

IDENTIFICATION STAMP
DIV. OF THE STATE ARCHITECT
APP: 03-121617 INC:
REVIEWED FOR
SS ☑ FLS ☑ ACS ☑
DATE: 08/02/2021

Engineous Group, Inc.
7214 N. Fair Oaks Ave., Suite 201
Pasadena, CA 91103
Phone: (626) 449-0000

REVISIONS

DC | ARCHITECTS
820 N. MOUNTAIN AVENUE
SUITE 200
UPLAND, CA. 91786
(909) 985 - 6539 OFFICE
(909) 985 - 6084 FAX

RELOCATION OF 3-PORT. CLRM. BLDGS.
HUENEME HIGH SCHOOL
500 W. BARD ROAD, OXNARD, CA 93033
OXNARD UNION HIGH SCHOOL DISTRICT

HUENEME HIGH SCHOOL
INSTALLATION DETAILS

JOB NUMBER: 2020-024
DRAWN BY: SAM
DATE: 03-2021
SCALE: 56-144 03-121600

E-0.2

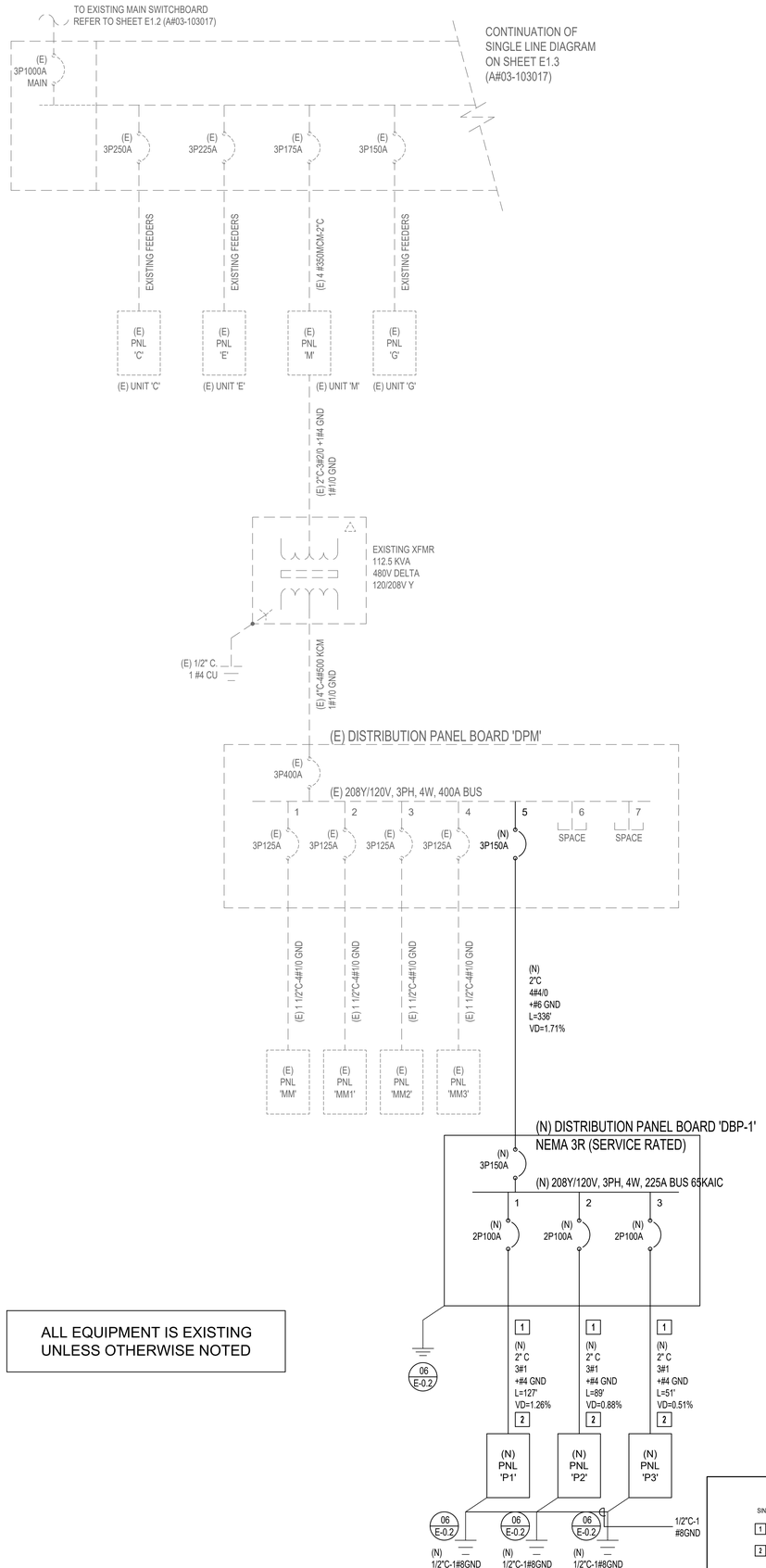

ALL EQUIPMENT IS EXISTING UNLESS OTHERWISE NOTED

SINGLE LINE DIAGRAM

SCALE: NONE

SINGLE LINE KEYED NOTES (NOT ALL MAY APPLY)

1. CONDUCTOR AND CONDUIT ROUTE FROM NEW DISTRIBUTION BOARD 'DBP-1' TO PORTABLE UNIT. CONTRACTOR SHALL VERIFY CONDUIT ROUTE AND CONNECTIONS PRIOR BID/CONSTRUCTION.
2. PANEL IS FURNISHED AND INSTALLED BY BUILDING MANUFACTURER.

SINGLE LINE DIAGRAM NOTES

SCALE: NONE

PANELBOARD: DBP-1 (NEW)

BUS AMPS: 150A
MAIN SIZE/TYPE: 150A MCB
VOLTS/PHASE: 208Y/120V, 3PH, 4W
SECTION: 1

FAULT CURRENT: REFER TO ONE-LINE DIAGRAM
AIC RATING: 65000 FULLY RATED
SERVES: PORTABLES
MOUNTING: SURFACE
LOCATION: NEW PORTABLES

CKT NO.	DESCRIPTION	VOLTAMPS/PHASE A	B	C	WIRE NO.	BKR AMP	P	P	BKR AMP	WIRE NO.	VOLTAMPS/PHASE A	B	C	DESCRIPTION	CKT NO.
1	PNL P1	6,770				100	2	1							2
3			6,720					1							4
5	PNL P2			6,770		100	2	1							6
7		7,920						1							8
9	PNL P3		6,770			100	2	1							10
11				6,720				1							12
13							1	1							14
15							1	1							16
17							1	1							18
19							1	1							20
21							1	1							22
23							1	1							24
25							1	1							26
27							1	1							28
29							1	1							30
31							1	1							32
33							1	1							34
35							1	1							36
37							1	1							38
39							1	1							40
41							1	1							42
SUBTOTAL		14,690	13,490	13,490										SUBTOTAL	

		LOAD	CONN. VA	DF	LOAD	CONN. VA	DF	
TOTAL PHASE A - VA	14,690	COOLING	21,840	1.00	REFRIGERATION		1.00	
AMPS	122	HEATING		0	SIGN/DISPLAY		1.25	
TOTAL PHASE B - VA	13,490	LIGHTING	9,990	1.25	KITCHEN		1.00	
AMPS	112	RECEPTACLES	9,840	1.0/.5	EXISTING		1.00	
TOTAL PHASE C - VA	13,490	MOTORS		1.00	LARGE MOTOR		1.25	TOTAL DEMAND
AMPS	112	SUPP HEAT		1.00	SHOW WINDOW		1.25	44,168 VA
TOTAL PNLBD - VA	41,670	MISC EQUIP		1.00	LTG TRACK		1.00	123 A
AMPS	116							

PANELBOARD NOTES

LTG TRACK - TRACK LENGTH
SIGN/DISPLAY - SIGNAGE & DISPLAY CASE

PANEL SCHEDULE 'DBP-1'

SCALE: NONE

PANELBOARD: P1 (NEW)

BUS AMPS: 100A
MAIN SIZE/TYPE: 100A MCB
VOLTS/PHASE: 208Y/120V, 1PH, 3W
SECTION: 1

FAULT CURRENT: REFER TO ONE-LINE DIAGRAM
AIC RATING: 22000 FULLY RATED
SERVES:
MOUNTING: SURFACE
LOCATION:

EQUIPMENT GROUND BUS

	CKT NO.	DESCRIPTION	VOLTAMPS/PHASE A	B	WIRE NO.	BKR AMP	P	P	BKR AMP	WIRE NO.	VOLTAMPS/PHASE A	B	DESCRIPTION	CKT NO.	
V	1	RECEPTACLES	1,440			20	1	1	20		200		LIGHTING	2	V
V	3	RECEPTACLES		1,440		20	1	1	20			200	LIGHTING	4	V
V	5	EM LIGHTING	50			20	1	1	20		1,440		COMPUTER OUTLETS	6	V
	7						1	1	20			1,440	COMPUTER OUTLETS	8	V
V	9	AC	3,640			50	2	1	20					10	
	11			3,640				1	20					12	
	SUBTOTAL		5,130	5,080							1,640	1,640	SUBTOTAL		

		LOAD	CONN. VA	DF	LOAD	CONN. VA	DF	
TOTAL PHASE A - VA	6,770	COOLING	7,280	1.00	REFRIGERATION		1.00	
AMPS	56	HEATING		0	DISPLAY CASE		1.25	
TOTAL PHASE B - VA	6,720	LIGHTING	3,330	1.25	KITCHEN		1.00	
AMPS	56	RECEPTACLES	2,880	1.0/.5	EXISTING		1.00	
TOTAL PNLBD - VA	13,490	MOTORS		1.00	LARGE MOTOR		1.25	TOTAL DEMAND
AMPS	65	SUPP HEAT		1.00	SHOW WINDOW		1.25	14,323 VA
		MISC EQUIP		1.00	LTG TRACK		1.00	69 A

PANELBOARD NOTES

L - LOCK-ON
R - CIRCUIT BREAKER SHALL BE RED
V - CONTRACTOR SHALL VERIFY CIRCUIT AND LOAD

LTG TRACK - TRACK LENGTH
SIGN/DISPLAY - SIGNAGE & DISPLAY CASE

PANEL SCHEDULE 'P1' (TYP. 'P3')

SCALE: NONE

PANELBOARD: P2 (NEW)

BUS AMPS: 100A
MAIN SIZE/TYPE: 100A MCB
VOLTS/PHASE: 208Y/120V, 1PH, 3W
SECTION: 1

FAULT CURRENT: REFER TO ONE-LINE DIAGRAM
AIC RATING: 22000 FULLY RATED
SERVES:
MOUNTING: SURFACE
LOCATION:

EQUIPMENT GROUND BUS

	CKT NO.	DESCRIPTION	VOLTAMPS/PHASE A	B	WIRE NO.	BKR AMP	P	P	BKR AMP	WIRE NO.	VOLTAMPS/PHASE A	B	DESCRIPTION	CKT NO.	
V	1	RECEPTACLES	1,440			20	1	1	20		200		LIGHTING	2	V
V	3	RECEPTACLES		1,440		20	1	1	20			200	LIGHTING	4	V
V	5	EM LIGHTING	50			20	1	1	20		1,440		COMPUTER OUTLETS	6	V
	7						1	1	20			1,440	COMPUTER OUTLETS	8	V
V	9	AC	3,640			50	2	1	20					10	
	11			3,640				1	20			1,200	FACP	12	RL
	SUBTOTAL		5,130	5,080							1,640	2,640	SUBTOTAL		

		LOAD	CONN. VA	DF	LOAD	CONN. VA	DF	
TOTAL PHASE A - VA	6,770	COOLING	7,280	1.00	REFRIGERATION		1.00	
AMPS	56	HEATING		0	DISPLAY CASE		1.25	
TOTAL PHASE B - VA	7,920	LIGHTING	3,330	1.25	KITCHEN		1.00	
AMPS	66	RECEPTACLES	4,080	1.0/.5	EXISTING		1.00	
TOTAL PNLBD - VA	14,690	MOTORS		1.00	LARGE MOTOR		1.25	TOTAL DEMAND
AMPS	71	SUPP HEAT		1.00	SHOW WINDOW		1.25	15,523 VA
		MISC EQUIP		1.00	LTG TRACK		1.00	75 A

PANELBOARD NOTES

L - LOCK-ON
R - CIRCUIT BREAKER SHALL BE RED
V - CONTRACTOR SHALL VERIFY CIRCUIT AND LOAD

LTG TRACK - TRACK LENGTH
SIGN/DISPLAY - SIGNAGE & DISPLAY CASE

PANEL SCHEDULE 'P2'

SCALE: NONE

VOLTAGE DROP CALCULATIONS

FORMULA IS

V=AxLxXxZ/C.M. Z=1+y(T-75)

WHERE

V=volts dropped
A=current of load in amps
L=length of run one way only
C.M.=size of wire in circular mils.
T=operating temp of wire in Celsius

y=.00323 for copper wire
.00330 for aluminum wire
X=21.6 for 1 PH copper wire
35.4 for 1 PH aluminum wire
18.7 for 3 PH copper wire
30.7 for 3 PH aluminum wire

PANEL 'P1'	A	80.0
AT 80% CAP	L	127
	X	21.6
	T	75
	y	0.00323
	C.M.	83690
	V	2.6
WIRE SIZE BELOW	SYS. V	208
1	% DROP	1.26%

PANEL 'P2'	A	80.0
AT 80% CAP	L	89
	X	21.6
	T	75
	y	0.00323
	C.M.	83690
	V	1.8
WIRE SIZE BELOW	SYS. V	208
1	% DROP	0.88%

PANEL 'P3'	A	80.0
AT 80% CAP	L	51
	X	21.6
	T	75
	y	0.00323
	C.M.	83690
	V	1.1
WIRE SIZE BELOW	SYS. V	208
1	% DROP	0.51%

FEEDER FOR 'DBP-1'	A	120.0
AT 80% CAP	L	336
	X	18.7
	T	75
	y	0.00323
	C.M.	211600
	V	3.6
WIRE SIZE BELOW	SYS. V	208
4/0	% DROP	1.71%

VOLTAGE DROP CALCULATIONS

SCALE: NONE

IDENTIFICATION STAMP
DIV. OF THE STATE ARCHITECT
APP: 03-121617 INC:
REVIEWED FOR
SS ☑ FLS ☑ ACS ☑
DATE: 08/02/2021

REGISTERED PROFESSIONAL ENGINEER
WITNEY POLEN
E-23389
EXP. 09-30-21
STATE OF CALIFORNIA

Engineous Group, Inc.
721 N. Fair Oaks Ave., Suite 201
Pasadena, CA 91103
(626) 449-8200
Engineous@engineous.com

REVISIONS

DC | ARCHITECTS
820 N. MOUNTAIN AVENUE
SUITE 200
UPLAND, CA. 91786
(909) 985 - 6539 OFFICE
(909) 985 - 6084 FAX

RELOCATION OF 3-PORT. CLRM. BLDGS.

HUENEME HIGH SCHOOL
500 W. BARD ROAD, OXNARD, CA 93033
OXNARD UNION HIGH SCHOOL DISTRICT

HUENEME HIGH SCHOOL
SINGLE LINE DIAGRAM
AND LOAD CALCULATIONS

JOB NUMBER:	2020-024
DRAWN BY:	SAM
DATE:	03-2021
SCALE:	S6-144 03-121600

E-0.3

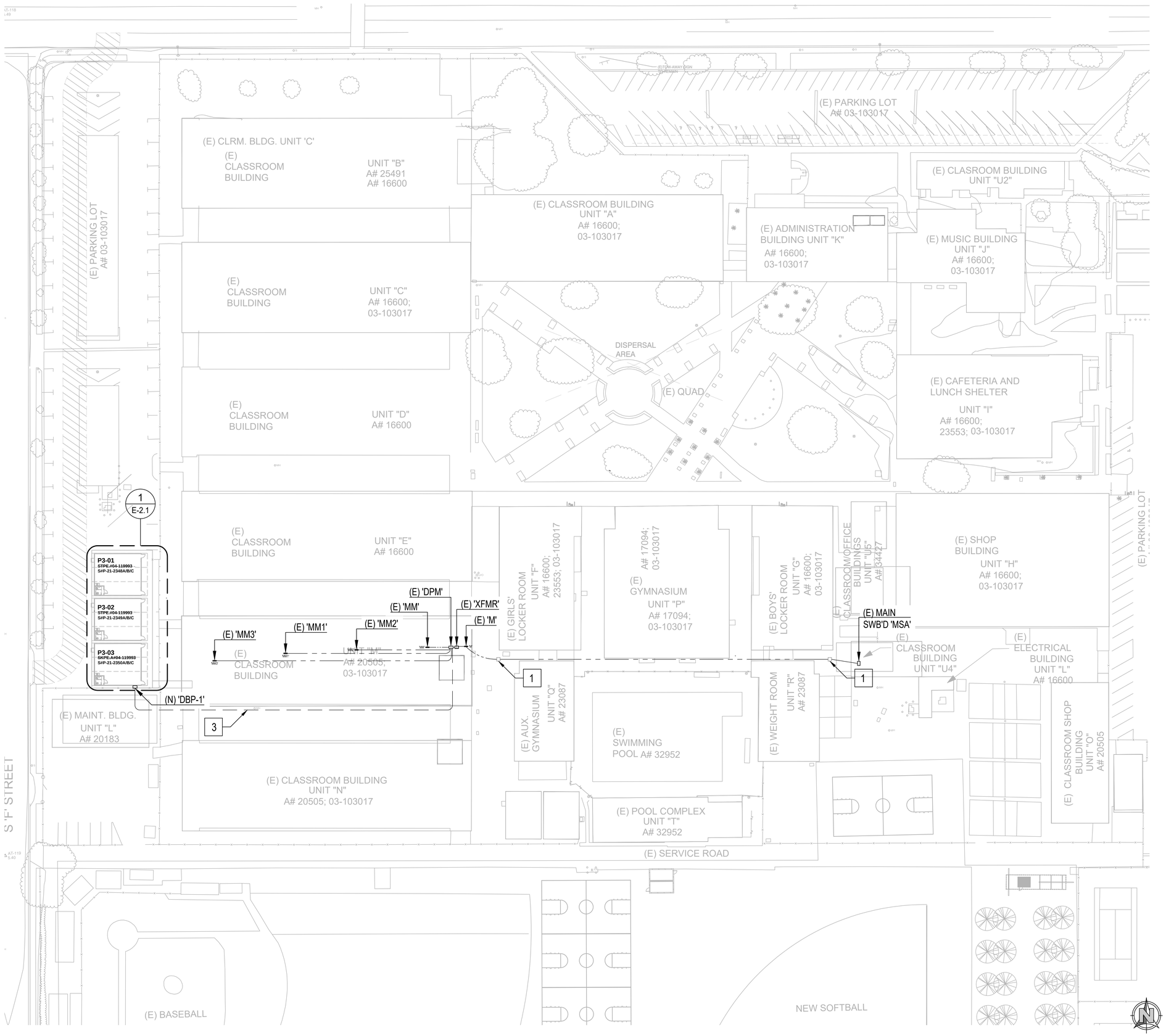

ELECTRICAL SITE PLAN | SCALE: 1/32"=1'-0" | 1

POWER GENERAL NOTES

1. ALL CONDUITS SHALL BE RUN NEATLY AND PARALLEL OR PERPENDICULAR TO STRUCTURAL MEMBERS. CONDUIT ROUTING SHOWN ON PLAN IS DIAGRAMMATIC AND IS INTENDED TO SHOW POSSIBLE FUNCTIONAL ROUTE OF CONDUITS AND CONDUCTORS. IN SOME CASES THE DRAWING SHOWS ROUTING WHICH MAY NOT BE PARALLEL OR PERPENDICULAR TO BUILDING STRUCTURAL MEMBERS, THIS IS FOR CLARITY OF CIRCUITING AND NOT INTENDED TO APPROVE ANY DEVIATION FROM NEAT WORKMANSHIP.
2. COMBINING OF HOMERUNS AND OTHER CIRCUITS OTHER THAN WHAT IS SHOWN ON PLAN WILL NOT BE APPROVED.
3. COMBINING OF EMERGENCY CIRCUITS WITH OTHER CIRCUITS IN CONDUITS AND/OR JUNCTION BOXES WILL NOT BE APPROVED.
4. CONDUITS AND ROUTING FOUND OBJECTIONABLE BY THE ARCHITECT WILL BE REWORKED AT ELECTRICAL CONTRACTORS EXPENSE.
5. ELECTRICAL CONTRACTOR SHALL PROVIDE APPROVED SEISMIC STRUCTURAL SUPPORTS AS CURRENTLY ADOPTED BY IBC OR CBC WHERE APPLICABLE FOR ALL FIXTURES, BOXES AND OTHER ELECTRICAL EQUIPMENT.
6. ELECTRICAL CONTRACTOR SHALL VERIFY LOCATIONS AND MOUNTING HEIGHTS OF ALL OUTLETS AND EQUIPMENT WITH ARCHITECTURAL PLANS, ELEVATIONS AND DETAILS.

POWER PLAN KEYED NOTES (NOT ALL MAY APPLY)

1. EXISTING UNDERGROUND PRECAST CONCRETE PULL BOX FOR POWER WIRING. SHOWN FOR REFERENCE. VERIFY EXACT LOCATION.
2. EXISTING UNDERGROUND CONCRETE PULL BOX FOR SIGNAL AND COMMUNICATIONS SYSTEMS WIRING. SHOWN FOR REFERENCE. VERIFY EXACT LOCATION.
3. POWER CONDUCTOR AND CONDUIT BURIED 24" BELOW GRADE (REFER TO E-0.2, DETAIL 03) FROM EXISTING DISTRIBUTION BOARD 'DPM' IN BUILDING 'M' (A # 03-103017) TO NEW PORTABLES DISTRIBUTION BOARD 'DBP-1'. REFER TO SINGLE LINE FOR RATINGS. CONTRACTOR SHALL VERIFY CONDUIT ROUTE AND CONNECTIONS PRIOR BID/CONSTRUCTION.

SITE PLAN NOTES | SCALE: NONE

IDENTIFICATION STAMP
DIV. OF THE STATE ARCHITECT
APP: 03-121617 INC:
REVIEWED FOR
SS ☑ FLS ☑ ACS ☑
DATE: 08/02/2021

REGISTERED PROFESSIONAL ENGINEER
WITHEY POLER
E-23288
EXP. 09-2021
STATE OF CALIFORNIA

Engineous Group, Inc.
7214 N. Fair Oaks Ave., Suite 201
Pasadena, CA 91103
(626) 449-8888 (626) 449-8889

REVISIONS

DC | ARCHITECTS
820 N. MOUNTAIN AVENUE
SUITE 200
UPLAND, CA. 91786
(909) 985 - 6939 OFFICE
(909) 985 - 6984 FAX

RELOCATION OF 3-PORT. CLRM. BLDGS.

HUENEME HIGH SCHOOL
500 W. BARD ROAD, OXNARD, CA 93033
OXNARD UNION HIGH SCHOOL DISTRICT

HUENEME HIGH SCHOOL
ELECTRICAL SITE PLAN

JOB NUMBER:	2020-024
DRAWN BY:	SAM
DATE:	05-20/21
SCALE:	56-144 03-121600

E-1.0

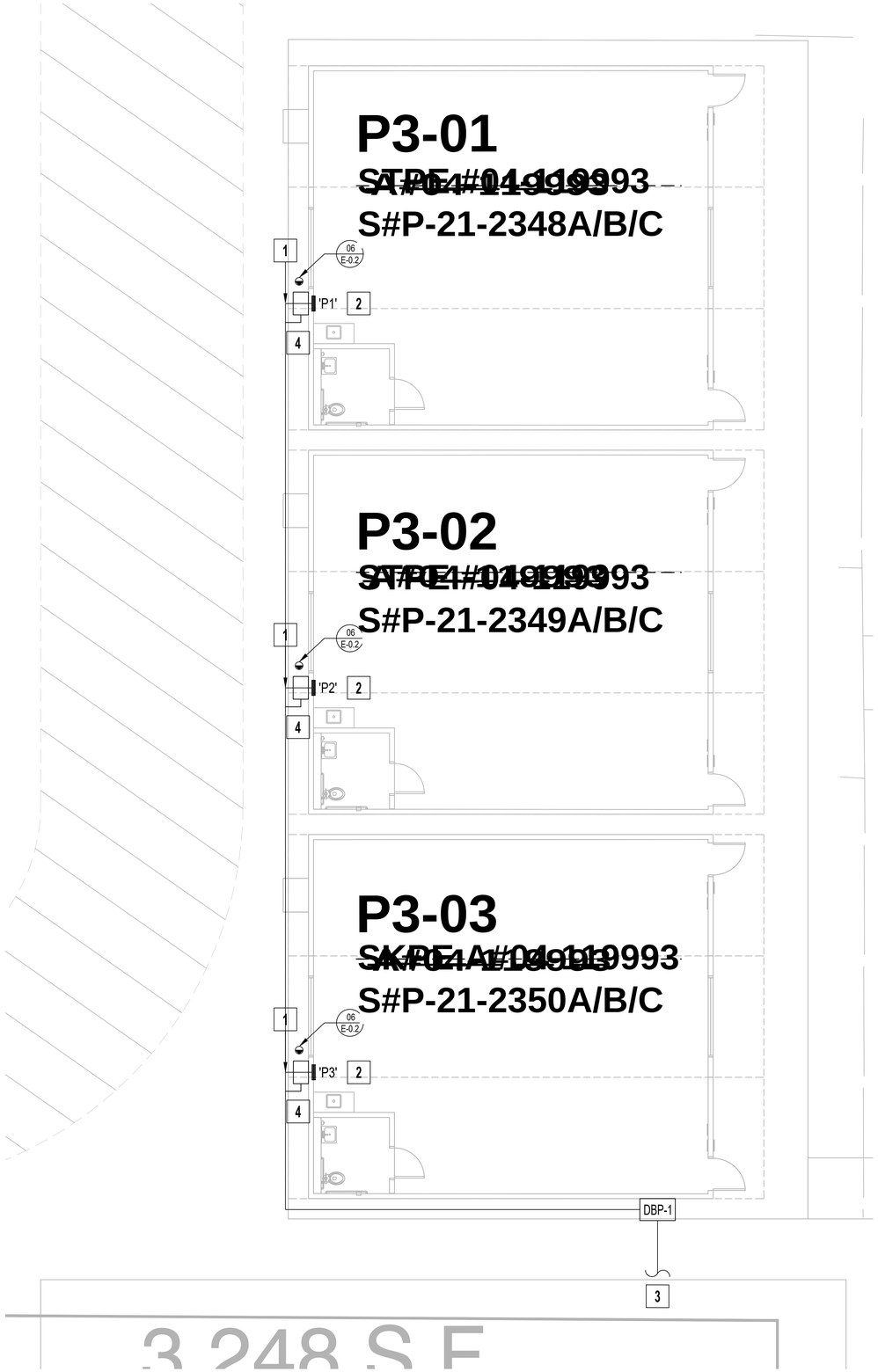

ENLARGED POWER PLAN | SCALE: 3/16"=1'-0" | 1

POWER GENERAL NOTES

1. ALL CONDUITS SHALL BE RUN NEATLY AND PARALLEL OR PERPENDICULAR TO STRUCTURAL MEMBERS. CONDUIT ROUTING SHOWN ON PLAN IS DIAGRAMMATIC AND IS INTENDED TO SHOW POSSIBLE FUNCTIONAL ROUTE OF CONDUITS AND CONDUCTORS. IN SOME CASES THE DRAWING SHOWS ROUTING WHICH MAY NOT BE PARALLEL OR PERPENDICULAR TO BUILDING STRUCTURAL MEMBERS. THIS IS FOR CLARITY OF CIRCUITING AND NOT INTENDED TO APPROVE ANY DEVIATIONB FROM NEAT WORKMANSHIP.
2. COMBINING OF HOMERUNS AND OTHER CIRCUITS OTHER THAN WHAT IS SHOWN ON PLAN WILL NOT BE APPROVED.
3. COMBINING OF EMERGENCY CIRCUITS WITH OTHER CIRCUITS IN CONDUITS AND/OR JUNCTION BOXES WILL NOT BE APPROVED.
4. CONDUITS AND ROUTING FOUND OBJECTIONABLE BY THE ARCHITECT WILL BE REWORKED AT ELECTRICAL CONTRACTORS EXPENSE.
5. ELECTRICAL CONTRACTOR SHALL PROVIDE APPROVED SEISMIC STRUCTURAL SUPPORTS AS CURRENTLY ADOPTED BY IBC OR CBC WHERE APPLICABLE FOR ALL FIXTURES, BOXES AND OTHER ELECTRICAL EQUIPMENT.
6. ELECTRICAL CONTRACTOR SHALL VERIFY LOCATIONS AND MOUNTING HEIGHTS OF ALL OUTLETS AND EQUIPMENT WITH ARCHITECTURAL PLANS, ELEVATIONS AND DETAILS.

POWER PLAN KEYED NOTES (NOT ALL MAY APPLY)

1. EXPOSED CONDUITS FROM NEW DISTRIBUTION BOARD "DBP-1" TO PORTABLE UNIT. CONTRACTOR SHALL VERIFY CONDUIT ROUTE AND CONNECTIONS PRIOR BID/CONSTRUCTION.
2. PANEL IS FURNISHED AND INSTALLED BY BUILDING MANUFACTURER.
3. POWER CONDUCTOR AND CONDUIT BURIED 24" BELOW GRADE FROM DISTRIBUTION BOARD "DPM" IN EXISTING BUILDING "M" (A # 03-103017) TO NEW PORTABLES DISTRIBUTION BOARD "DBP-1". CONTRACTOR SHALL VERIFY CONDUIT ROUTE AND CONNECTIONS PRIOR BID/CONSTRUCTION.
4. CONTRACTOR SHALL PROVIDE ONE NSR 2P100AS/100AF ON THE EXTERIOR OF EACH NEW PORTABLE IF AND ONLY IF THE PORTABLE MANUFACTURER DOES NOT FURNISH THE ELECTRICAL PANEL WITHIN THE NEW PORTABLE WITH 2P100A MAIN CIRCUIT BREAKER.

POWER PLAN NOTES | SCALE: NONE

IDENTIFICATION STAMP
DIV. OF THE STATE ARCHITECT
APP: 03-121617 INC:
REVIEWED FOR
SS ☑ FLS ☑ ACS ☑
DATE: 08/02/2021

STEVEN W. WITMER PROFESSIONAL ENGINEER E-23288 EXP. 09-2021 STATE OF CALIFORNIA

Engineous Group, Inc.
721 N. Fair Oaks Ave., Suite 201
Pasadena, CA 91103
Steven Witmer@engineous

REVISIONS

DC | ARCHITECTS
820 N. MOUNTAIN AVENUE
SUITE 200
UPLAND, CA. 91786
(909) 985 - 6539 OFFICE
(909) 985 - 6084 FAX

RELOCATION OF 3-PORT. CLRM. BLDGS.
HUENEME HIGH SCHOOL
500 W. BARD ROAD, OXNARD, CA 93033
OXNARD UNION HIGH SCHOOL DISTRICT

HUENEME HIGH SCHOOL
ELECTRICAL ENLARGED
FLOOR PLAN

JOB NUMBER: 2020-024
DRAWN BY: SJM
DATE: 03-2021
SCALE: 56-144 03-121600

E-2.1

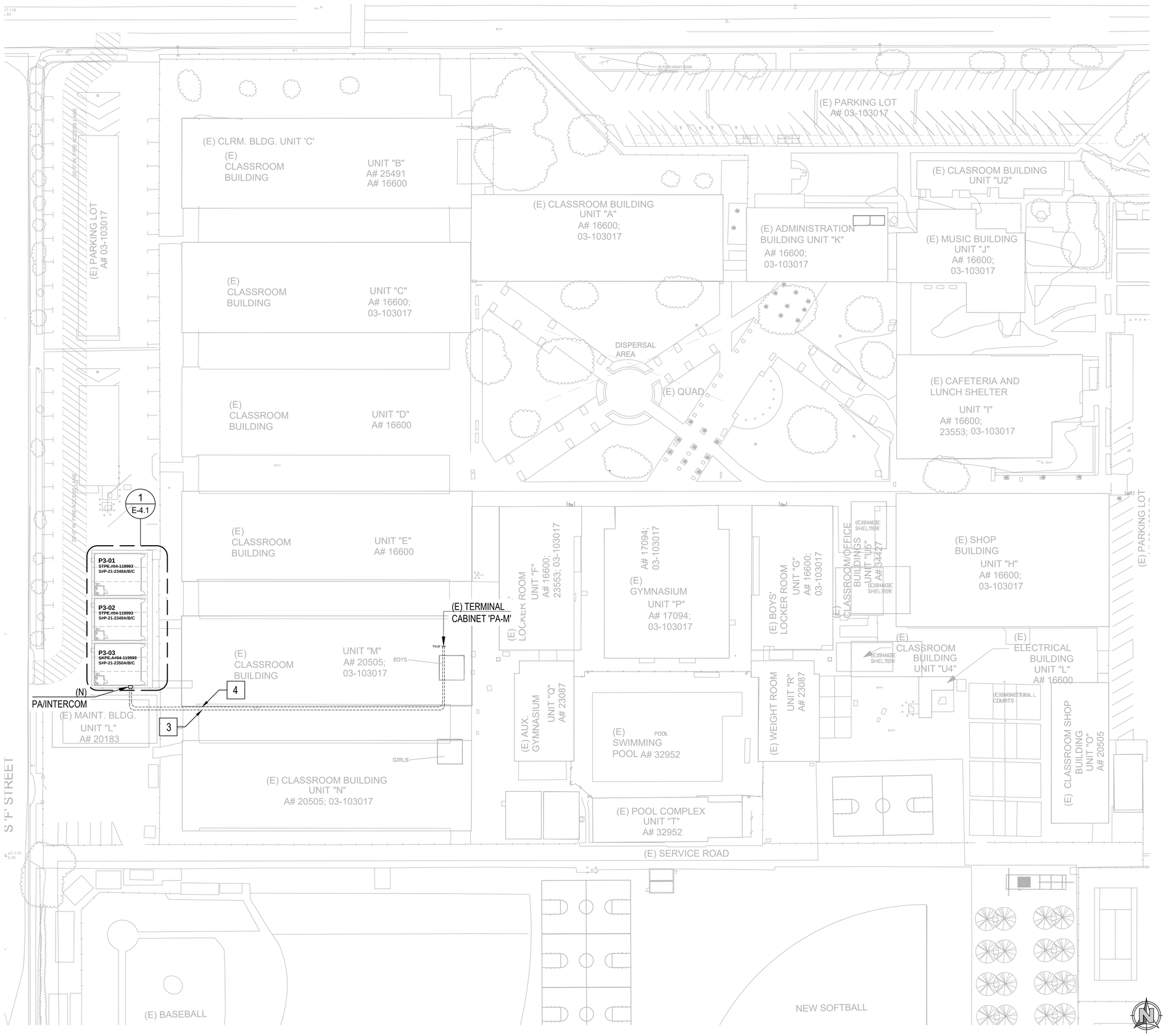

DATA SITE PLAN | SCALE: 1/32"=1'-0" | 1

DATA GENERAL NOTES

1. ALL CONDUITS SHALL BE RUN NEATLY AND PARALLEL OR PERPENDICULAR TO STRUCTURAL MEMBERS. CONDUIT ROUTING SHOWN ON PLAN IS DIAGRAMMATIC AND IS INTENDED TO SHOW POSSIBLE FUNCTIONAL ROUTE OF CONDUITS AND CONDUCTORS. IN SOME CASES THE DRAWING SHOWS ROUTING WHICH MAY NOT BE PARALLEL OR PERPENDICULAR TO BUILDING STRUCTURAL MEMBERS, THIS IS FOR CLARITY OF CIRCUITING AND NOT INTENDED TO APPROVE ANY DEVIATION FROM NEAT WORKMANSHIP.
2. COMBINING OF HOMERUNS AND OTHER CIRCUITS OTHER THAN WHAT IS SHOWN ON PLAN WILL NOT BE APPROVED.
3. COMBINING OF EMERGENCY CIRCUITS WITH OTHER CIRCUITS IN CONDUITS AND/OR JUNCTION BOXES WILL NOT BE APPROVED.
4. CONDUITS AND ROUTING FOUND OBJECTIONABLE BY THE ARCHITECT WILL BE REWORKED AT ELECTRICAL CONTRACTORS EXPENSE.
5. ELECTRICAL CONTRACTOR SHALL PROVIDE APPROVED SEISMIC STRUCTURAL SUPPORTS AS CURRENTLY ADOPTED BY IBC OR CBC WHERE APPLICABLE FOR ALL FIXTURES, BOXES AND OTHER ELECTRICAL EQUIPMENT.
6. ELECTRICAL CONTRACTOR SHALL VERIFY LOCATIONS AND MOUNTING HEIGHTS OF ALL OUTLETS AND EQUIPMENT WITH ARCHITECTURAL PLANS, ELEVATIONS AND DETAILS.

DATA PLAN KEYED NOTES (NOT ALL MAY APPLY)

1. EXISTING UNDERGROUND PRECAST CONCRETE PULL BOX FOR POWER WIRING. SHOWN FOR REFERENCE. VERIFY EXACT LOCATION.
2. EXISTING UNDERGROUND CONCRETE PULL BOX FOR SIGNAL AND COMMUNICATIONS SYSTEMS WIRING. SHOWN FOR REFERENCE. VERIFY EXACT LOCATION.
3. PROVIDE 2" CONDUIT BURIED 24" BELOW GRADE ONLY (REFER TO E-0.2, DETAIL 03) FOR CAT6 DATA/FIBER FROM EXISTING TERMINAL CABINET IN BUILDING 'M' ROOM 'JANITOR 568' (A # 03-103017). CONTRACTOR SHALL VERIFY CONDUIT ROUTE AND CONNECTIONS PRIOR BID/CONSTRUCTION.
4. PROVIDE 2" CONDUIT BURIED 24" BELOW GRADE (REFER TO E-0.2, DETAIL 03) FOR PAINTERCOM FROM EXISTING TERMINAL CABINET IN BUILDING 'M' ROOM 'JANITOR 568' (A # 03-103017). CONTRACTOR SHALL VERIFY CONDUIT ROUTE AND CONNECTIONS PRIOR BID/CONSTRUCTION.

SITE PLAN NOTES | SCALE: NONE

IDENTIFICATION STAMP
DIV. OF THE STATE ARCHITECT
APP: 03-121617 INC:
REVIEWED FOR
SS ☑ FLS ☑ ACS ☑
DATE: 08/02/2021

REGISTERED PROFESSIONAL ENGINEER
WITNEY POLER
E-23288
EXP. 09-2021
STATE OF CALIFORNIA

Engineous Group, Inc.
721 N. Fair Oaks Ave., Suite 201
Pasadena, CA 91103
(626) 449-8888 Fax (626) 449-8889

REVISIONS

DC | ARCHITECTS
820 N. MOUNTAIN AVENUE
SUITE 200
UPLAND, CA. 91786
(909) 985 - 6939 OFFICE
(909) 985 - 9084 FAX

RELOCATION OF 3-PORT. CLRM. BLDGS.
HUENEME HIGH SCHOOL
500 W. BARD ROAD, OXNARD, CA 93033
OXNARD UNION HIGH SCHOOL DISTRICT

HUENEME HIGH SCHOOL
DATA SITE PLAN

JOB NUMBER: 2020-024
DRAWN BY: SAM
DATE: 05-20/21
SCALE: 56-144 03-121600

E-4.0

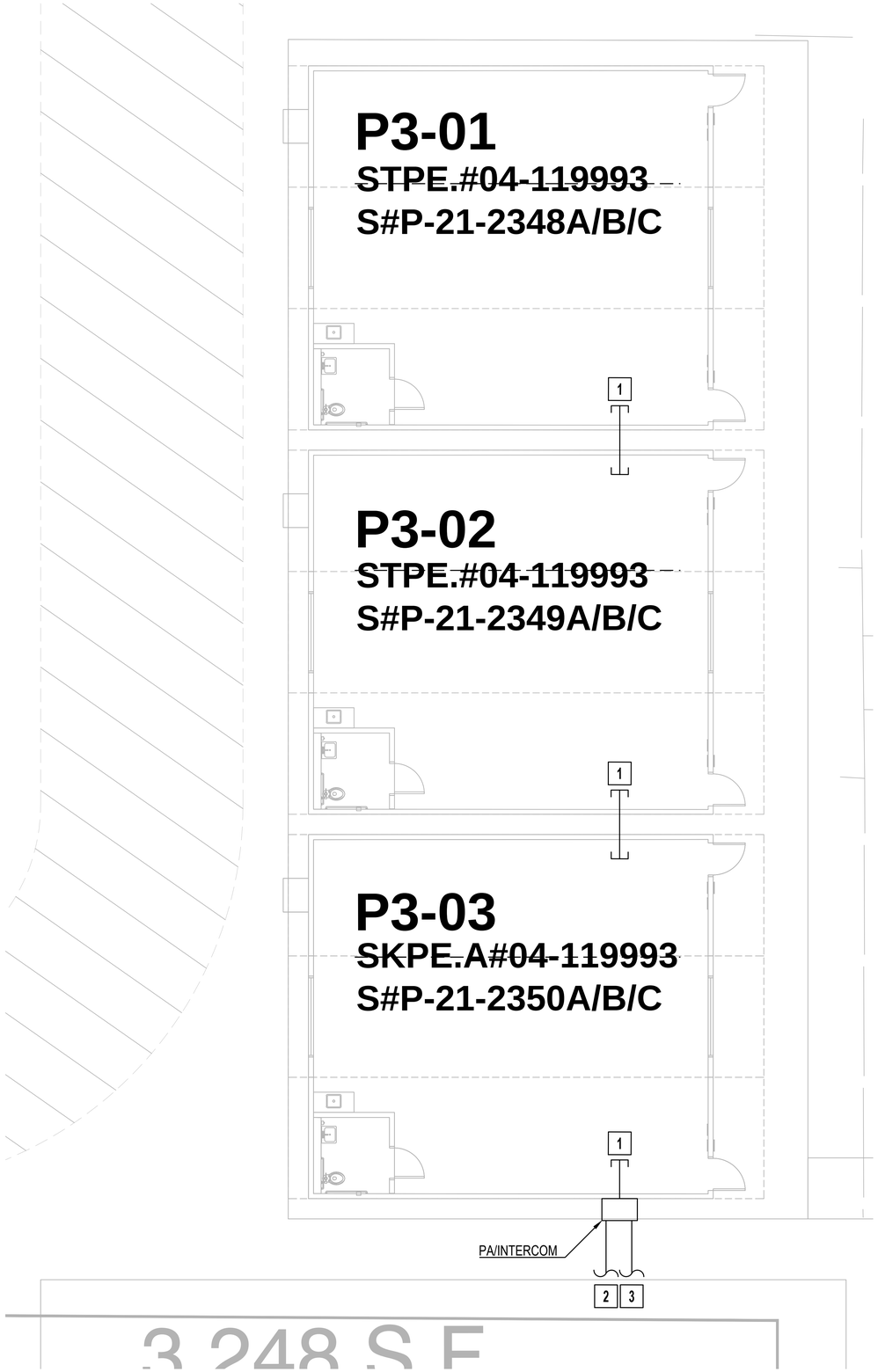

ENLARGED DATA PLAN | SCALE: 3/16"=1'-0" | 1

DATA GENERAL NOTES

1. ALL CONDUITS SHALL BE RUN NEATLY AND PARALLEL OR PERPENDICULAR TO STRUCTURAL MEMBERS. CONDUIT ROUTING SHOWN ON PLAN IS DIAGRAMMATIC AND IS INTENDED TO SHOW POSSIBLE FUNCTIONAL ROUTE OF CONDUITS AND CONDUCTORS. IN SOME CASES THE DRAWING SHOWS ROUTING WHICH MAY NOT BE PARALLEL OR PERPENDICULAR TO BUILDING STRUCTURAL MEMBERS. THIS IS FOR CLARITY OF CIRCUITING AND NOT INTENDED TO APPROVE ANY DEVIATIONB FROM NEAT WORKMANSHIP.
2. COMBINING OF HOMERUNS AND OTHER CIRCUITS OTHER THAN WHAT IS SHOWN ON PLAN WILL NOT BE APPROVED.
3. COMBINING OF EMERGENCY CIRCUITS WITH OTHER CIRCUITS IN CONDUITS AND/OR JUNCTION BOXES WILL NOT BE APPROVED.
4. CONDUITS AND ROUTING FOUND OBJECTIONABLE BY THE ARCHITECT WILL BE REWORKED AT ELECTRICAL CONTRACTORS EXPENSE.
5. ELECTRICAL CONTRACTOR SHALL PROVIDE APPROVED SEISMIC STRUCTURAL SUPPORTS AS CURRENTLY ADOPTED BY IBC OR CBC WHERE APPLICABLE FOR ALL FIXTURES, BOXES AND OTHER ELECTRICAL EQUIPMENT.
6. ELECTRICAL CONTRACTOR SHALL VERIFY LOCATIONS AND MOUNTING HEIGHTS OF ALL OUTLETS AND EQUIPMENT WITH ARCHITECTURAL PLANS, ELEVATIONS AND DETAILS.

DATA PLAN KEYED NOTES (NOT ALL MAY APPLY)

1. PROVIDE (2) 2 " CONDUIT SLEEVES FOR LOW VOLTAGE. CONDUCTORS. CONTRACTOR SHALL VERIFY CONDUIT ROUTE AND CONNECTIONS PRIOR BID/CONSTRUCTION.
2. PROVIDE 2" CONDUIT BURIED 24" BELOW GRADE ONLY FOR CAT6 DATA/FIBER FROM EXISTING TERMINAL CABINET IN BUILDING 'M' ROOM 'JANITOR 56B' (A # 03-103017) CONTRACTOR SHALL VERIFY CONDUIT ROUTE AND CONNECTIONS PRIOR BID/CONSTRUCTION.
3. PROVIDE 2" CONDUIT BURIED 24" BELOW GRADE FOR PA/INTERCOM FROM EXISTING TERMINAL CABINET IN BUILDING 'M' ROOM 'JANITOR 56B' (A # 03-103017). CONTRACTOR SHALL VERIFY CONDUIT ROUTE AND CONNECTIONS PRIOR BID/CONSTRUCTION.

DATA PLAN NOTES | SCALE: NONE

IDENTIFICATION STAMP
DIV. OF THE STATE ARCHITECT
APP: 03-121617 INC:
REVIEWED FOR
SS ☑ FLS ☑ ACS ☑
DATE: 08/02/2021

STEVEN W. PRIER E-23389 EXP. 09-30-21 PROFESSIONAL ENGINEER STATE OF CALIFORNIA

Engineous Group, Inc.
721 N. Fair Oaks Ave., Suite 201
Pasadena, CA 91103
(626) 449-0100 (626) 449-0200

REVISIONS

DC | ARCHITECTS
820 N. MOUNTAIN AVENUE
SUITE 200
UPLAND, CA. 91786
(909) 985 - 6539 OFFICE
(909) 985 - 6084 FAX

RELOCATION OF 3-PORT. CLRM. BLDGS.
HUENEME HIGH SCHOOL
500 W. BARD ROAD, OXNARD, CA 93033
OXNARD UNION HIGH SCHOOL DISTRICT

HUENEME HIGH SCHOOL
DATA ENLARGED
FLOOR PLAN

JOB NUMBER: 2020-024
DRAWN BY: SJM
DATE: 03-2021
SCALE: 56-144 03-121600

E-4.1

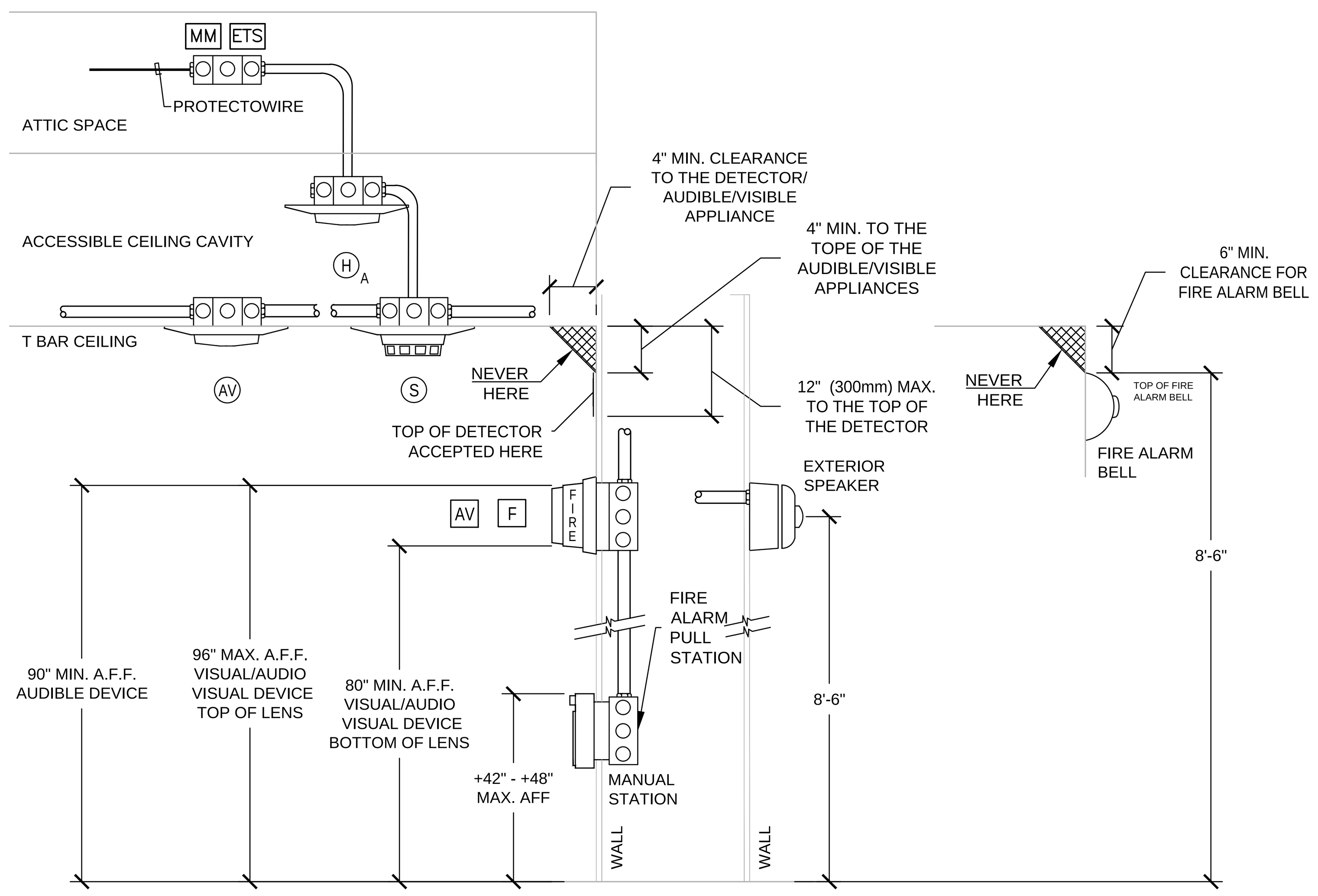

SMOKE/HEAT DETECTOR/PULL STATION, AUDIO/VISUAL DEVICE MOUNTING DETAILS (1)

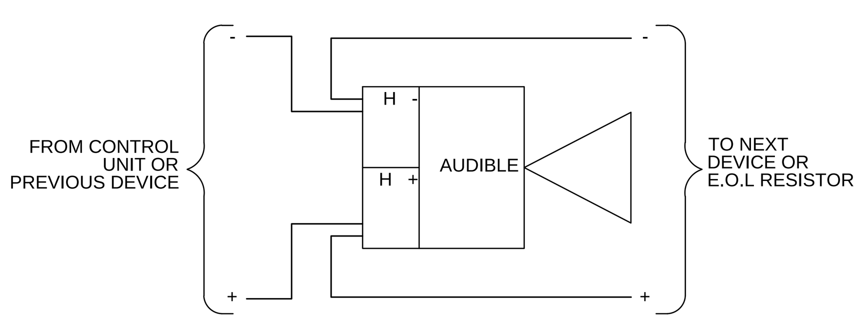

OUTDOOR VOICE EVAC SPEAKER UNIT

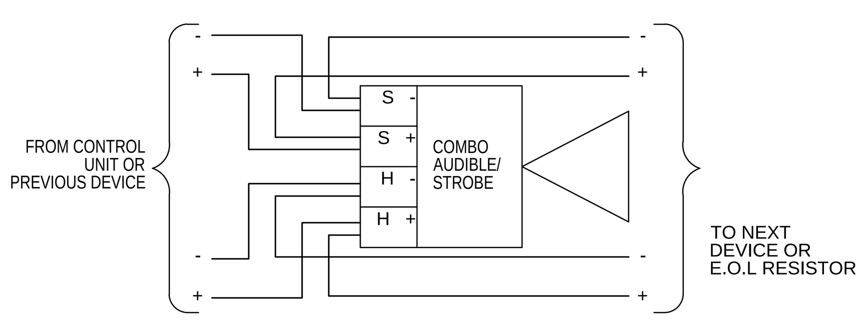

COMBINATION AUDIBLE SPEAKER/STROBE UNIT

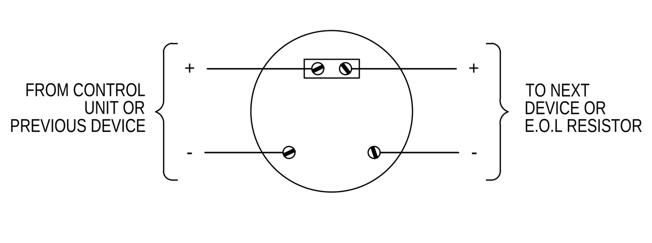

SMOKE AND/OR HEAT DETECTOR

TYPICAL DEVICE WIRING (2)

MEP Component Anchorage Note — February 14, 2020

All mechanical, plumbing, and electrical components shall be anchored and installed per the details on the DSA approved construction documents. The following components shall be anchored or braced to meet the force and displacement requirements prescribed in the 2019 CBC, Sections 1617A.1.18 through 1617A.1.26 and ASCE 7-16 Chapter 13, 26 and 30.

1. All permanent equipment and components.
2. Temporary or movable equipment that is permanently attached (e.g. hard wired) to the building utility services such as electricity, gas or water. "Permanently attached" shall include all electrical connections except plugs for 110/220 volt receptacles having a flexible cable.
3. Temporary, movable or mobile equipment which is heavier than 400 pounds or has a center of mass located 4 feet or more above the adjacent floor or roof level that directly support the component are required to be restrained in a manner approved by DSA.

The following mechanical and electrical components shall be positively attached to the structure, but need not demonstrate design compliance with the references noted above. These components shall have flexible connections provided between the component and associated ductwork, piping, and conduit. Flexible connections must allow movement in both transverse and longitudinal directions:

A. Components weighing less than 400 pounds and have a center of mass located 4 feet or less above the adjacent floor or roof level that directly support the component.

B. Components weighing less than 20 pounds, or in the case of distributed systems, less than 5 pounds per foot, which are suspended from a roof or floor or hung from a wall.

The anchorage of all mechanical, electrical, and plumbing components shall be subject to the approval of the design professional in general responsible charge or structural engineer delegated responsibility and the acceptance by DSA. The project inspector will verify that all components and equipment have been anchored in accordance with above requirements.

Piping, Ductwork, and Electrical Distribution System Bracing Note

Piping, ductwork, and electrical distribution systems shall be braced to comply with the forces and displacements prescribed in ASCE 7-16 Section 13.3. as defined in ASCE 7-16 Section 13.6.5, 13.6.6, 13.6.7, 13.6.8; and 2019 CBC, Sections 1617A.1.24, 1617A.1.25 and 1617A.1.26.

The method of showing bracing and attachments to the structure for the identified distribution system are as noted below. When bracing and attachments are based on a preapproved installation guide (e.g., SMACNA, OSHPD OPM for 2013 CBC or later), copies of the bracing system installation guide or manual shall be available on the jobsite prior to the start of and during the hanging and bracing of the distribution systems. The Structural Engineer of Record shall verify the adequacy of the structure to support the hanger and brace loads.

Mechanical Piping (MP), Mechanical Ducts (MD), Plumbing Piping (PP), Electrical Distribution Systems (E):

MP ☐ MD ☐ PP ☐ E ☒ - Option 1 : Detailed on the approved drawings with project specific notes and details.

MP ☐ MD ☐ PP ☐ E ☐ - Option 2 : Shall comply with the applicable OSHPD Pre-Approval (OPM#) #________.

MP ☐ MD ☐ PP ☐ - Option 3 : Shall comply with the SMACNA Seismic Restraint Manual, OSHPD Edition (2009), including any addenda. Fasteners and other attachments not specifically identified in the SMACNA Seismic Restraint Manual, OSHPD Edition, are detailed on the approved drawings with project specific notes and details. The details shall account for the applicable Seismic Hazard Level ______ and Connection Level ______ for the project and conditions.

MEP COMPONENT ANCHORAGE NOTE (3)

NEW FIRE ALARM SYMBOLS LEGEND

SYMBOL	DESCRIPTION	MANUFACTURER	MODEL NUMBER	CSFM NUMBER
(S)	SMOKE DETECTORS/PHOTOELECTRIC SMOKE DETECTORS	SILENT KNIGHT	SD505-PHOTO	7272-0559:0178
(H)	HEAT DETECTORS	SILENT KNIGHT	SD505-HEAT	7270-0559:0177
(AV) cd W	INDOOR SPEAKER-STROBE (15cd, 30cd, 75cd, 110cd) (CEILING MOUNTED)	SYSTEM SENSOR	SPSCWL, SPSCRL	7320-1653:0505
▷S W	OUTDOOR SPEAKER (1/4W, 1/2W, 1W, 2W)	SYSTEM SENSOR	SPWK, SPRK	7320-1653:0201
FACP	NEW FIRE ALARM CONTROL PANEL W/EMERGENCY VOICE EVACUTION	SILENT KNIGHT	6820EVS	7165-0559:0500
ANN	NEW REMOTE ANNUNCIATOR	SILENT KNIGHT	6860	7165-0559:0500
FACP	EXISTING FIRE ALARM CONTROL PANEL (A# 03-103017)	FCI	7200A	7165-0694:0174

SEQUENCE OF OPERATION

OPERATION/DESCRIPTION	BLDG POWER FAILURE	AREA SMOKE DETECTOR	AREA HEAT DETECTOR
ANNUNCIATE AT FIRE CONTROL PANEL (SUPERVISION & TROUBLE) ALARM	YES	YES	YES
SOUND CONTROL PANEL TROUBLE BUZZER	YES	ON WIRING FAULT	ON WIRING FAULT
ACTIVATE AUDIBLE ALARM SIGNALS	NO	YES	YES
ACTIVATE VISUAL ALARM SIGNALS	NO	YES	YES
CENTRAL STATION SIGNALS (UNTIL RESET)	YES	YES	YES

SYMBOL NOTES

"X"	WHEN SHOWN ADJACENT TO OUTLET SYMBOL OR IN CONDUIT RUN INDICATES EXISTING TO REMAIN. INTERCEPT, REROUTE, AND EXTEND, IF NECESSARY.
"XR"	WHEN SHOWN ADJACENT TO OUTLET SYMBOL OR LIGHT FIXTURE INDICATES EXISTING TO BE REMOVED.
"XX"	WHEN SHOWN IN CONDUIT RUN INDICATES EXISTING CONDUIT RUN TO BE REWIRED. PULL OUT EXISTING WIRES AND INSTALL NEW WIRES, QUANTITY AS INDICATED BY HASH MARKS.
"XA"	WHEN SHOWN ADJACENT TO LIGHT FIXTURE OR OUTLET SYMBOL OR IN CONDUIT RUN INDICATES EXISTING TO BE ABANDONED. REMOVE DEVICE AND INSTALL BLANK PLATE AND PULL WIRES FROM CONDUIT AS REQUIRED.
"XRR"	WHEN SHOWN ADJACENT TO FA SYSTEM DEVICE INDICATES EXISTING SHALL BE DISCONNECTED, REMOVED, CLEANED, AND RE-INSTALLED FURNISH AND INSTALL ALL MATERIAL NECESSARY TO MAKE ALL CONNECTION REQUIRED FOR A COMPLETE AND OPERABLE FIRE ALARM (FA) SYSTEM.
"XRN"	WHEN SHOWN ADJACENT TO FA SYSTEM DEVICE INDICATES EXISTING SHALL BE DISCONNECTED, AND REMOVED. FURNISH AND INSTALL NEW DEVICE AT PRE-EXISTING LOCATION WITH SPECIFICATIONS NOTED IN FA LEGENDS ON SHEET E-0.2. FURNISH AND INSTALL ALL MATERIAL NECESSARY TO MAKE ALL CONNECTION REQUIRED FOR A COMPLETE AND OPERABLE FIRE ALARM (FA) SYSTEM.
"XRL"	WHEN SHOWN ADJACENT TO EQUIPMENT, DEVICES OR LIGHTING FIXTURE, INDICATES EXISTING EQUIPMENT, DEVICE OR LIGHTING FIXTURE AND ALL ASSOCIATED WIRING TO BE RELOCATED, U.O.N.
"XB"	WHEN SHOWN NEXT TO DUPLEX OUTLET INDICATE REMOVE EXISTING DEVICE AND COVER PLATE. FURNISH AND INSTALL NEW DUPLEX OUTLET,EXTENSION RING AND STAINLESS STEEL COVER PLATE AND MAKE ALL CONNECTION REQUIRED TO RE-ESTABLISH CIRCUITRY AS BEFORE.
"NL"	INDICATE NEW LOCATION OF RELOCATED EQUIPMENT, DEVICE, LIGHTING FIXTURE OR FA SYSTEM DEVICE.

CODES AND STANDARDS

CODES AND PERMITS: ALL EQUIPMENT, INSTALLATION, ETC., SHALL CONFORM TO LOCAL ELECTRICAL, MECHANICAL AND OTHER APPLICABLE CODES. CONTRACTOR SHALL OBTAIN AND PAY FOR ALL PERMITS AND INSPECTIONS. COPIES OF ALL PERMITS AND INSPECTION REPORTS SHALL BE SUBMITTED TO THE ARCHITECT. CODES INCLUDE BUT NOT LIMITED TO:

- TITLE 24, PART 2, CCR (2019 CALIFORNIA BUILDING CODE W/AMENDMENTS)
- TITLE 24, PART 3, CCR (2019 CALIFORNIA ELECTRICAL CODE W/AMENDMENTS)
- TITLE 24, PART 4, CCR (2019 CALIFORNIA MECHANICAL CODE W/AMENDMENTS)
- TITLE 24, PART 5, CCR (2019 CALIFORNIA PLUMBING CODE W/AMENDMENTS)
- TITLE 24, PART 9, CCR (2019 CALIFORNIA FIRE CODE W/AMENDMENTS)
- 2019 CALIFORNIA GREEN BUILDINGS STANDARDS CODES)
- 2019 CALIFORNIA REFERENCED STANDARDS CODE (PART 12, TITLE 24, CCR)
  - NFPA 13 - 2016
  - NFPA 72 - 2016
- REFERENCED CODE SECTIONS FOR APPLICABLE STANDARDS
  - 2019 CBC, CHAPTER 35
  - 2019 CFC, CHAPTER 45
- NFPA STANDARDS AND GUIDES
  - NFPA 72 NATIONAL FIRE ALARM CODES (CALIFORNIA AMENDED, 2016 EDITION)
  - NOTE: SEE UL STANDARD 1971 FOR "VISUAL DEVICES".

WIRING SCHEDULE

DESIGN.	CIRCUIT TYPE	DESCRIPTION	MODEL
A	HORN/SPEAKER NOTIFICATION LOOP	1 TWISTED PAIR, 14 AWG FPLR	WESTPENN CABLE FPLP 2 PAIR #16 TWISTED, CSFM #7161-0859:0101
F	SLC INTELLIGENT LOOP NETWORK COMM	1 TWISTED PAIR, 18 AWG FPLR (2F = 2 SET OF CABLES)	WESTPENN CABLE FPLP 2 PAIR #16 TWISTED, CSFM #7161-0859:0101
V	STROBE SIGNAL OUTPUT CIRCUIT CABLE	(1) SETS OF 2#14 AWG (RED/BLACK)	WESTPENN CABLE FPLP 2#14 OR 2#12, CSFM #7161-0859:0101

NOTES:
1. ALL CABLE SHALL BE INSTALLED PER NEC/CEC PA VOICE CIRCUIT.
2. ALL WIRING SHALL CONFORM TO NEC 760 PART A & C FOR A POWER-LIMITED SUPPLY.
3. ALL WIRING IN WET LOCATIONS SHALL BE THWN, UL LISTED FOR OUTDOOR USE OR EQUAL.
4. ALL FIRE ALARM CABLING SHALL BE RUN IN MINIMUM 3/4" CONDUIT RACEWAY UNLESS OTHERWISE NOTED.

THE SEISMIC ANCHORAGE OF ELECTRICAL EQUIPMENT SHALL CONFORM TO CBC 2019 AND NFPA 13 2019 EDITION

FIRE ALARM SPECIFICATIONS

1. APPLICABLE STANDARD NFPA 72, AS ADOPTED AND AMENDED IN CBC CHAPTER 35
2. INSTALLATION OF THE SYSTEMS SHALL NOT BE STARTED UNTIL DETAILED DESIGN DOCUMENTS AND SPECIFICATION, INCLUDING STATE FIRE MARSHAL LISTING NUMBERS FOR EACH COMPONENT OF THE SYSTEM, HAS BEEN APPROVED BY DSA.
3. UPON COMPLETION OF SYSTEM INSTALLATION, A SATISFACTORY TEST OF THE ENTIRE SYSTEM SHALL BE MADE IN THE PRESENCE OF A DSA PROJECT INSPECTOR.
4. A STAMPED SET OF APPROVED FIRE ALARM DESIGN DOCUMENTS SHALL BE ON THE JOB SITE AND USED FOR INSTALLATION.
5. ANY DISCREPANCIES BETWEEN THE DRAWINGS AND THE CODE OR RECOGNIZED STANDARDS SHALL BE BROUGHT TO THE ATTENTION OF DSA AND THE ARCHITECT/ENGINEER OF THE PROJECT.
6. DSA, ARCHITECT/ENGINEER AND OWNER SHALL BE NOTIFIED A MINIMUM OF 48 HOURS PRIOR TO THE FINAL INSPECTION AND /OR TESTING.
7. ALL PENETRATIONS THROUGH RATED ASSEMBLIES REQUIRING OPENING PROTECTION SHALL BE PROVIDED WITH A PENETRATION FIRE STOP SYSTEM AS IDENTIFIED IN CBC CHAPTER 7, UL OR OTHER APPROVED LAB TESTING CRITERIA. APPROVED TYPES OF MATERIALS SHALL BE IDENTIFIED WITHIN THE PROJECT SPECIFICATIONS WITHIN THE FIRE ALARM SECTION.
8. WALL MOUNTED VISIBLE NOTIFICATION DEVICES SHALL HAVE THEIR BOTTOMS MOUNTED AT 80" MINIMUM AND 96" MAXIMUM FROM FINISHED FLOOR.
9. WALL MOUNTED AUDIBLE NOTIFICATION DEVICES SHALL HAVE THEIR TOPS MOUNTED AT 90" MINIMUM AND 100" MAXIMUM FROM FINISHED FLOOR AND NO CLOSER THAN 6" TO A HORIZONTAL STRUCTURE.
10. AUDIBLE DEVICES SHALL PROVIDE A SOUND PRESSURE LEVEL OF 15 DECIBELS (DBA) ABOVE THE AVERAGE AMBIENT SOUND LEVEL OR FIVE DBA ABOVE THE MAXIMUM SOUND LEVEL HAVING A DURATION OF AT LEAST 60 SECONDS, WHICHEVER IS GREATER, IN EVERY OCCUPIABLE SPACE WITHIN THE BUILDING.
11. AUDIBLE DEVICES SHALL BE SYNCHRONIZED TEMPORAL CODE 3 PATTERN.

11.1. 2.16 APPLICABLE CODES: ENSURE THE CURRENT CODES ARE LISTED ON THE PLANS.

12. THE CONTRACTOR SHALL ADJUST/INSTALL ALL DEVICES TO MAXIMIZE PERFORMANCE AND TO MINIMIZE FALSE ALARMS.
13. VISIBLE DEVICES SHOULD NOT EXCEED TWO FLASHES PER SECOND AND SHOULD NOT BE SLOWER THAN ONE FLASH EVERY SECOND. THE DEVICE SHALL HAVE A PULSING LIGHT SOURCE NOT LESS THAN 15 CANDELLA. VISIBLE DEVICES WITHIN 55' FROM EACH OTHER SHALL BE SYNCHRONIZED.
14. UNDERGROUND AND EXTERIOR CONDUITS TO HAVE WATER TIGHT FITTINGS AND WIRE TO BE APPROVED FOR WET LOCATIONS.
15. ALL FIRE ALARM WIRING SHALL BE FPL OR FPLP (FIRE POWER LIMITED OR FIRE POWER LIMITED PLENUM) AS REQUIRED FOR APPLICATION. WIRING IN CONDUIT ABOVE GROUND MAY BE TYPE THHN OR THWN.
16. PER CEC STANDARDS, ALL WIRING IS TO BE PULLED THROUGH EACH JUNCTION BOX AND CONNECTED DIRECTLY TO EACH FIRE DEVICE. DO NOT SPLICE THE WIRE. ALL BOXES TO BE SIZED PER CEC.
17. SMOKE DETECTORS SHALL NOT BE ANY CLOSER THAN 1' FROM FIRE SPRINKLERS OR 3' FROM ANY SUPPLY DIFFUSER. IN AREA OF CONSTRUCTION OR POSSIBLE DAMAGE/CONTAMINATION ON NEWLY INSTALLED FIRE ALARM, DEVICES SHALL BE COVERED UNTIL THAT AREA IS READY TO BE TURNED OVER TO THE OWNER.
18. ALL FIRE ALARM CIRCUITS SHALL BE IN CONDUIT, SURFACE RACEWAY OR OPEN RUN ABOVE CEILINGS, UNDER FLOORS AND IN WALLS IN A NEAT AND PROTECTED MANOR AS INDICATED ON DESIGN DOCUMENTS. EXPOSED CIRCUITS ARE ONLY PERMITTED WHEN NOTED AS EXPOSED ON DESIGN DOCUMENTS.
19. FIRE ALARM PANEL, REMOTES, AND COMPONENTS SHALL BE SECURED TO MOUNTING SURFACES PER MANUFACTURERS SPECIFICATIONS. NO SINGLE DEVICE SHALL EXCEED 20 LBS. WITHOUT SPECIAL MOUNTING DETAILS.
20. A DEDICATED BRANCH CIRCUIT SHALL BE PROVIDED FOR FIRE ALARM EQUIPMENT. THIS CIRCUIT SHALL BE ENERGIZED FROM THE COMMON USE AREA PANEL AND SHALL HAVE NO OTHER OUTLETS. THE BREAKER SHALL HAVE A RED LOCKING DEVICE TO BLOCK THE HANDLE IN THE "ON" POSITION. THE CIRCUIT BREAKER SHALL BE LABELED "FIRE ALARM CIRCUIT CONTROL." CIRCUIT ID TO BE LABELED AT FIRE PANEL/EXTENDERS.
21. THE INSTALLING CONTRACTOR SHALL PROVIDE A COMPLETED "SYSTEM RECORD OF COMPLETION" PER NFPA 72, FIGURE 17.8.2.
22. 120 VAC IS NOT PERMITTED IN THE SAME CONDUIT WITH LOW VOLTAGE WIRING.
23. ALL OPENINGS IN RATED ASSEMBLIES SHALL BE REPAIRED PER UFC, NEC, UBC AND STANDARD BUILDING CODES ON EFFECT AT THE TIME OF APPROVAL. THE SYSTEM SHALL CONFORM TITLES 19 AND 24 AS APPLICABLE TO THIS PROJECT (CBC PART 2, CH. 7, TITLE 24).
24. ALL BACK BOXES SHALL BE AS RECOMMENCED BY MANUFACTURER. CONTRACTOR SHALL LOCATE JUNCTION BOXES AS REQUIRED AND PER CEC CODES.
25. ALL PANELS SHALL BE MOUNTED WITH CLEARANCES FOR OBSERVATION AND TESTING, AND ALL FIRE ALARM JUNCTION BOXES SHALL BE MARKED FOR IDENTIFICATION.
26. ALL WIRING OF INITIATING DEVICES AND ANNUNCIATOR PANEL SHALL BE SUPERVISED TO THE PRINCIPLE POINT OF ANNUNCIATION (THE FIRE ALARM CONTROL PANEL IS TO SUPERVISE THE ANNUNCIATOR PANEL, ALL CIRCUITS AND INITIATING DEVICES).
27. WIRING SHALL NOT BE LOOPED THROUGH DEVICES; WIRE MUST BE CUT FOR IN AND OUT. POINT COMMON ANNUNCIATION AND T-TAPPING ARE PROHIBITED.
28. A. EXCEPTION: ADDRESSABLE SYSTEMS, MAPNET CONDUCTORS WIRED CLASS "B" MAY BE T-TAPPED.
29. ALL FIRE ALARM WIRING SHALL BE RUN IN MINIMUM 3/4" CONDUIT.
30. A. ALL CONDUIT SIZES SHOWN AND INDICATED ON DRAWING ARE MINIMUMS. CONTRACTOR TO ADJUST SIZES FOR FIELD CONDITIONS (I.E. NUMBER OF BENDS, ETC.) BUT SHALL NOT BE SMALLER THAN 3/4".
31. ALL FIRE ALARM SYSTEM WIRING TERMINATIONS IN MAIN PULL BOXES AND TERMINAL CABINETS SHALL BE ON BOX MOUNTED TERMINAL BLOCKS.
32. ALL FIRE ALARM WIRING MUST TEST FREE OF OPENS, SHORTS AND GROUNDS. SEE INSTALLATION MANUALS FOR FIELD WIRING SPECIFICATIONS FOR ADDITIONAL INSTALLATION REQUIREMENTS.
33. (2) PRIMARY PHONE LINE SHALL BE DEDICATED FOR THE FIRE ALARM SYSTEM TO COMMUNICATE WITH U.L. LISTED CENTRAL STATION.
34. WIRING COLOR CODE SHALL BE CONSISTENT THROUGHOUT THE SYSTEM AND SHALL ALLOW FOR EASY IDENTIFICATION OF INITIATING, INDICATING AND AUXILIARY CIRCUITS.
35. CABINET TERMINALS SHALL BE NUMBERED AND CODED. FLEXIBLE CONNECTORS SHALL BE USED FOR DEVICES MOUNTED IN SUSPENDED PANELS.
36. THE FIRE DEPARTMENT WILL TEST AND VERIFY ADEQUATE AUDIBILITY BEING PROVIDED THROUGHOUT, PARTICULARLY IN OPEN WORK AREAS AND IN TESTING AREAS.
37. AUDIBLE DEVICES(S) TO BE AT LEASE 15 DBA ABOVE THE AMBIENT SOUND LEVELS, BUT NOT LESS THAN THE 75 DBA AT 10' OR MORE THAN 11ODBA AT THE MINIMUM HEARING DISTANCE. AUDIBLE DEVICES SHALL SOUND THE TEMPORAL FIRE ALARM SIGNAL.
38. CONDUIT AND JUNCTION BACK BOXES ARE NOT TO BE USED FOR UNRELATED WIRING.
39. ALL CONDUIT MOUNTING BOXES, AND PANELS SHALL BE HUNG AND FASTENED WITH FITTINGS TO ENSURE POSITIVE GROUNDING THROUGHOUT THE ENTIRE SYSTEM.
40. PLACE THE BOTTOM OF THE WALL MOUNTED STROBE EXACTLY 80" ABOVE THE FLOOR TO BOTTOM OF LENS AND MAKE SURE THE TOP OF THE STROBE IS AT LEAST 6" BELOW THE CEILING. PLACE THE TOP OF THE STROBE 6" BELOW THE CEILING IF THE CEILING IS TOO LOW, AND MAKE SURE IT PROTRUDES LESS THAN 4" IF IN A WALKWAY, CORRIDOR OR AISLE. NOTE THAT THESE MOUNTING REQUIREMENTS ALSO APPLY TO COMBINATION HORN/STROBE OR SPEAKER/STROBE APPLIANCES THAT ARE WALL MOUNTED (NFPA 72, CH.18).
41. STROBES SHALL BE VISIBLE IN ALL LOCATIONS THROUGHOUT THE BUILDING PER NFPA 72, CHAPTER 18, SECTION 18-5.
42. VISUAL DEVICES SHALL NOT EXCEED 2 FLASHER PER SECOND AND SHALL NOT BE SLOWER THAN 1 FLASH EVERY SECOND.
43. PROVIDE 24 HOUR TELEPHONE NUMBER OF CENTRAL STATION NEAR ANNUNCIATOR AND FIRE ALARM CONTROL PANEL.
44. ON SMOKE DETECTORS CONTRACTOR SHALL MAINTAIN 36" DISTANCE FROM SUPPLY AIR DIFFUSER.

IDENTIFICATION STAMP
DIV. OF THE STATE ARCHITECT
APP: 03-121617 INC:
REVIEWED FOR
SS ☑ FLS ☑ ACS ☑
DATE: 08/02/2021

REGISTERED PROFESSIONAL ENGINEER
SHANE MATTHEW FOSTER
E-21308
EXP. 09-2021
ELECTRICAL
STATE OF CALIFORNIA

Engineous Group, Inc.
751 N. Fair Oaks Ave., Suite 201
Pasadena, CA 91103
Phone: (626) 696-3850

REVISIONS

DC | ARCHITECTS
820 N. MOUNTAIN AVENUE
SUITE 200
UPLAND, CA. 91786
(909) 985 - 6939 OFFICE
(909) 985 - 0864 FAX

RELOCATION OF 3-PORT. CLRM. BLDGS.
HUENEME HIGH SCHOOL
500 W. BARD ROAD, OXNARD, CA 93033
OXNARD UNION HIGH SCHOOL DISTRICT

HUENEME HIGH SCHOOL FIRE ALARM NOTES AND SYMBOLS

JOB NUMBER: 2020-024
DRAWN BY: SAM
DATE: 03-2021
SCALE: 56-H4 03-121000

FA-0.1

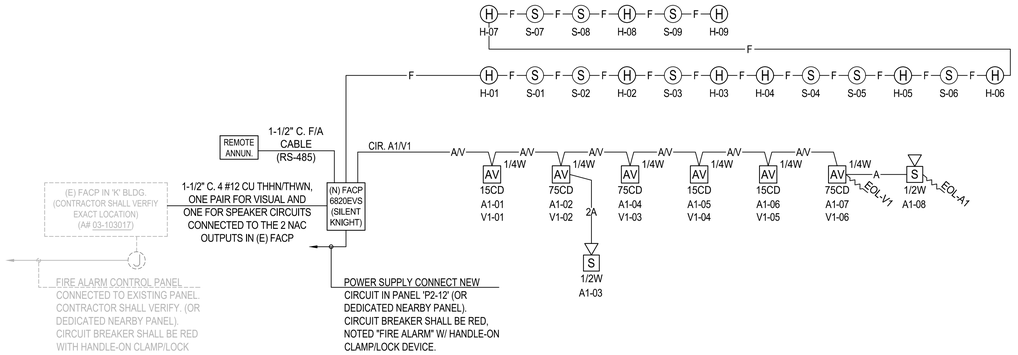

FIRE ALARM RISER DIAGRAM — SCALE:NONE — 1

PORTABLES STROBE/SPEAKER BATTERY CALCULATION - FACP						
	DEVICE	QTY.	CURRENT STANDBY (A)	CURRENT ALARM (A)	TOTAL STANDBY (A)	TOTAL ALARM (A)
	15cd STROBE (CEILING)	3	0.0000000	0.0410	0.0000000	0.1230000
	15cd SPEAKER (CEILING 1/4W)	3	0.0000000	0.0104	0.0000000	0.0312500
	75cd STROBE (CEILING)	3	0.0000000	0.1110	0.0000000	0.3330000
	75cd SPEAKER (CELING 1/4W)	3	0.0000000	0.0104	0.0000000	0.0312500
	FA SPEAKER WP (1/2W)	2	0.0000000	0.0208	0.0000000	0.0416667
	FACP W/VOICE EVAC	1	0.1900000	0.2500	0.1900000	0.2500000
				TOTAL	0.1900	0.8102

ALARM CURRENT X ALARM TIME / 60 = AMP/HR FOR ALARM					
	0.8102	X	1/4	=	0.2025

STANDBY CURRENT X 24 = AMP/HR FOR ALARM					
	0.1900	X	24	=	4.5600

ADJUSTED BATTERY CAPACITY		
REQUIRED STANDBY CAPACITY (AMP-HOURS) + REQUIRED ALARM CAPACITY (AMP-HOURS)	4.7625	
REQUIRED CAPACITY WITH SAFETY FACTOR (125%)	5.9532	
NEW BATTERY SIZE =	7 AMP HR.	

FIRE ALARM BATTERY CALCULATIONS — SCALE:NONE — 2

FACP STROBE/SPEAKER WORSE CASE VOLTAGE DROP CALCULATION						
FACP-1 SIGNAL CIRCUIT						
QTY.	DESCRIPTION			ALARM (A)		TOTAL (A)
3	15cd STROBE (CEILING)			0.0410	=	0.1230
3	15cd SPEAKER (CEILING)			0.0104	=	0.0313
3	75cd STROBE (CEILING)			0.1580	=	0.4740
3	75cd SPEAKER (CEILING)			0.0104	=	0.0313
2	FA SPEAKER WP (1/2W)			0.0208	=	0.0417
				TOTAL	=	0.7012
						0.0000 A
	0.7012	X	70	X 21.60	=	0.2580
CIRCULAR MILLS	4,110					VD
			0.2580	X 100	=	1.0750
VOLTAGE			24			VD%

FIRE ALARM VOLTAGE DROP CALCULATIONS — SCALE:NONE — 3

IDENTIFICATION STAMP
DIV. OF THE STATE ARCHITECT
APP: 03-121617 INC:
REVIEWED FOR
SS ☑ FLS ☑ ACS ☑
DATE: 08/02/2021

REGISTERED PROFESSIONAL ENGINEER — STEVEN W. FISHER — E-23288 — EXP. 09-2021 — STATE OF CALIFORNIA

Engineous Group, Inc.
721 N. Fair Oaks Ave., Suite 201
Pasadena, CA 91103
Steven@engineousgroup.com

REVISIONS

DC | ARCHITECTS
820 N. MOUNTAIN AVENUE
SUITE 200
UPLAND, CA. 91786
(909) 985 - 6539 OFFICE
(909) 985 - 6084 FAX

RELOCATION OF 3-PORT. CLRM. BLDGS.
HUENEME HIGH SCHOOL
500 W. BARD ROAD, OXNARD, CA 93033
OXNARD UNION HIGH SCHOOL DISTRICT

HUENEME HIGH SCHOOL
RISER DIAGRAM,
VOLTAGE DROP, AND
BATTERY CALCULATIONS

JOB NUMBER:	2020-024
DRAWN BY:	SAM
DATE:	03-20'21
SCALE:	SS-144 03-121900

FA-0.2

Fire Watch Guidelines

What is a Fire Watch?

A Fire Watch is a temporary measure intended to ensure continuous and systematic surveillance of an activity, building or portion thereof by one or more qualified individuals for the purposes of identifying and controlling fire hazards, detecting early signs of unwanted fire, raising an alarm of fire and notifying the fire department.

When do I need to have a Fire Watch?

A Fire Watch is required under the California Fire Code (CFC) for four reasons:

1) Pursuant to CFC §403.1 - When, in the opinion of the fire code official (also known as the Oxnard Fire Department Fire Marshal or his designee) it is essential for public safety in a place of assembly or any other place where people congregate, because of the number of persons, or the nature of the performance, exhibition, display, contest or activity, the owner, agent or lessee shall provide one or more fire watch personnel, as required and approved, to remain on duty during the times such places are open to the public, or when such activity is being conducted.
2) Pursuant to CFC §901.7 - Where a required fire protection system (such as a Fire Alarm System or Automatic Fire Sprinkler System) is out of service, the fire department and the fire code official shall be notified immediately and, where required by the fire code official (generally when systems are out of service for 4 or more hours), the building shall either be evacuated or an approved fire watch shall be provided for all occupants left unprotected by the shutdown until the fire protection system has been returned to service.
3) Pursuant to CFC §1405.5 - When required by the fire code official for building demolition that is hazardous in nature, qualified personnel shall be provided to serve as an on-site fire watch. Fire watch personnel shall be provided with at least one approved means for notification of the fire department and their sole duty shall be to perform constant patrols and watch for the occurrence of fire.
4) As required by the Fire Code Official whenever a hazardous condition is present.

Who is required to provide a Fire Watch?

The owner, agent or lessee of any building or activity whenever the above situations occur. The Oxnard Fire Department may require you to provide a Fire Watch however, it is **not** the responsibility of the Oxnard Fire Department to provide personnel to conduct a Fire Watch, although in certain circumstances we may provide Fire Prevention Staff at a charge to you.

What is required by me as an owner, agent or lessee?

1) You shall provide a Fire Watch during the entire time an activity that requires a fire watch is being conducted until all attendees have left the premises. The Fire Watch is required on a 24-hour basis whenever a fire protection system is out of service (unless the Fire Code Official approves otherwise).
2) You shall provide Fire Watch personnel the area to be patrolled and complete access to **all** areas of the activity or building in which the Fire Watch is conducted.
3) You shall provide a means of direct communication, such as a cell phone, to the Fire Watch for them to contact 9-1-1 in the event of an emergency. When multiple Fire Watch personnel are required, two-way radios shall be provided to each person on Fire Watch to communicate with each other and a centrally located administrative staff member.

What is required by me as an owner, agent or lessee? (Continued)

4) You shall provide each Fire Watch personnel with a method of alerting building occupants and an evacuation procedure.
5) You shall provide each Fire Watch personnel with a procedure for reactivating any sprinkler valves or other fire protection systems, if possible.

What is required for a fire watch?

Personnel
Personnel determined by the building or activity owner, agent or lessee to conduct the Fire Watch shall:

1) Be a responsible adult at least 18 years of age,
2) Be able to speak English clearly,
3) Be able to move throughout the building or activity safely,
4) Be thoroughly familiar with the building or activity they are patrolling such as all electrical shut off devices and main power cut-offs as well as shut–offs for gas, oil, process water and any other areas that may be either hazardous to fire personnel or add fuel to any fire situation. Fire watch personnel must know the location of any fire extinguisher, sprinkler system controls, hose connections and all fire protection equipment in the structure or site.
5) Fire watch personnel shall be familiar of all hazardous material locations and dangerous processes within the structure and site, along with storage areas for products that add fuel to combustion. Fire watch personnel shall be familiar with any pre-emergency plans and emergency plans that exist for the structure. Fire watch personnel must know their responsibility under any emergency plan in effect.

6) Be capable of recognizing and responding to a fire emergency in an efficient and appropriate manner.

A professional security company is not required, however they may be utilized for the Fire Watch if they meet the above requirements. Building or activity familiarity may be met through training and personal walkthrough of the location.

Duties
Personnel serving as a fire watch have the following responsibilities:

General
1) Conduct periodic patrols of the interior of the entire building as specified.
2) During the rounds, fire watch personnel shall make a thorough inspection of the building or spaces assigned to him/her noting at a minimum the following:
   a. Outside doors and windows are closed and locked; fire doors are closed and not chained or tampered with to prevent exiting the structure.
   b. All oily waste rags, paint residue, rubbish, etc., are in proper closed containers or removed from the building.
   c. All fire apparatus such as extinguisher hose lines, etc., are in place and not obstructed.
   d. Aisles and exit ways are clear and not obstructed.
   e. Motors and machines not required to be running are shut off.
   f. All offices, conference rooms, file rooms, shall be checked.
   g. All gas and electric heaters or other heating equipment checked regularly.
   h. All hazardous processes or manufacturing processes are in safe condition.
   i. Flammable and combustible materials are properly stored in containers or in storage areas.
   j. All sprinkler valves required to be open are chained in the open position.
   k. Particular attention shall be given to any areas of new construction or alteration areas for fire.
   l. Concealed spaces, basements, storage area, build-ups, penthouses and similar areas shall be checked.
3) Identify any fire, life or property hazards.
4) Have at least one means of direct communication with the Fire Department. One of the means of communication must be a cell phone.
5) Immediately report all discovered fire **hazards** to owner, agent or lessee for immediate correction.
6) Maintain a log of fire watch activities including hazards found, when and to whom they were reported.

In the event of fire or odor of smoke

1) Immediately notify the Oxnard Fire Department by calling 9-1-1 with the exact address and the extent of fire involvement.

2) Notify the occupants of the facility of the need to evacuate. If the sirens or public address function of the alarm system are still functional, use them to assist with the evacuation of the building.
3) **Fire watch personnel cannot have other duties besides their assigned fire watch,** unless directed by the Fire Department. **The fire watch will not perform fire-fighting duties beyond the scope of the ordinary citizen.**

Frequency of Inspection
Buildings or activities shall have a fire watch patrol **every 60 minutes.**
Fire watch personnel shall patrol the entire building or activity **every 30 minutes** in the following situations:

1) The building or activity has people sleeping.
2) The building or activity is an institutional occupancy.
3) The building or activity is an occupied assembly occupancy.

Number of Fire Watch Personnel
1) One Fire Watch personnel shall be provided per each 100,000 square feet of gross floor area for general businesses, apartment complexes, events and similar structures or activities.
2) One Fire Watch personnel shall be provided per each 500,000 square feet of gross floor area for open warehouses.
2) One Fire Watch personnel shall be provided for each 100 units of residential occupancy (such as a care facility).
3) These numbers may be modified by the Fire Code Official as deemed necessary.

Record Keeping
A fire watch log shall be maintained at the facility. The log must be available to the Oxnard Fire Department at all times during the fire watch. The log will show the following;

1) The address of the facility.
2) Times the patrol has commenced for each tour of the facility.
3) Name of the person(s) conducting the fire watch.
4) Record of any communication(s) to the Fire Department and/or monitoring company.
5) Record of any unsafe conditions.
6) Record of any corrective actions taken to remedy any unsafe conditions.
5) Record of other information as directed by the Fire Department.
6) The log shall be faxed **daily** to the Office of the Fire Marshal serving your area (see front page).

When may I cancel my Fire Watch?

The owner, agent or lessee may cancel the Fire Watch once the activity requiring the Fire Watch has concluded and all attendees have left the premises, or fire alarm and/or the fire suppression system(s) has been fully restored.

Once the fire watch has been cancelled, the owner, agent or lessee must notify the monitoring company and the Oxnard Fire Department during normal business hours. If repairs are completed after normal business hours, or on the weekend, notify the Oxnard Fire Department the next business day.

FIRE WATCH NOTICE

The Oxnard Fire Department has determined that you are required to maintain a Fire Watch for the following reason(s):

☐ **Place of Assembly** ☐ **Impaired Fire Protection System** ☐ **Hazardous Building Demolition**
☐ **Other** ____________

Prevention Staff ____________ **Signature** ____________ **Date** ____________

Activity/Facility Name: ____________

Address: ____________

Primary Responsible Party: ____________ **Phone:** ____________

Secondary Responsible Party: ____________ **Phone:** ____________

I, the undersigned, as the owner, lessee or agent thereof, understand the requirements of the Fire Watch and certify that I understand and agree to abide by my requirements for conducting the ordered fire watch.

Print Name ____________ **Signature** ____________ **Title** ____________ **Date** ____________

Company Providing Fire Watch (if any): ____________

Company Contact: ____________ **Phone:** ____________

FIRE WATCH PERSONNEL

NAME	PHONE	EVENT / FACILITY STAFF	PRIVATE SECURITY
		☐	☐
		☐	☐
		☐	☐
		☐	☐
		☐	☐
		☐	☐
		☐	☐
		☐	☐
		☐	☐
		☐	☐
		☐	☐
		☐	☐

FIRE WATCH LOG **Date:**_________

Facility/Event: **Address:**

TIME	INITIALS	NOTES

IDENTIFICATION STAMP
DIV. OF THE STATE ARCHITECT
APP: 03-121617 INC:
REVIEWED FOR
SS ☑ FLS ☑ ACS ☑
DATE: 08/02/2021

REGISTERED PROFESSIONAL ENGINEER
SHANE MATTHEW FOSTER
E-21308
EXP. 09-2021
ELECTRICAL
STATE OF CALIFORNIA

Engineous Group, Inc.
751 N. Fair Oaks Ave., Suite 201
Pasadena, CA 91103
Phone: (626) 696-3850

REVISIONS

DC | ARCHITECTS
820 N. MOUNTAIN AVENUE
SUITE 200
UPLAND, CA. 91786
(909) 985 - 6939 OFFICE
(909) 985 - 0864 FAX

RELOCATION OF 3-PORT. CLRM. BLDGS.
HUENEME HIGH SCHOOL
500 W. BARD ROAD, OXNARD, CA 93033
OXNARD UNION HIGH SCHOOL DISTRICT

HUENEME HIGH SCHOOL
FIRE WATCH
NOTES

JOB NUMBER: 2020-024
DRAWN BY: SAM
DATE: 03-2021
SCALE: 56-H4 03-121000

FA-0.3

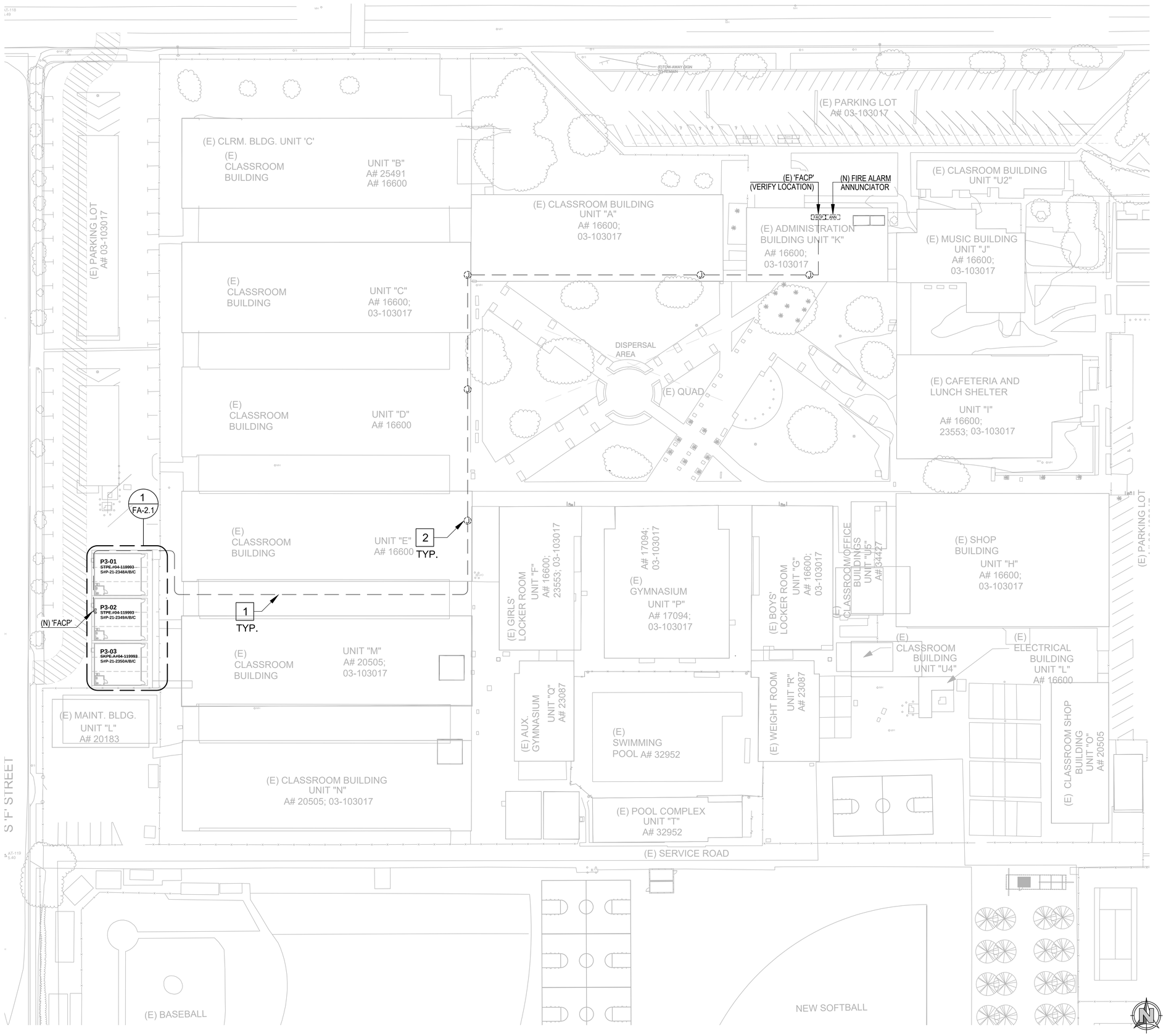

FIRE ALARM SITE PLAN | SCALE: 1/32"=1'-0" | 1

FIRE ALARM SITE PLAN GENERAL NOTES

1. ALL CONDUITS SHALL BE RUN NEATLY AND PARALLEL OR PERPENDICULAR TO STRUCTURAL MEMBERS. CONDUIT ROUTING SHOWN ON PLAN IS DIAGRAMMATIC AND IS INTENDED TO SHOW POSSIBLE FUNCTIONAL ROUTE OF CONDUITS AND CONDUCTORS. IN SOME CASES THE DRAWING SHOWS ROUTING WHICH MAY NOT BE PARALLEL OR PERPENDICULAR TO BUILDING STRUCTURAL MEMBERS. THIS IS FOR CLARITY OF CIRCUITING AND NOT INTENDED TO APPROVE ANY DEVIATION FROM NEAT WORKMANSHIP.
2. COMBINING OF HOMERUNS AND OTHER CIRCUITS OTHER THAN WHAT IS SHOWN ON PLAN WILL NOT BE APPROVED.
3. COMBINING OF EMERGENCY CIRCUITS WITH OTHER CIRCUITS IN CONDUITS AND/OR JUNCTION BOXES WILL NOT BE APPROVED.
4. CONDUITS AND ROUTING FOUND OBJECTIONABLE BY THE ARCHITECT WILL BE REWORKED AT ELECTRICAL CONTRACTORS EXPENSE.
5. ELECTRICAL CONTRACTOR SHALL PROVIDE APPROVED SEISMIC STRUCTURAL SUPPORTS AS CURRENTLY ADOPTED BY IBC OR CBC WHERE APPLICABLE FOR ALL FIXTURES, BOXES AND OTHER ELECTRICAL EQUIPMENT.
6. ELECTRICAL CONTRACTOR SHALL VERIFY LOCATIONS AND MOUNTING HEIGHTS OF ALL OUTLETS AND EQUIPMENT WITH ARCHITECTURAL PLANS, ELEVATIONS AND DETAILS.

FIRE ALARM SITE PLAN KEYED NOTES

1. PROVIDE 2" CONDUIT BURIED 24" BELOW GRADE (REFER TO E-0.2, DETAIL 03) FOR FIRE ALARM SYSTEM FROM EXISTING FIRE ALARM CONTROL PANEL (NOTIFIER) (A # 03-103017) IN BUILDING 'K'. TO NEW MODULAR BUILDING. CONTRACTOR SHALL VERIFY CONDUIT ROUTE AND CONNECTIONS PRIOR BID/CONSTRUCTION.
2. EXISTING UNDERGROUND BOX FOR FIRE ALARM SYSTEM (A# 03-103017). SHOWN FOR REFERENCE. VERIFY EXACT LOCATION.

FIRE ALARM PLAN NOTES | SCALE: NONE

IDENTIFICATION STAMP
DIV. OF THE STATE ARCHITECT
APP: 03-121617 INC:
REVIEWED FOR
SS ☑ FLS ☑ ACS ☑
DATE: 08/02/2021

REGISTERED PROFESSIONAL ENGINEER
WITHEY POLER
E-23389
EXP. 09-30-21
STATE OF CALIFORNIA

Engineous Group, Inc.
721 N. Fair Oaks Ave., Suite 201
Pasadena, CA 91103
(626) 449-8200 Fax (626) 449-8300
Electrical Engineering

REVISIONS

DC | ARCHITECTS
820 N. MOUNTAIN AVENUE
SUITE 200
UPLAND, CA. 91786
(909) 985 - 6939 OFFICE
(909) 985 - 6984 FAX

RELOCATION OF 3-PORT. CLRM. BLDGS.
HUENEME HIGH SCHOOL
500 W. BARD ROAD, OXNARD, CA 93033
OXNARD UNION HIGH SCHOOL DISTRICT

HUENEME HIGH SCHOOL
FIRE ALARM
SITE PLAN

JOB NUMBER: 2020-024
DRAWN BY: SAM
DATE: 05-20/21
SCALE: 56-144 03-121600

FA-1.0

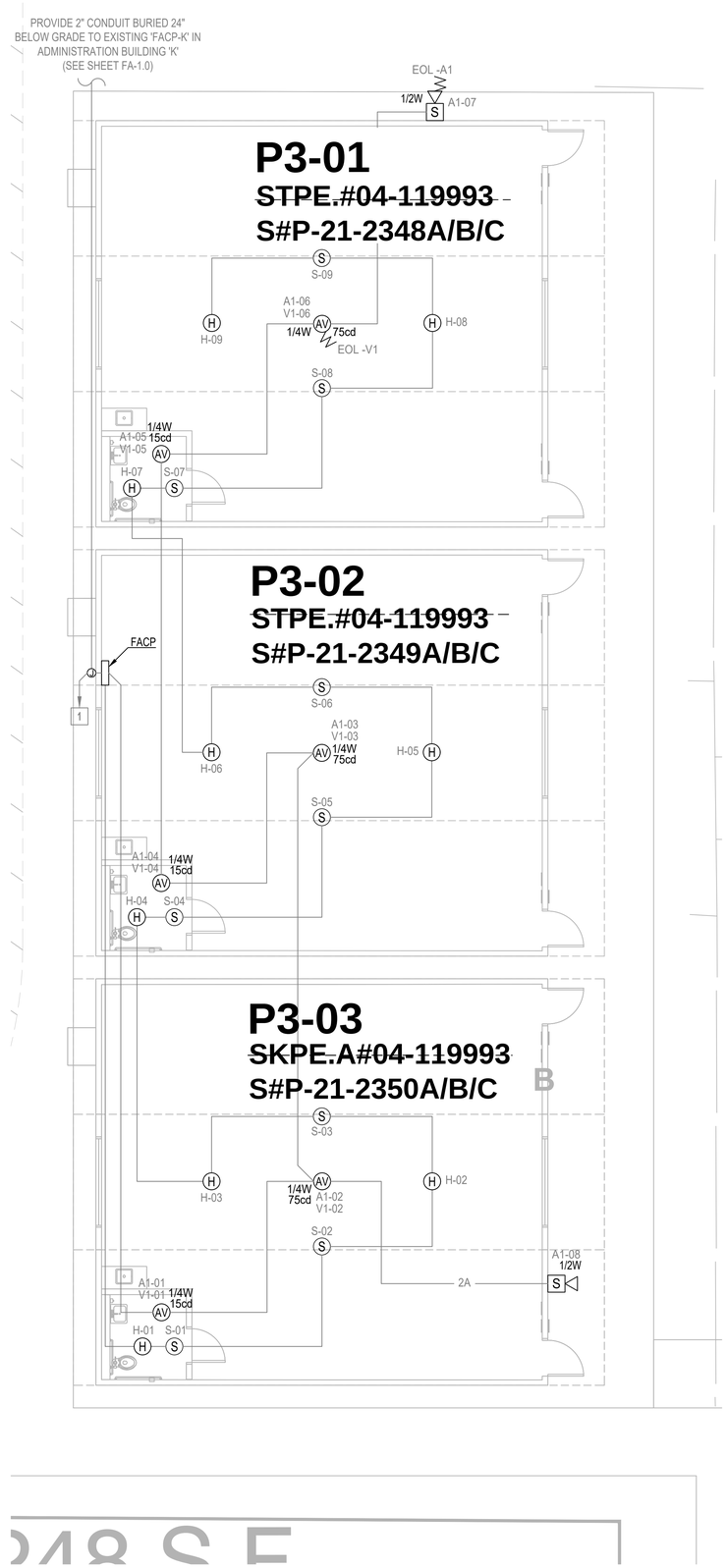

ENLARGED FIRE ALARM PLAN | SCALE: 3/16"=1'-0" | 1

FIRE ALARM PLAN GENERAL NOTES

1. ALL CONDUITS SHALL BE RUN NEATLY AND PARALLEL OR PERPENDICULAR TO STRUCTURAL MEMBERS. CONDUIT ROUTING SHOWN ON PLAN IS DIAGRAMMATIC AND IS INTENDED TO SHOW POSSIBLE FUNCTIONAL ROUTE OF CONDUITS AND CONDUCTORS. IN SOME CASES THE DRAWING SHOWS ROUTING WHICH MAY NOT BE PARALLEL OR PERPENDICULAR TO BUILDING STRUCTURAL MEMBERS. THIS IS FOR CLARITY OF CIRCUITING AND NOT INTENDED TO APPROVE ANY DEVIATION FROM NEAT WORKMANSHIP.
2. COMBINING OF HOMERUNS AND OTHER CIRCUITS OTHER THAN WHAT IS SHOWN ON PLAN WILL NOT BE APPROVED.
3. COMBINING OF EMERGENCY CIRCUITS WITH OTHER CIRCUITS IN CONDUITS AND/OR JUNCTION BOXES WILL NOT BE APPROVED.
4. CONDUITS AND ROUTING FOUND OBJECTIONABLE BY THE ARCHITECT WILL BE REWORKED AT ELECTRICAL CONTRACTORS EXPENSE.
5. ELECTRICAL CONTRACTOR SHALL PROVIDE APPROVED SEISMIC STRUCTURAL SUPPORTS AS CURRENTLY ADOPTED BY IBC OR CBC WHERE APPLICABLE FOR ALL FIXTURES, BOXES AND OTHER ELECTRICAL EQUIPMENT.
6. ELECTRICAL CONTRACTOR SHALL VERIFY LOCATIONS AND MOUNTING HEIGHTS OF ALL OUTLETS AND EQUIPMENT WITH ARCHITECTURAL PLANS, ELEVATIONS AND DETAILS.

FIRE ALARM PLAN KEYED NOTES

1. CONNECT FIRE ALARM CONTROL PANEL TO CIRCUIT 'P2-12', WITH A DEDICATED 1P20A 120V BREAKER. CIRCUIT BREAKER SHALL BE RED WITH HANDLE-ON CLAMPLOCK. CONTRACTOR SHALL VERIFY CIRCUIT.

FIRE ALARM PLAN NOTES | SCALE: NONE

IDENTIFICATION STAMP
DIV. OF THE STATE ARCHITECT
APP: 03-121617 INC:
REVIEWED FOR
SS ☑ FLS ☑ ACS ☑
DATE: 08/02/2021

DSA

STATE OF CALIFORNIA
REGISTERED PROFESSIONAL ENGINEER
WITNEY POLER
E-23389
EXP. 09-30-21

Engineous Group, Inc.
714 N. Fair Oaks Ave., Suite 201
Pasadena, CA 91103
(626) 449-1000
www.engineousgroup.com

REVISIONS

DC | ARCHITECTS
820 N. MOUNTAIN AVENUE
SUITE 200
UPLAND, CA. 91786
(909) 985 - 6939 OFFICE
(909) 985 - 5084 FAX

RELOCATION OF 3-PORT. CLRM. BLDGS.
HUENEME HIGH SCHOOL
500 W. BARD ROAD, OXNARD, CA 93033
OXNARD UNION HIGH SCHOOL DISTRICT

HUENEME HIGH SCHOOL
FIRE ALARM ENLARGED
FLOOR PLAN

JOB NUMBER:	2020-024
DRAWN BY:	SAM
DATE:	03-20'21
SCALE:	56-144 03-121900

FA-2.1

Sheet List

Sheet Number	Sheet Name
E2.3	120'x40' T24 CZ 16 (WALL AC)
E2.1	120'x40' T24 CZ 16 (WALL AC)
E2.2	120'x40' T24 CZ 16 (WALL AC)
Cover	
A0.0	COVER SHEET
A0.0.1	PROJECT OPTIONS SCHEDULE
A0.1	TYPICAL KEY PLAN AND SCHEDULES, GEN NOTES,
A0.2	SIGNAGE AND SYMBOLS
~~A0.3~~	~~DSA-103 T&I CONCRETE FLOORS~~
A0.4	DSA-103 T&I PLYWOOD FLOORS
A0.5	CALGREEN SPEC'S
Architectural	
~~A1.0~~	~~24x40 FLOOR PLAN~~
A1.1	36x40 FLOOR PLAN
~~A1.2~~	~~48x40 FLOOR PLAN~~
A2.1	ARCHITECTURAL DETAILS (WOOD FRAMING SHTG FINISH)
~~A2.2~~	~~ARCHITECTURAL DETAILS (WOOD FRAMING PLASTER FINISH)~~
~~A2.3~~	~~ARCHITECTURAL DETAILS (MTL FRAMING SHTG FINISH)~~
~~A2.4~~	~~ARCHITECTURAL DETAILS (MTL FRAMING PLASTER FINISH)~~
~~A2.5~~	~~ARCHITECTURAL DETAILS (1-HR WOOD FRAMING SHTG FINISH)~~
~~A2.6~~	~~ARCHITECTURAL DETAILS (1-HR WOOD FRAMING PLASTER FINISH)~~
~~A2.7~~	~~ARCHITECTURAL DETAILS (1-HR MTL FRAMING SHTG FINISH)~~
~~A2.8~~	~~ARCHITECTURAL DETAILS (1-HR MTL FRAMING PLASTER FINISH)~~
A2.9	ARCHITECTURAL DETAILS (FLOOR)
~~A3.0~~	~~ADDITIONAL FIRE RATING DETAILS AND NOTES~~
A3.1	SINGLE OCC. BATHROOM
A3.2	RCP
A3.2.1	CEILING NOTES
A3.3	CEILING DETAILS (T-GRID)
~~A3.4~~	~~CEILING DETAILS (GYP BOARD)~~
A4.0.1	ROOF PLAN MONO SLOPE (STANDING SEAM)
~~A4.0.2~~	~~ROOF PLAN DUAL SLOPE (STANDING SEAM)~~
A4.1	ROOF DETAILS (STANDING SEAM)
~~A4.2.1~~	~~ROOF PLAN MONO SLOPE (EPDM)~~
~~A4.2.2~~	~~ROOF PLAN DUAL SLOPE (EPDM)~~
~~A4.3~~	~~ROOF DETAILS (EPDM)~~
~~A4.4.1~~	~~ROOF PLAN w/ PARAPET MONO SLOPE (EPDM)~~
~~A4.5~~	~~ARCHITECTURAL DETAILS (PARAPET)~~
A5.0	SIDEWALL ELEVATION
A5.1	ENDWALL ELEVATIONS
A5.2	INTERIOR ELEVATIONS
A6.0	SECTION - STANDING SEAM (MONO)
~~A6.0.1~~	~~SECTION - STANDING SEAM (DUAL)~~
~~A6.1~~	~~SECTION - EPDM (DUAL)~~
A6.2	SECTION
~~A6.3~~	~~SECTION - EPDM (MONO)~~
A7.0	ADDITIONAL OPTION DETAILS
A7.1	ADDITIONAL OPTION DETAILS
A7.2	ADDITIONAL OPTION DETAILS
MEP	
~~E1.0~~	~~ELECTRICAL PLAN 24x40~~
~~E1.1~~	~~ELECTRICAL SCHEDULES 24x40~~
E1.2	ELECTRICAL PLAN 36x40
E1.3	ELECTRICAL SCHEDULE 36x40
~~E1.4~~	~~ELECTRICAL PLAN 48x40~~
~~E1.5~~	~~ELECTRICAL SCHEDULE 48x40~~
M0.1	MISCELLANEOUS NOTES & DETAILS
M2.1	120'x40' T24 CZ 16 (WALL AC)
M2.2	120'x40' T24 CZ 16 (WALL AC)
M2.3	120'x40' T24 CZ 16 (WALL AC)
M2.4	120'x40' T24 CZ 16 (WALL AC)
~~M5.1~~	~~MECHANICAL CEILING PLAN 24x40~~
~~M5.2~~	~~MECHANICAL ROOF MOUNT 24x40~~
M6.1	MECHANICAL CEILING PLAN 36x40
~~M6.2~~	~~MECHANICAL ROOF MOUNT 36x40~~
~~M7.1~~	~~MECHANICAL CEILING PLAN 48x40~~
~~M7.2~~	~~MECHANICAL ROOF MOUNT 48x40~~
P1.0	TYPICAL PLUMBING DETAILS
Foundation	
~~F1.10~~	~~WOOD FOUNDATION NOTES SCHED FOR BLDG W/ 50+15~~
~~F1.11~~	~~WOOD FOUNDATION PLAN 24x40 BLDG W/ 50+15~~
~~F1.12~~	~~WOOD FOUNDATION 36x40 BLDG W/ 50+15~~
~~F1.13~~	~~WOOD FOUNDATION PLAN 48x40 BLDG W/ 50+15~~
~~F1.14~~	~~MODLINE "B" W/ EXTERIOR WALLS BACK-TO-BACK 100 PSF~~
~~F1.20~~	~~WOOD FOUNDATION NOTES SCHED FOR BLDG W/ 100PSF~~
~~F1.21~~	~~WOOD FOUNDATION PLAN 24x40 BLDG W/ 100 PSF~~
~~F1.22~~	~~WOOD FOUDATION PLAN 36x40 BLDG W/ 100 PSF~~
~~F1.23~~	~~WOOD FOUNDATION PLAN 48x40 BLDG W/ 100 PSF~~
~~F1.24~~	~~MODLINE "B" W/ EXTERIOR WALLS BACK-TO-BACK 100 PSF~~
~~F1.30~~	~~WOOD FOUNDATION NOTES SCHED FOR BLDG W/ 150 PSF~~
~~F1.31~~	~~WOOD FOUNDATION PLAN 24X40 BLDG W/ 150 PSF~~
~~F1.32~~	~~WOOD FOUNDATION PLAN 36x40 BLDG W/ 150 PSF~~
~~F1.33~~	~~WOOD FOUNDATION PLAN 48x40 BLDG W/ 150 PSF~~
~~F1.34~~	~~MODLINE "B" W/ EXTERIOR WALL BACK-TO-BACK 150 PSF~~
~~F1.40~~	~~WOOD FOUNDATION DETAILS~~
~~F2.10~~	~~CONCRETE FOUNDATION PLAN~~
~~F2.20~~	~~CONCRETE FOUNDATION DETAILS~~
~~F2.22~~	~~CONCRETE FOUNDATION DETAILS~~
~~F2.23~~	~~CONCRETE FOUNDATION DETAILS~~
Structural	
S0.1	STRUCTURAL GEN NOTES
S1.0.1	WD SHTH'G FLR FRM'G PLAN (50+15 PSF)
~~S1.0.2~~	~~WD SHTH'G FLR FRM'G PLAN (100 PSF)~~
~~S1.0.3~~	~~WD SHTH'G FLR FRM'G PLAN (150 PSF)~~
~~S1.1.1~~	~~CONC FLR FRM'G PLAN (50+15 PSF)~~
~~S1.1.2~~	~~CONC FLR FRM'G PLAN (100 PSF)~~
~~S1.1.3~~	~~CONC FLR FRM'G PLAN (150 PSF)~~
S1.2	STRUCTURAL DETAILS (FLOOR)
S3.0.1	MONO SLOPE ROOF FRM'G PLAN
~~S3.0.2~~	~~DUAL SLOPE ROOF FRM'G PLAN~~
S3.1	STRUCTURAL DETAILS (ROOF)
~~S3.2~~	~~ROOF DETAILS (SOFFIT/PARAPET)~~
S3.3	ROOF PERIMETER TRUSS
~~S4.0~~	~~MTL WALL FRAMING ELEVATIONS~~
S4.1	WD WALL FRAMING ELEVATIONS
S4.2	WALL DETAILS (WOOD FRAMING)
~~S4.3~~	~~WALL DETAILS (MTL FRAMING)~~
S4.4	TYP FRAMING
S4.5	FRAMING SCHEDULES
S5.0	LONG. SECTION - (MONO)
~~S5.1~~	~~LONG SECTION - (DUAL)~~
~~SR0~~	~~MODULE PLAN AND NOTES~~
~~SR1~~	~~RAMP LANDING~~
~~SR2~~	~~LANDING FRAME~~
~~SR3~~	~~FOUNDATION PLAN~~
~~SR4~~	~~RAMP ELEVATION~~
~~SR5~~	~~RAMP DETAILS~~
~~SR6~~	~~RAMP DETAILS~~
~~SR7~~	~~STAIR CONN~~

C:\Users\Andrew\Documents\17016 - Aries, 24x40 PC - MainFile - Low Seismic_Andrew.rvt

3/8/2018 2:19:38 PM

Sheet List

Sheet Number	Sheet Name
Under Separate Cover	
~~FS-1~~	~~FIRE SPRINKLER DESIGN 1~~
~~FS-2~~	~~FIRE SPRINKLER DESIGN 2~~

Sheet Number	Sheet Name
ALT-01	ALTERATION
ALT-02	ALTERATION
ALT-03	ALTERATION
ALT-D1	ALTERATION

CLASS LEASING LLC

LOW SEISMIC
DESIGN CRITERIA

PC NOT USABLE
IN WUI AREAS

PC # 04-116504

24' x 40' EXPANDABLE TO 120' x 40'

DESIGN CODES

PARTIAL LIST OF APPLICABLE CODES AS OF February 28, 2017

2016 Administrative Code (CAC), Part 1, Title 24 C.C.R. *
2016 California Building Code (CBC), Part 2, Title 24 C.C.R.
(2015 International Building Code with 2016 California Amendments)
2016 California Electrical Code (CEC), Part 3, Title 24 C.C.R.
(2014 National Electrical Code with 2016 California Amendments)
2016 California Mechanical Code (CMC), Part 4, Tiltle 24 C.C.R.
(2015 Uniform Mechanical Code with 2016 California Amendments)
2016 California Plumbing Code (CPC), Part 5, Title 24 C.C.R.
(2015 Uniform Plumbing Code with 2016 California Amendments)
2016 California Energy Code (CEC), Part 6, Title 24 C.C.R
2016 California Fire Code, Part 9, Title 24 C.C.R.
(2015 International Fire Code with 2016 California Amendments)
2016 California Green Building Standards Code, Part 11, Title 24 C.C.R.
2016 California Referenced Standards, Part 12, Title 24 C.C.R
Title 19 C.C.R., Public Safety, State Fire Marshal Regulations.
2013 ASME A17.1 (W/ CSA B44-13) Safety Code for Elevators and Escalators

PARTIAL LIST OF APPLICABLE STANDARDS

NFPA 13	Automatic Sprinkler Systems	2016 Edition
NFPA 14	Standpipe Systems	2013 Edition
NFPA 17	Dry Chemical Extinguishing Systems	2013 Edition
NFPA 17a	Wet Chemical Systems	2013 Edition
NFPA 20	Stationary Pumps	2016 Edition
NFPA 22	Water Tanks for Private Fire Protection	2013 Edition
NFPA 24	Private Fire Mains	2016 Edition
NFPA 72	National Fire Alarm Code	2016 Edition
NFPA 80	Fire Doors and Other Opening Protectives	2016 Edition
NFPA 92	Standard for Smoke Control Systems	2015 Edition
NFPA 253	Critical Radiant Flux of Floor Covering Systems	2015 Edition
NFPA 2001	Clean Agent Fire Extinguishing Systems	2015 Edition
ICC 300	ICC Standards on Bleachers, Folding and Telescoping Seating and Grand stands	2012 Edition
UL 300	Fire Testing of Fire Extinguishing System for Protection Of Restaurant Cooking Areas	2005 Edition
UL 464	Audible Signal Appliances	2003 Edition
UL 521	Heat Detectors for Fire Protective Signaling Systems	1999 Edition

Reference Code Section for NFPA Standards - 2016 CBC (SFM) Chapter 35. See Chapter 35 for State of California amendments to NFPA Standards.

* California Administrative Code, Part 1, Chapter 10, Administrative Regulations for the California Energy Commission (CEC).

ACOUSTICAL CONTROL (EXTERIOR) REQUIREMENTS

Per the 2016 CCR, Title 24, Part 11 (CALGREEN CODE) Section 5.507.4. This pre-check building is not allowed to be placed:
- Within the 65 CNEL noise contour of a airport;
- Within the 65 CNEL or Ldn noise contour of a freeway, expressway, railroad, or industrial source guideway;
- Or in a location exposed to a noise level of 65 dB Leq-1Hr, during any hour of operation.

CODE	ADOPTED YEAR	ITEM
NFPA 13	2016	AUTOMATIC SPRINKLER SYSTEMS
NFPA 72	2016	NATIONAL FIRE ALARM CODE w/ CALIFORNIA AMENDMENTS

NOTE: VISUAL DEVICES PER UL STANDARD 1971

THIS PC HAS A "PRE-DESIGNED" FIRE SPRINKLER SYSTEM INSTALLED.
SEE BELOW FOR SITE REQUIREMENTS BY OWNER

IT IS THE OWNERS RESPONSIBILITY TO ENSURE THE MINIMUM FLOW (GPM) AND PRESSURE (PSI)CAN BE ATTAINED AT THE BASE OF THE RISER AT THE PROPOSED SITE FOR EACH PROPOSED BUILDING.
THIS PC REQUIRES
MINIMUM GPM : 250
MINIMUM PSI : 35

FAILURE TO ATTAIN THE MIN GPM/PSI MAY NECESSITATE THE INSTALLATION OF ONE OR MORE OF THE FOLLOWING ITEMS/EQUIPMENTS.

A. WATER TANK
1. FIRE PUMP
2. BACK UP FIRE SUPPLY

B. ADDITIONAL UNDERGROUND FIRE LINE TAPS
C. ALL OR ANY COMBINATION OF THE ABOVE OR ANY OTHERS AS REQUIRED TO ENSURE PROPER OPERATION OF THE AFSS

THE FOLLOWING MUST BE SUPPLIED TO DSA AT THE TIME OF SUBMITTAL WITH THE SITE PLAN FOR EACH PROPOSED BUILDING WITH AN AFSS.
1. MINIMUM GPM/PSI REQUIRED
2. WATER FLOW DATA (SEE DSA AFFS GUIDELINES)
3. SITE PLAN SHOWING THE LOCATION OF THE "FLOW" AND "TEST" HYDRANTS (FULLY DIMENSIONED)
4. ALL (NEW AND EXISTING) UNDERGROUND FIRE LINES/PIPING -LENGTH AND SIZE SHOWING LOCATION AND METHOD OF UNDERGROUND PIPING RESTRAINTS TO TEST HYDRANT
5. LOCATION OF ALL (NEW AND EXISTING) ;
   A. FIRE HYDRANTS
   B. POST INDICATORS
   C. FIRE DEPARTMENT CONNECTIONS
   D. PRESSURE REDUCERS
   E. BACK-FLOW PREVENTION/DETECTOR CHECK VALVES
   F. OTHER FIRE RELATED ITEM/EQUIPMENTS APPLICABLE
6. HYDRAULIC CALCULATIONS FOR THE UNDERGROUND PIPING WITH THE AVAILABLE GPM/PSI AT THE BASE OF EACH AFSS RISER (MUST MEET OR EXCEED MIN REQ'T)
7. ANY CHANGES TO THE CONFIGURATION (WALLS,CEILINGS, CONSTRUCTION TYPE) OR OCCUPANCY OF THE PC WILL NECESSITATE ADDITIONAL/REVISED HYDRAULIC CALCULATIONS

@	AT
AB	ANCHOR BOLT
ABC	AGGREGATE BASE COURSE
ABV	ABOVE
AD	AREA DRAIN
ADD	ADDENDUM
ADH	ADHESIVE
ADJ	ADJACENT, ADJUSTABLE
ADOH	ALTERNATE DIRECTION OF HOOK
AFF	ABOVE FINISHED FLOOR
AGG	AGGREGATE
ALT	ALTERNATE
ALUM	ALUMINUM
ANCH	ANCHOR (AGE)
ANOD	ANODIZED
APPRX	APPROXIMATE
ARCH	ARCHITECT (URAL)
ASPH	ASPHALT
AUTO	AUTOMATIC
B	BOTTOM
BB	BOND BEAM
BC	BOTTOM CHORD
BD	BOARD
BEG	BEGIN (ING)
BEL	BELOW
BIT	BITUMINOUS
BJT	BED JOINT
BLDG	BUILDING
BLK	BLOCK ('G, ING)
BLW	BELOW
BM	BEAM
BMK	BENCH MARK
BO*	BOTTOM OF ____
BPL	BEARING PLATE
BRD	BOARD
BRDG	BRIDGING
BRG	BEARING
BRK	BRICK
BRZ	BRONZE
BS	BOTH SIDES
BTWN	BETWEEN
BVL	BEVELED
BW	BOTH WAYS
C	CHANNEL, COMPRESSION
CAD	CADMIUM
CAM	CAMBER
C/C	CENTER TO CENTER
CEM	CEMENT
CF	CUBIC FOOT
CHAM	CHAMFER
CI	CAST IRON
CIP	CAST-IN-PLACE
CIR	CIRCLE
CIRC	CIRCUMFERENCE
CJ	CONSTRUCTION JOINT
CJT	CONTROL JOINT
CLG	CEILING
CLK	CAULK, ('G, ING)
CLKG	CAULKING
CLR	CLEAR
CLS	CLOSURE
CM	CENTIMETER
CMP	CORRUDATED METAL PIPE
CMU	CONCRETE MASONRY UNIT
CNTR	CENTER
COL	COLUMN
COG	CENTER OF GRAVITY
COMB	COMBINATION
COMP	COMPRESS (ED)(ION)(IBLE)
COMPO	COMPOSITE
CONN	CONNECT (ION)
CONC	CONCRETE
CONST	CONSTRUCT (ION) (ED)
CONT	CONTINUE, CONTINUOUS
CONTR	CONTRACTOR
COR	CORRUGATED
CP	COMPLETE PENETRATION
CPG	COPING
CPR	COPPER
CRS	COURSE (S)
CS	COUNTERSINK
CTSK	COUNTERSUNK SCREW
CU	CUBIC
CX	CONNECTION
CY	CUBIC YARD
D	DEEP, DEPTH
DBL	DOUBLE
DEF	DEFLECTION
DEG	DEGREE
DEM0	DEMOLISH, DEMOLITION
DEP	DEPRESSED
DEPT	DEPARTMENT
DET	DETAIL
DIAG	DIAGONAL
DIA	DIAMETER
DIM	DIMENSION (ED)
DIV	DIVISION
DL	DEAD LOAD
DN	DOWN
DO	DITTO
DP	DAMPROOFING
DWL	DOWEL (ED)
DWG	DRAWING, (S)
E	EAST, MODULUS OF ELASTICITY
EA	EACH
EB	EXPANSION BOLT
EF	EACH FACE
EJT	EXPANSION JOINT
EL	ELEVATION
ELEC	ELECTRIC (AL)
ENCL	ENCLOSURE, ENCLOSED
ENG	ENGINEER
EQ	EQUAL, EQUALIBRIUM
EQUIP	EQUIPMENT
ESTM	ESTIMATE (ED)
EV	EXPANSION BOLT
EW	EACH WAY
EXCA	EXCAVATE (D) (ION)
(E), EXIST	EXISTING
EXMP	EXPANDED METAL PLATE
EXP	EXPOSED
EXPN	EXPANSION
EXS	EXTRA STRONG
EXT	EXTERIOR, EXTERNAL
FAS	FASTENER
FBO	FURNISHED BY OTHERS
FD	FLOOR DRAIN
FHMS	FLATHEAD MACHINE SCREW
FHS	FIRE HOSE STATION
FHWS	FLATHEAD WOOD SCREW
FIN	FINISH (ED)

FIXT	FIXTURE
FJT	FLUSH JOINT
FLR	FLOOR
FLUR	FLUORESCENT
FLEX	FLEXIBLE
FND	FOUNDATION
FO*	FACE OF ____
FP	FIREPROOF (ED)
FP'G	FIREPROOFING
FR	FRAME (D)(ING)
FRC	FIRE RESISTANT COATING
FRGD	FORGED
FRMG	FRAMING
FT	FOOT, FEET
FTG	FOOTING
FURR	FURRED, FURRING
FV	FIELD VERIFY
GA	GAUGE
GALV	GALVANIZED
GC	GENERAL CONTRACTOR
GI	GALVANIZED IRON
GKT	GASKET
GL	GLASS, GLAZING
GLM	GLULAM
GP	GALVANIZED PIPE
GPM	GALLONS PER MINUTE
GPPL	GYPSUM PLASTER
GRVL	GRAVEL, GRANULAR
GRD	GRADE, GRADING
GRN	GRANITE
GSS	GALVANIZED SHEET STEEL
GT	GROUT
GVL	GRAVEL
GWB	GYPSUM WALLBOARD
GYP	GYPSUM
H	HIGH
HBD	HARDBOARD
HC	HOLLOW CORE
HD	HEAVY DUTY
HDNR	HARDENER
HDR	HEADER
HDWR	HARDWARE
HDWD	HARDWOOD
HES	HIGH EARLY STRENGTH CEMENT
HH	HANDHOLE
HJT	HEADJOINT
HK	HOOK
HM	HOLLOW METAL
HORIZ	HORIZONTAL
HPT	HIGH POINT
HR	HOUR
HSA	HEADED STUD ANCHOR
HSB	HIGH STRENGHT BOLT
HT	HEIGHT
HWD	HARDWOOD
ID	INSIDE DIAMETER
IN	INCHE (ES)
INCL	INCLUDE (D), INCLUDING
INSUL	INSULATE, INSULATION
INT	INTERIOR
INTM	INTERMEDIATE
INV	INVERT
JST	JOIST
JT	JOINT
K	KIP (S)
KO	KNOCKOUT
KSI	KIPS PER SQUARE INCH
L	LONG, LENGTH
LAM	LAMINATE (D)
LB	POUND, LAG BOLT
LBL	LABEL
LC	LIGHT CONTROL
LD	DEVELOPMENT LENGHT
LF	LINEAR FOOT
LH	LEFT HAND
LL	LIVE LOAD
LLH	LONG LEG HORIZONTAL
LLV	LONG LEG VERTICAL
LPT	LOW POINT
LT	LIGHT
LTL	LINTEL
LVL	LEVEL (ING)
LW	LIGHT WEIGHT
LWC	LIGHT WEIGHT CONCRETE
LWF	LIGHT WEIGHT FILL
M	METER (S) MOMENT
MATL	MATERIAL
MAS	MASONRY
MAX	MAXIMUM
MB	MACHINE BOLT
MBR	MEMBER
MCONN	MOMENT CONNECTION
MECH	MECHANICAL
MED	MEDIUM
MET	METAL
MEMB	MEMBER
MEP	MECHANICAL, ELECTRICAL, & PLUMBING
MFD	METAL FLOOR DECKING
MFR	MANUFACTURE (R) (ED)
MID	MID, MIDDLE
MIN	MINIMUM, MINUTE
MISC	MISCELLANEOUS
MM	MILLIMETER (S)
MMB	MEMBRANE
MO	MASONRY OPENING
MOD	MODEL
MODU	MODULAR
MOV	MOVABLE
MTL	MATERIAL
N	NORTH, NEW
NAT	NATURAL
NL	NAILABLE
NMT	NONMETALLIC
NO	NUMBER
NOM	NOMINAL
NTS	NOT TO SCALE
OA	OVERALL
o.c.	ON CENTER
OD	OUTSIDE DIAMETER
OH	OVERHEAD
OHMS	OVALHEAD MACHINE SCREW
OHWS	OVALHEAD WOOD SCREW
OJ	OPEN-WEB JOINT (S)
OPH	OPPOSITE HAND
OPNG	OPENING
OPP	OPPOSITE

PAR	PARALLEL
PBD	PARTICLE BOARD
PCC	PRECAST CONCRETE
PCF	POUNDS PER CUBIC FOOT
PCS	PIECES
PERF	PERFORATE (D)
PERI	PERIMETER
PFB	PREFABRICATE (D)
PFS	POUNDS PER SQUARE FOOT
PL	PLATE
PLBG	PLUMBING
PLF	POUNDS PER LINEAR FOOT
P.L.	PARALLAM
PLWD	PLYWOOD
PMT	PAVEMENT
PNL	PANEL
POSTEN	POST TENSION (D)
PRETEN	PRETENSIONED
POLY	POLYETHYLENE
PR	PAIR
PRJ	PROJECT
PSC	PRESTRESSED CONCRETE
PSF	POUNDS PER SQUARE FOOT
PSI	POUNDS PER SQUARE INCH
PT	POINT
P.T.	PRESSURE TREATED
PTC	POST-TENSIONED CONCRETE
PTD	PAINTED
PVC	POLYVINYL CHLORIDE
PVMT	PAVEMENT
QTY	QUANTITY
R	RADIUS, RISER
RAD	RADIUS
RD	ROOF DRAIN
RECT	RETANGULAR
REF	REFERENCE, REFER TO
REINF	REFORCE (D) (ING)
REM	REMOVE
REQD	REQUIRED
REQS	REQUIREMENTS
RETG	RETAINING
REV	REVISION, REVISED
RFG	ROOFING
RFH	ROOF HATCH
RFL	REFLECT (ED)(IVE)(OR)
RM	ROOM
RO	ROUGH OPENING
RT	FIRE RETARDANT TREATED
RT	RUBBER TILE
RTG	RATING
RVS	REVERSE SIDE
RVT	RIVET
S	SOUTH
SC	SOLID CORE
SCHED	SCHEDULE
SDL	SUPERIMPOSED DEAD LOAD
SDS	SELF DRILL SCREW
SE	STRUCTURAL ENGINEER
SDST	SELF-DRILL, SELF-TAP'G SCREW
SECT	SECTION
SF	SQUARE FOOT, SQUARE FEET
SHO	SHORE, SHORING
SHT	SHEET
SHTH	SHEATHING
SI	SQUARE INCH
SIM	SIMILAR
SL	SLOPE
SLNT	SEALANT
SMS	SHEET METAL SCREW
SOG	SLAB ON GRADE
SPA	SPACE, (ING)
SPC	SPACER
SPEC	SPECIFICATION (S)
SQ	SQUARE
SSTL	STAINLESS STEEL
STG	STAGGERED
STD	STANDARD
STL	STEEL
STOR	STORAGE
STRUCT	STRUCTURE
STR	STRUCTURAL
SYM	SYMETRICAL, SYMETRY
SYS	SYSTEM
T	TOP, TORSION, TREAD
T&B	TOP AND BOTTOM
T&G	TONGUE AND GROOVE
TC	TOP CHORD
TEN	TESION, TENSILE
TEMP	TEMPORARY, TEMPERATURE
THD	THREAD (ED)
THK	THICK (NESS)
TMPD	TEMPERED
TO*	TOP OF ____
TL	TOTAL LOAD
TR	TREAD
TS	TUBE STEEL
TYP	TYPICAL
UC	UNDERCUT
UGD	UNDERGROUND
UL	UNDEREWRITERS LABORATORY
UND	UNDER
UNF	UNFINISHED
UNO	UNLESS NOTED OTHERWISE
V	SHEAR FORCE, VELOCITY
VB	VAPOR BARRIER
VER	VERIFY
VERT	VERTICAL
VG	VERTICAL GRAIN
VIF	VERIFY IN FIELD
VJ	V-JOINTED
VNR	VENEER
V.T.R.	VENT THROUGH ROOF
W	WEST, WIDTH, WIDE, WIDE FLANGE
W/	WITH
W/O	WITHOUT
WD	WOOD
WI	WROUGHT IRON
WM	WIRE MESH
WP	WATERPROFFING
WPR	WATER REPELLENT
WPT	WORKING POINT
WS	WATER STOP
WT	WEIGHT
WTW	WALL TO WALL (W/W)
WWF	WELDED WIRE FABRIC
WWM	WELDED WIRE MESH

CONSTRUCTION OF CLASSROOM BUILDING (RELOCATABLE)

SCOPE OF WORK

BUILDING DESIGN

NUMBER OF STORIES: 1
OCCUPANCY: "E"
CONSTRUCTION TYPE: VB
FLOOR LIVE LOAD: ☒ 50+15 PSF PARTITION ☐ 100 PSF ☐ 150 PSF
FLOOR DEAD LOAD: ☒ WOOD FLOOR - 11 PSF ☐ CONC. FLOOR - 33 PSF

ROOF LIVE LOAD: 20 PSF
ROOF SNOW LOAD: 0 PSF
ROOF DEAD LOAD: 18.5 PSF (INCLUDES SPRINKLERS & 3PSF SOLAR PANEL)
RAMPLIVE LOAD: 100PSF
FLOOD DESIGN: This PC has not been designed to accommodate flood loads. If located in a zone other than X, a letter stamped and signed from a soils engineer is needed to validate the allowable soil values assumed in this PC are still applicable.

BUILDING AREA	NO OVERHANG	WITH OVERHANG (5' @ EA. END)
ALLOWABLE AREA	☐ 24x40 960 sf	☐ 24x40 1200 sf
=9,500 sf	☐ 36x40 1440 sf	☒ 36x40 1800 sf
ACTUAL AREA	☐ 48x40 1920 sf	☐ 48x40 2400 sf
=4,800 SF	☐ 60x40 2400 sf	☐ 60x40 3000 sf
	☐ 72x40 2880 sf	☐ 72x40 3600 sf
	☐ 84x40 3360 sf	☐ 84x40 4200 sf
	☐ 96x40 3840 sf	☐ 96x40 4800 sf
	☐ 108x40 4320 sf*	☐ 108x40 5400 sf*
	☐ 120x40 4800 sf*	☐ 120x40 6000 sf*

*Geo-hazard site specific report must be provided and approved by CGS for building area more than 4000 sf

ALLOWABLE SOIL PRESSURE: ☒ WOOD FTG -1000PSF ☐ CONCRETE FTG 1500PSF
FOUNDATION: ☒ WOOD ☐ CONCRETE
PC IS DESIGNED BASED ON A PINNED CONNECTION TO THE FOUNDATION.

CEC CLIMATE ZONE: 1-16

WIND DESIGN

ULTIMATE DESIGN SPEED: Vult = 130 mph, 3 sec GUST, Kzt = 1.0
RISK CATEGORY: II
EXPOSURE: C

EARTHQUAKE DESIGN

RISK CATEGORY: II
SEISMIC IMPORTANCE FACTOR: I = 1
MAPPED SPECTRAL RESPONSE: Ss = 2.14, S1 = 1.99
SITE CLASS: D
SEISMIC DESIGN CATEGORY: E
Note: For SDC (E) site specific motion analysis is not required if not in a seismic hazard zone and/or meets other exemptions in DSA IR A-4
SHORT/LONG PERIOD SITE COEFFICIENT: Fa = 1.0, Fu = 1.5
DEISIGN SPECTRAL RESPONSE: Sds = 1.00 (for building), Sd1 = 1.99,
(Sds=1.426 for other parameters non-structural component anchorage no-cap)
RESPONSE COEFFICIENT, Cs: 0.286
BASIC SEISMIC FORCE-RESISTING SYS: OMF, R = 3.5
ANALYSIS PROCEDURE: EQUIVALENT LATERAL FORCE
BASE SHEAR PER 24X40 MODULE:
WOOD FLOOR, LL ≤ 100, BASE SHEAR= 20.04 kip
WOOD FLOOR, LL = 150, BASE SHEAR= 26.71 kip
CONC. FLOOR, LL ≤ 100, BASE SHEAR= 26.07 kip
CONC. FLOOR, LL = 150, BASE SHEAR= 36.36 kip

~~(6)~~ 36X40
CLASSROOMS
W/ RESTROOM

~~P-21-2345 A/B/C~~
~~P-21-2346 A/B/C~~
~~P-21-2347 A/B/C~~
P-21-2348 A/B/C
P-21-2349 A/B/C
P-21-2350 A/B/C

1. ARCHITECT OF RECORD SHALL PROVIDE FIRE ALARM DRAWINGS WITH SITE ADAPTED PROJECTS. FIRE ALARM IS NOT PART OF THIS PC.
2. THIS PC HAS BEEN STRUCTURALLY DESIGNED TO SUPPORT THE WEIGHT OF A FIRE SPRINKLER SYSTEM
3. ALLOWABLE AREA IS BASED ON 10'-0" SETBACK FROM ASSUMED LINE
4. PC DESIGNED AS A SINGLE-STORY MODULAR BUILDING
5. SEE STRUCTURAL FOR SOIL TYPES & BEARING STRENGTHS
6. WORK SHALL CONFORM TO TITLE 24 OF THE CALIFORNIA CODE OF REGULATIONS
7. THIS PC IS NOT APPROVED FOR "A" OCCUPANCY USAGE
8. EXTERIOR PROJECTIONS TO BE FIRE PROTECTED WHERE REQUIRED
9. SEE A0.5 AND ENGERY CALC M-SHEETS FOR REQUIRED ENVELOPE ASSEMBLIES & HVAC SYSTEMS
10. ALL SPECIFICATIONS BASED ON PERFORMANCE AND ABLE TO BE SUBSTITUTED BY "EQUAL" PRODUCTS PENDING APPROVAL BY D.S.A.
11. BUILDINGS TO COMPLY WITH WILDLAND URBAN INTERFACE GUIDELINES WHERE APPLICABLE
12. BUILDING AND SITE FEATURES MUST COMPLY WITH CALGREEN CODE FOR ITS SPECIFIC LOCATION WHEN ADAPTED FOR SITE-USE
13. SHOULD THIS P.C. CLASSROOM BE DESIGNED TO CONNECT TO ANOTHER P.C. CLASSROOM, INTERIOR SOUND TRANSMISSION IN THE WALL AND FLOOR-CEILING ASSEMBLY MUST MEET A MINIMUM STC OF 40 PER CALGREEN

IDENTIFICATION STAMP
DIV. OF THE STATE ARCHITECT
APP: 03-121617 INC:
REVIEWED FOR
SS ☑ FLS ☑ ACS ☑
DATE: 08/02/2021

PROFESSIONAL STAMP
REGISTERED PROFESSIONAL ENGINEER
MANNY D. FRIEDH
No. S3380
STRUCTURAL
STATE OF CALIFORNIA
12/19/2017

THE PLANS, IDEAS & DESIGNS SHOWN ON THESE DRAWINGS ARE THE PROPERTY OF R&S TAVARES ASSOCIATES, INC. DEVISED SOLELY FOR THIS CONTRACT. THESE PLANS SHALL NOT BE USED, IN WHOLE OR IN PART, FOR ANY PURPOSE FOR WHICH THEY WERE NOT INTENDED WITHOUT THE EXPRESS WRITTEN CONSENT OF R&S TAVARES ASSOCIATES, INC. ©

CLIENT
CLASS LEASING LLC
1221 Harley Knox Boulevard
Perris, CA 92571

R&S TAVARES ASSOCIATES
DESIGN ◆ CONSULTING ◆ PROJECT
11777 Bernardo Plaza Court, Suite 105
San Diego, CA 92128
www.rstavares.com

ORIGINAL PC STATE AGENCY APPROVAL
FILE NUMBER: PC-128
IDENTIFICATION STAMP
DIVISION OF THE STATE ARCHITECT
04 - 116504 INCR: 0
AC RM FLS EA SSR KER
DATE 07/19/2018

PROJECT TITLE
24' x 40'
EXPANDABLE TO
120' x 40'

PRE-CHECK (PC) DOCUMENT
Code: [2016] **CBC**
A separate project application for construction is required.

PROJECT SPECIFIC STATE AGENCY APPROVAL
~~IDENTIFICATION STAMP~~
~~DIV. OF THE STATE ARCHITECT~~
~~APP. 04-119993 INC:~~
~~REVIEWED FOR~~
~~SS ☑ FLS ☒ ACS ☑~~
~~DATE: 02/24/2021~~

Revision Schedule

#	Description	Date

SHEET TITLE
COVER SHEET

PROJECT NUMBER
17016A

DRAWN BY
rMc/SC

CHECKED BY
JA/RT

DATE
2018/03/08

SHEET NO.
A0.0

SHEET OF SHEETS

ARCHITECTURAL

(6) General Architectural Sheets 1/4" = 1'-0"	GENERAL ARCHITECTURAL SHEETS	Sheet
COVER SHEET		A0.0
PROJECT OPTIONS SCHEDULE		A0.0.1
TYPICAL KEY PLAN AND SCHEDULE, GEN NOTES		A0.1
SIGNAGE AND SYMBOLS		A0.2
DSA-103 T&I CONCRETE FLOORS		A0.3
DSA-103 T&I CONCRETE FLOORS		A0.4
CALGREEN SPEC'S		A0.5
CALGREEN SHEET		A0.6
CALGREEN SHEET		A0.7

(5) Floor Plan Details 1/4" = 1'-0"	ARCHITECTURAL FLOOR PLANS	Sheet
☒ Floor Plans	☐ Floor Plan - 24'x40'	A1.0
	☒ Floor Plan - 36'x40'	A1.1
	☐ Floor Plan - 48'x40'	A1.2

(1) Arch Floor Framing Details 1/4" = 1'-0"	ARCHITECTURAL FLOOR FRAMING DETAILS						
							Sheet
☒ Wood Floor	1	2	3	4	5	6	A2.9
☐ Concrete Floor	7	8	9	10	11	12	A2.9

(2) Wall Schedule 1/4" = 1'-0"	ARCHITECTURAL WALL DETAILS												
☒ Wood Studs	Detail												Sheet
	Door	ML	Window	Corner	HVAC	Top PLT	6" SEP	1-HR OPT 1	1-HR OPT 2	EXT HDR	INT HDR		
☒ Sheating	8 9	2 3 4 5	11	1	16	17	5	x	x	10A	10B		A2.1
☐ Plaster	8 9	3 4 5	11	1	16	17	5	x	x	10A	10B		A2.2
☐ 1-HR Sheating	8 9	2 3 4 5	11	1	16	17	5	-	-	10A	-		A2.5
☐ 1-HR Plaster	8 9	2 3 4 5	11	1	16	17	4	-	-	10A	-		A2.
☐ Metal Studs													6
☐ Wood Sheating	8 9	2 3 4 5	11	1	10	16	5	x	x	10A	10B		A2.3
☐ Wood Plaster	8 9	2 3 4 5	11	1	10	16	5	x	x	10A	10B		A2.4
☐ 1-HR Sheating	8 9	2 3 4 5	11	1	16	17	5	-	-	10A	-		A2.7
☐ 1-HR Plaster	8 9	2 3 4 5	11	1	16	17	5	-	-	10A	-		A2.8
☐ Additional Fire Rating Details and Notes													A3.0
☒ Single OCC. Bathroom													A3.1

(4) Ceiling Plans 1/4" = 1'-0"	ARCHITECTURAL CEILING PLANS		Sheet
Reflected Ceiling Plans:	☐ 24' x 40'	☐ 8 (2'x4') Recessed Light Fixture	A3.2
		☐ 12 (1'x8') Pendant Light w/ 4 (1'x16') Recessed Light	A3.2
	☒ 36' x 40'	☒ 12 (2'x4') Recessed Light Fixture	A3.2
		☐ 16 (1'x8') Pendant Light w/ 4 (1'x16') Recessed Light	A3.2
	☐ 48' x 40'	☐ 16 (2'x4') Recessed Light Fixture	A3.2
		☐ 18 (1'x8') Pendant Light w/ 4 (1'x16') Recessed Light	A3.2
Celing Notes			A3.2.1

(3) Ceiling Details 1/4" = 1'-0"	ARCHITECTURAL CEILING DETAILS				
Celing Framing	Detail				Sheet
	Wall	Joists	Access	BLK'G	
☒ T-GRID	SEE PLAN	SEE PLAN	SEE PLAN	SEE PLAN	A3.3
☐ Wood	1	2	5	Typ	A3.4
☐ MTL	6	7	10	11	A3.4

(7) Roof Plans 1/4" = 1'-0"	ARCHITECTURAL ROOF PLANS	Sheet
☒ Mono	☐ EPDM	A4.2.1
	☒ Standing Seam	A4.0.1
	☐ Parapet	A4.4.1
☐ Dual	☐ EPDM	A4.2.2
	☐ Standing Seam	A4.0.2

(22) Roof Details 1/4" = 1'-0"	ARCHITECTURAL ROOF DETAILS	Sheet
☒ Mono	☐ EPDM	A4.3
	☒ Standing Seam	A4.1
	☐ Parapet	A4.5
☐ Dual	☐ EPDM	A4.3
	☐ Standing Seam	A4.1

(8) Arch Building Section 1/4" = 1'-0"	ARCHITECTURAL BUILDING SECTION	Sheet
☒ Mono	☐ EPDM	A6.3
	☒ Standing Seam	A6.0
☐ Dual	☐ EPDM	A6.1
	☐ Standing Seam	A6.0.1
Section		A6.2

C:\Users\Andrew\Documents\17016 - Aries, 24x40 PC - MainFile - Low Seismic_Andrew.rvt

3/8/2018 2:19:38 PM

ARCHITECTURAL

(13) Exterior Elevations 1/4" = 1'-0"	ARCHITECTURAL EXTERIOR ELEVATIONS						
		Detail		Sheet	Detail		Sheet
Exterior Elevations:	☐ 24'x40'	Left	Right		Front	Rear	
	☐ Mono Slope	1	2	A5.0	1	2	A5.1
	☐ Parapet Roof - Mono Slope	3	4	A5.0	3	4	A5.1
	☐ Dual Slope	5	6	A5.0	1	2	A5.1
	☒ 36'x40'						
	☒ Mono Slope	1	2	A5.0	5	6	A5.1
	☐ Parapet Roof - Mono Slope	3	4	A5.0	7	8	A5.1
	☐ Dual Slope	5	6	A5.0	5	6	A5.1
	☐ 48'x40'						
	☐ Mono Slope	1	2	A5.0	9	10	A5.1
	☐ Parapet Roof - Mono Slope	3	4	A5.0	11	12	A5.1
	☐ Dual Slope	5	6	A5.0	9	10	A5.1

(14) Interior Elevations 1/4" = 1'-0"	ARCHITECTURAL INTERIOR ELEVATIONS					
		Detail				Sheet
Interior Elevations:		Left	Right	Front	Rear	
	☐ 24'x40'	1	2	3	4	A5.2
	☒ 36'x40'	1	2	5	6	A5.2
	☐ 48'x40'	1	2	8	7	A5.2

MEP

(9) Plumbing 1/4" = 1'-0"	PLUMBING	Sheet
☒ Plumbing Details and Schedules		P1.0

(10) Mechanical 1/4" = 1'-0"		MECHANICAL	Sheet	
			Ceiling Plan	Roof Plan
Mechanical Plans:	☐ 24' x 40'	☐ Wall Mount	M5.1	M5.2
		☐ Roof Mount	M5.1	M5.2
	☒ 36' x 40'	☒ Wall Mount	M6.1	M6.2
		☐ Roof Mount	M6.1	M6.2
	☐ 48' x 40'	☐ Wall Mount	M7.1	M7.2
		☐ Roof Mount	M7.1	M7.2
	☐ 60' x 40'	☐ Wall Mount		
		☐ Roof Mount		
	☐ 72' x 40'	☐ Wall Mount		
		☐ Roof Mount		
	☐ 84' x 40'	☐ Wall Mount	A0.1	
		☐ Roof Mount		
	☐ 96' x 40'	☐ Wall Mount		
		☐ Roof Mount		
	☐ 108' x 40'	☐ Wall Mount		
		☐ Roof Mount		
	☐ 120' x 40'	☐ Wall Mount		
		☐ Roof Mount		

(11) Electrical 1/4" = 1'-0"		ELECTRICAL	Sheet	
Reflected Ceiling Plans:	☐ 24' x 40'	☐ 8 (2'x4') Recessed Light Fixture		
		☐ 12 (1'x8') Pendant Light w/ 4 (1'x16') Recessed Light	E1.0	E1.1
	☒ 36' x 40'	☒ 12 (2'x4') Recessed Light Fixture		
		☐ 18 (1'x8') Pendant Light w/ 4 (1'x16') Recessed Light	E1.2	E1.3
	☐ 48' x 40'	☐ 16 (2'x4') Recessed Light Fixture		
		☐ 24 (1'x8') Pendant Light w/ 4 (1'x16') Recessed Light	E1.4	E1.5
	☐ 60' x 40'	☐ 20 (2'x4') Recessed Light Fixture		
		☐ 30 (1'x8') Pendant Light w/ 4 (1'x16') Recessed Light		
	☐ 72' x 40'	☐ 24 (2'x4') Recessed Light Fixture		
		☐ 36 (1'x8') Pendant Light w/ 4 (1'x16') Recessed Light		
	☐ 84' x 40'	☐ 28 (2'x4') Recessed Light Fixture		
		☐ 42 (1'x8') Pendant Light w/ 4 (1'x16') Recessed Light		
	☐ 96' x 40'	☐ 32 (2'x4') Recessed Light Fixture		
		☐ 48 (1'x8') Pendant Light w/ 4 (1'x16') Recessed Light		
	☐ 108' x 40'	☐ 36 (2'x4') Recessed Light Fixture		
		☐ 54 (1'x8') Pendant Light w/ 4 (1'x16') Recessed Light		
	☐ 120' x 40'	☐ 40 (2'x4') Recessed Light Fixture		
		☐ 60 (1'x8') Pendant Light w/ 4 (1'x16') Recessed Light		

(12) Fire Sprinklers Plans 1/4" = 1'-0"	FIRE SPRINKLERS PLANS	Sheet
☐ Fire Sprinklers Drawings:	☐ Floor Plans	FS-2
	☐ Details	FS-1

STRUCTURAL

(15) Foundations Plans 1/4" = 1'-0"	FOUNDATION	Sheet
☒ Wood Foundation Plan:	☐ 24'x40' (50+15 PSF)	F1.11
	☐ 24'x40' (100 PSF)	F1.21
	☐ 24'x40' (150 PSF)	F1.31
	☒ 36'x40' (50+15 PSF)	F1.12
	☐ 36'x40' (100 PSF)	F1.22
	☐ 36'x40' (150 PSF)	F1.32
	☐ 48'x40' (50+15 PSF)	F1.13
	☐ 48'x40' (100 PSF)	F1.23
	☐ 48'x40' (150 PSF)	F1.33
☐ Concrete Foundation Plan		F2.10

(16) General Structural Sheets 1/4" = 1'-0"	GENERAL STRUCTURAL SHEETS	Sheet
STRUCTURAL GEN NOTES		S0.1

(17) Floor Framing Plans 1/4" = 1'-0"	STRUCTURAL FLOOR FRAMING PLANS	Sheet
☒ Wood Sheating Floor:	☒ (50+15 PSF)	S1.01
	☐ (100 PSF)	S1.02
	☐ (150 PSF)	S1.03
☐ Concrete Framing Floor:	☐ (50+15 PSF)	S1.1.1
	☐ (100 PSF)	S1.1.2
	☐ (150 PSF)	S1.1.3

(19) Floor Framing Details 1/4" = 1'-0"	STRUCTURAL FLOOR FRAMING DETAILS	Sheet
☒ Wood Framing		S1.2
☐ Concrete Framing		S1.2

(18) Roof Framing Plans 1/4" = 1'-0"	STRUCTURAL ROOF FRAMING PLANS	Sheet
☒ Mono Slope Roof Framing		S3.0.1
☐ Dual Slope Roof Framing		S3.0.2

(20) Wall Framing Details 1/4" = 1'-0"	STRUCTURAL WALL FRAMING DETAILS	Sheet
☒ Wood:		
☒ Framing Elevation		S4.1
☒ Wall Details		S4.2
☐ Metal:		
☐ Framing Elevation		S4.0
☐ Wall Details		S4.3
☒ Typ Framing:		S4.4
☒ Framing Schedule:		S4.5

(21) Building Section 1/4" = 1'-0"	STRUCTURAL BUILDING SECTION	Sheet
☒ Mono		S5.0
☐ Dual		S5.1

IDENTIFICATION STAMP
DIV. OF THE STATE ARCHITECT
APP: 03-121617 INC:
REVIEWED FOR
SS ☑ FLS ☑ ACS ☑
DATE: 08/02/2021

PROFESSIONAL STAMP

REGISTERED PROFESSIONAL ENGINEER
MANNY D. FRISCH
No. S3380
STRUCTURAL
STATE OF CALIFORNIA

12/19/2017

THE PLANS, IDEAS & DESIGNS SHOWN ON THESE DRAWINGS ARE THE PROPERTY OF R&S TAVARES ASSOCIATES, INC. DEVISED SOLELY FOR THIS CONTRACT. THESE PLANS SHALL NOT BE USED, IN WHOLE OR IN PART, FOR ANY PURPOSE FOR WHICH THEY WERE NOT INTENDED WITHOUT THE EXPRESS WRITTEN CONSENT OF R&S TAVARES ASSOCIATES, INC. ©

CLIENT

CLASS LEASING LLC
1221 Harley Knox Boulevard
Perris, CA 92571

R&S TAVARES ASSOCIATES
DESIGN ◆ CONSULTING ◆ PROJECT
11777 Bernardo Plaza Court, Suite 105
San Diego, CA 92128
www.rstavares.com

ORIGINAL PC STATE AGENCY APPROVAL
FILE NUMBER: PC-128
IDENTIFICATION STAMP
DIVISION OF THE STATE ARCHITECT
04 - 116504 INCR: 0
AC RM FLS EA SSR KER
DATE 07/19/2018

PROJECT TITLE
24' x 40'
EXPANDABLE TO
120' x 40'

PRE-CHECK (PC) DOCUMENT
Code: [2016] **CBC**
A separate project application for construction is required.

PROJECT SPECIFIC STATE AGENCY APPROVAL
~~IDENTIFICATION STAMP
DIV. OF THE STATE ARCHITECT
APP. 04-119993 INC:
REVIEWED FOR
SS ☑ FLS ☑ ACS ☑
DATE: 02/24/2021~~

Revision Schedule

#	Description	Date

SHEET TITLE
PROJECT OPTIONS SCHEDULE

PROJECT NUMBER
17016A

DRAWN BY
rMc/SC

CHECKED BY
JA/RT

DATE
2018/03/08

SHEET NO.
A0.0.1

SHEET OF SHEETS

Door Schedule

Mark	Type	Width	Height	Door Material	Frame Type	Wall Thickness	Hardware
1	D1	3' - 0"	7' - 0"	18GA Hollow Metal	Knock Down	5 1/4"	HW1
2	D	3' - 0"	7' - 0"	18GA Hollow Metal	Knock Down	5 1/4"	HW2
3	D	3' - 0"	7' - 0"	Solid Core Wood Legacy	Knock Down	5 1/2"	HW3
4	D2	3' - 0"	7' - 0"	18GA Hollow Metal	Knock Down	4 7/8"	HW3
5	D2	3' - 0"	7' - 0"	18GA Hollow Metal	Knock Down	4 7/8"	HW3
6	D3	2' - 0"	7' - 0"	18GA Hollow Metal	Knock Down	4 1/8"	HW3

SEE ALT SHEETS FOR CONFIGURATION

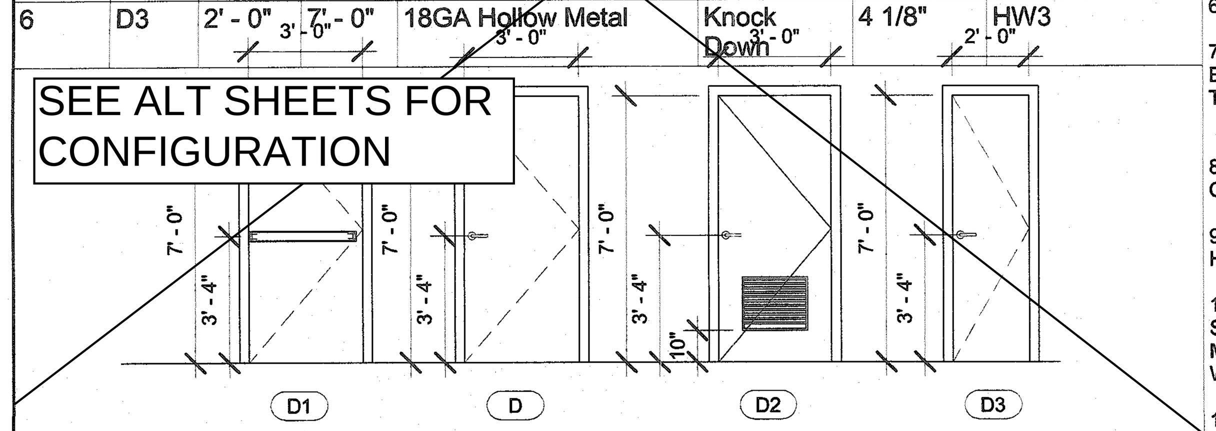

1. ALL DOORS SHALL COMPLY WITH CBC SECTION 11B-404 AND BE 1 3/4" THK (UNO)

2. CENTER ALL DOOR LEVERS FOR ACCESS AND LOCKING @ 40" ABOVE FINISH FLOOR. ALL HARDWARE SHALL OPEN FROM THE INTERIOR AND NOT REQUIRE ANY SPECIFIC KNOWLEDGE OF THE HARDWARE OR REQUIRE ANY SPECIAL EFFORT FOR EGRESS. THE LEVER OF LEVER-ACTUATED LEVERS OR LOCKS SHALL BE CURVED WITH A RETURN TO WITHIN 1/2" OF THE FACE OF THE DOOR TO PREVENT CATCHING ON THE CLOTHING (etc.) OF PERSONS DURING EGRESS. THE LEVER OF LEVER-ACTUATED LEVERS OR LOCKS SHALL EXTEND AT A MINIMUM OF ONE-HALF THE DOOR WIDTH.

3. PER CBC 1008.1.10 FOR ANY ROOM CONFIGURATION WHICH PROVIDES AN OCCUPANT LOAD OF 50 OR GREATER SHALL NOT BE PROVIDED WITH A LATCH OR LOCK UNLESS IT IS PANIC HARDWARE OR FIRE EXIT HARDWARE AND COMPLY WITH ALL REQUIREMENTS OF SECTION 11B-309 OF THE CBC. ALL HARDWARE SHALL COMPLY WITH HARDWARE SCHEDULE THIS SHEET.

4. PER CBC 11B-309.4 THE FORCE REQUIRED TO ACTIVATE OPERABLE PARTS SHALL BE 5 POUNDS (22.2 N) MAX.

5. PER CBC 11B-404.2.8.2 DOOR SPRING HINGES SHALL BE ADJUSTED SO THAT FROM THE OPEN POSITION OF 70 DEGREES, THE DOOR SHALL MOVE TO THE CLOSE POSITION IN 1.5 SECONDS MINIMUM. ALL CLOSER MUST COMPLY WITH CBC 11B-404.2.8.1 - DOOR CLOSER AND GATE CLOSERS SHALL BE ADJUSTED SO THAT FROM AN OPEN POSITION OF 90 DEGREES, THE TIME REQUIRED TO MOVE THE DOOR TO A POSITION OF 12 DEGREES FROM THE LATCH IS 5 SECONDS OR LESS.

6. THE MAXIMUM AREA OF EXTERIOR WALL OPENING PER CBC TABLE 705.8 AND THE FIRE PROTECTION FOR EXTERIOR WALL PER CBC TABLE 602. ALL FIRE PROTECTION BASED ON THE FIRE SEPARATION DISTANCE.

7. DOOR LOCATION MAY VARY BASED ON PROJECT REQUIREMENTS.

8. (PH) ON PLANS THE SHEET INDICATES REQUIRED PANIC HARDWARE.

9. PROVIDE EXIT SIGNS AS REQUIRED PER CBC SECTION 1013.4. SEE DETAILS PER A0.2

10. ALL EXIT DOORS SHALL BE OPENABLE FROM INSIDE W/O ANY USE OF SPECIAL TOOLS, KNOWLEDGE OR EFFORT.

9 ***Doors***

1. PLACE (2) PERMANENT METAL IDENTIFICATION LABELS ON EACH MODULE.
   (1) LABEL AT REAR EXTERIOR
   (1) LABEL ABOVE CEILING LINE AT INTERIOR FRAME.
   LABELS WILL BE MECHANICALLY FASTENED AND SHOW THE DSA APPLICATION NUMBER, MANUFACTURERS NAME AND SERIAL NUMBER, DESIGN LIVE LOAD FOR ROOF AND FLOOR FRAMING, WIND SPEED, EXPOSURE CATEGORY, AND Kzt = 1.0 PER 2016 CBC

2. VINYL TACKBOARD TO HAVE A CLASS 1 FLAME SPREAD RATING AND COMPLY WITH A SMOKE DENSITY OF 175

3. VERIFIED ALL DIMENSIONS PRIOR TO CONSTRUCTION

4. SEE INTERIOR ELEVATIONS FOR ALL REQUIRED EGRESS SIGNAGE AND FIRE ALARM SYSTEM COMPONENTS

5. WHEN RELOCATING OR REMOVING INTERIOR PARTITIONS (2) EXITS OR EXIT ACCESS DOORWAYS FROM ANY SPACE SHALL BE PROVIDED. EXIT DOORS MUST BE SEPERATED BY A DISTANCE APART EQUAL TO OR NOT LESS THAN ONE-HALF OF THE MAXUMUM OVERALL DIAGONAL DIMENSION FOR ALL NONSPRINKLERED BUILDINGS. EXIT DOORS MUST BE SEPERATED BY A DISTANCE APART EQUAL TO OR NOT LESS THAN ONE-THIRD OF THE MAXUMUM OVERALL DIAGONAL DIMENSION FOR ALL SPRINKLERED BUILDINGS. ALL EXIT AND EXIT ACCESS DOORWAYS MUST COMPLY WITH CBC SECTION 1015 EXIT AND EXIT ACCESS DOORWAYS AND CBC SECTION 1016 EXIT ACCESS TRAVEL DISTANCE.

6. OCCUPANCY LOAD SIGNS SHALL BE POSTING AND COMPLY WITH CBC SECTION 1004.3

7. SEE ADDITIONAL PC FOR ACCESS RAMPS AND STAIRS. WHERE RAMP IS AGAINST THE WALL AT PLASTER EXTERIOR OR ADJACENT TO ANY ABRASIVE SURFACE THEN A SMOOTH TROWEL SURFACE MUST BE PROVIDED AT THESE LOCATIONS OR AN ALTERNATIVE APPLICATION THAT COMPLIES WITH CBC SECTION 11B-505.8

8. ALL SURFACES ADJACENT TO HANDRAILS SHALL NOT HAVE ANY SHARP, ABRASIVE, OR PROTRUDING COMPONENTS

9. ALL METAL RAILINGS AND CONNECTIONS SHALL HAVE A SMOOTH SURFACE WHICH EXTENDS 8" ABOVE THE HANDRAIL

10. FOR PLASTER WALLS PROVIDE CONTROL JOINTS AT ALL MODLINES, ENDWALLS @ 2'-0 FROM EDGE, 10'-0" o/c @ SIDEWALLS, AND ABOVE AND BELOW ALL OPENING. SEE EXTERIOR ELEVATIONS. ALL MATERIALS, MEANS, METHODS, AND PROCEEDURES OF CONSTRUCTION USED TO PROTECT JOINTS SHALL COMPLY WITH FIRE RATED WALL ASSEMPLY PER CBC SECTION 703.2 - FIRE RESISTANCE RATING AND CBC SECTION 705 - EXTERIOR WALLS

11. FOR HVAC UNITS WHICH HEIGHT FROM GRADE TO BOTTOM OF UNIT EXCEEDS 27" AND LOCATED IN PEDESTRIAN PATH OF TRAVEL, A PROTECTION RAIL AROUND THE HVAC UNIT WILL BE PROVIDED. PER MNF INSTALLATION INSTRUCTIONS

2 ***A0.1 GENERAL NOTES***

MOISTURE PROTECTION INSULATION:

MATERIAL:
INSULATING MATERIAL FOR WALLS, CEILINGS, AND FLOORS SHALL BE FIBERGLASS BATTS (UNFACED) AND SHALL COMPLY WITH CBC 2016.
(CLASS A = 0-25 FLAME SPREAD:) SMOKE DEVELOPMENT DENSITY LESS THAN 450.

INSULATION VALUES
SEE TITLE 24 SHEETS FOR REQUIRED INSULATION VALUES PER CLIMATE ZONE

EXTERIOR WALL INSULATION (MIN.)
- ☒ R-19 (2x6 STUD)
- ☐ R-19, CONTINUOUS R-4 (MTL STUD)

INTERIOR WALL INSULATION (MIN.)
- ☒ R-13

FLOOR INSULATION (MIN.)
CONCRETE SLAB WITH R-11 FIBERGLASS INSULATION

ROOF INSULATION (MIN.)
- ☐ R-30 (EPDM)
- ☒ R-30 (STANDING SEAM)

3 ***Insulation Specs***

Finish Schedule

Room Number	Flooring: Floor	Flooring: Base	Wall Finish: Front	Wall Finish: Left	Wall Finish: Rear	Wall Finish: Right	Ceiling: Type	Ceiling: Ht.	Notes
CLASSROOM	Carp.	4" TS	Tack	Tack	Tack	Tack	CP	8'-6"	
CLASSROOM w/ PH	Carp.	4" TS	Tack	Tack	Tack	Tack	CP	8'-6"	
SINGLE OCC.	SV	6" TS	FRP	FRP	FRP	FRP	CP	8'-0"	
SINGLE OCC.	SV	SC	FRP	FRP	FRP	FRP	GBP	8'-0"	

SEE ALT SHEETS FOR CONFIGURATION

Abbreviations:

FLOORING
- CARP: COMPLYING WITH GROUP 1; TYPE "A" OR TYPE "B"; CLASS 2; DENSITY 4600; DIRECT GLUE DOWN
- SV: SHEET VINYL FLOORING
- VCT: VINYL COMPOSITION TILE

BASE
- 4" TS: 4" TOP SET BASE
- 6" TS: 6" TOP SET BASE

WALLS
- TACK: 1/2" VINYL TACKBOARD CLASS 1 OVER 1/2" GYPSUM BOARD BACKING
- FRP: 1/8" FIBER REINFORCED PANEL OVER 1/2" WATER RESISTANT GYPSUM BOARD
- GYP: 1/2" GYPSUM BOARD; TAPE; TEXTURE; PAINTED FINISH
- PLY: 1/2" PLYWOOD FINISH
- NF: NO FINISH SC: 6" SELF-COVE BASE

CEILING
- CP: ACOUSTICAL LAY IN GRID CEILING PANELS
- HC: 5/8" GYPSUM BOARD; TAPE; TEXTURE; PAINTED FINISH
- GBP: 1/2" GYPSUM BOARD WASHABLE PANELS (PAINTED)

Finishes Notes

1. ALL FINISHES SHALL COMPLY WITH CBC, TITLE 19, AND C.F.C

2. PER ASTM D2047 ALL FLOORING WITH A COEFFICIENT OF FRICTION OF A MINIMUM OF 0.6 WILL BE CONSIDERED TO OBTAIN THE INTENT OF A SLIP RESISTANCE SURFACE.

3. FLOORING CONTRACTOR IS RESPONSIBLE FOR SUB-FLOORING PREPARATION. ALL PLYWOOD TO BE APA RATED AND COMPLY WITH PS1-09. PLYWOOD SURFACE TO BE CARPETED IS TO BE PLUGGED AND SANDED BY FLOORING CONTRACTOR. ALL DEFORMITIES OCCURRING DUE TO STANDARD CONSTRUCTION PRACTICES SHALL BE PLUGGED AND SANDED BY FLOOR CONTRACTOR. MATELINE JOINTS TO BE A MAX OF 1/8" AND SHALL BE PLUGGED AND SANDED BY FLOORING CONTRACTORS.

4. ALL CARPET AND FLOOR FINISH MUST COMPLY PER CBC SECTION 11B-302 FLOOR AND GROUND SURFACES. ALL CHANGES IN ELEVATION SHALL COMPLY WITH CBC SECTION 11B-303 CHANGES IN LEVELS

5 ***Finishes and Materials***

HARDWARE SCHEDULE

CHILD RESTROOM : — **EXTERIOR DOOR HW-1**

LOCKSET	SCHLAGE ND75PDRHO626 (cylindrical)	Finish 26D or equal
BUTTS	HAGER BB1191 4 1/2" x 4 1/2" NRP	Finish 26D or equal
WEATHER STRIP	HAGER 891SAV 3684	Finish Alum or equal
THRESHOLD	HAGER 413SA 36	Finish Alum or equal
DOOR BOTTOM	HAGER 783SAV 35N	Finish Alum or equal

DOOR w/ PANIC HARDWARE: — **EXTERIOR DOOR HW-2**

EXIT DEVICE	VON DUPRIN 99L-2 w/ SCHLAGE RIM (cylindrical)	Finish Alum or equal
BUTTS	HAGER BB1191 4 1/2" x 4 1/2" NRP	Finish 26D or equal
CLOSER	NORTON 8501 BFDA	Finish 689 or equal
WEATHER STRIP	HAGER 891SAV 3684	Finish Alum or equal
THRESHOLD	HAGER 413SA 36	Finish Alum or equal
DOOR BOTTOM	HAGER 783SAV 35N	Finish Alum or equal

STAFF RESTROOM: — **EXTERIOR DOOR HW-3**

LOCKSET	SCHLAGE ND75PDRHO626 (cylindrical)	Finish 26D or equal
BUTTS	HAGER BB1191 4 1/2" x 4 1/2" NRP	Finish 26D or equal
LOUVER	ANEMO 24x12	Finish 689 or equal
		Finish Bronze or equal

FOOD PREP: — **EXTERIOR DOOR HW-4**

LOCKSET	SCHLAGE ND75PDRHO626 (cylindrical)	Finish 26D or equal
BUTTS	HAGER BB1191 4 1/2" x 4 1/2" NRP	Finish 26D or equal

ELECT ROOM: — **EXTERIOR DOOR HW-5**

LOCKSET	SCHLAGE ND75PDRHO626 (cylindrical)	Finish 26D or equal
BUTTS	HAGER BB1191 4 1/2" x 4 1/2" NRP	Finish 26D or equal
FLUSH BOLT	TBD	Finish 26D

OFFICE: — **EXTERIOR DOOR HW-6**

LOCKSET	SCHLAGE ND75PDRHO626 (cylindrical)	Finish 26D or equal
BUTTS	HAGER BB1191 4 1/2" x 4 1/2" NRP	Finish 26D or equal

NOTE: ALL CLASSROOM DOORS SHALL BE LOCKABLE FROM INSIDE

SEE ALT SHEETS FOR CONFIGURATION

7 ***Door Hardware***

Window Schedule

Mark	Type Mark	Height x Width	Function	Type Comments	Glazing	Wall Thickness
A	W1	4'-0" x 8'-0"	XOX	Clear Anodized Alum. Frame	*DP	
B	W2	4'-0" x 4'-0"	XO	Clear Anodized Alum. Frame	*DP	

SEE ALT SHEETS FOR CONFIGURATION

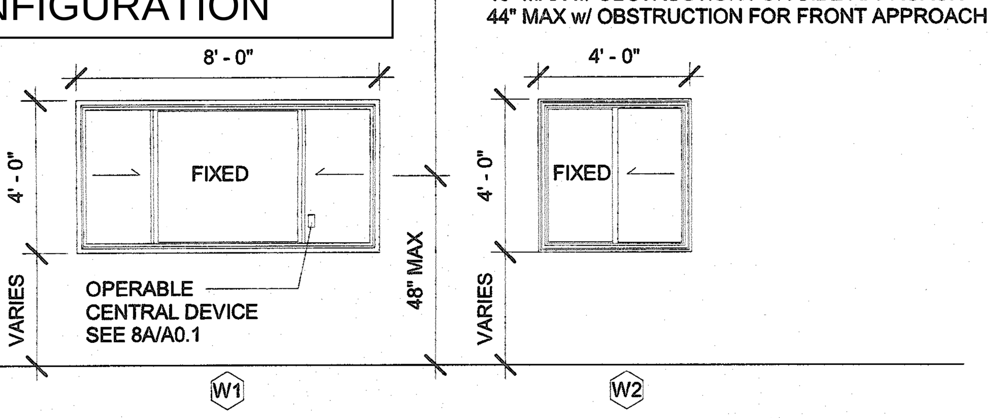

WINDOW LOCATION MAY VARY BASED ON PROJECT REQUIREMENTS.

WINDOW - 3/4" INSULATING GLASS UNIT PERFORMANCE
U-VALUE : 0.35
SHGC : 0.24
VT : 0.5

ABBREVIATIONS:
DP - DUAL PANE
T - TEMPERED GLASS

NEW BUILDINGS THAT ARE INCLUDED IN PUBLIC SCHOOLS (KINDERGARTEN THROUGH 12TH GRADE) SHALL INCLUDE LOCKS THAT ALLOW DOORS TO CLASSROOMS AND ANY ROOM WITH AN OCCUPANCY OF FIVE OR MORE PERSONS TO BE LOCKED FROM THE INSIDE. THE LOCKS SHALL CONFORM TO THE SPECIFICATION AND REQUIREMENTS FOUND IN SECTION 1010.1.9 Education Code 17075.50.

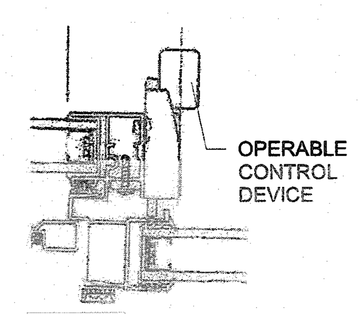

8 ***Windows*** **8A**

EMERGENCY EXIT AND PANIC HARDWARE: INDICATE ON DRAWINGS AND SPECIFICATIONS COMPLIANCE WITH SFM STANDARD 12-10-3,SECTION 12-10-302. (a) THE CROSS BAR SHALL EXTEND ACROSS NOT LESS THAN ONE-HALF THE WIDTH OF THE DOOR/GATE. (d) THE ENDS OF THE CROS-BAR SHALL BE CURVED, GUARDED OR OTHERWISE DESIGNED TO PREVENT CATCHING ON THE CLOTHING OF PERSONS DURING EGRESS. **PROVIDE CUT-SHEETS OF PANIC HARDWARE** PROVIDE THE ASSEMBLY DESIGN NUMBER FOR ALL FIRE-RATED CONSTRUCTION COMPONENTS. INSTALLATION DETAILS MUST BE COORDINATED WITH THE DESIGN NUMBERS. CUSTOM DESIGNS WHICH COMBINE COMPONENTS FROM VARIOUS DESIGNS BUT HAVE NOT BEEN TESTED AS A LISTED ASSEMBLY WILL NOT BE ACCEPTABLE.

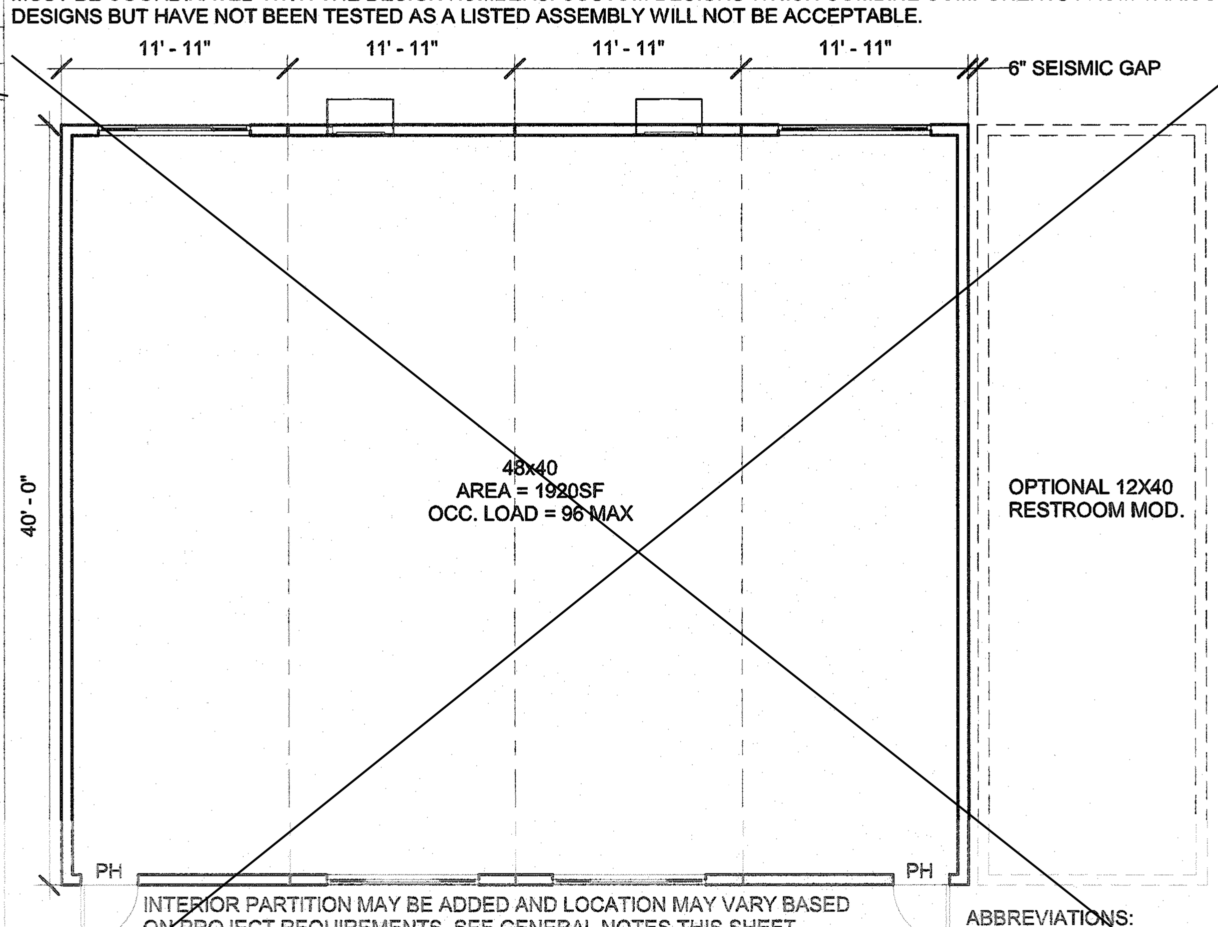

INTERIOR PARTITION MAY BE ADDED AND LOCATION MAY VARY BASED ON PROJECT REQUIREMENTS. SEE GENERAL NOTES THIS SHEET. ALL PARTITION ADDED TO BE SUBMITTED FOR APPROVAL WITH SITE SPECIFIC STATE AGENCY APPROVAL.

ABBREVIATIONS:
PH - SEE HARDWARE SCHEDULE ABOVE - NO.2

6 ***48x40 (Total Area 1920sf)***

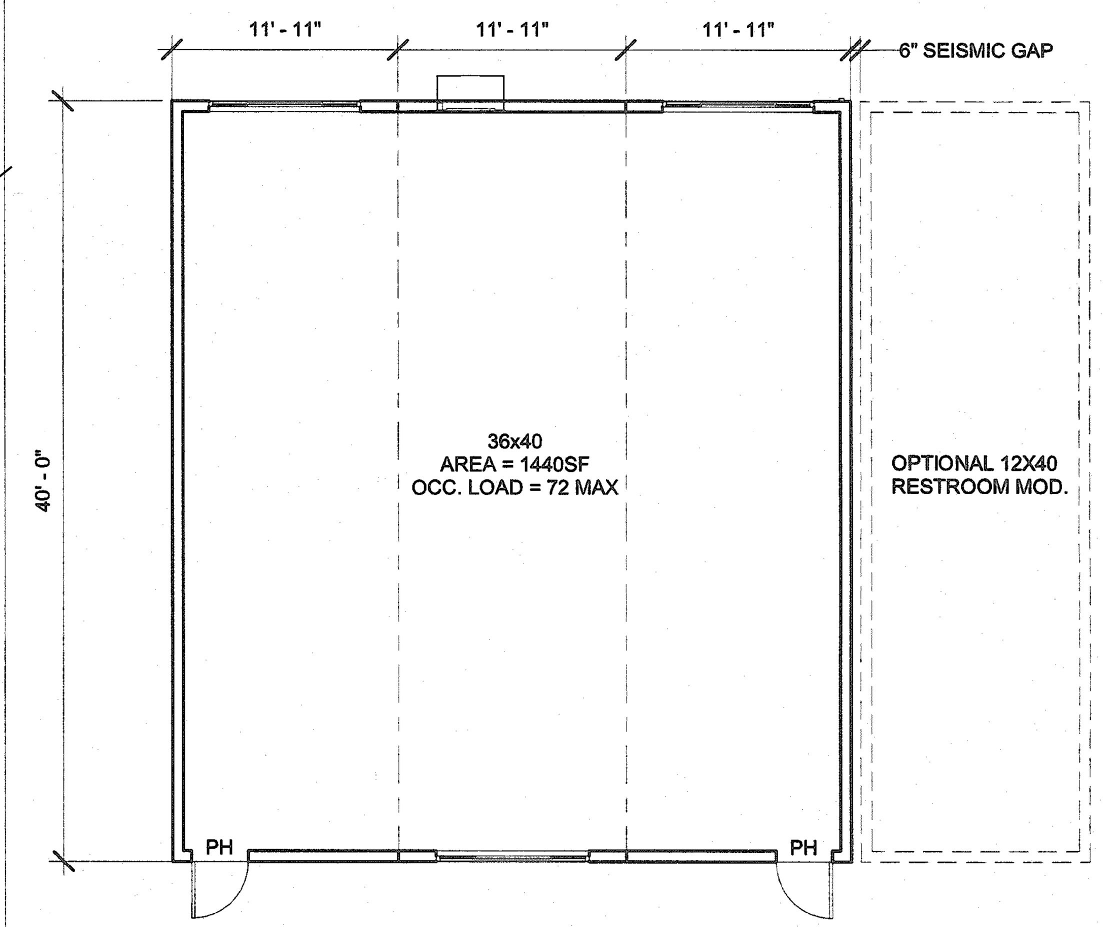

INTERIOR PARTITION MAY BE ADDED AND LOCATION MAY VARY BASED ON PROJECT REQUIREMENTS. SEE GENERAL NOTES THIS SHEET.
ALL PARTITION ADDED TO BE SUBMITTED FOR APPROVAL WITH SITE SPECIFIC STATE AGENCY APPROVAL.

ABBREVIATIONS:
PH - SEE HARDWARE SCHEDULE ABOVE - NO.2

SEE ALT SHEETS FOR CONFIGURATION

4 ***36x40 (Total Area 1440sf)***

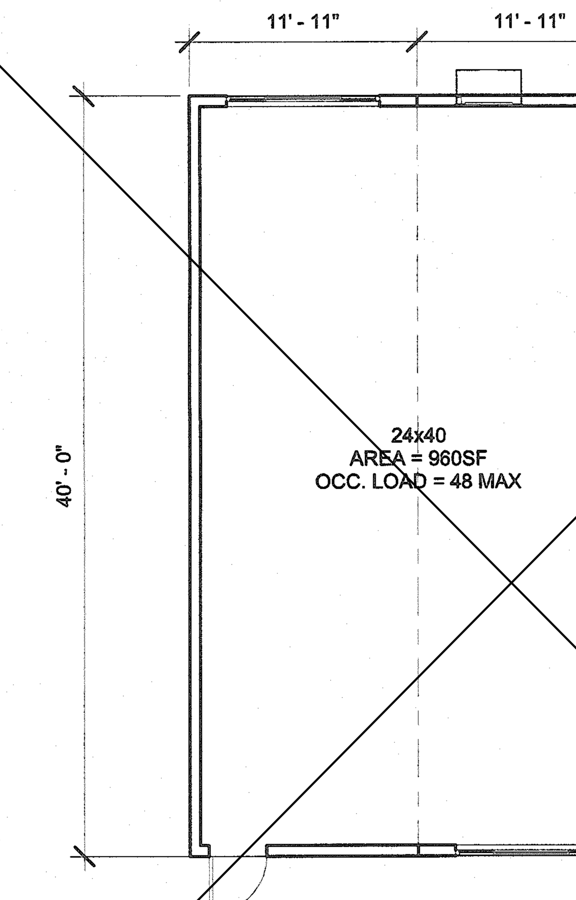

INTERIOR PARTITION MAY BE ADDED AND LOCATION MAY VARY BASED ON PROJECT REQUIREMENTS. SEE GENERAL NOTES THIS SHEET.
ALL PARTITION ADDED TO BE SUBMITTED FOR APPROVAL WITH SITE SPECIFIC STATE AGENCY APPROVAL.

ABBREVIATIONS:
PH - SEE HARDWARE SCHEDULE ABOVE - NO.2

1 ***24x40 (Total Area 960sf)***

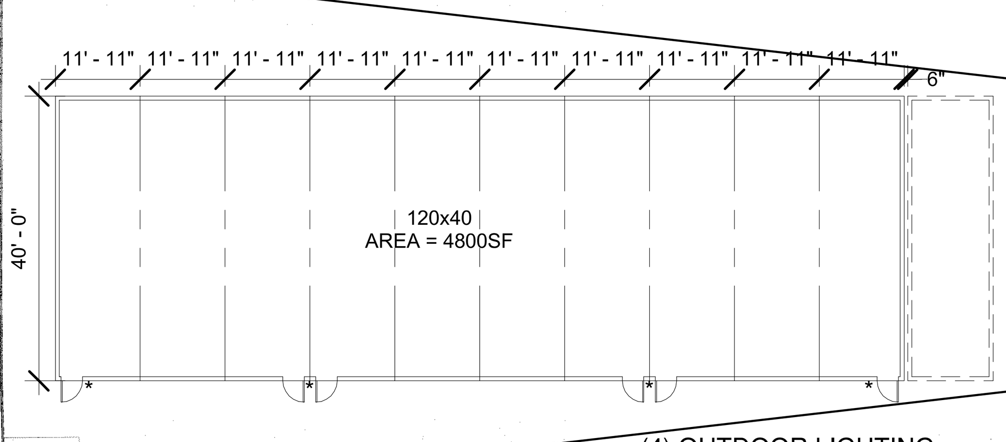

*(4) OUTDOOR LIGHTING

15 ***120x40 (Total Area 4800sf)***

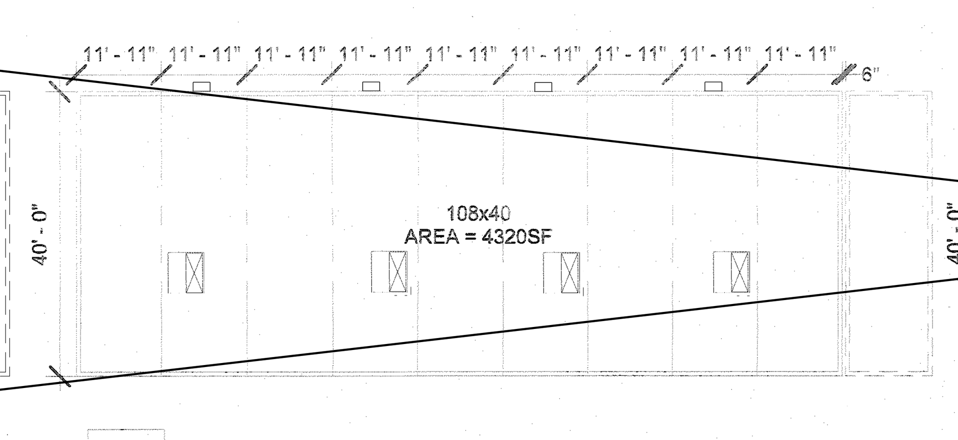

14 ***108x40 (Total Area 4320sf)***

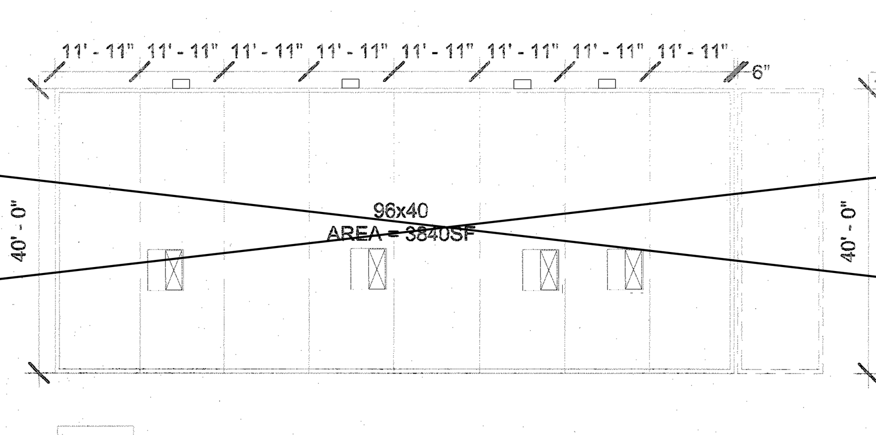

13 ***96x40 (Total Area 3840sf)***

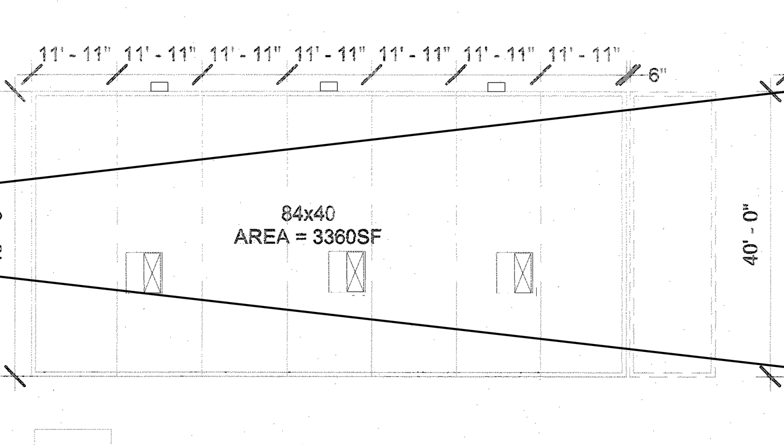

12 ***84x40 (Total Area 3360sf)***

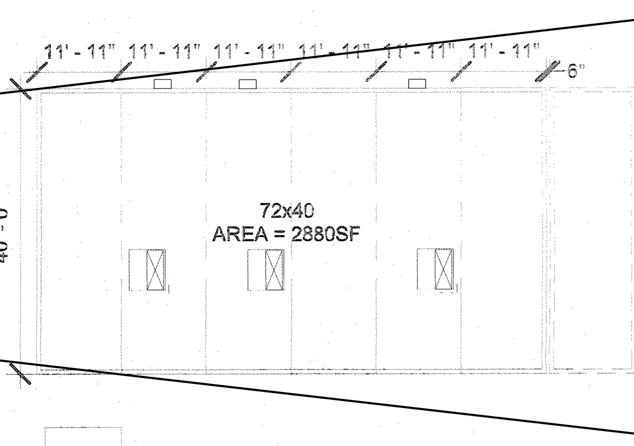

11 ***72x40 (Total Area 2880sf)***

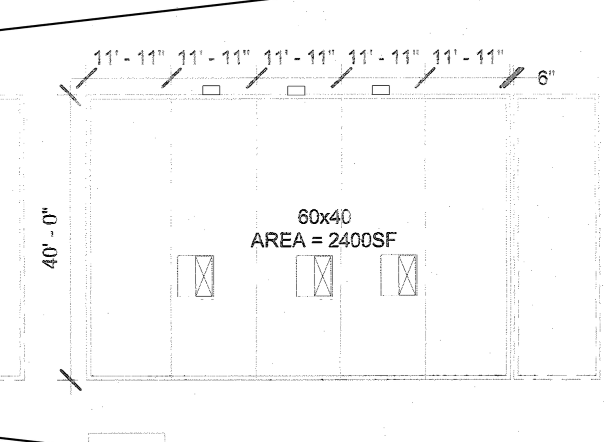

10 ***60x40 (Total Area 2400sf)***

IDENTIFICATION STAMP
DIV. OF THE STATE ARCHITECT
APP: 03-121617 INC:
REVIEWED FOR
SS ☑ FLS ☑ ACS ☑
DATE: 08/02/2021

PROFESSIONAL STAMP
REGISTERED PROFESSIONAL ENGINEER MANNY D. FRISCH No. S3380 STRUCTURAL STATE OF CALIFORNIA
12/19/2017

THE PLANS, IDEAS & DESIGNS SHOWN ON THESE DRAWINGS ARE THE PROPERTY OF R&S TAVARES ASSOCIATES, INC. DEVISED SOLELY FOR THIS CONTRACT. THESE PLANS SHALL NOT BE USED, IN WHOLE OR IN PART, FOR ANY PURPOSE FOR WHICH THEY WERE NOT INTENDED WITHOUT THE EXPRESS WRITTEN CONSENT OF R&S TAVARES ASSOCIATES, INC. ©

CLIENT
CLASS LEASING LLC
1221 Harley Knox Boulevard
Perris, CA 92571

R&S TAVARES ASSOCIATES
DESIGN ◆ CONSULTING ◆ PROJECT
11777 BERNARDO PLAZA COURT, SUITE 105
SAN DIEGO, CA 92128
WWW.RSTAVARES.COM

ORIGINAL PC STATE AGENCY APPROVAL
FILE NUMBER: PC-128
IDENTIFICATION STAMP
DIVISION OF THE STATE ARCHITECT
04 - 116504 INCR: 0
AC RM FLS EA SSR KER
DATE 07/19/2018

PROJECT TITLE
24' x 40'
EXPANDABLE TO
120' x 40'

PRE-CHECK (PC) DOCUMENT
Code: [2016] CBC
A separate project application for construction is required.

PROJECT SPECIFIC STATE AGENCY APPROVAL
IDENTIFICATION STAMP
DIV. OF THE STATE ARCHITECT
APP: 04-119993 INC:
REVIEWED FOR
SS ☑ FLS ☑ ACS ☑
DATE: 02/24/2021

Revision Schedule

#	Description	Date

SHEET TITLE
TYPICAL KEY PLAN AND SCHEDULES, GEN NOTES,

PROJECT NUMBER 17016A
DRAWN BY rMc/SC
CHECKED BY JA/RT
DATE 2017/06/05
SHEET NO. A0.1
SHE OF SHEETS

12/19/2017 1:11:55 PM C:\Users\Lee\Documents\17016 - Aries, 24x40 PC - MainFile - Low Seismic_Lee.rvt

Advisory 1008.4.2 Clear Floor or Ground Space. Clear floor or ground spaces, turning spaces, and accessible routes are permitted to overlap within play areas. A specific location has not been designated for the clear floor or ground spaces or turning spaces, except swings, because each play component may require that the spaces be placed in a unique location. Where play components include a seat or entry point, designs that provide for an unobstructed transfer from a wheelchair or other mobility device are recommended. This will enhance the ability of children with disabilities to independently use the play component.

When designing play components with manipulative or interactive features, consider appropriate reach ranges for children seated in wheelchairs. The following table provides guidance on reach ranges for children seated in wheelchairs. These dimensions apply to either forward or side reaches. The reach ranges are appropriate for use with those play components that children seated in wheelchairs may access and reach. Where transfer systems provide access to elevated play components, the reach ranges are not appropriate.

Children's Reach Ranges

Forward or Side Reach	High (maximum)	Low (minimum)
Ages 3 and 4	36 in (915 mm)	20 in (510 mm)
Ages 5 through 8	40 in (1015 mm)	18 in (455 mm)
Ages 9 through 12	44 in (1120 mm)	16 in (405 mm)

CHAPTER 7: COMMUNICATION ELEMENTS AND FEATURES

702 Fire Alarm Systems
702.1 General. Fire alarm systems shall have permanently installed audible and visible alarms complying with NFPA 72 (2016 edition)
except that the maximum allowable sound level of audible notification appliances complying with section 4-3.2.1 of NFPA 72 (1999 edition) shall have a sound level no more than 110 dB at the minimum hearing distance from the audible appliance. In addition, alarms in guest rooms required to provide communication features shall comply with sections 4-3 and 4-4 of NFPA 72 (2016 edition)

703 Signs

703.1 General. Signs shall comply with 703. Where both visual and tactile characters are required, either one sign with both visual and tactile characters, or two separate signs, one with visual, and one with tactile characters, shall be provided.

703.2 Raised Characters. Raised characters shall comply with 703.2 and shall be duplicated in braille complying with 703.3. Raised characters shall be installed in accordance with 703.4.

703.2.1 Depth. Raised characters shall be 1/32 inch (0.8 mm) minimum above their background.

703.2.2 Case. Characters shall be uppercase.

703.2.3 Style. Characters shall be sans serif. Characters shall not be italic, oblique, script, highly decorative, or of other unusual forms.

703.2.4 Character Proportions. Characters shall be selected from fonts where the width of the uppercase letter "O" is 60 percent minimum and 110 percent maximum of the height of the uppercase letter "I".

703.2.5 Character Height. Character height measured vertically from the baseline of the character shall be 5/8 inch (16 mm) minimum and 2 inches (51 mm) maximum based on the height of the uppercase letter "I".

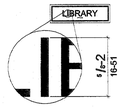

Figure 703.2.5 Height of Raised Characters

TABLE 11B-703.3.1
BRAILLE DIMENSIONS

MEASUREMENT RANGE	MINIMUM IN INCHES MAXIMUM IN INCHES
Dot base diameter	0.059 (1.5 mm) to 0.063 (1.6 mm)
Distance between two dots in the same cell[1]	0.09 (2.3 mm)
Distance between corresponding dots in adjacent cells[1]	0.300 (7.6 mm)
Dot height	0.025 (0.6 mm) to 0.037 (0.9 mm)
Distance between corresponding dots from one cell directly below[1]	0.395 (10 mm) to 0.400 (10.2 mm)

1. Measured center to center.

703.2.6 Stroke Thickness. Stroke thickness of the uppercase letter "I" shall be 15 percent maximum of the height of the character.

703.2.7 Character Spacing. Character spacing shall be measured between the two closest points of adjacent raised characters within a message, excluding word spaces. Where characters have rectangular cross sections, spacing between individual raised characters shall be 1/8 inch (3.2 mm) minimum and 4 times the raised character stroke width maximum. Where characters have other cross sections, spacing between individual raised characters shall be 1/16 inch (1.6 mm) minimum and 4 times the raised character stroke width maximum at the base of the cross sections, and 1/8 inch (3.2 mm) minimum and 4 times the raised character stroke width maximum at the top of the cross sections. Characters shall be separated from raised borders and decorative elements 3/8 inch (9.5 mm) minimum.

703.2.8 Line Spacing. Spacing between the baselines of separate lines of raised characters within a message shall be 135 percent minimum and 170 percent maximum of the raised character height.

703.3 Braille. Braille shall be contracted (Grade 2) and shall comply with 703.3 and 703.4.

703.3.1 Dimensions and Capitalization. Braille dots shall have a domed or rounded shape and shall comply with Table 703.3.1. The indication of an uppercase letter or letters shall only be used before the first word of sentences, proper nouns and names, individual letters of the alphabet, initials, and acronyms.

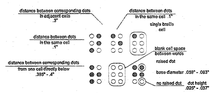

Figure 703.3.1 Braille Measurement

703.3.2 Position. Braille shall be positioned below the corresponding text. If text is multi-lined, braille shall be placed below the entire text. Braille shall be separated 3/8 inch (9.5 mm) minimum from any other tactile characters and 3/8 inch (9.5 mm) minimum from raised borders and decorative elements.

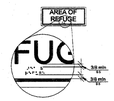

Figure 703.3.2 Position of Braille

703.4 Installation Height and Location. Signs with tactile characters shall comply with 703.4.

703.4.1 Height Above Finish Floor or Ground. Tactile characters on signs shall be located 48 inches (1220 mm) minimum above the finish floor or ground surface, measured from the baseline of the lowest tactile character and 60 inches (1525 mm) maximum above the finish floor or ground surface, measured from the baseline of the highest tactile character.

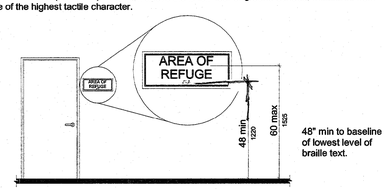

Figure 703.4.1 Height of Tactile Characters Above Finish Floor or Ground

703.4.2 Location. Where a tactile sign is provided at a door, the sign shall be located alongside the door at the latch side. Where a tactile sign is provided at double doors with one active leaf, the sign shall be located on the inactive leaf. Where a tactile sign is provided at double doors with two active leafs, the sign shall be located to the right of the right hand door. Where there is no wall space at the latch side of a single door or at the right side of double doors, signs shall be located on the nearest adjacent wall. Signs containing tactile characters shall be located so that a clear floor space of 18 inches (455 mm) minimum by 18 inches (455 mm) minimum, centered on the tactile characters, is provided beyond the arc of any door swing between the closed position and 45 degree open position.

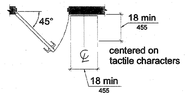

Figure 703.4.2 Location of Tactile Signs at Doors

703.5 Visual Characters. Visual characters shall comply with 703.5.

703.5.1 Finish and Contrast. Characters and their background shall have a non-glare finish. Characters shall contrast with their background with either light characters on a dark background or dark characters on a light background.

703.5.2 Case. Characters shall be uppercase or lowercase or a combination of both.

703.5.3 Style. Characters shall be conventional in form. Characters shall not be italic, oblique, script, highly decorative, or of other unusual forms.

703.5.4 Character Proportions. Characters shall be selected from fonts where the width of the uppercase letter "O" is 60 percent minimum and 110 percent maximum of the height of the uppercase letter "I".

703.5.5 Character Height. Minimum character height shall comply with Table 703.5.5. Viewing distance shall be measured as the horizontal distance between the character and an obstruction preventing further approach towards the sign. Character height shall be based on the uppercase letter "I".

703.5.6 Height From Finish Floor or Ground. Visual characters shall be 40 inches (1015 mm) minimum above the finish floor or ground.

703.5.7 Stroke Thickness. Stroke thickness of the uppercase letter "I" shall be 10 percent minimum and 30 percent maximum of the height of the character.

703.5.8 Character Spacing. Character spacing shall be measured between the two closest points of adjacent characters, excluding word spaces. Spacing between individual characters shall be 10 percent minimum and 35 percent maximum of character height.

703.5.9 Line Spacing. Spacing between the baselines of separate lines of characters within a message shall be 135 percent minimum and 170 percent maximum of the character height.

703.6 Pictograms. Pictograms shall comply with 703.6.

703.6.1 Pictogram Field. Pictograms shall have a field height of 6 inches (150 mm) minimum. Characters and braille shall not be located in the pictogram field.

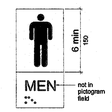

Figure 703.6.1 Pictogram Field
dark-on-light.

OPENING

DETAIL REFERENCE
1 — DETAIL NUMBER
S1 — PAGE NUMBER

CONCRETE

MASONRY

SAND

EARTH

SECTION REFERENCE
1 — SECTION LABEL
S1 — PAGE NUMBER

CONTINUOUS WOOD MEMBER

WOOD BLOCKING

0.00' FIN. FLR. ELEV.

-1.00' BOTTOM OF FOOTING ELEVATION

S — S STEPPED FOOTING

FM
ASSISTIVE LISTENING
SYSTEM AVAILABLE
- PLEASE ASK -

REQUIRED PER 11B-219 & 11B-706
(SEE FLOOR PLANS FOR MORE INFO)

MAXIMUM
OCCUPANCY
PERSONS

OCCUPANT LOAD SIGN REQUIRED PER DSA BU11-08.

EVERY ROOM OR SPACE WHICH IS USED FOR ASSEMBLY, CLASSROOM, DINING OR SIMILAR PURPOSES HAVING AN OCCUPANT LOAD OF 50 OR MORE SHALL HAVE THE OCCUPANT LOAD OF THE ROOM OR SPACE POSTED IN A CONSPICUOUS PLACE, NEAR THE MAIN EXIT OR EXIT ACCESS DOORWAY

5 1/4" = 1'-0"
Sign Notes

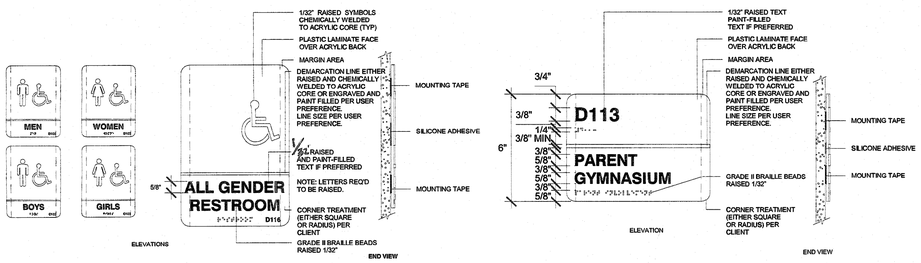

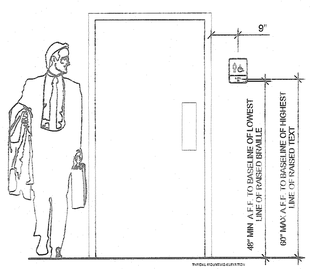

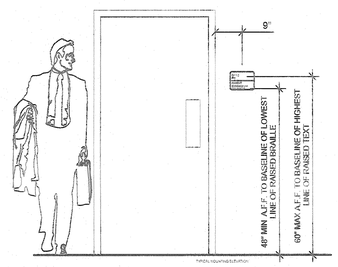

4 1/2" = 1'-0"
Signage

ROOM WALL SIGN

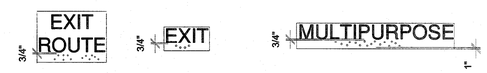

RESTROOM WALL SIGN

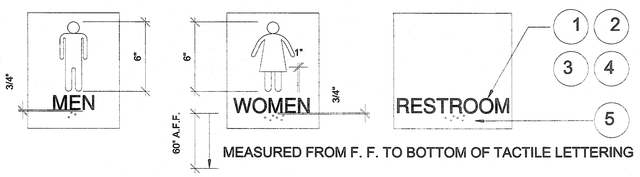

MEASURED FROM F. F. TO BOTTOM OF TACTILE LETTERING

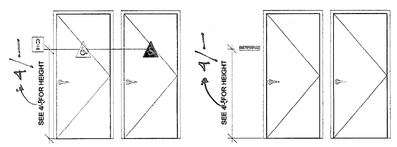

1/4"=1'-0"

DOOR SYMBOLS: CIRLCLE & TRIANGLE1/4" THICK. 1/4" THICK TRIANGLE SHALL BE SUPERIMPOSED OVER 1/4" THICK CIRCLE AT UNISEX AND GENDER NEUTRAL RR.

NOTE: TACTILE SIGN TEXT SHALL BE CENTERED 18" CLEAR FROM STRIKE OF DOOR

VERTICES SHALL BE 1/8" - 1/4" RADIUS
EDGES SHALL BE 1/16" - 1/8" ROUNDED

RESTROOM DOOR SIGN

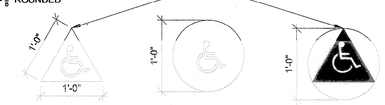

1. CHARACTERS ON SIGNS SHALL BE RAISED 1/32 INCH MIN. AND SHALL BE SANS SERIF UPPERCASE CHARACTERS ACCOMPANIED BY GRADE 2.
2. RAISED CHARACTERS SHALL BE A MINIMUM OF 5/8 INCH AND A MAXIMUM OF 2 INCHES HIGH.
3. CONTRAST BETWEEN CHARACTERS, SYMBOLS AND THEIR BACKGROUND MUST BE 70% MINIMUM AND HAVE A NON-GLARE FINISH. 11B-703-5.1.
4. TRIANGLE OR CIRCLE SMALL CONTRAST WITH DOOR. EITHER LIGHT ON A DARK BACKGROUND OR DARK ON A LIGHT BACKGROUND. 11B-703.7.2.6.1 AND 11B-703.2.2.6.2
5. CHARACTERES ON SIGN SHALL HAVE A WIDTH-TO HEIGHT RATIO OF BETWEEN 3:5 AND 1.1:1 AND A STROKE WIDTH TO HEIGHT RATIO OF BETWEEN 1:5 AND 1:10. SEE 11B.703.2.4

IDENTIFICATION STAMP
DIV. OF THE STATE ARCHITECT
APP: 03-121617 INC:
REVIEWED FOR
SS ☑ FLS ☑ ACS ☑
DATE: 08/02/2021

PROFESSIONAL STAMP

12/19/2017

THE PLANS, IDEAS & DESIGNS SHOWN ON THESE DRAWINGS ARE THE PROPERTY OF R&S TAVARES ASSOCIATES, INC. DEVISED SOLELY FOR THIS CONTRACT. THESE PLANS SHALL NOT BE USED, IN WHOLE OR IN PART, FOR ANY PURPOSE FOR WHICH THEY WERE NOT INTENDED WITHOUT THE EXPRESS WRITTEN CONSENT OF R&S TAVARES ASSOCIATES, INC. ©

CLIENT

CLASS LEASING LLC
1221 Harley Knox Boulevard
Perris, CA 92571

R&S TAVARES ASSOCIATES
DESIGN ◆ CONSULTING ◆ PROJECT
11777 Bernardo Plaza Court, Suite 105
San Diego, CA 92128
WWW.RSTAVARES.COM

ORIGINAL PC STATE AGENCY APPROVAL

FILE NUMBER: PC-128
IDENTIFICATION STAMP
DIVISION OF THE STATE ARCHITECT
04 - 116504 INCR: 0
AC RM FLS EA SSR KER
DATE 07/19/2018

PROJECT TITLE

24' x 40'
EXPANDABLE TO
120' x 40'

PRE-CHECK (PC) DOCUMENT
Code: [2016] CBC
A separate project application for construction is required.

PROJECT SPECIFIC STATE AGENCY APPROVAL

IDENTIFICATION STAMP
DIV. OF THE STATE ARCHITECT
APP: 04-119993 INC:
REVIEWED FOR
SS ☑ FLS ☑ ACS ☑
DATE: 02/24/2021

Revision Schedule

#	Description	Date

SHEET TITLE
SIGNAGE AND SYMBOLS

PROJECT NUMBER
17016A

DRAWN BY
rMc/SC

CHECKED BY
JA/RT

DATE
2017/06/05

SHEET NO.
A0.2

SHEET OF SHEETS

12/19/2017 1:11:57 PM C:\Users\Lee\Documents\17016 - Aries, 24x40 PC - MainFile - Low Seismic_Lee.rvt

DSA-103 Issued 12/30/2016
List of Required Structural Tests & Special Inspections - 2016 CBC

DIVISION OF THE STATE ARCHITECT – DEPARTMENT OF GENERAL SERVICES

INCREMENT # | DSA File No.: # | Application No.: # | Date Submitted: # | Revised: # | Revised: #

School Name | District

IMPORTANT: This form is only a summary list of structural tests and some of the special inspections required for the project. Generally, the structural tests and special inspections noted on this form are those that will be performed by the Geotechnical Engineer of Record, Laboratory of Record, or Special Inspector. The actual complete test and inspection program must be performed as detailed on the DSA approved documents. The appendix at the bottom of this form identifies work NOT subject to DSA requirements for special inspection or structural testing. The project inspector is responsible for providing inspection of all facets of construction, including but not limited to, special inspections not listed on this form such as structural wood framing, high-load wood diaphragms, cold-formed steel framing, anchorage of non-structural components, etc., per Title 24, Part 2, Chapter 17A.
NOTE: This form is also available for projects submitted for review under the 2007, 2010, and 2013 CBC.

INSTRUCTIONS: Click a plus sign (+) before any category or subcategory to reveal additional tests and special inspections. A shaded box indicates a test or special inspection that may be required, depending on the scope of the construction and other issues. A shaded box can be clicked indicating your selection of that test. **Note:** A minus (-) on a category or subcategory heading indicates that it can be collapsed. However, any selections you may have made will be cleared. Click on the "COMPILE" button to show only the tests and inspections finally selected. **For more information on use of this form, see DSA-103.INSTR.**

Note: References are to the 2016 edition of the California Building Code (CBC) unless otherwise noted.

REQUIRED	TEST OR SPECIAL INSPECTION	TYPE[1]	PERFORMED BY[2]	CODE REFERENCE AND NOTES
+	**SOILS**			
+	**CONCRETE**			Table 1705A.3, ACI 318-14 Sections 26.12 & 26.13
+	**MASONRY**			TMS 402-13/ACI 530-13/ASCE 5-13 Table 3.1.3 & TMS 602-13/ACI 530.1-13/ASCE 6-13 Table 5
-	**STEEL, ALUMINUM**			Table 1705A.2.1, AISC 303-10, AISC 360-10, AISC 341-10, AISC 358-10, AISI S100-07/S2-10
-	**17. STRUCTURAL STEEL, COLD-FORMED STEEL, AND ALUMINUM USED FOR STRUCTURAL PURPOSES**			
	Material Verification:			
X	a. Verify identification of all materials and: • Mill certificates indicate material properties that comply with requirements, • Material sizes, types and grades comply with requirements.	Periodic	*	**2203A.1** (2203.1[+]), **Table 1705A.2.1 Item 3a-3c;** AISI S100-07/S2-10 Section A2.1 & A2.2, AISI S200-12 Section A3, AISI S220-11 Section A4. * By special inspector or qualified technician when performed off-site.
X	b. Test unidentified materials	Test	LOR	**2203A.1** (2203.1[+]).
	c. Examine seam welds of HSS shapes	Periodic	SI	DSA IR 17-3.
	Inspection:			
	d. Not used.			
X	e. Verify and document steel fabrication per DSA approved construction documents.	Periodic	SI	Not applicable to cold-formed steel light-frame construction, except for trusses (**1705A.2.4**).
+	**18. HIGH STRENGTH BOLTS:**	RCSC 2009		
-	**19. WELDING:**			**1705A.2.5, Table 1705A.2.1 Items 4 & 5;** DSA IR 17-3, AWS D1.1 and AWS D1.8 for structurel steel, AWS D1.2 for Aluminum, AWS D1.3 for cold-formed steel, AWS D1.4 for reinforcing steel. (See Appendix for exemptions.)
	Verification of Materials, Equipment, Welders, etc:			
X	a. Verify weld filler material identification markings per AWS designation listed on the DSA approved documents and the WPS.	Periodic	SI	DSA IR 17-3.
X	b. Verify weld filler material manufacturer's certificate of compliance.	Periodic	SI	DSA IR 17-3.
X	c. Verify WPS, welder qualifications and equipment.	Periodic	SI	DSA IR 17-3.
-	**19.1 SHOP WELDING:**			
X	a. Inspect groove welds, multi-pass fillet welds, single pass fillet welds > 5/16", plug and slot welds	Continuous	SI	**Table 1705A.2.1 Item 5a1-4.** Per AISC 360-10 (and AISC 341-10 as applicable). DSA IR 17-3.
X	b. Inspect single-pass fillet welds ≤ 5/16", floor and roof deck welds	Periodic	SI	**1705A.2.2, Table 1705A.2.1 Item 5a.5 & 5a.6.** Per AISC 360-10 (and AISC 341-10 as applicable). DSA IR 17-3.
X	c. Inspect welding of stairs and railing systems.	Periodic	SI	**1705A.2.1.** Per AISC 360-10 (and AISC 341-10 as applicable). AWS D1.1 & D1.3. DSA IR 17-3.
	d. Verification of reinforcing steel weldability other than ASTM A706	Periodic	SI	**1705A.3.1**; verify carbon equivalent reported on mill certificates. AWS D1.4. DSA IR 17-3.
	e. Inspect welding of reinforcing steel.	Continuous	SI	**1705A.3.1, Table 1705A.3 Item 2, and Table 1705A.2.1 Item 5b, 1903A.8.** AWS D1.4. DSA IR 17-3.
+	**19.2 FIELD WELDING:**			
-	**20. NONDESTRUCTIVE TESTING:**			
X	a. Ultrasonic	Test	LOR	**1705A.2.1 & 1705A.2.5.** AISC 360-10 N5.5, AISC 341-10 App. Q 5.2. AWS D1.1, D1.8. ANSI/ASNT CP-189, SNT-TC-1A. DSA IR 17-2.
X	b. Magnetic Particle	Test	LOR	
	c.	Test	LOR	
	d.	Test	LOR	
+	**21. STEEL JOISTS AND TRUSSES:**			
+	**22. SPRAY APPLIED FIRE-PROOFING:**			
-	**23. ANCHOR BOLTS, ANCHOR RODS, & OTHER STEEL:**			
	a. Anchor Bolts and Anchor Rods	Test	LOR	IR 17-11 Sample and test anchor bolts and anchor rods not reedily identifiable.
	b. Threaded rod not used for foundation anchorage.	Test	LOR	Sample and test threaded rods not readily identifiable per procedures noted in IR 17-11
	c.			
+	**WOOD**			
+	**OTHER**			

THE EXAMPLE OF FORM DSA-103s SHOWN ON THIS SHEET ARE FOR ILLUSTRATION PURPOSE ONLY. A FORM DSA-103 IS TO BE COMPLETED FOR EACH APPLICATION THAT THIS PC IS BEING INCORPORATED INTO AND ALL EXAMPLE FORM DSA-103s ARE TO BE CROSSED OUT ON THIS DRAWING.

3 *6" = 1'-0"*
DSA-103 PLYWOOD FLOOR (Stockpile)1

12/18/2017 3:36:33 PM   C:\Users\Sarah\Documents\17016 - Aries, 24x40 PC - MainFile - Low Seismic_Sarah.rvt

DSA-103 Issued 12/30/2016
List of Required Structural Tests & Special Inspections - 2016 CBC

INCREMENT # | DSA File No.: # | Application No.: # | Date Submitted: # | Revised: # | Revised: #

School Name | District

IMPORTANT: This form is only a summary list of structural tests and some of the special inspections required for the project. Generally, the structural tests and special inspections noted on this form are those that will be performed by the Geotechnical Engineer of Record, Laboratory of Record, or Special Inspector. The actual complete test and inspection program must be performed as detailed on the DSA approved documents. The appendix at the bottom of this form identifies work NOT subject to DSA requirements for special inspection or structural testing. The project inspector is responsible for providing inspection of all facets of construction, including but not limited to, special inspections not listed on this form such as structural wood framing, high-load wood diaphragms, cold-formed steel framing, anchorage of non-structural components, etc., per Title 24, Part 2, Chapter 17A.
NOTE: This form is also available for projects submitted for review under the 2007, 2010, and 2013 CBC.

INSTRUCTIONS: Click a plus sign (+) before any category or subcategory to reveal additional tests and special inspections. A shaded box indicates a test or special inspection that may be required, depending on the scope of the construction and other issues. A shaded box can be clicked indicating your selection of that test. **Note:** A minus (-) on a category or subcategory heading indicates that it can be collapsed. However, any selections you may have made will be cleared. Click on the "COMPILE" button to show only the tests and inspections finally selected. **For more information on use of this form, see DSA-103.INSTR.**

Note: References are to the 2016 edition of the California Building Code (CBC) unless otherwise noted.

REQUIRED	TEST OR SPECIAL INSPECTION	TYPE[1]	PERFORMED BY[2]	CODE REFERENCE AND NOTES
-	**SOILS**			
-	**1. GENERAL:**	Table 1705A.6		
X	a. Verify that: • site has been prepared properly prior to placement of controlled fill and/or excavations for foundations, • foundation excavations are extended to proper depth and have reached proper material, and • materials below footings are adequate to achieve the design bearing capacity.	Periodic	GE*	* By geotechnical engineer or his or her qualified representative. (See Appendix for exemptions.)
-	**2. COMPACTED FILLS:**	Table 1705A.6		
	a. Perform classification and testing of fill materials.	Test	LOR*	* Under the supervision of the geotechnical engineer.
X	b. Verify use of proper meterials, densities end inspect lift thicknesses, placement, and compaction during placement of fill.	Continuous	GE*	* By geotechnical engineer or his or her qualified representative.
X	c. Test compaction of fill.	Test	LOR*	* Under the supervision of the geotechnical engineer.
+	**3. DRIVEN DEEP FOUNDATIONS (PILES):**	Table 1705A.7		
+	**4. CAST-IN-PLACE DEEP FOUNDATIONS (PIERS):**			Table 1705A.8
+	**5. RETAINING WALLS:**			
+	**6. OTHER SOILS:**			
-	**CONCRETE**			Table 1705A.3, ACI 318-14 Sections 26.12 & 26.13
-	**7. CAST IN PLACE CONCRETE**			
	Material Verification and Testing:			
X	a. Verify use of required design mix.	Periodic	SI*	**Table 1705A.3 Item 5, 1910A.1** (1909.2.3[+]). * To be performed by qualified batch-plent inspector and concrete sampling technician
	b. Identifiy, sample, and test reinforcing steel.	Test	LOR	**1910A.2** (1909.2.4[+]); ACI 318-14 Section 26.6.1.2. DSA IR 17-10
X	c. During concrete placement, fabricate specimens for strength tests,perform slump and air content tests, and determine the temperature of the concrete.	Test	LOR	**Table 1705A.3 item 6**; ACI 318-14 Sections 26.5 & 26.12
X	d. Test concrete (f'_c).	Test	LOR	**1905A.1.16** (1909.3.7[+]); ACI 318-14 Section 26.12.
	Inspection:			
X	e. Batch plant inspection ● Continuous ○ Periodic	See Notes	SI	Default of '**Continuous**' per **1705A.3.3**; If approved by DSA, batch plant inspection may be reduced to '**Periodic**' subject to requirements in Section **1705A.3.3.1** or eliminated per **1705A.3.3.2**. (See Appendix for exemptions.)
	f. Not used.			
	g. Not used.			
	h. Welding of reinforcing steel.			Provide special inspection per STEEL, category 19.1(d) & (e) and/or 19.2(g) & (h) below.
	I. Not used.			
+	**8. PRESTRESSED CONCRETE (in addition to Cast in Place Concrete tests and inspections):**			
+	**9. PRECAST CONCRETE (in addition to Cast in Place Concrete tests and inspections):**			
+	**10. SHOTCRETE (in addition to Cast in Place Concrete tests and inspections):**			
-	**11. POST-INSTALLED ANCHORS:**			
X	a. Inspect installation of post-installed anchors	See Notes	SI*	**Table 1705A.3 Item 4a (Continuous) & 4b (Periodic)** (see Appendix for exemptions). ACI 318-14 Sections 17.8 & 26.13 * May be performed by the project inspector when specifically approved by DSA.
X	b. Test post-installed anchors.	Test	LOR	**1910A.5** (1909.2.7[+]). (See Appendix for exemptions.)
+	**12. OTHER CONCRETE:**			
+	**MASONRY**			TMS 402-13/ACI 530-13/ASCE 5-13 Table 3.1.3 & TMS 602-13/ACI 530.1-13/ASCE 6-13 Table 5
-	**STEEL, ALUMINUM**			Table 1705A.2.1, AISC 303-10, AISC 360-10, AISC 341-10, AISC 358-10, AISI S100-07/S2-10
-	**17. STRUCTURAL STEEL, COLD-FORMED STEEL, AND ALUMINUM USED FOR STRUCTURAL PURPOSES**			
	Material Verification:			
X	a. Verify identification of all materials end: • Mill certificates indicate material properties that comply with requirements, • Material sizes, types and grades comply with requirements.	Periodic	*	**2203A.1** (2203.1[+]), **Table 1705A.2.1 Item 3a-3c;** AISI S100-07/S2-10 Section A2.1 & A2.2, AISI S200-12 Section A3, AISI S220-11 Section A4. * By special inspector or qualified technician when performed off-site.
X	b. Test unidentified materials	Test	LOR	**2203A.1** (2203.1[+]).
	c. Examine seam welds of HSS shapes	Periodic	SI	DSA IR 17-3.
	Inspection:			
	d. Not used.			
X	e. Verify and document steel fabrication per DSA approved construction documents.	Periodic	SI	Not applicable to cold-formed steel light-frame construction, except for trusses (**1705A.2.4**).
+	**18. HIGH STRENGTH BOLTS:**	RCSC 2009		
-	**19. WELDING:**			**1705A.2.5, Table 1705A.2.1 Items 4 & 5;** DSA IR 17-3, AWS D1.1 and AWS D1.8 for structural steel, AWS D1.2 for Aluminum, AWS D1.3 for cold-formed steel, AWS D1.4 for reinforcing steel. (See Appendix for exemptions.)
	Verification of Materials, Equipment, Welders, etc:			
X	a. Verify weld filler material identification markings per AWS designation listed on the DSA approved documents and the WPS.	Periodic	SI	DSA IR 17-3.
X	b. Verify weld filler material manufacturer's certificate of compliance.	Periodic	SI	DSA IR 17-3.
X	c. Verify WPS, welder qualifications and equipment.	Periodic	SI	DSA IR 17-3.
-	**19.1 SHOP WELDING:**			
X	a. Inspect groove welds, multi-pass fillet welds, single pass fillet welds > 5/16", plug and slot welds	Continuous	SI	**Table 1705A.2.1 Item 5a1-4.** Per AISC 360-10 (and AISC 341-10 as applicable). DSA IR 17-3.
X	b. Inspect single-pass fillet welds ≤ 5/16", floor and roof deck welds	Periodic	SI	**1705A.2.2, Table 1705A.2.1 Item 5a.5 & 5a.6.** Per AISC 360-10 (and AISC 341-10 as applicable). DSA IR 17-3.
X	c. Inspect welding of stairs and railing systems.	Periodic	SI	**1705A.2.1.** Per AISC 360-10 (and AISC 341-10 as applicable). AWS D1.1 & D1.3. DSA IR 17-3.
	d. Verification of reinforcing steel weldability other than ASTM A706	Periodic	SI	**1705A.3.1**; verify carbon equivalent reported on mill certificates. AWS D1.4. DSA IR 17-3.
	e. Inspect welding of reinforcing steel.	Continuous	SI	**1705A.3.1, Table 1705A.3 Item 2, and Table 1705A.2.1 Item 5b, 1903A.8.** AWS D1.4. DSA IR 17-3.
-	**19.2 FIELD WELDING:**			
	a. Inspect groove welds, multi-pass fillet welds, single pass fillet welds > 5/16", plug and slot welds	Continuous	SI	**Table 1705A.2.1 Item 5a1-4.** Per AISC 360-10 (and AISC 341-10 as applicable). DSA IR 17-3.
X	b. Inspect single-pass fillet welds ≤ 5/16"	Periodic	SI	**Table 1705A.2.1 Item 5a.5.** Per AISC 360-10 (and AISC 341-10 as epplicable). DSA IR 17-3.
	c. Inspect end-welded studs (ASTM A-108) installation (including bend test)	Periodic	SI	**2213A.2** (2212.6.2[+]); per AISC 360-10 (and AISC 341-10 as applicable), AWS D1.1. DSA IR 17-3.
	d. Inspect floor and roof deck welds	Periodic	SI	**1705A.2.2, Table 1705A.2.1 Item 5a.6;** per AISC 360 (and AISC 341 as applicable) & AWS D1.3. DSA IR 17-3.
	e. Inspect welding of structural cold-formed steel	Periodic	SI*	**1705A.2.5;** AWS D1.3. * May be performed by the project inspector when specifically approved by DSA. DSA IR 17-3.
	f. Inspect welding of stairs and railing systems	Periodic	SI*	**1705A.2.1;** Per AISC 360-10 (and AISC 341-10 as applicable). AWS D1.1 & D1.3. DSA IR 17-3. * May be performed by the project inspector when specifically approved by DSA.
	g. Verification of reinforcing steel weldability	Periodic	SI	**1705A.3.1**; verify carbon equivalent reported on mill certificates. DSA IR 17-3.
	h. Inspect welding of reinforcing steel.	Continuous	SI	**1705A.3.1, Table 1705A.3 Item 2, and Table 1705A.2.1 Item 5b, 1903A.8.** AWS D1.4. DSA IR 17-3.
-	**20. NONDESTRUCTIVE TESTING:**			
X	a. Ultrasonic	Test	LOR	**1705A.2.1 & 1705A.2.5.** AISC 360-10 N5.5, AISC 341-10 App. Q 5.2. AWS D1.1, D1.8. ANSI/ASNT CP-189, SNT-TC-1A. DSA IR 17-2.
X	b. Magnetic Particle	Test	LOR	
	c.	Test	LOR	
	d.	Test	LOR	
+	**21. STEEL JOISTS AND TRUSSES:**			
+	**22. SPRAY APPLIED FIRE-PROOFING:**			
-	**23. ANCHOR BOLTS, ANCHOR RODS, & OTHER STEEL:**			
	a. Anchor Bolts and Anchor Rods	Test	LOR	IR 17-11 Sample and test anchor bolts and anchor rods not readily identifiable.
	b. Threaded rod not used for foundation anchorage.	Test	LOR	Sample and test threaded rods not readily identifiable per procedures noted in IR 17-11
	c.			
+	**WOOD**			
+	**OTHER**			

THE EXAMPLE OF FORM DSA-103s SHOWN ON THIS SHEET ARE FOR ILLUSTRATION PURPOSE ONLY. A FORM DSA-103 IS TO BE COMPLETED FOR EACH APPLICATION THAT THIS PC IS BEING INCORPORATED INTO AND ALL EXAMPLE FORM DSA-103s ARE TO BE CROSSED OUT ON THIS DRAWING.

2 *6" = 1'-0"*
DSA-103 PLYWOOD FLOOR (Concrete Foundation)1

DSA-103 Issued 12/30/2016
List of Required Structural Tests & Special Inspections - 2016 CBC

INCREMENT # | DSA File No.: # | Application No.: # | Date Submitted: # | Revised: # | Revised: #

School Name | District

IMPORTANT: This form is only a summary list of structural tests and some of the special inspections required for the project. Generally, the structural tests and special inspections noted on this form are those that will be performed by the Geotechnical Engineer of Record, Laboratory of Record, or Special Inspector. The actual complete test and inspection program must be performed as detailed on the DSA approved documents. The appendix at the bottom of this form identifies work NOT subject to DSA requirements for special inspection or structural testing. The project inspector is responsible for providing inspection of all facets of construction, including but not limited to, special inspections not listed on this form such as structural wood framing, high-load wood diaphragms, cold-formed steel framing, anchorage of non-structural components, etc., per Title 24, Part 2, Chapter 17A.
NOTE: This form is also available for projects submitted for review under the 2007, 2010, and 2013 CBC.

INSTRUCTIONS: Click a plus sign (+) before any category or subcategory to reveal additional tests and special inspections. A shaded box indicates a test or special inspection that may be required, depending on the scope of the construction and other issues. A shaded box can be clicked indicating your selection of that test. **Note:** A minus (-) on a category or subcategory heading indicates that it can be collapsed. However, any selections you may have made will be cleared. Click on the "COMPILE" button to show only the tests and inspections finally selected. **For more information on use of this form, see DSA-103.INSTR.**

Note: References are to the 2016 edition of the California Building Code (CBC) unless otherwise noted.

REQUIRED	TEST OR SPECIAL INSPECTION	TYPE[1]	PERFORMED BY[2]	CODE REFERENCE AND NOTES
+	**SOILS**			
+	**CONCRETE**			Table 1705A.3, ACI 318-14 Sections 26.12 & 26.13
+	**MASONRY**			TMS 402-13/ACI 530-13/ASCE 5-13 Table 3.1.3 & TMS 602-13/ACI 530.1-13/ASCE 6-13 Table 5
-	**STEEL, ALUMINUM**			Table 1705A.2.1, AISC 303-10, AISC 360-10, AISC 341-10, AISC 358-10, AISI S100-07/S2-10
-	**17. STRUCTURAL STEEL, COLD-FORMED STEEL, AND ALUMINUM USED FOR STRUCTURAL PURPOSES**			
	Material Verification:			
X	a. Verify identification of all materials and: • Mill certificates indicate material properties that comply with requirements, • Material sizes, types and grades comply with requirements.	Periodic	*	**2203A.1** (2203.1[+]), **Table 1705A.2.1 Item 3a-3c;** AISI S100-07/S2-10 Section A2.1 & A2.2, AISI S200-12 Section A3, AISI S220-11 Section A4. * By special inspector or qualified technician when performed off-site.
X	b. Test unidentified materials	Test	LOR	**2203A.1** (2203.1[+]).
	c. Examine seam welds of HSS shapes	Periodic	SI	DSA IR 17-3.
	Inspection:			
	d. Not used.			
X	e. Verify and document steel fabrication per DSA approved construction documents.	Periodic	SI	Not applicable to cold-formed steel light-frame construction, except for trusses (**1705A.2.4**).
+	**18. HIGH STRENGTH BOLTS:**	RCSC 2009		
-	**19. WELDING:**			**1705A.2.5, Table 1705A.2.1 Items 4 & 5;** DSA IR 17-3, AWS D1.1 and AWS D1.8 for structural steel, AWS D1.2 for Aluminum, AWS D1.3 for cold-formed steel, AWS D1.4 for reinforcing steel. (See Appendix for exemptions.)
	Verification of Materials, Equipment, Welders, etc:			
X	a. Verify weld filler material identification markings per AWS designation listed on the DSA approved documents and the WPS.	Periodic	SI	DSA IR 17-3.
X	b. Verify weld filler material manufacturer's certificate of compliance.	Periodic	SI	DSA IR 17-3.
X	c. Verify WPS, welder qualifications and equipment.	Periodic	SI	DSA IR 17-3.
-	**19.1 SHOP WELDING:**			
X	a. Inspect groove welds, multi-pass fillet welds, single pass fillet welds > 5/16", plug and slot welds	Continuous	SI	**Table 1705A.2.1 Item 5a1-4.** Per AISC 360-10 (and AISC 341-10 as applicable). DSA IR 17-3.
X	b. Inspect single-pass fillet welds ≤ 5/16", floor and roof deck welds	Periodic	SI	**1705A.2.2, Table 1705A.2.1 Item 5a.5 & 5a.6.** Per AISC 360-10 (and AISC 341-10 as applicable). DSA IR 17-3.
X	c. Inspect welding of stairs and railing systems.	Periodic	SI	**1705A.2.1.** Per AISC 360-10 (and AISC 341-10 as applicable). AWS D1.1 & D1.3. DSA IR 17-3.
	d. Verification of reinforcing steel weldability other than ASTM A706	Periodic	SI	**1705A.3.1**; verify carbon equivalent reported on mill certificates. AWS D1.4. DSA IR 17-3.
	e. Inspect welding of reinforcing steel.	Continuous	SI	**1705A.3.1, Table 1705A.3 Item 2, and Table 1705A.2.1 Item 5b, 1903A.8.** AWS D1.4. DSA IR 17-3.
-	**19.2 FIELD WELDING:**			
	a. Inspect groove welds, multi-pass fillet welds, single pass fillet welds > 5/16", plug and slot welds	Continuous	SI	**Table 1705A.2.1 Item 5a1-4.** Per AISC 360-10 (and AISC 341-10 as applicable). DSA IR 17-3.
X	b. Inspect single-pass fillet welds ≤ 5/16"	Periodic	SI	**Table 1705A.2.1 Item 5a.5.** Per AISC 360-10 (and AISC 341-10 as applicable). DSA IR 17-3.
	c. Inspect end-welded studs (ASTM A-108) installation (including bend test)	Periodic	SI	**2213A.2** (2212.6.2[+]); per AISC 360-10 (and AISC 341-10 as applicable), AWS D1.1. DSA IR 17-3.
	d. Inspect floor and roof deck welds	Periodic	SI	**1705A.2.2, Table 1705A.2.1 Item 5a.6;** per AISC 360 (and AISC 341 as applicable) & AWS D1.3. DSA IR 17-3.
	e. Inspect welding of structural cold-formed steel	Periodic	SI*	**1705A.2.5;** AWS D1.3. * May be performed by the project inspector when specifically approved by DSA. DSA IR 17-3.
	f. Inspect welding of stairs and railing systems	Periodic	SI*	**1705A.2.1;** Per AISC 360-10 (and AISC 341-10 as applicable). AWS D1.1 & D1.3. DSA IR 17-3. * May be performed by the project inspector when specifically approved by DSA.
	g. Verification of reinforcing steel weldability	Periodic	SI	**1705A.3.1**; verify carbon equivalent reported on mill certificates. DSA IR 17-3.
	h. Inspect welding of reinforcing steel.	Continuous	SI	**1705A.3.1, Table 1705A.3 Item 2, and Table 1705A.2.1 Item 5b, 1903A.8.** AWS D1.4. DSA IR 17-3.
-	**20. NONDESTRUCTIVE TESTING:**			
X	a. Ultrasonic	Test	LOR	**1705A.2.1 & 1705A.2.5.** AISC 360-10 N5.5, AISC 341-10 App. Q 5.2. AWS D1.1, D1.8. ANSI/ASNT CP-189, SNT-TC-1A. DSA IR 17-2.
X	b. Magnetic Particle	Test	LOR	
	c.	Test	LOR	
	d.	Test	LOR	
+	**21. STEEL JOISTS AND TRUSSES:**			
+	**22. SPRAY APPLIED FIRE-PROOFING:**			
-	**23. ANCHOR BOLTS, ANCHOR RODS, & OTHER STEEL:**			
	a. Anchor Bolts and Anchor Rods	Test	LOR	IR 17-11 Sample and test anchor bolts and anchor rods not readily identifiable.
	b. Threaded rod not used for foundation anchorage.	Test	LOR	Sample and test threaded rods not readily identifiable per procedures noted in IR 17-11
	c.			
+	**WOOD**			
+	**OTHER**			

THE EXAMPLE OF FORM DSA-103s SHOWN ON THIS SHEET ARE FOR ILLUSTRATION PURPOSE ONLY. A FORM DSA-103 IS TO BE COMPLETED FOR EACH APPLICATION THAT THIS PC IS BEING INCORPORATED INTO AND ALL EXAMPLE FORM DSA-103s ARE TO BE CROSSED OUT ON THIS DRAWING.

1 *6" = 1'-0"*
DSA-103 PLYWOOD FLOOR (Wood Foundation)1

IDENTIFICATION STAMP
DIV. OF THE STATE ARCHITECT
APP: 03-121617 INC:
REVIEWED FOR
SS ☑ FLS ☑ ACS ☑
DATE: 08/02/2021

PROFESSIONAL STAMP

REGISTERED PROFESSIONAL ENGINEER
MANNY D. FRANCH
No. S3380
STRUCTURAL
STATE OF CALIFORNIA

12/19/2017

THE PLANS, IDEAS & DESIGNS SHOWN ON THESE DRAWINGS ARE THE PROPERTY OF R&S TAVARES ASSOCIATES, INC. DEVISED SOLELY FOR THIS CONTRACT. THESE PLANS SHALL NOT BE USED, IN WHOLE OR IN PART, FOR ANY PURPOSE FOR WHICH THEY WERE NOT INTENDED WITHOUT THE EXPRESS WRITTEN CONSENT OF R&S TAVARES ASSOCIATES, INC. ©

CLIENT

CLASS LEASING LLC
1221 Harley Knox Boulevard
Perris, CA 92571

R&S TAVARES ASSOCIATES
DESIGN ◆ CONSULTING ◆ PROJECT
11777 Bernardo Plaza Court, Suite 105
San Diego, CA 92128
www.rstavares.com

ORIGINAL PC STATE AGENCY APPROVAL

FILE NUMBER: PC-128
IDENTIFICATION STAMP
DIVISION OF THE STATE ARCHITECT
04 - 116504 INCR: 0
AC RM FLS EA SSR KER
DATE 07/19/2018

PROJECT TITLE
24' x 40'
EXPANDABLE TO
120' x 40'

PRE-CHECK (PC) DOCUMENT
Code: [2016] **CBC**
A separate project application for construction is required.

PROJECT SPECIFIC STATE AGENCY APPROVAL

IDENTIFICATION STAMP
DIV. OF THE STATE ARCHITECT
APP. 04-119993 INC:
REVIEWED FOR
SS ☑ FLS ☑ ACS ☑
DATE: 02/24/2021

Revision Schedule

#	Description	Date

SHEET TITLE
DSA-103 T&I
PLYWOOD
FLOORS

PROJECT NUMBER
17016A

DRAWN BY
rMc

CHECKED BY
RT

DATE
2017/06/05

SHEET NO.
A0.4

CAL GREEN NOTES

CONSTRUCTION WASTE MANAGEMENT

PER 2016 CALGREEN CODE SECTION 5.408.1
CONSTRUCTION WASTE MANAGEMENT MEETS THE FOLLOWING CALGREEN REQUIREMENTS:
I- PERCENTAGE OF WASTE TO BE SALVAGED OR RECYCLED WITH A MINIMUM OF 65% OF NON-HAZARDOUS CONSTRUCTION WASTE.

II- THE CONSTRUCTION AND DEMOLITION MATERIALS WILL BE HANDLED BY A MATERIAL RECOVERY FACILITY (MRF) PROCESSED AND DIVERTED AS NEEDED. THE PROCESS IN PLACE GENERALLY YIELD A 75% OR BETTER DIVERSION RATE.

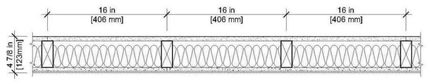

UL U329 or GAP WP 3441 Interior Partitions - Wood Stud	Fire Rating 1 hr.	STC 40 MIN.	Thickness (in.) 4-7/8"

* Gypsum Board - 5/8 in. thick board, applied horizontally or vertically

* Wood Studs - 2 in. x 4 in. wood studs spaced max. 16 in. o/c

* Batts and Blankets - Min. 3-1/2 in. thick mineral wool batt insulation

* Cement Board - 1/2 in. thick board, applied horizontally or vertically

* Bond Coat for Setting Tile - Latex modified portland cement mortar or . 1 type I organic adhesive applied with a notched trowel

* Ceremic Tile - 1/4 in. thick ceramic tile

[redacted]

Fire Test UL U465 Steel Stud (Non-loadbearing) Interior Partitions Sound Test: RAL-TL11-125	Fire Rating 1 hr.	STC 40 MIN.	Thickness (in.) 4-7/8"

* Gypsum Board - 5/8 in. thick board, applied vertically, attached to studs with 1 in. long, Type S-12 screws, spaced 8 in. o/c along the edges and 12 in. o/c of the board - SHHETROCK Brand Firecode Core (Type X)

* Steel Studs - 3-5/8 in. wide min. 25 gauge steel. Attached to floor and ceiling with fastners, 24 in o/c - 362S125-18

* Gypsum Board - 5/8 in. thick gypsum board applied vertically or horizontally - SHEETROCK Brand FIRECODE Core (Type X)

* Batts and Blankets - Min. 3-1/2 in. thick mineral wool batt insulation

Moisture control. Exterior door protection:
Nonabsorbent flooring indicated on floor plan, and
nonabsorbent interior wall finish indicated on interior elevations.

See sheets A1.0, A1.1, and A1.2 for door protection
See sheet A5.2 for wall finishes

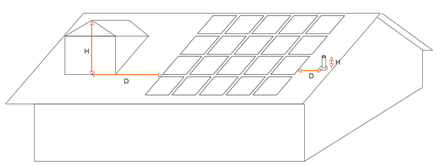

Source: California Energy Commission

Any obstruction, located on the roof or any other part of the building that projects above the solar zone shall be located at a sufficient horizontal distance away from the solar zone, in order to reduce the resulting shading of the solar zone. For each obstruction, the horizontal distance ("D") from the obstruction to the solar zone shall be at least two times the height difference ("H") between the highest point of the obstruction and the horizontal projection of the nearest point of the solar zone.

$D \geq 2 \times H$

SECTION	SHEET	2016 CALGREEN AND ENERGY CODE COMPLIANCE CHECKLIST FOR PRE-CHECKED (PC) PERMANENT AND MODULAR RELOCATABLE BUILDING DESIGNS
WATER EFFICIENCY		
5.303.3		**WATER CONSERVING PLUMBING FIXTURES AND FITTINGS:**
5.303.3	P1.0	PLUMBING FIXTURE FLOW RATES ARE SHOWN ON PLUMBING FIXTURE SCHEDULE.
MATERIAL CONSERVATION & RESOURCE EFFICIENCY		
5.407.2.2		**WATER RESISTANCE AND MOISTURE MANAGEMENT:**
5.407.2.2.1	A1.0-1.2 A1.0-1.2, A6.0-6.3	PLANS AND FINISH SCHEDULE SHOW THE LOCATION OF THE MINIMUM REQUIRED INTERIOR DOOR PROTECTION AND INDICATE THE NON-ABSORBENT FLOOR AND WALL FINISHES TO BE INSTALLED 2 FEET AROUND AND PERPENDICULAR TO THE PRIMARY ENTRANCES. PLANS AND SECTIONS INDICATE THE MINIMUM EXTERIOR DOOR PROTECTION WITH THE LOCATION AND DETAILS FOR A 4 FEET DEEP AWNING, ROOF OVERHANG, RECESSED AREA, OR OTHER APPROPRIATE METHOD AT THE PRIMARY ENTRANCES.
5.407.2.2.2	A4.0.1-4.3	ROOF PLANS AND DETAILS INDICATE FLASHINGS INTEGRATED WITH A DRAINAGE PLANE.
5.408.1		**CONSTRUCTION WASTE MANAGEMENT:**
5.408.1	PDF	PROVIDE A LETTER FROM THE LOCAL WASTE AND RECYCLING FACILITY USED BY THE MANUFACTURER WHICH SPECIFIES A CONSTRUCTION WASTE MANAGEMENT PLAN IDENTIFYING: ☑ RECYCLES AND/OR SALVAGES FOR REUSE A MINIMUM OF 65% OF THE NONHAZARDOUS CONSTRUCTION WASTE. ☑ THE CONSTRUCTION WASTE MATERIALS TO BE DIVERTED FROM DISPOSAL BY EFFICIENT USAGE, RECYCLING, REUSE ON THE PROJECT, OR SALVAGED FOR FUTURE USE OR ☑ SPECIFIES IF CONSTRUCTION WASTE MATERIALS WILL BE SORTED ON-SITE OR BULK MIXED. ☑ DIVERSION FACILITY WHERE CONSTRUCTION WASTE WILL BE TAKEN. ☑ SPECIFIES IF THE AMOUNT OF CONSTRUCTION WASTE IS CALCULATED BY WEIGHT OR VOLUME. ☑ WASTE MANAGEMENT COMPANY IS ABLE TO PROVIDE VERIFIABLE DOCUMENTATION THAT 65% OF CONSTRUCTION WASTE MATERIAL WILL BE DIVERTED.
ENVIRONMENTAL QUALITY		
5.504.4		**POLLUTANT CONTROL**
5.504.4.1	A0.5	**ADHESIVES, SEALANTS AND CAULKS**

		FINISH	WHERE USED (TYPE)	MANUFACTURER/SPECIFICATION	VOC	VOC LIMIT (GPL)
5.504.4.2	A0.5	Indoor Carpet Adhesives	NuBroadLok, Mohawk Inc.	NuBroadLok, Mohawk Inc.	0	50
		Carpet Pad Adhesives	N/A			
5.504.4.2	A0.5	Cove Base Adhesives	Interior Base	Henry 440	0	50
5.504.4.3	A0.5	Multi-purpose Construction Adhesives 1	General	Liquid Nails - Heavy Duty construction adhesive	70	70
5.504.4.4	A0.5	Contact Adhesive	General	Henkel - Loctite Light Cure	20	70
5.504.4.2	A0.5	Contact Adhesive	General	Henkel - Loctite Light Cure	20	70
5.504.4.1	A0.5	Architectural 1	Exterior	Sherwin williams - 950A White	33	250
5.504.4.1	A0.5	Architectural 2	Exterior	Sherwin williams - Shermax clear	19	250
5.504.4.1	A0.5	Single ply roof Membrane	Roof Caulk/Sealer	Trenco - Future Flash Sealant	6	450
5.504.4.3	A0.5	**PAINTS AND COATINGS**				
		FINISH	**WHERE USED (TYPE)**	**MANUFACTURER/SPECIFICATION**	**VOC**	**VOC LIMIT (GPL)**
5.504.4.3.1	A0.5	Aerosol Spray Flat Paint	Painted Surface	Krylon	<60	60
5.504.4.3	A0.5	Flat Coatings 1	Painted Surface	Sherwin Williams - Pro Mar 200 Zero	50	50
5.504.4.3	A0.5	Flat Coatings 2	Painted Surface	Dunn Edwards Paints - Azra Hues	40	50
5.504.4.3	A0.5	Flat Coatings 3	Painted Surface	Vista Paints	50	50
		Wall Material 1	FRP Wall Covering	Glassco		
		Wall Material 1	Tackable Wall (Nonabsorbent)	Chatfield Clarke		
5.504.4.4	A0.5	**CARPET SYSTEMS**				
		FINISH	**MANUFACTURER**	**CERTIFICATION ORGANIZATION**		
5.504.4.4	A0.5	Carpet	Mohawk Carpets	Carpet & Rug Institute - Green Label Plus Program		
5.504.4.5		**HARDWOOD PLYWOOD, PARTICLEBOARD, FIBERBOARD WOOD PRODUCTS**				
		FINISH	**WHERE USED (TYPE)**	**MANUFACTURER/SPECIFICATION**	**FORMALDEHYDE EMMISIONS**	**FORMALDEHYDE LIMIT**
5.504.4.5	A0.5	Plywood	Roof / Floor	APA Rated	<.05	0.05
5.504.4.6	A0.5	**RESILIENT FLOORING SYSTEMS**				
		FINISH	**MANUFACTURER**	**CERTIFICATION ORGANIZATION**		
5.504.4.6	A0.5	Vinyl Composition Tile Flooring	Armstrong / Imperial	CA Dept. of Public Health's 2010 Standard Method for the Testing ...		
	A0.5	Sheet Vinyl Flooring	Marmoleum	CA Dept. of Public Health's 2010 Standard Method for the Testing ...		
		FRP Wall Covering	Glassco	CA Dept. of Public Health's 2010 Standard Method for the Testing ...		
		Tackable Wall	Chatfield Clarke	CA Dept. of Public Health's 2010 Standard Method for the Testing ...		
		FILTER SPECIFICATION:				
5.504.3	M0.1	COVERING OF DUCT OPENINGS AND PROTECTION OF MECHANICAL EQUIPMENT DURING CONSTRUCTION AND SHIPMENT.				
5.504.5.3	M0.1	MECHANICAL SPECIFICATION OR NOTE INCLUDES INFORMATION REQUIRING A MINIMUM MERV 8 FILTER(S) OR HIGHER.				
		INDOOR MOISTURE CONTROL:				
		☑ ATTIC IS UNVENTED				
5.507.4		**ENVIRONMENTAL COMFORT:**				
5.507.4.1	A0.0	**EXTERIOR NOISE TRANSMISSION:** ☑ NOTE ON COVERSHEET THAT STATES - "THIS PC WILL NOT BE PLACED IN ANY OF THE FOLLOWING LOCATIONS: 1- WITHIN THE 65 CNEL NOISE CONTOUR OF AN AIRPORT; 2- WITHIN THE 65 CNEL OR LDN NOISE CONTOUR OF A FREEWAY, EXPRESSWAY, RAILROAD, OR INDUSTRIAL SOURCE GUIDEWAY; 3- WHERE EXPOSED TO NOISE LEVEL OF 65 DB LEQ-1-HR DURING ANY HOUR OF OPERATION."				
5.507.4.3		**INTERIOR SOUND TRANSMISSION:**				
5.507.4.3	A0.5	INTERIOR WALLS MEET MINIMUM 40 STC.				
5.508.1		**OUTDOOR AIR QUALITY:**				
5.508.1	M0.1	HVAC EQUIPMENT DOES NOT CONTAIN CFCS OR HALONS.				

IDENTIFICATION STAMP
DIV. OF THE STATE ARCHITECT
APP: 03-121617 INC: A
REVIEWED FOR
SS ☑ FLS ☑ ACS ☑
DATE: 08/02/2021

PROFESSIONAL STAMP

12/19/2017

THE PLANS, IDEAS & DESIGNS SHOWN ON THESE DRAWINGS ARE THE PROPERTY OF R&S TAVARES ASSOCIATES, INC. DEVISED SOLELY FOR THIS CONTRACT. THESE PLANS SHALL NOT BE USED, IN WHOLE OR IN PART, FOR ANY PURPOSE FOR WHICH THEY WERE NOT INTENDED WITHOUT THE EXPRESS WRITTEN CONSENT OF R&S TAVARES ASSOCIATES, INC. ©

CLIENT

CLASS LEASING LLC
1221 Harley Knox Boulevard
Perris, CA 92571

R&S TAVARES ASSOCIATES
DESIGN ◆ CONSULTING ◆ PROJECT
11777 Bernardo Plaza Court, Suite 105
San Diego, CA 92128
www.rstavares.com

ORIGINAL PC STATE AGENCY APPROVAL

FILE NUMBER: PC-128

IDENTIFICATION STAMP
DIVISION OF THE STATE ARCHITECT
04 - 116504 INCR: 0
AC RM FLS EA SSR KER
DATE 07/19/2018

PROJECT TITLE
24' x 40'
EXPANDABLE TO
120' x 40'

PRE-CHECK (PC) DOCUMENT
Code: [2016] **CBC**
A separate project application for construction is required.

PROJECT SPECIFIC STATE AGENCY APPROVAL

IDENTIFICATION STAMP
DIV. OF THE STATE ARCHITECT
APP. 04-119993 INC:
REVIEWED FOR
SS ☑ FLS ☑ ACS ☑
DATE: 02/24/2021

Revision Schedule

#	Description	Date

SHEET TITLE
CALGREEN SPEC'S

PROJECT NUMBER
17016A

DRAWN BY
MC/SC

CHECKED BY
JA/RT

DATE
2017/06/05

SHEET NO.
A0.5

SHEET OF SHEETS

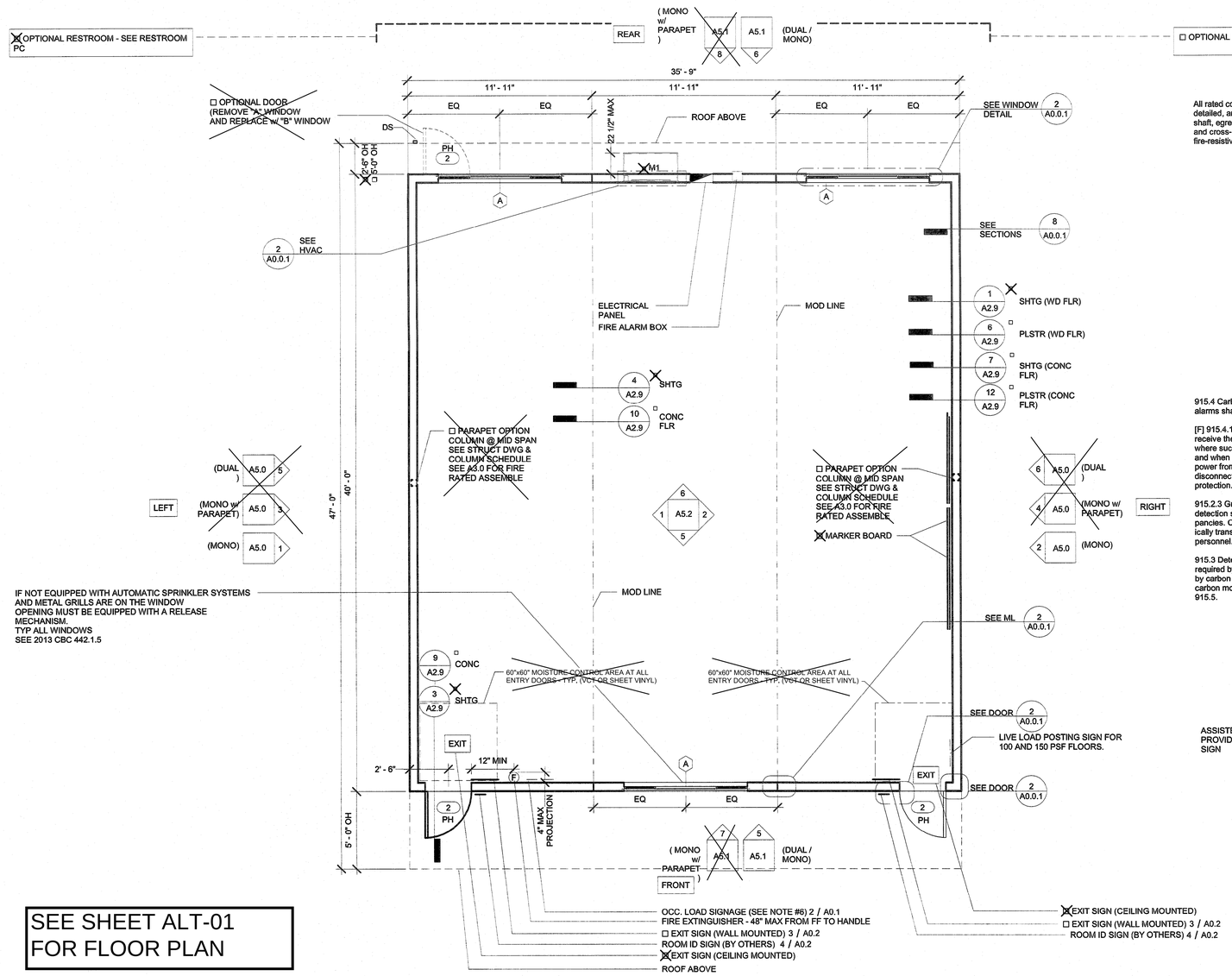

SEE SHEET ALT-01 FOR FLOOR PLAN

1 1/4" = 1'-0"
36x40 Floor Plan

All rated construction (both vertical and horizontal) must be clearly defined, correctly indentified, detailed, and listed in accordance with CBC Chapters 3,5,7 and 10 (fire partitions, barriers, walls, shaft, egress protection, ceilings, opening protection, penetrations, structural members, etc). Provide and cross-reference installation details, including all components and attachment schedules for the fire-resistive materials to the framing. Shall conform in every particular with the design number specified

SECTION 915
CARBON MONOXIDE DETECTION

915.4 Carbon monoxide alarms. Carbon monoxide alarms shall comply with Sections 915.4.1 through 915.4.4.

[F] 915.4.1 Power source. Carbon monoxide alarms shall receive their primary power from the building wiring where such wiring is served from a commercial source, and when primary power is interrupted, shall receive power from a battery. Wiring shall be permanent and with-out a disconnecting switch other than that required forovercurrent protection.

915.2.3 Group E occupancies. Carbon monoxide detection shall be installed in classrooms in Group E occu-pancies. Carbon monoxide alarm signals shall be automat-ically transmitted to an on-site location that is staffed byschool personnel.

915.3 Detection equipment. Carbon monoxide detection required by Sections 915.1 through 915.2.3 shall be provided by carbon monoxide alarms complying with Section 915.4 or carbon monoxide detection systems complying with Section 915.5.

ASSISTED LISTENING SYSTEM REQUIRED IN CLASSROOMS. PROVIDE SIGN FOR AVAILABILITY. SEE A0.2 FOR REQUIRED SIGN

Wall Schedule

	Stud Size	Sheet	Notes
☒	Wood Wall Stud	S4.5	
☐	Mtl Wall Stud	S4.5	CONTINUOUS EXT R-4 INSULATION

* SEE A0.5 FOR INTERIOR SOUND TRANSMISSION REQUIREMENTS, INTERIOR WALL LOCATION PER SITE SPECIFIC APPLICATION DRAWING,

5 1/4" = 1'-0"
Wall Schedule

Fire Rating Schedule

	Rating	Sheet	Notes
☐	1 HOUR - SIDING OVER WD STUDS	A2.5	WP#8105
☐	1 HOUR - PLASTER OVER 1/2" OSB OR 1/2" CDX PLY w/ WD STUDS	A2.6	PER-CBC-TABLE 721.1(2)
☐	1 HOUR - SIDING OVER STL STUDS	A2.7	WP#8006
☐	1 HOUR - PLASTER OVER 1/2" OSB OR 1/2" CDX PLY w/ STL STUDS	A2.8	PER-CBC-TABLE 721.1(2)

SEE A3.0 FOR ADDITIONAL FIRE ASSEMBLY NOTES AND DETAILS

4 1/4" = 1'-0"
Fire Rating Schedule

Ext. Finish Schedule

	Finishes	Sheet	Notes
☒	SIDING OVER WD STUDS	A2.1	
☐	PLASTER OVER 1/2" OSB OR 1/2" CDX PLY w/ WD STUDS	A2.2	
☐	SIDING OVER STL STUDS	A2.3	
☐	PLASTER OVER 1/2" OSB OR 1/2" CDX PLY w/ STL STUDS	A2.4	

3 1/4" = 1'-0"
Ext. Finish Schedule

Roofing Schedule

"SLOPE"	EDPM	Standing Seam	Parapet	Notes
Dual	☐ A4.2.2	☐ A4.0.2	N/A	
Mono	☐ A4.2.1	☒ A4.0.1	☐ A4.4.1	

HVAC Unit

Keynote	Type	Type Comments
☒ M1	Wall Mounted HVAC	See (M)-Sheets
☐ M2	Roof Mounted HVAV	See (M)-Sheets

IDENTIFICATION STAMP
DIV. OF THE STATE ARCHITECT
APP: 03-121617 INC:
REVIEWED FOR
SS ☑ FLS ☑ ACS ☑
DATE: 08/02/2021

PROFESSIONAL STAMP

REGISTERED PROFESSIONAL ENGINEER
HAMMY D. FRANCIS
No. S5380
STRUCTURAL
STATE OF CALIFORNIA

12/19/2017

THE PLANS, IDEAS & DESIGNS SHOWN ON THESE DRAWINGS ARE THE PROPERTY OF R&S TAVARES ASSOCIATES, INC. DEVISED SOLELY FOR THIS CONTRACT. THESE PLANS SHALL NOT BE USED, IN WHOLE OR IN PART, FOR ANY PURPOSE FOR WHICH THEY WERE NOT INTENDED WITHOUT THE EXPRESS WRITTEN CONSENT OF R&S TAVARES ASSOCIATES, INC. ©

CLIENT

CLASS LEASING LLC
1221 Harley Knox Boulevard
Perris, CA 92571

R&S TAVARES ASSOCIATES
DESIGN ◆ CONSULTING ◆ PROJECT
11777 Bernardo Plaza Court, Suite 105
San Diego, CA 92128
WWW.RSTAVARES.COM

ORIGINAL PC STATE AGENCY APPROVAL

FILE NUMBER: PC-128
IDENTIFICATION STAMP
DIVISION OF THE STATE ARCHITECT
04 - 116504 INCR: 0
AC RM FLS EA SSR KER
DATE 07/19/2018

PROJECT TITLE
24' x 40'
EXPANDABLE TO
120' x 40'

PRE-CHECK (PC) DOCUMENT
Code: [2016] CBC
A separate project application for construction is required.

PROJECT SPECIFIC STATE AGENCY APPROVAL

IDENTIFICATION STAMP
DIV. OF THE STATE ARCHITECT
APP: 04-119993 INC:
REVIEWED FOR
SS ☑ FLS ☑ ACS ☑
DATE 02/24/2021

Revision Schedule

#	Description	Date

SHEET TITLE
36x40 FLOOR PLAN

PROJECT NUMBER
17016A

DRAWN BY
rMc/SC

CHECKED BY
JA/RT

DATE
2017/06/05

SHEET NO.
A1.1
SHEET OF SHEETS

12/19/2017 1:12:06 PM C:\Users\Lee\Documents\17016 - Aries, 24x40 PC - MainFile - Low Seismic_Lee.rvt

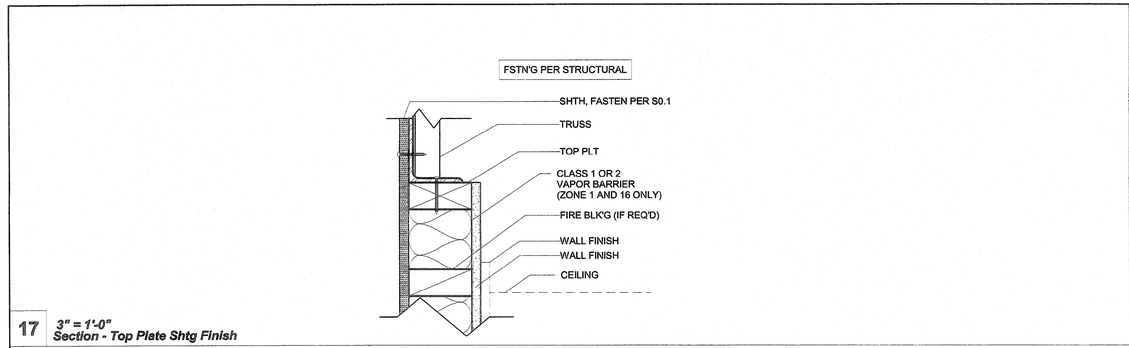

17 3" = 1'-0"
Section - Top Plate Shtg Finish

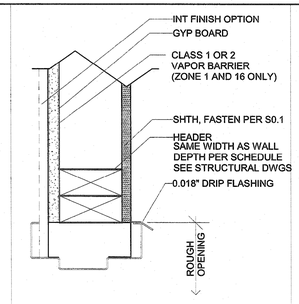

10A 3" = 1'-0"
Section - Ext Wall Hdr Door Shtg Finish

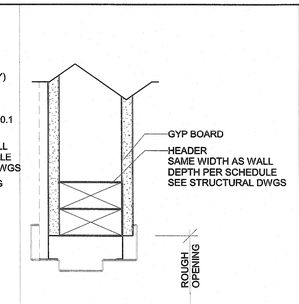

10B 3" = 1'-0"
Section - Int Wall Hdr Door Shtg Finish

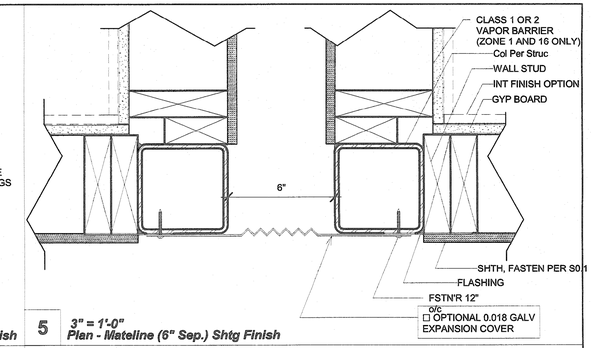

5 3" = 1'-0"
Plan - Mateline (6" Sep.) Shtg Finish

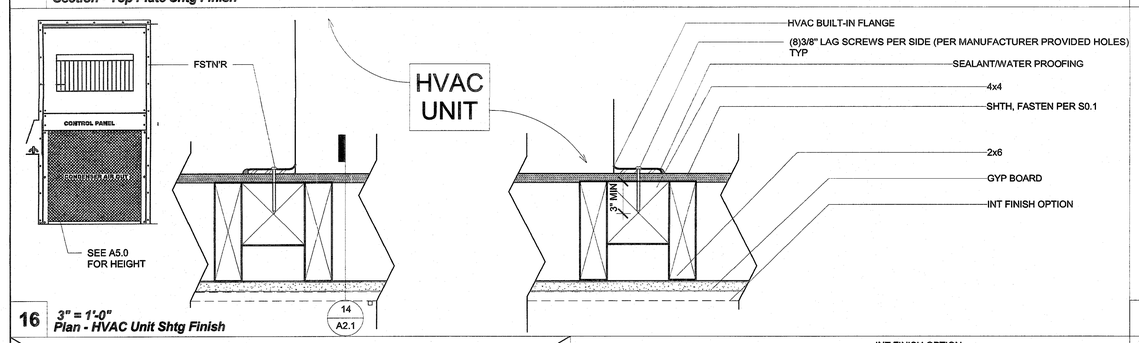

16 3" = 1'-0"
Plan - HVAC Unit Shtg Finish

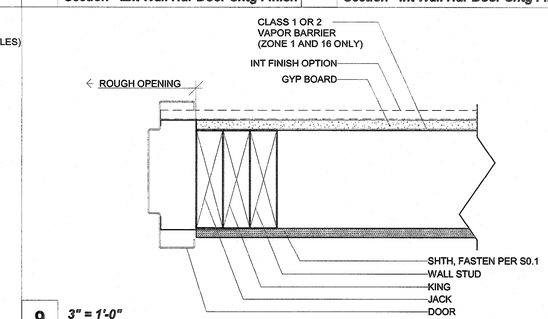

9 3" = 1'-0"
Plan - Exterior Door Jamb Shtg Finish

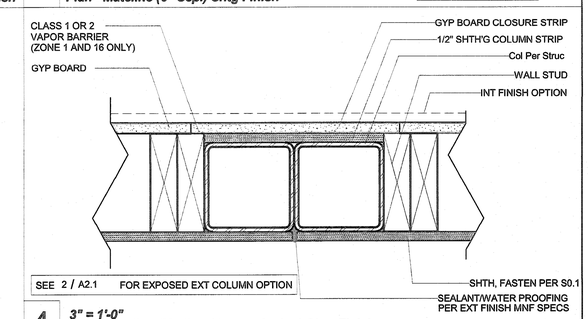

4 3" = 1'-0"
Plan - Mateline (Matline Closure Option) Shtg Finish

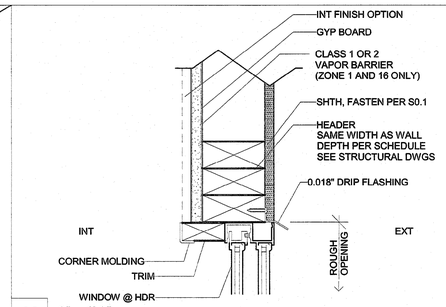

13 3" = 1'-0"
Section - Ext Wall Header @ Window Shtg Finish

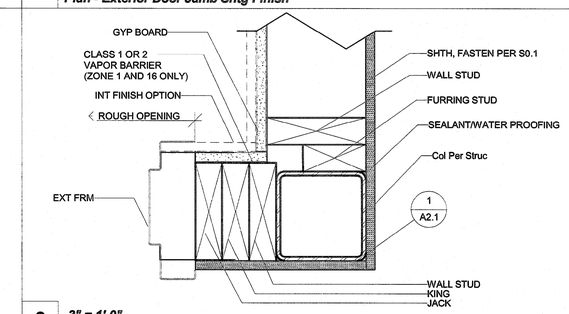

8 3" = 1'-0"
Plan - Exterior Door Jamb @ Wall Corner Shtg Finish

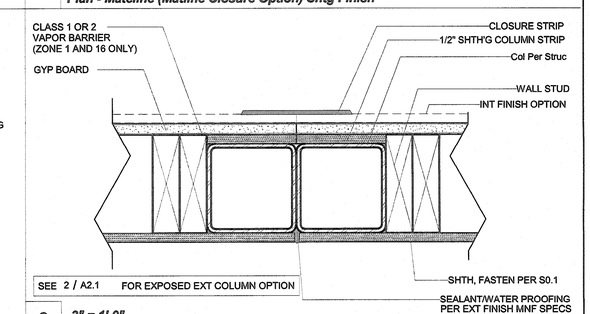

3 3" = 1'-0"
Plan - Mateline (Int Closure Strip) Shtg Finish

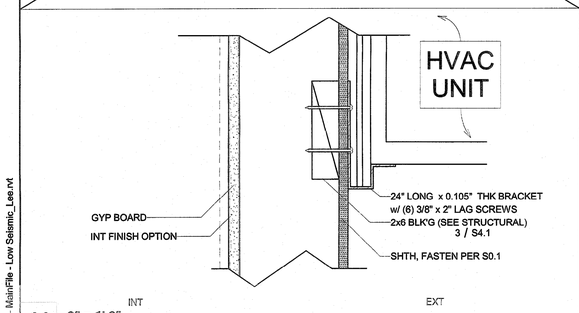

14 3" = 1'-0"
Section - Ext Wall @ HVAC Shtg Finish

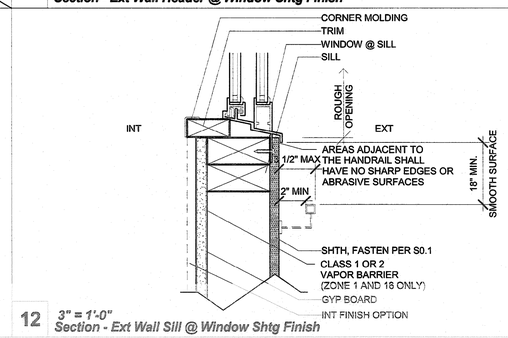

12 3" = 1'-0"
Section - Ext Wall Sill @ Window Shtg Finish

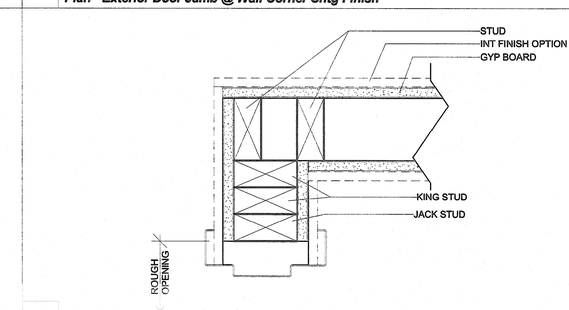

7 3" = 1'-0"
Plan - Interior Door Jamb @ Wall Corner Shtg Finish

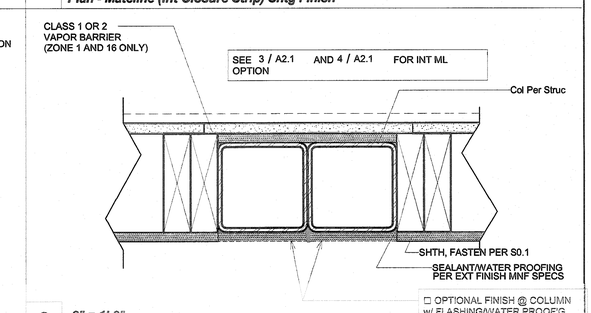

2 3" = 1'-0"
Plan - Mateline (ext exposed column mateline) Shtg Finish

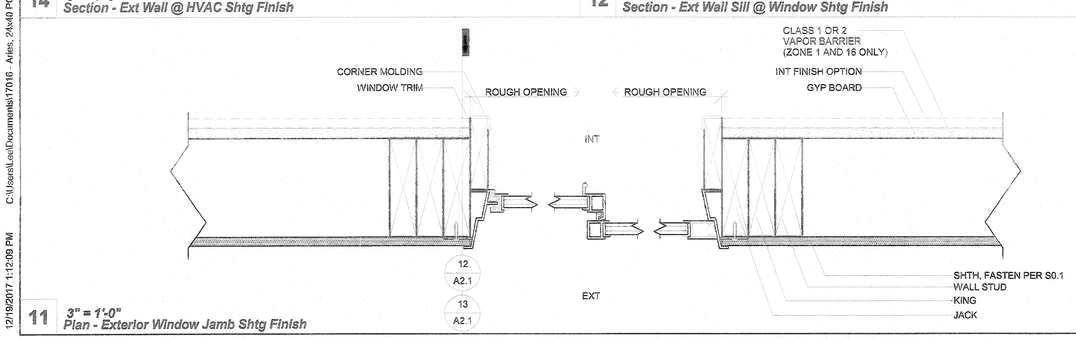

11 3" = 1'-0"
Plan - Exterior Window Jamb Shtg Finish

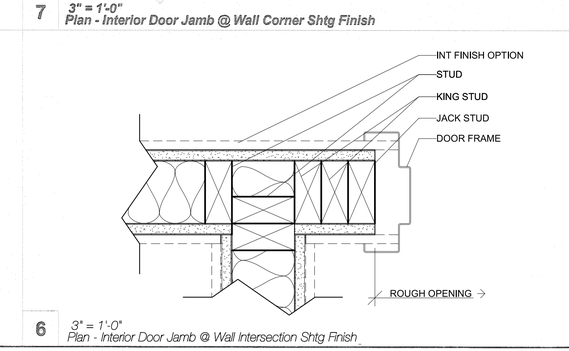

6 3" = 1'-0"
Plan - Interior Door Jamb @ Wall Intersection Shtg Finish

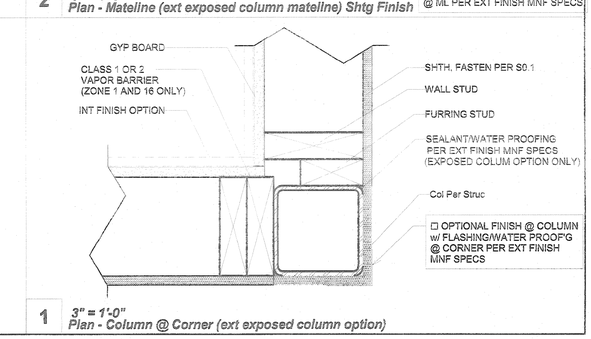

1 3" = 1'-0"
Plan - Column @ Corner (ext exposed column option)

IDENTIFICATION STAMP
DIV. OF THE STATE ARCHITECT
APP: 03-121617 INC:
REVIEWED FOR
SS ☑ FLS ☑ ACS ☑
DATE: 08/02/2021

PROFESSIONAL STAMP

REGISTERED PROFESSIONAL ENGINEER
MANNY D. FRESCO
No. 58380
STRUCTURAL
STATE OF CALIFORNIA

12/19/2017

THE PLANS, IDEAS & DESIGNS SHOWN ON THESE DRAWINGS ARE THE PROPERTY OF R&S TAVARES ASSOCIATES, INC. DEVISED SOLELY FOR THIS CONTRACT. THESE PLANS SHALL NOT BE USED, IN WHOLE OR IN PART, FOR ANY PURPOSE FOR WHICH THEY WERE NOT INTENDED WITHOUT THE EXPRESS WRITTEN CONSENT OF R&S TAVARES ASSOCIATES, INC. ©

CLIENT

CLASS LEASING LLC
1221 Harley Knox Boulevard
Perris, CA 92571

R&S TAVARES ASSOCIATES
DESIGN ◆ CONSULTING ◆ PROJECT
11777 BERNARDO PLAZA COURT, SUITE 105
SAN DIEGO, CA 92128
WWW.RSTAVARES.COM

ORIGINAL PC STATE AGENCY APPROVAL

FILE NUMBER: PC-128
IDENTIFICATION STAMP
DIVISION OF THE STATE ARCHITECT
04 - 116504 INCR: 0
AC RM FLS EA SSR KER
DATE 07/19/2018

PROJECT TITLE

24' x 40'
EXPANDABLE TO
120' x 40'

PRE-CHECK (PC) DOCUMENT
Code: [2016] CBC
A separate project application for construction is required.

PROJECT SPECIFIC STATE AGENCY APPROVAL

IDENTIFICATION STAMP
DIV. OF THE STATE ARCHITECT
APP: 04-119993 INC:
REVIEWED FOR
SS ☑ FLS ☑ ACS ☑
DATE: 02/24/2021

Revision Schedule

#	Description	Date

SHEET TITLE
ARCHITECTURAL DETAILS
(WOOD FRAMING
SHTG FINISH)

PROJECT NUMBER
17016A

DRAWN BY
rMc/SC

CHECKED BY
JA/RT

DATE
2017/06/05

SHEET NO.
A2.1

SHEET OF SHEETS

12/19/2017 1:12:09 PM C:\Users\Local\Documents\17016 - Aries, 24x40 PC - MainFile - Low Seismic_Lee.rvt

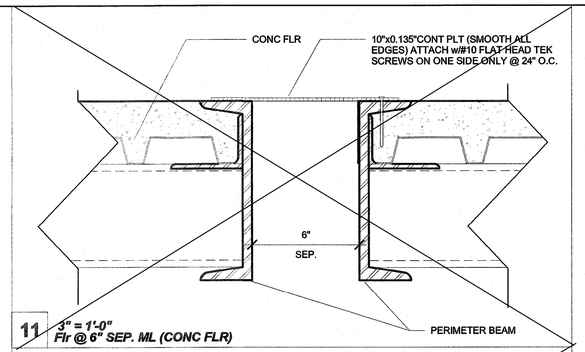

11 3" = 1'-0"
Flr @ 6" SEP. ML (CONC FLR)

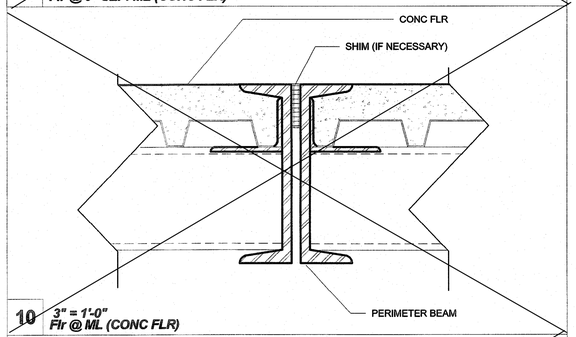

10 3" = 1'-0"
Flr @ ML (CONC FLR)

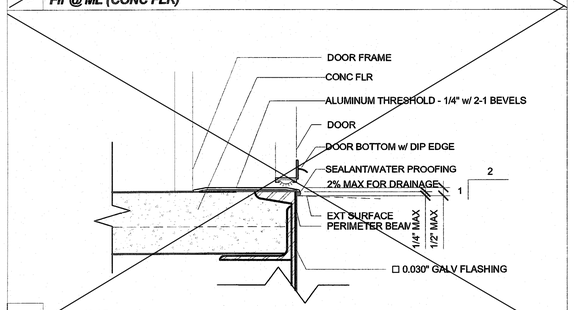

9 3" = 1'-0"
Typ Sill Plt @ Threshold (CONC FLR)

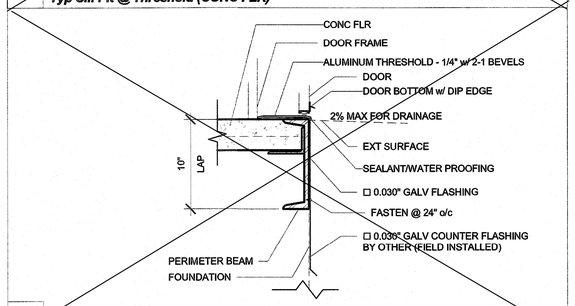

8 1 1/2" = 1'-0"
Threshold @ Fnd (CONC FLR)

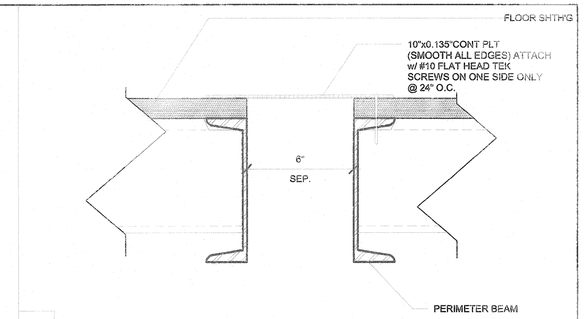

5 3" = 1'-0"
Flr @ 6" SEP. ML (WD FLR)

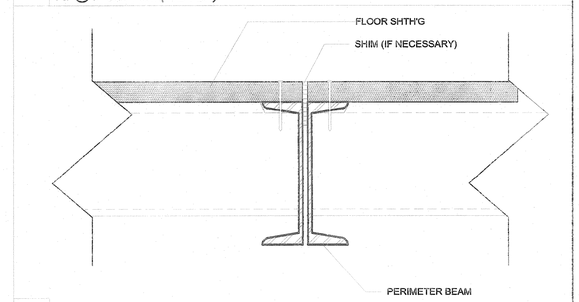

4 3" = 1'-0"
Flr @ ML (WD FLR)

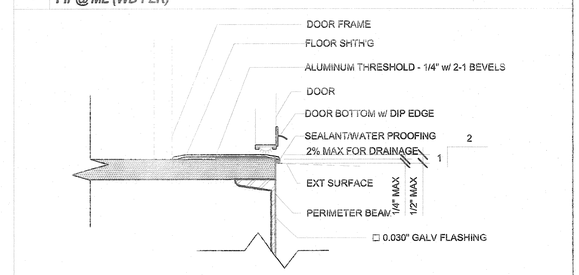

3 3" = 1'-0"
Typ Sill Plt @ Threshold (WD FLR)

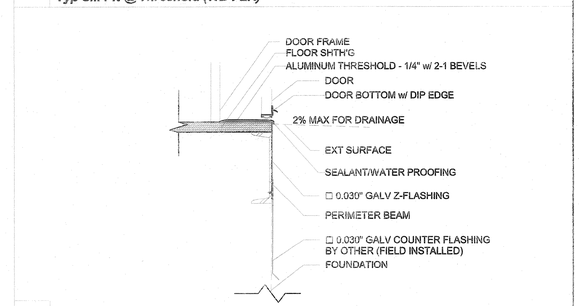

2 1 1/2" = 1'-0"
Threshold @ Fnd (WD FLR)

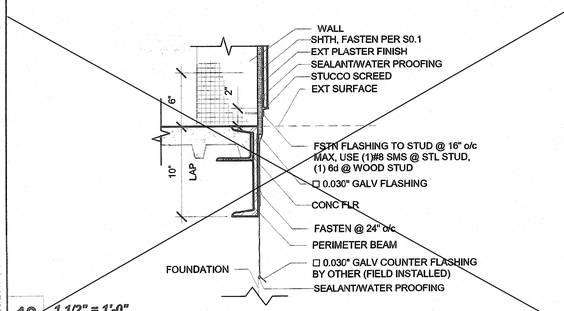

12 1 1/2" = 1'-0"
Typ Skirt @ Fnd PLSTR FIN (CONC FLR)

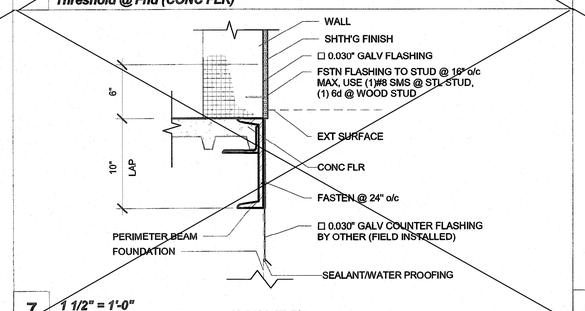

7 1 1/2" = 1'-0"
Typ Skirt @ Fnd SHTH'G FIN (CONC FLR)

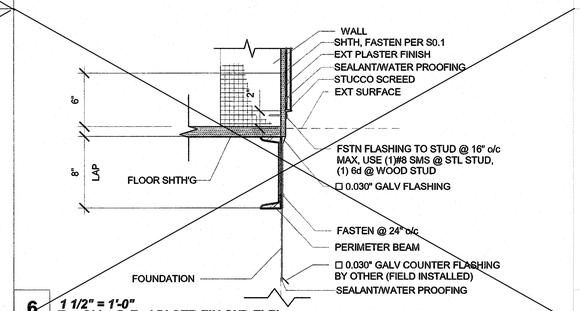

6 1 1/2" = 1'-0"
Typ Skirt @ Fnd PLSTR FIN (WD FLR)

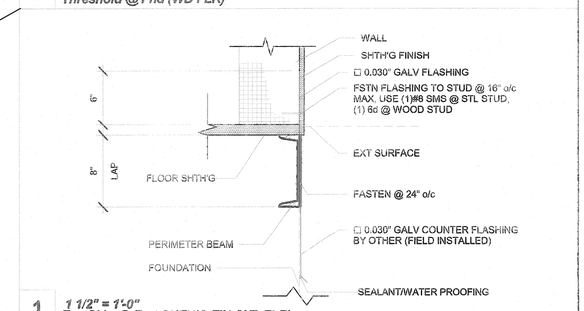

1 1 1/2" = 1'-0"
Typ Skirt @ Fnd SHTH'G FIN (WD FLR)

IDENTIFICATION STAMP
DIV. OF THE STATE ARCHITECT
APP: 03-121617 INC:
REVIEWED FOR
SS ☑ FLS ☑ ACS ☑
DATE: 08/02/2021

PROFESSIONAL STAMP

REGISTERED PROFESSIONAL ENGINEER MANNY D. FRANCO C-56 3900 STRUCTURAL STATE OF CALIFORNIA

12/19/2017

THE PLANS, IDEAS & DESIGNS SHOWN ON THESE DRAWINGS ARE THE PROPERTY OF R&S TAVARES ASSOCIATES, INC. DEVISED SOLELY FOR THIS CONTRACT. THESE PLANS SHALL NOT BE USED, IN WHOLE OR IN PART, FOR ANY PURPOSE FOR WHICH THEY WERE NOT INTENDED WITHOUT THE EXPRESS WRITTEN CONSENT OF R&S TAVARES ASSOCIATES, INC. ©

CLIENT

CLASS LEASING LLC
1221 Harley Knox Boulevard
Perris, CA 92571

R&S TAVARES ASSOCIATES
DESIGN ◆ CONSULTING ◆ PROJECT
11777 Bernardo Plaza Court, Suite 105
San Diego, CA 92128
WWW.RSTAVARES.COM

ORIGINAL PC STATE AGENCY APPROVAL

FILE NUMBER: PC-128
IDENTIFICATION STAMP
DIVISION OF THE STATE ARCHITECT
04 - 116504 INCR: 0
AC RM FLS EA SSR KER
DATE 07/19/2018

PROJECT TITLE
24' x 40'
EXPANDABLE TO
120' x 40'

PRE-CHECK (PC) DOCUMENT
Code: [2016] CBC
A separate project application for construction is required.

PROJECT SPECIFIC STATE AGENCY APPROVAL

IDENTIFICATION STAMP
DIV. OF THE STATE ARCHITECT
APP. 04-119993 INC:
REVIEWED FOR
SS ☑ FLS ☑ ACS ☑
DATE: 02/24/2021

Revision Schedule

#	Description	Date

SHEET TITLE
ARCHITECTURAL DETAILS (FLOOR)

PROJECT NUMBER
17016A

DRAWN BY
rMc/SC

CHECKED BY
JA/RT

DATE
2017/06/05

SHEET NO.
A2.9

SHEET OF SHEETS

12/18/2017 3:37:28 PM C:\Users\Sarah\Documents\17016 - Aries, 24x40 PC - MainFile - Low Seismic_Sarah.rvt

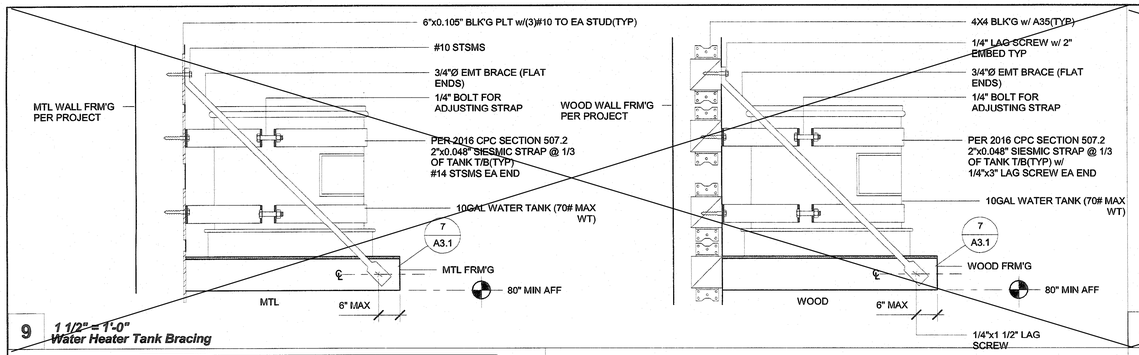

9 1 1/2" = 1'-0"
Water Heater Tank Bracing

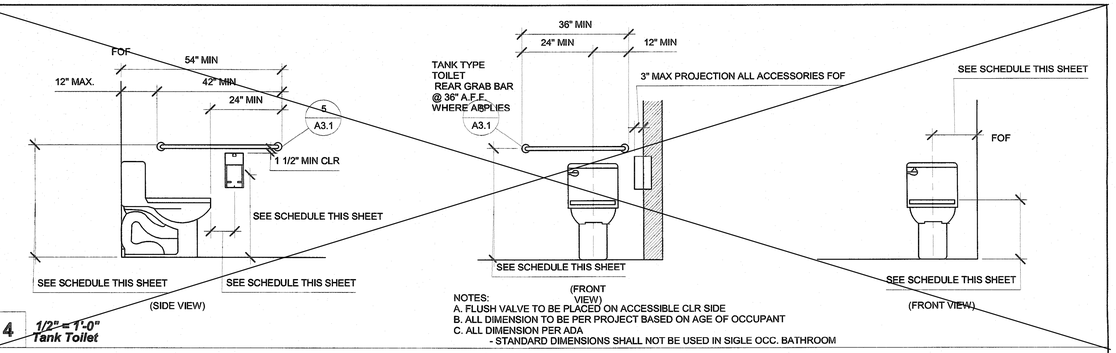

NOTES:
A. FLUSH VALVE TO BE PLACED ON ACCESSIBLE CLR SIDE
B. ALL DIMENSION TO BE PER PROJECT BASED ON AGE OF OCCUPANT
C. ALL DIMENSION PER ADA
- STANDARD DIMENSIONS SHALL NOT BE USED IN SIGLE OCC. BATHROOM

4 1/2" = 1'-0"
Tank Toilet

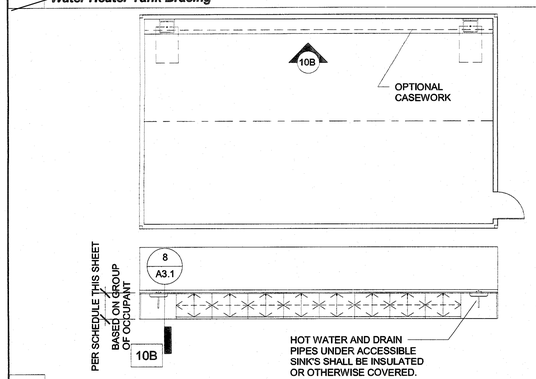

10 1/8" = 1'-0"
Optional Casework

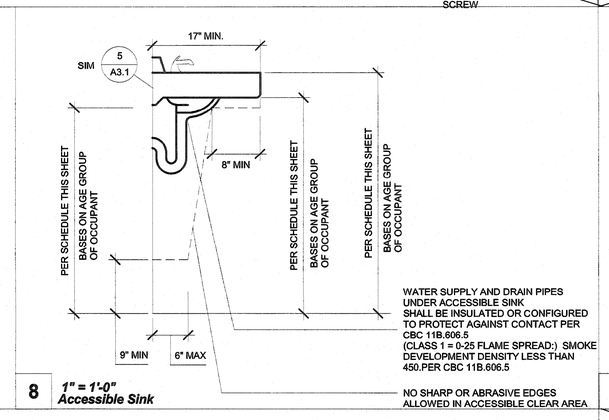

8 1" = 1'-0"
Accessible Sink

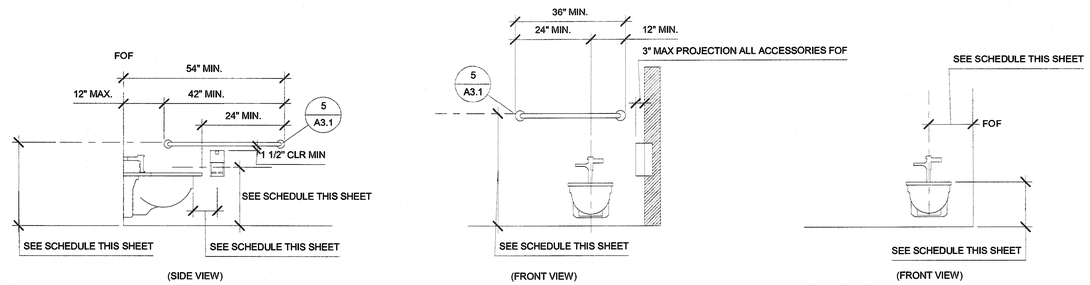

NOTES:
A. FLUSH VALVE TO BE PLACED ON ACCESSIBLE CLR SIDE
B. ALL DIMENSION TO BE PER PROJECT BASED ON AGE OF OCCUPANT
C. ALL DIMENSION PER ADA/CBC
- STANDARD DIMENSIONS SHALL NOT BE USED IN SINGLE OCC. BATHROOM

3 1/2" = 1'-0"
Wall Mounted Toilet

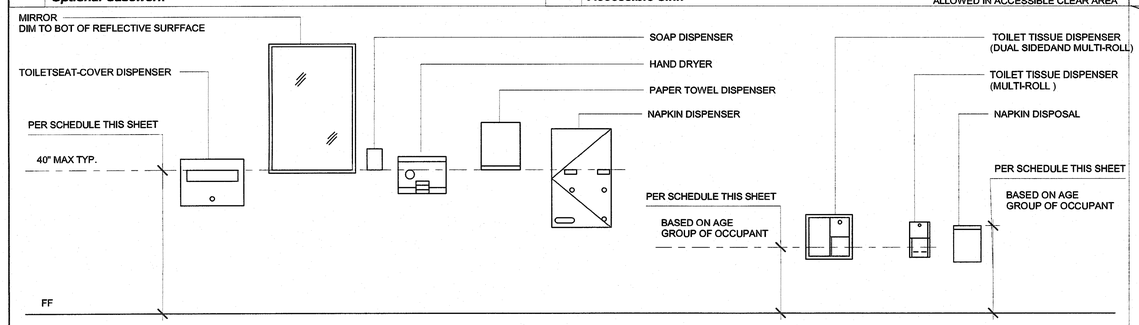

6 1/2" = 1'-0"
Mounting Heights

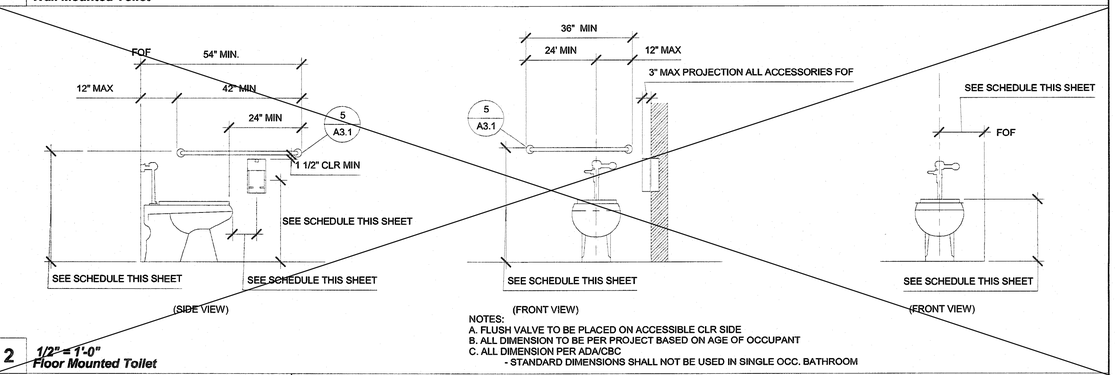

NOTES:
A. FLUSH VALVE TO BE PLACED ON ACCESSIBLE CLR SIDE
B. ALL DIMENSION TO BE PER PROJECT BASED ON AGE OF OCCUPANT
C. ALL DIMENSION PER ADA/CBC
- STANDARD DIMENSIONS SHALL NOT BE USED IN SINGLE OCC. BATHROOM

2 1/2" = 1'-0"
Floor Mounted Toilet

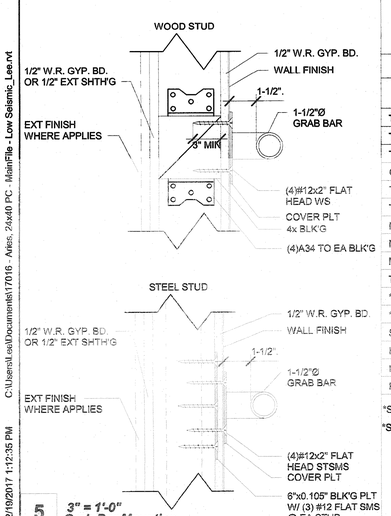

5 3" = 1'-0"
Grab Bar Mounting

RECOMMENDED ACCESSIBLE MOUNTING HEIGHT PER CBC TABLE 11B609.4

TYPE	☒	☐	☐	☐	☐
AGE GROUP	ADA ADULT	AGE 12 AND UP	AGES 9 THROUGH 12	AGES 5 THROUGH 8	AGES 3 AND 4
TOILET CENTERING FROM WALL	17" - 18"	17" - 18"	15" - 18"	12" - 15"	12"
TOILET SEAT HEIGHT	17" - 19"	17" - 19"	15" - 17"	12" - 15"	11" - 12"
TOILET FRONT CLEARANCE	48"	48"	48"	48"	48"
GRAB BAR HEIGHT (TOP OF BAR)	33" - 36"	33" - 36"	25" - 27"	20" - 25"	18" - 20"
TOILET PAPER IN FRONT OF TOILET	8" MAX.	7" - 9"	7" - 9"	7" - 9"	7" - 9"
TOILET PAPER DISPENSER HEIGHT (CENTER)	19" MIN.	19" MIN.	17" - 19"	14" - 17"	14"
NAPKIN DISPOSAL IN FRONT OF TOILET	12" MAX.	12" MAX.	12" MAX.	N/A	N/A
NAPKIN DISPOSAL HEIGHT (TO TOP)	25"-30"	25"-30"	25"-30"	N/A	N/A
MIRROR HEIGHT (TO REFLECTIVE SURFACE)	40" MAX.	40" MAX.	40" MAX.	36" MAX.	32" MAX.
TOILET SEAT COVER DISPENSER HEIGHT	40"	40"	40"	36"	32"
*SINK (TOP)	34" MAX.	34" MAX.	34" MAX.	31" MAX.	*24" MAX.
*SINK (BOT)	29" MIN.	29" MIN.	27" MIN.	24" MIN.	19" MIN.
SOAP DISPENSER	40" MAX.	40" MAX.	40" MAX.	36" MAX.	32" MAX.
HAND DRYER (TOP OF CONTROL)	40" MAX.	40" MAX.	40" MAX.	36" MAX.	32" MAX.
NAPKIN DISPENSER HEIGHT (TOP OF DISP.)	40" MAX.	40" MAX.	40" MAX.	N/A	N/A
PAPER TOWEL DISPENSER HEIGHT	40" MAX.	40" MAX.	40" MAX.	36" MAX.	32" MAX.

*SINK SHALL ACCOMMODATE SIDE APPROACH w/ 30x48 CLR SPACE
*SEE DETAIL THIS SHEET FOR DIMENSIONS AND NOTES ON KNEE AND TOE CLEARANCE

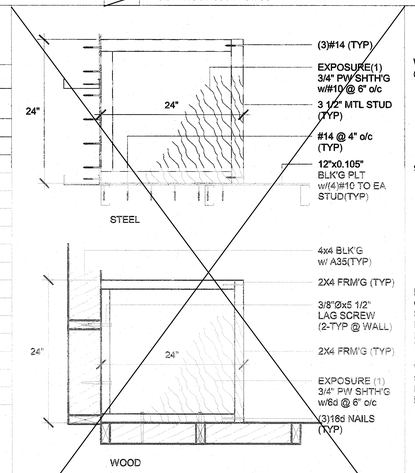

7 1" = 1'-0"
Water Heater Shelf Framing

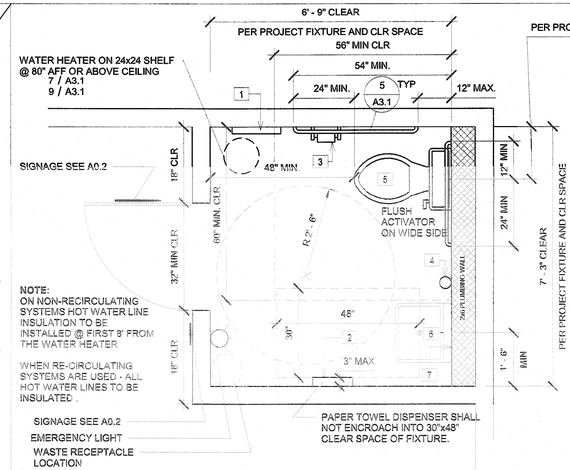

1. TOILET SEAT COVER DISPENSER: SURFACE MOUNTED.
2. PAPER TOWEL DISPENSER: SURFACE MOUNTED 3" MAX PROJECTION .
3. TOILET PAPER HOLDER: SINGLE ROLL SEMI-RECESSED INTO WALL IF SURFACE MOUNTED 3" MAX PROJECTION
4. LIQUID SOAP DISPENSER: SURFACE MOUNTED 4" MAX PROJECTION.
5. WATER CLOSET PER PROJECT SEE PLUMBING PLAN FOR TYPE SEE DETAILS THIS SHEET FOR MOUNTING SEE SCHEDULE THIS SHEET FOR MOUNTING HEIGHTS PER AGE GROUP
6. SINK PER PROJECT SEE PLUMBING PLAN FOR TYPE SEE DETAILS THIS SHEET FOR MOUNTING SEE SCHEDULE THIS SHEET FOR MOUNTING HEIGHTS PER AGE GROUP
7. SERIES 530 RETURNED MIRRORS STAINLESS STEEL -18GA 18"x24" - "J" SHEET METAL MANUFACTURED OR APPROVED EQUAL

1 1/2" = 1'-0"
Accessible Single Occ Bathroom Plan

IDENTIFICATION STAMP
DIV. OF THE STATE ARCHITECT
APP: 03-121617 INC:
REVIEWED FOR
SS ☑ FLS ☑ ACS ☑
DATE: 08/02/2021

PROFESSIONAL STAMP
REGISTERED PROFESSIONAL ENGINEER MANNY D. FRANCO C43380 STRUCTURAL STATE OF CALIFORNIA
12/19/2017

THE PLANS, IDEAS & DESIGNS SHOWN ON THESE DRAWINGS ARE THE PROPERTY OF R&S TAVARES ASSOCIATES, INC. DEVISED SOLELY FOR THIS CONTRACT. THESE PLANS SHALL NOT BE USED, IN WHOLE OR IN PART, FOR ANY PURPOSE FOR WHICH THEY WERE NOT INTENDED WITHOUT THE EXPRESS WRITTEN CONSENT OF R&S TAVARES ASSOCIATES, INC. ©

CLIENT
CLASS LEASING LLC
1221 Harley Knox Boulevard
Perris, CA 92571

R&S TAVARES ASSOCIATES
DESIGN ◆ CONSULTING ◆ PROJECT
11777 BERNARDO PLAZA COURT, SUITE 105
SAN DIEGO, CA 92128
WWW.RSTAVARES.COM

ORIGINAL PC STATE AGENCY APPROVAL
FILE NUMBER: PC-128
IDENTIFICATION STAMP
DIVISION OF THE STATE ARCHITECT
04 - 116504 INCR: 0
AC RM FLS EA SSR KER
DATE 07/19/2018

PROJECT TITLE
24' x 40'
EXPANDABLE TO
120' x 40'

PRE-CHECK (PC) DOCUMENT
Code: [2016] CBC
A separate project application for construction is required.

PROJECT SPECIFIC STATE AGENCY APPROVAL
IDENTIFICATION STAMP
DIV. OF THE STATE ARCHITECT
APP: 04-119993 INC:
REVIEWED FOR
SS ☑ FLS ☑ ACS ☑
DATE: 02/24/2021

Revision Schedule

#	Description	Date

SHEET TITLE
SINGLE OCC. BATHROOM

PROJECT NUMBER
17016A

DRAWN BY
rMc/SC

CHECKED BY
JA/RT

DATE
2017/06/05

SHEET NO.
A3.1
SHEET OF SHEETS

12/19/2017 1:12:35 PM C:\Users\Lea\Documents\17016 - Artec, 24x40 PC - Main\File - Low Seismic_Lee.rvt

SEE SHEET ALT-01
FOR REFLECTED
CEILING PLAN

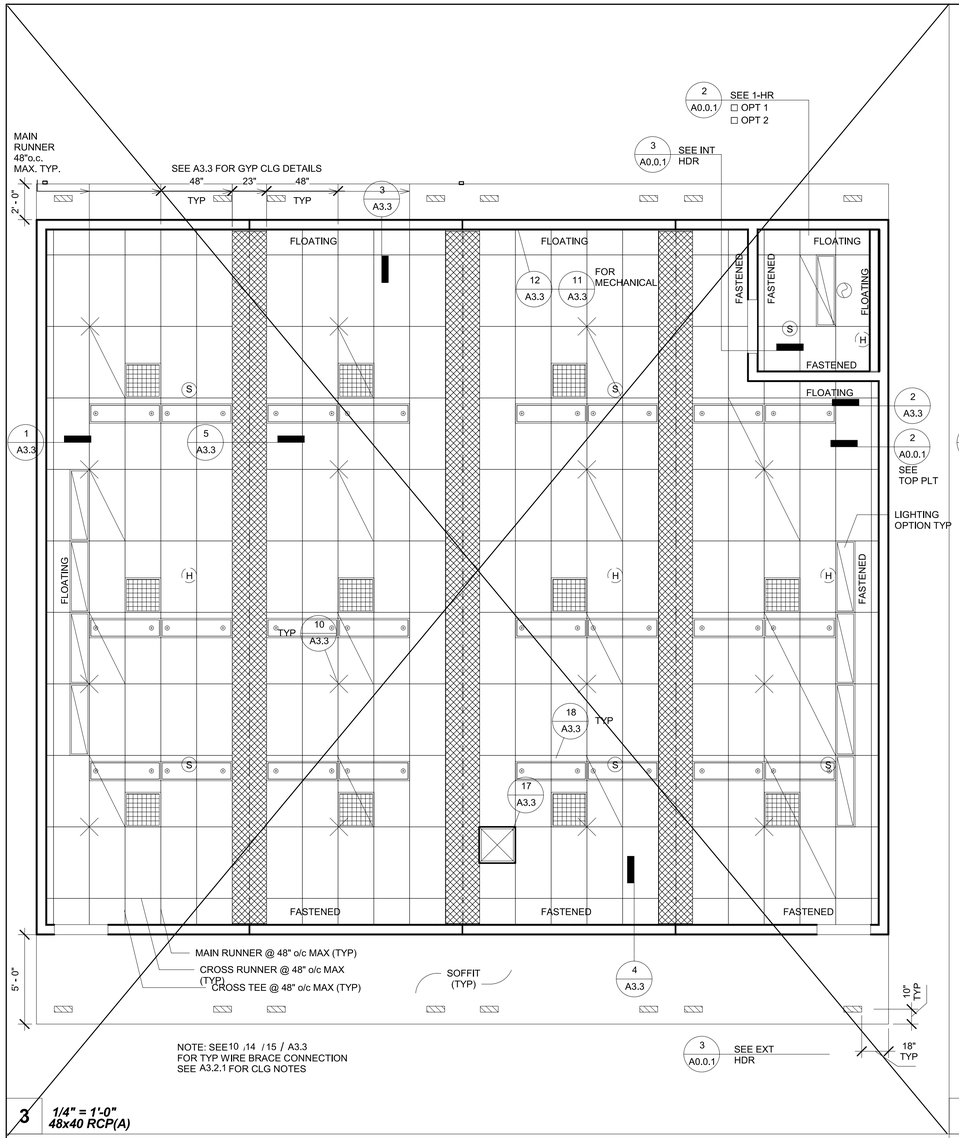

3 *1/4" = 1'-0"*
48x40 RCP(A)

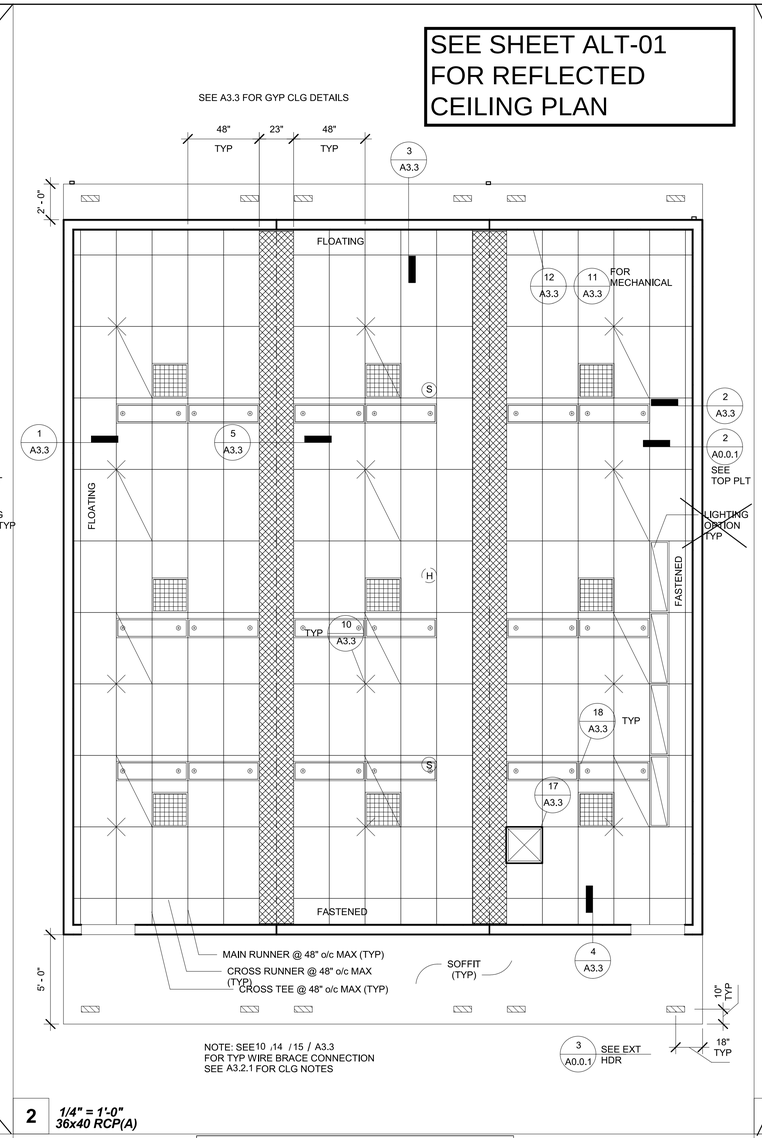

2 *1/4" = 1'-0"*
36x40 RCP(A)

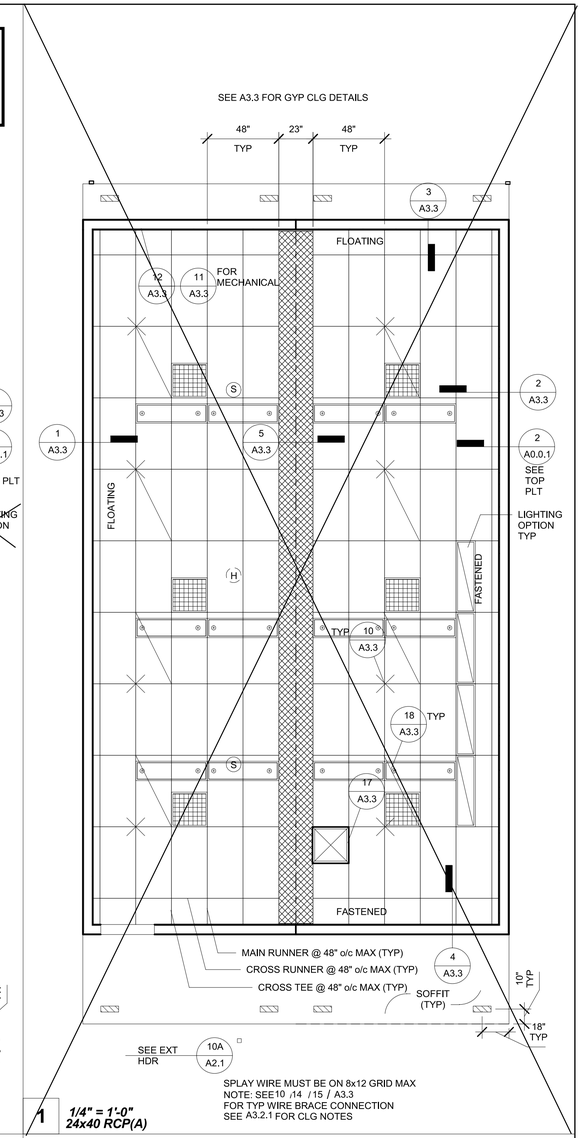

1 *1/4" = 1'-0"*
24x40 RCP(A)

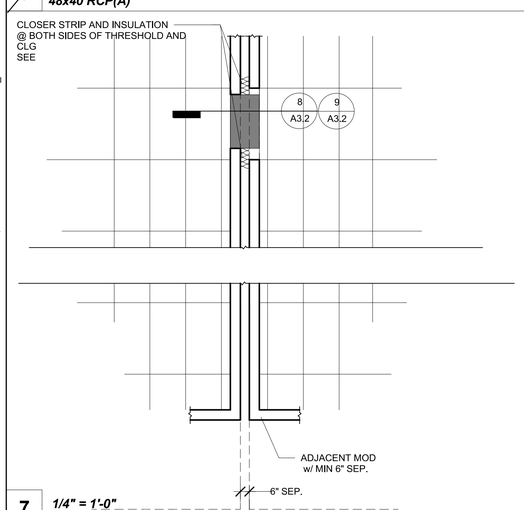

7 *1/4" = 1'-0"*
RCP - Optional Opening

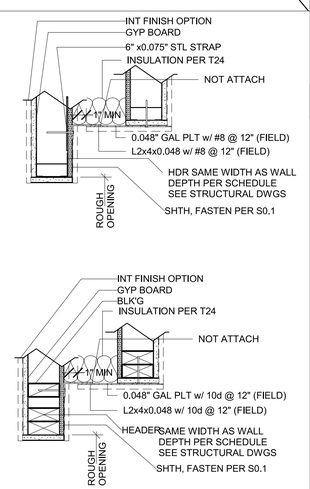

5 *1/4" = 1'-0"*
T-Bar Sched

ARMSTRONG #:
PA-041

MAIN RUNNER 7301
4' CROSS T #: XL7341
2' CROSS T #: XL7328

STANDARD 7/8" WALL ANGLE CLIP w/ BERC-2 CLIP (ICC #ESR-1308)
2" WALL ANGLE: 7810 (OPTIONAL)

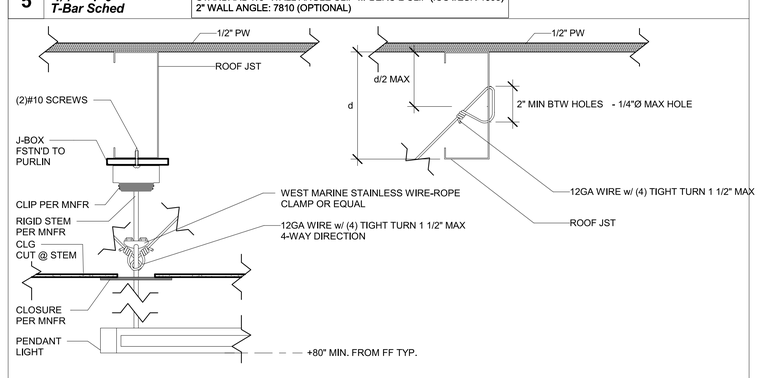

6 *3" = 1'-0"*
Section - Pendant Mounting Detail

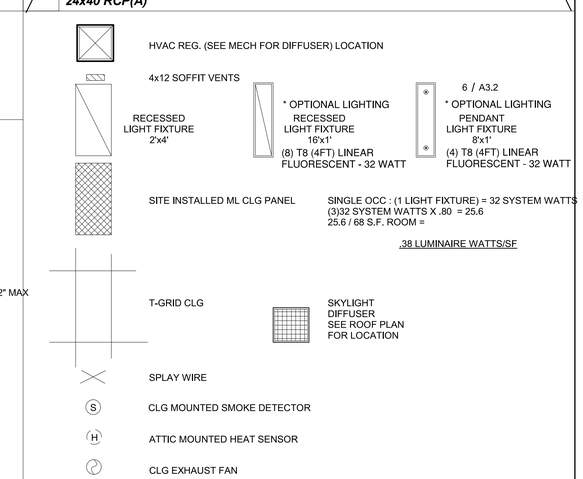

4 *1/4" = 1'-0"*
RCP Legend

IDENTIFICATION STAMP
DIV. OF THE STATE ARCHITECT
APP: 03-121617 INC:
REVIEWED FOR
SS ☑ FLS ☑ ACS ☑
DATE: 08/02/2021

PROFESSIONAL STAMP

REGISTERED PROFESSIONAL ENGINEER MANNY D. FRANCO C-23804 STRUCTURAL STATE OF CALIFORNIA

12/19/2017

THE PLANS, IDEAS & DESIGNS SHOWN ON THESE DRAWINGS ARE THE PROPERTY OF R&S TAVARES ASSOCIATES, INC. DEVISED SOLELY FOR THIS CONTRACT. THESE PLANS SHALL NOT BE USED, IN WHOLE OR IN PART, FOR ANY PURPOSE FOR WHICH THEY WERE NOT INTENDED WITHOUT THE EXPRESS WRITTEN CONSENT OF R&S TAVARES ASSOCIATES, INC. ©

CLIENT

CLASS LEASING LLC
1221 Harley Knox Boulevard
Perris, CA 92571

R&S TAVARES ASSOCIATES
DESIGN ◆ CONSULTING ◆ PROJECT
11777 BERNARDO PLAZA COURT, SUITE 105
SAN DIEGO, CA 92128
WWW.RSTAVARES.COM

ORIGINAL PC STATE AGENCY APPROVAL
FILE NUMBER: PC-128

IDENTIFICATION STAMP
DIVISION OF THE STATE ARCHITECT
04 - 116504 INCR: 0
AC RM FLS EA SSR KER
DATE 07/19/2018

PROJECT TITLE
24' x 40'
EXPANDABLE TO
120' x 40'

PRE-CHECK (PC) DOCUMENT
Code: [2016] CBC
A separate project application for construction is required.

PROJECT SPECIFIC STATE AGENCY APPROVAL

IDENTIFICATION STAMP
DIV. OF THE STATE ARCHITECT
APP: 04-119993 INC:
REVIEWED FOR
SS ☑ FLS ☑ ACS ☑
DATE: 02/24/2021

Revision Schedule

#	Description	Date

SHEET TITLE
RCP

PROJECT NUMBER
17016A

DRAWN BY
rMc/SC

CHECKED BY
JA/RT

DATE
2017/06/05

SHEET NO.
A3.2

SHEET OF SHEETS

C:\Users\Lee\Documents\17016 - Aries, 24x40 PC - MainFile - Low Seismic_Lee.rvt
1/4/2018 12:17:26 PM

1. CEILING SYSTEM GENERAL NOTES:

1.01 Ceiling system components shall comply with ASTM C635-07 and Section 5.1 of ASTM E580-10a.

1.02 The ceiling grid system must be rated heavy duty as defined by ASTM C635-08.

1.03 Ceiling systems. The following ceiling system(s) is/are part of the scope of this project: ***[For each system used, the RDP shall indicate in the construction documents, the information that follows]***

Manufacturer's Name ARMSTRONG.
Product Evaluation Report Type and Number PA-041.
Manufacturer's Model Number - main runner 7301. (SEE A3.2)
Manufacturer's catalog number - cross runner 4' CROSS T #: XL7341, 2' CROSS T #: XL7328.

1.04 Seismic Wall Clip: ***[RDP to specify if used]***
STANDARD 7/8" WALL ANGLE CLIP w/ BERC-2 CLIP (ICC #ESR-1308)
Manufacturer's Model 2" WALL ANGLE: 7810 (OPTIONAL)

1.05 Ceiling panels shall not support any light fixtures, air terminals or devices.

1.06 For ceiling installations utilizing acoustical tile panels of mineral or glass fiber, it is not mandatory to provide ¾" clearance between the acoustical tile panels and the wall on the sides of the ceiling which are free to slip. For all other ceiling panel types, provide ¾" clearance between the ceiling panel and the wall on the sides of the ceiling free to slip.

2. MATERIALS:

2.01 Ceiling wire shall be Class 1 zinc coated (galvanized) carbon steel conforming to ASTM A641-09a. Wire shall be #12 gage (0.106" diameter) with soft temper and minimum tensile strength = 70 ksi.

2.02 Galvanized sheet steel (including that used for metal stud and track compression struts/post) shall conform to ASTM A653-11, or other equivalent sheet steel listed in Section A2.1 of the North American Specification for the Design of Cold-Formed Steel Structural Members 2007, including supplement 2 dated 2010 (AISI S100-07/S2-10). Material 43 mil (18 gage) and lighter shall have minimum yield strength of 33 ksi. Material 54 mil (16 gage) and heavier shall have a minimum yield strength of 50 ksi.

2.03 Electrical metallic tube (EMT) shall be ANSI C80.3/UL 797 carbon steel with G90 galvanizing. EMT shall have minimum yield strength (Fy) of 30 ksi and minimum ultimate strength (Fu) of 48 ksi.

Basis Document: DSA IR 25-2.13			Sheet No:
Sheet Title: Ceiling Notes	rev.	09-21-15	1.00

3. ATTACHMENT OF HANGER AND BRACING WIRES:

3.01 Separate all ceiling hanger and bracing wires at least six (6) inches from all unbraced ducts, pipes, conduit, etc.

3.02 Hanger and bracing wires shall not attach to or bend around obstructions including but not limited to: piping, ductwork, conduit and equipment.

3.03 Hanger wires that are more than one (horizontal) in six (vertical) out of plumb shall have counter-sloping wires.

3.04 Slack safety wires shall be considered hanger wires for installation and testing requirements.

3.05 Hanger and bracing wire anchorage to the structure shall be installed in such a manner that the direction of the anchorage aligns closely with the direction of the wire. (e.g. bracing wire ceiling clips must be bent as shown in the details and rotated as required to align closely with the direction of the wire, screw eyes in wood must be installed so they align closely with the direction of the wire, etc.)

4. FASTENERS AND WELDING:

4.01 Sheet metal screws shall comply with ASTM C1513-10, ASME B18.6.4-89 (R2005). Penetration of screws through joined material shall not be less than three exposed threads.

4.02 Expansion anchors shall be not applicable.

4.03 Power-Actuated Fasteners shall be not applicable.

4.04 If not otherwise specified in the evaluation report, power-actuated fasteners installed in steel shall be installed so the entire pointed end of the fastener is driven through the steel member.

4.05 Power-actuated fasteners in concrete are not permitted for bracing wires.

4.06 Concrete reinforcement and prestressing tendons shall be located by non-destructive means prior to installing post - installed anchor.

4.07 Welding shall be in accordance with AWS D1.3 using E60XX series electrodes.

5. TESTING: All field testing must be performed in the presence of the project inspector.

5.01 Post-installed anchors in concrete used to support hanger wires shall be tested at a frequency of 10 percent. Power actuated fasteners in concrete shall be field tested for 200 lbs. in tension. All other post-installed anchors in concrete shall be tested in accordance with CBC Section 1913A.7.

5.02 Post-installed anchors in concrete used to attach bracing wires shall be tested at a frequency of 50 percent in accordance with CBC Section 1913A.7.

Basis Document: DSA IR 25-2.13			Sheet No:
Sheet Title: Ceiling Notes	rev.	09-21-15	1.01

6. LIGHT FIXTURES:

6.01 All light fixtures shall be positively attached to the ceiling suspension systems by mechanical means to resist a horizontal force equal to the weight of the fixture. A minimum of two screws or approved fasteners are required at each light fixture, per ASTM E580, Section 5.3.1.

6.02 Surface-mounted light fixtures shall be attached to the main runner with at least two positive clamping devices. The clamping device shall completely surround the supporting ceiling runner and be made of steel with a minimum thickness of #14 gage. Rotational spring catches do not comply. A #12 gage slack safety wire shall be connected from each clamping device to the structure above. Provide additional supports when light fixtures are eight (8) feet or longer or exceed 56 lb. Maximum spacing between supports shall not exceed eight (8) feet.

6.03 Light fixtures weighing less than or equal to 10 lb. shall have a minimum of one (1) #12 gage slack safety wire connected from the fixture housing to the structure above.

6.04 Light fixtures weighing less than or equal to 10 lb. shall have a minimum of one (1) #12 gage slack safety wire connected from the fixture housing to the structure above.

6.05 Light fixtures weighing greater than 10 lb. but less than or equal to 56 lbs. may be supported directly on the ceiling runners, but they shall have a minimum of two (2) #12 gage slack safety wires connected from the fixture housing at diagonal corners to the structure above.

Exception: All light fixtures greater than two by four feet weighing less than 56 lbs. shall have a #12 gage slack safety wire at each corner.

6.06 All Light fixtures weighing greater than 56 lb. shall be independently supported by not less than four (4) taut #12 gage hanger wires (one at each corner) attached from the fixture housing to the structure above or other approved hangers. The four (4) taut #12 gage wires or other approved hangers, including their attachment to the structure above, shall be capable of supporting four (4) times the weight of the fixture.

7. SERVICES WITHIN THE CEILING:

7.01 All flexible sprinkler hose fitting mounting brackets, ceiling-mounted air terminals or other services shall be positively attached to the ceiling suspension systems by mechanical means. Screws or approved fasteners are required. A minimum of two attachments are required at each component.

7.02 Ceiling-mounted air terminals or other services weighing less than or equal to 20 lb. shall have one (1) #12 gage slack safety wire attached from the terminal or service to the structure above.

7.03 Flexible sprinkler hose fittings, ceiling-mounted air terminals or other services weighing more than 20 lb. but less than or equal to 56 lb. shall have two (2) #12 gage slack safety wires (at diagonal corners) connected from the terminal or service to the structure above.

7.04 Flexible sprinkler hose fittings, ceiling-mounted air terminals or other services weighing more than 56 lb. shall be supported directly from the structure above by not less than four (4) taut #12 gage hanger wires attached from the terminal or service to the structure above or other approved hangers.

Basis Document: DSA IR 25-2.13			Sheet No:
Sheet Title: Ceiling Notes	rev.	09-21-15	1.02

8. OTHER DEVICES WITHIN THE CEILING:

8.01 All lightweight miscellaneous devices, such as strobe lights, occupancy sensors, speakers, exit signs, etc., shall be attached to the ceiling grid. In addition, devices weighing more than 10 lbs. shall have a #12 gage slack safety wire anchored to the structure above. Devices weighing more than 20 lb. shall be supported independently from the structure above.

Basis Document: DSA IR 25-2.13			Sheet No:
Sheet Title: Ceiling Notes	rev.	09-21-15	1.03

IDENTIFICATION STAMP
DIV. OF THE STATE ARCHITECT
APP: 03-121617 INC:
REVIEWED FOR
SS ☑ FLS ☑ ACS ☑
DATE: 08/02/2021

PROFESSIONAL STAMP

12/19/2017

THE PLANS, IDEAS & DESIGNS SHOWN ON THESE DRAWINGS ARE THE PROPERTY OF R&S TAVARES ASSOCIATES, INC. DEVISED SOLELY FOR THIS CONTRACT. THESE PLANS SHALL NOT BE USED, IN WHOLE OR IN PART, FOR ANY PURPOSE FOR WHICH THEY WERE NOT INTENDED WITHOUT THE EXPRESS WRITTEN CONSENT OF R&S TAVARES ASSOCIATES, INC. ©

CLIENT

CLASS LEASING LLC
1221 Harley Knox Boulevard
Perris, CA 92571

R&S TAVARES ASSOCIATES
DESIGN ◆ CONSULTING ◆ PROJECT
11777 Bernardo Plaza Court, Suite 105
San Diego, CA 92128
www.rstavares.com

ORIGINAL PC STATE AGENCY APPROVAL

FILE NUMBER: PC-128

IDENTIFICATION STAMP
DIVISION OF THE STATE ARCHITECT
04 - 116504 INCR: 0
AC RM FLS EA SSR KER
DATE 07/19/2018

PROJECT TITLE
24' x 40'
EXPANDABLE TO
120' x 40'

PRE-CHECK (PC) DOCUMENT
Code: [2016] CBC
A separate project application for construction is required.

PROJECT SPECIFIC STATE AGENCY APPROVAL

IDENTIFICATION STAMP
DIV. OF THE STATE ARCHITECT
APP: 04-119993 INC:
REVIEWED FOR
SS ☑ FLS ☑ ACS ☑
DATE: 02/24/2021

Revision Schedule

#	Description	Date

SHEET TITLE
CEILING NOTES

PROJECT NUMBER
17016A

DRAWN BY
rMc/SC

CHECKED BY
JA/RT

DATE
2017/06/05

SHEET NO.
A3.2.1

SHEET OF SHEETS

12/18/2017 3:37:36 PM C:\Users\Sarah\Documents\17016 - Aries, 24x40 PC - MainFile - Low Seismic_Sarah.rvt

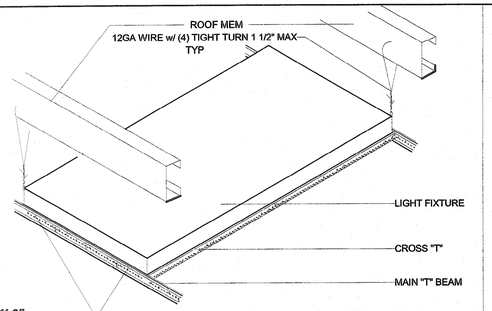

18 1" = 1'-0"
ISO - Light Fixture

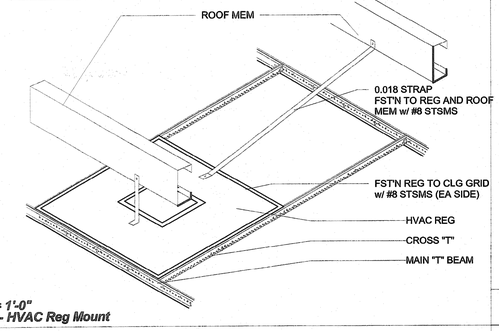

17 1" = 1'-0"
ISO - HVAC Reg Mount

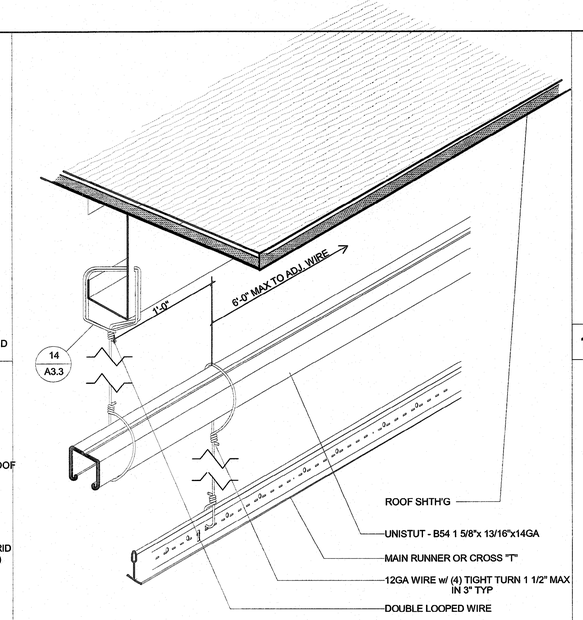

12 3" = 1'-0"
ISO - Trapeze Condition

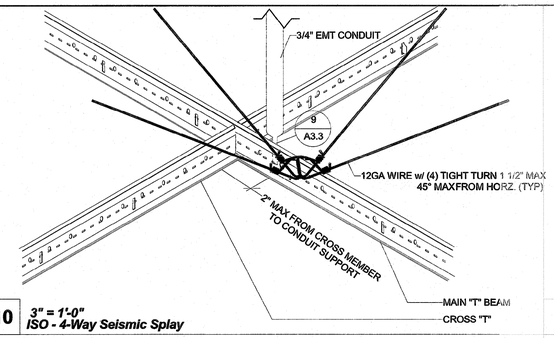

10 3" = 1'-0"
ISO - 4-Way Seismic Splay

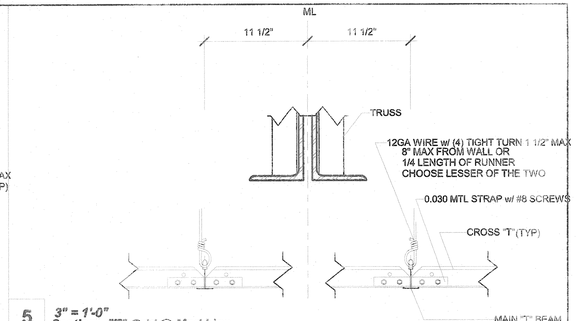

5 3" = 1'-0"
Section - "T" Grid @ Mod Line

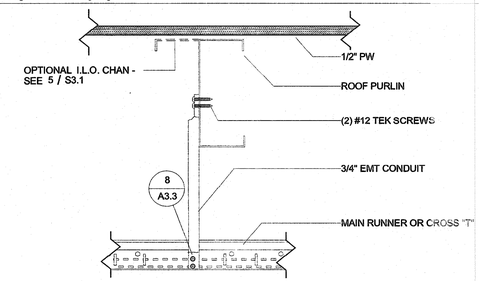

9 3" = 1'-0"
Elevation - Compression Strut

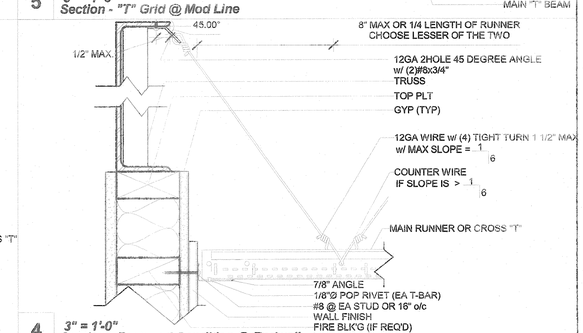

4 3" = 1'-0"
Section - Fastened Condition @ Endwall

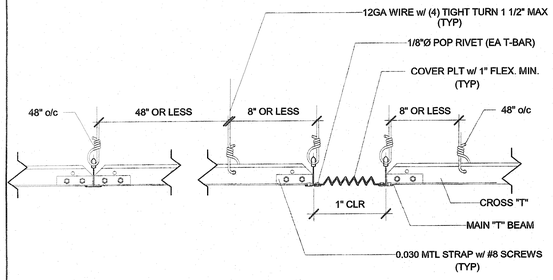

16 3" = 1'-0"
Section - "T" Grid @ Mod Line

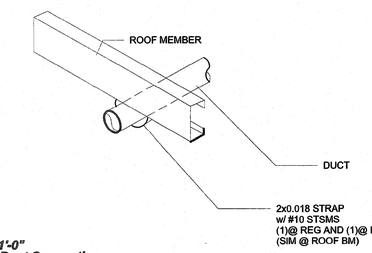

11 1" = 1'-0"
ISO - Duct Connection

NOTE:
CRIMP CONDUIT AND ATTACH TO MAIN RUNNER WITHIN 2" OF CROSS RUNNER

CONDUIT MAY BE CRIMPED AND ATTACHED ON EITHER SIDE OF "T" BAR PER CONDITION AND LOCATION

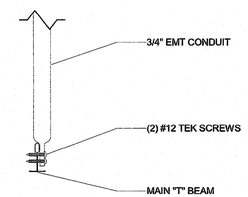

8 3" = 1'-0"
Section - Compression Strut

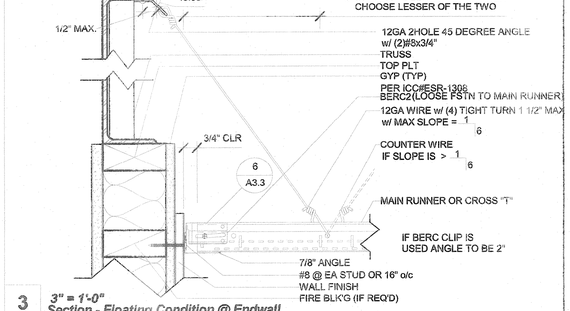

3 3" = 1'-0"
Section - Floating Condition @ Endwall

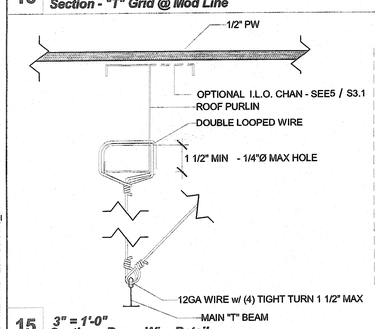

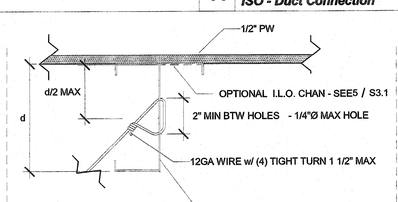

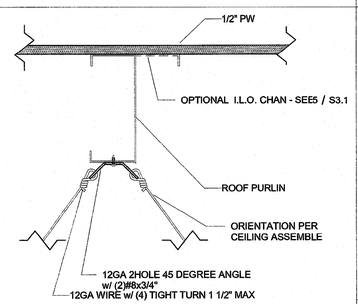

15 3" = 1'-0"
Section - Brace Wire Detail

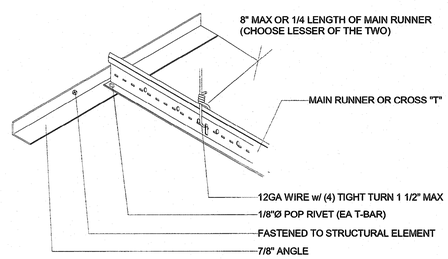

7 3" = 1'-0"
Fixed Condition w/ 2" Angle

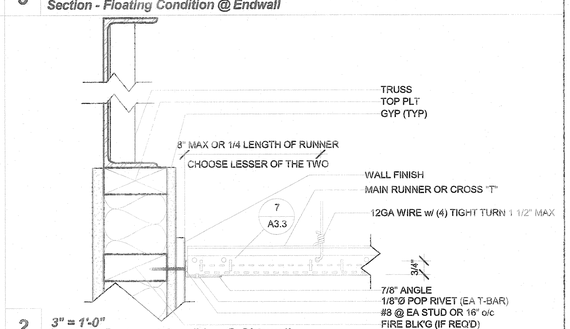

2 3" = 1'-0"
Section - Fastened Condition @ Sidewall

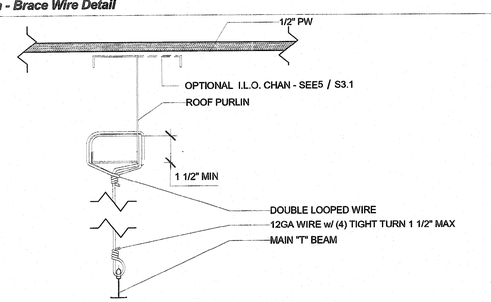

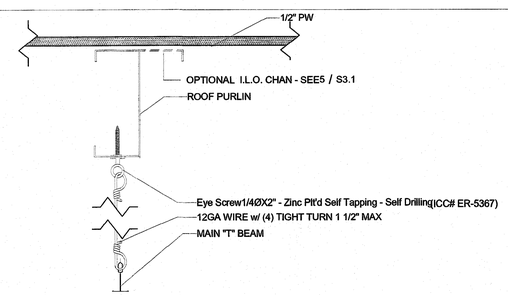

14 3" = 1'-0"
Section - Hanger Wire Detail

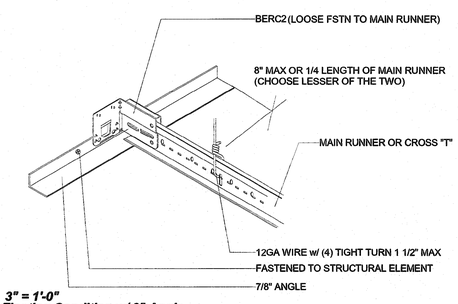

6 3" = 1'-0"
Floating Condition w/ 2" Angle

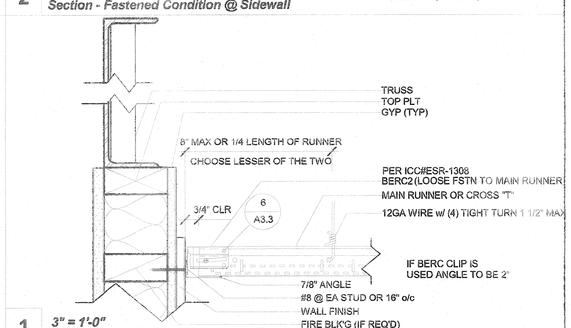

1 3" = 1'-0"
Section - Floating Condition @ Sidewall

IDENTIFICATION STAMP
DIV. OF THE STATE ARCHITECT
APP: 03-121617 INC:
REVIEWED FOR
SS ☑ FLS ☑ ACS ☑
DATE: 08/02/2021

PROFESSIONAL STAMP

12/19/2017

THE PLANS, IDEAS & DESIGNS SHOWN ON THESE DRAWINGS ARE THE PROPERTY OF R&S TAVARES ASSOCIATES, INC. DEVISED SOLELY FOR THIS CONTRACT. THESE PLANS SHALL NOT BE USED, IN WHOLE OR IN PART, FOR ANY PURPOSE FOR WHICH THEY WERE NOT INTENDED WITHOUT THE EXPRESS WRITTEN CONSENT OF R&S TAVARES ASSOCIATES, INC. ©

CLIENT

CLASS LEASING LLC
1221 Harley Knox Boulevard
Perris, CA 92571

R&S TAVARES ASSOCIATES
DESIGN ◆ CONSULTING ◆ PROJECT
11777 BERNARDO PLAZA COURT, SUITE 105
SAN DIEGO, CA 92128
WWW.RSTAVARES.COM

ORIGINAL PC STATE AGENCY APPROVAL

FILE NUMBER: PC-128

IDENTIFICATION STAMP
DIVISION OF THE STATE ARCHITECT
04 - 116504 INCR: 0
AC RM FLS EA SSR KER
DATE 07/19/2018

PROJECT TITLE

24' x 40'
EXPANDABLE TO
120' x 40'

PRE-CHECK (PC) DOCUMENT
Code: [2016] CBC
A separate project application for construction is required.

PROJECT SPECIFIC STATE AGENCY APPROVAL

IDENTIFICATION STAMP
DIV. OF THE STATE ARCHITECT
APP: 04-119993 INC:
REVIEWED FOR
SS ☑ FLS ☑ ACS ☑
DATE: 02/24/2021

Revision Schedule

#	Description	Date

SHEET TITLE
CEILING DETAILS
(T-GRID)

PROJECT NUMBER
17016A

DRAWN BY
rMc/SC

CHECKED BY
JA/RT

DATE
2017/06/05

SHEET NO.
A3.3

SHEET OF SHEETS

12/18/2017 3:37:41 PM C:\Users\Sarah\Documents\17016 - Aries, 24x40 PC - MainFile - Low Seismic_Sarah.rvt

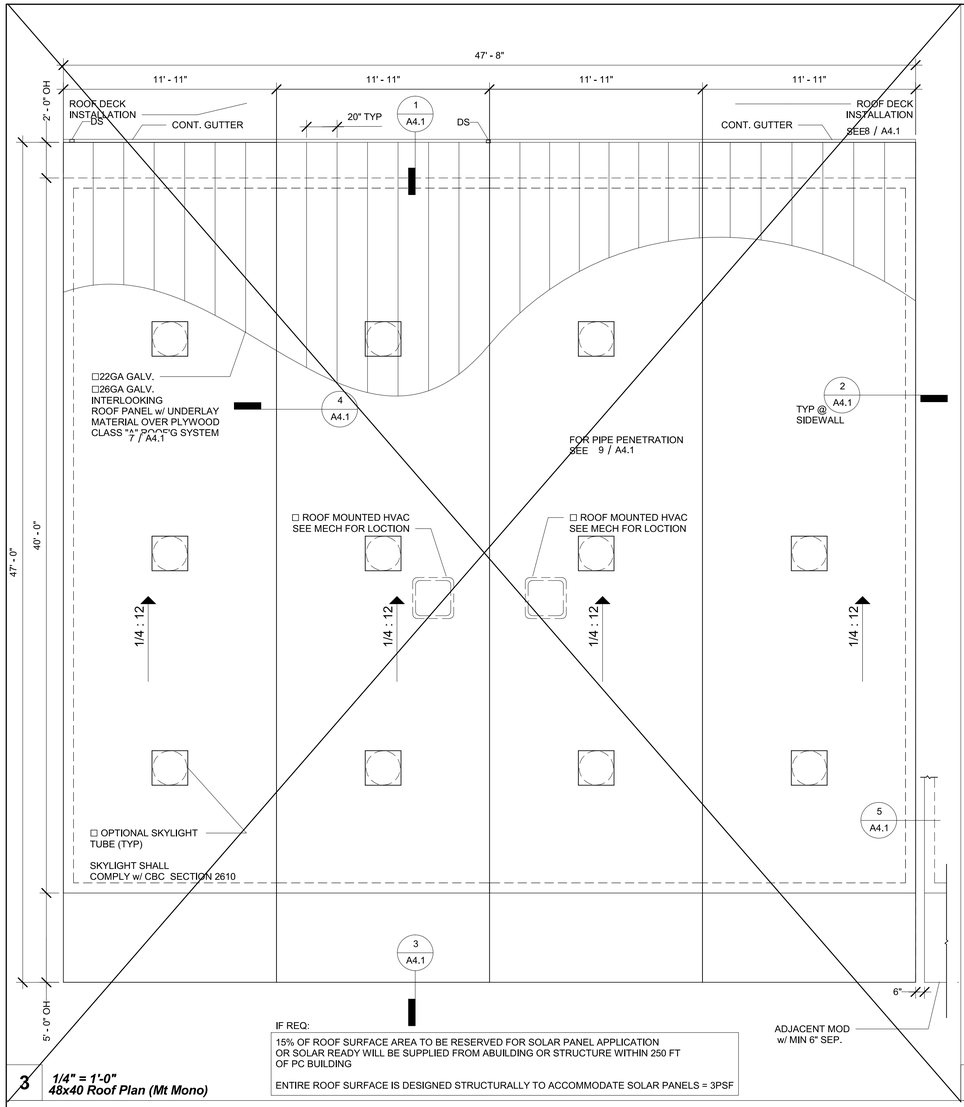

IF REQ:

15% OF ROOF SURFACE AREA TO BE RESERVED FOR SOLAR PANEL APPLICATION
OR SOLAR READY WILL BE SUPPLIED FROM ABUILDING OR STRUCTURE WITHIN 250 FT
OF PC BUILDING

ENTIRE ROOF SURFACE IS DESIGNED STRUCTURALLY TO ACCOMMODATE SOLAR PANELS = 3PSF

3 ***1/4" = 1'-0"***
48x40 Roof Plan (Mt Mono)

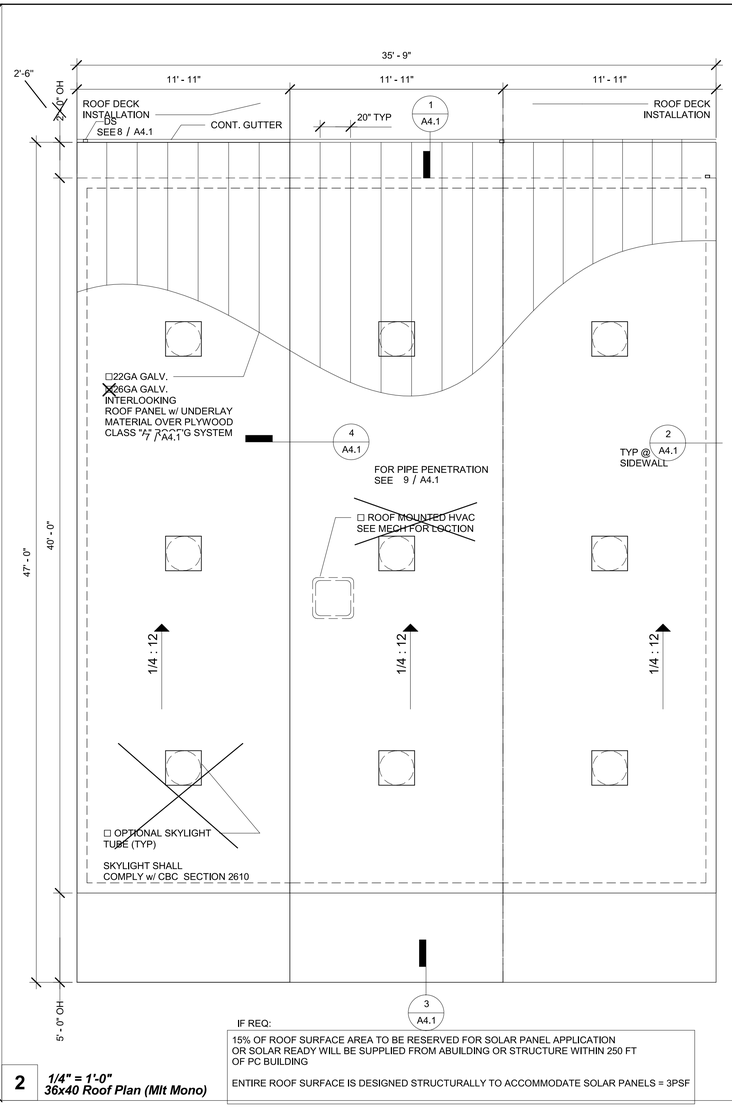

IF REQ:

15% OF ROOF SURFACE AREA TO BE RESERVED FOR SOLAR PANEL APPLICATION
OR SOLAR READY WILL BE SUPPLIED FROM ABUILDING OR STRUCTURE WITHIN 250 FT
OF PC BUILDING

ENTIRE ROOF SURFACE IS DESIGNED STRUCTURALLY TO ACCOMMODATE SOLAR PANELS = 3PSF

2 ***1/4" = 1'-0"***
36x40 Roof Plan (Mlt Mono)

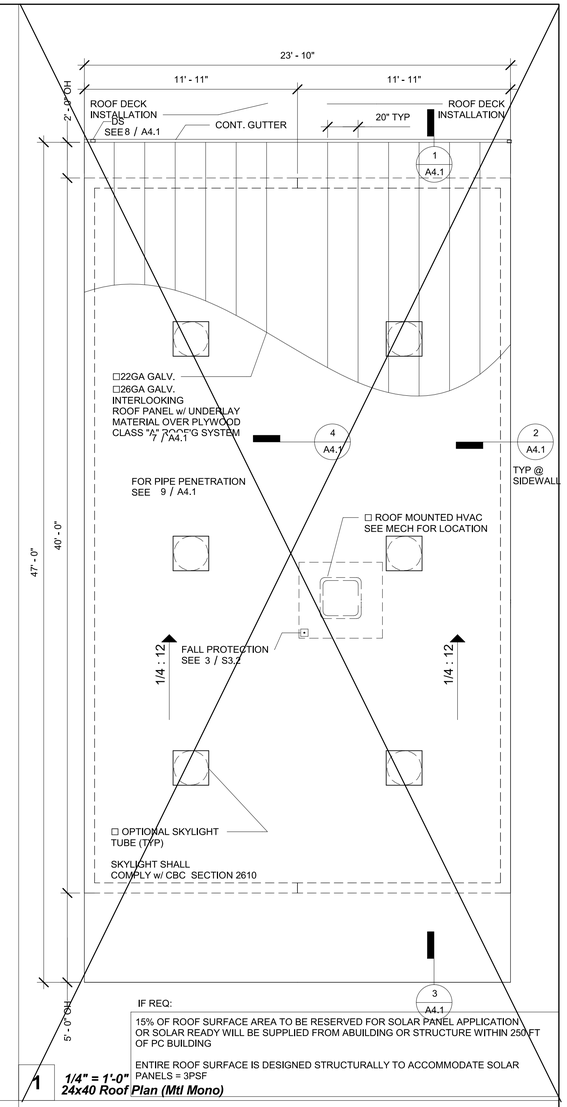

IF REQ:

15% OF ROOF SURFACE AREA TO BE RESERVED FOR SOLAR PANEL APPLICATION
OR SOLAR READY WILL BE SUPPLIED FROM ABUILDING OR STRUCTURE WITHIN 250 FT
OF PC BUILDING

ENTIRE ROOF SURFACE IS DESIGNED STRUCTURALLY TO ACCOMMODATE SOLAR
PANELS = 3PSF

1 ***1/4" = 1'-0"***
24x40 Roof Plan (Mtl Mono)

NOTE: PER CBC 1015.6. - EXCEPTION, GUARDRAILS ARE NOT REQUIRED WHERE PERMANENT FALL RESTRAINT ANCHORAGE DEVICES ARE AFFIXED & SHALL BE PLACED NOT MORE THAN 10FT FROM THE ROOF EDGE.

PV AREA FOR FIRE ACCESS REQ'T (PER IR 16-8)

3.2.1 General Requirements: A PV System shall be typically considered equipment. There is typically not an occupancy group classification, building area limitation, or type of construction assignment to a PV system.
a) PV equipment supported by non-combustible framing installed in locations dedicated for building frontage used for area increases per California Building Code (CBC), Chapter 5, Section 506, shall be limited in size and may be allowed on a case by case basis. Maximum area that may be allowed for such systems shall not exceed 1/3 of the horizontal projected area of each frontage.
b) Open sided PV systems and framing that are non-combustible and without use underneath may be considered equipment and may be placed next to DSA IR 16-8 Solar Photovoltaic and Thermal
(updated 01-25-17) Systems Review and Approval Requirements Page 11 of 19 property lines. Signs may be required on or near the system prohibiting any use or storage underneath the equipment.
c) Combustible PV systems and framing and those with use underneath such as for assembly or parking, may need to comply with 2010 CBC, Table 602. These structures may include those that do and that do not have a roof underneath the PV system.
d) PV systems (both the frame and the array) shall not be placed in fire department access roads. (Per Title 24 CCR, Division 1, Chapter 1, Section 3.05 and 2010 CFC Chapter 5, Section 503.)
e) Access to a public way or safe dispersal area shall not be obstructed by the system or system framing. (CBC 1027.6 and 442.3)
f) PV systems that cover a lunch area or similar (occupant load less than 50), that are not used for assembly purposes shall be considered equipment. Playgrounds would also fall into this category regardless of total occupant load.
g) Any PV system that is installed above an assembly use (i.e. Group A-3 or A-5 occupancy classification) shall be considered an open sided building structure and all or portions of CBC provisions apply on a case by case basis. Such areas might include an outdoor amphitheater, bleacher or grandstand seating with concentrated occupant loads and heavy use.
h) Fire Department concern for the installation of roof mounted PV systems will be addressed by DSA review to the State Fire Marshal Solar Photovoltaic Installation Guideline available at:
http://osfm.fire.ca.gov/pdf/reports/solarphotovoltaicguideline.pdf
i) When a PV system, without riser framework, is installed directly on a rated roof assembly with a required classification greater than "Class C" found in CBC, Chapter 15, and f

IDENTIFICATION STAMP
DIV. OF THE STATE ARCHITECT
APP: 03-121617 INC:
REVIEWED FOR
SS ☑ FLS ☑ ACS ☑
DATE: 08/02/2021

PROFESSIONAL STAMP

REGISTERED PROFESSIONAL ENGINEER
MANNY D. FRANCISCO
No. 38380
STRUCTURAL
STATE OF CALIFORNIA

12/19/2017

THE PLANS, IDEAS & DESIGNS SHOWN ON THESE DRAWINGS ARE THE PROPERTY OF R&S TAVARES ASSOCIATES, INC. DEVISED SOLELY FOR THIS CONTRACT. THESE PLANS SHALL NOT BE USED, IN WHOLE OR IN PART, FOR ANY PURPOSE FOR WHICH THEY WERE NOT INTENDED WITHOUT THE EXPRESS WRITTEN CONSENT OF R&S TAVARES ASSOCIATES, INC. ©

CLIENT

CLASS LEASING LLC
1221 Harley Knox Boulevard
Perris, CA 92571

R&S TAVARES ASSOCIATES
DESIGN ◆ CONSULTING ◆ PROJECT
11777 BERNARDO PLAZA COURT, SUITE 105
SAN DIEGO, CA 92128
WWW.RSTAVARES.COM

ORIGINAL PC STATE AGENCY APPROVAL
FILE NUMBER: PC-128

IDENTIFICATION STAMP
DIVISION OF THE STATE ARCHITECT
04 - 116504 INCR: 0
AC RM FLS EA SSR KER
DATE 07/19/2018

PROJECT TITLE

24' x 40'
EXPANDABLE TO
120' x 40'

PRE-CHECK (PC) DOCUMENT
Code: [2016] CBC
A separate project application for construction is required.

PROJECT SPECIFIC STATE AGENCY APPROVAL

IDENTIFICATION STAMP
DIV. OF THE STATE ARCHITECT
APP: 04-119993 INC:
REVIEWED FOR
SS ☑ FLS ☑ ACS ☑
DATE: 02/24/2021

Revision Schedule

#	Description	Date

SHEET TITLE

ROOF PLAN MONO SLOPE (STANDING SEAM)

PROJECT NUMBER
17016A

DRAWN BY
rMc/SC

CHECKED BY
JA/RT

DATE
2017/06/05

SHEET NO.
A4.0.1

SHEET OF SHEETS

1/10/2018 11:44:14 AM C:\Users\Lee\Documents\17016 - Aries, 24x40 PC - MainFile - Low Seismic_Lee.rvt

Metal Inside Closure

DESCRIPTION						PRICED PER EACH
PART #	SSR SYSTEM	WIDTH	GAUGE	FINISH	WEIGHT EACH	PRICE
HW-426	UD & DL	1/2"	18	Galvalume®	22#	✓

Clip - 2" Siding (Low)

Notes:
- Specify SSR System
- Clip fasteners must be installed separately
- 1½" movement in each direction

DESCRIPTION				PRICED PER EACH
PART #	SSR SYSTEM	HEIGHT	WEIGHT EACH	PRICE
HW-2102	Ultra-Dek®	3½"	50#	✓
HW-2122	Double-Lok®	3½"	50#	✓

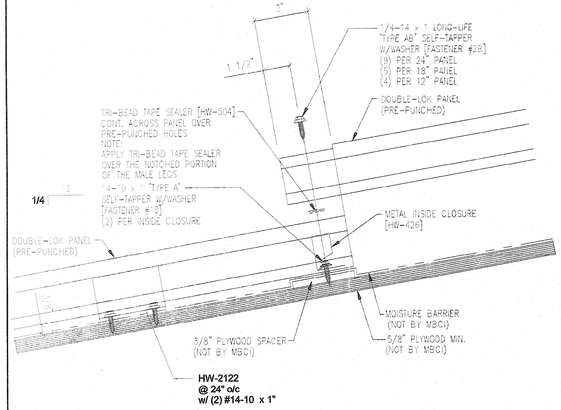

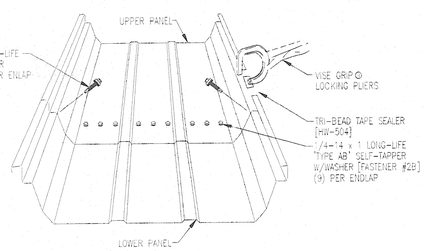

PANEL INSTALLATION SEQUENCE

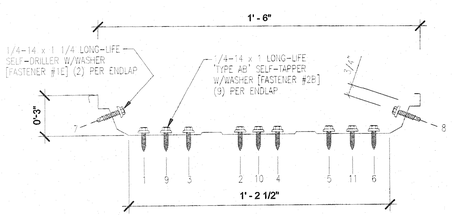

FASTENER SEQUENCE @ ENDLAP

18" DOUBLE-LOK 22GA STANDING SEAM PANEL BY MBCI

NEG		POS	
t	= 0.0299"	t	= 0.0299"
S_x	= 0.1846 IN^3	S_x	= 0.2154 IN^3
I_x	= 0.2718 IN^4	I_x	= 0.4968 IN^4
F_y	= 50 KSI	F_y	= 50 KSI

18" 26GA STANDING SEAM PANEL

NEG		POS	
t	= 0.018"	t	= 0.018"
S_x	= 0.1383 IN^3	S_x	= 0.7560 IN^3
I_x	= 0.351 IN^4	I_x	= 0.351 IN^4
F_y	= 33 KSI	F_y	= 33 KSI

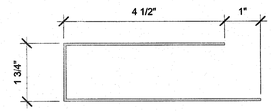

14 6" = 1'-0" **FLASHING @ ROOF HIGH SIDE**

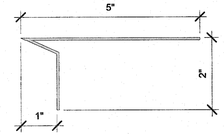

13 6" = 1'-0" **FLASHING @ ROOF LOW SIDE**

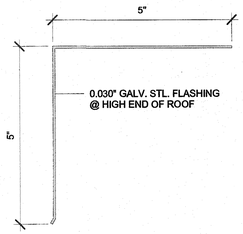

12 6" = 1'-0" **ROOF FLASHING**

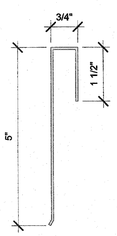

11 6" = 1'-0" **ROOF FLASHING @ SIDEWALL**

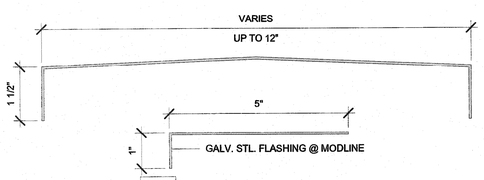

10A 6" = 1'-0" **FLASHING @ MODLINE WALL**

10 6" = 1'-0" **ROOF CAP @ MODLINE**

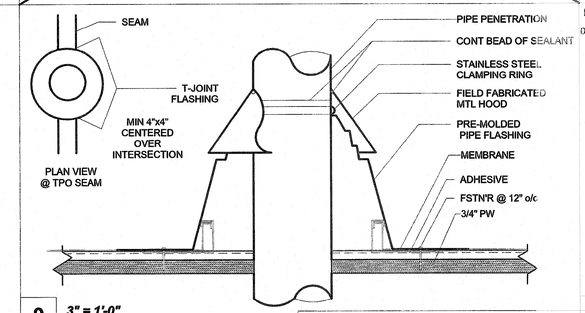

9 3" = 1'-0" **Pipe Penetration Standing Seam** | ALL FSTN'G & WATER PROOF'G/FLASHING PER MNFR SPECS

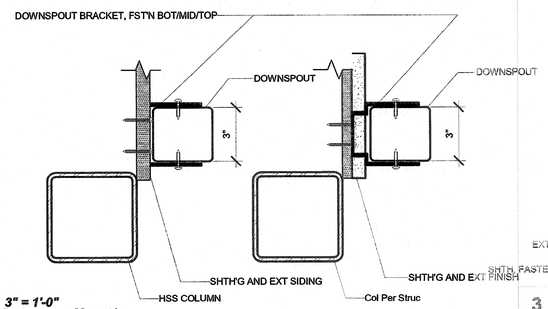

8 3" = 1'-0" **Downspout Mount1**

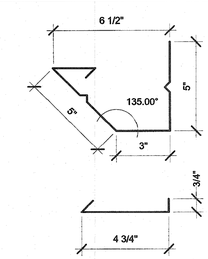

6 3" = 1'-0" **Gutter and Strap1**

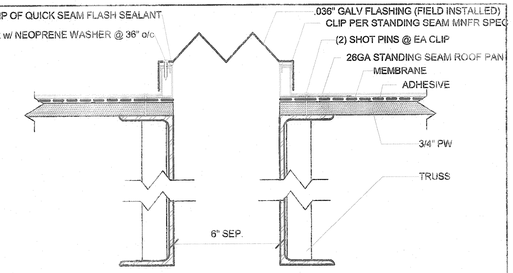

5 3" = 1'-0" **Roof @ Mateline Std'g Seam w/ 6" Sep** | ALL FSTN'G & WATER PROOF'G/FLASHING PER MNFR SPECS

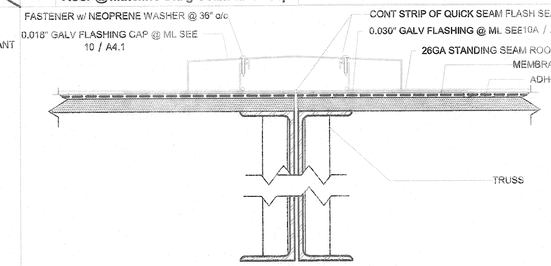

4 3" = 1'-0" **Roof @ Standing Seam Mateline** | ALL FSTN'G & WATER PROOF'G/FLASHING PER MNFR SPECS

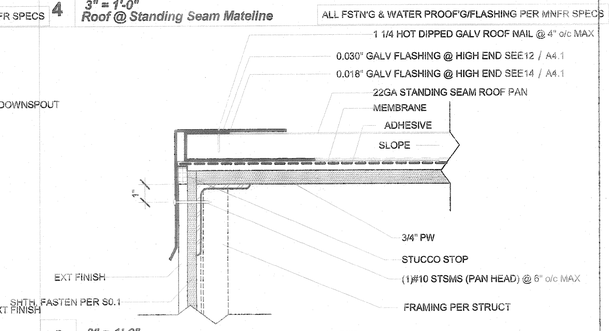

3 3" = 1'-0" **Roof @ Endwall Std'g Seam (High End)** | ALL FSTN'G & WATER PROOF'G/FLASHING PER MNFR SPECS

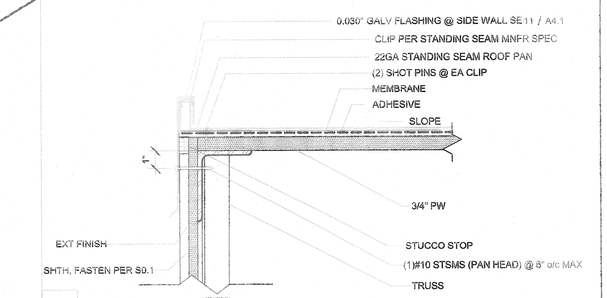

2 3" = 1'-0" **Roof @ Standing Seam Sidwall** | ALL FSTN'G & WATER PROOF'G/FLASHING PER MNFR SPECS

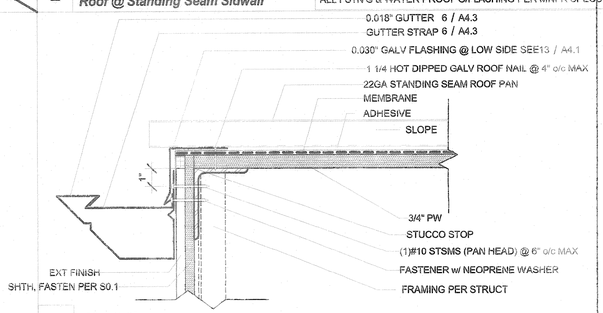

1 3" = 1'-0" **Roof @ Endwall Std'g Seam (Low End)** | ALL FSTN'G & WATER PROOF'G/FLASHING PER MNFR SPECS

IDENTIFICATION STAMP
DIV. OF THE STATE ARCHITECT
APP: 03-121617 INC:
REVIEWED FOR
SS ☑ FLS ☑ ACS ☑
DATE: 08/02/2021

PROFESSIONAL STAMP

12/19/2017

THE PLANS, IDEAS & DESIGNS SHOWN ON THESE DRAWINGS ARE THE PROPERTY OF R&S TAVARES ASSOCIATES, INC. DEVISED SOLELY FOR THIS CONTRACT. THESE PLANS SHALL NOT BE USED, IN WHOLE OR IN PART, FOR ANY PURPOSE FOR WHICH THEY WERE NOT INTENDED WITHOUT THE EXPRESS WRITTEN CONSENT OF R&S TAVARES ASSOCIATES, INC. ©

CLIENT

CLASS LEASING LLC
1221 Harley Knox Boulevard
Perris, CA 92571

R&S TAVARES ASSOCIATES
DESIGN ◆ CONSULTING ◆ PROJECT
11777 BERNARDO PLAZA COURT, SUITE 105
SAN DIEGO, CA 92128
WWW.RSTAVARES.COM

ORIGINAL PC STATE AGENCY APPROVAL

FILE NUMBER: PC-128

IDENTIFICATION STAMP
DIVISION OF THE STATE ARCHITECT
04 - 116504 INCR: 0
AC RM FLS EA SSR KER
DATE 07/19/2018

PROJECT TITLE
24' x 40'
EXPANDABLE TO
120' x 40'

PRE-CHECK (PC) DOCUMENT
Code: [2016] CBC
A separate project application for construction is required.

PROJECT SPECIFIC STATE AGENCY APPROVAL

IDENTIFICATION STAMP
DIV. OF THE STATE ARCHITECT
APP. 04-119993 INC:
REVIEWED FOR
SS ☑ FLS ☑ ACS ☑
DATE: 02/24/2021

Revision Schedule

#	Description	Date

SHEET TITLE
ROOF DETAILS
(STANDING SEAM)

PROJECT NUMBER
17016A

DRAWN BY
rMc/SC

CHECKED BY
JA/RT

DATE
2017/06/05

SHEET NO.
A4.1

SHEET OF SHEETS

12/18/2017 3:37:53 PM C:\Users\Sarah\Documents\17016 - Arles, 24x40 PC - MainFile - Low Seismic_Sarah.rvt

Ext. Finish Schedule

	Finishes	Sheet	Notes
☒	SIDING OVER WD STUDS	A2.1	
☐	PLASTER OVER 1/2" OSB OR 1/2" CDX PLY w/ WD STUDS	A2.2	
☐	SIDING OVER STL STUDS	A2.3	
☐	PLASTER OVER 1/2" OSB OR 1/2" CDX PLY w/ STL STUDS	A2.4	

9 *1/4" = 1'-0"*
Ext. Finish Scedule

Fire Rating Schedule

	Rating	Sheet	Notes
☐	1 HOUR - SIDING OVER WD STUDS	A2.5	
☐	1 HOUR - PLASTER OVER 1/2" OSB OR 1/2" CDX PLY w/ WD STUDS	A2.6	
☐	1 HOUR - SIDING OVER STL STUDS	A2.7	
☐	1 HOUR - PLASTER OVER 1/2" OSB OR 1/2" CDX PLY w/ STL STUDS	A2.8	

SEE A3.0 FOR ADDITIONAL FIRE ASSEMBLY NOTES AND DETAILS

10 *1/4" = 1'-0"*
Fire Rating Scedule

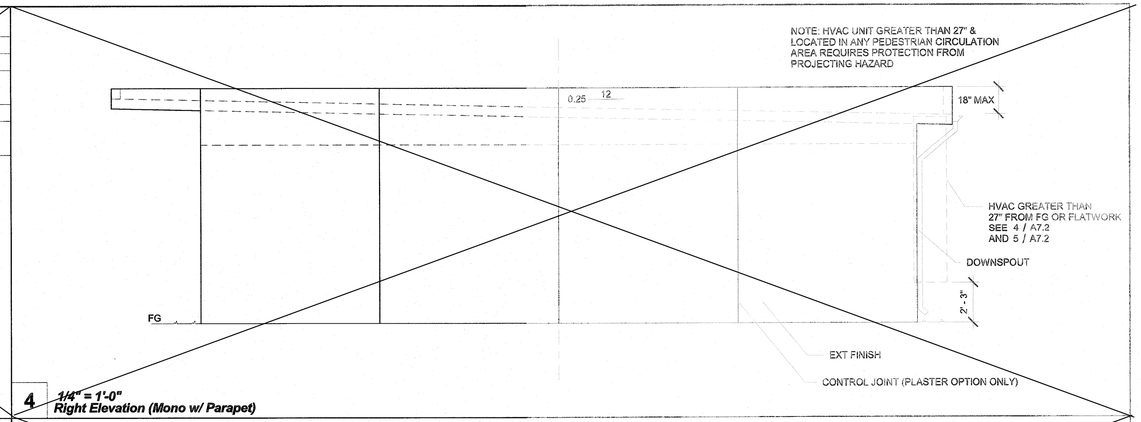

4 *1/4" = 1'-0"*
Right Elevation (Mono w/ Parapet)

SEE A0.1 FOR GENERAL NOTES

7 *3" = 1'-0"*
Notes A5.0

Wall Schedule

	Stud Size	Sheet	Notes
☒	Wood Wall Stud	S4.5	
☐	Mtl Wall Stud	S4.5	CONTINUOUS EXT R-4 INSULATION

8 *1/4" = 1'-0"*
Wall Schedule

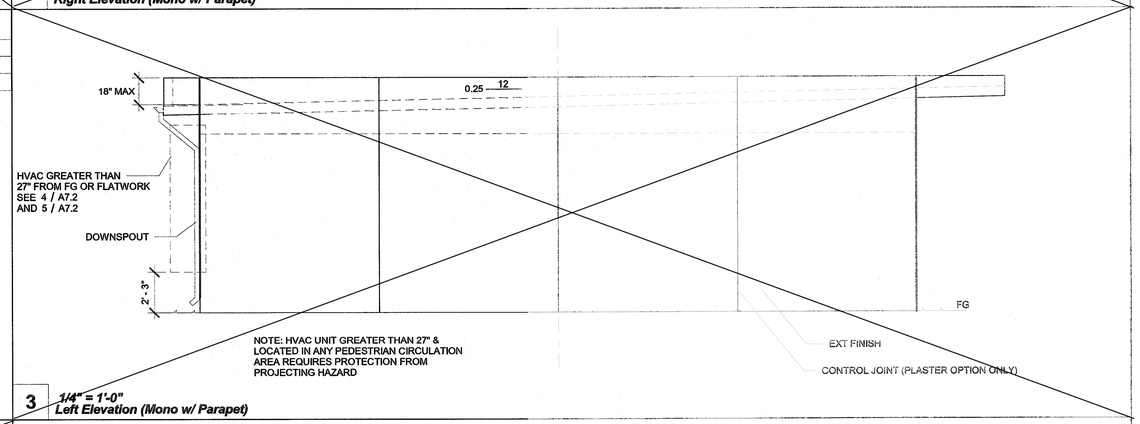

3 *1/4" = 1'-0"*
Left Elevation (Mono w/ Parapet)

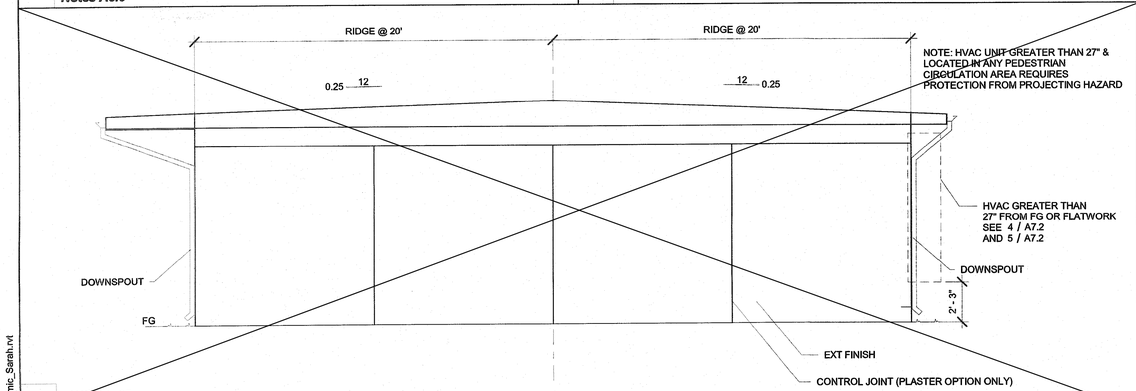

6 *1/4" = 1'-0"*
Right Elevation (Dual)

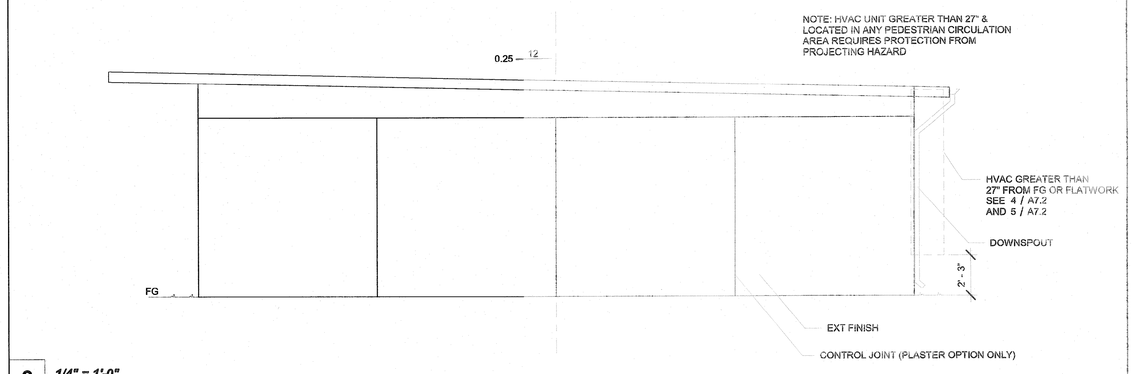

2 *1/4" = 1'-0"*
Right Elevation (Mono)

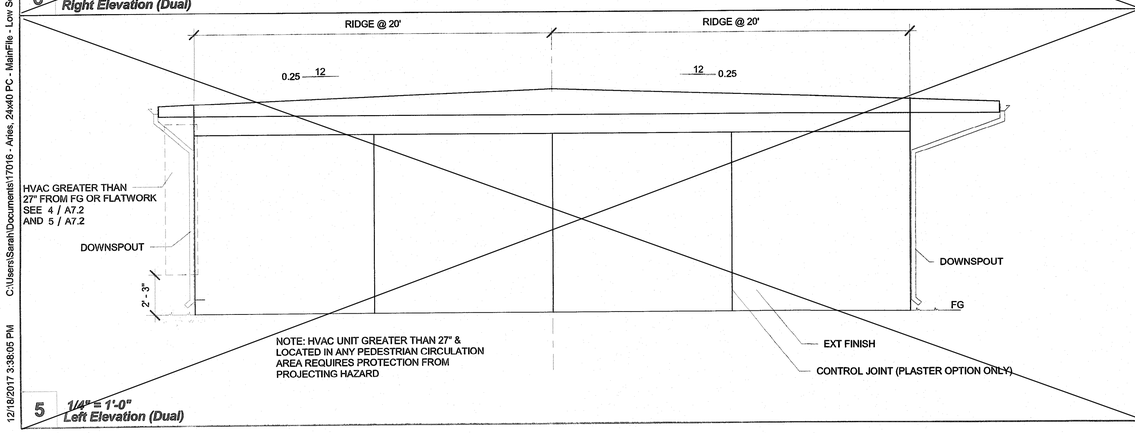

5 *1/4" = 1'-0"*
Left Elevation (Dual)

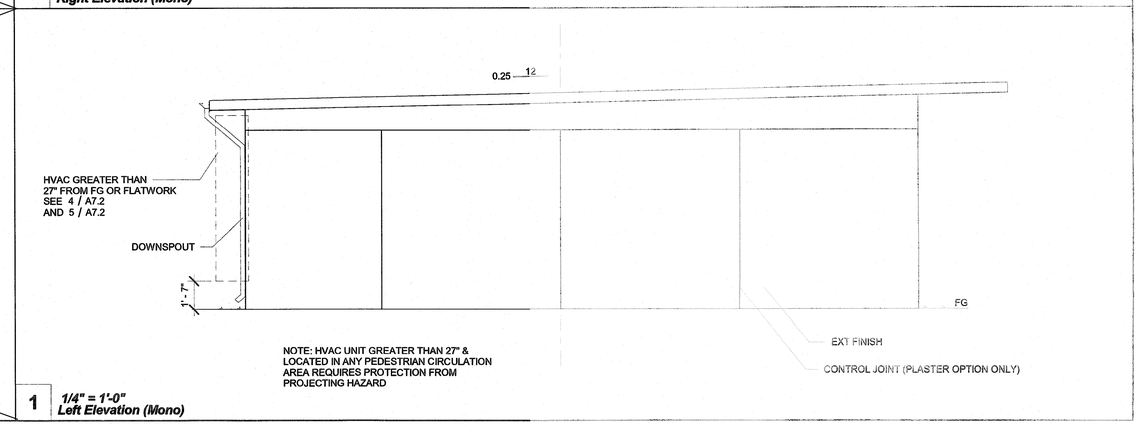

1 *1/4" = 1'-0"*
Left Elevation (Mono)

IDENTIFICATION STAMP
DIV. OF THE STATE ARCHITECT
APP: 03-121617 INC:
REVIEWED FOR
SS ☑ FLS ☑ ACS ☑
DATE: 08/02/2021

PROFESSIONAL STAMP

REGISTERED PROFESSIONAL ENGINEER MANNY D. FARAH STRUCTURAL STATE OF CALIFORNIA

12/19/2017

THE PLANS, IDEAS & DESIGNS SHOWN ON THESE DRAWINGS ARE THE PROPERTY OF R&S TAVARES ASSOCIATES, INC. DEVISED SOLELY FOR THIS CONTRACT. THESE PLANS SHALL NOT BE USED, IN WHOLE OR IN PART, FOR ANY PURPOSE FOR WHICH THEY WERE NOT INTENDED WITHOUT THE EXPRESS WRITTEN CONSENT OF R&S TAVARES ASSOCIATES, INC. ©

CLIENT

CLASS LEASING LLC
1221 Harley Knox Boulevard
Perris, CA 92571

R&S TAVARES ASSOCIATES
DESIGN ◆ CONSULTING ◆ PROJECT
11777 Bernardo Plaza Court, Suite 105
San Diego, CA 92128
www.rstavares.com

ORIGINAL PC STATE AGENCY APPROVAL

FILE NUMBER: PC-128

IDENTIFICATION STAMP
DIVISION OF THE STATE ARCHITECT
04 - 116504 INCR: 0
AC RM FLS EA SSR KER
DATE 07/19/2018

PROJECT TITLE

24' x 40'
EXPANDABLE TO
120' x 40'

PRE-CHECK (PC) DOCUMENT
Code: [2016] CBC
A separate project application for construction is required.

PROJECT SPECIFIC STATE AGENCY APPROVAL

IDENTIFICATION STAMP
DIV. OF THE STATE ARCHITECT
APP. 04-119993 INC:
REVIEWED FOR
SS ☑ FLS ☑ ACS ☑
DATE: 02/24/2021

Revision Schedule

#	Description	Date

SHEET TITLE

SIDEWALL ELEVATION

PROJECT NUMBER
17016A

DRAWN BY
rMc/SC

CHECKED BY
JA/RT

DATE
2017/06/05

SHEET NO.
A5.0

SHEET OF SHEETS

12/18/2017 3:38:05 PM C:\Users\Sarah\Documents\17016 - Aries, 24x40 PC - MainFile - Low Seismic_Sarah.rvt

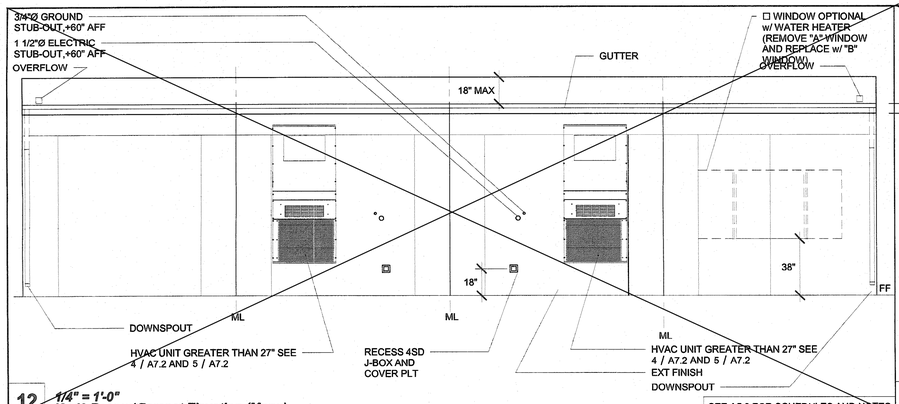

12 1/4" = 1'-0"
48x40 Rear w/ Parapet Elevation (Mono)
SEE A5.0 FOR SCHEDULES AND NOTES

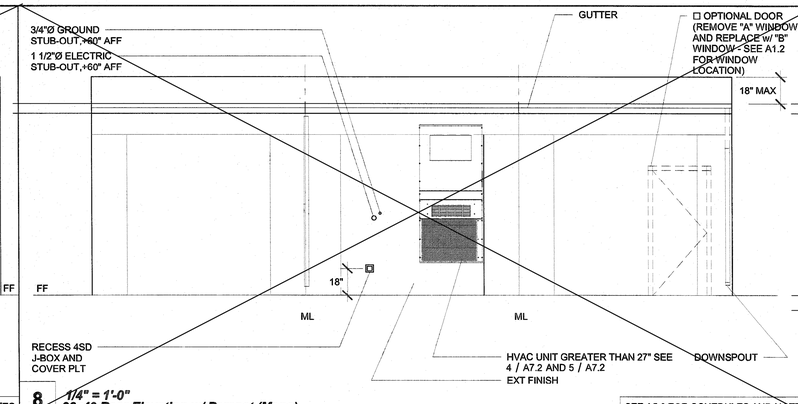

8 1/4" = 1'-0"
36x40 Rear Elevation w/ Parapet (Mono)
SEE A5.0 FOR SCHEDULES AND NOTES

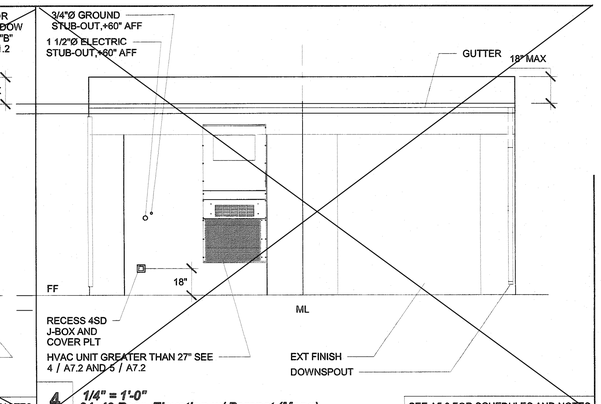

4 1/4" = 1'-0"
24x40 Rear Elevation w/ Parapet (Mono)
SEE A5.0 FOR SCHEDULES AND NOTES

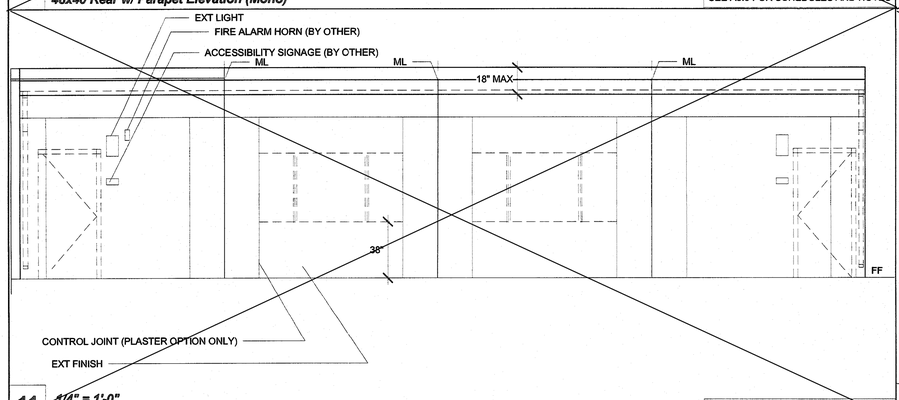

11 1/4" = 1'-0"
48x40 Front w/ Parapet Elevation (Mono)
SEE A5.0 FOR SCHEDULES AND NOTES

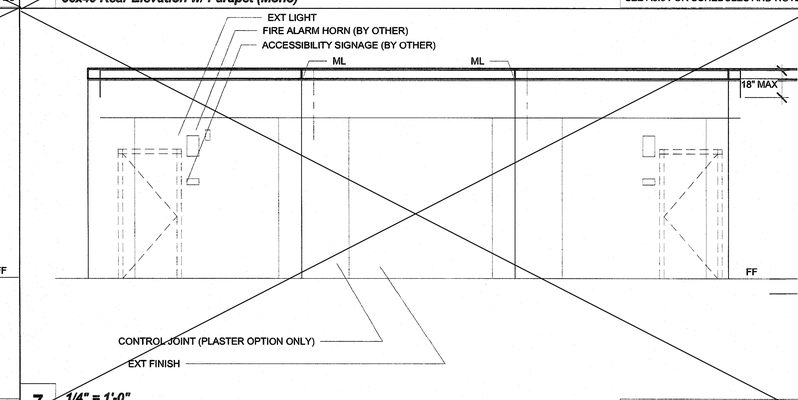

7 1/4" = 1'-0"
36x40 Front Elevation w/ Parapet (Mono)
SEE A5.0 FOR SCHEDULES AND NOTES

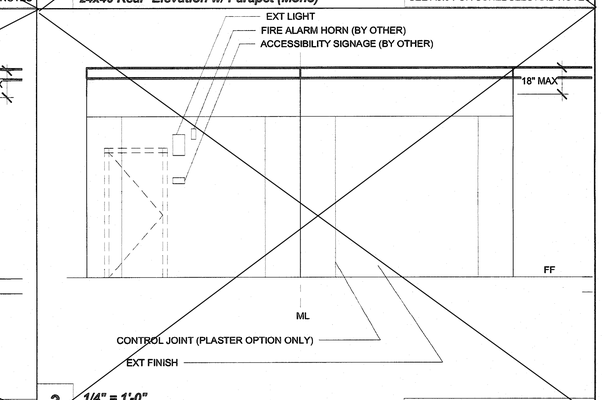

3 1/4" = 1'-0"
24x40 Front Elevation w/ Parapet (Mono)
SEE A5.0 FOR SCHEDULES AND NOTES

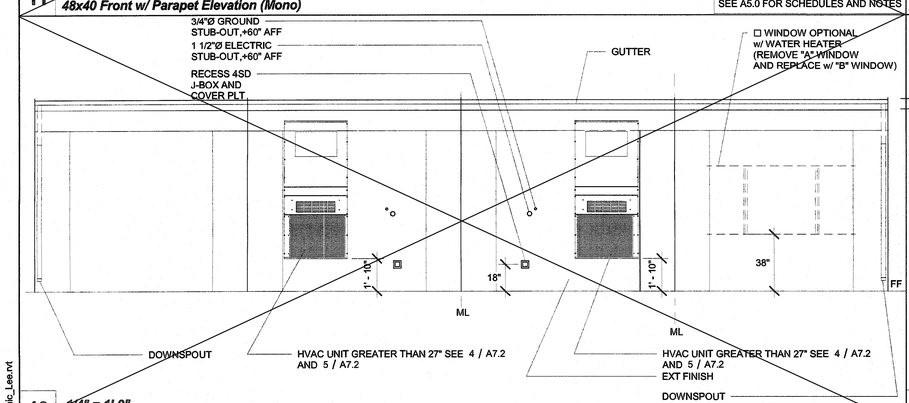

10 1/4" = 1'-0"
48x40 Rear Elevation (Dual/Mono)
SEE A5.0 FOR SCHEDULES AND NOTES

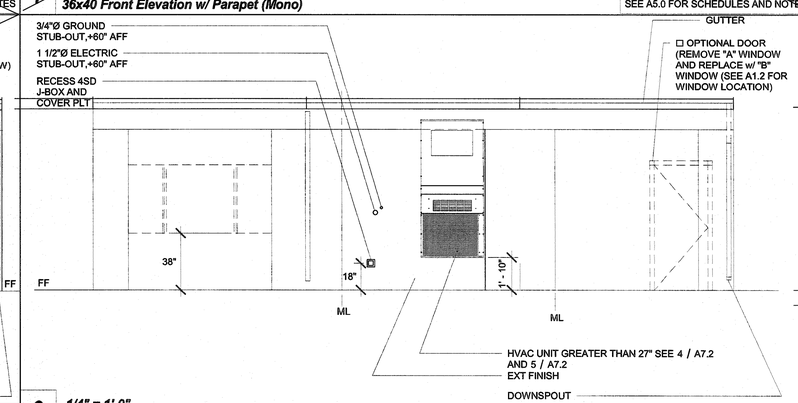

6 1/4" = 1'-0"
36x40 Rear Elevation (Dual/Mono)
SEE A5.0 FOR SCHEDULES AND NOTES

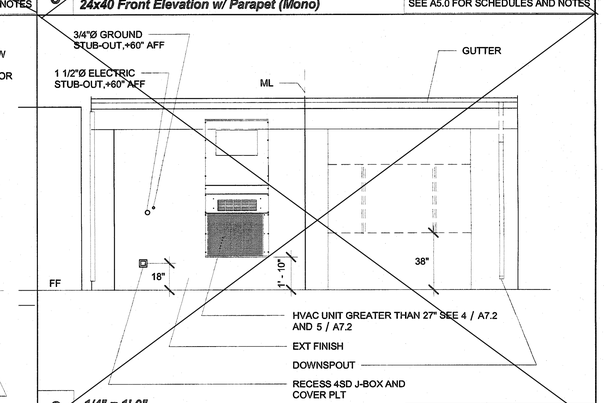

2 1/4" = 1'-0"
24x40 Rear Elevation (Dual/Mono)
SEE A5.0 FOR SCHEDULES AND NOTES

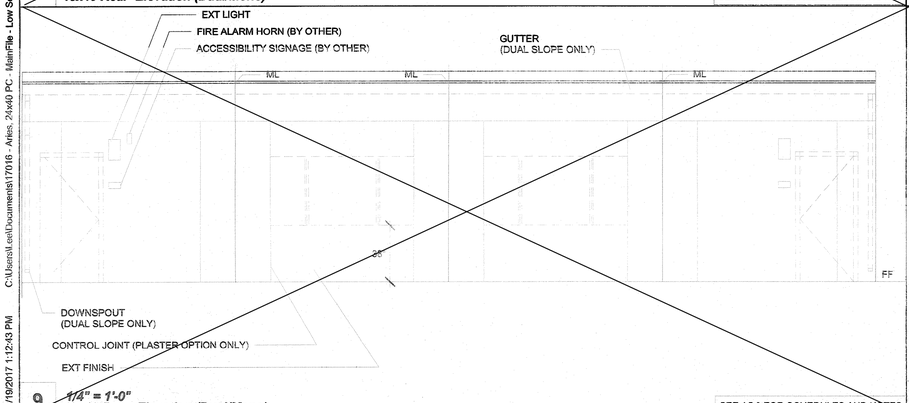

9 1/4" = 1'-0"
48x40 Front Elevation (Dual/Mono)
SEE A5.0 FOR SCHEDULES AND NOTES

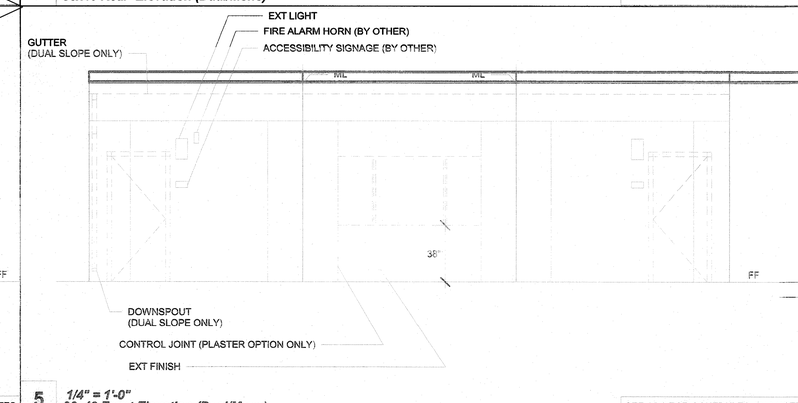

5 1/4" = 1'-0"
36x40 Front Elevation (Dual/Mono)
SEE A5.0 FOR SCHEDULES AND NOTES

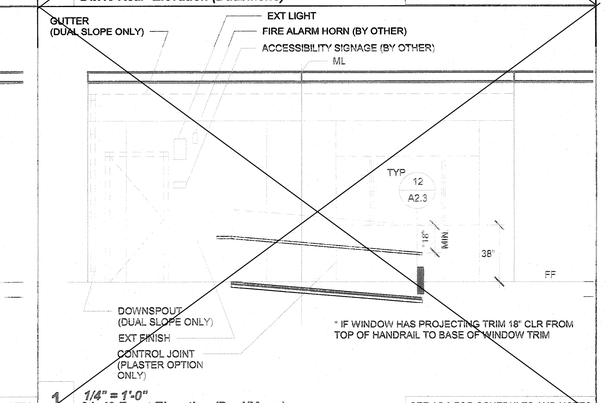

1 1/4" = 1'-0"
24x40 Front Elevation (Dual/Mono)
SEE A5.0 FOR SCHEDULES AND NOTES

IDENTIFICATION STAMP
DIV. OF THE STATE ARCHITECT
APP: 03-121617 INC:
REVIEWED FOR
SS ☑ FLS ☑ ACS ☑
DATE: 08/02/2021

PROFESSIONAL STAMP

REGISTERED PROFESSIONAL ENGINEER
JAMNY D. FRANSEN
S-6380
STRUCTURAL
STATE OF CALIFORNIA

12/19/2017

THE PLANS, IDEAS & DESIGNS SHOWN ON THESE DRAWINGS ARE THE PROPERTY OF R&S TAVARES ASSOCIATES, INC. DEVISED SOLELY FOR THIS CONTRACT. THESE PLANS SHALL NOT BE USED, IN WHOLE OR IN PART, FOR ANY PURPOSE FOR WHICH THEY WERE NOT INTENDED WITHOUT THE EXPRESS WRITTEN CONSENT OF R&S TAVARES ASSOCIATES, INC. ©

CLIENT

CLASS LEASING LLC
1221 Harley Knox Boulevard
Perris, CA 92571

R&S TAVARES ASSOCIATES
DESIGN ◆ CONSULTING ◆ PROJECT
11777 Bernardo Plaza Court, Suite 105
San Diego, CA 92128
WWW.RSTAVARES.COM

ORIGINAL PC STATE AGENCY APPROVAL

FILE NUMBER: PC-128
IDENTIFICATION STAMP
DIVISION OF THE STATE ARCHITECT
04 - 116504 INCR: 0
AC RM FLS EA SSR KER
DATE 07/19/2018

PROJECT TITLE

24' x 40'
EXPANDABLE TO
120' x 40'

PRE-CHECK (PC) DOCUMENT
Code: [2016] CBC
A separate project application for construction is required.

PROJECT SPECIFIC STATE AGENCY APPROVAL

IDENTIFICATION STAMP
DIV. OF THE STATE ARCHITECT
APP. 04-119993 INC:
REVIEWED FOR
SS ☑ FLS ☑ ACS ☑
DATE: 02/24/2021

Revision Schedule

#	Description	Date

SHEET TITLE
ENDWALL ELEVATIONS

PROJECT NUMBER
17016A

DRAWN BY
rMc/SC

CHECKED BY
JA/RT

DATE
2017/06/05

SHEET NO.
A5.1

SHEET OF SHEETS

12/19/2017 1:12:43 PM C:\Users\Lucid\Documents\17016 - Arlen, 24x40 PC - MainFile - Low Seismic_Less.rvt

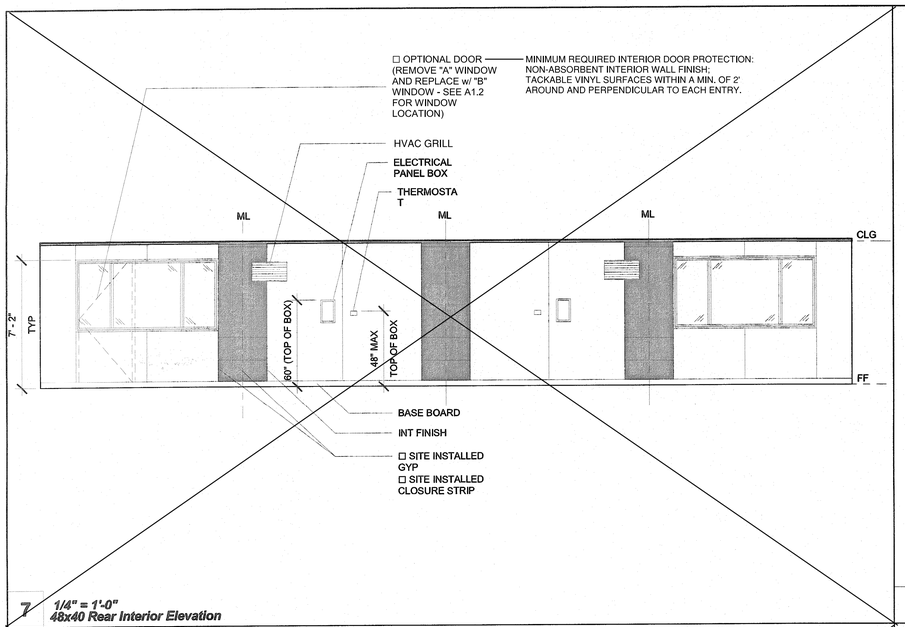

7 1/4" = 1'-0"
48x40 Rear Interior Elevation

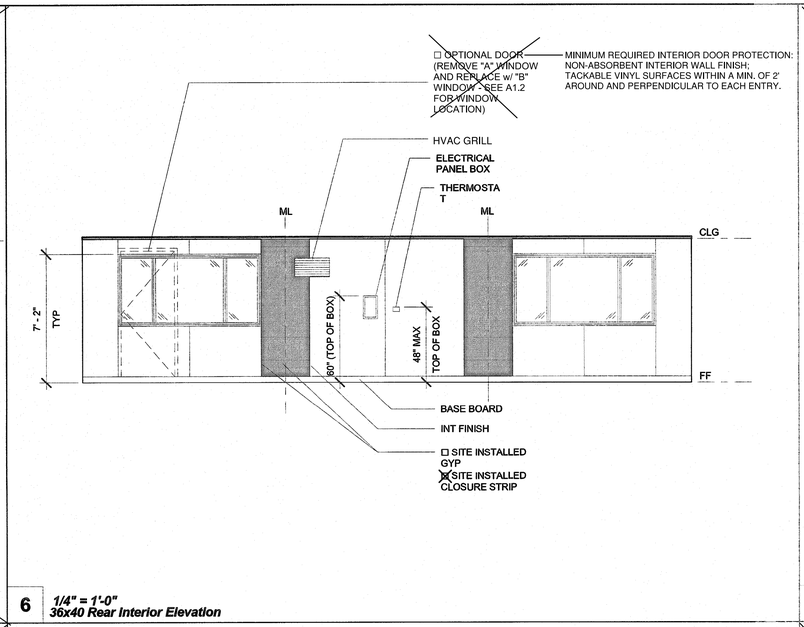

6 1/4" = 1'-0"
36x40 Rear Interior Elevation

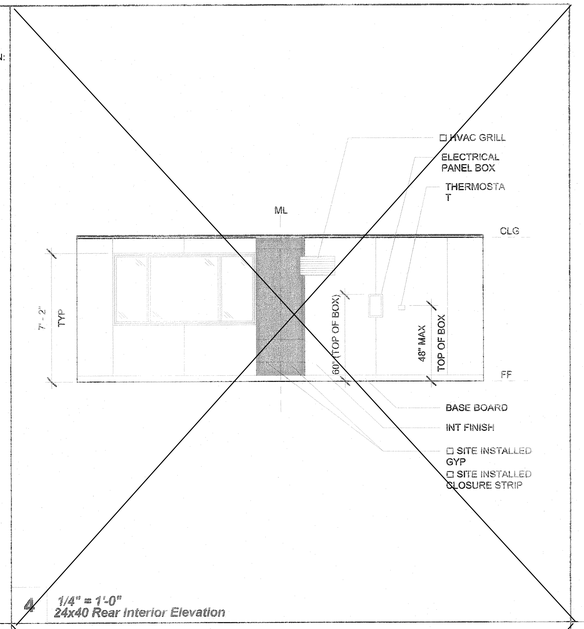

4 1/4" = 1'-0"
24x40 Rear Interior Elevation

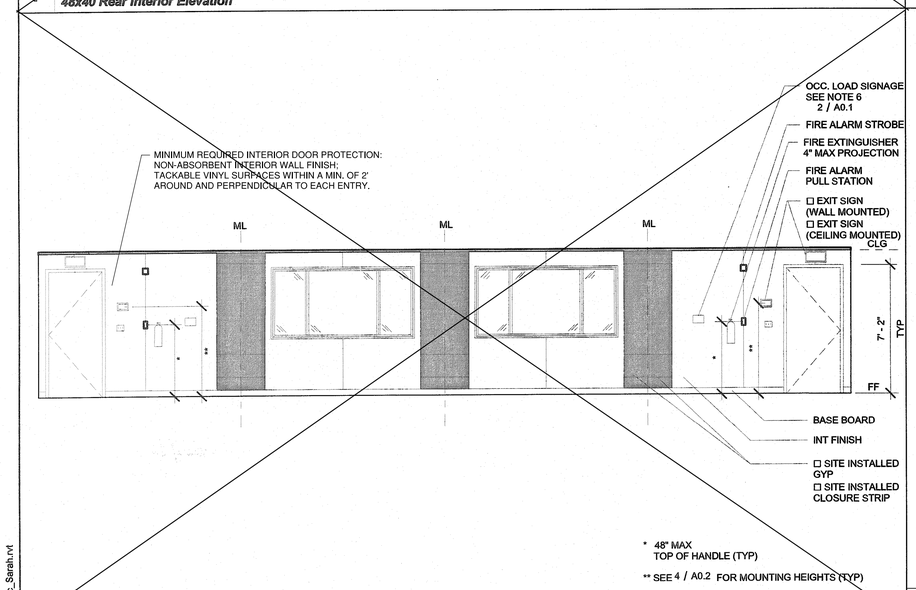

8 1/4" = 1'-0"
48x40 Front Interior Elevation

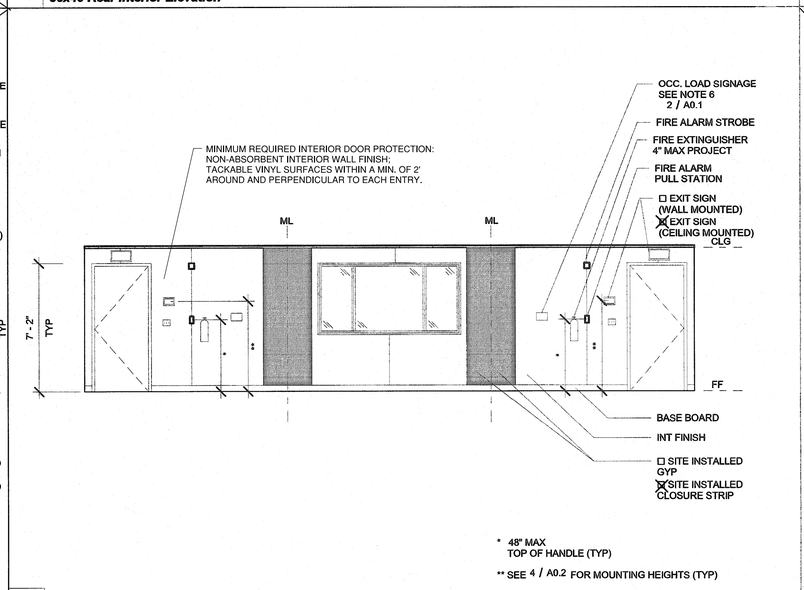

5 1/4" = 1'-0"
36x40 Front Interior Elevation

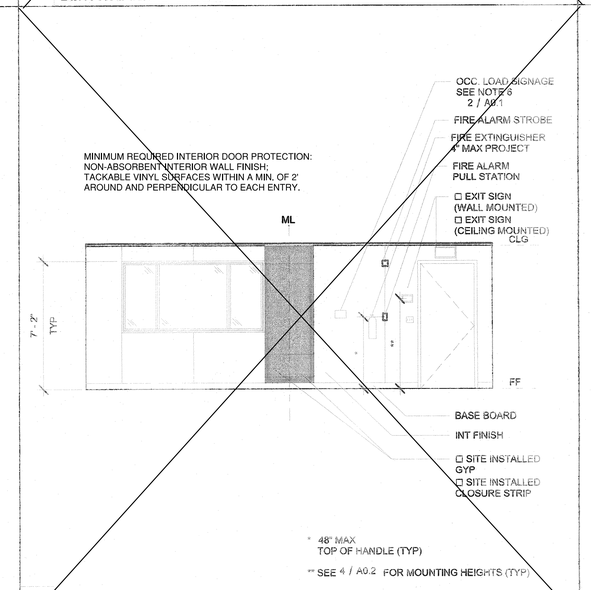

3 1/4" = 1'-0"
24x40 Front Interior Elevation

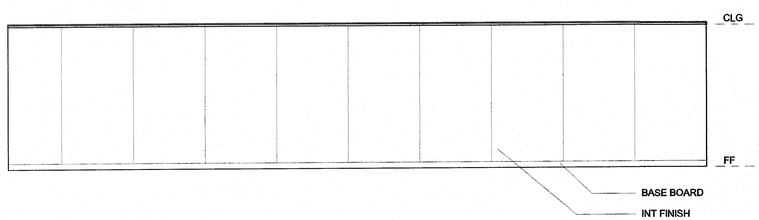

1 1/4" = 1'-0"
Interior Elevation (Left)

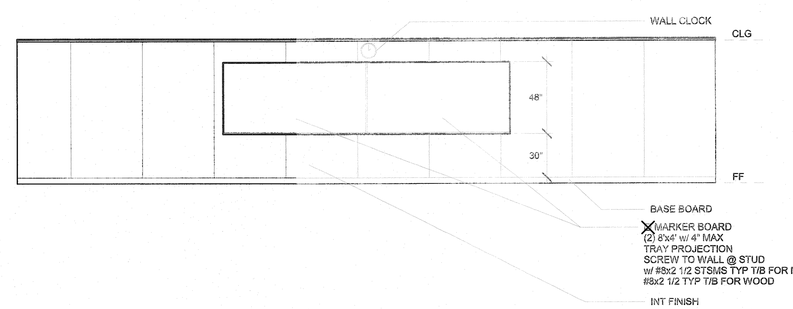

2 1/4" = 1'-0"
Interior Elevation (Right)

IDENTIFICATION STAMP
DIV. OF THE STATE ARCHITECT
APP: 03-121617 INC:
REVIEWED FOR
SS ☑ FLS ☑ ACS ☑
DATE: 08/02/2021

PROFESSIONAL STAMP

12/19/2017

THE PLANS, IDEAS & DESIGNS SHOWN ON THESE DRAWINGS ARE THE PROPERTY OF R&S TAVARES ASSOCIATES, INC. DEVISED SOLELY FOR THIS CONTRACT. THESE PLANS SHALL NOT BE USED, IN WHOLE OR IN PART, FOR ANY PURPOSE FOR WHICH THEY WERE NOT INTENDED WITHOUT THE EXPRESS WRITTEN CONSENT OF R&S TAVARES ASSOCIATES, INC. ©

CLIENT

CLASS LEASING LLC
1221 Harley Knox Boulevard
Perris, CA 92571

R&S TAVARES ASSOCIATES
DESIGN ◆ CONSULTING ◆ PROJECT
11777 Bernardo Plaza Court, Suite 105
San Diego, CA 92128
WWW.RSTAVARES.COM

ORIGINAL PC STATE AGENCY APPROVAL

FILE NUMBER: PC-128
IDENTIFICATION STAMP
DIVISION OF THE STATE ARCHITECT
04 - 116504 INCR: 0
AC RM FLS EA SSR KER
DATE 07/19/2018

PROJECT TITLE
24' x 40'
EXPANDABLE TO
120' x 40'

PRE-CHECK (PC) DOCUMENT
Code: [2016] CBC
A separate project application for construction is required.

PROJECT SPECIFIC STATE AGENCY APPROVAL

IDENTIFICATION STAMP
DIV. OF THE STATE ARCHITECT
APP: 04-119993 INC:
REVIEWED FOR
SS ☑ FLS ☑ ACS ☑
DATE: 02/24/2021

Revision Schedule

#	Description	Date

SHEET TITLE
INTERIOR ELEVATIONS

PROJECT NUMBER
17016A

DRAWN BY
rMc/SC

CHECKED BY
JA/RT

DATE
2017/06/05

SHEET NO.
A5.2

SHEET OF SHEETS

12/18/2017 3:38:16 PM C:\Users\Sarah\Documents\17016 - Aries, 24x40 PC - MainFile - Low Seismic_Sarah.rvt

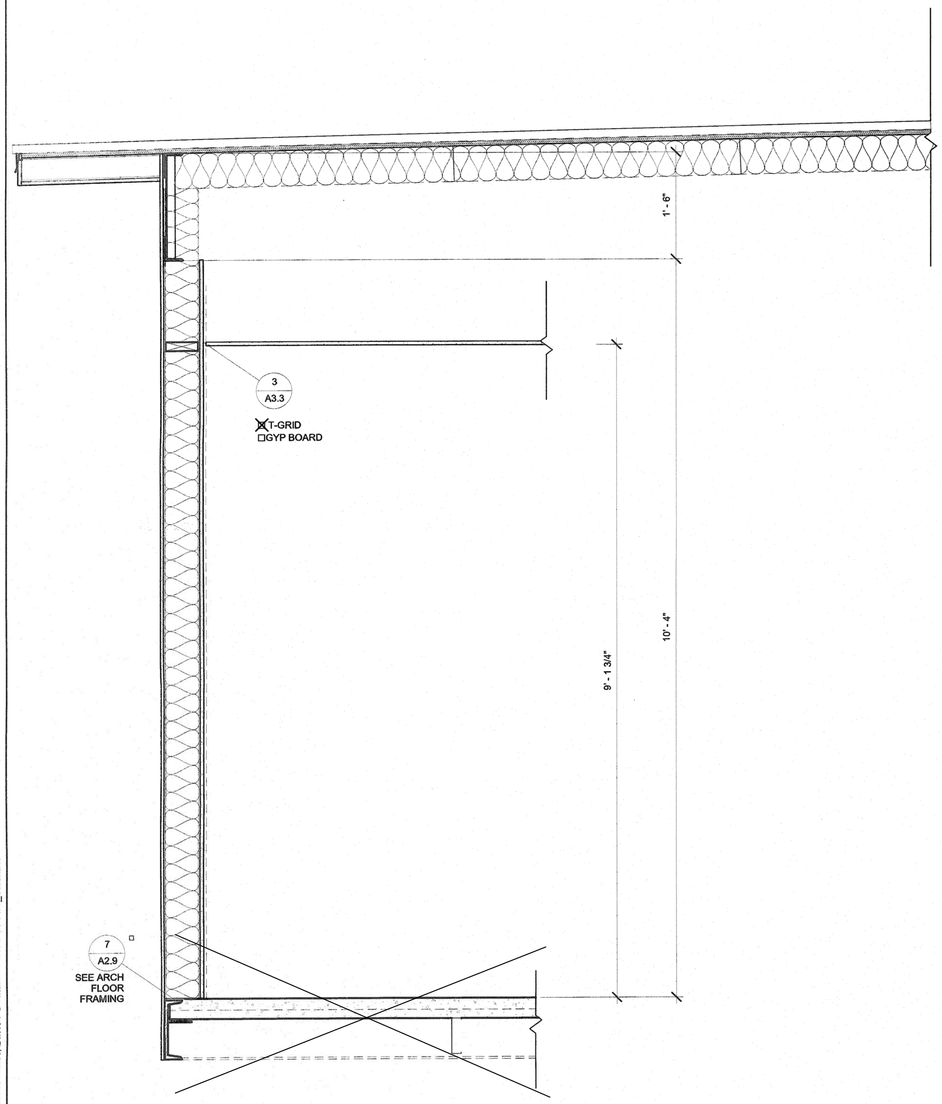

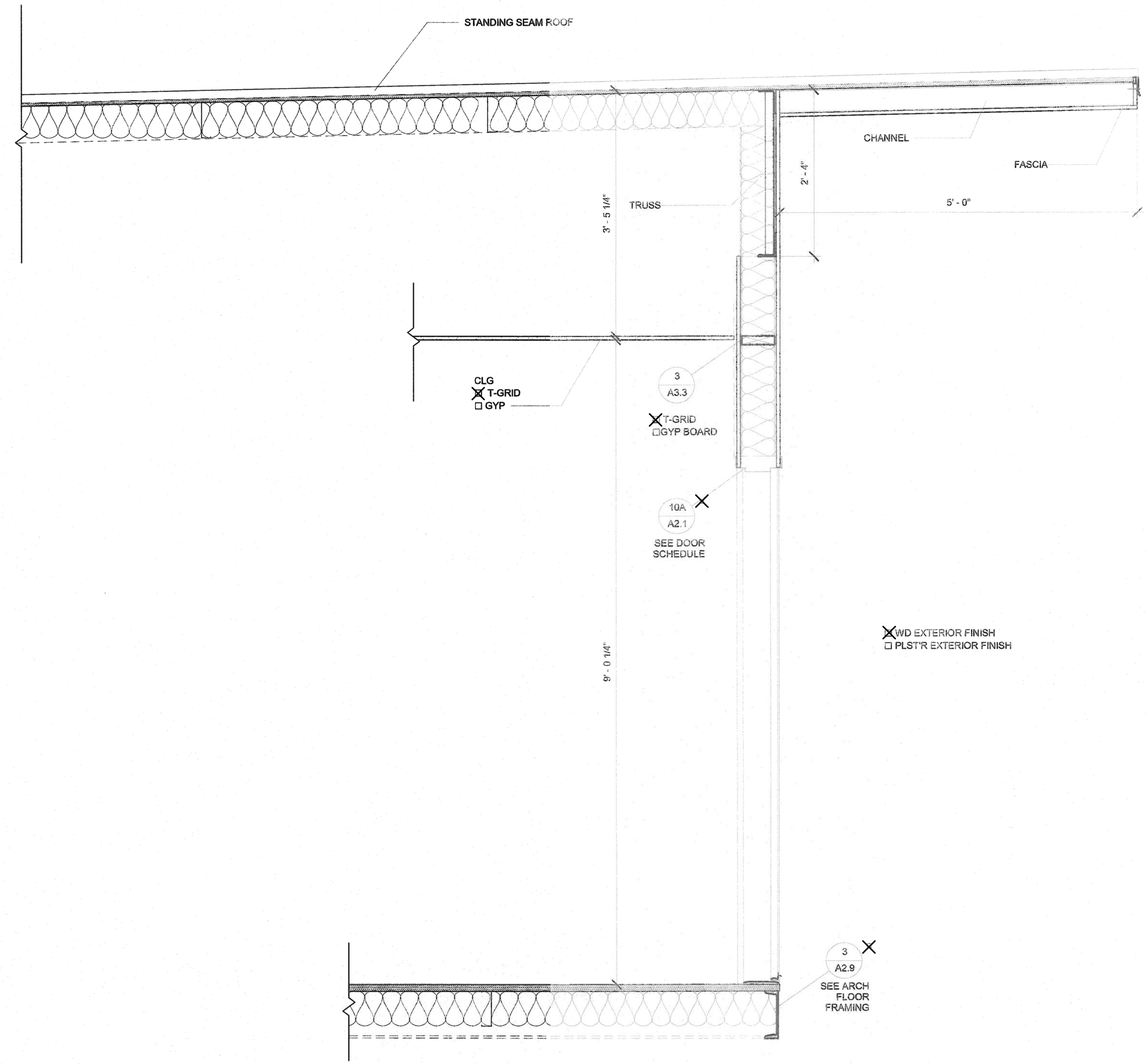

1 1" = 1'-0"
Section (EPDM)2

12/19/2017 3:38:16 PM C:\Users\Sarah\Documents\17016 - Aries, 24x40 PC - MainFile - Low Seismic_Sarah.rvt

IDENTIFICATION STAMP
DIV. OF THE STATE ARCHITECT
APP: 03-121617 INC:
REVIEWED FOR
SS ☑ FLS ☑ ACS ☑
DATE: 08/02/2021

PROFESSIONAL STAMP

REGISTERED PROFESSIONAL ENGINEER
MANUEL D. FERREIRA
No. 5800
STRUCTURAL
STATE OF CALIFORNIA

12/19/2017

THE PLANS, IDEAS & DESIGNS SHOWN ON THESE DRAWINGS ARE THE PROPERTY OF R&S TAVARES ASSOCIATES, INC. DEVISED SOLELY FOR THIS CONTRACT. THESE PLANS SHALL NOT BE USED, IN WHOLE OR IN PART, FOR ANY PURPOSE FOR WHICH THEY WERE NOT INTENDED WITHOUT THE EXPRESS WRITTEN CONSENT OF R&S TAVARES ASSOCIATES, INC. ©

CLIENT

CLASS LEASING LLC
1221 Harley Knox Boulevard
Perris, CA 92571

R&S TAVARES ASSOCIATES
DESIGN ◆ CONSULTING ◆ PROJECT
11777 Bernardo Plaza Court, Suite 105
San Diego, CA 92128
www.rstavares.com

ORIGINAL PC STATE AGENCY APPROVAL

FILE NUMBER: PC-128
IDENTIFICATION STAMP
DIVISION OF THE STATE ARCHITECT
04 - 116504 INCR: 0
AC RM FLS EA SSR KER
DATE 07/19/2018

PROJECT TITLE
24' x 40'
EXPANDABLE TO
120' x 40'

PRE-CHECK (PC) DOCUMENT
Code: [2016] CBC
A separate project application for construction is required.

PROJECT SPECIFIC STATE AGENCY APPROVAL

IDENTIFICATION STAMP
DIV. OF THE STATE ARCHITECT
APP: 04-119993 INC:
REVIEWED FOR
SS ☑ FLS ☑ ACS ☑
DATE: 02/24/2021

Revision Schedule

#	Description	Date

SHEET TITLE
SECTION -
STANDING SEAM
(MONO)

PROJECT NUMBER
17016A

DRAWN BY
rMc/SC

CHECKED BY
JA/RT

DATE
2017/06/05

SHEET NO.
A6.0

SHEET OF SHEETS

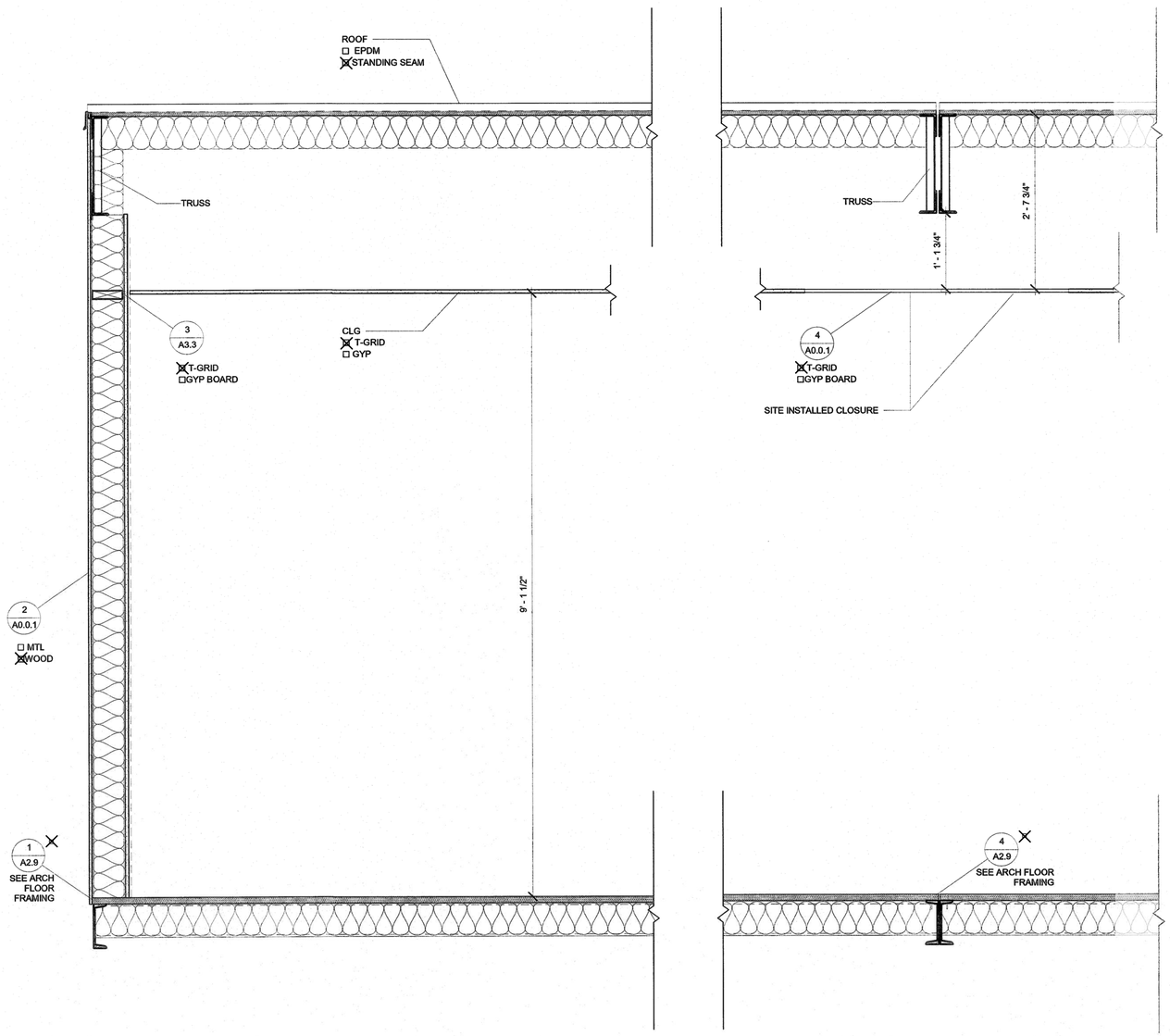

1 **1" = 1'-0"**
Latitudinal Section

12/18/2017 3:38:17 PM C:\Users\Sarah\Documents\17016 - Arlex, 24x40 PC - MainFile - Low Seismic_Sarah.rvt

IDENTIFICATION STAMP
DIV. OF THE STATE ARCHITECT
APP: 03-121617 INC:
REVIEWED FOR
SS ☑ FLS ☑ ACS ☑
DATE: 08/02/2021

PROFESSIONAL STAMP

12/19/2017

THE PLANS, IDEAS & DESIGNS SHOWN ON THESE DRAWINGS ARE THE PROPERTY OF R&S TAVARES ASSOCIATES, INC. DEVISED SOLELY FOR THIS CONTRACT. THESE PLANS SHALL NOT BE USED, IN WHOLE OR IN PART, FOR ANY PURPOSE FOR WHICH THEY WERE NOT INTENDED WITHOUT THE EXPRESS WRITTEN CONSENT OF R&S TAVARES ASSOCIATES, INC. ©

CLIENT

CLASS LEASING LLC
1221 Harley Knox Boulevard
Perris, CA 92571

R&S TAVARES ASSOCIATES
DESIGN ◆ CONSULTING ◆ PROJECT
11777 Bernardo Plaza Court, Suite 105
San Diego, CA 92128
www.rstavares.com

ORIGINAL PC STATE AGENCY APPROVAL

FILE NUMBER: PC-128
IDENTIFICATION STAMP
DIVISION OF THE STATE ARCHITECT
04 - 116504 INCR: 0
AC RM FLS EA SSR KER
DATE 07/19/2018

PROJECT TITLE

24' x 40'
EXPANDABLE TO
120' x 40'

PRE-CHECK (PC) DOCUMENT
Code: [2016] CBC
A separate project application for construction is required.

PROJECT SPECIFIC STATE AGENCY APPROVAL

IDENTIFICATION STAMP
DIV. OF THE STATE ARCHITECT
APP. 04-119993 INC:
REVIEWED FOR
SS ☑ FLS ☑ ACS ☑
DATE: 02/24/2021

Revision Schedule

#	Description	Date

SHEET TITLE
SECTION

PROJECT NUMBER
17016A

DRAWN BY
rMc/SC

CHECKED BY
JA/RT

DATE
2017/06/05

SHEET NO.
A6.2

SHEET OF SHEETS

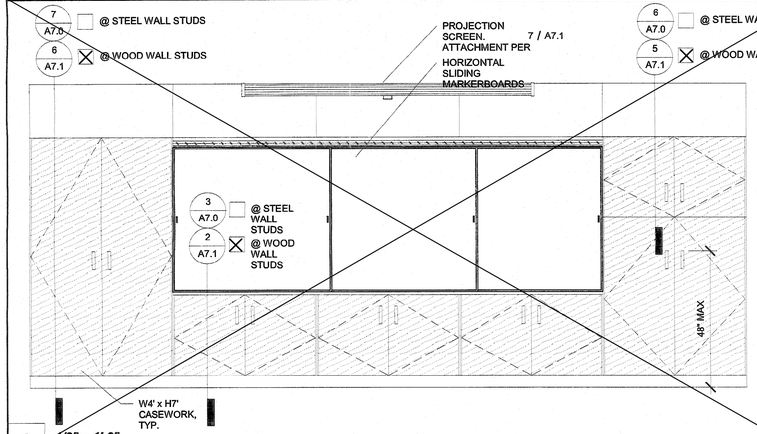

8 1/2" = 1'-0"
Teaching Wall - Elevation/Section - Option

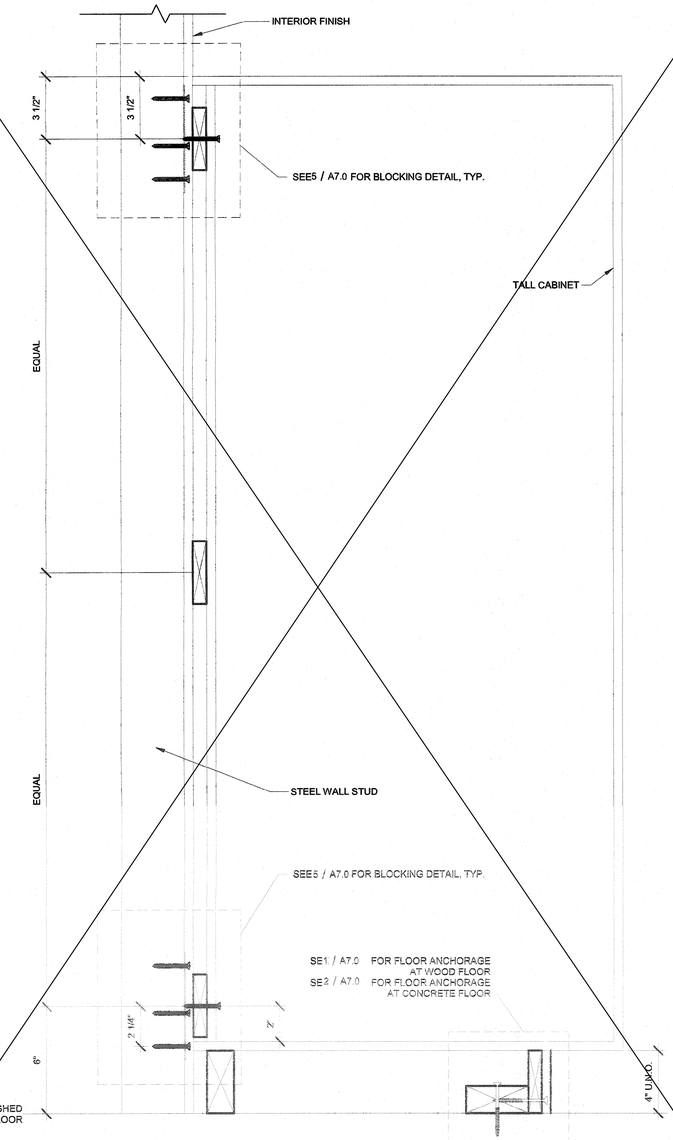

7 3" = 1'-0"
Tall Cabinet Wall Anchorage at Steel Stud

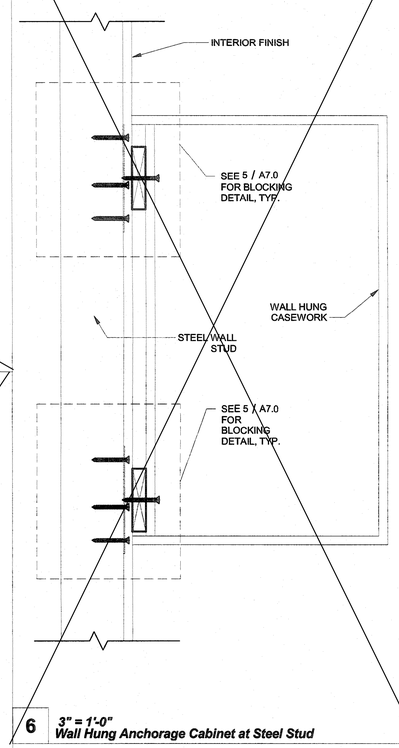

6 3" = 1'-0"
Wall Hung Anchorage Cabinet at Steel Stud

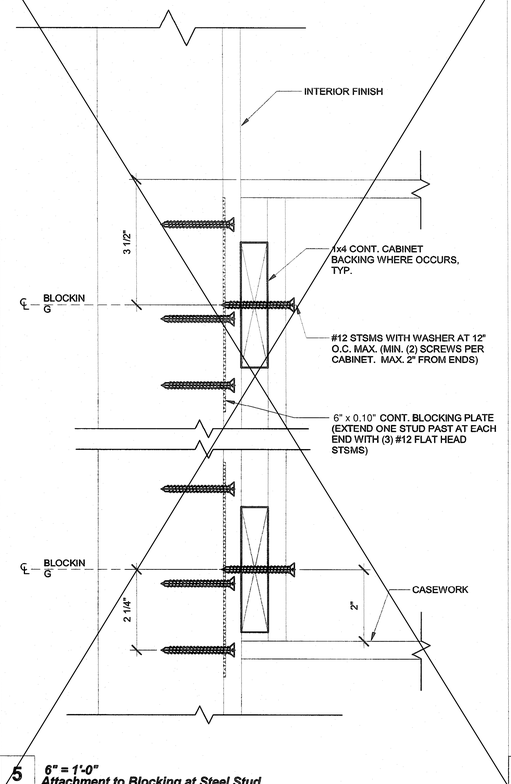

5 6" = 1'-0"
Attachment to Blocking at Steel Stud

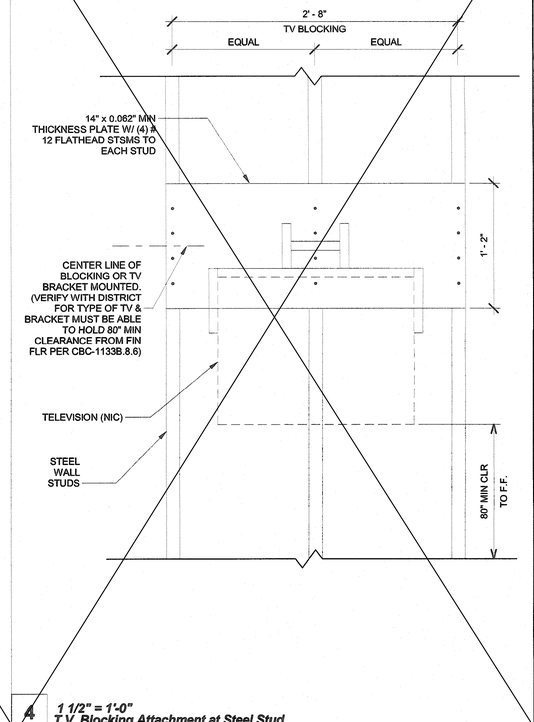

4 1 1/2" = 1'-0"
T.V. Blocking Attachment at Steel Stud

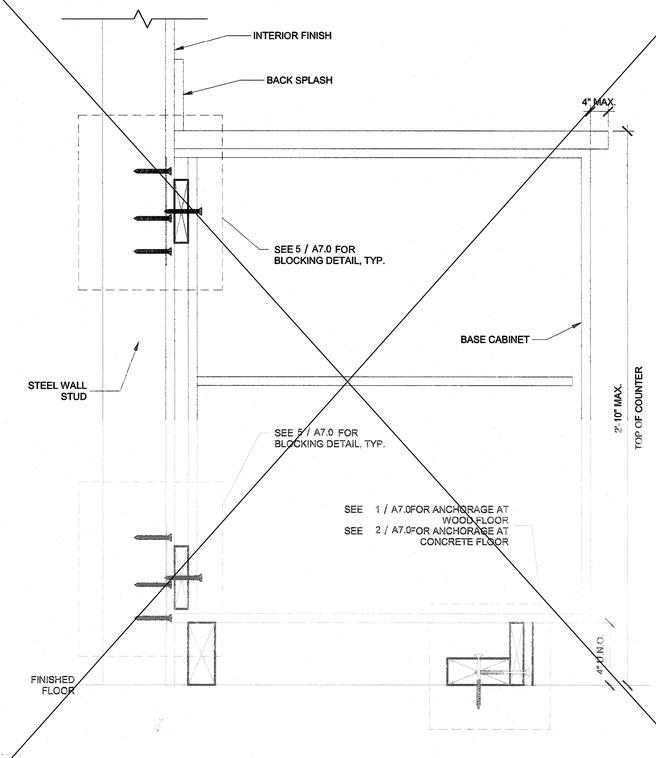

3 3" = 1'-0"
Base Cabinet Wall Anchorage at Steel Stud

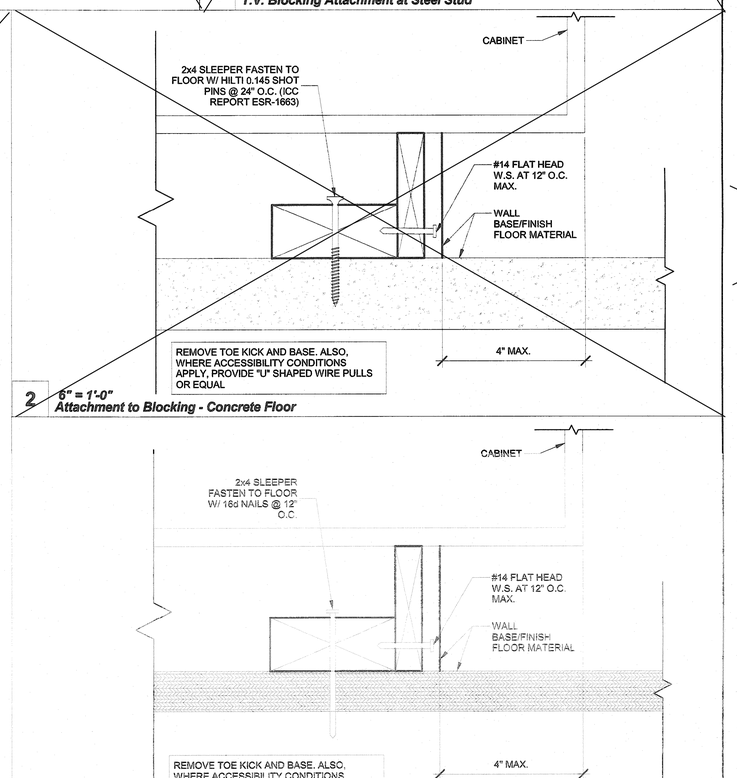

2 6" = 1'-0"
Attachment to Blocking - Concrete Floor

1 6" = 1'-0"
Attachment to Blocking - Wood Floor

IDENTIFICATION STAMP
DIV. OF THE STATE ARCHITECT
APP: 03-121617 INC:
REVIEWED FOR
SS ☑ FLS ☑ ACS ☑
DATE: 08/02/2021

PROFESSIONAL STAMP

REGISTERED PROFESSIONAL ENGINEER MANNY D. FRESCO C-58380 STRUCTURAL STATE OF CALIFORNIA

12/19/2017

THE PLANS, IDEAS & DESIGNS SHOWN ON THESE DRAWINGS ARE THE PROPERTY OF R&S TAVARES ASSOCIATES, INC. DEVISED SOLELY FOR THIS CONTRACT. THESE PLANS SHALL NOT BE USED, IN WHOLE OR IN PART, FOR ANY PURPOSE FOR WHICH THEY WERE NOT INTENDED WITHOUT THE EXPRESS WRITTEN CONSENT OF R&S TAVARES ASSOCIATES, INC. ©

CLIENT

CLASS LEASING LLC
1221 Harley Knox Boulevard
Perris, CA 92571

R&S TAVARES ASSOCIATES
DESIGN ◆ CONSULTING ◆ PROJECT
11777 Bernardo Plaza Court, Suite 105
San Diego, CA 92128
www.rstavares.com

ORIGINAL PC STATE AGENCY APPROVAL

FILE NUMBER: PC-128
IDENTIFICATION STAMP
DIVISION OF THE STATE ARCHITECT
04 - 116504 INCR: 0
AC RM FLS EA SSR KER
DATE 07/19/2018

PROJECT TITLE
24' x 40'
EXPANDABLE TO
120' x 40'

PRE-CHECK (PC) DOCUMENT
Code: [2016] CBC
A separate project application for construction is required.

PROJECT SPECIFIC STATE AGENCY APPROVAL

IDENTIFICATION STAMP
DIV. OF THE STATE ARCHITECT
APP: 04-119993 INC:
REVIEWED FOR
SS ☑ FLS ☑ ACS ☑
DATE: 02/24/2021

Revision Schedule

#	Description	Date

SHEET TITLE
ADDITIONAL OPTION DETAILS

PROJECT NUMBER
17016A

DRAWN BY
rMc/SC

CHECKED BY
JA/RT

DATE
2017/06/05

SHEET NO.
A7.0

SHEET OF SHEETS

12/19/2017 1:12:46 PM C:\Users\Jaxel\Documents\17016 - Atlas, 24'x40' PC - Main\File - Low Seismic_Lee.rvt

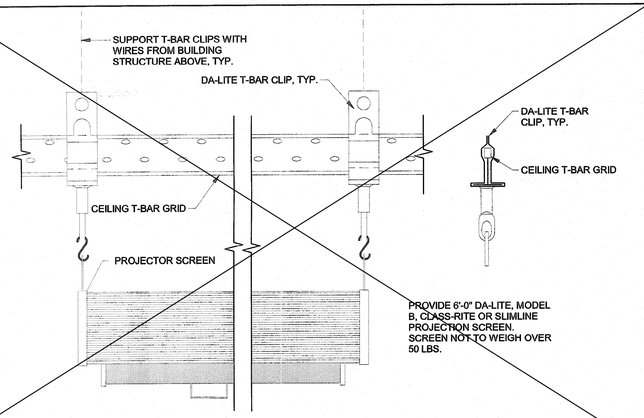

7 1 1/2" = 1'-0"
Projection Screen Mounting

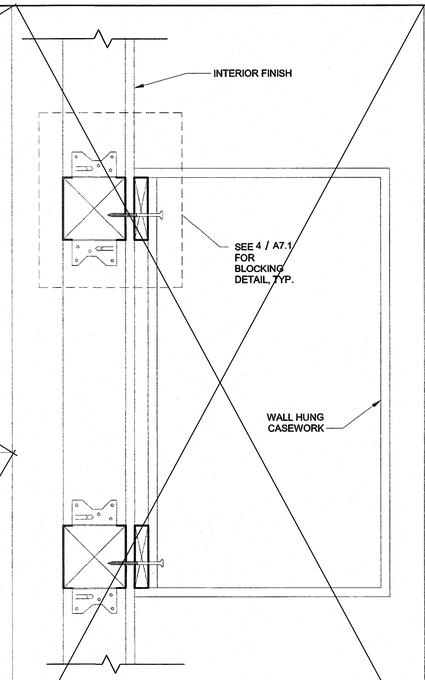

5 3" = 1'-0"
Wall Hung Anchorage Cabinet at Wood Stud

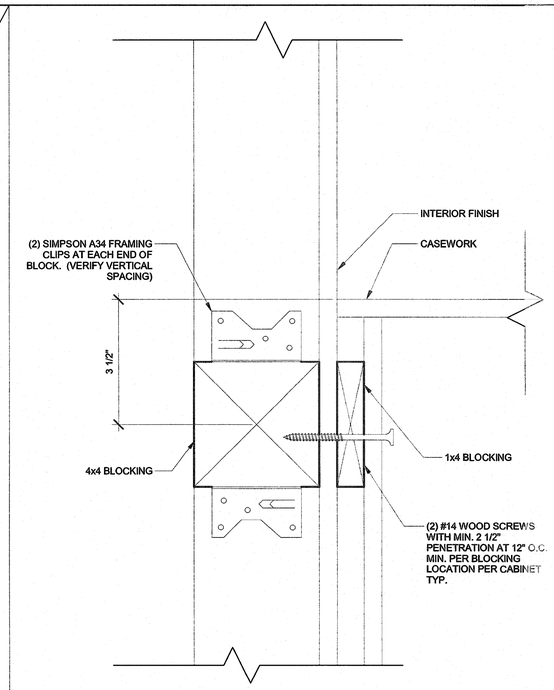

4 6" = 1'-0"
Attachment to Blocking at Wood Stud

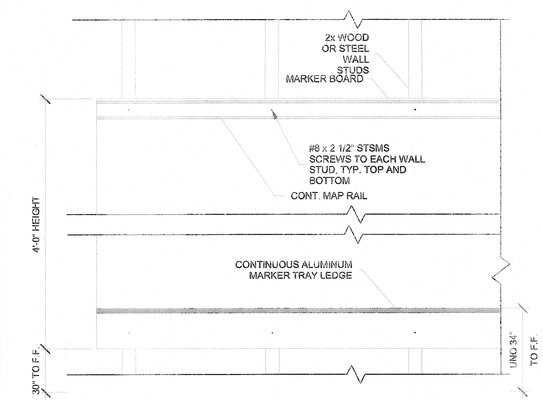

3 1 1/2" = 1'-0"
Marker Board Attachment

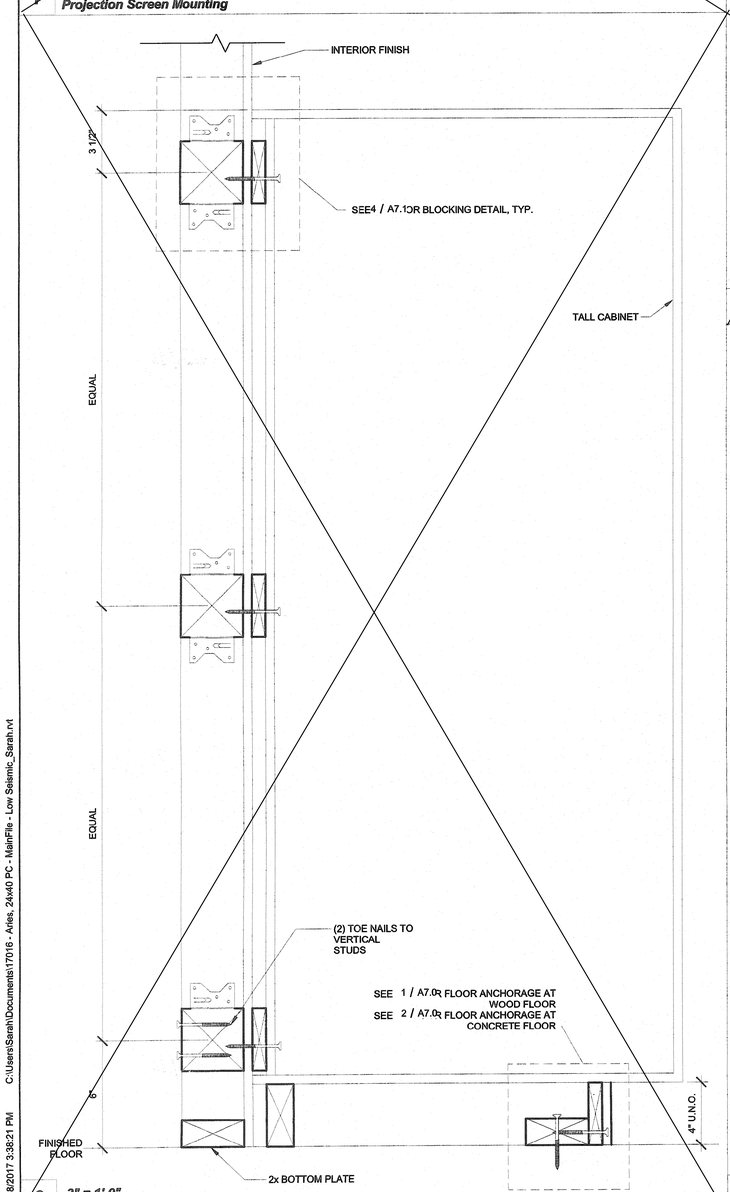

6 3" = 1'-0"
Tall Cabinet Wall Anchorage at Wood Stud

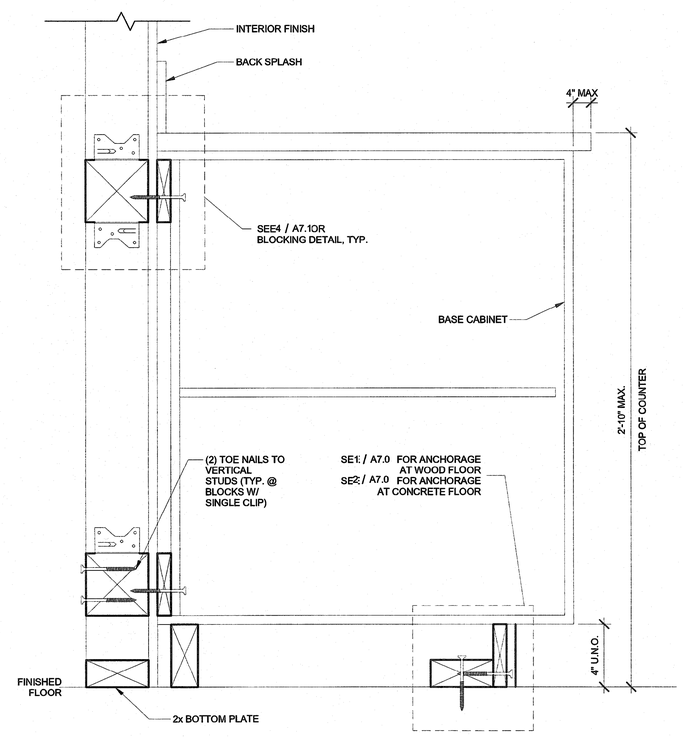

2 3" = 1'-0"
Base Cabinet Wall Anchorage at Wood Stud

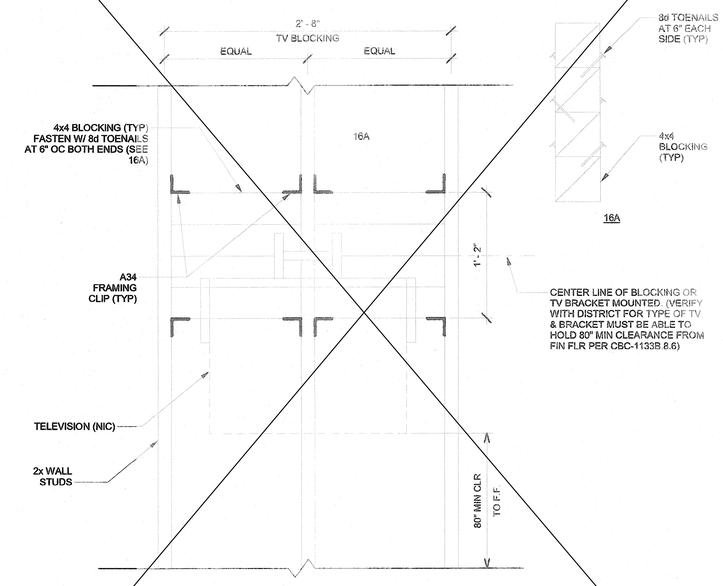

1 1 1/2" = 1'-0"
T.V. Blocking Attachment at Wood Stud

IDENTIFICATION STAMP
DIV. OF THE STATE ARCHITECT
APP: 03-121617 INC: A
REVIEWED FOR
SS ☑ FLS ☑ ACS ☑
DATE: 08/02/2021

PROFESSIONAL STAMP

12/19/2017

THE PLANS, IDEAS & DESIGNS SHOWN ON THESE DRAWINGS ARE THE PROPERTY OF R&S TAVARES ASSOCIATES, INC. DEVISED SOLELY FOR THIS CONTRACT. THESE PLANS SHALL NOT BE USED, IN WHOLE OR IN PART, FOR ANY PURPOSE FOR WHICH THEY WERE NOT INTENDED WITHOUT THE EXPRESS WRITTEN CONSENT OF R&S TAVARES ASSOCIATES, INC. ©

CLIENT

CLASS LEASING LLC
1221 Hartley Knox Boulevard
Perris, CA 92571

R&S TAVARES ASSOCIATES
DESIGN ◆ CONSULTING ◆ PROJECT
11777 Bernardo Plaza Court, Suite 105
San Diego, CA 92128
www.rstavares.com

ORIGINAL PC STATE AGENCY APPROVAL

FILE NUMBER: PC-128
IDENTIFICATION STAMP
DIVISION OF THE STATE ARCHITECT
04 - 116504 INCR: 0
AC RM FLS EA SSR KER
DATE 07/19/2018

PROJECT TITLE
24' x 40'
EXPANDABLE TO
120' x 40'

PRE-CHECK (PC) DOCUMENT
Code: [2016] CBC
A separate project application for construction is required.

PROJECT SPECIFIC STATE AGENCY APPROVAL

IDENTIFICATION STAMP
DIV. OF THE STATE ARCHITECT
APP. 04-119993 INC:
REVIEWED FOR
SS ☑ FLS ☑ ACS ☑
DATE: 02/24/2021

Revision Schedule

#	Description	Date

SHEET TITLE
ADDITIONAL OPTION DETAILS

PROJECT NUMBER
17016A

DRAWN BY
rMc/SC

CHECKED BY
JA/RT

DATE
2017/06/05

SHEET NO.
A7.1

SHEET OF SHEETS

12/18/2017 3:38:21 PM C:\Users\Sarah\Documents\17016 - Aries, 24x40 PC - MainFile - Low Seismic_Sarah.rvt

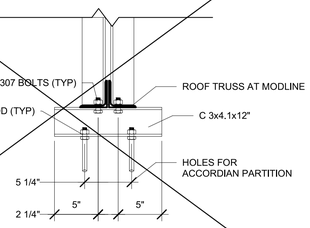

2 *1 1/2" = 1'-0"*
ACCORDIAN DOOR - TOP CONN AT TRUSS

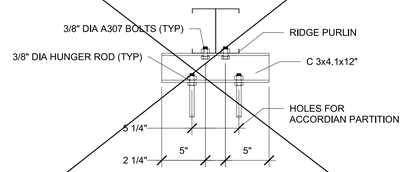

1 *1 1/2" = 1'-0"*
ACCORDIAN DOOR - TOP CONN AT PURLIN

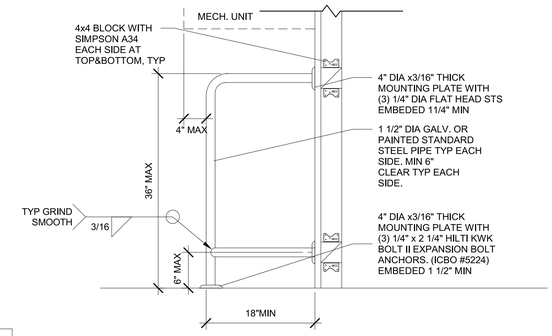

5 *1" = 1'-0"*
HVAC BARRIER at wood stud

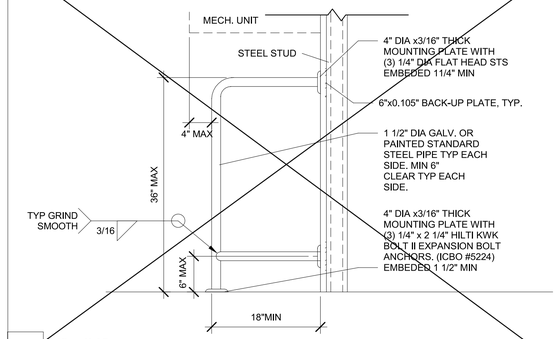

4 *1" = 1'-0"*
HVAC BARRIER at steel stud

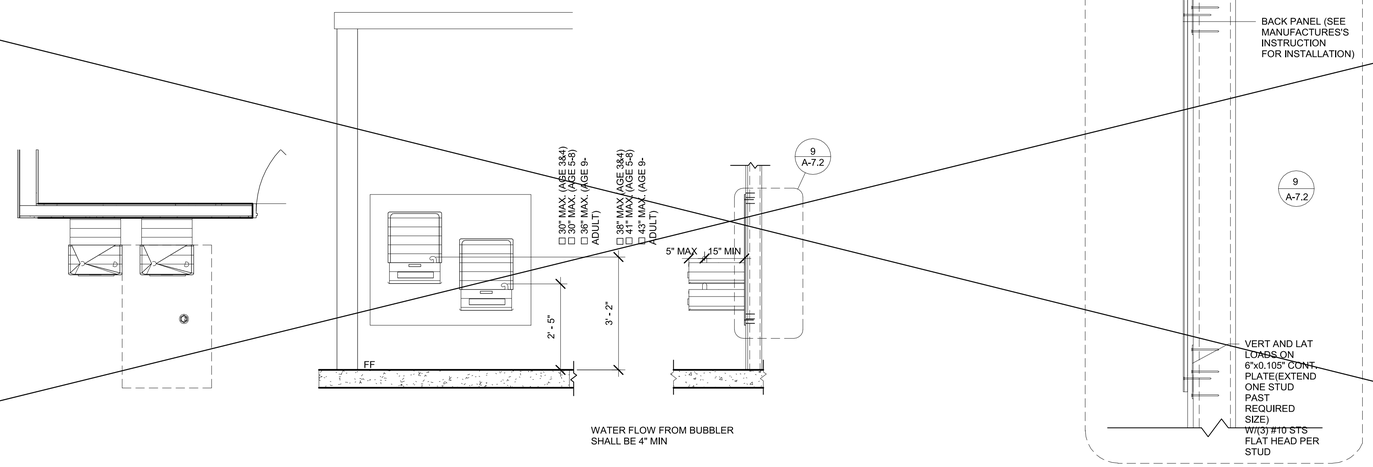

6 *1/2" = 1'-0"*
Drinking Fountain Blocking Detail steel stud

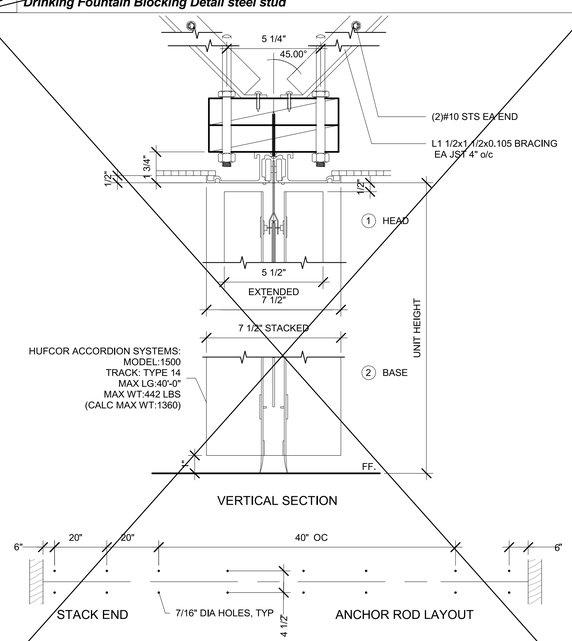

3 *3" = 1'-0"*
ACCORDIAN PARTITION ATTACHMENT

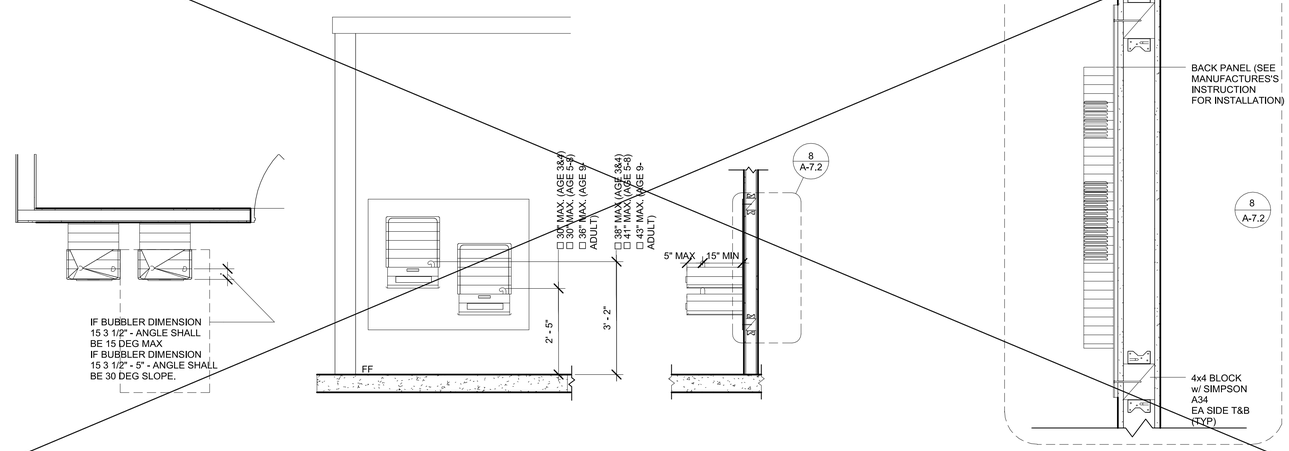

7 *1/2" = 1'-0"*
Drinking Fountain Blocking Detail wood stud

IDENTIFICATION STAMP
DIV. OF THE STATE ARCHITECT
APP: 03-121617 INC:
REVIEWED FOR
SS ☑ FLS ☑ ACS ☑
DATE: 08/02/2021

PROFESSIONAL STAMP

REGISTERED PROFESSIONAL ENGINEER
MANNY D. FRANCO
C-43804
STRUCTURAL
STATE OF CALIFORNIA

12/19/2017

THE PLANS, IDEAS & DESIGNS SHOWN ON THESE DRAWINGS ARE THE PROPERTY OF R&S TAVARES ASSOCIATES, INC. DEVISED SOLELY FOR THIS CONTRACT. THESE PLANS SHALL NOT BE USED, IN WHOLE OR IN PART, FOR ANY PURPOSE FOR WHICH THEY WERE NOT INTENDED WITHOUT THE EXPRESS WRITTEN CONSENT OF R&S TAVARES ASSOCIATES, INC. ©

CLIENT

CLASS LEASING LLC
1221 Harley Knox Boulevard
Perris, CA 92571

R&S TAVARES ASSOCIATES
DESIGN ★ CONSULTING ★ PROJECT
11777 BERNARDO PLAZA COURT, SUITE 105
SAN DIEGO, CA 92128
WWW.RSTAVARES.COM

ORIGINAL PC STATE AGENCY APPROVAL
FILE NUMBER: PC-128

IDENTIFICATION STAMP
DIVISION OF THE STATE ARCHITECT
04 - 116504 INCR: 0
AC RM FLS EA SSR KER
DATE 07/19/2018

PROJECT TITLE

24' x 40'
EXPANDABLE TO
120' x 40'

PRE-CHECK (PC) DOCUMENT
Code: [2016] **CBC**
A separate project application for construction is required.

PROJECT SPECIFIC STATE AGENCY APPROVAL

IDENTIFICATION STAMP
DIV. OF THE STATE ARCHITECT
APP: 04-119993 INC:
REVIEWED FOR
SS ☑ FLS ☑ ACS ☑
DATE: 02/24/2021

Revision Schedule

#	Description	Date

SHEET TITLE

ADDITIONAL
OPTION DETAILS

PROJECT NUMBER
17016A

DRAWN BY
rMc/SC

CHECKED BY
JA/RT

DATE
2017/06/05

SHEET NO.
A7.2

SHEET OF SHEETS

1/4/2018 12:17:31 PM C:\Users\Lee\Documents\17016 - Aries, 24x40 PC - MainFile - Low Seismic_Lee.rvt

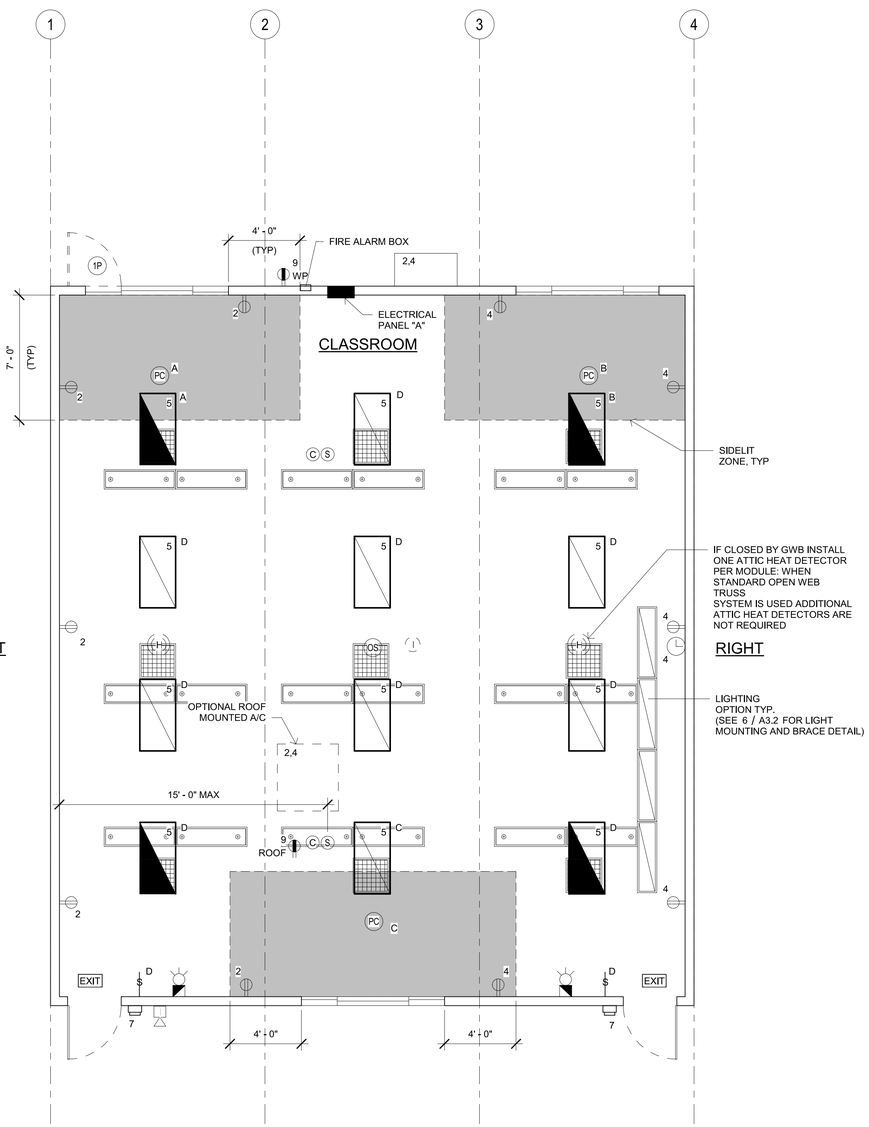

NOTE: PROVIDE A MINIMUM OF 72 SF SOLAR READY AREA PER MODULE. AREA TO BE A MINIMUM OF 5' IN ANY DIRECTION WITH A MINIMUM SPACE OF 80 SF PER BUILDING.

SEE SHEET ALT-01
FOR ELECTRICAL PLAN

1 ***1/4" = 1'-0"***
ELECTRICAL PLAN

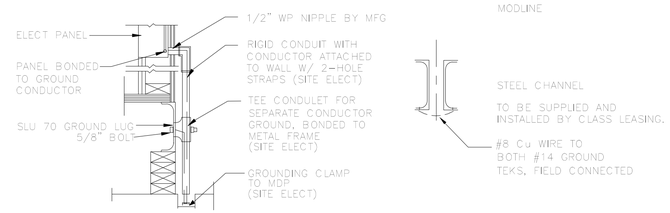

NOTES:

1. BOND SEPARATE CONDUCTORS FROM GROUND ROD TO ELEC'L. PANEL & TO METAL BUILDING FRAME (CEC 250.52) IN ADDITION TO THE DETAIL SHOWN ABOVE. BOND THE ELECTRICAL GROUND TO METAL UNDERGROUND WATER PIPE IN DIRECT CONTACT WITH THE EARTH FOR 10 FT. OR MORE, IF AVAILABLE (CEC 250.52)

2. CHECK RESISTANT TO GROUND ROD. IF RESISTANCE EXCEEDS 25 OHMS. INSTALL ADDITIONAL GROUND RODS WITH CONDUCTORS AS SHOWN SEPARATED AT LEAST 6'-0" UNTIL RESISTANCE IS REDUCED TO 25 OHMS OR LESS (CEC 250.56).

3. ELEC. TRADE SHALL CHECK AREA FOR EXISTING CONDUITS, SEWER, GAS & WATER PIPING BEFORE DRIVING GROUND RODS.

4. ALL MODULES OF STEEL FRAME BLDGS. SHALL BE ELECTRICALLY BONDED TOGETHER (BOLTING ONLY IS NOT ACCEPTABLE BONDING). BONDING SHALL INCLUDE METAL RAMP & STAIRS.

5. SIZE OF CONDUCTORS SHALL COMPLY WITH CEC TABLE 250.66

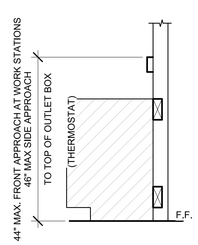

3 ***1" = 1'-0"***
ELEV. @ WORKSTATION

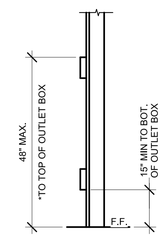

* 30"x48" MIN CLR FLOOR SPACE AT EACH LOCATION FOR PERPENDICULAR APPROACH

4 ***1" = 1'-0"***
MOUNTING ELEV.

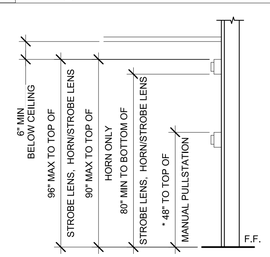

* PROVIDE MIN 30"x48" CLR FLOOR SPACE FOR PERPENDICULAR APPROACH AT EACH LOCATION

THE SWITCH OR SWITCHES INSTALLED IN EMERGENCY LIGHTING CIRCUITS SHALL BE SO ARRANGED THAT ONLY AUTHORIZED PERSONNEL WILL HAVE CONTROL OF EMERGENCY LIGHTING. (CEC art. 700.20)

5 ***1" = 1'-0"***
FIRE ALARM MOUNTING HEIGHTS

GENERAL GROUNDING NOTES

EACH BUILDING SHALL BE GROUNDED SEPARARELY WITH A ¾" ROUND X 8 FEET COPPERCLAD STEEL GROUND ROD. WHERE ROCK BOTOOM IS FOUND, DRIVE ROD AT 45 DEGREES MAXIMUM FROM THE VERTICAL OR HAVE IT BURIED IN A TRENCH 30" DEEP MINIMUM.

TESTING FOR RESISTANCE TO GROUND, IF RESISTANCE EXCEEDS 25 OHMS INSTALL ADDITIONAL GROUND RODS SEPARATED AT LEAST 6 FEET, UNTIL RESISTANCE REDUCES TO 25 OHMS OR LESS. GROUND TEST MUST BE DONE IN THE PRESENCE OF THE PROJECT INSPECTOR AND ALL GROUNDING SHALL BE IN ACCORDANCE WITH CEC ARTICLE 250

EQUIPMENT ANCHORAGE

ALL MECHANICAL, PLUMBING AND ELECTRICAL COMPONENTS SHALL BE ANCHORED AND INSTALLED PER THE DETAILS ON THE DSA APPROVED CONSTRUCTION DOCUMENTS. WHERE NO DETAIL IS INDICATED, THE FOLLOWING COMPONENTS SHALL BE ANCHORED OR BRACED TO MEET THE FORCE AND DISPLACEMENT REQUIREMENTS PRESCRIBED IN THE 2013 CBC, SECTIONS 1616A.1.18 THROUGH 1616A.1.26 AND ASCE 7-10 CHAPTER 13, 26 AND 30.

1. ALL PERMANENT EQUIPMENT AND COMPONENTS.
2. TEMPORARY OR MOVABLE EQUIPMENT THAT IS PERMANENTLY ATTACHED (E.G. HARD WIRED) TO THE BUILDING UTILITY SERVICES SUCH AS ELECTRICITY, GAS OR WATER.
3. MOVABLE EQUIPMENT WHICH IS STATIONED IN ONE PLACE FOR MORE THAN 8 HOURS AND HEAVIER THAN 400 POUNDS ARE REQUIRED TO BE ANCHORED WITH TEMPORARY ATTACHMENTS.

THE ATTACHMENT OF THE FOLLOWING MECHANICAL AND ELECTRICAL COMPONENTS SHALL BE POSITIVELY ATTACHED TO THE STRUCTURE. BUT NEED NOT BE DETAILED ON THE PLANS. THESE COMPONENTS SHALL HAVE FLEXIBLE CONNECTIONS PROVIDED BETWEEN THE COMPONENT AND ASSOCIATED DUCTWORK, PIPING, AND CONDUIT.

A. COMPONENTS WEIGHING LESS THAN 400 POUNDS AND HAVE A CENTER OF MASS LOCATED 4 FEET OR LESS ABOVE THE ADJACENT FLOOR OR ROOF LEVEL THAT DIRECTLY SUPPORT THE COMPONENT.
B. COMPONENTS WEIGHING LESS THAN 20 POUNDS, OR IN THE CASE OF DISTRIBUTED SYSTEMS, LESS THAN 5 POUNDS PER FOOT, WHICH ARE SUSPENDED FROM A ROOF OR FLOOR OR HUNG FROM A WALL.

FOR THOSE ELEMENTS THAT DO NOT REQUIRE DETAILS ON THE APPROVED DRAWINGS, THE INSTALLATION SHALL BE SUBJECT TO THE APPROVAL OF THE STRUCTURAL ENGINEER OF RECORD AND THE DSA DISTRICT STRUCTURAL ENGINEER. THE PROJECT INSPECTOR WILL VERIFY THAT ALL COMPONENTS AND EQUIPMENT HAVE BEEN ANCHORED IN ACCORDANCE WITH ABOVE REQUIREMENTS.

PIPING, DUCTWORK AND ELECTRICAL SYSTEM BRACING OF

PIPING, DUCTWORK AND ELECTRICAL DISTRIBUTION SYSTEMS SHALL BE BRACED TO COMPLY WITH THE FORCES AND DISPLACEMENTS PRESCRIBED IN ASCE 7-10 SECTION 13.3 AS DEFINED IN ASCE 7-10 SECTION 13.6.8, 13.6.7, 13.6.5.6 AND 2013 CBC SECTIONS 1616A.1.23, 1616A.1.24, 1616A.1.25 AND 1616A.1.26

THE BRACING AND ATTACHMENTS TO THE STRUCTURE SHALL BE DETAILED ON THE APPROVED DRAWINGS OR THEY SHALL COMPLY WITH ONE OF THE OSHPD PRE-APPROVALS (OPA #) AS MODIFIED TO SATISFY ANCHORAGE REQUIREMENTS OF ACI 318, APPENDIX D.

COPIES OF THE MANUAL SHALL BE AVAILABLE ON THE JOBSITE PRIOR TO THE START OF HANGING AN BRACING OF THE PIPE, DUCTWORK AND ELECTRICAL DISTRIBUTION SYSTEMS.

THE STRUCTURAL ENGINEER OF RECORD SHALL VERIFY THE ADEQUACY OF THE STRUCTURE TO SUPPORT THE HANGER AND BRACE LOADS.

FIRE ALARM NOTES

PROVIDE SPACE ON ELECTRICAL PANEL FOR LOCK-ON BREAKER, IDENTIFIED WITH RED MARKING, FOR 120 VOLTS FIRE ALARM CIRCUIT, WITH BREAKER LABELED AS FIRE ALARM CIRCUIT, CEC 760.41 (B).
BREAKER AND CIRCUIT PROVIDED AND INSTALLED ON SITE BY OTHERS.

SMOKE AND HEAT DETECTOR CONDUIT AND DEVICES TO BE PROVIDED AND INTERCONNECTED TO THE FIRE ALARM SYSTEMS ON SITE BY OTHERS

APPROVAL OF THIS PLAN DOES NOT CONSTITUTE APPROVAL OF THIS FIRE ALARM SYSTEM FOR ALL SITES, THE FIRE ALARM SYSTEM AND COMPONENTS MAYBE REQUIRED TO BE CHANGED DUE TO EXISTING CONDITIONS OR INCOMPATIBLE COMPONENTS.

CONDUIT FILL AND CONDUCTOR CAPACITY TABLE

(ALL CONDUCTORS SHALL BE TYPE THHN/THWN 75 DEG. C. COPPER)

WIRE SIZE	CAPACITY	WIRE TYPE	NO. OF CONDUCTOR 1/2" C	3/4" C	1" C	1 1/4" C
#12	20A	THHN	9	16	25	45
#10	30A	THHN	5	10	16	28
#8	45A	THHN	2	5	8	14
#6	65A	THHN	1	3	5	10
#4	85A	THHN	1	2	4	7

JUNCTION BOX SIZE TABLE

BOX	SIZE	CU. IN.	MAX NO. OF CONDUCTORS #12	#10	#8	#6
4SS	1 1/4"x4" SQ	18.0	8	7	6	0
4S	1 1/2"x4" SQ	21.0	9	8	7	0
4SD	2 1/8"x4" SQ	30.3	13	12	10	6
4SX	2 7/8"x4" SQ	43.5	23	21	17	10
5SD	2 1/8"x4-11/16" SQ	42.0	18	16	14	6
5SX	3 7/8"x4-11/16" SQ	86.0	38	34	28	17
664	4"x6" SQ	144.0	64	57	48	28

* DEDUCT ONE CONDUCTOR FOR (1) OR MORE GROUNDING CONDUCTORS ENTERING THE BOX

IDENTIFICATION STAMP
DIV. OF THE STATE ARCHITECT
APP: 03-121617 INC:
REVIEWED FOR
SS ☑ FLS ☑ ACS ☑
DATE: 08/02/2021

PROFESSIONAL STAMP

REGISTERED PROFESSIONAL ENGINEER MANNY D. FRANCISCO C-43801 STRUCTURAL STATE OF CALIFORNIA

12/19/2017

THE PLANS, IDEAS & DESIGNS SHOWN ON THESE DRAWINGS ARE THE PROPERTY OF R&S TAVARES ASSOCIATES, INC. DEVISED SOLELY FOR THIS CONTRACT. THESE PLANS SHALL NOT BE USED, IN WHOLE OR IN PART, FOR ANY PURPOSE FOR WHICH THEY WERE NOT INTENDED WITHOUT THE EXPRESS WRITTEN CONSENT OF R&S TAVARES ASSOCIATES, INC. ©

CLIENT

CLASS LEASING LLC
1221 Harley Knox Boulevard
Perris, CA 92571

R&S TAVARES ASSOCIATES
DESIGN ★ CONSULTING ★ PROJECT
11777 BERNARDO PLAZA COURT, SUITE 105
SAN DIEGO, CA 92128
WWW.RSTAVARES.COM

ORIGINAL PC STATE AGENCY APPROVAL
FILE NUMBER: PC-128
IDENTIFICATION STAMP
DIVISION OF THE STATE ARCHITECT
04 - 116504 INCR: 0
AC RM FLS EA SSR KER
DATE 07/19/2018

PROJECT TITLE
24' x 40'
EXPANDABLE TO
120' x 40'

PRE-CHECK (PC) DOCUMENT
Code: [2016] **CBC**
A separate project application for construction is required.

PROJECT SPECIFIC STATE AGENCY APPROVAL
IDENTIFICATION STAMP
DIV. OF THE STATE ARCHITECT
APP: 04-119993 INC:
REVIEWED FOR
SS ☑ FLS ☑ ACS ☑
DATE: 02/24/2021

Revision Schedule

#	Description	Date

SHEET TITLE
ELECTRICAL PLAN
36x40

PROJECT NUMBER
17016A

DRAWN BY
rMc/SC

CHECKED BY
JA/RT

DATE
2017/06/05

SHEET NO.
E1.2

SHEET OF SHEETS

1/4/2018 2:43:47 PM C:\Users\Lee\Documents\17016 - Aries, 24x40 PC - MainFile - Low Seismic_Lee.rvt

PANEL A= 100A	120/208 VOLTS, 3 ϕ, 3 WIRE					MAIN LUGS ONLY			
	LOADCENTER SURFACE MOUNTED						GRD & NEUTRAL BARS		AMP BUS
	VOLTAMPS		10000 AIC				VOLTAMPS		
DESCRIPTION	ϕ A	ϕ B	C/B	CKT	ϕ	CKT	C/B	ϕA	ϕ B	DESCRIPTION
AC WALL MOUNTED- 5 TON	7705		30	1	A	2	20	900		OUTLETS
		7705	30	3	B	4	20		1080	OUTLETS
GENERAL LIGHTING	1152		20	5	A	6	20	180		EXTERIOR GFI/WP
EXTERIOR LIGHTING		80	20	7	B	8	20		180	ROOF GFI/WP
DED SOLAR READY										
DED SOLAR READY										
SUBTOTAL	ϕ A 9145	ϕ B 7785						ϕ A 1080	ϕ B 1260	SUBTOTAL
TOTAL	10225	9045	10225/120 VOLTS=81.21 81.21+ 1.7= 82.91							

SEE SHEET ALT-01
FOR ELECTRICAL PANEL

2 1" = 1'-0"
ELECTRICAL PANEL_WALL MOUNTED

PANEL A= 100A	120/208 VOLTS, 3 ϕ, 3 WIRE					MAIN LUGS ONLY			
	LOADCENTER SURFACE MOUNTED						GRD & NEUTRAL BARS		AMP BUS
	VOLTAMPS		10000 AIC				VOLTAMPS		
DESCRIPTION	ϕ A	ϕ B	C/B	CKT	ϕ	CKT	C/B	ϕA	ϕ B	DESCRIPTION
AC ROOF MOUNTED- 5 TON	8280		30	1	A	2	20	900		OUTLETS
		8280	30	3	B	4	20		1080	OUTLETS
GENERAL LIGHTING	1152		20	5	A	6	20	180		EXTERIOR GFI/WP
EXTERIOR LIGHTING		80	20	7	B	8	20		180	ROOF GFI/WP
DED SOLAR READY										
DED SOLAR READY										
SUBTOTAL	ϕ A 9720	ϕ B 8360						ϕ A 1080	ϕ B 1260	SUBTOTAL
TOTAL	10800	9620	10800/120 VOLTS= 90 90 + 1.15= 9115							

3 1" = 1'-0"
ELECTRICAL PANEL_ROOF MOUNTED

LEGEND

ELECTRICAL PANEL AT +60" AFF TO TOP OF ELECTRICAL PANEL WITH 1 1/2" DIA POWER STUB OUT

ROOF MOUNTED HVAC UNIT-SEE MECHANICAL DWGS

WALL MOUNTED HVAC UNIT, SEE MECHANICAL DWGS

100 CFM CEILING MOUNTED EXHAUST FAN. INTERLOCKED WITH LIGHT SWITCH

HW — 4SD J-BOX FOR WATER HEATER LOCATE ABOVE CEILING W/ COVER PLATE, HARD WIRE TO UNIT

4SD J-BOX IN ATTIC FOR ATTIC MOUNTED HEAT DETECTOR (DEVICE BY OTHERS). MAXIMUM 35'-0" FROM ANY POINT IN ATTIC AND 50'-0" BETWEEN THEM. PROVIDE A 6'-0" CONDUIT FROM EACH J-BOX TO HEAT DETECTOR LOCATION. CONDUIT & CONNECTION TO CEILING DEVICE & DEVICE BY OTHERS (ALARM NOTE #1)

S — 4SD J-BOX IN ATTIC FOR CEILING MOUNTED SMOKE DETECTOR (DEVICE BY OTHERS). MAXIMUM 21'-0" FROM ANY POINT IN ROOM BUT NOT MORE THAN 15'-0" TO A PERPENDICULAR WALL AND 30'-0" BETWEEN THEM. PROVIDE A 6'-0" CONDUIT FROM EACH J-BOX TO SMOKE DETECTOR LOCATION. CONDUIT & CONNECTION TO CEILING DEVICE & DEVICE BY OTHERS (ALARM NOTE #1)

RECESSED 4SD J-BOX W/ COVER PLATE FOR FUTURE FIRE ALARM SYSTEM BY OTHERS. MOUNT AT +18" AFF U.O.N. TO CENTERLINE OF BOX AND PROVIDE 1" CO STUB TO ATTIC SPACE WITH PULLSTRING

4SD J-BOX FOR EXTERIOR FIRE ALARM HORN (DEVICE BY OTHERS). MOUNT AT +90" AFF TO TOP OF DEVICE WITH 3/4" CONDUIT STUBBED TO ATTIC WITH PULLSTRING

4SD J-BOX FOR FIRE ALARM STROBE (DEVICE BY OTHERS). BOTTOM OF LENS 80" MIN TOP OF LENS 96" MAX AFF WITH 3/4"CONDUIT TO EXTERIOR FIRE ALARM HORN WITH PULLSTRING

4SD J-BOX FOR FIRE ALARM PULLSTATION (DEVICE BY OTHERS). MOUNT AT +48" AFF TO TOP OF CONTROL BOX WITH 3/4" CONDUIT TO FIRE ALARM STROBE WITH PULLSTRING

EXIT — EXIT SIGN WITH BATTERY BACK UP. EXIT SIGN REQUIRED FOR CLASSROOMS WITH TWO OR MORE EXTERIOR DOORS. CLASSROOMS WITH ONE EXTERIOR DOOR-OPTIONAL.

CLOCK OUTLET AT +80" AFF TO CENTERLINE OF DEVICE

EXTERIOR LED LIGHT FIXTURE. 30w MAX WITH 90 MIN BACK UP BATTERY MOUNT AT +93" AFF

ROOF — ROOF MOUNTED WEATHER PROOF GFI RECEPTACLE

GFI — GROUND FAULT CIRCUIT INTERRUPT RECEPTACLE WITHIN 6'-0" OF ALL SINKS

WP — EXTERIOR WEATHER PROOF GFI RECEPTACLE AT +24" AFF FOR A/C SERVICES (MAX 25'-0" FROM UNITS)

DUPLEX (WALL MOUNTED) RECEPTACLE 15A-125v-3 WIRE. MOUNT AT +15" AFF U.O.N. TO BOTTOM OF OUTLET BOX

MIN. + 15" TO BOTTOM OF BOX

3-WAY LIGHT SWITCH. MOUNT AT+48" AFF TO TOP OF SWITCH BOX

$ 3

$ — LIGHT SWITCH. MOUNT AT+48" AFF TO TOP OF SWTICH BOX

$ D — SINGLE BUTTON DIMMER SWITCH, AT +48" AFF. TO TOP OF SWITCH BOX, WATTSTOPPER #LMDM-101 OR EQUAL

WS-1 — SINGLE SWITCH WALL OCCUPANCY SENSOR. WATTSTOPPER PW-100 OR EQUAL. SENSOR TO BE MOUNTED AT +44" AFF AND USE FOR OPEN ROOM (OR RESTROOM) LESS THAN 100 SQ FT W/ (1) CIRCUIT.

US — ULTRASONIC CEILING OCCUPANCY SENSOR. WATTSTOPPER W-500A OR EQUAL. SENSOR TO BE CONNECTED TO KEYED LIGHT SWITCHES FOR MANUAL OVERRIDE AND USE FOR RESTROOM W/ PARTITIONS.

PC — CEILING MOUNTED PHOTOCELL, WATTSTOPPER #LMLS-500 OR EQUAL

OS — CEILING MOUNTED OCCUPANCY SENSOR. WATTSTOPPER #LMPC-100 OR EQUAL.

C — CARBON MONOXIDE PER CBC SECTION 915

2x4 CEILING LIGHT WITH (3) T-8 LAMPS, LAY-IN FLUORESCENT LIGHT FIXTURE WITH DIMMABLE BALLAST
ORACLE LIGHTING MODEL: 24-OT-3-32-T8-A12-L41K-C4
WATTAGE: 96W (3 LAMPS/32W/T8) OR EQUAL

2x4 CEILING LIGHT WITH (3) T-8 LAMPS, LAY-IN FLUORESCENT LIGHT FIXTURE WITH DIMMABLE BALLAST
ORACLE LIGHTING MODEL: 24-OT-3-32-T8-EMG-T8-BX-600-A12-L41K-C4
WATTAGE: 96W (3 LAMPS/32W/T8) OR EQUAL
EACH LIGHT FIXTURE WHICH IS INDICATED AS BEING AN EMERGENCY LIGHT SHALL HAVE A BALLAST BATTERY PACK INSTALLED ON THE FIXTURE. THE BATTERY PACK SHALL PROVIDE POWER TO A SINGLE LAMP WITHIN THE FIXTURE FOR NO LESS THAN 90 MINUTES. ANY LIGHT FIXTURE Equipped WITH A BATTERY PACK SHALL BE WIRED IN SUCH A MANNER THAT THE BATTERY WILL BE ACTIVATED IMMEDIATELY UPON LOSS OF POWER TO THE FIXTURE. ADDITIONALLY THE BATTERY PACK SHALL BE OPERATED USING BATTERY POWER LIGHTING CONTROL SWITCHES AND SENSORS SHALL NOT BE ABLE TO SHUT THE FIXTURE OFF.
SHALL COMPLY w/ CEC 700.20

NOTE: SEE 4/A3.2 FOR PHOTOMETRIC DATA

IDENTIFICATION STAMP
DIV. OF THE STATE ARCHITECT
APP: 03-121617 INC:
REVIEWED FOR
SS ☑ FLS ☑ ACS ☑
DATE: 08/02/2021

PROFESSIONAL STAMP

REGISTERED PROFESSIONAL ENGINEER MANNY D. FRANCISCO 15330 STRUCTURAL STATE OF CALIFORNIA

12/19/2017

THE PLANS, IDEAS & DESIGNS SHOWN ON THESE DRAWINGS ARE THE PROPERTY OF R&S TAVARES ASSOCIATES, INC. DEVISED SOLELY FOR THIS CONTRACT. THESE PLANS SHALL NOT BE USED, IN WHOLE OR IN PART, FOR ANY PURPOSE FOR WHICH THEY WERE NOT INTENDED WITHOUT THE EXPRESS WRITTEN CONSENT OF R&S TAVARES ASSOCIATES, INC. ©

CLIENT

CLASS LEASING LLC
1221 Hartley Knox Boulevard
Perris, CA 92571

R&S TAVARES ASSOCIATES
DESIGN ◆ CONSULTING ◆ PROJECT
11777 Bernardo Plaza Court, Suite 105
San Diego, CA 92128
www.rstavares.com

ORIGINAL PC STATE AGENCY APPROVAL

FILE NUMBER: PC-128
IDENTIFICATION STAMP
DIVISION OF THE STATE ARCHITECT
04 - 116504 INCR: 0
AC RM FLS EA SSR KER
DATE 07/19/2018

PROJECT TITLE
24' x 40'
EXPANDABLE TO
120' x 40'

PRE-CHECK (PC) DOCUMENT
Code: [2016] CBC
A separate project application for construction is required.

PROJECT SPECIFIC STATE AGENCY APPROVAL

IDENTIFICATION STAMP
DIV. OF THE STATE ARCHITECT
APP: 04-119993 INC:
REVIEWED FOR
SS ☑ FLS ☑ ACS ☑
DATE: 02/24/2021

Revision Schedule

#	Description	Date

SHEET TITLE
ELECTRICAL
SCHEDULE 36x40

PROJECT NUMBER
17016A

DRAWN BY
rMc/SC

CHECKED BY
JA/RT

DATE
2017/06/05

SHEET NO.
E1.3

SHEET OF SHEETS

12/18/2017 3:38:29 PM C:\Users\Sarah\Documents\17016 - Aries, 24x40 PC - MainFile - Low Seismic_Sarah.rvt

STATE OF CALIFORNIA
INDOOR LIGHTING
CEC-NRCC-LTI-01-E (Revised 04/16) — CALIFORNIA ENERGY COMMISSION

CERTIFICATE OF COMPLIANCE	NRCC-LTI-01-E
Indoor Lighting	(Page 1 of 6)
Project Name: 120'x40' (PC 04-116504)	Date Prepared: 06/25/2018

A. General Information

Climate Zone:	Conditioned Floor Area: 4800					
	Unconditioned Floor Area:					
Building Type:	☑	Nonresidential	☐	High-Rise Residential	☐	Hotel/Motel
☐ Schools	☑	Relocatable Public Schools	☐	Conditioned Spaces	☐	Unconditioned Spaces
Phase of Construction:	☑	New Construction	☐	Addition	☐	Alteration
Method of Compliance:	☐	Complete Building	☐	Area Category	☐	Tailored
Project Address:						

B. Lighting Compliance Documents (select yes for each document included)

For detailed instructions on the use of this and all Energy Efficiency Standards compliance documents, refer to the Nonresidential Manual published by the California Energy Commission.

YES	NO	COMP. DOC.	TITLE
◉	○	NRCC-LTI-01-E	Certificate of Compliance. All Pages required on plans for all submittals.
◉	○	NRCC-LTI-02-E	Lighting Controls, Certificate of Compliance, and PAF Calculation. All Pages required on plans for all submittals.
◉	○	NRCC-LTI-03-E	Indoor Lighting Power Allowance
○	◉	NRCC-LTI-04-E	Tailored Method Worksheets
○	◉	NRCC-LTI-05-E	Line Voltage Track Lighting Worksheets
○	◉	NRCC-LTI-06-E	Indoor Lighting Existing Conditions

C. Summary of Allowed Lighting Power

Conditioned and Unconditioned space Lighting must not be combined for compliance

	Indoor Lighting Power for Conditioned Spaces		Watts	Indoor Lighting Power for Unconditioned Spaces		Watts
01	**Installed** Lighting NRCC-LTI-01-E, Table H, page 5	+	3840	**Installed** Lighting NRCC-LTI-01-E, Table H, page 5	+	
02	Portable Only for Offices NRCC-LTI-01-E, Table G, page 4	+				
03	Minus Lighting Control Credits NRCC-LTI-02-E, page 2	-	711	Minus Lighting Control Credits NRCC-LTI-02-E, page 2	-	
04	Adjusted **Installed** Lighting Power (row 1 plus row 2 minus row 3)	=	3129	Adjusted **Installed** Lighting Power (row 1 minus row 3)	=	0
	Complies ONLY if **Installed** ≤ **Allowed** (Box 04 < Box 05)			Complies ONLY if **Installed** ≤ **Allowed** (Box 04 < Box 05)		
05	**Allowed** Lighting Power Conditioned NRCC-LTI-03-E, page 1 Alterations with replacement luminaires that have at least 50/35%lower power compared to the original existing luminaires, may instead use the allowed wattage from NRCC-LTI-06, page 2		5280	**Allowed** Lighting Power Unconditioned NRCC-LTI-03-E, page 1 Alterations with replacement luminaires that have at least 50/35% lower power compared to the original existing luminaires, may instead use the allowed wattage from NRCC-LTI-06, page 2		

D. Declaration of Required Certificates of Installation

Declare by selecting yes for all of the Certificates that will be submitted. (Retain copies and verify forms are completed and signed.)

YES	NO	Form/Title	
◉	○	NRCI-LTI-01-E - Must be submitted for all buildings	☐ Field Inspector
◉	○	NRCI-LTI-02-E - Must be submitted for a lighting control system, or for an Energy Management Control System (EMCS), to be recognized for compliance.	☐ Field Inspector
○	◉	NRCI-LTI-03-E - Must be submitted for a line-voltage track lighting integral current limiter, or for a supplementary overcurrent protection panel used to energize only line-voltage track lighting, to be recognized for compliance.	☐ Field Inspector
○	◉	NRCI-LTI-04-E - Must be submitted for two interlocked systems serving an auditorium, a convention center, a conference room, a multipurpose room, or a theater to be recognized for compliance.	☐ Field Inspector
○	◉	NRCI-LTI-05-E - Must be submitted for a Power Adjustment Factor (PAF) to be recognized for compliance.	☐ Field Inspector
○	◉	NRCI-LTI-06-E - Must be submitted for additional wattage installed in a video conferencing studio to be recognized for compliance.	☐ Field Inspector

E. Declaration of Required Certificates of Acceptance

Declare by selecting yes for all of the Certificates of Acceptance that will be submitted. (Retain copies and verify forms are completed and signed.)

YES	NO	FORM/TITLE	
◉	○	NRCA-LTI-02-A - Must be submitted for occupancy sensors and automatic time switch controls.	☐ Field Inspector
◉	○	NRCA-LTI-03-A - Must be submitted for automatic daylight controls.	☐ Field Inspector
○	◉	NRCA-LTI-04-A - Must be submitted for demand responsive lighting controls.	☐ Field Inspector
○	◉	NRCA-LTI-05-A - Must be submitted for institutional tuning power adjustment factor (PAF).	

A Separate Lighting Schedule Must Be Filled Out for Conditioned and Unconditioned Spaces. Installed Lighting Power listed on this Lighting Schedule is only for: ☑ **CONDITIONED SPACE** ☐ **UNCONDITIONED SPACE**

F. Indoor Lighting Schedule and Field Inspection Energy Checklist

- ☐ The actual indoor lighting power listed on the next 2 pages includes all installed permanent and planned portable lighting systems.
- ☐ When Complete Building Method is used for compliance, list each different type of luminaire on separate lines.
- ☐ When Area Category Method or Tailored Method is used for compliance, list each different type of luminaire by each different function area on separate lines
- ☐ Also include track lighting in schedule, and submit the track lighting compliance document (NRCC-LTI-05-E) when line-voltage track lighting is installed.

G. Installed Portable Luminaires in Offices – Exception to Section 140.6(a)

- This section shall be filled out ONLY for portable luminaires in offices (As defined in §100.1). All other planned portable luminaires shall be documented on next page of this compliance document.
- This section is used to determine if greater than 0.3 watts of portable lighting is planned for any office
- Fill out a separate line for each different office. Small offices that are typical (having the same general and portable lighting) may be grouped together. This allowance shall not be traded between offices having different lighting systems.

Office Portable Luminaire Schedule	Office Installed Portable Luminaire W/ft²							Office Location	Field Inspector	
01	02	03	04	05	06	07	08	09	10	
Complete Luminaire Description (i.e., LED, under cabinet, furniture mounted direct/indirect)	Watts per Luminaire	Number of Luminaires	Installed portable luminaire watts in this office (G02 x G03)	Square feet of this office	Watts per square foot (G04 / G05)	If G06 ≤ 0.3, enter zero; If G06 > 0.3, (G06-0.3)	(G05 x G07)	Identify Office area in which these portable luminaires are installed	Pass	Fail
			0				0		○	○
			0				0		○	○
			0				0		○	○
			0				0		○	○
			0				0		○	○
Total installed portable luminaire watts that are greater than 0.3 W/ft² per office:								Enter sum total of all pages into NRCC-LTI-01-E; Page 2		

A Separate Lighting Schedule Must Be Filled Out for Conditioned and Unconditioned Spaces. Installed Lighting Power listed on this Lighting Schedule is only for:
☑ **CONDITIONED SPACE** ☐ **UNCONDITIONED SPACE**

H. Indoor Lighting Schedule and Field Inspection Energy Checklist

Luminaire Schedule		Installed Watts					Location	Field Inspector[1]	
01	02	03	04		05	06	07	08	
			How wattage was determined						
Name or Item Tag	Complete Luminaire Description (i.e, 3 lamp fluorescent troffer, F32T8, one dimmable electronic ballast)	Watts per Luminaire	CEC Default from M&E	According to §130.6(c)	Number Luminaires	Total Installed Watts in this area (H03 xH05)	Primary Function area in which these luminaires are installed	Pass	Fail
L-1	3-LAMP/32W/T8	96	☑	☐	40	3840		○	○
			☐	☐		0		○	○
			☐	☐		0		○	○
			☐	☐		0		○	○
			☐	☐		0		○	○
			☐	☐		0		○	○
			☐	☐		0		○	○
			☐	☐		0		○	○
			☐	☐		0		○	○
INSTALLED WATTS PAGE TOTAL:						3160	Enter sum total of all pages into NRCC-LTI-01-E; Page 2		

DOCUMENTATION AUTHOR'S DECLARATION STATEMENT

1. I certify that this Certificate of Compliance documentation is accurate and complete.

Documentation Author Name: RALPH M. TAVARES	Documentation Author Signature:
Company: R&S TAVARES ASSOCIATES, INC.	Signature Date: 06/25/2018
Address: 11777 BERNARDO PLAZA CT. SUITE 105	CEA Certification Identification (if applicable):
City/State/Zip: SAN DIEGO, CA 92128	Phone: 858-444-3344 EXT 1801

RESPONSIBLE PERSON'S DECLARATION STATEMENT

I certify the following under penalty of perjury, under the laws of the State of California:
1. The information provided on this Certificate of Compliance is true and correct.
2. I am eligible under Division 3 of the Business and Professions Code to accept responsibility for the building design or system design identified on this Certificate of Compliance (responsible designer).
3. The energy features and performance specifications, materials, components, and manufactured devices for the building design or system design identified on this Certificate of Compliance conform to the requirements of Title 24, Part 1 and Part 6 of the California Code of Regulations.
4. The building design features or system design features identified on this Certificate of Compliance are consistent with the information provided on other applicable compliance documents, worksheets, calculations, plans and specifications submitted to the enforcement agency for approval with this building permit application.
5. I will ensure that a completed signed copy of this Certificate of Compliance shall be made available with the building permit(s) issued for the building, and made available to the enforcement agency for all applicable inspections. I understand that a completed signed copy of this Certificate of Compliance is required to be included with the documentation the builder provides to the building owner at occupancy.

Responsible Designer Name: MANNY D. FRISCH	Responsible Designer Signature:
Company : R&S TAVARES ASSOCIATES, INC.	Date Signed: 06/25/2018
Address: 11777 BERNARDO PLAZA CT. SUITE 105	License: S3380
City/State/Zip: SAN DIEGO, CA 91218	Phone: 858 444 3344 EXT 1810

A. Mandatory Lighting Control Declaration Statements (Indicate if the measure applies by checking yes or no below.)

YES	NO	Control Requirements
◉	○	Lighting shall be controlled by self-contained lighting control devices which are certified to the Energy Commission according to the Title 20 Appliance Efficiency Regulations in accordance with Section 110.9.
◉	○	Lighting shall be controlled by a lighting control system or energy management control system in accordance with §110.9. An Installation Certificate shall be submitted in accordance with Section 130.4(b).
○	◉	One or more Track Lighting Integral Current Limiters shall be installed which have been certified to the Energy Commission in accordance with §110.9 and §130.0. Additionally, an Installation Certificate shall be submitted in accordance with Section 130.4(b).
○	◉	A Track Lighting Supplementary Overcurrent Protection Panel shall be installed in accordance with Section 110.9 and Section 130.0. Additionally, an Installation Certificate shall be installed in accordance with Section 130.4(b).
◉	○	All lighting controls and equipment shall comply with the applicable requirements in §110.9 and shall be installed in accordance with the manufacturer's instructions in accordance with Section 130.1.
◉	○	All luminaires shall be functionally controlled with manual ON and OFF lighting controls in accordance with Section 130.1(a).
○	◉	General lighting shall be separately controlled from all other lighting systems in an area. Floor and wall display, window display, case display, ornamental, and special effects lighting shall each be separately controlled on circuits that are 20 amps or less. When track lighting is used, general, display, ornamental, and special effects lighting shall each be separately controlled; in accordance with Section 130.1(a)4.
◉	○	The general lighting of any enclosed area 100 square feet or larger, with a connected lighting load that exceeds 0.5 watts per square foot shall meet the multi-level lighting control requirements in accordance with Section 130.1(b).
◉	○	All installed indoor lighting shall be equipped with controls that meet the applicable Shut-OFF control requirements in Section 130.1(c).
◉	○	Lighting in all Daylit Zones shall be controlled in accordance with the requirements in Section 130.1(d) and daylit zones are shown on the plans.
○	◉	Lighting power in buildings larger than 10,000 square feet shall be capable of being automatically reduced in response to a Demand Responsive Signal in accordance with Section 130.1(e).
◉	○	Before an occupancy permit is granted for a newly constructed building or area, or a new lighting system serving a building, area, or site is operated for normal use, indoor lighting controls serving the building, area, or site shall be certified as meeting the Acceptance Requirements for Code Compliance in accordance with Section 130.4.(a). The controls required to meet the Acceptance Requirements include automatic daylight controls, automatic shut-OFF controls, and demand responsive controls.

A separate document must be filled out for Conditioned and Unconditioned Spaces. This page is used only for the following:
☑ CONDITIONED SPACES ☐ UNCONDITIONED SPACES

B. Mandatory and Prescriptive Indoor Lighting Control Schedule, PAF Calculation, and Field Inspection Checklist

Lighting Control Schedule			Standards Complying With[1] (✓ all that apply, or leave empty if Exempted)							PAF Credit Calculation[2]			✓ if Acceptance Test Required	Field Inspector	
01	02	03	04	05	06	07	08	09	10	11	12	13	14	15	
Location in Building	Type/ Description of Lighting Control (i.e.: occupancy sensor, automatic time switch, dimmer, automatic daylight, etc…)	# of Units	§130.1(a)	§130.0(b)	§130.1(c)	§130.1(d)	§130.1(e)	§140.6(a)2	§140.6(d)	Watts of Controlled Lighting	PAF	Control Credit (11 x 12)	Control Credit Test Required	Pass	Fail
CLASSROOM	AUTOMATIC DAYLIGHT	10	◆	◆	◆	◆		◆		790	.10	79	☐	○	○
CLASSROOM	OCCUPANCY SENSOR	3	◆	◆	◆	◆		◆		3160	.20	632	☐	○	○
												0	☐	○	○
												0	☐	○	○
												0	☐	○	○
												0	☐	○	○
												0	☐	○	○
Control Credit PAGE TOTAL (Sum of Column 13):												711			
IF MULTIPLE PAGES ARE USED, ENTER SUM TOTAL OF Control Credit for all pages HERE (Sum of all Column 13):												Enter Control Credit total into NRCC-LTI-01-E; Page 1.			

1. §130.1(a) = Manual area controls; §130.0(b) = Multi Level; §130.1(c) = Auto Shut-Off; §130.1(d) = Mandatory Daylight; §130.1(e) = Demand Responsive; §140.6(d) = Additional lighting controls installed to earn a PAF; §140.6(d) = Prescriptive Secondary Sidelit Daylight Controls.
2. Check Table 140.6-A for correct Factor. PAFs shall not be traded between conditioned and unconditioned spaces. As a condition to earn a PAF, an Installation Certificate is also required to be filled out, signed, and submitted.

DOCUMENTATION AUTHOR'S DECLARATION STATEMENT

1. I certify that this Certificate of Compliance documentation is accurate and complete.

Documentation Author Name: RALPH M. TAVARES	Documentation Author Signature:
Company: R&S TAVARES ASSOCIATES, INC.	Signature Date: 06/25/2018
Address: 11777 BERNARDO PLAZA CT. SUITE 105	CEA Certification Identification (if applicable):
City/State/Zip: SAN DIEGO, CA 92128	Phone: 858 444 3344 EXT 1801

RESPONSIBLE PERSON'S DECLARATION STATEMENT

I certify the following under penalty of perjury, under the laws of the State of California:
1. The information provided on this Certificate of Compliance is true and correct.
2. I am eligible under Division 3 of the Business and Professions Code to accept responsibility for the building design or system design identified on this Certificate of Compliance (responsible designer).
3. The energy features and performance specifications, materials, components, and manufactured devices for the building design or system design identified on this Certificate of Compliance conform to the requirements of Title 24, Part 1 and Part 6 of the California Code of Regulations.
4. The building design features or system design features identified on this Certificate of Compliance are consistent with the information provided on other applicable compliance documents, worksheets, calculations, plans and specifications submitted to the enforcement agency for approval with this building permit application.
5. I will ensure that a completed signed copy of this Certificate of Compliance shall be made available with the building permit(s) issued for the building, and made available to the enforcement agency for all applicable inspections. I understand that a completed signed copy of this Certificate of Compliance is required to be included with the documentation the builder provides to the building owner at occupancy.

Responsible Designer Name: MANNY D. FRISCH	Responsible Designer Signature:
Company : R&S TAVARES ASSOCIATES, INC.	Date Signed: 06/25/2018
Address: 11777 BERNARDO PLAZA CT. SUITE 105	License: S3380
City/State/Zip: SAN DIEGO, CA 92128	Phone: 858 444 3344 EXT 1810

APPROVED
DIVISION OF STATE ARCHITECT
HIGH PERFORMANCE SECTION
APP.# 04-116504 DATE: 7.10.18

IDENTIFICATION STAMP
DIV. OF THE STATE ARCHITECT
APP: 03-121617 INC: A
REVIEWED FOR
SS ☑ FLS ☑ ACS ☑
DATE: 08/02/2021

PROFESSIONAL STAMP
REGISTERED PROFESSIONAL ENGINEER — MANNY D. FRISCH — No. 38014 — STRUCTURAL — STATE OF CALIFORNIA
12/19/2017

THE PLANS, IDEAS & DESIGNS SHOWN ON THESE DRAWINGS ARE THE PROPERTY OF R&S TAVARES ASSOCIATES, INC. DEVISED SOLELY FOR THIS CONTRACT. THESE PLANS SHALL NOT BE USED, IN WHOLE OR IN PART, FOR ANY PURPOSE FOR WHICH THEY WERE NOT INTENDED WITHOUT THE EXPRESS WRITTEN CONSENT OF R&S TAVARES ASSOCIATES, INC. ©

CLIENT
CLASS LEASING LLC
1221 Harley Knox Boulevard
Perris, CA 92571

R&S TAVARES ASSOCIATES
DESIGN ◆ CONSULTING ◆ PROJECT
11777 BERNARDO PLAZA COURT, SUITE 105
SAN DIEGO, CA 92128
WWW.RSTAVARES.COM

ORIGINAL PC STATE AGENCY APPROVAL
FILE NUMBER: PC-128
IDENTIFICATION STAMP
DIVISION OF THE STATE ARCHITECT
04 - 116504 INCR: 0
AC RM FLS EA SSR KER
DATE 07/19/2018

PROJECT TITLE
24' x 40'
EXPANDABLE TO
120' x 40'

PRE-CHECK (PC) DOCUMENT
Code: [2016] **CBC**
A separate project application for construction is required.

PROJECT SPECIFIC STATE AGENCY APPROVAL
IDENTIFICATION STAMP
DIV. OF THE STATE ARCHITECT
APP: 04-119993 INC:
REVIEWED FOR
SS ☑ FLS ☑ ACS ☑
DATE: 02/24/2021

Revision Schedule

#	Description	Date

SHEET TITLE
120'x40' T24 CZ 16
(WALL AC)

PROJECT NUMBER
17016A

DRAWN BY
rMc/SC

CHECKED BY
JA/RT

DATE
2018/06/26

SHEET NO.
E2.1

SHEET OF SHEETS

3/8/2018 2:19:39 PM C:\Users\Andrew\Documents\17016 - Aries, 24x40 PC - MainFile - Low Seismic_Andrew.rvt

STATE OF CALIFORNIA
OUTDOOR LIGHTING
CEC-NRCC-LTO-01-E (Revised 04/16) — CALIFORNIA ENERGY COMMISSION

CERTIFICATE OF COMPLIANCE	NRCC-LTO-01-E
Outdoor Lighting	(Page 1 of 4)
Project Name: 120'x40' (PC 04-116504)	Date Prepared: 03/05/2018

A. General Information

Project Address: NA	Total Illuminated Hardscape Area: NA

Phase of Construction: ☑ New Construction ☐ Addition ☐ Alteration

Outdoor Lighting Zone (LZ) ☐ LZ-1 ☐ LZ-2 ☑ LZ-3 ☐ LZ-4

I have confirmed with the AHJ which LZ applies to this site. For default lighting zone designations, see Title 24 Part 6, §10-114

B. Lighting Compliance Documents (check box for each document included)

For detailed instructions on the use of this and all Energy Efficiency Standards compliance documents, refer to the Nonresidential Manual published by the California Energy Commission.

☑	NRCC-LTO-01-E	Certificate of Compliance
☑	NRCC-LTO-02-E	Outdoor Lighting Controls Certificate of Compliance
☑	NRCC-LTO-03-E	Outdoor Lighting Power Allowance Certificate of Compliance
☐	NRCC-LTO-04-E	Outdoor Lighting Existing Conditions Certificate of Compliance

C. Summary of Allowed Outdoor Lighting Power

		Watts
01	**Sum Total ALLOWED** Outdoor Lighting Wattage from NRCC-LTO-03-E, page 1 Alterations with NO increase of connected lighting load may instead use the allowed wattage from NRCC-LTO-04, page 2.	120
Complies ONLY if **Installed** (Box 02) ≤ **Allowed** (Box 01)		
02	**Sum Total INSTALLED** Outdoor Lighting Wattage from NRCC-LTO-01-E, page 3.	120

D. Declaration of Required Installation Certificates

Declare by checking all Installation Certificates that will be submitted. (Retain copies and verify compliance documents are completed and signed.)

☑ NRCI-LTO-01-E - Must be submitted for all buildings	☐ Field Inspector
☑ NRCI-LTO-02-E - Must be submitted for a lighting control system, or for an Energy Management Control System (EMCS), to be recognized for compliance.	☐ Field Inspector

E. Declaration of Required Certificates of Acceptance

Declare by checking all of the Certificates of Acceptance that will be submitted. (Retain copies and verify compliance documents are completed and signed.)

☑ NRCA-LTO-02-A - Must be submitted for outdoor lighting controls.	☐ Field Inspector

F. Schedule of Luminaires Exempt from the Outdoor Lighting Power Requirements in §140.7

01	02
Name or Symbol	Description of exempt luminaire in accordance with the exemptions

STATE OF CALIFORNIA
OUTDOOR LIGHTING
CEC-NRCC-LTO-01-E (Revised 04/16) — CALIFORNIA ENERGY COMMISSION

CERTIFICATE OF COMPLIANCE	NRCC-LTO-01-E
Outdoor Lighting	(Page 2 of 4)
Project Name: 120'x40' (PC 04-116504)	Date Prepared: 03/05/2018

G. Schedule of Luminaires Exempt from the Cutoff Requirements in §130.2(b)

01	02
Name or Symbol	Description of exempt luminaire in accordance with the exemptions

H. Schedule of Luminaires Exempt from the Outdoor Lighting Control Requirements in §130.2(c)

01	02
Name or Symbol	Description of exempt luminaire in accordance with the exemptions

STATE OF CALIFORNIA
OUTDOOR LIGHTING
CEC-NRCC-LTO-01-E (Revised 04/16) — CALIFORNIA ENERGY COMMISSION

CERTIFICATE OF COMPLIANCE	NRCC-LTO-01-E
Outdoor Lighting	(Page 3 of 4)
Project Name: 120'x40' (PC 04-116504)	Date Prepared: 03/05/2018

I. Outdoor Lighting Schedule and Field Inspection Energy Checklist

Luminaire Schedule		Installed Watts					Location	Cutoff	Field Inspector	
01	02	03	04		05	06	07	08	09	
Name or Item Tag	Complete Luminaire Description	Watts per Luminaire	How wattage was determined: CEC Default from NAs	How wattage was determined: According to §130.0(c)	Number of Luminaires	Total Installed Watts in this area (03 x 05)	Primary Function area in which these luminaires are installed (Outdoor Lighting Zone)	BUG Rating	Pass	Fail
D	EXTERIOR LED LIGHT FIXTURE 30W MAX WITH PHOTOCELL MOUNT AT 93" AFF	30	☑	☐	4	120	MAIN ENTRANCE	UH: UL: FVH: BVH: FH: BH:	○	○
			☐	☐		0		UH: UL: FVH: BVH: FH: BH:	○	○
			☐	☐		0		UH: UL: FVH: BVH: FH: BH:	○	○
INSTALLED WATTS PAGE TOTAL:						120	Enter sum total of all pages (**Sum Total INSTALLED** Outdoor lighting wattage) into NRCC-LTO-01-E; Page 1		120	

STATE OF CALIFORNIA
OUTDOOR LIGHTING
CEC-NRCC-LTO-01-E (Revised 04/16) — CALIFORNIA ENERGY COMMISSION

CERTIFICATE OF COMPLIANCE	NRCC-LTO-01-E
Outdoor Lighting	(Page 4 of 4)
Project Name: 120'x40' (PC 04-116504)	Date Prepared: 03/05/2018

DOCUMENTATION AUTHOR'S DECLARATION STATEMENT

1. I certify that this Certificate of Compliance documentation is accurate and complete.

Documentation Author Name: RALPH M. TAVARES	Documentation Author Signature:
Company: R&S TAVARES ASSOCIATES, INC.	Signature Date: 03/05/2018
Address: 11777 BERNARDO PLAZA CT. SUITE 105	CEA Certification Identification (if applicable):
City/State/Zip: SAN DIEGO, CA 92128	Phone: 858 444 3344 EXT 1801

RESPONSIBLE PERSON'S DECLARATION STATEMENT

I certify the following under penalty of perjury, under the laws of the State of California:
1. The information provided on this Certificate of Compliance is true and correct.
2. I am eligible under Division 3 of the Business and Professions Code to accept responsibility for the building design or system design identified on this Certificate of Compliance (responsible designer).
3. The energy features and performance specifications, materials, components, and manufactured devices for the building design or system design identified on this Certificate of Compliance conform to the requirements of Title 24, Part 1 and Part 6 of the California Code of Regulations.
4. The building design features or system design features identified on this Certificate of Compliance are consistent with the information provided on other applicable compliance documents, worksheets, calculations, plans and specifications submitted to the enforcement agency for approval with this building permit application.
5. I will ensure that a completed signed copy of this Certificate of Compliance shall be made available with the building permit(s) issued for the building, and made available to the enforcement agency for all applicable inspections. I understand that a completed signed copy of this Certificate of Compliance is required to be included with the documentation the builder provides to the building owner at occupancy.

Responsible Designer Name: MANNY D. FRISCH	Responsible Designer Signature:
Company : R&S TAVARES ASSOCIATES, INC.	Date Signed: 03/05/2018
Address: 11777 BERNARDO PLAZA CT. SUITE 105	License: S3380
City/State/Zip: SAN DIEGO, CA 92128	Phone: 858 444 3344 EXT 1810

APPROVED
DIVISION OF STATE ARCHITECT
HIGH PERFORMANCE SECTION
APP.# 04-116504 DATE: 7-10-18

STATE OF CALIFORNIA
OUTDOOR LIGHTING CONTROLS
CEC-NRCC-LTO-02-E (Revised 08/16) — CALIFORNIA ENERGY COMMISSION

CERTIFICATE OF COMPLIANCE	NRCC-LTO-02-E
Outdoor Lighting Controls	(Page 1 of 3)
Project Name: 120'x40' (PC 04-116504)	Date Prepared: 03/05/2018

A. Mandatory Outdoor Lighting Control Declaration Statements

Check all that apply:

- ☑ Lighting shall be controlled by self-contained lighting control devices which are certified to the Energy Commission according to the Title 20 Appliance Efficiency Regulations in accordance with §110.9(a).
- ☐ Lighting shall be controlled by a lighting control system or energy management control system in accordance with §110.9. An Installation Certificate shall be submitted in accordance with §130.4(b).
- ☑ All lighting controls and equipment shall comply with the applicable requirements in §110.9 and shall be installed in accordance with the manufacturer's instructions in accordance with §130.0(d).
- ☐ Part-Night Outdoor Lighting Controls, as defined in Section 100.1(b), shall meet the requirements in Section 110.9(b)5.
- ☐ All outdoor incandescent luminaires rated over 100 watts, determined in accordance with Section 130.0(c), shall be controlled by a motion sensor.
- ☐ All outdoor luminaires rated for use with lamps greater than 150 lamp watts, determined in accordance with Section 130.0(c), shall comply with Uplight and Glare requirements in accordance with Section 130.2(b)
- ☑ All installed outdoor lighting shall be controlled by a photocontrol or outdoor astronomical time-switch control, or other control capable of automatically switching OFF in accordance with Section 130.2(c)1.
- ☐ All installed outdoor lighting shall be circuited and independently controlled from other electrical loads by an automatic scheduling control in accordance with Section 130.2(c)2.
- ☑ All installed outdoor lighting, where the bottom of the luminaire is mounted 24 feet or less above the ground, shall be controlled with automatic lighting controls in accordance with Section 130.2(c)3.
- ☐ For Outdoor Sales Frontage, an automatic lighting control shall be installed in accordance with Section 130.2(c)4.
- ☐ For Building Facade, Ornamental Hardscape and Outdoor Dining lighting, an automatic lighting control shall be installed in accordance with Section 130.2(c)5
- ☐ Before an occupancy permit is granted for the newly constructed building or for the addition, or for any altered outdoor lighting controls, shall be certified as meeting the Acceptance Requirements for Code Compliance in accordance with §130.4.(a). Outdoor lighting controls shall comply with the applicable requirements of Section 130.2(c) and Reference Nonresidential Appendix NA7.8.

CA Building Energy Efficiency Standards - 2016 Nonresidential Compliance August 2016
STATE OF CALIFORNIA
OUTDOOR LIGHTING CONTROLS
CEC-NRCC-LTO-02-E (Revised 08/16) — CALIFORNIA ENERGY COMMISSION

CERTIFICATE OF COMPLIANCE	NRCC-LTO-02-E
Outdoor Lighting Controls	(Page 2 of 3)
Project Name: 120'x40' (PC 04-116504)	Date Prepared: 03/05/2018

B. Mandatory Outdoor Lighting Control Schedule and Field Inspection Checklist

Outdoor Lighting Control Schedule			Standards Complying With (✓ all that apply, or leave empty if Exempted)						✓ if Acceptance Test Required	Field Inspector	
01	02	03	04	05	06	07	08	09	10	11	
Location and Application of Luminaires Being Controlled	Type/ Description of Lighting Control (i.e. outdoor motion sensor, outdoor photocontrol, outdoor astronomical time-switch control, automatic scheduling control, part-night outdoor lighting control)	# of Units	§130.2(a)	§130.2(c)1	§130.2(c)2	§130.2(c)3	§130.2(c)4	§130.2(c)5		Pass	Fail
ENTRY DOOR	PHOTOCELL CONTROLLED	4		•		•			☐	○	○
									☐	○	○
									☐	○	○
									☐	○	○
									☐	○	○
									☐	○	○
									☐	○	○
									☐	○	○
									☐	○	○
									☐	○	○
									☐	○	○
									☐	○	○
									☐	○	○
									☐	○	○
									☐	○	○
									☐	○	○
									☐	○	○

STATE OF CALIFORNIA
OUTDOOR LIGHTING CONTROLS
CEC-NRCC-LTO-02-E (Revised 08/16) — CALIFORNIA ENERGY COMMISSION

CERTIFICATE OF COMPLIANCE	NRCC-LTO-02-E
Outdoor Lighting Controls	(Page 3 of 3)
Project Name: 120'x40' (PC 04-116504)	Date Prepared: 03/05/2018

DOCUMENTATION AUTHOR'S DECLARATION STATEMENT

1. I certify that this Certificate of Compliance documentation is accurate and complete.

Documentation Author Name: RALPH M. TAVARES	Documentation Author Signature:
Company: R&S TAVARES ASSOCIATES, INC.	Signature Date: 03/05/2018
Address: 11777 BERNARDO PLAZA CT. SUITE 105	CEA Certification Identification (if applicable):
City/State/Zip: SAN DIEGO, CA 92128	Phone: 858 444 3344 EXT 1801

RESPONSIBLE PERSON'S DECLARATION STATEMENT

I certify the following under penalty of perjury, under the laws of the State of California:
1. The information provided on this Certificate of Compliance is true and correct.
2. I am eligible under Division 3 of the Business and Professions Code to accept responsibility for the building design or system design identified on this Certificate of Compliance (responsible designer).
3. The energy features and performance specifications, materials, components, and manufactured devices for the building design or system design identified on this Certificate of Compliance conform to the requirements of Title 24, Part 1 and Part 6 of the California Code of Regulations.
4. The building design features or system design features identified on this Certificate of Compliance are consistent with the information provided on other applicable compliance documents, worksheets, calculations, plans and specifications submitted to the enforcement agency for approval with this building permit application.
5. I will ensure that a completed signed copy of this Certificate of Compliance shall be made available with the building permit(s) issued for the building, and made available to the enforcement agency for all applicable inspections. I understand that a completed signed copy of this Certificate of Compliance is required to be included with the documentation the builder provides to the building owner at occupancy.

Responsible Designer Name: MANNY D. FRISCH	Responsible Designer Signature:
Company : R&S TAVARES ASSOCIATES, INC.	Date Signed: 03/05/2018
Address: 11777 BERNARDO PLAZA CT. SUITE 105	License: S3380
City/State/Zip: SAN DIEGO, CA 92128	Phone: 858 444 3344 EXT 1810

IDENTIFICATION STAMP
DIV. OF THE STATE ARCHITECT
APP: 03-121617 INC: A
REVIEWED FOR
SS ☑ FLS ☑ ACS ☑
DATE: 08/02/2021

PROFESSIONAL STAMP
REGISTERED PROFESSIONAL ENGINEER MANNY D. FRISCH No. S-3380 STRUCTURAL STATE OF CALIFORNIA
12/19/2017

THE PLANS, IDEAS & DESIGNS SHOWN ON THESE DRAWINGS ARE THE PROPERTY OF R&S TAVARES ASSOCIATES, INC. DEVISED SOLELY FOR THIS CONTRACT. THESE PLANS SHALL NOT BE USED, IN WHOLE OR IN PART, FOR ANY PURPOSE FOR WHICH THEY WERE NOT INTENDED WITHOUT THE EXPRESS WRITTEN CONSENT OF R&S TAVARES ASSOCIATES, INC. ©

CLIENT
CLASS LEASING LLC
1221 Harley Knox Boulevard
Perris, CA 92571

R&S TAVARES ASSOCIATES
DESIGN ✦ CONSULTING ✦ PROJECT
11777 Bernardo Plaza Court, Suite 105
San Diego, CA 92128
www.rstavares.com

ORIGINAL PC STATE AGENCY APPROVAL
FILE NUMBER: PC-128
IDENTIFICATION STAMP
DIVISION OF THE STATE ARCHITECT
04 - 116504 INCR: 0
AC RM FLS EA SSR KER
DATE 07/19/2018

PROJECT TITLE
24' x 40'
EXPANDABLE TO
120' x 40'

PRE-CHECK (PC) DOCUMENT
Code: [2016] **CBC**
A separate project application for construction is required.

PROJECT SPECIFIC STATE AGENCY APPROVAL
IDENTIFICATION STAMP
DIV. OF THE STATE ARCHITECT
APP: 04-119993 INC:
REVIEWED FOR
SS ☑ FLS ☑ ACS ☑
DATE: 02/24/2021

Revision Schedule

#	Description	Date

SHEET TITLE
120'x40' T24 CZ 16
(WALL AC)

PROJECT NUMBER
17016A

DRAWN BY
rMc/SC

CHECKED BY
JA/RT

DATE
2018/03/08

SHEET NO.
E2.2
SHEET OF SHEETS

3/8/2018 2:19:40 PM C:\Users\Andrew\Documents\17016 - Aries, 24x40 PC - MainFile - Low Seismic_Andrew.rvt

STATE OF CALIFORNIA
Electrical Power Distribution
CEC-NRCC-ELC-01-E (Revised 01/16) — CALIFORNIA ENERGY COMMISSION

CERTIFICATE OF COMPLIANCE	NRCC-ELC-01-E
Electrical Power Distribution	Page of
Project Name: 120'x40' (PC 04-116504)	Date Prepared: 04/24/2018

General Information

Project Address:	Climate Zone:	Conditioned Floor Area : 4800
NA	16	Unconditioned Floor Area :

Building Type: ☐ Nonresidential ☐ High-Rise Residential ☐ Hotel/Motel
☐ Schools ☑ Relocatable Public Schools ☐ Conditioned Spaces ☐ Unconditioned Spaces
Phase of Construction: ☐ New Construction ☐ Addition ☐ Alteration

In the table below identify all applicable construction documents that specify the requirements for the scope of responsibility reported by this certificate. Use additional pages as needed to list all construction documents related to compliance of Section 130.5.

Document Number	Document Title/Descriptions (include description information for Table or Schedule if it contains compliance information)	Document Sheet # or Page #	Indicate which subsection of Section 130.5 is related to the document (e.g. 130.5(a) for service electrical metering)

Add Row | Remove Last

A. Service Electrical Metering

Check one of the three boxes below if the electrical power distribution system is in compliance with Section 130.5(a).

☐ For newly installed electrical service in newly constructed buildings, Service Electrical Metering is required according to Section 130.5(a). *Fill out Column 1 through 6 of table below.*

☑ For new or replacement electrical service equipment in existing buildings, Service Electrical Metering is required according to Section 141.0(b)2PI. *Fill out Column 1 through 6 of table below.*

☐ EXCEPTION to Electrical Service Metering: Service or feeder for which the utility company provides a metering system that indicates instantaneous kW demand and kWh for a utility-defined period. *Fill out Column 1, 2 and 6 of table below with the compliance information.*

Fill out a separate line for each electrical service that is connected to the building.

Electrical Service Schedule	Electrical	Metering Capabilities (check all that are present)				Exception to	Field Inspector
01	02	03	04	05	06	07	08
Electrical Service Designation/ Location/Description	kVA	Instantaneous (at the time) kW	Historical peak (kW)	Tracking kWh for a user-definable period	kWh per rate period	Utility metering system	Check that the metering complies
IT WILL VARY DEPENDING ON CLIENT'S SITE PROJECT - RELOCATABLE PUBLIC SCHOOL	0	☐	☐	☐	☐	☐	☐

Add Row | Remove Last

STATE OF CALIFORNIA
Electrical Power Distribution
CEC-NRCC-ELC-01-E (Revised 01/16) — CALIFORNIA ENERGY COMMISSION
CERTIFICATE OF COMPLIANCE NRCC-ELC-01-E
Electrical Power Distribution Page of
Project Name: 120'x40' (PC 04-116504) Date Prepared: 04/24/2018

B. Separation of Electrical Circuits for Electrical Energy Monitoring

Check all boxes below if the electrical power distribution system is in compliance with Section 130.5(b).

☑ The electrical power distribution system meets the separation of electrical circuits for electrical energy monitoring requirement of Section 130.5(b). The electrical power distribution systems is designed so that measurement devices can monitor the electrical energy usage of load types according to TABLE 130.5-B.

☐ Describe the electrical power distribution system installed and the compliance method chosen in meeting the requirement of Section 130.5(b). Use the space below to include the information. Examples of compliance methods are detailed in Nonresidential Compliance Manual Chapter 8.

Fill out Column 1 thru 3 with the compliance information.

General Information	Electrical Power Distribution System information and Method of compliance	Electrical Service Rating	Enforcement Agency
01	02	03	04
Electrical Service Designation/Location/Description	Describe the electrical power distribution system installed and the compliance method used	kVA	Check that the system complies
IT WILL VARY DEPENDING ON CLIENT'S SITE PROJECT - RELOCATABLE PUBLIC SCHOOL	NA	0	☐

Field Inspector Notes:

STATE OF CALIFORNIA
Electrical Power Distribution
CEC-NRCC-ELC-01-E (Revised 01/16) — CALIFORNIA ENERGY COMMISSION
CERTIFICATE OF COMPLIANCE NRCC-ELC-01-E
Electrical Power Distribution Page of
Project Name: 120'x40' (PC 04-116504) Date Prepared: 04/24/2018

C. Voltage Drop

Check all boxes below if he electrical power distribution system is in compliance with Section 130.5(c).

	Enforcement Agency Check that the system complies
☑ The electrical power distribution system meets the voltage drop requirement of Section 130.5(c). The maximum combined voltage drop on feeder conductors and branch circuit conductors to the farthest connected load or outlet, do not exceed 5%.	☐
☐ Voltage drop calculation documents showing compliance to Section 130.5(c) are submitted as part of the compliance document submittal.	☐

D. Circuit Controls for 120-Volt Receptacles and Controlled Receptacles

Check one or more boxes below for applicable requirements of Section 130.5(d) for the electrical power distribution system.

	Field Inspector Check that the system complies
☐ The control is capable of automatically shutting OFF the controlled receptacles when the space is typically unoccupied, either at the receptacle or circuit level. For the automatic time switch control, it incorporates an override control that allows the controlled receptacle to remain ON for no more than 2 hours when an override is initiated and an automatic holiday "shut-OFF" feature that turns OFF all loads for at least 24 hours and then resumes the normally scheduled operation. Countdown timer switches are not be used to comply with the automatic time switch control requirements. The controls meet the requirement of Section 130.5(d)1.	☐
☑ There is at least one controlled receptacle within 6 ft from each uncontrolled receptacle. Where receptacles are installed in modular furniture in open office area, at least one controlled receptacle is installed at each workstation. The receptacles meet the requirement of Section 130.5(d)2.	☐
☐ There are installed split wired receptacles with at least one controlled and one uncontrolled receptacle. Where receptacles are installed in modular furniture in open office area, at least one controlled receptacle is installed at each workstation. The receptacles meet the requirement of Section 130.5(d)2.	☐
☑ Permanent and durable marking for controlled receptacles or circuits to differentiate them from uncontrolled receptacles or circuits is provided. The markings meet the requirement of Section 130.5(d)3.	☐
☐ For hotel and motel guest rooms, there are controlled receptacles for at least one-half of the 120-volt receptacles in each guest room. Electric circuits serving controlled receptacles in guestrooms are installed to have captive key controls, occupancy sensing controls, or automatic controls so the power is switched off no longer than 30 minutes after the guest room has been vacated. The receptacles meet the requirement of Section 130.5(d)4.	☐
☑ Receptacles that are only for the following purposes are excepted from Section 130.5(d): - Receptacles specifically for refrigerators and water dispensers in kitchen areas. - Receptacles located a minimum of six ft above the floor that are specifically for clocks. - Receptacles for network copiers, fax machines, A/V and data equipment other than personal computers in copy rooms. - Receptacles on circuits rated more than 20 amperes. - Receptacles connected to an uninterruptible power supply (UPS) that are intended to be in continuous use, 24 hours per day/365 days per year, and are marked to differentiate them from other uncontrolled receptacles or circuits.	☐

STATE OF CALIFORNIA
Electrical Power Distribution
CEC-NRCC-ELC-01-E (Revised 01/16) — CALIFORNIA ENERGY COMMISSION
CERTIFICATE OF COMPLIANCE NRCC-ELC-01-E
Electrical Power Distribution Page of
Project Name: 120'x40' (PC 04-116504) Date Prepared: 04/24/2018

DOCUMENTATION AUTHOR'S DECLARATION STATEMENT

1. I certify that this Certificate of Compliance documentation is accurate and complete.

Documentation Author Name: RALPH M. TAVARES	Documentation Author Signature:
Company: R&S TAVARES ASSOCIATES, INC.	Signature Date: 04/24/2018
Address: 11777 BERNARDO PLAZA CT. SUITE 105	CEA/ HERS Certification Identification (if applicable):
City/State/Zip: SAN DIEGO, CA 92128	Phone: 858-444-3344 EXT 1801

RESPONSIBLE PERSON'S DECLARATION STATEMENT

I certify the following under penalty of perjury, under the laws of the State of California:

1. The information provided on this Certificate of Compliance is true and correct.
2. I am eligible under Division 3 of the Business and Professions Code to accept responsibility for the building design or system design identified on this Certificate of Compliance (responsible designer).
3. The energy features and performance specifications, materials, components, and manufactured devices for the building design or system design identified on this Certificate of Compliance conform to the requirements of Title 24, Part 1 and Part 6 of the California Code of Regulations.
4. The building design features or system design features identified on this Certificate of Compliance are consistent with the information provided on other applicable compliance documents, worksheets, calculations, plans and specifications submitted to the enforcement agency for approval with this building permit application.
5. I will ensure that a completed signed copy of this Certificate of Compliance shall be made available with the building permit(s) issued for the building, and made available to the enforcement agency for all applicable inspections. I understand that a completed signed copy of this Certificate of Compliance is required to be included with the documentation the builder provides to the building owner at occupancy.

Responsible Designer Name: MANNY D. FRISCH	Responsible Designer Signature:
Company: R&S TAVARES ASSOCIATES, INC.	Date Signed: 04/24/2018
Address: 11777 BERNARDO PLAZA CT. SUITE 105	License: S3380
City/State/Zip: SAN DIEGO, CA 91218	Phone: 858 444 3344 EXT 1810

APPROVED
DIVISION OF STATE ARCHITECT
HIGH PERFORMANCE SECTION
APP.# 04-116504 DATE: 7-10-18

IDENTIFICATION STAMP
DIV. OF THE STATE ARCHITECT
APP: 03-121617 INC: A
REVIEWED FOR
SS ☑ FLS ☑ ACS ☑
DATE: 08/02/2021

PROFESSIONAL STAMP
REGISTERED PROFESSIONAL ENGINEER MANNY D. FRISCH S-2380 STRUCTURAL STATE OF CALIFORNIA
12/19/2017

THE PLANS, IDEAS & DESIGNS SHOWN ON THESE DRAWINGS ARE THE PROPERTY OF R&S TAVARES ASSOCIATES, INC. DEVISED SOLELY FOR THIS CONTRACT. THESE PLANS SHALL NOT BE USED, IN WHOLE OR IN PART, FOR ANY PURPOSE FOR WHICH THEY WERE NOT INTENDED WITHOUT THE EXPRESS WRITTEN CONSENT OF R&S TAVARES ASSOCIATES, INC. ©

CLIENT
CLASS LEASING LLC
1221 Harley Knox Boulevard
Perris, CA 92571

R&S TAVARES ASSOCIATES
DESIGN ♦ CONSULTING ♦ PROJECT
11777 BERNARDO PLAZA COURT, SUITE 105
SAN DIEGO, CA 92128
WWW.RSTAVARES.COM

ORIGINAL PC STATE AGENCY APPROVAL
FILE NUMBER: PC-128
IDENTIFICATION STAMP
DIVISION OF THE STATE ARCHITECT
04 - 116504 INCR: 0
AC RM FLS EA SSR KER
DATE 07/19/2018

PROJECT TITLE
24' x 40'
EXPANDABLE TO
120' x 40'

PRE-CHECK (PC) DOCUMENT
Code: [2016] **CBC**
A separate project application for construction is required.

PROJECT SPECIFIC STATE AGENCY APPROVAL
IDENTIFICATION STAMP
DIV. OF THE STATE ARCHITECT
APP: 04-119993 INC:
REVIEWED FOR
SS ☑ FLS ☑ ACS ☑
DATE: 02/24/2021

Revision Schedule

#	Description	Date

SHEET TITLE
120'x40' T24 CZ 16
(WALL AC)

PROJECT NUMBER
17016A

DRAWN BY
rMc/SC

CHECKED BY
JA/RT

DATE
2018/04/25

SHEET NO.
E2.3

SHEET OF SHEETS

3/8/2018 2:19:40 PM C:\Users\Andrew\Documents\17016 - Aries, 24x40 PC - MainFile - Low Seismic_Andrew.rvt

ABB.	DESCRIPTION	SYMBOL
WM	WALL MOUNTED UNIT (SEE SCHEDULE THIS SHEET)	WM-1
RM	ROOF MOUNTED UNIT (SEE SCHEDULE THIS SHEET)	RM-1
P.O.C	POINT OF CONNECTION	P.O.C
CO2	CARBON MONOXIDE SENSOR	CO2
BT	BYPASS TIMER	BT
STAT	THERMOSTAT	T
UC	UNDERCUT DOOR	UC
MVD	MANUAL VOLUME DAMPER	
FD	FIRE DAMPER	
VTR	VENT THRU ROOF	
ER	EXHAUST CEILING REGISTER	
CR	RETURN CEILING REGISTER	
CD	SUPPLY CEILING DIFFUSER	
(L)	LINED DUCTWORK	
EAD	EXHAUST AIR DUCT	
RAD	RETURN AIR DUCT	
SAD	SUPPLY AIR DUCT	
EF	EXHAUST FAN	EF

1 *1" = 1'-0"*
LEGEND

EQUIPMENT ANCHORAGE

ALL MECHANICAL, PLUMBING AND ELECTRICAL COMPONENTS SHALL BE ANCHORED AND INSTALLED PER THE DETAILS ON THE DSA APPROVED CONSTRUCTION DOCUMENTS. WHERE NO DETAIL IS INDICATED, THE FOLLOWING COMPONENTS SHALL BE ANCHORED OR BRACED TO MEET THE FORCE AND DISPLACEMENT REQUIREMENTS PRESCRIBED IN THE 2016 CBC, SECTIONS 1616A.1.18 THROUGH 1616A.1.26 AND ASCE 7-10 CHAPTER 13, 26 AND 30.

1. **ALL PERMANENT EQUIPMENT AND COMPONENTS.**
2. **TEMPORARY OR MOVABLE EQUIPMENT THAT IS PERMANENTLY ATTACHED (E.G. HARD WIRED) TO THE BUILDING UTILITY SERVICES SUCH AS ELECTRICITY, GAS OR WATER.**
3. **MOVABLE EQUIPMENT WHICH IS STATIONED IN ONE PLACE FOR MORE THAN 8 HOURS AND HEAVIER THAN 400 POUNDS ARE REQUIRED TO BE ANCHORED WITH TEMPORARY ATTACHMENTS.**

THE ATTACHMENT OF THE FOLLOWING MECHANICAL AND ELECTRICAL COMPONENTS SHALL BE POSITIVELY ATTACHED TO THE STRUCTURE, BUT NEED NOT BE DETAILED ON THE PLANS. THESE COMPONENTS SHALL HAVE FLEXIBLE CONNECTIONS PROVIDED BETWEEN THE COMPONENT AND ASSOCIATED DUCTWORK, PIPING, AND CONDUIT.

A. **COMPONENTS WEIGHING LESS THAN 400 POUNDS AND HAVE A CENTER OF MASS LOCATED 4 FEET OR LESS ABOVE THE ADJACENT FLOOR OR ROOF LEVEL THAT DIRECTLY SUPPORT THE COMPONENT.**
B. **COMPONENTS WEIGHING LESS THAN 20 POUNDS, OR IN THE CASE OF DISTRIBUTED SYSTEMS, LESS THAN 5 POUNDS PER FOOT, WHICH ARE SUSPENDED FROM A ROOF OR FLOOR OR HUNG FROM A WALL.**

FOR THOSE ELEMENTS THAT DO NOT REQUIRE DETAILS ON THE APPROVED DRAWINGS, THE INSTALLATION SHALL BE SUBJECT TO THE APPROVAL OF THE STRUCTURAL ENGINEER OF RECORD AND THE DSA DISTRICT STRUCTURAL ENGINEER. THE PROJECT INSPECTOR WILL VERIFY THAT ALL COMPONENTS AND EQUIPMENT HAVE BEEN ANCHORED IN ACCORDANCE WITH ABOVE REQUIREMENTS.

BRACING OF PIPING, DUCTWORK AND ELECTRICAL SYSTEM:

PIPING, DUCTWORK AND ELECTRICAL DISTRIBUTION SYSTEMS SHALL BE BRACED TO COMPLY WITH THE FORCES AND DISPLACEMENTS PRESCRIBED IN ASCE 7-10 SECTION 13.3 AS DEFINED IN ASCE 7-10 SECTION 13.6.8, 13.6.7, 13.6.5.6 AND 2016 CBC SECTIONS 1616A.1.23, 1616A.1.24, 1616A.1.25 AND 1616A.1.26

THE BRACING AND ATTACHMENTS TO THE STRUCTURE SHALL BE DETAILED ON THE APPROVED DRAWINGS OR THEY SHALL COMPLY WITH ONE OF THE OSHPD PRE-APPROVALS (OPA #) AS MODIFIED TO SATISFY ANCHORAGE REQUIREMENTS OF ACI 318, APPENDIX D.

COPIES OF THE MANUAL SHALL BE AVAILABLE ON THE JOBSITE PRIOR TO THE START OF HANGING AN BRACING OF THE PIPE, DUCTWORK AND ELECTRICAL DISTRIBUTION SYSTEMS.

THE STRUCTURAL ENGINEER OF RECORD SHALL VERIFY THE ADEQUACY OF THE STRUCTURE TO SUPPORT THE HANGER AND BRACE LOADS.

5 *1" = 1'-0"*
EQUIPMENT ANCHORAGE

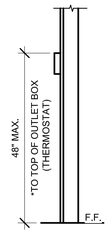

* 30"x48" MIN CLR FLOOR SPACE AT EACH LOCATION FOR PERPENDICULAR APPROACH

9 *1" = 1'-0"*
MOUNTING ELEV.

10.6 EER and 11 EER

SINGLE PACKAGE VERTICAL HEAT PUMP SCHEDULE

	STANDARD	OPTION #I	OPTION #2
TAG	WM-1.1	WM-1.2	WM-1.3
NOMINAL TONNAGE	4.0 TONS	*5 TONS	3.5 TONS
MANUFACTURER	**BARD	**BARD	**BARD
MODEL#	C48H1	C60H1	C42H1
CFM	1550	1700	1400
STATIC PRESSURE	3.0	3.0	3.0
DRIVE	DIRECT	DIRECT	DIRECT
MCA	58	67	57
MOCP	60	80	60
VOLTAGE	208/230-1	208/230-1	208/230-1
WIRE SIZE (PWR/GRND)	#6/#10	#4/#8	#6/#10
DESIGN RETURN AIR (DB/WB)	80/67	80/67	80/67
SENSIBLE COOLING @ 95° F (PART/FULL)	25.900/36.00	30.800/40.300	21.700/29.700
TOTAL COOLING @ 95° F (PART/FULL)	34.000/45.500	40.800/55.500	26.800/40.000
HEATING CAP. BTUH @ 47° F (PART/FULL)	29.200/41.500	36.000/51.000	46.600/38.500
HEATING CAP. BTUH @ 17° F	26.000	32.000	25.000
OPERATING WEIGHT	550#	580#	550#
EER	11.00	10.60	11.00
COP @ 47° F	3.00	3.00	3.00
COP @ 17° F	2.00	2.00	2.00

10.6 AND 11.0 EER (GAS ALTERNATE)

SINGLE PACKAGE VERTICAL AIR CONDITIONER WITH GAS FURNACE

	STANDARD	OPTION #I	OPTION #2
TAG	WM-2.1	WM-2.2	WM-2.3
NOMINAL TONNAGE	4.0 TONS	*5 TONS	3.5 TONS
MANUFACTURER	BARD	**BARD	BARD
MODEL#	C48H1	C60H1	C42H1
CFM	1600	1750	1300
STATIC PRESSURE	0.2	0.2	0.2
DRIVE	DIRECT	DIRECT	DIRECT
MCA	38	40	32
MOCP	50	60	50
VOLTAGE	208/230-1	208/230-1	208/230-1
WIRE SIZE (PWR/GRND)	#6/#10	#6/#10	#6/#10
DESIGN RETURN AIR (DB/WB)	80/67	80/67	80/67
SENSIBLE COOLING @ 95° F (PART/FULL)	35.900/36.000	30.800/40.300	21.700/29.700
TOTAL COOLING @ 95° F (PART/FULL)	34.000/45.500	40.800/55.500	26.800/40.000
HEATING INPUT	75.000	75.000	75.000
HEATING OUTPUT	61.500	61.500	61.500
OPERATING WEIGHT	710#	725#	700#
EER	11.00	10.60	11.00
THERMAL EFFICIENCY (TE)	82	82	82

HVAC SCHEDULE

BUILDING SIZE	# OF HVAC: 3 1/2 TON HVAC	4 TON HVAC	5 TON HVAC
☐ 24' x 40'	1		
☒ 36' x 40'		1	
☐ 48' x 40'	2		
☐ 60' x 40'		~~2~~	
☐ 72' x 40'	3		2
☐ 84' x 40'		~~3~~	
☐ 96' x 40'	4		3
☐ 108' x 40'		~~4~~	
☐ 120' x 40'	5		

HVAC SCHEDULE TYPICAL FOR WALL MTD AND ROOF MTD UNITS

2016 CALGREEN AND ENERGY CODE - COMPLIANCE SECTIONS

FILTER SPECIFICATION:

5.504.3 - ALL EXPOSED DUCT OPENINGS AND MECHANICAL EQUIPMENT SHALL BE COVERED AND PROTECTED DURING CONSTRUCTION AND SHIPMENT.

5.504.5.3 - HVAC FILTER (MERV RATING OF 8 MINIMUN OR HIGHER), ALL MECHANICAL EQUIPMENT WHICH REQUIRES A FILTER SHALL NOT BE OPERATED WITHOUT A FILTER IN PLACE.

OUTDOOR AIR QUALITY:

HVAC EQUIPMENT DOES NOT CONTAIN CFCS OR HALONS.

CEILING MOUNTED EXHAUST FAN

SYM.	USE	MFR/MODEL	CFM	SOUND LEVEL	SP	VOLTS	Ø	POWER	WGT#	NOTES
EF A	BATHROOM EXHAUST	BROAN L100	109	1.0 SONES	0.25	120	1	87 WATTS	22.80#	WITH BROAN ROOF CAP #634. PROVIDE 6" DIA. EXHAUST DUCT UP TO ROOF. INTERLOCK WITH LIGHT SWITCH.
EF B	BATHROOM EXHAUST	BROAN L200	210	2.0 SONES	0.25	120	1	127 WATTS	23#	WITH BROAN ROOF CAP #634. PROVIDE 8" DIA. EXHAUST DUCT UP TO ROOF. INTERLOCK WITH LIGHT SWITCH.
EF C	BATHROOM EXHAUST	BROAN L300	308	2.8 SONES	0.25	120	1	212 WATTS	23.10#	WITH BROAN ROOF CAP #634. PROVIDE 8" DIA. EXHAUST DUCT UP TO ROOF. INTERLOCK WITH LIGHT SWITCH.
EF D	BATHROOM EXHAUST	BROAN 676	100	4.0 SONES	0.25	120	1	156 WATTS	7#	WITH BROAN ROOF CAP #636. PROVIDE 4" DIA. EXHAUST DUCT UP TO ROOF. INTERLOCK WITH LIGHT SWITCH.

OR APPROVED EQUAL.

2 *1" = 1'-0"*
CEILING MOUNTED EXHAUST FAN SCHEDULE

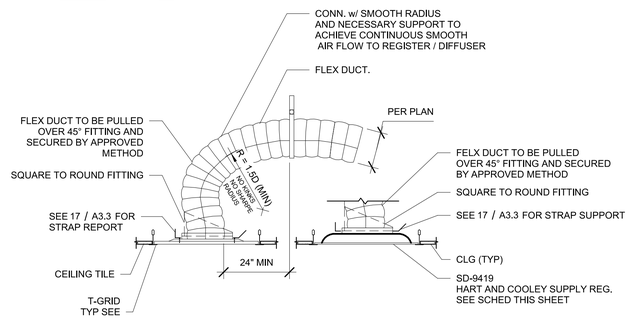

PERFORATED FACE GRILLE SCHEDULE (SUPPLY)

NECK SIZE	CFM (RANGE)	NOTES
6"Ø	0-150	SEE DETAIL FOR MAKE AND MODEL
8"Ø	150-230	SEE DETAIL FOR MAKE AND MODEL
10"Ø	230-350	SEE DETAIL FOR MAKE AND MODEL
12"Ø	350-460	SEE DETAIL FOR MAKE AND MODEL
14"Ø	460-640	SEE DETAIL FOR MAKE AND MODEL

16x16-4W

T-BAR SUPPLY

Fixed Curve Blade, 4-way throw

3 *1" = 1'-0"*
PFG SCHED (SUPPLY)

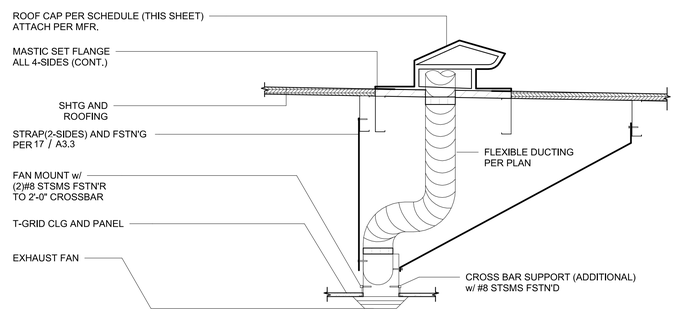

SEE ISOMETRIC DETAIL 17/A3.3 FOR STRAPS

PERFORATED FACE GRILLE SCHEDULE (RETURN)

NECK SIZE	CFM (RANGE)	NOTES
6"Ø	0-230	SEE MECH CLG PLAN FOR SIZE
10"Ø	230-460	SEE MECH CLG PLAN FOR SIZE
14"Ø	460-710	SEE MECH CLG PLAN FOR SIZE

T-BAR RETURN

Perforated Face

Shoemaker 105P with 24 ga. 45 deg.

4 *1" = 1'-0"*
PFG SCHED (RETURN)

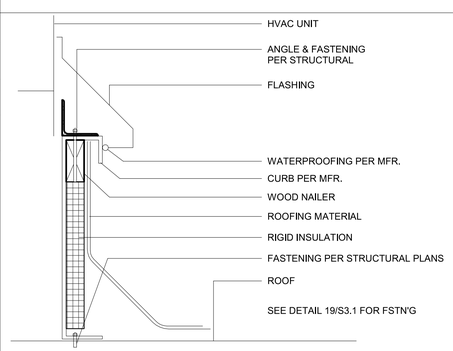

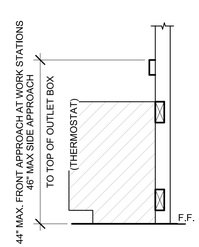

10 *1" = 1'-0"*
ELEV. @ WORKSTATION

14 SEER

SINGLE PACKAGE ROOF TOP HEAT PUMP SCHEDULE

	STANDARD	OPTION #I	OPTION #2
TAG	RM-1.1	RM-1.2	RM-1.3
NOMINAL TONNAGE	4.0 TONS	*5 TONS	3 TONS
MANUFACTURER	**CARRIER	**CARRIER	**CARRIER
MODEL#	50KCQ05	50KCQ06	50KCQ04
CFM	1600	1750	1400
STATIC PRESSURE	0.2	0.2	0.15
DRIVE	BELT	BELT	BELT
MCA	64	72	59
MOCP	70	80	60
VOLTAGE	208/230-1	208/230-1	208/230-1
WIRE SIZE (PWR/GRND)	#4/#8	#4/#8	#6/#10
DESIGN RETURN AIR (DB/WB)	80/67	80/67	80/67
SENSIBLE COOLING @ 95° F	35.260	40.700	30.500
TOTAL COOLING @ 95° F	49.000	58.000	35.600
HEATING CAP. BTUH @ 47° F	45.500	58.000	35.500
HEATING CAP. BTUH @ 17° F	28.600	28.600	18.400
OPERATING WEIGHT	560#	615#	572#
SEER	14.00	14.3	14.00
HSPF	8.0	8.0	8.0
COP @ 47° F	3.4	3.5	3.4
COP @ 17° F	2.4	2.4	2.3

14 SEER (GAS ALTERNATE)

SINGLE PACKAGE ROOF TOP AIR CONDITIONER WITH GAS FURNACE

	STANDARD	OPTION #I	OPTION #2
TAG	RM-2.1	RM-2.2	RM-2.3
NOMINAL TONNAGE	4.0 TONS	*5 TONS	3 TONS
MANUFACTURER	**CARRIER	**CARRIER	**CARRIER
MODEL#	50KCQ05	50KCQ06	50KCQ04
CFM	1600	1750	1400
STATIC PRESSURE	0.2	0.2	0.15
DRIVE	BELT	BELT	BELT
MCA	36.1	41.3	29.6
MOCP	50	60	40
VOLTAGE	208/230-1	208/230-1	208/230-1
WIRE SIZE (PWR/GRND)	#6/#10	#6/#10	#6/#10
DESIGN RETURN AIR (DB/WB)	80/67	80/67	80/67
SENSIBLE COOLING @ 95° F	35.260	40.700	30.500
TOTAL COOLING @ 95° F	49.000	58.000	35.600
HEATING INPUT	90.000	90.000	90.000
HEATING OUTPUT	73.000	73.000	73.000
OPERATING WEIGHT	590#	618#	572#
SEER	14.00	14.3	14.00
AFUE	80.4%	80.4%	80.4%

HVAC NOTES
1. SET BACK THERMOSTAT SHALL BE PROVIDED
2. THE CO2 SENSOR SHALL NOT BE OBSTRUCTED BY FURNITURE OR EQUIPMENT AND NEED TO BE LOCATED ACCORDINGLY, AND PLACED NO LESS THAN 35" AFF AND NO MORE THAN 72" AFF.
3. AIR HANDLERS WITH OTHER VOLTAGES SHOULD BE ACCEPTABLE, AS WELL AS OTHERS THAN THE MAKE AND MODELS LISTED ON THESE TABLES, WHEN THE NOMINAL TONNAGE DOES NOT EXCEEDS 5 TON AND THE SEER, HSPF AND COP VALUES ARE NO LESS THAN SHOWN.
4. MODEL NUMBERS FOR HEAT PUMP UNITS WITH OPTIONAL 5.0 AUXILIARY HEAT STRIPS, WHEN THE HEAT STRIP IS NOT USED, THE MCA AND MOCP MUST BE VERIFIED AND HEAT STRIPS LARGER THAN THE SIZES SHOWN MAY NOT BE USED.
5. HVAC SYSTEM DOES NOT CONTAIN AN ECONOMIZER AND DEMAND CONTROL VENTILATION DEVICES.
6. CLASSROOMS ARE DESIGNED FOR MINIMUM OUTSIDE AIR OF 0.38 CFM PER SF. PER CALIFORNIA ENERGY CODE (CEC), SPACES SHALL BE DESIGNED TO THE MINIMUM REQUIREMENTS AS SPECIFIED OR TO 15 CFM PER OCCUPANT, WHICHEVER IS GREATER. PC MANUFACTURER SHALL VERIFY WITH THE SCHOOL DISTRICT THE EXPECTED NUMBER OF OCCUPANTS IN THE CLASSROOM SO THAT THE OUTDOOR VENTILATION RATE FOR MECHANICAL SYSTEMS CAN BE ADEQUATELY ADJUSTED UPON SITE INSTALLATION OF THE BUILDING. PC MANUFACTURER SHALL ALSO CONFIRM WITH HVAC EQUIPMENT MANUFACTURER THAT THE SELECTED EQUIPMENT WILL BE ABLE TO PERFORM TO ACCOMODATE THE ADDITIONAL OUTDOOR AIR REQUIREMENTS UNDER THE PEAK DESIGN CONDITIONS FOR THE CLIMATE ZONE IN WHICH THE BUILDING IS LOCATED. AT OCCUPANCY, THE BUILDING MANUFACTURER SHALL PROVIDE TO BUILDING OWNER A DESCRIPTION OF THE QUANTITIES OF OUTDOOR AND RECIRCULATED AIR THAT THE VENTILATION SYSTEMS ARE DESIGNED TO PROVIDE EACH AREA.

*FOR 24x40 BUILDING A 5 TONS UNIT IS ONLY TO BE USED ON COMPUTER LAB APPLICATION

**OR EQUAL

SECTION 915
CARBON MONOXIDE DETECTION

915.2.3 Group E occupancies. Carbon monoxide detection shall be installed in classrooms in Group E occupancies. Carbon monoxide alarm signals shall be automatically transmitted to an on-site location that is staffed byschool personnel.

915.3 Detection equipment. Carbon monoxide detection required by Sections 915.1 through 915.2.3 shall be provided by carbon monoxide alarms complying with Section 915.4 or carbon monoxide detection systems complying with Section 915.5.

CFC 915.1 - Classrooms which contain a fuel-burning appliance or a fuel-burning fireplace or are supplied by a forced-air furnace shall be provided with a carbon monoxide detexction system. Provide a carbon monoxide detection system

GENERAL NOTE:
UTILILITIES THAT SPAN BETWEEN UNITS OR ACROSS SEISMIC SEPARATION JOINTS MUST BE DESIGNED WITH A FLEXIBLE CONNECTION THAT CAN ACCOMMODATE DIFFERENTIAL MOVEMENTS

IDENTIFICATION STAMP
DIV. OF THE STATE ARCHITECT
APP: 03-121617 INC:
REVIEWED FOR
SS ☑ FLS ☑ ACS ☑
DATE: 08/02/2021

PROFESSIONAL STAMP

REGISTERED PROFESSIONAL ENGINEER MANNY D. FRANCO C-43801 STRUCTURAL STATE OF CALIFORNIA

12/19/2017

THE PLANS, IDEAS & DESIGNS SHOWN ON THESE DRAWINGS ARE THE PROPERTY OF R&S TAVARES ASSOCIATES, INC. DEVISED SOLELY FOR THIS CONTRACT. THESE PLANS SHALL NOT BE USED, IN WHOLE OR IN PART, FOR ANY PURPOSE FOR WHICH THEY WERE NOT INTENDED WITHOUT THE EXPRESS WRITTEN CONSENT OF R&S TAVARES ASSOCIATES, INC. ©

CLIENT

CLASS LEASING LLC
1221 Harley Knox Boulevard
Perris, CA 92571

R&S TAVARES ASSOCIATES
DESIGN ◆ CONSULTING ◆ PROJECT
11777 BERNARDO PLAZA COURT, SUITE 105
SAN DIEGO, CA 92128
WWW.RSTAVARES.COM

ORIGINAL PC STATE AGENCY APPROVAL
FILE NUMBER: PC-128
IDENTIFICATION STAMP
DIVISION OF THE STATE ARCHITECT
04 - 116504 INCR: 0
AC RM FLS EA SSR KER
DATE 07/19/2018

PROJECT TITLE

24' x 40'
EXPANDABLE TO
120' x 40'

PRE-CHECK (PC) DOCUMENT
Code: [2016] CBC
A separate project application for construction is required.

PROJECT SPECIFIC STATE AGENCY APPROVAL
IDENTIFICATION STAMP
DIV. OF THE STATE ARCHITECT
APP: 04-119993 INC:
REVIEWED FOR
SS ☑ FLS ☑ ACS ☑
DATE: 02/24/2021

Revision Schedule

#	Description	Date

SHEET TITLE
MISCELLANEOUS NOTES & DETAILS

PROJECT NUMBER
17016A

DRAWN BY
rMc/SC

CHECKED BY
JA/RT

DATE
2017/06/05

SHEET NO.
M0.1
SHEET OF SHEETS

C:\Users\Lee\Documents\17016 - Aries, 24x40 PC - MainFile - Low Seismic_Lee.rvt
1/4/2018 2:44:35 PM

PC DESIGN REVIEW INFORMATION
Title 24, Part 6, Energy Code
DSA Application #: 04-116504
Calculation Date/Time of Energy Report: 2018-06-23 17:00:30
Model Name and Option: **24'x40'** PC - CLASS LEASING LLC
Total Floor Area: 960 ft^2
HVAC System Type: Simple / Wall Mounted A/C

Climate Zone (Reference City)	Azimuth (Front Orientation)	TDV - Standard Design	TDV - Proposed Design	Compliance Margin
14 (Palmdale) <	30	375.47	352.44	6.13%
	< * 75	356.36	348.45	< * 2.20%
	120	374.87	352.54	5.96%
	165	377.28	352.73	6.51%
	210	375.47	352.94	6.00%
	* 255	356.36	348.45	* 2.20%
	300	374.87	352.54	5.96%
	345	377.28	352.73	6.51%
15 (Palm Springs-Intl)	30	429.08	394.12	8.15%
	* 75	411.12	390.15	* 5.10%
	120	428.02	394.06	7.93%
	165	430.55	394.04	8.48%
	210	429.08	394.12	8.15%
	* 255	411.12	390.15	* 5.10%
	300	428.02	394.06	7.93%
	345	430.55	394.04	8.48%
16 (Blue Canyon)	30	357.12	336.72	5.71%
	* 75	337.94	329.35	* 2.50%
	120	356.82	336.85	5.60%
	165	358.91	336.85	6.12%
	210	357.12	336.72	5.71%
	* 255	337.94	329.35	* 2.50%
	300	356.82	336.85	5.60%
	345	358.91	336.95	6.12%

Reference: Energy Code, Appendix NA4, Table NA4-3
Notes:
* In the event that there are identical percentages, select one.
**This table is not currently generated by the energy software.
< Least Compliance Margin Orientation

PC DESIGN REVIEW INFORMATION
Title 24, Part 6, Energy Code
DSA Application #: 04-116504
Calculation Date/Time of Energy Report: 2018-06-23 19:58:52
Model Name and Option: **120'x40'** PC - CLASS LEASING LLC
Total Floor Area: 4,800 ft^2
HVAC System Type: Simple / Wall Mounted A/C

Climate Zone (Reference City)	Azimuth (Front Orientation)	TDV - Standard Design	TDV - Proposed Design	Compliance Margin
14 (Palmdale) <	30	355.00	337.30	4.99%
	< * 75	334.48	333.12	< * 0.40%
	120	353.88	336.40	4.94%
	165	358.78	338.70	5.60%
	210	355.00	337.30	4.99%
	* 255	334.48	333.12	* 0.40%
	300	353.88	336.40	4.94%
	345	358.78	338.70	5.60%
15 (Palm Springs-Intl)	30	406.60	381.50	6.17%
	* 75	384.85	375.42	* 2.50%
	120	404.84	380.12	6.11%
	165	410.19	382.55	6.74%
	210	406.60	381.50	6.17%
	* 255	384.85	375.42	* 2.50%
	300	404.84	404.84	6.11%
	345	410.19	382.55	6.74%
16 (Blue Canyon)	30	334.47	320.27	4.25%
	* 75	314.67	312.69	* 0.60%
	120	333.94	319.52	4.32%
	165	339.48	321.33	5.35%
	210	334.47	320.27	4.25%
	* 255	314.67	312.69	* 0.60%
	300	333.94	319.52	4.32%
	345	339.48	321.33	5.35%

Reference: Energy Code, Appendix NA4, Table NA4-3
Notes:
* In the event that there are identical percentages, select one.
**This table is not currently generated by the energy software.
< Least Compliance Margin Orientation

APPROVED
DIVISION OF STATE ARCHITECT
HIGH PERFORMANCE SECTION
APP.# 04-116504 DATE: 7.10.18

Project Name:	120X40 (PC 04-116504) - Wall AC	NRCC-PRF-01-E	Page 1 of 19
Project Address:	Climate Zone 14 Palmdale	Calculation Date/Time:	19:52, Sat, Jun 23, 2018
Compliance Scope:	NewComplete	Input File Name:	120X40 PC - CZ14(Wall AC)R75RSPV.cibd16x

A. PROJECT GENERAL INFORMATION

1.	Project Location (city)	Palmdale	**8.**	Standards Version	Compliance2016
2.	CA Zip Code		**9.**	Compliance Software (version)	EnergyPro 7.2
3.	Climate Zone	14	**10.**	Weather File	PALMDALE_723820_CZ2010.epw
4.	Total Conditioned Floor Area in Scope	4,800 ft^2	**11.**	Building Orientation (deg)	(E) 75 deg
5.	Total Unconditioned Floor Area	0 ft^2	**12.**	Permitted Scope of Work	NewComplete
6.	Total # of Stories (Habitable Above Grade)	1	13	Building Type(s)	Nonresidential
7.	Total # of dwelling units	0	14	Gas Type	NaturalGas

B. COMPLIANCE RESULTS FOR PERFORMANCE COMPONENTS (Annual TDV Energy Use, kBtu/ft ^{2}-yr) **§ 140.1**

BUILDING COMPLIES

1. Energy Component	2. Standard Design (TDV)	3. Proposed Design (TDV)	4. Compliance Margin (TDV)	5. Percent Better than Standard
Space Heating	17.88	22.68	-4.80	-26.8%
Space Cooling	103.92	117.41	-13.49	-13.0%
Indoor Fans	88.46	85.47	2.99	3.4%
Heat Rejection	--	--	--	--
Pumps & Misc.	--	--	--	--
Domestic Hot Water	11.16	11.16	--	0.0%
Indoor Lighting	48.76	32.10	16.66	34.2%
COMPLIANCE TOTAL	**270.18**	**268.82**	**1.36**	**0.5%**
Receptacle	64.30	64.30	0.0	0.0%
Process	--	--	--	--
Other Ltg	--	--	--	--
Process Motors	--	--	--	--
TOTAL	**334.48**	**333.12**	**1.4**	**0.4%**

Project Name:	120X40 (PC 04-116504) - Wall AC	NRCC-PRF-01-E	Page 2 of 19
Project Address:	Climate Zone 14 Palmdale	Calculation Date/Time:	19:52, Sat, Jun 23, 2018
Compliance Scope:	NewComplete	Input File Name:	120X40 PC - CZ14(Wall AC)R75RSPV.cibd16x

C. PRIORITY PLAN CHECK/ INSPECTION ITEMS (in order of highest to lowest TDV energy savings)

1st	Indoor Lighting: Check lighting
2nd	Indoor Fans: Check envelope and mechanical
3rd	Heat Rejection: Check envelope and mechanical
4th	Pumps & Misc.: Check mechanical
5th	Domestic Hot Water: Check mechanical
6th	Space Heating: Check envelope and mechanical
7th	Space Cooling: Check envelope and mechanical

Compliance Margin By Energy Component (from Table B column 4)

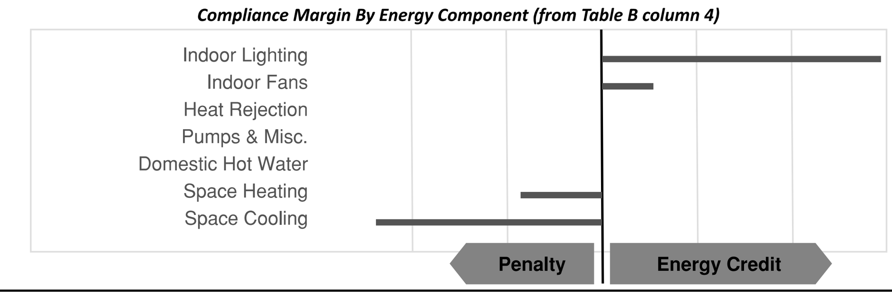

D. EXCEPTIONAL CONDITIONS

The building does not include service water heating. Verify that service water heating is not required and is not included in the design.

This project uses the Simplified Geometry Performance Modeling Approach which is not capable of modeling daylighting controls and assumes the prescriptive Secondary Daylit Control requirements are met. PRESCRIPTIVE COMPLIANCE documentation (form NRCC-LTI-02-E) for the requirements of section 140.6(d) Automatic Daylighting Controls in Secondary Daylit Zones is required.

E. HERS VERIFICATION

This Section Does Not Apply

F. ADDITIONAL REMARKS

Standard Building (Compliance)

Project Name:	120X40 (PC 04-116504) - Wall AC	NRCC-PRF-01-E	Page 3 of 19
Project Address:	Climate Zone 14 Palmdale	Calculation Date/Time:	19:52, Sat, Jun 23, 2018
Compliance Scope:	NewComplete	Input File Name:	120X40 PC - CZ14(Wall AC)R75RSPV.cibd16x

G. COMPLIANCE PATH & CERTIFICATE OF COMPLIANCE SUMMARY

Identify which building components use the performance or prescriptive path for compliance. "NA"= not in project

For components that utilize the performance path, indicate the sheet number that includes mandatory notes on plans.

Building Component	Compliance Path	Compliance Forms *(required for submittal)*	Location of Mandatory Notes on Plans
Envelope	☒ Performance	NRCC-PRF-ENV-DETAILS (section of the NRCC-PRF-01-E)	M2.3
	☐ Prescriptive	NRCC-ENV-01 / 02 / 03 / 04 / 05 / 06-E	
	☐ NA		
Mechanical	☒ Performance	NRCC-PRF-MCH-DETAILS (section of the NRCC-PRF-01-E)	M2.3
	☐ Prescriptive	NRCC-MCH-01 / 02 / 03 / 04 / 05 / 06 / 07-E	
	☐ NA		
Domestic Hot Water	☐ Performance	NRCC-PRF-PLB-DETAILS (section of the NRCC-PRF-01-E)	
	☒ Prescriptive	NRCC-PLB-01-E	
	☐ NA		
Lighting (Indoor Conditioned)	☒ Performance	NRCC-PRF-LTI-DETAILS (section of the NRCC-PRF-01-E)	M2.3
	☐ Prescriptive	NRCC-LTI-01 / 02 / 03 / 04 / 05-E	
	☐ NA		
Covered Process: Commercial Kitchens	☐ Performance	S2 (section of the NRCC-PRF-01-E)	
	☐ Prescriptive	NRCC-PRC-01/ 03-E	
	☒ NA		
Covered Process: Computer Rooms	☐ Performance	S3 (section of the NRCC-PRF-01-E)	
	☐ Prescriptive	NRCC-PRC-01/ 04-E	
	☒ NA		
Covered Process: Laboratory Exhaust	☐ Performance	S4 (section of the NRCC-PRF-01-E)	
	☐ Prescriptive	NRCC-PRC-01/ 09-E	
	☒ NA		

Project Name:	120X40 (PC 04-116504) - Wall AC	NRCC-PRF-01-E	Page 4 of 19
Project Address:	Climate Zone 14 Palmdale	Calculation Date/Time:	19:52, Sat, Jun 23, 2018
Compliance Scope:	NewComplete	Input File Name:	120X40 PC - CZ14(Wall AC)R75RSPV.cibd16x

G. COMPLIANCE PATH & CERTIFICATE OF COMPLIANCE SUMMARY

The following building components are only eligible for prescriptive compliance. Indicate which are relevant to the project. / *The following building components may have mandatory requirements per Part 6. Indicate which are relevant to the project.*

Yes	NA	Prescriptive Requirement	Compliance Forms	Yes	NA	Mandatory Requirement	Compliance Forms
☐	☒	Lighting (Indoor Unconditioned) §140.6	NRCC-LTI-01 / 02 / 03 / 04 / 05-E	 ☐ ☐	 ☒ ☒	Commissioning: §120.8 Simple Systems Complex Systems	 NRCC-CXR-01 / 02 / 03 / 05-E NRCC-CXR-01 / 02 / 04 / 05-E
☐	☒	Lighting (Outdoor) §140.7	NRCC-LTO-01 / 02 / 03-E	☐	☒	Electrical: §130.5	NRCC-ELC-01-E
☐	☒	Lighting (Sign) §140.8	NRCC-LTS-01-E	☐	☒	Solar Ready: §110.10	NRCC-SRA-01 / 02-E
☐	☒	Solar Thermal Water Heating: §140.5	NRCC-STH-01-E	 ☐ ☐ ☐ ☐ ☐	 ☒ ☒ ☒ ☒ ☒	Covered Process: §120.6 Parking Garage Commercial Refrigeration Warehouse Refrigeration Compressed Air Process Boilers	NRCC-PRC-01-E NRCC-PRC-02-E NRCC-PRC-05-E NRCC-PRC-06/07/08-E NRCC-PRC-10-E NRCC-PRC-11-E

Project Name:	120X40 (PC 04-116504) - Wall AC	NRCC-PRF-01-E	Page 5 of 19
Project Address:	Climate Zone 14 Palmdale	Calculation Date/Time:	19:52, Sat, Jun 23, 2018
Compliance Scope:	NewComplete	Input File Name:	120X40 PC - CZ14(Wall AC)R75RSPV.cibd16x

H. CERTIFICATE OF INSTALLATION, CERTIFICATE OF ACCEPTANCE & CERTIFICATE OF VERIFICATION SUMMARY (NRCI/NRCA/NRCV) –
Documentation Author to indicate which Certificates must be submitted for the features to be recognized for compliance
(Retain copies and verify forms are completed and signed to post in field for Field Inspector to verify).
See Tables G. and H. in MCH and LTI Details Sections for Acceptance Tests and forms by equipment.

Building Component	Compliance Forms *(required for submittal)*	Confirmed Pass	Confirmed Fail
Envelope	☒ NRCI-ENV-01-E - For all buildings	☐	☐
	☒ NRCA-ENV-02-F- NFRC label verification for fenestration	☐	☐
Mechanical	☒ NRCI-MCH-01-E - For all buildings with Mechanical Systems	☐	☐
	☒ NRCA-MCH-02-A- Outdoor Air	☐	☐
	☐ NRCA-MCH-03-A – Constant Volume Single Zone HVAC	☐	☐
	☐ NRCA-MCH-04-H- Air Distribution Duct Leakage	☐	☐
	☐ NRCA-MCH-05-A- Air Economizer Controls	☐	☐
	☐ NRCA-MCH-06-A- Demand Control Ventilation	☐	☐
	☐ NRCA-MCH-07-A – Supply Fan Variable Flow Controls	☐	☐
	☐ NRCA-MCH-08-A- Valve Leakage Test	☐	☐
	☐ NRCA-MCH-09-A – Supply Water Temp Reset Controls	☐	☐
	☐ NRCA-MCH-10-A- Hydronic System Variable Flow Controls	☐	☐
	☐ NRCA-MCH-11-A – Auto Demand Shed Controls	☐	☐
	☐ NRCA-MCH-12-A- Packaged Direct Expansion Units	☐	☐
	☐ NRCA-MCH-13-A- Air Handling Units and Zone Terminal Units	☐	☐
	☐ NRCA-MCH-14-A- Distributed Energy Storage	☐	☐
	☐ NRCA-MCH-15-A – Thermal Energy Storage	☐	☐
	☐ NRCA-MCH-16-A- Supply Air Temp Reset Controls	☐	☐
	☐ NRCA-MCH-17-A – Condensate Water Temp Reset Controls	☐	☐
	☐ NRCA-MCH-18-A- Energy Management Controls Systems	☐	☐
	☐ NRCV-MCH-04-H- Duct Leakage Test	☐	☐

Project Name:	120X40 (PC 04-116504) - Wall AC	NRCC-PRF-01-E	Page 6 of 19
Project Address:	Climate Zone 14 Palmdale	Calculation Date/Time:	19:52, Sat, Jun 23, 2018
Compliance Scope:	NewComplete	Input File Name:	120X40 PC - CZ14(Wall AC)R75RSPV.cibd16x

H. CERTIFICATE OF INSTALLATION, CERTIFICATE OF ACCEPTANCE & CERTIFICATE OF VERIFICATION SUMMARY (NRCI/NRCA/NRCV) –
Documentation Author to indicate which Certificates must be submitted for the features to be recognized for compliance
(Retain copies and verify forms are completed and signed to post in field for Field Inspector to verify).
See Tables G. and H. in MCH and LTI Details Sections for Acceptance Tests and forms by equipment.

Building Component	Compliance Forms *(required for submittal)*	Confirmed Pass	Confirmed Fail
Plumbing	☐ NRCI-PLB-01-E - For all buildings with Plumbing Systems	☐	☐
	☐ NRCI-PLB-02-E - required on central systems in high-rise residential, hotel/motel application.	☐	☐
	☐ NRCI-PLB-03-E - Single dwelling unit systems in high-rise residential, hotel/motel application.	☐	☐
	☐ NRCI-PLB-21-E - HERS verified central systems in high-rise residential, hotel/motel application.	☐	☐
	☐ NRCI-PLB-22-E - HERS verified single dwelling unit systems in high-rise residential, hotel/motel application.	☐	☐
	☐ NRCV-PLB-21-H- HERS verified central systems in high-rise residential, hotel/motel application.	☐	☐
	☐ NRCV-PLB-22-H - HERS verified single dwelling unit systems in high-rise residential, hotel/motel application.	☐	☐
	☐ NRCI-STH-01-E - Any solar water heating	☐	☐
Indoor Lighting	☒ NRCI-LTI-01-E - For all buildings	☐	☐
	☐ NRCI-LTI-02-E - Lighting control system, or for an Energy Management Control System (EMCS)	☐	☐
	☐ NRCI-LTI-03-E - Line-voltage track lighting integral current limiter, or for a supplementary overcurrent protection panel used to energize only line-voltage track lighting	☐	☐
	☐ NRCI-LTI-04-E - Two interlocked systems serving an auditorium, a convention center, a conference room, or a theater	☐	☐
	☐ NRCI-LTI-05-E - Lighting Control Credit Power Adjustment Factor (PAF)	☐	☐
	☐ NRCI-LTI-06-E - Additional wattage installed in a video conferencing studio	☐	☐
	☒ NRCA-LTI-02-A - Occupancy sensors and automatic time switch controls.	☐	☐
	☒ NRCA-LTI-03-A - Automatic daylighting controls	☐	☐
	☐ NRCA-LTI-04-A - Demand responsive lighting controls	☐	☐
Outdoor Lighting	☐ NRCI-LTO-01-E – Outdoor Lighting	☐	☐
	☐ NRCI-LTO-02-E- EMCS Lighting Control System	☐	☐
	☐ NRCA-LTO-02-A - Outdoor Lighting Control	☐	☐
Sign Lighting	☐ NRCI-LTS-01-E – Sign Lighting	☐	☐
Electrical	☐ NRCI-ELC-01-E - Electrical Power Distribution	☐	☐
Photovoltaic	☐ NRCI-SPV-01-E Photovoltaic Systems	☐	☐

IDENTIFICATION STAMP
DIV. OF THE STATE ARCHITECT
APP: 03-121617 INC:
REVIEWED FOR
SS ☑ FLS ☑ ACS ☑
DATE: 08/02/2021

PROFESSIONAL STAMP
REGISTERED PROFESSIONAL ENGINEER MANNY D. FRIEDMAN No. S3380 STRUCTURAL STATE OF CALIFORNIA
12/19/2017

THE PLANS, IDEAS & DESIGNS SHOWN ON THESE DRAWINGS ARE THE PROPERTY OF R&S TAVARES ASSOCIATES, INC. DEVISED SOLELY FOR THIS CONTRACT. THESE PLANS SHALL NOT BE USED, IN WHOLE OR IN PART, FOR ANY PURPOSE FOR WHICH THEY WERE NOT INTENDED WITHOUT THE EXPRESS WRITTEN CONSENT OF R&S TAVARES ASSOCIATES, INC. ©

CLIENT
CLASS LEASING LLC
1221 Harley Knox Boulevard
Perris, CA 92571

R&S TAVARES ASSOCIATES
DESIGN ◆ CONSULTING ◆ PROJECT
11777 Bernardo Plaza Court, Suite 105
San Diego, CA 92128
www.rstavares.com

ORIGINAL PC STATE AGENCY APPROVAL
FILE NUMBER: PC-128
IDENTIFICATION STAMP
DIVISION OF THE STATE ARCHITECT
04 - 116504 INCR: 0
AC RM FLS EA SSR KER
DATE 07/19/2018

PROJECT TITLE
24' x 40'
EXPANDABLE TO
120' x 40'

PRE-CHECK (PC) DOCUMENT
Code: [2016] **CBC**
A separate project application for construction is required.

PROJECT SPECIFIC STATE AGENCY APPROVAL
~~IDENTIFICATION STAMP
DIV. OF THE STATE ARCHITECT
APP: 04-119993 INC:
REVIEWED FOR
SS ☑ FLS ☑ ACS ☑
DATE: 02/24/2021~~

Revision Schedule

#	Description	Date

SHEET TITLE
120'x40' T24 CZ 16
(WALL AC)

PROJECT NUMBER
17016A

DRAWN BY
rMc/SC

CHECKED BY
JA/RT

DATE
07/05/2018

SHEET NO.
M2.1

SHEET OF SHEETS

C:\Users\Andrew\Documents\17016 - Aries, 24x40 PC - MainFile - Low Seismic_Andrew.rvt
3/8/2018 2:19:41 PM

H. CERTIFICATE OF INSTALLATION, CERTIFICATE OF ACCEPTANCE & CERTIFICATE OF VERIFICATION SUMMARY (NRCI/NRCA/NRCV) – Documentation Author to indicate which Certificates must be submitted for the features to be recognized for compliance (Retain copies and verify forms are completed and signed to post in field for Field Inspector to verify). See Tables G. and H. in MCH and LTI Details Sections for Acceptance Tests and forms by equipment.

Building Component	Compliance Forms *(required for submittal)*	Confirmed Pass	Confirmed Fail
Covered Process	☐ NRCI-PRC-01-E Covered Processes	☐	☐
	☐ NRCA-PRC-01-F- Compressed Air Systems	☐	☐
	☐ NRCA-PRC-02-F- Kitchen Exhaust	☐	☐
	☐ NRCA-PRC-03-F- Garage Exhaust	☐	☐
	☐ NRCA-PRC-04-F- Refrigerated Warehouse- Evaporator Fan Motor Controls	☐	☐
	☐ NRCA-PRC-05-F- Refrigerated Warehouse- Evaporative Condenser Controls	☐	☐
	☐ NRCA-PRC-06-F- Refrigerated Warehouse- Air Cooled Condenser Controls	☐	☐
	☐ NRCA-PRC-07F- Refrigerated Warehouse- Variable Speed Compressor	☐	☐
	☐ NRCA-PRC-08-F- Electrical Resistance Underslab Heating System	☐	☐

I. ENVELOPE GENERAL INFORMATION (See NRCC-PRF-ENV-DETAILS for more information)

						Confirmed Pass	Confirmed Fail
1.	Total Conditioned Floor Area	4,800 ft^2	5.	Number of Floors Above Grade	1		
2.	Total Unconditioned Floor Area	0 ft^2	6.	Number of Floors Below Grade	0		
3.	Addition Conditioned Floor Area	0 ft^2					
4.	Addition Unconditioned Floor Area	0 ft^2					

7. Opaque Surfaces & Orientation	8. Total Gross Surface Area	9. Total Fenestration Area	10. Window to Wall Ratio	Pass	Fail
North Wall	1,200 ft^2	160 ft^2	13.3%	☐	☐
East Wall	400 ft^2	0 ft^2	00.0%	☐	☐
South Wall	1,200 ft^2	160 ft^2	13.3%	☐	☐
West Wall	400 ft^2	0 ft^2	00.0%	☐	☐
Total	**3,200 ft^2**	**320 ft^2**	**10.0%**	☐	☐
Roof	4,800 ft^2	30 ft^2	00.6%	☐	☐

J. FENESTRATION ASSEMBLY SUMMARY § 110.6 — Confirmed

1. Fenestration Assembly Name / Tag or I.D.	2. Fenestration Type / Product Type / Frame Type	3. Certification Method[1]	4. Assembly Method	5. Area ft^2	6. Overall U-factor	7. Overall SHGC	8. Overall VT	9. Status[2]	Pass	Fail
Sierra Pacific Windows	VerticalFenestration FixedWindow N/A	NFRC Rated	Manufactured	320	0.35	0.24	0.50	N	☐	☐
Solatube	Skylight FixedWindow N/A	NFRC Rated	Manufactured	30	0.37	0.35	0.50	N	☐	☐

[1] *Newly installed fenestration shall have a certified NFRC Label Certificate or use the CEC default tables found in Table 110.6-A and Table 110.6-B. Center of Glass (COG) values are for the glass-only, determined by the manufacturer, and are shown for ease of verification. Site-built fenestration values are calculated per Nonresidential Appendix NA6 and are used in the analysis.*

[2] *Status: N - New, A – Altered, E – Existing*

Taking compliance credit for fenestration shading devices? (if "Yes", see NRCC-PRF-ENV-DETAILS for more information)	No

K. OPAQUE SURFACE ASSEMBLY SUMMARY § 120.7/ § 140.3 — Confirmed

1. Surface Name	2. Surface Type	3. Area (ft^2)	4. Framing Type	5. Cavity R-Value	6. Continuous R-Value	7. U-Factor / F-Factor / C-Factor	8. Status[1]	Pass	Fail
R-19 Wall Metal Stud5	ExteriorWall	3200	Metal	19	4	U-Factor: 0.104	N	☐	☐
Raised Slab Floor with R-12	ExteriorFloor	4800	Metal	11	NA	U-Factor: 0.091	N	☐	☐
Standing Seam R-30 Metal14	Roof	4800	NA	30	NA	U-Factor: 0.072	N	☐	☐

[1] *Status: N – New, A – Altered, E – Existing*

L. ROOFING PRODUCT SUMMARY § 140.3 — Confirmed

1. Product Type	2. Product Density (lb/ft^2)	3. Aged Solar Reflectance	4. Thermal Emittance	5. SRI	6. Cool Roof Credit	7. Roofing Product Description	Pass	Fail
Standing Seam R-30 Metal14	2.543	0.08	0.75	NA	No	NA	☐	☐

M. HVAC SYSTEM SUMMARY (see NRCC-PRF-MCH-DETAILS for more information) § 110.1 / § 110.2

Dry System Equipment [1] (Fan & Economizer info included below in Table N) — Confirmed

1. Equip Name	2. Equip Type	3. System Type (Simple [2] or Complex [3])	4. Qty	5. Total Heating Output (kBtu/h)	6. Supp Heat Source (Y/N)	7. Supp Heat Output (kBtuh)	8. Total Cooling Output (kBtu/h)	9. Efficiency: Cooling	9. Efficiency: Heating	10. Acceptance Testing Required? (Y/N) [4]	11. Status[5]	Pass	Fail
AC-1 to AC-5	SPVHP (Packaged1Phase)	Simple	5	40	No	0	38	EER-11.00	COP-3.40	Yes	N	☐	☐

[1] *Dry System Equipment includes furnaces, air handling units, heat pumps, etc.*

[2] *Simple Systems must complete NRCC-CXR-03-E commissioning design review form*

[3] *Complex Systems must complete NRCC-CXR-04-E commissioning design review form*

[4] *A summary of which acceptance tests are applicable is provided in NRCC-PRF-MCH-DETAILS*

[5] *Status: N - New, A – Altered, E – Existing*

Wet System Equipment Section Does Not Apply

Discrepancy between modeled and designed equipment sizing? (if "Yes", see Table F. "Additional Remarks" for an explanation)	No

N. ECONOMIZER & FAN SYSTEMS SUMMARY[1] § 140.4 — Confirmed

1. Equip Name	2. Outside Air	3. Supply Fan: CFM	HP	BHP	TSP (inch WC)	Control	4. Return Fan: CFM	HP	BHP	TSP (inch WC)	Control	5. Economizer Type (if present)	Pass	Fail
AC-1 to AC-5	360	1250	0.750	0.750	1.90	ConstantVolume	NA	NA	NA	NA	NA	NoEconomizer	☐	☐

[1] *Mechanical ventilation calculations and exhaust fans are included in the NRCC-PRF-MCH-DETAILS section*

O. EQUIPMENT CONTROLS § 120.2 — Confirmed

1. Equip Name	2. Equip Type	3. Controls	Pass	Fail
AC-1 to AC-5	SPVHP	No DCV Controls No Economizer No Supply Air Temp. Control No Optimum Start No Evaporative Cooler No Heat Recovery	☐	☐

P. SYSTEM DISTRIBUTION SUMMARY § 120.4/ § 140.4(l) — Confirmed

1. Equip Name	2. Equip Type	3. Duct Leakage and Sealing Required per 140.4(l)	4. Duct Leakage will be verified per NA1 and NA2	5. Ducts: Insulation R-Value	5. Ducts: Location	6. Status[1]	Pass	Fail
AC-1 to AC-5	SPVHP	No	No	8	Unconditioned	N	☐	☐

[1] *Status: N - New, E – Existing*

Does the Project Include Zonal Systems? (if "Yes", see NRCC-PRF-MCH-DETAILS for system information)	No
Does the Project Include a Solar Hot Water System? (if "Yes", see NRCC-PRF-MCH-DETAILS for system information)	No
Multifamily or Hotel/ Motel Occupancy? (if "Yes", see NRCC-PRF-MCH-DETAILS for DHW system information)	No

Q. INDOOR CONDITIONED LIGHTING GENERAL INFO (see NRCC-PRF-LTI-DETAILS for more info)[1] § 140.6 — Confirmed

1. Occupancy Type [1]	2. Conditioned Floor Area [2] (ft^2)	3. Installed Lighting Power (Watts)	4. Lighting Control Credits (Watts)	5. Additional (Custom) Allowance: Area Category Footnotes (Watts)	5. Additional (Custom) Allowance: Tailored Method (Watts)	Pass	Fail
Classrooms, Lecture, Training, Vocational Areas	4,800	3,160	0	0	0	☐	☐
Building Totals:	**4,800**	**3,160**	**0**	**0**	**0**		

[1] *See Table 140.6-C*

DOCUMENTATION AUTHOR'S DECLARATION STATEMENT § 10-103

I certify that this Certificate of Compliance documentation is accurate and complete.

Documentation Author Name: LAL B. SAHGAL	Signature: Lal Sahgal
Company: LSA CONSULTING ENGINEERS	
Address: 83, WINDSWEPT WAY	Signature Date: 06/25/2018
City/State/Zip: MISSION VIEJO CA. 92692	CEA Identification (If applicable): M26885
Phone: (949)830-4746	

RESPONSIBLE PERSON'S DECLARATION STATEMENT

I certify the following under penalty of perjury, under the laws of the State of California:

1	I hereby affirm that I am eligible under the provisions of Division 3 of the Business and Professions Code to sign this document as the person responsible for its preparation; and that I am licensed in the State of California as a civil engineer, mechanical engineer, electrical engineer, or I am a licensed architect.
2	I affirm that I am eligible under the provisions of Division 3 of the Business and Professions Code by section 5537.2 or 6737.3 to sign this document as the person responsible for its preparation; and that I am a licensed contractor performing this work.
3	I affirm that I am eligible under Division 3 of the Business and Professions Code to sign this document because it pertains to a structure or type of work described as exempt pursuant to Business and Professions Code Sections 5537, 5538 and 6737.1.

Responsible Envelope Designer Name: Manny D, Frisch	Signature: Manny D. Frisch	
Company: R & S Tavares Associates		
Address: 11777 Bernardo Plaza Ct. #105	Date Signed: 06/25/2018	
City/State/Zip: San Diego Ca. 92128	Declaration Statement Type:	
Phone: (858)444-3344 Ext. 1810	Title:	License #: S3380
Responsible Lighting Designer Name: Ralph M. Tavares	Signature:	
Company: R & S Tavares Associates		
Address: 11777 Bernardo Plaza Ct. #105	Date Signed: 06/25/2018	
City/State/Zip: San Diego Ca. 92128	Declaration Statement Type:	
Phone: (858)444-3344 Ext. 1801	Title:	License #:
Responsible Mechanical Designer Name: Lal Sahgal	Signature: Lal Sahgal	
Company: LSA Consulting Engineers		
Address: 83, Windswept Way	Date Signed: 06/25/2018	
City/State/Zip: Mission Viejo Ca. 92692	Declaration Statement Type:	
Phone: (949)830-4746	Title:	License #: M26885

[2] *See NRCC-LTI-01-E for unconditioned spaces*

[3] *Lighting information for existing spaces modeled is not included in the table*

R. INDOOR CONDITIONED LIGHTING SCHEDULE (Adapted from NRCC-LTI-01-E)[1] § 130.0

Luminaire Schedule (includes all permanent installed lighting in conditioned space, and portable lighting over 0.3 w/ft^2 in offices)		Installed Watts (Conditioned)					Confirmed	
Name or Item Tag	Complete Luminaire Description (i.e., 3-lamp fluorescent troffer, F32T8, one dimmable electronic ballast)	Watts per luminaire	How Wattage is Determined: CEC Default from NA8	How Wattage is Determined: According to §130.0(c)	Total Number Luminaires	Installed Watts	Pass	Fail
L-1	3-LAMP / 32W / T8	96	Yes	No	40	3,840	☐	☐

[1] *If lighting power densities were used in the compliance model Building Departments will need to check prescriptive forms for Luminaire Schedule details.*

S1. COVERED PROCESS SUMMARY – ENCLOSED PARKING GARAGES § 140.9

This Section Does Not Apply

S2. COVERED PROCESS SUMMARY – COMMERCIAL KITCHENS § 140.9

This Section Does Not Apply

S3. COVERED PROCESS SUMMARY – COMPUTER ROOMS § 140.9

This Section Does Not Apply

S4. COVERED PROCESS SUMMARY – LABORATORY EXHAUSTS § 140.9

This Section Does Not Apply

T. UNMET LOAD HOURS

This Section Does Not Apply

U. ENERGY USE SUMMARY

Energy Component	Standard Design Site (MWh)	Proposed Design Site (MWh)	Margin (MWh)	Standard Design Site (MBtu)	Proposed Design Site (MBtu)	Margin (MBtu)
Space Heating	--	6.4	--	51.5	--	--
Space Cooling	12.2	14.3	-2.1	--	--	--

U. ENERGY USE SUMMARY

Energy Component	Standard Design Site (MWh)	Proposed Design Site (MWh)	Margin (MWh)	Standard Design Site (MBtu)	Proposed Design Site (MBtu)	Margin (MBtu)
Indoor Fans	18.2	18.1	0.1	--	--	--
Heat Rejection	--	--	--	--	--	--
Pumps & Misc.	--	--	--	--	--	--
Domestic Hot Water	--	--	--	37.1	37.1	0.0
Indoor Lighting	9.8	6.5	3.3	--	--	--
COMPLIANCE TOTAL	**40.2**	**45.3**	**-5.1**	**88.6**	**37.1**	**51.5**
Receptacle	12.7	12.7	0.0	--	--	--
Process	--	--	--	--	--	--
Other Ltg	--	--	--	--	--	--
Process Motors	--	--	--	--	--	--
TOTAL	**52.9**	**58.0**	**-5.1**	**88.6**	**37.1**	**51.5**

APPROVED
DIVISION OF STATE ARCHITECT
HIGH PERFORMANCE SECTION
APP.# 04-116504 DATE: 7-10-18

IDENTIFICATION STAMP
DIV. OF THE STATE ARCHITECT
APP: 03-121617 INC: A
REVIEWED FOR
SS ☑ FLS ☑ ACS ☑
DATE: 08/02/2021

PROFESSIONAL STAMP

REGISTERED PROFESSIONAL ENGINEER MANNY D. FRISCH C-23380 STRUCTURAL STATE OF CALIFORNIA

12/19/2017

THE PLANS, IDEAS & DESIGNS SHOWN ON THESE DRAWINGS ARE THE PROPERTY OF R&S TAVARES ASSOCIATES, INC. DEVISED SOLELY FOR THIS CONTRACT. THESE PLANS SHALL NOT BE USED, IN WHOLE OR IN PART, FOR ANY PURPOSE FOR WHICH THEY WERE NOT INTENDED WITHOUT THE EXPRESS WRITTEN CONSENT OF R&S TAVARES ASSOCIATES, INC. ©

CLIENT

CLASS LEASING LLC
1221 Harley Knox Boulevard
Perris, CA 92571

R&S TAVARES ASSOCIATES
DESIGN ♦ CONSULTING ♦ PROJECT
11777 BERNARDO PLAZA COURT, SUITE 105
SAN DIEGO, CA 92128
WWW.RSTAVARES.COM

ORIGINAL PC STATE AGENCY APPROVAL
FILE NUMBER: PC-128

IDENTIFICATION STAMP
DIVISION OF THE STATE ARCHITECT
04 - 116504 INCR: 0
AC RM FLS EA SSR KER
DATE 07/19/2018

PROJECT TITLE

24' x 40'
EXPANDABLE TO
120' x 40'

PRE-CHECK (PC) DOCUMENT
Code: [2016] **CBC**
A separate project application for construction is required.

PROJECT SPECIFIC STATE AGENCY APPROVAL

IDENTIFICATION STAMP
DIV. OF THE STATE ARCHITECT
APP: 04-119993 INC:
REVIEWED FOR
SS ☑ FLS ☑ ACS ☑
DATE: 02/24/2021

Revision Schedule

#	Description	Date

SHEET TITLE
120'x40' T24 CZ 16
(WALL AC)

PROJECT NUMBER
17016A

DRAWN BY
rMc/SC

CHECKED BY
JA/RT

DATE
07/05/2018

SHEET NO.
M2.2

SHEET OF SHEETS

3/8/2018 2:19:42 PM C:\Users\Andrew\Documents\17016 - Arias, 24x40 PC - MainFile - Low Seismic_Andrew.rvt

Project Name:	120X40 (PC 04-116504) - Wall AC	NRCC-PRF-01-E	Page 14 of 19
Project Address:	Climate Zone 14 Palmdale	Calculation Date/Time:	19:52, Sat, Jun 23, 2018
Compliance Scope:	NewComplete	Input File Name:	120X40 PC - CZ14(Wall AC)R75RSPV.cibd16x

NRCC-PRF-ENV-DETAILS -SECTION START-

A. OPAQUE SURFACE ASSEMBLY DETAILS				Confirmed	
1.	2.	3.	4.	Pass	Fail
Surface Name	Surface Type	Description of Assembly Layers	Notes		
R-19 Wall Metal Stud5	ExteriorWall	Stucco - 7/8 in. Vapor permeable felt - 1/8 in. Metal framed wall, 16in. OC, 5.5in., R-19 Gypsum Board - 1/2 in. Expanded Polystyrene - EPS - 1 in. R4.2		☐	☐
Raised Slab Floor with R-12	ExteriorFloor	Concrete - 140 lb/ft3 - 4 in. Metal framed floor, 24in. OC, 5.5in., R-11 Plywood - 1/2 in. Carpet - 3/4 in.		☐	☐
Standing Seam R-30 Metal14	Roof	Metal Standing Seam - 1/16 in. Metal standing seam roof, R-30		☐	☐

B. OVERHANG DETAILS (Adapted from NRCC-ENV-02-E)

This Section Does Not Apply

C. OPAQUE DOOR SUMMARY

This Section Does Not Apply

Project Name:	120X40 (PC 04-116504) - Wall AC	NRCC-PRF-01-E	Page 15 of 19
Project Address:	Climate Zone 14 Palmdale	Calculation Date/Time:	19:52, Sat, Jun 23, 2018
Compliance Scope:	NewComplete	Input File Name:	120X40 PC - CZ14(Wall AC)R75RSPV.cibd16x

NRCC-PRF-MCH-DETAILS -SECTION START-

A. MECHANICAL VENTILATION AND REHEAT *(Adapted from 2016-NRCC-MCH-03-E)*

	1. DESIGN AIR FLOWS							2. VENTILATION (§ 120.1)										Confirmed	
CONDITIONED ZONE NAME	HEATING/COOLING SYSTEM ID	DESIGN PRIMARY AIR FLOW (CFM)	DESIGN PRIMARY MINIMUM AIR FLOW (CFM)	MINIMUM PRIMARY AIR FLOW FRACTION	MAXIMUM HEATING AIR FLOW (CFM)	MAXIMUM HEATING AIR FLOW FRACTION	DDC CONTROL (Y/N)	VENT SYSTEM ID	CONDITIONED AREA (ft2)	MIN. VENT PER AREA (CFM/ft2)	DESIGN NUM. OF PEOPLE	MIN. VENT PER PERSON (CFM/person)	REQ'D VENT AIR FLOW (CFM)	DESIGN VENT AIR FLOW (CFM)	TRANSFER AIRFLOW (CFM)	DCV (Y/N)	Operable Window Interlock § 140.4(n) (Y/N)	Pass	Fail
1-First Floor	AC-1 to AC-5	6,250	NA	NA	NA	NA	N	AC-1 to AC-5	4,800	NA	120.00	15.00	1,800	1,800	NA	N	NA	☐	☐
								TOTAL	4,800		120.00		1,800	1,800	NA			☐	☐

B. ZONAL SYSTEM AND TERMINAL UNIT SUMMARY														§ 140.4	
1.	2.	3.	4.		5.	6.	7.			8.				Confirmed	
System ID	System Type	Qty	Rated Capacity (kBtuh) Heating	Rated Capacity (kBtuh) Cooling	Economizer	Zone Name	Airflow (cfm) Design	Min.	Min. Ratio	Fan BHP	Cycles	ECM Motor		Pass	Fail
1-First Floor-Trm	Uncontrolled	5	NA	NA	NA	1-First Floor	6250	NA	NA	NA	NA	☐		☐	☐

C. EXHAUST FAN SUMMARY

This Section Does Not Apply

D. DHW EQUIPMENT SUMMARY – *(Adapted from NRCC-PLB-01)*

This Section Does Not Apply

Project Name:	120X40 (PC 04-116504) - Wall AC	NRCC-PRF-01-E	Page 16 of 19
Project Address:	Climate Zone 14 Palmdale	Calculation Date/Time:	19:52, Sat, Jun 23, 2018
Compliance Scope:	NewComplete	Input File Name:	120X40 PC - CZ14(Wall AC)R75RSPV.cibd16x

E. MULTI-FAMILY CENTRAL DHW SYSTEM DETAILS

This Section Does Not Apply

F. SOLAR HOT WATER HEATING SUMMARY (Adapted from NRCC-STH-01)

This Section Does Not Apply

G. MECHANICAL HVAC ACCEPTANCE TESTS & FORMS *(Adapted from 2016-NRCC-MCH-01-E)* § RA4

Declaration of Required Acceptance Certificates (NRCA) – Acceptance Certificates that may be submitted. (Retain copies and verify forms are completed and signed to post in field for Field Inspector to verify).

Test Description		MCH-02A	MCH-03A	MCH-04A	MCH-05A	MCH-06A	MCH-07A	MCH-08A	MCH-09A	MCH-10A	MCH-11A	MCH-12A	MCH-13A	MCH-14A	MCH-15A	MCH-16A	MCH-17A	MCH-18A	Confirmed	
Equipment Requiring Testing or Verification	# of units	Outdoor Air	Single Zone Unitary	Air Dist. Ducts	Economizer Controls	DCV	Supply Fan VAV	Valve leakage	Supply Water Temp. Reset	Hyd. Variable Flow Control	Auto Demand Shed Control	FDD for DX Units	Auto FDD for Air & Zone	Dist. Energy Storage DX AC	TES Systems	Supply Air Temp. Reset	Condenser Water Reset Controls	ECMS	Pass	Fail
AC-1 to AC-5	5	X	--	--	--	--	--	--	--	--	--	--	--	--	--	--	--	--	☐	☐

H. EVAPORATIVE COOLER SUMMARY

This Section Does Not Apply

Project Name:	120X40 (PC 04-116504) - Wall AC	NRCC-PRF-01-E	Page 17 of 19
Project Address:	Climate Zone 14 Palmdale	Calculation Date/Time:	19:52, Sat, Jun 23, 2018
Compliance Scope:	NewComplete	Input File Name:	120X40 PC - CZ14(Wall AC)R75RSPV.cibd16x

NRCC-PRF-LTI-DETAILS -SECTION START-

A. INDOOR CONDITIONED LIGHTING CONTROL CREDITS (Adapted from NRCC-LTI-02-E) § 140.6

Lighting Control Credits Schedule (includes all lighting controls installed in conditioned space for compliance credit per §140.6(a)2 and Table 140.6-A)				Control Credit Calculation			√ If Acceptance Test Required	Confirmed	
Location in Building	Occupancy Type (must meet requirements of Table 140.6-A)	Type/Description of Lighting Control (i.e., partial on occupancy sensor, manual dimming, etc.)	# of Units	Watts of Controlled Lighting	Power Adjustment Factor	Control Credit Watts		Pass	Fail
S-1-First Floor	Classrooms, Lecture, Training, Vocational Areas	- none specified -	1		0.00	0		☐	☐

B. INDOOR CONDITIONED LIGHTING MANDATORY LIGHTING CONTROLS (Adapted from NRCC-LTI-02-E) § 130.1

This Section Does Not Apply

§130.1(a) = Manual area controls; §130.0(b) = Multi Level; §130.1(c) = Auto Shut-Off; §130.1(d) = Mandatory Daylight; §130.1(e) = Demand Responsive

C. TAILORED METHOD CONDITIONED LIGHTING POWER ALLOWANCE SUMMARY AND CHECKLIST (Adapted from NRCC-LTI-04-E)	§ 140.6
General lighting power (see Table D)	0
General lighting power from special function areas (see Table E)	NA
Additional "use it or lose it" (See Table G)	0
Total watts	0

D. GENERAL LIGHTING POWER (Adapted from NRCC-LTI-04-E) § 140.6-D

This Section Does Not Apply

E. GENERAL LIGHTING FROM SPECIAL FUNCTION AREAS (Adapted from NRCC-LTI-04-E) § 140.6(c) 3H

Room Number	Primary Function Area	Illuminance Value (LUX)	Room Cavity Ratio (Table G)	Allowed LPD	Floor Area (ft^2)	Allowed Watts	Confirmed Pass	Confirmed Fail
NA	NA	NA	NA	NA	NA	NA	☐	☐

Note: Tailored Method for Special Function Areas is not currently implemented

Project Name:	120X40 (PC 04-116504) - Wall AC	NRCC-PRF-01-E	Page 18 of 19
Project Address:	Climate Zone 14 Palmdale	Calculation Date/Time:	19:52, Sat, Jun 23, 2018
Compliance Scope:	NewComplete	Input File Name:	120X40 PC - CZ14(Wall AC)R75RSPV.cibd16x

F. ROOM CAVITY RATIO (Adapted from NRCC-LTI-04-E)

Rectangular Spaces						Confirmed	
Room Number	Task/Activity Description	Room Length (ft)	Room Width (ft)	Room Cavity Height (ft)	RCR	Pass	Fail
NA	NA	NA	NA	NA	NA	☐	☐

Non-Rectangular Spaces

This Section Does Not Apply

Note: All applicable spaces are listed under the Non-Rectangular Spaces table

G. ADDITIONAL "USE IT OR LOSE IT" (Adapted from NRCC-LTI-04-E)

1.	2.	3.	4.	Allowed Watts	Confirmed	
Wall Display	Combined Floor Display and Task Lighting	Combined Ornamental and Special Effects Lighting	Very Valuable Merchandise		Pass	Fail
0	0	0	0	**0**	☐	☐

5. Wall Display

This Section Does Not Apply

6. Floor Display and Task Lighting

This Section Does Not Apply

7. Combined Ornamental and Special Effects Lighting

This Section Does Not Apply

8. Very Valuable Merchandise

This Section Does Not Apply

Project Name:	120X40 (PC 04-116504) - Wall AC	NRCC-PRF-01-E	Page 19 of 19
Project Address:	Climate Zone 14 Palmdale	Calculation Date/Time:	19:52, Sat, Jun 23, 2018
Compliance Scope:	NewComplete	Input File Name:	120X40 PC - CZ14(Wall AC)R75RSPV.cibd16x

H. INDOOR & OUTDOOR LIGHTING ACCEPTANCE TESTS & FORMS (Adapted from NRCC-LTI-01-E and NRCC-LTO-01-E) § 130.4

Declaration of Required Acceptance Certificates (NRCA) –Acceptance Certificates that must be verified in the field. (Retain copies and verify forms are completed and signed to post in field for Field Inspector to verify).

Test Description		Indoor			Outdoor	Confirmed	
		NRCA-LTI-02-A	NRCA-LTI-03-A	NRCA-LTI-04-A	NRCA-LTO-02-A	Pass	Fail
Equipment Requiring Testing or Verification	# of units	Occ Sensors / Auto Time Switch	Auto Daylight	Demand Responsive	Outdoor Controls		
Occupant Sensors	0	☒	☐	☐	☐	☐	☐
Automatic Time Switch	0	☒	☐	☐	☐	☐	☐
Automatic Daylighting	0	☐	☒	☐	☐	☐	☐
Demand Responsive	0	☐	☐	☐	☐	☐	☐
Outdoor Controls	0	☐	☐	☐	☐	☐	☐

APPROVED
DIVISION OF STATE ARCHITECT
HIGH PERFORMANCE SECTION
APP.# 04-116504 DATE: 7-10-18

IDENTIFICATION STAMP
DIV. OF THE STATE ARCHITECT
APP: 03-121617 INC:
REVIEWED FOR
SS ☑ FLS ☑ ACS ☑
DATE: 08/02/2021

PROFESSIONAL STAMP

REGISTERED PROFESSIONAL ENGINEER
MANNY D. FRISCH
No. S3380
STRUCTURAL
STATE OF CALIFORNIA

12/19/2017

THE PLANS, IDEAS & DESIGNS SHOWN ON THESE DRAWINGS ARE THE PROPERTY OF R&S TAVARES ASSOCIATES, INC. DEVISED SOLELY FOR THIS CONTRACT. THESE PLANS SHALL NOT BE USED, IN WHOLE OR IN PART, FOR ANY PURPOSE FOR WHICH THEY WERE NOT INTENDED WITHOUT THE EXPRESS WRITTEN CONSENT OF R&S TAVARES ASSOCIATES, INC. ©

CLIENT

CLASS LEASING LLC
1221 Harley Knox Boulevard
Perris, CA 92571

R&S TAVARES ASSOCIATES
DESIGN ◆ CONSULTING ◆ PROJECT
11777 Bernardo Plaza Court, Suite 105
San Diego, CA 92128
www.rstavares.com

ORIGINAL PC STATE AGENCY APPROVAL
FILE NUMBER: PC-128
IDENTIFICATION STAMP
DIVISION OF THE STATE ARCHITECT
04 - 116504 INCR: 0
AC RM FLS EA SSR KER
DATE 07/19/2018

PROJECT TITLE
24' x 40' EXPANDABLE TO 120' x 40'

PRE-CHECK (PC) DOCUMENT
Code: [2016] CBC
A separate project application for construction is required.

PROJECT SPECIFIC STATE AGENCY APPROVAL
IDENTIFICATION STAMP
DIV. OF THE STATE ARCHITECT
APP. 04-119993 INC:
REVIEWED FOR
SS ☑ FLS ☑ ACS ☑
DATE: 02/24/2021

Revision Schedule

#	Description	Date

SHEET TITLE
120'x40' T24 CZ 16 (WALL AC)

PROJECT NUMBER
17016A

DRAWN BY
rMc/SC

CHECKED BY
JA/RT

DATE
07/05/2018

SHEET NO.
M2.3

SHEET OF SHEETS

3/8/2018 2:19:43 PM C:\Users\Andrew\Documents\17016 - Aries, 24x40 PC - MainFile - Low Seismic_Andrew.rvt

ENVELOPE MANDATORY MEASURES: NONRESIDENTIAL — ENV-MM

Project Name	Date
120X40 (PC 04-116504) - Wall AC	*6/23/2018*

DESCRIPTION

Building Envelope Measures:

§110.8(a):	Installed insulating material shall have been certified by the manufacturer to comply with the California Quality Standards for insulating material, Title 20 Chapter 4, Article 3.
§110.8(c):	All Insulating Materials shall be installed in compliance with the flame spread rating and smoke density requirements of Sections 2602 and 707 of Title 24, Part 2.
§110.8(g):	Heated slab floors shall be insulated according to the requirements in Table 110.8-A.
§110.7(a):	All Exterior Joints and openings in the building that are observable sources of air leakage shall be caulked, gasketed, weatherstripped or otherwise sealed.
§110.6(a):	Manufactured fenestration products and exterior doors shall have air infiltration rates not exceeding 0.3 cfm/ft.² of window area, 0.3 cfm/ft.² of door area for residential doors, 0.3 cfm/ft.² of door area for nonresidential single doors (swinging and sliding), and 1.0 cfm/ft.² for nonresidential double doors (swinging).
§110.6(a):	Fenestration U-factor shall be rated in accordance with NFRC 100, or the applicable default U-factor.
§110.6(a) :	Fenestration SHGC shall be rated in accordance with NFRC 200, or NFRC 100 for site-built fenestration, or the applicable default SHGC.
§110.6(b):	Site Constructed Doors, Windows and Skylights shall be caulked between the unit and the building, and shall be weatherstripped (except for unframed glass doors and fire doors).
§120.7(a):	The opaque portions of the roof/ceiling that separates conditioned spaces from unconditioned spaces or ambient air shall meet the applicable U-Factor requirements as follows: **Metal Building-** The weighted average U-factor of the roof assembly shall not exceed 0.098. **Wood Framed and Others-** The weighted average U-factor of the roof assembly shall not exceed 0.075.
§120.7(b):	The opaque portions of walls that separate conditioned spaces from unconditioned spaces or ambient air shall meet the applicable U-factor as follows: **Metal Building-** The weighted average U-factor of the wall assembly shall not exceed 0.113. **Metal Framed-** The weighted average U-factor of the wall assembly shall not exceed 0.151. **Light Mass Walls-** A 6 inch or greater Hollow Core Concrete Masonry Unit shall have a U-factor not to exceed 0.440. **Heavy Mass Walls-** An 8 inch or greater Hollow Core Concrete Masonry Unit shall have a U-factor not to exceed 0.690. **Wood Framed and Others-** The weighted average U-factor of the wall assembly shall not exceed 0.110. **Spandrel Panels and Opaque Curtain Wall-** The weighted average U-factor of the spandrel panels and opaque curtain wall assembly shall not exceed 0.280. **Demising Walls-**. The opaque portions of framed demising walls shall meet the requirements of Item A or B below: A. Wood framed walls shall be insulated to meet a U-factor not greater than 0.099. B. Metal Framed walls shall be insulated to meet a U-factor not greater than 0.151.
§120.7(c):	The opaque portions of floors and soffits that separate conditioned spaces from unconditioned spaces or ambient air shall meet the applicable U-Factor requirements as follows: **Raised Mass Floors-** Shall have a minimum of 3 inches of lightweight concrete over a metal deck or the weighted average U-factor of the floor assembly shall not exceed 0.269. **Other Floors-**The weighted average U-factor of the floor assembly shall not exceed 0.071.

Mandatory Measures: The following notes (items) represent the Mandatory Measures for all buildings.

Heat pumps with supplementary electric resistance heaters shall have controls:

1) That prevent supplementary heater operation when the heating load can be met by the heat pump alone; and

2) In which the cut-on temperature for compression heating is higher than the cut-on temperature for supplementary heating, and the cut-off temperature for compression heating is higher than the cut-off temperature for supplementary heating.

Sec. 110.2 (b)

The minimum rate of outdoor air required per Section 120.1 (b) 2 shall be supplied to each space at all time the space is usually occupied.

Sec. 120.1 (c) 3

The Lesser of the minimum rate of outdoor air required by Sec. 120.1 (b) 2, or three complete air changes shall be supplied to the entire building during the one-hour period immediately before the building is normally occupied.

Sec. 120.1 (c) 2

Hotel/Motel Guest Room Thermostats shall have numeric temperature set points in degrees F; and set point stops accessible only to authorized personnel, to restrict over-heating and over-cooling.

Sec. 120.2 (c)

All air distribution system ducts and plenums, including, but not limited to, building cavities, mechanical closets, air-handler boxes and support platforms used as ducts or plenums, shall be installed, sealed and insulated to meet the requirements of chapter 6 of the 2001 CMC. Supply-air and return-air ducts conveying heated or cooled air shall be insulated to a minimum installed level of R-8, unless ducts are in conditioned space.

Sec. 120.4 (a)

The thermostatic controls for HVAC systems shall meet the following requirements as applicable:

a) Each space conditioning zone shall be controlled by an individual thermostatic control that responds to temperature within the zone and meets the applicable requirements of Subsection (b).

b) Each Thermostatic control required by Subsection (a) shall be capable of being set locally or remotely by adjustment or selection of sensors to control:

1) Comfort heating down to 55°F or lower.

2) Comfort Cooling up to 85°F or higher.

3) Both heating and cooling, the thermostatic controls shall be capable of providing a temperature range or dead band of at least 5°F within which the supply of heating and cooling energy to the zone is shut off or reduced to a minimum.

Sec. 120.2 (a) & (b)

1) Outdoor air supply and exhaust equipment shall be installed with dampers that automatically close upon fan shutdown.

Sec. 120.2 (f)

2) Demand Control Ventilation Devices (CO2 sensors) shall be installed in accordance with Sec. 120.1 (c) 4.

Sec. 120.1 (c) 4

3) Each space-conditioning system shall be installed with controls that comply with Items 1 and 2 below:

1) Are capable of automatically shutting off the system during periods of non-use and shall have:

a) An automatic time switch control device complying with Sec. 119(c), with an accessible manual override that allows operation of the system for up to 4 hours; or
b) An occupancy sensor; or
c) A four-hour timer that can be manually operated.
d) EXCEPTION: Mechanical systems serving retail stores and associated malls, restaurants, grocery stores, churches, and theaters equipped with 7-day programmable timers.

2) Automatically restart and temporarily operate the system as required to maintain:
a) A setback heating thermostat set point, if the system provides mechanical heating; and
EXCEPTION: Area with the design winter outdoor temperature of greater than 32°F.
b) A setup cooling thermostat set point, if the system provides mechanical cooling.

EXCEPTION: Area with the design summer outdoor temperature of less than 100°F.
EXCEPTION: Systems serving hotel/motel guest rooms, if they have a readily accessible manual shut-off switch.

Sec. 120.2 (e)

4) The piping for all space conditioning and service water heating systems shall be insulated in accordance with TABLE 123-A.

Sec. 120.3

5) Service water heating systems and equipment shall meet the applicable requirements of the Appliance Efficiency Regulations as required by Sec. 110.1.

Sec. 110.3 (b)

6) Service hot water systems with circulating pumps or with electrical heat trace systems shall be capable of automatically turning off the system.

Sec. 110.3 (c) 2

7) Lavatories in public restrooms shall have controls that limit the water supply temperature to 110°F.

Sec. 110.3 (c) 3

IDENTIFICATION STAMP
DIV. OF THE STATE ARCHITECT
APP: 03-121617 INC:
REVIEWED FOR
SS ☑ FLS ☑ ACS ☑
DATE: 08/02/2021

PROFESSIONAL STAMP

REGISTERED PROFESSIONAL ENGINEER
MANNY D. FRESON
No. 38014
STRUCTURAL
STATE OF CALIFORNIA

12/19/2017

THE PLANS, IDEAS & DESIGNS SHOWN ON THESE DRAWINGS ARE THE PROPERTY OF R&S TAVARES ASSOCIATES, INC. DEVISED SOLELY FOR THIS CONTRACT. THESE PLANS SHALL NOT BE USED, IN WHOLE OR IN PART, FOR ANY PURPOSE FOR WHICH THEY WERE NOT INTENDED WITHOUT THE EXPRESS WRITTEN CONSENT OF R&S TAVARES ASSOCIATES, INC. ©

CLIENT

CLASS LEASING LLC
1221 Harley Knox Boulevard
Perris, CA 92571

R&S TAVARES ASSOCIATES
DESIGN ◆ CONSULTING ◆ PROJECT
11777 Bernardo Plaza Court, Suite 105
San Diego, CA 92128
www.rstavares.com

ORIGINAL PC STATE AGENCY APPROVAL
FILE NUMBER: PC-128
IDENTIFICATION STAMP
DIVISION OF THE STATE ARCHITECT
04 - 116504 INCR: 0
AC RM FLS EA SSR KER
DATE 07/19/2018

PROJECT TITLE
24' x 40' EXPANDABLE TO 120' x 40'

PRE-CHECK (PC) DOCUMENT
Code: [2016] **CBC**
A separate project application for construction is required.

PROJECT SPECIFIC STATE AGENCY APPROVAL
IDENTIFICATION STAMP
DIV. OF THE STATE ARCHITECT
APP: 04-119993 INC:
REVIEWED FOR
SS ☑ FLS ☑ ACS ☑
DATE: 02/24/2021

Revision Schedule

#	Description	Date

SHEET TITLE
120'x40' T24 CZ 16 (WALL AC)

PROJECT NUMBER
17016A

DRAWN BY
rMc/SC

CHECKED BY
JA/RT

DATE
07/05/2018

SHEET NO.
M2.4

SHEET OF SHEETS

GENERAL NOTES:

1- DUCTWORK SHALL HAVE R-8 INSULATION.

2- PER 2016 CALIFORNIA MECHANICAL CODE (CMC) SECTION 603.4.1 AND SECTION 603.5 FACTORY-MADE FLEXIBLE AIR DUCTS AND CONNECTORS SHALL BE MORE THAN FIVE (5) FEET IN LENGTH AND SHALL BE USED IN LIEU OF RIGID ELBOWS OR FITTINGS.

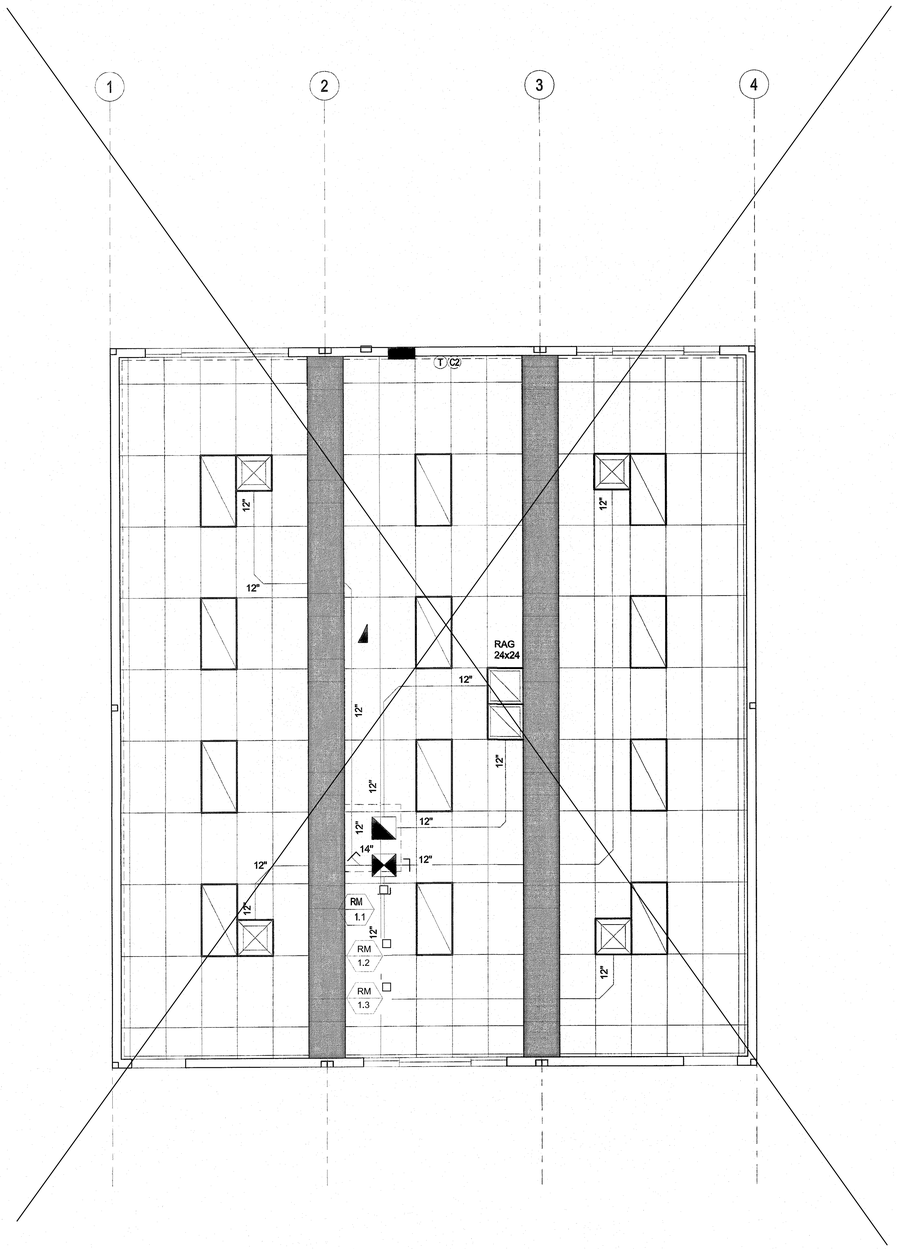

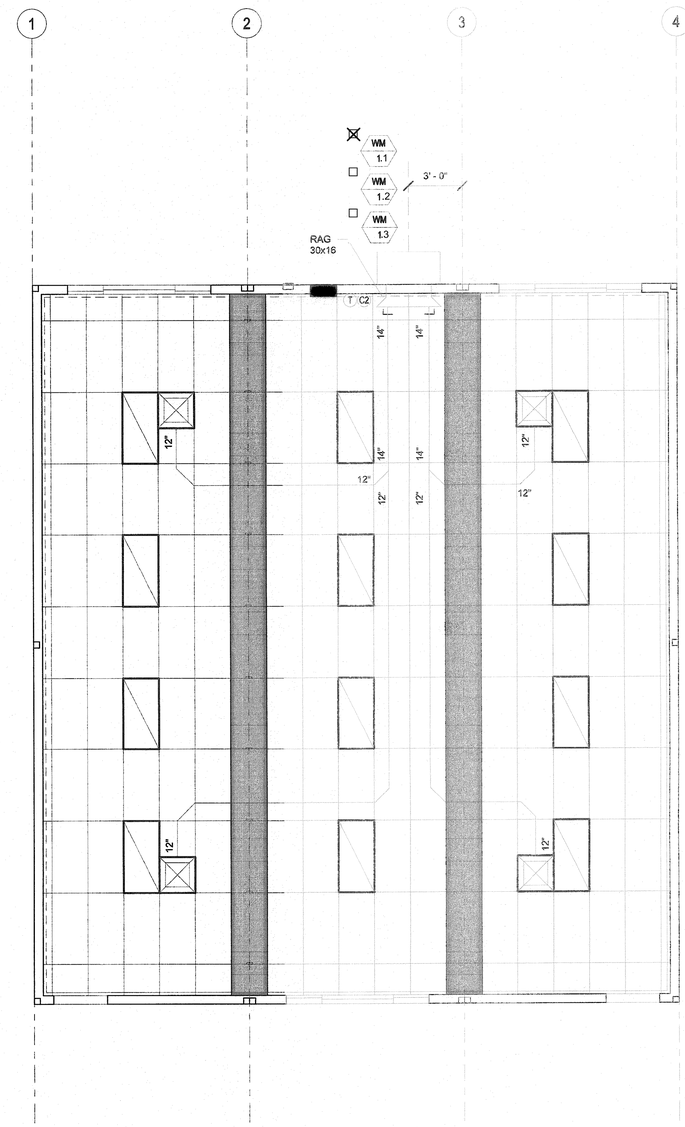

SEE SHEET ALT-01
FOR MECHCANICAL PLAN

1 1/4" = 1'-0"
36x40 WM-1 MECH PLAN

IDENTIFICATION STAMP
DIV. OF THE STATE ARCHITECT
APP: 03-121617 INC:
REVIEWED FOR
SS ☑ FLS ☑ ACS ☑
DATE: 08/02/2021

PROFESSIONAL STAMP

12/19/2017

THE PLANS, IDEAS & DESIGNS SHOWN ON THESE DRAWINGS ARE THE PROPERTY OF R&S TAVARES ASSOCIATES, INC. DEVISED SOLELY FOR THIS CONTRACT. THESE PLANS SHALL NOT BE USED, IN WHOLE OR IN PART, FOR ANY PURPOSE FOR WHICH THEY WERE NOT INTENDED WITHOUT THE EXPRESS WRITTEN CONSENT OF R&S TAVARES ASSOCIATES, INC. ©

CLIENT

CLASS LEASING LLC
1221 Harley Knox Boulevard
Perris, CA 92571

R&S TAVARES ASSOCIATES
DESIGN ◆ CONSULTING ◆ PROJECT
11777 Bernardo Plaza Court, Suite 105
San Diego, CA 92128
www.rstavares.com

ORIGINAL PC STATE AGENCY APPROVAL

FILE NUMBER: PC-128
IDENTIFICATION STAMP
DIVISION OF THE STATE ARCHITECT
04 - 116504 INCR: 0
AC RM FLS EA SSR KER
DATE 07/19/2018

PROJECT TITLE
24' x 40'
EXPANDABLE TO
120' x 40'

PRE-CHECK (PC) DOCUMENT
Code: [2016] CBC
A separate project application for construction is required.

PROJECT SPECIFIC STATE AGENCY APPROVAL

IDENTIFICATION STAMP
DIV. OF THE STATE ARCHITECT
APP. 04-119993 INC:
REVIEWED FOR
SS ☑ FLS ☑ ACS ☑
DATE: 02/24/2021

Revision Schedule

#	Description	Date

SHEET TITLE
MECHANICAL
CEILING PLAN
36x40

PROJECT NUMBER
17016A

DRAWN BY
rMc/SC

CHECKED BY
JA/RT

DATE
2017/06/05

SHEET NO.
M6.1

SHEET OF SHEETS

12/18/2017 3:41:50 PM C:\Users\Sarah\Documents\17016 - Aries, 24x40 PC - MainFile - Low Seismic_Sarah.rvt

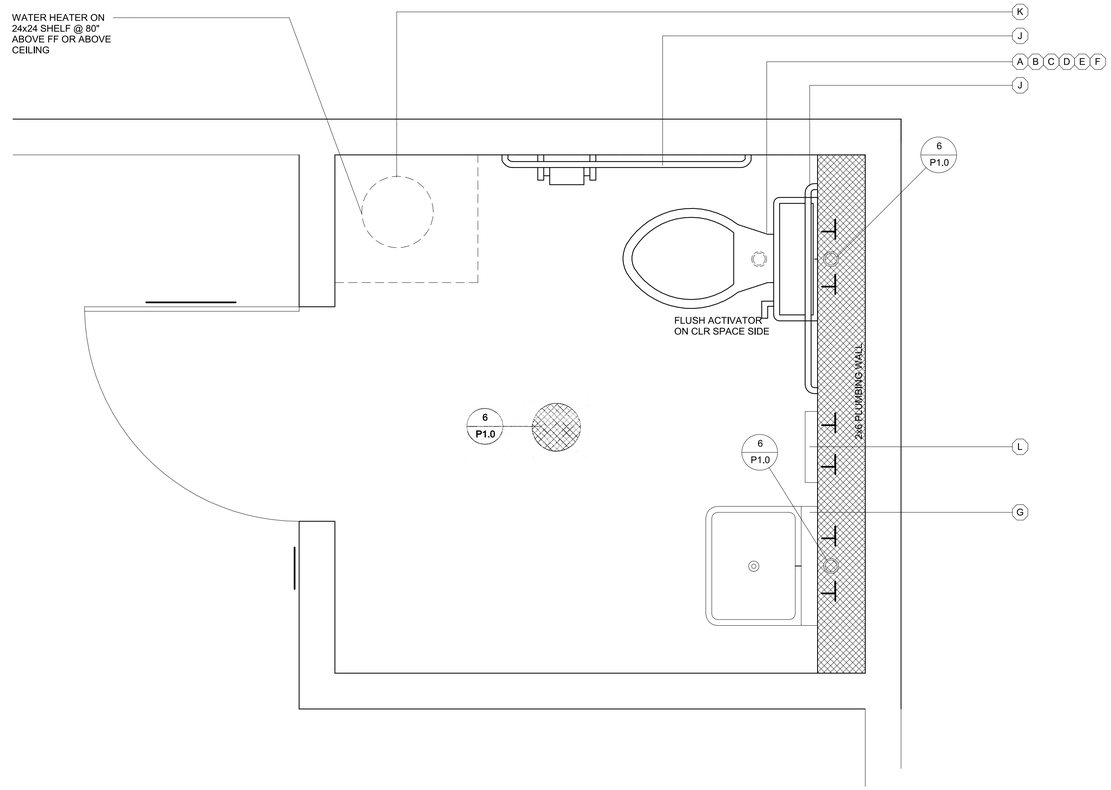

PLUMBING FIXTURE SCHEDULE

SYMBOL	FIXTURE	COLD WATER	HOT WATER	WASTE	VENT	FIXTURE DESCRIPTION (AS CALLED OUT OR APPROVED EQUAL)
A	[ADULT] WATER CLOSET TANK TYPE (ACCESSIBLE)	1/2"	-	3"	2"	STD: PROFLO ADA PF9403, (1.28 GPF) ALT: AMERICAN STANDARD ADA 2758.128, 17" HIGH, VITREOUS CHINA ELONGATED RIM, TANK TYPE; 12" ROUGH-IN; OLSONITE 10CC SOLID OPEN WHITE ELONGATED PLASTIC SEAT
C	[AGE 9 - 12] WATER CLOSET TANK TYPE (ACCESSIBLE)	1/2"	-	3"	2"	STD: PROFLO STANDARD PF9300, (1.28 GPF) ALT: AMERICAN STANDARD 2832.128, 16" HIGH, VITREOUS CHINA ELONGATED RIM, TANK TYPE; 12" ROUGH-IN; OLSONITE 10CC SOLID OPEN WHITE ELONGATED PLASTIC SEAT
A	[AGE 3 - 8] WATER CLOSET TANK TYPE (ACCESSIBLE & NON-ACCESSIBLE)	1/2"	-	3"	2"	STD: PROFLO PF1704BB, (1.28 GPF) ALT: AMERICAN STANDARD 2315.016 BABY DEVORO 10" HIGH, 10" ROUGH-IN, VITREOUS CHINA ELONGATED RIM, TANK TYPE; OLSONITE 10CC SOLID OPEN WHITE ELONGATED PLASTIC SEAT
D	[ADULT] WATER CLOSET FLOOR MTD/FLUSH (ACCESSIBLE)	1"	-	3"	2"	STD: PROFLO ADA PF1723, (1.28 GPF) ALT: AMERICAN STANDARD ADA 3043.001 "MADERA" 16 3/4" HIGH, VITREOUS CHINA ELONGATED RIM, SIPHON JET, 10" ROUGH-IN; OLSONITE 10CC SOLID OPEN WHITE ELONGATED PLASTIC SEAT; SLOAN ROYAL #111-1.28 LOW CONSUMPTION FLUSHOMETER VALVE
E	[AGE 9 - 12] WATER CLOSET FLOOR MTD/FLUSH (ACCESSIBLE)	1"	-	3"	2"	STD: PROFLO STANDARD PF1721, (1.28 GPF) ALT: AMERICAN STANDARD 2234.001 "MADERA" 15" HIGH, VITREOUS CHINA ELONGATED RIM, SIPHON JET,12" ROUGH-IN; OLSONITE 10CC SOLID OPEN WHITE ELONGATED PLASTIC SEAT; SLOAN ROYAL #111-1.28 LOW CONSUMPTION FLUSHOMETER VALVE
F	[AGE 3 - 8] WATER CLOSET FLOOR MTD/FLUSH (ACCESSIBLE & NON-ACCESSIBLE)	1"	-	3"	2"	STD: PROFLO PF1700BB (1.28 GPF) ALT: AMERICAN STANDARD BABY DEVORO 2282.010 VITREOUS CHINA ELONGATED RIM, 10" ROUGH-IN LOW CONSUMPTION CLOSET BOWL; OLSONITE 126CC SOLID OPEN WHITE ELONGATED PLASTIC SEAT; SLOAN ROYAL #111-1.28 LOW CONSUMPTION FLUSH VALVE
G	LAV (ACCESSIBLE)	1/2"	-	2"	1 1/2"	STD: AMERICAN STANDARD 0355.012 LUCERNE ALT: CRANE 1412-20 "HARWICH" 20x18" VITREOUS CHINA JAY R SMITH #722 CONCEALED HANGER; VALLEY #NL805IPS SINGLE HANDLE FAUCET (AMERICAN STANDARD 9141.011 TO BE USED FOR AGES 5-8) (0.5 GPM)
H	FLOOR DRAIN	-	-	2"	1 1/2"	JAY R SMITH #2005YA-02-P050-NB, FLOOR DRAIN TAPPED FOR PRIMER. 5" NICKEL BRONZE STRAINER w/ 1/2" MAX. STRAINER OPENINGS IN ALL DIRECTIONS
I	TRAP PRIMER	1/2"	-	-	-	PR-500 WITH 8"x12" LOCKABLE BOX, 1/2" BALL SHUT-OFF VALVE, AND PPP DU-U FRESH WATER DISTRIBUTION SYSTEM
J	GRAB BAR	-	-	-	-	BOBRICK B-6806-1-1/2 OC STAINLESS STEEL GRAB BAR - STAIN FINISH; 36" LONG ON BACK AND 42" ON SIDE
K	WATER HEATER	3/4"	3/4"	-	-	☐ A.O. SMITH #DEL-6 (6 GALLON) ☐ A.O. SMITH #DEL-10 (10 GALLON)
L	*INSTANT WATER HEATER	1/2"	1/2"	-	-	EEMAX #SP3012, 120V, 3.0KW, 25A

GENERAL NOTE:
UTILITIES THAT SPAN BETWEEN UNITS OR ACROSS SEISMIC SEPARATION JOINTS MUST BE DESIGNED WITH A FLEXIBLE CONNECTION THAT CAN ACCOMMODATE DIFFERENTIAL MOVEMENTS

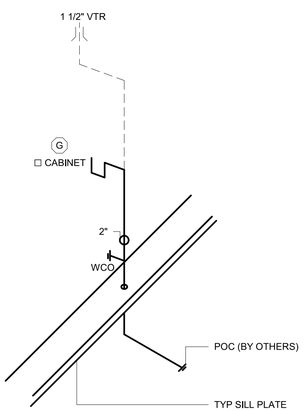

ABS SCHEDULE 40 PIPE

5 *1/2" = 1'-0"*
LAV WASTE

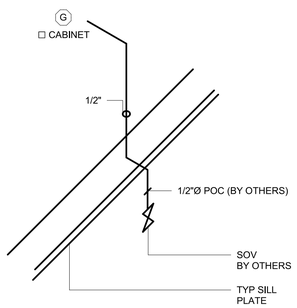

TYPE 'L' COPPER

3 *1/2" = 1'-0"*
LAV COLD WATER SUPPLY

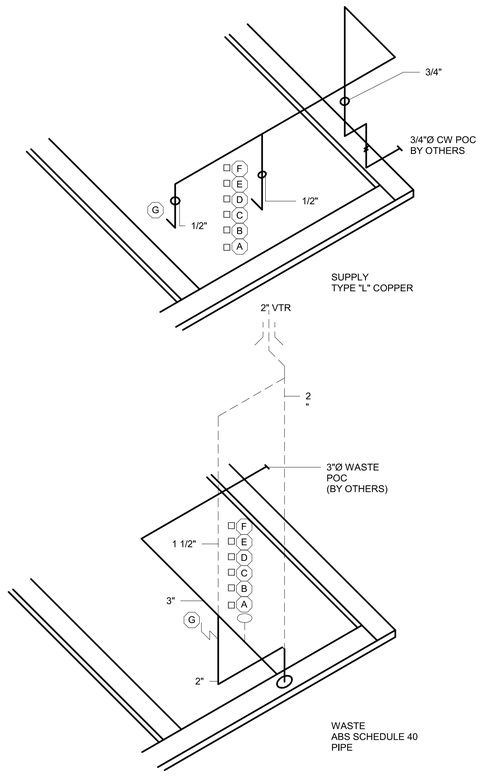

9 *1/2" = 1'-0"*
SINGLE OCC PLUMBING ISO

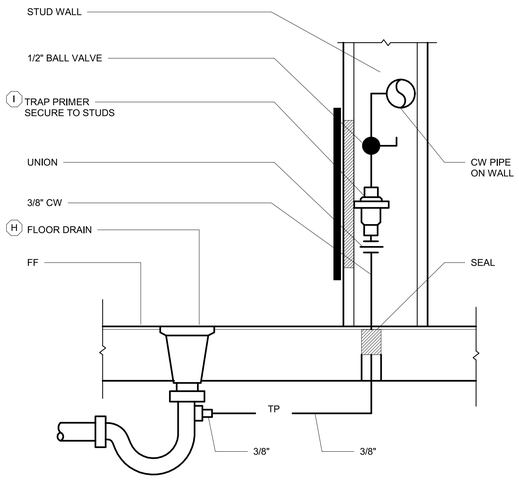

6 *1/2" = 1'-0"*
TRAP PRIMER TO FLOOR DRAIN

IDENTIFICATION STAMP
DIV. OF THE STATE ARCHITECT
APP: 03-121617 INC:
REVIEWED FOR
SS ☑ FLS ☑ ACS ☑
DATE: 08/02/2021

PROFESSIONAL STAMP

REGISTERED PROFESSIONAL ENGINEER
MANNY D. FRANCO
C-43801
STRUCTURAL
STATE OF CALIFORNIA

12/19/2017

THE PLANS, IDEAS & DESIGNS SHOWN ON THESE DRAWINGS ARE THE PROPERTY OF R&S TAVARES ASSOCIATES, INC. DEVISED SOLELY FOR THIS CONTRACT. THESE PLANS SHALL NOT BE USED, IN WHOLE OR IN PART, FOR ANY PURPOSE FOR WHICH THEY WERE NOT INTENDED WITHOUT THE EXPRESS WRITTEN CONSENT OF R&S TAVARES ASSOCIATES, INC. ©

CLIENT

CLASS LEASING LLC
1221 Harley Knox Boulevard
Perris, CA 92571

R&S TAVARES ASSOCIATES
DESIGN ◆ CONSULTING ◆ PROJECT
11777 Bernardo Plaza Court, Suite 105
San Diego, CA 92128
www.rstavares.com

ORIGINAL PC STATE AGENCY APPROVAL
FILE NUMBER: PC-128
IDENTIFICATION STAMP
DIVISION OF THE STATE ARCHITECT
04 - 116504 INCR: 0
AC RM FLS EA SSR KER
DATE 07/19/2018

PROJECT TITLE
24' x 40'
EXPANDABLE TO
120' x 40'

PRE-CHECK (PC) DOCUMENT
Code: [2016] CBC
A separate project application for construction is required.

PROJECT SPECIFIC STATE AGENCY APPROVAL
IDENTIFICATION STAMP
DIV. OF THE STATE ARCHITECT
APP. 04-119993 INC:
REVIEWED FOR
SS ☑ FLS ☑ ACS ☑
DATE: 02/24/2021

Revision Schedule

#	Description	Date

SHEET TITLE
TYPICAL
PLUMBING
DETAILS

PROJECT NUMBER
17016A

DRAWN BY
rMc/SC

CHECKED BY
JA/RT

DATE
2017/06/05

SHEET NO.
P1.0

SHEET OF SHEETS

1/4/2018 2:44:41 PM C:\Users\Lee\Documents\17016 - Aries, 24x40 PC - MainFile - Low Seismic_Lee.rvt

STRUCTRUAL STEEL:

A. ALL WORK, UNLESS MODIFIED BY THE CONCTRACT DOCUMENTS, SHALL BE PERFORMED IN ACCORDANCE WITH CURRENT AISC SPECIFICATIONS AND STANDARDS.
B. STEEL SHAPES SHALL COMFORM TO THE FOLLOWING STANDARD:
   a. STRUCTURAL HSS COLUMNS: ASTM A500 GRADE B
   b. STRUCTURAL W-SHAPES: ASTM A992 GRADE 50
   c. TUBE STEEL: ASTM A500 GRADE B
   d. ALL OTHER: ASTM A36

C. FABRICATION, ERECTION, AND SHOP PAINTING SHALL BE IN ACCORDANCE WITH THE PROVISIONS OF THE AISC *CODE OF STANDARD PRACTICE FOR STEEL BUILDING AND BRIDGES*.
D. HOLES IN STRUCTURAL STEEL SHALL NOT BE PERMITTED, UNLESS SPECIFIED IN THE STRUCTURAL DRAWINGS

CONCRETE

A. ALL CONCRETE WORK, UNLESS MODIFIED BY CONTRACT DOCUMENTS, SHALL BE PERFORMED IN ACCORDANCE WITH CHAPTER 19A, CBC 2013 AND ACI 318-11.

B. TESTS AND INSPECTION SHALL BE PERFORMED BY A TESTING LABORATRY CONTRACTED BY THE DISTRICT.

C. MIX DESIGN SHALL BE SUBMITTED FOR QUALIFICATION AND PROVIDE A 28-DAY COMPRESSIVE STRENGTH F'C OF 3500 PSI, COMPOSED OF NORMAL WEIGHT TYPE I PORTALAND CEMENT IN CONFORMANCE WITH ASTM C150.

D. FORMWORK SHALL RESULT IN FINAL STRUCTURE THAT CONFORMS TO SHAPES, LINES, AND DIMENSIONS AS REQUIRED BY THE CONTRACT DOCUMENTS.

E. LOCATIONS OF VENTS AND OPENINGS FOR MECHANICAL AND ELECTRICAL USE SHALL BE VERIFIED BY ARCHITECT.

F. EMBEDMENT OF MATERIALS NOT HARMFULL TO CONCRETE AND WITHIN LIMITATIONS OF SECTION 6.3, ACI-318-11 SHALL BE PERMITTED. REFER TO OTHER DISCIPLINES FOR LOCATION OF CONDUIT, PIPES, FITTINGS, SLEEVES, ETC.

G. CONTINUOUS BATCH PLANT INSPECTION WAIVED PER CBC 1705A3.3. WHEN CONTINUOUS BATCH PLANT INSPECTION IS WAIVED, THE FOLLOWING PERIODIC INSPECTION SHALL BE REQUIRED:(INSPECTIONS PROVIDED BY DISTRICT)

   1. QUALIFIED TECHNICIAN OF THE TESTING LABORATORY SHALL CHECK THE FIRST BATCH AT THE START OF THE DAY.
   2. LICENSED WEIGHMASTER TO POSITIVELY IDENTIFY MATERIALS AS TO QUANTIFY AND CERTIFY TO EACH LOAD BY A BATCH TICKET.
   3. BATCH TICKETS, INCLUDING MATERIAL QUANTITIES AND WEIGHTS SHALL ACCOMPANY THE LOAD, SHALL BE TRANSMITTED TO THE INSPECTOR OF RECORD BY A TRUCK DRIVER WITH THE LOAD IDENTIFIED THEREON. THE LOAD SHALL NOT BE PLACED WITHOUT A BATCH TICKET IDENTIFYING THE MIX. THE INSPECTOR WILL KEEP A DAILY RECORD OF PLACEMENTS, IDENTIFYING EACH TRUCK, ITS LOAD, AND TIME OF RECEIPT, AND APPROXIMATE LOCATION OF DEPOSIT IN THE STRUCTURE AND WILL TRANSMIT A COPY OF THE DAILY RECORD TO THE ENFORCEMENT AGENCY.

H. ANCHOR BOLTS, AND REINFORCING STEEL SHALL BE SECURELY TIED BEFORE CONCRETE IS POURED.

STEEL REINFORCEMENT

A. DEFORMED BARS SHALL CONFORM TO ASTM A615.
B. fy= 40,000 PSI, FOR ALL BARS EXEPT FOR #3 BARS, fy= 60,000 PSI.
C. PROVIDE A MINIMUM CONCRETE COVER FOR REINFORCEMENT EMBEDDED IN:
   a. CONCRETE CAST AGAINST AND PERMANENTLY EXPOSED TO EARTH = 3"
   b. CONCRETE EXPOSED TO EARTH OR WEATHER FOR #5 BARS OR SMALLER = 1.5"
D. SPLICE LENGTHS SHALL BE A MINIMUM OF 48" FOR #5 BARS, AND 30" FOR #4 BARS UNLESS OTHERWISE SPECIFIED IN DRAWINGS.

BOLTS

A. ALL BOLTS AND ANCHOR BOLTS SHALL COMFORM ATO ASTM A-307
B. BOLTS EXPOSED TO THE ELEMENTS SHALL BE GALVANIZED BY THE HOT-DIP OR MECHANICAL PROCESS

WELDING

A. ALL WELDING SAHLL BE IN COMFORMANCE TO:
   a. AWS D1.1, EXCEPT AS MODIFIED IN SECTION J2, AISC-360 FOR STEEL
   b. AWS D1.3 FOR LIGHT GAUGE STEEL
   c. AWS D1.4 FOR REINFORCING STEEL

B. ELECTRODE CLASSIFICATION:
   a. E70XX FOR STEEL AND CONCRETE STEEL REINFORCEMENT
   b. E60XX FOR LIGHT GAUGE STEEL

C. WELDS SHALL BE CAPABLE OF PRODUCING THE FOLLOWING V-NOTCH TOUGHNESS AS DETERMINED BY APPROPRIATE AWS A5 CLASSIFICATION TEST METHOD OR MANUFACTURER CERTIFICATION:
   a. LATERAL FORCE RESISTING SYSTEM (LFRS) = 20 FT-LB AT 0 DEGREE F
   b. COMPLETE JOINT PENETRATION GROOVE WELD = 20 FT-LB AT 40 DEGREE F

D. SHOP AND FIELD WELDING SHALL BE PERFORMED BY AWS CERTIFIED WELDERS.

E. INSPECTION:
   a. PERIODIC INSPECTION OF FILLET WELDS LESS THAN OR EQUAL TO 5/16", FLOOR AND ROOF DECK WELDS.
   b. CONTINUOUS INSPECTION FOR OTHER WELDS.

F. NONDESTRUCTIVE TESTING (NDT):
   a. ULTRASONIC TESTING SHALL BE PERFORMED ON 100 PERCENT OF CJP GROOVE WELDS IN MATERIALS 5/16" OR THICK OR GREATER. ULTRASONIC TESTING NOT REQUIRED FOR MATERIALS LESS THAN 5/16" THICK. TESTING FREQUENCY MAY BE REDUCED TO 25%, PROVIDED PROVISIONS SET FORTH IN SECTION N5.5e, AISC-360 IS MET.
   b. MAGNETIC PARTICLE TESTING SHALL BE PERFORMED ON 25 PERCENT OF ALL BEAM-TO-COLUMN CJP GROOVE WELDS. TESTING FREQUENCY MAY BE REDUCED TO 10%, PROVIDED PROVISIONS SET FORTH IN J6.2g, AISC-341 IS MET.

.

FOUNDATIONS

GEOTECHNICAL INVESTIGATION SHALL BE CONDUCTED IN ACCORDANCE WITH SECTION 1803A.1 THROUGH 1803A.8 BY A GEOTECHNICAL ENGINEER CONTRACTED BY THE DISTRICT. ALLOWABLE FOUNDATION AND LATERAL SOIL PRESSURE VALUES MAY BE DETERMINED FROM TALBLE 1806A.2, WHERE GEOTECHNINCAL REPORTS IS NOT REQUIRED PER SECTION 1803A.2. A MAXIMUM ALLOWABLE SOIL PRESSURE OF 1000 PSF AND 1500 PSF SHALLBE PERMITTED FOR TEMPORARY WOOD AND PERMANENT CONCRETE FOUNDATIONS RESPECTIVELY IN ACCORDANCE WITH SECTION 4.6, IR 16-1.13

A PREVIIOUS REPORT FOR A SPECIFIC SITE MAY BE RESUBMITTED. THE ALLOWABLE FOUNDATIONA AND LATERAL SOIL PRESSURE VALUES ARE ALLOWED A 33% INCREASE FOR SHORT TERM WIND AND SEIMIC LOADS.

THE DISTRCT SHALL BE RESPONSIBLE FOR EXCAVATION, BACKFILL, SETTING ELEVATIONS, CRANING AND RIGGING. PROVIDE SHIMS TO LEVEL BUILDING WITHIN 1/2" TOLERANCE.

COLD-FORMED STEEL:

A. ALL WORK SHALL, UNLESS MODIFIED BY THE CONCTRACT DOCUMENTS, SHALL BE PERFORMED IN ACCORDANCE WITH CURRENT AISI SPECIFICATIONS AND STANDARDS.

B. MATERIAL SPECIFICATION:
   a. ASTM A-1011/A, GRADE 33 FOR MATERIALS THICKNESS 0.120 OR LESS UNLESS OTHERWISE NOTED
   b ASTM A-1003, GRADE 33 TYPE H FOR LIGHT GUAGE STUDS AND TRACKS
   c. SHAPES SHALL BE DIMENSIONED TO SSMA SPECIFICATIONS.

C. SCREWS EXPOSED TO THE ELEMENTS SHALL BE GALVANIZED

STEEL DECK

MINIMUM THICKNESS PERMITTED FOR FLOOR STEEL DECKS IS 20GA. PER DSA IR 16-1.13, 1.2.1, MINIMUM THICKNESS OF NON-STRUCTURAL STEEL ROOF DECKING IS 26GA. STANDING SEAM ROOF PANELS ARE GRADE 40 SHEET STEEL WITH AN ALUMINUM ZINC COATING CONFORMING TO ASTM A792 AND AZ55.

CHANGES

CHANGES AFFECTING STRUCTURAL PORTION OF THE APPROVED PC SHALL NEED DSA APPROVAL AND SHALL BE CLASSIFIED AS CCD CATEFORY A.

WOOD

ALL FRAMING LUMBER SHALL BE GRADE MARKED BY AN APPROVED GRADING AGENCY

SHEATHING:

EACH SHEET SHALL BE GRADE MARKED BY THE AMERICAN PLYWOOD ASSOCIATION IN ACCORDANCE WITH THE PROCEDURES AND QUALIFICATIONS SET FORTH BY PS 1-07.

1. SUB FLOOR: 1 1/8" T&G UNBLOCKED PLYWOOD, SHALL PROVIDE A SMOOTH AND UNIFORM SURFACE CAPABLE OF ACCEPTING CARPET FINISH
2. PLYWOOD ROOF DECK OPTION: APA RATED 3/4" T&G OSB OR EQUIVALENT RATED SHEATHING
3. EXTERIOR WALL SIDING:
   I. STANDARD: 5/8" DURATEMP OR 5/8" SMART PANEL
   II. OPTION: 5/8" MOD
   III. OPTION: 1/2" OSB OR CDX PLYWOOD FOR PLASTER/STUCCO FINISH
   IV. OPTION: 1/2" OSB OR CDX PLYWOOD FOR HARDIE BOARD (LAP SIDING) FINISH

4. EXTERIOR WALL SIDING ATTACHMENT:

   FASTENERS USED FOR THE ATTACHMENT OF EXTERIOR WALL COVERINGS SHALL BE HOT-DIPPED GALVANIZED, MECHANICALLY DEPOSITED ZINC-COATED, STAINLESS, SILICON BRONZE OR COPPER PER CBC SECTION 2304.9.1.1

   FASTEN TO WOOD FRAMING WITH 8D BOX NAILS @ 6" E.N., 12" F.N.
   FASTEN TO LIGHT GAGE METAL FRAMING WITH #8 WAFER HEAD STSMS @ 6" E.N., 12" F.N.
   FASTEN TO STRUCTURAL STEEL WITH #12 STSMS OR 0.145 DIAM SHOT PINS @ 12" O.C.

TREATED WOOD:

ALL WOOD LOCATED WITHIN 6" OF EXPOSED EARTH SHALL BE "PRESERVATIVE TREATED" OR SHALL BE "NATURALLY DURABLE" MATERIAL IN ACCORDANCE WITH CBC SECTION 2304.11.2.2.
1. ALL ROUGH LUMBER SHALL BE DF #2 OR BETTER.
2. ALL POWER DRIVEN FASTENERS SHALL BE HILTI FASTENERS ICC# ESR-1663, AND RAMSET POWER DRIVEN FASTENERS (ICC # ESR-1799), OR SIMPSON POWER DRIVEN FASTENERS ICC #ESR-2138, OR OTHER EQUIVALENT PRODUCTS WITH ICC REPORTS AND APPROVED BY DSA.
3. FASTENERS, INCLUDING NUTS AND WASHERS, IN CONTACT WITH PRESERVATIVE-TREATED WOOD SHALL BE OF HOT-DIPPED ZINC-COATED GALVANIZED STEEL, STAINLESS STEEL, SILICON BRONZE OR COPPER PER CBC 2304.9.5.1

ROOF DIAPHRAGM:

3/4" T&G RATED SHEATHING, EXPOSURE 1, 48/24 SPAN RATING
FASTEN AT METAL SUPPORTS W/ #10 x 1 1/4" SELF-TAPPING PHILLIPS FLAT-HEAD ZINC COATED TEKS SCREWS @ 4" O.C. BN, 6" O.C. EN, AND 12" O.C. FN. PROVIDE A MINIMUM OF 3/8" EDGE DISTANCE FOR FASTENERS TO PLYWOOD EDGE PER CBC SECTION 2306.2.

FLOOR DIAPHRAGM:

1 1/8" PLYWOOD - STURD-I-FLOOR T&G RATED SHEATHING, EXTERIOR, 48" oc SPAN RATING
FASTEN AT METAL SUPPORTS W/ #10 - 24 x 1 3/4" SELF-TAPPING PHILLIPS FLAT-HEAD ZINC COATED TEKS @ 6" O.C. BN, 6" O.C. EN, 12" FN. PROVIDE A MINIMUM OF 3/8" EDGE DISTANCE FOR FASTENERS TO PLYWOOD EDGE PER CBC SECTION 2306.2

CONCRETE FLOOR DATA: LIGHTWEIGHT CONCRETE FLOOR
STRENGTH: 3500 PSI
TYPE: I OR II
DESINTY: 110 PCF - MAX

DIMENSION LUMBER ATTACHMENT TO STEEL FRAMING:

2 x STUDS AT CORNER STEEL COLUMNS (NAILING STUD)
USE: #10 - 24 x 2 1/2" LG. SELF-DRILLING SELF-TAPPING PHILLIPS FLAT-HEAD WITH WASHER ZINC COATED TEK SCREWS AT 24" OC.

NAILING NOTES:

1. ALL NAILS SHALL BE COMMON UNLESS OTHERWISE NOTED
2. MACHINE APPLIED 16d FASTENERS SHALL HAVE AN EMBEDMENT OF NOT LESS THAN 1 1/2" INTO THE SECOND MEMBER, AND SHALL NOT BE LESS THAN 3" IN OVERALL LENGTH.
3. NAILS SHALL BE ACCEPTABLE FOR HAND NAILING, PROVIDED THE REQUIREMENT EMBEDMENT IS MAINTAINED.

CONNECTIONS AND FASTENERS:

ALL CONNECTIONS AND FASTENERS IN DRAWINGS CAN BE SUBSTITUTED BY AN EQUIVALENT PRODUCT PROVIDING ICC REPORTS ARE SUBMITTED TO AND APPROVED BY DSA.

CONNECTIONS LAG SCREWS:

LAG SCREWS SHALL BE INSTALLED WITH WASHER AND TURNED BY WRENCH, OVER-TORQUING SHALL BE AVOIDED. A PRE-DRILLED CLEARANCE AND LEAD HOLE SHALL BE REQUIRED AS DESCRIBED BELOW:

a) THE CLEARANCE HOLE FOR THE UNTHREADED PORTION OR THE SHANK SHALL HAVE SAME DEPTH AND DIAMETER.

b) THE LEAD HOLE FOR THE THREADED PORTION OF THE SHANK SHALL HAVE SAME DEPTH AND
65% TO 85% OF SHANK DIAMETER FOR LUMBER WITH SPECIFC GRAVITY OF, $G > 0.6$
60% TO 75% OF SHANK DIAMETER FOR LUMBER WITH SPECIFC GRAVITY OF, $0.5 < G \leq 0.6$
40% TO 70% OF SHANK DIAMETER FOR LUMBER WITH SPECIFC GRAVITY OF, $G \leq 0.5$

LEAD OR CLEARANCE HOLES SHALL NOT BE REQUIRED FOR 3/8" DIAMETER OR SMALLER LAG SCREWS.

BALLISTIC PINS OPTIONS

1. HILTI X-CR PIN WITH 0.145 SHANK DIAMTER, ICC ESR-1663
2. RAMP SET 1500 PIN WITH 0.145 SHANK DIAMETER, ICC ESR-1799
3. SIMPSON STRONG TIE PDP PIN WITH 0.145 SHANK DIAMETER, ICC ESR-2138

NAILING SCHEDULE: (ALL NAILS SHALL BE COMMON, GALVANIZED WHERE EXPOSED) PER C.B.C. TABLE 2304.9.1

CONNECTION	FASTENING	LOCATION
1. JOIST TO SILL OR GIRDER	3-8d	TOENAIL
2. BRIDGING TO JOIST	2-8d	TOENAIL EA. END
3. 1X6 OR LESS SUBFLOOR TO EA. JOIST	2-8d	FACE NAIL
4. WIDER THAN 1X6 SUBFLOOR TO EA. JOIST	3-8d	FACE NAIL
5. 2" SUBFLOOR TO JOIST	2-16d	BLIND & FACE NAIL
6. SOLE PLT. TO JOIST OR BLK'G. TO EA. JOIST	16d@16"	TYP. FACE NAIL
SOLE PLT. TO JOIST OR BLK'G. @ BRACED WALL PANEL	3-16d@16"	TYP. FACE NAIL
7. TOP PLT. TO STUD	2-16d	END NAIL
8. STUD TO SOLE PLT.	2-16d	END NAIL
OR	4-8d	TOENAIL
9. DOUBLE STUDS	16d@24"	END NAIL
10. DOUBLE TOP PLT.	16d@16"	TYP. FACE NAIL
DOUBLE TOP PLT.	8-16d MIN. U.N.O.	LAP SPLICE
11. BLKG. BTW. JOIST OR RAFTERS TO TOP PLT.	3-8d	TOENAIL
12. RIM JOIST TO TOP PLT.	8d@6"	TOENAIL
13. TOP PLT., LAPS & INTERSECTIONS	2-16d	FACE NAIL
14. CONT. HDR. 2 PIECES	16d@16"	ALONG EDGE
15. CLG. JOIST TO PLT.	3-8d	TOENAIL
16. CONT. HDR. TO STUD	4-8d	TOENAIL
17. CLG. JOIST LAP OVER PARTITONS	3-16d	FACE NAIL
18. CLG. JOIST PARALLEL TO RAFTERS	3-16d	FACE NAIL
19. RAFTER TO PLT.	3-8d	TOENAIL
20. 1" DIA. BRACE TO EA. STUD & PLT.	2-8d	FACE NAIL
21. 1X8 SHT'G. TO EA. BRG.	3-8d	FACE NAIL
22. WIDER THAN 1X8 SHT'G. TO BRG.	3-8d	FACE NAIL
23. BUILT-UP CORNER STUDS	16d@24"	FACE NAIL
24. BUILT-UP GIRDERS & BEAMS	20d@32"	FACE NAIL @ TOP & BTM. STAGR. ON OPP. SIDES
	2-20d	FACE NAIL @ ENDS & @ EA. SPLICE
25. 2" PLANKS	2-16d	@ EA. BRG.
26. COLLAR TIE TO RAFTER	3-10d	FACE NAIL
27. JACK RAFTER TO HIP	3-10d	TOENAIL
28. ROOF RAFTER TO 2X RIDGE	2-16d	TOENAIL
	2-16d	FACE NAIL
29. JOIST TO BAND JOIST	3-16d	FACE NAIL
30. 4X BLOCKING TO STUDS	1-A34	FACE NAIL

12" = 1'-0"
STRUCTURAL NOTES

12/18/2017 6:01:37 PM C:\Users\Lee\Documents\17016 - Aries, 24x40 PC - MainFile - Low Seismic_Lee.rvt

IDENTIFICATION STAMP
DIV. OF THE STATE ARCHITECT
APP: 03-121617 INC:
REVIEWED FOR
SS ☑ FLS ☑ ACS ☑
DATE: 08/02/2021

PROFESSIONAL STAMP
REGISTERED PROFESSIONAL ENGINEER
MANNY D. FRISCH
No. S3380
STRUCTURAL
STATE OF CALIFORNIA
12/19/2017

THE PLANS, IDEAS & DESIGNS SHOWN ON THESE DRAWINGS ARE THE PROPERTY OF R&S TAVARES ASSOCIATES, INC. DEVISED SOLELY FOR THIS CONTRACT. THESE PLANS SHALL NOT BE USED, IN WHOLE OR IN PART, FOR ANY PURPOSE FOR WHICH THEY WERE NOT INTENDED WITHOUT THE EXPRESS WRITTEN CONSENT OF R&S TAVARES ASSOCIATES, INC. ©

CLIENT
CLASS LEASING LLC
1221 Harley Knox Boulevard
Perris, CA 92571

R&S TAVARES ASSOCIATES
DESIGN ◆ CONSULTING ◆ PROJECT
11777 BERNARDO PLAZA COURT, SUITE 105
SAN DIEGO, CA 92128
WWW.RSTAVARES.COM

ORIGINAL PC STATE AGENCY APPROVAL
FILE NUMBER: PC-128
IDENTIFICATION STAMP
DIVISION OF THE STATE ARCHITECT
04 - 116504 INCR: 0
AC RM FLS EA SSR KER
DATE 07/19/2018

PROJECT TITLE
24' x 40' EXPANDABLE TO 120' x 40'

PRE-CHECK (PC) DOCUMENT
Code: [2016] CBC
A separate project application for construction is required.

PROJECT SPECIFIC STATE AGENCY APPROVAL
IDENTIFICATION STAMP
DIV. OF THE STATE ARCHITECT
APP. 04-119993 INC:
REVIEWED FOR
SS ☑ FLS ☑ ACS ☑
DATE: 02/24/2021

Revision Schedule

#	Description	Date

SHEET TITLE
STRUCTURAL GEN NOTES

PROJECT NUMBER
17016A

DRAWN BY
rMc/SC

CHECKED BY
JA/RT

DATE
2017/06/05

SHEET NO.
S0.1

SHEET OF SHEETS

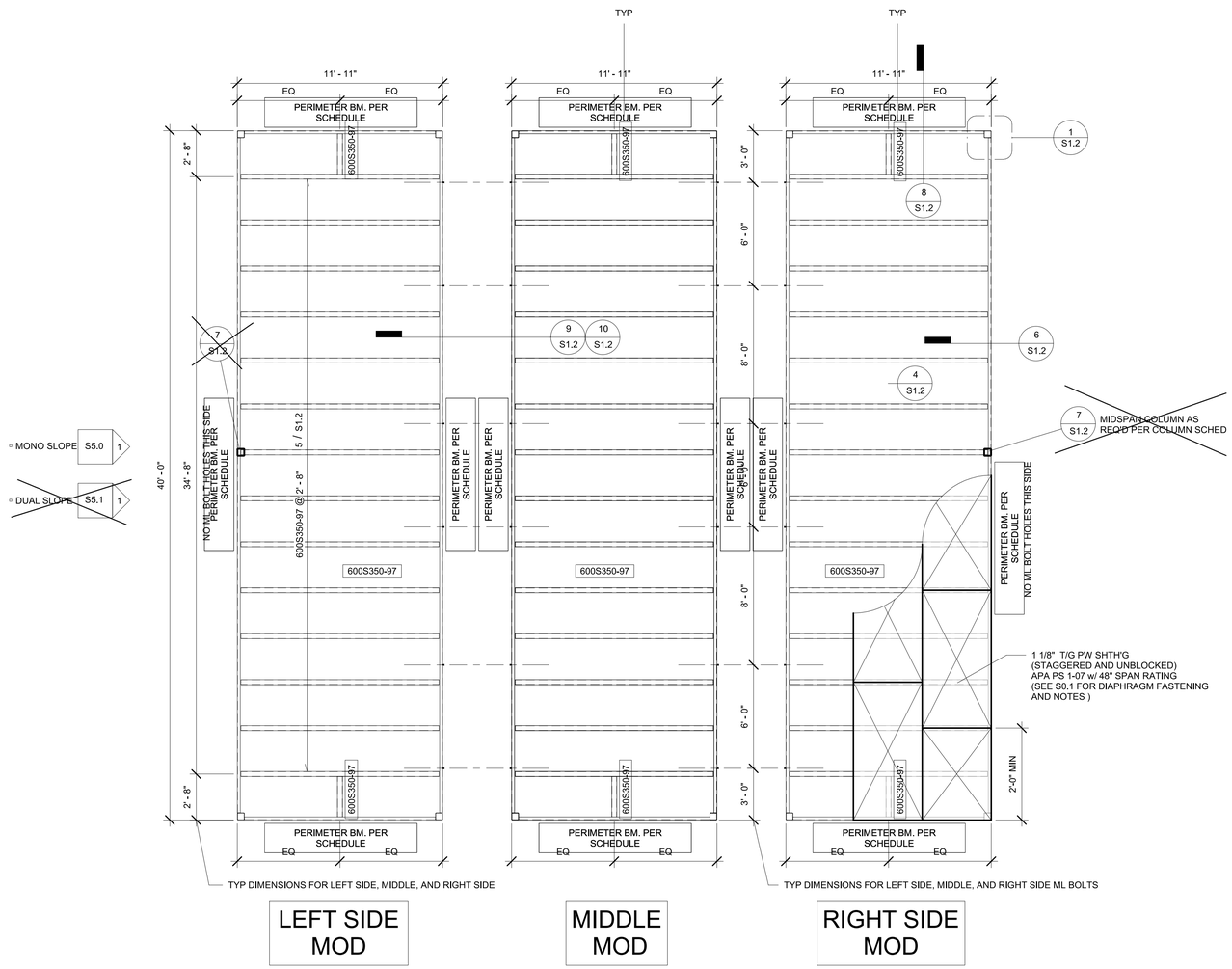

Perimeter Floor Beam Schedule			
HT	No Plaster Walls	Plaster Walls	w/ Parapet, 18" max
☒ 9'	C8x11.5	~~C8x11.5~~	~~C8x11.5~~
☐ 10'	C8x11.5	~~C8x11.5~~	~~C8x11.5~~

NOTE: SPLICE AT FLOOR BEAM PERMITTED PER 3/S1.2

Column Schedule			
HT	No Plaster Walls	Plaster Walls	w/ Parapet, 18" max
☒ 9'	5x5X1/4	~~5x5X1/4~~	~~5x5X1/4~~
☐ 10'	5x5X1/4	~~5x5X5/16*~~	~~5x5X5/16*~~
			3x3X3/16 mid-span column

*Alternative 6x6x1/4

1 ***1/4" = 1'-0"***
WD Shth'g Flr Framing Plan (50+15 PSF)

1/4/2018 2:44:47 PM C:\Users\Lee\Documents\17016 - Aries, 24x40 PC - MainFile - Low Seismic_Lee.rvt

IDENTIFICATION STAMP
DIV. OF THE STATE ARCHITECT
APP: 03-121617 INC:
REVIEWED FOR
SS ☑ FLS ☑ ACS ☑
DATE: 08/02/2021

PROFESSIONAL STAMP

REGISTERED PROFESSIONAL ENGINEER
MANNY D. FRANCISCO
C-24380
STRUCTURAL
STATE OF CALIFORNIA

12/19/2017

THE PLANS, IDEAS & DESIGNS SHOWN ON THESE DRAWINGS ARE THE PROPERTY OF R&S TAVARES ASSOCIATES, INC. DEVISED SOLELY FOR THIS CONTRACT. THESE PLANS SHALL NOT BE USED, IN WHOLE OR IN PART, FOR ANY PURPOSE FOR WHICH THEY WERE NOT INTENDED WITHOUT THE EXPRESS WRITTEN CONSENT OF R&S TAVARES ASSOCIATES, INC. ©

CLIENT

CLASS LEASING LLC
1221 Harley Knox Boulevard
Perris, CA 92571

R&S TAVARES ASSOCIATES
DESIGN ◆ CONSULTING ◆ PROJECT
11777 Bernardo Plaza Court, Suite 105
San Diego, CA 92128
www.rstavares.com

ORIGINAL PC STATE AGENCY APPROVAL
FILE NUMBER: PC-128

IDENTIFICATION STAMP
DIVISION OF THE STATE ARCHITECT
04 - 116504 INCR: 0
AC RM FLS EA SSR KER
DATE 07/19/2018

PROJECT TITLE

24' x 40'
EXPANDABLE TO
120' x 40'

PRE-CHECK (PC) DOCUMENT
Code: [2016] CBC
A separate project application for construction is required.

PROJECT SPECIFIC STATE AGENCY APPROVAL

IDENTIFICATION STAMP
DIV. OF THE STATE ARCHITECT
APP: 04-119993 INC:
REVIEWED FOR
SS ☑ FLS ☑ ACS ☑
DATE: 02/24/2021

Revision Schedule

#	Description	Date

SHEET TITLE

WD SHTH'G FLR
FRM'G PLAN
(50+15 PSF)

PROJECT NUMBER
17016A

DRAWN BY
rMc/SC

CHECKED BY
JA/RT

DATE
2017/06/05

SHEET NO.
S1.0.1

SHEET OF SHEETS

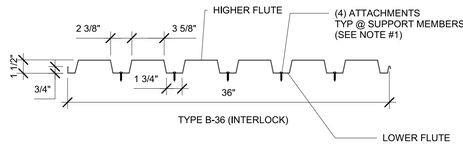

DECK SECTION PROPERTIES
TYPE B

THICKNESS	= 0.036"
POSITIVE	= 0.235 IN³
NEGITIVE	= 0.246 IN³
I	= 0.22 IN⁴

NOTES:

1. TYPICAL ATTACHMENT TO BE #10-16 TEKS/3 OR 1/2" DIAMETER SPOT (PUDDLE) WELDS.

2. PROVIDE #10-16 TEKS/3 @ 12" OC OR 1/2" DIAMETER SPOT (PUDDLE) WELDS AT 12" O.C. AT SUPPORTS PARALLEL WITH FLUTES & @ AT SEAMS

20 *1 1/2" = 1'-0"*
MTL Deck Section Properites

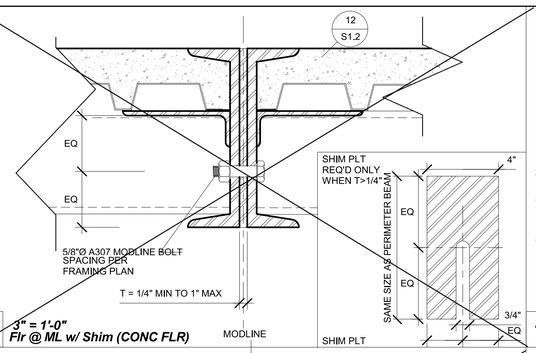

15 *3" = 1'-0"*
Flr @ ML w/ Shim (CONC FLR)

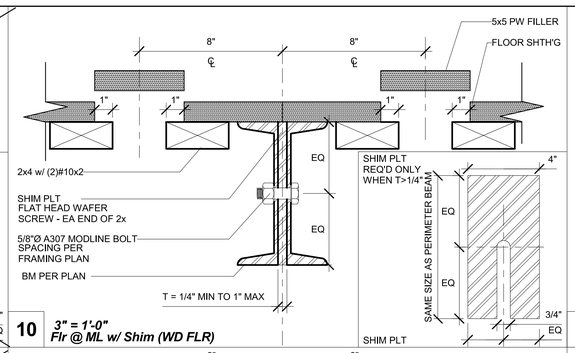

10 *3" = 1'-0"*
Flr @ ML w/ Shim (WD FLR)

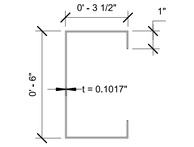

CHANNEL JOIST SECTION PROPERTIES
A-1011, GRADE 33

t	= 0.1017"
S_x	= 2.822 IN³
I_x	= 8.631 IN⁴
F_y	= 33 KSI

5 *3" = 1'-0"*
Channel Joist Section Properties (600S350-97)

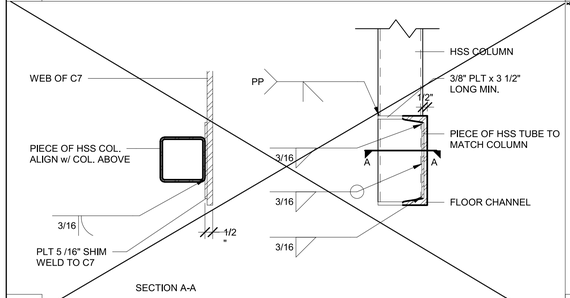

7 *1 1/2" = 1'-0"*
Mid-Span Column Connection

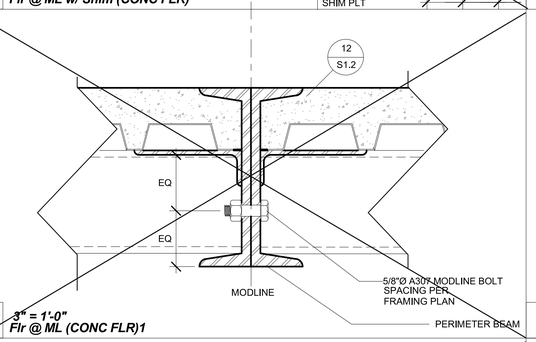

14 *3" = 1'-0"*
Flr @ ML (CONC FLR)1

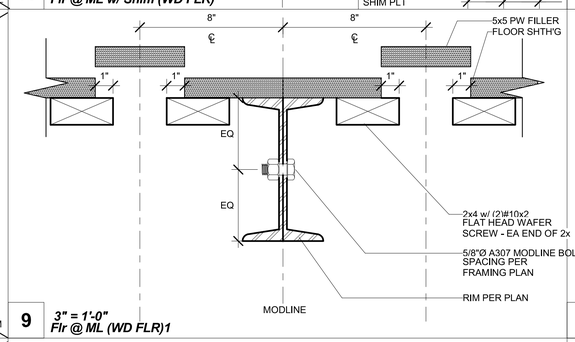

9 *3" = 1'-0"*
Flr @ ML (WD FLR)1

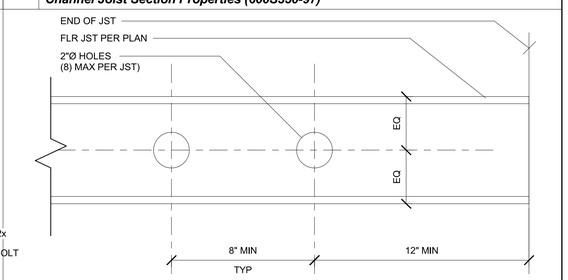

4 *3" = 1'-0"*
Elevation - Allowable Jst Holes

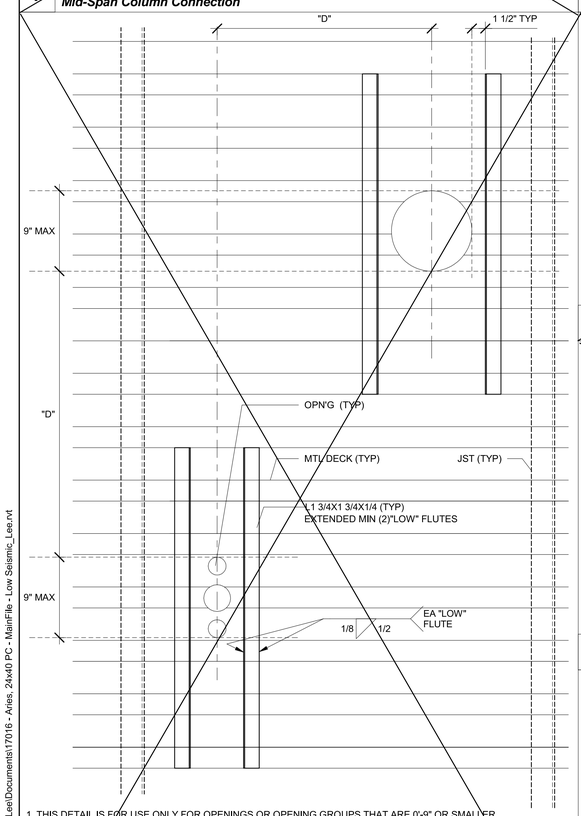

1. THIS DETAIL IS FOR USE ONLY FOR OPENINGS OR OPENING GROUPS THAT ARE 0'-9" OR SMALLER.

2. OPENINGS 2"Ø OR LESS NOT OCCURING IN THE LOWER FLUTE DO NOT REQUIRE REINFORCING AND MAY BE CORED THRU THE CONCRETE.

3. IF "D" IS LESS THAN 32" THEN THE GROUP OF OPENINGS MUST BE BLOCKED OUT WITH ADDITIONAL FRAMING.

4. PRIOR TO CONCRETE POUR, BLOCK OUT THE OPENINGS. AFTER THE CONCRETE HAS BEEN CURED THE DECK MAY BE CUT.

16 *1 1/2" = 1'-0"*
Typ Deck Penetrations (CONC FLR)

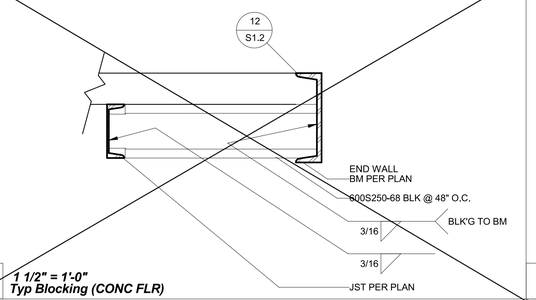

13 *1 1/2" = 1'-0"*
Typ Blocking (CONC FLR)

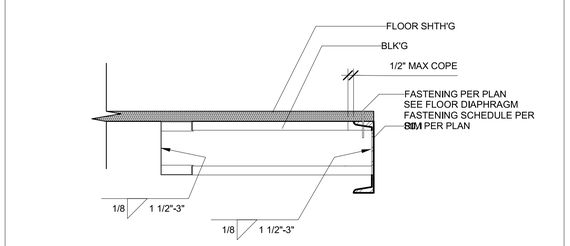

8 *1 1/2" = 1'-0"*
Typ Blk'g Connection @ Rim (WD FLR)

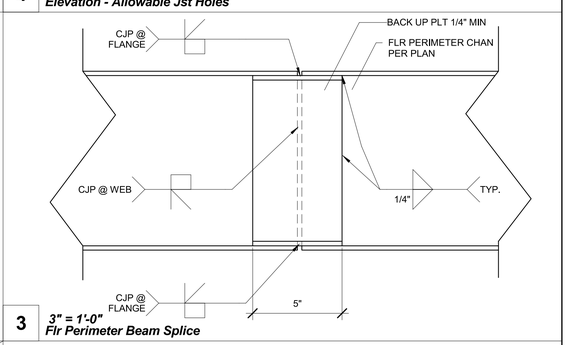

3 *3" = 1'-0"*
Flr Perimeter Beam Splice

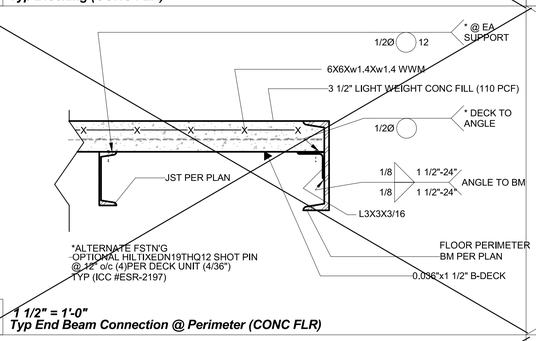

12 *1 1/2" = 1'-0"*
Typ End Beam Connection @ Perimeter (CONC FLR)

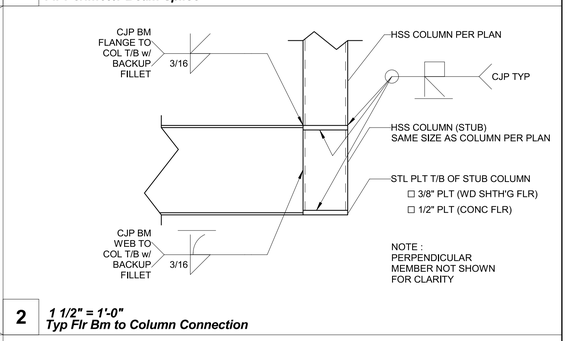

2 *1 1/2" = 1'-0"*
Typ Flr Bm to Column Connection

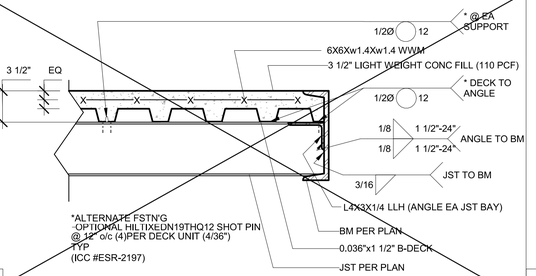

11 *1 1/2" = 1'-0"*
Typ Side Beam Connection @ Perimeter (CONC FLR)

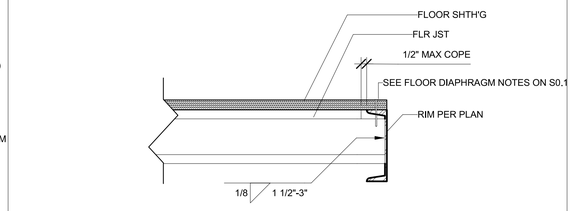

6 *1 1/2" = 1'-0"*
Typ Joist Connection @ Rim (WD FLR)

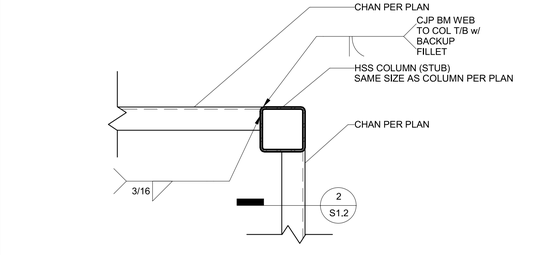

1 *1 1/2" = 1'-0"*
Typ Corner Connection

IDENTIFICATION STAMP
DIV. OF THE STATE ARCHITECT
APP: 03-121617 INC:
REVIEWED FOR
SS ☑ FLS ☑ ACS ☑
DATE: 08/02/2021

PROFESSIONAL STAMP
REGISTERED PROFESSIONAL ENGINEER
MANNY D. FRANCISCO
C-43801
STRUCTURAL
STATE OF CALIFORNIA
12/19/2017

THE PLANS, IDEAS & DESIGNS SHOWN ON THESE DRAWINGS ARE THE PROPERTY OF R&S TAVARES ASSOCIATES, INC. DEVISED SOLELY FOR THIS CONTRACT. THESE PLANS SHALL NOT BE USED, IN WHOLE OR IN PART, FOR ANY PURPOSE FOR WHICH THEY WERE NOT INTENDED WITHOUT THE EXPRESS WRITTEN CONSENT OF R&S TAVARES ASSOCIATES, INC. ©

CLIENT
CLASS LEASING LLC
1221 Harley Knox Boulevard
Perris, CA 92571

R&S TAVARES ASSOCIATES
DESIGN ★ CONSULTING ★ PROJECT
11777 BERNARDO PLAZA COURT, SUITE 105
SAN DIEGO, CA 92128
WWW.RSTAVARES.COM

ORIGINAL PC STATE AGENCY APPROVAL
FILE NUMBER: PC-128
IDENTIFICATION STAMP
DIVISION OF THE STATE ARCHITECT
04 - 116504 INCR: 0
AC RM FLS EA SSR KER
DATE 07/19/2018

PROJECT TITLE
24' x 40'
EXPANDABLE TO
120' x 40'

PRE-CHECK (PC) DOCUMENT
Code: [2016] **CBC**
A separate project application for construction is required.

PROJECT SPECIFIC STATE AGENCY APPROVAL
IDENTIFICATION STAMP
DIV. OF THE STATE ARCHITECT
APP: 04-119993 INC:
REVIEWED FOR
SS ☑ FLS ☑ ACS ☑
DATE: 02/24/2021

Revision Schedule

#	Description	Date

SHEET TITLE
STRUCTURAL
DETAILS
(FLOOR)

PROJECT NUMBER
17016A

DRAWN BY
rMc/SC

CHECKED BY
JA/RT

DATE
2017/06/05

SHEET NO.
S1.2

SHEET OF SHEETS

C:\Users\Lee\Documents\17016 - Aries, 24x40 PC - MainFile - Low Seismic_Lee.rvt
1/4/2018 2:45:23 PM

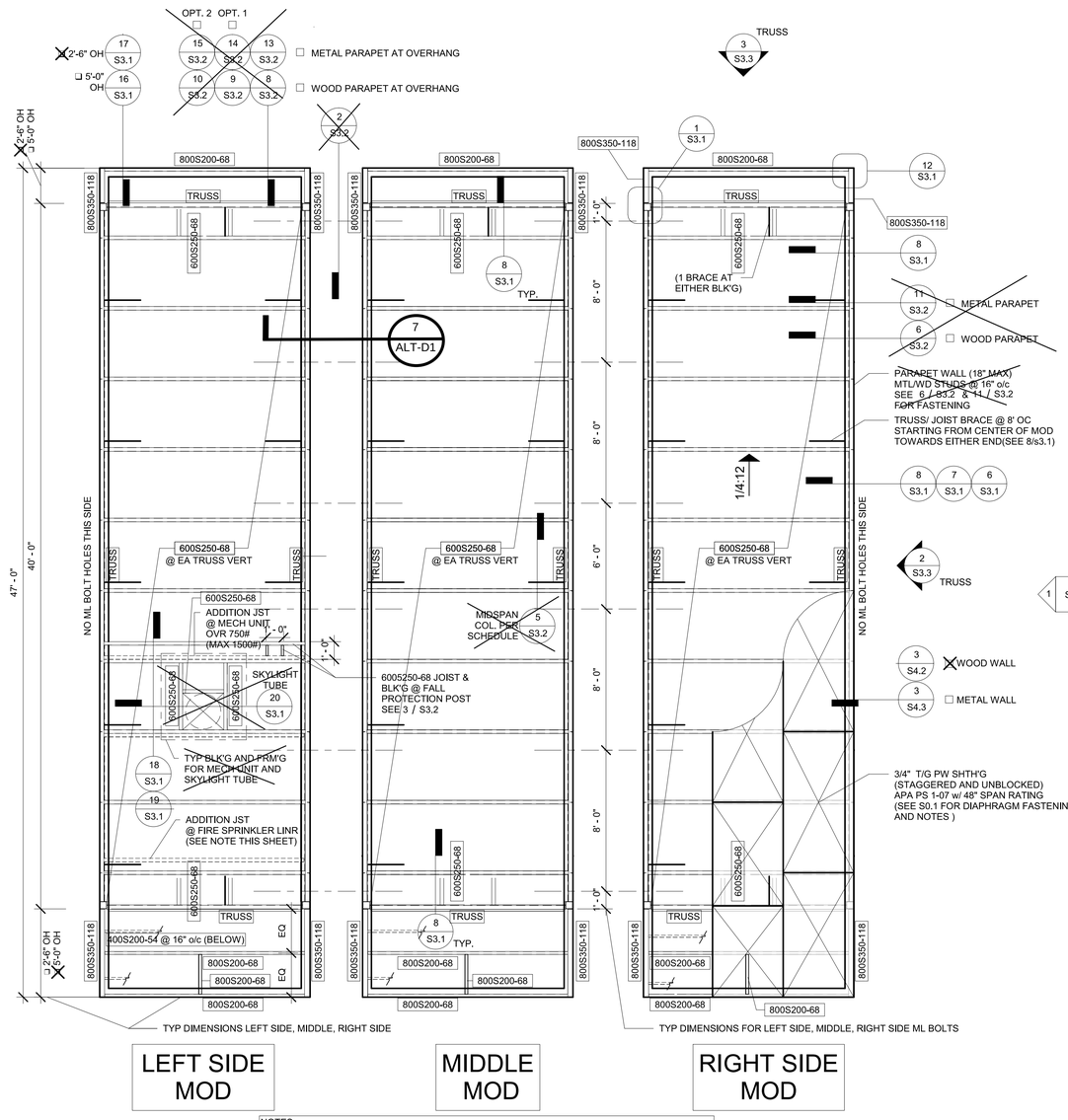

NOTES:

FIRE SPRINKLER
ADDITIONAL ROOF JOIST FOR FIRE SPRINKLER LINE AS REQ'D
LOCATION OF FIRE SPRINKLER AND ADDITIONAL JOIST TO BE DETERMINED

1 *1/4" = 1'-0"*
Mono Roof Framing Plan

1/10/2018 11:44:46 AM C:\Users\Lee\Documents\17016 - Aries, 24x40 PC - MainFile - Low Seismic_Lee.rvt

IDENTIFICATION STAMP
DIV. OF THE STATE ARCHITECT
APP: 03-121617 INC:
REVIEWED FOR
SS ☑ FLS ☑ ACS ☑
DATE: 08/02/2021

PROFESSIONAL STAMP
REGISTERED PROFESSIONAL ENGINEER
MANNY D. FRANCISCO
No. S4380
STRUCTURAL
STATE OF CALIFORNIA
12/19/2017

THE PLANS, IDEAS & DESIGNS SHOWN ON THESE DRAWINGS ARE THE PROPERTY OF R&S TAVARES ASSOCIATES, INC. DEVISED SOLELY FOR THIS CONTRACT. THESE PLANS SHALL NOT BE USED, IN WHOLE OR IN PART, FOR ANY PURPOSE FOR WHICH THEY WERE NOT INTENDED WITHOUT THE EXPRESS WRITTEN CONSENT OF R&S TAVARES ASSOCIATES, INC. ©

CLIENT
CLASS LEASING LLC
1221 Harley Knox Boulevard
Perris, CA 92571

R&S TAVARES ASSOCIATES
DESIGN ◆ CONSULTING ◆ PROJECT
11777 Bernardo Plaza Court, Suite 105
San Diego, CA 92128
www.rstavares.com

ORIGINAL PC STATE AGENCY APPROVAL
FILE NUMBER: PC-128
IDENTIFICATION STAMP
DIVISION OF THE STATE ARCHITECT
04 - 116504 INCR: 0
AC RM FLS EA SSR KER
DATE 07/19/2018

PROJECT TITLE
24' x 40'
EXPANDABLE TO
120' x 40'

PRE-CHECK (PC) DOCUMENT
Code: [2016] CBC
A separate project application for construction is required.

PROJECT SPECIFIC STATE AGENCY APPROVAL
IDENTIFICATION STAMP
DIV. OF THE STATE ARCHITECT
APP: 04-119993 INC:
REVIEWED FOR
SS ☑ FLS ☑ ACS ☑
DATE: 02/24/2021

Revision Schedule

#	Description	Date

SHEET TITLE
MONO SLOPE
ROOF FRM'G PLAN

PROJECT NUMBER
17016A

DRAWN BY
rMc/SC

CHECKED BY
JA/RT

DATE
2017/06/05

SHEET NO.
S3.0.1

SHEET OF SHEETS

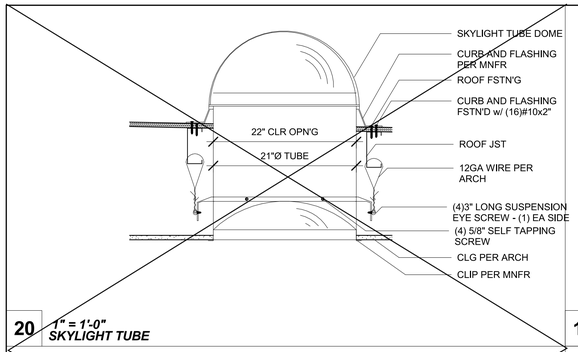

20 *1" = 1'-0"*
SKYLIGHT TUBE

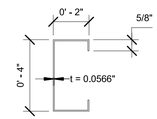

OVERHANG CHANNEL SECTION PROPERTIES
400S200-54
A-1003, GRADE 33, TYPE H
t = 0.0566"
S_x = 0.623 IN^3
I_x = 1.292 IN^4
F_y = 33 KSI

15 *3" = 1'-0"*
Soffit Channel Section Properties

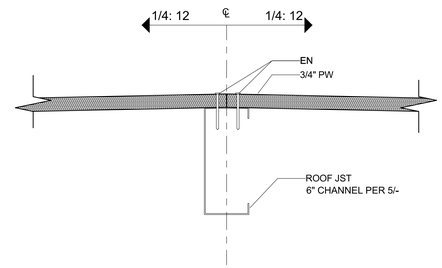

10 *3" = 1'-0"*
Roof @ Ridge

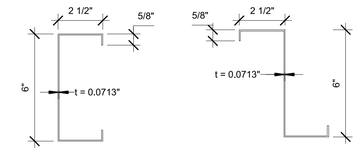

CHANNEL JOIST SECTION PROPERTIES
600S250-68 OR Z6X2.5X5/8-14GA
A-1003, GRADE 33, TYPE H
t = 0.0713"
S_x = 1.508 IN^3
I_x = 4.727 IN^4
F_y = 33 KSI

5 *3" = 1'-0"*
Roof Channel Joist Section Properites

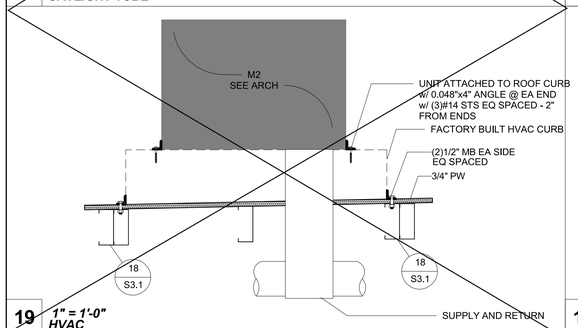

19 *1" = 1'-0"*
HVAC

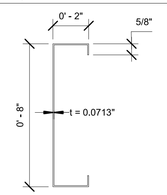

OVERHANG CHANNEL SECTION PROPERTIES
800S200-68
A-1003, GRADE 33, TYPE H
t = 0.0713"
S_x = 2.035 IN^3
I_x = 8.140 IN^4
F_y = 33 KSI

14 *3" = 1'-0"*
Fascia Channel Section Properties

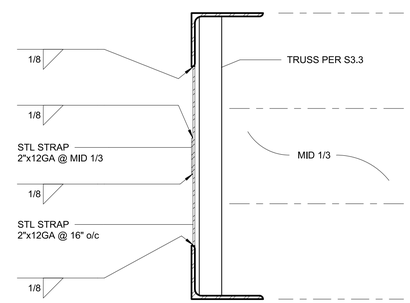

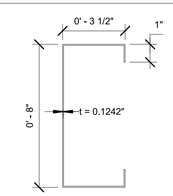

OVERHANG CHANNEL SECTION PROPERTIES
800S350-118
A-1003, GRADE 33, TYPE H
t = 0.1242"
S_x = 5.010 IN^3
I_x = 20.041 IN^4
F_y = 33 KSI

4 *3" = 1'-0"*
Overhang Beam Section Properites

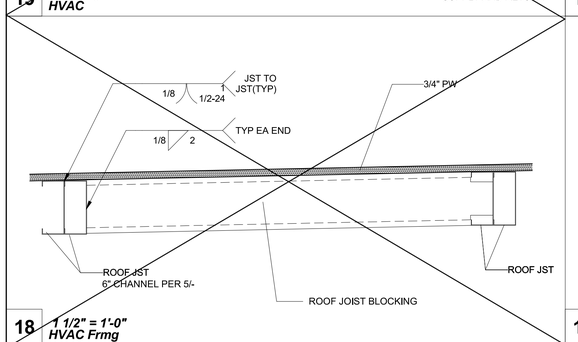

18 *1 1/2" = 1'-0"*
HVAC Frmg

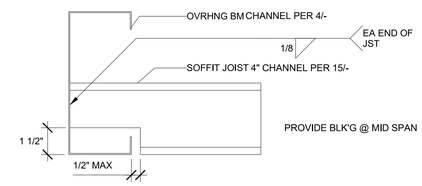

13 *3" = 1'-0"*
Typ Soffit Joist Connection

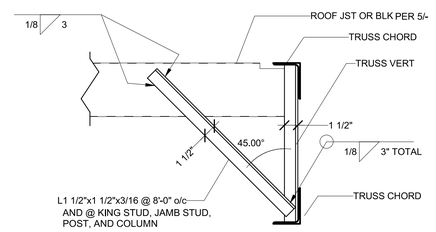

8 *1 1/2" = 1'-0"*
Typ Roof Jst Bracing

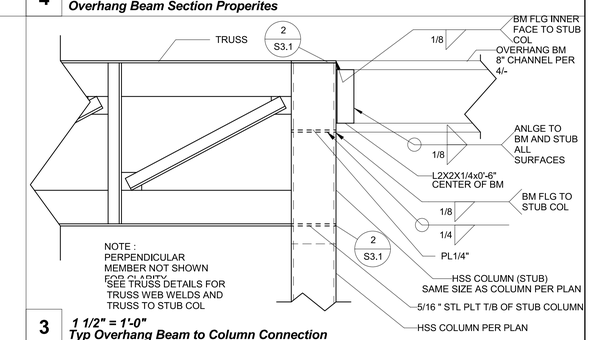

3 *1 1/2" = 1'-0"*
Typ Overhang Beam to Column Connection

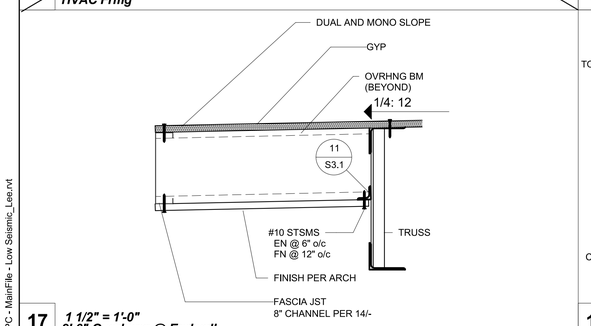

17 *1 1/2" = 1'-0"*
2'-6" Overhang @ Endwall

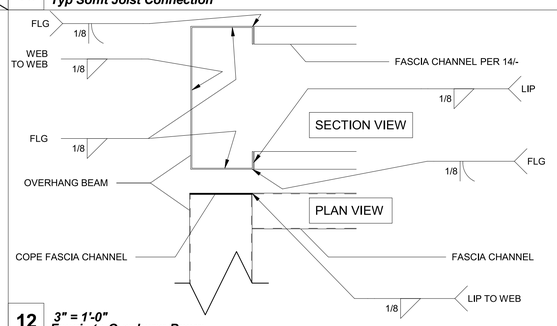

12 *3" = 1'-0"*
Fascia to Overhang Beam

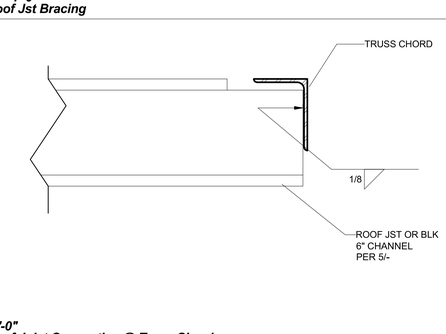

7 *3" = 1'-0"*
Typ Roof Joist Connection @ Truss Chord

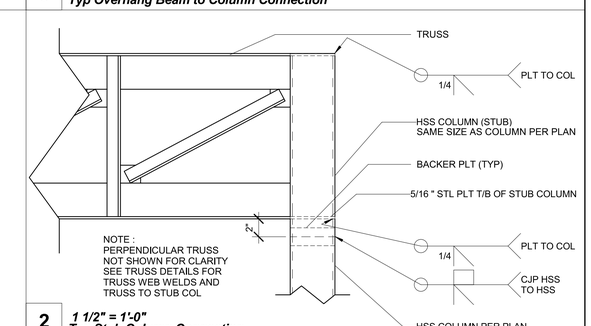

2 *1 1/2" = 1'-0"*
Typ Stub Column Connection

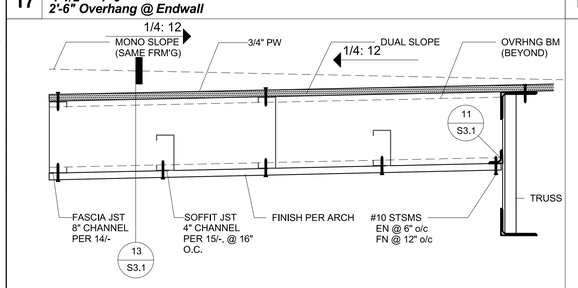

16 *1 1/2" = 1'-0"*
5'-0" Overhang @ Endwall

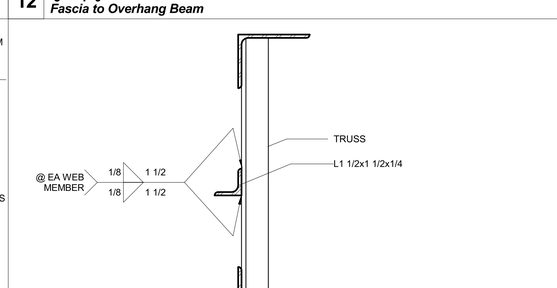

11 *3" = 1'-0"*
Angle to Truss

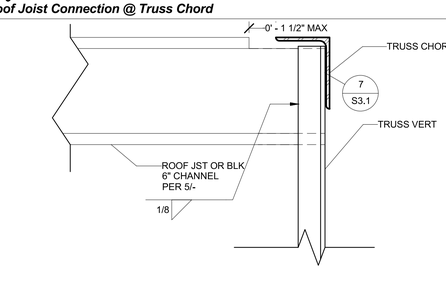

6 *3" = 1'-0"*
Typ Roof Joist Connection @ Truss Vert

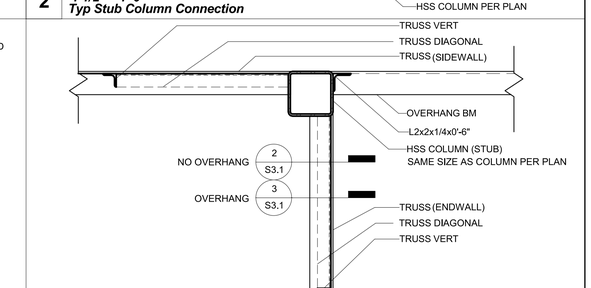

1 *1 1/2" = 1'-0"*
Typ Corner Connection @ Roof

IDENTIFICATION STAMP
DIV. OF THE STATE ARCHITECT
APP: 03-121617 INC:
REVIEWED FOR
SS ☑ FLS ☑ ACS ☑
DATE: 08/02/2021

PROFESSIONAL STAMP
REGISTERED PROFESSIONAL ENGINEER
MANNY D. FRANCISCO
C-43801
STRUCTURAL
STATE OF CALIFORNIA
12/19/2017

THE PLANS, IDEAS & DESIGNS SHOWN ON THESE DRAWINGS ARE THE PROPERTY OF R&S TAVARES ASSOCIATES, INC. DEVISED SOLELY FOR THIS CONTRACT. THESE PLANS SHALL NOT BE USED, IN WHOLE OR IN PART, FOR ANY PURPOSE FOR WHICH THEY WERE NOT INTENDED WITHOUT THE EXPRESS WRITTEN CONSENT OF R&S TAVARES ASSOCIATES, INC. ©

CLIENT
CLASS LEASING LLC
1221 Harley Knox Boulevard
Perris, CA 92571

R&S TAVARES ASSOCIATES
DESIGN ◆ CONSULTING ◆ PROJECT
11777 BERNARDO PLAZA COURT, SUITE 105
SAN DIEGO, CA 92128
WWW.RSTAVARES.COM

ORIGINAL PC STATE AGENCY APPROVAL
FILE NUMBER: PC-128
IDENTIFICATION STAMP
DIVISION OF THE STATE ARCHITECT
04 - 116504 INCR: 0
AC RM FLS EA SSR KER
DATE 07/19/2018

PROJECT TITLE
24' x 40'
EXPANDABLE TO
120' x 40'

PRE-CHECK (PC) DOCUMENT
Code: [2016] **CBC**
A separate project application for construction is required.

PROJECT SPECIFIC STATE AGENCY APPROVAL
IDENTIFICATION STAMP
DIV. OF THE STATE ARCHITECT
APP: 04-119993 INC:
REVIEWED FOR
SS ☑ FLS ☑ ACS ☑
DATE: 02/24/2021

Revision Schedule

#	Description	Date

SHEET TITLE
STRUCTURAL DETAILS (ROOF)

PROJECT NUMBER
17016A

DRAWN BY
rMc/SC

CHECKED BY
JA/RT

DATE
2017/06/05

SHEET NO.
S3.1
SHEET OF SHEETS

C:\Users\Lee\Documents\17016 - Aries, 24x40 PC - MainFile - Low Seismic_Lee.rvt
1/4/2018 2:45:29 PM

TABLE A-SECTION CENTROID	
SECTION	CENTROID C
L4X3 (LLV)	1 1/4"
L4X3 (LLH)	3/4"
L2X2X3/16	9/16"
L1.5X1.5X3/16	7/16"

12 *1/2" = 1'-0"*
TABLE A - SECTION CENTROID

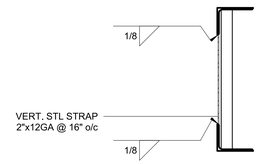

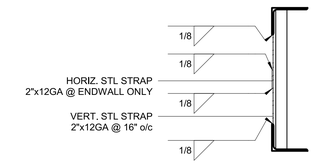

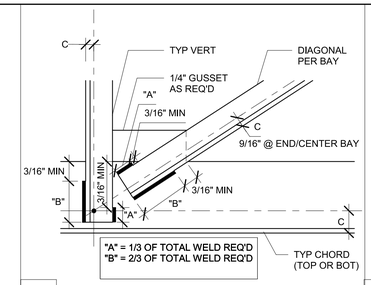

8 *3" = 1'-0"*
Typ Fillet Weld Lengths

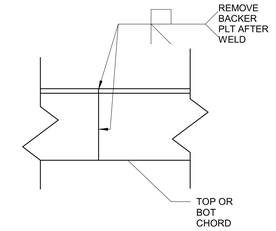

9 *3" = 1'-0"*
Typ Truss Chord Splice

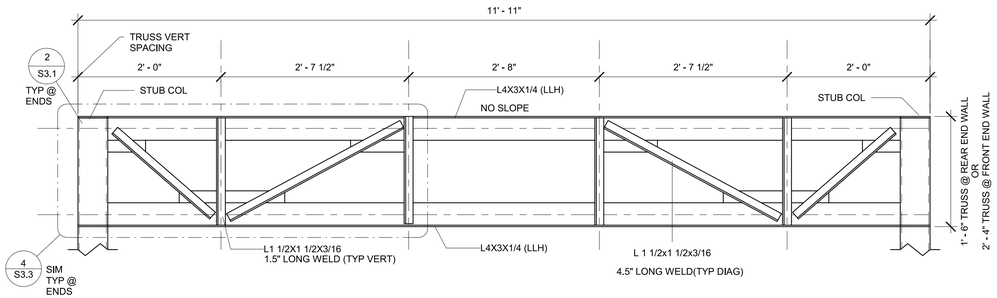

3 *1" = 1'-0"*
End Wall Truss

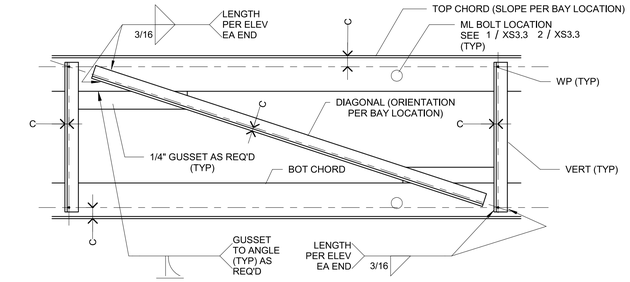

NOTE:
SEE DISTRIBUTION/S3.3 FOR ALL FILLET WELD LENGTH

7 *1 1/2" = 1'-0"*
Typ Truss Bay

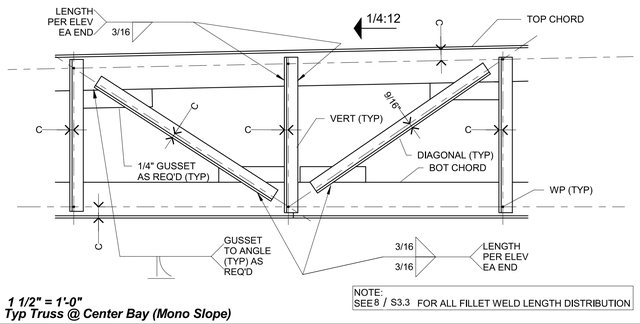

NOTE:
SEE 8 / S3.3 FOR ALL FILLET WELD LENGTH DISTRIBUTION

6 *1 1/2" = 1'-0"*
Typ Truss @ Center Bay (Mono Slope)

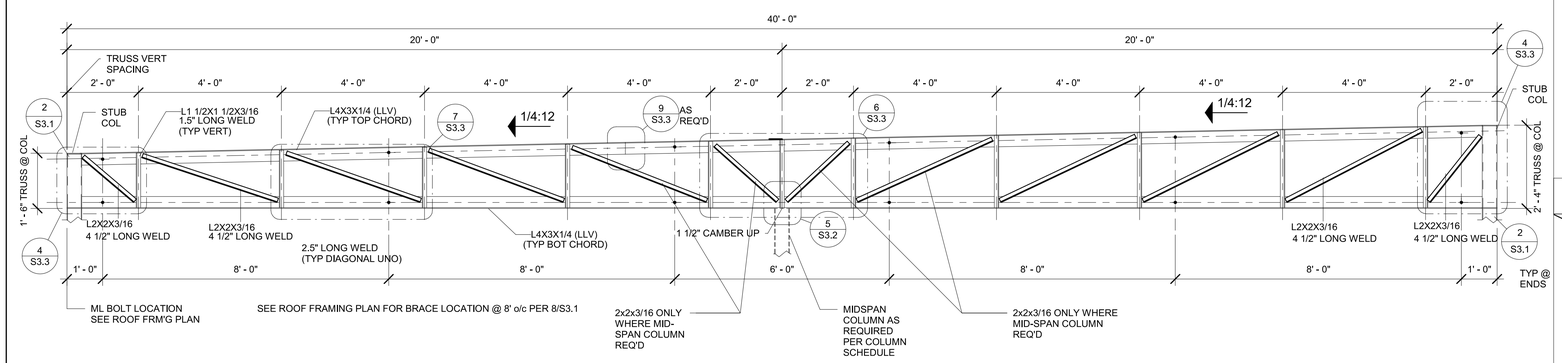

2 *1/2" = 1'-0"*
Mono Truss

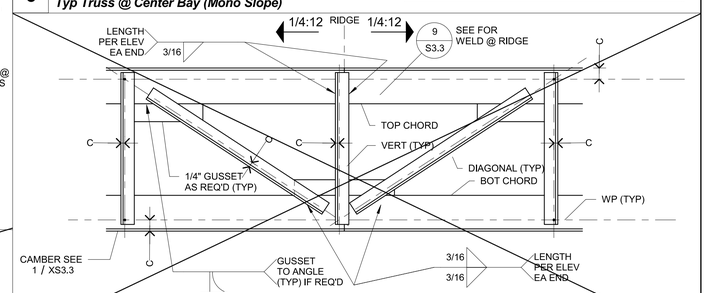

NOTE:
SEE 8 / S3.3 FOR ALL FILLET WELD LENGTH DISTRIBUTION

5 *1 1/2" = 1'-0"*
Typ Truss @ Center Bay (Dual Slope)

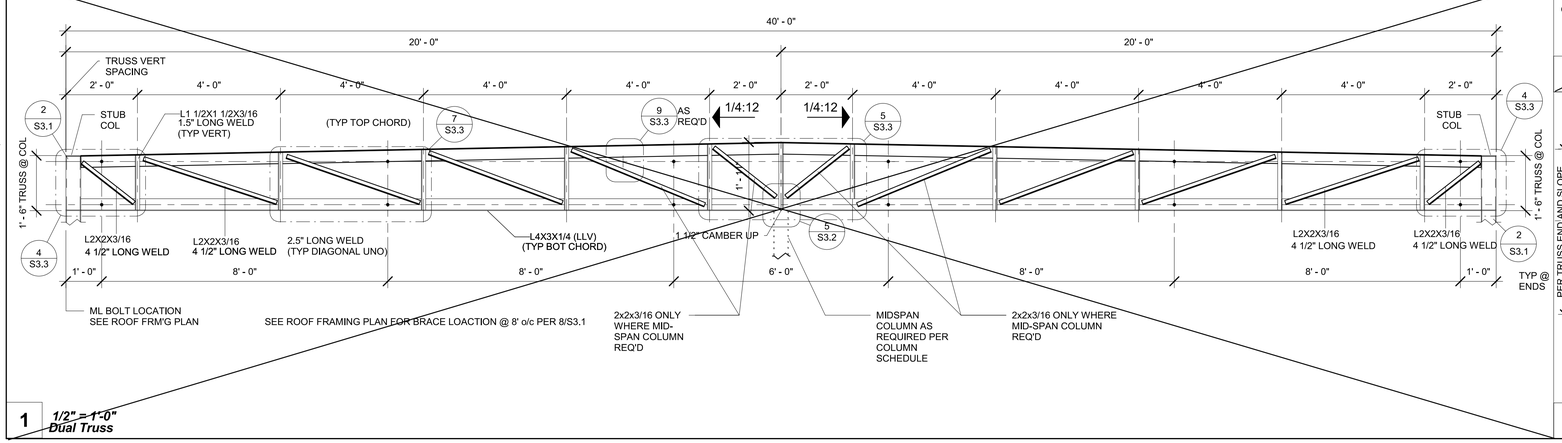

1 *1/2" = 1'-0"*
Dual Truss

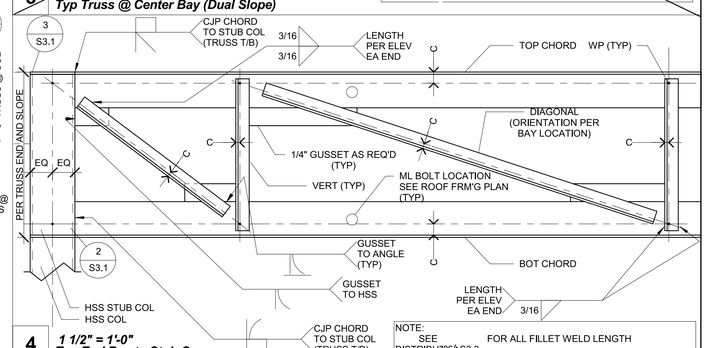

NOTE:
SEE DISTRIBUTION/S3.3 FOR ALL FILLET WELD LENGTH

4 *1 1/2" = 1'-0"*
Typ End Bay to Stub Conn

IDENTIFICATION STAMP
DIV. OF THE STATE ARCHITECT
APP: 03-121617 INC:
REVIEWED FOR
SS ☑ FLS ☑ ACS ☑
DATE: 08/02/2021

PROFESSIONAL STAMP
REGISTERED PROFESSIONAL ENGINEER
MANNY D. FRANCO
C-42380
STRUCTURAL
STATE OF CALIFORNIA
12/19/2017

THE PLANS, IDEAS & DESIGNS SHOWN ON THESE DRAWINGS ARE THE PROPERTY OF R&S TAVARES ASSOCIATES, INC. DEVISED SOLELY FOR THIS CONTRACT. THESE PLANS SHALL NOT BE USED, IN WHOLE OR IN PART, FOR ANY PURPOSE FOR WHICH THEY WERE NOT INTENDED WITHOUT THE EXPRESS WRITTEN CONSENT OF R&S TAVARES ASSOCIATES, INC. ©

CLIENT
CLASS LEASING LLC
1221 Harley Knox Boulevard
Perris, CA 92571

R&S TAVARES ASSOCIATES
DESIGN ◆ CONSULTING ◆ PROJECT
11777 BERNARDO PLAZA COURT, SUITE 105
SAN DIEGO, CA 92128
WWW.RSTAVARES.COM

ORIGINAL PC STATE AGENCY APPROVAL
FILE NUMBER: PC-128
IDENTIFICATION STAMP
DIVISION OF THE STATE ARCHITECT
04 - 116504 INCR: 0
AC RM FLS EA SSR KER
DATE 07/19/2018

PROJECT TITLE
24' x 40'
EXPANDABLE TO
120' x 40'

PRE-CHECK (PC) DOCUMENT
Code: [2016] CBC
A separate project application for construction is required.

PROJECT SPECIFIC STATE AGENCY APPROVAL
IDENTIFICATION STAMP
DIV. OF THE STATE ARCHITECT
APP: 04-119993 INC:
REVIEWED FOR
SS ☑ FLS ☑ ACS ☑
DATE: 02/24/2021

Revision Schedule

#	Description	Date

SHEET TITLE
ROOF PERIMETER
TRUSS

PROJECT NUMBER
17016A

DRAWN BY
rMc/SC

CHECKED BY
JA/RT

DATE
2017/06/05

SHEET NO.
S3.3

SHEET OF SHEETS

C:\Users\Lee\Documents\17016 - Aries, 24x40 PC - MainFile - Low Seismic_Lee.rvt
1/4/2018 2:45:35 PM

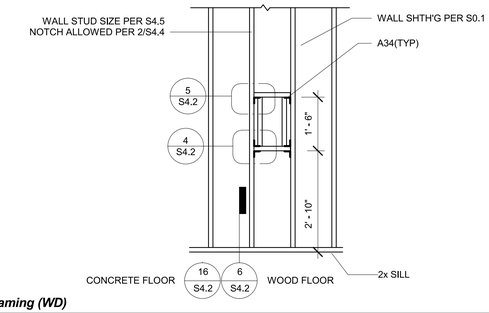

6 *1/2" = 1'-0"*
Typ Fire Extinguisher Framing (WD)

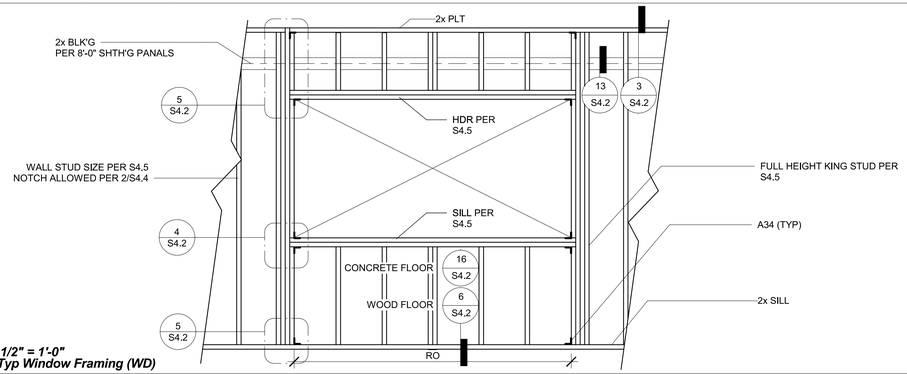

4 *1/2" = 1'-0"*
Typ Window Framing (WD)

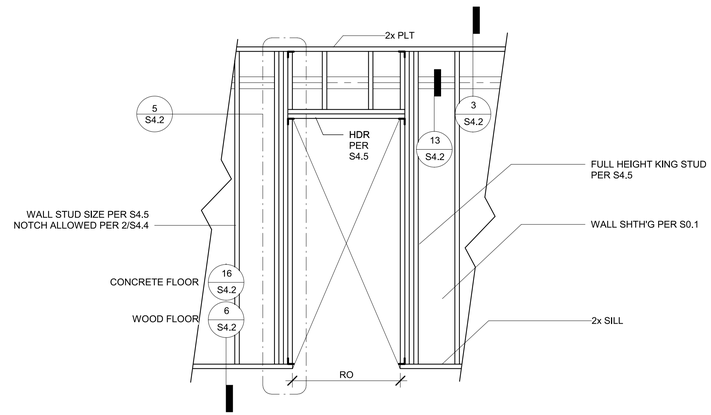

5 *1/2" = 1'-0"*
Typ Door Framing (WD)

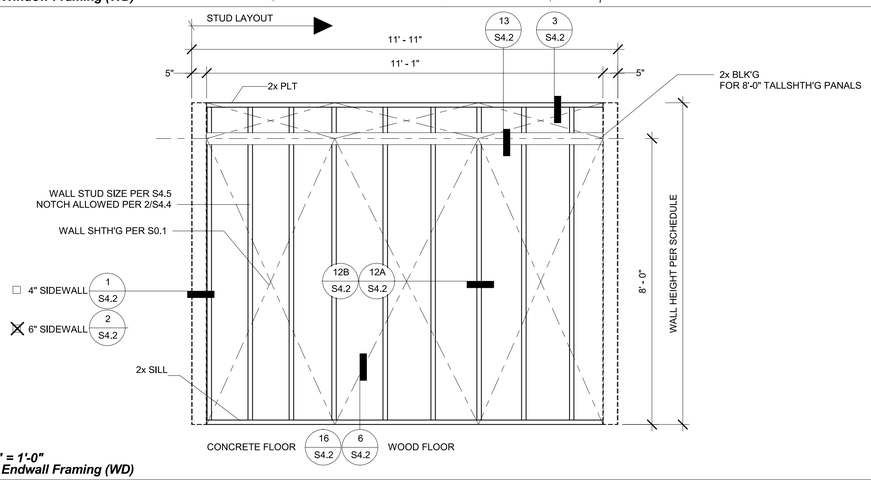

2 *1/2" = 1'-0"*
Typ Endwall Framing (WD)

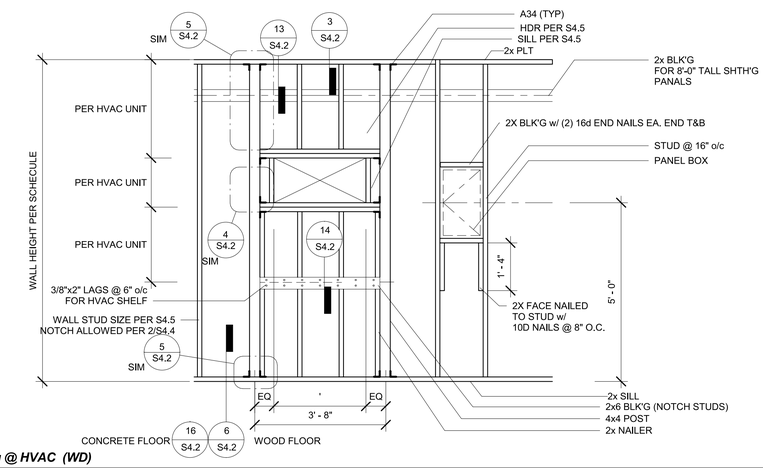

3 *1/2" = 1'-0"*
Typ Endwall Framing @ HVAC (WD)

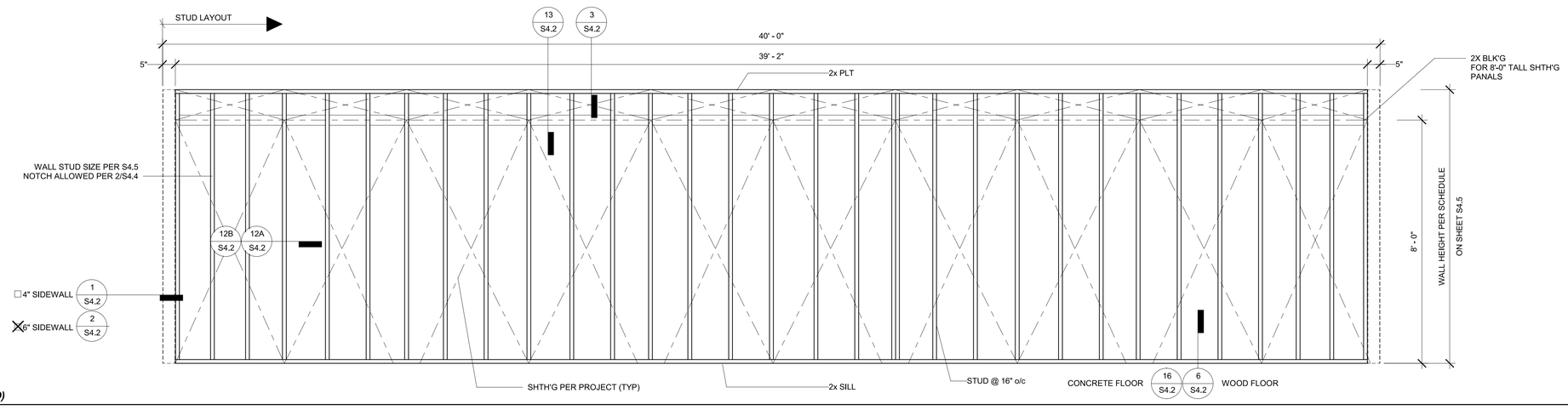

1 *1/2" = 1'-0"*
Typ Sidewall Framing (WD)

12/18/2017 6:02:23 PM C:\Users\Lee\Documents\17016 - Aries, 24x40 PC - MainFile - Low Seismic_Lee.rvt

IDENTIFICATION STAMP
DIV. OF THE STATE ARCHITECT
APP: 03-121617 INC:
REVIEWED FOR
SS ☑ FLS ☑ ACS ☑
DATE: 08/02/2021

PROFESSIONAL STAMP

REGISTERED PROFESSIONAL ENGINEER
MANNY D. FRANCO
C-42380
STRUCTURAL
STATE OF CALIFORNIA

12/19/2017

THE PLANS, IDEAS & DESIGNS SHOWN ON THESE DRAWINGS ARE THE PROPERTY OF R&S TAVARES ASSOCIATES, INC. DEVISED SOLELY FOR THIS CONTRACT. THESE PLANS SHALL NOT BE USED, IN WHOLE OR IN PART, FOR ANY PURPOSE FOR WHICH THEY WERE NOT INTENDED WITHOUT THE EXPRESS WRITTEN CONSENT OF R&S TAVARES ASSOCIATES, INC. ©

CLIENT

CLASS LEASING LLC
1221 Harley Knox Boulevard
Perris, CA 92571

R&S TAVARES ASSOCIATES
DESIGN ◆ CONSULTING ◆ PROJECT
11777 Bernardo Plaza Court, Suite 105
San Diego, CA 92128
www.rstavares.com

ORIGINAL PC STATE AGENCY APPROVAL
FILE NUMBER: PC-128

IDENTIFICATION STAMP
DIVISION OF THE STATE ARCHITECT
04 - 116504 INCR: 0
AC RM FLS EA SSR KER
DATE 07/19/2018

PROJECT TITLE
24' x 40'
EXPANDABLE TO
120' x 40'

PRE-CHECK (PC) DOCUMENT
Code: [2016] **CBC**
A separate project application for construction is required.

PROJECT SPECIFIC STATE AGENCY APPROVAL

IDENTIFICATION STAMP
DIV. OF THE STATE ARCHITECT
APP: 04-119993 INC:
REVIEWED FOR
SS ☑ FLS ☑ ACS ☑
DATE: 02/24/2021

Revision Schedule

#	Description	Date

SHEET TITLE
WD WALL
FRAMING
ELEVATIONS

PROJECT NUMBER
17016A

DRAWN BY
rMc/SC

CHECKED BY
JA/RT

DATE
2017/06/05

SHEET NO.
S4.1

SHEET OF SHEETS

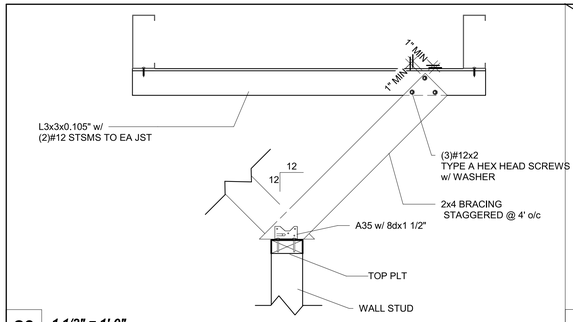

20 *1 1/2" = 1'-0"*
Sections - Interior Partition w/ Brace to Blk'g (WD)

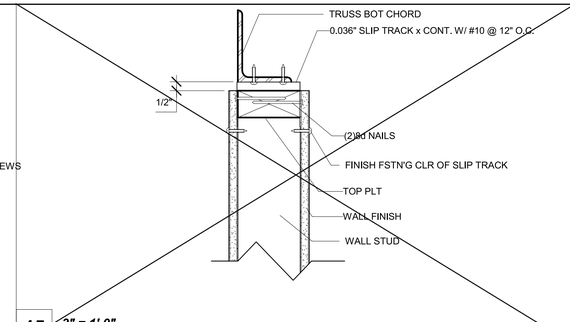

15 *3" = 1'-0"*
Section - Interior Wall Top Plate @ Truss (ML)

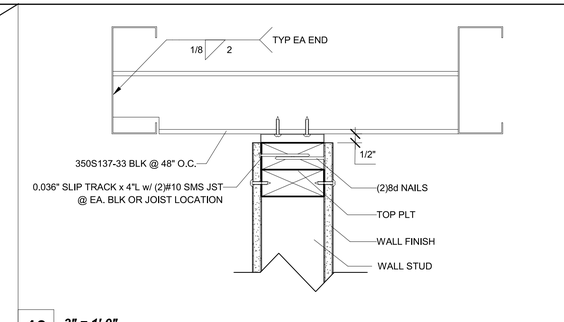

10 *3" = 1'-0"*
Sections - Interior Partition @ Blk'g (WD)

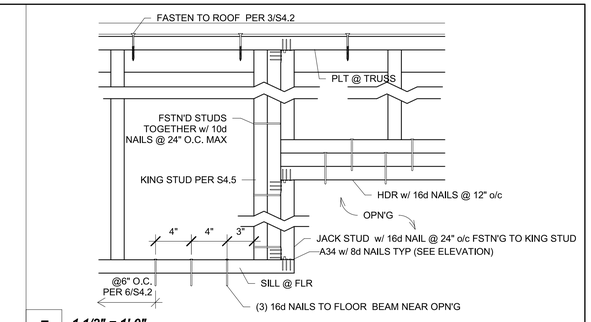

5 *1 1/2" = 1'-0"*
Elevation - Window/Door Hdr and Sill

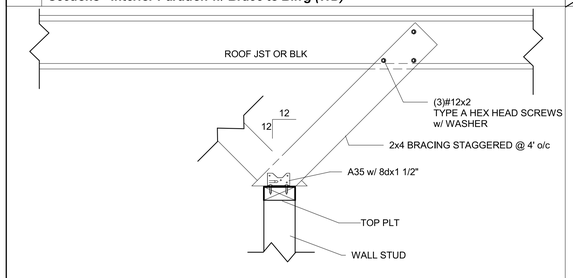

19 *1 1/2" = 1'-0"*
Sections - Interior Partition w/ Brace (WD)

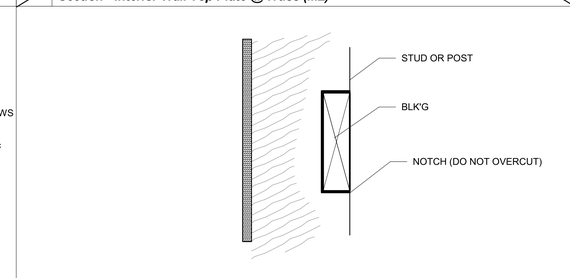

14 *3" = 1'-0"*
Notch Stud @ Blk'g

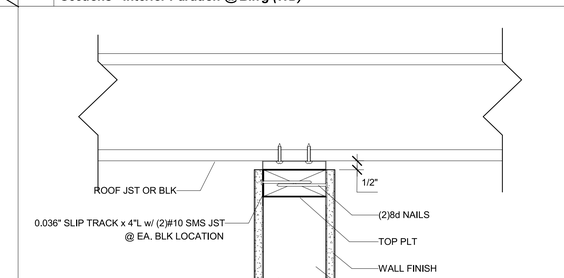

9 *3" = 1'-0"*
Sections - Interior Partition @ Jst (WD)

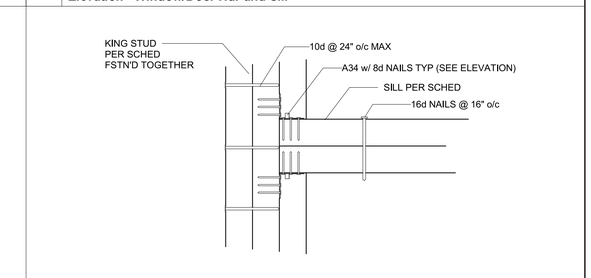

4 *3" = 1'-0"*
Elevation - Ext Wall Sill @ Window

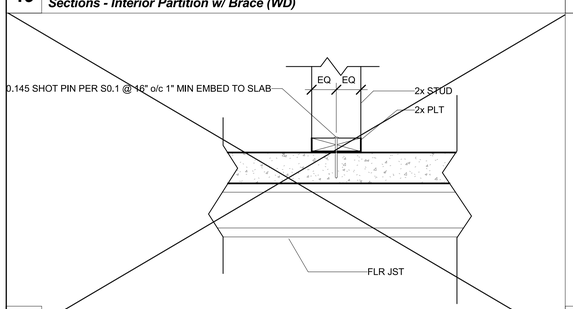

18 *1 1/2" = 1'-0"*
Typ Partition Sill Connection (CONC)

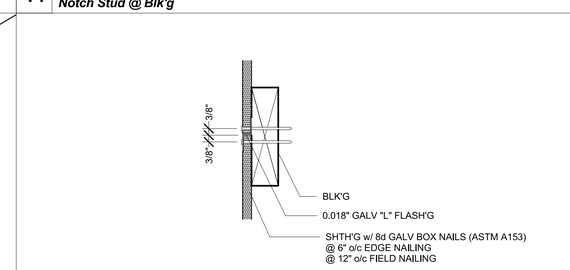

13 *3" = 1'-0"*
Shth'g @ Blk'g

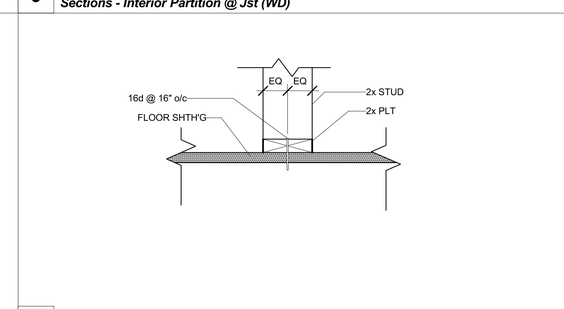

8 *1 1/2" = 1'-0"*
Typ Partition Sill Connection (WD)

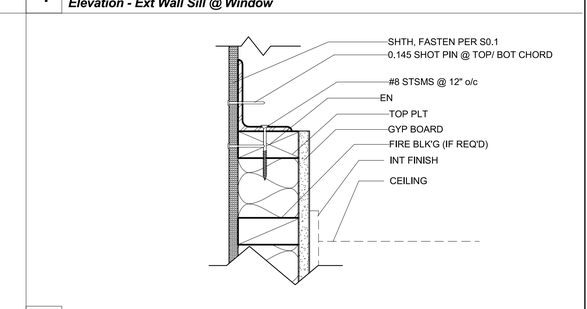

3 *3" = 1'-0"*
Section - Exterior Wall Top Plate @ Truss (WD)

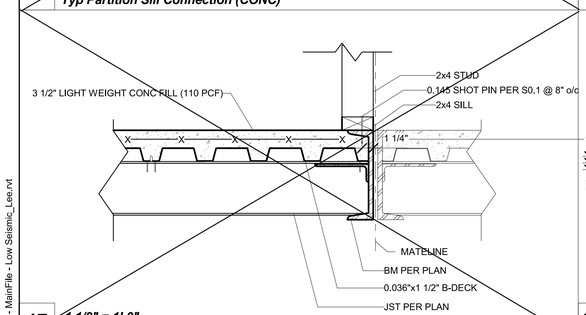

17 *1 1/2" = 1'-0"*
Wall Sill Plt Connection @ Interior Sidewall (CONC)

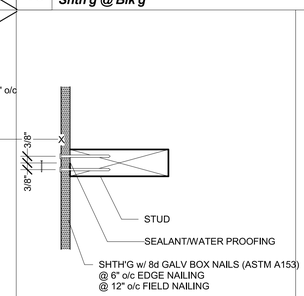

12A *3" = 1'-0"*
Shth'g @ Butt Jnt

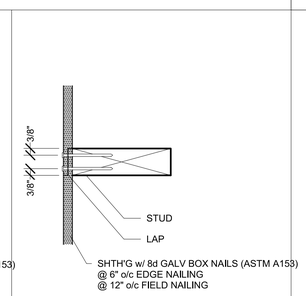

12B *3" = 1'-0"*
Shth'g @ Lap Jnt

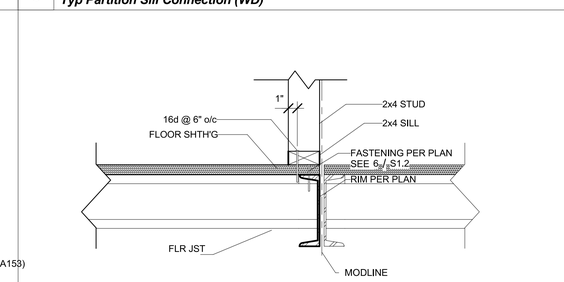

7 *1 1/2" = 1'-0"*
2x4 Wall Sill Connection @ Interior Sidewalls (WD)

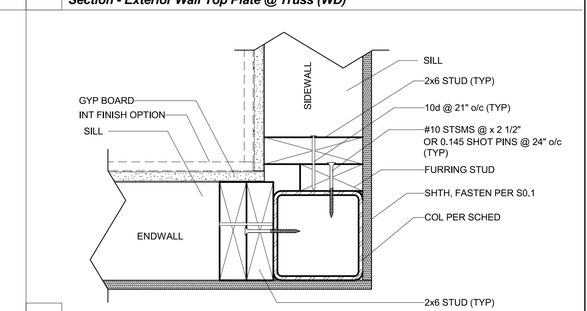

2 *3" = 1'-0"*
2x6 Framing @ Column (WD)

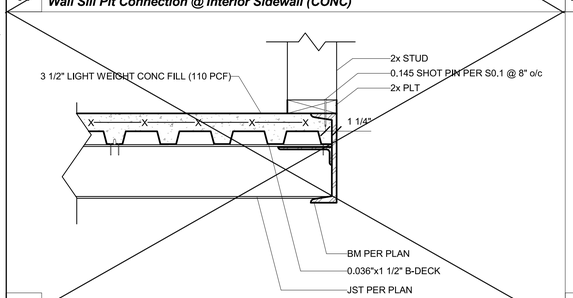

16 *1 1/2" = 1'-0"*
Wall Sill Plt Connection @ Exterior Rim (CONC)

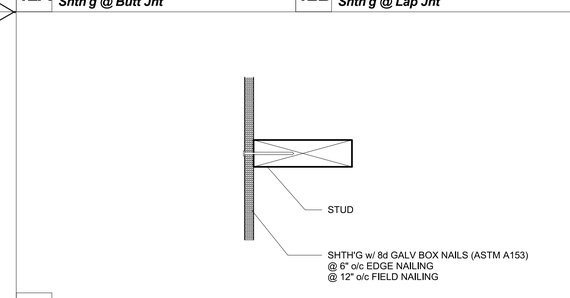

11 *3" = 1'-0"*
Shth'g @ Stud Conn

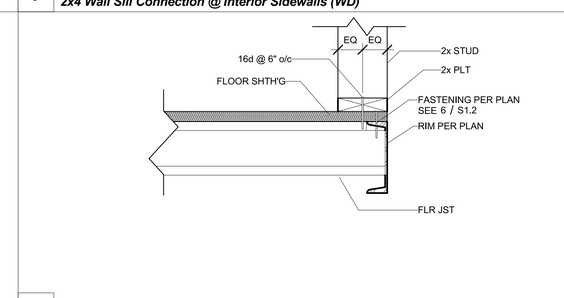

6 *1 1/2" = 1'-0"*
Wall Sill Connection @ Exterior Rim (WD)

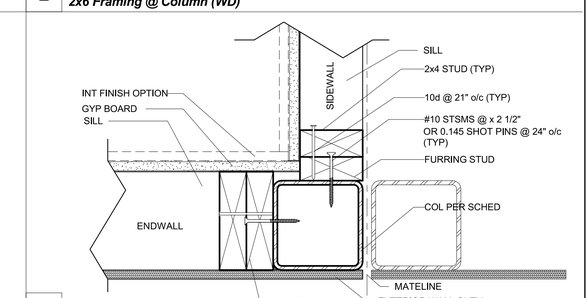

1 *3" = 1'-0"*
Interior Sidewall Framing @ Column (WD)

IDENTIFICATION STAMP
DIV. OF THE STATE ARCHITECT
APP: 03-121617 INC:
REVIEWED FOR
SS ☑ FLS ☑ ACS ☑
DATE: 08/02/2021

PROFESSIONAL STAMP

REGISTERED PROFESSIONAL ENGINEER
MANNY D. FRESSON
C-42380
STRUCTURAL
STATE OF CALIFORNIA

12/19/2017

THE PLANS, IDEAS & DESIGNS SHOWN ON THESE DRAWINGS ARE THE PROPERTY OF R&S TAVARES ASSOCIATES, INC. DEVISED SOLELY FOR THIS CONTRACT. THESE PLANS SHALL NOT BE USED, IN WHOLE OR IN PART, FOR ANY PURPOSE FOR WHICH THEY WERE NOT INTENDED WITHOUT THE EXPRESS WRITTEN CONSENT OF R&S TAVARES ASSOCIATES, INC. ©

CLIENT

CLASS LEASING LLC
1221 Harley Knox Boulevard
Perris, CA 92571

R&S TAVARES ASSOCIATES
DESIGN ◆ CONSULTING ◆ PROJECT
11777 Bernardo Plaza Court, Suite 105
San Diego, CA 92128
www.rstavares.com

ORIGINAL PC STATE AGENCY APPROVAL
FILE NUMBER: PC-128

IDENTIFICATION STAMP
DIVISION OF THE STATE ARCHITECT
04 - 116504 INCR: 0
AC RM FLS EA SSR KER
DATE 07/19/2018

PROJECT TITLE

24' x 40'
EXPANDABLE TO
120' x 40'

PRE-CHECK (PC) DOCUMENT
Code: [2016] CBC
A separate project application for construction is required.

PROJECT SPECIFIC STATE AGENCY APPROVAL

IDENTIFICATION STAMP
DIV. OF THE STATE ARCHITECT
APP. 04-119993 INC:
REVIEWED FOR
SS ☑ FLS ☑ ACS ☑
DATE: 02/24/2021

Revision Schedule

#	Description	Date

SHEET TITLE

WALL DETAILS
(WOOD FRAMING)

PROJECT NUMBER
17016A

DRAWN BY
rMc/SC

CHECKED BY
JA/RT

DATE
2017/06/05

SHEET NO.
S4.2

SHEET OF SHEETS

1/4/2018 2:45:41 PM C:\Users\Lee\Documents\17016 - Aries, 24x40 PC - MainFile - Low Seismic_Lee.rvt

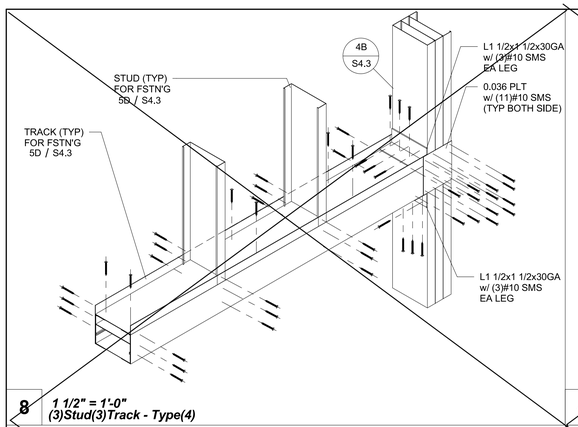

8 *1 1/2" = 1'-0"*
(3)Stud(3)Track - Type(4)

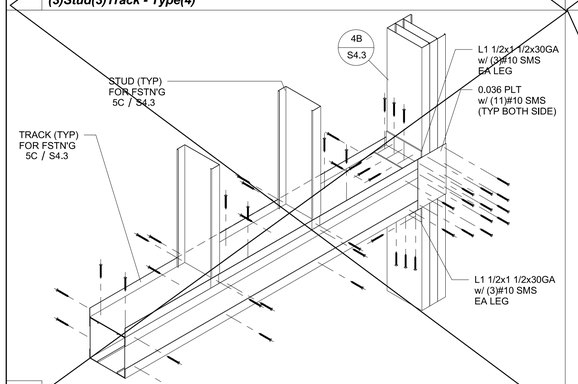

7 *1 1/2" = 1'-0"*
(3)Track(2)Stud - Type(3)

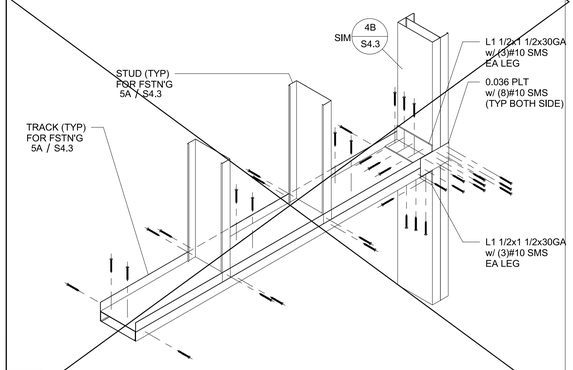

6 *1 1/2" = 1'-0"*
(2)Track(1)Stud - Type(2)

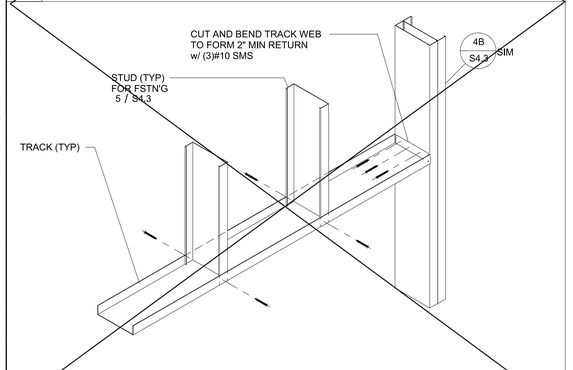

5 *1 1/2" = 1'-0"*
Single Track - Type(1)

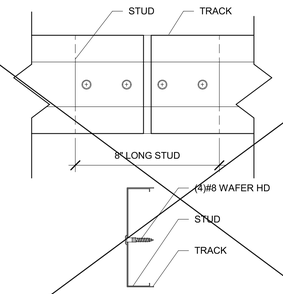

4 *3" = 1'-0"*
Track Splice

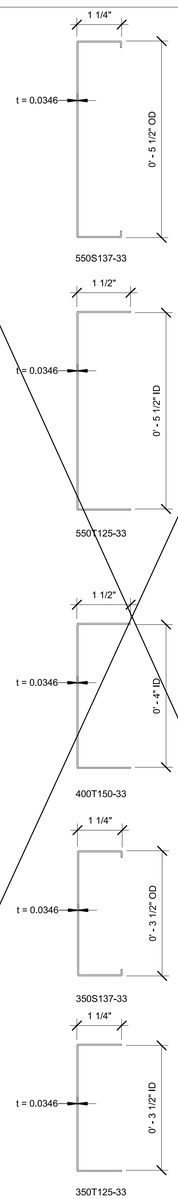

3 *6" = 1'-0"*
STUD AND TRACK

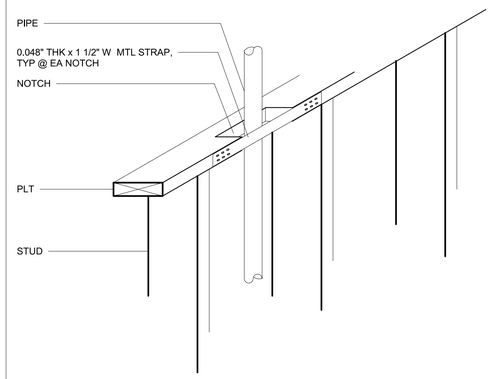

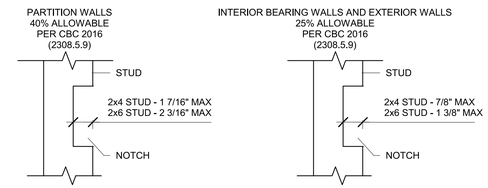

2 *1 1/2" = 1'-0"*
Plt Notch

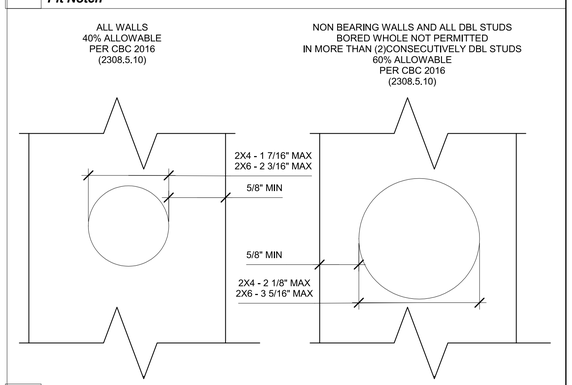

1 *6" = 1'-0"*
Stud Penetration

IDENTIFICATION STAMP
DIV. OF THE STATE ARCHITECT
APP: 03-121617 INC:
REVIEWED FOR
SS ☑ FLS ☑ ACS ☑
DATE: 08/02/2021

PROFESSIONAL STAMP

REGISTERED PROFESSIONAL ENGINEER
MANNY D. FRANCO
C-43801
STRUCTURAL
STATE OF CALIFORNIA

12/19/2017

THE PLANS, IDEAS & DESIGNS SHOWN ON THESE DRAWINGS ARE THE PROPERTY OF R&S TAVARES ASSOCIATES, INC. DEVISED SOLELY FOR THIS CONTRACT. THESE PLANS SHALL NOT BE USED, IN WHOLE OR IN PART, FOR ANY PURPOSE FOR WHICH THEY WERE NOT INTENDED WITHOUT THE EXPRESS WRITTEN CONSENT OF R&S TAVARES ASSOCIATES, INC. ©

CLIENT

CLASS LEASING LLC
1221 Harley Knox Boulevard
Perris, CA 92571

R&S TAVARES ASSOCIATES
DESIGN ◆ CONSULTING ◆ PROJECT
11777 Bernardo Plaza Court, Suite 105
San Diego, CA 92128
www.rstavares.com

ORIGINAL PC STATE AGENCY APPROVAL
FILE NUMBER: PC-128
IDENTIFICATION STAMP
DIVISION OF THE STATE ARCHITECT
04 - 116504 INCR: 0
AC RM FLS EA SSR KER
DATE 07/19/2018

PROJECT TITLE
24' x 40'
EXPANDABLE TO
120' x 40'

PRE-CHECK (PC) DOCUMENT
Code: [2016] **CBC**
A separate project application for construction is required.

PROJECT SPECIFIC STATE AGENCY APPROVAL
IDENTIFICATION STAMP
DIV. OF THE STATE ARCHITECT
APP. 04-119993 INC:
REVIEWED FOR
SS ☑ FLS ☑ ACS ☑
DATE: 02/24/2021

Revision Schedule

#	Description	Date

SHEET TITLE
TYP FRAMING

PROJECT NUMBER
17016A

DRAWN BY
rMc/SC

CHECKED BY
JA/RT

DATE
2017/06/05

SHEET NO.
S4.4

SHEET OF SHEETS

12/18/2017 6:02:34 PM C:\Users\Lee\Documents\17016 - Aries, 24x40 PC - MainFile - Low Seismic_Lee.rvt

2x4 Interior Wall Opening Schedule

COL HEIGHT	OPN'G SIZE	HDR			SILL			FULL HEIGHT KING STUD		
		Lumber	Number	Type	Lumber	Number	Type	Lumber	Number	Type
9FT	3070	HF	1	#2	-	-	-	HF	2	#2
		DF	1	#2	-	-	-	DF	2	#2
	4070	HF	1	#2	-	-	-	HF	2	#2
		DF	1	#2	-	-	-	DF	2	#2
	6040	HF	2	#2	DF	2	#2	HF	2	#2
		DF	2	#2	DF	2	#2	DF	2	#2
	8040	HF	3	#2	HF	3	#2	HF	2	#2
		DF	3	#2	DF	3	#2	DF	2	#2
10FT	3070	HF	1	#2	-	-	-	HF	2	#2
		DF	1	#2	-	-	-	DF	2	#2
	4070	HF	1	#2	-	-	-	HF	2	#2
		DF	1	#2	-	-	-	DF	2	#2
	6040	HF	2	#2	HF	2	#2	HF	2	#2
		DF	2	#2	DF	2	#2	DF	2	#2
	8040	HF	3	#2	HF	3	#2	HF	2	#2
		DF	3	#2	DF	3	#2	DF	2	#2

2x6 Exterior Wall Opening Schedule (SHTH'G FINISH)

COL HEIGHT	OPN'G SIZE	HDR			SILL			FULL HEIGHT KING STUD		
		Lumber	Number	Type	Lumber	Number	Type	Lumber	Number	Type
9FT	3070	HF	1	#2	HF	1	#2	HF	1	#2
		DF	1	#2	DF	1	#2	DF	1	#2
	4070	HF	1	#2	HF	1	#2	HF	1	#2
		DF	1	#2	DF	1	#2	DF	1	#2
	6040	HF	1	#2	HF	1	#2	HF	1	#2
		DF	1	#2	DF	1	#2	DF	1	#2
	8040	HF	2	#2	HF	1	#2	HF	2	#2
		DF	2	#2	DF	1	#2	DF	2	#2
10FT	3070	HF	1	#2	HF	1	#2	HF	1	#2
		DF	1	#2	DF	1	#2	DF	1	#2
	4070	HF	1	#2	HF	1	#2	HF	1	#2
		DF	1	#2	DF	1	#2	DF	1	#2
	6040	HF	2	#2	HF	1	#2	HF	2	#2
		DF	2	#2	DF	1	#2	DF	2	#2
	8040	HF	3	#2	HF	1	#2	HF	2	#2
		DF	3	#2	DF	1	#2	DF	2	#2

2x6 Exterior Wall Opening Schedule (PLASTER FINISH)

COL HEIGHT	OPN'G SIZE	HDR			SILL			FULL HEIGHT KING STUD		
		Lumber	Number	Type	Lumber	Number	Type	Lumber	Number	Type
9FT	3070	HF	1	#2	HF	1	#2	HF	1	#2
		DF	1	#2	DF	1	#2	DF	1	#2
	4070	HF	1	#2	HF	1	#2	HF	1	#2
		DF	1	#2	DF	1	#2	DF	1	#2
	6040	HF	2	#2	HF	1	#2	HF	2	#2
		DF	2	#2	DF	1	#2	DF	1	#2
	8040	HF	3	#2	HF	1	#2	HF	2	#2
		DF	3	#2	DF	1	#2	DF	2	#2
10FT	3070	HF	1	#2	HF	1	#2	HF	2	#2
		DF	1	#2	DF	1	#2	DF	1	#2
	4070	HF	1	#2	HF	1	#2	HF	2	#2
		DF	1	#2	DF	1	#2	DF	1	#2
	6040	HF	2	#2	HF	1	#2	HF	2	#2
		DF	2	#2	DF	1	#2	DF	2	#2
	8040	HF	3	#2	HF	1	#2	HF	2	#2
		DF	3	#2	DF	1	#2	DF	2	#2

2x4 Interior Wall Framing Schedule

COL HEIGHT	Typical Location				4ft From Building Corner			
	Lumber	Number	Type	Spacing	Lumber	Number	Type	Spacing
9	HF	1	#2	16" O.C.	-	-	-	-
	DF	1	#2	16" O.C.	-	-	-	-
10	HF	1	#2	16" O.C.	-	-	-	-
	DF	1	#2	16" O.C.	-	-	-	-

2x6 Exterior Wall Framing Schedule (SHTH'G FINISH)

COL HEIGHT	Typical Location				4.8ft From Building Corner			
	Lumber	Number	Type	Spacing	Lumber	Number	Type	Spacing
9	HF	1	#2	16" O.C.	HF	1	#2	16" O.C.
	DF	1	#2	16" O.C.	DF	1	#2	16" O.C.
10	HF	1	#2	16" O.C.	HF	1	#2	16" O.C.
	DF	1	#2	16" O.C.	DF	1	#2	16" O.C.

2x6 Exterior Wall Framing Schedule (PLASTER FINISH)

COL HEIGHT	Typical Location				4.8ft From Building Corner			
	Lumber	Number	Type	Spacing	Lumber	Number	Type	Spacing
9	HF	1	#2	16" O.C.	HF	1	#2	16" O.C.
	DF	1	#2	16" O.C.	DF	1	#2	16" O.C.
10	HF	1	#2	16" O.C.	HF	1	#2	16" O.C.
	DF	1	#2	16" O.C.	DF	1	#2	16" O.C.

NOTE: SEE DETAIL 1 ON SHEETS A2.1 - A2.8

☐ 350 Interior Wall Opening Schedule --Studs = 350S137-33 --Track = 350T125-33

Col Ht	Opn'g Size	HDR		SILL		FULL HEIGHT KING STUD		
		Type	Reference	Type	Reference	Type	Num.	Size
9'- 0"	3070	1	5	N/A	N/A	Stud	(2)	350S137-33
	4070	1	5	N/A	N/A	Stud	(2)	350S137-33
	6040	2	6	2	6	Stud	(3)	350S137-33
	8040	3	8	3	8	Stud	(3)	350S137-33
10'- 0"	3070	1	5	N/A	N/A	Stud	(2)	350S137-33
	4070	2	5	N/A	N/A	Stud	(2)	350S137-33
	6040	2	6	2	6	Stud	(3)	350S137-33
	8040	4	8	4	8	Stud	(4)	350S137-33

☐ 550 Exterior Wall Opening Schedule (SHTH'G FINSIH) --Studs = 550S137-33 --Track = 550T125-33

Col Ht	Opn'g Size	HDR		SILL		FULL HEIGHT KING STUD		
		Type	Reference	Type		Type	Num.	Size
9'- 0"	3070	1	5	N/A	N/A	Stud	(2)	550S137-33
	4070	1	5	N/A	N/A	Stud	(2)	550S137-33
	6040	2	6	2	6	Stud	(3)	550S137-33
	8040	3	6	3	6	Stud	(3)	550S137-33
10'- 0"	3070	1	5	N/A	N/A	Stud	(2)	550S137-33
	4070	2	5	N/A	N/A	Stud	(2)	550S137-33
	6040	2	6	2	6	Stud	(3)	550S137-33
	8040	4	6	4	6	Stud	(4)	550S137-33

☐ 550 Exterior Wall Opening Schedule (PLASTER FINSIH) --Stud = 550S137-33 --Track = 550T125-33

Col Ht	Opn'g Size	HDR		SILL		FULL HEIGHT KING STUD		
		Type		Type		Type	Num.	Size
9'- 0"	3070	1	5	N/A	N/A	Stud	(2)	550S137-33
	4070	1	5	N/A	N/A	Stud	(2)	550S137-33
	6040	2	6	2	6	Stud	(3)	550S137-33
	8040	3	6	3	6	Stud	(3)	550S137-33
10'- 0"	3070	1	5	N/A	N/A	Stud	(2)	550S137-33
	4070	2	5	N/A	N/A	Stud	(2)	550S137-33
	6040	2	6	2	6	Stud	(3)	550S137-33
	8040	4	6	4	6	Stud	(4)	550S137-33

☐ 350 Interior Wall Framing Schedule

Column Height	Typ Wall Framing				4" From Corner Stud			
	Size	Number	Type	Spacing	Lumber	Number	Type	Spacing
9'- 0"	350S137-33	(1)	Stud	16" o/c	-	-	-	-
10'- 0"	350S137-33	(1)	Stud	16" o/c	-	-	-	-

☐ 550 Exterior Wall Framing Schedule (SHTH'G FINISH)

Column Height	Typ Wall Framing				4" From Corner Stud			
	Size	Number	Type	Spacing	Lumber	Number	Type	Spacing
9'- 0"	550S137-33	(1)	Stud	16" o/c	550S137-33	(1)	Stud	16" o/c
10'- 0"	550S137-33	(1)	Stud	16" o/c	550S137-33	(1)	Stud	16" o/c

☐ 550 Exterior Wall Framing Schedule (PLASTER FINISH)

Column Height	Typ Wall Framing				4" From Corner Stud			
	Size	Number	Type	Spacing	Lumber	Number	Type	Spacing
9'- 0"	550S137-33	(1)	Stud	16" o/c	550S137-33	(1)	Stud	16" o/c
10'- 0"	550S137-33	(1)	Stud	16" o/c	550S137-33	(1)	Stud	16" o/c

IDENTIFICATION STAMP
DIV. OF THE STATE ARCHITECT
APP: 03-121617 INC:
REVIEWED FOR
SS ☑ FLS ☑ ACS ☑
DATE: 08/02/2021

PROFESSIONAL STAMP

REGISTERED PROFESSIONAL ENGINEER MANNY D. FRANCO C-42380 STRUCTURAL STATE OF CALIFORNIA

12/19/2017

THE PLANS, IDEAS & DESIGNS SHOWN ON THESE DRAWINGS ARE THE PROPERTY OF R&S TAVARES ASSOCIATES, INC. DEVISED SOLELY FOR THIS CONTRACT. THESE PLANS SHALL NOT BE USED, IN WHOLE OR IN PART, FOR ANY PURPOSE FOR WHICH THEY WERE NOT INTENDED WITHOUT THE EXPRESS WRITTEN CONSENT OF R&S TAVARES ASSOCIATES, INC. ©

CLIENT

CLASS LEASING LLC
1221 Harley Knox Boulevard
Perris, CA 92571

R&S TAVARES ASSOCIATES
DESIGN ▲ CONSULTING ▲ PROJECT
11777 Bernardo Plaza Court, Suite 105
San Diego, CA 92128
www.rstavares.com

ORIGINAL PC STATE AGENCY APPROVAL
FILE NUMBER: PC-128
IDENTIFICATION STAMP
DIVISION OF THE STATE ARCHITECT
04 - 116504 INCR: 0
AC RM FLS EA SSR KER
DATE 07/19/2018

PROJECT TITLE
24' x 40'
EXPANDABLE TO
120' x 40'

PRE-CHECK (PC) DOCUMENT
Code: [2016] CBC
A separate project application for construction is required.

PROJECT SPECIFIC STATE AGENCY APPROVAL
IDENTIFICATION STAMP
DIV. OF THE STATE ARCHITECT
APP. 04-119993 INC:
REVIEWED FOR
SS ☑ FLS ☑ ACS ☑
DATE 02/24/2021

Revision Schedule

#	Description	Date

SHEET TITLE
FRAMING SCHEDULES

PROJECT NUMBER
17016A

DRAWN BY
rMc/SC

CHECKED BY
JA/RT

DATE
2017/06/05

SHEET NO.
S4.5

SHEET OF SHEETS

C:\Users\Lee\Documents\17016 - Aries, 24x40 PC - MainFile - Low Seismic_Lee.rvt

12/18/2017 6:02:38 PM

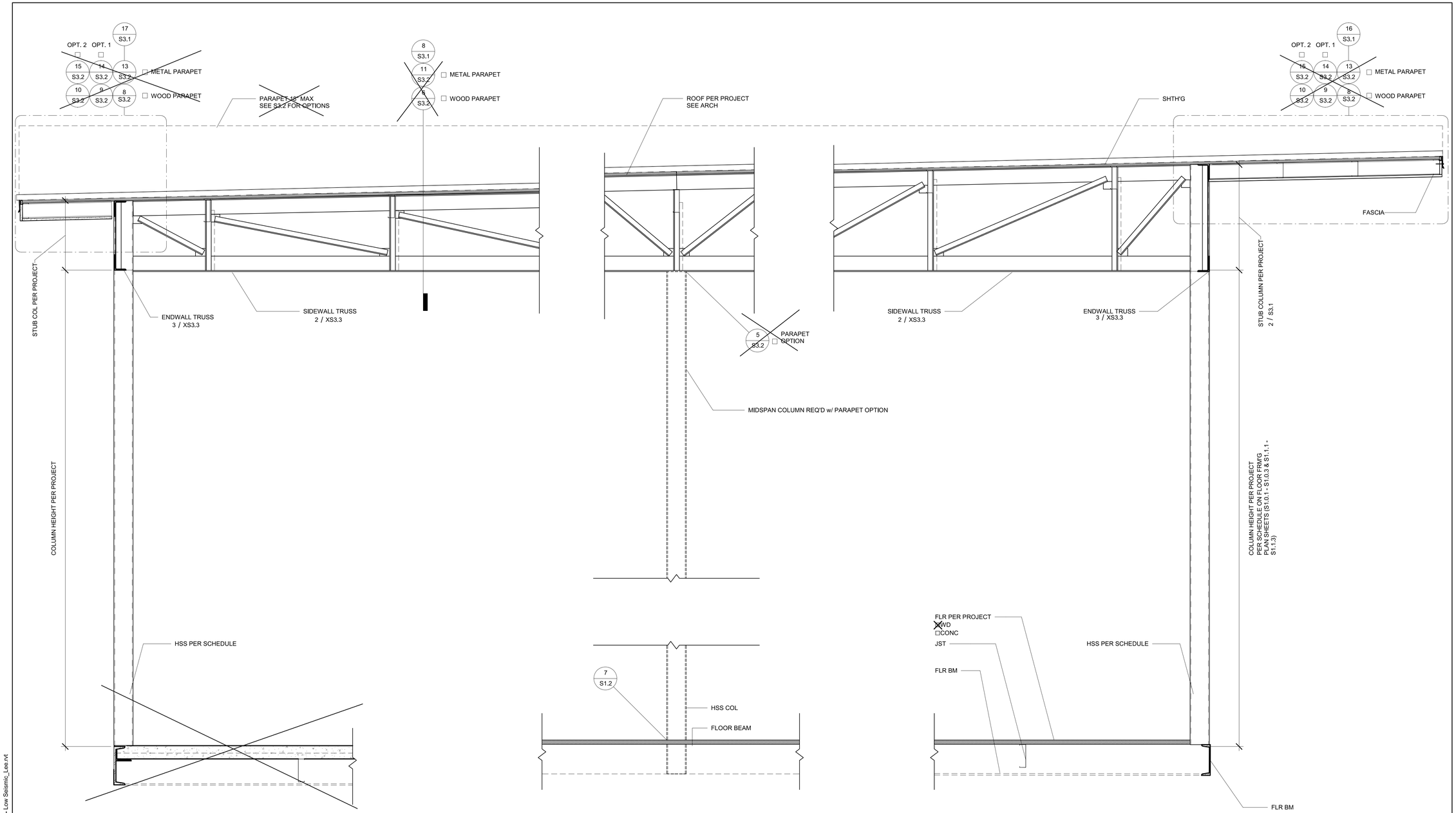

1 1" = 1'-0"
Structural Section (MONO)

1/5/2018 11:34:51 AM C:\Users\Lee\Documents\17016 - Aries, 24x40 PC - MainFile - Low Seismic_Lee.rvt

IDENTIFICATION STAMP
DIV. OF THE STATE ARCHITECT
APP: 03-121617 INC:
REVIEWED FOR
SS ☑ FLS ☑ ACS ☑
DATE: 08/02/2021

PROFESSIONAL STAMP

REGISTERED PROFESSIONAL ENGINEER
MANNY D. FRANCO
C-23801
STRUCTURAL
STATE OF CALIFORNIA

12/19/2017

THE PLANS, IDEAS & DESIGNS SHOWN ON THESE DRAWINGS ARE THE PROPERTY OF R&S TAVARES ASSOCIATES, INC. DEVISED SOLELY FOR THIS CONTRACT. THESE PLANS SHALL NOT BE USED, IN WHOLE OR IN PART, FOR ANY PURPOSE FOR WHICH THEY WERE NOT INTENDED WITHOUT THE EXPRESS WRITTEN CONSENT OF R&S TAVARES ASSOCIATES, INC. ©

CLIENT

CLASS LEASING LLC
1221 Harley Knox Boulevard
Perris, CA 92571

R&S TAVARES ASSOCIATES
DESIGN ◆ CONSULTING ◆ PROJECT
11777 Bernardo Plaza Court, Suite 105
San Diego, CA 92128
www.rstavares.com

ORIGINAL PC STATE AGENCY APPROVAL
FILE NUMBER: PC-128
IDENTIFICATION STAMP
DIVISION OF THE STATE ARCHITECT
04 - 116504 INCR: 0
AC RM FLS EA SSR KER
DATE 07/19/2018

PROJECT TITLE
24' x 40'
EXPANDABLE TO
120' x 40'

PRE-CHECK (PC) DOCUMENT
Code: [2016] CBC
A separate project application for construction is required.

PROJECT SPECIFIC STATE AGENCY APPROVAL
IDENTIFICATION STAMP
DIV. OF THE STATE ARCHITECT
APP: 04-119993 INC:
REVIEWED FOR
SS ☑ FLS ☑ ACS ☑
DATE: 02/24/2021

Revision Schedule

#	Description	Date

SHEET TITLE
LONG. SECTION - (MONO)

PROJECT NUMBER
17016A

DRAWN BY
rMc/SC

CHECKED BY
JA/RT

DATE
2017/06/05

SHEET NO.
S5.0

SHEET OF SHEETS

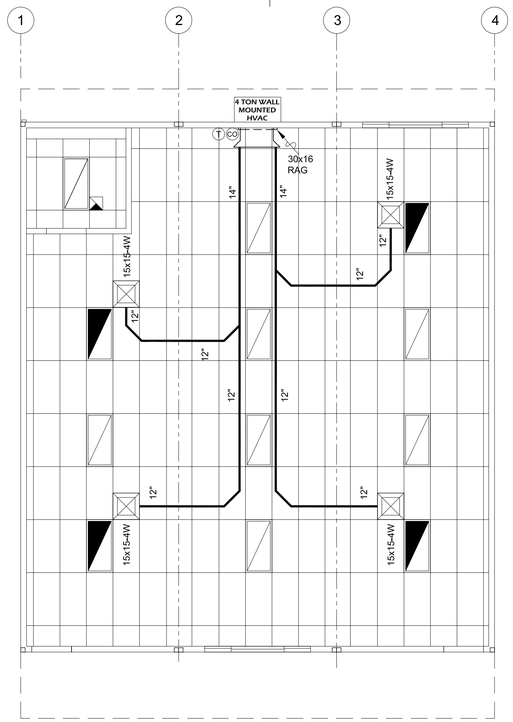

MECHANICAL LEGEND - SEE M0.1

- (T) WALL MOUNTED THERMOSTAT AT +48" AFF TO TOP OF DEVICE MAXIMUM
- (CO) WALL MOUNTED CARBON MONOXIDE SENSOR AT +48" AFF TO TOP OF DEVICE MAXIMUM
- SUPPLY AIR GRILLE IN CEILING WITH INTEGRAL DAMPER
- 12" EXHAUST AIR DUCT (NUMBER INDICATES DUCT SIZE)

REF.: DSA A# - 04-116504 } SHEET M6.1 **MECHANICAL PLAN** SCALE: 3/16" = 1'-0" | 3

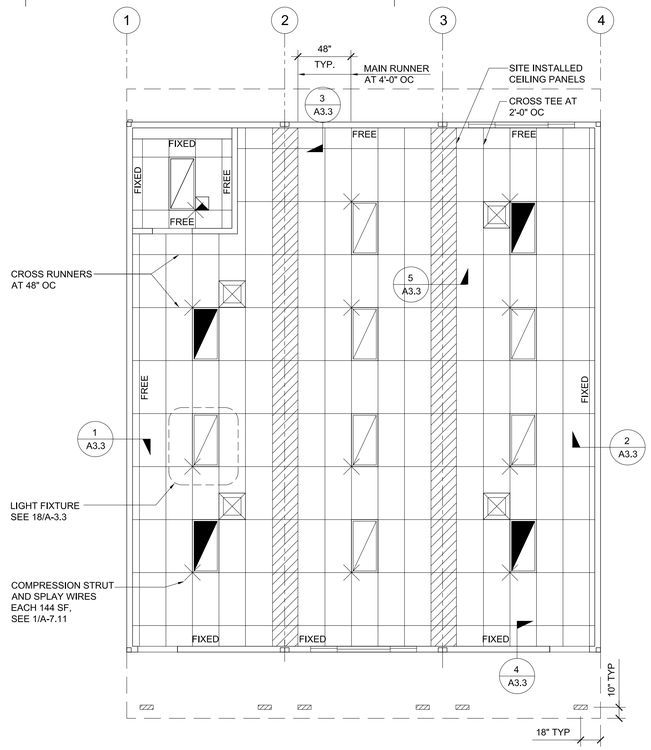

REF.: DSA A# - 04-116504 } SHEET A3.2 **REFLECTED CEILING PLAN** SCALE: 3/16" = 1'-0" | 2

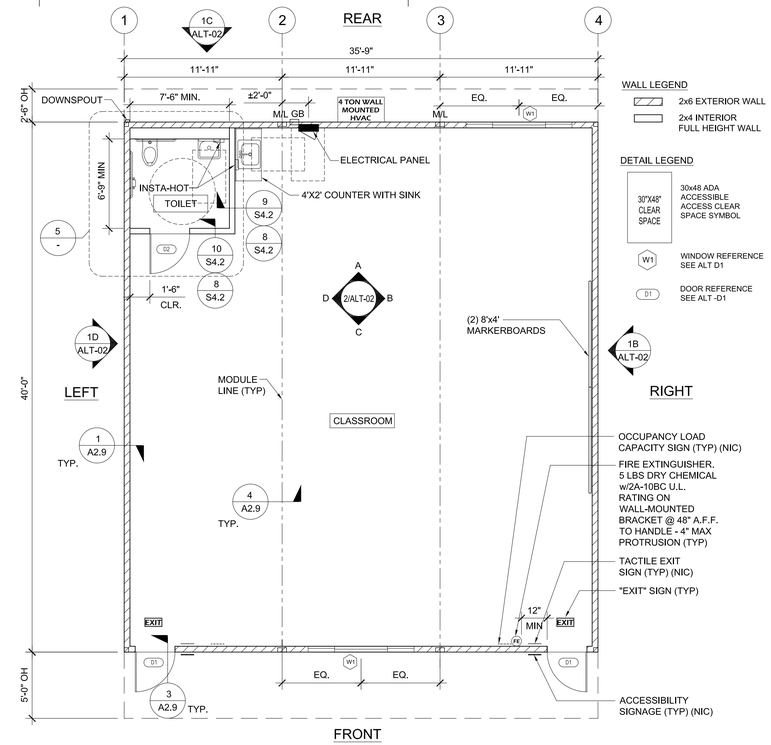

REF.: DSA A# - 04-116504 } SHEET A1.1 **FLOOR PLAN** SCALE: 3/16" = 1'-0" | 1

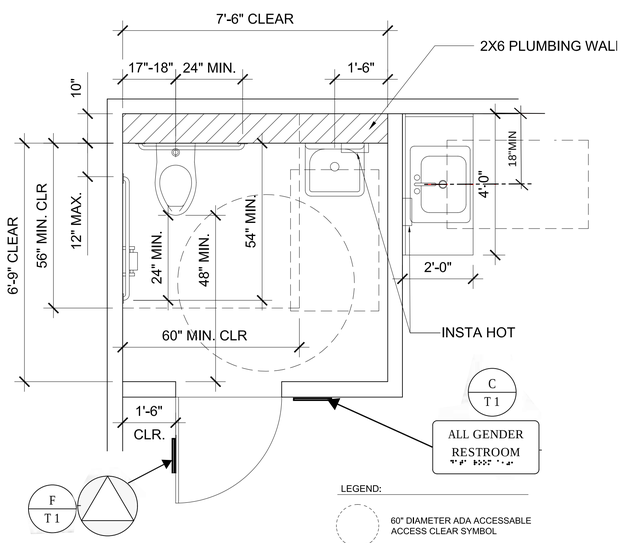

REFER TO PC PLUMBING FIXTURE HEIGHTS AND ACCESSIBILTY SHEET A3.1

ENLARGED TOILET PLAN SCALE: 1/2" = 1'-0" | 5

ELECTRICAL LEGEND - SEE SHEET E1.2 & E1.3

- 2X4 CEILING LIGHT, LED LAY IN LIGHT FIXTURE AND 90 MINUTE BATTERY BACKUP EMERGENCY LIGHT
- 2X4 CEILING LIGHT, LED LAY IN LIGHT FIXTURE
- 100A - SINGLE PHASE - ELECTRICAL PANEL AT +60" TO TOP OF PANEL
- $D DIMMER ELECTRICAL SWITCH AT +48" AFF TO TOP OF SWITCH BOX
- $M MOTION ELECTRICAL SWITCH AT +48" AFF TO TOP OF SWITCH BOX
- EXIT EXIT SIGN WITH BATTERY BACK UP. EXIT SIGN REQUIRED FOR CLASSROOMS WITH TWO OR MORE EXTERIOR DOORS (CLASSROOMS WITH ONE EXTERIOR DOOR - OPTIONAL)
- DUPLEX OUTLET AT 18" AFF TO CENTERLINE OF BOX U.N.O. 1. (ROT) = OUTLET ROTATED 90 DEGREES AS NOTED 2. TOB - TOP OF BOX AS NOTED
- WP EXTERIOR WEATHER PROOF GFI RECEPTACLE AT +24" A.F.F FOR A/C SERVICES (MAX. 25'-9" FROM UNITS)
- GFI GFCI DUPLEX OUTLET AT 18" AFF TO CENTERLINE OF BOX U.N.O. 1. (ROT) = OUTLET ROTATED 90 DEGREES AS NOTED 2. TOB - TOP OF BOX AS NOTED
- (PC) CEILING MOUNTED PHOTOCELL, WATTSTOPPER #LMLS-500 OR EQUAL
- (OS) CEILING MOUNTED OCCUPANCY SENSOR WATTSTOPPER #LMPC-100 OR EQUAL
- 100 CFM CEILING MOUNTED EXHAUST FAN INTERLOCKED WITH LIGHT SWITCH, TYPE EF-D
- CLOCK OUTLET +90" A.F.F. TO CENTERLINE OF DEVICE
- EXTERIOR LIGHT WITH 90 MINUTE BATTERY BACKUP

PANEL: A	PHASE:			VOLTS:		BUSS:			MAIN:				LOCATION:		FEED:				MOUNTING:
S/ M:	SINGLE			120/ 208		100 AMP			BREAKER				INTERIOR		REAR				RECESSED
OBJECT DESCRIPTION	WATT PER	NO. OF	LCL	WATTS A	WATTS B	BRK	POLE	WIRE SIZE	CKT NO	LEG A	LEG B	CKT NO	WIRE SIZE	POLE	BRK	WATTS A	WATTS B	LCL	NO OF	WATT PER	OBJECT DESCRIPTION
4 TON A/C	4638	1	x	4638		30	2	#6	1	X		2	#12	1	20	1260			7	180	RECEPTS DUPLEX
4 TON A/C	4638	/	x		4638	/	/	#6	3		X	4	#12	1	20		1080		6	180	RECEPTS DUPLEX
LIGHTS 2x4	136	12	x	1632		20	1	#12	5	X		6	#12	1	20	180			1	180	EXTERIOR GFI/WP
EXTERIOR LIGHTS	60	2	x		120	20	1	#12	7		X	8	#12	1	20		180		1	180	RECEPT DUPLEX/ DED
EXHAUST FAN	144	1	x	144		20	1	#12	9	X		10	#12	1	20	180			1	180	RECEPT DUPLEX/ DED
					0				11		X	12					0				FIRE ALARM
	LEG TOTALS			6414	4758											1620	1260	LEG TOTALS			
LCL=2793+14052=16845																					
TOTAL WATTS=16845						LEG BALANCE = 14.3%											TOTAL AMPS: 70.19				

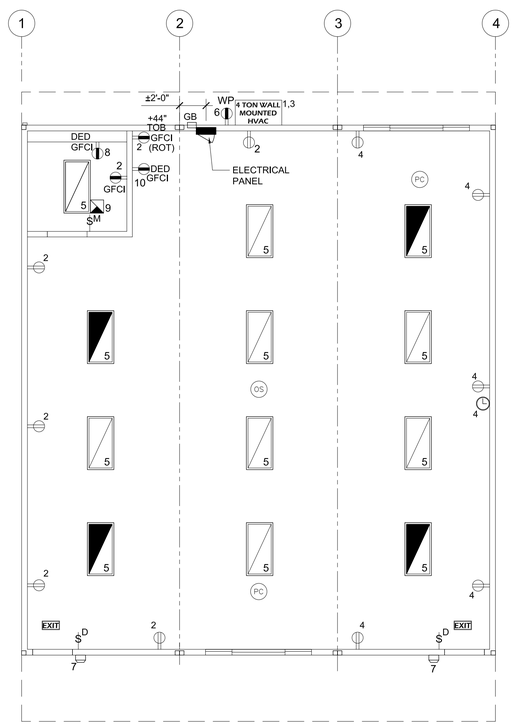

REF.: DSA A# - 04-116504 } SHEET E1.2 & E1.3 **ELECTRICAL PLAN** SCALE: 3/16" = 1'-0" | 4

IDENTIFICATION STAMP
DIV. OF THE STATE ARCHITECT
APP: 03-121617 INC:
REVIEWED FOR
SS ☑ FLS ☑ ACS ☑
DATE: 08/02/2021

REVISIONS	BY
1	
2	
3	
4	
5	
6	
7	
8	

TAVARES ASSOCIATES
DESIGN ◆ CONSULTING ◆ PROJECT
11777 BERNARDO PLAZA COURT, SUITE 105
SAN DIEGO, CA 92128
WWW.RSTAVARES.COM

Class L Leasing
1320 W. Oleander Ave. Perris, CA 92571-7408
VOICE (951)943-1908 FAX (951)943-5768

ENGINEER

REGISTERED PROFESSIONAL ENGINEER — MARIANO D. FRANCISCO — No. S3380 — STRUCTURAL — STATE OF CALIFORNIA

02/23/2021

AOR

IDENTIFICATION STAMP
DIV. OF THE STATE ARCHITECT
APP: 04-119993 INC:
REVIEWED FOR
SS ☑ FLS ☑ ACS ☑
DATE: 02/24/2021

36x40 CLASSROOM W/ TOILET AND ADDED COUNTER W/ SINK

SHEET TITLE:

FLOOR PLAN, REFECTED CEILING PLAN, MECHANICAL PLAN & ELECTRICAL PLAN

DATE: 01-19-21

DRAWN BY: EDDIE LOPEZ

SCALE: AS SHOWN

JOB:

SHEET NO:

ALT-01

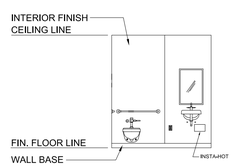

A

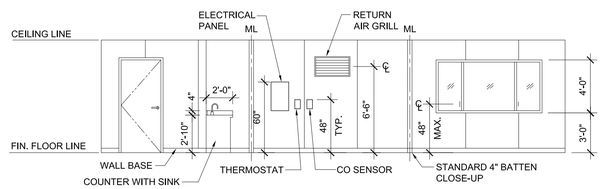

A

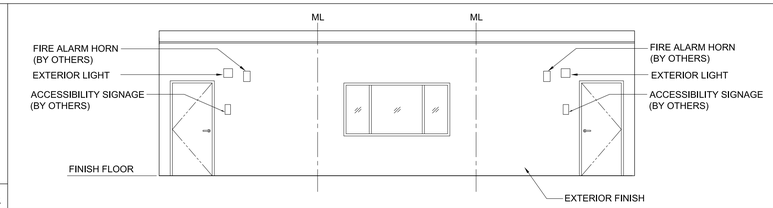

FRONT

A

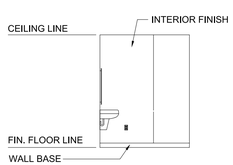

B

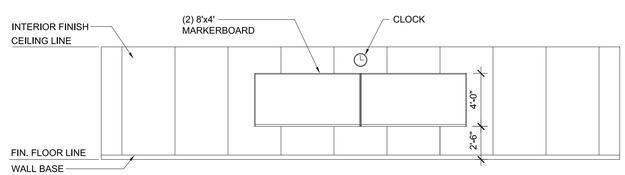

B

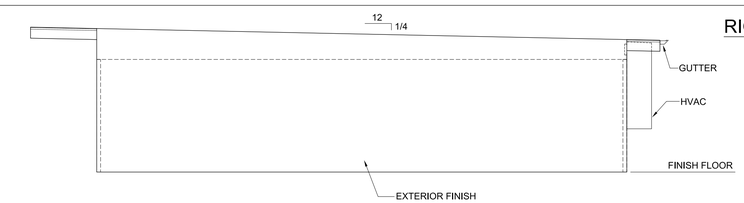

RIGHT

B

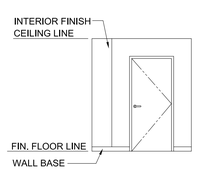

C

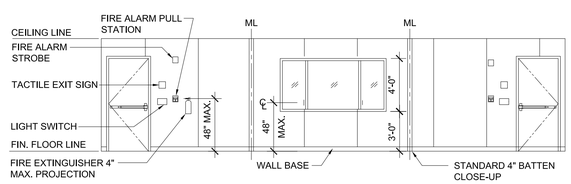

C

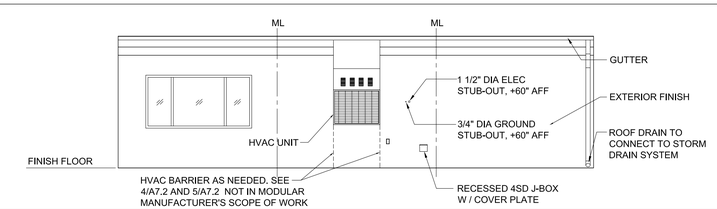

REAR

C

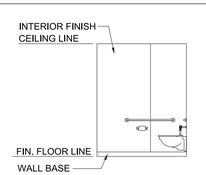

REFER TO PC PLUMBING FIXTURE HEIGHTS AND ACCESSIBILTY SHEET A3.1

D

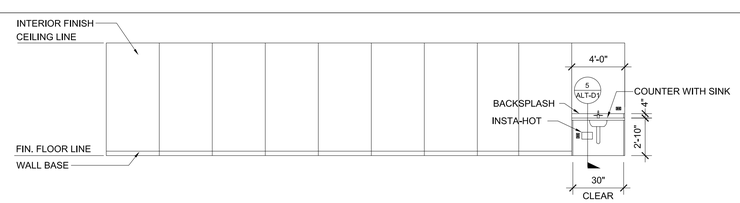

D

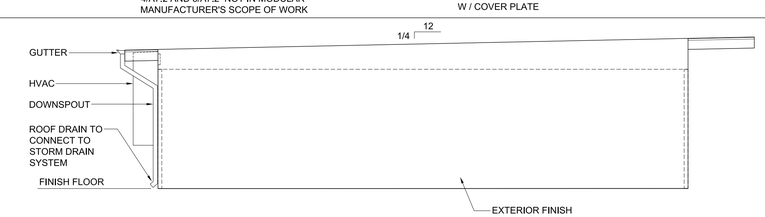

LEFT

D

INT. ELEVATIONS (TOILET) SCALE: 3/16" = 1'-0" 3

REF.: DSA A# - 04-116504 } SHEET A5.2

INTERIOR ELEVATIONS SCALE: 3/16" = 1'-0" 2

REF.: DSA A# - 04-116504 } SHEET A5.0 & A5.1

EXTERIOR ELEVATIONS SCALE: 3/16" = 1'-0" 1

IDENTIFICATION STAMP
DIV. OF THE STATE ARCHITECT
APP: 03-121617 INC:
REVIEWED FOR
SS ☑ FLS ☑ ACS ☑
DATE: 08/02/2021

REVISIONS	BY
1	
2	
3	
4	
5	
6	
7	
8	

TAVARES ASSOCIATES
DESIGN ◆ CONSULTING ◆ PROJECT
11777 BERNARDO PLAZA COURT, SUITE 105
SAN DIEGO, CA 92128
WWW.RSTAVARES.COM

Class Leasing
1320 W. Oleander Ave. Perris, CA 92571-7408
VOICE (951)943-1908 FAX (951)943-5768

ENGINEER

REGISTERED PROFESSIONAL ENGINEER
MANNY D. FRESON
No. S3380
STRUCTURAL
STATE OF CALIFORNIA

02/23/2021

AOR

IDENTIFICATION STAMP
DIV. OF THE STATE ARCHITECT
APP. 04-119993 INC:
REVIEWED FOR
SS ☑ FLS ☑ ACS ☑
DATE: 02/24/2021

36x40 CLASSROOM W/ TOILET AND ADDED COUNTER W/ SINK

SHEET TITLE:

ELEVATIONS

DATE: 01-19-21

DRAWN BY: EDDIE LOPEZ

SCALE: AS SHOWN

JOB:

SHEET NO:

ALT-02

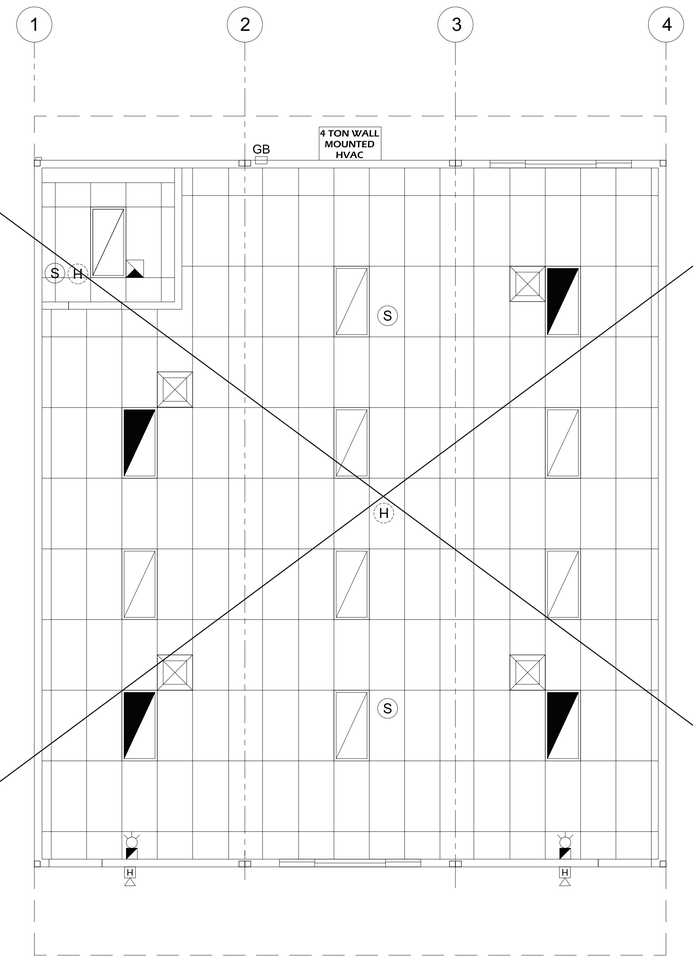

NOTE: FOR FIRE ALARM PLAN, REFER TO FA-2.1

FIRE ALARM LEGEND

GB	FIRE ALARM GUTTER BOX - RECESSED 4SD BOX W/ COVER FOR FIRE ALARM SYSTEM BY OTHERS. MOUNT AT 18" AFF U.N.O. TO CENTERLINE OF BOX. PROVIDE 1" CONDUIT STUB TO ATTIC SPACE W/ PULL STRING. FIRE ALARM SYSTEM IS A CLOSED SYSTEM. ALL DEVICES, WIRING AND INSTALLATION IS NOT IN MODULAR MANUFACTURERS SCOPE OF WORK.
H	HEAT DETECTOR IN ATIC W/ 3/4" CONDUIT AND PULLSTRING
S	SMOKE DETECTOR IN CEILING W/ 3/4" CONDUIT AND PULLSTRING
H	4SD J-BOX FOR EXTERIOR FIRE ALARM HORN (DEVICE BY OTHERS). MOUNT AT +90" AFF TO CENTERLINE OF DEVICE WITH 3/4" CONDUIT. ROUTED TO GUTTER BOX AT REAR OF BUILDING.
	4SD J-BOX FOR FIRE ALARM STROBE/HORN (DEVICE BY OTHERS). MOUNT AT +80" AFF TO BOTTOM OF DEVICE WITH 3/4" CONDUIT TO EXTERIOR FIRE ALARM HORN WITH PULLSTRING - ROUTED TO GUTTER BOX AT REAR OF BUILDING.
	4SD J-BOX FOR FIRE ALARM PULLSTATION (DEVICE BY OTHERS). MOUNT AT +48" AFF TO PULL HANDLE OF DEVICE WITH 3/4" CONDUIT TO FIRE ALARM STROBE WITH PULLSTRING - ROUTED TO GUTTER BOX AT REAR OF BUILDING.

FIRE ALARM PLAN

SCALE: 1/4" = 1'-0"

1

IDENTIFICATION STAMP
DIV. OF THE STATE ARCHITECT
APP: 03-121617 INC:
REVIEWED FOR
SS ☑ FLS ☑ ACS ☑
DATE: 08/02/2021

REVISIONS	BY
1	
2	
3	
4	
5	
6	
7	
8	

R&S TAVARES ASSOCIATES
DESIGN ◆ CONSULTING ◆ PROJECT
11777 BERNARDO PLAZA COURT, SUITE 105
SAN DIEGO, CA 92128
WWW.RSTAVARES.COM

Class Leasing

1320 W. Oleander Ave. Perris, CA 92571-7408
VOICE (951)943-1908 FAX (951)943-5768

ENGINEER

REGISTERED PROFESSIONAL ENGINEER
MANNY D. FRANCISCO
No. 53380
STRUCTURAL
STATE OF CALIFORNIA

02/23/2021

AOR

IDENTIFICATION STAMP
DIV. OF THE STATE ARCHITECT
APP. 04-119993 INC:
REVIEWED FOR
SS ☑ FLS ☑ ACS ☑
DATE: 02/24/2021

36x40 CLASSROOM W/ TOILET AND ADDED COUNTER W/ SINK

SHEET TITLE:

FIRE ALARM PLAN

DATE: 01-19-21

DRAWN BY: EDDIE LOPEZ

SCALE: AS SHOWN

JOB:

SHEET NO:

ALT-03

DOOR SCHEDULE

MARK	TYPE	WIDTH	HEIGHT	DOOR MATERIAL	FRAME TYPE	WALL THICKNESS	HARDWARE	QTY.
D1	A	3'-0"	7'-0"	18GA HOLLOW METAL	KNOCKDOWN	7"	HW1	2
D2	B	3'-0"	7'-0"	18GA HOLLOW METAL	KNOCKDOWN	5"	HW2	1

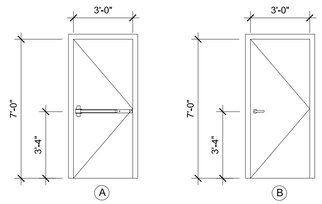

1. ALL DOORS SHALL COMPLY WITH CBC SECTION 11B-404 AND 1-3/4" THK (UNO)
2. CENTER ALL DOOR LEVERS FOR ACCESS AND LOCKING @ 40" ABOVE FINISH FLOOR. ALL HARDWARE SHALL OPEN FROM THE INTERIOR AND NOT REQUIRE ANY SPECIFIC KNOWLEDGE OF THE HARDWARE OR REQUIRE ANY SPECIAL EFFORT FOR EGRESS. THE LEVER OF LEVER-ACTUATED LEVERS OR LOCKS SHALL BE CURVED WITH A RETURN TO WITHIN 1/2" OF THE FACE OF THE DOOR TO PREVENT CATCHING ON THE CLOTHING (ETC.) OF PERSONS DURING EGRESS. THE LEVER OF LEVER-ACTUATED LEVERS OR LOCKS SHALL EXTEND AT A MINIMUM OF ONE-HALF THE DOOR WIDTH.
3. PER CBC 1008.1.10 FOR ANY ROOM CONFIURATION WHICH PROVIDES AN OCCUPANT LOAD OF 50 OR GREATER SHALL NOT BE PROVIDED WITH A LATCH OR LOCK UNLESS IT IS PANIC HARDWARE OR FIRE EXIT HARDWARE AND COMPLY WITH ALL REQUIREMENTS OF SECTION 11B-309 OF THE CBC. ALL HARDWARE SHALL COMPLY WITH HARDWARE SCHEDULE THIS SHEET.
4. PER CBC 11B-309.4 THE FORCE REQUIRED TO ACTIVATE OPERABLE PARTS SHALL BE 5 POUNDS (22.2N) MAX.
5. PER CBC 11B-404.2.8.2 DOOR SPRING HINGES SHALL BE ADJUSTED SO THAT FROM THE OPEN POSITION OF 70 DEGREES, THE DOOR SHALL MOVE TO THE CLOSE POSITION IN 1.5 SECONDS MINIMUM. ALL CLOSER MUST COMPLY WITH CBC 11B-404.2.8.1 - DOOR CLOSER AND GATE CLOSERS SHALL BE ADJUSTED SO THAT FROM AN OPEN POSITION OF 90 DEGREES, THE TIME REQUIRED TO MOVE THE DOOR TO A POSITION OF 12 DEGREES FROM THE LATCH IS 5 SECONDS OR LESS.
6. THE MAXIMUM AREA OF EXTERIOR WALL OPENING PER CBC TABLE 705.8 AND THE FIRE PROTECTION FOR EXTERIOR WALL PER CBC TABLE 602. ALL FIRE PROTECTION BASED ON THE FIRE SEPARATION DISTANCE.
7. DOOR LOCATION MAY VARY BASED ON PROJECT REQUIREMENTS.
8. (PH) ON PLANS THE SHEET INDICATED REQUIRED PANIC HARDWARE.
9. PROVIDE EXIT SIGNS AS REQUIRED PER CBC SECTION 1013.4. SEE DETAILS PER A0.2
10. ALL EXIT DOORS SHALL BE OPENABLE FROM INSIDE W/O ANY USE OF SPECIAL TOOLS, KNOWLEDGE OR EFFORT.

DOORS | 1

EXTERIOR DOOR W/PANIC HARDWARE - HW1:

3 HAGAR BB1279 4.5 x 4.5 NRP 626
1 VON DUPRIN AX-PA 99L-2 626
2 SCHLAGE RIM CYLINDER 20022 C123 626 1-BITTED
1 NORTON 8501DA 689
1 HAGAR 190S 10 x 34 630
1 PEMCO 315CN 36
1 HAGAR 891SAV 3684
1 HAGAR 413SA 36

INTERIOR RESTROOM DOOR - HW2:

3 HAGAR 1279 4.5 x 4.5 626
1 SCHLAGE ND40S RHO 626
1 NORTON 8501DA 689
1 HAGAR 190S 10 x 34 630

NOTE: ALL BUILDING ROOM DOORS SHALL BE LOCKABLE FROM INSIDE

DOOR HARDWARE | 2

WINDOW SCHEDULE

TYPE MARK	HEIGHT x WIDTH	FUNCTION	TYPE COMMENTS	GLAZING	WALL THICKNESS	QTY.	REMARKS
W1	8'-0" X 4'-0"	XOX	CLEAR ANODIZED ALUM. FRAME	*DP	6"	2	

WINDOW LOCATION MAY VARY BASED ON PROJECT REQUIREMENTS.

WINDOW - 3/4" INSULATING GLASS UNIT PERFORMANCE
U-VALUE: 0.35
SHGC: 0.24
VT: 0.5

T = TEMPERED GLASS

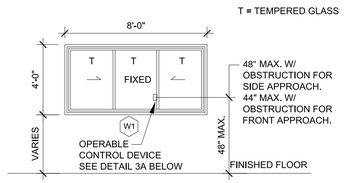

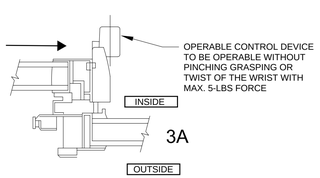

3A

WINDOWS | 3

FINISH SCHEDULE

BUILDING	ROOM	FLOORING		WALL FINISH	CEILING	
		FLOOR	BASE	WALL FINISH TYPE	HEIGHT	TYPE
36' x 40'	CLASSROOM	VCT	4" RUBBER WALL BASE	TACK	8'-6"	CP
36' x 40'	RESTROOM	SHEET VINYL	6" INTEGRAL COVE BASE	FRP	8'-0"	CP

ABBREVIATIONS:

WALLS

TACK: EXTERIOR WALL 1/2" VINYL TACKBOARD CLASS 1 OVER 1/2" GYPSUM BOARD BACKING

FRP: 1/8" FIBER REINFORCED PANEL OVER 1/2" WATER RESISTANT GYPSUM BOARD

CEILING

CP: ACOUSTICAL LAY IN GRID CEILING PANELS

FLOORING

VCT: VINYL COMPOSITION TILE

FINISH NOTES

1. ALL FINISHES SHALL COMPLY WITH CBC, TITLE 19, AND C.F.C.

2. PER ASTM D2047 ALL FLOORING WITH A COEFFICIENT OF FRICTION OF A MINIMUM OF 0.6 WILL BE CONSIDERED TO OBTAIN THE INTENT OF A SLIP RESISTANCE SURFACE.

3. FLOORING CONTRACTOR IS RESPONSIBLE FOR SUB-FLOORING PREPARATION. ALL PLYWOOD TO BE APA RATED AND COMPLY WITH PS1-09 PLYWOOD SURFACE TO BE CARPETED IS TO BE PLUGGED AND SANDED BY FLOORING CONTRACTOR. ALL DEFORMITIES OCCURRING DUE TO TO STANDARD CONSTRUCTION PRACTICES SHALL BE PLUGGED AND SANDED BY FLOOR CONTRACTOR. MATELINE JOINTS TO BE A MAX OF 1/8" AND SHALL BE PLUGGED AND SANDED BY FLOORING CONTRACTORS.

4. ALL CARPET AND FLOOR FINISH MUST COMPLY PER CBC SECTION 11B-302 FLOOR AND GROUND SURFACES. ALL CHANGES IN ELEVATION SHALL COMPLY WITH CBC SECTION 11B-303 CHANGES IN LEVEL.

EXTERIOR COLORS

EXTERIOR SELECTIONS	MATERIAL	COLOR
BODY OF BUILDING	WOOD SIDING	BABY SEAL - DE 6361
RAMPS & LANDINGS	METAL	BABY SEAL - DE 6361
TRIM	EXPOSED METALS OR MOLDINGS	SILVER SETTING - DE 6359
EXTERIOR DOORS	METAL	SILVER SETTING - DE 6359
DOOR FRAMES	METAL	SILVER SETTING - DE 6359

NOTE:
COLORS ARE BASED ON DUNN-EDWARDS

FINISH SCHEDULE | 4

RECOMMENDED ACCESSIBLE MOUNTING HEIGHT PER CBC TABLE 11B609.4

	TYPE	☒	☐	☐	☐	☐	☐
	AGE GROUP	CBC ADULT	AGE 12 AND UP	AGES 9 THROUGH 12	AGES 5 THROUGH 8	AGES 3 AND 4	AGES 5 AND 12
	TOILET CENTERING FROM WALL	17" - 18"	17" - 18"	15" - 18"	12" - 15"	12"	15"
	TOILET SEAT HEIGHT	17" - 19"	17" - 19"	15" - 17"	12" - 15"	11" - 12"	15"
	TOILET FRONT CLEARANCE	48"	48"	48"	48"	48"	48"
	GRAB BAR HEIGHT (TOP OF BAR)	33" - 36"	33" - 36"	25" - 27"	20" - 25"	18" - 20"	25"
	TOILET PAPER IN FRONT OF TOILET	7"-9"	7" - 9"	7" - 9"	7" - 9"	7" - 9"	7" - 9"
	TOILET PAPER DISPENSER HEIGHT (CENTER)	19" MIN.	19" MIN.	17" - 19"	14" - 17"	14"	17"
**	NAPKIN DISPOSAL IN FRONT OF TOILET	12" MAX.	12" MAX.	12" MAX.	N/A	N/A	12"MAX
**	NAPKIN DISPOSAL HEIGHT (TO TOP)	25"-30"	25"-30"	25"-30"	N/A	N/A	25"-30"
	MIRROR HEIGHT (TO REFLECTIVE SURFACE)	40" MAX.	40" MAX.	40" MAX.	36" MAX.	32" MAX.	36" MAX.
**	TOILET SEAT COVER DISPENSER HEIGHT	40" MAX	40" MAX	40" MAX	36" MAX	32" MAX	36" MAX
	*SINK (TOP)	34" MAX.	34" MAX.	34" MAX.	31" MAX.	*24" MAX.	31" MAX.
	*SINK (BOT)	29" MIN	29" MIN.	27" MIN.	24" MIN.	19" MIN.	27" MIN.
**	SOAP DISPENSER	40" MAX.	40" MAX.	40" MAX.	36" MAX.	32" MAX.	36" MAX.
**	HAND DRYER (TOP OF CONTROL)	40" MAX.	40" MAX.	40" MAX.	36" MAX.	32" MAX.	36" MAX.
**	NAPKIN DISPENSER HEIGHT (TOP OF DISP.)	40" MAX.	40" MAX.	40" MAX.	N/A	N/A	36" MAX
**	PAPER TOWEL DISPENSER HEIGHT	40" MAX.	40" MAX.	40" MAX.	36" MAX.	32" MAX.	36" MAX.

*SINK SHALL ACCOMMODATE SIDE APPROACH w/ 30x48 CLR SPACE

*SEE DETAIL THIS SHEET FOR DIMENSIONS AND NOTES ON KNEE AND TOE CLEARANCE

** ACCESSORIES ARE NOT IN MODULAR MFR. SCOPE OF WORK

MOUNTING HEIGHT SCHEDULE | 6

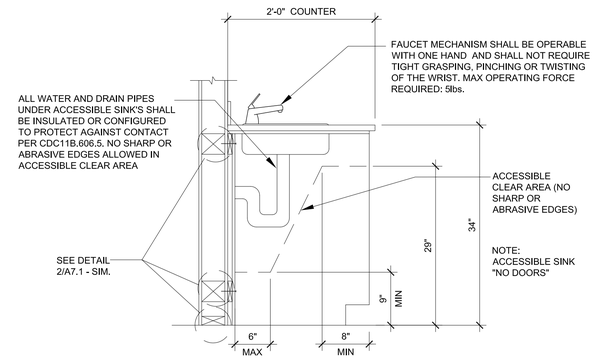

SEE SHEET A3.1 FOR PC APPROVED APPLICATION

SINK CABINET DETAIL | SCALE: 1" = 1'-0" | 5

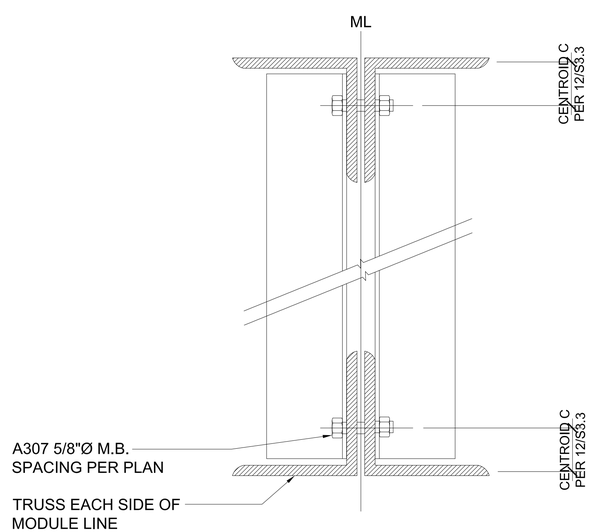

ROOF CONNECTION @ MOD LINE | 7

IDENTIFICATION STAMP
DIV. OF THE STATE ARCHITECT
APP: 03-121617 INC:
REVIEWED FOR
SS ☑ FLS ☑ ACS ☑
DATE: 08/02/2021

REVISIONS	BY
1	
2	
3	
4	
5	
6	
7	
8	

RS TAVARES ASSOCIATES
DESIGN ◆ CONSULTING ◆ PROJECT
11777 BERNARDO PLAZA COURT, SUITE 105
SAN DIEGO, CA 92128
WWW.RSTAVARES.COM

Class L Leasing
1320 W. Oleander Ave. Perris, CA 92571-7408
VOICE (951)943-1908 FAX (951)943-5768

ENGINEER

REGISTERED PROFESSIONAL ENGINEER
MARK B. FRANSEN
No. S3380
STRUCTURAL
STATE OF CALIFORNIA
02/23/2021

AOR

IDENTIFICATION STAMP
DIV. OF THE STATE ARCHITECT
APP. 04-119993 INC:
REVIEWED FOR
SS ☑ FLS ☑ ACS ☑
DATE: 02/24/2021

36x40 CLASSROOM W/ TOILET AND ADDED COUNTER W/ SINK

SHEET TITLE:
DOOR SCHEDULE, WINDOW SCHEDULE, FINISH SCHEDULE, MOUNTING HEIGHT SCHEDULE & DETAIL

DATE: 01-19-21

DRAWN BY: EDDIE LOPEZ

SCALE: AS SHOWN

JOB:

SHEET NO:
ALT-D1

Sheet List	
Sheet Number	Sheet Name
E2.3	120'x40' T24 CZ 16 (WALL AC)
E2.1	120'x40' T24 CZ 16 (WALL AC)
E2.2	120'x40' T24 CZ 16 (WALL AC)
Cover	
A0.0	COVER SHEET
A0.0.1	PROJECT OPTIONS SCHEDULE
A0.1	TYPICAL KEY PLAN AND SCHEDULES, GEN NOTES,
A0.2	SIGNAGE AND SYMBOLS
~~A0.3~~	~~DSA-103 T&I CONCRETE FLOORS~~
A0.4	DSA-103 T&I PLYWOOD FLOORS
A0.5	CALGREEN SPEC'S
Architectural	
~~A1.0~~	~~24x40 FLOOR PLAN~~
A1.1	36x40 FLOOR PLAN
~~A1.2~~	~~48x40 FLOOR PLAN~~
A2.1	ARCHITECTURAL DETAILS (WOOD FRAMING SHTG FINISH)
~~A2.2~~	~~ARCHITECTURAL DETAILS (WOOD FRAMING PLASTER FINISH)~~
~~A2.3~~	~~ARCHITECTURAL DETAILS (MTL FRAMING SHTG FINISH)~~
~~A2.4~~	~~ARCHITECTURAL DETAILS (MTL FRAMING PLASTER FINISH)~~
~~A2.5~~	~~ARCHITECTURAL DETAILS (1-HR WOOD FRAMING SHTG FINISH)~~
~~A2.6~~	~~ARCHITECTURAL DETAILS (1-HR WOOD FRAMING PLASTER FINISH)~~
~~A2.7~~	~~ARCHITECTURAL DETAILS (1-HR MTL FRAMING SHTG FINISH)~~
~~A2.8~~	~~ARCHITECTURAL DETAILS (1-HR MTL FRAMING PLASTER FINISH)~~
A2.9	ARCHITECTURAL DETAILS (FLOOR)
~~A3.0~~	~~ADDITIONAL FIRE RATING DETAILS AND NOTES~~
A3.1	SINGLE OCC. BATHROOM
A3.2	RCP
A3.2.1	CEILING NOTES
A3.3	CEILING DETAILS (T-GRID)
~~A3.4~~	~~CEILING DETAILS (GYP BOARD)~~
A4.0.1	ROOF PLAN MONO SLOPE (STANDING SEAM)
~~A4.0.2~~	~~ROOF PLAN DUAL SLOPE (STANDING SEAM)~~
A4.1	ROOF DETAILS (STANDING SEAM)
~~A4.2.1~~	~~ROOF PLAN MONO SLOPE (EPDM)~~
~~A4.2.2~~	~~ROOF PLAN DUAL SLOPE (EPDM)~~
~~A4.3~~	~~ROOF DETAILS (EPDM)~~
~~A4.4.1~~	~~ROOF PLAN w/ PARAPET MONO SLOPE (EPDM)~~
~~A4.5~~	~~ARCHITECTURAL DETAILS (PARAPET)~~
A5.0	SIDEWALL ELEVATION
A5.1	ENDWALL ELEVATIONS
A5.2	INTERIOR ELEVATIONS
A6.0	SECTION - STANDING SEAM (MONO)
~~A6.0.1~~	~~SECTION - STANDING SEAM (DUAL)~~
~~A6.1~~	~~SECTION - EPDM (DUAL)~~
A6.2	SECTION
~~A6.3~~	~~SECTION - EPDM (MONO)~~
A7.0	ADDITIONAL OPTION DETAILS
A7.1	ADDITIONAL OPTION DETAILS
A7.2	ADDITIONAL OPTION DETAILS
MEP	
~~E1.0~~	~~ELECTRICAL PLAN 24x40~~
~~E1.1~~	~~ELECTRICAL SCHEDULES 24x40~~
E1.2	ELECTRICAL PLAN 36x40
E1.3	ELECTRICAL SCHEDULE 36x40
~~E1.4~~	~~ELECTRICAL PLAN 48x40~~
~~E1.5~~	~~ELECTRICAL SCHEDULE 48x40~~
M0.1	MISCELLANEOUS NOTES & DETAILS
M2.1	120'x40' T24 CZ 16 (WALL AC)
M2.2	120'x40' T24 CZ 16 (WALL AC)
M2.3	120'x40' T24 CZ 16 (WALL AC)
M2.4	120'x40' T24 CZ 16 (WALL AC)
~~M5.1~~	~~MECHANICAL CEILING PLAN 24x40~~
~~M5.2~~	~~MECHANICAL ROOF MOUNT 24x40~~
M6.1	MECHANICAL CEILING PLAN 36x40
~~M6.2~~	~~MECHANICAL ROOF MOUNT 36x40~~
~~M7.1~~	~~MECHANICAL CEILING PLAN 48x40~~
~~M7.2~~	~~MECHANICAL ROOF MOUNT 48x40~~
P1.0	TYPICAL PLUMBING DETAILS
Foundation	
~~F1.10~~	~~WOOD FOUNDATION NOTES SCHED FOR BLDG W/ 50+15~~
~~F1.11~~	~~WOOD FOUNDATION PLAN 24x40 BLDG W/ 50+15~~
~~F1.12~~	~~WOOD FOUNDATION 36x40 BLDG W/ 50+15~~
~~F1.13~~	~~WOOD FOUNDATION PLAN 48x40 BLDG W/ 50+15~~
~~F1.14~~	~~MODLINE "B" W/ EXTERIOR WALLS BACK-TO-BACK 100 PSF~~
~~F1.20~~	~~WOOD FOUNDATION NOTES SCHED FOR BLDG W/ 100PSF~~
~~F1.21~~	~~WOOD FOUNDATION PLAN 24x40 BLDG W/ 100 PSF~~
~~F1.22~~	~~WOOD FOUDATION PLAN 36x40 BLDG W/ 100 PSF~~
~~F1.23~~	~~WOOD FOUNDATION PLAN 48x40 BLDG W/ 100 PSF~~
~~F1.24~~	~~MODLINE "B" W/ EXTERIOR WALLS BACK-TO-BACK 100 PSF~~
~~F1.30~~	~~WOOD FOUNDATION NOTES SCHED FOR BLDG W/ 150 PSF~~
~~F1.31~~	~~WOOD FOUNDATION PLAN 24X40 BLDG W/ 150 PSF~~
~~F1.32~~	~~WOOD FOUNDATION PLAN 36x40 BLDG W/ 150 PSF~~
~~F1.33~~	~~WOOD FOUNDATION PLAN 48x40 BLDG W/ 150 PSF~~
~~F1.34~~	~~MODLINE "B" W/ EXTERIOR WALL BACK-TO-BACK 150 PSF~~
~~F1.40~~	~~WOOD FOUNDATION DETAILS~~
~~F2.10~~	~~CONCRETE FOUNDATION PLAN~~
~~F2.20~~	~~CONCRETE FOUNDATION DETAILS~~
~~F2.22~~	~~CONCRETE FOUNDATION DETAILS~~
~~F2.23~~	~~CONCRETE FOUNDATION DETAILS~~
Structural	
S0.1	STRUCTURAL GEN NOTES
S1.0.1	WD SHTH'G FLR FRM'G PLAN (50+15 PSF)
~~S1.0.2~~	~~WD SHTH'G FLR FRM'G PLAN (100 PSF)~~
~~S1.0.3~~	~~WD SHTH'G FLR FRM'G PLAN (150 PSF)~~
~~S1.1.1~~	~~CONC FLR FRM'G PLAN (50+15 PSF)~~
~~S1.1.2~~	~~CONC FLR FRM'G PLAN (100 PSF)~~
~~S1.1.3~~	~~CONC FLR FRM'G PLAN (150 PSF)~~
S1.2	STRUCTURAL DETAILS (FLOOR)
S3.0.1	MONO SLOPE ROOF FRM'G PLAN
~~S3.0.2~~	~~DUAL SLOPE ROOF FRM'G PLAN~~
S3.1	STRUCTURAL DETAILS (ROOF)
~~S3.2~~	~~ROOF DETAILS (SOFFIT/PARAPET)~~
S3.3	ROOF PERIMETER TRUSS
~~S4.0~~	~~MTL WALL FRAMING ELEVATIONS~~
S4.1	WD WALL FRAMING ELEVATIONS
S4.2	WALL DETAILS (WOOD FRAMING)
~~S4.3~~	~~WALL DETAILS (MTL FRAMING)~~
S4.4	TYP FRAMING
S4.5	FRAMING SCHEDULES
S5.0	LONG. SECTION - (MONO)
~~S5.1~~	~~LONG SECTION - (DUAL)~~
~~SR0~~	~~MODULE PLAN AND NOTES~~
~~SR1~~	~~RAMP LANDING~~
~~SR2~~	~~LANDING FRAME~~
~~SR3~~	~~FOUNDATION PLAN~~
~~SR4~~	~~RAMP ELEVATION~~
~~SR5~~	~~RAMP DETAILS~~
~~SR6~~	~~RAMP DETAILS~~
~~SR7~~	~~STAIR CONN~~

Sheet List	
Sheet Number	Sheet Name
Under Separate Cover	
~~FS-1~~	~~FIRE SPRINKLER DESIGN 1~~
~~FS-2~~	~~FIRE SPRINKLER DESIGN 2~~
ALT-01	ALTERATION
ALT-02	ALTERATION
ALT-03	ALTERATION
ALT-D1	ALTERATION
F1.10	WOOD FOUNDATION NOTES SCHED FOR BLDG W/ 50+50
F1.12	WOOD FOUNDATION 36X40 BLDG W/ 50+15
F1.40	WOOD FOUNDATION DETAILS

CLASS LEASING LLC

LOW SEISMIC
DESIGN CRITERIA

PC NOT USABLE
IN WUI AREAS

PC # 04-116504

24' x 40' EXPANDABLE TO 120' x 40'

STKP# 293

DESIGN CODES

PARTIAL LIST OF APPLICABLE CODES AS OF February 28, 2017

2016 Administrative Code (CAC), Part 1, Title 24 C.C.R. *
2016 California Building Code (CBC), Part 2, Title 24 C.C.R.
(2015 International Building Code with 2016 California Amendments)
2016 California Electrical Code (CEC), Part 3, Title 24 C.C.R.
(2014 National Electrical Code with 2016 California Amendments)
2016 California Mechanical Code (CMC), Part 4, Tiltle 24 C.C.R.
(2015 Uniform Mechanical Code with 2016 California Amendments)
2016 California Plumbing Code (CPC), Part 5, Title 24 C.C.R.
(2015 Uniform Plumbing Code with 2016 California Amendments)
2016 California Energy Code (CEC), Part 6, Title 24 C.C.R
2016 California Fire Code, Part 9, Title 24 C.C.R.
(2015 International Fire Code with 2016 California Amendments)
2016 California Green Building Standards Code, Part 11, Title 24 C.C.R.
2016 California Referenced Standards, Part 12, Title 24 C.C.R
Title 19 C.C.R., Public Safety, State Fire Marshal Regulations.
2013 ASME A17.1 (W/ CSA B44-13) Safety Code for Elevators and Escalators

PARTIAL LIST OF APPLICABLE STANDARDS

NFPA 13	Automatic Sprinkler Systems	2016 Edition
NFPA 14	Standpipe Systems	2013 Edition
NFPA 17	Dry Chemical Extinguishing Systems	2013 Edition
NFPA 17a	Wet Chemical Systems	2013 Edition
NFPA 20	Stationary Pumps	2016 Edition
NFPA 22	Water Tanks for Private Fire Protection	2013 Edition
NFPA 24	Private Fire Mains	2016 Edition
NFPA 72	National Fire Alarm Code	2016 Edition
NFPA 80	Fire Doors and Other Opening Protectives	2016 Edition
NFPA 92	Standard for Smoke Control Systems	2015 Edition
NFPA 253	Critical Radiant Flux of Floor Covering Systems	2015 Edition
NFPA 2001	Clean Agent Fire Extinguishing Systems	2015 Edition
ICC 300	ICC Standards on Bleachers, Folding and Telescoping Seating and Grand stands	2012 Edition
UL 300	Fire Testing of Fire Extinguishing System for Protection Of Restaurant Cooking Areas	2005 Edition
UL 464	Audible Signal Appliances	2003 Edition
UL 521	Heat Detectors for Fire Protective Signaling Systems	1999 Edition

Reference Code Section for NFPA Standards - 2016 CBC (SFM) Chapter 35. See Chapter 35 for State of California amendments to NFPA Standards.

* California Administrative Code, Part 1, Chapter 10, Administrative Regulations for the California Energy Commission (CEC).

ACOUSTICAL CONTROL (EXTERIOR) REQUIREMENTS

Per the 2016 CCR, Title 24, Part 11 (CALGREEN CODE) Section 5.507.4. This pre-check building is not allowed to be placed:
- Within the 65 CNEL noise contour of a airport;
- Within the 65 CNEL or Ldn noise contour of a freeway, expressway, railroad, or industrial source guideway;
- Or in a location exposed to a noise level of 65 dB Leq-1Hr, during any hour of operation.

CODE	ADOPTED YEAR	ITEM
NFPA 13	2016	AUTOMATIC SPRINKLER SYSTEMS
NFPA 72	2016	NATIONAL FIRE ALARM CODE w/ CALIFORNIA AMENDMENTS

NOTE: VISUAL DEVICES PER UL STANDARD 1971

THIS PC HAS A "PRE-DESIGNED" FIRE SPRINKLER SYSTEM INSTALLED.
SEE BELOW FOR SITE REQUIREMENTS BY OWNER

IT IS THE OWNERS RESPONSIBILITY TO ENSURE THE MINIMUM FLOW (GPM) AND PRESSURE (PSI)CAN BE ATTAINED AT THE BASE OF THE RISER AT THE PROPOSED SITE FOR EACH PROPOSED BUILDING.

THIS PC REQUIRES
MINIMUM GPM : 250
MINIMUM PSI : 35

FAILURE TO ATTAIN THE MIN GPM/PSI MAY NECESSITATE THE INSTALLATION OF ONE OR MORE OF THE FOLLOWING ITEMS/EQUIPMENTS.

A. WATER TANK
1. FIRE PUMP
2. BACK UP FIRE SUPPLY

B. ADDITIONAL UNDERGROUND FIRE LINE TAPS
C. ALL OR ANY COMBINATION OF THE ABOVE OR ANY OTHERS AS REQUIRED TO ENSURE PROPER OPERATION OF THE AFSS

THE FOLLOWING MUST BE SUPPLIED TO DSA AT THE TIME OF SUBMITTAL WITH THE SITE PLAN FOR EACH PROPOSED BUILDING WITH AN AFSS.
1. MINIMUM GPM/PSI REQUIRED
2. WATER FLOW DATA (SEE DSA AFFS GUIDELINES)
3. SITE PLAN SHOWING THE LOCATION OF THE "FLOW" AND "TEST" HYDRANTS (FULLY DIMENSIONED)
4. ALL (NEW AND EXISTING) UNDERGROUND FIRE LINES/PIPING -LENGTH AND SIZE SHOWING LOCATION AND METHOD OF UNDERGROUND PIPING RESTRAINTS TO TEST HYDRANT
5. LOCATION OF ALL (NEW AND EXISTING) ;
   A. FIRE HYDRANTS
   B. POST INDICATORS
   C. FIRE DEPARTMENT CONNECTIONS
   D. PRESSURE REDUCERS
   E. BACK-FLOW PREVENTION/DETECTOR CHECK VALVES
   F. OTHER FIRE RELATED ITEM/EQUIPMENTS APPLICABLE
6. HYDRAULIC CALCULATIONS FOR THE UNDERGROUND PIPING WITH THE AVAILABLE GPM/PSI AT THE BASE OF EACH AFSS RISER (MUST MEET OR EXCEED MIN REQ'T)
7. ANY CHANGES TO THE CONFIGURATION (WALLS,CEILINGS, CONSTRUCTION TYPE) OR OCCUPANCY OF THE PC WILL NECESSITATE ADDITIONAL/REVISED HYDRAULIC CALCULATIONS

@	AT
AB	ANCHOR BOLT
ABC	AGGREGATE BASE COURSE
ABV	ABOVE
AD	AREA DRAIN
ADD	ADDENDUM
ADH	ADHESIVE
ADJ	ADJACENT, ADJUSTABLE
ADOH	ALTERNATE DIRECTION OF HOOK
AFF	ABOVE FINISHED FLOOR
AGG	AGGREGATE
ALT	ALTERNATE
ALUM	ALUMINUM
ANCH	ANCHOR (AGE)
ANOD	ANODIZED
APPRX	APPROXIMATE
ARCH	ARCHITECT (URAL)
ASPH	ASPHALT
AUTO	AUTOMATIC
B	BOTTOM
BB	BOND BEAM
BC	BOTTOM CHORD
BD	BOARD
BEG	BEGIN (ING)
BEL	BELOW
BIT	BITUMINOUS
BJT	BED JOINT
BLDG	BUILDING
BLK	BLOCK ('G, ING)
BLW	BELOW
BM	BEAM
BMK	BENCH MARK
BO*	BOTTOM OF ___
BPL	BEARING PLATE
BRD	BOARD
BRDG	BRIDGING
BRG	BEARING
BRK	BRICK
BRZ	BRONZE
BS	BOTH SIDES
BTWN	BETWEEN
BVL	BEVELED
BW	BOTH WAYS
C	CHANNEL, COMPRESSION
CAD	CADMIUM
CAM	CAMBER
C/C	CENTER TO CENTER
CEM	CEMENT
CF	CUBIC FOOT
CHAM	CHAMFER
CI	CAST IRON
CIP	CAST-IN-PLACE
CIR	CIRCLE
CIRC	CIRCUMFERENCE
CJ	CONSTRUCTION JOINT
CJT	CONTROL JOINT
CLG	CEILING
CLK	CAULK, ('G, ING)
CLKG	CAULKING
CLR	CLEAR
CLS	CLOSURE
CM	CENTIMETER
CMP	CORRUDATED METAL PIPE
CMU	CONCRETE MASONRY UNIT
CNTR	CENTER
COL	COLUMN
COG	CENTER OF GRAVITY
COMB	COMBINATION
COMP	COMPRESS (ED)(ION)(IBLE)
COMPO	COMPOSITE
CONN	CONNECT (ION)
CONC	CONCRETE
CONST	CONSTRUCT (ION) (ED)
CONT	CONTINUE, CONTINUOUS
CONTR	CONTRACTOR
COR	CORRUGATED
CP	COMPLETE PENETRATION
CPG	COPING
CPR	COPPER
CRS	COURSE (S)
CS	COUNTERSINK
CTSK	COUNTERSUNK SCREW
CU	CUBIC
CX	CONNECTION
CY	CUBIC YARD
D	DEEP, DEPTH
DBL	DOUBLE
DEF	DEFLECTION
DEG	DEGREE
DEM0	DEMOLISH, DEMOLITION
DEP	DEPRESSED
DEPT	DEPARTMENT
DET	DETAIL
DIAG	DIAGONAL
DIA	DIAMETER
DIM	DIMENSION (ED)
DIV	DIVISION
DL	DEAD LOAD
DN	DOWN
DO	DITTO
DP	DAMPROOFING
DWL	DOWEL (ED)
DWG	DRAWING, (S)
E	EAST, MODULUS OF ELASTICITY
EA	EACH
EB	EXPANSION BOLT
EF	EACH FACE
EJT	EXPANSION JOINT
EL	ELEVATION
ELEC	ELECTRIC (AL)
ENCL	ENCLOSURE, ENCLOSED
ENG	ENGINEER
EQ	EQUAL, EQUALIBRIUM
EQUIP	EQUIPMENT
ESTM	ESTIMATE (ED)
EV	EXPANSION BOLT
EW	EACH WAY
EXCA	EXCAVATE (D) (ION)
(E), EXIST	EXISTING
EXMP	EXPANDED METAL PLATE
EXP	EXPOSED
EXPN	EXPANSION
EXS	EXTRA STRONG
EXT	EXTERIOR, EXTERNAL
FAS	FASTENER
FBO	FURNISHED BY OTHERS
FD	FLOOR DRAIN
FHMS	FLATHEAD MACHINE SCREW
FHS	FIRE HOSE STATION
FHWS	FLATHEAD WOOD SCREW
FIN	FINISH (ED)

FIXT	FIXTURE
FJT	FLUSH JOINT
FLR	FLOOR
FLUR	FLUORESCENT
FLEX	FLEXIBLE
FND	FOUNDATION
FO*	FACE OF ___
FP	FIREPROOF (ED)
FP'G	FIREPROOFING
FR	FRAME (D)(ING)
FRC	FIRE RESISTANT COATING
FRGD	FORGED
FRMG	FRAMING
FT	FOOT, FEET
FTG	FOOTING
FURR	FURRED, FURRING
FV	FIELD VERIFY
GA	GAUGE
GALV	GALVANIZED
GC	GENERAL CONTRACTOR
GI	GALVANIZED IRON
GKT	GASKET
GL	GLASS, GLAZING
GLM	GLULAM
GP	GALVANIZED PIPE
GPM	GALLONS PER MINUTE
GPPL	GYPSUM PLASTER
GRVL	GRAVEL, GRANULAR
GRD	GRADE, GRADING
GRN	GRANITE
GSS	GALVANIZED SHEET STEEL
GT	GROUT
GVL	GRAVEL
GWB	GYPSUM WALLBOARD
GYP	GYPSUM
H	HIGH
HBD	HARDBOARD
HC	HOLLOW CORE
HD	HEAVY DUTY
HDNR	HARDENER
HDR	HEADER
HDWR	HARDWARE
HDWD	HARDWOOD
HES	HIGH EARLY STRENGTH CEMENT
HH	HANDHOLE
HJT	HEADJOINT
HK	HOOK
HM	HOLLOW METAL
HORIZ	HORIZONTAL
HPT	HIGH POINT
HR	HOUR
HSA	HEADED STUD ANCHOR
HSB	HIGH STRENGHT BOLT
HT	HEIGHT
HWD	HARDWOOD
ID	INSIDE DIAMETER
IN	INCHE (ES)
INCL	INCLUDE (D), INCLUDING
INSUL	INSULATE, INSULATION
INT	INTERIOR
INTM	INTERMEDIATE
INV	INVERT
JST	JOIST
JT	JOINT
K	KIP (S)
KO	KNOCKOUT
KSI	KIPS PER SQUARE INCH
L	LONG, LENGTH
LAM	LAMINATE (D)
LB	POUND, LAG BOLT
LBL	LABEL
LC	LIGHT CONTROL
LD	DEVELOPMENT LENGHT
LF	LINEAR FOOT
LH	LEFT HAND
LL	LIVE LOAD
LLH	LONG LEG HORIZONTAL
LLV	LONG LEG VERTICAL
LPT	LOW POINT
LT	LIGHT
LTL	LINTEL
LVL	LEVEL (ING)
LW	LIGHT WEIGHT
LWC	LIGHT WEIGHT CONCRETE
LWF	LIGHT WEIGHT FILL
M	METER (S) MOMENT
MATL	MATERIAL
MAS	MASONRY
MAX	MAXIMUM
MB	MACHINE BOLT
MBR	MEMBER
MCONN	MOMENT CONNECTION
MECH	MECHANICAL
MED	MEDIUM
MET	METAL
MEMB	MEMBER
MEP	MECHANICAL, ELECTRICAL, & PLUMBING
MFD	METAL FLOOR DECKING
MFR	MANUFACTURE (R) (ED)
MID	MID, MIDDLE
MIN	MINIMUM, MINUTE
MISC	MISCELLANEOUS
MM	MILLIMETER (S)
MMB	MEMBRANE
MO	MASONRY OPENING
MOD	MODEL
MODU	MODULAR
MOV	MOVABLE
MTL	MATERIAL
N	NORTH, NEW
NAT	NATURAL
NL	NAILABLE
NMT	NONMETALLIC
NO	NUMBER
NOM	NOMINAL
NTS	NOT TO SCALE
OA	OVERALL
o.c.	ON CENTER
OD	OUTSIDE DIAMETER
OH	OVERHEAD
OHMS	OVALHEAD MACHINE SCREW
OHWS	OVALHEAD WOOD SCREW
OJ	OPEN-WEB JOINT (S)
OPH	OPPOSITE HAND
OPNG	OPENING
OPP	OPPOSITE

PAR	PARALLEL
PBD	PARTICLE BOARD
PCC	PRECAST CONCRETE
PCF	POUNDS PER CUBIC FOOT
PCS	PIECES
PERF	PERFORATE (D)
PERI	PERIMETER
PFB	PREFABRICATE (D)
PFS	POUNDS PER SQUARE FOOT
PL	PLATE
PLBG	PLUMBING
PLF	POUNDS PER LINEAR FOOT
P.L.	PARALLAM
PLWD	PLYWOOD
PMT	PAVEMENT
PNL	PANEL
POSTEN	POST TENSION (D)
PRETEN	PRETENSIONED
POLY	POLYETHYLENE
PR	PAIR
PRJ	PROJECT
PSC	PRESTRESSED CONCRETE
PSF	POUNDS PER SQUARE FOOT
PSI	POUNDS PER SQUARE INCH
PT	POINT
P.T.	PRESSURE TREATED
PTC	POST-TENSIONED CONCRETE
PTD	PAINTED
PVC	POLYVINYL CHLORIDE
PVMT	PAVEMENT
QTY	QUANTITY
R	RADIUS, RISER
RAD	RADIUS
RD	ROOF DRAIN
RECT	RETANGULAR
REF	REFERENCE, REFER TO
REINF	REFORCE (D) (ING)
REM	REMOVE
REQD	REQUIRED
REQS	REQUIREMENTS
RETG	RETAINING
REV	REVISION, REVISED
RFG	ROOFING
RFH	ROOF HATCH
RFL	REFLECT (ED)(IVE)(OR)
RM	ROOM
RO	ROUGH OPENING
RT	FIRE RETARDANT TREATED
RT	RUBBER TILE
RTG	RATING
RVS	REVERSE SIDE
RVT	RIVET
S	SOUTH
SC	SOLID CORE
SCHED	SCHEDULE
SDL	SUPERIMPOSED DEAD LOAD
SDS	SELF DRILL SCREW
SE	STRUCTURAL ENGINEER
SDST	SELF-DRILL, SELF-TAP'G SCREW
SECT	SECTION
SF	SQUARE FOOT, SQUARE FEET
SHO	SHORE, SHORING
SHT	SHEET
SHTH	SHEATHING
SI	SQUARE INCH
SIM	SIMILAR
SL	SLOPE
SLNT	SEALANT
SMS	SHEET METAL SCREW
SOG	SLAB ON GRADE
SPA	SPACE, (ING)
SPC	SPACER
SPEC	SPECIFICATION (S)
SQ	SQUARE
SSTL	STAINLESS STEEL
STG	STAGGERED
STD	STANDARD
STL	STEEL
STOR	STORAGE
STRUCT	STRUCTURE
STR	STRUCTURAL
SYM	SYMETRICAL, SYMETRY
SYS	SYSTEM
T	TOP, TORSION, TREAD
T&B	TOP AND BOTTOM
T&G	TONGUE AND GROOVE
TC	TOP CHORD
TEN	TESION, TENSILE
TEMP	TEMPORARY, TEMPERATURE
THD	THREAD (ED)
THK	THICK (NESS)
TMPD	TEMPERED
TO*	TOP OF ___
TL	TOTAL LOAD
TR	TREAD
TS	TUBE STEEL
TYP	TYPICAL
UC	UNDERCUT
UGD	UNDERGROUND
UL	UNDEREWRITERS LABORATORY
UND	UNDER
UNF	UNFINISHED
UNO	UNLESS NOTED OTHERWISE
V	SHEAR FORCE, VELOCITY
VB	VAPOR BARRIER
VER	VERIFY
VERT	VERTICAL
VG	VERTICAL GRAIN
VIF	VERIFY IN FIELD
VJ	V-JOINTED
VNR	VENEER
V.T.R.	VENT THROUGH ROOF
W	WEST, WIDTH, WIDE, WIDE FLANGE
W/	WITH
W/O	WITHOUT
WD	WOOD
WI	WROUGHT IRON
WM	WIRE MESH
WP	WATERPROFFING
WPR	WATER REPELLENT
WPT	WORKING POINT
WS	WATER STOP
WT	WEIGHT
WTW	WALL TO WALL (W/W)
WWF	WELDED WIRE FABRIC
WWM	WELDED WIRE MESH

CONSTRUCTION OF CLASSROOM BUILDING (RELOCATABLE)

SCOPE OF WORK

BUILDING DESIGN

NUMBER OF STORIES: 1
OCCUPANCY: "E"
CONSTRUCTION TYPE: VB
FLOOR LIVE LOAD: ☒ 50+15 PSF PARTITION
☐ 100 PSF ☐ 150 PSF
FLOOR DEAD LOAD: ☒ WOOD FLOOR - 11 PSF
☐ CONC. FLOOR - 33 PSF

ROOF LIVE LOAD: 20 PSF
ROOF SNOW LOAD: 0 PSF
ROOF DEAD LOAD: 18.5 PSF (INCLUDES SPRINKLERS & 3PSF SOLAR PANEL)
RAMPLIVE LOAD: 100PSF
FLOOD DESIGN: This PC has not been designed to accommodate flood loads. If located in a zone other than X, a letter stamped and signed from a soils engineer is needed to validate the allowable soil values assumed in this PC are still applicable.

BUILDING AREA	NO OVERHANG	WITH OVERHANG (5' @ EA. END)
ALLOWABLE AREA	☐ 24x40 960 sf	☐ 24x40 1200 sf
=9,500 sf	☐ 36x40 1440 sf	☒ 36x40 1800 sf
ACTUAL AREA	☐ 48x40 1920 sf	☐ 48x40 2400 sf
=4,800 SF	☐ 60x40 2400 sf	☐ 60x40 3000 sf
	☐ 72x40 2880 sf	☐ 72x40 3600 sf
	☐ 84x40 3360 sf	☐ 84x40 4200 sf
	☐ 96x40 3840 sf	☐ 96x40 4800 sf
	☐ 108x40 4320 sf*	☐ 108x40 5400 sf*
	☐ 120x40 4800 sf*	☐ 120x40 6000 sf*

*Geo-hazard site specific report must be provided and approved by CGS for building area more than 4000 sf
ALLOWABLE SOIL PRESSURE: ☒ WOOD FTG -1000PSF ☐ CONCRETE FTG 1500PSF
FOUNDATION: ☒ WOOD ☐ CONCRETE
PC IS DESIGNED BASED ON A PINNED CONNECTION TO THE FOUNDATION.

CEC CLIMATE ZONE: 1-16

WIND DESIGN

ULTIMATE DESIGN SPEED: Vult = 130 mph, 3 sec GUST, Kzt = 1.0
RISK CATEGORY: II
EXPOSURE: C

EARTHQUAKE DESIGN

RISK CATEGORY: II
SEISMIC IMPORTANCE FACTOR: I = 1
MAPPED SPECTRAL RESPONSE: Ss = 2.14
S1 = 1.99
SITE CLASS: D
SEISMIC DESIGN CATEGORY: E
Note: For SDC (E) site specific motion analysis is not required if not in a seismic hazard zone and/or meets other exemptions in DSA IR A-4
SHORT/LONG PERIOD SITE COEFFICIENT: Fa = 1.0, Fu = 1.5
DEISIGN SPECTRAL RESPONSE: Sds = 1.00 (for building), Sd1 = 1.99,
(Sds=1.426 for other parameters non-structural component anchorage no-cap)
RESPONSE COEFFICIENT, Cs: 0.286
BASIC SEISMIC FORCE-RESISTING SYS: OMF, R = 3.5
ANALYSIS PROCEDURE: EQUIVALENT LATERAL FORCE
BASE SHEAR PER 24X40 MODULE: WOOD FLOOR, LL ≤ 100, BASE SHEAR= 20.04 kip
WOOD FLOOR, LL = 150, BASE SHEAR= 26.71 kip
CONC. FLOOR, LL ≤ 100, BASE SHEAR= 26.07 kip
CONC. FLOOR, LL = 150, BASE SHEAR= 36.36 kip

~~(6)~~ 36X40
CLASSROOMS
W/ RESTROOM

~~P-21-2345 A/B/C~~
~~P-21-2346 A/B/C~~
~~P-21-2347 A/B/C~~
P-21-2348 A/B/C
P-21-2349 A/B/C
P-21-2350 A/B/C

1. ARCHITECT OF RECORD SHALL PROVIDE FIRE ALARM DRAWINGS WITH SITE ADAPTED PROJECTS. FIRE ALARM IS NOT PART OF THIS PC.
2. THIS PC HAS BEEN STRUCTURALLY DESIGNED TO SUPPORT THE WEIGHT OF A FIRE SPRINKLER SYSTEM
3. ALLOWABLE AREA IS BASED ON 10'-0" SETBACK FROM ASSUMED LINE
4. PC DESIGNED AS A SINGLE-STORY MODULAR BUILDING
5. SEE STRUCTURAL FOR SOIL TYPES & BEARING STRENGTHS
6. WORK SHALL CONFORM TO TITLE 24 OF THE CALIFORNIA CODE OF REGULATIONS
7. THIS PC IS NOT APPROVED FOR "A" OCCUPANCY USAGE
8. EXTERIOR PROJECTIONS TO BE FIRE PROTECTED WHERE REQUIRED
9. SEE A0.5 AND ENGERY CALC M-SHEETS FOR REQUIRED ENVELOPE ASSEMBLIES & HVAC SYSTEMS
10. ALL SPECIFICATIONS BASED ON PERFORMANCE AND ABLE TO BE SUBSTITUTED BY "EQUAL" PRODUCTS PENDING APPROVAL BY D.S.A.
11. BUILDINGS TO COMPLY WITH WILDLAND URBAN INTERFACE GUIDELINES WHERE APPLICABLE
12. BUILDING AND SITE FEATURES MUST COMPLY WITH CALGREEN CODE FOR ITS SPECIFIC LOCATION WHEN ADAPTED FOR SITE-USE
13. SHOULD THIS P.C. CLASSROOM BE DESIGNED TO CONNECT TO ANOTHER P.C. CLASSROOM, INTERIOR SOUND TRANSMISSION IN THE WALL AND FLOOR-CEILING ASSEMBLY MUST MEET A MINIMUM STC OF 40 PER CALGREEN

IDENTIFICATION STAMP
DIV. OF THE STATE ARCHITECT
APP: 03-121617 INC:
REVIEWED FOR
SS ☑ FLS ☑ ACS ☑
DATE: 08/02/2021

PROFESSIONAL STAMP
REGISTERED PROFESSIONAL ENGINEER
MANNY D. FRISCH
No. S3380
STRUCTURAL
STATE OF CALIFORNIA
12/19/2017

THE PLANS, IDEAS & DESIGNS SHOWN ON THESE DRAWINGS ARE THE PROPERTY OF R&S TAVARES ASSOCIATES, INC. DEVISED SOLELY FOR THIS CONTRACT. THESE PLANS SHALL NOT BE USED, IN WHOLE OR IN PART, FOR ANY PURPOSE FOR WHICH THEY WERE NOT INTENDED WITHOUT THE EXPRESS WRITTEN CONSENT OF R&S TAVARES ASSOCIATES, INC. ©

CLIENT
CLASS LEASING LLC
1221 Harley Knox Boulevard
Perris, CA 92571

ORIGINAL PC STATE AGENCY APPROVAL
FILE NUMBER: PC-128
IDENTIFICATION STAMP
DIVISION OF THE STATE ARCHITECT
04 116504 INC: 0
AC RM FLS EA SSR KER
DATE 07/19/2018

PROJECT TITLE
24' x 40'
EXPANDABLE TO
120' x 40'

PRE-CHECK (PC) DOCUMENT
Code: [2016] CBC
A separate project application for construction is required.

PROJECT SPECIFIC STATE AGENCY APPROVAL

Revision Schedule

#	Description	Date

SHEET TITLE
COVER SHEET

PROJECT NUMBER
17016A

DRAWN BY
rMc/SC

CHECKED BY
JA/RT

DATE
2018/03/08

SHEET NO.
A0.0

SHEET OF SHEETS

C:\Users\Andrew\Documents\17016 - Aries, 24x40 PC - MainFile - Low Seismic_Andrew.rvt
3/8/2018 2:19:38 PM

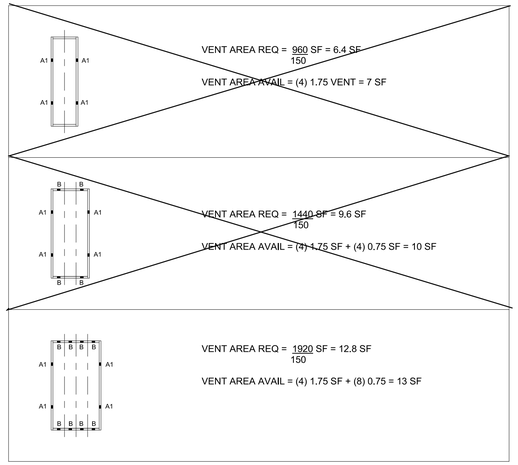

NOTE: WOOD FOUNDATION EXPANDABLE TO 48x40

1 *1/16" = 1'-0"*
50+15 VENTING LAYOUT

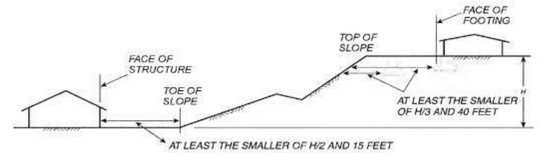

For SI: 1 foot = 304.8 mm.

FIGURE 1808.7.1
FOUNDATION CLEARANCES FROM SLOPES

3 *1/4" = 1'-0"*
FOUNDATION SETBACKS

KEY PLAN VENTING SCHEDULE
VENT "A1" (SIDEWALL): 3'-6" x 6" = 1.75 S.F. VENTILATION
VENT "B" (ENDWALL): 3'-0" x 3" = 0.75 S.F. VENTILATION

SEE 2

9 *1/4" = 1'-0"*
KEY PLAN VENTING SCHEDULE FOR 50+15 PSF

WOOD FOUNDATION PLATE SCHEDULE								
50 + 15 PSF								
PLATES	END WALL	SIDE WALL	MODLINE ENDS	MODLINE INTERIOR	ML "B" ENDS	ML "B" INTERIOR	SEPERATION ENDS	SEPERATION INTERIOR
BOOSTER	2x4	2x4	2x6	2x6	2x8	2x8	2x4	2x4
TOP	2x6	2x6	2x8	2x8	2x10	2x10	2x6	2x6
BASE	2x8	2x8	2x10	2x10	2x12	2x12	2x8	2x8
SILL	2x12	2x12	(6) 2x12, 24" LONG	(6) 2x12, 24" LONG	(8) 2x12, 24" LONG	(8) 2x12, 24" LONG	2x12	2x12

* MODLINE "B" - MODLINE W/ EXT. WALLS BACK-TO-BACK SEE F1.14

8 *1/4" = 1'-0"*
WOOD FOUNDATION PLATE SCHEDULE FOR 50+15

1. WOOD FOUNDATION CONSTRUCTION IS ALLOWED FOR BUILDINGS WITH 2160 SF AND UNDER.

2. SILL PLATES SHALL BE OF FOUNDATION GRADE REDWOOD OR PRESERVATIVE PRESURE TREATED MATERIAL AND IS ALLOWED TO REST DIRECTLY ON SOIL OR PAVEMENT. MATERIALS ABOVE THE SILL PLATES ARE NOT CONTROLLED BY THIS REQUIREMENT.

3. VENTS THAT OCCUR INSIDE RAMP BOUNDARIES SHALL REQUIRE A VENT OF EQUAL SIZE AT RAMP SKIRTING.

4. TO PREVENT SLIDING; A 1 INCH G.S. SCHEDULE 40 PIPE (1.315" ACTUAL O.D.) SHALL BE ATTACHED TO SILL PLATE AND ANCHORED INTO THE EARTH W/ 12" MIN EMBEDMENT (PROJECTED VERTICALLY) @ 10' - 0" MAX O.C. AND SHALL BE LOCATED A MAXIMIUM OF 2'-0" FROM CORNERS

5. STACKED FOUNDATION MEMBERS SHALL BE FASTENED TO ONE ANOTHER W/ CORROSION RESISTANT NAILS.

6. WOOD FOUNDATION HAVE BEEN DESIGNED FOR AN ALLOWABLE BEARING PRESSURE OF 1,000 PSF IN ABSENSE OF A SOILS INVESTIGATION REPORT PROVIDED BY A LICENSED GEOTECHNICAL ENGINEER.

7. REFER TO ARCHITECT'S SITE PLAN FOR DRAINAGE.

8. THERE IS NO CONCRETE FLOOR FOR WOOD FOUNDATION OPTION, I.E., CONCRETE FLOOR LOAD IS INCLUDED IN THE CONCRETE FOUNDATION OPTION FOR FOUNDATION & ANCHORAGE DESIGN.

7 *1/4" = 1'-0"*
NOTES FOR 50+15

(2) 16d NAILS SILL TO BASE CONNECTION FOR 50+15 SEE 7 / F1.10			
	ENDWALL	SIDEWALL	SEPERATION
24x40	9" O.C	12" O.C	12" O.C
36x40	11" O.C	12" O.C	12" O.C
48x40	12" O.C	12" O.C	12" O.C

*16D "COMMON" NAIL CAN BE USED IN LIEU OF 16D "BOX" NAIL FOR SILL PLATE FASTENING.

6 *1/4" = 1'-0"*
NAILING SCHEDULE FOR 50+15

TIE PLATE SCHEDULE		
	END WALL	SIDE WALL
24x40	4	2
36x40	5	2
48x40	7	2

4 *1/4" = 1'-0"*
TIE PLATE SCHEDULE FOR 50+15

IDENTIFICATION STAMP
DIV. OF THE STATE ARCHITECT
APP: 03-121617 INC:
REVIEWED FOR
SS ☑ FLS ☑ ACS ☑
DATE: 08/02/2021

PROFESSIONAL STAMP

REGISTERED PROFESSIONAL ENGINEER
MANNY D. FRANCO
C-43801
STRUCTURAL
STATE OF CALIFORNIA

12/19/2017

THE PLANS, IDEAS & DESIGNS SHOWN ON THESE DRAWINGS ARE THE PROPERTY OF R&S TAVARES ASSOCIATES, INC. DEVISED SOLELY FOR THIS CONTRACT. THESE PLANS SHALL NOT BE USED, IN WHOLE OR IN PART, FOR ANY PURPOSE FOR WHICH THEY WERE NOT INTENDED WITHOUT THE EXPRESS WRITTEN CONSENT OF R&S TAVARES ASSOCIATES, INC. ©

CLIENT

CLASS LEASING LLC
1221 Harley Knox Boulevard
Perris, CA 92571

ORIGINAL PC STATE AGENCY APPROVAL
FILE NUMBER: PC-128
IDENTIFICATION STAMP
DIVISION OF THE STATE ARCHITECT
DATE 07/19/2018

PROJECT TITLE
24' x 40'
EXPANDABLE TO
120' x 40'

PRE-CHECK (PC) DOCUMENT
Code: [2016] CBC
A separate project application for construction is required.

PROJECT SPECIFIC STATE AGENCY APPROVAL

Revision Schedule

#	Description	Date

SHEET TITLE
WOOD FOUNDATION NOTES SCHED FOR BLDG W/ 50+15

PROJECT NUMBER
17016A

DRAWN BY
rMc/SC

CHECKED BY
JA/RT

DATE
2017/06/05

SHEET NO.
F1.10

SHEET OF SHEETS

1/4/2018 2:43:58 PM C:\Users\Lee\Documents\17016 - Aries, 24x40 PC - MainFile - Low Seismic_Lee.rvt

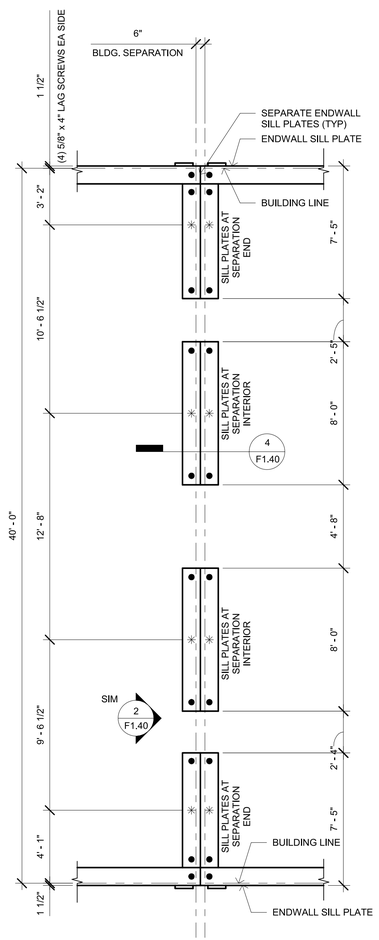

SYMBOLS LEGEND
✳ LAG SCREWS
● SILL RESTRAINTS (SEE NOTE 4 / F1.10)

2 *1/4" = 1'-0"*
FOOTING AT SEPARATION 36x40 FOR 50+15

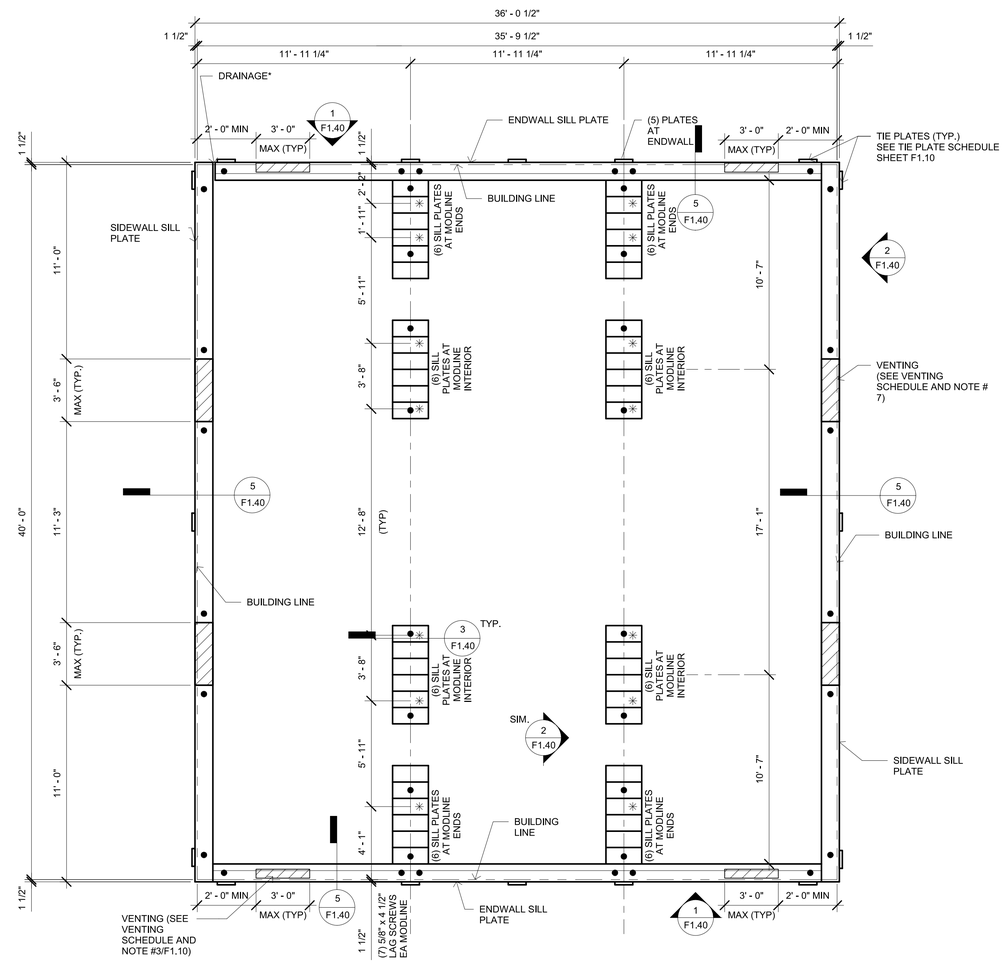

* REFER TO ARCHITECTURAL SITE PLAN FOR DRAINAGE

SYMBOLS LEGEND
✳ LAG SCREWS
● SILL RESTRAINTS (SEE NOTE 4 / F1.10)

1 *1/4" = 1'-0"*
FOUNDATION PLAN 36x40 FOR 50+15

IDENTIFICATION STAMP
DIV. OF THE STATE ARCHITECT
APP: 03-121617 INC:
REVIEWED FOR
SS ☑ FLS ☑ ACS ☑
DATE: 08/02/2021

PROFESSIONAL STAMP

REGISTERED PROFESSIONAL ENGINEER
MANNY D. FRANCISCO
C-63801
STRUCTURAL
STATE OF CALIFORNIA

12/19/2017

THE PLANS, IDEAS & DESIGNS SHOWN ON THESE DRAWINGS ARE THE PROPERTY OF R&S TAVARES ASSOCIATES, INC. DEVISED SOLELY FOR THIS CONTRACT. THESE PLANS SHALL NOT BE USED, IN WHOLE OR IN PART, FOR ANY PURPOSE FOR WHICH THEY WERE NOT INTENDED WITHOUT THE EXPRESS WRITTEN CONSENT OF R&S TAVARES ASSOCIATES, INC. ©

CLIENT

CLASS LEASING LLC
1221 Harley Knox Boulevard
Perris, CA 92571

ORIGINAL PC STATE AGENCY APPROVAL
FILE NUMBER: PC-128
IDENTIFICATION STAMP
DIVISION OF THE STATE ARCHITECT
C1 - 116504 INC: 0
AC RM FLS EA SSR KER
DATE 07/19/2018

PROJECT TITLE

24' x 40'
EXPANDABLE TO
120' x 40'

PRE-CHECK (PC) DOCUMENT
Code: [2016] **CBC**
A separate project application for construction is required.

PROJECT SPECIFIC STATE AGENCY APPROVAL

Revision Schedule

#	Description	Date

SHEET TITLE

WOOD
FOUNDATION
36x40 BLDG W/
50+15

PROJECT NUMBER
17016A

DRAWN BY
rMc/SC

CHECKED BY
JA/RT

DATE
2017/06/05

SHEET NO.
F1.12

SHEET OF SHEETS

12/18/2017 3:38:39 PM C:\Users\Sarah\Documents\17016 - Aries, 24x40 PC - MainFile - Low Seismic_Sarah.rvt

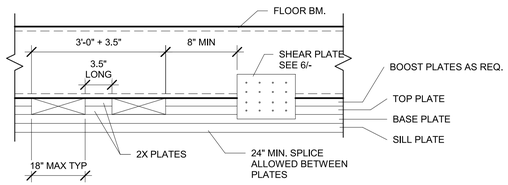

1 *1 1/2" = 1'-0"*
VENT OPENING OVER BASE PLATE

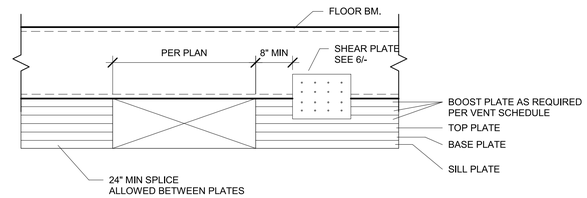

2 *1 1/2" = 1'-0"*
VENT OPENING @ SIDEWALL OR MODLINE @ SEPERATION

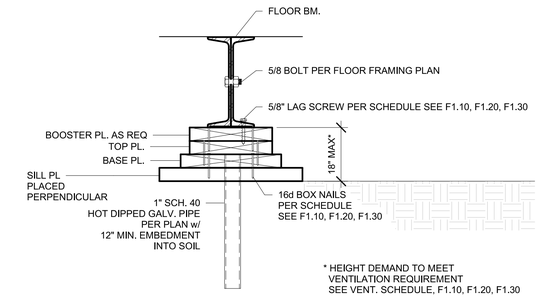

3 *1 1/2" = 1'-0"*
FOUNDATION PAD AT MOD LINE

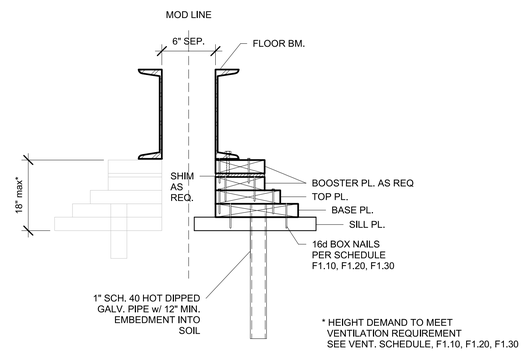

4 *1 1/2" = 1'-0"*
FOUNDATION PAD AT SEPARATION

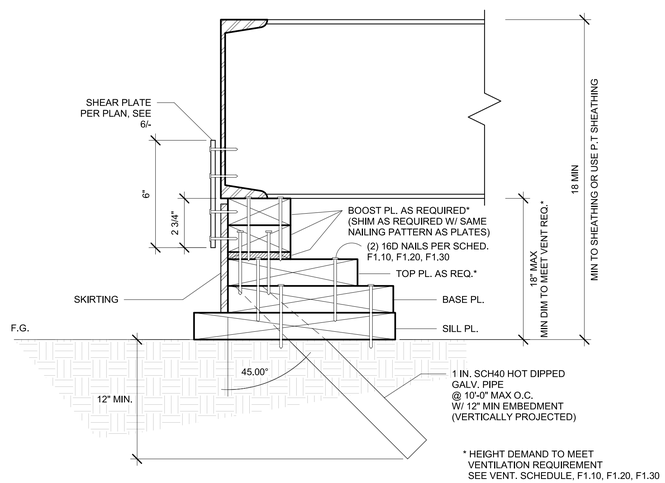

5 *3" = 1'-0"*
SILL PLATE PROFILE

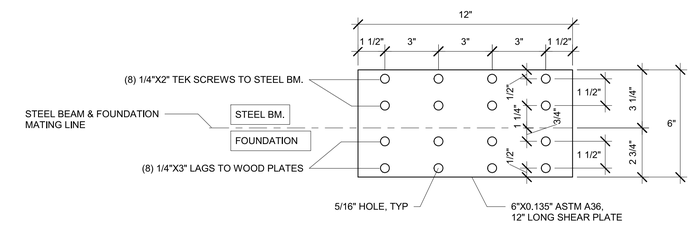

6 *3" = 1'-0"*
SHEAR PLATE

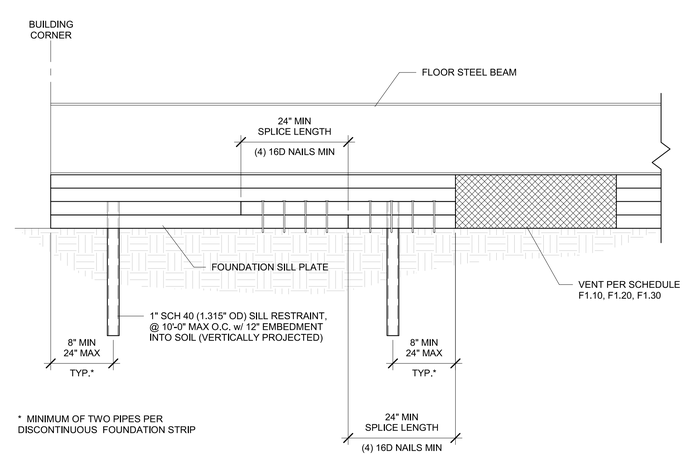

7 *1 1/2" = 1'-0"*
Splice at Sills

IDENTIFICATION STAMP
DIV. OF THE STATE ARCHITECT
APP: 03-121617 INC:
REVIEWED FOR
SS ☑ FLS ☑ ACS ☑
DATE: 08/02/2021

PROFESSIONAL STAMP

REGISTERED PROFESSIONAL ENGINEER
MANNY D. FRANCISCO
C-34380
STRUCTURAL
STATE OF CALIFORNIA

12/19/2017

THE PLANS, IDEAS & DESIGNS SHOWN ON THESE DRAWINGS ARE THE PROPERTY OF R&S TAVARES ASSOCIATES, INC. DEVISED SOLELY FOR THIS CONTRACT. THESE PLANS SHALL NOT BE USED, IN WHOLE OR IN PART, FOR ANY PURPOSE FOR WHICH THEY WERE NOT INTENDED WITHOUT THE EXPRESS WRITTEN CONSENT OF R&S TAVARES ASSOCIATES, INC. ©

CLIENT

CLASS LEASING LLC
1221 Harley Knox Boulevard
Perris, CA 92571

ORIGINAL PC STATE AGENCY APPROVAL
FILE NUMBER: PC-128
IDENTIFICATION STAMP
DIVISION OF THE STATE ARCHITECT
116504 INCR:
AC RM FLS EA SR KER
DATE 07/19/2018

PROJECT TITLE
24' x 40'
EXPANDABLE TO
120' x 40'

PRE-CHECK (PC) DOCUMENT
Code: [2016] **CBC**
A separate project application for construction is required.

PROJECT SPECIFIC STATE AGENCY APPROVAL

Revision Schedule

#	Description	Date

SHEET TITLE
WOOD FOUNDATION DETAILS

PROJECT NUMBER
17016A

DRAWN BY
rMc/SC

CHECKED BY
JA/RT

DATE
2017/06/05

SHEET NO.
F1.40

SHEET OF SHEETS

1/4/2018 2:44:12 PM C:\Users\Lee\Documents\17016 - Aries, 24x40 PC - MainFile - Low Seismic_Lee.rvt