COLLEGE PARK ELEMENTARY SCHOOL - HVAC REPLACEMENT

715A INDIAN AVENUE, SAN MATEO, CA, 94401

SAN MATEO-FOSTER CITY SCHOOL DISTRICT

CONSTRUCTION DOCUMENTS

DSA FILE NUMBER 41-26
DSA APPLICATION NUMBER 01-119530
PTN 69039-111

IDENTIFICATION STAMP
DIV. OF THE STATE ARCHITECT
APP: 01-119530 INC:
REVIEWED FOR
SS ☑ FLS ☑ ACS ☑
DATE: 10/26/2021

aedis architects
www.aedisarchitects.com
387 S. 1st Street, Suite 300
San Jose, CA 95113
tel: (408)-300-5160
fax: (408)-300-5121

ABBREVIATIONS

&	AND
@	AT
A.B.	ANCHOR BOLT
ABV.	ABOVE
A.C.	ASPHALTIC CONCRETE
ACT	ACOUSTIC TILE
ADJ.	ADJUSTABLE
A.F.F.	ABOVE FINISHED FLOOR
ALUM.	ALUMINUM
A.P.	ACCESS PANEL
APPROX.	APPROXIMATELY
ARCH.	ARCHITECT
BD.	BOARD
BLDG.	BUILDING
BLKG.	BLOCKING
BM	BEAM
B.M.	BENCH MARK
BOT.	BOTTOM
BTWN	BETWEEN
B.W.	BOTH WAYS
CAB.	CABINET
C.B.	CATCH BASIN
C.C or O.C.	CENTER TO CENTER
CEM.	CEMENT
CER. TILE	CERAMIC TILE
C.G.	CORNER GUARD
C.I.	CAST IRON
C.J.	CONTROL JOINT
CLG.	CEILING
CLKG.	CAULKING
CLR	CLEAR
CMU	CONCRETE MASONRY UNIT
CNTR.	COUNTER
C.O.	CLEANOUT
COL.	COLUMN
CONC.	CONCRETE
CONST.	CONSTRUCTION
CONT.	CONTINUOUS
CONTR.	CONTRACTOR
C.P.	CONCRETE PIPE
CTR.	CENTER
CTSK.	COUNTER SUNK
C.W.	COLD WATER
D.A.	DISABLED ACCESS
DBL	DOUBLE
D.F.	DRINKING FOUNTAIN
D.F.IR	DOUGLAS FIR
DTL.	DETAIL
DIA. or Ø	DIAMETER
DIM.	DIMENSION
DISP.	DISPOSAL
DN	DOWN
DO	DITTO
DR.	DOOR
DS.	DOWNSPOUT
DWG.	DRAWING
(E)	EXISTING
E.	EAST
EA.	EACH
E.J.	EXPANSION JOINT
ELEC.	ELECTRIC or ELECTRICAL
EL.	ELEVATION
ELEV.	ELEVATOR
ENCL.	ENCLOSE and/or ENCLOSURE
EQ.	EQUAL
EQUIP.	EQUIPMENT
E.W.	EACH WAY
E.W.C.	ELECTRIC WATER COOLER
EX.	EXPANSION
EXP.	EXPOSED
EXT.	EXTERIOR
F.A.	FIRE ALARM
F.D.	FLOOR DRAIN
FDN.	FOUNDATION
F.E.	FIRE EXTINGUISHER
F.E.C.	FIRE EXTINGUISHER CABINET
F.H.	FIRE HYDRANT
F.H.C.	FIRE HOSE CABINET
F.H.S.M.S.	FLAT HEAD SHEET METAL SCREW
F.H.W.S.	FLAT HEAD WOOD SCREW
FIN.	FINISH
FL. or FLR.	FLOOR
F.O.C.	FACE OF CONCRETE
F.O.F.	FACE OF FINISH
F.O.M.	FACE OF MASONRY
F.O.S.	FACE OF STUD
F.S.	FINISH SLAB
FT.	FOOT OR FEET
FTG.	FOOTING
FURR.	FURRING
GA.	GAUGE
GALV.	GALVANIZED
G.B.	GRAB BAR
G.I.	GALVANIZED IRON
GL.	GLASS
GLU-LAM	GLUE-LAMINATED
GND.	GROUND
GR.	GRADE
GYP.	GYPSUM
H.B.	HOSE BIBB
H.C.	HOLLOW CORE
HDWD.	HARDWOOD
HDWR.	HARDWARE
H.M.	HOLLOW METAL
HORIZ.	HORIZONTAL
HR.	HOUR
HT.	HEIGHT
I.D.	INSIDE DIAMETER
INSUL.	INSULATION
INT.	INTERIOR
INV.	INVERT
JAN.	JANITOR
JT	JOINT
K.D.	KILN DRIED
LAB.	LABORATORY
LAM.	LAMINATE
LAV.	LAVATORY
LKR.	LOCKER
LT.	LIGHT
MAX.	MAXIMUM
M.B.	MACHINE BOLT
MECH.	MECHANICAL
MFR.	MANUFACTURER
M.H.	MANHOLE
MIN.	MINIMUM
MIR.	MIRROR
MISC.	MISCELLANEOUS
M.O.	MASONRY OPENING
M.S.	MACHINE SCREW
MTD.	MOUNTED
MTL.	METAL
MUL.	MULLION
(N)	NEW
N.	NORTH
N.I.C.	NOT IN CONTRACT
NO. or #	NUMBER
NOM.	NOMINAL
N.T.S.	NOT TO SCALE
OBS.	OBSCURE
O.C.	ON CENTER
OCC.	OCCUPANT(CY)
O.D.	OVERFLOW DRAIN and/or OUTSIDE DIAMETER
O.F.O.S.	OUTSIDE FACE OF STUD
O.F.C.I	OWNER FURNISHED and CONTRACTOR INSTALLED
O.H.	OPPOSITE HAND
OPNG.	OPENING
OPP.	OPPOSITE
P.A.F.	POWDER ACTUATED FASTENER
PL	PLATE
P.L.	PROPERTY LINE
P. LAM	PLASTIC LAMINATE
PLAS.	PLASTER
PLYWD.	PLYWOOD
PR.	PAIR
PTD.	PAINTED
PTN.	PARTITION
Q.T.	QUARRY TILE
R. or RAD.	RADIUS
R.C.P.	REINFORCED CONCRETE PIPE
R.D.	ROOF DRAIN
R.E.	RIM ELEVATION
REF.	REFERENCE
REINF.	REINFORCING
REQ'D	REQUIRED
R.H.M.S.	ROUND HEAD METAL SCREW
R.H.W.S.	ROUND HEAD WOOD SCREW
RM.	ROOM
R.O.	ROUGH OPENING
RWD.	REDWOOD
R.W.L.	RAIN WATER LEADER
S	SOUTH
S.A.D.	SEE ARCHITECTURAL DRAWINGS
S.C	SOLID CORE
S.C.D.	SEE CIVIL DRAWINGS
SCHED.	SCHEDULE
S.E.D.	SEE ELECTRICAL DRAWINGS
S.F.	SQUARE FEET
SHEATH.	SHEATHING
SHT.	SHEET
SIM.	SIMILAR
S.L.D.	SEE LANDSCAPE DRAWINGS
S.M.	SHEET METAL
S.M.D.	SEE MECHANICAL DRAWINGS
S.M.S.	SHEET METAL SCREW
S.O.V.	SHUT OFF VALVE
S.P.D.	SEE PLUMBING DRAWINGS
SPEC.	SPECIFICATIONS
SQ. or Ø	SQUARE
S.S.	STAINLESS STEEL
S.S.D.	SEE STRUCTURAL DRAWINGS
STAG.	STAGGERED
STD.	STANDARD
STL.	STEEL
STOR.	STORAGE
STRUCT.	STRUCTURAL
S.T.S.M.S.	SELF TAPPING SHEET METAL SCREW
SUSP.	SUSPENDED
T.& G.	TONGUE & GROOVE
TEL.	TELEPHONE
TERR.	TERRAZZO
THRES.	THRESHOLD
T.J.	TOOLED JOINT
T.O.B.	TOP OF BEAM
T.O.C.	TOP OF CURB or CONCRETE
T.O.S.	TOP OF STEEL or SLAB
T.O.W.	TOP OF WALL
TYP.	TYPICAL
U.O.N.	UNLESS OTHERWISE NOTED
VERT.	VERTICAL
V.C.P.	VITRIFIED CLAY PIPE
V.C.T.	VINYL COMPOSITION TILE
V.G.	VERTICAL GRAIN
V.I.F.	VERIFY IN FIELD
V.T.R.	VENT THROUGH ROOF
V.W.C.	VINYL WALL COVERING
W	WEST
W/	WITH
W.C.	WATER CLOSET
WD.	WOOD
W.H.	WATER HEATER
W/O	WITHOUT
W.O.	WHERE OCCURS
WP.	WATERPROOF / WEATHERPROOF
W. PT.	WORKING POINT
W.R.	WATER RESISTANT
WT.	WEIGHT

BOARD OF TRUSTEES

KENNETH CHIN	(PRESIDENT)
ALISON PROCTOR	(VICE PRESIDENT)
SHARA WATKINS	(CLERK)
NOELIA CORZO	(MEMBER)
LISA WARREN	(MEMBER)

DISTRICT SUPERINTENDANT
DR. JOAN ROSAS

CONSULTANTS

MECHANICAL
CYPRESS ENGINEERING GROUP
8 HARRIS COURT, SUITE A8
MONTEREY, CA 93940
(831) 218 - 1802

ELECTRICAL
AMERICAN CONSULTING ENGINEERS ELECTRICAL, INC.
1590 THE ALAMEDA, SUITE 200
SAN JOSE, CA 95126
(408) 236 - 2312

STRUCTURAL
BASE DESIGN, INC.
582 MARKET STREET, SUITE 1042
SAN FRANSISCO, CA 94104
(415) 455-2997

REFERENCE STANDARDS

PARTIAL LIST OF APPLICABLE STANDARDS (AS REFERENCED IN 2019 CBC - CHAPTER 35 & CFC):

ADA STANDARDS FOR ACCESSIBLE DESIGN (APPENDIX A OF 28 CFR PART 36) 2010 EDITION

APPLICABLE CODES

1 2019 BUILDING STANDARDS ADMINISTRATION CODE (PART 1, TITLE 24, CCR)
2 2019 CALIFORNIA BUILDING CODE (PART 2, VOLUMES 1 AND 2, TITLE 24, CCR)
3 2019 CALIFORNIA ELECTRICAL CODE (PART 3, TITLE 24, CCR)
4 2019 CALIFORNIA MECHANICAL CODE (PART 4, TITLE 24, CCR)
5 2019 CALIFORNIA PLUMBING CODE (PART 5, TITLE 24, CCR)
6 2019 CALIFORNIA ENERGY CODE (PART 6, TITLE 24, CCR)
7 2019 CALIFORNIA FIRE CODE (PART 9, TITLE 24, CCR)
8 2019 CALGREEN BUILDING STANDARDS CODE (PART 11, TITLE 24, CCR)
9 2019 CALIFORNIA REFERENCED STANDARDS CODE (PART 12, TITLE 24, CCR)
10 TITLE 19, CCR, PUBLIC SAFETY, STATE FIRE MARSHAL REGULATIONS

ADMINISTRATIVE REQUIREMENTS

1. A COPY OF PART 1 TO 5 CCR SHALL BE KEPT ON SITE AT ALL TIMES.
2. ALL CONSTRUCTION CHANGE DOCUMENTS AND ADDENDA TO BE SIGNED BY THE ARCHITECT, THE OWNER, AND APPROVED BY DSA. CONSTRUCTION CHANGE DOCUMENTS ARE NOT VALID UNTIL APPROVED BY DSA PER SECTION 4-338.
3. ALL TESTS TO CONFORM TO THE REQUIREMENTS OF SECTION 4-335.
4. TESTS OF MATERIALS AND TESTING LABORATORY SHALL BE IN ACCORDANCE WITH SECTION 4-335.
5. DSA SHALL BE NOTIFIED AT THE START OF CONSTRUCTION AND PRIOR TO PLACEMENT OF CONCRETE PER SECTION 4-331.
6. INSPECTOR SHALL BE APPROVED BY DSA. INSPECTOR SHALL BE IN ACCORDANCE WITH SECTION 4-333(b). THE DUTY OF THE INSPECTOR SHALL BE IN ACCORDANCE WITH SECTION 4-342.
7. SUPERVISION OF CONSTRUCTION BY DSA SHALL BE IN ACCORDANCE WITH 4-334.
8. CONTRACTOR, INSPECTOR, ARCHITECT, AND ENGINEERS SHALL SUBMIT VERIFIED REPORTS (FORM 6) IN ACCORDANCE WITH SECTION 4-336 AND 4-343.
9. THE ARCHITECT AND THE STRUCTURAL ENGINEERS SHALL PERFORM THEIR DUTIES IN ACCORDANCE WITH SECTIONS 4-333(a) AND 4-341.
10. THE CONTRACTOR SHALL PERFORM HIS DUTIES IN ACCORDANCE WITH SECTION 4-343.
11. THE INTENT OF THE DRAWINGS AND SPECIFICATIONS IS THE (RE)CONSTRUCTION OF A SCHOOL BUILDING(S) IN ACCORDANCE WITH TITLE 24, C.C.R. SHOULD ANY CONDITIONS DEVELOP NOT COVERED BY THE CONTRACT DOCUMENTS WHEREIN THE FINISHED WORK WILL NOT COMPLY WITH SAID C.C.R. A CONSTRUCTION CHANGE DOCUMENT DETAILING AND SPECIFYING THE REQUIRED WORK SHALL BE SUBMITTED AND APPROVED BY DSA BEFORE PROCEEDING WITH THE WORK.
12. DSA IS NOT SUBJECT TO ARBITRATION.
13. CHANGES TO THE APPROVED DRAWINGS AND SPECIFICATIONS SHALL BE MADE BY AN ADDENDUM OR A CONSTRUCTION CHANGED DOCUMENT (CCD) APPROVED BY THE DIVISION OF THE STATE ARCHITECT, AS REQUIRED BY SECTION 4-338, PART 1, TITLE 24, CCR.
14. A "DSA CERTIFIED" PROJECT INSPECTOR EMPLOYED BY THE DISTRICT (OWNER) AND APPROVED BY THE DSA SHALL PROVIDE CONTINUOUS INSPECTION OF THE WORK. THE DUTIES OF THE INSPECTOR ARE DEFINED IN SECTION 4-342, PART 1, TITLE 24, CCR.
15. A DSA ACCEPTED TESTING LABORATORY DIRECTLY EMPLOYED BY THE DISTRICT (OWNER) SHALL CONDUCT ALL THE REQUIRED TESTS AND INSPECTIONS FOR THE PROJECT.

SYMBOL LEGEND

REFER TO ARCHITECTURAL FLOR PLAN SHEETS AND CONSULTANT DRAWINGS FOR ADDITIONAL SYMBOLS AND REFERENCE DESIGNATIONS

DIMENSION REFERENCE

FACE OF OBJECT

CENTER LINE OF OBJECT

TAGS AND MARKERS

0 — PLAN REFERECE GRID

STRUCTURAL GRID LINE

1 — REVISION MARKER

1 — PLAN KEY NOTES

Room name / 101 — ROOM LABEL; ROOM NAME; ROOM NUMBER

1 — WALL TYPE MARKER

101a — DOOR ID; DOOR DESIGNATION; ROOM NUMBER

℄ — CENTER LINE

XX-1 — FINISH TAG

XX-1 — FLOOR FINISH TAG

MATERIALS REFERENCE

EARTH
GRAVEL / ROCK
CONCRETE
CONCRETE BLOCK (CMU)
SAND, GROUT, OR PLASTER
STEEL
PLYWOOD
WOOD, CONTINUOUS MEMBER
WOOD, BLOCKING
WOOD, FINISH GRADE

CABINET TYPES

PC - PREFINISHED CABINETS
PM - PREFINISHED MOBILE CABINETS
PR - PREFINISHED MOVEABLE CABINETS
PU - PREFINISHED UTILITY CABINETS
PS - SCIENCE CABINETS

NOTE: REFER TO SPECIFICATIONS FOR SPECIFIC CABINET TYPE REQUIREMENTS.

SECTION REFERENCE

1 / A12.08 — SIM — SECTION NUMBER; REFERENCE LABEL WHERE OCCURES; SHEET NUMBER

DETAIL REFERENCE

1 / A12.08 — SIM — DETAIL NUMBER; REFERENCE LABEL WHERE OCCURES; SHEET NUMBER

GENERAL NOTES

1. ITEMS OF A CIVIL, LANDSCAPE, STRUCTURAL, MECHANICAL, OR ELECTRICAL NATURE MAY NOT APPEAR ON THE ARCHITECTURAL DRAWINGS. SEE APPROPRIATE DRAWINGS FOR THESE ITEMS.
2. DIVISION OF THE STATE ARCHITECT (DSA) APPROVAL OF THIS APPLICATION DOES NOT INCLUDE FUTURE OR N.I.C. ITEMS.
3. ALL DEFERRED APPROVAL ITEMS SHALL BE SUBMITTED TO THE ARCHITECT AND THE APPROPRIATE CONSULTING ENGINEER FOR REVIEW & APPROVAL PRIOR TO SUBMITTING TO DSA FOR CHECKING & APPROVAL.
4. PRIOR TO BIDDING, THE GENERAL CONTRACTOR SHALL VISIT & INSPECT THE SITE TO FAMILIARIZE THEMSELVES WITH THE EXISTING CONDITIONS AFFECTING THE NEW WORK. THE GENERAL CONTRACTOR SHALL NOT DISPUTE, COMPLAIN, OR ASSERT THAT THERE IS ANY MISUNDERSTANDING IN REGARDS TO LOCATION, EXTENT, NATURE, OR AMOUNT OF WORK TO BE PERFORMED UNDER THIS CONTRACT DUE TO THE CONTRACTOR'S FAILURE TO INSPECT THE SITE AND/OR FAILURE TO INSPECT THE CONTRACT DOCUMENTS.
5. THE GENERAL CONTRACTOR & SUBCONTRACTORS ARE RESPONSIBLE FOR LOCATING & VERIFYING ALL EXISTING UNDERGROUND UTILITIES IN ALL AREAS OF THE NEW WORK PRIOR TO COMMENCEMENT OF EXCAVATION. EXISTING UTILITIES SHOWN ON THE DRAWINGS ARE APPROXIMATE ROUTING LOCATIONS AS BEST DETERMINED FROM EXISTING DRAWINGS & BY THE SCHOOL DISTRICT, BUT SHOULD NOT BE CONSTRUED TO REPRESENT ALL EXISTING UTILITIES.
6. ANY ALTERATIONS OF EXISTING FACILITIES TO ACCOMMODATE THE INSTALLATION OF NEW WORK SHALL BE REVIEWED BY THE ARCHITECT PRIOR TO COMMENCEMENT OF WORK.
7. ALL EXISTING FINISHES OR MATERIALS DAMAGED OR DEMOLISHED DUE TO NEW CONSTRUCTION SHALL BE RESTORED TO THEIR ORIGINAL STATE OR REPLACED WITH NEW MATERIALS FINISHED TO MATCH EXISTING.
8. CONTRACTOR SHALL COORDINATE ALL WORK TO AVOID DISRUPTION OF STUDENTS OR TEACHERS DURING SCHOOL HOURS. ANY DISRUPTION OF POWER, TELEPHONE, OR HVAC SYSTEMS MUST BE COORDINATED AND APPROVED BY THE DISTRICT REPRESENTATIVE PRIOR TO ANY WORK COMMENCING.
9. COMPLIANCE WITH CFC CHAPTER 33 (FIRE SAFETY DURING CONSTRUCTION AND DEMOLITION) AND CBC CHAPTER 33 (SAFEGUARDS DURING CONSTRUCTION) WILL BE ENFORCED.
10. ALL ITEMS ARE TO BE PROVIDED AS NEW, UNLESS OTHERWISE NOTED AS (E).

DEFERRED APPROVAL ITEMS

1. NONE

LOCATION MAP

SCOPE OF WORK

SCOPE OF WORK INCLUDES, BUT IS NOT LIMITED TO CAMPUS WIDE ELECTRICAL SERVICE UPGRADE AND REPLACEMENT OF HVAC EQUIPMENT AND ENCLOSURES. THIS PROJECT IS EXEMPT FROM PATH OF TRAVEL ALTERATION PER C.B.C. 11B-202.4, EXCEPTION 7.

BUILDING KEY

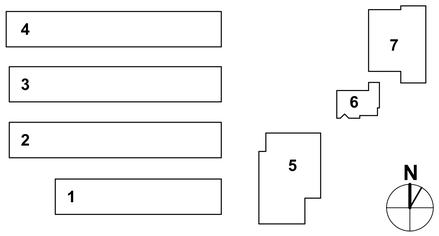

DRAWING INDEX

T1 TITLE SHEET

ARCHITECTURAL
A1.02 SITE PLAN
A2.01 DEMOLITION FLOOR PLANS - WINGS 2, 3, & 4
A3.01 NEW FLOOR PLANS - WINGS 2, 3, & 4
A4.01 TYPICAL NEW REFLECTED CEILING PLAN
A5.01 PARTIAL SITE ROOF PLAN
A8.10 EXTERIOR DETAILS
A9.10 INTERIOR ELEVATIONS & DETAILS
A11.01 FINISH SCHEDULE, CASEWORK SCHEDULE, & OPENING SCHEDULE, LEGENDS, & DETAILS

STRUCTURAL
S1.01 ABBREVIATIONS AND GENERAL NOTES
S2.01 EXISTING FRAMING PLANS - WINGS 2, 3, & 4
S5.01 TYPICAL CONCRETE DETAILS
S5.02 TYPICAL CONCRETE DETAILS
S8.01 FRAMING DETAILS & NAILING SCHEDULE

MECHANICAL
MP0.01 SYMBOL LEGENDS, ABBREVIATIONS, NOTES - MECHANICAL
MP0.02 SCHEDULES - MECHANICAL
MP2.01 FLOOR PLAN - DEMO - WING 2, 3, AND 4 - MECHANICAL
MP2.03 FLOOR PLAN - NEW - WINGS 2, 3, & 4 - MECHANICAL
MP5.01 CONTROLS - MECHANICAL
MP6.01 DETAILS - MECHANICAL & PLUMBING
MP8.01 TITLE 24 DCCUMENTS - MECHANICAL
* MP8.02 TITLE 24 DCCUMENTS - MECHANICAL

ELECTRICAL
E0.1 ELECTRICAL COVER SHEET
E1.1 ELECTRICAL SITE PLAN
E2.1 ELECTRICAL DEMO FLOOR PLANS - WINGS #1, #2, #3 & #4
E3.1 ELECTRICAL NEW FLOOR PLANS - WINGS #1, #2, #3 & #4
E4.1 DEMO SINGLE LINE DIAGRAM
E4.2 NEW SINGLE LINE DIAGRAM
E4.3 PANEL SCHEDULES
E5.1 ELECTRICAL DETAILS
E5.2 ELECTRICAL DETAILS
E5.3 ELECTRICAL DETAILS
E5.4 ELECTRICAL DETAILS

TOTAL SHEET COUNT: 33

* These drawings, and/or specifications, and/or calculations for the items listed above have been prepared by other design professionals or consultants who are licensed and/or authorized to prepare such drawings in this state. It has been examined by me for:
1. design intent and appears to meet the appropriate requirements of Title 24, California Code of Regulations and the project specifications prepared by me.
2. coordination with my plans and specifications and is acceptable for incorporation into the construction of this project.

The Statement of General Conformance "shall not be construed as relieving me of my rights, duties, and responsibilities under Sections 17302 and 81138 of the Education Code and Sections 4-336, 4-341 and 4-344" of Title 24, Part 1. (Title 24, Part 1, Section 4-317(b))

THANG DO	10/08/2021
PRINCIPAL IN CHARGE	**DATE -**
C-018127	11/30/21
CALIFORNIA LICENSE NUMBER	**EXPIRATION DATE**

PROJECT
COLLEGE PARK ELEMENTARY SCHOOL - HVAC REPLACEMENT

SAN MATEO-FOSTER CITY SCHOOL DISTRICT

CONSULTANT

STAMP

STATE
DSA FILE NUMBER 41-26
APPL # 01-119530

REVISIONS

No.	Description	Date

MILESTONES

SD	
90% CD	
DSA SUB	05/26/2021
BACKCHECK	10/08/2021

SHEET
TITLE SHEET

DATE 10/08/2021
JOB # 2021005.01
SHEET # T1

10/12/2021 2:03:46 PM
C:\Users\kbailey\Documents\2021005.01_College Park ES - HVAC Replacement_Central (2019 version)_kbaileyKKPJP.rvt

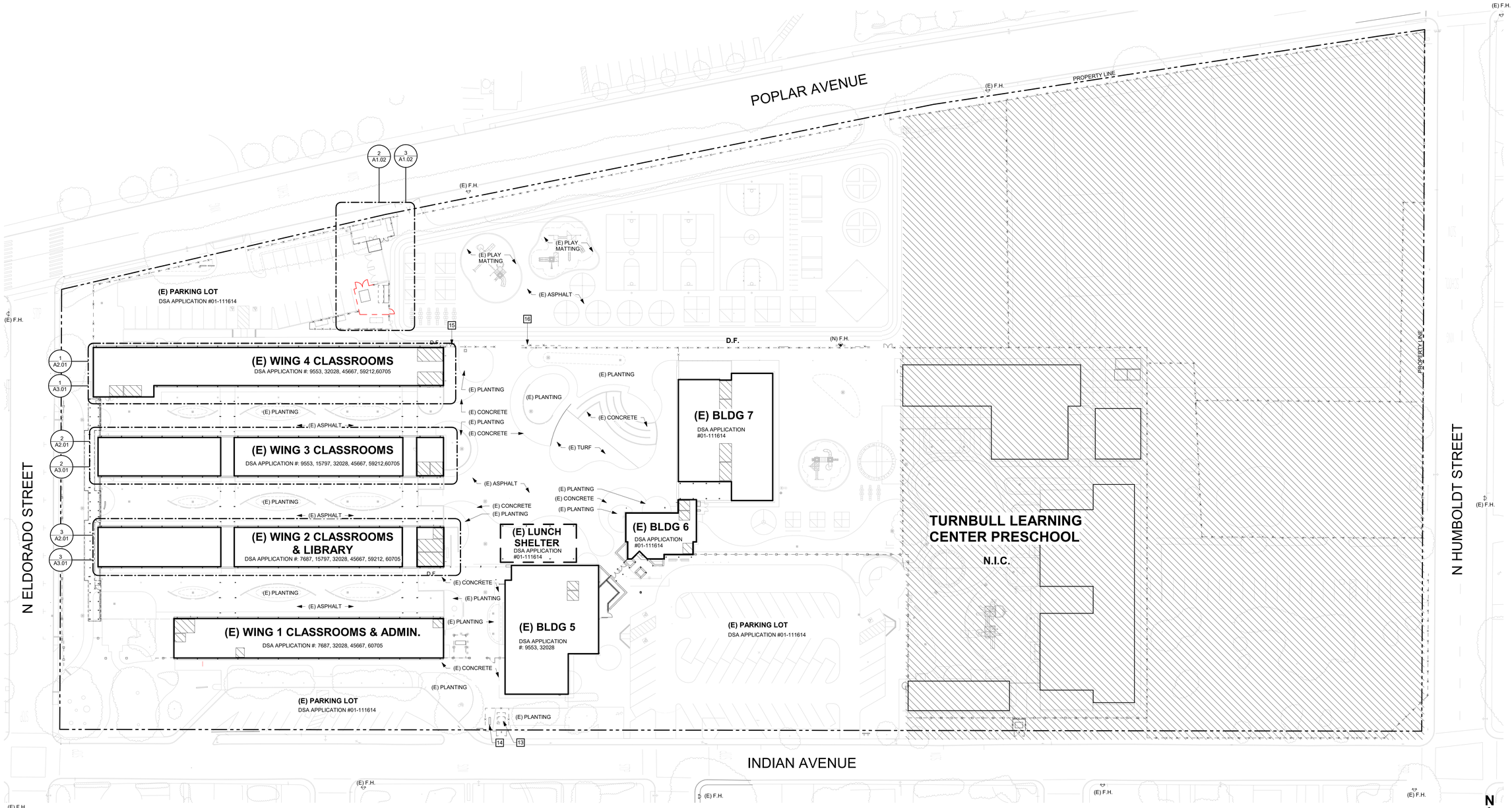

1 NEW SITE PLAN
SCALE: 1/32" = 1'-0"

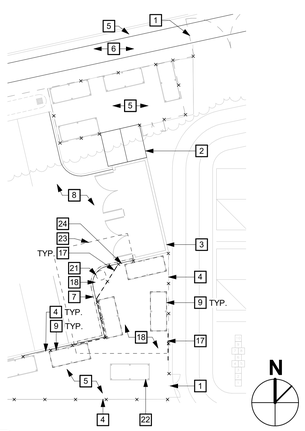

2 DEMOLITION ENLARGED SITE PLAN
SCALE: 1/16" = 1'-0"

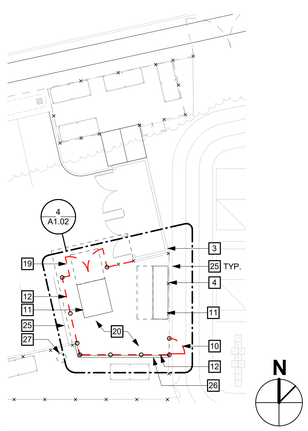

3 NEW ENLARGED SITE PLAN
SCALE: 1/16" = 1'-0"

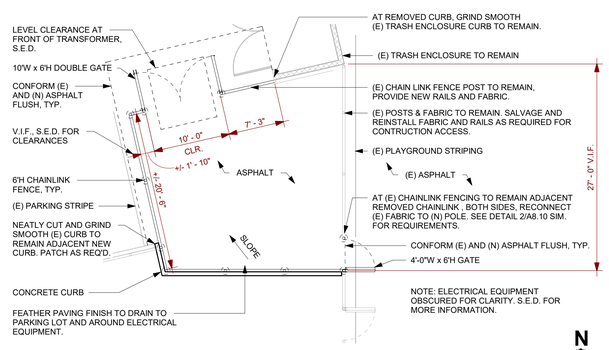

4 ELECTRICAL ENCLOSURE ENLARGED LAYOUT
SCALE: 1/8" = 1'-0"

GENERAL NOTES

A BUILDINGS ARE UNSPRINKLERED, TYPE V-B CONSTRUCTION UNLESS OTHERWISE NOTED.

B NO DEMOLITION SHALL BEGIN UNTIL PLANS INCLUDING THE DEMOLITION WORK HAVE BEEN APPROVED BY DSA.

C CONTRACTOR SHALL MAINTAIN FIRE LANE ACCESS THROUGHOUT PROJECT.

D DO NOT INTERRUPT EXISTING UTILITY SERVICES SERVING OCCUPIED OR USED FACILITIES, EXCEPT WHEN AUTHORIZED IN WRITING BY AND COORDINATED WITH THE OWNER.

E PROTECT EXISTING & NEW STRUCTURES, UTILITIES, SIDEWALKS, PAVEMENTS, TREES AND SHRUBS FROM DAMAGE DURING CONSTRUCTION.

F REFER TO ELECTRICAL AND MECHANICAL DRAWINGS FOR EXTENT OF ELECTRICAL AND MECHANICAL WORK.

SITE PLAN KEY NOTES

1 (E) GATE TO REMAIN.
2 (E) SHED TO REMAIN.
3 (E) CMU TRASH ENCLOSURE TO REMAIN.
4 (E) CHAINLINK FENCING TO REMAIN.
5 (E) PLANTINGTO REMAIN.
6 (E) SIDEWALK TO REMAIN.
7 REMOVE (E) CURB AND PREP FOR NEW WORK, S.E.D.
8 (E) ASPHALT TO REMAIN.
9 REMOVE (E) PLANTER.
10 4'-0"W GATE. SEE DETAIL 2/A8.10 AND S.E.D.
11 ELECTRICAL EQUIPMENT, S.E.D.
12 CHAINLINK FENCE, SEE DETAIL 2/A8.10 AND S.E.D.
13 REMOVE (E) ELECTRICAL EQUIPMENT AND FOUNDATION COMPLETELY, S.E.D. (E) CHAINLINK FENCING TO REMAIN.
14 (E) GAS METER TO REMAIN.
15 (E) GATE TO REMAIN
16 (E) SLIDING GATE TO REMAIN.
17 REMOVE (E) CHAINLINK FENCING, POLES, AND FOOTINGS. SEE NEW PLAN FOR ADDITIONAL INFORMATION.
18 REMOVE (E) PLANTING, CAP & REROUTE IRRIGATION AND PREP FOR NEW WORK, S.E.D.
19 10'-0"W DOUBLE GATE, SEE DETAIL 3/A8.10 AND S.E.D.
20 ASPHALT PAVING, SEE DETAIL 9/A8.01 SIM. CONFORM FLUSH TO ADJACENT SURFACE.
21 REMOVE (E) LIGHT POLE & FOOTING. PREP FOR NEW WORK, S.E.D.
22 (E) PLANTER TO REMAIN.
23 REMOVE (E) PAVING. SEE NEW PLAN FOR MORE INFORMATION.
24 (E) POLES TO REMAIN. REMOVE (E) CHAINLINK FENCING. SEE NEW PLAN FOR ADDITIONAL INFORMATION.
25 RESTRIPE AREAS ALTERED FOR CONSTRUCTION ACCESS.
26 CURB, SEE 13/A8.10. CONFORM FLUSH TO ADJACENT CURB TO REMAIN.
27 LIGHT POLE, S.E.D.

GRAPHIC KEY

EXISTING TOILET ROOMS.
EXISTING CONSTRUCTION TO REMAIN
EXISTING COVERED STRUCTURE
TURNBULL LEARNING CENTER PRESCHOOL, N.I.C.
ASSUMED PROPERTY LINE
(E) F.H. EXISTING FIRE HYDRANT
EXISTING CHAINLINK FENCE
EXISTING TUBE STEEL FENCE
(N) CHAINLINK FENCE

IDENTIFICATION STAMP
DIV. OF THE STATE ARCHITECT
APP: 01-119530 INC:
REVIEWED FOR
SS ☑ FLS ☑ ACS ☑
DATE: 10/26/2021

aedis architects
www.aedisarchitects.com
387 S. 1st Street, Suite 300
San Jose, CA 95113
tel: (408)-300-5160
fax: (408)-300-5121

PROJECT
COLLEGE PARK ELEMENTARY SCHOOL - HVAC REPLACEMENT

SAN MATEO-FOSTER CITY SCHOOL DISTRICT

CONSULTANT

STAMP
LICENSED ARCHITECT STATE OF CALIFORNIA

STATE
DSA FILE NUMBER 41-26
APPL # 01-119530

REVISIONS

No.	Description	Date
△		

MILESTONES

DD	
90% CD	
DSA SUB	05/26/2021
BACKCHECK	10/08/2021

SHEET
SITE PLAN

DATE 10/08/2021
JOB # 2021005.01
SHEET # A1.02

10/12/2021 2:03:17 PM
C:\Users\kbailey\Documents\2021005.01_College Park ES - HVAC Replacement_Central (2019 version)_kbaileyKKPJP.rvt

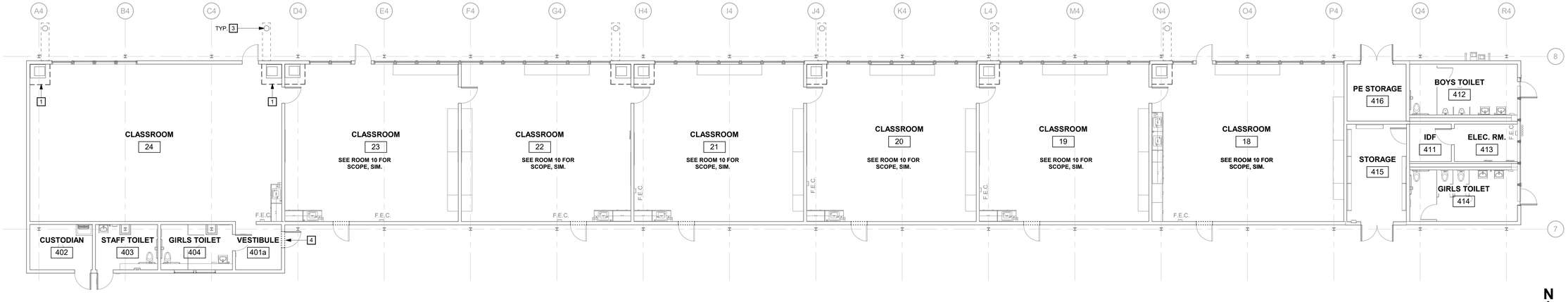

1 DEMOLITION FLOOR PLAN - WING 4
SCALE: 1/8" = 1'-0"

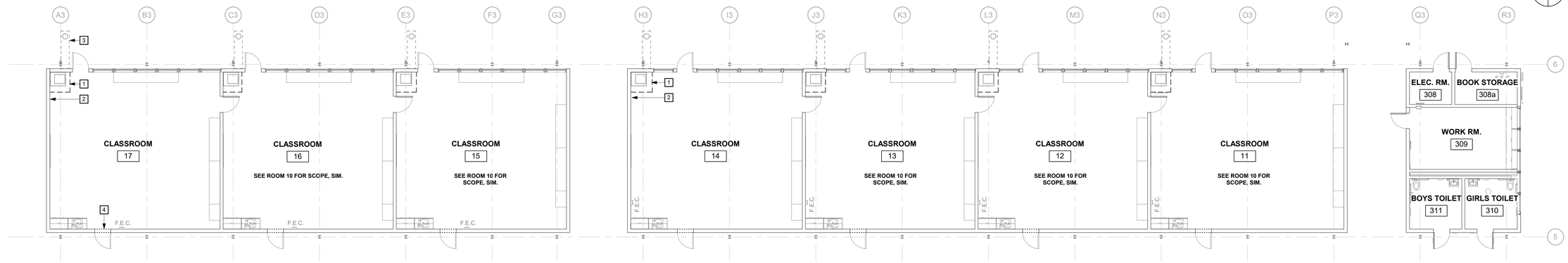

2 DEMOLITION FLOOR PLAN - WING 3
SCALE: 1/8" = 1'-0"

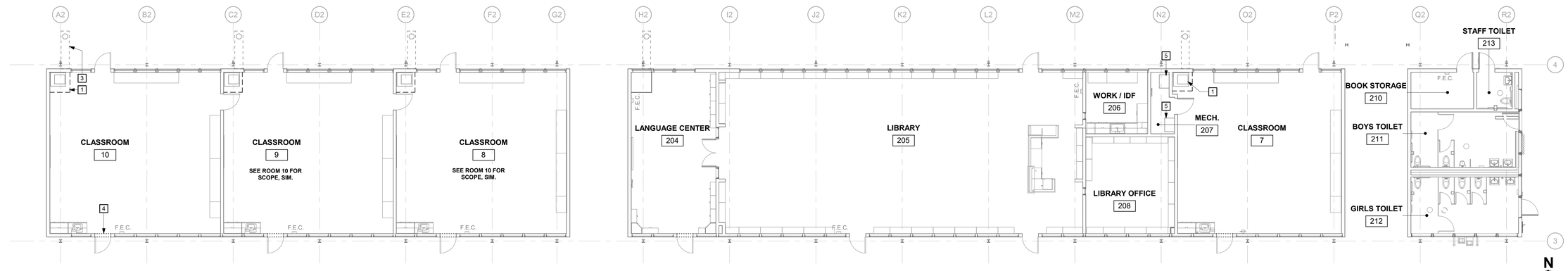

3 DEMOLITION FLOOR PLAN - WING 2
SCALE: 1/8" = 1'-0"

GENERAL SHEET NOTES

A ROOM NAMES OR NUMBERS MAY NOT BE CONSISTENT BETWEEN DEMOLITION AND NEW FLOOR PLANS.

B REFER TO MECHANICAL AND ELECTRICAL DRAWINGS FOR EXTENT OF MECHANICAL AND ELECTRICAL DEMOLITION WORK.

C VERIFY LIMITS OF DEMOLITION WITH SCOPE OF NEW WORK PRIOR TO COMMENCING WORK.

D ALL ITEMS SHOWN DASHED ARE TO BE DEMOLISHED UNLESS OTHERWISE NOTED ON PLANS.

E REMOVE ALL MISCELLANEOUS TRIM, CASEWORK, EQUIPMENT, CONDUIT, BASES, AND OTHER SURFACE MOUNTED ITEMS WHETHER SHOWN OR NOT, AS REQUIRED TO FACILITATE SCOPE OF WORK. REMOVE AND CAP ALL OUTLETS, SWITCHES, WIRES, THERMOSTATS, ETC. TO THEIR SOURCE AS REQUIRED. SEE MECHANICAL AND ELECTRICAL DRAWINGS FOR ADDITIONAL INFORMATION AND SCOPE OF WORK.

F REMOVE ADJACENT FINISHES AS REQUIRED TO FACILITATE SCOPE OF WORK. PATCH BACK IN KIND.

G EXISTING EQUIPMENT INDICATED TO BE RELOCATED PER NEW PLAN IS TO BE STORED AND PROTECTED DURING CONSTRUCTION.

H NO DEMOLITION SHALL BEGIN UNTIL PLANS INCLUDING THE DEMOLITION WORK HAVE BEEN APPROVED BY DSA

I DIMENSIONS FOR EXISTING BUILDING ARE APPROXIMATE. CONTRACTOR TO FIELD VERIFY PRIOR TO START OF CONSTRUCTION.

DEMOLITION FLOOR PLAN KEYNOTES

1 REMOVE (E) MECHANICAL UNIT AND ENCLOSURE. (E) DUCTWORK TO BE REUSED. S.M.D.
2 RECONFIGURE (E) WIREMOLD. SHORTEN CONFIGURATION TIGHT TO NEW ENCLOSURE AND PROVIDE END CAP. SEE NEW FLOOR PLAN FOR MORE INFORMATION.
3 (E) DRYWELL TO REMAIN, S.M.D.
4 REMOVE (E) WINDOW GLAZING ABOVE AND PREP FOR NEW WORK, S.M.D
5 REMOVE (E) MECHANICAL EQUIPMENT, S.M.D.

GRAPHIC KEY

EXISTING WALL TO REMAIN.

EXISTING STOREFRONT OR WINDOW TO REMAIN.

BUILDING KEY

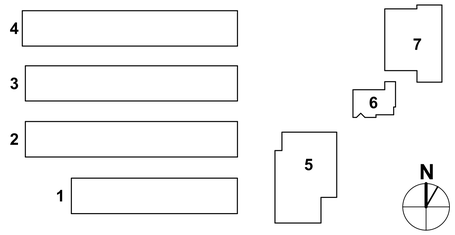

IDENTIFICATION STAMP
DIV. OF THE STATE ARCHITECT
APP: 01-119530 INC:
REVIEWED FOR
SS ☑ FLS ☑ ACS ☑
DATE: 10/26/2021

aedis architects
www.aedisarchitects.com
387 S. 1st Street, Suite 300
San Jose, CA 95113
tel: (408)-300-5160
fax: (408)-300-5121

PROJECT
COLLEGE PARK ELEMENTARY SCHOOL - HVAC REPLACEMENT

SAN MATEO-FOSTER CITY SCHOOL DISTRICT

CONSULTANT

STAMP

STATE
DSA FILE NUMBER 41-26
APPL # 01-119530

REVISIONS

No.	Description	Date
△		

MILESTONES

DD	
90% CD	
DSA SUB	05/26/2021
BACKCHECK	10/08/2021

SHEET
DEMOLITION FLOOR PLANS - WINGS 2, 3, & 4

DATE 10/08/2021
JOB # 2021005.01
SHEET # A2.01

10/12/2021 2:03:22 PM
C:\Users\kbailey\Documents\2021005.01_College Park ES - HVAC Replacement_Central (2019 version)_kbaileyKKPJP.rvt

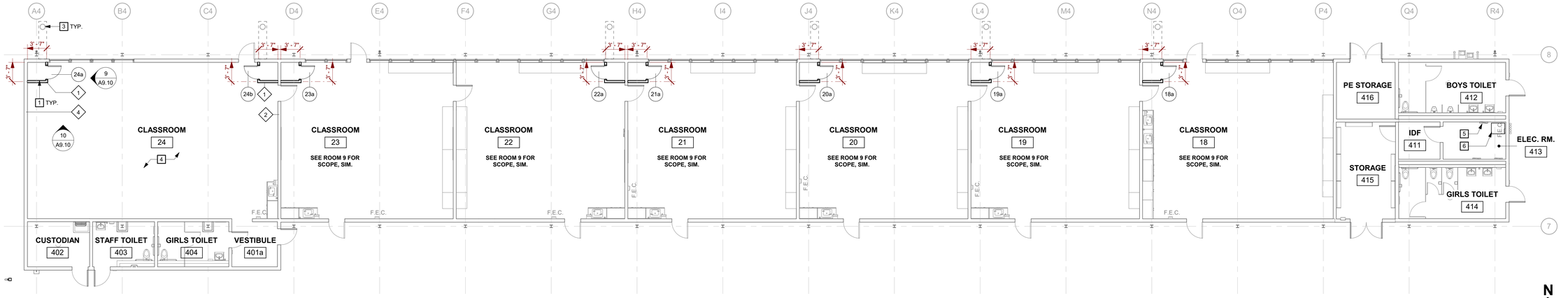

1 NEW FLOOR PLAN - WING 4
SCALE: 1/8" = 1'-0"

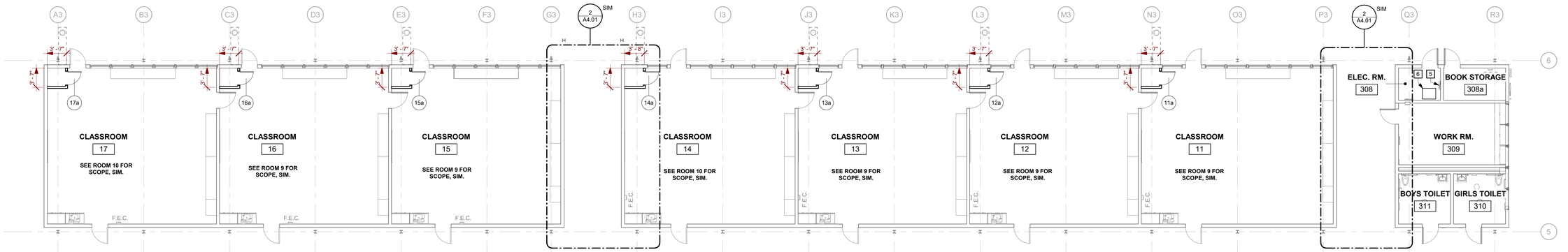

2 NEW FLOOR PLAN - WING 3
SCALE: 1/8" = 1'-0"

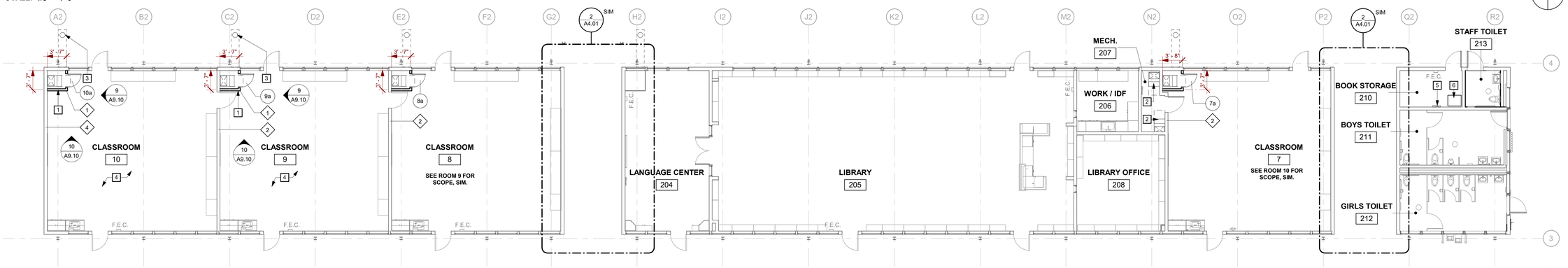

3 NEW FLOOR PLAN - WING 2
SCALE: 1/8" = 1'-0"

GENERAL SHEET NOTES

A REFER TO MECHANICAL AND ELECTRICAL DRAWINGS FOR EXTENT OF MECHANICAL AND ELECTRICAL WORK.

B DIMENSIONS FOR EXISTING BUILDING ARE APPROXIMATE. CONTRACTOR TO FIELD VERIFY PRIOR TO START OF CONSTRUCTION.

C REMOVE AND REPLACE (E) WALL BASE AS REQUIRED FOR NEW CONSTRUCTION. PROVIDE NEW WALL BASE AT ALL REMOVED CASEWORK, NEW PARTITION WALLS, OR PATCHED FLOORING.

D RECONFIGURE A.C.T. GRID TIGHT TO NEW MECHANICAL ENCLOSURE WALL FINISH. PROVIDE NEW LAY IN CEILING TILES AT RECONFIGURED AREA. AREA CUT OR ALTERED IN EACH ROOM SHALL NOT EXCEED 10 PERCENT OF THE ENTIRE CEILING AREA.

E PATCH AND PAINT WALL AT REMOVED CASEWORK, REMOVED WALL MOUNTED BOARDS, OR RECONFIGURED RACEWAY.

F SCRIBE FINISHES TIGHT TO ADJACENT CONDITIONS INCLUDING BUT NOT LIMITED TO WALL FINISHES, WINDOWS, CURTAIN RAILS, AND DUCTWORK.

NEW FLOOR PLAN KEY NOTES

1 FULL HEIGHT FRAMED MECHANICAL ENCLOSURE. MAINTAIN MIN. INTERIOR CLR. PER DETAIL 16/A9.10. PATCH ADJACENT FINISHES INCLUDING BUT NOT LIMITED TO WALLS AND CEILINGS. RECONFIGURE A.C.T. GRID AND REPLACE ACOUSTICAL TILES. V.I.F. FREE AND FIXED END OF GRID AND REPLACE IN KIND, SEE DETAILS 8/A9.10, 11/A9.10, & 12/A9.10

2 MECHANICAL UNIT, S.M.D.

3 (E) DRYWELL TO REMAIN, S.M.D.

4 REFER TO 1/A4.01 FOR TYPICAL REFLECTED CEILING PLAN

5 ELECTRICAL PANEL, PROVIDE BACKING, S.E.D.

6 TRANSFORMER, S.E.D

GRAPHIC KEY

WALL TYPES:

EXISTING NONRATED WALL TO REMAIN.

WALL TYPE. REFER TO SHEET A9.10 FOR WALL TYPE DESCRIPTION, TYP.

STUD WALL

BUILDING KEY

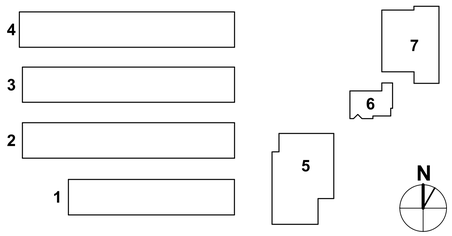

IDENTIFICATION STAMP
DIV. OF THE STATE ARCHITECT
APP: 01-119530 INC:
REVIEWED FOR
SS ☑ FLS ☑ ACS ☑
DATE: 10/26/2021

aedis architects
www.aedisarchitects.com
387 S. 1st Street, Suite 300
San Jose, CA 95113
tel: (408)-300-5160
fax: (408)-300-5121

PROJECT

COLLEGE PARK ELEMENTARY SCHOOL - HVAC REPLACEMENT

SAN MATEO-FOSTER CITY SCHOOL DISTRICT

CONSULTANT

STAMP

STATE
DSA FILE NUMBER 41-26
APPL # 01-119530

REVISIONS

No.	Description	Date
△		

MILESTONES

DD	
90% CD	
DSA SUB	05/26/2021
BACKCHECK	10/08/2021

SHEET

NEW FLOOR PLANS - WINGS 2, 3, & 4

DATE 10/08/2021

JOB # 2021005.01

SHEET # A3.01

10/12/2021 2:03:24 PM
C:\Users\kbailey\Documents\2021005.01_College Park ES - HVAC Replacement_Central (2019 version)_kbaileyKKPJP.rvt

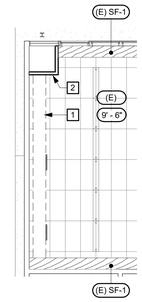

1 TYPICAL NEW REFLECTED CEILING PLAN
SCALE: 1/8" = 1'-0"

N

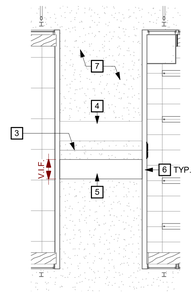

2 TYPICAL WALKWAY REFLECTED CEILING PLAN
SCALE: 1/8" = 1'-0"

N

GENERAL SHEET NOTES

A REFER TO MECHANICAL AND ELECTRICAL DRAWINGS FOR EXTENT OF MECHANICAL AND ELECTRICAL WORK.

B REFER TO FINISH SCHEDULE ON SHEET A11.01 FOR CEILING FINISHES NOT SHOWN.

C RECONFIGURE A.C.T. GRID TIGHT TO NEW MECHANICAL ENCLOSURE WALL FINISH. PROVIDE NEW LAY IN CEILING TILES AT RECONFIGURED AREA. AREA CUT OR ALTERED IN EACH ROOM SHALL NOT EXCEED 10 PERCENT OF THE ENTIRE CEILING AREA.

D SCRIBE FINISHES TIGHT TO ADJACENT CONDITIONS INCLUDING BUT NOT LIMITED TO WALL FINISHES, WINDOWS, CURTAIN RAILS, AND DUCTWORK.

E PROVIDE NEW CEILING TILE MATCHING ADJACENT TILES WHERE EXISTING LIGHTS, SPEAKERS OR OTHER EQUIPMENT WERE REMOVED.

NEW REFLECTED CEILING PLAN KEYNOTES

1 DUCTWORK OBSCURED FOR CLARITY, S.M.D.
2 REPLACE PERIMETER TRIM AND PROVIDE NEW CEILING TILE ADJACENT. REPLACE FREE AND FIXED ENDS IN KIND, SEE DETAILS 8/A9.10, 11/A9.10, & 12/A9.10.
3 (E) RIDGE
4 (E) PAINTED SHEET METAL CONDUIT ENCLOSURE TO REMAIN.
5 PAINTED 18 GA. SHEET METAL CONDUIT ENCLOSURE. SEE DETAIL 20/A8.10 AND S.E.D.
6 S.E.D. FOR CONDUIT PENETRATION DETAIL.
7 (E) WOOD FINISH.

GRAPHIC KEY

(E) 2'-0" x 4'-0" A.C.T. SUSPENDED CEILING SYSTEM

(E) GYPSUM BD. CEILING

(E) WOOD SOFFIT

BUILDING KEY

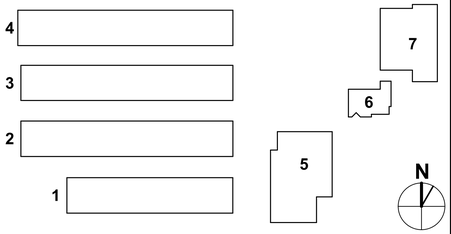

IDENTIFICATION STAMP
DIV. OF THE STATE ARCHITECT
APP: 01-119530 INC:
REVIEWED FOR
SS ☑ FLS ☑ ACS ☑
DATE: 10/26/2021

aedis architects
www.aedisarchitects.com
387 S. 1st Street, Suite 300
San Jose, CA 95113
tel: (408)-300-5160
fax: (408)-300-5121

PROJECT

COLLEGE PARK ELEMENTARY SCHOOL - HVAC REPLACEMENT

SAN MATEO-FOSTER CITY SCHOOL DISTRICT

CONSULTANT

STAMP

LICENSED ARCHITECT
10/08/21
STATE OF CALIFORNIA

STATE
DSA FILE NUMBER 41-26
APPL # 01-119530

REVISIONS

No.	Description	Date
△		

MILESTONES

DD	
90% CD	
DSA SUB	05/26/2021
BACKCHECK	10/08/2021

SHEET

TYPICAL NEW REFLECTED CEILING PLAN

DATE 10/08/2021
JOB # 2021005.01
SHEET # A4.01

10/12/2021 2:03:27 PM
C:\Users\kbailey\Documents\2021005.01_College Park ES - HVAC Replacement_Central (2019 version)_kbaileyKKPJP.rvt

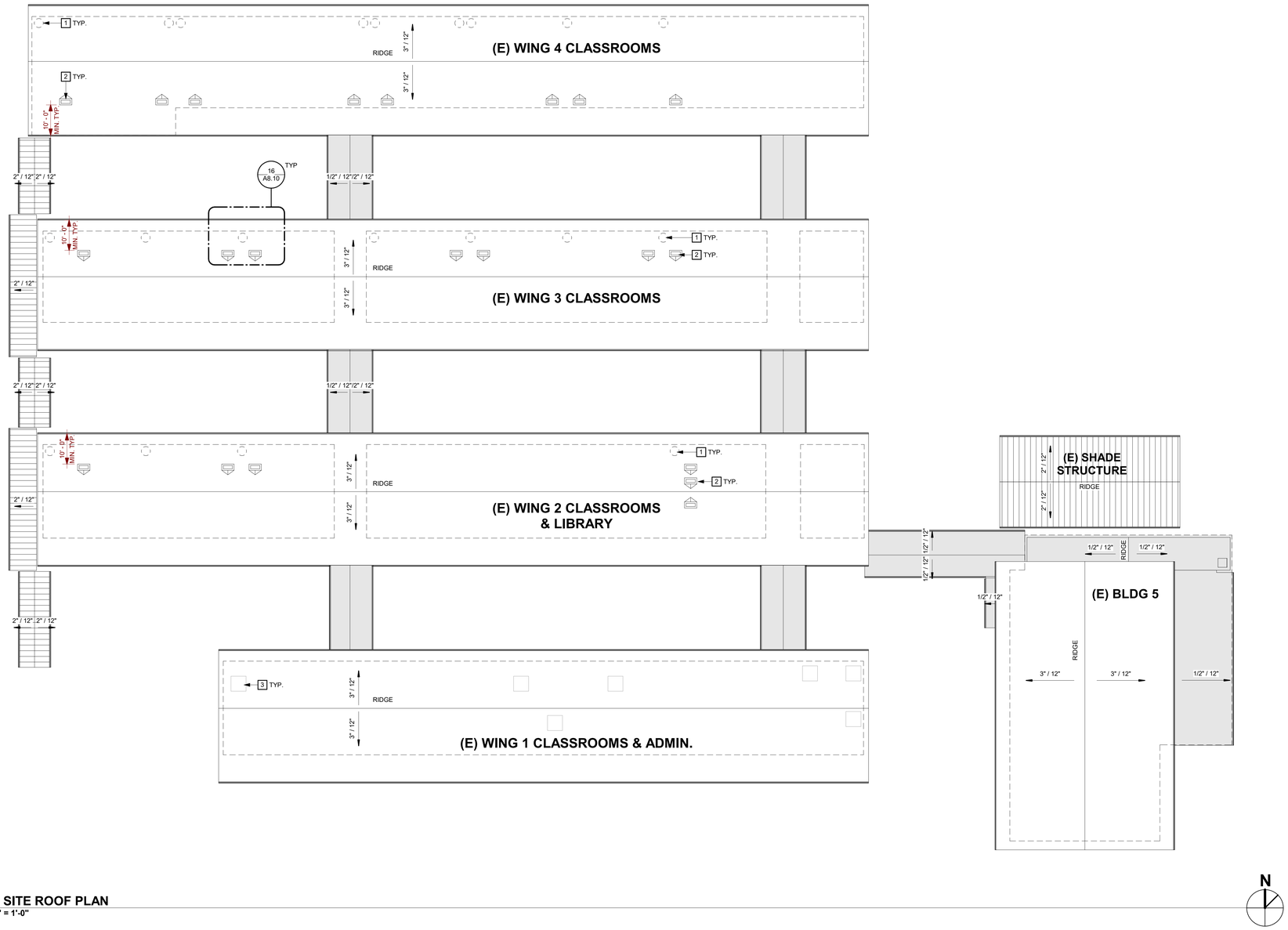

1 **PARTIAL SITE ROOF PLAN**
SCALE: 1/16" = 1'-0"

GENERAL SHEET NOTES

A REFER TO MECHANICAL AND ELECTRICAL DRAWINGS FOR EXTENT OF MECHANICAL AND ELECTRICAL WORK.

B SIZE OF MECHANICAL EQUIPMENT PADS ARE FOR REFERENCE ONLY. THE CONTRACTOR SHALL VERIFY REQUIRED PAD DIMENSION WITH EQUIPMENT MANUFACTURER.

ROOF PLAN KEYNOTES

1 PATCH (E) PENETRATION AT REMOVED FLUE AND COMBUSTION AIR INTAKE AND PATCH (N) PENETRATIONS. S.M.D. AND SEE DETAIL 17/A8.10.
2 MECHANICAL UNIT ON PLATFORM WITH CRICKET. S.M.D. AND SEE DETAIL 10/A8.10
3 (E) MECHANICAL EQUIPMENT

GRAPHIC KEY

(E) ASPHALT SHINGLE, CLASS C MINIMUM

(E) SINGLE PLY ROOFING, CLASS C MINIMUM

(E) METAL ROOFING

OUTLINE OF WALL BELOW

IDENTIFICATION STAMP
DIV. OF THE STATE ARCHITECT
APP: 01-119530 INC:
REVIEWED FOR
SS ☑ FLS ☑ ACS ☑
DATE: 10/26/2021

aedis architects
www.aedisarchitects.com
387 S. 1st Street, Suite 300
San Jose, CA 95113
tel: (408)-300-5160
fax: (408)-300-5121

PROJECT
COLLEGE PARK ELEMENTARY SCHOOL - HVAC REPLACEMENT

SAN MATEO-FOSTER CITY SCHOOL DISTRICT

CONSULTANT

STAMP
LICENSED ARCHITECT
10/08/21
STATE OF CALIFORNIA

STATE
DSA FILE NUMBER 41-26
APPL # 01-119530

REVISIONS

No.	Description	Date

MILESTONES

DD	
90% CD	
DSA SUB	05/26/2021
BACKCHECK	10/08/2021

SHEET
PARTIAL SITE ROOF PLAN

DATE 10/08/2021
JOB # 2021005.01
SHEET # A5.01

10/12/2021 2:03:30 PM
C:\Users\kbailey\Documents\2021005.01_College Park ES - HVAC Replacement_Central (2019 version)_kbaileyKKP.rvt

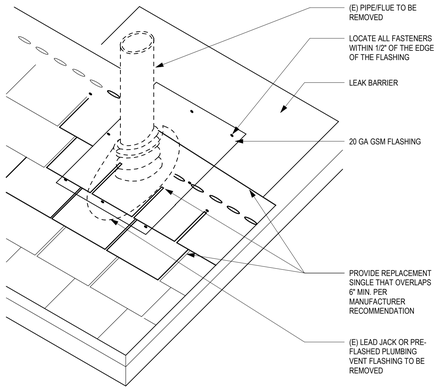

17 ROOF PATCH AT REMOVED PIPES
SCALE: 3" = 1'-0"

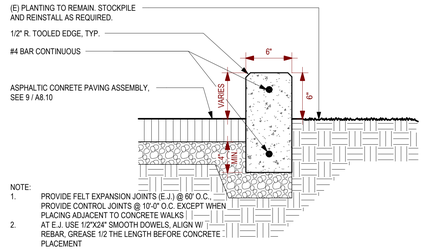

13 ASPHALT/CONCRETE CURB
SCALE: 1 1/2" = 1'-0"

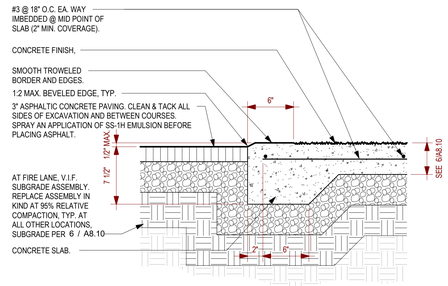

9 ASPHALT/CONCRETE JOINT
SCALE: 1 1/2" = 1'-0"

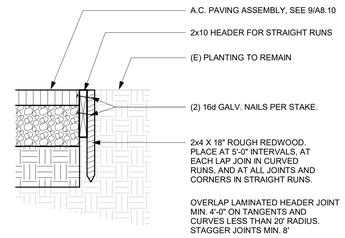

5 EDGE OF ASPHALT PAVING
SCALE: 1" = 1'-0"

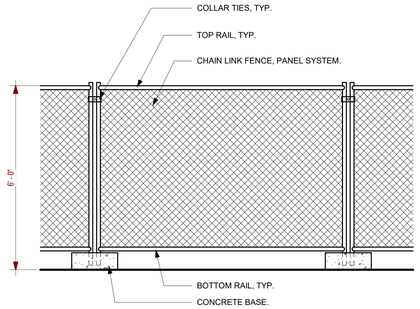

1 REQ'D TEMPORARY CONSTRUCTION FENCE
SCALE: 1/2" = 1'-0"

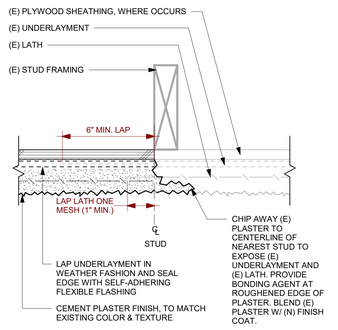

PLAN AT VERTICAL PATCH

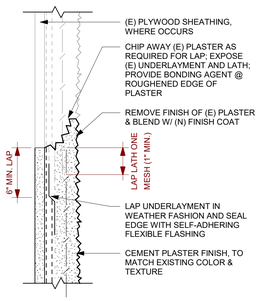

SECTION AT HORIZONTAL PATCH

18 CEMENT PLASTER PATCHING
SCALE: 3" = 1'-0"

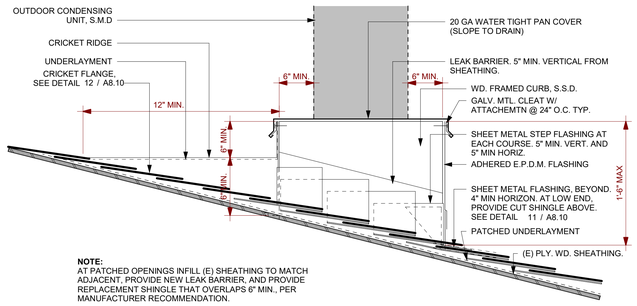

NOTE:
AT PATCHED OPENINGS INFILL (E) SHEATHING TO MATCH ADJACENT, PROVIDE NEW LEAK BARRIER, AND PROVIDE REPLACEMENT SHINGLE THAT OVERLAPS 6" MIN., PER MANUFACTURER RECOMMENDATION.

10 SHINGLE SIDE FLASHING
SCALE: 1 1/2" = 1'-0"

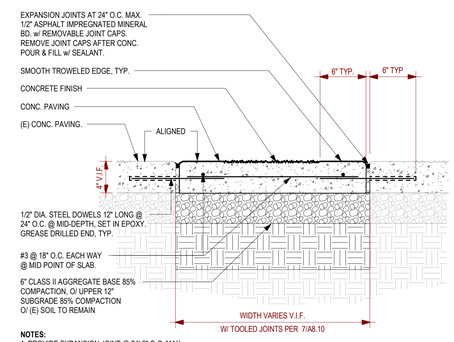

NOTES:
1. PROVIDE EXPANSION JOINT @ 24'-0" O.C. MAX.

6 CONCRETE PATCH
SCALE: 1 1/2" = 1'-0"

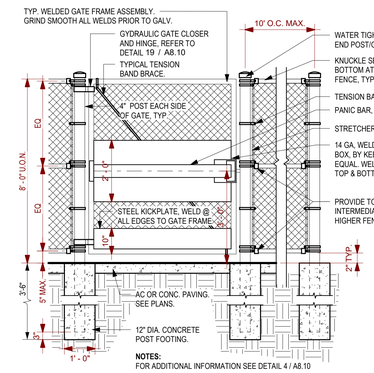

NOTES:
FOR ADDITIONAL INFORMATION SEE DETAIL 4 / A8.10

2 TYPICAL CHAINLINK GATE (SINGLE)
SCALE: 1/2" = 1'-0"

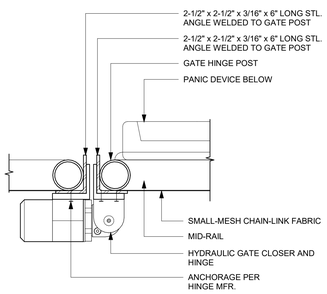

19 HYDRAULIC HINGE AND CLOSER
SCALE: 3" = 1'-0"

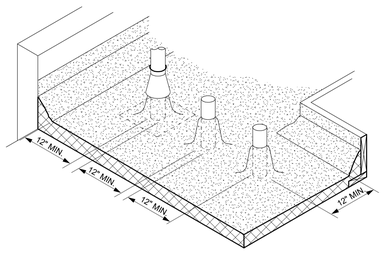

CLEARANCES BETWEEN PIPES, WALLS & CURBS
SCALE: 1" = 1'-0"

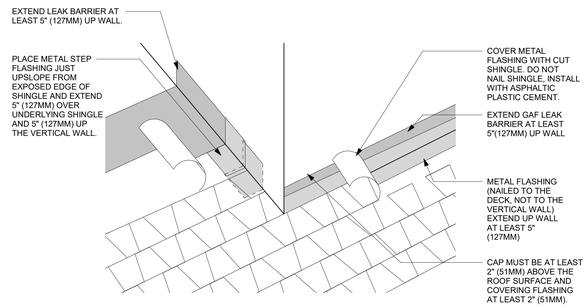

11 SHINGLE LOWER FLASHING
SCALE: 1" = 1'-0"

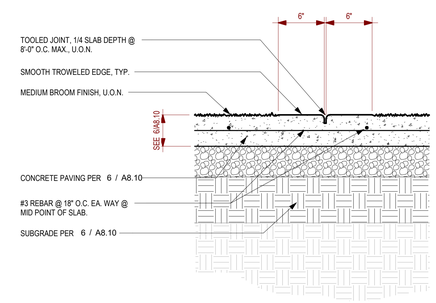

7 TOOLED JOINT (TJ)
SCALE: 1 1/2" = 1'-0"

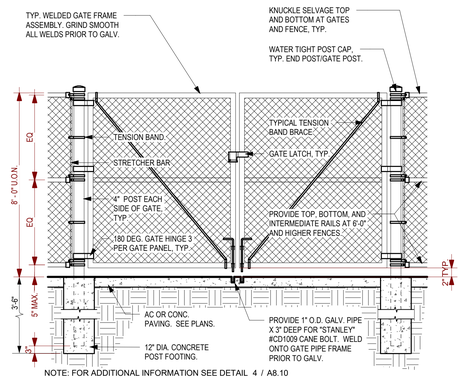

NOTE: FOR ADDITIONAL INFORMATION SEE DETAIL 4 / A8.10

3 TYPICAL CHAINLINK GATE (PAIR) AT EQUIPMENT YARD
SCALE: 1/2" = 1'-0"

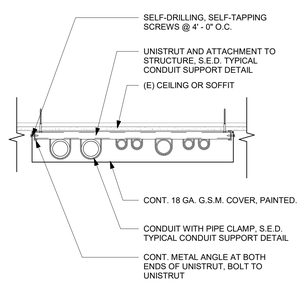

20 CONDUIT ENCLOSURE
SCALE: 1 1/2" = 1'-0"

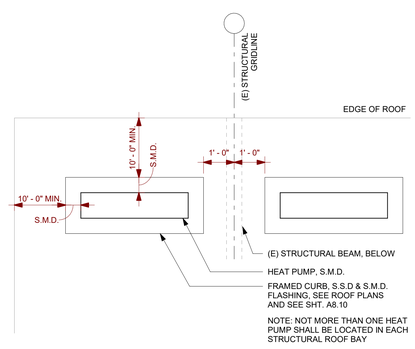

16 HEAT PUMP TYP. ROOF LAYOUT, N.T.S.
SCALE: 1/2" = 1'-0"

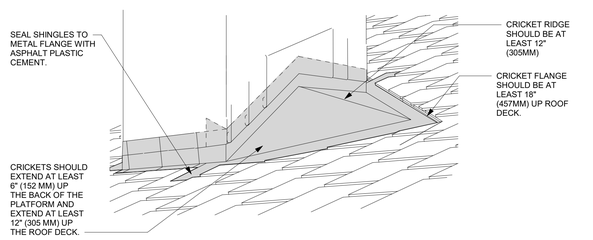

12 CRICKET SHINGLE FLASHING
SCALE: 1/2" = 1'-0"

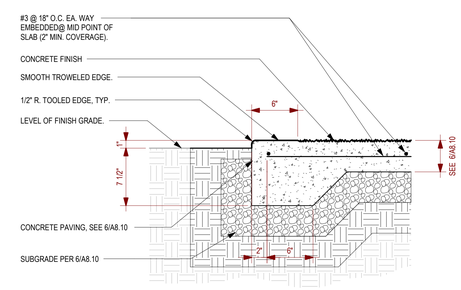

8 EDGE OF CONCRETE PAVING
SCALE: 1 1/2" = 1'-0"

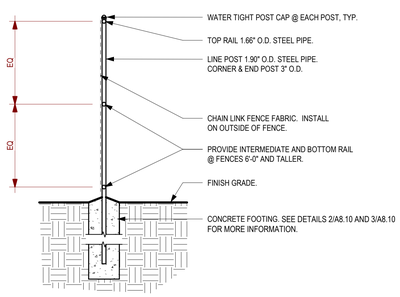

4 TYPICAL CHAINLINK FENCE
SCALE: 1/2" = 1'-0"

IDENTIFICATION STAMP
DIV. OF THE STATE ARCHITECT
APP: 01-119530 INC:
REVIEWED FOR
SS ☑ FLS ☑ ACS ☑
DATE: 10/26/2021

aedis architects
www.aedisarchitects.com
387 S. 1st Street, Suite 300
San Jose, CA 95113
tel: (408)-300-5160
fax: (408)-300-5121

PROJECT

COLLEGE PARK ELEMENTARY SCHOOL - HVAC REPLACEMENT

SAN MATEO-FOSTER CITY SCHOOL DISTRICT

CONSULTANT

STAMP

STATE
DSA FILE NUMBER 41-26
APPL # 01-119530

REVISIONS

No.	Description	Date
△		

MILESTONES

DD	
90% CD	
DSA SUB	05/26/2021
BACKCHECK	10/08/2021

SHEET

EXTERIOR DETAILS

DATE 10/08/2021
JOB # 2021005.01
SHEET # A8.10

10/12/2021 2:03:33 PM
C:\Users\kbailey\Documents\2021005.01_College Park ES - HVAC Replacement_Central (2019 version)_kbaileyKKPJP.rvt

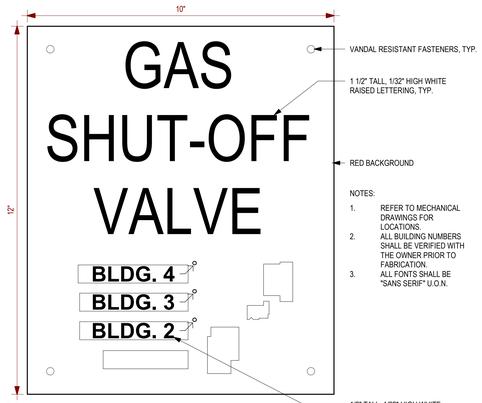

13 GAS SHUT OFF SIGNAGE
SCALE: 6" = 1'-0"

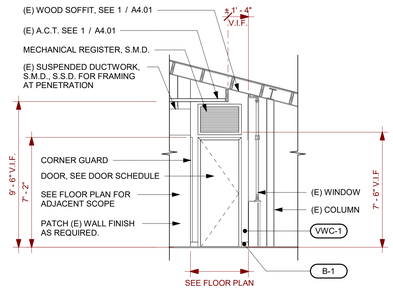

9 HVAC ENCLOSURE TYPICAL ELEVATION
SCALE: 1/4" = 1'-0"

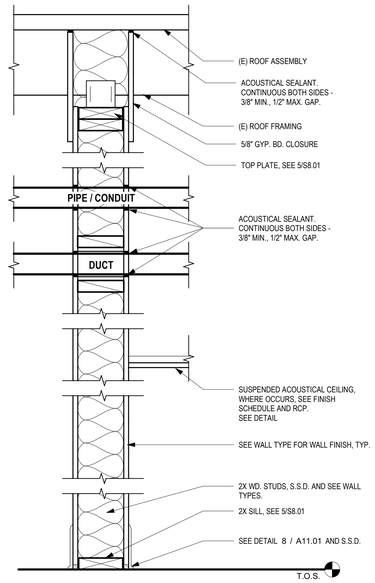

NOTES:
1. FOR RECESSED ACCESSORIES OR CABINETS, PROVIDE BLOCKING, GYPSUM BOARD AND ACOUSTICAL SEALANT SIMILAR TO DETAIL AT DUCT.

6 TYPICAL SOUND TREATED NONRATED WALL
SCALE: 1 1/2" = 1'-0"

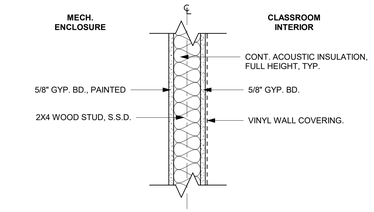

1 WALL TYPE - MECHANICAL ENCLOSURE
SCALE: 1 1/2" = 1'-0"

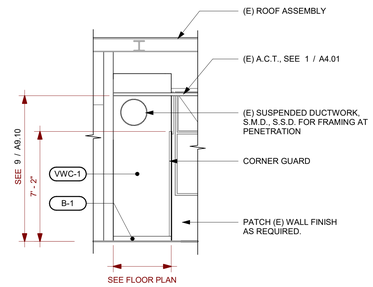

10 HVAC ENCLOSURE TYPICAL ELEVATION
SCALE: 1/4" = 1'-0"

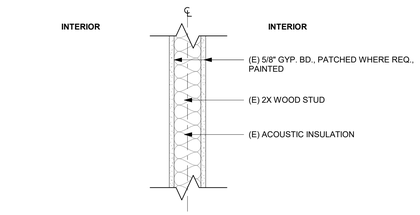

2 (E) WALL TYPE - GYP. BD.
SCALE: 1 1/2" = 1'-0"

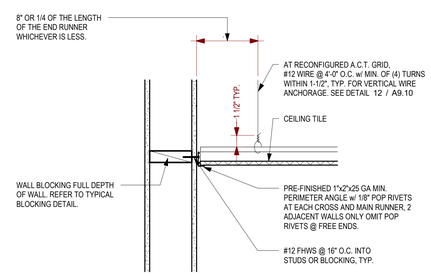

NOTE:
PERIMETER ANGLE TO BE MIN. 2" PER IR 25-2.13, OR, "SEISMIC RX CODE COMPLIANT SOLUTION" BERC 2 CLIP (ARMSTRONG SYSTEM ONLY).

11 SUSP. CEILING FIXED END CONNECTION
SCALE: 1 1/2" = 1'-0"

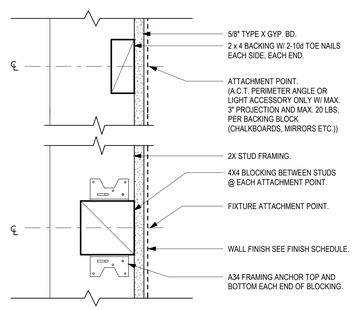

7 TYPICAL WOOD WALL BACKING/ BLOCKING
SCALE: 3" = 1'-0"

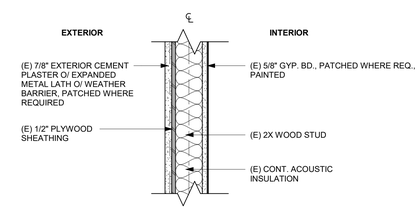

3 (E) WALL TYPE - CEMENT PLASTER / GYP. BD.
SCALE: 1 1/2" = 1'-0"

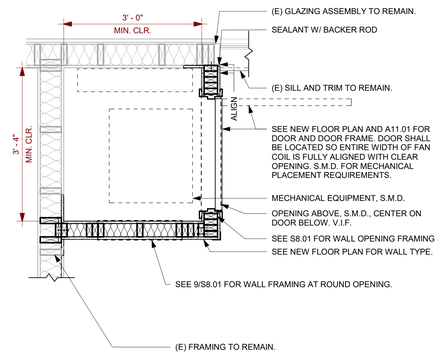

NOTE: NOT ALL MECHANICAL ELEMENTS SHOWN. S.M.D. FOR MORE INFORMATION.

16 MECH. ENCLOSURE CLEARANCES, TYP.
SCALE: 3/4" = 1'-0"

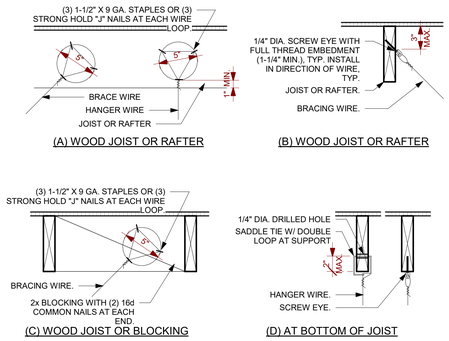

NOTE: HANGER WIRE AT WOOD FRAMING SHALL BE #12 GAGE WITH (3) TIGHT TURNS WITHIN 3",. AT BRACE WIRE PROVIDE (4) TIGHT TURNS AT 1 1/2"

12 WIRE ATTACHMENT AT WOOD FRAMING
SCALE: 1 1/2" = 1'-0"

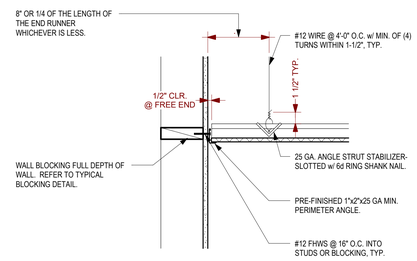

NOTE:
PERIMETER ANGLE TO BE MIN. 2" PER IR 25-2.13, OR, "SEISMIC RX CODE COMPLIANT SOLUTION" BERC 2 CLIP (ARMSTRONG SYSTEM ONLY).

8 SUSP. CEILING FREE END CONNECTION
SCALE: 1 1/2" = 1'-0"

IDENTIFICATION STAMP
DIV. OF THE STATE ARCHITECT
APP: 01-119530 INC:
REVIEWED FOR
SS ☑ FLS ☑ ACS ☑
DATE: 10/26/2021

aedis architects
www.aedisarchitects.com
387 S. 1st Street, Suite 300
San Jose, CA 95113
tel: (408)-300-5160
fax: (408)-300-5121

PROJECT
COLLEGE PARK ELEMENTARY SCHOOL - HVAC REPLACEMENT

SAN MATEO-FOSTER CITY SCHOOL DISTRICT

CONSULTANT

STAMP
LICENSED ARCHITECT
STATE OF CALIFORNIA
10/08/21

STATE
DSA FILE NUMBER 41-26
APPL # 01-119530

REVISIONS

No.	Description	Date
△		

MILESTONES

DD	
90% CD	
DSA SUB	05/26/2021
BACKCHECK	10/08/2021

SHEET
INTERIOR ELEVATIONS & DETAILS

DATE 10/08/2021
JOB # 2021005.01
SHEET # A9.10

10/12/2021 2:03:36 PM
C:\Users\kbailey\Documents\2021005.01_College Park ES - HVAC Replacement_Central (2019 version)_kbaileyKKPJP.rvt

DOOR SCHEDULE

DOOR ID	OPENING SIZE WIDTH	OPENING SIZE HEIGHT	DOOR TYPE	DOOR FINISH	FRAME TYPE	FRAME FINISH	DETAILS HEAD DETAIL	DETAILS JAMB-1 DETAIL	DETAILS JAMB-2 DETAIL	DETAILS SILL DETAIL	HARDWARE GROUP
7a	2' - 6"	7' - 0"	A	P-2	F1	P-3	11/A11.01	11/A11.01	11/A11/01	4/A11.01	01
8a	2' - 6"	7' - 0"	A	P-2	F1	P-3	11/A11.01	11/A11.01	11/A11/01	4/A11.01	01
9a	2' - 6"	7' - 0"	A	P-2	F1	P-3	11/A11.01	11/A11.01	11/A11/01	4/A11.01	01
10a	2' - 6"	7' - 0"	A	P-2	F1	P-3	11/A11.01	11/A11.01	11/A11/01	4/A11.01	01
11a	2' - 6"	7' - 0"	A	P-2	F1	P-3	11/A11.01	11/A11.01	11/A11/01	4/A11.01	01
12a	2' - 6"	7' - 0"	A	P-2	F1	P-3	11/A11.01	11/A11.01	11/A11/01	4/A11.01	01
13a	2' - 6"	7' - 0"	A	P-2	F1	P-3	11/A11.01	11/A11.01	11/A11/01	4/A11.01	01
14a	2' - 6"	7' - 0"	A	P-2	F1	P-3	11/A11.01	11/A11.01	11/A11/01	4/A11.01	01
15a	2' - 6"	7' - 0"	A	P-2	F1	P-3	11/A11.01	11/A11.01	11/A11/01	4/A11.01	01
16a	2' - 6"	7' - 0"	A	P-2	F1	P-3	11/A11.01	10/A10.02	11/A11/01	4/A11.01	01
17a	2' - 6"	7' - 0"	A	P-2	F1	P-3	11/A11.01	11/A11.01	11/A11/01	4/A11.01	01
18a	2' - 6"	7' - 0"	A	P-2	F1	P-3	11/A11.01	11/A11.01	11/A11/01	4/A11.01	01
19a	2' - 6"	7' - 0"	A	P-2	F1	P-3	11/A11.01	11/A11.01	11/A11/01	4/A11.01	01
20a	2' - 6"	7' - 0"	A	P-2	F1	P-3	11/A11.01	11/A11.01	11/A11/01	4/A11.01	01
21a	2' - 6"	7' - 0"	A	P-2	F1	P-3	11/A11.01	11/A11.01	11/A11/01	4/A11.01	01
22a	2' - 6"	7' - 0"	A	P-2	F1	P-3	11/A11.01	11/A11.01	11/A11/01	4/A11.01	01
23a	2' - 6"	7' - 0"	A	P-2	F1	P-3	11/A11.01	11/A11.01	11/A11/01	4/A11.01	01
24a	2' - 6"	7' - 0"	A	P-2	F1	P-3	11/A11.01	11/A11.01	11/A11/01	4/A11.01	01
24b	2' - 6"	7' - 0"	A	P-2	F1	P-3	11/A11.01	11/A11.01	11/A11/01	4/A11.01	01

FINISH SCHEDULE

ROOM NUMBER	ROOM NAME	FLOOR FINISH	FLOOR BASE FINISH	WALL FINISH	CEILING FINISH	CEILING FINISH 2	COMMENTS
7	CLASSROOM	(E) VSF-1	B-1	VWC-1, GB-1, P-1	ACT-1	(E) SF-1	
8	CLASSROOM	(E) VSF-1	B-1	VWC-1, GB-1, P-1	ACT-1	(E) SF-1	
9	CLASSROOM	(E) VSF-1	B-1	VWC-1, GB-1, P-1	ACT-1	(E) SF-1	
10	CLASSROOM	(E) VSF-1	B-1	VWC-1, GB-1, P-1	ACT-1	(E) SF-1	
11	CLASSROOM	(E) VSF-1	B-1	VWC-1, GB-1, P-1	ACT-1	(E) SF-1	
12	CLASSROOM	(E) VSF-1	B-1	VWC-1, GB-1, P-1	ACT-1	(E) SF-1	
13	CLASSROOM	(E) VSF-1	B-1	VWC-1, GB-1, P-1	ACT-1	(E) SF-1	
14	CLASSROOM	(E) VSF-1	B-1	VWC-1, GB-1, P-1	ACT-1	(E) SF-1	
15	CLASSROOM	(E) VSF-1	B-1	VWC-1, GB-1, P-1	ACT-1	(E) SF-1	
16	CLASSROOM	(E) VSF-1	B-1	VWC-1, GB-1, P-1	ACT-1	(E) SF-1	
17	CLASSROOM	(E) VSF-1	B-1	VWC-1, GB-1, P-1	ACT-1	(E) SF-1	
18	CLASSROOM	(E) VSF-1	B-1	VWC-1, GB-1, P-1	ACT-1	(E) SF-1	
19	CLASSROOM	(E) VSF-1	B-1	VWC-1, GB-1, P-1	ACT-1	(E) SF-1	
20	CLASSROOM	(E) VSF-1	B-1	VWC-1, GB-1, P-1	ACT-1	(E) SF-1	
21	CLASSROOM	(E) VSF-1	B-1	VWC-1, GB-1, P-1	ACT-1	(E) SF-1	
22	CLASSROOM	(E) VSF-1	B-1	VWC-1, GB-1, P-1	ACT-1	(E) SF-1	
23	CLASSROOM	(E) VSF-1	B-1	VWC-1, GB-1, P-1	ACT-1	(E) SF-1	
24	CLASSROOM	(E) VSF-1	B-1	VWC-1, GB-1, P-1	ACT-1	(E) SF-1	

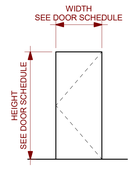

A **WOOD**

RATED - 0 MIN

DOOR TYPES
SCALE: 1/4" = 1'-0"

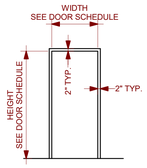

F1 **METAL**

FRAME TYPES
SCALE: 1/4" = 1'-0"

GENERAL DOOR SCHEDULE NOTES

1 CONTRACTOR SHALL COORDINATE, PRIOR TO FABRICATION, DOOR FRAME DEPTH TO ACCEPT ALL WALL FINISHES AS DETAILED IN THE DRAWINGS.

FINISH LEGEND

MARK	DESCRIPTION	MFR. / BRAND	COLOR / FINISH	COMMENTS
(E) CPT-1	CARPET (SHEET)			
(E) SF-1	WOOD SOFFIT			
(E) VSF-1	VINYL SHEET FLOORING			
ACT-1	2'-0" X 4'-0" ACOUSTICAL CEILING TILES	SEE SPEC.		SEE 11/A9.10
B-1	4" RUBBER TOP SET BASE	SEE SPEC.		SEE 8/A11.01
GB-1	GYPSUM BOARD	SEE SPEC.		
P-1	PAINT			
P-2	PAINT			
P-3	PAINT			
VWC-1	VINYL WALL COVERING	SEE SPEC.		

GENERAL FINISH SCHEDULE NOTES

A WHERE MULTIPLE FINISHES ARE CALLED OUT, REFER TO INTERIOR ELEVATIONS FOR LOCATIONS OF INDIVIDUAL FINISHES.

B PROVIDE FINISHES TO COMPLY WITH FLAME SPREAD & SMOKE DENSITY REQUIREMENTS OF CBC 803, 804, AND TABLE 803.13. UNSPRINKLERED CLASSROOMS (OCCUPANCY GROUP E SHALL BE CLASS C MINIMUM WALL AND CEILING FINISH).

C PATCH FINISHES TO MATCH ADJACENT AT ALL SURFACES REMOVED TO FACILITATE CONSTRUCTION.

D EXISTING FINISHES THAT MIGHT OCCUR OUTSIDE OF THE AREA OF WORK HAVE BEEN OMITTED.

E (E) FLOORING INDICATED FOR REFERENCE ONLY

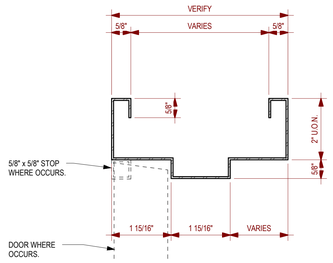

10 **TYPICAL STEEL FRAME DOOR PROFILE**
SCALE: 6" = 1'-0"

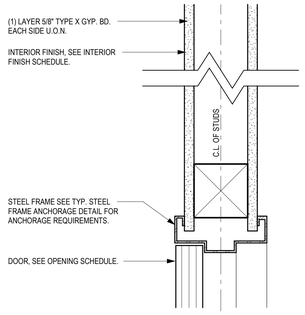

11 **INTERIOR STEEL FRAME HEAD AND JAMB**
SCALE: 3" = 1'-0"

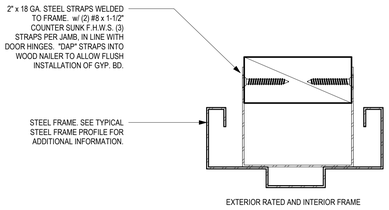

7 **TYPICAL STEEL FRAME ANCHORAGE**
SCALE: 6" = 1'-0"

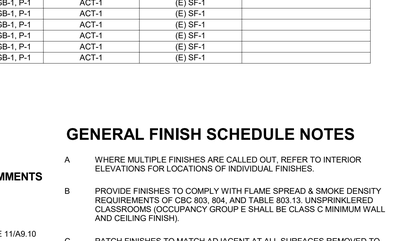

A RESILIENT FLOORING TRANSITION

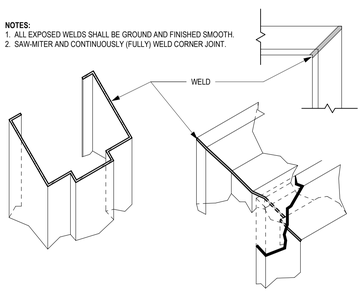

12 **TYP. WELDING @ STEEL FRAME CORNER**
SCALE: 1 : 1

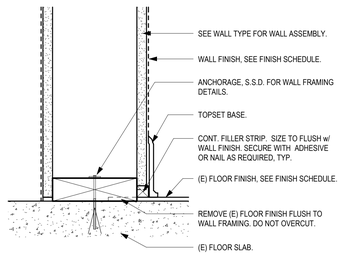

8 **INTERIOR WALL BASE**
SCALE: 3" = 1'-0"

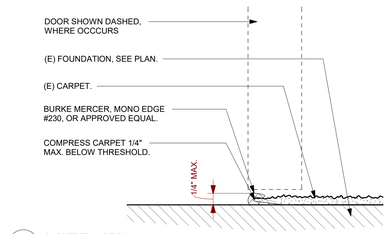

B CARPET TRANSITION

4 **FLOORING TRANSITION**
SCALE: 6" = 1'-0"

IDENTIFICATION STAMP
DIV. OF THE STATE ARCHITECT
APP: 01-119530 INC:
REVIEWED FOR
SS ☑ FLS ☑ ACS ☑
DATE: 10/26/2021

aedis architects
www.aedisarchitects.com
387 S. 1st Street, Suite 300
San Jose, CA 95113
tel: (408)-300-5160
fax: (408)-300-5121

PROJECT

COLLEGE PARK ELEMENTARY SCHOOL - HVAC REPLACEMENT

SAN MATEO-FOSTER CITY SCHOOL DISTRICT

CONSULTANT

STAMP

LICENSED ARCHITECT
10/08/21
STATE OF CALIFORNIA

STATE

DSA FILE NUMBER 41-26

APPL # 01-119530

REVISIONS

No.	Description	Date
△		

MILESTONES

DD	
90% CD	
DSA SUB	05/26/2021
BACKCHECK	10/08/2021

SHEET

FINISH SCHEDULE, CASEWORK SCHEDULE, & OPENING SCHEDULE, LEGENDS, & DETAILS

DATE 10/08/2021

JOB # 2021005.01

SHEET #

A11.01

10/12/2021 2:03:42 PM
C:\Users\kbailey\Documents\2021005.01_College Park ES - HVAC Replacement_Central (2019 version)_kbaileyKKPJP.rvt

I. GENERAL REQUIREMENTS

A. THE STRUCTURAL DRAWINGS AND PROJECT SPECIFICATIONS REPRESENT THE FINISHED STRUCTURE. THE MEANS, METHODS, PROCEDURES AND SEQUENCE OF CONSTRUCTION ARE THE RESPONSIBILITY OF THE CONTRACTOR. THE CONTRACTOR SHALL TAKE ALL NECESSARY PRECAUTIONS TO MAINTAIN AND ENSURE THE INTEGRITY OF THE STRUCTURE AT ALL STAGES OF CONSTRUCTION.

B. DURING THE CONSTRUCTION PERIOD, THE CONTRACTOR SHALL BE RESPONSIBLE FOR THE SAFETY OF PERSONNEL AND PROPERTY ON AND AROUND THE JOBSITE. THE CONTRACTOR SHALL PROVIDE SHORING, BRACING, GUYS, ETC. IN ACCORDANCE WITH ALL LOCAL, STATE, AND NATIONAL STANDARDS.

C. ALL CONSTRUCTION, TESTING, AND INSPECTIONS SHALL CONFORM TO THE BUILDING CODE REFERENCED UNDER THE HEADING "BASIS OF DESIGN" BELOW.

D. STANDARDS REFERENCED IN THESE DRAWINGS SHALL BE THE LATEST EDITION, UNLESS OTHERWISE NOTED.

E. SEE DRAWINGS OTHER THAN STRUCTURAL FOR: FLOOR FINISHES; DEPRESSIONS IN FLOOR SLABS; OPENINGS IN WALLS AND FLOORS REQUIRED BY ARCHITECTURAL AND MEP FEATURES; EXTERIOR PAVING; CURBS; SLOPES; DRAINS; PADS; NON-STRUCTURAL PARTITIONS; EMBEDDED ITEMS; ETC. COORDINATE THESE ITEMS WITH THE STRUCTURAL DRAWINGS.

F. THE CONTRACTOR SHALL VERIFY ALL DIMENSIONS AT THE JOB SITE BEFORE COMMENCING WORK AND SHALL REPORT ANY DISCREPANCIES TO THE ARCHITECT.

G. OMISSIONS OR DISCREPANCIES BETWEEN THE VARIOUS ELEMENTS OF THE CONTRACT DOCUMENTS SHALL BE BROUGHT TO THE ATTENTION OF THE ARCHITECT AND STRUCTURAL ENGINEER AND RESOLVED BEFORE PROCEEDING WITH THE WORK.

H. DO NOT SCALE THE DRAWINGS; USE WRITTEN DIMENSIONS ONLY. WHERE NO DIMENSIONS ARE PROVIDED OR WHERE DIMENSIONS PROVIDED CONFLICT WITH OTHER DRAWINGS, CONSULT THE ARCHITECT AND SEOR BEFORE PROCEEDING WITH THE WORK.

I. WHERE MEMBER LOCATIONS ARE NOT DIMENSIONED, MEMBERS SHALL BE LOCATED ON COLUMN LINES OR EQUALLY SPACED BETWEEN MEMBERS ON COLUMN LINES OR BETWEEN MEMBERS OTHERWISE LOCATED. CENTERLINES OF COLUMNS, WALLS, FRAMING MEMBERS, AND FOUNDATIONS COINCIDE WITH GRIDLINES, UNLESS OTHERWISE NOTED.

J. TYPICAL DETAILS ARE INTENDED TO APPLY TO APPLICABLE SITUATIONS, UNLESS OTHERWISE NOTED. TYPICAL DETAILS MAY NOT BE SPECIFICALLY LOCATED.

K. DETAILS SHALL BE APPLIED TO EVERY LIKE CONDITION WHETHER OR NOT THEY ARE REFERENCED IN EVERY INSTANCE. FOR CONDITIONS NOT SPECIFICALLY SHOWN, USE DETAILS SIMILAR TO THOSE PROVIDED.

I. THE CONTRACTOR SHALL VERIFY THAT CONSTRUCTION LOADS DO NOT EXCEED THE CAPACITY OF THE STRUCTURE AT THE TIME THE LOADS ARE PLACED.

II. EXISTING CONSTRUCTION

A. WORK SHOWN IS NEW UNLESS OTHERWISE NOTED AS EXISTING, (E).

B. EXISTING CONSTRUCTION SHOWN IN THESE DRAWINGS WAS OBTAINED FROM AS-BUILT DRAWINGS AND INDICATED FOR REFERENCE ONLY. THE CONTRACTOR SHALL VERIFY ALL EXISTING CONDITIONS, REVIEW ALL AVAILABLE EXISTING DRAWINGS AND VERIFY DIMENSIONS PRIOR TO CONSTRUCTION. THE CONTRACTOR SHALL NOTIFY THE ARCHITECT AND SEOR OF ALL DISCREPANCIES AND EXCEPTIONS BEFORE PROCEEDING WITH THE WORK.

C. THE REMOVAL, CUTTING, DRILLING, ETC. OF EXISTING WORK SHALL BE PERFORMED WITH GREAT CARE AND SMALL TOOLS IN ORDER TO MAINTAIN THE STRUCTURAL INTEGRITY OF THE BUILDING. IF EXISTING STRUCTURAL MEMBERS NOT INDICATED FOR REMOVAL INTERFERE WITH THE NEW WORK, THE SEOR SHALL BE NOTIFIED IMMEDIATELY. APPROVAL SHALL BE OBTAINED PRIOR TO REMOVAL OF THE EXISTING MEMBERS.

D. THE CONTRACTOR SHALL SAFELY SHORE EXISTING CONSTRUCTION WHEREVER EXISTING SUPPORTS ARE REMOVED TO ALLOW INSTALLATION OF THE NEW WORK. THE EXISTING CONSTRUCTION SHALL BE CONNECTED AND/OR EMBEDDED INTO THE NEW CONSTRUCTION AS SHOWN OR SPECIFIED.

E. ALL SHORING METHODS AND SEQUENCING OF DEMOLITION SHALL BE SPECIFIED BY A LICENSED CIVIL OR STRUCTURAL ENGINEERING IN THE STATE OF CALIFORNIA TO BE RETAINED BY THE CONTRACTOR. SEE SPECIFICATIONS FOR DETAILED REQUIREMENTS.

F. THE CONTRACTOR SHALL VERIFY THE LOCATION OF EXISTING UTILITIES BEFORE BEGINNING WORK. SPECIAL CARE SHALL BE TAKEN TO PROTECT UTILITIES THAT ARE TO REMAIN IN SERVICE DURING CONSTRUCTION.

G. THE CONTRACTOR SHALL PROMPTLY REPAIR DAMAGE CAUSED DURING OPERATIONS WITH SIMILAR MATERIALS AND WORKMANSHIP.

H. THE CONTRACTOR SHALL LOCATE EXISTING REINFORCING STEEL WHERE EXISTING CONCRETE IS TO BE CUT, CORED OR SAWN. LOCATION SHALL BE DONE USING A NON-DESTRUCTIVE METHOD. DO NOT DAMAGE EXISTING REINFORCING WITHOUT NOTIFYING THE ARCHITECT AND SEOR.

III. BASIS OF DESIGN

A. THE STRUCTURAL DESIGN OF THIS PROJECT IS GOVERNED BY THE 2019 CALIFORNIA BUILDING CODE (CBC) WITH SS/DSA AMMENDMENTS.

B. RISK CATEGORY = III

D. LIVE LOADS:
1. ROOF = 20 PSF

E. WIND DESIGN DATA:
1. BASIC WIND SPEED = 100 mph (3 SECOND GUST)
2. EXPOSURE CATEGORY = C

F. SEISMIC DESIGN DATA:
1. I = 1.25
2. Fa = 1.2
3. Fv = N/A
4. Ss = 1.842
5. S1 = 0.754
6. SDS = 1.474
7. SD1 = N/A
8. SITE CLASS = D (DEFAULT)
9. SEISMIC DESIGN CATEGORY = D

IV. CONCRETE

A. MIXING, BATCHING, TRANSPORTING AND PLACING OF ALL CONCRETE SHALL CONFORM TO ACI 301, SPECIFICATION FOR STRUCTURAL CONCRETE FOR BUILDINGS.

B. ALL CONCRETE SHALL BE THOROUGHLY CONSOLIDATED.

C. THE SCHEDULE BELOW INDICATES THE MINIMUM CONCRETE DESIGN MIX REQUIREMENTS. SEE THE SPECIFICATIONS FOR ADDITIONAL CONCRETE PROPERTIES.

TYPE	LOCATION	MINIMUM 28-DAY STRENGTH (PSI)	MAXIMUM WEIGHT (PCF)	MAX W/C RATIO
A	SLAB ON GRADE	3000	150	0.5

D. CONCRETE CLEAR COVER OVER MILD REINFORCING STEEL SHALL BE AS FOLLOWS, UNLESS OTHERWISE NOTED:
1. CONCRETE CAST AGAINST AND PERMANENTLY EXPOSED TO EARTH = 3"
2. CONCRETE EXPOSED TO EARTH OR WEATHER:
   a. NO. 5 BARS AND SMALLER = 1-1/2"
   b. NO. 6 BARS AND LARGER = 2"
3. CONCRETE NOT EXPOSED TO WEATHER OR IN CONTACT WITH GROUND:
   a. SLABS, WALLS, JOISTS:
4. NO. 11 BARS AND SMALLER = 3/4"
5. NO. 14 BARS AND LARGER = 1-1/2"
   a. BEAMS, COLUMNS:
6. PRIMARY REINFORCEMENT, TIES, STIRRUPS, SPIRALS = 1-1/2"
   a. SHELLS, FOLDED PLATE MEMBERS:
7. NO. 5 BARS AND SMALLER = 1/2"
8. NO. 6 BARS AND LARGER = 3/4"

E. NON-SHRINK GROUT SHALL HAVE A MINIMUM COMPRESSIVE STRENGTH OF 6000 PSI AT 28 DAYS.

F. CONSTRUCTION JOINTS
1. NO HORIZONTAL CONSTRUCTION JOINTS ARE PERMITTED IN BEAMS, WALLS OR SLABS UNLESS APPROVED BY THE SEOR IN WRITING.
2. ALL CONSTRUCTION JOINTS SHALL BE CONSTRUCTED IN ACCORDANCE WITH TYPICAL CONSTRUCTION JOINT DETAILS.
3. ALL CONSTRUCTION JOINT LOCATIONS SHALL BE COORDINATED AND CONSTRUCTED IN ACCORDANCE WITH ARCHITECTURAL FINISHES AND TREATMENTS.
4. ALL SURFACES OF CONSTRUCTION JOINTS SHALL BE CLEANED TO REMOVE DUST, CHIPS OR OTHER FOREIGN MATTER PRIOR TO PLACING ADJACENT CONCRETE.

V. REINFORCING STEEL

A. ALL REINFORCING BARS SHALL BE DEFORMED BARS CONFORMING TO THE REQUIREMENTS OF ASTM A615 AND ASTM A706 WHERE REQUIRED; ALL BARS TO BE GRADE 60 UNLESS OTHERWISE NOTED.

B. REINFORCING BARS TO BE WELDED SHALL BE ASTM A706.

C. WELDED WIRE REINFORCING SHALL BE ASTM A185.

D. WELDED BAR ANCHORS SHALL BE NELSON D2L DEFORMED BAR ANCHORS PER ICC-ES ESR-5217.

E. DETAIL REINFORCING STEEL BASED ON THE PROJECT REQUIREMENTS, ACI 318, AND ACI 315.

F. TERMINATION OF REINFORCEMENT:
1. TERMINATE ALL BARS IN LAPS, 90 DEGREE BENDS OR WITH DOWELS EPOXIED INTO EXISTING CONCRETE.
2. PROVIDE DOWELS INTO FOOTINGS BELOW AND SLABS ABOVE AT WALLS AND COLUMNS OF SAME SIZE AND SPACING AS VERTICAL REINFORCEMENT.

G. WHERE A 90 DEGREE, 135 DEGREE OR 180 DEGREE HOOK IS GRAPHICALLY INDICATED, PROVIDE CORRESPONDING ACI STANDARD HOOK PER DETAIL 2&3/S5.01.

H. SPLICES
1. LAP REINFORCING STEEL AS SPECIFICALLY DETAILED ON THE DRAWINGS. SEE REBAR OFFSET AND LAP SPLICE SCHEDULE IN DETAIL 7/S5.01.
2. UNLESS OTHERWISE NOTED, ALL LAP SPLICES ARE TO BE CLASS B.
3. MECHANICAL SPLICES, IF USED AT CONTRACTOR'S OPTION, SHALL BE ICC-ES APPROVED AND CAPABLE OF DEVELOPING 125% OF THE SPECIFIED MINIMUM YIELD STRENGTH OF THE BAR IN TENSION OR COMPRESSION.
4. LOCATE LAPS IN REINFORCING STEEL AS FOLLOWS:
   a. TOP HORIZONTAL REINFORCEMENT IN BEAMS AND WALLS AT SUPPORTS.
   b. BOTTOM HORIZONTAL REINFORCEMENT IN BEAMS AND WALLS AT MIDSPAN.
   c. VERTICAL REINFORCEMENT AT INSIDE FACE OF WALL AT SUPPORTS.
   d. VERTICAL REINFORCEMENT AT OUTSIDE FACE OF WALL AT MIDHEIGHT OF WALL.

VI. WOOD

A. ALL WOOD FRAMING SHALL CONFORM TO NATIONAL DESIGN SPECIFICATIONS (NDS) FOR WOOD CONSTRUCTION AND APA PDS, PLYWOOD DESIGN SPECIFICATION.

B. ALL WOOD FRAMING SHALL BE DOUGLAS FIR LARCH, UNLESS OTHERWISE NOTED. GRADE SHALL BE AS FOLLOWS:
1. WALL STUDS = NO 2
2. SILL PLATES = PRESSURE TREATED
3. BLOCKING AND MISCELLANEOUS = NO 2

C. REJECTION OF WOOD MEMBERS: THE PROVISION IN DOC PS 20 (AS REFERENCED BY CBC 2303.1.1) WHICH PERMITS FIVE PERCENT OF THE MATERIAL TO FALL BELOW GRADE SHALL NOT BE CONSTRUED TO PERMIT BELOW-GRADE MATERIAL TO BE USED AS LOAD-CARRYING MEMBERS WHICH HAVE BEEN DESIGNED FOR SPECIFIC ALLOWABLE STRESSES AND ACCEPTABLE SAFETY FACTORS. MATERIALS WHICH FALL BELOW GRADE SHALL BE REJECTED FOR LOAD-CARRYING USE. WOOD MEMBERS WHICH ARE REQUIRED TO CARRY DESIGN LOADS AND WHICH THE PROJECT ARCHITECT, SEOR OR INSPECTOR JUDGE TO BE MISGRADED SHALL BE REINSPECTED BY A QUALIFIED LUMBER GRADING INSPECTOR TO VERIFY THE PROPER GRADING OF THE MATERIAL. WOOD MEMBERS WHICH HAVE PERMISSIBLE GRADE CHARACTERISTICS OR DEFECTS IN SUCH COMBINATION AS TO AFFECT THE SERVICEABILITY OF THE MEMBER SHALL BE REJECTED BY THE PROJECT INSPECTOR WITH THE CONCURRENCE OF THE ARCHITECT OR SEOR.

D. ALL LUMBER IN CONTACT WITH CONCRETE OR CONCRETE MASONRY 0'-8" OR LESS ABOVE THE GROUND SHALL BE PRESSURE TREATED.

E. MAXIMUM MOISTURE CONTENT SHALL BE 15%AT TIME OF FRAMING FOR NEW WOOD MEMBERS ADJACENT TO EXISTING WOOD MEMBERS. ALL OTHER MEMBERS SHALL HAVE A MAXIMUM MOISTURE CONTENT OF 19% AT TIME OF FRAMING. REFER TO ARCHITECTURAL DRAWINGS, PROJECT SPECIFICATIONS AND CLADDING MANUFACTURERS' INFORMATION FOR MORE STRINGENT MOISTURE CONTENT REQUIREMENTS.

F. WOOD CONNECTORS SHALL BE AS MANUFACTURED BY SIMPSON STRONG TIE OR EQUAL PRODUCT IF APPROVED BY SEOR. SIMPSON DESIGNATIONS USED IN THESE DRAWINGS.

G. NAILS SHALL BE COMMON WIRE GAGE, UNLESS OTHERWISE NOTED AND CONFORM TO CBC TABLE 2304.10.1. USE OF MACHINE NAILING IS SUBJECT TO A SATISFACTORY JOBSITE DEMONSTRATION FOR EACH PROJECT AND THE APPROVAL OF THE PROJECT ARCHITECT, STRUCTURAL ENGINEER AND DSA.

H. LAG BOLTS AND UNFINISHED MACHINE BOLTS SHALL CONFORM TO ASTM A307. PROVIDE WASHERS UNDER THE HEADS AND NUTS OF ALL BOLTS AND LAG SCREWS BEARING ON WOOD.

I. ANCHOR RODS SHALL CONFORM TO ASTM F1554 GR 36.

J. FASTENERS INSTALLED IN PRESSURE TREATED OR FIRE RETARDANT TREATED WOOD SHALL BE GALVANIZED.

K. PROVIDE LATERAL SUPPORT FOR BEAMS, JOISTS, AND RAFTERS PER CBC SECTION 2308.8.5.

VII. POST-INSTALLED ANCHORS

A. POST-INSTALLED ANCHORS INCLUDE EXPANSION ANCHORS, EPOXY ANCHORS AND REINFORCING STEEL DOWELS, SCREW ANCHORS AND POWDER-ACTUATED FASTENERS. AS DETAILED IN THE DRAWINGS.

B. DO NOT DAMAGE OR CUT EXISTING REINFORCING STEEL WHILE INSTALLING POST-INSTALLED ANCHORS. NOTIFY SEOR IF EXISTING REINFORCING STEEL INTERFERES WITH INSTALLATION OF POST-INSTALLED ANCHORS.

C. ALL MIS-DRILLED OR UNACCEPTABLE HOLES SHALL NOT BE USED AND SHALL BE GROUTED SOLID.

D. ALL POST-INSTALLED ANCHORS SHALL BE INSTALLED IN ACCORDANCE WITH APPLICABLE ICC-ES REPORT AND MANUFACTURER'S RECOMMENDATIONS.

E. PROVIDE SPECIAL INSPECTION FOR THE INSTALLATION OF ALL POST-INSTALLED ANCHORS, UNLESS OTHERWISE NOTED.

F. FIELD TEST POST-INSTALLED ANCHORS, UNLESS OTHERWISE NOTED. FIELD TESTING SHALL BE IN COMPLIANCE WITH THE FOLLOWING:
1. 10% OF POST-INSTALLED ANCHORS USED FOR SILL PLATE BOLTING SHALL BE TESTED; 100% OF ALL OTHER POST-INSTALLED ANCHORS USED FOR STRUTURAL APPLICATIONS SHALL BE TESTED.
2. 50% OF POST-INSTALLED ANCHORS USED FOR NON-STRUCTURAL APPLICATIONS SHALL BE TESTED, INCLUDING ONE HALF OF ALL ANCHORS IN EACH GROUP.
   a. IF ANY ANCHOR FAILS TESTING, ALL ANCHORS OF THE SAME TYPE THAT ARE UNTESTED SHALL BE TESTED UNTIL 20 CONSECUTIVE ANCHORS PASS.
   b. NO TESTING REQUIRED FOR POWDER-ACTUATED FASTENERS USED TO ATTACH TRACKS OF INTERIOR, NON-STRUCTURAL PARTITION WALLS WHERE THERE ARE AT LEAST THREE FASTENERS PER PIECE OF TRACK.
3. NO TESTING REQUIRED OF REINFORCING STEEL DOWELS ACROSS COLD JOINTS IN CONCRETE SLABS ON GRADE.
4. TORQUE TESTING MAY BE USED FOR TORQUE CONTROLLED POST-INSTALLED ANCHORS; TENSION TEST ALL OTHER POST-INSTALLED ANCHORS.
5. TORQUE TESTING SHALL BE IN ACCORDANCE WITH CBC SECTION 1910A.5.5.2.
6. TENSION TESTING SHALL BE IN ACCORDANCE WITH CBC SECTION 1910A.5.5.1.
7. ALL FIELD TESTING SHALL BE DONE UNDER THE OBSERVATION OF THE PROJECT INSPECTOR.

G. EPOXY ANCHORS AND REINFORCING STEEL DOWELS
1. FOR INSTALLATION IN CONCRETE, EPOXY SHALL BE ONE OF THE FOLLOWING:
   a. SET-XP PER ICC-ES ESR-2508 AS MANUFACTURED BY SIMPSON STRONG TIE
   b. HIT-RE 500-SD PER ICC-ES ESR-2322 AS MANUFACTURED BY HILTI, INC.
   c. HY-200 MAX-SD PER ICC-ES ESR-3187 AS MANUFACTURED BY HILTI, INC.
2. FOR INSTALLATION IN FULLY-GROUTED MASONRY, EPOXY SHALL BE ONE OF THE FOLLOWING:
   a. SET-HIGH STRENGTH PER ICC-ES ESR-2508 AS MANUFACTURED BY SIMPSON STRONG TIE.
   b. HY-150 PER ICC-ES ESR-1967 AS MANUFACTURED BY HILTI, INC.
3. EPOXIED ANCHOR RODS SHALL BE CARBON STEEL THREADED RODS PER APPROPRIATE ICC-ES REPORT; EPOXIED REINFORCING STEEL DOWELS SHALL BE ASTM A615 GR 60 UNLESS OTHERWISE NOTED. MINIMUM ANCHOR EMBEDMENT AND TENSION TEST VALUES ARE AS FOLLOWS:

EPOXY ANCHORS IN NORMAL-WEIGHT CONCRETE (f'c = 3000 PSI MIN)				
THREADED ROD DIAMETER (IN)	EMBED (IN)	TENSION TEST VALUE (LBS)		
		HY-200 MAX-SD	HIT-RE 500-SD	SET-XP
3/8	3	3360	3510	3620
1/2	4	6010	6150	5690
5/8	5	9440	9330	7640
3/4	6	7120	12860	9770
7/8	7	15750	13620	12250
1	8	20670	16440	15430
1 1/4	10	32500	22060	24100

ANCHORS SHALL NOT BE INSTALLED INTO CONCRETE THAT IS LESS THAN 21 DAYS OLD.

H. EXPANSION ANCHORS
1. FOR INSTALLATION IN CONCRETE, EXPANSION ANCHORS SHALL BE ONE OF THE FOLLOWING:
   a. STRONG BOLT 2 PER ICC-ES ESR-3037 AS MANUFACTURED BY SIMPSON STRONG TIE.
   b. KWIK BOLT TZ2 PER ICC-ES ESR-4266 AS MANUFACTURED BY HILTI, INC.
2. USE STAINLESS STEEL AT EXTERIOR, WEATHER-EXPOSED OR DAMP LOCATIONS; CARBON STEEL EXPANSION ANCHORS MAY BE USED AT ALL OTHER LOCATION, UNLESS OTHERWISE NOTED.
3. MINIMUM ANCHOR EMBEDMENT AND TORQUE TEST VALUES ARE AS FOLLOWS:

KWIK BOLT TZ2 IN NORMAL WEIGHT CONCRETE (f'c = 3000 PSI MIN)			
ANCHOR DIAMETER	EMBED (IN)	MINIMUM HOLE	TORQUE TEST
(IN)		DEPTH (IN)	VALUE (FT-LBS)
3/8	2 5/16	2 5/8	30
1/2	2 3/8	2 5/8	50
5/8	4 1/16	4 3/4	60
3/4	5 9/16	5 3/4	125

STRONG BOLT 2 IN NORMAL WEIGHT CONCRETE (f'c = 3000 PSI MIN)			
ANCHOR DIAMETER	EMBED (IN)	MINIMUM HOLE	TORQUE TEST
(IN)		DEPTH (IN)	VALUE (FT-LBS)
3/8	1 7/8	2	30
1/2	2 3/4	3	60
5/8	5 3/8	5 3/8	90
3/4	5 1/4	6	150

4. WHERE EXPANSION ANCHORS ARE INSTALLED IN CONTACT WITH WOOD FRAMING, PROVIDE AN OVERSIZE WASHER IN ORDER TO ACHIEVE TORQUE REQUIRED BY ICC-ES REPORT. USE 1/4"x3"x3" WASHER, MINIMUM.
5. CONTRACTOR SHALL PROVIDE ANCHORS WITH SUFFICIENT TOTAL LENGTH FOR THE SPECIFIED EMBEDMENT LENGTH, THICKNESS OF FASTENED PART, WASHER AND NUT.

I. SCREW ANCHORS
1. FOR INSTALLATION IN CONCRETE, SCREW ANCHORS SHALL BE ONE OF THE FOLLOWING:
   a. TITEN HD PER ICC-ES ESR-2713 AS MANUFACTURED BY SIMPSON STRONG TIE.
   b. KWIK HUS-EZ PER ICC-ES ESR-3027 AS MANUFACTURED BY HILTI, INC.
2. MINIMUM ANCHOR EMBEDMENT AND TENSION TEST VALUES ARE AS FOLLOWS:

TITEN HD IN NORMAL WEIGHT CONCRETE (f'c = 3000 PSI MIN)			
ANCHOR DIAMETER	EMBED (IN)	MINIMUM HOLE	TENSION TEST
(IN)		DEPTH (IN)	VALUE (FT-LBS)
3/8	2 1/2	3	1200
1/2	3 1/4	3 3/4	2973
5/8	4	4 1/2	3935
3/4	5 1/2	6	5895

KWIK HUS-EZ IN NORMAL WEIGHT CONCRETE (f'c = 3000 PSI MIN)			
ANCHOR DIAMETER	EMBED (IN)	MINIMUM HOLE	TENSION TEST
(IN)		DEPTH (IN)	VALUE (FT-LBS)
1/4	2 1/2	2 7/8	1133
3/8	2 1/2	2 3/4	2093
1/2	2 1/4	2 5/8	1547
5/8	3 1/4	3 5/8	3049
3/4	4	4 3/8	4118

J. POWDER-ACTUATED FASTENERS
1. PAF SHALL BE ONE OF THE FOLLOWING:
   a. SIMPSON STRONG TIE POWDER-ACTUATED FASTENERS PER ICC-ES ESR-2138 FOR ANCHORAGE OF METAL TO CONCRETE, MASONRY OR STEEL.
   b. HILTI, INC. X-U PER ICC-ES ESR-2269 FOR ANCHORAGE OF METAL TO CONCRETE, MASONRY OR STEEL
   c. HILTI, INC. X-CP 72 PER ICC-ES ESR-2379 FOR ANCHORAGE OF SILL PLATES TO CONCRETE
   d. DEWALT POWDER-ACTUATED FASTENERS PER ICC-ES ESR-2024 FOR ANCHORAGE OF METAL TO CONCRETE, MASONRY OR STEEL AND ANCHORAGE OF WOOD SILLS TO CONCRETE.
2. PROVIDE 0.08"x1.1"x1.1" SQUARE OR 0.08"x1.425" DIAMETER ROUND WASHER AT EACH PAF.
3. MINIMUM PAF EMBED INTO CONCRETE SHALL BE 1", UNLESS OTHERWISE NOTED.
4. MINIMUM PAF EMBED INTO STEEL SHALL BE PER MANUFACTURER.

VIII. STRUCTURAL TESTS AND SPECIAL INSPECTIONS

A. THE FOLLOWING ITEMS ARE EXEMPT FROM DSA REQUIREMENTS FOR STRUCTURAL TESTS / SPECIAL INSPECTION, SEE DSA FORM 103 AND SPECIFICATIONS:

1. TESTING OF REINFORCING BARS IS NOT REQUIRED SUBJECT TO THE REQUIREMENTS AND LIMITATIONS GIVEN IN CBC SECTION 1910A.2.
2. BATCH PLANT INSPECTION OF CONCRETE IS WAIVED IN COMPLIANCE WITH CBC SECTION 1705A.3.3.2. SEE SPECIFICATIONS FOR REQUIRED CERTIFICATION OF CEMENT AND REINFORCING, TAKING AND SAMPLING OF STRENGTH TEST, AND PROVISION OF WEIGHMASTER'S BATCH TICKETS.
3. MANUFACTURED SUPPORT FRAMES AND CURBS USING HOT ROLLED OR COLD-FORMED STEEL FOR MECHANICAL, ELECTRICAL, OR PLUMBING EQUIPMENT WEIGHING LESS THAN 2000#.
4. MANUFACTURED COMPONENTS FOR MECHANICAL, ELECTRICAL, OR PLUMBING HANGER SUPPORT AND BRACING.
5. ANY SUPPORT FOR EXEMPT NON-STRUCTURAL COMPONENTS GIVEN IN CBC SECTION 1617A.1.18 MEETING THE FOLLOWING: A) WHEN SUPPORTED ON A FLOOR/ROOF, <400# AND RESULTING COMPOSITE CENTER OF MASS < 4' ABOVE SUPPORTING FLOOR/ROOF, B) WHEN HUNG FROM A WALL OR ROOF/FLOOR, <20# FOR DISCRETE UNITS OR <5 PLF FOR DISTRIBUTED SYSTEMS.

ABBREVIATION

ABBREVIATION	DESCRIPTION	ABBREVIATION	DESCRIPTION
(E)	EXISTING	LLV	LONG LEG VERTICAL
(N)	NEW	LOC	LOCATION
AB	ANCHOR BOLT	LONG	LONGITUDINAL
ADDL	ADDITIONAL	LW	LIGHTWEIGHT
ALT	ALTERNATE	LWC	LIGHTWEIGHT CONCRETE
APPRX	APPROXIMATE	MATL	MATERIAL
AR	ANCHOR ROD	MAX	MAXIMUM
ARCH	ARCHITECT OR ARCHITECTURAL	MB	UNFINISHED MACHINE BOLT
AVG	AVERAGE	MECH	MECHANICAL
BLDG	BUILDING	MEP	MECHANICAL, ELECTRICAL, PLUMBING, FIRE PROTECTION
BLKG	BLOCKING		
BM	BEAM	MEZZ	MEZZANINE
BOT	BOTTOM	MFR	MANUFACTURER
BRDG	BRIDGING	MID	MIDDLE
BTWN	BETWEEN	MIN	MINIMUM
CIP	CAST-IN-PLACE	MISC	MISCELLANEOUS
CJ	CONTROL/CONSTRUCTION JOINT	MTL	METAL
CJP	COMPLETE JOINT PENETRATION	N/A	NOT APPLICABLE
CL	CENTER LINE	NIC	NOT IN CONTRACT
CLR	CLEAR OR CLEARANCE	NO	NUMBER
COL	COLUMN	NOM	NOMINAL
CONC	CONCRETE	NS	NEAR SIDE
CONN	CONNECTION(S)	NTS	NOT TO SCALE
CONST	CONSTRUCTION	NW	NORMAL WEIGHT
CONT	CONTINUOUS	NWC	NORMALWEIGHT CONCRETE
CTR	CENTER	OC	ON CENTER
CTRD	CENTERED	OD	OUTSIDE DIAMETER
CTRSK	COUNTERSINK	OF	OUTSIDE FACE
db	DIAMETER OF BOLT OR REBAR	OH	OPPOSITE HAND
DBL	DOUBLE	OPNG(S)	OPENING(S)
DEMO	DEMOLISH	OPP	OPPOSITE
DET	DETAIL	OSB	ORIENTED STRAND BOARD
DF	DOUGLAS FIR	PAF	POWDER ACTUATED FASTENER
DIA	DIAMETER	PERP	PERPENDICULAR
DIAG	DIAGONAL	PL	PLATE
DIM(S)	DIMENSION(S)	PLY	PLYWOOD
DL	DEAD LOAD	PSF	POUNDS PER SQUARE FOOT
DWG(S)	DRAWING(S)	PSI	POUNDS PER SQUARE INCH
DWL	DOWEL(S)	PSL	PARALLEL STRAND LUMBER
EA	EACH	RAD	RADIUS
ECC	ECCENTRICITY	REF	REFERENCE
EF	EACH FACE	REINF	REINFORCE(D) (ING) OR (MENT)
EJ	EXPANSION JOINT	REQD	REQUIRED
EL	ELEVATION	REV	REVISION
ELEC	ELECTRICAL	RWD	REDWOOD
EMBED	EMBEDMENT	SAD	SEE ARCHITECTURAL DRAWINGS
EN	EDGE NAIL	SCD	SEE CIVIL DRAWINGS
ENGR	ENGINEER	SCHED	SCHEDULE(D)
EOS	EDGE OF SLAB	SECT	SECTION
EQ	EQUAL	SEOR	STRUCTURAL ENGINEER OF RECORD
EQUIP	EQUIPMENT		
ES	EACH SIDE	SF	SQUARE FOOT (FEET)
EW	EACH WAY	SHT	SHEET
EXP	EXPANSION	SIM	SIMILAR
EXT	EXTERIOR	SLRS	SEISMIC LOAD RESISTING SYSTEM
FF	FINISH FLOOR		
FIN	FINISH(ED)	SMD	SEE MECHANICAL DRAWINGS
FLR	FLOOR	SMS	SHEET METAL SCREW(S)
FN	FIELD NAILING	SOG	SLAB ON GRADE
FND	FOUNDATION	SP	SPACE
FO	FACE OF	SPEC(S)	SPECIFICATION(S)
FRM'G	FRAMING	SQ	SQUARE
FS	FAR SIDE	STAGG'D	STAGGERED
FTG	FOOTING	STD	STANDARD
GA	GAGE, GAUGE	STIFF	STIFFENER
GALV	GALVANIZED	STL	STEEL
GB	GRADE BEAM	STR	STRUCTURE
GEN	GENERAL	STRCTL	STRUCTURAL
GLB	GLUE-LAMINATED BEAM	SYMM	SYMMETRICAL
GR	GRADE	T&B	TOP AND BOTTOM
GYP	GYPSUM	T&G	TONGUE AND GROOVE
HD	HOLDOWN	TD	TIE DOWN
HDR	HEADER	TEMP	TEMPERATURE OR TEMPORARY
HGR	HANGER	THK	THICK OR THICKNESS
HK	HOOK	THRD'D	THREADED
HORIZ	HORIZONTAL	TO	TOP OF
HT	HEIGHT	TRANSV	TRANSVERSE
HVAC	HEATING VENTING AND AIR CONDITIONING	TYP	TYPICAL
		UON	UNLESS OTHERWISE NOTED
ID	INSIDE DIAMETER	VERT	VERTICAL
IF	INSIDE FACE	VIF	VERIFY IN FIELD
INFO	INFORMATION	W/	WITH
INT	INTERIOR	W/O	WITHOUT
JH	JOIST HANGER	WD	WOOD
JST(S)	JOIST(S)	WF	WIDE FLANGE
JT	JOINT	WP	WORK POINT
LBS	POUNDS	WT	WEIGHT
LL	LIVE LOAD	WWR	WELDED WIRE REINFORCEMENT
LLH	LONG LEG HORIZONTAL		

IDENTIFICATION STAMP
DIV. OF THE STATE ARCHITECT
APP: 01-119530 INC:
REVIEWED FOR
SS ☑ FLS ☑ ACS ☑
DATE: 10/26/2021

aedis architects
www.aedisarchitects.com
387 S. 1st Street, Suite 300
San Jose, CA 95113
tel: (408)-300-5160
fax: (408)-300-5121

PROJECT
COLLEGE PARK ELEMENTARY SCHOOL - HVAC REPLACEMENT

SAN MATEO-FOSTER CITY SCHOOL DISTRICT

CONSULTANT

BASE DESIGN
582 MARKET ST. STE. 1402
SAN FRANCISCO, CA 94104
Office:(415) 466-2997
www.BASEdesigninc.com

STAMP
REGISTERED PROFESSIONAL ENGINEER
GOKHAN AKALAN
NO. 5594
STRUCTURAL
STATE OF CALIFORNIA

STATE
DSA FILE NUMBER 41-26
APPL # 01-119530

REVISIONS

No.	Description	Date

MILESTONES
DD
90% CD
DSA SUB 05/26/2021
BACKCHECK

SHEET
ABBREVIATIONS AND GENERAL NOTES

DATE 05/26/2021
JOB # 2021005.01
SHEET # S1.01

10/8/2021 10:32:12 AM
D:\21115 - SMFCSD HVAC Upgrade\College Park\Structural drawings\21115 - SMFCSD HVAC Upgrades - College Park - R20.rvt

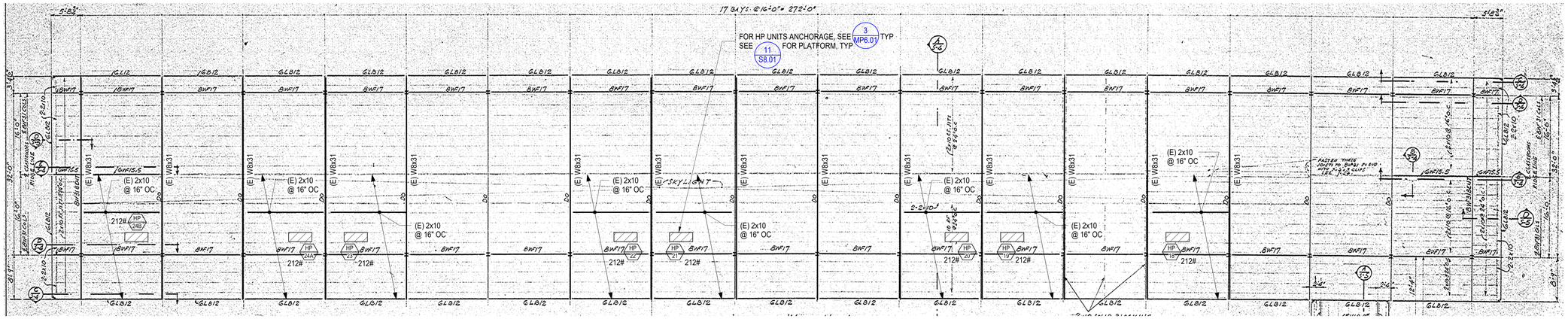

1 EXISTING ROOF FRAMING PLAN - WING 4

NTS

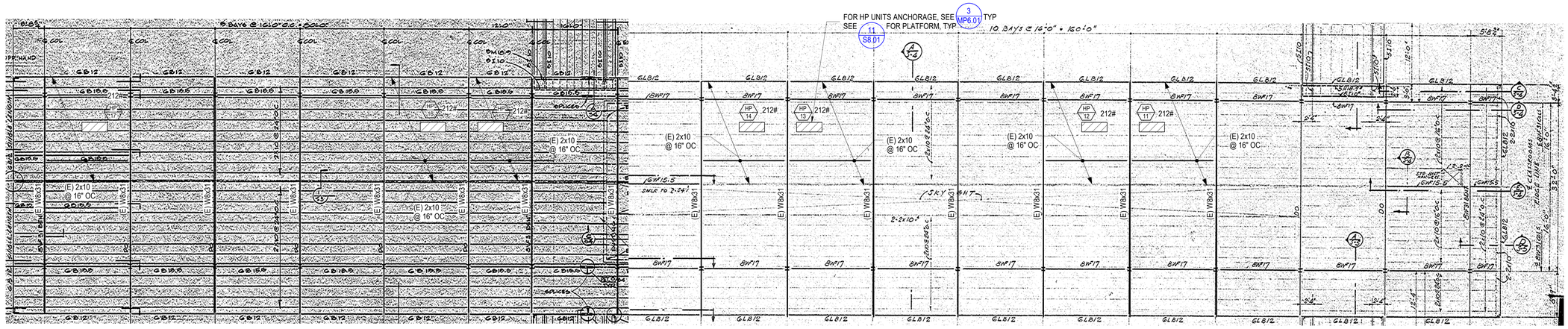

2 EXISTING ROOF FRAMING PLAN - WING 3

NTS

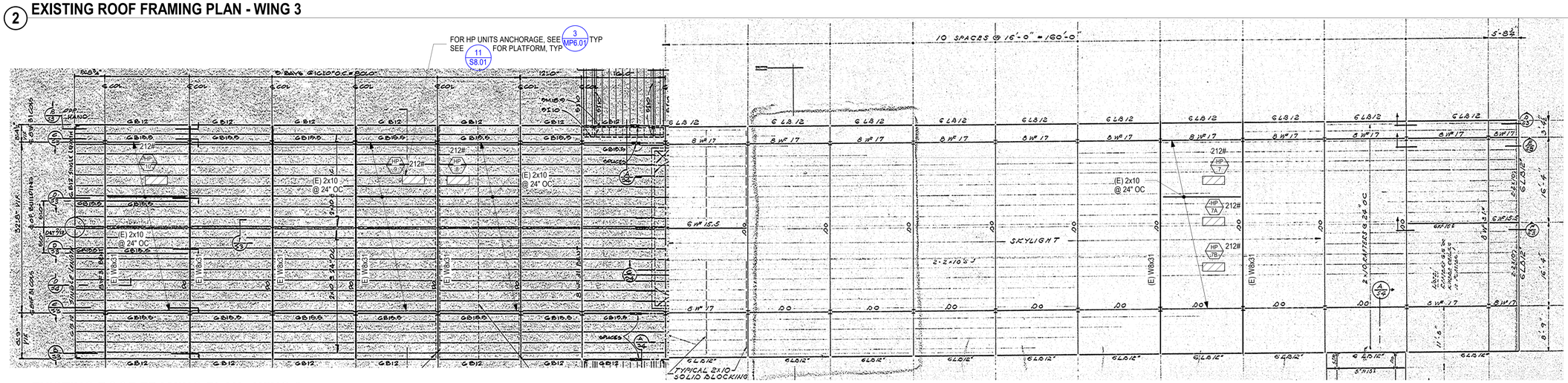

3 EXISTING ROOF FRAMING PLAN - WING 2

NTS

SHEET NOTES:

1. LOCATIONS OF MECHANICAL UNITS ARE SHOWN FOR REFERENCE ONLY. SEE 16 S8.10 AND MP2.02 FOR UNIT LOCATIONS.
2. EXISTING STRUCTURAL FRAMING PLAN SHOWN IS TAKEN FROM DSA APPROVED AS-BUILT DRAWINGS AND IS SHOWN FOR REFERENCE ONLY.
3. SEE GENERAL NOTES ON SHEET S1.01.
4. SEE TYPICAL FRAMING DETAILS ON SHEET S8.01.

IDENTIFICATION STAMP
DIV. OF THE STATE ARCHITECT
APP: 01-119530 INC:
REVIEWED FOR
SS ☑ FLS ☑ ACS ☑
DATE: 10/26/2021

aedis architects
www.aedisarchitects.com
387 S. 1st Street, Suite 300
San Jose, CA 95113
tel: (408)-300-5160
fax: (408)-300-5121

PROJECT

COLLEGE PARK ELEMENTARY SCHOOL - HVAC REPLACEMENT

SAN MATEO-FOSTER CITY SCHOOL DISTRICT

CONSULTANT

BASE DESIGN
582 MARKET ST. STE. 1402
SAN FRANCISCO, CA 94104
Office:(415) 466-2997
www.BASEdesigninc.com

STAMP

REGISTERED PROFESSIONAL ENGINEER
GÖKHAN AKALAN
NO. 5594
STRUCTURAL
STATE OF CALIFORNIA

STATE
DSA FILE NUMBER 41-26
APPL # 01-119530

REVISIONS

No.	Description	Date

MILESTONES

DD	
90% CD	
DSA SUB	05/26/2021
BACKCHECK	

SHEET

EXISTING ROOF FRAMING PLANS - WINGS 2, 3 & 4

DATE 05/26/2021

JOB # 2021005.01

SHEET # S2.01

10/8/2021 10:32:13 AM
D:\21115 - SMFCSD HVAC Upgrade\College Park\Structural drawings\21115 - SMFCSD HVAC Upgrades - College Park - R20.rvt

CONCRETE STRENGTH		3000 PSI			
REINFORCING CONFIGURATION		CASE 1		CASE 2	
BAR SIZE	BAR LOCATION	TOP	OTHER	TOP	OTHER
"CLASS A LAP SPLICE AND STRAIGHT DEVELOPMENT LENGTH, Ld (INCHES)"	#3	22	17	32	25
	#4	29	22	43	33
	#5	36	28	54	41
	#6	43	33	64	50
	#7	63	48	94	72
CLASS B LAP SPLICE (INCHES)	#3	28	22	42	32
	#4	37	29	56	43
	#5	47	36	70	54
	#6	56	43	84	64
	#7	81	63	122	94

NOTES:
1. VALUES IN THE TABLE ARE FOR NON-EPOXY COATED GRADE 60 REINFORCING STEEL AND NORMAL WEIGHT CONCRETE.
2. CASES 1 AND 2 ARE DEPENDENT ON THE TYPE OF CONCRETE ELEMENT, CONCRETE COVER AND CENTER-TO-CENTER SPACING OD REINFORCING BARS. THEY ARE DEFINED AS:
   CASE 1:
   BEAM AND COLUMNS:
   - CONCRETE COVER >= db
   - CENTER-TO-CENTER SPACING >= 2x db, AND
   - STIRRUPS OR TIES PROVIDED THROUGHTOUT ld
   OTHER ELEMENTS:
   - CONCRETE COVER >= db AND
   - CENTER-TO-CENTER SPACING >= 3x db
   CASE 2:
   BEAM AND COLUMNS:
   - CONCRETE COVER < db
   - CENTER-TO-CENTER SPACING < 2x db
   OTHER ELEMENTS:
   - CONCRETE COVER < db AND
   - CENTER-TO-CENTER SPACING < 2x db
3. TOP BARS ARE HORIZONTAL BARS WITH MORE THAN 12" OF FRESH CONCRETE BELOW. OTHER BAR INCLUDE ALL VERTICAL REINFORCING, ALL HORIZONTAL WALL REINFORCING AND HORIZONTAL REINFORCING WITH LESS THAN 12" OF RESH CONCRETE BELOW BAR.
4. PROVIDE CLASS B LAP SPLICES, U.O.N.
5. FOR LIGHTWEIGHT CONCRETE, MULTIPLY THE VALUES IN THIS TABLE BY 1.3.
6. WHERE ld IS NOT OBTAINABLE DUE TO SPACE RETRICTIONS, PROVIDE A STANDARD HOOK PER DETAIL 2/-
7. FOR EPOXY-COATED BARS, MULTIPLY THE VALUE IN THIS TABLE BY 1.5.
8. SPLICES OF HORIZONTAL REINFORCING BARS IN WALLS AND SLABS SHALL BE STAGGERED. SPLICES OF HORIZONTAL REINFORCING BARS IN WALLS AND SLABS CONTAINING TWO CURTAINS OF REINFORCEMENT SHALL NOT OCCUR IN THE SAME LOCATION; SPLICES SHALL BE OFFSET BY THE MAXIMUM OF 12 INCHES AND 12 BAR DIAMETERS.
9. SEE SHORTCRETE NOTES FOR LAP SPLICES IN SHOTCRETE WALLS.
10. MECHANICAL COUPLERS MAY BE USED IN LIEU OF LAP SPLICES. MECHANICAL COUPLERS SHALL HAVE AN APPROVED ICC REPORT AND RESIST 125% OF REINFORCING BAR YIELD STRENGTH.
11. WHERE BARS OF DIFFERENT SIZES ARE SPLICED, SPLICE LENGTH SHALL BE THE MAXIMUM OF ld OF THE LARGER BAR AND THE LAP SPLICE LENGTH OF THE SMALLER BAR.
12. LAP TOP BARS AT MIDSPAN AND BOTTOM BARS AT SUPPORT, U.O.N.
13. NON-CONTACT LAP SPLICED BARS SHALL BE SPLACED AT LEAST 1 ½" AND NO MORE THAN THE MAXIMUM OF ONE-FIFTH OF THE LAP SPLICE AND 6".

7 LAP SPLICE + STRAIGHT BAR DEVELOPMENT LENGTHS

NTS

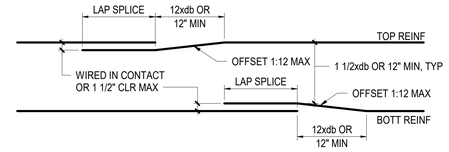

a BEAM SPLICE DETAIL

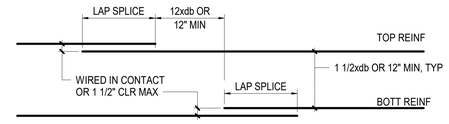

b STRAGGERED WALL OR SLAB SPLICE DETAIL

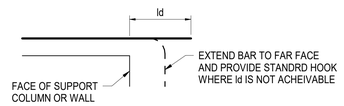

c BEAM AT SUPPORT

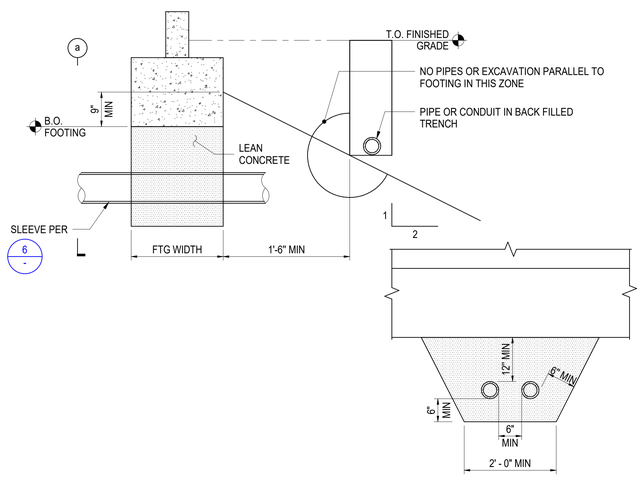

8 TYPICAL EXCAVATION PARALLEL TO FTG

NTS

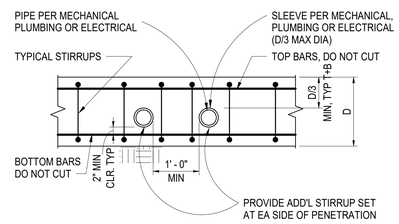

a CLEAR OF TOP & BOTTOM REINF

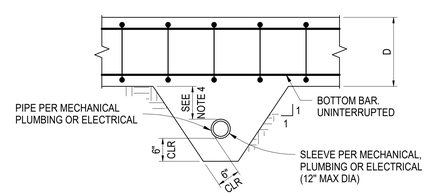

b BELOW BOTTOM REINF

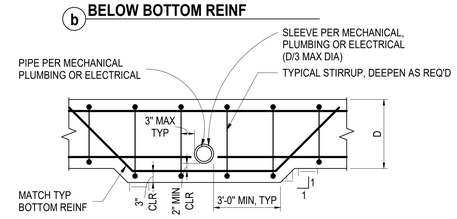

c AT BOTTOM REINF

NOTES:
1. ALL PIPES AND CONDUITS SHALL CLEAR SLEEVE BY 1" ALL AROUND U.O.N.
2. SEAL VOID BETWEEN PIPE AND SLEEVE WITH ELASTIC WATERPROOF MATERIAL, TYP.
3. DETAIL APPLICABLE TO MAXIMUM 8" DIA SLEEVE.
4. NO FTG EXTENSION REQ'D FOR PIPE DEEPER THAN 12" BELOW FTG (SLEEVE STILL REQ'D). SEE DETAIL 8 ON THIS SHEET.
5. WHERE PENETRATION CONFLICTS WITH REBAR TIE, OMIT TIE & PROVIDE 1 ADDITIONAL TIE EA SIDE OF SLEEVE.
6. IF PIPE OR CONDUIT SLEEVE IS ASTM A53 SCHEDULE 40 OR GREATER PIPE, ADDITIONAL STIRRUPS MAY BE ELIMINATED, SLEEVE SHALL GALVAIZED.

6 TYPICAL FOOTING PENETRATION

NTS

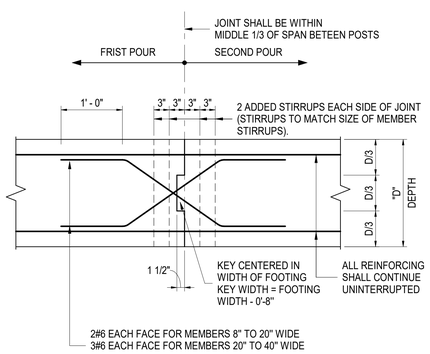

9 CONTINUOUS FOOTING CONSTRUCTION JOINT DETAIL

NTS

HOOKED BAR DEVELOPMENT LENGTH, Ldh			
BAR SIZE	CONCRETE STRENGTH		
	3000 PSI	4000 PSI	5000 PSI
#3	0' - 8"	0' - 7"	0' - 6"
#4	0' - 11"	0' - 9"	0' - 9"
#5	1' - 2"	1' - 0"	0' - 11"
#6	1' - 4"	1' - 2"	1' - 1"
#7	1' - 7"	1' - 5"	1' - 3"

NOTES:
1. THE HOOKED BAR DEVELOPMENT LENGTHS IN THIS TABLE ARE FOR NORMALWEIGHT CONCRETE. FOR LIGHTWEIGHT CONCRETE, THE HOOKED BAR DEVELOPMENT LENGTH SHALL NOT BE LESS THEN 10xdb, 7 ½" AND 1.3xLdh PER THE TABLE ABOVE.
2. THE HOOKED BAR DEVELOPMENT LENGTHS IN THIS TABLE APPLY TO MEMBERS WITH:
   a. SIDE COVER EQUAL TO AT LEAST 2 ½".
   b. END COVER EQUAL TO AT LEAST 2".

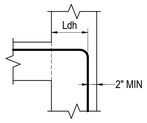

2 HOOKED BAR DEVELOPMENT LENGTHS

NTS

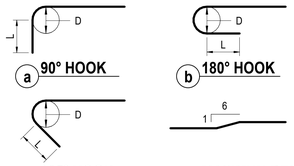

a 90° HOOK
b 180° HOOK
c 135° HOOK
d MAXIMUN BEND IN MAIN REINFORCING

MAIN REINFORCING HOOKS			
BAR SIZE	BEND DIAMETER, D (IN)	90° HOOK L (IN)	180° HOOK L (IN)
#3	2 1/4	4 1/2	2 1/2
#4	3	6	2 1/2
#5	3 3/4	7 1/2	2 1/2
#6	4 1/2	9	3
#7	5 1/4	10 1/2	3 1/2

STIRRUP + TIE REINFORCING HOOKS			
BAR SIZE	BEND DIAMETER, D (IN)	90° HOOK L (IN)	180° HOOK L (IN)
#3	1 1/2	3	3
#4	2	3	3
#5	2 1/2	3 3/4	3 3/4
#6	4 1/2	9	4 1/2
#7	5 1/4	10 1/2	5 1/4

3 TYPICAL BAR HOOKS

NTS

IDENTIFICATION STAMP
DIV. OF THE STATE ARCHITECT
APP: 01-119530 INC:
REVIEWED FOR
SS ☑ FLS ☑ ACS ☑
DATE: 10/26/2021

aedis architects
www.aedisarchitects.com
387 S. 1st Street, Suite 300
San Jose, CA 95113
tel: (408)-300-5160
fax: (408)-300-5121

PROJECT
COLLEGE PARK ELEMENTARY SCHOOL - HVAC REPLACEMENT

SAN MATEO-FOSTER CITY SCHOOL DISTRICT

CONSULTANT

BASE DESIGN
582 MARKET ST. STE. 1402
SAN FRANCISCO, CA 94104
Office:(415) 466-2997
www.BASEdesigninc.com

STAMP
REGISTERED PROFESSIONAL ENGINEER
O GOKHAN AKALAN
NO. 5594
STRUCTURAL
STATE OF CALIFORNIA

STATE
DSA FILE NUMBER 41-26
APPL # 01-119530

REVISIONS

No.	Description	Date

MILESTONES
DD
90% CD
DSA SUB 05/26/2021
BACKCHECK

SHEET
TYPICAL CONCRETE DETAILS

DATE 05/26/2021
JOB # 2021005.01
SHEET # S5.01

10/8/2021 10:32:13 AM
D:\21115 - SMFCSD HVAC Upgrade\College Park\Structural drawings\21115 - SMFCSD HVAC Upgrades - College Park - R20.rvt

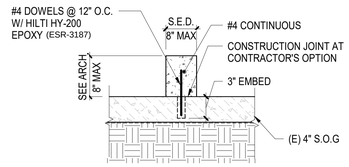

B CURB AT SLAB-ON-GRADE

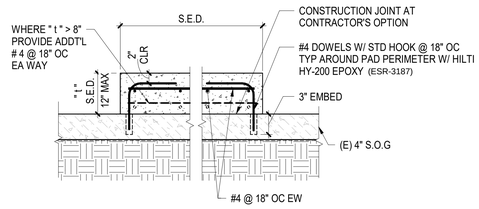

A CURB WIDTH > 8"

9 CURBS AND HOUSEKEEPING PADS AT (E) S.O.G

NTS

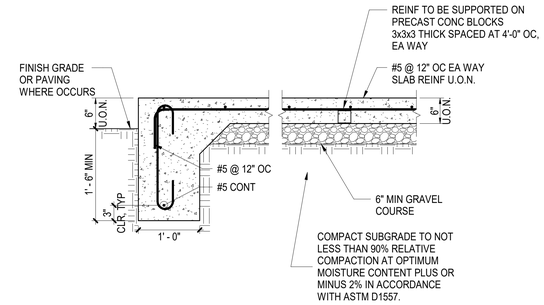

EDGE OF SLAB

SLAB-ON-GRADE

NOTE:
OVER EXCAVATE TO REMOVE ANY CRACKED OR LOOSE EXISTING MATERIAL BELOW SLAB AND FOOTING EXCAVATIONS. BACKFILL WITH LEAN CONCRETE f'c=1500 PSI @ 28 DAYS AS REQUIRED.

5 SLAB-ON-GRADE DETAIL

NTS

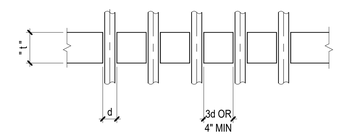

NOTES:
1. DO NOT CUT REINFORCING.
2. IF 4" MINIMUM CLEAR DISTANCE BETWEEN SLEEVES IS NOT POSSIBLE, THIS CONDITION SHALL BE TREATED AS A SLAB OPENING PER DETAIL 7/-
3. USE OF ALUMINUM CONDUIT IS PROHIBITED.

6 PIPING & CONDUIT THROUGH SLAB

NTS

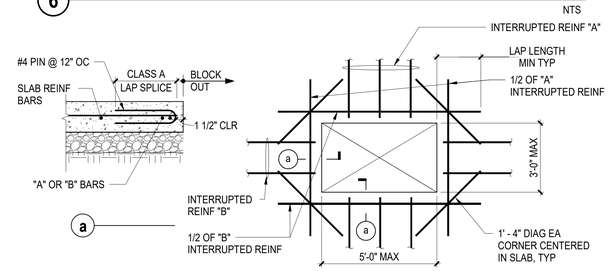

PLAN

NOTES:
1. OPENING SIZE, LOCATION, AND REINFORCING SHALL BE SUBMITTED AS PART OF THE REINFORCING SHOP DRAWING SUBMITTAL FOR REVIEW AND APPROVAL.
2. AT EACH SIDE OF THE OPENING, ADD NOT LESS THAN ONE-HALF THE AREA OF REINFORCING THAT IS INTERRUPTED BY THE OPENING. WHERE THE BAR LENGTH PAST THE OPENING IS INTERRUPTED BY AN EDGE OF SLAB, PROVIDE A STANDARD HOOK AT THE DISCONTINUOUS END.
3. WHERE THE DIAGONAL LENGTH IS INTERRUPTED BY AN EDGE OF SLAB, PROVIDE A STANDARD HOOK.
4. NOT REQUIRED AT COLUMN LOCATIONS.

7 OPENING IN SLAB-ON-GRADE

NTS

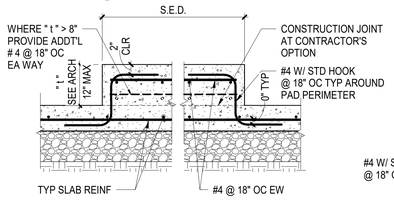

b HOUSEKEEPING PAD AT SLAB-ON-GRADE

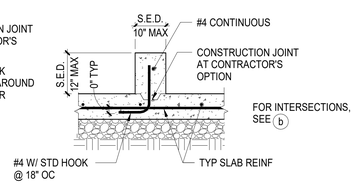

a CURB AT SLAB-ON-GRADE

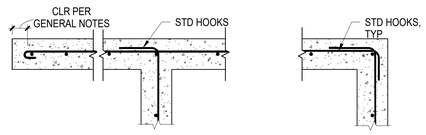

c CONCRETE CURB INTERSECTIONS

8 CURBS AND HOUSEKEEPING PADS

NTS

IDENTIFICATION STAMP
DIV. OF THE STATE ARCHITECT
APP: 01-119530 INC:
REVIEWED FOR
SS ☑ FLS ☑ ACS ☑
DATE: 10/26/2021

aedis architects

www.aedisarchitects.com
387 S. 1st Street, Suite 300
San Jose, CA 95113
tel: (408)-300-5160
fax: (408)-300-5121

PROJECT

COLLEGE PARK ELEMENTARY SCHOOL - HVAC REPLACEMENT

SAN MATEO-FOSTER CITY SCHOOL DISTRICT

CONSULTANT

BASE DESIGN
582 MARKET ST. STE. 1402
SAN FRANCISCO, CA 94104
Office:(415) 466-2997
www.BASEdesigninc.com

STAMP

REGISTERED PROFESSIONAL ENGINEER
G. OKHAN AKALAN
NO. 5594
STRUCTURAL
STATE OF CALIFORNIA

STATE
DSA FILE NUMBER 41-26
APPL # 01-119530

REVISIONS

No.	Description	Date

MILESTONES

DD	
90% CD	
DSA SUB	05/26/2021
BACKCHECK	

SHEET

TYPICAL CONCRETE DETAILS

DATE 05/26/2021

JOB # 2021005.01

SHEET #

S5.02

10/8/2021 10:32:13 AM
D:\21115 - SMFCSD HVAC Upgrade\College Park\Structural drawings\21115 - SMFCSD HVAC Upgrades - College Park - R20.rvt

FASTENING SCHEDULE		
DESCRIPTION OF BUILDING ELEMENTS	NUMBER AND TYPE OF FASTENER	SPACING AND LOCATION
ROOF		
1. Blocking between ceiling joists, rafters or trusses to top plate or other framing below	3-8d common (2 1/2" × 0.131"); or 3-10d box (3" × 0.128"); or 3-3" × 0.131" nails; or 3-3" 14 gage staples, 7/16" crown	Each end, toenail
Blocking between rafters or truss not at the wall top plate, to rafter or truss	2-8d common (2 1/2" × 0.131") 2-3" × 0.131" nails 2-3" 14 gage staples	Each end, toenail
	2-16 d common (3 1/2" × 0.162") 3-3" × 0.131" nails 3-3" 14 gage staples	End nail
Flat blocking to truss and web filler	16d common (3 1/2" × 0.162") @ 6" o.c. 3" × 0.131" nails @ 6" o.c. 3" × 14 gage staples @ 6" o.c	Face nail
2. Ceiling joists to top plate	3-8d common (2 1/2" × 0.131"); or 3-10d box (3" × 0.128"); or 3-3" × 0.131" nails; or 3-3" 14 gage staples, 7/16" crown	Each joist, toenail
3. Ceiling joist not attached to parallel rafter, laps over partitions (no thrust)	3-16d common (3 1/2" x 0.163") 4-10d box (3" × 0.128"); or 4-3" × 0.131" nails; or 4-3" 14 gage staples, 7/16" crown	Face nail
4. Ceiling joist attached to parallel rafter (heel joint)	Per Table 2308.7.3.1, CBC 2019	Face nail
5. Collar tie to rafter	3-10d common (3" × 0.148"); or 4-10d box (3" × 0.128"); or 4-3" × 0.131" nails; or 4-3" 14 gage staples, 7/16" crown	Face nail
6. Rafter or roof truss to top plate	3-10 common (3" × 0.148"); or 3-16d box (3 1/2" × 0.135"); or 4-10d box (3" × 0.128"); or 4-3" × 0.131 nails; or 4-3" 14 gage staples, 7/16" crown	Toenail[c]
7. Roof rafters to ridge valley or hip rafters; or roof rafter to 2-inch ridge beam	2-16d common (3 1/2" × 0.162"); or 3-10d box (3" × 0.128"); or 3-3" × 0.131" nails; or 3-3"14 gage staples, 7/16" crown; or	End nail
	3-10d common (3 1/2" × 0.148"); or 4-16d box (3 1/2" × 0.135"); or 4-10d box (3" × 0.128"); or 4-3" × 0.131" nails; or 4-3" 14 gage staples, 7/16" crown	Toenail
WALL		
8. Stud to stud (not at braced wall panels)	16d common (3 1/2" × 0.162");	24" o.c. face nail
	10d box (3" × 0.128"); or 3" × 0.131" nails; or 3-3" 14 gage staples, 7/16" crown	16" o.c. face nail
9. Stud to stud and abutting studs at intersecting wall corners (at braced wall panels)	16d common (3 1/2" × 0.162"); or	16" o.c. face nail
	16d box (3 1/2" × 0.135"); or	12" o.c. face nail
	3" × 0.131" nails; or 3-3" 14 gage staples, 7/16" crown	12" o.c. face nail
10. Built-up header (2" to 2" header)	16d common (3 1/2" × 0.162"); or	16" o.c. each edge, face nail
	16d box (3 1/2" × 0.135")	12" o.c. each edge, face nail
11. Continuous header to stud	4-8d common (2 1/2" × 0.131"); or 4-10d box (3" × 0.128")	Toenail
12. Top plate to top plate	16d common (3 1/2" × 0.162"); or	16" o.c. face nail
	10d box (3" × 0.128"); or 3" × 0.131" nails; or 3" 14 gage staples, 7/16" crown	12" o.c. face nail
13. Top plate to top plate, at end joints	8-16d common (3 1/2" × 0.162"); or 12-10d box (3" × 0.128"); or 12-3" × 0.131" nails; or 12-3" 14 gage staples, 7/16" crown	Each side of end joint, face nail (minimum 24" lap splice length each side of end joint)
14. Bottom plate to joist, rim joist, band joist or blocking (not at braced wall panels)	16d common (3 1/2"x0.163"); or	16" o.c. face nail
	16d box (3 1/2" × 0.135"); or 3" × 0.131" nails; or 3" 14 gage staples, 7/16" crown	12" o.c. face nail
15. Bottom plate to joist, rim joist, band joist or blocking at braced wall panels	2-16d common (3 1/2 " × 0.162"); or 3-16d box (3 1/2" × 0.135"); or 4-3" × 0.131" nails; or 4-3" 14 gage staples, 7/16" crown	16" o.c. face nail
16. Stud to top or bottom plate	4-8d common (2 1/2" × 0.131"); or 4-10d box (3" × 0.128"); or 4-3" × 0.131" nails; or 4-3" 14 gage staples, 7/16" crown; or	Toenail
	2-16d common (3 1/2" × 0.162"); or 3-10d box (3" × 0.128"); or 3-3" × 0.131" nails; or 3-3" 14 gage staples, 7/16" crown	End nail
17. Top plates, laps at corners and intersections	2-16d common (3 1/2" × 0.162"); or 3-10d box (3" × 0.128"); or 3-3" × 0.131" nails; or 3-3" 14 gage staples, 7/16" crown	Face nail
18. 1" brace to each stud and plate	2-8d common (2 1/2" × 0.131"); or 2-10d box (3" × 0.128"); or 2-3" × 0.131" nails; or 2-3" 14 gage staples, 7/16" crown	Face nail
19. 1" × 6" sheathing to each bearing	2-8d common (2 1/2" × 0.131"); or 2-10d box (3" × 0.128")	Face nail
20. 1" × 8" and wider sheathing to each bearing	3-8d common (2 1/2" × 0.131"); or 3-10d box (3" × 0.128")	Face nail

For SI: 1 inch = 25.4 mm.

a. Nails spaced at 6 inches at intermediate supports where spans are 48 inches or more. Nails for wall sheathing are permitted to be common, box or casing.
b. Spacing shall be 6 inches on center on the edges and 12 inches on center at intermediate supports for nonstructural applications. Panel supports at 16 inches (20 inches if strength axis in the long direction of the panel, unless otherwise marked).
c. Where a rafter is fastened to an adjacent parallel ceiling joist in accordance with this schedule and the ceiling joist is fastened to the top plate in accordance with this schedule, the number of toenails in the rafter shall be permitted to be reduced by one nail.
d. RSRS-01 is a Roof Sheathing Ring Shank nail meeting the specifications in ASTM F1667.

12 NAILING SCHEDULE

NTS

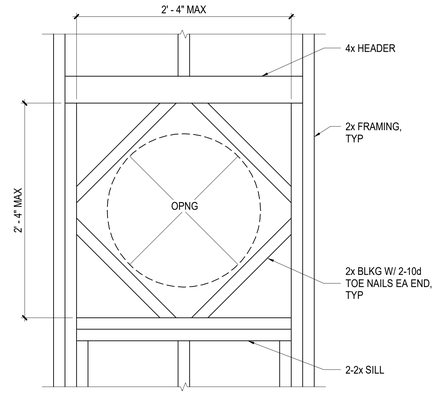

NOTES:
1. FOR INFO NOT SHOWN OR NOTED, SEE 5

9 FRAMING DETAIL AT ROUND OPENING

1 1/2" = 1'-0"

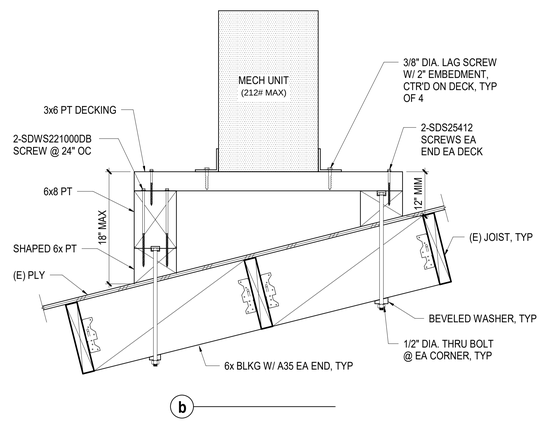

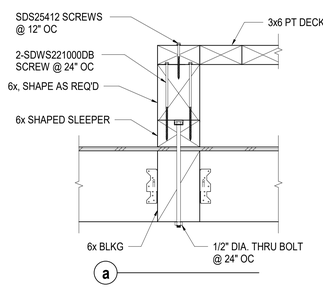

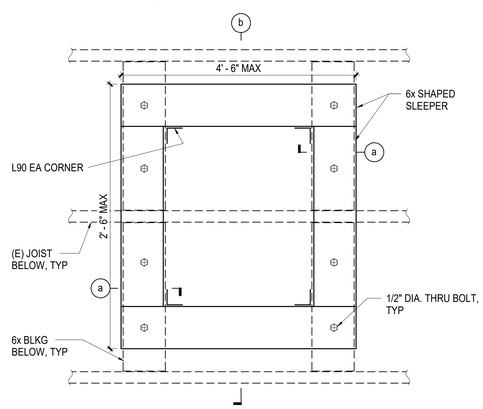

PLAN VIEW

11 MECH UNIT PLATFORM FRAMING DETAIL

1 1/2" = 1'-0"

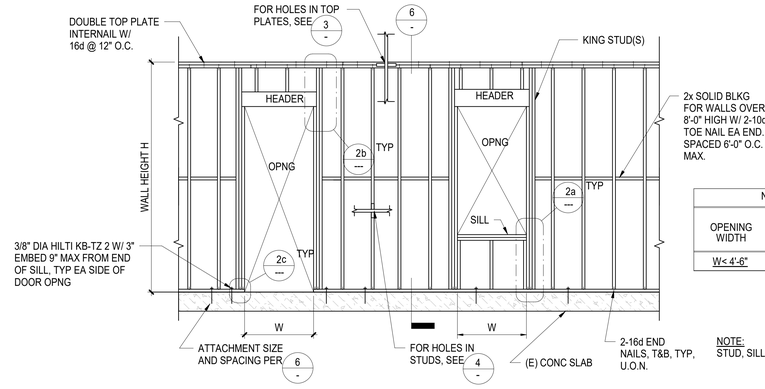

NON-BEARING WALL STUD SCHEDULE		
WALL HEIGHT	STUD SIZE	SPACING
H < 13'-0"	2x4	16"

b

NON-BEARING WALL SCHEDULE AT OPENINGS				
OPENING WIDTH	KING STUD(S)	HEADER DEPTH	BEARING STUD(S)	SILL
W< 4'-6"	2x	4x	1-2x	2-2x

a

NOTE:
STUD, SILL, AND HEADER WIDTHS TO MATCH WALL FRAMING SIZE.

5 TYPICAL INTERIOR NON-BEARING WALL FRAMING

NTS

NOTES:
1. SEE DETAIL 5 ON THIS SHEET FOR TYPICAL WALL FRAMING.
2. FOR PARTITION WALL INTERSECTION DETAILS & STUD CONFIGURATIONS SEE 7

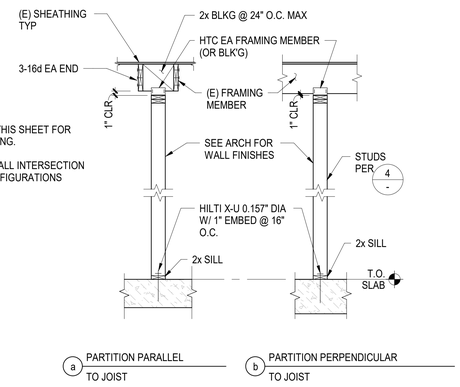

6 NON-BEARING WALL PARTITION

NTS

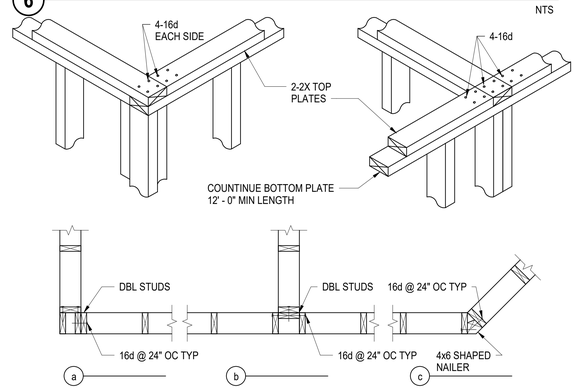

7 WALL INTERSECTIONS

NTS

NOTES:
1. FOR MEMBER SIZES, SEE 5
2. USE 20d NAILS AT 3x STUDS

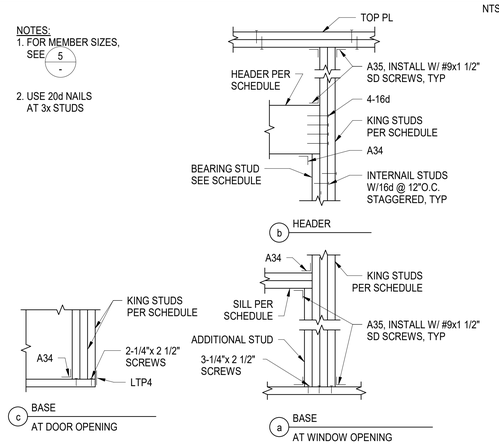

2 WALL OPENING

NTS

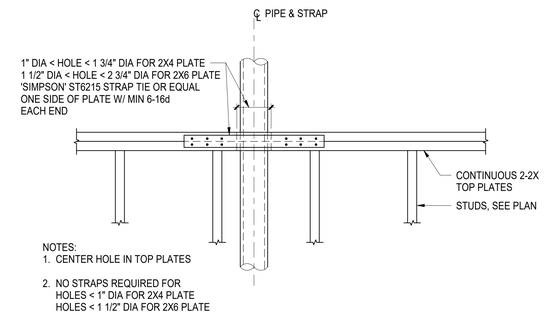

NOTES:
1. CENTER HOLE IN TOP PLATES
2. NO STRAPS REQUIRED FOR HOLES < 1" DIA FOR 2X4 PLATE
HOLES < 1 1/2" DIA FOR 2X6 PLATE

3 TOP PLATE PENETRATIONS

NTS

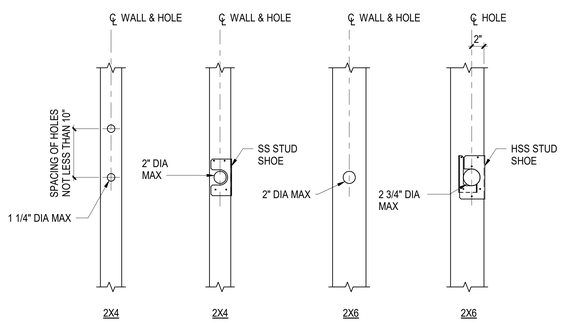

4 PENETRATIONS IN STUDS

NTS

IDENTIFICATION STAMP
DIV. OF THE STATE ARCHITECT
APP: 01-119530 INC:
REVIEWED FOR
SS ☑ FLS ☑ ACS ☑
DATE: 10/26/2021

aedis architects
www.aedisarchitects.com
387 S. 1st Street, Suite 300
San Jose, CA 95113
tel: (408)-300-5160
fax: (408)-300-5121

PROJECT

COLLEGE PARK ELEMENTARY SCHOOL - HVAC REPLACEMENT

SAN MATEO-FOSTER CITY SCHOOL DISTRICT

CONSULTANT

BASE DESIGN
582 MARKET ST. STE. 1402
SAN FRANCISCO, CA 94104
Office:(415) 466-2997
www.BASEdesigninc.com

STAMP

REGISTERED PROFESSIONAL ENGINEER
O GOKHAN AKALAN
NO. 5594
STRUCTURAL
STATE OF CALIFORNIA

STATE
DSA FILE NUMBER 41-26
APPL # 01-119530

REVISIONS

No.	Description	Date

MILESTONES

DD	
90% CD	
DSA SUB	05/26/2021
BACKCHECK	

SHEET

FRAMING DETAILS AND NAILING SCHEDULE

DATE 05/26/2021

JOB # 2021005.01

SHEET #

S8.01

10/8/2021 10:32:14 AM
D:\21115 - SMFCSD HVAC Upgrade\College Park\Structural drawings\21115 - SMFCSD HVAC Upgrades - College Park - R20.rvt

ABBREVIATIONS

&	AND
°F	DEGREES FAHRENHEIT
AAV	AUTOMATIC AIR VENT
AC	AIR CONDITIONER
AD	ACCESS DOOR
AFF	ABOVE FINISH FLOOR
AFUE	ANNUAL FUEL UTILIZATION EFFICIENCY
AL	ACOUSTICALLY LINED
AMP	AMPERE
AP	ACCESS PANEL
APPROX	APPROXIMATE
ARCH	ARCHITECT/ARCHITECTURAL
BDD	BACK DRAFT DAMPER
BFP	BACK FLOW PREVENTER
BHP	BRAKE HORSEPOWER
BLDG	BUILDING
BOD	BOTTOM OF DUCT
BOP	BOTTOM OF PIPE
BTU	BRITISH THERMAL UNIT
BTUH	BRITISH THERMAL UNITS PER HOUR
CA	COMBUSTION AIR
CFH	CUBIC FEET PER HOUR
CFM	CUBIC FEET PER MINUTE
CHWR	CHILLED WATER RETURN
CHWS	CHILLED WATER SUPPLY
CIRC	CIRCULATING
CLG	COOLING, CEILING
CLR	CLEAR
CONC	CONCRETE
CONN	CONNECTION
CONT	CONTINUED, CONTINUATION
COOL	COOLING
COP	COEFFICIENT OF PERFORMANCE
DB	DRY BULB
DF	DRINKING FOUNTAIN
D/L	DOOR LOUVER
DN	DOWN
DP	DIFFERENTIAL PRESSURE
DWGS	DRAWINGS
(E)	EXISTING
EA	EXHAUST AIR
EAD	EXHAUST AIR DAMPER
EAT	ENTERING AIR TEMPERATURE
EDB	ENTERING DRY BULB
EER	ENERGY EFFICIENCY RATIO
EFF	EFFICIENCY
ELEC	ELECTRICAL
ELEV	ELEVATION
ENT	ENTERING
EQ	EQUAL
EQUIP	EQUIPMENT
ESP	EXTERNAL STATIC PRESSURE
EW	ENTERING WATER
EWB	ENTERING WET BULB
EWT	ENTERING WATER TEMPERATURE
EXT	EXTERIOR
FD	FLOOR DRAIN
FFE	FINISHED FLOOR ELEVATION
FLA	FULL LOAD AMPS
FLEX	FLEXIBLE
FPM	FEET PER MINUTE
FS	FLOOR SINK
FT	FEET
FT HD	FEET HEAD
FTR	FLUE THRU ROOF
GA	GAUGE
GAL	GALLON
GPM	GALLONS PER MINUTE
HP	HORSEPOWER
HR	HOUR
HTG	HEATING
HZ	HERTZ
IE	INVERT ELEVATION
IN	INCH
INV	INVERT
KW	KILOWATTS
KWH	KILOWATT HOUR
LAT	LEAVING AIR TEMPERATURE
LBS	POUNDS
LVR	LOUVER
LWT	LEAVING WATER TEMPERATURE
LWB	LEAVING WET BULB
MAD, MD	MANUAL AIR DAMPER
MAV	MANUAL AIR VENT
MAX	MAXIMUM
MBH	1000 BTU PER HOUR
MCA	MINIMUM CIRCUIT AMPS
MCP	MECHANICAL CONTROL PANEL
MECH	MECHANICAL
MFR	MANUFACTURER
MIN	MINIMUM
MOCP	MAXIMUM OVERCURRENT PROTECTION
(N)	NEW
NC	NORMALLY CLOSED
NIC	NOT IN CONTRACT
NO	NORMALLY OPEN
NTS	NOT TO SCALE
OA	OUTSIDE AIR
OAD	OUTSIDE AIR DAMPER
OC	ON CENTER
OD	OUTSIDE DIAMETER
PD	PRESSURE DROP
PH	PHASE
POC	POINT OF CONNECTION
PRV	PRESSURE REDUCING VALVE
PSI (G) (A)	POUNDS PER SQUARE INCH (GAUGE) (ABSOLUTE)
P/T	PRESSURE/TEMPERATURE
QTY	QUANTITY
RA	RETURN AIR
RAD	RETURN AIR DAMPER
RH	RELATIVE HUMIDITY
RL	REFRIGERANT LIQUID
RM	ROOM
RPM	REVOLUTIONS PER MINUTE
RS	REFRIGERANT SUCTION
RV	RELIEF VALVE
SA	SUPPLY AIR
SC	SENSIBLE COOLING
SEER	SEASONAL ENERGY EFFICIENCY RATIO
SD	SMOKE DAMPER
SM	SHEET METAL
SOV	SHUT-OFF VALVE
SP	STATIC PRESSURE
SPEC	SPECIFICATION
SQ	SQUARE
SQFT, FT^2	SQUARE FEET
SQIN, IN^2	SQUARE INCHES
STRUCT	STRUCTURAL
T	THERMOSTAT, "X" INDICATES DEVICE CONTROLLED. 48" AFF (TO TOP OF STAT)
TC	TOTAL COOLING
TDH	TOTAL DYNAMIC HEAD
TEMP	TEMPERATURE
THRU	THROUGH
TSP	TOTAL STATIC PRESSURE
TV	TURNING VANES
TYP	TYPICAL
UL	UNDERWRITER'S LABORATORIES
UON	UNLESS OTHERWISE NOTED
V	VOLT
VFD	VARIABLE FREQUENCY DRIVE
VTR	VENT THROUGH ROOF
W	WATTS
W/	WITH
WB	WET BULB
WC	WATER COLUMN
WH	WATER HEATER
WT	WEIGHT

LIST OF GOVERNING CODES

2019 BUILDING STANDARDS ADMINISTRATIVE CODE, PART 1, TITLE 24, C.C.R.
2019 CALIFORNIA BUILDING CODE (CBC), PART 2, TITLE 24, C.C.R.
2019 CALIFORNIA ELECTRICAL CODE, PART 3, TITLE 24, C.C.R.
2019 CALIFORNIA MECHANICAL CODE (CMC), PART 4, TITLE 24, C.C.R.
2019 CALIFORNIA PLUMBING CODE (CPC), PART 5, TITLE 24, C.C.R.
2019 CALIFORNIA ENERGY CODE (CEC), PART 6, TITLE 24, C.C.R.
2019 CALIFORNIA FIRE CODE (CFC), PART 9, TITLE 24, C.C.R.
2019 CALIFORNIA GREEN BUILDING STANDARDS CODE, PART 11, TITLE 24, C.C.R.
2019 CALIFORNIA REFERENCED STANDARDS CODE, PART 12, TITLE 24, C.C.R.
TITLE 19, C.C.R., PUBLIC SAFETY, STATE FIRE MARSHAL REGULATIONS.

ALL SECTION NUMBERS BELOW REFER TO GROUP 1, CHAPTER 4, PART 1, TITLE 24, C.C.R.

1. ADDENDA, CONSTRUCTION CHANGES PER SECTION 4-338.
2. INSPECTOR APPROVED BY DSA. INSPECTOR AND CONTINUOUS INSPECTION OF WORK PER SECTION 4-333(b) AND 4-342.
3. TESTS AND TESTING LABORATORY PER SECTION 4-335.
4. SPECIAL INSPECTION PER SECTION 4-333(c).
5. CONTRACTOR SHALL SUBMIT VERIFIED REPORTS PER SECTION 4-336 AND 4-343(c).
6. ADMINISTRATION OF CONSTRUCTION PER PART 1, TITLE 24, C.C.R. - DUTIES OF ARCHITECT, STRUCTURAL ENGINEER OR PROFESSIONAL ENGINEER PER SECTION 4-333(a) AND 4-341.
7. GOVERNING CODES: TITLE 24.
8. A COPY OF PARTS 1, 2, 3, 4, AND 5 OF TITLE 24 SHALL BE KEPT AVAILABLE IN THE FIELD DURING CONSTRUCTION.
9. DSA SHALL BE NOTIFIED OF START OF CONSTRUCTION PER SECTION 4-331.
10. SUPERVISION BY THE DIVISION OF THE STATE ARCHITECT PER SECTION 4-334.

DSA GENERAL NOTES

1. THE INTENT OF THE CONTRACT DOCUMENTS IS TO MODERNIZE THE SCHOOL'S CAMPUS. SHOULD ANY CONDITIONS DEVELOP NOT COVERED BY THE CONTRACT DOCUMENTS, A CONSTRUCTION CHANGE DOCUMENT DETAILING AND SPECIFYING THE REQUIRED WORK SHALL BE SUBMITTED TO AND APPROVED BY DSA BEFORE PROCEEDING WITH THE WORK.
2. THE SEISMIC SUPPORT AND ANCHORAGE OF THE EQUIPMENT DESCRIBED ON THESE DRAWINGS HAVE BEEN ENGINEERED BY THE ENGINEER OF RECORD FOR CONFORMANCE WITH APPROPRIATE BUILDING CODES. THE ENGINEER OF RECORD WAS NOT RESPONSIBLE FOR THE EQUIPMENT DESIGN.
3. ALL MECHANICAL AND PLUMBING EQUIPMENT SHALL BE BRACED OR ANCHORED TO RESIST A HORIZONTAL FORCE ACTING IN ANY DIRECTION USING THE CRITERIA FROM CHAPTER 16A CALIFORNIA BUILDING CODE (CBC) 2019.
4. WHERE ANCHORAGE DETAILS ARE NOT SHOWN ON THE DRAWINGS, THE FIELD INSTALLATION SHALL BE SUBJECT TO THE APPROVAL OF THE STRUCTURAL ENGINEER AND THE FIELD REPRESENTATIVE OF THE DIVISION OF THE STATE ARCHITECT.
5. NO DEMOLITION SHALL BEGIN UNTIL PLANS INCLUDING THE DEMOLITION WORK HAVE BEEN APPROVED BY DSA.

MEP COMPONENT ANCHORAGE NOTE

ALL MECHANICAL, PLUMBING AND ELECTRICAL COMPONENTS SHALL BE ANCHORED AND INSTALLED PER THE DETAILS ON DSA APPROVED CONSTRUCTION DOCUMENTS. THE FOLLOWING COMPONENTS SHALL BE ANCHORED OR BRACED TO MEET THE FORCE AND DISPLACEMENT REQUIREMENTS PRESCRIBED IN THE 2019 CBC, SECTIONS 1617A.1.18 THROUGH 1617A.1.26 AND ASCE 7-16 CHAPTER 13, 26 AND 30.

1. ALL PERMANENT EQUIPMENT AND COMPONENTS.
2. TEMPORARY, MOVABLE OR MOBILE EQUIPMENT THAT IS PERMANENTLY ATTACHED (E.G. HARD WIRED) TO THE BUILDING UTILITY SERVICES SUCH AS ELECTRICITY, GAS OR WATER. "PERMANENTLY ATTACHED" SHALL INCLUDE ALL ELECTRICAL CONNECTIONS EXCEPT PLUGS FOR 110/220 VOLT RECEPTACLES HAVING A FLEXIBLE CABLE.
3. TEMPORARY, MOVABLE, OR MOBILE EQUIPMENT WHICH IS HEAVIER THAN 400 POUNDS OR HAS A CENTER OF MASS LOCATED 4 FEET OR MORE ABOVE THE ADJACENT FLOOR OR ROOF LEVEL THAT DIRECTLY SUPPORT THE COMPONENT IS REQUIRED TO BE RESTRAINED IN A MANNER APPROVED BY DSA.

THE FOLLOWING MECHANICAL AND ELECTRICAL COMPONENTS SHALL BE POSITIVELY ATTACHED TO THE STRUCTURE, BUT NEED NOT DEMONSTRATE DESIGN COMPLIANCE WITH THE REFERENCED NOTED ABOVE. THESE COMPONENTS SHALL HAVE FLEXIBLE CONNECTIONS PROVIDED BETWEEN THE COMPONENT AND ASSOCIATED DUCTWORK, PIPING, AND CONDUIT. FLEXIBLE CONNECTIONS MUST ALLOW MOVEMENT IN BOTH TRANSVERSE AND LONGITUDINAL DIRECTIONS:

A. COMPONENTS WEIGHING LESS THAN 400 POUNDS AND HAVE A CENTER OF MASS LOCATED 4 FEET OR LESS ABOVE THE ADJACENT FLOOR OR ROOF LEVEL THAT DIRECTLY SUPPORT THE COMPONENT.

B. COMPONENTS WEIGHING LESS THAN 20 POUNDS, OR IN THE CASE OF DISTRIBUTED SYSTEMS, LESS THAN 5 POUNDS PER FOOT, WHICH ARE SUSPENDED FROM A ROOF OR FLOOR OR HUNG FROM A WALL

THE ANCHORAGE OF ALL MECHANICAL, ELECTRICAL, AND PLUMBING COMPONENTS SHALL BE SUBJECT TO THE APPROVAL OF THE DESIGN PROFESSIONAL IN GENERAL RESPONSIBLE CHARGE OR STRUCTURAL ENGINEER DELEGATED RESPONSIBILITY AND ACCEPTANCE BY DSA. THE PROJECT INSPECTOR WILL VERIFY THAT ALL COMPONENTS AND EQUIPMENT HAVE BEEN ANCHORED IN ACCORDANCE WITH ABOVE REQUIREMENTS.

PIPING, DUCTWORK, AND ELECTRICAL DISTRIBUTION SYSTEM BRACING NOTE

PIPING, DUCTWORK, AND ELECTRICAL DISTRIBUTION SYSTEMS SHALL BE BRACED TO COMPLY WITH THE FORCES AND DISPLACEMENTS PRESCRIBED IN ASCE 7-16 SECTION 13.3 AS DEFINED IN ASCE 7-16 SECTION 13.6.5, 13.6.6, 13.6.7, 13.6.8; AND 2019 CBC, SECTIONS 1617A.1.24, 1617A.1.25, AND 1617A.1.26.

THE METHOD OF SHOWING BRACING AND ATTACHMENTS TO THE STRUCTURE FOR THE IDENTIFIED DISTRIBUTION SYSTEM ARE AS NOTED BELOW. WHEN BRACING AND ATTACHMENTS ARE BASED ON A PREAPPROVED INSTALLATION GUIDE (E.G., OSHPD OPM FOR 2013 BC OR LATER), COPIES OF THE BRACING SYSTEM INSTALLATION GUIDE OR MANUAL SHALL BE AVAILABLE ON THE JOBSITE PRIOR TO THE START OF AND DURING THE HANGING AND BRACING OF THE DISTRIBUTION SYSTEMS. THE STRUCTURAL ENGINEER OF RECORD SHALL VERIFY THE ADEQUACY OF THE STRUCTURE TO SUPPORT THE HANGER AND BRACE LOADS.

MECHANICAL PIPING (MP), MECHANICAL DUCTS (MD), PLUMBING PIPING (PP), ELECTRICAL DISTRIBUTION SYSTEMS (E):

MP [ ] MD [ ] PP [ ] E [ ] - OPTION 1: DETAILED ON THE APPROVED DRAWINGS WITH PROJECT SPECIFIC NOTES AND DETAILS.

MP [X] MD [X] PP [ ] E [ ] - OPTION 2: SHALL COMPLY WITH THE APPLICABLE OSHPD PRE-APPROVAL (OPM #) #0043-13, "MASON WEST, INC. SEISMIC RESTRAINT GUIDELINES FOR SUSPENDED DISTRIBUTION SYSTEMS" OR #0052-13, "B-LINE/TOLCO SEISMIC RESTRAINT SYSTEMS GUIDELINES"

SYMBOL LEGEND

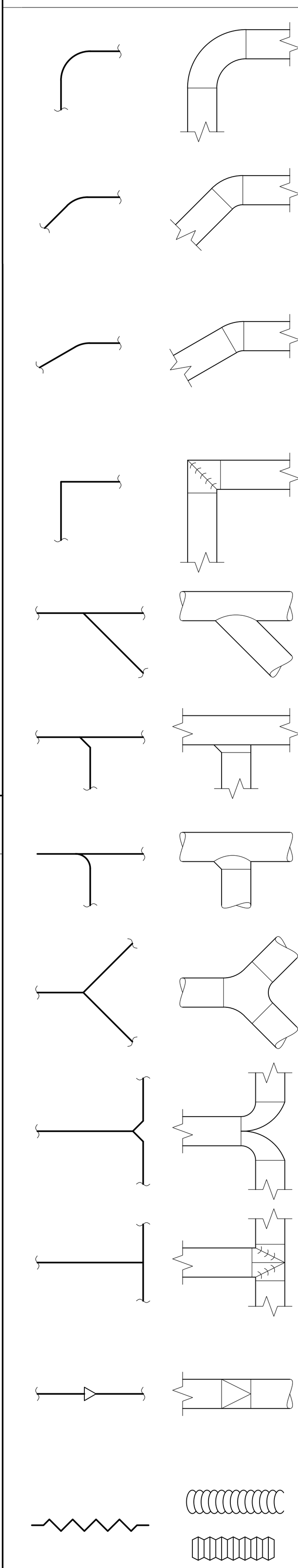

SINGLE LINE SYMBOL / DOUBLE LINE SYMBOL	DESCRIPTION
	LONG SWEEP 90° ELBOW - RECTANGULAR, ROUND OR OVAL
	45° ELBOW - RECTANGULAR, ROUND OR OVAL
	30° ELBOW - RECTANGULAR, ROUND OR OVAL
	90° ELBOW - RECTANGULAR DUCT WITH TURNING VANES
	45° LATERAL - ROUND TO ROUND OR OVAL TO OVAL
	90° TAKEOFF WITH 45° TAPER - RECTANGULAR TO RECTANGULAR (FOR BRANCH TAKEOFF LONGER THAN 50'-0", USE 15)
	90° TAKEOFF WITH 45° ELONGATED TEE - ROUND TO ROUND
	Y BRANCH - ROUND OR OVAL DUCT
	90° RADIUS SPLIT - RECTANGULAR DUCT, PROVIDE SPLITTER DAMPER, X/Y PROPORTIONAL SPLIT
	90° RECTANGULAR SPLIT - RECTANGULAR DUCT, PROVIDE SPLITTER DAMPER, X/Y PROPORTIONAL SPLIT
	TRANSITION - RECTANGULAR TO ROUND OR RECTANGULAR TO OVAL
	FLEXIBLE DUCT - ROUND
	FLEXIBLE DUCT - RECTANGULAR

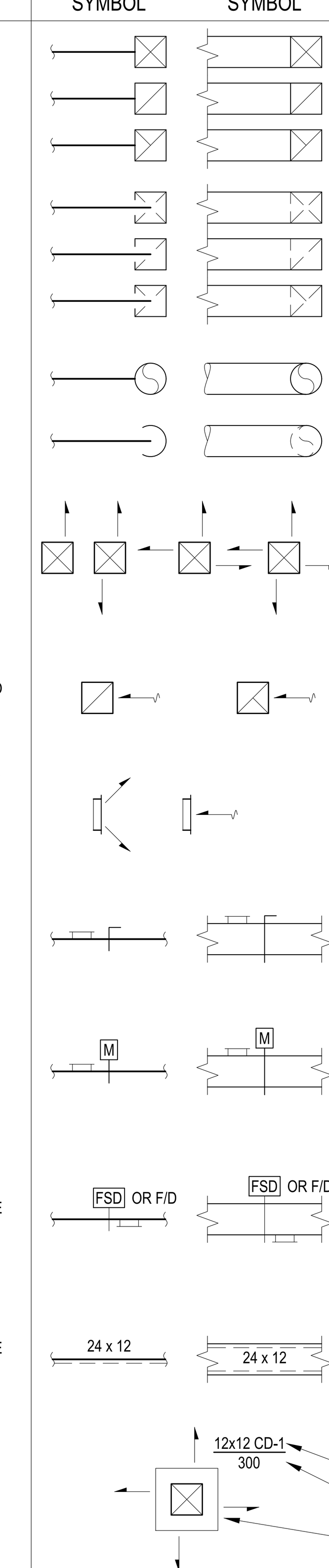

SINGLE LINE SYMBOL / DOUBLE LINE SYMBOL	DESCRIPTION
	SECTION AT SUPPLY AIR OR MAKE-UP AIR DUCT UP
	SECTION AT RETURN AIR OR COMBUSTION AIR DUCT UP
	SECTION AT EXHAUST AIR OR RELIEF AIR DUCT UP
	SUPPLY AIR DUCT DOWN
	RETURN AIR DUCT DOWN
	EXHAUST AIR DUCT DOWN
	ROUND DUCT UP - SUPPLY, RETURN OR EXHAUST
	ROUND DUCT DOWN - SUPPLY, RETURN OR EXHAUST
	CEILING DIFFUSER - ONE, TWO, THREE AND FOUR WAY THROW
	CEILING - RETURN AND EXHAUST REGISTERS
	SIDEWALL - SUPPLY DIFFUSER, RETURN AND EXHAUST REGISTERS
	MANUAL BALANCE DAMPER WITH DUCT ACCESS DOOR
	MOTORIZED BALANCE DAMPER WITH DUCT ACCESS DOOR
	FIRE DAMPER WITH DUCT ACCESS DOOR FIRE/SMOKE DAMPER WITH DUCT ACCESS DOOR
	ACOUSTICALLY LINED DUCT. DIMENSIONS ARE INSIDE
	REGISTER NECK SIZE AND TAG
	DESIGN CFM
	PANEL AT T-BAR CEILING

SYMBOL	ABBRV.	IDENTIFICATION
		CAP
	CONT	CONTINUATION
		UNION
		LINE BREAK
	CKV	CHECK VALVE
	T&PRV	TEMP. & PRESS. RELIEF VALVE
OR		VALVE
		CONCENTRIC & ECCENTRIC REDUCERS
	AD, AP	ACCESS DOOR, ACCESS PANEL
	MAV	MANUAL AIR VENT
T	T	THERMOSTAT MOUNTED @ 48" AFF. MAX.
CO2	CO2	CARBON DIOXIDE (CO2) SENSOR

SYMBOL	ABBRV.	IDENTIFICATION
	P.O.C.	POINT OF CONNECTION
		REMOVE EXISTING
		TEE DOWN
		90 DOWN
FC		EQUIPMENT DESIGNATION
A-1		TAG NUMBER
1 / M2.1		SECTION 1 / SHEET M2.1

GENERAL NOTES

1. CONTRACTOR SHALL VISIT THE SITE PRIOR TO SUBMISSION OF FINAL BID TO VERIFY ALL EXISTING SITE CONDITIONS WHICH MAY AFFECT THE COMPLETION OF THE INSTALLATION. ALL METHODS AND REQUIREMENTS FOR INSTALLATION SHALL BE DETERMINED PRIOR TO BID DATE. CONTRACTOR SHALL NOTIFY THE ARCHITECT/ENGINEER OF RECORD OF ANY REQUIRED MODIFICATIONS WHICH ARE NOT REFERENCED ON THESE PLANS PRIOR TO SUBMITTING BID. SUBMITTAL OF THE CONTRACTOR'S BID DEMONSTRATES THE CONTRACTOR'S AWARENESS OF ALL SITE CONDITIONS AND REQUIRED WORK TO BE PERFORMED.
2. CONTRACTOR SHALL INCLUDE AND PROVIDE IN BID ALL LABOR AND MATERIALS NECESSARY FOR A COMPLETE AND OPERATIONAL INSTALLATION OF ALL SYSTEMS.
3. THE DRAWINGS INCLUDED IN THIS SET ARE DIAGRAMMATIC. THEY ARE REPRESENTATIVE OF THE ENGINEER OF RECORD'S DESIGN INTENT FOR ALL EQUIPMENT AND RELATED PIPING ETC. INDIVIDUAL POWER NEEDS, CONTROLS AND OTHER CONNECTIONS SHALL BE COORDINATED AND COMPLETED/ PROVIDED FOR COMPLETE SYSTEM OPERATION BY CONTRACTOR.
4. EVERYTHING IS NEW UNLESS OTHERWISE NOTED.
5. EQUIPMENT LOCATIONS AND PIPE ROUTING ARE NOT PRECISE AND SHALL BE COORDINATED, VERIFIED, AND DETERMINED IN THE FIELD. CONTRACTOR SHALL INSTALL ALL EQUIPMENT AND ROUTE PIPING IN LOCATIONS WHICH MEET CODE REQUIREMENTS AND DO NOT INTERFERE WITH ANY BUILDING STRUCTURES, UTILITIES, OR OTHER TRADE EQUIPMENT.
6. (E) DUCTWORK, PIPING AND ITEMS TO BE REMOVED ARE SHOWN HATCHED. SEE LEGEND. COORDINATE CLOSELY WITH (N) DUCTWORK AND P.O.C.'S SHOWN. ALL OTHER (E) DUCTWORK, ETC. TO REMAIN.
7. REMOVE ALL ABANDONED PIPING, DUCTWORK, EQUIPMENT, WIRING, EQUIPMENT, AND FIXTURES INTERFERING WITH NEW WORK WHETHER NEW WORK IS ARCHITECTURAL, STRUCTURAL, MECHANICAL, OR ELECTRICAL
8. ABANDON IN PLACE BEHIND NEW FINISHES ALL PIPING, WIRING, AND DUCTWORK NOT INTERFERING WITH NEW WORK UNLESS REQUIRED FOR CONTINUED SERVICE.
9. ALL EQUIPMENT, EQUIPMENT CONNECTIONS, PIPING, MOUNTING LOCATIONS ETC. ARE TO BE VERIFIED WITH OWNER'S REPRESENTATIVE AND EQUIPMENT SUPPLIER PRIOR TO BEGINNING OF THE ROUGH-IN.
10. ALL WORK SHALL BE PERFORMED TO STATE, LOCAL, NATIONAL AND DISTRICT STANDARDS AND CODES. COORDINATE SPECIFIC REQUIREMENTS WITH DISTRICT STANDARDS AND AUTHORITY HAVING JURISDICTION.
11. ALL EQUIPMENT SHALL BE NEW AND CLEARLY LABELED AND IDENTIFIED. LABELS SHALL NOT BE COVERED BY OTHER CONSTRUCTION ELEMENTS.
12. UNLESS OTHERWISE NOTED IN CONTRACT DOCUMENTS, CONTRACTOR SHALL GUARANTEE ALL EQUIPMENT AND WORK FOR A PERIOD OF ONE YEAR.
13. CONTRACTOR SHALL BE RESPONSIBLE FOR ALL REQUIRED SAW CUTTING, CORE DRILLING, PATCHING, REFINISHING, ETC. AS REQUIRED FOR INSTALLATION OF SYSTEMS. ANY PENETRATIONS OR OPENINGS MADE IN WALLS OR STRUCTURES SHALL BE PATCHED AND/OR SEALED AS REQUIRED TO MAINTAIN THE INTEGRITY OF THE WALL OR STRUCTURE.
14. CONTRACTOR IS RESPONSIBLE FOR COMPLETING ALL FINAL CONNECTIONS TO OWNER FURNISHED EQUIPMENT AND SHALL INCLUDE THE PRICE OF INSTALLING ALL CONNECTIONS AS REQUIRED IN THEIR BIDS.
15. CONTRACTOR SHALL SUBMIT SHOP DRAWINGS FOR THE APPROVAL OF THE ENGINEER OF RECORD . ALL APPROVALS BY THE ENGINEER OF RECORD MUST BE SECURED PRIOR TO COMPLETION OF ANY PURCHASE ORDERS OR ROUGH-IN WORK.
16. THESE DRAWINGS AND ASSOCIATED SPECIFICATIONS ARE TO BE CONSIDERED CONTRACT DOCUMENTS FOR AGENCY REVIEW/ APPROVAL AND CONTRACTOR BIDDING PURPOSES.
17. AT THE COMPLETION OF THE PROJECT THE CONTRACTOR SHALL PROVIDE THE OWNER WITH A COMPLETE SET OF AS-BUILT DRAWINGS.
18. ANY AND ALL WORK THAT REQUIRES AN INTERRUPTION TO BUILDING SERVICES(S) (ELECTRICAL/ HVAC/ PLUMBING ETC.) MUST BE COORDINATED WITH THE DISTRICT A MINIMUM OF 48 HOURS IN ADVANCE. ANY SERVICE DOWNTIME SHALL NOT OCCUR DURING SCHOOL OPERATION HOURS.
19. IN INSTANCES WHERE A CONFLICT BETWEEN THE DRAWINGS AND THE SPECIFICATIONS AND INSTALLATION MANUALS FOR THE PROJECT EXISTS, THE CONTRACTOR SHALL ADHERE TO THE MORE STRINGENT REQUIREMENT.
20. ANY EXISTING BUILDING STRUCTURES OR SURFACES DAMAGED BY DEMOLITION OR DURING INSTALLATION ACTIVITIES SHALL BE REPAIRED, PATCHED, AND/OR REFINISHED TO THE SATISFACTION OF THE OWNER.
21. FURNISH AND INSTALL MANUAL AIR DAMPERS AT ALL DUCT BRANCH TAKEOFFS TO A SINGLE SUPPLY DIFFUSER.
22. FOR ALL VOLUME DAMPERS LOCATED ABOVE CEILINGS, PROVIDE 12" LONG 1/2" WIDE FLUORESCENT ORANGE TAPE TO MARK DAMPER LOCATIONS.
23. ALL DUCTWORK, CONDUITS, BOXES, SURFACE MOUNTED RACEWAYS, SUPPORT DEVICES, AND ASSOCIATED FITTINGS SHALL BE MOUNTED IN CONCEALED LOCATIONS ABOVE CEILINGS, DUCTS, TRUSSES, BEAMS, ETC. WHERE WORK HAS TO BE INSTALLED IN EXPOSED LOCATIONS, IT SHALL BE PAINTED TO MATCH THE ADJACENT SURFACES OR PER ARCHITECT'S DIRECTION.
24. CONTRACTOR SHALL PREPARE AND SUBMIT THE CALIFORNIA ENERGY COMMISSION TITLE 24 CERTIFICATE OF ACCEPTANCE FORMS RELATED TO INSTALLED EQUIPMENT AND SYSTEMS.
25. SAFETY: IN ACCORDANCE WITH GENERALLY ACCEPTED CONSTRUCTION PRACTICES, THE CONTRACTOR WILL BE SOLELY AND COMPLETELY RESPONSIBLE FOR CONDITIONS OF THE JOB SITE INCLUDING SAFETY OF ALL PERSONS AND PROPERTY DURING PERFORMANCE OF THE WORK. THIS REQUIREMENT WILL APPLY CONTINUOUSLY AND NOT BE LIMITED TO NORMAL WORKING HOURS.
26. CONTRACTOR'S EQUIPMENT: COORDINATE WITH OWNER'S REPRESENTATIVE FOR APPROVED LOCATION OF JOB SITE ACCESS, PARKING, AND LOCATION OF CONTRACTOR'S EQUIPMENT AND MATERIAL STORAGE AREA. COORDINATE WITH OWNER FOR LOCATION AND PROCEDURES.
27. ALL BUILDING MATERIALS MUST BE ASBESTOS FREE.
28. CONSTRUCTION SCHEDULING: CONTRACTOR SHALL COORDINATE ALL CONSTRUCTION OPERATIONS WITH OWNER'S REPRESENTATIVE PRIOR TO SCHEDULING AND START OF THE WORK. CONTRACTOR SHALL PROVIDE PROTECTION TO ALL EXISTING SPACES AND SYSTEMS WHICH ARE IN USE, ADJOINING THE PROJECT, AND NOT PART OF THE PROJECT.
29. TITLE 24 COMPLIANCE: THE INTENT OF THESE DRAWINGS AND SPECIFICATIONS IS THAT THE WORK IS TO BE IN ACCORDANCE WITH TITLE 24, CALIFORNIA CODE OF REGULATIONS (2019 CBC). SHOULD ANY CONDITIONS BE DISCOVERED NOT COVERED BY THE CONTRACT DOCUMENTS WHERE IN THE FINISHED WORK DOES NOT COMPLY WITH 2019 CBC, A CONSTRUCTION CHANGE DOCUMENT OR A SEPARATE SET OF PLANS AND SPECIFICATIONS, DETAILING AND SPECIFYING THE REQUIRED WORK, SHALL BE SUBMITTED TO AND APPROVED BY THE DSA BEFORE PROCEEDING WITH THE WORK.

DRAWING INDEX

MP0.01 SYMBOL LEGENDS, ABBREVIATIONS, NOTES - MECHANICAL
MP0.02 SCHEDULES - MECHANICAL
MP2.01 FLOOR PLAN - DEMO - WING 2, 3, AND 4 - MECHANICAL & PLUMBING
MP2.02 FLOOR PLAN - NEW - WINGS 2, 3 & 4 - MECHANICAL & PLUMBING
MP5.01 CONTROLS - MECHANICAL
MP6.01 DETAILS - MECHANICAL & PLUMBING
MP8.01 TITLE 24 DOCUMENTS - MECHANICAL
MP8.02 TITLE 24 DOCUMENTS - MECHANICAL

IDENTIFICATION STAMP
DIV. OF THE STATE ARCHITECT
APP: 01-119530 INC:
REVIEWED FOR
SS ☑ FLS ☑ ACS ☑
DATE: 10/26/2021

aedis architects
www.aedisarchitects.com
387 S. 1st Street, Suite 300
San Jose, CA 95113
tel: (408)-300-5160
fax: (408)-300-5121

PROJECT

COLLEGE PARK ELEMENTARY SCHOOL - HVAC REPLACEMENT

SAN MATEO-FOSTER CITY SCHOOL DISTRICT

CONSULTANT

CEG JOB NO: 21033
CYPRESS Engineering Group
HVAC, Plumbing, Fire Protection
Building Commissioning
Industrial Refrigeration
Environmental Compliance
Training & Technical Support
831.218.1802
8 Harris Court, Suite A8
Monterey, CA 93940
cypresseg.com

STAMP

REGISTERED PROFESSIONAL ENGINEER
METIN SERTTUNC
No. M31059
EXP. JUNE 30, 2023
MECHANICAL
STATE OF CALIFORNIA

STATE

DSA FILE NUMBER 41-26
APPL # 01-119530

REVISIONS

No. Description Date

MILESTONES

DD	
90% CD	
DSA SUB	05/26/2021
BACKCHECK	09/30/2021

SHEET

SYMBOL LEGENDS, ABBREVIATIONS, NOTES - MECHANICAL

DATE 09/30/2021
JOB # 2021005.01
SHEET #
MP0.01

AIR DISTRIBUTION SCHEDULE

TAG	MANUFACTURER	MODEL NO.	DESCRIPTION	BORDER TYPE	MOUNTING DETAIL	NOTES
HSR-1	TITUS	350RL	HIGH SIDEWALL RETURN	TYPE 1	8/MP6.01	1,2

1. PRIME AND PAINT PER ARCHITECT'S INSTRUCTIONS. REGISTER COLOR SELECTED BY ARCHITECT.
2. PROVIDE WITH AIRSAN COMPACT DUCT SILENCER.

CLASSROOM SPLIT SYSTEM HEAT PUMPS SCHEDULE

TAG	MANUFACTURER BASIS OF DESIGN	MODEL		LOCATION	COOLING	HEATING	AIRFLOW CFM	OUTSIDE AIR CFM	REFRIGERANT PIPING		SEER	HSPF	ELECTRICAL			WEIGHT LBS	MOUNTING DETAIL	NOTES
					TOTAL MBH	TOTAL MBH			LIQUID	GAS			V / PH	MCA	MOCP			
FC-7	SAMSUNG	AC054KNZDCH/AA		CLASSROOM 7	54	60	1155	450	3/8"	3/4"	-	-	NOTE 8			164	1/MP6.01	2, 3, 4, 6, 7, 8
HP-7	SAMSUNG	AC054KXADCH/AA		ROOF			-	-	3/8"	3/4"	17.1	9.0	208 / 1	42	70	212	3/MP6.01	1
FC-7A	SAMSUNG	AC054KNZDCH/AA		MECH 207	54	60	1160	450	3/8"	3/4"	-	-	NOTE 8			164	2/MP6.01	2, 3, 4, 6, 7, 8
HP-7A	SAMSUNG	AC054KXADCH/AA		ROOF			-	-	3/8"	3/4"	17.1	9.0	208 / 1	42	70	212	3/MP6.01	1
FC-7B	SAMSUNG	AC054KNZDCH/AA		MECH 207	54	60	1160	450	3/8"	3/4"	-	-	NOTE 8			164	2/MP6.01	2, 3, 4, 6, 7, 8
HP-7B	SAMSUNG	AC054KXADCH/AA	WING 2	ROOF			-	-	3/8"	3/4"	17.1	9.0	208 / 1	42	70	212	3/MP6.01	1
FC-8	SAMSUNG	AC054KNZDCH/AA		CLASSROOM 8	54	60	1155	450	3/8"	3/4"	-	-	NOTE 8			164	1/MP6.01	2, 3, 4, 6, 7, 8
HP-8	SAMSUNG	AC054KXADCH/AA		ROOF			-	-	3/8"	3/4"	17.1	9.0	208 / 1	42	70	212	3/MP6.01	1
FC-9	SAMSUNG	AC054KNZDCH/AA		CLASSROOM 9	54	60	1155	450	3/8"	3/4"	-	-	NOTE 8			164	1/MP6.01	2, 3, 4, 6, 7, 8
HP-9	SAMSUNG	AC054KXADCH/AA		ROOF			-	-	3/8"	3/4"	17.1	9.0	208 / 1	42	70	212	3/MP6.01	1
FC-10	SAMSUNG	AC054KNZDCH/AA		CLASSROOM 10	54	60	1155	450	3/8"	3/4"	-	-	NOTE 8			164	1/MP6.01	2, 3, 4, 6, 7, 8
HP-10	SAMSUNG	AC054KXADCH/AA		ROOF			-	-	3/8"	3/4"	17.1	9.0	208 / 1	42	70	212	3/MP6.01	1
FC-11	SAMSUNG	AC054KNZDCH/AA		CLASSROOM 11	54	60	1155	450	3/8"	3/4"	-	-	NOTE 8			164	1/MP6.01	2, 3, 4, 6, 7, 8
HP-11	SAMSUNG	AC054KXADCH/AA		ROOF			-	-	3/8"	3/4"	17.1	9.0	208 / 1	42	70	212	3/MP6.01	1
FC-12	SAMSUNG	AC054KNZDCH/AA		CLASSROOM 12	54	60	1155	450	3/8"	3/4"	-	-	NOTE 8			164	1/MP6.01	2, 3, 4, 6, 7, 8
HP-12	SAMSUNG	AC054KXADCH/AA		ROOF			-	-	3/8"	3/4"	17.1	9.0	208 / 1	42	70	212	3/MP6.01	1
FC-13	SAMSUNG	AC054KNZDCH/AA		CLASSROOM 13	54	60	1155	450	3/8"	3/4"	-	-	NOTE 8			164	1/MP6.01	2, 3, 4, 6, 7, 8
HP-13	SAMSUNG	AC054KXADCH/AA		ROOF			-	-	3/8"	3/4"	17.1	9.0	208 / 1	42	70	212	3/MP6.01	1
FC-14	SAMSUNG	AC054KNZDCH/AA	WING 3	CLASSROOM 14	54	60	1155	450	3/8"	3/4"	-	-	NOTE 8			164	1/MP6.01	2, 3, 4, 6, 7, 8
HP-14	SAMSUNG	AC054KXADCH/AA		ROOF			-	-	3/8"	3/4"	17.1	9.0	208 / 1	42	70	212	3/MP6.01	1
FC-15	SAMSUNG	AC054KNZDCH/AA		CLASSROOM 15	54	60	1155	450	3/8"	3/4"	-	-	NOTE 8			164	1/MP6.01	2, 3, 4, 6, 7, 8
HP-15	SAMSUNG	AC054KXADCH/AA		ROOF			-	-	3/8"	3/4"	17.1	9.0	208 / 1	42	70	212	3/MP6.01	1
FC-16	SAMSUNG	AC054KNZDCH/AA		CLASSROOM 16	54	60	1155	450	3/8"	3/4"	-	-	NOTE 8			164	1/MP6.01	2, 3, 4, 6, 7, 8
HP-16	SAMSUNG	AC054KXADCH/AA		ROOF			-	-	3/8"	3/4"	17.1	9.0	208 / 1	42	70	212	3/MP6.01	1
FC-17	SAMSUNG	AC054KNZDCH/AA		CLASSROOM 17	54	60	1155	450	3/8"	3/4"	-	-	NOTE 8			164	1/MP6.01	2, 3, 4, 6, 7, 8
HP-17	SAMSUNG	AC054KXADCH/AA		ROOF			-	-	3/8"	3/4"	17.1	9.0	208 / 1	42	70	212	3/MP6.01	1
FC-18	SAMSUNG	AC054KNZDCH/AA		CLASSROOM 18	54	60	1155	450	3/8"	3/4"	-	-	NOTE 8			164	1/MP6.01	2, 3, 4, 6, 7, 8
HP-18	SAMSUNG	AC054KXADCH/AA		ROOF			-	-	3/8"	3/4"	17.1	9.0	208 / 1	42	70	212	3/MP6.01	1
FC-19	SAMSUNG	AC054KNZDCH/AA		CLASSROOM 19	54	60	1155	450	3/8"	3/4"	-	-	NOTE 8			164	1/MP6.01	2, 3, 4, 6, 7, 8
HP-19	SAMSUNG	AC054KXADCH/AA		ROOF			-	-	3/8"	3/4"	17.1	9.0	208 / 1	42	70	212	3/MP6.01	1
FC-20	SAMSUNG	AC054KNZDCH/AA		CLASSROOM 20	54	60	1155	450	3/8"	3/4"	-	-	NOTE 8			164	1/MP6.01	2, 3, 4, 6, 7, 8
HP-20	SAMSUNG	AC054KXADCH/AA		ROOF			-	-	3/8"	3/4"	17.1	9.0	208 / 1	42	70	212	3/MP6.01	1
FC-21	SAMSUNG	AC054KNZDCH/AA		CLASSROOM 21	54	60	1155	450	3/8"	3/4"	-	-	NOTE 8			164	1/MP6.01	2, 3, 4, 6, 7, 8
HP-21	SAMSUNG	AC054KXADCH/AA	WING 4	ROOF			-	-	3/8"	3/4"	17.1	9.0	208 / 1	42	70	212	3/MP6.01	1
FC-22	SAMSUNG	AC054KNZDCH/AA		CLASSROOM 22	54	60	1155	450	3/8"	3/4"	-	-	NOTE 8			164	1/MP6.01	2, 3, 4, 6, 7, 8
HP-22	SAMSUNG	AC054KXADCH/AA		ROOF			-	-	3/8"	3/4"	17.1	9.0	208 / 1	42	70	212	3/MP6.01	1
FC-23	SAMSUNG	AC054KNZDCH/AA		CLASSROOM 23	54	60	1155	450	3/8"	3/4"	-	-	NOTE 8			164	1/MP6.01	2, 3, 4, 6, 7, 8
HP-23	SAMSUNG	AC054KXADCH/AA		ROOF			-	-	3/8"	3/4"	17.1	9.0	208 / 1	42	70	212	3/MP6.01	1
FC-24A	SAMSUNG	AC054KNZDCH/AA		CLASSROOM 24	54	60	1155	450	3/8"	3/4"	-	-	NOTE 8			164	1/MP6.01	2, 3, 4, 6, 7, 8
HP-24A	SAMSUNG	AC054KXADCH/AA		ROOF			-	-	3/8"	3/4"	17.1	9.0	208 / 1	42	70	212	3/MP6.01	1
FC-24B	SAMSUNG	AC054KNZDCH/AA		CLASSROOM 24	54	60	1155	450	3/8"	3/4"	-	-	NOTE 8			164	1/MP6.01	2, 3, 4, 6, 7, 8
HP-24B	SAMSUNG	AC054KXADCH/AA		ROOF			-	-	3/8"	3/4"	17.1	9.0	208 / 1	42	70	212	3/MP6.01	1

1. SPLIT SYSTEM SHALL BE ABLE TO OPERATE AT 94% HEATING CAPACITY DOWN TO 32°F OUTDOOR AMBIENT TEMPERATURE.
2. CFM BASED ON 0.55 ESP.
3. PROVIDE WITH SAMSUNG MIM-A60UN 24VAC THERMOSTAT ADAPTER AND 24VAC TRANSFORMER.
4. PROVIDE DELTA CONTROLS THERMOSTAT WITH CO2 SENSOR. SEE MP5.01 FOR CONTROLS.
5. NOT USED.
6. PROVIDE WITH 4" MERV- 13 FILTERS WITH FILTER ACCESS PANEL.
7. FAN COIL SHALL BE ADJUSTED TO OPERATE AT CONSTANT SPEED AT INDICATED CFM.
8. INDOOR UNIT POWERED BY OUTDOOR UNIT.

IDENTIFICATION STAMP
DIV. OF THE STATE ARCHITECT
APP: 01-119530 INC:
REVIEWED FOR
SS ☑ FLS ☑ ACS ☑
DATE: 10/26/2021

aedis architects

www.aedisarchitects.com
387 S. 1st Street, Suite 300
San Jose, CA 95113
tel: (408)-300-5160
fax: (408)-300-5121

PROJECT

COLLEGE PARK ELEMENTARY SCHOOL - HVAC REPLACEMENT

SAN MATEO-FOSTER CITY SCHOOL DISTRICT

CONSULTANT

CEG JOB NO: 21033
CYPRESS Engineering Group
HVAC, Plumbing, Fire Protection
Building Commissioning
Industrial Refrigeration
Environmental Compliance
Training & Technical Support
831.218.1802
8 Harris Court, Suite A8
Monterey, CA 93940
cypresseg.com

STAMP

REGISTERED PROFESSIONAL ENGINEER
No. M31059
EXP. JUNE 30, 2023
MECHANICAL
STATE OF CALIFORNIA

STATE
DSA FILE NUMBER 41-26
APPL # 01-119530

REVISIONS

No.	Description	Date

MILESTONES

DD	
90% CD	
DSA SUB	05/26/2021
BACKCHECK	09/30/2021

SHEET

SCHEDULES-MECHANICAL

DATE 09/30/2021

JOB # 2021005.01

SHEET #

MP0.02

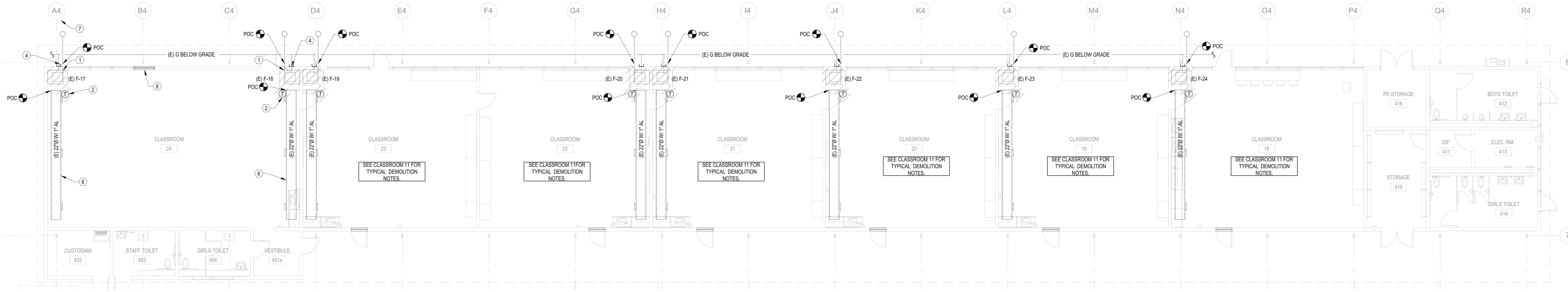

1 / MP2.01

FLOOR PLAN - WING 4 - DEMO - MECHANICAL & PLUMBING

SCALE: 1/8" = 1'-0"

NORTH

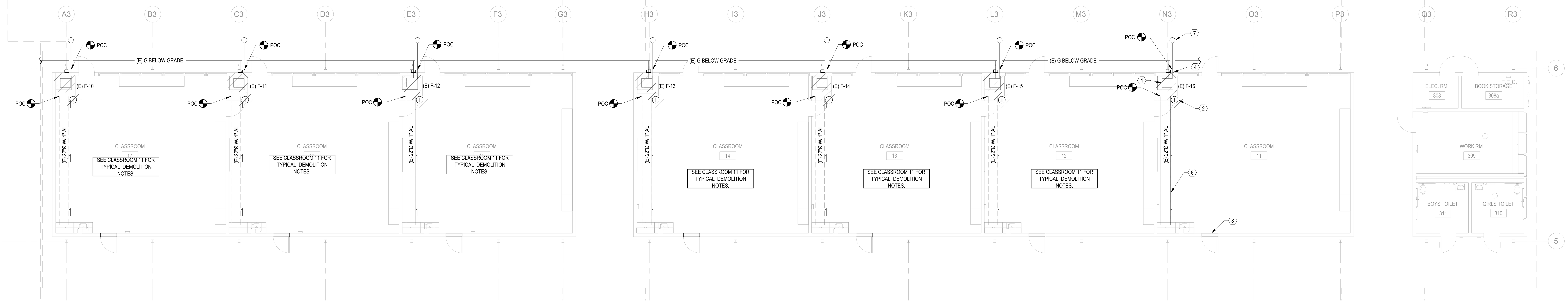

2 / MP2.01

FLOOR PLAN - WING 3 - DEMO - MECHANICAL & PLUMBING

SCALE: 1/8" = 1'-0"

NORTH

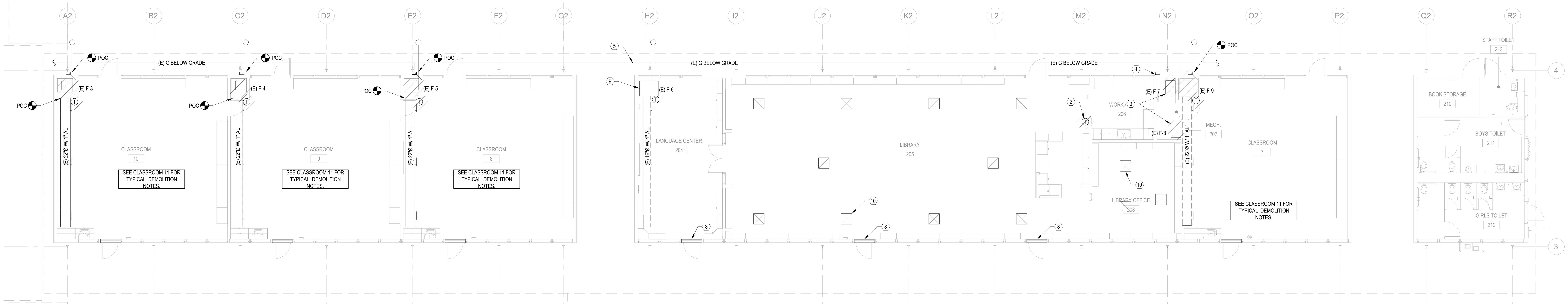

3 / MP2.01

FLOOR PLAN - WING 2 - DEMO - MECHANICAL & PLUMBING

SCALE: 1/8" = 1'-0"

NORTH

DEMOLITION SHEET NOTES

1. REMOVE (E) FURNACE ENCLOSURE, FURNACE, AND SUPPLY DUCT BACK TO POC, TYP OF (19).
2. REMOVE (E) THERMOSTAT AND WIRING BACK TO (E) FURNACE, TYP OF (21). SALVAGE (E) THERMOSTAT AND UNIT CONTROLLERS. 30% OF THE EQUIPMENT NEEDS TO BE RETURNED TO THE DISTRICT.
3. REMOVE (E) FURNACE, (E) DUCTWORK TO REMAIN, TYP OF (2).
4. REMOVE (E) GAS BRANCH LINE. CAP (E) BRANCH LINE TIGHT TO WALL.
5. (E) GAS MAIN TO REMAIN, TYP.
6. (E) DUCTWORK AND DUCT SUPPORTS TO REMAIN, TYP.
7. (E) CD PIPING AND DRY WELL TO REMAIN, TYP.
8. (E) RELIEF LOUVER TO REMAIN, TYP.
9. (E) FURNACE, (E) FURNACE ENCLOSURE, (E) THERMOSTAT, AND (E) DUCTWORK TO REMAIN.
10. ALL (E) DUCTWORK AND REGISTERS TO REMAIN IN LIBRARY AND LIBRARY OFFICES, TYP.

GENERAL NOTES

1. CONTRACTOR SHALL BE RESPONSIBLE FOR PROTECTING ALL EXISTING AND NEW BUILDING STRUCTURES, SERVICES AND OWNER'S PROPERTY DURING THE ENTIRE PERIOD OF CONSTRUCTION.
2. COORDINATE THE LOCATIONS OF ROOF/ WALL OPENINGS, PENETRATIONS, DUCTWORK AND ALL MECHANICAL EQUIPMENT WITH RESPECT TO BUILDING STRUCTURE AND OTHER BUILDING SERVICES TO AVOID CONFLICT.

BUILDING KEY

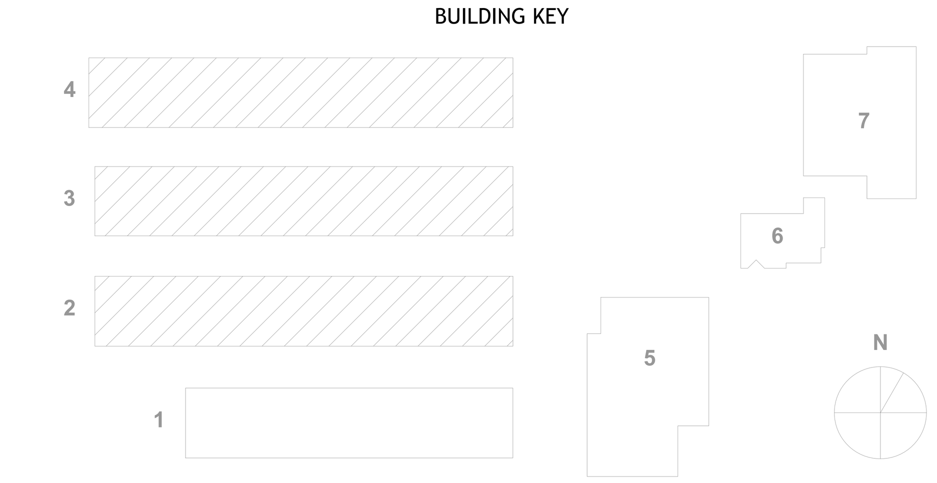

IDENTIFICATION STAMP
DIV. OF THE STATE ARCHITECT
APP: 01-119530 INC:
REVIEWED FOR
SS ☑ FLS ☑ ACS ☑
DATE: 10/26/2021

aedis architects

www.aedisarchitects.com
387 S. 1st Street, Suite 300
San Jose, CA 95113
tel: (408)-300-5160
fax: (408)-300-5121

PROJECT

COLLEGE PARK ELEMENTARY SCHOOL - HVAC REPLACEMENT

SAN MATEO-FOSTER CITY SCHOOL DISTRICT

CONSULTANT

CEG JOB NO: 21033
CYPRESS Engineering Group
HVAC, Plumbing, Fire Protection
Building Commissioning
Industrial Refrigeration
Environmental Compliance
Training & Technical Support
831.218.1802
8 Harris Court, Suite A8
Monterey, CA 93940
cypresseg.com

STAMP

REGISTERED PROFESSIONAL ENGINEER
METIN SERTTUNC
No. M31059
EXP. JUNE 30, 2023
MECHANICAL
STATE OF CALIFORNIA

STATE

DSA FILE NUMBER 41-26
APPL # 01-119530

REVISIONS

No.	Description	Date

MILESTONES

DD	
90% CD	
DSA SUB	05/26/2021
BACKCHECK	09/30/2021

SHEET

FLOOR PLAN - DEMO - WING 2, 3, AND 4 - MECHANICAL & PLUMBING

DATE 09/30/2021

JOB # 2021005.01

SHEET # MP2.01

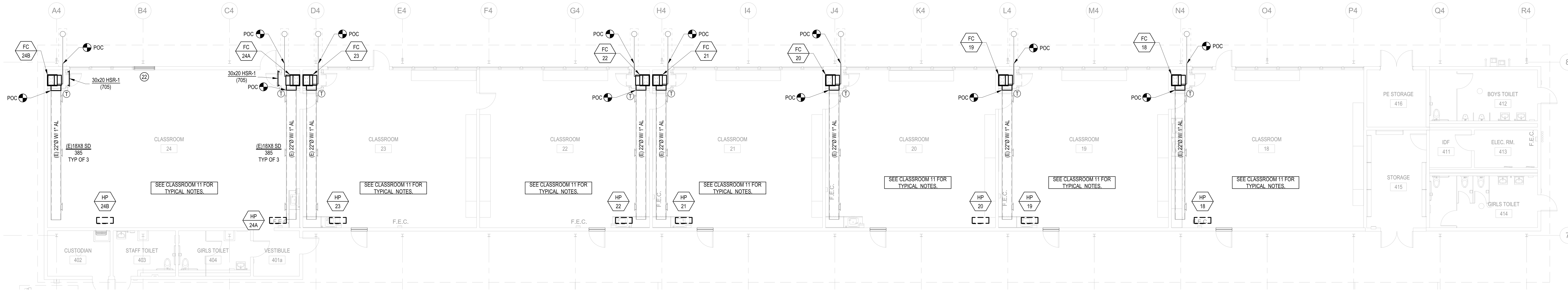

1 MP2.02 FLOOR PLAN - WING 4 - NEW - MECHANICAL & PLUMBING

SCALE: 1/8" = 1'-0"

NORTH

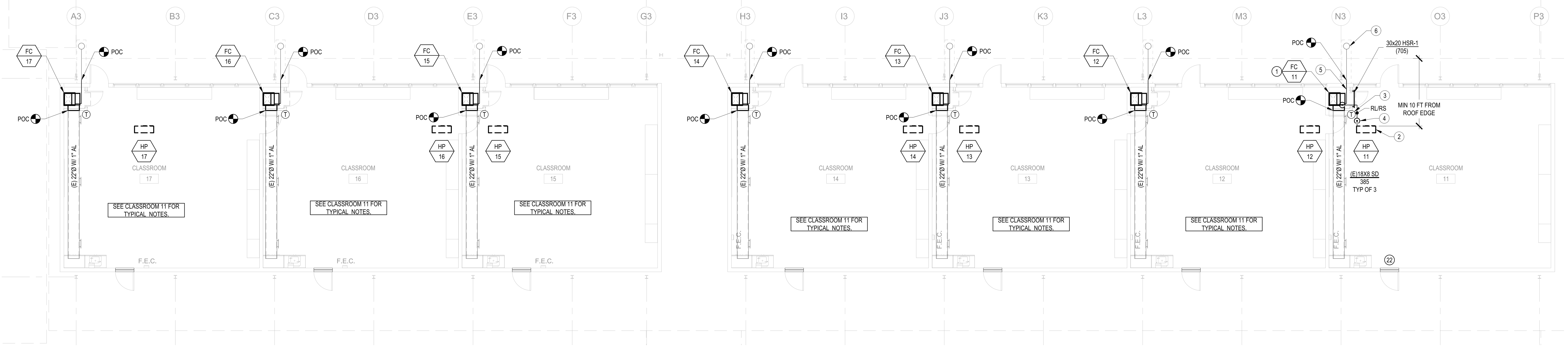

2 MP2.02 FLOOR PLAN - WING 3 - NEW - MECHANICAL & PLUMBING

SCALE: 1/8" = 1'-0"

NORTH

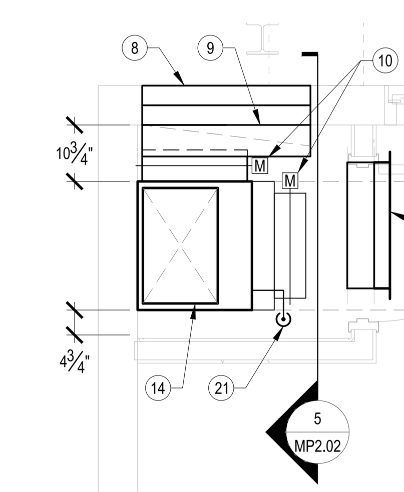

4 MP2.02 FLOOR PLAN - ENCLOSURE

SCALE: NONE

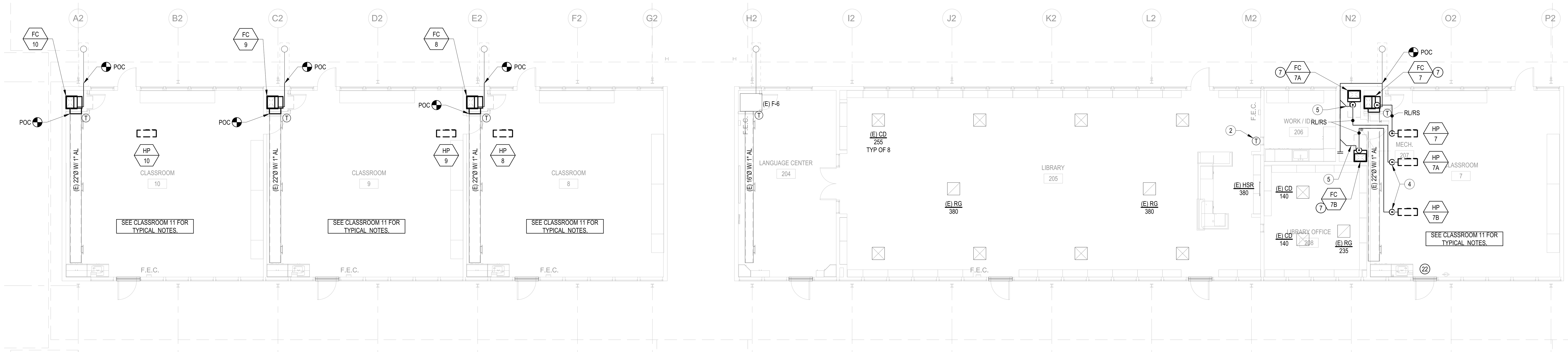

3 MP2.02 FLOOR PLAN - WING 2 - NEW - MECHANICAL & PLUMBING

SCALE: 1/8" = 1'-0"

NORTH

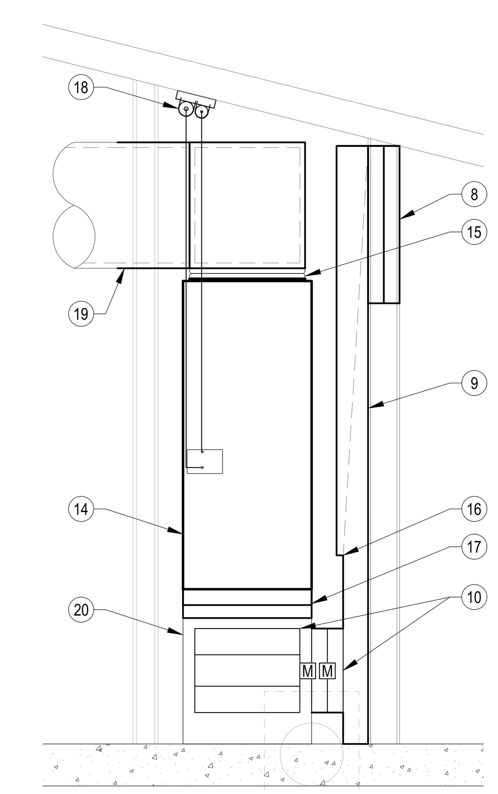

5 MP2.02 SECTION - ENCLOSURE

SCALE: NONE

NEW SHEET NOTES

1. INSTALL FAN COIL. PROVIDE SUPPLY PLENUM ABOVE FAN COIL. INSTALL SUPPLY DUCT FROM SUPPLY PLENUM AND CONNECT TO (E) SUPPLY DUCT. SEE PLANS FOR SIZE, TYP OF (19). SEE 4/MP2.02 AND 5/MP2.02 FOR FAN COIL INSTALLATION. SEE 1/MP6.01 FOR FAN COIL MOUNTING.
2. INSTALL HEAT PUMP ON ROOF, MIN 10 FT FROM EDGE OF ROOF, TYP. OF (21). SEE 3/MP6.01 FOR MOUNTING.
3. INSTALL THERMOSTAT ON WALL AND WIRE TO FAN COIL.
4. INSTALL REFRIGERANT PIPING FROM HEAT PUMP TO FAN COIL, TYP. MINIMIZE EXPOSED PIPING ON ROOF. PENETRATE ROOF WITHIN 36" OF HEAT PUMP. RUN PIPES CONCEALED ABOVE T-BAR CEILING TO FAN COIL ENCLOSURE. PENETRATE FAN COIL ENCLOSURE WALL ABOVE CEILING. ENSURE REFRIGERANT PIPING DOES NOT BLOCK FILTER ACCESS.
5. INSTALL 3/4" CD PIPING FROM FAN COIL. CONNECT TO (E) CD PIPE AT POC OUTSIDE FAN COIL ENCLOSURE.
6. (E) CD DRYWELL, TYP.
7. INSTALL FAN COIL. PROVIDE RETURN PLENUM BELOW FAN COIL. SEE 2/MP6.01. CONNECT RETURN AND SUPPLY DUCT TO (E) DUCTS IN MECHANICAL ROOM. TYP OF (2).
8. (E) OUTSIDE AIR LOUVER.
9. 6"x32" OUTSIDE AIR DUCT DOWN TO MIXING PLENUM.
10. 20"X16" MOTORIZED DAMPER (LOW VOLTAGE).
11. 30" FULL HEIGHT DOOR. SEE ARCHITECTS DRAWINGS.
12. 30"x20" RETURN REGISTER HSR-1 ABOVE ENCLOSURE DOOR. INSTALL WITH GRILLE SILENCER.
13. CLEARANCE REQUIRED FOR FILTER REPLACEMENT.
14. FAN COIL. SEE PLANS FOR LOCATION.
15. FLEX DUCT AT CONNECTION TO UNIT.
16. DUCT TRANSITION TO ALLOW DAMPER CONNECTION.
17. FILTER BOX THAT CAN FIT 4" OR 2" FILTER.
18. REFRIGERANT PIPING FROM HEAT PUMP TO FAN COIL. SEE 7/MP6.01 FOR PIPE SUPPORT.
19. CONNECT TO (E) SUPPLY DUCT.
20. MIXING PLENUM BELOW FAN COIL.
21. CD FROM FAN COIL. DROP PIPE DOWN TO ENCLOSURE FLOOR AT LEFT SIDE OF UNIT, ENSURING PIPE DOES NOT BLOCK FILTER ACCESS. THEN RUN ALONG FLOOR TO EXTERIOR WALL. CONNECT TO (E) CD PIPE INSIDE ENCLOSURE. PROVIDE CLEANOUT FOR EACH AGGREGATE HORIZONTAL CHANGE IN DIRECTION EXCEEDING 135°. SEE 6/MP6.01 FOR CONNECTION TO UNIT.
22. (E) RELIEF LOUVER.

GENERAL NOTES

1. CONTRACTOR SHALL BE RESPONSIBLE FOR PROTECTING ALL EXISTING AND NEW BUILDING STRUCTURES, SERVICES AND OWNER'S PROPERTY DURING THE ENTIRE PERIOD OF CONSTRUCTION.
2. COORDINATE THE LOCATIONS OF ROOF/ WALL OPENINGS, PENETRATIONS, DUCTWORK AND ALL MECHANICAL EQUIPMENT WITH RESPECT TO BUILDING STRUCTURE AND OTHER BUILDING SERVICES TO AVOID CONFLICT.
3. FOR CLARITY, (E) GAS MAINS ARE NOT SHOWN ON THIS PLAN. SEE MP2.01.
4. PAINT ALL EXPOSED DUCTWORK, AND REGISTERS TO MATCH EXISTING.
5. SEE DETAIL 5/MP6.01 FOR PIPE SUPPORT ON ROOF.
6. CLEAN ALL (E) DUCTWORK AND REGISTERS PER SPECIFICATION 23 01 30.

BUILDING KEY

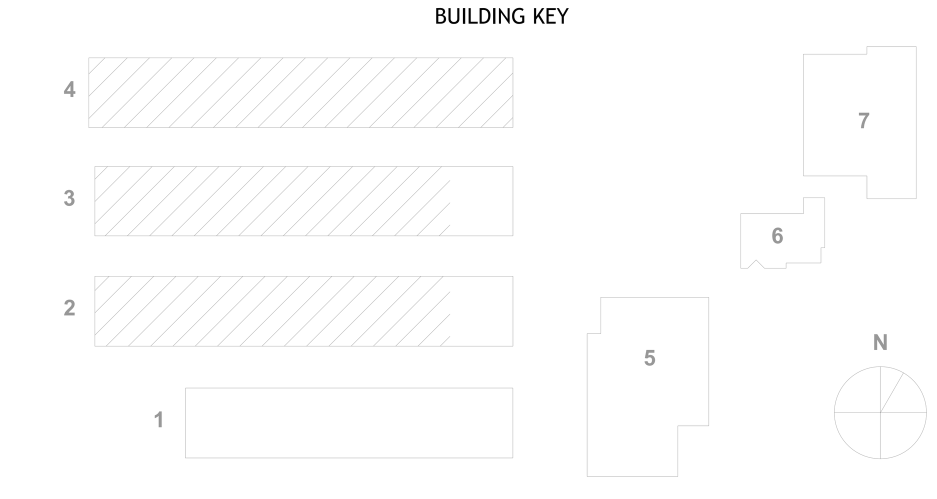

IDENTIFICATION STAMP
DIV. OF THE STATE ARCHITECT
APP: 01-119530 INC:
REVIEWED FOR
SS ☑ FLS ☑ ACS ☑
DATE: 10/26/2021

aedis architects
www.aedisarchitects.com
387 S. 1st Street, Suite 300
San Jose, CA 95113
tel: (408)-300-5160
fax: (408)-300-5121

PROJECT
COLLEGE PARK ELEMENTARY SCHOOL - HVAC REPLACEMENT

SAN MATEO-FOSTER CITY SCHOOL DISTRICT

CONSULTANT
CEG JOB NO. 21033
CYPRESS Engineering Group
HVAC, Plumbing, Fire Protection
Building Commissioning
Industrial Refrigeration
Environmental Compliance
Training & Technical Support
831.218.1802
8 Harris Court, Suite A8
Monterey, CA 93940
cypresseg.com

STAMP
REGISTERED PROFESSIONAL ENGINEER
METIN SERTTUNA
No. M31059
EXP. JUNE 30, 2023
MECHANICAL
STATE OF CALIFORNIA

STATE
DSA FILE NUMBER 41-26
APPL # 01-119530

REVISIONS

No.	Description	Date

MILESTONES

DD	
90% CD	
DSA SUB	05/26/2021
BACKCHECK	09/30/2021

SHEET
FLOOR PLAN - NEW - WINGS 2, 3 & 4 - MECHANICAL & PLUMBING

DATE 09/30/2021
JOB # 2021005.01
SHEET # MP2.02

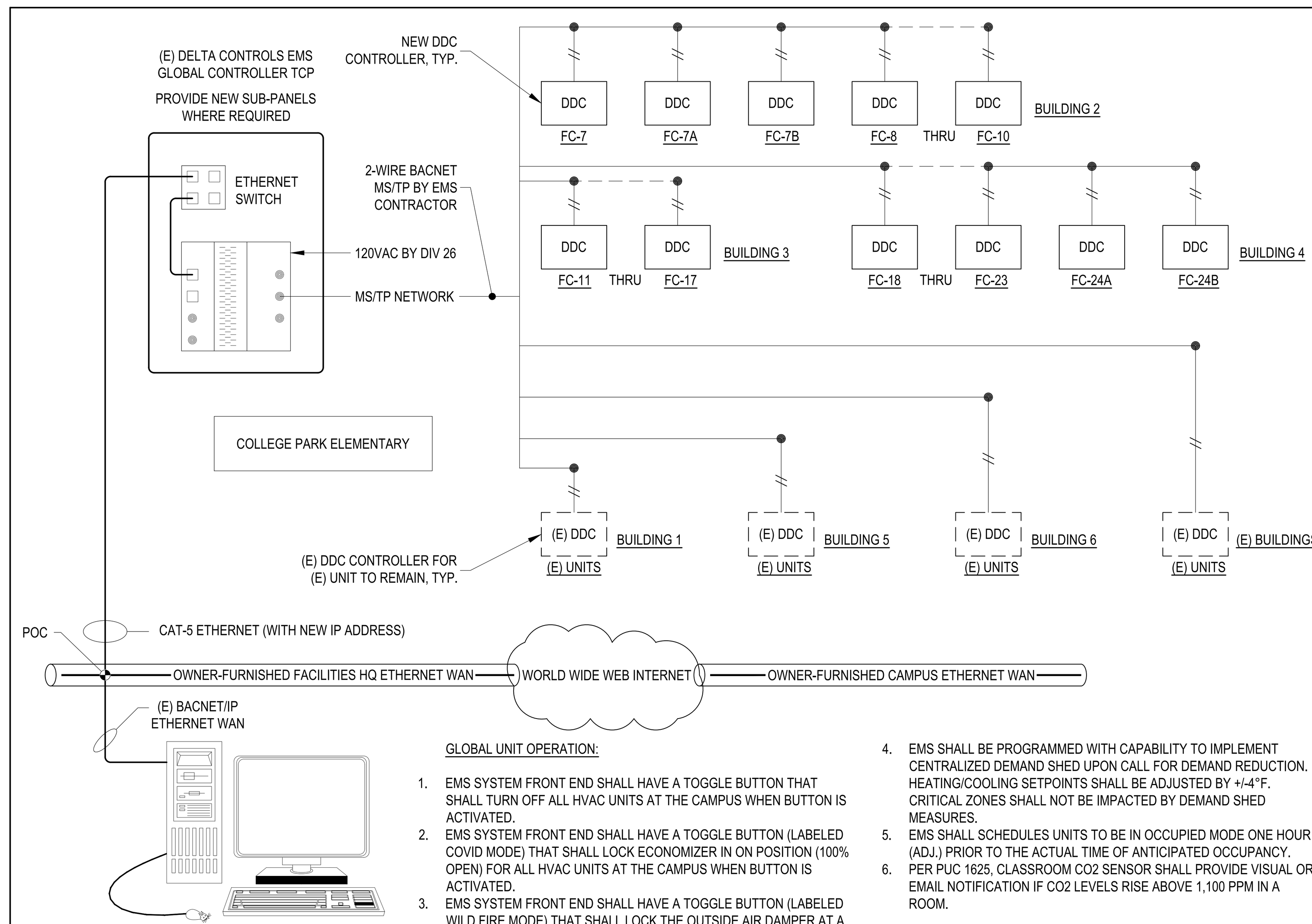

GLOBAL UNIT OPERATION:

1. EMS SYSTEM FRONT END SHALL HAVE A TOGGLE BUTTON THAT SHALL TURN OFF ALL HVAC UNITS AT THE CAMPUS WHEN BUTTON IS ACTIVATED.
2. EMS SYSTEM FRONT END SHALL HAVE A TOGGLE BUTTON (LABELED COVID MODE) THAT SHALL LOCK ECONOMIZER IN ON POSITION (100% OPEN) FOR ALL HVAC UNITS AT THE CAMPUS WHEN BUTTON IS ACTIVATED.
3. EMS SYSTEM FRONT END SHALL HAVE A TOGGLE BUTTON (LABELED WILD FIRE MODE) THAT SHALL LOCK THE OUTSIDE AIR DAMPER AT A USER ADJUSTABLE SETPOINT FOR ALL HVAC UNITS AT THE CAMPUS WHEN BUTTON IS ACTIVATED.
4. EMS SHALL BE PROGRAMMED WITH CAPABILITY TO IMPLEMENT CENTRALIZED DEMAND SHED UPON CALL FOR DEMAND REDUCTION. HEATING/COOLING SETPOINTS SHALL BE ADJUSTED BY +/-4°F. CRITICAL ZONES SHALL NOT BE IMPACTED BY DEMAND SHED MEASURES.
5. EMS SHALL SCHEDULES UNITS TO BE IN OCCUPIED MODE ONE HOUR (ADJ.) PRIOR TO THE ACTUAL TIME OF ANTICIPATED OCCUPANCY.
6. PER PUC 1625, CLASSROOM CO2 SENSOR SHALL PROVIDE VISUAL OR EMAIL NOTIFICATION IF CO2 LEVELS RISE ABOVE 1,100 PPM IN A ROOM.

SCOPE OF WORK:

NEW GRAPHICS, FLOOR PLAN, SEQUENCE OF OPERATION AND SYSTEM INFORMATION TO BE DEVELOPED ON DELTA CONTROLS SERVER. NEW GRAPHICS SHALL INCLUDE INTERACTIVE BUILDING FLOOR PLANS. ROOMS SHALL BE COLOR CODED BASED ON ROOM TEMPERATURES, AND WHETHER UNITS ARE IN NORMALLY OCCUPIED VS OVERRIDE MODE.

CONTROLS FOR (E) UNITS SHALL REMAIN ACTIVE AND OPERATIONAL. IF (E) CONTROLS NEED TO BE DISCONNECTED FOR NEW WORK, THEY SHALL BE RECONNECTED AND VERIFIED FOR PROPER OPERATION.

CONTRACTOR SHALL PROVIDE NEW CONTROLLERS, THERMOSTATS, AND WIRING FOR CONTROLS WORK. REMOVE (E) CONTROLLERS AND THERMOSTATS. SALVAGE AND TURNOVER (+/- 30%) (E) CONTROLLERS AND THERMOSTATS TO DISTRICT. DISTRICT TO SELECT FIXTURES TO BE TURNED OVER.
PROVIDE AS-BUILT WIRING DIAGRAM AND LABEL ALL INSTALLED WIRING AT EACH END OF CABLE.

GENERAL NOTES

1. THE CONTROLS CONTRACTOR SHALL HAVE THE RESPONSIBILITY AS THE EXPERT IN THE PROPER APPLICATION OF CONTROL COMPONENTS AND DDC SYSTEMS. THE FINAL DESIGN, INSTALLATION, AND OPERATION OF THE CONTROL SYSTEM IS THE RESPONSIBILITY OF THE CONTROLS CONTRACTOR. CONTROLS CONTRACTOR SHALL VISIT THE SITE BEFORE BIDDING AND DETERMINE THE REQUIRED NUMBER OF CONTROL PANELS AND OPTIMAL LOCATION FOR EACH.
2. THE CONTROLS CONTRACTOR SHALL MAKE ADDITIONS AND/OR MODIFICATIONS TO THE DESIGN AS REQUIRED AT NO ADDITIONAL COST. CONTROLS CONTRACTOR SHALL WORK WITH THE MECHANICAL ENGINEER AND OBTAIN APPROVAL FOR ANY NECESSARY REVISIONS.
3. CONTROLS CONTRACTOR SHALL COORDINATE EXACT REQUIREMENT FOR CONTROL HARDWARE WITH ALL ASSOCIATED TRADES AND OWNER. REFER TO DRAWINGS FOR PRELIMINARY OPERATING SEQUENCES.
4. CONTROLS CONTRACTOR SHALL SUBMIT DETAILED SEQUENCES FOR ENGINEER'S REVIEW AND APPROVAL.
5. CONTROLS CONTRACTOR SHALL PROVIDE ALL CONTROLS, WIRING DIAGRAMS, "AS-BUILT" DRAWINGS, SYSTEM START-UP, AND PROGRAMMING.
6. CONTROLS CONTRACTOR TO WIRE COMMUNICATION BUS FROM NETWORK ROUTER TO ALL LOCAL BACNET CONTROLLERS.
7. CONTROLS CONTRACTOR TO PROVIDE THE NETWORK ROUTER, TEMPERATURE CONTROL PANELS, AND ALL LOCAL CONTROL PANELS FOR ALL EQUIPMENT AS REQUIRED.
8. CONTROLS CONTRACTOR TO PROVIDE ALL TEMPERATURE WIRING FOR ALL TEMPERATURE CONTROL WORK.
9. PROVIDE EMT CONDUIT AND JUNCTION BOXES FOR ALL TEMPERATURE CONTROL WORK RUNNING IN WALL SPACES.
10. PROVIDE RIGID CONDUIT FOR ALL EXTERIOR TEMPERATURE CONTROL WORK.
11. USE PLENUM RATED CABLE AND "J" HOOKS FOR ALL ABOVE CEILING AND FURRED SPACE TEMPERATURE CONTROL WORK.
12. ELECTRICAL CONTRACTOR TO PROVIDE ALL POWER WIRING FOR TEMPERATURE CONTROL PANELS AND LINE VOLTAGE THERMOSTATS. CONTROLS CONTRACTOR SHALL COORDINATE REQUIREMENTS WITH ELECTRICAL CONTRACTOR.
13. MECHANICAL/CONTROLS CONTRACTOR TO COORDINATE WITH ELECTRICAL AND VERIFY CIRCUITS ARE CORRECT BEFORE WIRING CONTROLS.
14. MECHANICAL/CONTROLS CONTRACTOR TO PROVIDE ALL CONTROL COMPONENTS NECESSARY TO FULFILL THE DESIGN INTENT OF THE DRAWINGS.

1 EMS SYSTEM ARCHITECTURE

SEQUENCE OF OPERATION

1. SYSTEM OVERVIEW
 A. EACH FAN COIL /HEAT PUMP UNIT UNIT WILL BE DIRECTLY CONTROLLED BY ITS OWN DEDICATED EMS (ENERGY MANAGEMENT SYSTEM) UNITARY CONTROLLER.
 B. EMS UNITARY CONTROLLER WILL BE CONNECTED TO A WALL MOUNTED ELECTRONIC THERMOSTAT.
 C. ELECTRONIC THERMOSTAT SHALL HAVE AN INTERFACE WHICH INCLUDES: 1) PUSHBUTTONS FOR WARMER/COOLER SETPOINT CONTROL; 2) VISUAL DISPLAY OF ROOM TEMPERATURE & CO2, AND 3) AFTER-HOURS OVERRIDE TIMER CONTROL, WITH USER ADJUSTABLE DURATION (2 HOURS MAX). THE AFTER-HOURS OVERRIDE DURATION SHALL HAVE THE ABILITY TO BE LIMITED FROM THE FRONT-END.
 D. EMS UNITARY CONTROLLER SHALL BE WIRED TO MANUFACTURER'S THERMOSTAT ADAPTER.
3. UNIT FAN OPERATION
 A. WHEN THE ZONE IS IN OCCUPIED MODE OR IN OVERRIDE MODE, THE FAN SHALL RUN CONTINUOUSLY
 B. DURING THE UNOCCUPIED MODE AS DETERMINED BY EMS TIME SCHEDULE, THE UNIT FAN CYCLES WITH DEMAND AND THE TEMPERATURE IS CONTROLLED BY THE UNOCCUPIED SPACE TEMPERATURE HEATING AND COOLING SETPOINTS.
4. MINIMUM OUTDOOR AIR VENTILATION
 A. DURING OCCUPIED MODE OR AFTERHOURS MODE, THE OUTSIDE AIR DAMPER SHALL BE COMMANDED BY THE EMS UNITARY CONTROLLER TO MAINTAIN A POSITION WHICH SATISFIES THE MINIMUM (DESIGN) OUTDOOR AIR VENTILATION REQUIREMENTS FOR THE ZONE. DESIGN OA CFM IS LISTED ON EQUIPMENT SCHEDULE. DAMPER POSITION(S) DETERMINED BY AIR BALANCING CONTRACTOR. RETURN AIR DAMPER SHALL BE ADJUSTED TO BE INVERSE OF OUTSIDE AIR DAMPER.
5. DEMAND CONTROL VENTILATION
 A. IF ROOM CO2 LEVELS RISE ABOVE 1000 PPM (ADJ.), THE OUTSIDE AIR DAMPER SHALL BE MODULATED OPEN TO MAXIMUM POSITION UNTIL CO2 LEVELS DROP BELOW 800 PPM (ADJ.).
6. HEATING OPERATION
 A. THE CONTROLLER COMPARES THE HEATING SETPOINT WITH THE SPACE TEMPERATURE AND DETERMINES A NEED-HEATING CONTROL SIGNAL TO MAINTAIN SETPOINT.
 B. MECHANICAL COOLING TO BE LOCKED OUT DURING HEATING MODE.
7. ECONOMIZER CONTROL
 A. EMS UNITARY CONTROLLER SHALL BE DIRECTLY CONNECTED TO DISCHARGE AIR AND RETURN AIR TEMPERATURE SENSORS. GLOBAL DDC PROGRAMMING SHALL BE USED TO BROADCAST CENTRALIZED AMBIENT OUTSIDE AIR TEMPERATURE.
 B. EMS UNITARY CONTROLLER SHALL ALSO BE DIRECTLY CONNECTED TO ECONOMIZER (OUTSIDE/RETURN AIR) DAMPER ACTUATOR, INCLUDING POSITION FEEDBACK SIGNAL.
 C. SEE MINIMUM OUTDOOR AIR VENTILATION FOR OUTSIDE AIR DAMPER MINIMUM CFM SETPOINT.
 D. THE EMS UNITARY CONTROLLER SHALL CONTINUOUSLY COMPARE THE CURRENT OSA TEMPERATURE TO THE ESTABLISHED AIR ECONOMIZER HIGH LIMIT SHUT OFF (ECON LOCK OUT) TEMPERATURE SET POINT (ADJUSTABLE) AND RETURN AIR TEMPERATURE.
 E. WHEN CURRENT OSA TEMP IS LESS THAN OR EQUAL TO ECON LOCK OUT TEMP AND THE RETURN AIR TEMPERATURE, EMS UNITARY CONTROLLER SHALL USE THE OUTSIDE AIR FOR FREE COOLING.
 F. WHEN THE OUTDOOR AIR DAMPER IS OPEN 100% FOR MORE THAN 5 MINUTES (ADJUSTABLE) AND THE NEED-COOLING SIGNAL CONTINUES TO INCREASE OR REACHES A MAXIMUM OF 100%, MECHANICAL COOLING WILL BE ACTIVATED.
 G. THE ECONOMIZER WILL REMAIN IN USE DURING MECHANICAL COOLING AS LONG AS DISCHARGE AIR TEMPERATURE REMAINS ABOVE 55°F (ADJUSTABLE) AND CURRENT OSA TEMP IS LESS THAN ECON LOCK OUT TEMP AND RETURN AIR TEMP.
 H. WHEN OSA TEMP IS ABOVE ECON LOCK OUT TEMP OR RETURN AIR TEMP, ECONOMIZER WILL BE DEACTIVATED AND ECONOMIZER SHALL BE COMMANDED TO MINIMUM CFM SETPOINT.
 I. ECONOMIZER WILL BE COMMANDED TO MINIMUM CFM SETPOINT WHEN UNIT IS IN HEATING MODE.
 J. WHEN UNIT FAN IS NOT OPERATING, OUTSIDE AIR DAMPER SHALL BE COMMANDED CLOSED
8. COOLING OPERATION
 A. THE CONTROLLER COMPARES THE COOLING SETPOINT WITH THE SPACE TEMPERATURE AND DETERMINES A NEED-COOLING SIGNAL.
 B. FREE COOLING (ECONOMIZER) WILL BE USED FIRST WHEN POSSIBLE. MECHANICAL COOLING SHALL BE ENGAGED IF SETPOINT IS UNABLE TO BE MET WITH ECONOMIZING.
 C. THE CONTROLLER WILL ENABLE THE COMPRESSOR(S) TO MAINTAIN THE ROOM SET POINT.
 D. MECHANICAL HEATING TO BE LOCKED OUT DURING COOLING MODE.
9. ROOM PRESSURE CONTROL
 A. EMS UNITARY CONTROLLER SHALL BE CONNECTED TO STATIC PRESSURE PROBE LOCATED IN EACH ROOM. CONTROLS CONTRACTOR SHALL INSTALL AND CONNECT PRESSURE SENSOR.
 B. EMS UNITARY CONTROLLER SHALL MODULATE RELIEF LOUVER OPEN TO MAINTAIN ROOM STATIC PRESSURE SETPOINT OF +0.03" WC MAXIMUM.
10. SETPOINTS
 A. OCCUPIED HOURS SETPOINTS SHALL BE 68°F TO 74°F. (USER ADJUSTABLE AT THERMOSTAT WITHIN THIS RANGE).
 B. UNOCCUPIED HOURS SETPOINTS SHALL BE 60°F HEATING AND 90°F COOLING.
 C. DEADBAND SHALL BE 2°F.
11. FAULT DETECTION DIAGNOSTICS
 A. THE EMS DDC CONTROLLER SHALL MONITOR FAULT STATUS OF THE FOLLOWING FAULT DETECTION DIAGNOSTIC CONDITIONS AND BROADCAST RESULTS VIA EMS NETWORK.
 B. UNIT NOT ECONOMIZING WHEN ENABLED - IF ECONOMIZER DAMPER ACTUATOR FEEDBACK STATUS DOES NOT MATCH THE COMMANDED ECONOMIZER SETPOINT WHEN THE ECONOMIZER IS ENABLED FOR MORE THAN 3 MINUTES (ADJUSTABLE), AN ALARM SHALL BE GENERATED AND BROADCAST.
 C. UNIT ECONOMIZING WHEN DISABLED - IF ECONOMIZER DAMPER ACTUATOR FEEDBACK STATUS INDICATES THAT THE ECONOMIZER DAMPER IS OPEN BEYOND THE MIN CFM SETPOINT WHEN THE ECONOMIZER IS NOT ENABLED FOR MORE THAN 3 MINUTES (ADJUSTABLE), AN ALARM SHALL BE GENERATED AND BROADCAST.
 D. DAMPER MODULATION FAULT - IF ECONOMIZER DAMPER ACTUATOR FEEDBACK PERCENT DOES NOT MATCH THE COMMANDED ECONOMIZER DAMPER PERCENT FOR MORE THAN 3 MINUTES (ADJUSTABLE), AN ALARM SHALL BE GENERATED AND BROADCAST.
 E. EXCESS OUTDOOR AIR - IF ECONOMIZER DAMPER ACTUATOR FEEDBACK STATUS INDICATES THAT THE ECONOMIZER DAMPER IS OPEN BEYOND MIN CFM SETPOINT IN HEATING MODE, AN ALARM SHALL BE GENERATED AND BROADCAST.
12. MONITORING - THE FOLLOWING CONDITIONS SHALL BE MONITORED AND DISPLAYED AT EMS OPERATOR WORKSTATION/GRAPHICAL USER INTERFACE:
 A. SUPPLY AIR TEMPERATURE.
 B. MIXED AIR TEMPERATURE.
 C. OUTSIDE AIR TEMPERATURE.
 D. ROOM TEMPERATURE.
 E. ROOM CO2 LEVEL.
 F. CURRENT MODE (HEATING/COOLING/FAN).
 G. FAN STATUS THRU CURRENT SWITCH.
 H. RETURN AIR DAMPER POSITION.
 I. OUTSIDE AIR DAMPER POSITION.
13. ALARMS - AT A MINIMUM THE FOLLOWING ALARMS SHALL BE DISPLAYED ON THE GRAPHICAL USER INTERFACE:
 A. ROOM TEMPERATURE OUT OF BOUNDS.
 B. ROOM CO2 TOO HIGH.
 C. FAN NOT RUNNING.
 D. DAMPER POSITION DOES NOT MATCH COMMAND.

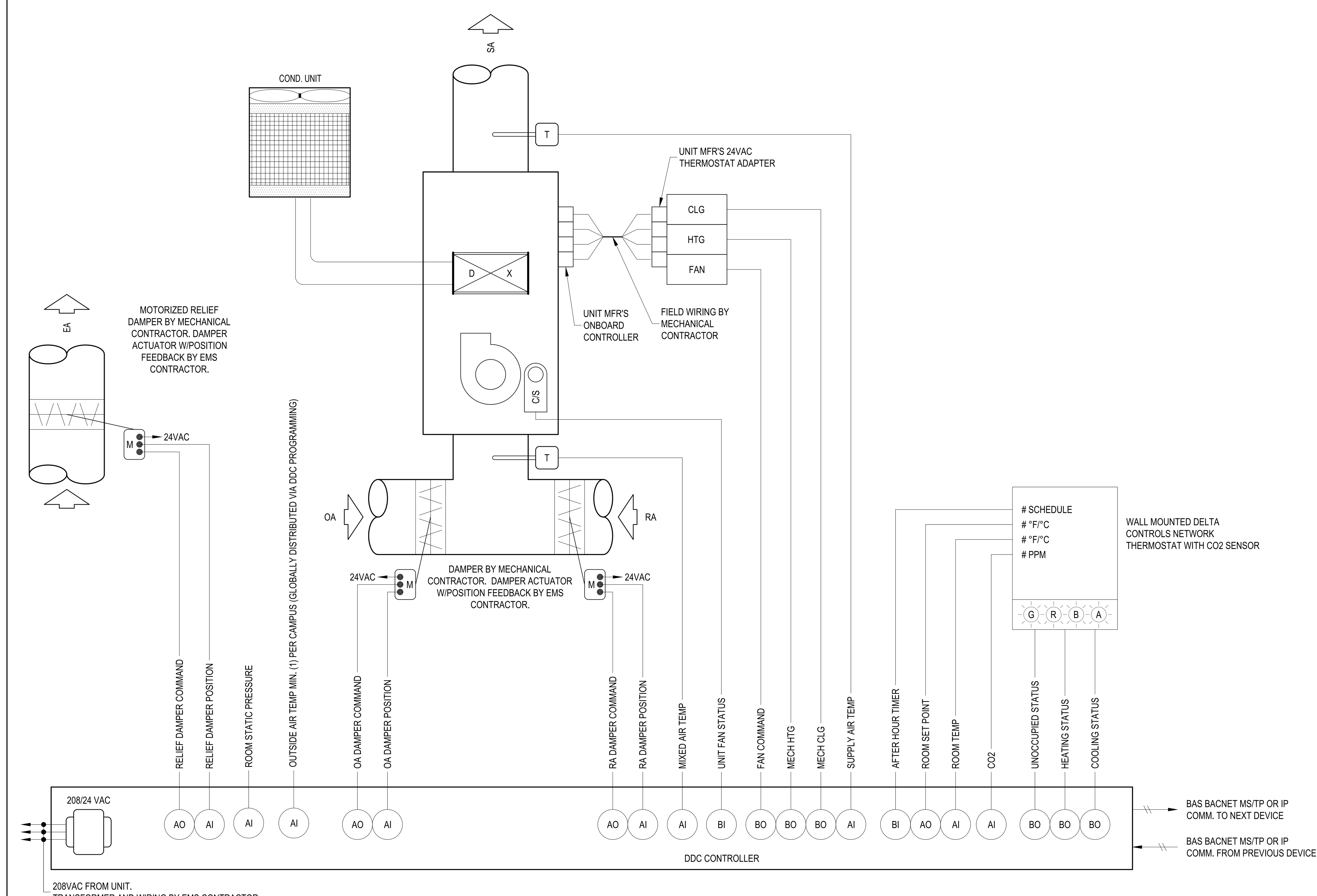

2 CLASSROOM SPLIT SYSTEM HEAT PUMP / FAN COIL UNIT CONTROL SCHEMATIC

IDENTIFICATION STAMP
DIV. OF THE STATE ARCHITECT
APP: 01-119530 INC:
REVIEWED FOR
SS ☑ FLS ☑ ACS ☑
DATE: 10/26/2021

aedis architects
www.aedisarchitects.com
387 S. 1st Street, Suite 300
San Jose, CA 95113
tel: (408)-300-5160
fax: (408)-300-5121

PROJECT

COLLEGE PARK ELEMENTARY SCHOOL - HVAC REPLACEMENT

SAN MATEO-FOSTER CITY SCHOOL DISTRICT

CONSULTANT

CEG JOB NO: 21033
CYPRESS Engineering Group
HVAC, Plumbing, Fire Protection
Building Commissioning
Industrial Refrigeration
Environmental Compliance
Training & Technical Support
831.218.1802
8 Harris Court, Suite A8
Monterey, CA 93940
cypresseg.com

STAMP

REGISTERED PROFESSIONAL ENGINEER
METIN SERTTUNC
No. M31059
EXP. JUNE 30, 2023
MECHANICAL
STATE OF CALIFORNIA

STATE
DSA FILE NUMBER 41-26
APPL # 01-119530

REVISIONS

No.	Description	Date

MILESTONES

DD	
90% CD	
DSA SUB	05/26/2021
BACKCHECK	09/30/2021

SHEET

CONTROLS - MECHANICAL

DATE 09/30/2021
JOB # 2021005.01
SHEET # MP5.01

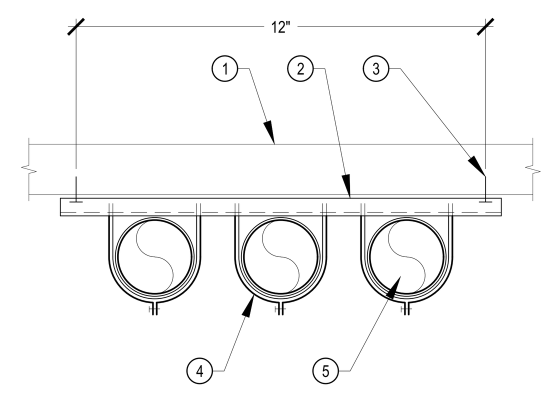

DETAIL NOTES:

1. (E) JOIST.
2. COPPER B-LINE B22 CHANNEL.
3. SCREW CHANNEL INTO (E) JOIST W/ 2-3/8"x2" LAG SCREWS.
4. B-LINE VIBRA-CLAMP PIPE CLAMP.
5. PIPE(S). SEE PLANS FOR TYPES AND SIZES.

NOTES:

1. 6 FT MAX SPACING BETWEEN SUPPORT

7 PIPE SUPPORT N.T.S.

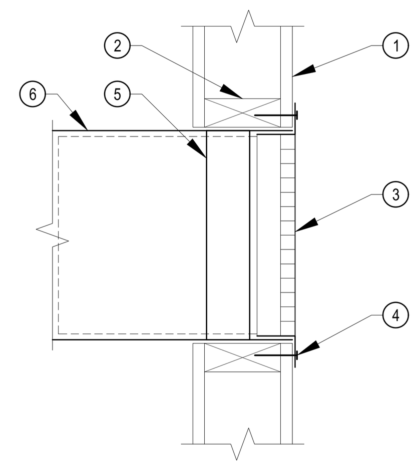

DETAIL NOTES:

1. WALL.
2. 2x BLOCKING ALL AROUND.
3. REGISTER.
4. #8 WOOD SCREWS, TYP. OF 4.
5. AIRSAN COMPACT SILENCER BEHIND REGISTER.
6. SHEET METAL DUCT WITH 1/2" ACOUSTIC LINING.

8 REGISTER DETAIL - SIDEWALL MOUNTED N.T.S.

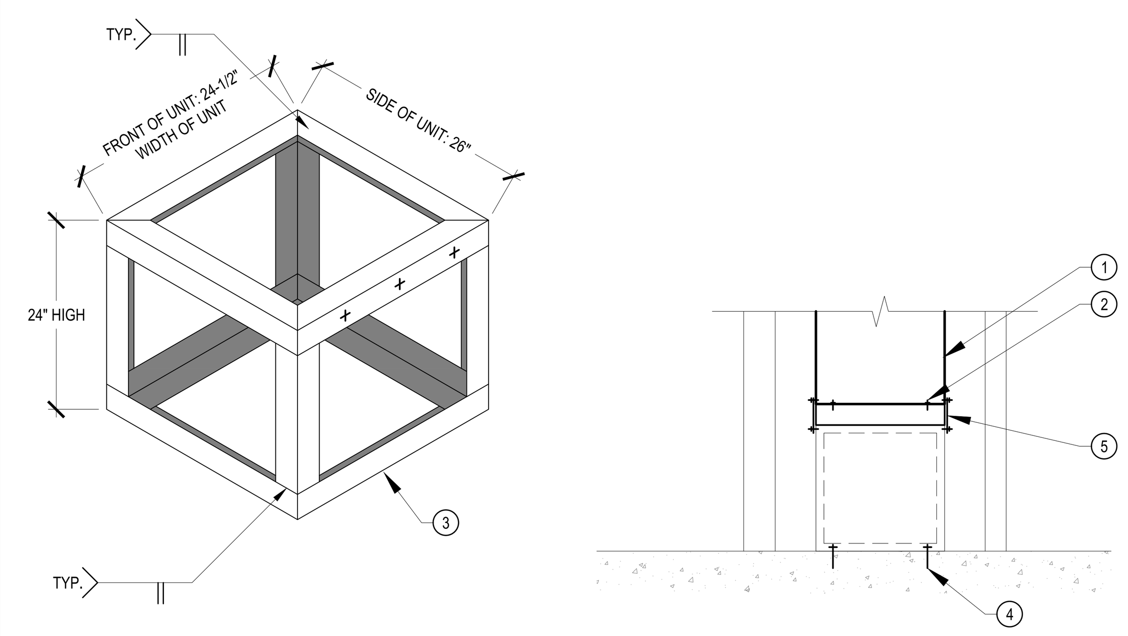

DETAIL NOTES:

1. FAN COIL. SEE PLANS FOR LOCATIONS.
2. SECURE FAN COIL TO FILTER BOX WITH #14 x 3/4" SM SCREWS AT 4" O.C. ALL AROUND.
3. FAN COIL STAND / RETURN / OUTSIDE AIR MIXING PLENUM W/ 2"x2"x1/4" ANGLE IRON FRAME(ASTM A36), ALL WELDED WITH ELECTRODE E70XX, MITERED CORNERS. COVER W/ 20 GA SHEET METAL. LINE W/ 1" ACOUSTIC MATERIAL.
4. SECURE STAND / MIXING PLENUM TO CONCRETE FLOOR WITH (4) HILTI KB-TZ2 3/8Ø"x2-1/2", 2" MIN EMBEDMENT ESR-4266 .
5. SECURE FAN COIL TO STAND W/ 1/4" x 1" BOLT, 7"x24" 16 GA PLATE, NUT, AND LOCK WASHER AT 8" O.C. (3) SIDES. FILTER BOX ACCESS TO REMAIN CLEAR. ENSURE REFRIGERANT AND CONDENSATE PIPES DO NOT BLOCK FILTER BOX ACCESS.

1 FAN COIL AND STAND MOUNTING N.T.S.

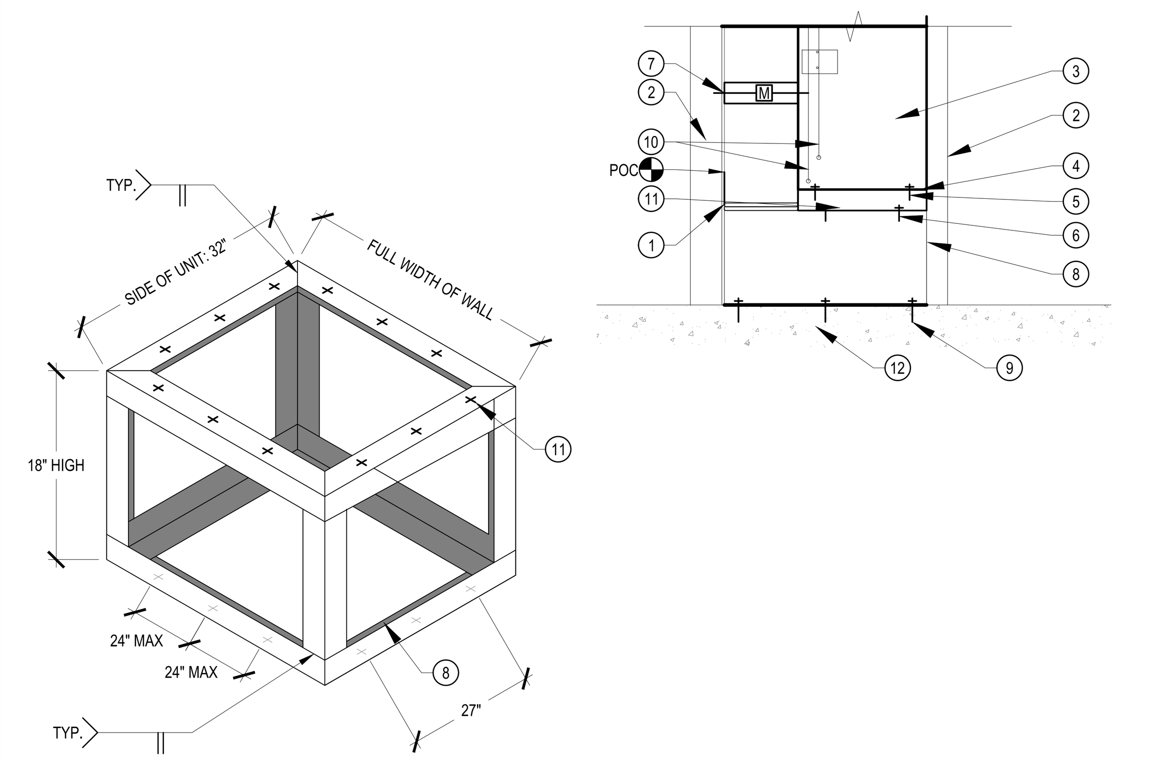

DETAIL NOTES:

1. FLEX DUCT AT CONNECTION TO UNIT.
2. (E) WALL.
3. FAN COIL. SEE PLANS FOR LOCATIONS.
4. SEAL ALL AROUND FAN COIL AND FILTER BOX WITH 1/2" THICK NEOPRENE GASKET.
5. SECURE FAN COIL TO FILTER BOX WITH #14 x 3/4" SM SCREWS AT 4" O.C. ALL AROUND.
6. 4" FILTER BOX THAT CAN FIT EITHER 2" OR 4" FILTERS.
7. (E) MOTORIZED DAMPER ON RETURN AIR DUCT.
8. FAN COIL STAND / RETURN / OUTSIDE AIR MIXING PLENUM W/ 2"x2"x1/4" ANGLE IRON FRAME(ASTM A36), ALL WELDED WITH ELECTRODE E70XX, MITERED CORNERS. COVER W/ 20 GA SHEET METAL. LINE W/ 1" ACOUSTIC MATERIAL.
9. SECURE STAND / MIXING PLENUM TO CONCRETE FLOOR WITH (4) HILTI KB-TZ2 3/8Ø"x 2-1/2", 2 EMBEDMENT ESR-4266.
10. DRAIN CONNECTIONS WITH P-TRAP PER MANUFACTURER'S RECOMMENDATIONS AND CLEANOUT AT ALL CHANGES OF DIRECTION. ROUTE TO CONDENSATE PUMP. INSTALL P-TRAPS OFF TO SIDE OF UNIT SUCH THAT THEY DO NOT BLOCK ACCESS TO THE FILTER BOX.
11. SECURE FILTER BOX TO STAND W/ 1/4" x 1" BOLT, NUT, AND LOCK WASHER AT 8" O.C. ALL AROUND.
12. (E) CONCRETE FLOOR.

2 FAN COIL MOUNTING IN MECHANICAL ROOM N.T.S.

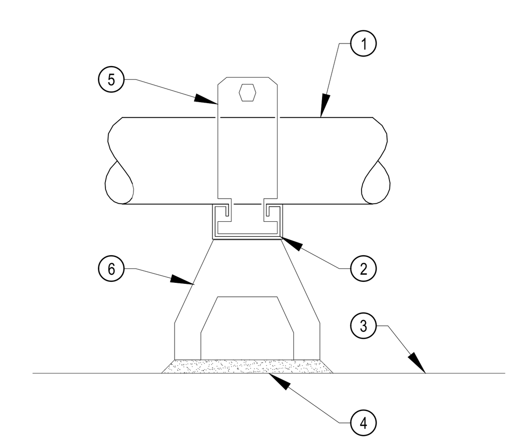

DETAIL NOTES:

1. FOR PIPE SIZES AND TYPES, SEE PLANS.
2. PROVIDE GAP BETWEEN INTEGRAL STRUT CHANNEL AND HARDWARE USED TO SECURE PIPE TO ALLOW FOR MOVEMENT OF SYSTEM.
3. (E) ROOF.
4. SET SUPPORT IN MASTIC COMPATIBLE WITH ROOF SURFACE.
5. PROVIDE STANDARD STRUT CLAMPS.
6. B-LINE DURA-BLOCK WITH INTEGRAL CHANNEL AND PIPE BRACKETS, WIDTH AS REQUIRED FOR NUMBER OF PIPES.

NOTES:

1. REFER TO 22 05 00 PLUMBING SPECIFICATIONS FOR SPACING BETWEEN SUPPORT BLOCKS. ADDITIONALLY PROVIDE BLOCK WITHIN 2'-0" OF ANY CHANGE OF DIRECTION.

5 PIPE SUPPORT ON ROOF N.T.S.

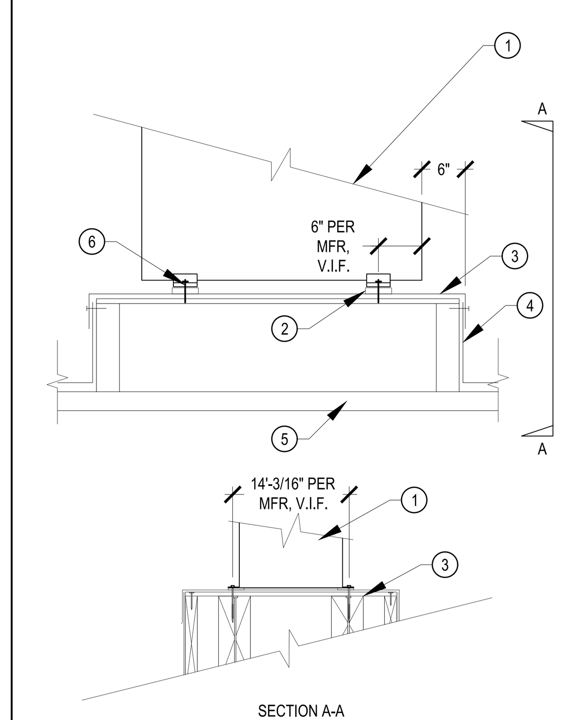

DETAIL NOTES:

1. HEAT PUMP. FOR LOCATION, SEE PLANS.
2. 4"x4"x1/4" NEOPRENE PADS SET IN SEALANT. TYP. OF 4.
3. LEVEL BUILT UP PLATFORM WITH SHEET METAL CAP. SEE 11/S8.01 FOR PLATFORM DETAIL AND ATTACHMENT TO ROOF STRUCTURE. SEE ARCHITECTS DRAWINGS FOR PLATFORM CAP.
4. FOR FLASHING, SEE ARCHITECT'S DRAWINGS.
5. (E) ROOF.
6. 3/8"Ø LAG SCREW THRU MOUNTING HOLE AND ISOLATOR PAD TO PLATFORM. MINIMUM 2" EMBEDMENT. TYP. OF 4.

3 SPLIT SYSTEM HEAT PUMP UNIT ON PLATFORM N.T.S.

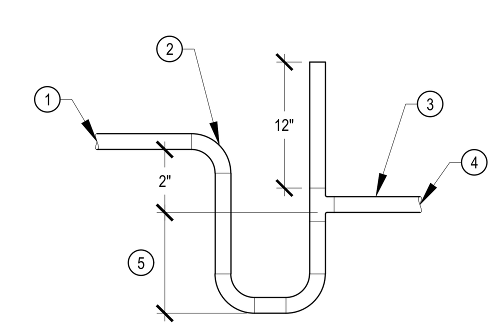

DETAIL NOTES:

1. CONNECT CD TO UNIT PER MANUFACTURER'S INSTALLATION REQUIREMENTS.
2. LONG RADIUS ELBOW, TYP.
3. PITCH MINIMUM 1/8" PER FOOT TO DRAIN.
4. ROUTE TO ROOF DRAIN.
5. UNIT TOTAL INCHES STATIC PRESSURE ±2".

NOTES:

1. CD PIPE SIZE SHALL NOT BE SMALLER THAN UNIT DRAIN CONNECTION SIZE.
2. FOR PIPE SIZES AND LOCATIONS, SEE PLANS.

6 CONDENSATE DRAIN CONNECTION TO EQUIPMENT N.T.S.

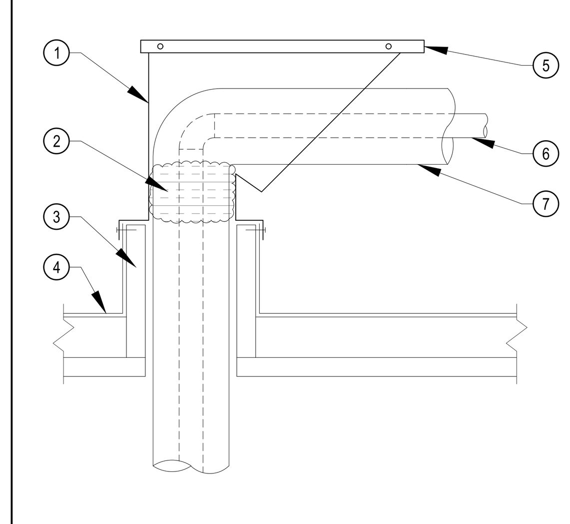

DETAIL NOTES:

1. GALVANIZED SHEET METAL ROOF JACK WITH CAP.
2. FILL OPENING WITH FOAM.
3. ROOF OPENING. SEE STRUCTURAL DRAWING FOR CURB, SEE ARCHITECT'S DRAWINGS FOR FLASHING.
4. ROOFING.
5. REMOVABLE SHEET METAL COVER ATTACHED WITH TWO (2) #8 SELF TAPPING SCREWS EACH SIDE, PAINTED.
6. PIPE.
7. PIPE INSULATION.

NOTES:

1. EXPOSED PIPING SHALL HAVE ALUMINUM JACKET.

4 PIPING ROOF JACK N.T.S.

IDENTIFICATION STAMP
DIV. OF THE STATE ARCHITECT
APP: 01-119530 INC:
REVIEWED FOR
SS ☑ FLS ☑ ACS ☑
DATE: 10/26/2021

aedis architects
www.aedisarchitects.com
387 S. 1st Street, Suite 300
San Jose, CA 95113
tel: (408)-300-5160
fax: (408)-300-5121

PROJECT

COLLEGE PARK ELEMENTARY SCHOOL - HVAC REPLACEMENT

SAN MATEO-FOSTER CITY SCHOOL DISTRICT

CONSULTANT

CEG JOB NO: 21033
CYPRESS Engineering Group
HVAC, Plumbing, Fire Protection
Building Commissioning
Industrial Refrigeration
Environmental Compliance
Training & Technical Support
831.218.1802
8 Harris Court, Suite A8
Monterey, CA 93940
cypresseg.com

STAMP

REGISTERED PROFESSIONAL ENGINEER
METIN SERTTUNC
No. M31059
EXP. JUNE 30, 2023
MECHANICAL
STATE OF CALIFORNIA

STATE
DSA FILE NUMBER 41-26
APPL # 01-119530

REVISIONS

No.	Description	Date

MILESTONES

DD	
90% CD	
DSA SUB	05/26/2021
BACKCHECK	09/30/2021

SHEET

DETAILS - MECHANICAL & PLUMBING

DATE 09/30/2021

JOB # 2021005.01

SHEET # MP6.01

CERTIFICATE OF COMPLIANCE			NRCC-MCH-E
This document is used to demonstrate compliance for mechanical systems that are within the scope of the permit application and are demonstrating compliance using the prescriptive path outlined in §140.4, or §141.0(b)2 for alterations.			
Project Name:	College Park Elementary School - HVAC Replacement	Report Page:	Page 1 of 11
Project Address:	715 Indian Ave, San Mateo, CA 94401	Date Prepared:	2021-05-08

A. GENERAL INFORMATION

01	Project Location (city)	San Mateo	04	Total Conditioned Floor Area	
02	Climate Zone	3	05	Total Unconditioned Floor Area	
03	Occupancy Types Within Project:		06	# of Stories (Habitable Above Grade)	

☐ Office (B)	☐ Retail (M)	☐ Non-refrigerated Warehouse (S)
☐ Hotel/ Motel Guest Rooms (R-1)	☑ School (E)	☐ Healthcare Facility (I)
☐ High-Rise Residential (R-2/R-3)	☐ Relocatable Class Bldg (E)	☐ Other (Write In):

[1] FOOTNOTES: Climate zone can be determined on the California Energy Commission's website at http://www.energy.ca.gov/maps/renewable/building_climate_zones.html

B. PROJECT SCOPE

Table Instructions: Include any mechanical systems that are within the scope of the permit application and are demonstrating compliance using the prescriptive path outlined in §140.4, or §141.0(b)2 for alterations.

My project consists of (check all that apply)

01	02	03
Air System(s)	Wet System Components	Dry System Components
☑ Heating Air System	☐ Water Economizer	☐ Air Economizer
☑ Cooling Air System	☐ Pumps	☐ Electric Resistance Heat
Mechanical Controls	☐ Hydronic System Piping	☐ Fan Systems
☑ Mechanical Controls (existing to remain, altered or new)	☐ Cooling Towers	☑ Ductwork (existing to remain, altered or new)
	☐ Chillers	☑ Ventilation
	☐ Boilers	☐ Zonal Systems/ Terminal Boxes

C. COMPLIANCE RESULTS

Table Instructions: If any cell on this table says "DOES NOT COMPLY" or "COMPLIES with Exceptional Conditions" refer to Table D. for guidance.

01		02		03		04		05		06		07		08	09
System Summary §110.1, §110.2, §140.4	AND	Pumps §140.4(k)	AND	Fans/ Economizers §140.4(c), §140.4(e)	AND	System Controls §110.2, §120.2, §140.4(f)	AND	Ventilation §120.1	AND	Terminal Box Controls §140.4(d)	AND	Distribution §120.3, §140.4(l)	AND	Cooling Towers §110.2(e)2	Compliance Results
(See Table F)		(See Table G)		(See Table H)		(See Table I)		(See Table J)		(See Table K)		(See Table L)		(See Table M)	
Yes	AND		AND		AND	Yes	AND	Yes	AND		AND	Yes	AND		COMPLIES
Mandatory Measures Compliance (See Table Q for Details)															COMPLIES

CERTIFICATE OF COMPLIANCE			NRCC-MCH-E
Project Name:	College Park Elementary School - HVAC Replacement	Report Page:	Page 2 of 11
Project Address:	715 Indian Ave, San Mateo, CA 94401	Date Prepared:	2021-05-08

D. EXCEPTIONAL CONDITIONS

This table is auto-filled with uneditable comments because of selections made or data entered in tables throughout the form.

Selections made in Table O have been changed by the permit applicant. See Table E. Additional Remarks for permit applicant's explanation.

E. ADDITIONAL REMARKS

This table includes remarks made by the permit applicant to the Authority Having Jurisdiction.

F. HVAC SYSTEM SUMMARY (DRY & WET SYSTEMS)

Table Instructions: Complete the following equipment schedules to show compliance with mandatory requirements found in §110.1 and §110.2(a) and prescriptive requirements found in §140.4(a), §140.4(b) and §140.4(k) or §141.0(b)2 for alterations.

Dry System Equipment Sizing (includes air conditioners, condensers, heat pumps, VRF, furnaces and unit heaters)

01	02	03	04	05	06	07	08	09	10	11
				Equipment Sizing per Mechanical Schedule (kBtu/h) §140.4 (a&b)						
				Heating Output[2,3]			Cooling Output[2,3]		Load Calculations[3,4]	
Name or Item Tag	Equipment Category per Tables 110.2	Equipment Type per Tables 110.2 & Title 20	Smallest Size Available[1] §140.4(a)	Per Design (kBtu/h)	Rated (kBtu/h)	Supp. Heating Output (kBtu/h)	Sensible Per Design (kBtu/h)	Rated (kBtu/h)	Total Heating Load (kBtu/h)	Total Sensible Cooling Load (kBtu/h)
HP/FC	Unitary heat pumps (no elec. resistance)	Air cooled, split (1 phase)	Yes	60	60	0	54	54		

[1] FOOTNOTES: Equipment shall be the smallest size, within the available options of the desired equipment line, necessary to meet the design heating and cooling loads of the building per §140.4(a). Healthcare facilities are excepted.
[2] It is common practice to show rated output capacity on the equipment schedule. Sensible cooling output comes from specification sheet tables.
[3] If equipment is heating only, leave cooling output and load blank. If equipment is cooling only, leave heating output and load blank.
[4] Authority Having Jurisdiction may ask for load calculations used for compliance per §140.4(b).
Table Continued

CERTIFICATE OF COMPLIANCE			NRCC-MCH-E
Project Name:	College Park Elementary School - HVAC Replacement	Report Page:	Page 3 of 11
Project Address:	715 Indian Ave, San Mateo, CA 94401	Date Prepared:	2021-05-08

Dry System Equipment Efficiency (other than Package Terminal Air Conditioners (PTAC) and Package Terminal Heat Pumps (PTHP))

01	02	03	04	05	06	07	08	09
		Heating Mode				Cooling Mode		
Name or Item Tag	Size Category (Btu/h)	Rating Condition (°F)	Efficiency Unit	Min Efficiency Required per Tables 110.2/ Title 20	Design Efficiency	Efficiency Unit	Min Efficiency Required per Tables 110.2/ Title 20	Design Efficiency
HP/FC	<65,000		HSPF	8.2	9	SEER	14	17.1

G. PUMPS

This Section Does Not Apply

H. FAN SYSTEMS & AIR ECONOMIZERS

This Section Does Not Apply

I. SYSTEM CONTROLS

Table Instructions: Complete the following Table to demonstrate compliance with mandatory controls in §110.2 and §120.2 and prescriptive controls in §140.4(f) and (n) or requirements in §141.0(b)2E for altered space conditioning systems.

01	02	03	04	05	06	07	08	09
System Name	System Zoning	Conditioned Floor Area Being Served (ft²)	Thermostats §110.2(b) & (c)[1], §120.2(a) or §141.0(b)2E	Shut-Off Controls §120.2(e)	Isolation Zone Controls §120.2(g)	Demand Response §110.12 and §120.2(b)	Supply Air Temp. Reset §140.4(f)	Window Interlocks per §140.4(n)
HP/FC	single zone	≤ 25,000 ft²	EMCS	EMCS	NA: Single Zone	EMCS	NA: Single Zone	NA: Alteration project

[1] FOOTNOTES: Gravity gas wall heaters, gravity floor heaters, gravity room heaters, non-central electric heaters, fireplaces or decorative gas appliances, wood stoves are not required to have setback thermostats.
* NOTES: Controls with a * require a note in the space below explaining how compliance is achieved.
EX: System 1: SA Temp Reset: Exempt because zones compliant with §140.4(d); EXCEPTION 1 to §140.4(f)

CERTIFICATE OF COMPLIANCE			NRCC-MCH-E
Project Name:	College Park Elementary School - HVAC Replacement	Report Page:	Page 4 of 11
Project Address:	715 Indian Ave, San Mateo, CA 94401	Date Prepared:	2021-05-08

J. VENTILATION AND INDOOR AIR QUALITY

Table Instructions: Complete the following Table to demonstrate compliance with mandatory ventilation requirements in §120.1 and §120.2(e)3B for all nonresidential, high-rise residential and hotel/motel occupancies. For alterations, only ventilation systems being altered within the scope of the permit application need to be documented in this table. In lieu of this table, the required outdoor ventilation rates and airflows may be shown on the plans or the calculations can be presented in a spreadsheet.

01	☐	Check the box if the project is showing ventilation calculations on the plans, or attaching the calculations instead of completing this table.
02	☐	Check this box if the project includes Nonresidential or Hotel/Motel spaces
	☐	Check this box if the project includes new or altered high-rise residential dwelling units
03	☐	Check the box if the project is using natural ventilation in any spaces to meet required ventilation rates per §120.1(c)2.

Nonresidential and Hotel/ Motel Ventilation Systems

04		05		06		07
System Name:	HP/FC	System Design OA CFM Air Flow[1]:	450	System Design Transfer Air CFM:	0	Air Filtration per §120.1(c) and §141.0(b)2[2]: Provided per §120.1(c) (NR & Hotel/Motel)

08	09	10	11	12	13	14	15	16	
	Mechanical Ventilation Required per §120.1(c)3[3]					Exh. Vent. per §120.1(c)4			
Space Name or Item Tag	Occupancy Type[4]	Conditioned Floor Area (ft²)	# of showerheads / toilets	# of people[5]	Required Min OA CFM	Required Minimum CFM	Provided per Design CFM	DCV or Occupant Sensor Controls per §120.1(d)3, §120.1(d)5 & §120.2(e)3[6]	
HP/FC	Classroom (age 5-18)	1,000			150		0	DCV	Provided per §120.1(d)4
								Occ Sensor	NA: Not required space type

17	Total System Required Min OA CFM	150	18	Ventilation for this System Complies?	Yes

CERTIFICATE OF COMPLIANCE			NRCC-MCH-E
Project Name:	College Park Elementary School - HVAC Replacement	Report Page:	Page 5 of 11
Project Address:	715 Indian Ave, San Mateo, CA 94401	Date Prepared:	2021-05-08

[1] FOOTNOTES: System CFM should include both mechanical and natural ventilation for the zone/system.
[2] Air filtration requirements apply to the following three system types per §120.1(c)1A: space conditioning systems utilizing ducts to supply air to occupiable space; supply-only ventilation systems providing outside air to occupiable space; supply side of balanced ventilation systems including heat recovery and energy recovery ventilation systems providing outside air to occupiable space.
[3] Uniform Mechanical Code may have more stringent ventilation requirements; the most stringent code requirement takes precedence.
[4] See Standards Tables 120.1-A and 120.1-B
[5] For lecture halls with fixed seating, the expected number of occupants shall be determined in accordance with the California Building Code.
[6] §120.2(e)3 requires systems serving rooms that are required by §130.1(c) to have lighting occupancy sensing controls to also have occupancy sensing zone controls for ventilation. Examples of spaces which require lighting occupancy sensors include offices 250ft² or smaller, multipurpose rooms less than 1,000ft², classrooms, conference rooms, restrooms, aisles and open areas in warehouses, library book stack aisles, corridors, stairwells, parking garages, and loading and unloading zones, unless excepted by §130.1(c).

K. TERMINAL BOX CONTROLS

This Section Does Not Apply

L. DISTRIBUTION (DUCTWORK AND PIPING)

Table Instructions: Complete the following tables to show compliance with mandatory pipe insulation requirements found in §120.3 and prescriptive requirements found in §140.4(l) for duct leakage testing.

Duct Leakage Sealing

The answers to the questions below apply to the following duct system(s):		FC		Duct leakage testing triggered for these systems?	No
11	No	The scope of the project includes only duct systems serving healthcare facilites.			
12	Yes	Duct system provides conditioned air to an occupiable space for a constant volume, single zone, space-conditioning system.			
13	No	The space conditioning system serves less than 5,000 ft² of conditioned floor area.			
14	No	The combined surface area of the ducts in the following locations is more than 25% of the total surface area of the entire duct system:			
		☐	Outdoors		
		☐	In a space directly under a roof that has a U-factor greater than the U-factor of the ceiling, or if the roof does not meet the requirements of §140.3(a)1B or if the roof has fixed vents or openings to the outside/ unconditioned spaces		
		☐	In an unconditioned crawlspace		
		☐	In other unconditioned spaces		
15	No	The scope of the project includes extending an existing duct system, which is constructed, insulated or sealed with asbestos.			
16	No	The scope of the project includes an existing duct system that is documented to have been previously sealed as confirmed through field verification and diagnostic testing in accordance with procedures in the Reference Nonresidential Appendix NA2.			

Table Continued

CERTIFICATE OF COMPLIANCE			NRCC-MCH-E
Project Name:	College Park Elementary School - HVAC Replacement	Report Page:	Page 6 of 11
Project Address:	715 Indian Ave, San Mateo, CA 94401	Date Prepared:	2021-05-08

Table Continued

17		Duct system shall be sealed in accordance with the California Mechanical Code.

M. COOLING TOWERS

This Section Does Not Apply

N. DECLARATION OF REQUIRED CERTIFICATES OF INSTALLATION

Table Instructions: Selections have been made based on information provided in previous tables of this document. If any selection needs to be changed, please explain why in Table E. Additional Remarks. These documents must be provided to the building inspector during construction and can be found online at https://www.energy.ca.gov/title24/2019standards/2019_compliance_documents/Nonresidential_Documents/NRCI/

YES	NO	Form/Title	Systems To Be Field Verified	Field Inspector Pass	Field Inspector Fail
◉		NRCI-MCH-01-E - Must be submitted for all buildings.		☐	☐

CERTIFICATE OF COMPLIANCE			NRCC-MCH-E
Project Name:	College Park Elementary School - HVAC Replacement	Report Page:	Page 7 of 11
Project Address:	715 Indian Ave, San Mateo, CA 94401	Date Prepared:	2021-05-08

O. DECLARATION OF REQUIRED CERTIFICATES OF ACCEPTANCE

Table Instructions: Selections have been made based on information provided in previous tables of this document. If any selection needs to be changed, please explain why in Table E. Additional Remarks. These documents must be provided to the building inspector during construction and can be found online at https://www.energy.ca.gov/title24/2019standards/2019_compliance_documents/Nonresidential_Documents/NRCA/

YES	NO	Form/Title	Systems To Be Field Verified	Field Inspector Pass	Field Inspector Fail
◉	○	NRCA-MCH-02-A Outdoor Air must be submitted for all newly installed HVAC units. *Note: MCH02-A can be performed in conjunction with MCH-07-A Supply Fan VFD Acceptance (if applicable) since testing activities overlap.*		☐	☐
◉	○	NRCA-MCH-03-A Constant Volume Single Zone HVAC *NOTE: This form does not automatically move to "Yes". If Constant Volume Single Zone HVAC Systems are included in the scope, permit applicant should move this form to "Yes".*		☐	☐
○	◉	NRCA-MCH-04-A Air Distribution Duct Leakage		☐	☐
○	◉	NRCA-MCH-05-A Air Economizer Controls		☐	☐
◉	○	NRCA-MCH-06-A Demand Control Ventilation Systems Acceptance must be submitted for all systems required to employ demand controlled ventilation (refer to §120.1(c)3) can vary outside ventilation flow rates based on maintaining interior carbon dioxide (CO2) concentration setpoints.		☐	☐
○	◉	NRCA-MCH-07-A Supply Fan Variable Flow Controls		☐	☐
○	◉	NRCA-MCH-08-A Valve Leakage Test		☐	☐
○	◉	NRCA-MCH-09-A Supply Water Temperature Reset Controls		☐	☐
○	◉	NRCA-MCH-10-A Hydronic System Variable Flow Controls		☐	☐
○	◉	NRCA-MCH-11-A Automatic Demand Shed Controls		☐	☐

CERTIFICATE OF COMPLIANCE			NRCC-MCH-E
Project Name:	College Park Elementary School - HVAC Replacement	Report Page:	Page 8 of 11
Project Address:	715 Indian Ave, San Mateo, CA 94401	Date Prepared:	2021-05-08

YES	NO	Form/Title	Systems To Be Field Verified	Field Inspector Pass	Field Inspector Fail
○	◉	NRCA-MCH-12-A FDD for Packaged Direct Expansion Units		☐	☐
○	◉	NRCA-MCH-13-A Automatic FDD for Air Handling Units and Zone Terminal Units Acceptance		☐	☐
○	◉	NRCA-MCH-14-A Distributed Energy Storage DX AC Systems Acceptance *NOTE: This form does not automatically move to "Yes". If Distributed Energy Storage DX AC Systems are included in the scope, permit applicant should move this form to "Yes".*		☐	☐
○	◉	NRCA-MCH-15-A Thermal Energy Storage (TES) System Acceptance *NOTE: This form does not automatically move to "Yes". If Chilled Water Storage, Ice-on-Coil Internal Melt, Ice-on-Coil External Melt, Ice Harvester, Brine, Ice-Slurry, Eutectic Salt, Clathrate Hydrate Slurry (CHS), Cryogenic or Encapulated (Ice Ball) Systems are included in the scope, permit applicant should move this form to "Yes".*		☐	☐
○	◉	NRCA-MCH-16-A Supply Air Temperature Reset Controls		☐	☐
○	◉	NRCA-MCH-17-A Condenser Water Temperature Reset Controls		☐	☐
◉	○	NRCA-MCH-18 Energy Management Control Systems		☐	☐
○	◉	NRCA-MCH-19 Occupancy Sensor Controls		☐	☐
○	◉	NRCA-MCH-20 Multi-Family Ventilation		☐	☐
○	◉	NRCA-MCH-21 Multi-Family Envelope Leakage		☐	☐

CERTIFICATE OF COMPLIANCE			NRCC-MCH-E
Project Name:	College Park Elementary School - HVAC Replacement	Report Page:	Page 9 of 11
Project Address:	715 Indian Ave, San Mateo, CA 94401	Date Prepared:	2021-05-08

P. DECLARATION OF REQUIRED CERTIFICATES OF VERIFICATION

Table Instructions: Selections have been made based on information provided in previous tables of this document. If any selection needs to be changed, please explain why in Table E. Additional Remarks. These documents must be completed by a HERS Rater and provided to the building inspector during construction. The final documents must be created by a HERS Providers registry, but drafts can be found online at https://www.energy.ca.gov/title24/2019standards/2019_compliance_documents/Nonresidential_Documents/NRCV/

YES	NO	Form/Title	Field Inspector Pass	Field Inspector Fail
○	◉	NRCV-MCH-04-H Duct Leakage Test *NOTE: Must be completed by a HERS Rater*	☐	☐
○	◉	NRCV-MCH-24 Enclosure Air Leakage Worksheet *NOTE: Must be completed by a HERS Rater*	☐	☐
○	◉	NRCV-MCH-27 High-rise Residential *NOTE: Must be completed by a HERS Rater*	☐	☐
○	◉	NRCV-MCH-32 Local Mechanical Exhaust *NOTE: Must be completed by a HERS Rater*	☐	☐

IDENTIFICATION STAMP
DIV. OF THE STATE ARCHITECT
APP: 01-119530 INC:
REVIEWED FOR
SS ☑ FLS ☑ ACS ☑
DATE: 10/26/2021

aedis architects
www.aedisarchitects.com
387 S. 1st Street, Suite 300
San Jose, CA 95113
tel: (408)-300-5160
fax: (408)-300-5121

PROJECT
COLLEGE PARK ELEMENTARY SCHOOL - HVAC REPLACEMENT

SAN MATEO-FOSTER CITY SCHOOL DISTRICT

CONSULTANT
CEG JOB NO: 21033
CYPRESS Engineering Group
HVAC, Plumbing, Fire Protection
Building Commissioning
Industrial Refrigeration
Environmental Compliance
Training & Technical Support
831.218.1802
8 Harris Court, Suite A8
Monterey, CA 93940
cypresseg.com

STAMP
REGISTERED PROFESSIONAL ENGINEER
METIN SERTTUNC
No. M31059
EXP. JUNE 30, 2023
MECHANICAL
STATE OF CALIFORNIA

STATE
DSA FILE NUMBER 41-26
APPL # 01-119530

REVISIONS

No.	Description	Date

MILESTONES

DD	
90% CD	
DSA SUB	05/26/2021
BACKCHECK	09/30/2021

SHEET
TITLE 24 DOCUMENTS - MECHANICAL

DATE 09/30/2021
JOB # 2021005.01
SHEET # MP8.01

STATE OF CALIFORNIA

Mechanical Systems

NRCC-MCH-E (Created 09/2020)

CALIFORNIA ENERGY COMMISSION

CERTIFICATE OF COMPLIANCE		NRCC-MCH-E
Project Name: College Park Elementary School - HVAC Replacement	Report Page:	Page 10 of 11
Project Address: 715 Indian Ave, San Mateo, CA 94401	Date Prepared:	2021-05-08

Q. MANDATORY MEASURES DOCUMENTATION LOCATION

Table Instructions: Indicate where mandatory measures are documented in the plan set or construction documentation. For any mandatory measures that do not apply, mark the plan sheet or construction document location as "N/A", any active cells that are left blank will result in non-compliance in Table C.

01		02
		Plan sheet or construction document location
Compliance with Mandatory Measures documented through MCH Mandatory Measures Note Block:	No	

03	04
Mandatory Measure	Plan sheet or construction document location
Heating Equipment Efficiency per §110.1	MP0.02
Cooling Equipment Efficiency per §110.1	MP0.02
Furnace Standby Loss Control per §110.2(d)	NA
Duct Insulation per §120.4	23 05 00
Heating Hot Water Equipment Efficiency per §110.1	NA
Cooling Chilled and Condenser Water Equipment Efficiency per §110.1	NA
Open and Closed Circuit Cooling Towers conductivity of flow-based controls per §110.2(e)1	NA
Open and Closed Circuit Cooling Towers Flow Meter with analog output per §110.2(e)3	NA
Open and Closed Circuit Cooling Towers Overflow Alarm per §110.2(e)4	NA
Open and Closed Circuit Cooling Towers Efficient Drift Eliminators per §110.2(e)5	NA
Pipe Insulation per §120.3(b)	NA
Combustion air shutoff, combustion air fan controls and stack design and controls for boilers per §120.9	NA
Heat Pump with Supplementary Electric Resistance Heater Controls per §110.2(b)	NA
The air duct and plenum system is designed per §120.4(a)-(f)	Yes
Kitchen range hoods shall be rated for sound in accordance with Section 7.2 of ASHRAE 62.2	NA

STATE OF CALIFORNIA

Mechanical Systems

NRCC-MCH-E (Created)

CALIFORNIA ENERGY COMMISSION

CERTIFICATE OF COMPLIANCE		NRCC-MCH-E
Project Name: College Park Elementary School - HVAC Replacement	Report Page:	Page 11 of 11
Project Address: 715 Indian Ave, San Mateo, CA 94401	Date Prepared:	2021-05-08

DOCUMENTATION AUTHOR'S DECLARATION STATEMENT

1. I certify that this Certificate of Compliance documentation is accurate and complete.

Documentation Author Name:	Chahan Shah	Documentation Author Signature:	Chahan S. Shah
Company:	Cypress Engineering Group	Signature Date:	5/8/21
Address:	8 Harris Court, Suite A8	CEA/ HERS Certification Identification (if applicable):	
City/State/Zip:	Monterey, CA 93940	Phone:	8312181802

RESPONSIBLE PERSON'S DECLARATION STATEMENT

I certify the following under penalty of perjury, under the laws of the State of California:

1. **The information provided on this Certificate of Compliance is true and correct.**
2. **I am eligible under Division 3 of the Business and Professions Code to accept responsibility for the building design or system design identified on this Certificate of Compliance (responsible designer)**
3. **The energy features and performance specifications, materials, components, and manufactured devices for the building design or system design identified on this Certificate of Compliance conform to the requirements of Title 24, Part 1 and Part 6 of the California Code of Regulations.**
4. **The building design features or system design features identified on this Certificate of Compliance are consistent with the information provided on other applicable compliance documents, worksheets, calculations, plans and specifications submitted to the enforcement agency for approval with this building permit application.**
5. **I will ensure that a completed signed copy of this Certificate of Compliance shall be made available with the building permit(s) issued for the building, and made available to the enforcement agency for all applicable inspections. I understand that a completed signed copy of this Certificate of Compliance is required to be included with the documentation the builder provides to the building owner at occupancy.**

Responsible Designer Name:	Metin Serttunc	Responsible Designer Signature:	
Company :	Cypress Engineering Group	Date Signed:	5/8/21
Address:	8 Harris Court, Suite A8	License:	M31059
City/State/Zip:	Monterey, CA 93940	Phone:	8312181802

IDENTIFICATION STAMP
DIV. OF THE STATE ARCHITECT
APP: 01-119530 INC:
REVIEWED FOR
SS ☑ FLS ☑ ACS ☑
DATE: 10/26/2021

aedis architects
www.aedisarchitects.com
387 S. 1st Street, Suite 300
San Jose, CA 95113
tel: (408)-300-5160
fax: (408)-300-5121

PROJECT

COLLEGE PARK ELEMENTARY SCHOOL - HVAC REPLACEMENT

SAN MATEO-FOSTER CITY SCHOOL DISTRICT

CONSULTANT

CEG JOB NO: 21033
CYPRESS Engineering Group
HVAC, Plumbing, Fire Protection
Building Commissioning
Environmental Compliance
Training & Technical Support
831.218.1802
8 Harris Court, Suite A8
Monterey, CA 93940
cypressegi.com

STAMP

REGISTERED PROFESSIONAL ENGINEER
METIN SERTTUNC
No. M31059
EXP. JUNE 30, 2023
MECHANICAL
STATE OF CALIFORNIA

STATE
DSA FILE NUMBER 41-26
APPL # 01-119530

REVISIONS

No.	Description	Date

MILESTONES

DD	
90% CD	
DSA SUB	05/26/2021
BACKCHECK	09/30/2021

SHEET

TITLE 24 DOCUMENTS - MECHANICAL

DATE 09/30/2021

JOB # 2021005.01

SHEET #

MP8.02

SYMBOL LIST:

- PLAN, DETAIL OR SECTION DESIGNATION.
- 201 — ROOM NUMBER.
- SHEET REFERENCE SYMBOL - SEE ASSOCIATED NOTE ON SAME SHEET.
- FEEDER SCHEDULE SYMBOL.
- MECHANICAL EQUIPMENT TAG.
- INDICATES FIXTURE TYPE

LUMINAIRE SYMBOLS

- LUMINAIRE - SEE SCHEDULE.
- LUMINAIRE - SEE SCHEDULE.
- LUMINAIRE - SEE SCHEDULE.
- LUMINAIRE - SEE SCHEDULE.
- POLE MOUNTED LUMINAIRE - SEE SCHEDULE.
- POLE MOUNTED LUMINAIRE - SEE SCHEDULE.
- LUMINAIRE - SEE SCHEDULE.
- LUMINAIRE - SEE SCHEDULE.
- LUMINAIRE WALL MOUNTED-SEE SCHEDULE.
- EMERGENCY LUMINAIRE - PROVIDE EMERGENCY BATTERY BALLAST
- EM — EMERGENCY LUMINAIRE - PROVIDE EMERGENCY BATTERY BALLAST
- EMERGENCY LUMINAIRE - PROVIDE EMERGENCY BATTERY BALLAST
- EMERGENCY LUMINAIRE - PROVIDE EMERGENCY BATTERY BALLAST
- EMERGENCY LUMINAIRE WALL MOUNTED- PROVIDE EM. BATTERY BALLAST
- EXIT LIGHT SINGLE FACE - SEE SCHEDULE.
- EXIT LIGHT SINGLE FACE (WITH ARROW)- SEE SCHEDULE.
- EXIT LIGHT (DOUBLE FACED WITH ARROW)- SEE SCHEDULE.
- EMERGENCY BATTERY PACK EXIT LIGHT INSTALL AS DIRECTED.

TYPICAL LUMINAIRE NOMENCLATURE

3a — INDICATES SWITCHING DESIGNATION

INDICATES CIRCUIT NUMBER

SWITCH SYMBOLS

- \$ — SINGLE POLE SWITCH, + 48" AFF TO THE TOP OF THE OUTLET BOX UON.
- \$a — SINGLE POLE SWITCH, + 48" AFF TO THE TOP OF THE OUTLET BOX, a = CIRCUIT CONTROLLED.
- \$3 — THREE WAY SWITCH + 48" AFF TO THE TOP OF THE OUTLET BOX UON.
- \$4 — FOUR WAY SWITCH + 48" AFF TO THE TOP OF THE OUTLET BOX UON.
- MOTOR RATED SWITCH
- LVS a — WALL MOUNTED LOW VOLTAGE "DATALINE SWITCH =48" FROM TOP OF BOX, UON, a = CIRCUIT CONTROLLED
- OS — LIGHTING OCCUPANCY SENSOR
- P — MOTION DETECTOR POWER PACK
- OS — ONE CIRCUIT WALL SWITCH WITH BUILT IN OCCUPANCY SENSOR. CONNECT SWITCHING TO LIGHTING FIXTURES AS REQUIRED. MOUNT AT +48"AFF TO THE TOP OF THE SWITCH BOX, UON.

RECEPTACLE SYMBOLS

- CONVENIENCE RECEPTACLE - DUPLEX AT + 18" AFF AND NOT LESS THAN 15" FROM BOTTOM OF BOX U.O.N.
- GFCI CONVENIENCE RECEPTACLE - DUPLEX AT +18" AFF AND NOT LESS THAN 15" FROM BOTTOM OF BOX U.O.N.
- RECEPTACLE - DOUBLE DUPLEX AT + 18" AFF AND NOT LESS THAN 15" FROM BOTTOM OF BOX U.O.N.
- SINGLE RECEPTACLE - NEMA 5-20R UON, AT + 18" AFF AND NOT LESS THAN 15" FROM BOTTOM OF BOX U.O.N.
- SINGLE RECEPTACLE - NEMA L21 - 208 VOLT, THREE PHASE, 5 WIRE, AT + 18" AFF UON AND NOT LESS THAN 15" FROM BOTTOM OF BOX U.O.N.
- C — DOUBLE DUPLEX RECEPTACLE WITH (1) CONTROLLED DUPLEX AND (1) UNCONTROLLED DUPLEX, AT +18" AFF AND NOT LESS THAN 15" FROM BOTTOM OF BOX U.O.N.
- 3-CHANNEL SURFACE RACEWAY, INSTALL AT +36" AFF UON. RACEWAY SHALL BE WIREMOLD #5500.
- FLOOR BOX WITH (2) DUPLEX RECEPTACLES AND DATA OUTLETS. QUANTITY OF DATA OUTLETS AS INDICATED ON THE FLOOR PLANS.

POWER DISTRIBUTION SYMBOLS

- PANELBOARD - SURFACE OR FLUSH MOUNTED.
- LCP — LIGHTING CONTROL CABINET.
- EM — EMERGENCY POWER INVERTER.
- J — JUNCTION BOX - CEILING OR WALL MOUNTED, SIZE PER CEC, TAPE AND TAG WIRES.
- MAIN SWITCHBOARD OR DISTRIBUTION PANEL.
- M — MOTOR
- 30 — RATING AS INDICATED.
- 60 — UNFUSED DISCONNECT SWITCH - RATING AS INDICATED.
- 100 — FUSED DISCONNECT SWITCH - SIZE FUSES PER MOTOR MANUFACTURER'S RECOMMENDATIONS. RATING AS INDICATED.
- II — MAGNETIC STARTER - NEMA SIZE INDICATED.
- T — TRANSFORMER - SEE SINGLE LINE FOR REQUIREMENTS.
- GROUND ROD.
- P — IN-GRADE ELECTRICAL PULL BOX WITH TRAFFIC RATED LID.
- L — IN-GRADE LIGHTING PULL BOX WITH TRAFFIC RATED LID.
- C — IN-GRADE COMMUNICATION PULL BOX WITH TRAFFIC RATED LID.
- EV1 — SINGLE EV CHARGER FOR BUS
- EV2 — DOUBLE EV CHARGER FOR CAR

POWER DISTRIBUTION SINGLE LINE SYMBOLS

- DRAW-OUT CIRCUIT BREAKER.
- CIRCUIT BREAKER.
- FUSED SWITCH.
- M — "PG&E" METER W/ CURRENT TRANSFORMER.
- TRANSFORMER.
- NORMALLY OPENED, AUXILIARY CONTACT.
- NORMALLY CLOSED, AUXILIARY CONTACT.
- AUTOMATIC TRANSFER SWITCH.
- EMERGENCY GENERATOR.

WIRING & CONDUIT RUN SYMBOLS

- CONDUIT - CONCEALED IN WALLS OR CEILING.
- CONDUIT - EXPOSED.
- CONDUIT - IN OR BELOW FLOOR: 3/4"MIN.
- EXISTING CONDUIT, CABLES OR DEVICE
- #10, G — CONDUIT - HOME RUN TO PANEL, TERMINAL CABINET, ETC. RUNS MARKED WITH CROSSHATCHES INDICATE NUMBER OF #12 AWG WIRES. CROSSHATCH WITH SUBSCRIPT "G" INDICATES GREEN GROUND WIRE. SIZE CONDUIT ACCORDING TO SPECIFICATIONS AND APPLICABLE CODE. CROSSHATCHES WITH "#10" INDICATES WIRE SIZE OTHER THAN #12'S.
- FLEX CONDUIT WITH CONNECTION.
- CONDUIT - STUB UP.
- CONDUIT - STUB DOWN.
- CONDUIT EMERGENCY SYSTEM.
- CAPPED CONDUIT.
- CONDUIT CONTINUATION.

WATTSTOPPER DIGITAL LIGHTING MANAGEMENT CONTROLS

- LCP — WATTSTOPPER LMCP24
- LMRC 101 — WATTSTOPPER LMRC-101
- LMRC 211 — WATTSTOPPER LMRC-211
- LMRC 212 — WATTSTOPPER LMRC-212
- LMRC 213 — WATTSTOPPER LMRC-213
- PC — WATTSTOPPER LMDC-100, CEILING MOUNT
- 101 — WATTSTOPPER LMDW-101, + 48" AFF TO TOP OF THE BOX, UON.
- DL — WATTSTOPPER LMLS-500, CEILING/WALL MOUNT
- \$101 — WATTSTOPPER LMSW-101, + 48" AFF TO TOP OF THE BOX, UON.
- \$102 — WATTSTOPPER LMSW-102, + 48" AFF TO TOP OF THE BOX, UON.

COMMUNICATIONS SYMBOLS

- 19" FLOOR MOUNTED DATA RACK.
- DATA/TEL STATION AT +18" AFF UON WITH (1) DATA OUTLET. CONNECT DATA/TEL OUTLETS OUTLETS PER THE DATA/TEL RISER DIAGRAM. STUB CONDUIT INTO AVAILABLE CEILING SPACE.
- (2) — DATA/TEL STATION AT +18" AFF UON WITH (2) DATA OUTLETS. CONNECT DATA/TEL OUTLETS OUTLETS PER THE DATA/TEL RISER DIAGRAM. STUB CONDUIT INTO AVAILABLE CEILING SPACE.
- WAP — (2) DATA OUTLETS FOR WIRELESS ACCESS POINT EQUIPMENT TO BE MOUNTED IN CEILING CHASE.
- S — INTERIOR SPEAKER WALL MOUNTED AT + 8'-0" AFF UON. CONNECT SPEAKER PER THE PA/CLOCK RISER DIAGRAM
- S — CEILING MOUNTED SPEAKER. CONNECT SPEAKER PER THE PA/CLOCK RISER DIAGRAM
- S — FLUSH MOUNTED EXTERIOR SPEAKER AT +8'-0" AFF UON. CONNECT EXTERIOR SPEAKER PER THE PA/CLOCK RISER DIAGRAM.
- COMBINATION FLUSH MOUNTED CLOCK/SPEAKER DEVICE AT +8'-0" AFF UON. CONNECT CLOCK/SPEAKER PER THE PA/CLOCK RISER DIAGRAM. PROVIDE 3/4"C TO ACCESSIBLE CEILING.
- HDMI DEVICE. CONNECT PER A 4 11/16" EXTRA DEEP BOX WITH A 2 GANG RING THROUGH 1 1/4"C TO CEILING.

FIRE ALARM SYMBOLS

- FACP — FIRE ALARM CONTROL PANEL.
- RPS — REMOTE POWER SUPPLY.
- AMP — EVAC SPEAKER AMPLIFIER.
- FATC — FIRE ALARM TERMINAL CABINET.
- ANN — REMOTE FIRE ALARM ANNUNCIATOR.
- SMOKE DETECTOR
- F — PULL STATION
- HORN STROBE

MEP COMPONENT ANCHORAGE NOTE

ALL MECHANICAL, PLUMBING, AND ELECTRICAL COMPONENTS SHALL BE ANCHORED AND INSTALLED PER THE DETAILS ON THE DSA APPROVED CONSTRUCTION DOCUMENTS. THE FOLLOWING COMPONENTS SHALL BEANCHORED OR BRACED TO MEET THE FORCE AND DISPLACEMENT REQUIREMENTS PRESCRIBED IN THE 2019 CBC, SECTIONS 1617A.1.18 THROUGH 1617A.1.26 AND ASCE 7-16 CHAPTER 13, 26 AND 30.

1. ALL PERMANENT EQUIPMENT AND COMPONENTS.
2. TEMPORARY, MOVABLE OR MOBILE EQUIPMENT THAT IS PERMANENTLY ATTACHED (e.g., HARD WIRED) TO THE BUILDING UTILITY SERVICES SUCH AS ELECTRICITY, GAS OR WATER. "PERMANENTLY ATTACHED" SHALL INCLUDE ALL ELECTRICAL CONNECTIONS EXCEPT PLUGS FOR 110/220 VOLT RECEPTACLE HAVING A FLEIXBLE CABLE.
3. TEMPORARY, MOVABLE OR MOBILE EQUIPMENT WHICH IS HEAVIER THAN 400 OR HAS A CENTER OF MASS LOCATED 4 FEET OR MORE ABOVE THE ADJACENT FLOOR OR ROOF LEVEL THAT DIRECTLY SUPPORT THE COMPONENT IS REQUIRED TO BE RESTRAINED IN A MANNER APPROVED BY DSA.

THE FOLLOWING MECHANICAL AND ELECTRICAL COMPONENTS SHALL BE POSITIVELY ATTACHED TO THE STRUCTURE, BUT NEED NOT DEMONSTRATE DESIGN COMPLIANCE WITH THE REFERENCES NOTED ABOVE. THESE COMPONENTS SHALL HAVE FLEXIBLE CONNECTIONS PROVIDED BETWEEN THE COMPONENT AND ASSOCIATED DUCTWORK, PIPING, AND CONDUIT. FLEXIBLE CONNECTIONS MUST ALLOW MOVEMENT IN BOTH TRANSVERSE AND LINGITUDINAL DIRECTIONS:

A. COMPONENTS WEIGHING LESS THAN 400 POUNDS AND HAVE A CENTER OF MASS LOCATED 4 FEET OR LESS ABOVE THE ADJACENT FLOOR OF ROOF LEVEL THAT DIRECTLY SUPPORT THE COMPONENT.

B. COMPONENTS WEIGHING LESS THAN 20 POUNDS, OR IN THE CASE OF DISTRIBUTED SYSTEMS, LESS THAN 5 POUNDS PER FOOT, WHICH ARE SUSPENDED FROM A ROOF OR FLOOR OR HUNG FROM A WALL.

THE ANCHORAGE OF ALL MECHANICAL, ELECTRICAL AND PLUMBING COMPONENTS SHALL BE SUBJECT TO THE APPROVAL OF THE DESIGN PROFESSIONAL IN GENERAL RESPONSIBLE CHARGE OR STRUCTURAL ENGINEER DELEGATED RESPONSIBILITY AND ACCEPTANCE BY DSA. THE PROJECT INSPECTOR WILL VERIFY THAT ALL COMPONENTS AND EQUIPMENT HAVE BEEN ANCHORED IN ACCORDANCE WITH THE ABOVE REQUIREMENTS.

PIPING, DUCTWORK, AND ELECTRICAL DISTRIBUTION SYSTEM BRACING NOTE

PIPING, DUCTWORK, AND ELECTRICAL DISTRIBUTION SYSTEMS SHALL BE BRACED TO COMPLY WITH THE FORCES AND DISPLACEMENTS PRESCRIBED IN ASCE 7-16 SECTION 13.3 AS DEFINED IN ASCE 7-16 SECTION 13.6.5, 13.6.6, 13.6.7, 13.6.8; AND 2019 CBC, SECTIONS 1617A.1.24, 1617A.1.25 AND 1617A.1.26.

THE METHOD OF SHOWING BRACING AND ATTACHMENTS TO THE STRUCTURE FOR THE IDENTIFIED DISTRIBUTION SYSTEM ARE AS NOTED BELOW. WHEN BRACING AND ATTACHMENTS ARE BASED ON A PREAPPROVED INSTALLATION GUIDE (E.G., SMACNA OR OSHPD OPM FOR 2013 CBC OR LATER), COPIES OF THE BRACING SYSTEM INSTALLATION GUIDE OR MANUAL SHALL BE AVAILABLE ON THE JOBSITE PRIOR TO THE START OF AND DURING THE HANGING AND BRACING OF THE DISTRIBUTION SYSTEM. THE STRUCTURAL ENGINEER OF RECORD SHALL VERIFY THE ADEQUACY OF THE STRUCTURE TO SUPPORT THE HANGER AND BRACE LOADS.

MECHANICAL PIPING (MP), MECHANICAL DUCTS (MD), PLUMBING PIPING (PP), ELECTRICAL DISTRIBUTION SYSTEMS (E):

MP☐ MD☐ PP☐ E☒ - OPTION 1: DETAILED ON THE APPROVED DRAWINGS WITH PROJECT SPECIFIC NOTES AND DETAILS.

MP☐ MD☐ PP☐ E☐ - OPTION 2: SHALL COMPLY WITH THE APPLICABLE OSHPD PRE-APPROVED (OPM #) #

GENERAL NOTES:

1. THE CONTRACTOR SHALL BE LICENSED BY THE STATE OF CALIFORNIA C-10 AND SHALL COMPLY WITH ALL APPLICABLE CODES AND REGULATIONS. MATERIALS AND EQUIPMENT SHALL BE U.L. LISTED AND LABELED FOR THE APPLICATION.
2. THE CONTRACTOR SHALL OBTAIN AND PAY FOR ALL PERMITS, LICENSES AND INSPECTION FEES REQUIRED BY THIS CONTRACT WORK.
3. PRIOR TO SUBMITTING A BID THE CONTRACTOR SHALL VISIT THE SITE, REVIEW THE EXISTING CONDITIONS AND ALLOW FOR LABOR, MATERIAL AND COORDINATION THAT IS NECESSARY TO PROVIDE A COMPLETE INSTALLATION OF EACH SYSTEM. THE CONTRACTOR SHALL OBTAIN AND BE FAMILIAR WITH ALL OTHER TRADES. THE CONTRACTOR SHALL BE RESPONSIBLE FOR ALL ELECTRICAL WORK NOTED AND CALLED OUT ON ALL CONTRACT DOCUMENTS. THE CONTRACTOR SHALL BE RESPONSIBLE FOR COORDINATION BETWEEN OTHER TRADES ON PROJECT.
4. THE CONTRACTOR SHALL BE RESPONSIBLE FOR THE SAFETY OF PERSONS AND PROPERTY AND SHALL PROVIDE INSURANCE COVERAGE AS NECESSARY FOR LIABILITY, PERSONAL, PROPERTY DAMAGE, TO FULLY PROTECT THE OWNER, ARCHITECT AND ENGINEER FROM ANY AND ALL CLAIMS RESULTING FROM THIS WORK.
5. THE CONTRACTOR SHALL MAINTAIN RECORD DRAWINGS AT THE PROJECT SITE INDICATING ALL MODIFICATIONS TO ELECTRICAL SYSTEMS. THE CONTRACTOR SHALL AT THE CONCLUSION OF THE PROJECT PROVIDE ACCURATE "AS-BUILT" DRAWINGS. "AS-BUILT" DRAWINGS SHALL SHOW ACTUAL CHANGES TO ORIGINAL ELECTRICAL DRAWING, SHOW LOCATIONS OF PULL BOXES, CONDUIT RUNS AND WIRING CHANGES. THE CONTRACTOR SHALL PROVIDE ONE (1) HARDCOPY SET OF DOCUMENT DRAWINGS AND ONE (1) SET OF DOCUMENT DRAWINGS IN ELECTRONIC CAD FILE THAT REPRESENTS THE ACTUAL "AS-BUILTS". CAD FILES SHALL BE AUTOCAD 2010 FORMAT.
6. ALL MATERIALS PROVIDED TO THE PROJECT SHALL BE NEW. THE CONTRACTOR SHALL BE RESPONSIBLE TO PROVIDE AND INSTALL ALL INCIDENTAL MATERIALS REQUIRED FOR A COMPLETE INSTALLATION.
7. THE CONTRACTOR SHALL PROVIDE TO THE ARCHITECT A CONSTRUCTION SCHEDULE OF ELECTRICAL WORK. THE CONSTRUCTION SCHEDULE SHALL IDENTIFY ALL SIGNIFICANT MILESTONES WITH COMPLETION DATES.
8. THE CONTRACTOR SHALL PROVIDE ALL REQUIRED "CUTTING, PATCHING, EXCAVATION, BACKFILL AND REPAIRS" NECESSARY TO RESTORE DAMAGED SURFACES TO EQUAL OR BETTER THAN ORIGINAL CONDITIONS EXISTING AT START OF WORK. THE CONTRACTOR SHALL CONTACT "UNDERGROUND SERVICES ALERT" FOR LOCATION OF EXISTING UTILITIES PRIOR TO COMMENCEMENT OF UNDERGROUND WORK.
9. THE CONTRACTOR SHALL BE RESPONSIBLE FOR PAINTING ALL EXPOSED CONDUITS AND ELECTRICAL EQUIPMENT. REFER TO ARCHITECTS PAINTING SECTION FOR REQUIREMENTS.
10. ALL ELECTRICAL EQUIPMENT INSTALLED OUTDOORS SHALL BE WEATHERPROOF. EXTERIOR CONDUITS RUN INTO BUILDINGS SHALL BE INSTALLED WITH FLASHING, CAULKED AND SEALED. CONDUITS FOR EXTERIOR ELECTRICAL DEVICES SHALL BE RUN INSIDE BUILDING UNLESS OTHERWISE NOTED ON DRAWINGS. ALL EXTERIOR CONDUITS SHALL BE "RSG" UNLESS OTHERWISE NOTED ON DRAWINGS.
11. ALL CONDUITS UNLESS OTHERWISE NOTED ON DRAWINGS SHALL HAVE AS A MINIMUM: TWO (2) #12'S WITH ONE (1) #12 GROUND. "TICK" MARKS SHOWN ON CIRCUITRY ARE FOR "ROUGH" ESTIMATING ONLY. THE CONTRACTOR SHALL BE RESPONSIBLE FOR ALL WIRES AND WIRE SIZES REQUIRED BY LATEST CODE.
12. COORDINATE ALL CONDUIT RUNS, ELECTRICAL EQUIPMENT AND PANELS WITH ALL OTHER WORK TO AVOID CONFLICTS.
13. SEE ARCHITECTURAL DOCUMENTS FOR EXACT PLACEMENT OF LIGHTING FIXTURES AND DEVICES. THE ELECTRICAL CONTRACTOR SHALL BE RESPONSIBLE FOR VERIFICATION OF CEILING TYPES FROM ARCHITECTURAL DOCUMENTS AND PROVIDE AND INSTALL ALL REQUIRED FIXTURE MOUNTING HARDWARE. PROVIDE AND INSTALL U.L. LISTED FIRE STOP ENCLOSURES FOR ALL RECESSED FIXTURES IN FIRE RATED CEILINGS.
14. THE CONTRACTOR SHALL PROVIDE IN EVERY CONDUIT A DRAW STRING FOR USE IN FUTURE CONSTRUCTION.
15. POWER FEEDERS MAY NOT BE SHOWN ON THE DRAWINGS, REFER TO THE SINGLE LINE DIAGRAM FOR CONDUIT AND FEEDER INFORMATION. ALL DRAWINGS ARE DIAGRAMMATIC INDICATING LOCATION OR POSITION OF EQUIPMENT. FIELD VERIFY CONDITIONS PRIOR TO INSTALLATION OF ANY WORK.
16. MANUFACTURER'S RECOMMENDATIONS FOR CONDUCTOR SIZING, CIRCUIT BREAKER OR FUSE PROTECTION OF ELECTRICALLY OPERATED EQUIPMENT MAY DIFFER FROM THOSE INDICATED ON DRAWINGS. CONTRACTOR SHALL CONFIRM RATINGS PRIOR TO ORDERING EQUIPMENT. PROVIDE ELECTRICAL PROTECTION TO EQUIPMENT IN ACCORDANCE TO MANUFACTURER'S SPECIFICATIONS AND PER NATIONAL ELECTRICAL CODE REQUIREMENTS.
17. CONTRACTOR SHALL REVIEW EQUIPMENT REQUIREMENTS OF OTHER TRADES AND PROVIDE POWER CIRCUITS AND CONNECTIONS TO ELECTRICALLY OPERATED EQUIPMENT.
18. EFFECTIVELY BOND ELECTRICAL CABINETS, ENCLOSURES AND CONDUIT RACEWAYS TO CODE APPROVED GROUND AS PART OF THE CONTINUOUS GROUNDING SYSTEM.
19. MEASEURE THE 3-PHASE AND PHASE TO NEUTRAL SERVICE VOLTAGE FOR 208/120V PANELS PRIOR TO ENERGIZING ANY PANELS OR EQUIPMENT. AVOID ENERGIZING 208/120V PANELS PHASE TO NEUTRAL VOLTAGE ABOVE 130 VOLTS. TRANSFORMER TAP SETTING MAY REQUIRE CHANGING.
20. MEASURE THE 1-PHASE AND PHASE TO NEUTRAL SERVICE VOLTAGE FOR 240/120V PANELS PRIOR TO ENERGIZING ANY PANELS OR EQUIPMENT. AVOID ENERGIZING 240/120V PANELS PHASE TO NEUTRAL VOLTAGE ABOVE 130 VOLTS.
21. DO NOT SUBSTITUTE SPECIFIED MATERIAL OR EQUIPMENT WITHOUT FIRST OBTAINING APPROVAL FROM THE OWNER OR HIS REPRESENTATIVE.
22. IDENTIFY ALL ABOVE CEILING JUNCTION BOXES COVERS WITH PANEL AND CIRCUITS IN LEGIBLE PRINT USING BLACK INDELIBLE INK. ABOVE CEILING JUNCTION BOXES SHALL ALSO BE LABELED AT THE REAR INTERIOR BOX WITH AN INDELIBLE BLACK MARKER.
23. LABEL ALL WALL AND/OR WIREMOLD MOUNTED OUTLET DEVICES WITH PANEL CIRCUIT IDENTIFICATION WITH BOLD TYPE-PRINTED LABELING. BLACK LETTERING ON WHITE BACKGROUND PREFERRED.
24. DERATE CONDUCTORS IN RACEWAYS IN ACCORDANCE WITH NEC CODE REQUIREMENTS. PANEL FEEDERS TO WIREMOLDS CAN ENTER AT VARIOUS LOCATIONS TO LIMIT CONDUCTOR CIRCUITS PER WIREMOLD CAPACITIES.

DRAWING INDEX

SHEET NO.	SHEET TITLE
E0.1	ELECTRICAL COVER SHEET
E1.1	ELECTRICAL SITE PLAN
E2.1	ELECTRICAL DEMO FLOOR PLANS - WINGS #1, #2, #3 & #4
E3.1	ELECTRICAL NEW FLOOR PLANS - WINGS #1, #2, #3 & #4
E4.1	DEMO SINGLE LINE DIAGRAM
E4.2	NEW SINGLE LINE DIAGRAM
E4.3	PANEL SCHEDULES
E5.1	ELECTRICAL DETAILS
E5.2	ELECTRICAL DETAILS
E5.3	ELECTRICAL DETAILS
E5.4	ELECTRICAL DETAILS

ABBREVIATIONS

A	AMPERE
ABV	ABOVE
AF	AMP FRAME OR AMP FUSE
AFF	ABOVE FINISHED FLOOR
ARCH	ARCHITECTURAL
AS	AMP SWITCH
AT	AMP TRIP
ATS	AUTOMATIC TRANSFER SWITCH
BKR	BREAKER
BLDG	BUILDING
C	CONDUIT
CATV	CABLE TELEVISION
CB	CIRCUIT BREAKER
CD	CANDELAS
CKT	CIRCUIT
CL	CENTER LINE
CLG	CEILING
CO	CONDUIT ONLY
CTR	CENTER
(D)	DEMOLISH
DET	DETAIL
DIM	DIMENSION
DISTR	DISTRIBUTION
DWG	DRAWING
(E)	EXISTING
EM	EMERGENCY
EQPT	EQUIPMENT
FA	FIRE ALARM
FACP	FIRE ALARM CONTROL PANEL
(F)	FUTURE
FIN	FINISH
FL	FLOOR
G , GND	GROUND
HGT	HEIGHT
HP	HORSEPOWER
IC	INTERCOM
IDF	INTERMEDIATE DISTRIBUTION FRAME
JB	JUNCTION BOX
KAIC	KILOAMPERE INTERRUPTING CAPACITY
KV	KILOVOLT
KVA	KILOVOLT AMPERES
KW	KILOWATT
LTG	LIGHTING
MCM	THOUSAND CIRCULAR MILS
MDF	MAIN DISTRIBUTION FRAME
MECH	MECHANICAL
MH	MANHOLE
MTD	MOUNTED
MTG	MOUNTING
(N)	NEW
NC	NORMALLY CLOSED
NIC	NOT IN CONTRACT
NIEC	NOT IN ELECTRICAL CONTRACT
NO	NUMBER/ NORMALLY OPEN
NTS	NOT TO SCALE
O.C.	ON CENTER
P	POLE CIRCUIT BREAKER
PA	PUBLIC ADDRESS
PB	PULL BOX
PF	POWER FACTOR
PH	PHASE
PNL	PANEL
(R)	EXISTING TO BE RELOCATED
REQD	REQUIRED
REQT	REQUIREMENT(S)
RM	ROOM
RSC	RIGID STEEL CONDUIT
SHT	SHEET
SW	SWITCH
SWBD	SWITCHBOARD
TC	TERMINAL CABINET
TEL	TELEPHONE
TYP	TYPICAL
UON	UNLESS OTHERWISE NOTED
V	VOLT
W	WATT
WP	WEATHERPROOF
XFMR	TRANSFORMER

IDENTIFICATION STAMP
DIV. OF THE STATE ARCHITECT
APP: 01-119530 INC:
REVIEWED FOR
SS ☑ FLS ☑ ACS ☑
DATE: 10/26/2021

aedis architects
www.aedisarchitects.com
387 S. 1st Street, Suite 300
San Jose, CA 9511
tel: (408)-300-516
fax: (408)-300-512

PROJECT

COLLEGE PARK ELEMENTARY SCHOOL - HVAC REPLACEMENT

SAN MATEO-FOSTER CITY SCHOOL DISTRICT

CONSULTANT

REGISTERED PROFESSIONAL ENGINEER
SAMMY S. FERNANDEZ
E16890
Exp. 06/30/23
ELECTRICAL
STATE OF CALIFORNIA

American Consulting Engineer Electrical, Inc.
1590 The Alameda, Suite 200
San Jose, CA 95126
JOB # EK21030.00
408/236-231
Fax: 408/236-231

STAMP

STATE

DSA FILE NUMBER 41-26

APPL # 01-119530

REVISIONS

No.	Description	Date
△		

MILESTONES

DD	
90% CD	
DSA SUB	05/26/2021
BACKCHECK	10/07/2021

SHEET

ELECTRICAL COVER SHEET

DATE 10/07/2021

JOB # 2021005.01

SHEET #

E0.1

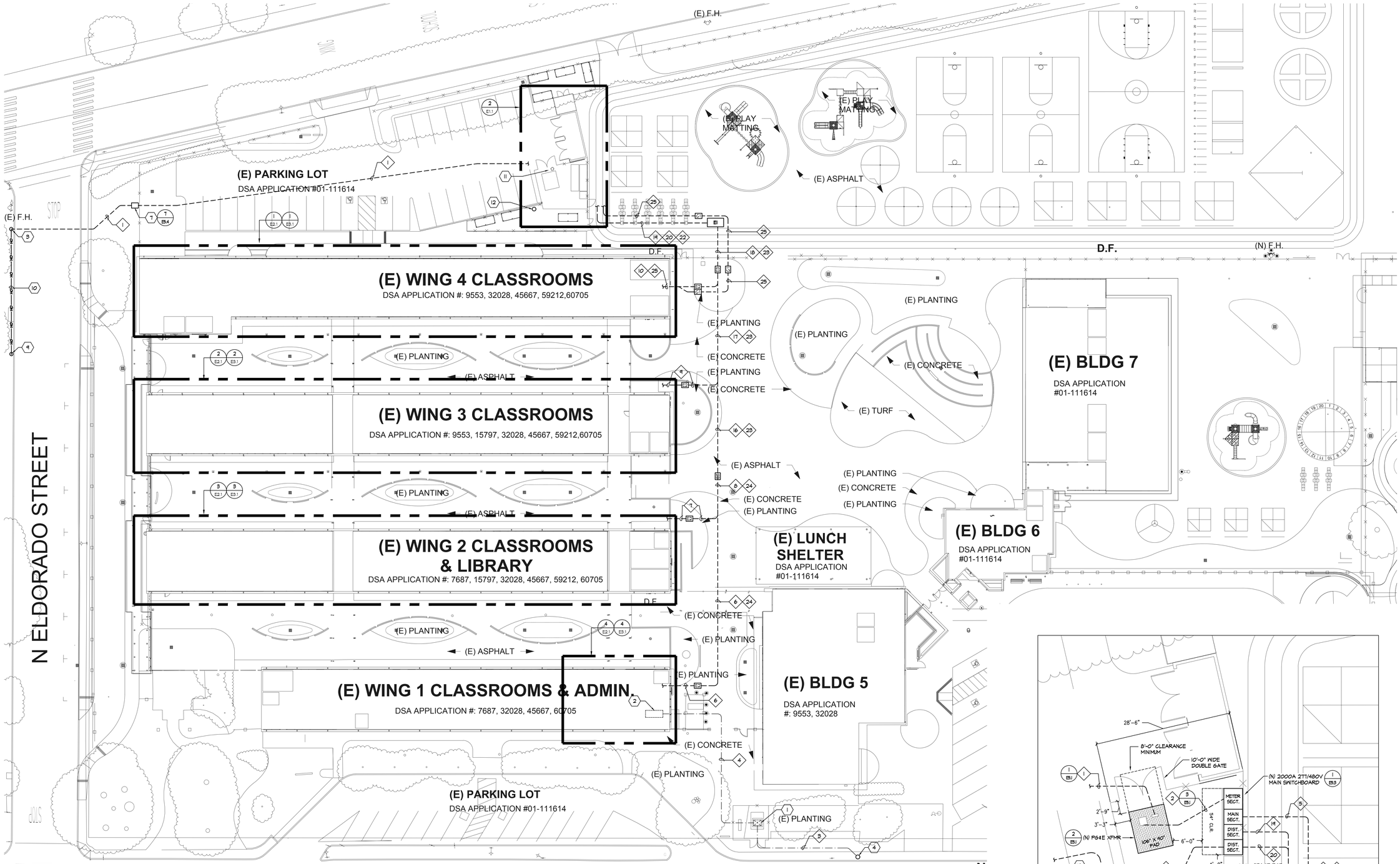

1 ELECTRICAL SITE PLAN

E1.1 SCALE: 1" = 20'-0"

GENERAL NOTES:

1. CONTRACTOR SHALL COORDINATE UNDERGROUND REQUIREMENTS WITH ALL OTHER TRADES TO AVOID CONFLICTS.
2. CONTRACTOR SHALL BE RESPONSIBLE FOR ANY SAW CUTTING AND REMOVAL OF EXISTING SURFACES TO FACILITATE UNDERGROUND SYSTEMS. THE CONTRACTOR SHALL PATCH AND REPAIR ALL DAMAGED AND CUT SURFACES TO MATCH ADJACENT.
3. CONTRACTOR TO SITE SURVEY EXISTING CONDITIONS AND LOCATIONS OF EXISTING UNDERGROUND SYSTEMS, WHERE NEW TRENCH WORK OCCURS PRIOR TO BIDDING. CONTRACTOR SHALL TAKE PROPER PRECAUTIONS TO ENSURE EXISTING UNDERGROUND SYSTEMS/CONDUIT/PIPES ARE NOT DAMAGED DURING INSTALLATION. CONTRACTOR IS RESPONSIBLE FOR ANY REPAIRS REQUIRED IN THE EVENT THE EXISTING UNDERGROUND SYSTEMS ARE DAMAGED AS A RESULT OF THE NEW ELECTRICAL TRENCH WORK.
4. INSTALL PG&E PRIMARY TRENCH PER 1/ E5.1.
5. INSTALL PG&E SECONDARY TRENCH PER 3/ E5.1.
6. PG&E TRANSFORMER PAD SHALL BE PER 2/ E5.1.
7. ALL ON SITE TRENCH SHALL BE INSTALLED PER 3/ E5.4.
8. SEE THE DEMO SINGLE LINE DIAGRAM FOR ADDITIONAL REQUIREMENTS.
9. SEE NEW SINGLE LINE DIAGRAM FOR FEEDER CABLE AND CONDUIT REQUIREMENTS.
10. THE CONTRACTOR SHALL MANDREL THROUGH THE ENTIRE PG&E CONDUIT SYSTEM. COORDINATE WITH PG&E FOR ADDITIONAL REQUIREMENTS AND PROCEDURES.

SHEET NOTES:

1. EXISTING PG&E TRANSFORMER TO BE REMOVED.
2. EXISTING MAIN SWITCHBOARD TO BE CONVERTED TO DISTRIBUTION PANEL 'DP1'.
3. NEW PG&E UTILITY POLE WITH NEW RISER PROVIDED BY PG&E.
4. EXISTING PG&E POLE WITH RISER.
5. FUTURE PV DISTRIBUTION PANEL LOCATION. STUB CONDUIT INTO LOCATION OF CONDUIT FOR FUTURE GEAR.
6. FUTURE PV DISCONNECT SWITCH LOCATION. STUB CONDUIT INTO LOCATION OF CONDUIT ENTRY FOR FUTURE SWITCH.
7. NEW PG&E IN-GRADE PULL BOX.
8. STUB PV CONDUIT IN THIS LOCATION. CONDUIT TO BE STUBBED TO JUST OUTSIDE CONCRETE SIDEWALK.
9. EXISTING PG&E POLE TO REMAIN.
10. NEW OVERHEAD PRIMARY PROVIDED BY PG&E.
11. EXISTING EXTERIOR POLE AND LIGHT FIXTURE FOR PARKING LOT TO BE RELOCATED. THE EXISTING RAISED POLE BASE TO BE DEMOLISHED AND REMOVED. EXISTING LIGHTING CIRCUITRY IS TO BE REUSED. CONTRACTOR IS RESPONSIBLE TO LOCATE AND PREPARE THE EXISTING UNDERGROUND CIRCUITRY TO BE INTERCEPTED. REMOVE THE EXISTING LIGHTING CIRCUITRY FROM THE AREA OF NEW WORK.
12. RELOCATED POLE AND LIGHT FIXTURE WITH NEW POLE BASE TO THIS APPROXIMATE LOCATION.
13. PROVIDE NEW IN-GRADE PULL BOX AND NEW UNDERGROUND CONDUIT REQUIRED TO INTERCEPT THE EXISTING UNDERGROUND LIGHTING CIRCUITRY. EXTEND EXISTING CIRCUITRY WITH NEW CABLES. FOR SPLICES INSIDE THE IN-GRADE PULL BOX, PROVIDE POLARIS SUBMERSIBLE SPLICE CONNECTIONS.

CONDUIT SCHEDULE:

1. (N) (1) 4"C - PG&E PRIMARY
2. (N) (7) 5"C - PG&E SECONDARY
3. (E) (1) 4"C - PG&E PRIMARY
4. (E) (5) 5"C - PG&E SECONDARY
5. (N) (1) 1"C - PG&E COMMUNICATIONS
6. (N) (2) 2½"C - XFMR 'T1'
   (N) (1) 2"C - FUTURE PV
7. (N) (1) 2½"C - XFMR 'T2'
   (N) (1) 2"C - FUTURE PV
8. (N) (2) 2½"C - XFMR 'T1'
   (N) (1) 2½"C - XFMR 'T2'
   (N) (2) 2"C - FUTURE PV
9. (N) (1) 3"C - XFMR 'T3'
   (N) (1) 2"C - FUTURE PV
10. (N) (1) 3"C - XFMR 'T4'
    (N) (1) 2"C - FUTURE PV
11. NOT USED
12. NOT USED
13. NOT USED
14. NOT USED
15. NOT USED
16. (N) (2) 2½"C - XFMR 'T1'
    (N) (1) 2½"C - XFMR 'T2'
    (N) (1) 4"C - XFMR 'T5' (FUTURE)
    (N) (1) 2"C - XFMR 'T6' (FUTURE)
    (N) (1) 2½"C - XFMR 'T7' (FUTURE)
    (N) (5) 2"C - FUTURE PV
17. (N) (2) 2½"C - XFMR 'T1'
    (N) (1) 2½"C - XFMR 'T2'
    (N) (1) 3"C - XFMR 'T3'
    (N) (1) 4"C - XFMR 'T5' (FUTURE)
    (N) (1) 2"C - XFMR 'T6' (FUTURE)
    (N) (1) 2½"C - XFMR 'T7' (FUTURE)
    (N) (6) 2"C - FUTURE PV
18. (N) (2) 2½"C - XFMR 'T1'
    (N) (1) 2½"C - XFMR 'T2'
    (N) (1) 3"C - XFMR 'T3'
    (N) (1) 3"C - XFMR 'T4'
    (N) (1) 4"C - XFMR 'T5' (FUTURE)
    (N) (1) 2"C - XFMR 'T6' (FUTURE)
    (N) (1) 2½"C - XFMR 'T7' (FUTURE)
    (N) (7) 2"C - FUTURE PV
19. (N) (2) 2½"C - XFMR 'T1'
    (N) (1) 2½"C - XFMR 'T2'
    (N) (1) 3"C - XFMR 'T3'
    (N) (1) 3"C - XFMR 'T4'
    (N) (3) 4"C - SPARE POWER
20. (N) (1) 4"C - XFMR 'T5' (FUTURE)
    (N) (1) 2"C - XFMR 'T6' (FUTURE)
    (N) (1) 2½"C - XFMR 'T7' (FUTURE)
    (N) (3) 4"C - SPARE POWER
21. (N) (2) 3"C - FUTURE PV DISTRIBUTION
22. (N) (7) 2"C - FUTURE PV
23. (N) (4) 4"C - SPARE
24. NOT USED
25. (N) (1) 1"C - PG&E COMMUNICATIONS
    (N) (1) 2"C - FUTURE PV COMMUNICATIONS
26. (N) (1) 2"C - FUTURE PV COMMUNICATIONS

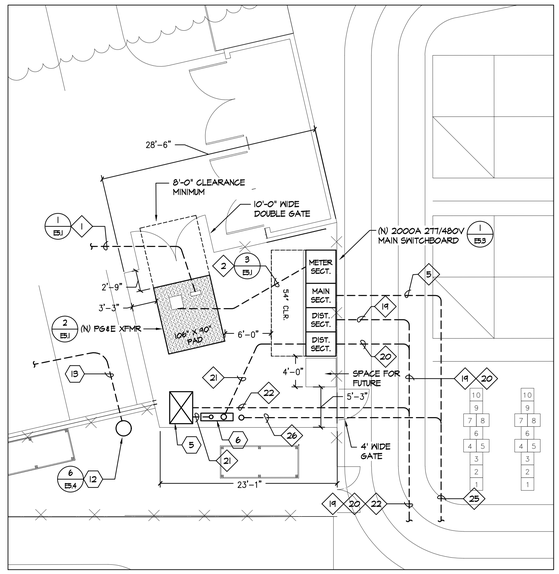

2 ELECTRICAL SWITCHGEAR DIMENSIONS

E1.1 SCALE: 1/8" = 1'-0"

PULLBOX SCHEDULE:

- E1 - NEW 4'-6"x8'-6" ELECTRIC / POWER PULLBOX WITH TRAFFIC RATED LID, LABEL LID 'POWER'.
- E2 - NEW B2436 ELECTRIC / POWER PULLBOX WITH TRAFFIC RATED LID, LABEL LID 'POWER'.
- E3 - NEW 3'x5' ELECTRIC / POWER PULLBOX WITH TRAFFIC RATED LID, LABEL LID 'POWER'.
- E4 - NEW B3048 ELECTRIC / POWER PULLBOX WITH TRAFFIC RATED LID, LABEL LID 'POWER'.
- C1 - NEW B2436 COMMUNICATIONS PULLBOX WITH TRAFFIC RATED LID, LABEL LID 'COMM.'.
- C2 - NEW B3048 COMMUNICATIONS PULLBOX WITH TRAFFIC RATED LID, LABEL LID 'COMM.'.

IDENTIFICATION STAMP
DIV. OF THE STATE ARCHITECT
APP: 01-119530 INC:
REVIEWED FOR
SS ☑ FLS ☑ ACS ☑
DATE: 10/26/2021

aedis architects
www.aedisarchitects.com
387 S. 1st Street, Suite 300
San Jose, CA 95113
tel: (408)-300-5160
fax: (408)-300-5125

PROJECT
COLLEGE PARK ELEMENTARY SCHOOL - HVAC REPLACEMENT

SAN MATEO-FOSTER CITY SCHOOL DISTRICT

CONSULTANT
REGISTERED PROFESSIONAL ENGINEER STAMP S. FERNANDEZ E16890 exp. 06/30/23 ELECTRICAL STATE OF CALIFORNIA

American Consulting Engineer Electrical, Inc.
1580 The Alameda, Suite 200
San Jose, CA 95126
JOB # EX21030.00
408/336-3310
Fax: 408/336-3311

STAMP

STATE
DSA FILE NUMBER 41-26
APPL # 01-119530

REVISIONS

No.	Description	Date
△		

MILESTONES

DD	
90% CD	
DSA SUB	05/26/2021
BACKCHECK	10/07/2021

SHEET
ELECTRICAL SITE PLAN

DATE 10/07/2021
JOB # 2021005.01
SHEET # E1.1

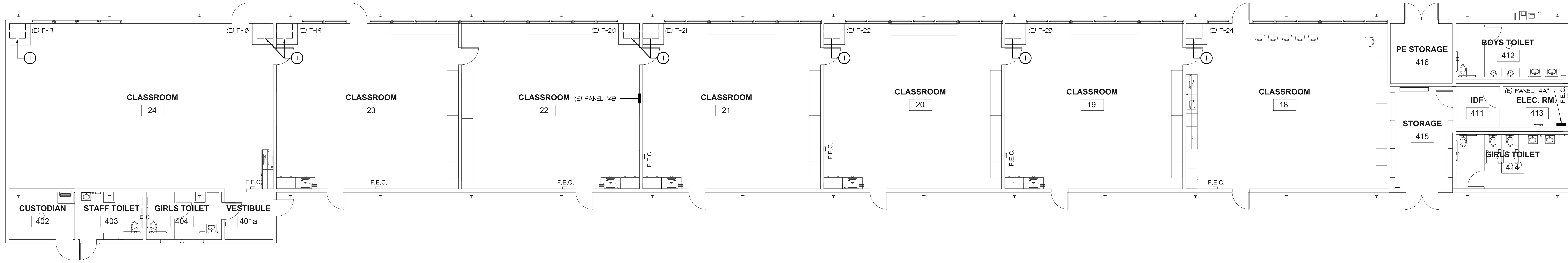

1 / E2.1
ELECTRICAL DEMO FLOOR PLAN - WING #4
SCALE: 1/8" = 1'-0"

N

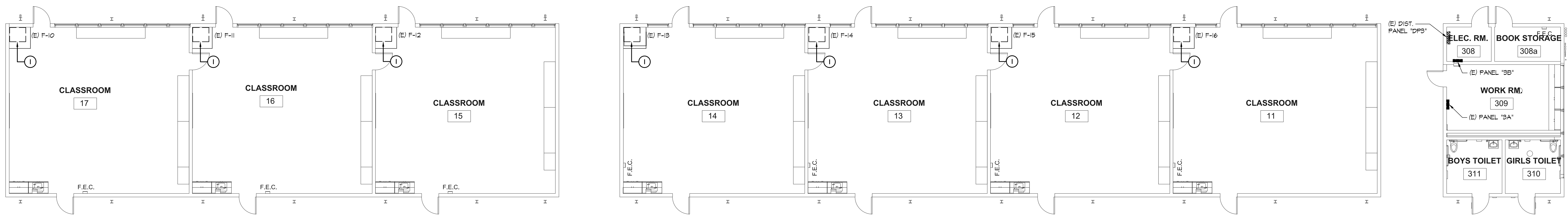

2 / E2.1
ELECTRICAL DEMO FLOOR PLAN - WING #3
SCALE: 1/8" = 1'-0"

N

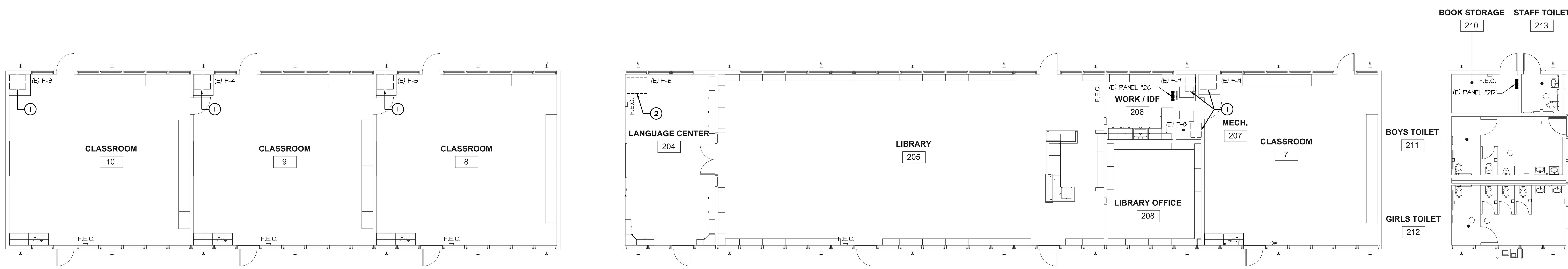

3 / E2.1
ELECTRICAL DEMO FLOOR PLAN - WING #2
SCALE: 1/8" = 1'-0"

N

GENERAL NOTES:

1. CONTRACTOR SHALL REFER TO MECHANICAL DRAWINGS FOR ADDITIONAL DEMO REQUIREMENTS.
2. EXISTING ELECTRICAL PANELS ARE TO REMAIN.
3. SEE NEW ELECTRICAL FLOOR PLANS FOR ADDTIONAL REQUIREMENTS.
4. SEE DEMO AND NEW SINGLE LINE DIAGRAMS FOR ADDTIONAL REQUIREMENTS.

DEMOLITION SHEET NOTES:

(1) EXISTING MECHANICAL UNIT TO BE DEMOLISHED. PULL EXISTING ELECTRICAL CIRCUITRY BACK TO SOURCE AND REMOVE. REMOVE ALL CONDUITS, J-BOXES AND DISCONNECT SWITCH ASSOCIATED WITH THE DEMOLISHED UNIT.

(2) EXISTING MECHANICAL UNIT AND CONNECTIONS TO REMAIN.

(3) EXISTING MAIN SWITCHBOARD TO BE CONVERTED TO DISTRIBUTION PANEL. REFER TO DEMOLITION SINGLE LINE DIAGRAM FOR ADDITIONAL REQUIREMENTS.

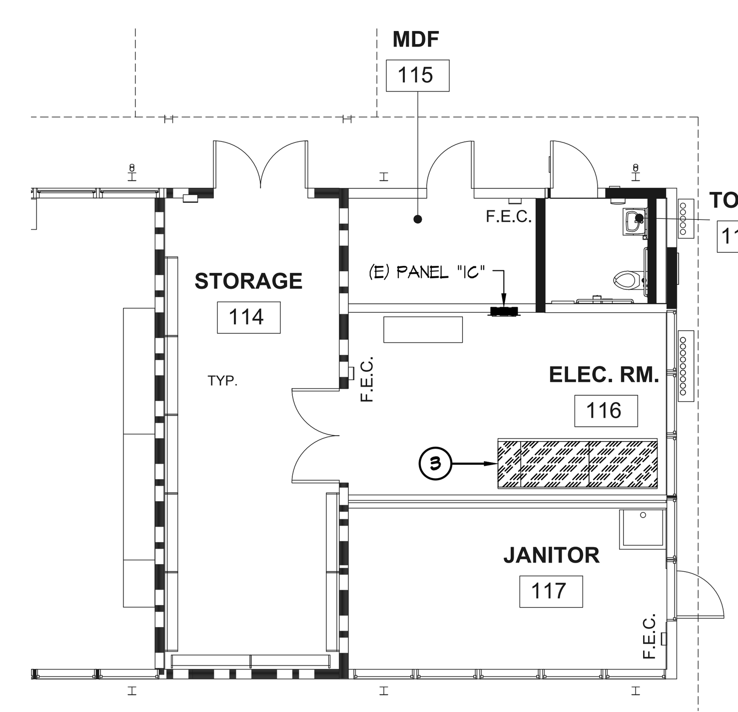

4 / E2.1
ELECTRICAL DEMO FLOOR PLAN - WING #1
SCALE: 1/8" = 1'-0"

N

BUILDING KEY

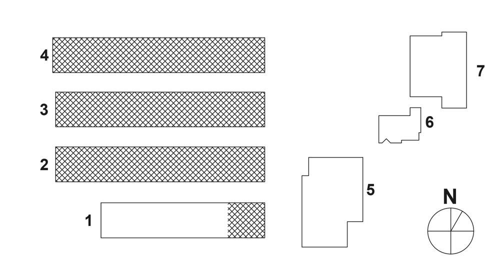

IDENTIFICATION STAMP
DIV. OF THE STATE ARCHITECT
APP: 01-119530 INC:
REVIEWED FOR
SS ☑ FLS ☑ ACS ☑
DATE: 10/26/2021

aedis architects
www.aedisarchitects.com
387 S. 1st Street, Suite 300
San Jose, CA 9511
tel: (408)-300-516
fax: (408)-300-512

PROJECT

COLLEGE PARK ELEMENTARY SCHOOL - HVAC REPLACEMENT

SAN MATEO-FOSTER CITY SCHOOL DISTRICT

CONSULTANT

REGISTERED PROFESSIONAL ENGINEER
SAMMY S. FERNANDEZ
E16890
Exp. 06/30/23
ELECTRICAL
STATE OF CALIFORNIA

American Consulting Engineer Electrical, Inc.
1590 The Alameda, Suite 200
San Jose, CA 95126
JOB # EK21030.00
408/236-231
Fax: 408/236-231

STAMP

STATE
DSA FILE NUMBER 41-26
APPL # 01-119530

REVISIONS

No.	Description	Date
△		

MILESTONES

DD	
90% CD	
DSA SUB	05/26/2021
BACKCHECK	10/07/2021

SHEET

ELECTRICAL DEMO FLOOR PLANS - WINGS #1, #2, #3, & #4

DATE 10/07/2021

JOB # 2021005.01

SHEET # E2.1

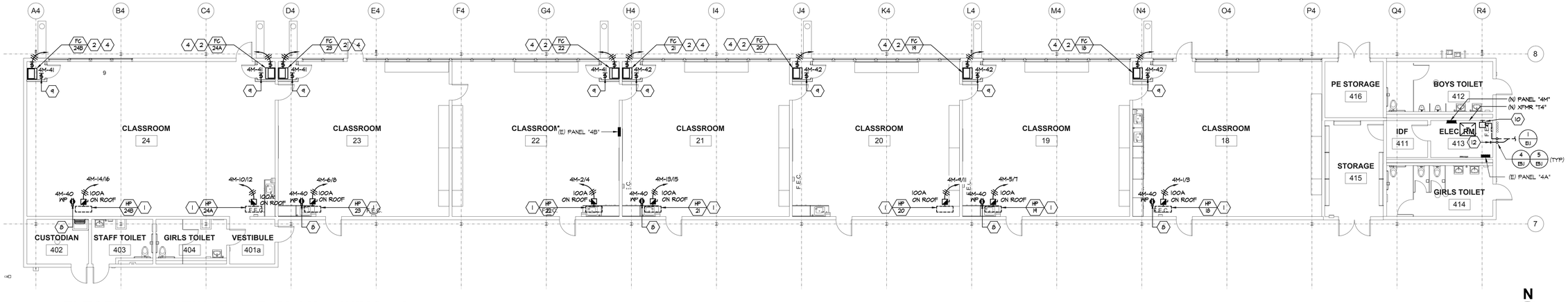

1 ELECTRICAL NEW FLOOR PLAN - WING #4

E3.1 SCALE: 1/8" = 1'-0"

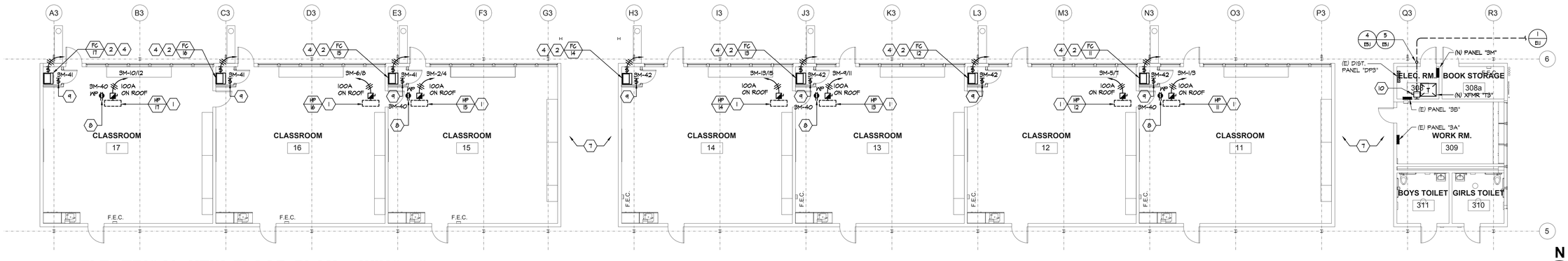

2 ELECTRICAL NEW FLOOR PLAN - WING #3

E3.1 SCALE: 1/8" = 1'-0"

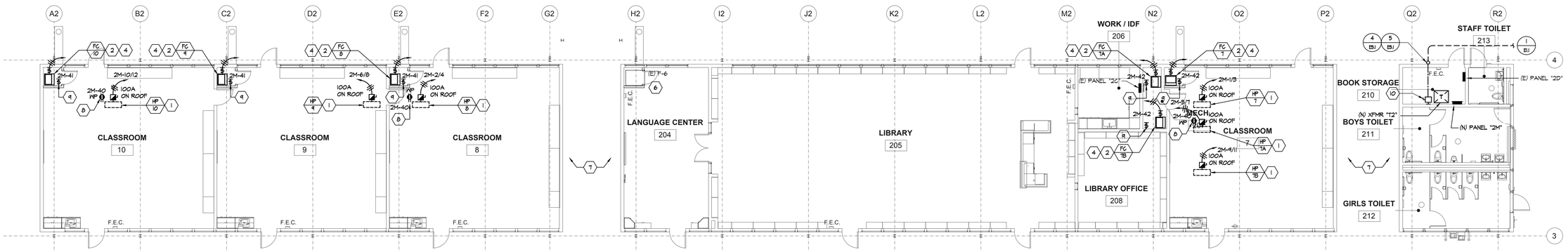

3 ELECTRICAL NEW FLOOR PLAN - WING #2

E3.1 SCALE: 1/8" = 1'-0"

GENERAL NOTES:

1. ALL CONDUITS SHALL BE ROUTED CONCEALED IN CEILING BELOW WHERE POSSIBLE. ALL EXPOSED CONDUITS SHALL BE PAINTED.
2. CONTRACTOR SHALL COORDINATE EXACT LOCATIONS AND POINTS OF CONNECTION FOR MECHANICAL UNIT WITH MECHANICAL CONTRACTOR. ADJUST LOCATION AND CONNECTION POINTS AS NEEDED.
3. SEE PANEL SCHEDULES AND SINGLE LINE DIAGRAM FOR POWER CONNECTION REQUIREMENTS.
4. COORDINATE WITH ARCHITECTURAL AND MECHANICAL DRAWINGS FOR ADDITIONAL REQUIREMENTS.
5. FUSED AND UNFUSED DISCONNECT SWITCHES SHALL BE 600V RATED, HEAVY DUTY CYCLE. FUSES FOR MECHANICAL UNITS SHALL BE SIZED PER THE MANUFACTURER'S RECOMMENDATION.

SHEET NOTES:

1. NEW 100A-2P, NEMA-3R, FUSED DISCONNECT SWITCH FOR MECHANICAL UNIT.
2. NEW 30A-2P, NEMA-1, FUSED DISCONNECT SWITCH FOR MECHANICAL UNIT.
3. NEW 30A-2P, NEMA-3R, FUSED DISCONNECT SWITCH FOR MECHANICAL UNIT.
4. INDOOR UNIT IS POWER BY THE OUTDOOR UNIT. ROUTE HOMERUN CIRCUIT TO ASSOCIATED OUTDOOR UNIT. REFER TO MECHANICAL SCHEDULE MP0.02 FOR ADDITIONAL REQUIREMENTS.
5. EXISTING MAIN SWITCHBOARD TO BE CONVERTED TO DISTRIBUTION PANEL.
6. EXISTING MECHANICAL UNIT AND CONNECTIONS TO REMAIN.
7. MOUNT CONDUIT ADJACENT TO CHASE AND ROUTE ACROSS THE HALLWAY.
8. PROVIDE NEW WEATHERPROOF GFCI RECEPTACLE. RECEPTACLE SHALL BE MOUNTED ON A WEATHERPROOF BOX WITH WHILE-IN-USE COVER. COVER SHALL BE INTERMATIC WP1011MXD "BOSS".
9. PROVIDE MOTOR RATED SWITCH AND 120V POWER FOR CONDENSATION PUMP.
10. NEW 400A-3P, NEMA 1, UNFUSED DISCONNECT SWITCH.
11. NEW 600A-3P, NEMA 1, UNFUSED DISCONNECT SWITCH.
12. STUB COMMUNICATION CONDUITS INTO THE ROOM. PROVIDE END BUSHINGS FOR CABLE PROTECTION.

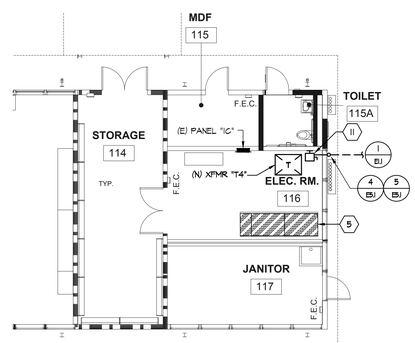

4 ELECTRICAL NEW FLOOR PLAN - WING #1

E3.1 SCALE: 1/8" = 1'-0"

BUILDING KEY

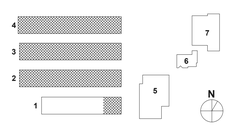

IDENTIFICATION STAMP
DIV. OF THE STATE ARCHITECT
APP: 01-119530 INC:
REVIEWED FOR
SS ☑ FLS ☑ ACS ☑
DATE: 10/26/2021

aedis architects
www.aedisarchitects.com
387 S. 1st Street, Suite 30
San Jose, CA 9511
tel: (408)-300-516
fax: (408)-300-512

PROJECT

COLLEGE PARK ELEMENTARY SCHOOL - HVAC REPLACEMENT

SAN MATEO-FOSTER CITY SCHOOL DISTRICT

CONSULTANT

REGISTERED PROFESSIONAL ENGINEER SAM S. FERNANDEZ E16890 Exp. 06/30/23 ELECTRICAL STATE OF CALIFORNIA

American Consulting Engineers Electrical, Inc.
1580 The Alameda, Suite 200
San Jose, CA 95126 408/236-231
JOB # EX21030.00 Fax: 408/236-231

STAMP

STATE
DSA FILE NUMBER 41-26
APPL # 01-119530

REVISIONS

No.	Description	Date
△		

MILESTONES

DD	
90% CD	
DSA SUB	05/26/2021
BACKCHECK	10/07/2021

SHEET

ELECTRICAL NEW FLOOR PLANS - WINGS #1, #2, #3, & #4

DATE 10/07/2021

JOB # 2021005.01

SHEET # E3.1

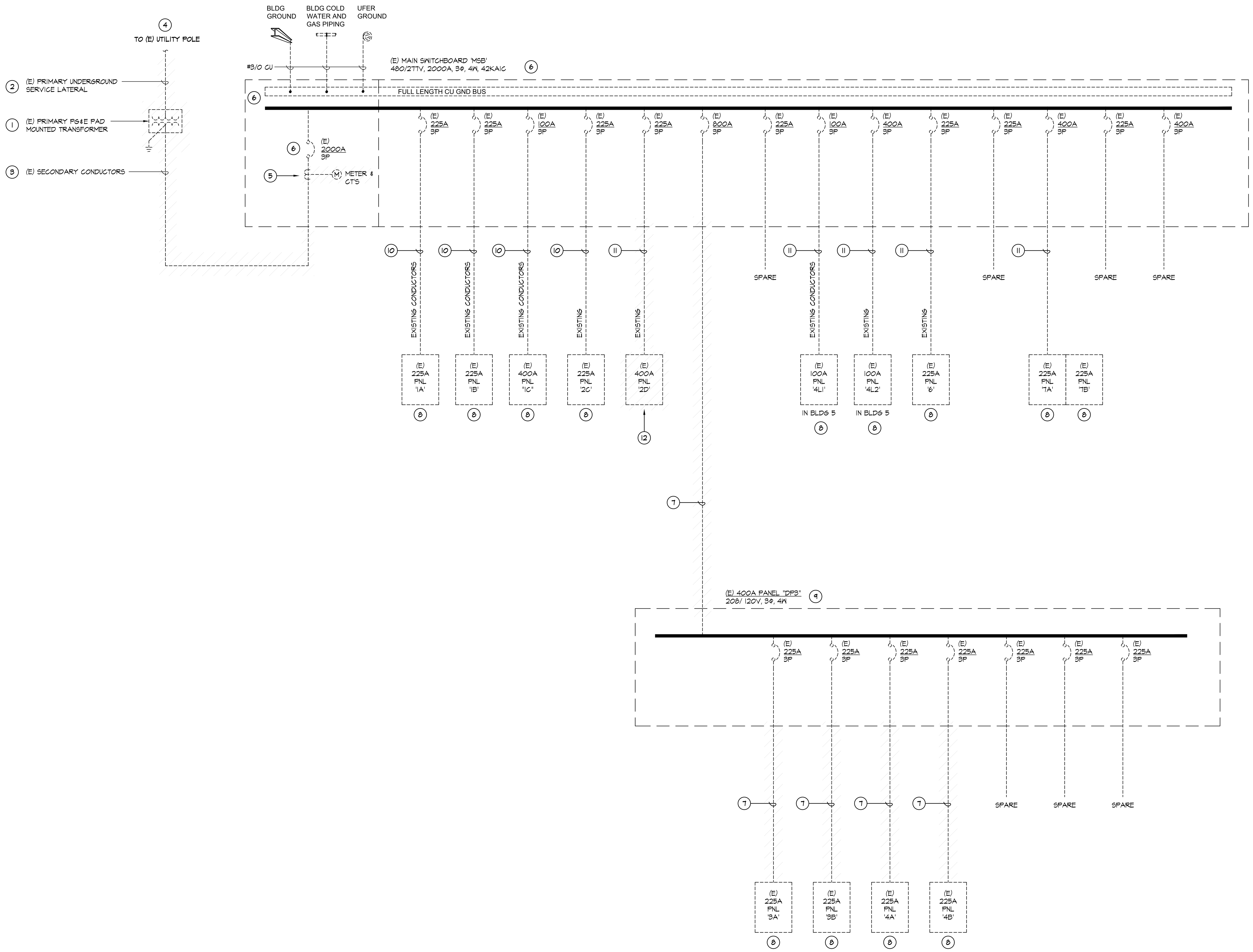

1 DEMO SINGLE LINE DIAGRAM

E4.1 NOT TO SCALE

GENERAL NOTES:

1. SEE ELECTRICAL SITE PLAN AND ENLARGED SWITCHGEAR PLAN FOR ADDITIONAL REQUIREMENTS.
2. SEE NEW SINGLE LINE DIAGRAM FOR ADDITIONAL REQUIREMENTS.
3. COORDINATE WITH THE PG&E UTILITY COMPANY FOR THE DISCONNECTING AND REMOVAL OF ALL ASSOCIATED EQUIPMENT AND CABLES.

DEMOLITION SHEET NOTES:

1. EXISTING PG&E TRANSFORMER TO BE DISCONNECTED AND REMOVED BY PG&E. COORDINATE REMOVAL WITH PG&E.
2. EXISTING PG&E PRIMARY CONDUCTORS TO BE REMOVED BY PG&E. COORDINATE REMOVAL WITH PG&E.
3. EXISTING PG&E SECONDARY CONDUCTORS AND GROUNDING CONDUCTORS TO BE REMOVED BY PG&E. COORDINATE REMOVAL WITH PG&E.
4. EXISTING PG&E UTILITY POLE TO REMAIN.
5. EXISTING PG&E METER, CT'S AND PT'S TO BE DISCONNECTED AND REMOVED BY PG&E. COORDINATE REMOVAL WITH PG&E.
6. EXISTING MAIN SWITCHBOARD TO BE CONVERTED TO DISTRIBUTION PANEL "DP1". DISCONNECT AND REMOVE EXISTING MAIN CIRCUIT BREAKER. DISCONNECT THE EXISTING MAIN BONDING JUMPER FROM THE GROUND BUS TO THE NEUTRAL BUS.
7. EXISTING FEEDERS CABLES TO BE DISCONNECTED FROM EXISTING PANEL. PULL BACK TO SOURCE AND REMOVE.
8. EXISTING ELECTRICAL PANEL TO REMAIN.
9. EXISTING DISTRIBUTION PANEL TO DISCONNECTED AND DEMOLISHED.
10. EXISTING FEEDER CABLES TO REMAIN.
11. EXISTING FEEDER CABLES TO BE MODIFIED TO FACILITATE NEW WORK.
12. EXISTING ELECTRICAL PANEL TO BE DISCONNECTED AND DEMOLISHED.

IDENTIFICATION STAMP
DIV. OF THE STATE ARCHITECT
APP: 01-119530 INC:
REVIEWED FOR
SS ☑ FLS ☑ ACS ☑
DATE: 10/26/2021

aedis architects
www.aedisarchitects.co
387 S. 1st Street, Suite 30
San Jose, CA 9511
tel: (408)-300-516
fax: (408)-300-512

PROJECT

COLLEGE PARK ELEMENTARY SCHOOL - HVAC REPLACEMENT

SAN MATEO-FOSTER CITY SCHOOL DISTRICT

CONSULTANT

REGISTERED PROFESSIONAL ENGINEER SAMI S. TERRO E16890 Exp. 06/30/23 ELECTRICAL STATE OF CALIFORNIA

American Consulting Engineer Electrical, Inc.

STAMP

STATE
DSA FILE NUMBER 41-26
APPL # 01-119530

REVISIONS

No.	Description	Date
△		

MILESTONES

DD	
90% CD	
DSA SUB	05/26/2021
BACKCHECK	10/07/2021

SHEET

DEMO SINGLE LINE DIAGRAM

DATE 10/07/2021

JOB # 2021005.01

SHEET # E4.1

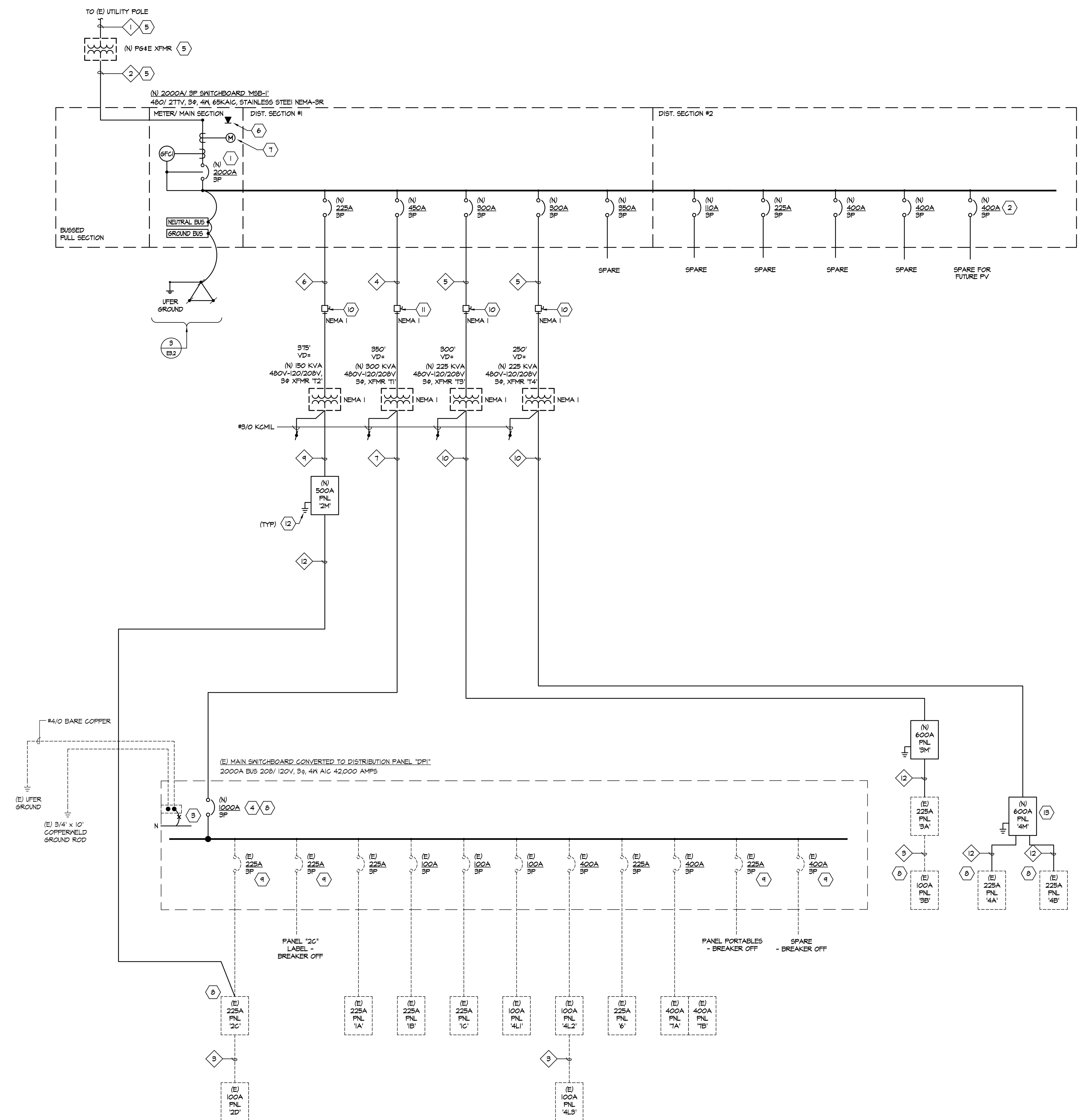

1 NEW SINGLE LINE DIAGRAM

E4.2 NOT TO SCALE

GENERAL NOTES:

1. SEE DETAIL 2/E3.2 FOR GROUNDING AT SWITCHBOARD ENCLOSURE REQUIREMENTS.
2. SEE DETAIL 3/E3.2 FOR MAIN SWITCHBOARD GROUNDING REQUIREMENTS.
3. SEE DETAIL 5/E3.2 FOR TRANSFORMER GROUNDING REQUIREMENTS.
4. ALL TRANSFORMERS SHALL BE CLASS 155 INSULATION - COMPLETELY ENCLOSED EXCEPT FOR VENTILATION.
5. SEE ENLARGED SWITCHGEAR PLAN FOR ADDITIONAL REQUIREMENTS.
6. THE CONTRACTOR SHALL OBTAIN THE PG&E SUBSTRUCTURE PACKAGE PRIOR TO ANY RELATED WORK. THE CONTRACTOR SHALL COORDINATE ALL PG&E INSTALLATION REQUIREMENTS WITH PG&E GREENBOOK AND PG&E SUBSTRUCTURE PACKAGE.
7. SEE THE ENLARGED SITE DEMO SITE PLAN AND DEMO SINGLE LINE DIAGRAM FOR ADDITIONAL INFORMATION.
8. PROVIDE THE REQUIRED ARC FLASH HAZARD WARNING LABEL TO MEET THE REQUIREMENTS OF CEC 110.16. SEE SPECIFICATIONS FOR ADDITIONAL REQUIREMENTS.
9. PROVIDE MAINTENANCE SWITCH FOR ARC ENERGY REDUCTION TO MEET THE REQUIREMENTS OF CEC 240.87.

SHEET NOTES:

1. MAIN BREAKER SHALL BE GFCI PER NEC.
2. PV BREAKER TO BE INSTALLED AT THE FURTHEST POINT ON THE BUS BAR.
3. DISCONNECT THE EXISTING MAIN BONDING JUMPER FROM THE GROUND BUS TO THE NEUTRAL BUS.
4. REMOVE EXISTING 2000A MAIN CIRCUIT BREAKER AND REPLACE WITH NEW 1000A MAIN CIRCUIT BREAKER AS REQUIRED TO CONVERT THE EXISTING MAIN SWITCHBOARD TO DISTRIBUTION PANEL"DP1". CONNECT NEW FEEDERS TO "DP1" AS REQUIRED.
5. INSTALL PER PG&E AND PG&E GREENBOOK REQUIREMENTS.
6. PROVIDE TWO DEDICATED TELEPHONE LINES FROM THE MAIN SWITCHBOARD TO THE TELEPHONE MPOE PER PG&E REQUIREMENTS. MOUNT TELEPHONE OUTLETS INSIDE METER SECTION FOR THE MAIN SWITCHBOARD BEHIND THE SWITCHBOARDS DOORS. MOUNT IN NEMA-3R JUNCTION BOX.
7. PROVIDE PG&E METER PER PG&E REQUIREMENTS.
8. COORDINATE THE DISCONNECT AND REMOVAL OF THE EXISTING FEEDERS WITH THE PROJECT SCHEDULE AFTER REMOVAL OF EXISTING FEEDERS AND CONDUITS. CONTRACTOR SHALL RECONNECT PANEL WITH NEW FEEDERS AND CONDUIT AS SHOWN.
9. TURN OFF CIRCUIT BREAKER AND LABEL AS SPARE.
10. PROVIDE 400A-3P, 600V, HEAVY DUTY, DISCONNECT SWITCH FOR TRANSFORMER.
11. PROVIDE 600A-3P, 600V, HEAVY DUTY, DISCONNECT SWITCH FOR TRANSFORMER.
12. PROVIDE GROUNDING PER CEC.
13. PROVIDE (2) 225A-3P SUBFEED CIRCUIT BREAKERS IN NEW PANEL AS NEEDED.

CABLE SCHEDULE:

1. (N)(1) 4"C - PG&E PRIMARY.
2. (N)(7) 5"C - PG&E SECONDARY.
3. (E) FEEDER TO REMAIN.
4. (N) 2 SETS - (N) 2.5"C - (N) 3#250 + 1#2 GND.
5. (N) 3"C - (N) 3#350 + (1) #4 GND.
6. (N) 2.5"C - (N) 3#4/0 + (1) #4 GND.
7. (N) 3 SETS - (N) 3"C - (N) 4#400 + 1#3/0 GND.
8. (N) 2"C - (N) 3#1 + 1#6 GND.
9. (N) 2 SETS - (N) 3"C - (N) 4#250 + 1#1/0 GND.
10. (N) 2 SETS - (N) 3"C - (N) 4#350 + 1#2/0 GND.
11. (N) 2.5"C - (N) 4#4/0 + 1#2 GND.
12. (N) 2.5"C - (N) 4#4/0 + 1#4 GND.
13. (N) 4"C - (N) 4#500 + 1#3 GND.
14. (N) 1.5"C - (N) 4#2 + 1#8 GND.

IDENTIFICATION STAMP
DIV. OF THE STATE ARCHITECT
APP: 01-119530 INC:
REVIEWED FOR
SS ☑ FLS ☑ ACS ☑
DATE: 10/26/2021

aedis architects
www.aedisarchitects.co
387 S. 1st Street, Suite 30
San Jose, CA 9511
tel: (408)-300-516
fax: (408)-300-512

PROJECT
COLLEGE PARK ELEMENTARY SCHOOL - HVAC REPLACEMENT

SAN MATEO-FOSTER CITY SCHOOL DISTRICT

CONSULTANT

E16890

American Consulting Engineer Electrical, Inc.

STAMP

STATE
DSA FILE NUMBER 41-26
APPL # 01-119530

REVISIONS

No.	Description	Date

MILESTONES
DD
90% CD
DSA SUB 05/26/2021
BACKCHECK 10/07/2021

SHEET
NEW SINGLE LINE DIAGRAM

DATE 10/07/2021
JOB # 2021005.01
SHEET # E4.2

PANEL NAME:	2M	FED FROM:	MSB-1
VOLTAGE:	208/120V	MAIN C/B:	500A-3P
PHASE:	3	BUSSING:	500 AMP
WIRE:	4	MIN. AIC:	10,000
TYPE:	NEMA 1	SUB-FEED C/B:	
MOUNTING:	SURFACE	FEED THRU LUGS:	YES

CIRCUIT DESCRIPTION	LOAD TYPE (KVA) LTG	REC	MTR	NCL	CB AMP/P	CKT #	PH	CKT #	CB AMP/P	LOAD TYPE (KVA) LTG	REC	MTR	NCL	CIRCUIT DESCRIPTION
(N) HP-7, FC-7 - CLASSROOM 7				4.37	70A	1	A	2	70A				4.37	(N) HP-8, FC-8 - CLASSROOM 8
" " " " "				4.37	2P	3	B	4	2P				4.37	" " " " "
(N) HP-7A, FC-7A - CLASSROOM 7				4.37	70A	5	C	6	70A				4.37	(N) HP-9, FC-9 - CLASSROOM 9
" " " " "				4.37	2P	7	A	8	2P				4.37	" " " " "
(N) HP-7A, FC-7A - CLASSROOM 7				4.37	70A	9	B	10	70A				4.37	(N) HP-10, FC-10 - CLASSROOM 10
" " " " "				4.37	2P	11	C	12	2P				4.37	" " " " "
SPARE					20A/1P	13	A	14	20A/1P					SPARE
SPARE					20A/1P	15	B	16	20A/1P					SPARE
SPARE					20A/1P	17	C	18	20A/1P					SPARE
SPARE					20A/1P	19	A	20	20A/1P					SPARE
SPARE					20A/1P	21	B	22	20A/1P					SPARE
SPARE					20A/1P	23	C	24	20A/1P					SPARE
SPARE					20A/1P	25	A	26	20A/1P					SPARE
SPARE					20A/1P	27	B	28	20A/1P					SPARE
SPARE					20A/1P	29	C	30	20A/1P					SPARE
SPARE					20A/1P	31	A	32	20A/1P					SPARE
SPARE					20A/1P	33	B	34	225A					(E) PANEL '2C'
SPARE					20A/1P	35	C	36						" " " " "
SPARE					20A/1P	37	A	38	3P					" " " " "
SPARE					20A/1P	39	B	40	20A/1P		0.54			(N) WEATHERPROOF GFCI - WING 2
(N) MOTOR RATED SWITCH FOR COND. PUMP - WING 2			0.36		20A/1P	41	C	42	20A/1P			0.36		(N) MOTOR RATED SWITCH FOR COND. PUMP - WING 2
	0	0	0.4	26.2						0	0.5	0.4	26.2	

LOAD SUMMARY	CONNECTED KVA	DEMAND FACTOR	DEMAND KVA
(LTG) LIGHTING X 125%	0	1.25	0.0
(REC) RECEPTS PER 220.44;	0.5	1.00	0.5
10KVA x 100% + REMAINDER x 50%	0	0.50	0.0
(MTR) LARGEST MOTOR X 125%	0.4	1.25	0.5
+ REMAINING MOTORS x 100%	0.4	1.00	0.4
(NCL) NON CONTINOUS LOAD x 100%	52.4	1.00	52.4

	Yes/No
FULL RATED AIC	Y
SERIES RATED AIC	N
SPD	N
COPPER BUSSING	Y
ALUMINUM BUSSING	N

KVA PHASE A (CONNECTED)	17.5
KVA PHASE B (CONNECTED)	18.0
KVA PHASE C (CONNECTED)	18.2
SUB FEED CONNECTED LOAD	
TOTAL DEMAND KVA	53.8
TOTAL LOAD AMPERES	149.4

PANEL NAME:	3M	FED FROM:	MSB-1
VOLTAGE:	208/120V	MAIN C/B:	600A-3P
PHASE:	3	BUSSING:	600 AMP
WIRE:	4	MIN. AIC:	10,000
TYPE:	NEMA 1	SUB-FEED C/B:	
MOUNTING:	SURFACE	FEED THRU LUGS:	YES

CIRCUIT DESCRIPTION	LOAD TYPE (KVA) LTG	REC	MTR	NCL	CB AMP/P	CKT #	PH	CKT #	CB AMP/P	LOAD TYPE (KVA) LTG	REC	MTR	NCL	CIRCUIT DESCRIPTION
(N) HP-11, FC-11 - CLASSROOM 11				4.37	70A	1	A	2	70A				4.37	(N) HP-15, FC-15 - CLASSROOM 15
" " " " "				4.37	2P	3	B	4	2P				4.37	" " " " "
(N) HP-12, FC-12 - CLASSROOM 12				4.37	70A	5	C	6	70A				4.37	(N) HP-16, FC-16 - CLASSROOM 16
" " " " "				4.37	2P	7	A	8	2P				4.37	" " " " "
(N) HP-13, FC-13 - CLASSROOM 13				4.37	70A	9	B	10	70A				4.37	(N) HP-17, FC-17 - CLASSROOM 17
" " " " "				4.37	2P	11	C	12	2P				4.37	" " " " "
(N) HP-14, FC-14 - CLASSROOM 14				4.37	70A	13	A	14	20A/1P					SPARE
" " " " "				4.37	2P	15	B	16	20A/1P					SPARE
SPARE					20A/1P	17	C	18	20A/1P					SPARE
SPARE					20A/1P	19	A	20	20A/1P					SPARE
SPARE					20A/1P	21	B	22	20A/1P					SPARE
SPARE					20A/1P	23	C	24	20A/1P					SPARE
SPARE					20A/1P	25	A	26	20A/1P					SPARE
SPARE					20A/1P	27	B	28	20A/1P					SPARE
SPARE					20A/1P	29	C	30	20A/1P					SPARE
SPARE					20A/1P	31	A	32	20A/1P					SPARE
SPARE					20A/1P	33	B	34	225A					(E) PANEL '3A'
SPARE					20A/1P	35	C	36						" " " " "
SPARE					20A/1P	37	A	38	3P					" " " " "
SPARE					20A/1P	39	B	40	20A/1P		0.72			(N) WEATHERPROOF GFCI REC - WING 3
(N) MOTOR RATED SWITCH FOR COND PUMP - WING 3			0.36		20A/1P	41	C	42	20A/1P			0.48		(N) MOTOR RATED SWITCH FOR COND PUMP - WING 3
	0	0	0.4	34.9						0	0.7	0.5	26.2	

LOAD SUMMARY	CONNECTED KVA	DEMAND FACTOR	DEMAND KVA
(LTG) LIGHTING X 125%	0	1.25	0.0
(REC) RECEPTS PER 220.44;	0.7	1.00	0.7
10KVA x 100% + REMAINDER x 50%	0	0.50	0.0
(MTR) LARGEST MOTOR X 125%	0.5	1.25	0.6
+ REMAINING MOTORS x 100%	0.4	1.00	0.4
(NCL) NON CONTINOUS LOAD x 100%	61.2	1.00	61.2

	Yes/No
FULL RATED AIC	Y
SERIES RATED AIC	N
SPD	N
COPPER BUSSING	Y
ALUMINUM BUSSING	N

KVA PHASE A (CONNECTED)	21.8
KVA PHASE B (CONNECTED)	22.6
KVA PHASE C (CONNECTED)	18.3
SUB FEED CONNECTED LOAD	
TOTAL DEMAND KVA	62.8
TOTAL LOAD AMPERES	174.5

PANEL NAME:	4M	FED FROM:	MSB-1
VOLTAGE:	208/120V	MAIN C/B:	600A-3P
PHASE:	3	BUSSING:	600 AMP
WIRE:	4	MIN. AIC:	10,000
TYPE:	NEMA 1	SUB-FEED C/B:	
MOUNTING:	SURFACE	FEED THRU LUGS:	YES

CIRCUIT DESCRIPTION	LOAD TYPE (KVA) LTG	REC	MTR	NCL	CB AMP/P	CKT #	PH	CKT #	CB AMP/P	LOAD TYPE (KVA) LTG	REC	MTR	NCL	CIRCUIT DESCRIPTION
(N) HP-18, FC-18 - CLASSROOM 18				4.37	70A	1	A	2	70A				4.37	(N) HP-22, FC-22 - CLASSROOM 22
" " " " "				4.37	2P	3	B	4	2P				4.37	" " " " "
(N) HP-19, FC-19 - CLASSROOM 19				4.37	70A	5	C	6	70A				4.37	(N) HP-23, FC-23 - CLASSROOM 23
" " " " "				4.37	2P	7	A	8	2P				4.37	" " " " "
(N) HP-20, FC-20 - CLASSROOM 20				4.37	70A	9	B	10	70A				4.37	(N) HP-24A, FC-24A - CLASSROOM 24
" " " " "				4.37	2P	11	C	12	2P				4.37	" " " " "
(N) HP-21, FC-21 - CLASSROOM 21				4.37	70A	13	A	14	70A				4.37	(N) HP-24B, FC-24B - CLASSROOM 24
" " " " "				4.37	2P	15	B	16	2P				4.37	" " " " "
SPARE					20A/1P	17	C	18	20A/1P					SPARE
SPARE					20A/1P	19	A	20	20A/1P					SPARE
SPARE					20A/1P	21	B	22	20A/1P					SPARE
SPARE					20A/1P	23	C	24	20A/1P					SPARE
SPARE					20A/1P	25	A	26	20A/1P					SPARE
SPARE					20A/1P	27	B	28	225A					(E) PANEL '4A'
SPARE					20A/1P	29	C	30						" " " " "
SPARE					20A/1P	31	A	32	3P					" " " " "
SPARE					20A/1P	33	B	34	225A					(E) PANEL '4B'
SPARE					20A/1P	35	C	36						" " " " "
SPARE					20A/1P	37	A	38	3P					" " " " "
SPARE					20A/1P	39	B	40	20A/1P		0.90			(N) WEATHERPROOF GFCI REC - WING 4
(N) MOTOR RATED SWITCH FOR COND. PUMP - WING 4			0.48		20A/1P	41	C	42	20A/1P			0.48		(N) MOTOR RATED SWITCH FOR COND. PUMP - WING 4
	0	0	0.5	34.9						0	0.9	0.5	34.9	

LOAD SUMMARY	CONNECTED KVA	DEMAND FACTOR	DEMAND KVA
(LTG) LIGHTING X 125%	0	1.25	0.0
(REC) RECEPTS PER 220.44;	0.9	1.00	0.9
10KVA x 100% + REMAINDER x 50%	0	0.50	0.0
(MTR) LARGEST MOTOR X 125%	0.5	1.25	0.6
+ REMAINING MOTORS x 100%	0.5	1.00	0.5
(NCL) NON CONTINOUS LOAD x 100%	69.9	1.00	69.9

	Yes/No
FULL RATED AIC	Y
SERIES RATED AIC	N
SPD	N
COPPER BUSSING	Y
ALUMINUM BUSSING	N

KVA PHASE A (CONNECTED)	26.2
KVA PHASE B (CONNECTED)	27.1
KVA PHASE C (CONNECTED)	18.4
SUB FEED CONNECTED LOAD	
TOTAL DEMAND KVA	71.9
TOTAL LOAD AMPERES	199.6

IDENTIFICATION STAMP
DIV. OF THE STATE ARCHITECT
APP: 01-119530 INC:
REVIEWED FOR
SS ☑ FLS ☑ ACS ☑
DATE: 10/26/2021

aedis architects
www.aedisarchitects.com
387 S. 1st Street, Suite 300
San Jose, CA 95113
tel: (408)-300-5160
fax: (408)-300-5121

PROJECT

COLLEGE PARK ELEMENTARY SCHOOL - HVAC REPLACEMENT

SAN MATEO-FOSTER CITY SCHOOL DISTRICT

CONSULTANT

REGISTERED PROFESSIONAL ENGINEER
STAMP S. FERNANDEZ
E16890
Exp. 06/30/23
ELECTRICAL
STATE OF CALIFORNIA

American Consulting Engineer Electrical, Inc.
1990 The Alameda, Suite 200
San Jose, CA 95126
JOB # EK21030.00
408/236-231
Fax: 408/236-231

STAMP

STATE
DSA FILE NUMBER 41-26
APPL # 01-119530

REVISIONS

No.	Description	Date
△		

MILESTONES

DD	
90% CD	
DSA SUB	05/26/2021
BACKCHECK	10/07/2021

SHEET

PANEL SCHEDULES

DATE 10/07/2021

JOB # 2021005.01

SHEET #

E4.3

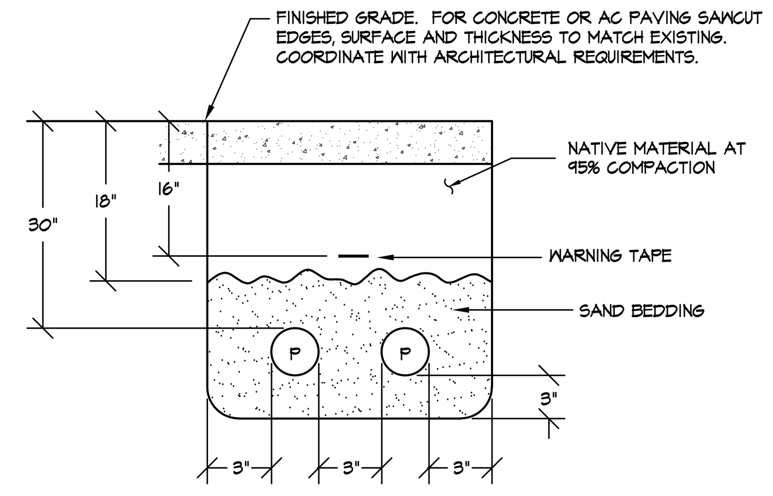

1. TRENCH PER PG&E STANDARDS

P - PRIMARY

1 E5.1 PG&E TRENCH DETAIL PRIMARY SIDE

NOT TO SCALE

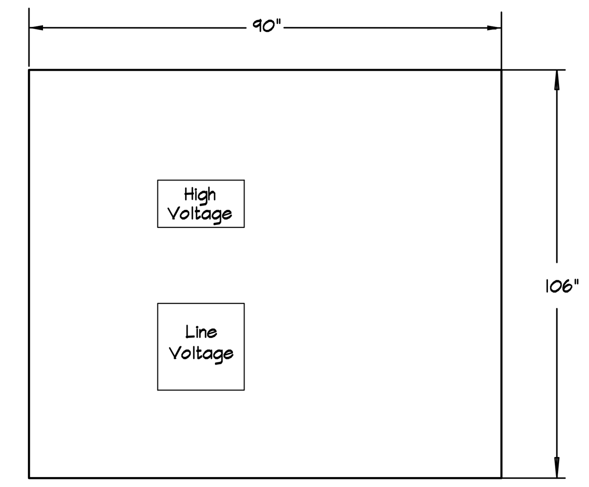

PAD SHALL BE PG&E TYPE IIE PER PG&E REQUIREMENTS. PAD SHALL BE JENSEN PG&E 040292 OR EQUAL.

THIS PAD TO BE INSTALLED PER PG&E REQUIREMENTS AND PG&E GREEN BOOK. THIS PAD IS UNDER PG&E JURISDICTION AND PROPERTY EASEMENT.

PAD SHALL CONFORM TO ALL REQUIREMENTS OF UTILITY "PG&E." REFER TO PG&E. CONTRACTOR DOCUMENTS FOR FINAL REQUIREMENTS AND APPROVED VENDORS FOR "PRE-CAST" PADS.

Concrete Pad Details for Style IID, IIE, and IIG Transformers

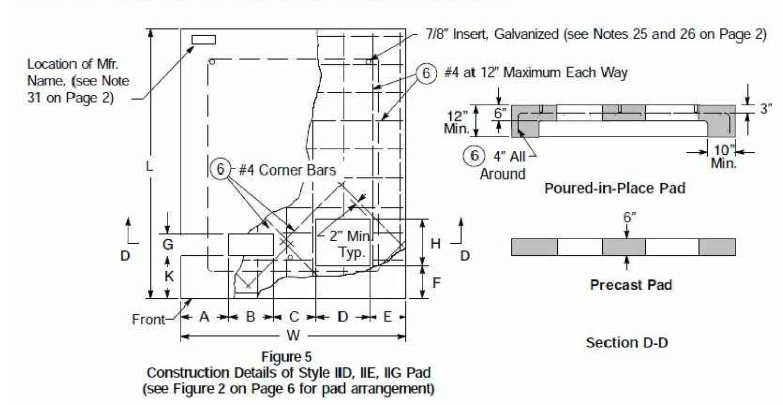

Figure 5
Construction Details of Style IID, IIE, IIG Pad
(see Figure 2 on Page 6 for pad arrangement)

Table 3 Dimensions and Codes for Style IID, IIE, and IIG Transformer Pads [1]

Transformer			Pad Dimensions (inches)											Code
Style	kVA Size	Approximate Maximum Weight (lbs)	A	B	C	D	E	F	G	H	K	L	W	
IID and IIE	75	4,600	17	16	15	19	13	10	6	17	14	61	80	040291
	(112.5) [2]	4,800												
	150	5,000												
	(225) [2]	5,500												
IIE	300	5,800	22	16	15	20	17	20	6	19	25	106	90	040292
	(500) [2]	6,100												
	750	9,000												
	1,000	11,000												
	1,500	13,000												
IIE	2,500	16,000	22	16	15	20	17	20	6	19	25	106	90	040292
IIG	2955/3325	22,000												

1 See Document 066211 for approved suppliers.
2 ( ) = Indicates a kVA size that is no longer purchased.

Pad Arrangements for Style IID, IIE, and IIG Transformers

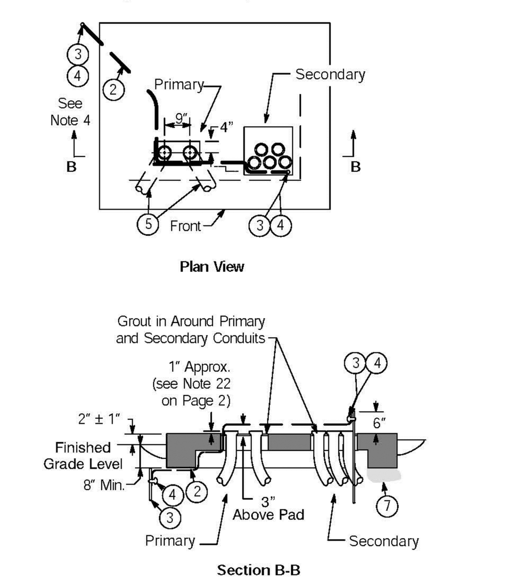

Figure 2
Loop Installation of Style IID, IIE, and IIGPad Arrangement, Poured-in-Place Pad Shown

2 E5.1 PG&E TRANSFORMER PAD DETAIL

NOT TO SCALE

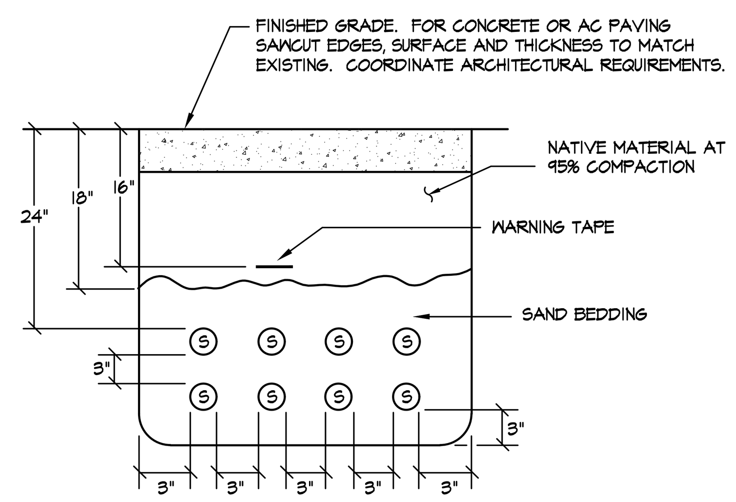

1. TRENCH PER PG&E STANDARDS

S - SECONDARY

3 E5.1 PG&E TRENCH DETAIL SECONDARY SIDE

NOT TO SCALE

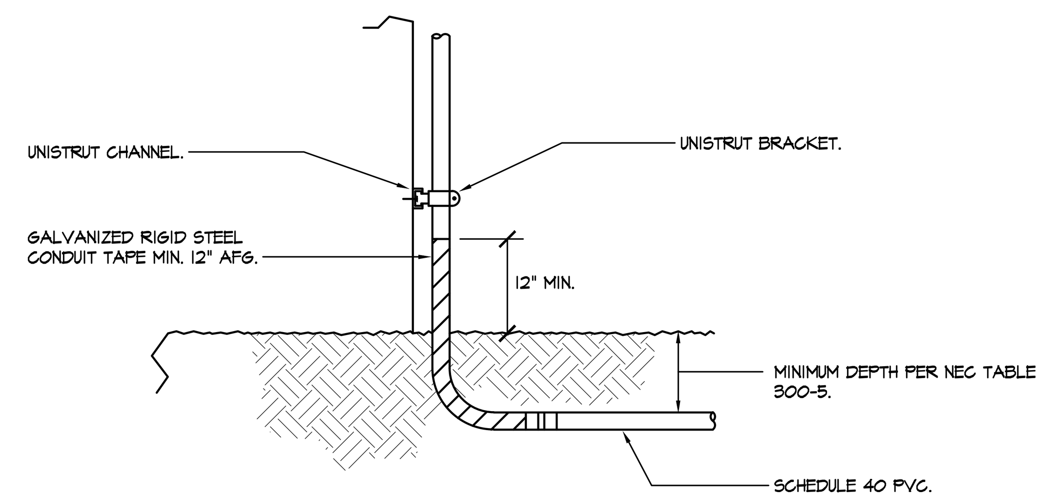

NOTE:

1. FOR WOOD STUD WALL: USE 3/8" LAG BOLT WITH MIN. 3/4" EMBEDMENT INTO STUDS. (ONE AT EACH END OF BRACKET)

2. FOR CONCRETE WALL: USE 3/8" WEDGE ANCHOR WITH MIN. 2 ½" EMBEDMENT INTO CONCRETE WALL. (ONE AT EACH END OF BRACKET).

4 E5.1 UNDERGROUND CONDUIT RISER DETAIL

NOT TO SCALE

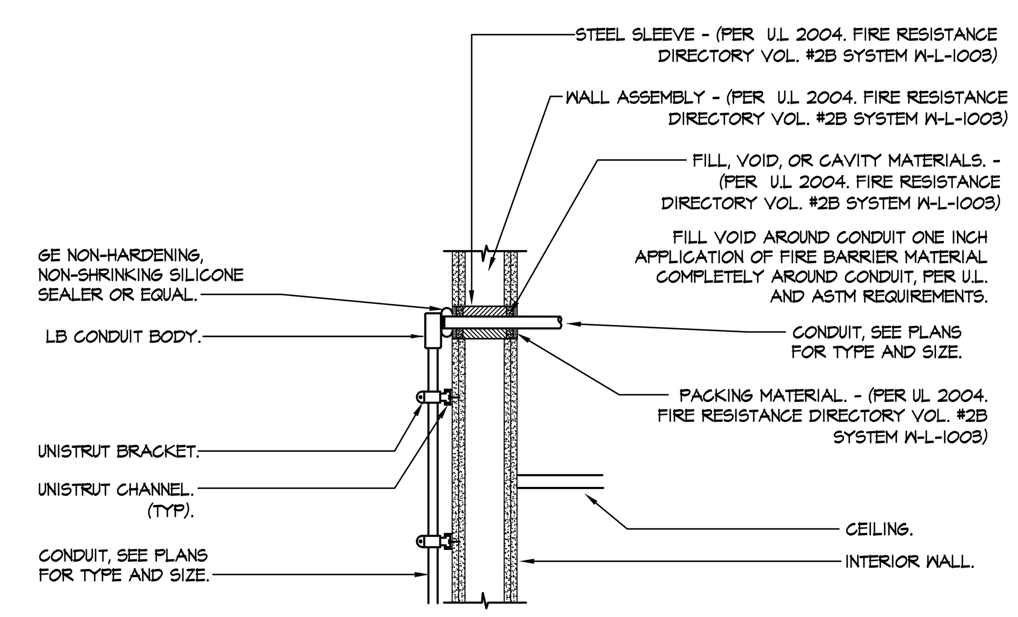

NOTE:
REFERENCE UL 2004, FIRE RESISTANCE DIRECTORY VOL. #2B SYSTEM W-L-1003.

5 E5.1 CONDUIT RISER AND WALL PENETRATION - POWER

NOT TO SCALE

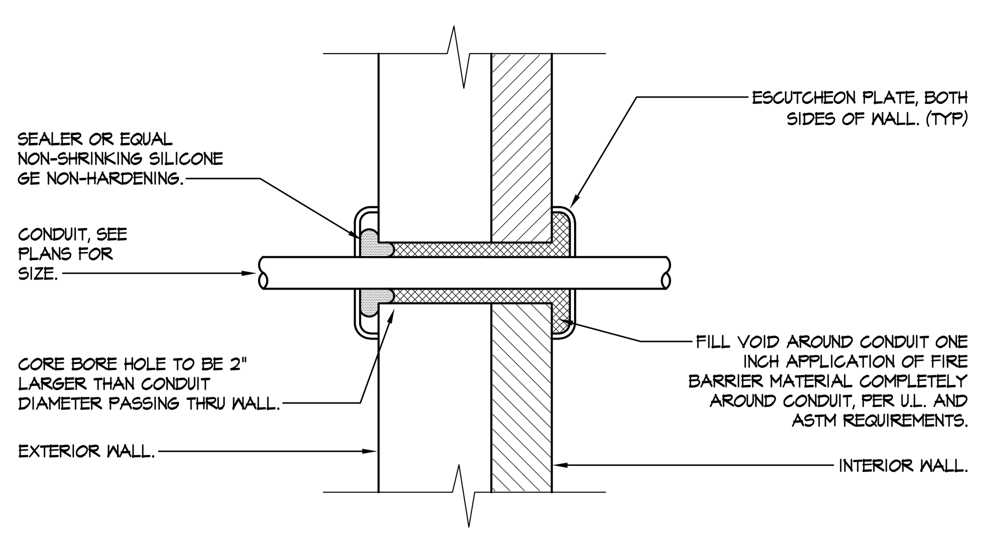

6 E5.1 CONDUIT WALL PENETRATION DETAIL

NOT TO SCALE

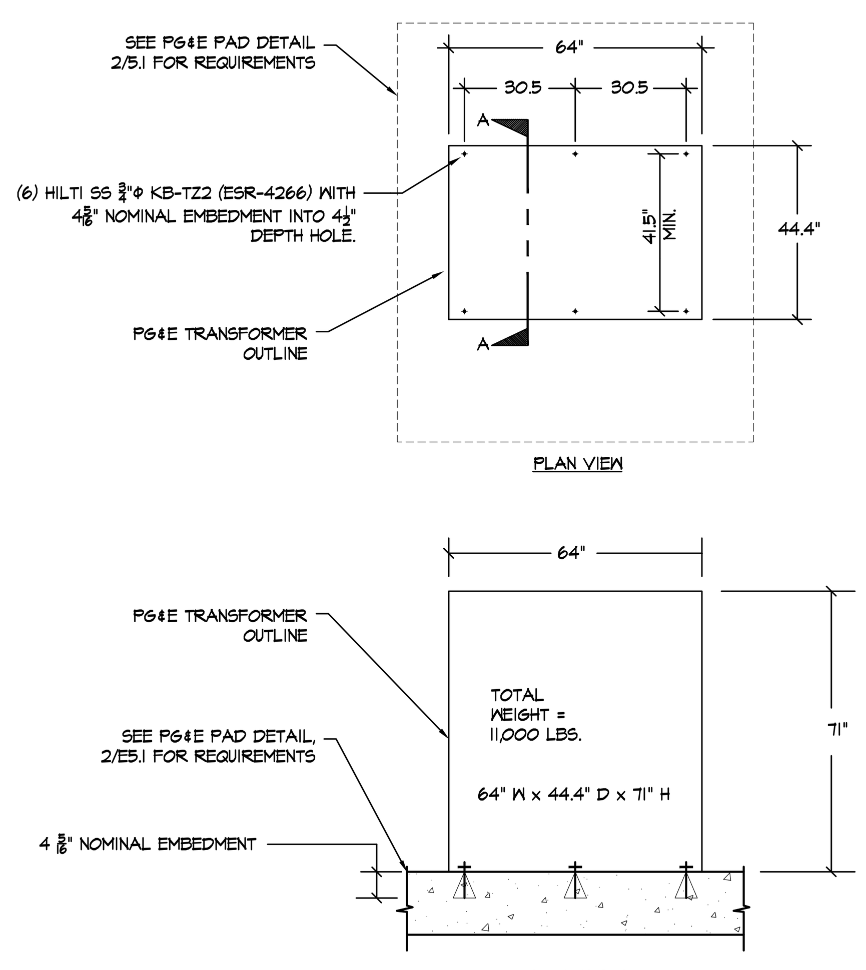

7 E5.1 PG&E TRANSFORMER ANCHORAGE DETAIL

NOT TO SCALE

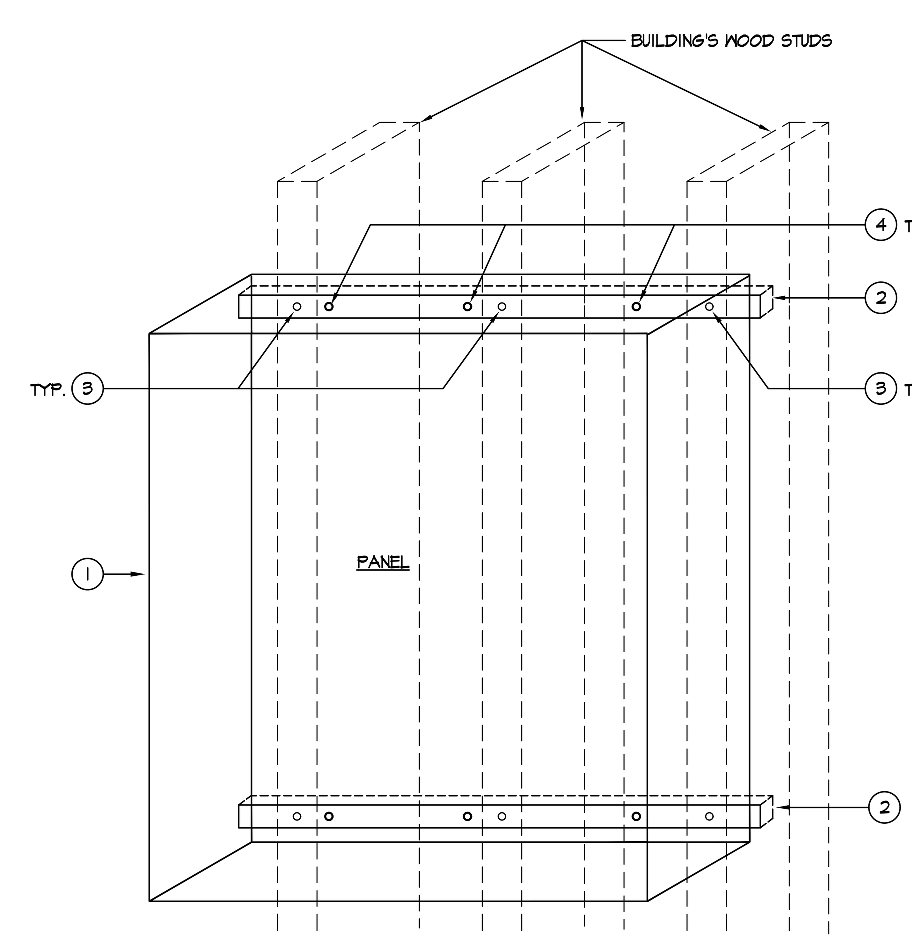

1. NEMA-1 ELECTRICAL PANEL (200 LBS).
2. UNISTRUT P1000 MIN. 50" SPANNING OVER 3 STUDS.
3. 3/8" LAG SCREW. SCREW SHALL PENETRATE MINIMUM 3". CENTER ON STUDS.
4. PROVIDE 3/8" HEX HEAD CAP SCREW (MIN. OF 3) WITH 3/8" CHANNEL NUT.

8 E5.1 WALL MOUNTED PANEL INSTALLATION (100A-600A)

NOT TO SCALE

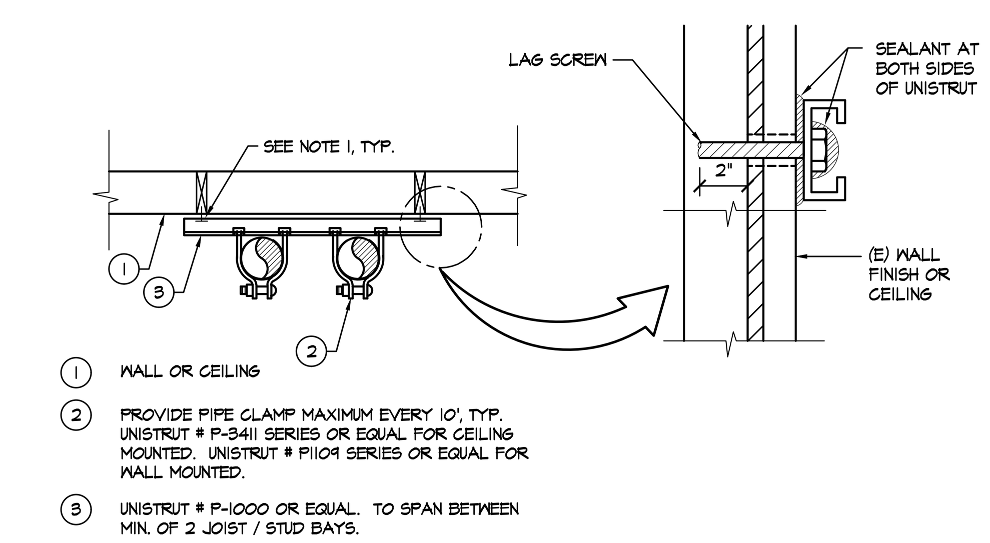

1. WALL OR CEILING
2. PROVIDE PIPE CLAMP MAXIMUM EVERY 10', TYP. UNISTRUT # P-2411 SERIES OR EQUAL FOR CEILING MOUNTED. UNISTRUT # P1109 SERIES OR EQUAL FOR WALL MOUNTED.
3. UNISTRUT # P-1000 OR EQUAL. TO SPAN BETWEEN MIN. OF 2 JOIST / STUD BAYS.

* MAXIMUM CONDUIT TO BE INSTALL SHALL NOT BE GREATER THAN 4" IN SIZE AND MORE THAN 100 LBS IN WEIGHT PER 10'.

NOTE:

1. FOR WOOD STUD WALL OR WOOD ROOF JOIST: USE 3/8" DIA. X MIN. 3" LONG LAG SCREW WITH MIN. 2" EMBEDMENT INTO STUDS. (ONE AT EACH END OF BRACKET)

9 E5.1 TYPICAL CONDUIT SUPPORT DETAIL

SCALE: NOT TO SCALE

IDENTIFICATION STAMP
DIV. OF THE STATE ARCHITECT
APP: 01-119530 INC:
REVIEWED FOR
SS ☑ FLS ☑ ACS ☑
DATE: 10/26/2021

aedis architects
www.aedisarchitects.com
387 S. 1st Street, Suite 300
San Jose, CA 95113
tel: (408)-300-516
fax: (408)-300-512

PROJECT
COLLEGE PARK ELEMENTARY SCHOOL - HVAC REPLACEMENT

SAN MATEO-FOSTER CITY SCHOOL DISTRICT

CONSULTANT

E16890

American Consulting Engineers Electrical, Inc.
JOB # EX21030.00

STAMP

STATE
DSA FILE NUMBER 41-26
APPL # 01-119530

REVISIONS

No.	Description	Date
△		

MILESTONES

DD	
90% CD	
DSA SUB	05/26/2021
BACKCHECK	10/07/2021

SHEET
ELECTRICAL DETAILS

DATE 10/07/2021
JOB # 2021005.01
SHEET # E5.1

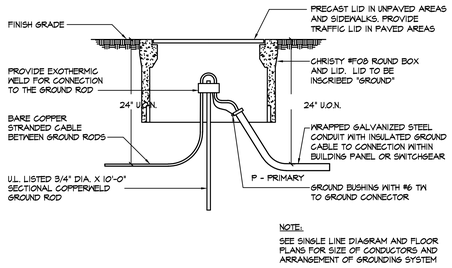

NOTE:
SEE SINGLE LINE DIAGRAM AND FLOOR PLANS FOR SIZE OF CONDUCTORS AND ARRANGEMENT OF GROUNDING SYSTEM

1 / E5.2 GROUND ROD INSPECTION WELL FOR MULTIPLE GROUND RODS

NOT TO SCALE

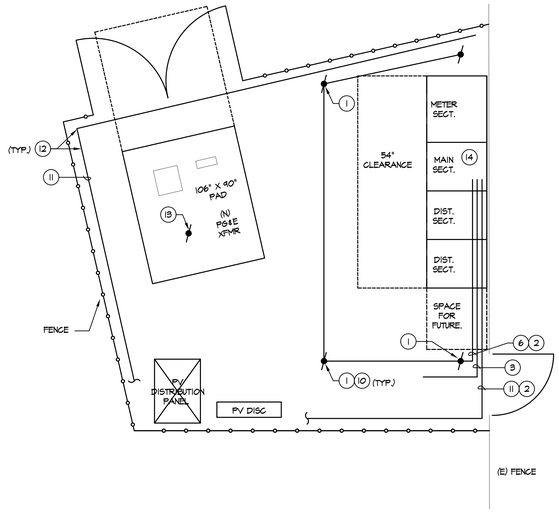

2 / E5.2 GROUNDING AT SWITCHBOARD ENCLOSURE

SCALE: 1/4" = 1'-0"

GROUNDING DETAIL NOTES:

1. GROUND ROD. SEE DETAIL 1/E3.2 FOR REQUIREMENTS.
2. CADWELD GROUNDING ELECTRODE CONDUCTOR TO THE REBAR.
3. UFER CADWELD TO REBAR +20' OF BARE COPPER ENCASED.
4. NOT USED.
5. NOT USED.
6. #3/0 BARE COPPER MAIN SWITCHBOARD GROUNDING ELECTRODE CONDUCTOR. CONDUCTOR SHALL BE INSTALLED ENCASED IN THE CONCRETE SLAB.
7. #3/0 BARE COPPER TRANSFORMER GROUNDING ELECTRODE CONDUCTOR. CONDUCTOR SHALL BE INSTALLED ENCASED IN THE CONCRETE SLAB TO THE GROUND ROD AND CADWELD TO THE GROUND ROD.
8. NOT USED.
9. ALL INTERSECTIONS OF GROUNDING CONDUCTORS SHALL BE CADWELD TOGETHER.
10. GROUND RODS SHALL BE INSTALLED A MINIMUM 10' APART.
11. #3/0 BARE COPPER FENCE GROUNDING CONDUCTOR. CONDUCTOR SHALL BE INSTALLED ENCASED IN THE CONCRETE SLAB.
12. PROVIDE T INTERSECTION AND EXTEND #3/0 CONDUCTORS ABOVE THE SLAB ADJACENT TO THE FENCE POST. COORDINATE INSTALLATION WITH FENCE SLEEVES AND FENCE POST INSTALLER. T INTERSECTION SHALL BE CADWELD. SEE 3/E3.2 AND 4/E3.2 FOR ADDITIONAL INFORMATION. SEE ARCHITECTURAL DRAWINGS FOR FENCE POST QUANTITY. TYPICAL FOR ALL FENCE POSTS.
13. PROVIDE GROUND ROD PER PG&E GREENBOOK REQUIREMENTS.
14. SEE DETAIL 3/E3.2 FOR ADDITIONAL GROUNDING REQUIREMENTS.

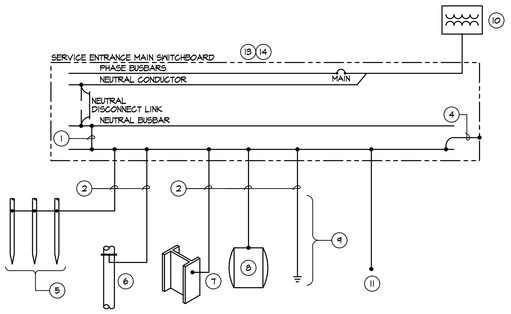

NOTES:

1. THE EQUIPMENT GROUNDING CONDUCTOR SHALL BE USED FOR GROUNDING OR BONDING OF EQUIPMENT, STRUCTURES OR FRAMES REQUIRED TO BE GROUNDED OR BONDED(250.32(B)). PROVIDE ALL OF THE CONNECTIONS BELOW AND BOND TO THE EQUIPMENT GROUNDING CONDUCTOR.
2. GROUNDING ELECTRODE CONDUCTOR. GROUNDING ELECTRODE CONDUCTOR SHALL BE BARE OR INSULATED COPPER AND SHALL BE SIZED PER TABLE 250.66.
3. NOT USED.
4. EQUIPMENT BONDING JUMPER. EQUIPMENT BONDING JUMPER SHALL BE INSULATED COPPER AND SHALL BE SIZED PER TABLE 250.122.
5. PROVIDE A MINIMUM OF (3) GROUND ROD. GROUND ROD SHALL BE 10' LONG BY ¾" DIAMETER COPPERCLAD. GROUNDING ELECTRODE CONDUCTOR SHALL BE BONDED TO THE GROUND ROD VIA EXOTHERMIC WELD. GROUND RODS SHALL BE INSTALLED IN A ROUND BOX. SEE DETAIL FOR BOX/INSTALLATION REQUIREMENTS.
6. PROVIDE GROUNDING ELECTRODE CONDUCTOR CONNECTION TO THE NEAREST UNDERGROUND WATER PIPE IN DIRECT CONTACT WITH EARTH FOR A MINIMUM OF 10 FEET. WATER PIPE SHALL BE ELECTRICALLY CONTINUOUS TO POINTS OF CONNECTION OF THE GROUNDING ELECTRODE CONDUCTOR. CONNECTION POINT SHALL NOT BE GREATER THAN 5' FROM THE POINT OF ENTRANCE OF THE UNDERGROUND WATER PIPE.
7. PROVIDE GROUNDING ELECTRODE CONDUCTOR CONNECTION TO THE NEAREST METAL FRAME OR STRUCTURAL STEEL.
8. PROVIDE GROUNDING ELECTRODE CONDUCTOR CONNECTION TO ALL OTHER LOCAL METAL UNDERGROUND SYSTEMS OR STRUCTURES, AS REQUIRED WHEN AVAILABLE.
9. PROVIDE A CONCRETE ENCASED ELECTRODE (UFER) IN AND NEAR THE BOTTOM OF THE STRUCTURAL FOOTING OR SLAB ON GRADE THAT IS IN DIRECT CONTACT WITH EARTH. THE ELECTRODE SHALL BE A MINIMUM OF 20 FEET LONG INSIDE THE PAD, FOOTING OR SLAB. THE ELECTRODE CONDUCTOR SHALL BE BARE COPPER AND SIZED PER TABLE 250.66 BUT SHALL NOT BE LESS THAN #4AWG.
10. MAIN UTILITY TRANSFORMER SHALL BE GROUNDED PER THE REQUIREMENTS OF THE UTILITY COMPANY.
11. PROVIDE GROUNDING TO FENCE. SEE DETAIL 4/E5.2.
12. PROVIDE GROUNDING ELECTRODE CONDUCTOR CONNECTION TO THE SECONDARY SIDE OF ALL WYE CONNECTED BUILDING TRANSFORMERS. GROUNDING ELECTRODE CONDUCTOR MAY BE CONNECTED TO THE NEAREST STRUCTURAL STEEL, OR THE MAIN SERVICE GROUNDING ELECTRODE ONLY. SEE TRANSFORMER GROUNDING DETAIL FOR ADDITIONAL REQUIREMENTS.
13. THE CONTRACTOR SHALL BE RESPONSIBLE FOR PROVIDING ALL GROUNDING AND BONDING AS REQUIRED PER THE CEC.
14. SEE SPECIFICATIONS FOR ADDITIONAL REQUIREMENTS.

3 / E5.2 MAIN SERVICE GROUNDING DETAIL

NOT TO SCALE

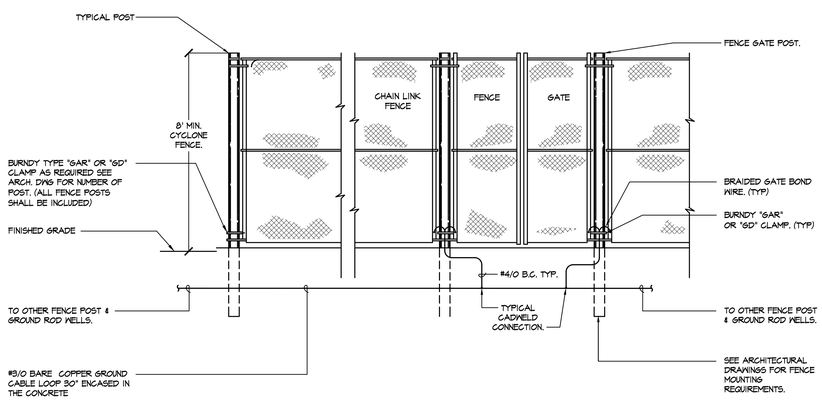

NOTE: REFER TO ARCHITECTURAL DRAWINGS FOR FENCE REQUIREMENTS.

NOTE: THIS DETAIL IS SHOWN FOR GROUNDING REQUIREMENTS NOT HOW THE FENCE IS INSTALLED.

4 / E5.2 CHAIN LINK FENCE GROUNDING DETAIL

NOT TO SCALE

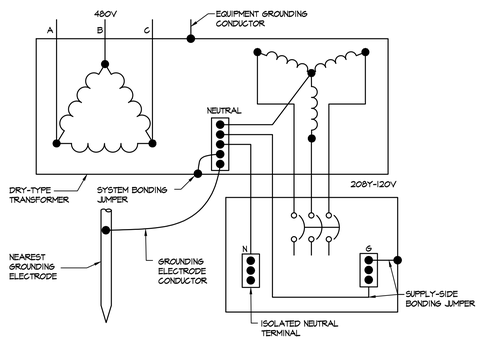

5 / E5.2 TRANSFORMER GROUNDING DETAIL

NOT TO SCALE

IDENTIFICATION STAMP
DIV. OF THE STATE ARCHITECT
APP: 01-119530 INC:
REVIEWED FOR
SS ☑ FLS ☑ ACS ☑
DATE: 10/26/2021

aedis architects
www.aedisarchitects.com
387 S. 1st Street, Suite 300
San Jose, CA 95113
tel: (408)-300-5160
fax: (408)-300-5125

PROJECT
COLLEGE PARK ELEMENTARY SCHOOL - HVAC REPLACEMENT

SAN MATEO-FOSTER CITY SCHOOL DISTRICT

CONSULTANT

REGISTERED PROFESSIONAL ENGINEER
STAMP S. FERNANDEZ
E16890
exp. 06/30/23
ELECTRICAL
STATE OF CALIFORNIA

American Consulting Engineer Electrical, Inc.
1580 The Alameda, Suite 200
San Jose, CA 95126
JOB # EX21030.00
408/236-231
Fax: 408/236-231

STAMP

STATE
DSA FILE NUMBER 41-26
APPL # 01-119530

REVISIONS

No.	Description	Date
△		

MILESTONES

DD	
90% CD	
DSA SUB	05/26/2021
BACKCHECK	10/07/2021

SHEET
ELECTRICAL DETAILS

DATE 10/07/2021
JOB # 2021005.01
SHEET # E5.2

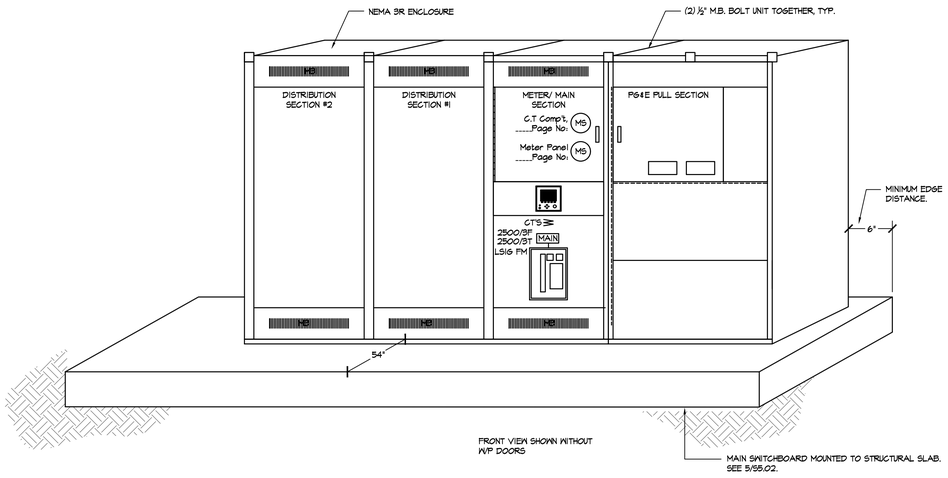

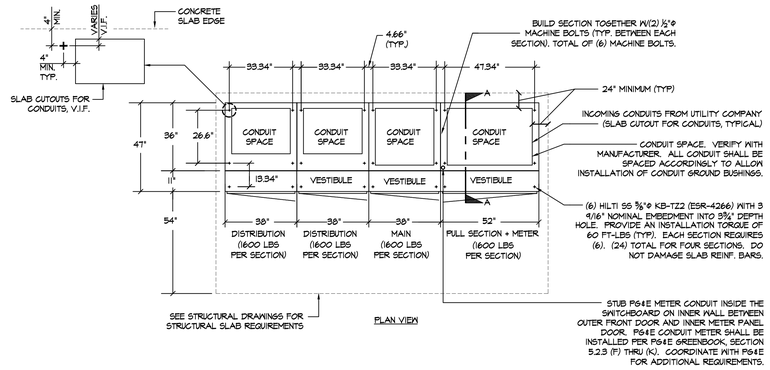

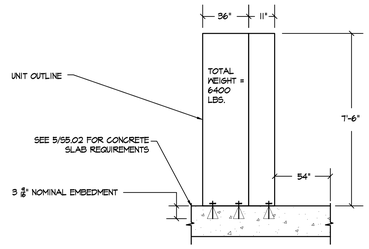

1 / E5.3 **NEMA 3R MAIN SWITCHBOARD ELEVATION AND ANCHORAGE DETAIL**

NOT TO SCALE

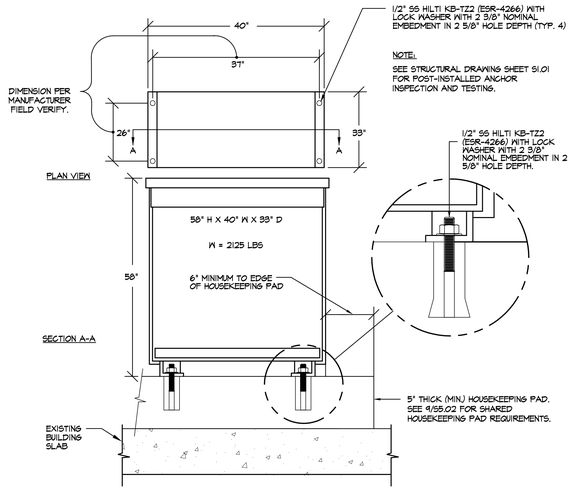

2 / E5.3 **DISTRIBUTION TRANSFORMER INSTALLATION DETAIL (300 KVA)**

NOT TO SCALE

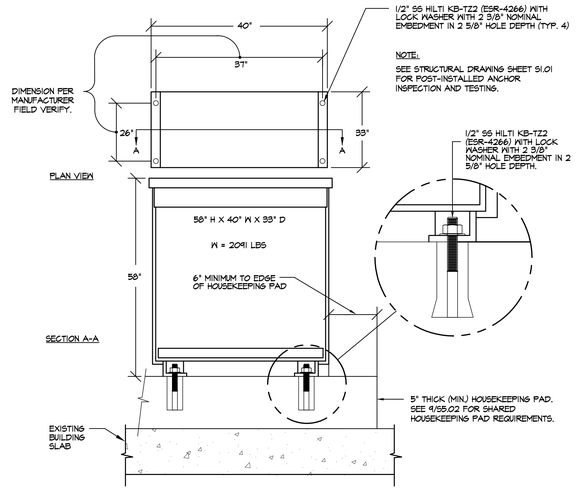

3 / E5.3 **DISTRIBUTION TRANSFORMER INSTALLATION DETAIL (225 KVA)**

NOT TO SCALE

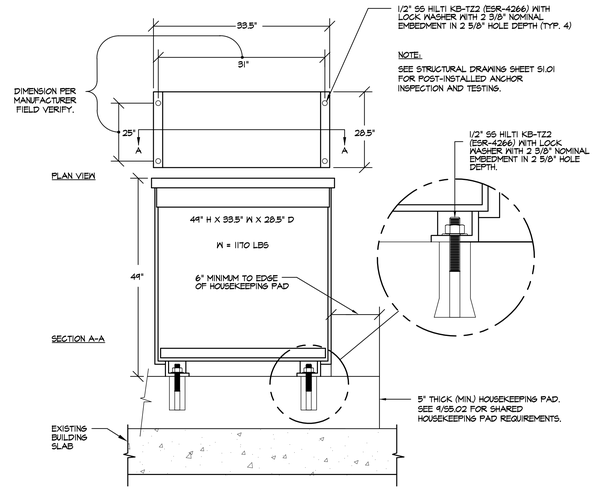

4 / E5.3 **DISTRIBUTION TRANSFORMER INSTALLATION DETAIL (150 KVA)**

NOT TO SCALE

IDENTIFICATION STAMP
DIV. OF THE STATE ARCHITECT
APP: 01-119530 INC:
REVIEWED FOR
SS ☑ FLS ☑ ACS ☑
DATE: 10/26/2021

aedis architects
www.aedisarchitects.com
387 S. 1st Street, Suite 300
San Jose, CA 95113
tel: (408)-300-5160
fax: (408)-300-5121

PROJECT

COLLEGE PARK ELEMENTARY SCHOOL - HVAC REPLACEMENT

SAN MATEO-FOSTER CITY SCHOOL DISTRICT

CONSULTANT

REGISTERED PROFESSIONAL ENGINEER STAMP S. FERNANDEZ E16890 exp. 06/30/23 ELECTRICAL STATE OF CALIFORNIA

American Consulting Engineers Electrical, Inc.
1580 The Alameda, Suite 200
San Jose, CA 95126
JOB # EX21030.00
408/236-2310
Fax: 408/236-2311

STAMP

STATE
DSA FILE NUMBER 41-26
APPL # 01-119530

REVISIONS

No.	Description	Date
△		

MILESTONES

DD	
90% CD	
DSA SUB	05/26/2021
BACKCHECK	10/07/2021

SHEET

ELECTRICAL DETAILS

DATE 10/07/2021
JOB # 2021005.01
SHEET # E5.3

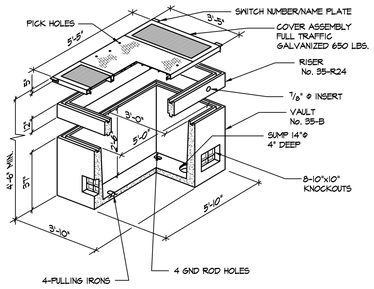

NOTES:

1. HIGH DENSITY REINFORCED CONCRETE BOX WITH NON-SETTING SHOULDERS POSITIONED TO MAINTAIN GRADE AND FACILITATE BACK FILLING. APPROXIMATE DIMENSIONS SHOWN.
2. ALL CONDUITS SHALL ENTER FROM SIDES OF PULL BOX. NO CONDUITS SHALL BE ALLOWED FROM THE BOTTOM OF THE PULL BOX.
3. CONTRACTOR SHALL STACK CONDUITS AS REQUIRED TO MEET THE NEC CODE REQUIREMENTS.
4. PROVIDE BELL ENDS ON ALL CONDUIT.
5. ALL PENETRATIONS INTO BOXES SHALL BE SEALED WITH GROUT.
6. PROVIDE BASE WITH DRAIN. PROVIDE DRAIN ROCK.

1 / E5.4 3' X 5' ELECTRICAL VAULT

NOT TO SCALE (FULL TRAFFIC COVER)

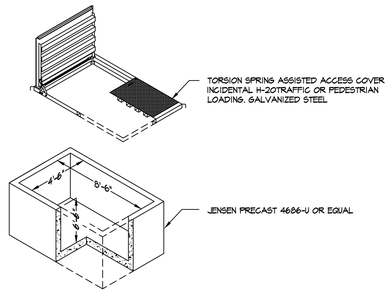

NOTES:

1. HIGH DENSITY REINFORCED CONCRETE BOX WITH NON-SETTING SHOULDERS POSITIONED TO MAINTAIN GRADE AND FACILITATE BACK FILLING. APPROXIMATE DIMENSIONS SHOWN.
2. ALL CONDUITS SHALL ENTER FROM SIDES OF PULL BOX. NO CONDUITS SHALL BE ALLOWED FROM THE BOTTOM OF THE PULL BOX.
3. CONTRACTOR SHALL STACK CONDUITS AS REQUIRED TO MEET THE NEC CODE REQUIREMENTS.
4. PROVIDE BELL ENDS ON ALL CONDUIT.
5. ALL PENETRATIONS INTO BOXES SHALL BE SEALED WITH GROUT.
6. PROVIDE BASE WITH DRAIN. PROVIDE DRAIN ROCK.

2 / E5.4 4'6" x 8'6" ELECTRICAL VAULT

NOT TO SCALE

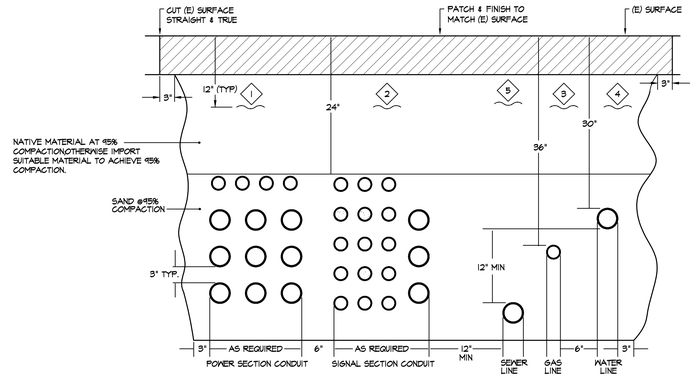

1. WARNING TAPE MARKED "POWER"
2. WARNING TAPE MARKED "SIGNAL"
3. WARNING TAPE MARKED "GAS"
4. WARNING TAPE MARKED "WATER"
5. WARNING TAPE MARKED "SEWER"

NOTES:

1. ALL ELECTRICAL TRENCH WORK SHALL BE THE RESPONSIBILITY OF THE ELECTRICAL CONTRACTOR.
2. MINIMUM SPACING BETWEEN CONDUITS IS 3".
3. SEE SITE/FLOOR PLANS AND SPECIFICATIONS FOR CONDUIT REQUIREMENTS.
4. ALL UNDERGROUND CONDUITS TO BE IN CONFORMANCE WITH DETAIL 1/S5.1

3 / E5.4 TYPICAL JOINT TRENCH & DUCT BANK DETAIL

NOT TO SCALE

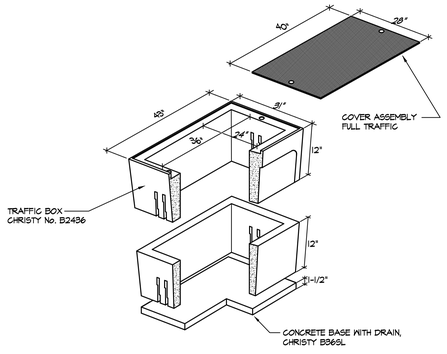

NOTES:

1. HIGH DENSITY REINFORCED CONCRETE BOX WITH NON-SETTING SHOULDERS POSITIONED TO MAINTAIN GRADE AND FACILITATE BACK FILLING. APPROXIMATE DIMENSIONS SHOWN.
2. ALL CONDUITS SHALL ENTER FROM SIDES OF PULL BOX. CONTRACTOR SHALL PROVIDE PULL BOX EXTENSION AS REQUIRED. NO CONDUITS SHALL BE ALLOWED FROM THE BOTTOM OF THE PULL BOX.
3. CONTRACTOR SHALL STACK CONDUITS AS REQUIRED TO MEET THE NEC CODE REQUIREMENTS.
4. PROVIDE BELL ENDS ON ALL CONDUIT.
5. ALL PENETRATIONS INTO BOXES SHALL BE SEALED WITH GROUT.
6. PROVIDE BASE WITH DRAIN. PROVIDE DRAIN ROCK.

4 / E5.4 B2436 ELECTRICAL VAULT

NOT TO SCALE (FULL TRAFFIC COVER)

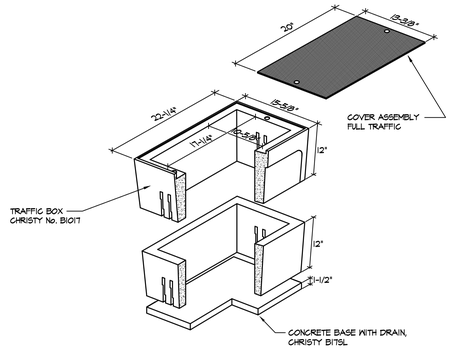

NOTES:

1. HIGH DENSITY REINFORCED CONCRETE BOX WITH NON-SETTING SHOULDERS POSITIONED TO MAINTAIN GRADE AND FACILITATE BACK FILLING. APPROXIMATE DIMENSIONS SHOWN.
2. ALL CONDUITS SHALL ENTER FROM SIDES OF PULL BOX. CONTRACTOR SHALL PROVIDE PULL BOX EXTENSION AS REQUIRED. NO CONDUITS SHALL BE ALLOWED FROM THE BOTTOM OF THE PULL BOX.
3. CONTRACTOR SHALL STACK CONDUITS AS REQUIRED TO MEET THE NEC CODE REQUIREMENTS.
4. PROVIDE BELL ENDS ON ALL CONDUIT.
5. ALL PENETRATIONS INTO BOXES SHALL BE SEALED WITH GROUT.
6. PROVIDE BASE WITH DRAIN. PROVIDE DRAIN ROCK.

5 / E5.4 B1017 ELECTRICAL VAULT

NOT TO SCALE (FULL TRAFFIC COVER)

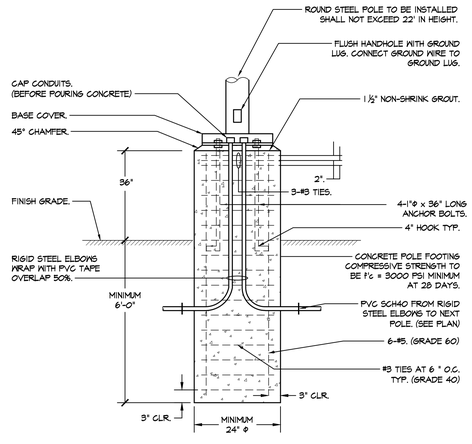

6 / E5.4 TYPICAL RAISED POLE BASE DETAIL

NOT TO SCALE (NOT PART OF DSA STRUCTURAL REVIEW PER IR A-22)
(POLE LESS THAN 35')

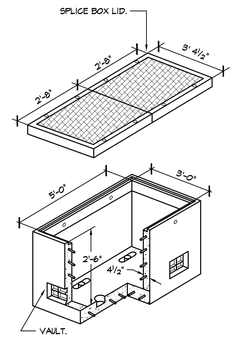

NOTE:
A HEAVY DUTY REINFORCED CONCRETE BOX WITH STANDARD KNOCKOUTS AND PULLING IRONS MADE IN CONFORMANCE WITH PG&E REQUIREMENTS.

7 / E5.4 PG&E 3' X 5' ELECTRICAL VAULT

NOT TO SCALE

IDENTIFICATION STAMP
DIV. OF THE STATE ARCHITECT
APP: 01-119530 INC:
REVIEWED FOR
SS ☑ FLS ☑ ACS ☑
DATE: 10/26/2021

aedis architects
www.aedisarchitects.com
387 S. 1st Street, Suite 300
San Jose, CA 95113
tel: (408)-300-5160
fax: (408)-300-5125

PROJECT

COLLEGE PARK ELEMENTARY SCHOOL - HVAC REPLACEMENT

SAN MATEO-FOSTER CITY SCHOOL DISTRICT

CONSULTANT

REGISTERED PROFESSIONAL ENGINEER
STEVEN S. FERNANDEZ
E16890
ex. 06/30/23
ELECTRICAL
STATE OF CALIFORNIA

American Consulting Engineers Electrical, Inc.
1580 The Alameda, Suite 200
San Jose, CA 95126
JOB # EX21030.00
408/236-231
Fax: 408/236-231

STAMP

STATE
DSA FILE NUMBER 41-26
APPL # 01-119530

REVISIONS

No.	Description	Date
△		

MILESTONES

DD	
90% CD	
DSA SUB	05/26/2021
BACKCHECK	10/07/2021

SHEET

ELECTRICAL DETAILS

DATE 10/07/2021
JOB # 2021005.01
SHEET # E5.4