Stamford Public Schools
EXCELLENCE IS THE POINT.

TO: All Bidders

FROM: Vivens Joachim, BOE Management Analyst/Purchasing Agent

CC: Ryan Fealey, Director of Finance; Jeanie Valentine, Buyer

DATE: April 13, 2022

RE: B-4038 PRE FAB METAL BUILDING AT SHS

ADDENDUM 1

VENDOR QUESTONS & ANSWERS

1. Can we get a to-scale copy of the drawings for the Pre-Fab building:
   Yes, see below for the drawing for the Pre-Fab building
2. Can the bid due date be extended for one (1) more week?
   Yes, the new Due date is:
   THURSDAY APRIL 28, 2022 | TIME: 2:30 PM

All other specification and requirements remain unchanged.

STAMFORD HIGH STADIUM CREW STORAGE BLDG. #2

UNIVERSAL STEEL BUILDINGS

FO# 21175

Building of 2 2

STATE OF CONNECTICUT
T. JAMES EISENMAN, JR.
No. 24534
LICENSED
PROFESSIONAL ENGINEER

1/20/21

OLYMPIA STEEL BUILDINGS
Olympia Steel Buildings®
400 Island Avenue • McKees Rocks, PA 15136
888-449-7756

INDEX OF DRAWINGS

Page	Drawing Title	REV NO.
	Cover Page	02
1	Specifications	01
2	Anchor Bolt Plan	02
3	Rigid Frame Reactions	01
4	EndWall Reactions, Design Criteria	01
5	Anchor Bolt Details	01
6	Roof Framing	01
7	Roof Panel Layout	01
8	Rigid Frame #1	01
9	Rigid Frame #2	01
10	Front Sidewall Framing	01

Page	Drawing Title	REV NO.
11	Back Sidewall Framing	01
12	Left Endwall Framing	01
13	Right Endwall Framing	01
14	Detail Page #1	01
15	Detail Page #2	01
16	Detail Page #3	01
17		0
18		0
19		0
20		0
21		0

Page	Drawing Title	REV NO.
22		0
23		0
24		0
25		0
26		0
27		0
28		0
29		0
30		0
31		0
32		0

GENERAL

All materials included in the Metal Building System are in accordance with the manufacturer's standard materials and details unless otherwise specified on the order documents. (MBMA 2012 Metal Building Systems Manual, Part IV, Section 2.1)

DESIGN RESPONSIBILITY

The manufacturer is responsible only for the structural design of the Metal Building System it sells to the purchaser / customer. Neither the manufacturer nor the manufacturer's engineer is the design professional or engineer of record for the construction project. The manufacturer is not responsible for the design of any component or materials not sold by it, or their interface and connection with Metal Building System unless such design responsibility is specifically required by the order documents. (MBMA 2012 Metal Building Systems Manual, Part IV, Section 3.1)

FOUNDATION DESIGN AND ANCHOR BOLTS

The manufacturer is not responsible for the design, materials, and workmanship of the foundation. The anchor bolt plans prepared by the manufacturer are intended to show only the anchor bolt location, diameter (based on ASTM A36 bolts), and quantity required to connect the Metal Building System to the foundation. (MBMA 2012 Metal Building Systems Manual, Part IV, Section 3.2.2).

It is the responsibility of the end customer to ensure that adequate provisions are made for specifying bolt embedment, bearing angles, tie rods, and / or associated items embedded in the concrete foundation, as well as foundation design based on the loads imposed by the Metal Building System, or other imposed loads, and the bearing capacity of the soil and other conditions of the building site. (MBMA 2012 Metal Building Systems Manual, Part IV, Section 3.2.2)

U.S. –Anchor bolts shall be accurately set to a tolerance of +/– 1/8 in both elevation and location (AISC Code of Standard Practice for Steel Buildings and Bridges).

Canada –Anchor bolts shall be accurately set in accordance with CISC Code of Standard Practice, June 2008, Clause 7.7.1

ADJACENT EXISTING BUILDINGS

The manufacturer does not investigate the influence of the Metal Building System on adjacent existing buildings or structures. The end customer assures that such buildings and structures are adequate to resist snow loads or other conditions as a result of the presence of the Metal Building System. (MBMA 2012 Metal Building Systems Manual, Part IV, Section 3.2.5)

SHOP-PRIMED STEEL

All structural members of the Metal Building System not fabricated of corrosion resistant material or protected by corrosion resistant coating are painted with one coat of shop primer. All surfaces to receive shop primer are cleaned of loose rust, loose mill scale and other foreign matter by using, as a minimum the hand tool cleaning method SSPC–SP2 (Steel Manual, Structures Painting Council) prior to painting. The coat of shop primer is intended to protect the steel framing for only a short period of exposure to ordinary atmospheric conditions. Shop–primed steel should be placed on blocking to prevent contact with the ground, and so positioned as to minimize water holding pockets, dust, mud an other contamination of the primer film. Repairs of damage to primed surfaces and or removal of foreign material due to improper field storage or site conditions are not the responsibility of the manufacturer. (CISC Code of Standard Practice, June 2008, Clause 6.8; (MBMA 2012 Metal Building Systems Manual, Part IV, Section 4.2.4).

ERECTION-GENERAL

The erector, by entering into contract to erect the building, holds itself out as skilled in the erection of Metal Building Systems and is responsible for complying with all applicable local, federal, and state construction and safety regulations including OSHA regulations as well as any applicable requirements of local, national, or international union rules or practices. (CISC Code of Standard Practice, June 2008, Clause 7.2; (MBMA 2012 Metal Building System Manual, Part IV, Section 6.9).

The erector shall erect the Metal Building System in accordance with the erection drawings, the Erection and Detail Manual (February 2012), and / or the Seam–Lok Technical – Erection manual (May 2012) as furnished by the manufacturer. The aforementioned erection information is intended to illustrate the layout of the framing members, provide the associated connection details, and suggests sequence of erection. It is not intended to specify any particular method of erection to be followed by the erector. The erector remains solely responsible for the safety and appropriateness of all techniques and methods utilized by its crews in the erection of the Metal Building System. The erector is responsible for supplying any safety devices such as scaffolds, runways, nets, et, which may be required to safely erect the Metal Building System. (MBMA 2012 Metal Building Systems Manual, Part IV, Section 6.9) The manufacturer expressly disclaims any responsibility for injury to persons in the course of erection or for damages to the product itself. Field erection of a Pre–Engineered Metal Building, as in all construction projects, involves hazards to persons within the area of the construction and risk of damage to the property itself. Only experienced persons who are skilled and qualified in the erection of Metal Building Systems should be permitted to field–erect a building due to the hazards of this construction activity. The manufacturer is not responsible for the erection of the Metal Building System, the supply of any tools or equipment, or any other field work. The manufacturer provides no field supervision for the erection of the structure nor does the manufacturer perform any intermediate or final inspections of the Metal Building System during or after erection.

The erector shall furnish temporary guys and bracing where needed for squaring, plumbing, and securing the structural framing against loads, such as wind loads acting on the exposed framing as well as loads due to erection equipment and erection operation, but not including loads resulting from the performance of work by others. Bracing furnished by the manufacturer for the Metal Building System cannot be assumed to be adequate during erection. Temporary supports such as temporary guys, braces, false work, cribbing, or other elements required for the erection operation will be determined, erected, and installed by the erector. (AISC Code of Standard Practice for Steel Buildings and Bridges, April 14, 2010, Section 7.10.3; CISC Code of Standard Practices, June, 2008, Clause 1.5; MBMA 2012 Metal Buildings System Manual, Part IV, Section 6.2.1.5).

ERECTION TOLERANCES

U.S. ; Erection tolerances are those set forth in AISC code of standard practice except individual members are considered, plumb, level and aligned if the deviation does not exceed 1:500. (AISC Code of Standard Practice for Steel Buildings and Bridges April 14, 2010 Section 7.13.1; MBMA 2012 Metal Building Systems Manual, Part IV, Section 6.8)

Canada; Erection tolerances are those set forth in CISC Code of Standard Practice except individual members are considered plumb, level and aligned if the deviation does not exceed 1:500. (CISC Handbook of Steel Construction, Tenth Edition, Second Revised Printing, Part 1, Clause 29.3; MBMA 2012 Metal Building Systems Manual, Part IV, Section 6.8)

BOLT TIGHTENING

The proper tightening and inspection of all fasteners is the responsibility of the erector (Reference RCSC for structural joints using high strength bolts; August 1, 2014). All high strength (ASTM F3125, A325, A490) bolts and nuts must be tightened by the "turn–of–the–nut" method unless otherwise specified by the end customer in the contract documents. Inspection of high strength bolt and nut installation by other than the erector must also be specified in the contract documents and the erector is responsible for ensuring that the installation procedures are compatible prior to the start of erection (CISC Handbook of Steel Construction, Tenth Edition, Second Revised Printing, Part 1, Clause 23.8.2), (MBMA 2012 Metal Building Systems Manual, Part IV, Section 6.9).

MATERIALS	ASTM DESIGNATION	MINIMUM YIELD	MATERIALS	ASTM DESIGNATION	MINIMUM YIELD
Hot–Rolled Mill Sections	A 36, A 572, A 992	Fy = 36 ksi and/or 50 ksi	Roof and Wall Sheeting	A 792, Gr. 50 Class 1 A 792, Gr. 80	Fy = 50 ksi Fy = 80 ksi
Structural Steel Plates	A 572, A 1011	Fy = 55 ksi	Mild Steel Bolts	A 307	Fy = 36 ksi
Structural Steel Bars	A 572 or A 529	Fy = 55 ksi	High Strength Bolts	F3125: A 325–N A 490–N	Fy = 92 or 81 ksi N/A
Cold Formed Light Gauge Shapes	A 653 Gr. 55	Fy = 55 ksi	Anchor Rods (If supplied)	A 36	Fy = 36 ksi
Cable Bracing	A 475, EHS	N/A	Pipe and Hollow Structural Sections	A 500 Gr. B	Fy = 42 ksi, 46 ksi
Rod Bracing	A 36	Fy = 36 ksi			

CORRECTION OF ERRORS AND REPAIRS

The correction of minor misfits by the use of drift pins to draw the components into line, shimming, moderate amounts of reaming, chipping, and cutting, and the replacement of minor shortages of material are a normal part of erection and are not subject to claim. (AISC Code of Standard Practice for Steel Buildings and Bridges, April 14, 2010, Section 7.14; CISC Code of Standard Practice, June 2008, Clause 7.15; MBMA 2012 Metal Building Systems Manual, Part IV, Section 6.10).

DRAWING DISCREPANCIES

In case of discrepancies between the manufacturers steel plans and plans for other trades, the manufacturers steel plans govern. (AISC Code of Standard Practice for Steel Buildings and Bridges, April 14, 2010, Section 3.3; CISC Code of Standard Practice, June 2008, Clause 3.4; MBMA 2012 Metal Building Systems Manual, Part IV, Section 3.1).

DELIVERIES

Delivery of any material by the manufacturers carrier, a common carrier, or to purchasers/ customers own leased, chartered, or authorized conveyance shall constitute delivery to builder, and thereafter, such material shall be at builders risk. If builder chooses to use its own, or private carrier, it shall be solely responsible for compliance with all applicable government regulations. All charges shall be borne by the builder. The manufacturers responsibility for damage or loss ceases upon delivery of shipment to carrier. The manufacturer will endeavor to deliver on the required date. The manufacturers truck is not considered as being late if deliveries are between 8am – 12pm (morning) and 12pm – 5pm (afternoon). However, the manufacturer cannot be held responsible for circumstances beyond our control. For deliveries via the manufacturers truck, the manufacturer will only honor claims that were approved by the customer service department at the time of delivery. For deliveries via contract carriers, it is the responsibility of the customer to file claims with the carrier. The manufacturer cannot assume any liability for the claim.

SHORTAGES

The purchaser /customer should make an inspection upon arrival of all building components. The purchaser/customer must note on the freight bill any missing item(s) and notify the manufacturers customer service department immediately; otherwise, the manufacturer cannot be held responsible for any shortages. If any item is damaged, note on the bill of lading and file a claim with the freight agent. Concealed shortages must be reported to the manufacturers customer service department within the following time frames (date from receipt of first delivery), based on the project shipment size, i.e., number of truck loads used in delivery.

1 to 3 loads....2 weeks 4 loads and over....3 weeks The manufacturers responsibility for shortages expires at the end of these time periods.

FABRICATION ERRORS

The purchaser/customer is responsible for contacting the customer service department to advise the manufacturer of fabrication problems and corresponding cost estimates. The manufacturer will be responsible for providing the builder with verbal approval to proceed with appropriate field corrections. This will be done in a timely manner. IF THE BUILDER PROCEEDS WITH CORRECTIVE WORK WITHOUT THE MANUFACTURERS APPROVAL, HE DOES SO AT HIS OWN RISK. The manufacturer shall not be responsible for any claims where the purchaser/customer has not documented the problem, its correction, and reasonable costs for repair, and submitted this documentation for payment within 30 days of the occurrence.

INVOICE PAYMENT

By acceptance of the materials of services set forth in the invoice, the purchaser/customer agrees to pay the invoice amount within the time period specified on the invoice. AT NO TIME IS IT ACCEPTABLE TO DEDUCT A BACK CHARGE OR SHORTAGE FROM AN INVOICE.

SAFETY PROCEDURES

The manufacturer is committed to manufacturing a quality product that can be erected safely. Although good job site practices and a commitment to safety by the erector are beyond the control of the manufacturer, the manufacturer highly recommends the erector provide good, safe working conditions on the job site. The erector should follow all local, state, and federal health and safety regulations at all times. Accident prevention practices should be implemented and each employee should know emergency procedures. The manufacturer also recommends daily meetings to discuss erection safety procedures. For additional information concerning federal health and safety regulations, contact the occupational safety and health administration (osha).

U.S. Department of Labor
Occupational Safety and Health Administration
200 Constitution Avenue, N.W.
Washington, DC 20210
www.osha.gov

The manufacturer shall not be responsible for personal injury or property damage as a result of failure to follow all applicable safety regulations and material handling and installation recommendations.

OLYMPIA STEEL BUILDINGS
Olympia Steel Buildings
400 Island Avenue • McKees Rocks, PA 15136
888-449-7756

STAMFORD HIGH STADIUM CREW STORAGE BLDG #2

30'-0" x 32'-0" x 12'-0"

DATE: 10/24/17 | REVISION: 01

ENG: MCK | DWN: BJC | APPD: MCK

F.O. 21175

STAMFORD HIGH STADIUM CREW STORAGE BLDG #2

REVISION HISTORY

REV.	DESCRIPTION	DATE
01	SEE C-01	1/14/21

DRAWING STATUS

FOR APPROVAL: THESE DRAWINGS, BEING FOR APPROVAL, ARE BY DEFINITION NOT FINAL, AND ARE FOR CONCEPTUAL REPRESENTATION ONLY. THE PURPOSE IS TO CONFIRM PROPER INTERPRETATION OF THE PROJECT DOCUMENTS. ONLY DRAWINGS ISSUED "FOR CONSTRUCTION" CAN BE CONSIDERED AS COMPLETE.

FOR PERMIT: THESE DRAWINGS, BEING FOR PERMIT, ARE BY DEFINITION NOT FINAL. ONLY DRAWINGS ISSUED "FOR CONSTRUCTION" CAN BE CONSIDERED AS COMPLETE.

FOR CONSTRUCTION: FINAL DRAWINGS.

STATE OF CONNECTICUT
T. JAMES EISENMAN, JR.
No. 24534
LICENSED PROFESSIONAL ENGINEER

1/20/21

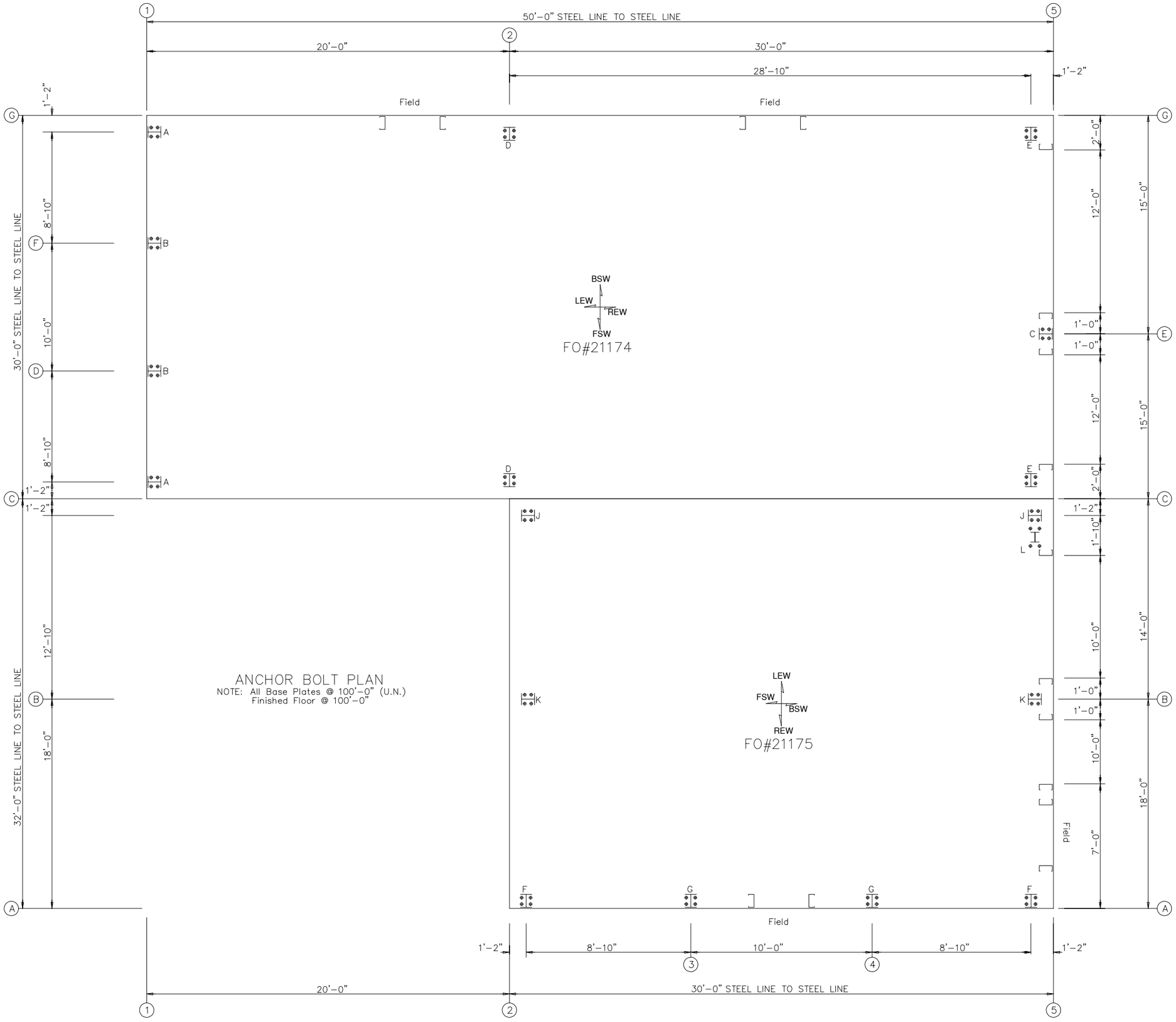

OLYMPIA STEEL BUILDINGS

Olympia Steel Buildings
4000 Island Avenue • McKees Rocks, PA 15136
888-449-7756

STAMFORD HIGH STADIUM CREW STORAGE BLDG #2

30'-0" x 50'-0" x 17'-6"

DATE: 10/16/17	REVISION: 02
ENG: MCK	DWN: BJC	APPD: MCK

F.O. 21175

STAMFORD HIGH STADIUM CREW STORAGE BLDG #2

REVISION HISTORY

REV.	DESCRIPTION	DATE
01	ADJUSTED OVERHEAD DOOR OFFSET.	12/5/17
02	SEE CO-01	1/14/21

DRAWING STATUS

☐ FOR APPROVAL:
THESE DRAWINGS, BEING FOR APPROVAL, ARE BY DEFINITION NOT FINAL, AND ARE FOR CONCEPTUAL REPRESENTATION ONLY. THEIR PURPOSE IS TO CONFIRM PROPER INTERPRETATION OF THE PROJECT DOCUMENTS. ONLY DRAWINGS ISSUED "FOR CONSTRUCTION" CAN BE CONSIDERED AS COMPLETE.

☐ FOR PERMIT:
THESE DRAWINGS, BEING FOR PERMIT, ARE BY DEFINITION NOT FINAL. ONLY DRAWINGS ISSUED "FOR CONSTRUCTION" CAN BE CONSIDERED AS COMPLETE.

■ FOR CONSTRUCTION:
FINAL DRAWINGS.

STATE OF CONNECTICUT
T. JAMES EISENMAN, JR.
No. 24534
LICENSED
PROFESSIONAL ENGINEER

1/20/21

FRAME LINES: C B

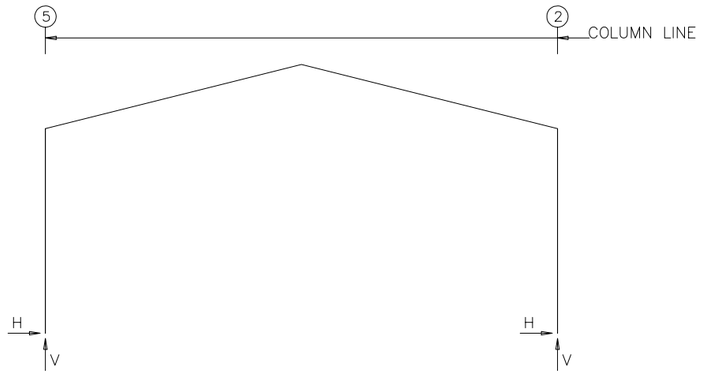

RIGID FRAME: ANCHOR BOLTS & BASE PLATES

Frm Line	Col Line	Anc_Bolt Qty	Anc_Bolt Dia	Base_Plate (in) Width	Base_Plate (in) Length	Base_Plate (in) Thick	Grout (in)
C	5	4	0.750	8.000	9.875	0.500	0.0
C	2	4	0.750	8.000	9.875	0.500	0.0

RIGID FRAME: ANCHOR BOLTS & BASE PLATES

Frm Line	Col Line	Anc_Bolt Qty	Anc_Bolt Dia	Base_Plate (in) Width	Base_Plate (in) Length	Base_Plate (in) Thick	Grout (in)
B	5	4	0.750	8.000	11.50	0.500	0.0
B	2	4	0.750	8.000	11.50	0.500	0.0

WIND COLUMN REACTIONS

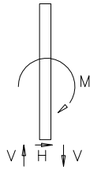

Loc	Wall Line	Col Line	R/L	Load_ID	± Reactions Horz (k)	± Reactions Vert/Side (k)	± Reactions Moment (f-k)	Anc_Bolt Qty	Anc_Bolt Dia	Base_Plate(in) Width	Base_Plate(in) Length	Base_Plate(in) Thick
B_SW	5	C	L	Wind	2.1	23.2	23.2	4	0.750	6.000	18.000	1.250
				Seismic	0.5	15.3	5.1					

RIGID FRAME: BASIC COLUMN REACTIONS (k)

Frame Line	Column Line	Dead Horiz	Dead Vert	Collateral Horiz	Collateral Vert	Live Horiz	Live Vert	Snow Horiz	Snow Vert	Snow_Drift Horiz	Snow_Drift Vert	Slide_Snow Horiz	Slide_Snow Vert
C	5	0.1	0.5	0.1	0.4	0.7	2.3	1.1	3.4	0.5	1.7	0.4	1.4
C	2	−0.1	0.5	−0.1	0.4	−0.7	2.3	−1.1	3.4	−0.5	1.7	−0.4	1.4

Frame Line	Column Line	Wind_Left1 Horiz	Wind_Left1 Vert	Wind_Right1 Horiz	Wind_Right1 Vert	Wind_Left2 Horiz	Wind_Left2 Vert	Wind_Right2 Horiz	Wind_Right2 Vert	Wind_Long1 Horiz	Wind_Long1 Vert	Wind_Long2 Horiz	Wind_Long2 Vert
C	5	−2.0	−3.6	0.5	−2.1	−2.1	−2.5	0.4	−1.0	0.2	−2.3	0.0	−2.0
C	2	−0.5	−2.1	2.0	−3.6	−0.4	−1.0	2.1	−2.5	0.0	−3.6	−0.2	−3.8

Frame Line	Column Line	Seismic_Left Horiz	Seismic_Left Vert	Seismic_Right Horiz	Seismic_Right Vert	Seismic_Long Horiz	Seismic_Long Vert	F1UNB_SL_L Horiz	F1UNB_SL_L Vert	F1UNB_SL_R Horiz	F1UNB_SL_R Vert
C	5	−0.1	−0.1	0.1	0.1	0.0	0.0	0.9	3.3	0.9	1.9
C	2	−0.1	0.1	0.1	−0.1	0.0	−0.3	−0.9	1.9	−0.9	3.3

Frame Line	Column Line	Dead Horiz	Dead Vert	Collateral Horiz	Collateral Vert	Live Horiz	Live Vert	Snow Horiz	Snow Vert	Snow_Drift Horiz	Snow_Drift Vert	Slide_Snow Horiz	Slide_Snow Vert
B	5	0.3	1.1	0.3	0.9	1.9	5.9	2.8	8.9	0.1	0.2	0.5	1.7
B	2	−0.3	1.1	−0.3	0.9	−1.9	5.9	−2.8	8.9	−0.1	0.2	−0.5	1.7

Frame Line	Column Line	Wind_Left1 Horiz	Wind_Left1 Vert	Wind_Right1 Horiz	Wind_Right1 Vert	Wind_Left2 Horiz	Wind_Left2 Vert	Wind_Right2 Horiz	Wind_Right2 Vert	Wind_Long1 Horiz	Wind_Long1 Vert	Wind_Long2 Horiz	Wind_Long2 Vert
B	5	−3.8	−7.3	1.1	−4.3	−4.1	−4.4	0.8	−1.5	0.6	−6.0	0.0	−5.2
B	2	−1.1	−4.3	3.8	−7.3	−0.8	−1.5	4.1	−4.4	0.0	−6.8	−0.6	−7.5

Frame Line	Column Line	Seismic_Left Horiz	Seismic_Left Vert	Seismic_Right Horiz	Seismic_Right Vert	Seismic_Long Horiz	Seismic_Long Vert	F2UNB_SL_L Horiz	F2UNB_SL_L Vert	F2UNB_SL_R Horiz	F2UNB_SL_R Vert
B	5	−0.2	−0.2	0.2	0.2	0.0	0.0	2.2	8.6	2.2	4.9
B	2	−0.2	0.2	0.2	−0.2	0.0	−0.3	−2.2	4.9	−2.2	8.6

OLYMPIA STEEL BUILDINGS
Olympia Steel Buildings
4000 Island Avenue • McKees Rocks, PA 15136
888-449-7756

STAMFORD HIGH STADIUM CREW STORAGE BLDG #2

30'-0" x 32'-0" x 12'-0"

DATE: 10/24/17 | REVISION: 01

ENG: MCK | DWN: BJC | APPD: MCK

F.O. 21175

STAMFORD HIGH STADIUM CREW STORAGE BLDG #2

REVISION HISTORY

REV.	DESCRIPTION	DATE
01	SEE CO-01	1/14/21

DRAWING STATUS

☐ FOR APPROVAL: THESE DRAWINGS, BEING FOR APPROVAL, ARE BY DEFINITION NOT FINAL, AND ARE FOR CONCEPTUAL REPRESENTATION ONLY. THEIR PURPOSE IS TO CONFIRM PROPER INTERPRETATION OF THE PROJECT DOCUMENTS. ONLY DRAWINGS ISSUED "FOR CONSTRUCTION" CAN BE CONSIDERED AS COMPLETE.

☐ FOR PERMIT: THESE DRAWINGS, BEING FOR PERMIT, ARE BY DEFINITION NOT FINAL. ONLY DRAWINGS ISSUED "FOR CONSTRUCTION" CAN BE CONSIDERED AS COMPLETE.

■ FOR CONSTRUCTION: FINAL DRAWINGS.

STATE OF CONNECTICUT
T. JAMES EISENMAN, JR.
No. 24534
LICENSED
PROFESSIONAL ENGINEER

1/20/21

ENDWALL COLUMN: BASIC COLUMN REACTIONS (k)

Frm Line	Col Line	Dead Vert	Collat Vert	Live Vert	Snow Vert	Wind_Left1 Horz	Wind_Left1 Vert	Wind_Right1 Horz	Wind_Right1 Vert	Wind_Left2 Horz	Wind_Left2 Vert	Wind_Right2 Horz	Wind_Right2 Vert	Wind Press Horz
A	2	0.2	0.1	0.8	1.1	1.3	−2.8	0.0	1.0	1.3	−2.8	0.0	1.0	−0.7
A	3	0.5	0.3	2.0	3.0	0.0	−1.1	1.3	−3.7	0.0	−1.1	1.3	−3.7	−1.6
A	4	0.5	0.3	2.0	3.0	0.0	−1.6	0.0	−2.9	0.0	−1.6	0.0	−2.9	−1.6
A	5	0.2	0.1	0.8	1.1	0.0	−1.1	0.0	−1.0	0.0	−1.1	0.0	−1.0	−0.7

Frm Line	Col Line	Wind Suct Horz	Wind_Long1 Horz	Wind_Long1 Vert	Wind_Long2 Horz	Wind_Long2 Vert	Seis_Left Horz	Seis_Left Vert	Seis_Right Horz	Seis_Right Vert	E2UNB_SL_L− Horz	E2UNB_SL_L− Vert	E2UNB_SL_R− Horz	E2UNB_SL_R− Vert
A	2	0.8	0.0	−0.5	0.4	−1.3	0.3	−0.4	0.0	0.5	0.0	1.1	0.0	0.3
A	3	1.8	0.4	−3.4	0.0	−1.1	0.0	0.4	0.3	−0.5	0.0	3.6	0.0	1.2
A	4	1.8	0.0	−1.7	0.0	−2.7	0.0	0.0	0.0	0.0	0.0	1.2	0.0	3.6
A	5	0.8	0.0	−0.7	0.0	−1.2	0.0	0.0	0.0	0.0	0.0	0.3	0.0	1.1

ANCHOR BOLT SUMMARY

Qty	Locate	Dia (in)	Type
O 16	Endwall	3/4"	
O 16	Frame	3/4"	
O 8	WindCol	3/4"	

BUILDING BRACING REACTIONS

Wall Loc	Wall Line	Col Line	Reactions in plane of wall ± Reactions(k) Wind Horz	Wind Vert	Seismic Horz	Seismic Vert	Panel_Shear (lb/ft) Wind	Seis	Note
L_EW	C								(h)
F_SW	2	C,B	2.1	*	0.5	*			
R_EW	A	2,3	Bracing, see EW reactions						
B_SW	5	C							(g)

(g)Wind column at column line
(h)Rigid frame at endwall

*See RF reactions table for vertical and horizontal reactions in plane of the rigid frame.

ENDWALL COLUMN: ANCHOR BOLTS & BASE PLATES

Frm Line	Col Line	Anc._Bolt Qty	Anc._Bolt Dia	Base_Plate (in) Width	Base_Plate (in) Length	Base_Plate (in) Thick	Grout (in)
A	2	4	0.750	6.000	7.875	0.375	0.0
A	3	4	0.750	6.000	7.875	0.375	0.0
A	4	4	0.750	6.000	7.875	0.375	0.0
A	5	4	0.750	6.000	7.875	0.375	0.0

DESIGN INFORMATION

1. All loading conditions are examined and only the maximum / minimum H or V and the corresponding H or V are reported.
2. Positive reactions are shown in the sketch. Foundation loads are in opposite directions.
3. Bracing reactions are in the plane of the brace with the H pointing away from the braced bay. The vertical reaction is downward.
4. Building reactions are based on the following building data:

DESIGN CRITERIA

Width (ft) = 30
Length (ft) = 32
Eave Height (ft) = 12
Roof Slope (rise/12) = 3.0:12
Building Code = IBC 15
Local Code (State/Prov) = Connecticut 2018
Dead Load (psf) = 2.250
Collateral Load (psf) = 3.00
Roof Live Load (psf) = 20.00
Frame Live Load (psf) = 20.00

Snow:
Ground Snow Load (psf) = 30.00
Snow Importance = 1.00
Thermal Coefficient = 1.00
Snow Exposure Factor = 1.00
Slippery Roof = N
Roof Snow Load (psf) = 30

Wind:
Ultimate Wind Speed (mph) = 120 mph
Occupancy Category = II − Normal
Importance − Wind = 1.00
Wind Exposure = C
Enclosure Classification = C

--Internal Pressure Coefficients--
Pressure = 0.18
Suction = −0.18

----Components & Cladding----
Design Pressure:
Pressure (psf) = 31.43
Suction (psf) = −42.00

Equivalent Lateral Brace Force Procedure.

Steel systems not specifically detailed for seismic resistance.

SEISMIC CRITERIA

Seismic Importance = 1.00
Occupancy Category = II − Normal

Mapped Spectral Response Accelerations
Ss = 0.2490
S1 = 0.0690

---Spectral Response Coefficients---
Sds = 0.2656
Sd1 = 0.1104

Site Class = D
Seismic Design Category = B

------Base Shear------
Expanded Formula = 0.667*Ie*Fa*Ss*W/R
Longitudinal Base Shear = 0.91
Transverse Base Shear = 1.03

--Seismic Response Coefficients--
Frame = 0.089
FSW = 0.089
BSW = 0.089

--Response Modification Factors--
Frame = 3
FSW = 3
BSW = 3

DEFLECTION LIMITS

ENDWALL COLUMN L/ 120
ENDWALL RAFTER (Live) L/ 180
ENDWALL RAFTER (Wind) L/ 180
WALL GIRTS L/ 90
PURLIN (LIVE) L/ 150
PURLIN (WIND) L/ 150
WALL PANEL L/ 90
ROOF PANEL (Live) L/ 120
ROOF PANEL (Wind) L/ 120
Main Frame (Horiz) L/ 60
Main Frame (Vert) L/ 180
WIND BRACING L/ 60
Main Frame (Crane) L/ 100
Main Frame (Seismic) L/ 50
SEISMIC BRACING L/ 50
PARTITION COLUMN L/ 120
PARTITION GIRT L/ 120
PARTITION PANEL L/ 120

OLYMPIA STEEL BUILDINGS
Olympia Steel Buildings
4000 Island Avenue • McKees Rocks, PA 15136
888-449-7756

STAMFORD HIGH STADIUM CREW STORAGE BLDG #2
30'-0" x 32'-0" x 12'-0"
DATE: 10/24/17 | REVISION: 01
ENG: MCK | DWN: BJC | APPD: MCK

F.O. 21175

STAMFORD HIGH STADIUM CREW STORAGE BLDG #2

REVISION HISTORY

REV.	DESCRIPTION	DATE
01	SEE CO-01	1/14/21

DRAWING STATUS

☐ FOR APPROVAL: THESE DRAWINGS, BEING FOR APPROVAL, ARE BY DEFINITION NOT FINAL, AND ARE FOR CONCEPTUAL REPRESENTATION ONLY. THEIR PURPOSE IS TO CONFIRM PROPER INTERPRETATION OF THE PROJECT DOCUMENTS. ONLY DRAWINGS ISSUED "FOR CONSTRUCTION" CAN BE CONSIDERED AS COMPLETE.

☐ FOR PERMIT: THESE DRAWINGS, BEING FOR PERMIT, ARE BY DEFINITION NOT FINAL. ONLY DRAWINGS ISSUED "FOR CONSTRUCTION" CAN BE CONSIDERED AS COMPLETE.

■ FOR CONSTRUCTION: FINAL DRAWINGS.

STATE OF CONNECTICUT
T. JAMES EISENMAN, JR.
No. 24534
LICENSED
PROFESSIONAL ENGINEER
1/20/21

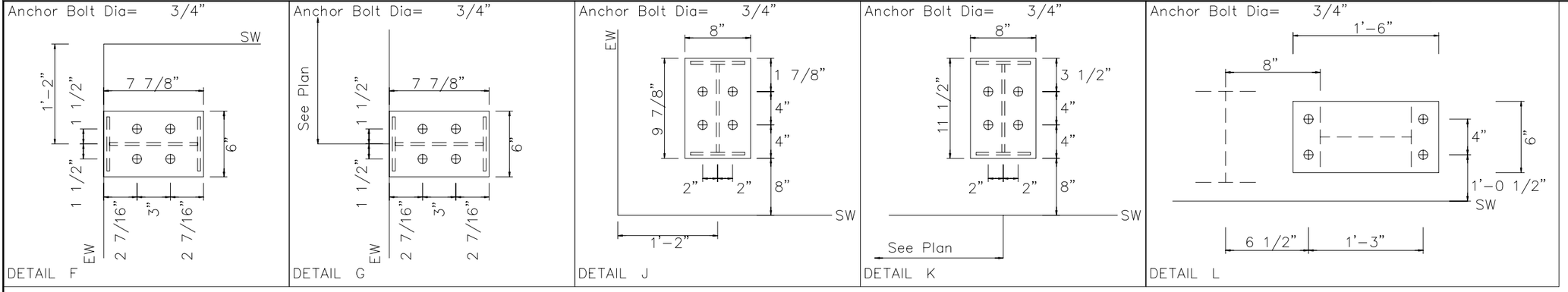

ADDITIONAL LOADING INFORMATION

Mezzanine Loads:

Dead Load _____ PSF

Collateral Load _____ PSF

Live Load _____ PSF

Crane Information:

Crane Type _____

CMAA Service Class _____

Crane capacity = _____ Kips

Bridge Weight = _____ Kips

Hoist/Trolley Weight = _____ Kips

Wheel Spacing = _____ Ft.

Additional Loads:

1. _____

2. _____

3. _____

OLYMPIA STEEL BUILDINGS

Olympia Steel Buildings
400 Island Avenue • McKees Rocks, PA 15136
888-449-7756

STAMFORD HIGH STADIUM CREW STORAGE BLDG #2

30'-0" x 32'-0" x 12'-0"

DATE: 10/24/17 | REVISION: 01

ENG: MCK | DWN: BJC | APPD: MCK

F.O. 21175

STAMFORD HIGH STADIUM CREW STORAGE BLDG #2

DRAWING STATUS

FOR APPROVAL:
THESE DRAWINGS, BEING FOR APPROVAL, ARE BY DEFINITION NOT FINAL, AND ARE FOR CONCEPTUAL REPRESENTATION ONLY. THEIR PURPOSE IS TO CONFIRM PROPER INTERPRETATION OF THE PROJECT DOCUMENTS. ONLY DRAWINGS ISSUED "FOR CONSTRUCTION" CAN BE CONSIDERED AS COMPLETE.

FOR PERMIT:
THESE DRAWINGS, BEING FOR PERMIT, ARE BY DEFINITION NOT FINAL. ONLY DRAWINGS ISSUED "FOR CONSTRUCTION" CAN BE CONSIDERED AS COMPLETE.

FOR CONSTRUCTION:
FINAL DRAWINGS.

REVISION HISTORY

REV.	DESCRIPTION	DATE
01	SEE CO-01	1/14/21

STATE OF CONNECTICUT
T. JAMES EISENMAN, JR.
No. 24534
LICENSED
PROFESSIONAL ENGINEER

1/20/21

STANDARD EAVE STRUT BRACING DETAIL

NOTE 1: SPACE BRACES EVENLY ACROSS BAYS

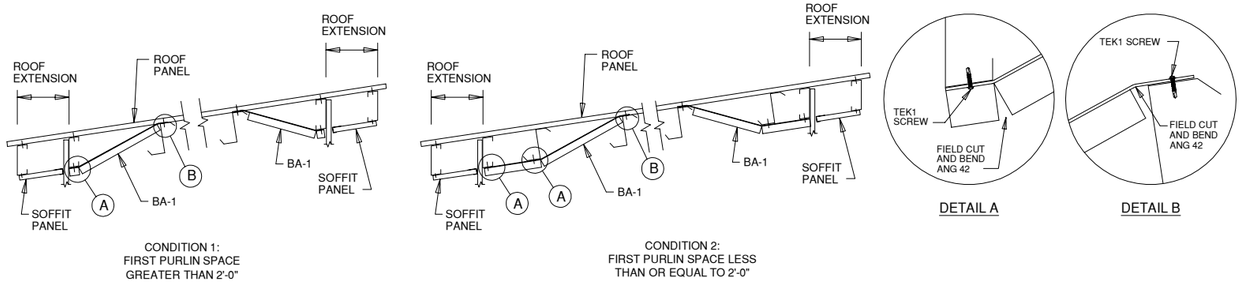

MEMBER TABLE
ROOF PLAN

QUAN	MARK	PART	LENGTH
3	P-1	10X25Z14	15'-1 1/2"
3	P-2	10X25Z14	19'-1 1/2"
3	P-3	10X25Z14	15'-1 1/2"
3	P-4	10X25Z14	19'-1 1/2"
1	E-1	10X35E16	13'-11 1/2"
1	E-2	10X35E16	17'-11 1/2"
1	E-3	10X35E16	17'-11 1/2"
1	E-4	10X35E16	13'-11 1/2"
2	CB-5	CABLE250	17'-1 3/16"
2	CB-6	CABLE250	16'-5 5/16"

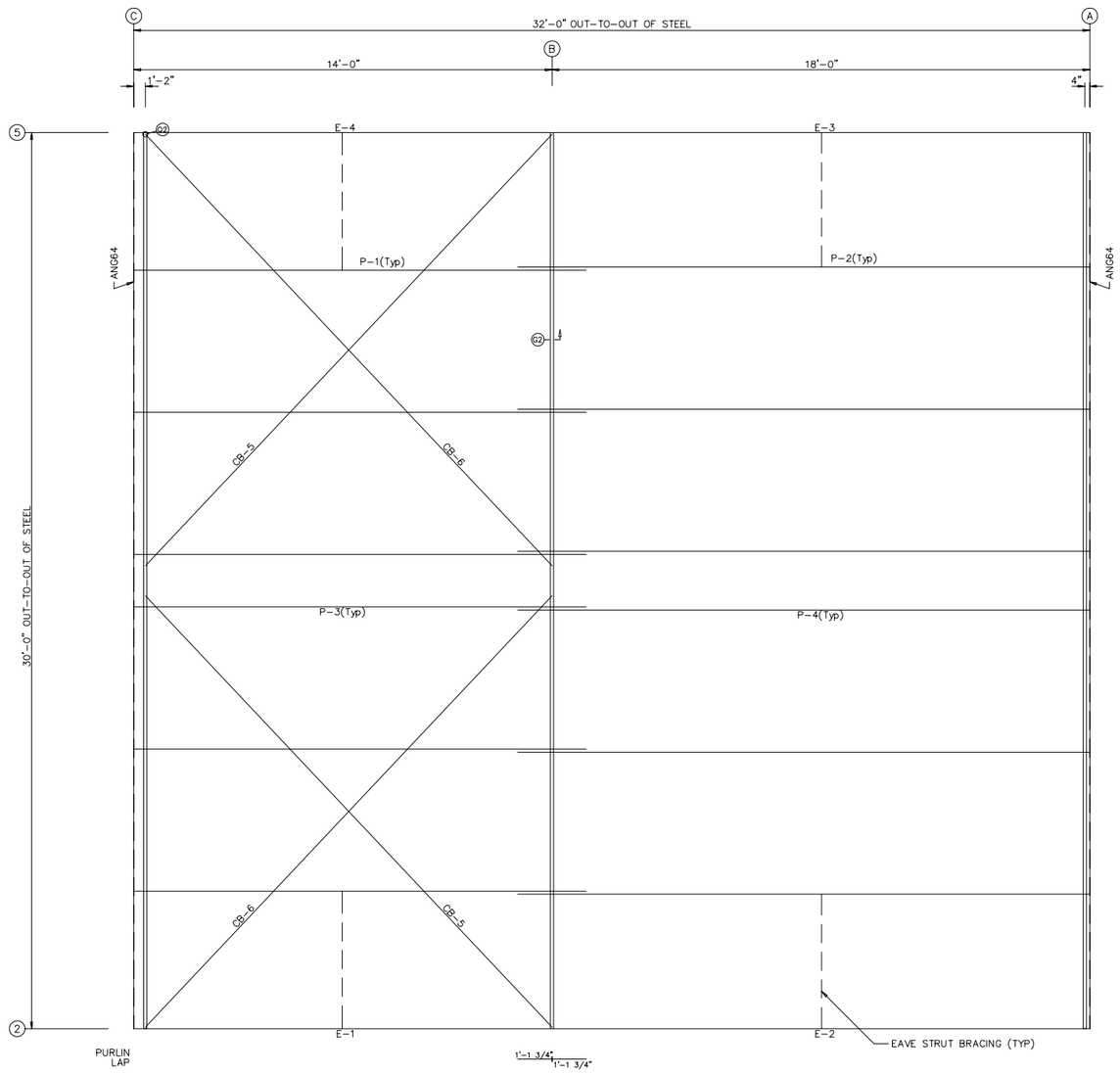

ROOF FRAMING PLAN

GENERAL NOTES:

1. Screw Down Roof: Use TEK5WW screws in place of SD150 panel screws at all 10 gage purlins, eave struts, or roof joists.
2. Standing Seam Roof: Use FST#6 in place of FST#1 clip to purlin screws at all 10 gage purlins, eave struts, or at roof joists.

OLYMPIA STEEL BUILDINGS
Olympia Steel Buildings
4000 Island Avenue • McKees Rocks, PA 15136
888-449-7756

STAMFORD HIGH STADIUM CREW STORAGE BLDG #2

30'-0" x 32'-0" x 12'-0"

DATE: 10/24/17 | REVISION: 01

ENG: MCK | DWN: BJC | APPD: MCK

F.O. 21175

STAMFORD HIGH STADIUM CREW STORAGE BLDG #2

REVISION HISTORY

REV.	DESCRIPTION	DATE
01	SEE CO-01	1/14/21

DRAWING STATUS

- [ ] FOR APPROVAL: THESE DRAWINGS, BEING FOR APPROVAL, ARE BY DEFINITION NOT FINAL, AND ARE FOR CONCEPTUAL REPRESENTATION ONLY. THEIR PURPOSE IS TO CONFIRM PROPER INTERPRETATION OF THE PROJECT DOCUMENTS. ONLY DRAWINGS ISSUED "FOR CONSTRUCTION" CAN BE CONSIDERED AS COMPLETE.
- [ ] FOR PERMIT: THESE DRAWINGS, BEING FOR PERMIT, ARE BY DEFINITION NOT FINAL. ONLY DRAWINGS ISSUED "FOR CONSTRUCTION" CAN BE CONSIDERED AS COMPLETE.
- [x] FOR CONSTRUCTION: FINAL DRAWINGS.

STATE OF CONNECTICUT
T. JAMES EISENMAN, JR.
No. 24534
LICENSED
PROFESSIONAL ENGINEER

1/20/21

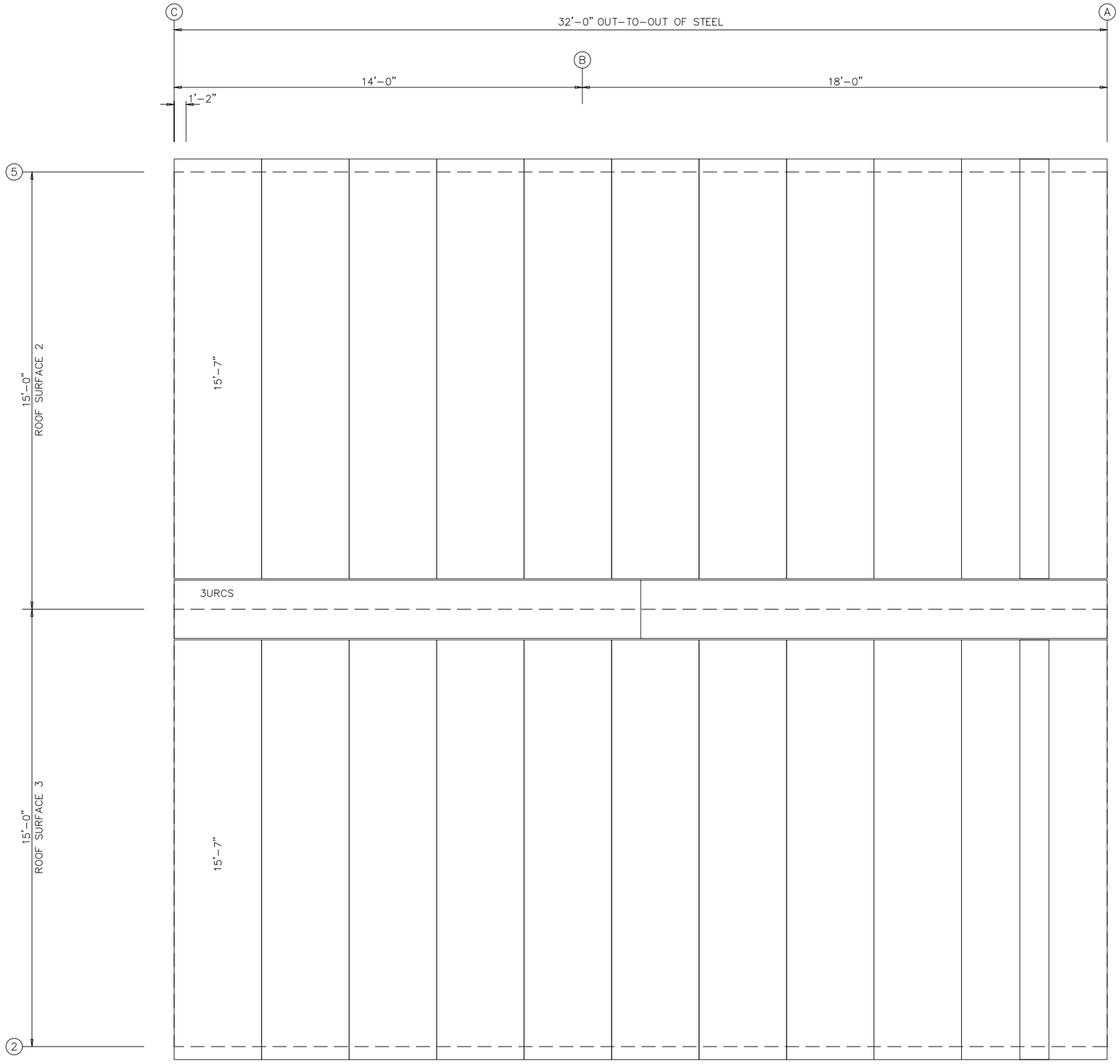

ROOF SHEETING PLAN

PANELS: 26 Ga. R – Charcoal Grey

GENERAL NOTES:

Panel "Start" and "End" dimensions must be followed for the proper installation of the gable trim(s) provided.

OLYMPIA STEEL BUILDINGS

Olympia Steel Buildings
400 Island Avenue • McKees Rocks, PA 15136
888-449-7756

STAMFORD HIGH STADIUM CREW STORAGE BLDG #2

30'-0" x 32'-0" x 12'-0"

DATE: 10/24/17 | REVISION: 01

ENG: MCK | DWN: BJC | APPD: MCK

F.O. 21175

STAMFORD HIGH STADIUM CREW STORAGE BLDG #2

REVISION HISTORY

REV.	DESCRIPTION	DATE
01	SEE CO-01	1/14/21

DRAWING STATUS

- [ ] FOR APPROVAL: THESE DRAWINGS, BEING FOR APPROVAL, ARE BY DEFINITION NOT FINAL, AND ARE FOR CONCEPTUAL REPRESENTATION ONLY. THEIR PURPOSE IS TO CONFIRM PROPER INTERPRETATION OF THE PROJECT DOCUMENTS. ONLY DRAWINGS ISSUED "FOR CONSTRUCTION" CAN BE CONSIDERED AS COMPLETE.
- [ ] FOR PERMIT: THESE DRAWINGS, BEING FOR PERMIT, ARE BY DEFINITION NOT FINAL. ONLY DRAWINGS ISSUED "FOR CONSTRUCTION" CAN BE CONSIDERED AS COMPLETE.
- [x] FOR CONSTRUCTION: FINAL DRAWINGS.

STATE OF CONNECTICUT
T. JAMES EISENMAN, JR.
No. 24534
LICENSED
PROFESSIONAL ENGINEER

1/20/21

SPLICE BOLT TABLE						
Mark	Qty Top	Bot	Int	Type	Dia	Length
SP-1	4	4	0	A325	0.500	2.00
SP-2	4	4	0	A325	0.500	1.50

MEMBER SIZE TABLE		
MARK	MEMBER	LENGTH
RF1-1	W10X12	11'-3 11/16"
RF1-2	W8X10	13'-10 5/8"
RF1-3	W8X10	13'-10 5/8"
RF1-4	W10X12	11'-3 11/16"

▽FLANGE BRACES: Both Sides(U.N.)
FBxxA(1)
A – L15X1/8

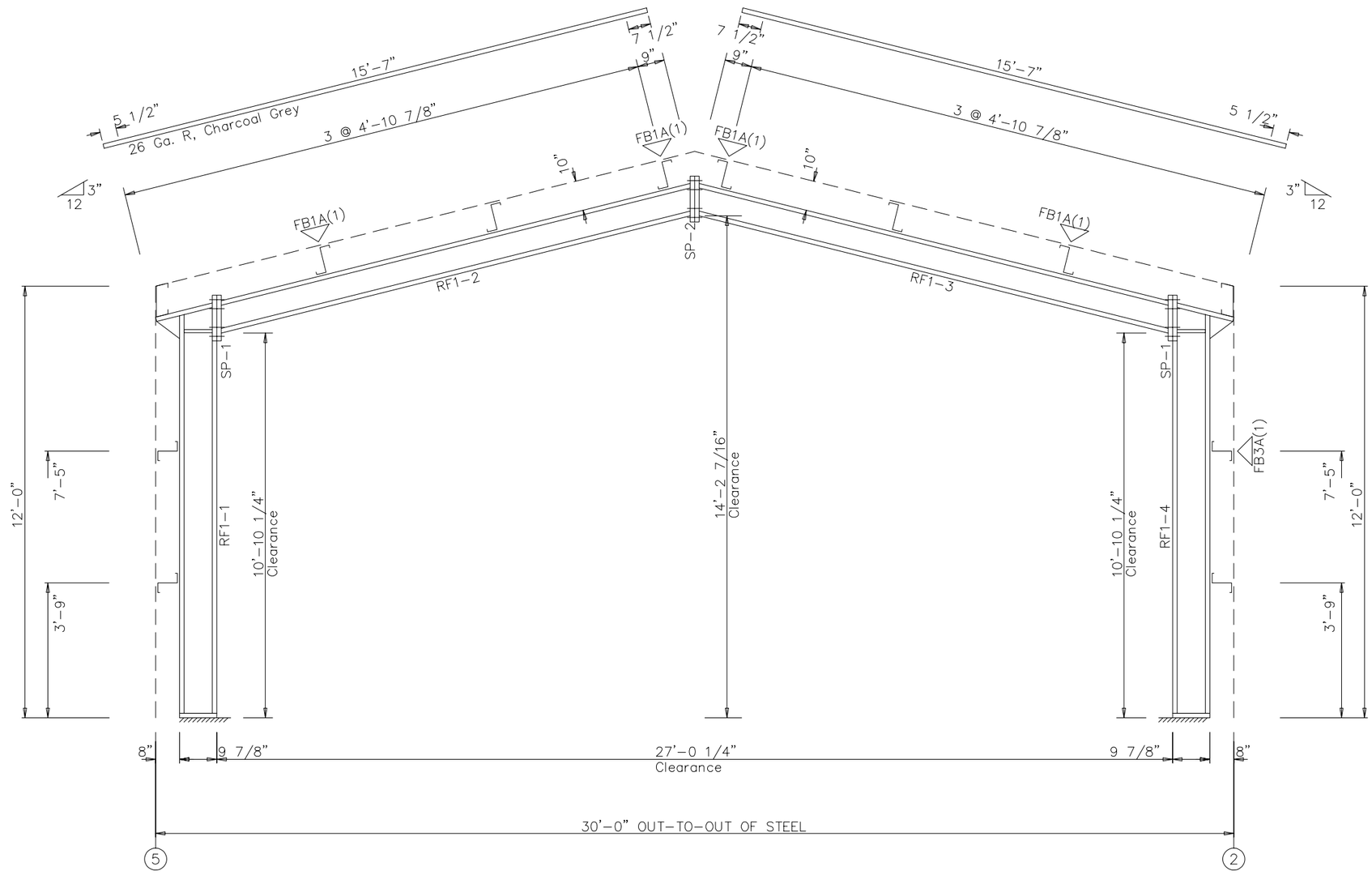

BUILDING CROSS SECTION: FRAME LINE C

GENERAL NOTES:

1. See Detail Sheets for Connection Information.
2. See Shipping List for Flange Brace Lengths.

OLYMPIA STEEL BUILDINGS
Olympia Steel Buildings
4000 Island Avenue • McKees Rocks, PA 15136
888-449-7756

STAMFORD HIGH STADIUM CREW STORAGE BLDG #2
30'-0" x 32'-0" x 12'-0"
DATE: 10/24/17 | REVISION: 01
ENG: MCK | DWN: BJC | APPD: MCK

F.O. 21175

STAMFORD HIGH STADIUM CREW STORAGE BLDG #2

REVISION HISTORY

REV.	DESCRIPTION	DATE
01	SEE CO-01	1/14/21

DRAWING STATUS

☐ FOR APPROVAL: THESE DRAWINGS, BEING FOR APPROVAL, ARE BY DEFINITION NOT FINAL, AND ARE FOR CONCEPTUAL REPRESENTATION ONLY. THEIR PURPOSE IS TO CONFIRM PROPER INTERPRETATION OF THE PROJECT DOCUMENTS. ONLY DRAWINGS ISSUED "FOR CONSTRUCTION" CAN BE CONSIDERED AS COMPLETE.

☐ FOR PERMIT: THESE DRAWINGS, BEING FOR PERMIT, ARE BY DEFINITION NOT FINAL. ONLY DRAWINGS ISSUED "FOR CONSTRUCTION" CAN BE CONSIDERED AS COMPLETE.

■ FOR CONSTRUCTION: FINAL DRAWINGS.

STATE OF CONNECTICUT
T. JAMES EISENMAN, JR.
No. 24534
LICENSED
PROFESSIONAL ENGINEER
1/20/21

SPLICE BOLT TABLE						
Mark	Qty Top	Bot	Int	Type	Dia	Length
SP−1	4	4	0	A325	0.750	2.00
SP−2	4	4	2	A325	0.500	1.50

▽FLANGE BRACES: Both Sides(U.N.)
FBxxA(1)
A − L15X1/8

MEMBER TABLE					
Mark	Web Depth Start/End	Web Plate Thick	Web Plate Length	Outside Flange W x Thk x Length	Inside Flange W x Thk x Length
RF2−1	11.0/14.0	0.188	137.7	6 x 1/4" x 134.9 6 x 1/4" x 19.6	6 x 1/4" x 125.0
RF2−2	10.0/12.0	0.149	164.5	6 x 1/4" x 164.5	6 x 1/4" x 161.4
RF2−3	14.0/11.0	0.188	137.7	6 x 1/4" x 19.6 6 x 1/4" x 134.9	6 x 1/4" x 125.0

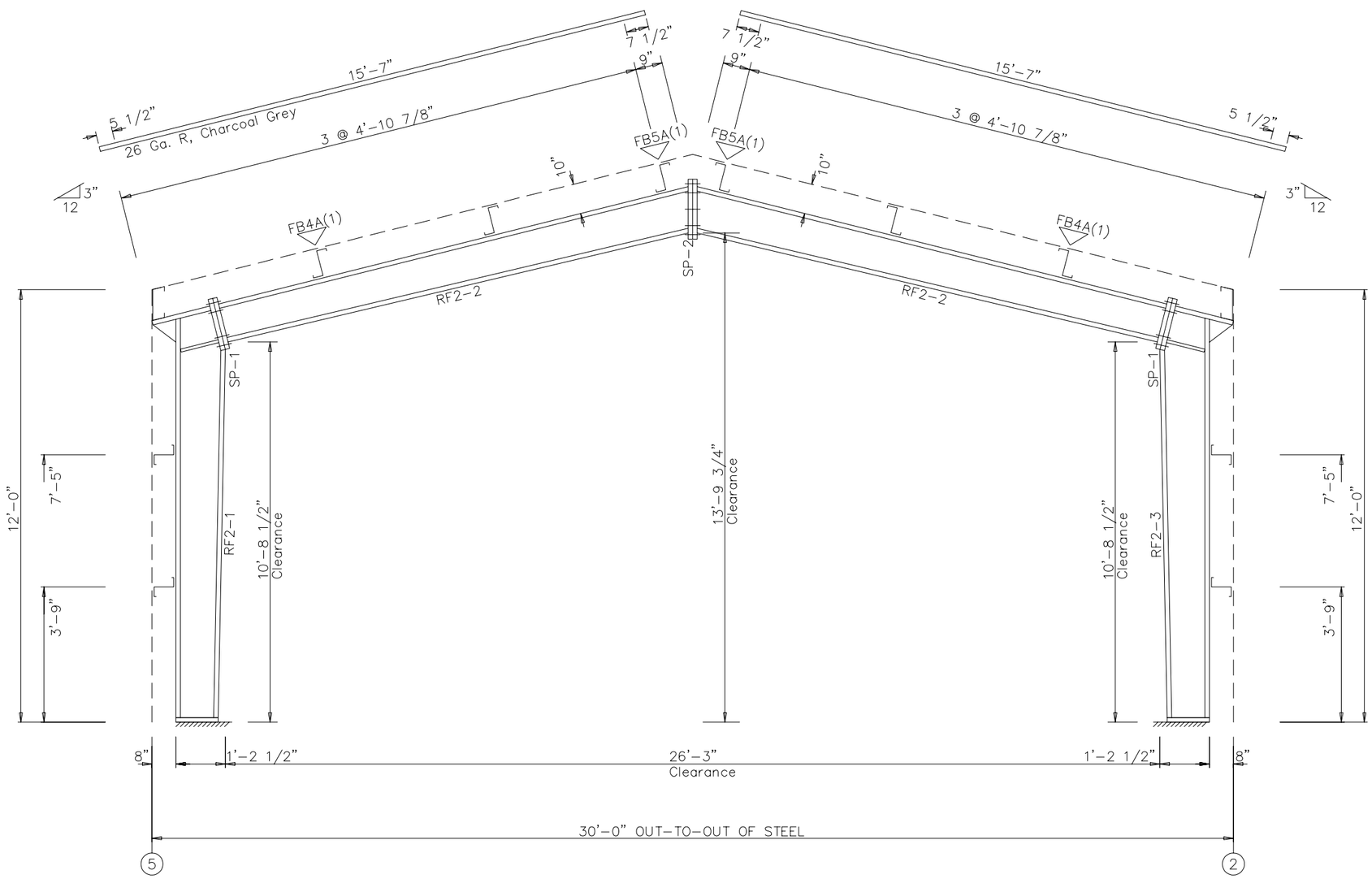

BUILDING CROSS SECTION: FRAME LINE B

GENERAL NOTES:

1. See Detail Sheets for Connection Information.
2. See Shipping List for Flange Brace Lengths.

OLYMPIA STEEL BUILDINGS
Olympia Steel Buildings
4000 Island Avenue • McKees Rocks, PA 15136
888-449-7756

STAMFORD HIGH STADIUM CREW STORAGE BLDG #2
30'-0" x 32'-0" x 12'-0"
DATE: 10/24/17 | REVISION: 01
ENG: MCK | DWN: BJC | APPD: MCK

F.O. 21175

STAMFORD HIGH STADIUM CREW STORAGE BLDG #2

REVISION HISTORY

REV.	DESCRIPTION	DATE
01	SEE CO-01	1/14/21

DRAWING STATUS

☐ FOR APPROVAL: THESE DRAWINGS, BEING FOR APPROVAL, ARE BY DEFINITION NOT FINAL, AND ARE FOR CONCEPTUAL REPRESENTATION ONLY. THEIR PURPOSE IS TO CONFIRM PROPER INTERPRETATION OF THE PROJECT DOCUMENTS. ONLY DRAWINGS ISSUED "FOR CONSTRUCTION" CAN BE CONSIDERED AS COMPLETE.

☐ FOR PERMIT: THESE DRAWINGS, BEING FOR PERMIT, ARE BY DEFINITION NOT FINAL. ONLY DRAWINGS ISSUED "FOR CONSTRUCTION" CAN BE CONSIDERED AS COMPLETE.

■ FOR CONSTRUCTION: FINAL DRAWINGS.

STATE OF CONNECTICUT
T. JAMES EISENMAN, JR.
No. 24534
LICENSED
PROFESSIONAL ENGINEER
1/20/21

MEMBER TABLE
FRAME LINE 2

QUAN	MARK	PART	LENGTH
2	G-4	8X25Z16	15'-1 1/2"
2	G-5	8X25Z16	19'-1 1/2"
1	CB-4	CABLE250	14'-5 7/16"
1	CB-7	CABLE250	14'-2 5/16"

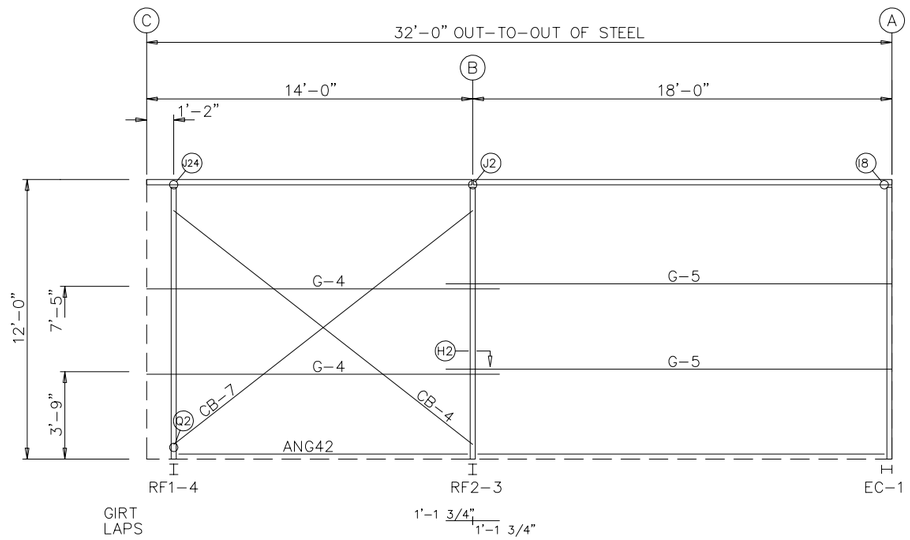

SIDEWALL FRAMING: FRAME LINE 2

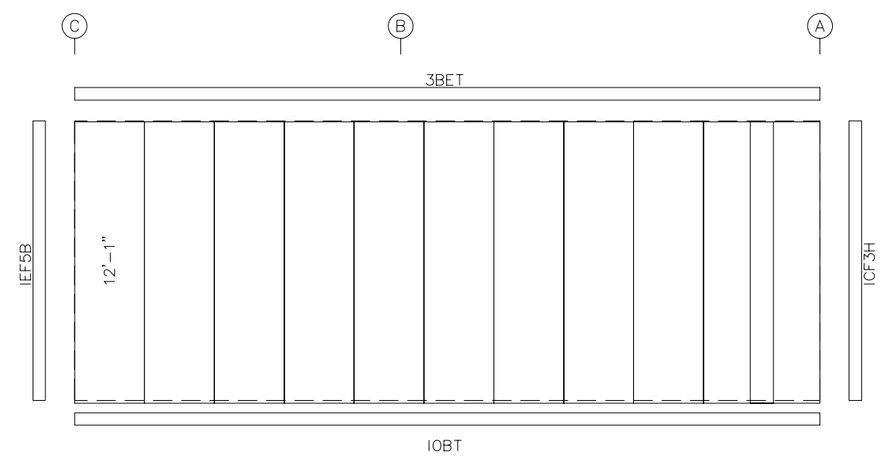

SIDEWALL SHEETING & TRIM: FRAME LINE 2

PANELS: 26 Ga. R – Ash Grey

TRIM COLORS

EAVE TRIM	= Ash Grey	CORNER TRIM	= Ash Grey
BASE TRIM	= Ash Grey	GUTTER	=
DOOR TRIM	= Ash Grey	DOWNSPOUTS	=
RAKE TRIM	= Ash Grey		
* LINER TRIM	= Liner panel color		
* SOFFIT TRIM	= Soffit panel color		

* ONLY APPLICABLE IF LINER TRIM OR SOFFIT PANEL IS INDICATED ON BUILDING ORDER.

GENERAL NOTES:

1. Use TEK5WW screws in place of SD150 panel screws at all 10 gage members.
2. All connections to door or window jambs where the clip is not designated in the clip table / drawing are made with JC# clips (#= Girt Depth).

OLYMPIA STEEL BUILDINGS
Olympia Steel Buildings
4000 Island Avenue • McKees Rocks, PA 15136
888-449-7756

STAMFORD HIGH STADIUM CREW STORAGE BLDG #2
30'-0" x 32'-0" x 12'-0"
DATE: 10/24/17 | REVISION: 01
ENG: MCK | DWN: BJC | APPD: MCK

F.O. 21175

STAMFORD HIGH STADIUM CREW STORAGE BLDG #2

REVISION HISTORY

REV.	DESCRIPTION	DATE
01	SEE CO-01	1/14/21

DRAWING STATUS

☐ FOR APPROVAL: THESE DRAWINGS, BEING FOR APPROVAL, ARE BY DEFINITION NOT FINAL, AND ARE FOR CONCEPTUAL REPRESENTATION ONLY. THEIR PURPOSE IS TO CONFIRM PROPER INTERPRETATION OF THE PROJECT DOCUMENTS. ONLY DRAWINGS ISSUED "FOR CONSTRUCTION" CAN BE CONSIDERED AS COMPLETE.

☐ FOR PERMIT: THESE DRAWINGS, BEING FOR PERMIT, ARE BY DEFINITION NOT FINAL. ONLY DRAWINGS ISSUED "FOR CONSTRUCTION" CAN BE CONSIDERED AS COMPLETE.

■ FOR CONSTRUCTION: FINAL DRAWINGS.

STATE OF CONNECTICUT
T. JAMES EISENMAN, JR.
No. 24534
LICENSED
PROFESSIONAL ENGINEER

1/20/21

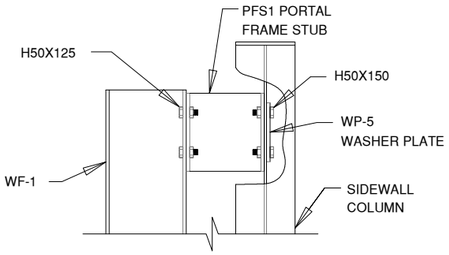

WIND COLUMN CONNECTION WITH PFS1 STUB

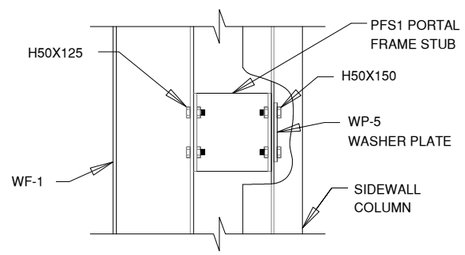

WIND COLUMN CONNECTION WITH PFS1 STUB @ MID-HEIGHT

MEMBER TABLE
FRAME LINE 5

QUAN	MARK	PART	LENGTH
1	WF-1	W12X16	10'-6 3/4"
2	DJ-1	8X35C16	7'-4 3/4"
4	DJ-2	8X35C16	11'-1"
2	DH-3	8X35C16	10'-0"
2	G-6	8X25Z16	6'-8"
2	G-7	8X25Z16	1'-4 1/2"
2	G-8	8X25Z16	2'-8"

CONNECTION PLATES
FRAME LINE 5

☐ID	QUAN	MARK/PART
4	4	JC
6	2	PFS1

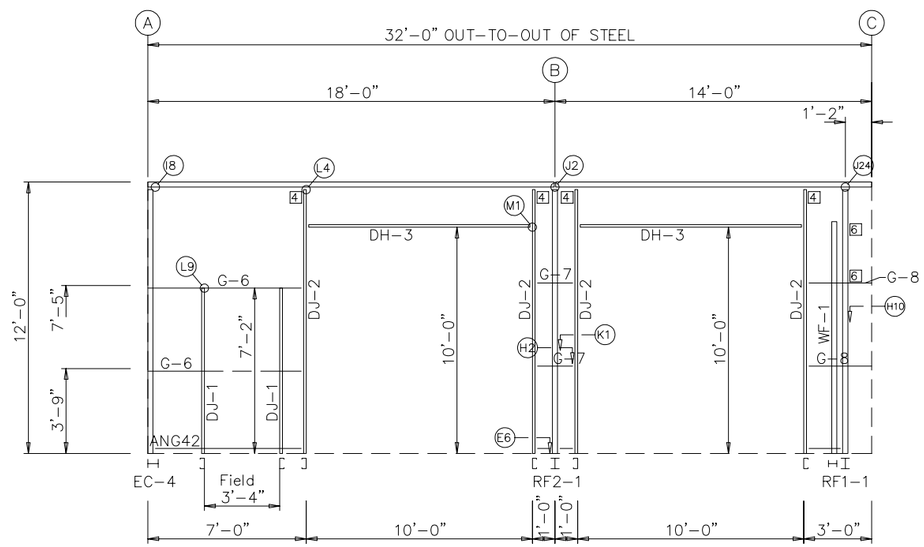

SIDEWALL FRAMING: FRAME LINE 5

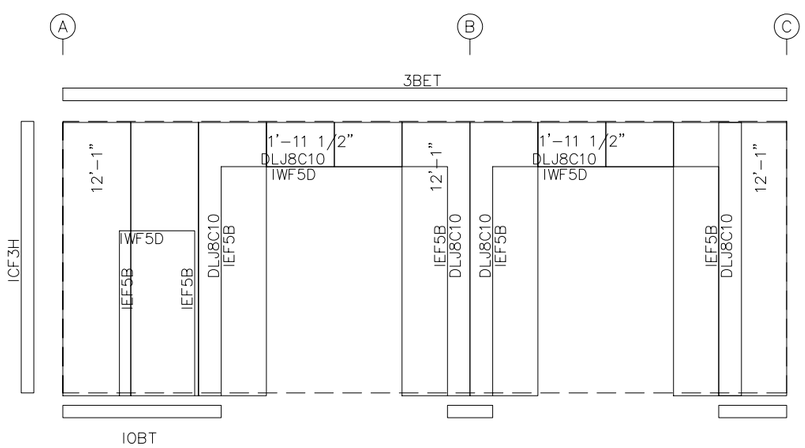

SIDEWALL SHEETING & TRIM: FRAME LINE 5

PANELS: 26 Ga. R – Ash Grey

TRIM COLORS

EAVE TRIM	= Ash Grey	CORNER TRIM	= Ash Grey
BASE TRIM	= Ash Grey	GUTTER	=
DOOR TRIM	= Ash Grey	DOWNSPOUTS	=
RAKE TRIM	= Ash Grey		
* LINER TRIM	= Liner panel color		
* SOFFIT TRIM	= Soffit panel color		

* ONLY APPLICABLE IF LINER TRIM OR SOFFIT PANEL IS INDICATED ON BUILDING ORDER.

GENERAL NOTES:

1. Use TEK5WW screws in place of SD150 panel screws at all 10 gage members.
2. All connections to door or window jambs where the clip is not designated in the clip table / drawing are made with JC# clips (#= Girt Depth).

OLYMPIA STEEL BUILDINGS
Olympia Steel Buildings
4000 Island Avenue • McKees Rocks, PA 15136
888-449-7756

STAMFORD HIGH STADIUM CREW STORAGE BLDG #2
30'-0" x 32'-0" x 12'-0"
DATE: 10/24/17 | REVISION: 01
ENG: MCK | DWN: BJC | APPD: MCK

F.O. 21175

STAMFORD HIGH STADIUM CREW STORAGE BLDG #2

REVISION HISTORY

REV.	DESCRIPTION	DATE
01	SEE CO-01	1/14/21

DRAWING STATUS

FOR APPROVAL: THESE DRAWINGS, BEING FOR APPROVAL, ARE BY DEFINITION NOT FINAL, AND ARE FOR CONCEPTUAL REPRESENTATION ONLY. THEIR PURPOSE IS TO CONFIRM PROPER INTERPRETATION OF THE PROJECT DOCUMENTS. ONLY DRAWINGS ISSUED "FOR CONSTRUCTION" CAN BE CONSIDERED AS COMPLETE.

FOR PERMIT: THESE DRAWINGS, BEING FOR PERMIT, ARE BY DEFINITION NOT FINAL. ONLY DRAWINGS ISSUED "FOR CONSTRUCTION" CAN BE CONSIDERED AS COMPLETE.

FOR CONSTRUCTION: FINAL DRAWINGS.

STATE OF CONNECTICUT
T. JAMES EISENMAN, JR.
No. 24534
LICENSED
PROFESSIONAL ENGINEER
1/20/21

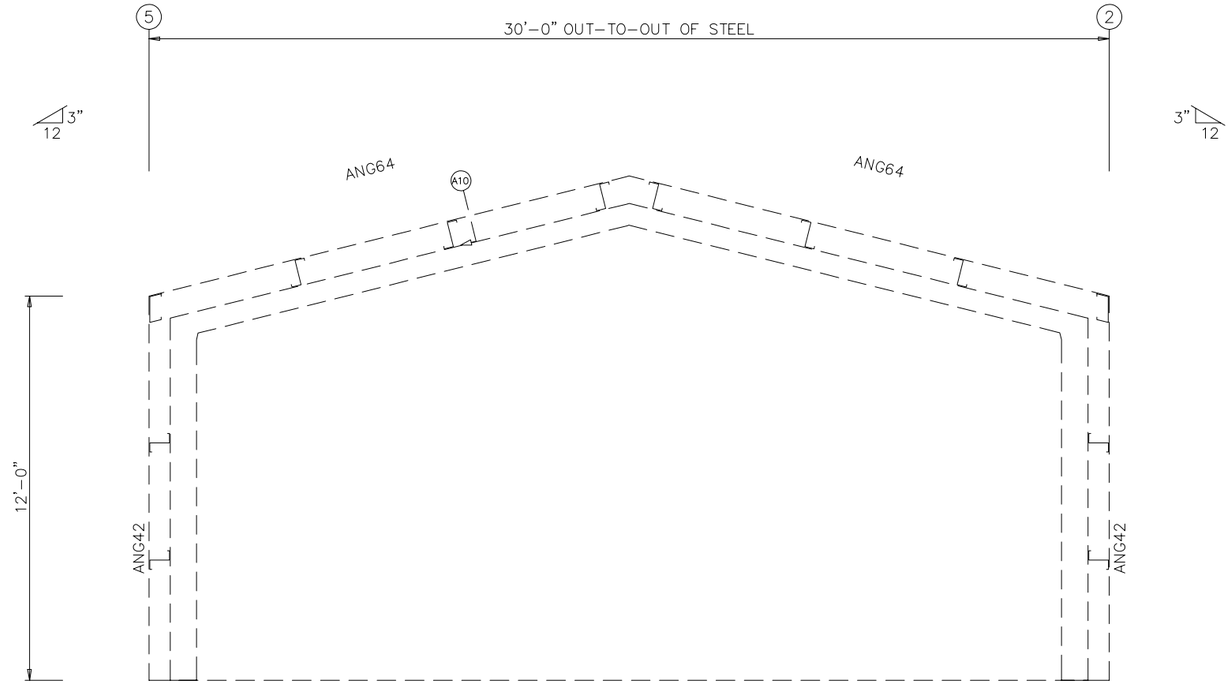

ENDWALL FRAMING: FRAME LINE C

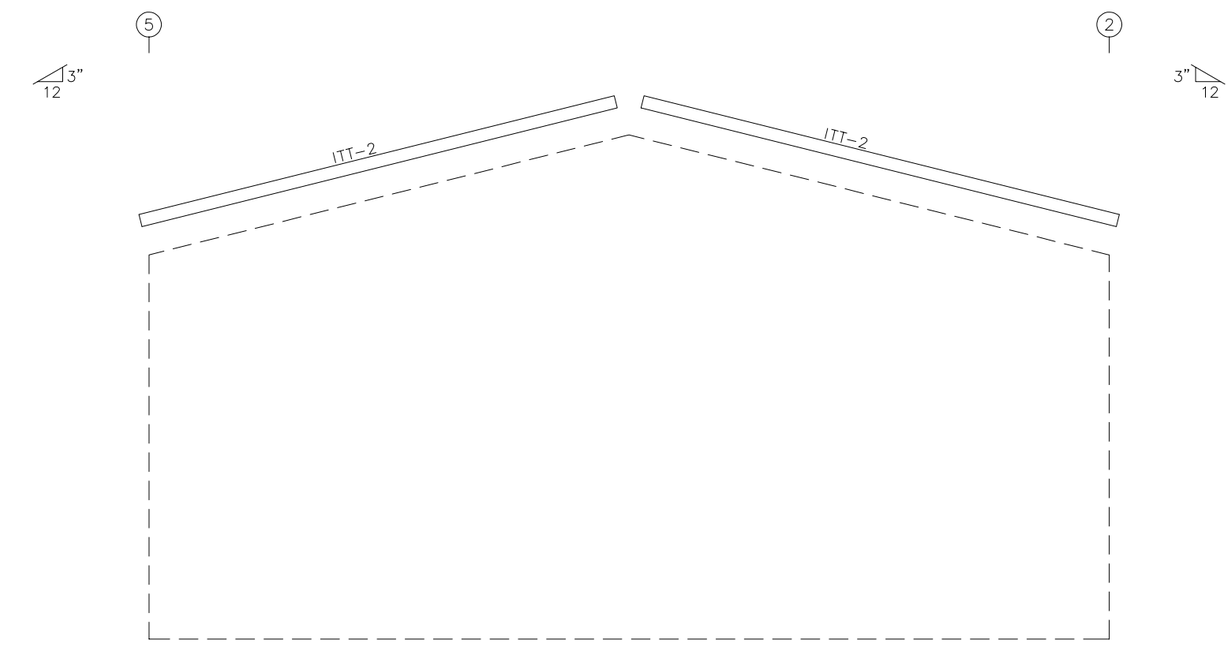

ENDWALL SHEETING & TRIM: FRAME LINE C

GENERAL NOTES:

1. Use TEK5WW screws in place of SD150 panel screws at all 10 gage members.
2. See detail C7A for field coping of coldform endwall column flange braces.
3. All connections to door or window jambs where the clip is not designated in the clip table / drawing are made with JC# clips (#= Girt Depth).

TRIM COLORS

EAVE TRIM	= Ash Grey	CORNER TRIM	= Ash Grey
BASE TRIM	= Ash Grey	GUTTER	=
DOOR TRIM	= Ash Grey	DOWNSPOUTS	=
RAKE TRIM	= Ash Grey		
* LINER TRIM	= Liner panel color		
* SOFFIT TRIM	= Soffit panel color		

* ONLY APPLICABLE IF LINER TRIM OR SOFFIT PANEL IS INDICATED ON BUILDING ORDER.

OLYMPIA STEEL BUILDINGS
Olympia Steel Buildings
4000 Island Avenue • McKees Rocks, PA 15136
888-449-7756

STAMFORD HIGH STADIUM CREW STORAGE BLDG #2
30'-0" x 32'-0" x 12'-0"

DATE: 10/24/17	REVISION: 01
ENG: MCK	DWN: BJC	APPD: MCK

F.O. 21175

STAMFORD HIGH STADIUM CREW STORAGE BLDG #2

REVISION HISTORY

REV.	DESCRIPTION	DATE
01	SEE CO-01	1/14/21

DRAWING STATUS

- [ ] FOR APPROVAL: THESE DRAWINGS, BEING FOR APPROVAL, ARE BY DEFINITION NOT FINAL, AND ARE FOR CONCEPTUAL REPRESENTATION ONLY. THEIR PURPOSE IS TO CONFIRM PROPER INTERPRETATION OF THE PROJECT DOCUMENTS. ONLY DRAWINGS ISSUED "FOR CONSTRUCTION" CAN BE CONSIDERED AS COMPLETE.
- [ ] FOR PERMIT: THESE DRAWINGS, BEING FOR PERMIT, ARE BY DEFINITION NOT FINAL. ONLY DRAWINGS ISSUED "FOR CONSTRUCTION" CAN BE CONSIDERED AS COMPLETE.
- [x] FOR CONSTRUCTION: FINAL DRAWINGS.

STATE OF CONNECTICUT
T. JAMES EISENMAN, JR.
No. 24534
LICENSED
PROFESSIONAL ENGINEER

1/20/21

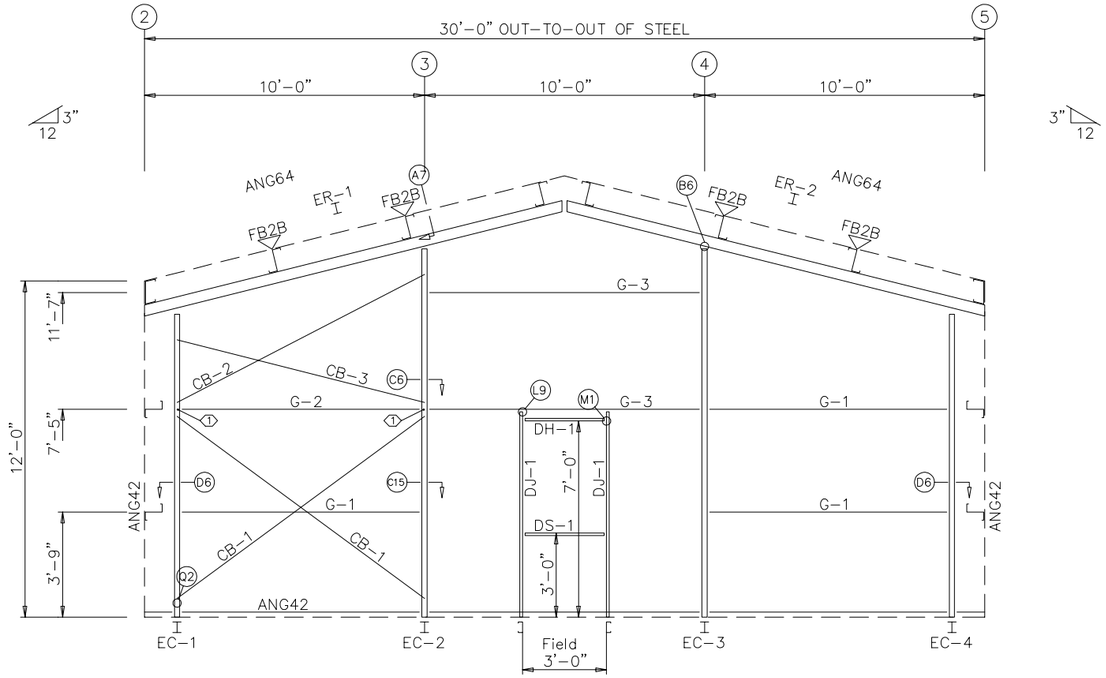

ENDWALL FRAMING: FRAME LINE A

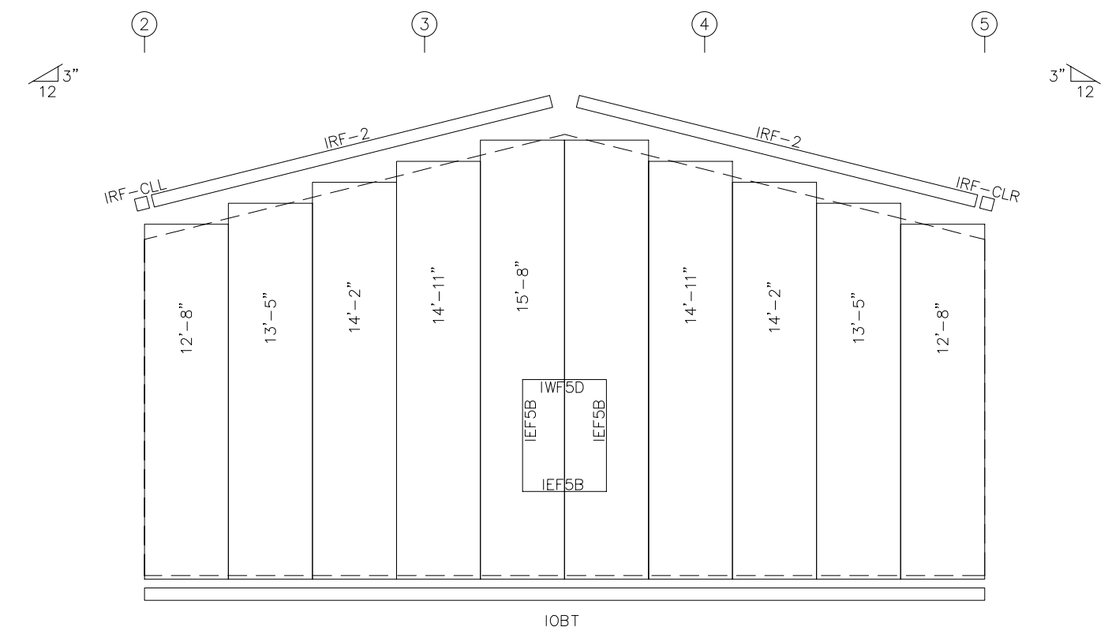

ENDWALL SHEETING & TRIM: FRAME LINE A

PANELS: 26 Ga. R – Ash Grey

GENERAL NOTES:

1. Use TEK5WW screws in place of SD150 panel screws at all 10 gage members.
2. See detail C7A for field coping of coldform endwall column flange braces.
3. All connections to door or window jambs where the clip is not designated in the clip table / drawing are made with JC# clips (#= Girt Depth).

BOLT TABLE
FRAME LINE A

LOCATION	QUAN	TYPE	DIA	LENGTH
ER-1/ER-2	8	A325	1/2"	1 1/2"
Columns/Raf	2	A325	3/4"	1 3/4"

MEMBER TABLE
FRAME LINE A

QUAN	MARK	PART	LENGTH
1	EC-1	W8X10	10'-8 5/16"
1	EC-2	W8X10	12'-10 13/16"
1	EC-3	W8X10	12'-10 13/16"
1	EC-4	W8X10	10'-8 5/16"
1	ER-1	W8X10	15'-5 9/16"
1	ER-2	W8X10	15'-5 9/16"
2	DJ-1	8X35C16	7'-4 3/4"
1	DH-1	8X35C16	3'-0"
1	DS-1	8X35C16	3'-0"
3	G-1	8X25Z16	8'-5 1/2"
1	G-2	8X25Z13	8'-5 1/2"
2	G-3	8X25Z16	9'-7 1/2"
2	CB-1	CABLE250	8'-11 5/8"
1	CB-2	CABLE250	7'-11 13/16"
1	CB-3	CABLE250	7'-3 7/16"

SPECIAL BOLTS
ROOF PLAN

◇ ID	QUAN	TYPE	DIA	LENGTH	WASH
1	2	A325	1/2"	1 1/2"	0

FLANGE BRACE TABLE
FRAME LINE A

▽ID	MARK	LENGTH
1	FB2B	1'-3"

NOTE: FIELD DRILL GIRTS TO ALLOW CABLES TO PASS.

TRIM COLORS

EAVE TRIM	= Ash Grey	CORNER TRIM	= Ash Grey
BASE TRIM	= Ash Grey	GUTTER	=
DOOR TRIM	= Ash Grey	DOWNSPOUTS	=
RAKE TRIM	= Ash Grey		
* LINER TRIM	= Liner panel color		
* SOFFIT TRIM	= Soffit panel color		

* ONLY APPLICABLE IF LINER TRIM OR SOFFIT PANEL IS INDICATED ON BUILDING ORDER.

OLYMPIA STEEL BUILDINGS
Olympia Steel Buildings
4000 Island Avenue • McKees Rocks, PA 15136
888-449-7756

STAMFORD HIGH STADIUM CREW STORAGE BLDG #2

30'-0" x 32'-0" x 12'-0"

DATE: 10/24/17 | REVISION: 01

ENG: MCK | DWN: BJC | APPD: MCK

F.O. 21175

STAMFORD HIGH STADIUM CREW STORAGE BLDG #2

REVISION HISTORY

REV.	DESCRIPTION	DATE
01	SEE CO-01	1/14/21

DRAWING STATUS

FOR APPROVAL: THESE DRAWINGS, BEING FOR APPROVAL, ARE BY DEFINITION NOT FINAL, AND ARE FOR CONCEPTUAL REPRESENTATION ONLY. THEIR PURPOSE IS TO CONFIRM PROPER INTERPRETATION OF THE PROJECT DOCUMENTS. ONLY DRAWINGS ISSUED "FOR CONSTRUCTION" CAN BE CONSIDERED AS COMPLETE.

FOR PERMIT: THESE DRAWINGS, BEING FOR PERMIT, ARE BY DEFINITION NOT FINAL. ONLY DRAWINGS ISSUED "FOR CONSTRUCTION" CAN BE CONSIDERED AS COMPLETE.

FOR CONSTRUCTION: FINAL DRAWINGS.

STATE OF CONNECTICUT
T. JAMES EISENMAN, JR.
No. 24534
LICENSED PROFESSIONAL ENGINEER

1/20/21

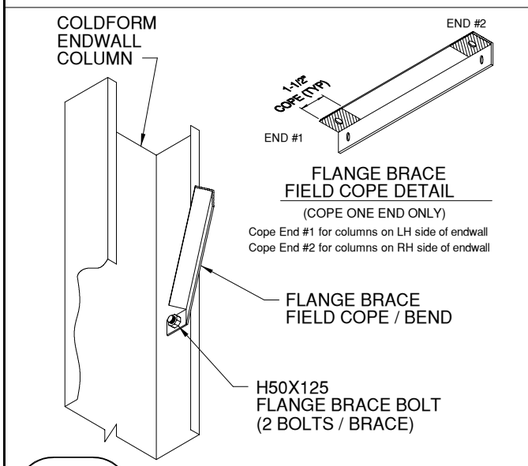

C7A FLANGE BRACE TO BYPASS COLDFORM ENDWALL COLUMN

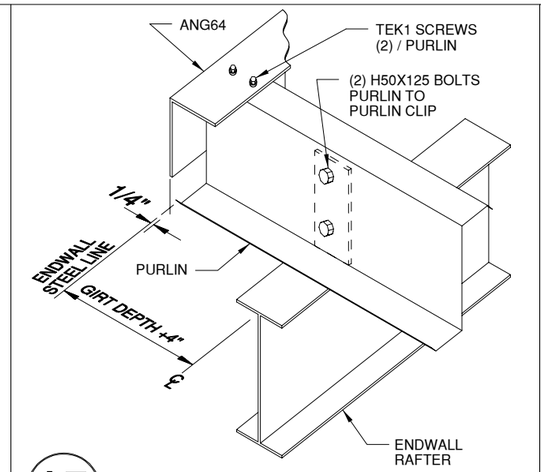

A7 PURLIN TO ENDWALL RAFTER CONNECTION

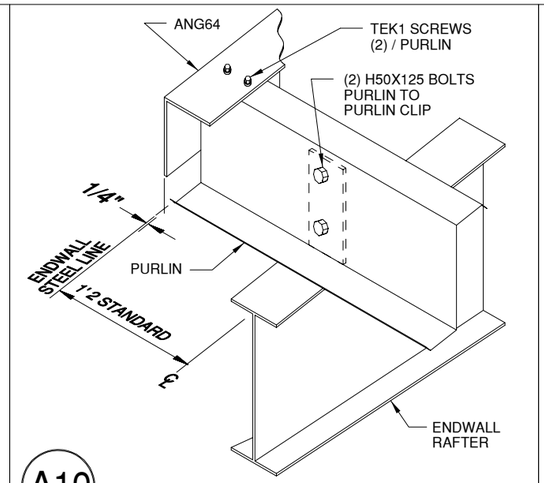

A10 PURLIN TO RIGID FRAME ENDWALL RAFTER CONNECTION

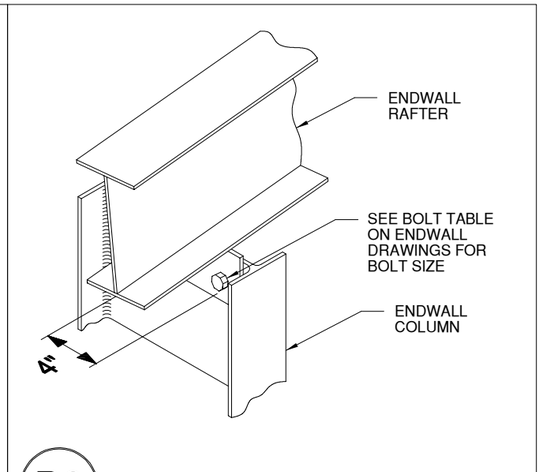

B6 ENDWALL COLUMN TO RAFTER CONNECTION

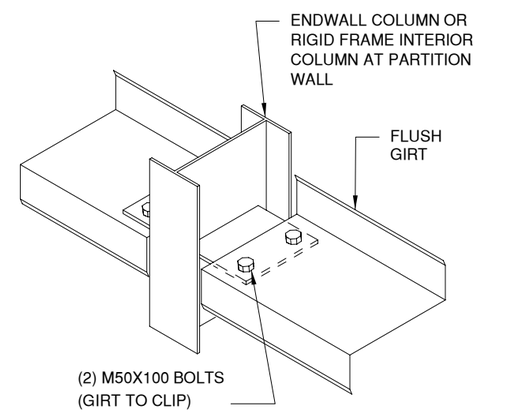

C6 FLUSH GIRT TO COLUMN

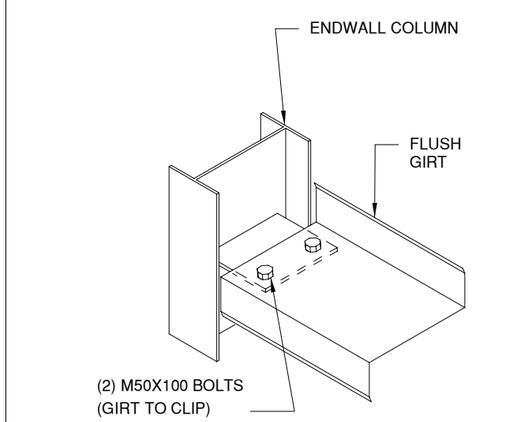

C15 FLUSH GIRT ENDING AT COLUMN

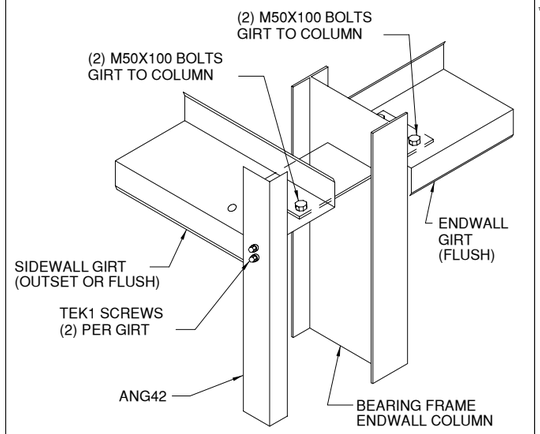

D6 WALL GIRTS TO FLUSH CORNER COLUMN

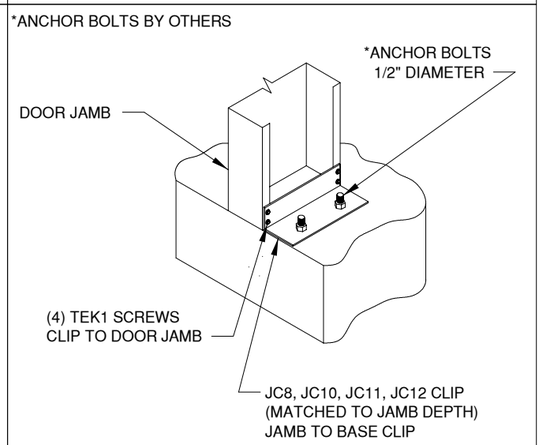

E6 DOOR JAMB TO FOUNDATION

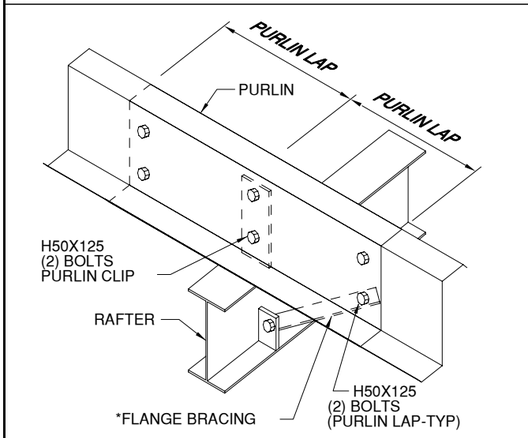

G2 ROOF PURLIN TO INTERIOR FRAME RAFTER

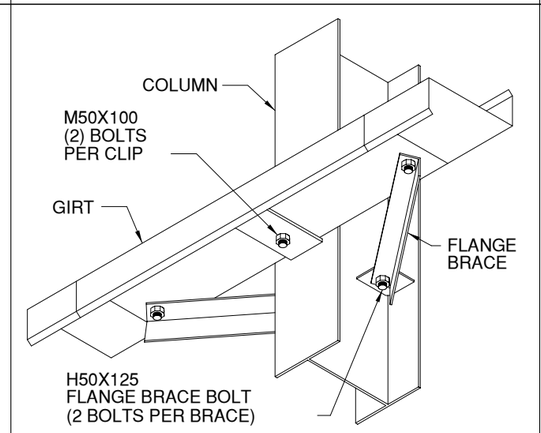

H2 GIRT TO COLUMN - BYPASS GIRTS

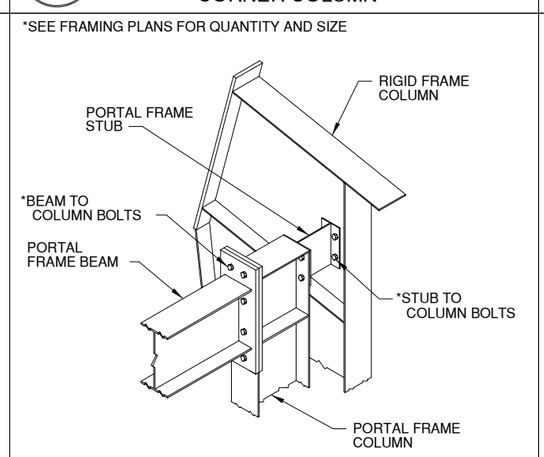

H10 PORTAL FRAME TO RIGID FRAME COLUMN

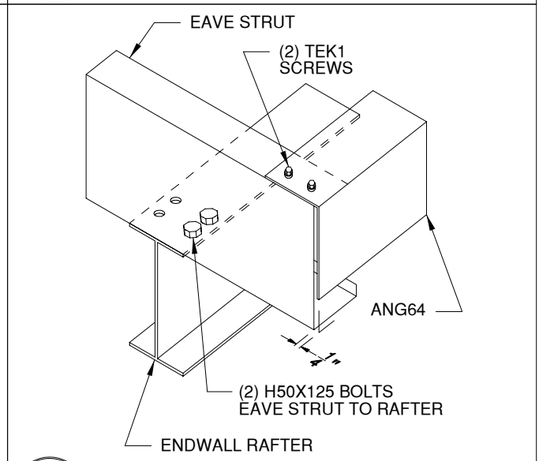

I8 EAVE STRUT TO ENDWALL RAFTER LOW EAVE

OLYMPIA STEEL BUILDINGS
Olympia Steel Buildings
4000 Island Avenue • McKees Rocks, PA 15136
888-449-7756

STAMFORD HIGH STADIUM CREW STORAGE BLDG #2
30'-0" x 32'-0" x 12'-0"
DATE: 10/24/17 | REVISION: 01
ENG: MCK | DWN: BJC | APPD: MCK

F.O. 21175

STAMFORD HIGH STADIUM CREW STORAGE BLDG #2

REVISION HISTORY

REV.	DESCRIPTION	DATE
01	SEE CO-01	1/14/21

DRAWING STATUS

FOR APPROVAL:
THESE DRAWINGS, BEING FOR APPROVAL, ARE BY DEFINITION NOT FINAL, AND ARE FOR CONCEPTUAL REPRESENTATION ONLY. THEIR PURPOSE IS TO CONFIRM PROPER INTERPRETATION OF THE PROJECT DOCUMENTS. ONLY DRAWINGS ISSUED "FOR CONSTRUCTION" CAN BE CONSIDERED AS COMPLETE.

FOR PERMIT:
THESE DRAWINGS, BEING FOR PERMIT, ARE BY DEFINITION NOT FINAL. ONLY DRAWINGS ISSUED "FOR CONSTRUCTION" CAN BE CONSIDERED AS COMPLETE.

FOR CONSTRUCTION:
FINAL DRAWINGS.

STATE OF CONNECTICUT
T. JAMES EISENMAN, JR.
No. 24534
LICENSED
PROFESSIONAL ENGINEER
1/20/21

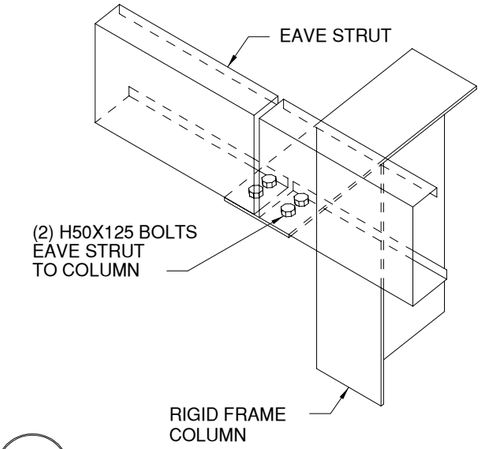

J2 EAVE STRUT TO RIGID FRAME BYPASS GIRT CONDITION

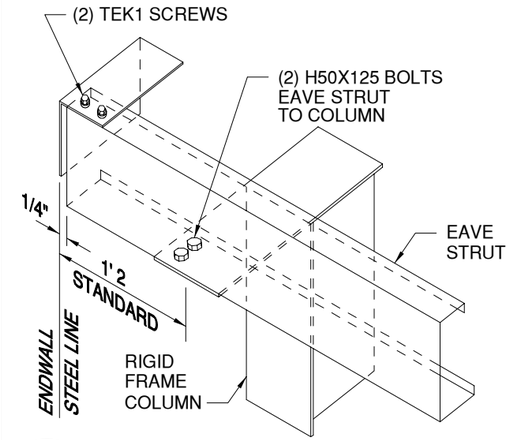

J24 EAVE STRUT TO RIGID FRAME IN ENDWALL - BYPASS GIRTS LOW EAVE

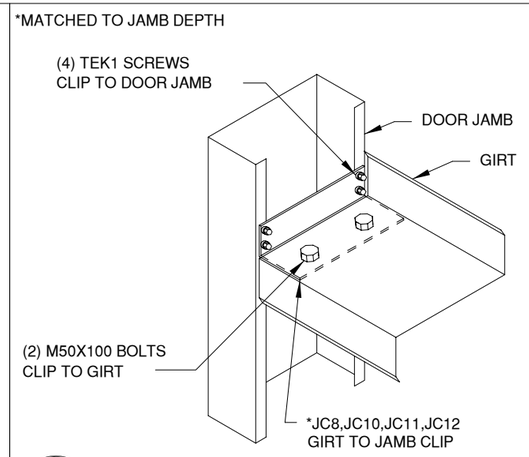

K1 WALL GIRT TO DOOR JAMB

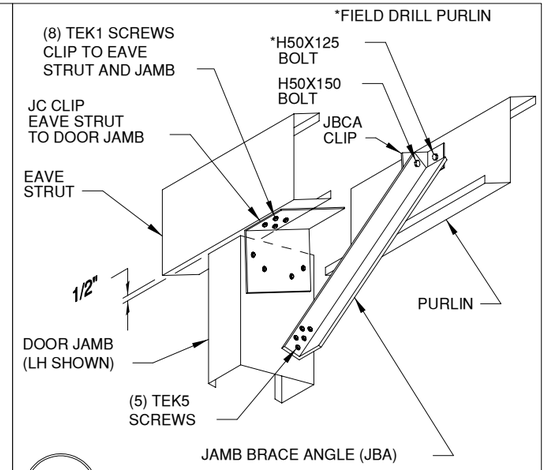

L4 ANGLE BRACE FROM DOOR JAMB TO FIRST PURLIN

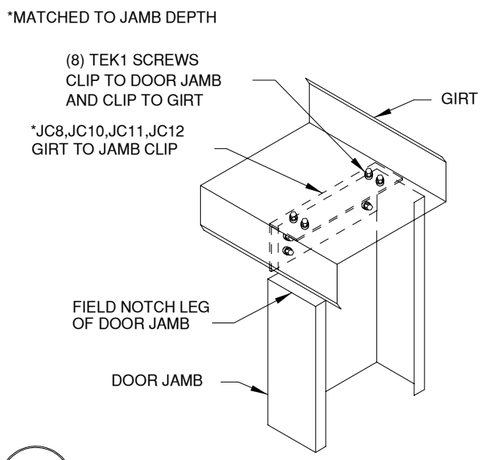

L9 DOOR JAMB TO WALL GIRT

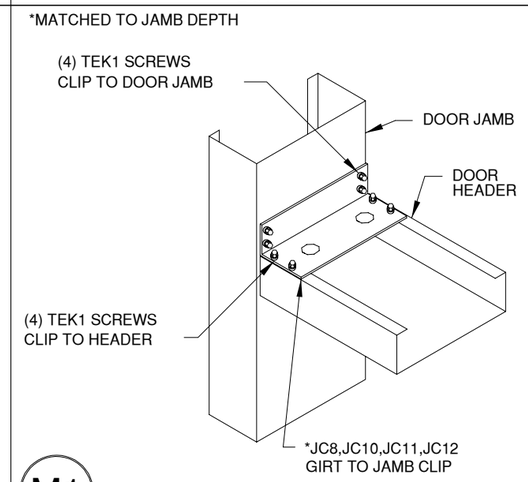

M1 DOOR HEADER TO DOOR JAMB

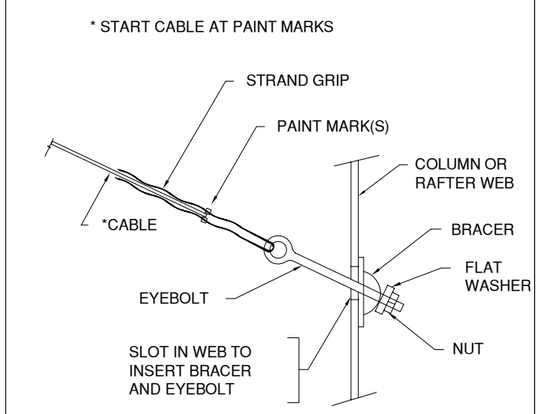

Q2 CABLE BRACE / EYEBOLT

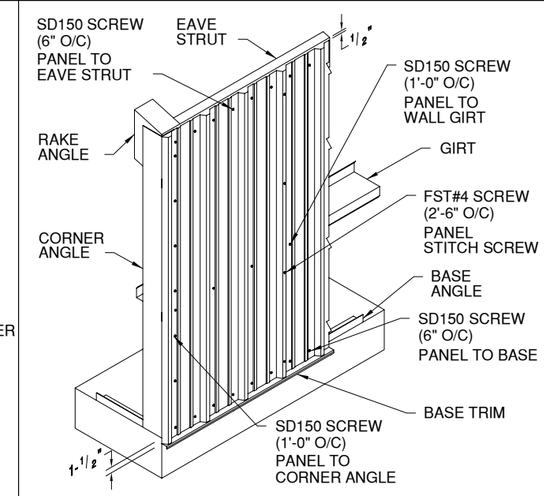

"R" PANEL SIDEWALL

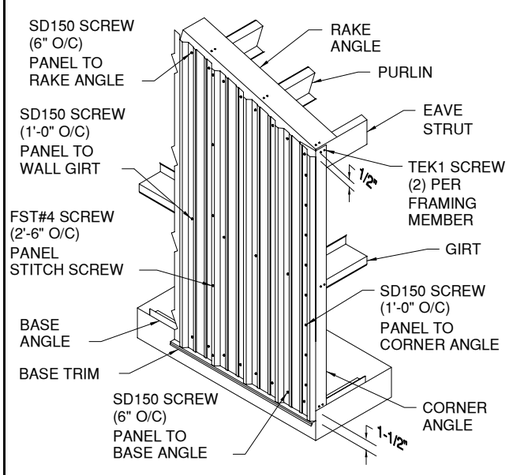

"R" PANEL ENDWALL

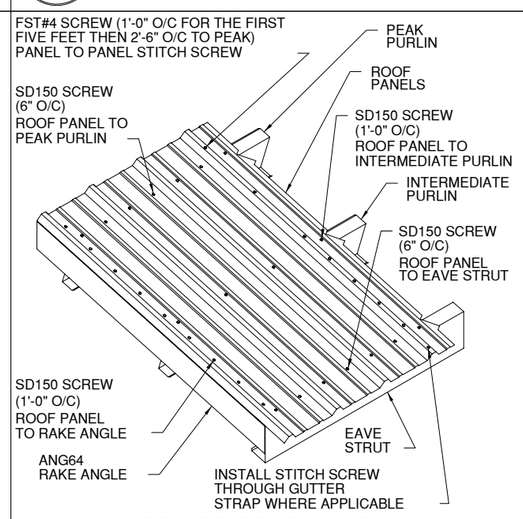

ROOF FASTENER APPLICATION

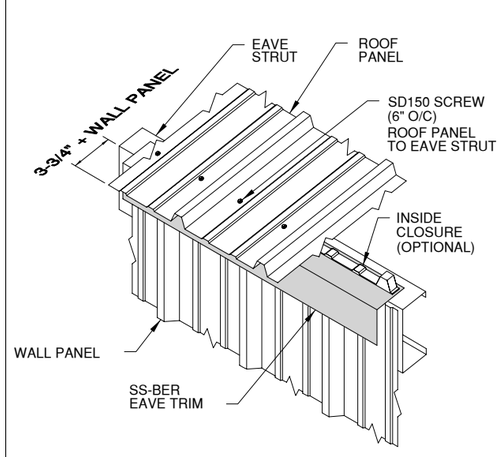

STANDARD EAVE CONDITION

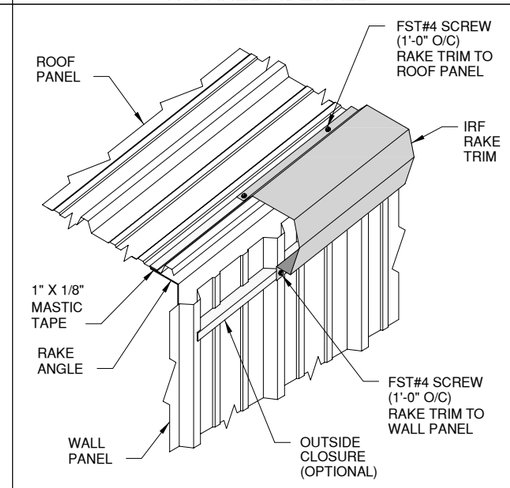

STANDARD RAKE CONDITION

OLYMPIA STEEL BUILDINGS
Olympia Steel Buildings
4000 Island Avenue • McKees Rocks, PA 15136
888-449-7756

STAMFORD HIGH STADIUM CREW STORAGE BLDG #2
30'-0" x 32'-0" x 12'-0"
DATE: 10/24/17 | REVISION: 01
ENG: MCK | DWN: BJC | APPD: MCK

F.O. 21175

STAMFORD HIGH STADIUM CREW STORAGE BLDG #2

REVISION HISTORY

REV.	DESCRIPTION	DATE
01	SEE CO-01	1/14/21

DRAWING STATUS

FOR APPROVAL:
THESE DRAWINGS, BEING FOR APPROVAL, ARE BY DEFINITION NOT FINAL, AND ARE FOR CONCEPTUAL REPRESENTATION ONLY. THEIR PURPOSE IS TO CONFIRM PROPER INTERPRETATION OF THE PROJECT DOCUMENTS. ONLY DRAWINGS ISSUED "FOR CONSTRUCTION" CAN BE CONSIDERED AS COMPLETE.

FOR PERMIT:
THESE DRAWINGS, BEING FOR PERMIT, ARE BY DEFINITION NOT FINAL. ONLY DRAWINGS ISSUED "FOR CONSTRUCTION" CAN BE CONSIDERED AS COMPLETE.

FOR CONSTRUCTION:
FINAL DRAWINGS.

STATE OF CONNECTICUT
T. JAMES EISENMAN, JR.
No. 24534
LICENSED
PROFESSIONAL ENGINEER
1/20/21

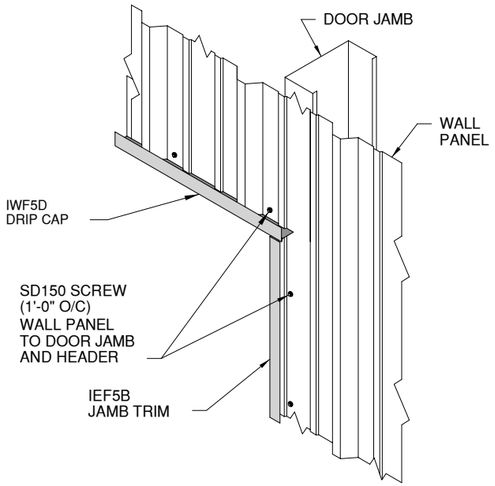

DOOR & WINDOW JAMB / HEADER TRIM

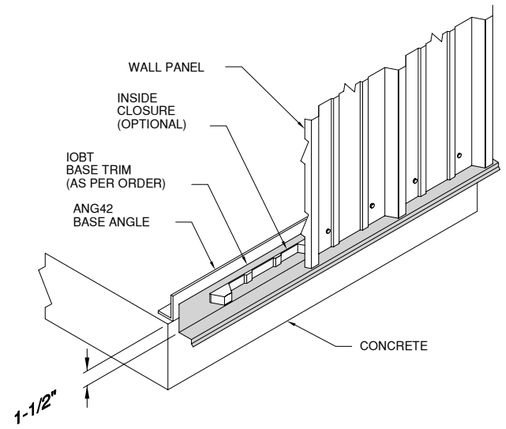

STANDARD BASE TRIM

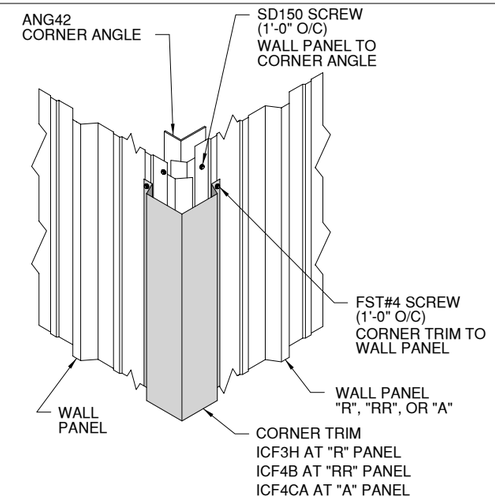

CORNER TRIM

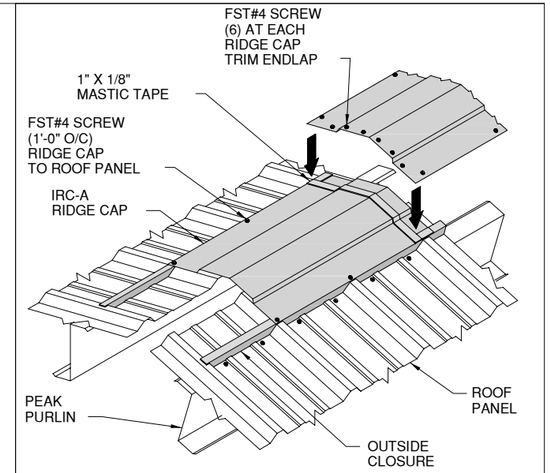

RIDGE CAP
ROOFS OVER 1:12 PITCH AND / OR
ROOFS OVER 100'-0" WIDE

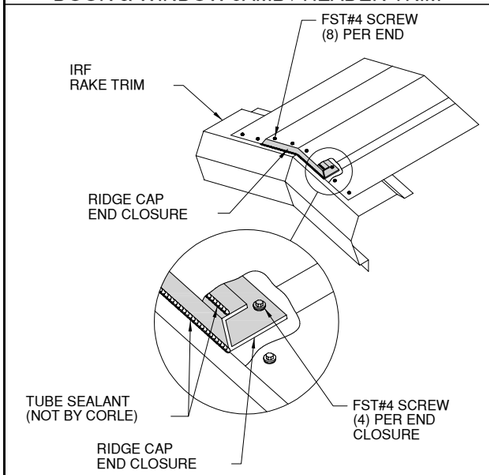

RIDGE END CAP

* # = JAMB / HEADER DEPTH

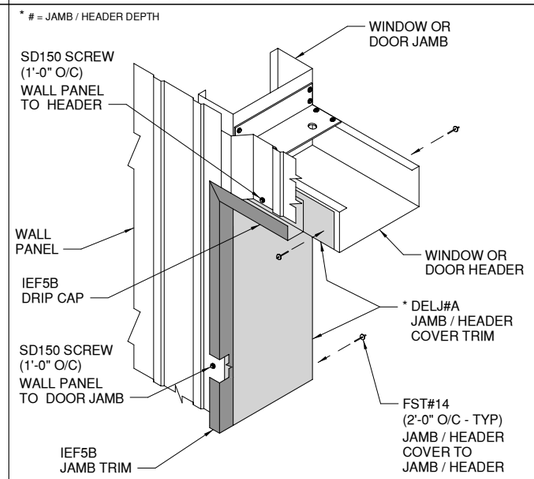

DOOR & WINDOW DELUXE JAMB TRIM

NOTE(S)
1. RAKE TRIM HELD BACK FOR ILLUSTRATION PURPOSES ONLY.

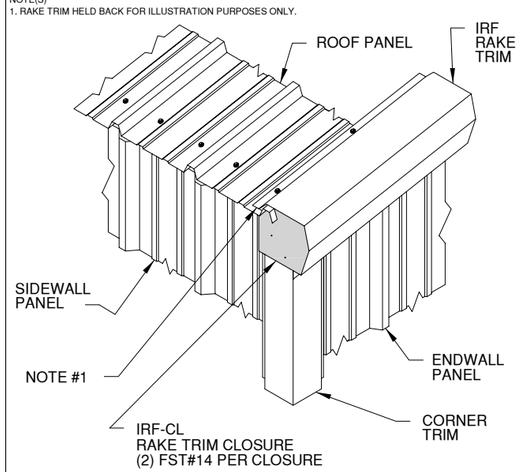

RAKE TRIM CLOSURE

OLYMPIA STEEL BUILDINGS
Olympia Steel Buildings™
4000 Island Avenue • McKees Rocks, PA 15136
888-449-7756

STAMFORD HIGH STADIUM CREW STORAGE BLDG #2
30'-0" x 32'-0" x 12'-0"
DATE: 10/24/17 | REVISION: 01
ENG: MCK | DWN: BJC | APPD: MCK

F.O. 21175

STAMFORD HIGH STADIUM CREW STORAGE BLDG #2

REVISION HISTORY

REV.	DESCRIPTION	DATE
01	SEE CO-01	1/14/21

DRAWING STATUS

☐ FOR APPROVAL:
THESE DRAWINGS, BEING FOR APPROVAL, ARE BY DEFINITION NOT FINAL, AND ARE FOR CONCEPTUAL REPRESENTATION ONLY. THEIR PURPOSE IS TO CONFIRM PROPER INTERPRETATION OF THE PROJECT DOCUMENTS. ONLY DRAWINGS ISSUED "FOR CONSTRUCTION" CAN BE CONSIDERED AS COMPLETE.

☐ FOR PERMIT:
THESE DRAWINGS, BEING FOR PERMIT, ARE BY DEFINITION NOT FINAL. ONLY DRAWINGS ISSUED "FOR CONSTRUCTION" CAN BE CONSIDERED AS COMPLETE.

■ FOR CONSTRUCTION:
FINAL DRAWINGS.

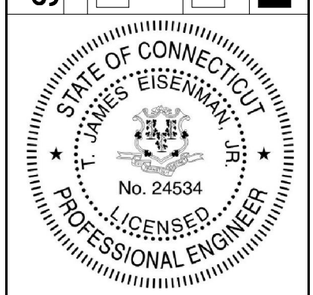

1/20/21