ADDENDUM NO. 04
February 17, 2022

To Drawings and Specifications dated February 2, 2022.

FRIENDSWOOD HIGH SCHOOL ADDITIONS & RENOVATIONS
FOR FRIENDSWOOD I.S.D.

Prepared by: PBK
11 Greenway Plaza, 22nd Floor
Houston, TX 77046-1104
PBK Project No: 20381

Notice to Bidders

A. Receipt of this Addendum shall be acknowledged on the Bid Form.

B. This Addendum forms part of the Contract documents for the above referenced project and shall be incorporated integrally therewith.

C. Each bidder shall make necessary adjustments and submit his proposal with full knowledge of all modifications, clarifications, and supplemental data included therein. Where provisions of the following supplemental data differ from those of the original Contract Documents, this Addendum shall govern.

GENERAL

Item No. 1 Provide a mounting bracket and blocking in the wall behind each wall-mounted TV. Provide a mounting bracket and overhead blocking to support each ceiling-mounted TV.

Item No. 2 All markerboards shall be magnetic.

Item No. 3 At Areas F and G, GC shall reinforce existing beams/joists located underneath new Roof top units per detail 1/S-526. GC shall coordinate locations with ARCH/MEP drawings. This item is part of alternate #4.

SPECIFICATIONS

Item No. 4 **Section 00 40 10: Alternate Proposal Form:** Replace section in its entirety.

Item No. 5 **Section 01 23 00: Alternates:** Add Alternate No. 24 as follows:

Z. Alternate No. 24: Deductive Change to Adjust Base Bid Pricing

1. State in the proposal form the amount to deduct from the Base Proposal for the Proposed Team. This alternate is intended to provide the Contractor the opportunity to adjust the Base Proposal down based upon the proposed subcontractors submitted along with Alternate proposals.

Item No. 6 **Section 02 82 00: Asbestos Remediation:** Remove section in its entirety.

Item No. 7 **Section 07 42 13: Metal Composite Material Wall Panels:** Remove section in its entirety.

Item No. 8 **Section 07 42 13: Metal Wall and Soffit Panels:** Add section in its entirety.

Item No. 9 **Section 07 42 13.16: Modular Metal Wall Panels:** Remove section in its entirety.

Item No. 10 **Section 07 42 16: Metal Soffit Panels:** Remove section in its entirety.

Item No. 11 **Section 08 33 23: Overhead Coiling Doors:** Add section in its entirety.

Item No. 12 **Section 08 33 43: Smoke Shield Fire Doors:** Add section in its entirety.

Item No. 13 **Section 08 71 00: Door Hardware:** Replace section in its entirety.

Item No. 14 **Section 11 61 25: Orchestra Pit Filler:** Remove Part 2.1, B.

Item No. 15 **Section 11 66 00: Gymnasium Equipment:** Replace section in its entirety.

Item No. 16 **Section 12 63 00: Auditorium Seating:** Add the following paragraph to Part 2.1, A:

6. Davis Furniture Company, Melrose, WI; (800) 584-9733.

Item No. 17 **Section 28 16 00: Intrusion Detection System:**

a) Section 1.4, subsection A, subsection 18 – remove WBOX 0E-SRNSTOBT Strobe/Sounders

from attic stock list.
b) Section 2.5, subsection D – remove subsection D in its entirety.
c) Section 3.1, subsection L – remove strobe/sounder from subsection.

DRAWINGS

Item No. 18 **Sheet C 102:** Replace sheet in its entirety.
Item No. 19 **Sheet C 103:** Replace sheet in its entirety.
Item No. 20 **Sheet C 501:** Replace sheet in its entirety.
Item No. 21 **Sheet C 502:** Replace sheet in its entirety.
Item No. 22 **Sheet S-012:**

a) GC allowance note #1 changed to "PROVIDE AN ALLOWANCE FOR AN ADDITIONAL 15 TONS OF MISCELLANEOUS STEEL. SIZES OF MEMBERS AND USE OF MEMBERS SHALL BE AS DIRECTED BY THE ARCHITECT IN THE FIELD. ALLOWANCE SHALL INCLUDE/ACCOUNT FOR ALL COSTS FOR MATERIAL, FABRICATION, DELIVERY, ERECTION, ETC. ANY UNUSED PORTION OF THE 15 TONS OF STEEL SHALL BE CREDITED BACK TO THE OWNER AT $4,800.00 / TON.

b) GC allowance note #2 changed to "PROVIDE AN ALLOWANCE FOR AN ADDITIONAL 100 CUBIC YARDS OF CONCRETE. SIZE OF MEMBERS AND USE OF MEMBERS SHALL BE AS DIRECTED BY THE ARCHITECT IN THE FIELD. ALLOWANCE SHALL INCLUDE/ACCOUNT FOR ALL COSTS FOR MATERIAL, FABRICATION, DELIVERY, LABOR FOR INSTALLATION/PLACEMENT, FORMWORK, ETC. REINFORCEMENT FOR CONCRETE SHALL ALSO BE INCLUDED AS PART OF THIS ALLOWANCE AND SHALL BE ASSUMED TO BE 2% MINIMUM BY VOLUME. ANY UNUSED PORTION OF THE 100 CUBIC YARDS SHALL BE CREDITED BACK TO THE OWNER AT $190.00 / CUBIC YARD.

c) Tie-in to existing allowance note #1 changed to PROVIDE AN ALLOWANCE FOR AN ADDITIONAL 25 TONS OF MISCELLANEOUS STEEL. SIZES OF MEMBERS AND USE OF MEMBERS SHALL BE AS DIRECTED BY THE ARCHITECT IN THE FIELD. ALLOWANCE SHALL INCLUDE/ACCOUNT FOR ALL COSTS FOR MATERIAL, FABRICATION, DELIVERY, ERECTION, ETC. ANY UNUSED PORTION OF THE 25 TONS OF STEEL SHALL BE CREDITED BACK TO THE OWNER AT $4,800.00 / TON.

d) Tie-in to existing allowance note #2 changed to "PROVIDE AN ALLOWANCE FOR AN ADDITIONAL 50 CUBIC YARDS OF CONCRETE. SIZE OF MEMBERS AND USE OF MEMBERS SHALL BE AS DIRECTED BY THE ARCHITECT IN THE FIELD. ALLOWANCE SHALL INCLUDE/ACCOUNT FOR ALL COSTS FOR MATERIAL, FABRICATION, DELIVERY, LABOR FOR INSTALLATION/PLACEMENT, FORMWORK, ETC. REINFORCEMENT FOR CONCRETE SHALL ALSO BE INCLUDED AS PART OF THIS ALLOWANCE AND SHALL BE ASSUMED TO BE 2% MINIMUM BY VOLUME. ANY UNUSED PORTION OF THE 50 CUBIC YARDS SHALL BE CREDITED BACK TO THE OWNER AT $190.00 / CUBIC YARD.

Item No. 23 **Sheet S-013:** Subgrade note 11 revised as follows:

AT GYM AND TENNIS BUILDING:
A MINIMUM REMOVAL OF 5 FEET OF EXISTING SOIL AND REPLACEMENT OF 5 FEET (5.0 FT) OF SELECT FILL MATERIAL IS REQUIRED UNDER THE FLOOR SLAB, AND SHALL EXTEND A MINIMUM OF 10'-0" BEYOND THE BUILDING PERIMETER. LEVELING (CUSHION) SAND SHALL NOT BE USED.

AT PAC:
A MINIMUM REMOVAL OF 4 FEET OF EXISTING SOIL AND REPLACEMENT OF 4 FEET OF SELECT FILL MATERIAL PLUS AN ADDITIONAL BUILT UP OF 2'-6" (TOTAL THICKNESS OF SELECT FILL EQUALS TO 6'-6") IS REQUIRED UNDER THE FLOOR SLAB, AND SHALL EXTEND A MINIMUM OF 10'-0" BEYOND THE BUILDING PERIMETER. LEVELING (CUSHION) SAND SHALL NOT BE USED.

Item No. 24 **Sheet S-101P:** Alternate 3 changed to the base bid. Ref to detail 7/S-523 added.
Item No. 25 **Sheet S-101Q:** Replace sheet in its entirety.
Item No. 26 **Sheet S-101R:**
a) Change column sizes located on grid lines R11/RA, R3/RA, R3/RJ to W10X49.
b) Change column size located on grid lines R5/RA to W14X99.

Item No. 27 **Sheet S-101S:** Replace sheet in its entirety.

Item No. 28 **Sheet S-101T:** Replace sheet in its entirety.

Item No. 29 **Sheet S-102D:** Note added as follows: “GC SHALL REINF. ALL BEAMS AND JOISTS ABOVE THE NEW FOLDING PARTITIONS FOR ALTERNATE#11, ALTERNATE # 9 AND OTHER LOCATIONS SPECIFIED AS THE BASE BID PER DETAIL 1/S-526 AND PROVIDE THE MISC STEELS PER DETAIL 1/S-522 IN ALL EXISTING AREAS. GC SHALL COORDINATE LOCATION AND NUMBER OF NEW FOLDING PARTITIONS AT THE EXISTING AREAS W/ARCH DRAWINGS. TYP ALL EXISTING AREAS”.

Item No. 30 **Sheet S-102E:** Replace sheet in its entirety.

Item No. 31 **Sheet S-102H:** HSS 12X6X3/8 (LSH) added between grid lines HT-HV/H12. BOS EL=REF ARCH. Refer to detail 2/S-515. Note added “EXISTING BEAM TO BE CONNECTED TO NEW COLUMN AT H12/HV. REF TYP CONNECTION DETAILS. GC SHALL PROVIDE TEMPORARY SHORING OF EXISTING BEAM UNTIL THE EXISTING BEAM IS ATTACHED TO THE NEW COLUMN”.

Item No. 32 **Sheet S-102Q:** Replace sheet in its entirety.

Item No. 33 **Sheet S-103E:** Replace sheet in its entirety.

Item No. 34 **Sheet S-103H:** Replace sheet in its entirety.

Item No. 35 **Sheet S-103P:** Refer to detail 7/S-523 at the columns added on each side of the new folding partition.

Item No. 36 **Sheet S-316:** Replace sheet in its entirety.

Item No. 37 **Sheet S-317:** Name of detail 7 changed to chain-link fence detail (Alternate #23).

Item No. 38 **Sheet S-319:** Replace sheet in its entirety.

Item No. 39 **Sheet S-402:** Replace sheet in its entirety.

Item No. 40 **Sheet S-500:** Replace sheet in its entirety.

Item No. 41 **Sheet S-515:** Replace sheet in its entirety.

Item No. 42 **Sheet S-523:** Replace sheet in its entirety.

Item No. 43 **Sheet S-528:** Replace sheet in its entirety.

Item No. 44 **Sheet AS403:**

a) Revise detail 5 / Wall section at service yard. Refer to SK-08.

b) Provide 6’-0” swinging double gate and two dock bumpers at detail 4 / PAC Loading Dock.

Item No. 45 **Sheet A-101E:** Add Fire Riser room at Area E north-east corner. Refer to SK-09.

Item No. 46 **Sheet A-101F.1:** Replace sheet in its entirety.

Item No. 47 **Sheet A-101P1:** Door K110 to receive door hardware set # W714AM.

Item No. 48 **Sheet A-503:** In Elevation 5, add a note which points to the lettering HOME OF THE MUSTANGS and reads as follows: “36” HIGH CAST ALUMINIUM BACKLIT LETTERS. RE: SPECS AND ELECTRICAL”.

Item No. 49 **Sheet A-518:** Add sheet in its entirety.

Item No. 50 **Sheet A-641:** Replace sheet in its entirety.

Item No. 51 **Sheets A-841 – A-847:** Provide locks and keys for all casework drawers and doors.

Item No. 52 **Sheet A-843:** Detail 14 has been updated. Refer to SK-06.

Item No. 53 **Sheet M-202:**

a) Equipment within Boiler Room R112 shall be adjusted to accommodate sprinkler system equipment and piping to be added to this room.

b) Room shall be extended three feet to the east.

Item No. 54 **Sheet EP-101E:** Provide one duplex receptacle in new Riser Room at exterior wall in this area. RE: architectural for location. Provide connection to nearest 120V general power circuit.

Item No. 55 **Sheet EP-101T:**

a) Distribution equipment within Electrical R118 shall be adjusted to accommodate west wall moving three feet to the east.

b) An additional 6’ wall is to be built within the center of this room.

Item No. 56 **Sheet P-101E:**

a) Fire entry riser and associated equipment shown in new Riser 107B shall be relocated instead to new Riser Room at exterior wall in this area. RE: architectural for location.

b) Intercept existing underground fire water line outside exterior wall and extend to new riser room.

c) Maintain existing line size. GC to provide sawcut and pour back to match existing concrete finish. Extend existing zone piping and connect at new location.

Item No. 57 **Sheet P-101T:**

a) Equipment within Boiler Room R112 shall be adjusted to accommodate sprinkler system equipment and piping to be added to this room.

b) Room shall be extended three feet to the east.

Item No. 58 **Sheet P-102T:**
a) Fire entry piping, pump, and associated equipment shall be relocated to first floor Boiler Room R112.
b) Boiler Room R112 shall be extended three feet to the east.

Item No. 59 **Sheet TF-101E:** Extend existing fire alarm connections at existing fire riser to be relocated to new Riser Room at exterior wall in this area. RE: architectural for location.

QUESTIONS

Item No. 60 **What are the cabinets on the east wall of room 1009A on drawing A101H?** Answer: These cabinets are file cabinets (N.I.C.).

Item No. 61 **Drawing A843 detail 14 doesn't match it's plan view; drawing A101H, room 1005, east wall, please advise.** Answer: Refer to SK-06 in this addendum.

Item No. 62 **Section 11 61 25, 2.4, C calls for the pit filler traffic surface to be tongued and grooved wood stage flooring. Drawing AF-101.3 lists the pit filler finish as MSF-1, which is identified as Masonite Stage Flooring on AF-100. Please advise.** Answer: Sheet AF-101.3 shows the pit filler floor finish as WF-2.

Item No. 63 **Section 11 61 25, 2.5, B, calls for drapery closures. There is no drapery shown on the drawings, please advise.** Answer: See specifications line items in this addendum.

Item No. 64 **the Room Finish Schedules: A-101P1 Room K147 Team; A-102E Room 201 Mech Mezz; A-102Q1 Rooms L202 Men and L203 Women; A-102R Room R202 Mech Mezz; A-102S1 Rooms R203 Stor, R205 IDF, R206 Mech Mezz; do not match up to AF drawings: AF101.2 Area P; AF102.1 Area E & Area Q; AF102.2 Area R & Area S for the room finishes or there are no rooms listed.** Answer: Refer to AF drawings.

Item No. 65 **Room K147 Team Area P1 – what floor goes into this room?** Answer: LVT flooring. Refer to AF drawings.

Item No. 66 **Rooms L202 Men & L203 Women Area Q2 – what floor goes into these 2 rooms?** Answer: EPF-1. Refer to AF drawings.

Item No. 67 **Room L201 Concessions Area Q2 – what floor goes into this room?** Answer: LVT-1. Refer to AF drawings.

Item No. 68 **Rooms 201 Area E2, R202 Area R2, R203, R206, R206 Area S2 – do these rooms get the sealed concrete?** Answer: Refer to AF drawings.

Item No. 69 **Is there going to be a "proposed team" alternate as there was a couple of weeks ago?** Answer: This alternate has been added in this addendum.

Item No. 70 **Is asbestos abatement required, if so, who is responsible for the costs?** Answer: The owner will be addressing any required asbestos abatement separately.

Item No. 71 **What jurisdiction is permitting?** Answer: This project will be permitted with the City of Friendswood, Galveston County Consolidated Drainage District, and Galveston County Health District.

Item No. 72 **What is the status of the permit?** Answer: The project is currently being reviewed.

Item No. 73 **How many permits are there?** Answer: There are multiple permits required.

Item No. 74 **Will permits be ready at the time the NTP is issued?** Answer: This is anticipated.

Item No. 75 **Are there any utility tap fees? If so, who is responsible for the costs of them?** Answer: There will not be any tap fees.

Item No. 76 **Is there a drawing that shows the seating layout for the Auditorium Seating for Alternate No. 12?** Answer: Yes – please refer to sheet A-102S.1 which was included with the Issue for Proposal drawings.

Item No. 77 **The GC Allowance notes on Sheet S-012 calls for a 75 ton steel allowance (credited back if not fully used) and a 500 cy concrete allowance (credited back if not fully used). Just below is a Tie-Into Allowance listing 35 tons of steel (states to credit back unused amount of 75 tons) and a 50 cy concrete allowance (credit back unused amount of 500 cy). Please clarify if we are to carry a 75 ton or 110 ton steel allowance and a 500 cy concrete allowance or 550 cy concrete allowance.** Answer: See structural drawing line items in this addendum.

Item No. 78 **The Fire Alarm notes to the Contractor on Sheet TF-101 calls out to replace the existing fire alarm system with a voice evacuation at the Stadium. Is this referring to the Press Box only?** Answer: The whole stadium, press box, and all support buildings are included in this replacement.

Item No. 79 **Area E Door # 106B & C, not sure if they need to be insulated or not. Too big to be counter doors.** Answer: Door 106C should be insulated since it is an exterior door. Door 106B should not be insulated.

Item No. 80 **Area R Alt. #4 Door #R104G, not sure if it needs to be insulated or not. Too big to be counter door.** Answer: This door should be a Bi-Folding Door under section 08 35 13.

Item No. 81 **Area S Door #R101Q shows to be a grille (OHCG) but calls for a 45 Min Rating. No Spec's Fire Doors.** Answer: This door should be a counter shutter.

Item No. 82 **Area T Door #R113D shows to be a grille (OHCG) but calls for a 45 Min Rating. No Spec's Fire Doors.** Answer: This door should be a counter shutter 12' W x 18' H.

Item No. 83 **Area T Door #R113E Calls for OHCG but looks like it might be a Service or Insulated Door.** Answer: This door should be insulated counter shutter since it is an exterior door.

Item No. 84 **Area Q Door #L201B calls for OHCG, want to verify it's a counter grille or counter shutter.** Answer: This door should be a counter shutter.

Attachments include 111 additional sheets and ends with drawing SK-06 dated 02/17/22.

02/17/2022

▲4 DOCUMENT 00 40 10 - ALTERNATE PROPOSAL FORM

FRIENDSWOOD HIGH SCHOOL ADDITIONS AND RENOVATIONS
FRIENDSWOOD INDEPENDENT SCHOOL DISTRICT

Submitted by: _____

Date: _____ Phone No.: _____

To: Board of Trustees
Friendswood ISD
302 Laurel
Friendswood, Texas 77546

Having examined Proposal and Contract Documents prepared by PBK, Inc., dated February 2, 2022 and having examined site conditions, the undersigned proposes to furnish all labor, equipment and materials and perform all work for the completion of the above-named project for the sum indicated below.

In submitting his Proposal, the undersigned agrees to the following:

1. Hold proposal open for acceptance 60 days.
2. Accept right of Owner to reject any or all proposals, to waive formalities and to accept proposal which Owner considers most advantageous.
3. Enter into and execute the contract, if awarded, for the Base Proposal and accepted Alternate Proposals.
4. Complete work in accordance with the Contract Documents within the stipulated contract time.
5. By signing, the undersigned affirms that, to the best of his knowledge, the Proposals have been arrived at independently and is submitted without collusion with anyone to obtain information or gain any favoritism that would in any way limit competition or give an unfair advantage over respondents in the award of this proposal.

I. ALTERNATES

If the Owner accepts any or all of the Alternates, the undersigned agrees to modify the Base Proposal as stipulated below:

A. Alternate No. 1 Distribution Switch:
ADD _____ Dollars $ _____
(Amount written in words governs) (Amount in figures)

Alternate No.2 Exterior Canopies at Area H:
ADD _____ Dollars $ _____
(Amount written in words governs) (Amount in figures)

Alternate No.3 Additional Rigging Line sets:
ADD _____ Dollars $ _____
(Amount written in words governs) (Amount in figures)

Alternate No.4 Replacement of Mechanical Systems in Areas F and G:
ADD _____ Dollars $ _____
(Amount written in words governs) (Amount in figures)

NOTE: THIS DOCUMENT MUST BE SUBMITTED BY 3:00 PM ON FEBRUARY 22, 2022.

Alternate No.5a Scroll Water Chillers Air-Cooled – Carrier:
ADD _____ Dollars $ _____
(Amount written in words governs) (Amount in figures)

Alternate No.5b Scroll Water Chillers Air-Cooled - Trane:
ADD _____ Dollars $ _____
(Amount written in words governs) (Amount in figures)

Alternate No.6a Packaged, Outdoor, Central-Station Air Handling Units – Aaon RN:
ADD _____ Dollars $ _____
(Amount written in words governs) (Amount in figures)

Alternate No.6b Packaged, Outdoor, Central-Station Air Handling Units – Trane Horizon:
ADD _____ Dollars $ _____
(Amount written in words governs) (Amount in figures)

Alternate No.7 Automated Theatrical Lighting Fixtures:
ADD _____ Dollars $ _____
(Amount written in words governs) (Amount in figures)

Alternate No.8 MDF Panel in lieu of Painted Gyp Board Walls:
ADD _____ Dollars $ _____
(Amount written in words governs) (Amount in figures)

Alternate No.9 Addition of Team Room Operable Partition:
ADD _____ Dollars $ _____
(Amount written in words governs) (Amount in figures)

Alternate No.10 Addition of Outdoor Trellis Structure:
ADD _____ Dollars $ _____
(Amount written in words governs) (Amount in figures)

Alternate No.11 Glass Operable Partition in lieu of Hollow Metal Window System:
ADD _____ Dollars $ _____
(Amount written in words governs) (Amount in figures)

Alternate No.12 Addition of Box Seats:
ADD _____ Dollars $ _____
(Amount written in words governs) (Amount in figures)

Alternate No.13 Addition of Outdoor Stage:
ADD _____ Dollars $ _____
(Amount written in words governs) (Amount in figures)

NOTE: THIS DOCUMENT MUST BE SUBMITTED BY 3:00 PM ON FEBRUARY 22, 2022.

Alternate No.14 Arriscraft in lieu of Burnished Block:
ADD_____ Dollars $_____
(Amount written in words governs) (Amount in figures)

Alternate No.15 Wood Veneer Paneling in lieu of PSI Wall Panels:
ADD_____ Dollars $_____
(Amount written in words governs) (Amount in figures)

Alternate No.16 Addition of Tennis Courts Parking Lots:
ADD_____ Dollars $_____
(Amount written in words governs) (Amount in figures)

Alternate No.17 Direct Digital Controls – Unify Energy Solutions:
ADD_____ Dollars $_____
(Amount written in words governs) (Amount in figures)

Alternate No.18 Direct Digital Controls – Automated Logic Corporation:
ADD_____ Dollars $_____
(Amount written in words governs) (Amount in figures)

Alternate No.19 Hollow Metal Window System in lieu of Glass Operable Partition:
DEDUCT_____ Dollars $_____
(Amount written in words governs) (Amount in figures)

Alternate No.20 Floor Tile in lieu of Terrazzo:
DEDUCT_____ Dollars $_____
(Amount written in words governs) (Amount in figures)

Alternate No.21 Hollow Metal Door Systems in lieu of Three Glass Operable Partitions:
DEDUCT_____ Dollars $_____
(Amount written in words governs) (Amount in figures)

Alternate No.22 Reduction of Parking on Greenbriar:
DEDUCT_____ Dollars $_____
(Amount written in words governs) (Amount in figures)

Alternate No.23 Chainlink Fencing in lieu of Ornamental Fencing:
DEDUCT_____ Dollars $_____
(Amount written in words governs) (Amount in figures)

Alternate No.24 Deductive Change to Adjust Base Bid Pricing:
DEDUCT_____ Dollars $_____
(Amount written in words governs) (Amount in figures)

NOTE: THIS DOCUMENT MUST BE SUBMITTED BY 3:00 PM ON FEBRUARY 22, 2022.

It is understood that the right is reserved by the Owner to reject any or all proposals, or waive any informalities in the proposal process.

_____
Authorized Signature

_____
Printed Name

_____
Title

(Seal, if a Corporation) State whether Corporation, Partnership or Individual**)**

_____
Name of Contracting Firm

_____
Email Address

_____
Address

_____
Telephone

_____
Date

END OF DOCUMENT 00 40 10

NOTE: THIS DOCUMENT MUST BE SUBMITTED BY 3:00 PM ON FEBRUARY 22, 2022.

▲4 SECTION 07 42 13 - METAL WALL AND SOFFIT PANELS

PART 1 - GENERAL

1.1 RELATED DOCUMENTS

A. Drawings and general provisions of the Contract, including General and Supplementary Conditions and other Division 01 Specification Sections, apply to this Section.

1.2 SUMMARY

A. Section includes: Requirements including but not limited to:
   1. Concealed fastener metal wall panels as part of the assembly.
   1. Modular metal wall panel system consisting of aluminum panels in a rainscreen application.
   2. Accessories necessary for a complete installation.

1.3 PERFORMANCE REQUIREMENTS

A. Delegated Design: Engage a qualified professional engineer, licensed in the State of Texas with experience in the design of metal composite wall panels as part of curtainwalls and aluminum storefront systems to design and coordinate the cladding assembly using performance requirements and design criteria indicated.

1.4 SYSTEM REQUIREMENTS

A. Modular Metal Panel System: Rainscreen design consisting of dry seal joinery designed, attachment system components, and associated necessary to minimize water penetration and induce air circulation in the space behind the panel system. Moisture weeping trim at panel base details allows water to drain out of the system.

1.5 SUBMITTALS

A. Product Data: Technical data including construction details, material descriptions, dimensions of individual components and profiles, and finishes for each type of panel and accessory.

B. Shop Drawings: Provide shop drawings prepared by manufacturer or manufacturer's authorized dealer. Include full elevations showing openings and penetrations. Include details of each condition of installation and attachment. Provide details at a minimum scale 3-inch per foot of all required trim and extrusions needed for a complete installation.
   1. Include data indicating compliance with performance requirements.
   2. Indicate points of supporting structure that must coordinate with modular metal panel system installation.

C. Samples:
   1. One (1) ft long sample of each listed panel, including clips (if applicable) & fasteners
   2. Minimum 2" x 4" chip of specified finish.

D. Qualification Information: For Installer and Installer's field supervisor.

E. Sample Warranties: Submit proposed warranty meeting requirements of this Section.

1.6 DELIVERY AND STORAGE

A. All panels shall be delivered with appropriate packaging to provide protection against transportation damage. Materials damaged in shipping or storage shall not be used.

B. Store all materials and accessories above ground on well-skidded platforms. Store under waterproof covering. Provide proper ventilation to panels to prevent condensation build-up between panels.

1.7 COORDINATION

A. Coordinate work with installation of associated metal flashings and manufactured roof panels.

B. General contractor shall coordinate with all subcontractors including masonry, waterproofing membrane, sheathing work, and framing to ensure walls are plumb and ready to accept fasteners and panel systems.

C. Pre-construction meeting required with owner and architect. Representatives from all associated trades shall attend to coordinate arrival, delivery, and installation of products and materials.

1.8 WARRANTY

A. Warrant the work specified herein for five (5) years against becoming unserviceable or causing an objectionable appearance resulting from either defective or non-conforming materials or workmanship.

B. Provide a manufacturer's twenty (20) year finish integrity warranty.

PART 2 - PRODUCTS

2.2 MANUFACTURERS

A. Basis of Design Manufacturer: Berridge Manufacturing Company; Houston, TX, (800) 231-8127 . Other manufacturers may bid this project provided they comply with all requirements of this specification. Product listed is considered basis of design and owner shall not be responsible for any costs resulting from change of manufacturer including sizes, trim pieces, structural, or system components. Manufacturers listed below who produce equivalent products to those specified are approved for use on the Project. Other manufacturers must have a minimum of ten (10) years' experience manufacturing products meeting or exceeding the specifications and comply with Division 1 requirements regarding substitutions to be considered.
   1. Alcoa, New York, NY (800) 841-7774.
   2. CENTRIA Architectural Systems; Township, PA (800) 759-7474.
   3. MBCI, Houston, Tx, (281) 445-8555.

2.2 MATERIALS

A. Concealed Fastener Metal Wall Panels (MP-1):
   1. Prefinished Sheet Material: 24 gauge thick Galvalume® steel sheet, minimum yield 50,000 PSI, roll formed in continuous lengths, ASTM A792.
   2. Finish: Kynar 500 or Hylar 5000 Fluoropolymer coating, applied by the manufacturer on a continuous coil coating line, with a top side dry film thickness of 0.70 to 0.90 mil over 0.25 to 0.35 mil prime coat, to provide a total dry film thickness of 0.95 to 1.25 mil. Bottom side shall be coated with primer with a dry film thickness of 0.25 mil. Finish shall conform to all tests for adhesion, flexibility, and longevity as specified by the Kynar 500 or Hylar 5000 finish supplier. Color shall be as selected by Architect from manufacturer's available colors. Interior surface finish shall be manufacturer's standard color.

3. Touch-up Paint: Paint burns, scars, welds, and damaged and rusted surfaces with cold galvanizing paint in accordance with ASTM A780. Acceptable Products include ZRC Cold Galvanizing Compound or Galvilite manufactured by ZRC Worldwide, Marshfield, MA; Galvax Zinc-rich Cold Galvanizing Coating manufactured by Alvin Products, Inc., Lawerence, MA; or paint complying with military specification MILP-21035A, Type I or II.
4. Strippable Film: Shall be applied to the top side of the painted coil to protect the finish during fabrication, shipping and field handling. This strippable film must be removed before installation.
5. Accessories:
    1) Sealant: As specified in Section 07 92 00.
    2) Cold Formed Metal Framing: As specified in Section 05 40 00.
    3) Girts, Sub-girts, purlins: 16 gauge minimum thickness (55,000 psi minimum yield thickness) galvanized steel, with Stainless Steel screws to meet application.
    4) Fasteners: long-life, corrosion resistant screws supplied or instructed by panel manufacturer to suit application spaced according to UL requirements, color matched to match metal panel color.
    5) Clips, miscellaneous fasteners: galvanized steel as supplied or instructed by panel manufacturer.
    6) Metal Trim, closures, and flashing: Exposed adjacent flashing shall be the same material and finish as panel system.
    7) Separate dissimilar metals with asphalt-saturated building felt or a bituminous coating to prevent galvanic action.
    8) Dampproofing: refer to section 07 11 00.

6. Profile/Dimensions: 7/8 inch thick panel 16 inch coverage width, in continuous length up to 40 feet-0 inches, with interlocking design with concealed fasteners.
7. Approved Product/Manufacturer: ‘HR-16’ Panel manufactured by Berridge Manufacturing Co., Houston, TX; (800) 231-8127, or Architect approved equal.

C. Concealed Fastener Metal Soffit Panels (MP-2):
1. Basis-of –Design Product: Subject to compliance with requirements, provide Berridge Manufacturing Company; L-Panel.
2. Metallic – Coated Steel Sheet: Aluminum-zinc alloy-coated steel sheet complying with ASTM A 792/A 792M, Class AZ50 coating designation; structural quality. Pre-painted by the coil-coating process to comply with ASTM A 755/A 755M.
    a. Nominal Thickness: 0.032 inch.
    b. Surface: Smooth, flat finish.
    c. Exterior Finish: Metallic Two Coat fluoropolymer
    d. Color: As selected by Architect from manufacturer's full range

D. All Cold-Formed Metal Framing for Metal Wall and Soffit Panels to be designed by a Texas Licensed Profession Engineer per spec. Section 05 40 00.
Professional Engineer

E. Accessories:
1. Zees: 16 gauge minimum thickness galvanized steel, 2 inch rise minimum, or as required to align with existing conditions.
2. Sub-Girt Fasteners: Stainless Steel screws to meet application.
3. Concealed Fasteners: Stainless Steel screws supplied or recommended by panel manufacturer to suit application.
4. Metal Trim at Siding Panels: 0.060 inch thick pre-finished aluminum sheet, matching finish type and color of siding panels.
5. Closures: 0.060 inch thick aluminum sheet, mill finish.
6. Separate dissimilar metals with asphalt-saturated building felt or a bituminous coating to prevent galvanic action.
7. Air Barrier: High temperature air barrier. Re: 07 26 00.

8. Polyisocynurate: Shall comply with NFPA 285 & ASTM G 2357 & ASTM E 331. Thickness shall be 2-inch.
9. Access Panels: Refer to 08 31 13 Specification.

PART 3 - EXECUTION

3.1 EXAMINATION OF MODULAR METAL PANEL SYSTEM

A. Examine substrates, areas, and conditions, with Installer present, for compliance with requirements for installation tolerances, metal composite material panel supports, and other conditions affecting performance of the Work.
   1. Examine wall framing to verify that girts, angles, channels, studs, and other structural panel support members and anchorage have been installed within alignment tolerances required by metal composite material wall panel manufacturer.
   2. Examine wall sheathing to verify that sheathing joints are supported by framing or blocking and that installation is within flatness tolerances required by metal composite material wall panel manufacturer.
      a. Verify that air or water resistive barriers have been installed over sheathing or backing substrate to prevent air infiltration or water penetration.

B. Examine roughing in for components and assemblies penetrating metal composite material panels to verify actual locations of penetrations relative to seam locations of metal composite material panels before installation.

C. Proceed with installation after correcting unsatisfactory conditions.

3.2 PREPARATION

A. Miscellaneous Supports: Install subframing, furring, and other miscellaneous panel support members and anchorages according to ASTM C 754 and metal composite material panel as required by manufacturer's written recommendations.

3.3 SOFFIT PANEL INSTALLATION

A. Install metal wall panels according to manufacturer's written instructions in orientation, sizes, and locations indicated on Drawings. Install panels perpendicular to supports unless otherwise indicated. Anchor metal composite material panels and other components of the work securely in place, with provisions for thermal and structural movement.
   1. Shim or otherwise plumb substrates receiving metal composite material panels.
   2. Flash and seal metal composite material panels at perimeter of all openings. Fasten with self-tapping screws. Do not begin installation until air or water resistive barriers and flashings that will be concealed by metal composite material panels are installed.
   3. Install screw fasteners in predrilled holes.
   4. Locate and space fastenings in uniform vertical and horizontal alignment.
   5. Install flashing and trim as metal composite material panel work proceeds.
   6. Locate panel splices over, but not attached to, structural supports. Stagger panel splices and end laps to avoid a four-panel lap splice condition.
   7. Align bottoms of metal composite material panels and fasten with blind rivets, bolts, or self-tapping screws. Fasten flashings and trim around openings and similar elements with self-tapping screws.
   8. Provide weathertight escutcheons for pipe and conduit penetrating panels.

B. Fasteners:
   1. Aluminum Panels: Use aluminum or stainless-steel fasteners for surfaces exposed to the exterior; use aluminum or galvanized steel fasteners for surfaces exposed to the interior.

C. Metal Protection: Where dissimilar metals contact each other or corrosive substrates, protect against galvanic action as recommended in writing by metal composite material panel manufacturer.

D. Attachment Assembly, General: Install attachment assembly required to support metal composite material wall panels and to provide a complete weathertight wall system, including subgirts, perimeter extrusions, tracks, drainage channels, panel clips, and anchor channels.
   1. Include attachment to supports, panel to panel joinery, panel to dissimilar material joinery, and panel system joint seals.

E. Installation: Attach metal composite material wall panels to supports at locations, spacings, and with fasteners recommended by manufacturer to achieve performance requirements specified.
   1. Wet Seal Systems: Seal horizontal and vertical joints between adjacent metal composite material wall panels with sealant backing and sealant. Install sealant backing and sealant according to requirements specified in Section 07 92 00.
   2. Dry Seal Systems: Seal horizontal and vertical joints between adjacent metal composite material wall panels with manufacturer's standard gasket system.
   3. Rainscreen Systems: Do not apply sealants to joints unless otherwise indicated.

F. Clip Installation: Attach panel clips to supports at locations, spacings, and with fasteners recommended by manufacturer. Attach routed and returned flanges of wall panels to panel clips with standard fasteners.
   1. Seal horizontal and vertical joints between adjacent panels with sealant backing and sealant. Install sealant backing and sealant according to requirements specified in Section 07 92 00.
   2. Seal horizontal and vertical joints between adjacent metal composite material wall panels with manufacturer's standard gaskets.

G. Subgirt and Spline Installation: Install support assembly at locations, spacings, and with fasteners recommended by manufacturer. Use manufacturer's standard subgirts and splines that provide support and complete secondary drainage assembly, draining to the exterior at horizontal joints. Attach metal composite material wall panels by interlocking perimeter extrusions attached to panels with subgirts and splines. Fully engage integral subgirt and spline gaskets and leave horizontal and vertical joints with open reveal. Terminate edge of panels flush with perimeter extrusions.
   1. Install wall panels to allow individual panels to free float and be installed and removed without disturbing adjacent panels.
   2. Do not apply sealants to joints unless otherwise indicated.

H. Track Support Installation: Install support assembly at locations, spacings, and with fasteners recommended by manufacturer. Use manufacturer's standard horizontal tracks and vertical tracks that provide support and secondary drainage assembly, draining to the exterior at horizontal joints through drain tube. Attach metal composite material wall panels to tracks by interlocking panel edges with manufacturer's standard "T" clips.
   1. Attach routed and returned flanges of wall panels to perimeter extrusions with manufacturer's standard fasteners.
   2. Attach flush wall panels to perimeter extrusions by engaging panel edges and by attaching with manufacturer's standard structural silicone adhesive.
   3. Install wall panels to allow individual panels to "free float" and be installed and removed without disturbing adjacent panels.
   4. Do not apply sealants to joints unless otherwise indicated.

I. Rainscreen Principle Installation: Install using assembly with vertical channel that provides support and secondary drainage assembly, draining at base of wall. Notch vertical channel to receive support pins. Install vertical channels supported by channel brackets or adjuster angles and at locations, spacings, and with fasteners recommended by manufacturer. Attach metal

composite material wall panels by inserting horizontal support pins into notches in vertical channels and into flanges of panels. Leave horizontal and vertical joints with open reveal.

1. Install wall panels to allow individual panels to be installed and removed without disturbing adjacent panels.
2. Do not apply sealants to joints unless otherwise indicated.

J. Accessory Installation: Install accessories with positive anchorage to building and weathertight mounting, and provide for thermal expansion. Coordinate installation with flashings and other components.

1. Install components required for a complete metal wall panel assembly including trim, copings, corners, seam covers, flashings, sealants, gaskets, fillers, closure strips, and similar items. Provide types indicated by metal composite material panel manufacturer; provide types recommended in writing by metal composite material panel manufacturer.

K. Flashing and Trim: Comply with performance requirements, manufacturer's written installation instructions, and SMACNA *Architectural Sheet Metal Manual*. Provide concealed fasteners where possible, and set units true to line and level as indicated. Install work with laps, joints, and seams that are permanently watertight.

1. Install exposed flashing and trim that is without buckling and tool marks and that is true to line and levels indicated, with exposed edges folded back to form hems. Install sheet metal flashing and trim to fit substrates and to result in waterproof performance.
2. Expansion Provisions: Provide for thermal expansion of exposed flashing and trim. Space movement joints at a maximum of 10 feet (3 m) with no joints allowed within 24 inches (605 mm) of corner or intersection. Where lapped expansion provisions cannot be used or would not be sufficiently waterproof, form expansion joints of intermeshing hooked flanges, not less than 1 inch (25 mm) deep, filled with mastic sealant (concealed within joints).

3.3 ERECTION TOLERANCES

A. Installation Tolerances: Shim and align metal composite material wall panel units within installed tolerance of 1/4 inch in 20 feet (6 mm in 6 m), nonaccumulative, on level, plumb, and location lines as indicated, and within 1/8 inch (3 mm) offset of adjoining faces and of alignment of matching profiles.

3.4 FIELD QUALITY CONTROL

A. Testing Agency: Owner will engage a qualified independent testing agency to perform field tests and inspections.

B. Water Spray Test: After installation, test area of assembly directed by Architect for water penetration according to AAMA 501.2.

C. Manufacturer Field Service: Engage a factory authorized service representative to test and inspect completed metal composite material wall panel installation, including accessories.

D. Metal composite material wall panels are considered defective if they do not pass test and inspections.

E. Additional tests and inspections, at Contractor's expense, are performed to determine compliance of replaced or additional work with specified requirements.

F. Prepare test and inspection reports.

3.5 CLEANING AND PROTECTION

A. Remove temporary protective coverings and strippable films as metal composite material panels are installed, unless otherwise indicated in manufacturer's written installation instructions. On completion of metal composite material panel installation, clean finished surfaces as recommended by metal composite material panel manufacturer. Maintain in a clean condition during construction.

B. After metal composite material panel installation, clear weep holes and drainage channels of obstructions, dirt, and sealant.

C. Replace metal composite material panels that have been damaged or have deteriorated beyond successful repair by finish touchup or similar minor repair procedures.

END OF SECTION 07 42 13

▲4 SECTION 08 33 23 - OVERHEAD COILING DOORS

PART 1 - GENERAL

1.1 RELATED DOCUMENTS

A. Drawings and general provisions of the Contract, including General and Supplementary Conditions and Division 01 Specification Sections, apply to this Section.

1.2 SUMMARY

A. Section Includes: Requirements including but not limited to:
   1. Insulated service doors.
   2. Accessories necessary for a complete installation.

1.3 PERFORMANCE REQUIREMENTS

A. Delegated Design: Design overhead coiling doors, including comprehensive engineering analysis by a qualified professional engineer, licensed in the State of Texas, using performance requirements and design criteria indicated.

B. Structural Performance, Exterior Doors: Capable of withstanding the design wind loads.
   1. Design Wind Load: Indicated on Drawings.
   2. Testing: According to ASTM E 330.
   3. Deflection Limits: Design overhead coiling doors to withstand design wind load without evidencing permanent deformation or disengagement of door components.
   4. Operability under Wind Load: Design overhead coiling doors to remain operable under design wind load, acting inward and outward.

C. Air Infiltration: Maximum rate of 1.0 cfm/sq. ft. (5.1 L/s per sq. m) at 15 and 25 mph (24.1 and 40.2 km/h) when tested according to ASTM E 283.

D. STC Rating: 26.

E. Curtain R-Value: 5.0 degrees F x h x sq. ft./Btu (0.881 K x sq. m/W).

F. TDI Windstorm Requirements: Basic design wind speed requirements for construction in the designated catastrophic areas along Texas Gulf coast.
   1. Inland I Zone: Resist 120 mph, 3-second gust.

G. Windborne Debris Impact Resistance: Refer to the Structural Engineer's Drawings, S1.01.

H. Operation Cycles: Provide overhead coiling door components and operators capable of operating for not less than 100,000 cycles for each door. One operation cycle is complete when a door is opened from the closed position to the fully open position and returned to the closed position.
   1. Include tamperproof cycle counter.

1.4 SUBMITTALS

A. Product Data: Technical data including construction details, material descriptions, dimensions of individual components, profiles for slats, and finishes.
   1. Include rated capacities, operating characteristics, electrical characteristics, and furnished accessories.
   2. Include description of automatic closing device and testing and resetting instructions.

B. Shop Drawings: Submit plans, elevations, sections, and mounting details.
   1. Include details of equipment assemblies, and indicate dimensions, required clearances, method of field assembly, components, and location and size of each field connection.
   2. Include details of equipment assemblies. Indicate dimensions, required clearances, method of field assembly, components, and location and size of each field connection.
   3. Include points of attachment and their corresponding static and dynamic loads imposed on structure.
   4. For exterior components, include details of provisions for assembly expansion and contraction and for excluding and draining moisture to the exterior.
   5. Show locations of controls, locking devices, replaceable fusible links, and other accessories.
   6. Include diagrams for power, signal, and control wiring.

C. Samples: Submit samples for exposed metal finish in standard sizes.

D. Delegated Design Submittal: Submit delegated design including analysis data signed and sealed by the professional engineer licensed in the State of Texas who is responsible for the preparation.

E. Maintenance Data: Submit for inclusion in maintenance manuals.

1.5 QUALITY ASSURANCE

A. Regulatory Requirements:
   1. Electrical Components, Devices, and Accessories: Listed and labeled as defined in NFPA 70, by a qualified testing agency, and marked for intended location and application.
   2. Sound Control Doors: Assemblies tested in a laboratory for sound transmission loss performance according to ASTM E 90, calculated according to ASTM E 413, and rated for not less than the STC value indicated.
   3. Accessibility Requirements: Comply with applicable requirements.
      a. U.S. Architectural and Transportation Barriers Compliance Board Americans with Disabilities Act Accessibility Guidelines for Buildings and Facilities (ADAAG).
      b. ICC/ANSI A117.1 Accessible and Useable Building and Facilities.
      c. Texas Accessibility Standards (TAS).

B. Installer Qualifications: Entity having minimum 5 years documented experience who employs installers and supervisors trained and approved by manufacturer for both installation and maintenance of units required.

C. Source Limitations: Obtain overhead coiling doors from single source from single manufacturer.
   1. Obtain operators and controls from overhead coiling door manufacturer.

1.6 WARRANTY

A. Warrant the work specified herein for two (2) years against becoming unserviceable or causing an objectionable appearance resulting from either defective or nonconforming materials and workmanship.

PART 2 - PRODUCTS

2.1 DOOR ASSEMBLY

A. Manufacturers: Subject to compliance with requirements, provide products by one of the following:
   1. Clopay Building Products.
   2. Cookson Company.

3. Cornell Iron Works, Inc.
4. McKeon Door Company, Inc. as distributed by Griesenbeck.
5. Overhead Door Corporation.
6. Wayne-Dalton Corp.
7. Holiday Gate & Door Systems Inc.

B. Insulated Service Door: Overhead coiling door formed with curtain of interlocking metal slats.

C. Door Curtain Slats: Flat profile slats of 2-5/8 inch (67 mm) center to center height.
1. Gasket Seal. Continuous gaskets between slats.

D. Bottom Bar: Two angles, each not less than 1-1/2 inch by 1-1/2 inch by 1/8 inch (38 mm by 38 mm by 3 mm) thick; fabricated from hot dip galvanized steel finished to match door.

E. Curtain Jamb Guides: Galvanized steel with exposed finish matching curtain slats.

F. Hood: Match curtain material and finish.
1. Shape: Round.
2. Mounting: Between jambs.

G. Locking Devices: Equip door with locking device assembly.
1. Locking Device Assembly: Cremone type, both jamb sides locking bars, operable from inside and outside with cylinders.

H. Electric Door Operator:
1. Usage Classification: Standard duty, up to 25 cycles per hour and up to 90 cycles per day.
2. Operator Location: Front of hood.
3. Safety: Listed according to UL 325 by a qualified testing agency for commercial or industrial use; moving parts of operator enclosed or guarded if exposed and mounted at 8 feet (2.44 m) or lower.
4. Motor Exposure: Interior.
5. Emergency Manual Operation: Chain type.
6. Obstruction-Detection Device: Automatic pneumatic sensor edge on bottom bar
a. Sensor Edge Bulb Color: Black.

7. Control Station(s): Control Station: Sargent keyed cylinder to open and close.

I. Curtain Accessories: Equip door with weatherseals, astragal, push/pull handles and automatic closing device.

J. Door Finish:
1. Finish: Powder coated. Architect to select from manufacturer’s full range.
2. Interior Curtain Slat Facing: Match finish of exterior curtain slat face.

2.2 DOOR CURTAIN MATERIALS AND CONSTRUCTION

A. Door Curtains: Fabricate overhead coiling door curtain of interlocking metal slats, designed to withstand wind loading indicated, in a continuous length for width of door without splices. Unless otherwise indicated, provide slats of thickness and mechanical properties recommended by door manufacturer for performance, size, and type of door indicated, and as follows:
1. Steel Door Curtain Slats: Zinc coated (galvanized), cold rolled structural steel sheet; complying with ASTM A 653/A 653M, with G90 (Z275) zinc coating; nominal sheet thickness (coated) of 0.028 inch (0.71 mm); and as required.

2. Insulation: Fill slats for insulated doors with thermal insulation complying with maximum flame spread and smoke developed indexes of 75 and 450, respectively, according to ASTM E 84 or UL 723. Enclose insulation completely within slat faces.
3. Metal Interior Curtain Slat Facing: Match metal of exterior curtain slat face, with minimum aluminum thickness of 0.032 inch (0.80 mm).

B. Curtain Jamb Guides: Angles or channels and angles of same material and finish as curtain slats unless otherwise indicated, with sufficient depth and strength to retain curtain, to allow curtain to operate smoothly, and to withstand loading. Slot bolt holes for guide adjustment. Provide removable stops on guides to prevent overtravel of curtain.

2.3 HOODS

A. Form sheet metal hood to entirely enclose coiled curtain and operating mechanism at opening head. Contour to fit end brackets to which hood is attached. Roll and reinforce top and bottom edges for stiffness. Form closed ends for surface mounted hoods and fascia for any portion of between jamb mounting that projects beyond wall face. Equip hood with intermediate support brackets as required to prevent sagging.
1. Galvanized Steel: Nominal 0.028 inch (0.71 mm) thick, hot dip galvanized steel sheet with G90 (Z275) zinc coating, complying with ASTM A 653/A 653M.

2.4 LOCKING DEVICES

A. Locking Device Assembly: Fabricate with cylinder lock, spring-loaded dead bolt, operating handle, cam plate, and adjustable locking bars to engage through slots in tracks. Open from both sides.
1. Lock Cylinders: Refer to Section 08 71 00 for Sargent cylinder.
2. Keys: Refer to Section 08 71 00.

B. Safety Interlock Switch: Equip power operated doors with safety interlock switch to disengage power supply when door is locked.

2.5 CURTAIN ACCESSORIES

A. Weatherseals for Exterior Doors: Equip each exterior door with weather stripping gaskets fitted to entire exterior perimeter of door for weather resistant installation unless otherwise indicated.
1. At door head, use 1/8 inch (3 mm) thick, replaceable, continuous sheet baffle secured to inside of hood or field installed on the header.
2. At door jambs, use replaceable, adjustable, continuous, flexible, 1/8 inch (3 mm) thick seals of flexible vinyl, rubber, or neoprene.

B. Astragal for Interior Doors: Equip each door bottom bar with replaceable, adjustable, continuous, compressible gasket of flexible vinyl, rubber, or neoprene as a cushion bumper.

2.6 COUNTERBALANCING MECHANISM

A. Counterbalance doors using standard mechanism with adjustable tension, steel helical torsion spring mounted around a steel shaft and contained in a spring barrel connected to top of curtain with barrel rings. Use grease sealed bearings or self-lubricating graphite bearings for rotating members.

B. Counterbalance Barrel: Fabricate spring barrel of hot formed, structural quality, seamless or welded carbon steel pipe, of sufficient diameter and wall thickness to support rolled up curtain without distortion of slats and to limit barrel deflection to not more than 0.03 in./ft. (2.5 mm/m) of span under full load.

C. Counterbalance Spring: One or more oil tempered, heat treated steel helical torsion springs. Size springs to counterbalance weight of curtain, with uniform adjustment accessible from outside barrel. Secure ends of springs to barrel and shaft with cast steel barrel plugs.

D. Torsion Rod for Counterbalance Shaft: Fabricate of cold rolled steel, sized to hold fixed spring ends and carry torsional load.

E. Brackets: Mounting brackets fabricated from either cast iron or cold rolled steel plate.

2.7 ELECTRIC DOOR OPERATORS

A. Electric door operator assembly of size and capacity recommended and provided by door manufacturer for door and operation cycles requirement specified, with electric motor and factory prewired motor controls, starter, gear reduction unit, solenoid operated brake, clutch, control stations, control devices, integral gearing for locking door, and accessories required for proper operation.
   1. Comply with NFPA 70.
   2. Control equipment complying with NEMA ICS 1, NEMA ICS 2, and NEMA ICS 6, with NFPA 70 Class 2 control circuit, maximum 24-V ac or dc.

B. Usage Classification: Electric operator and components capable of operating for not less than number of cycles per hour indicated for each door.

C. Door Operator Location(s): Operator location indicated for each door.
   1. Wall Mounted: Operator is mounted to the inside front wall on the left or right side of door and connected to door drive shaft with drive chain and sprockets. Side room is required for this type of mounting. Wall mounted operator can also be mounted above or below shaft; if above shaft, headroom is required. Mount on interior to operate from pedestrian height. Coordinate height with Architect prior to installation.

D. Motors: Reversible type motor with controller (disconnect switch) for motor exposure indicated.
   1. Electrical Characteristics:
      a. Phase: Polyphase.
      b. Volts: 115 V.
      c. Hertz: 60.
   2. Motor Size: Minimum size large enough to start, accelerate, and operate door in either direction from any position, at a speed not less than 8 in./sec. (203 mm/s) and not more than 12 in./sec. (305 mm/s), without exceeding nameplate ratings or service factor.
   3. Operating Controls, Controllers, Disconnect Switches, Wiring Devices, and Wiring: Standard unless otherwise indicated.
   4. Coordinate wiring requirements and electrical characteristics of motors and other electrical devices with building electrical system and each location where installed.

E. Limit Switches: Equip each motorized door with adjustable switches interlocked with motor controls and set to automatically stop door at fully opened and fully closed positions.

F. Obstruction Detection Devices: External entrapment protection consisting of indicated automatic safety sensor capable of protecting full width of door opening. For nonfire rated doors, activation of device immediately stops and reverses downward door travel.
   1. Photoelectric Sensor: Manufacturer's standard system designed to detect an obstruction in door opening without contact between door and obstruction.
      a. Self-Monitoring Type: Designed to interface with door operator control circuit to detect damage to or disconnection of sensing device. When self-monitoring feature is activated, door closes only with sustained or constant pressure on close button.

2. Electric Sensor Edge: Automatic safety sensor edge, located within astragal or weather stripping mounted to bottom bar. Contact with sensor activates device. Connect to control circuit using take up reel or self-coiling cable.
   a. Self-Monitoring Type: Four wire configured device designed to interface with door operator control circuit to detect damage to or disconnection of sensor edge.

3. Pneumatic Sensor Edge: Automatic safety sensor edge, located within astragal or weather stripping mounted to bottom bar. Contact with sensor activates device.

G. Control Station: Three button control station in fixed location with momentary contact push button controls labeled *Open* and *Stop* and sustained or constant pressure push button control labeled *Close*.
   1. Interior Mounted Units: Full guarded, surface mounted, heavy duty type, with general purpose NEMA ICS 6, Type 1 enclosure.
   2. Exterior Mounted Units: Full guarded, standard duty, surface mounted, weatherproof type, NEMA ICS 6, Type 4 enclosure, key operated.

H. Emergency Manual Operation: Equip each electrically powered door with capability for emergency manual operation. Design manual mechanism so required force for door operation does not exceed 25 lbf (111 N).

I. Emergency Operation Disconnect Device: Equip operator with hand operated disconnect mechanism for automatically engaging manual operator and releasing brake for emergency manual operation while disconnecting motor without affecting timing of limit switch. Mount mechanism so it is accessible from floor level. Include interlock device to automatically prevent motor from operating when emergency operator is engaged.

J. Motor Removal: Design operator so motor may be removed without disturbing limit-switch adjustment and without affecting emergency manual operation.

K. Audible and Visual Signals: Audible alarm and visual indicator lights in compliance with regulatory requirements for accessibility. Interconnect with security system by door contacts located so not easily knocked off in daily operation.

2.8 FINISH REQUIREMENTS

A. Comply with NAAMM/NOMMA *Metal Finishes Manual for Architectural and Metal Products (AMP 500-06***)** for recommendations for applying and designating finishes.

B. Appearance of Finished Work: Noticeable variations in same piece are not acceptable. Variations in appearance of adjoining components are acceptable if they are within the range of approved Samples and are assembled or installed to minimize contrast.

C. Steel and Galvanized Steel Finishes:
   1. Powder Coat Finish: Baked on finish consisting of prime coat and thermosetting topcoat. Comply with coating manufacturer's written instructions for cleaning, pretreatment, application, and minimum dry film thickness.

PART 3 - EXECUTION

3.1 EXAMINATION

A. Examine substrates areas and conditions for compliance with requirements for substrate construction and other conditions affecting performance of the Work.

B. Examine locations of electrical connections.

C. Proceed with installation after correcting unsatisfactory conditions.

3.2 INSTALLATION

A. Install overhead coiling doors and operating equipment complete with necessary hardware, anchors, inserts, hangers, and equipment supports; according to manufacturer's written instructions and as specified.

B. Install overhead coiling doors, hoods, controls, and operators at the mounting locations indicated for each door. Motors and all items of maintenance shall be reachable by lift & access panel without removal of ceiling grid.

C. Accessibility: Install overhead coiling doors, switches, and controls along accessible routes in compliance with regulatory requirements for accessibility.

D. Power Operated Doors: Install according to UL 325.

3.3 STARTUP SERVICE

A. Engage a factory authorized service representative to perform startup service.
   1. Perform installation and startup checks according to manufacturer's written instructions.
   2. Test and adjust controls and safety devices. Replace damaged and malfunctioning controls and equipment.
   3. Test door closing when activated by detector or alarm-connected fire-release system. Reset door closing mechanism after successful test. Exterior doors stay secure.

3.4 ADJUSTING

A. Adjust hardware and moving parts to function smoothly so doors operate easily, free of warp, twist, or distortion. Adjust exterior doors and components to be weather resistant.

B. Lubricate bearings and sliding parts recommended by manufacturer.

C. Adjust seals to provide tight fit around entire perimeter.

3.5 DEMONSTRATION

A. Engage a factory authorized service representative to train Owner's maintenance personnel to adjust, operate, and maintain overhead coiling doors.

END OF SECTION 08 33 23

▲4 SECTION 08 33 43 – SMOKE SHIELD FIRE DOORS

PART 1 - GENERAL

1.1 RELATED DOCUMENTS

A. Drawings and general provisions of the Contract, including General and Supplementary Conditions and Division 01 Specification Sections, apply to this Section.

1.2 SUMMARY

A. Section Includes: electric operated, automatic closing, overhead rolling fire doors with SmokeShield® UL leakage rated assembly label.

B. Products That May Be Supplied, But Are Not Installed Under This Section:
   1. Control Station
   2. Annunciator

1.3 SYSTEM DESCRIPTION

A. Performance Requirements:
   1. Provide doors with Underwriters' Laboratories, Inc. label for the fire rating classification, 3 hours.
   2. Provide doors with Underwriters' Laboratories, Inc. label for “Leakage Rated Assembly” or “S” label demonstrating product tested to UL 1784
      a. Comply with NFPA 105 air leakage requirements

1.4 SUBMITTALS

A. Reference Section 01 33 00–Submittal Procedures; submit the following items:
   1. Product Data
   2. Shop Drawings: Include special conditions not detailed in Product Data. Show interface with adjacent work.
   3. Quality Assurance/Control Submittals:
      a. Provide manufacturer ISO 9001:2015 registration.
      b. Provide manufacturer and installer qualifications - see 1.4 below.
      c. Provide manufacturer's installation instructions.

   4. Closeout Submittals:
      a. Operation and Maintenance Manual.
      b. Certificate stating that installed materials comply with this specification.

1.5 QUALITY ASSURANCE

A. Qualifications:
   1. Manufacturer Qualifications: ISO 9001:2015 registered and a minimum of five years experience in producing fire and smoke control units of the type specified.
   2. Installer Qualifications: Manufacturer's approval.

1.6 DELIVERY STORAGE AND HANDLING

A. Reference Section 01 66 00–Product Storage and Handling Requirements.

B. Follow manufacturer's instructions.

1.7 WARRANTY

A. Standard Warranty: Two years from date of shipment against defects in material and workmanship.

B. Maintenance: Submit for owner's consideration and acceptance of a maintenance service agreement for installed products.

PART 2 - PRODUCTS

2.1 MANUFACTURERS

A. Basis of Design: Model ERD 11 as manufactured bv Cornell: 24 Elmwood Avenue, Mountain Top, PA 18707.

B. Other approved manufacturers:
1. Cookson.
2. Clopay Building Products.

2.2 MATERIALS

A. Curtain:
1. Slats: No. 5F
a. Galvanized Steel with Finish as Described Below: No. 5F, minimum 22 gauge, Grade 40 steel, ASTM A 653 galvanized steel zinc coating
a. Stainless Steel: No. 5F, 20 gauge AISI type 304 stainless steel
2. Finish:
a. SpectraShield® Coating System (Color Selected by Architect from manufacturer's full range of colors):
1) ASTM A 653 galvanized base coating treated with dual process rinsing agents in preparation for chemical bonding, gray baked-on base coat and gray baked-on polyester finish coat
2) Zirconium pre-treatment followed by baked-on polyester powder coat, with color as selected by Architect from manufacturer's RAL color range; minimum 2.5 mils (0.065 mm) cured film thickness; ASTM D-3363 pencil hardness: H or better

B. Endlocks:
1. Fabricate interlocking continuous slat sections with high strength steel endlocks secured with two ¼" (6.35 mm) rivets per UL requirements.

C. Bottom Bar:
1. Configuration:
a. Structural Steel Angles: 2 structural steel angles minimum 2"x2"x1/8" (50x50x3.2 mm).

2. Finish:
a. Powder Coat (Color Selected by Architect from manufacturer's full range of colors): Zirconium treatment followed by baked-on polyester powder coat, color as selected by Architect from manufacturer's RAL color range; minimum 2.5 mils (0.065 mm) cured film thickness; ASTM D-3363 pencil hardness: H or better.

D. Guides:
1. Fabrication

a. Minimum 3/16 inch (4.76 mm) structural steel. Top of inner and outer guide angles to be flared outwards to form bellmouth for smooth entry of curtain into guides. Provide removable guide stoppers to prevent over travel of curtain and bottom bar. Top 16 ½" (419.10 mm) of coil side guide angles to be removable for ease of curtain installation and as needed for future curtain service.

2. Finish:
   a. Powder Coat (Color Selected by Architect from manufacturer's full range of colors): Zirconium treatment followed by baked-on polyester powder coat, color as selected by Architect from manufacturer's standard color range minimum 2.5 mils (0.065 mm) cured film thickness; ASTM D-3363 pencil hardness: H or better

E. Counterbalance Shaft Assembly:
1. Barrel: Steel pipe capable of supporting curtain load with maximum deflection of 0.03 inches per foot (2.5 mm per meter) of width
2. Spring Balance: Oil-tempered, heat-treated steel helical torsion spring assembly designed for proper balance of door to ensure that maximum effort to operate will not exceed 25 lbs (110 N). Provide wheel for applying and adjusting spring torque.

F. Brackets: Fabricate from minimum 1/4 inch (6.35 mm) steel plate with permanently lubricated ball or roller bearings at rotating support points to support counterbalance shaft assembly and form end closures
1. Finish:
   a. Powder Coat (Color Selected by Architect from manufacturer's full range of colors): Zirconium treatment followed by baked-on polyester powder coat, color as selected by Architect from manufacturer's standard color range; minimum 2.5 mils (0.065 mm) cured film thickness; ASTM D-3363 pencil hardness: H or better

G. Hood:
1. Minimum 24 gauge galvanized steel with reinforced top and bottom edges. Provide minimum 1/4 inch (6.35 mm) steel intermediate support brackets
   a. SpectraShield® Coating System (Color Selected by Architect):
      1) ASTM A 653 galvanized base coating treated with dual process rinsing agents in preparation for chemical bonding, gray baked-on base coat and gray baked-on polyester finish coat
      2) Zirconium treatment followed by baked-on polyester powder coat, with color as selected by Architect from manufacturer's standard color range; minimum 2.5 mils (0.065 mm) cured film thickness; ASTM D-3363 pencil hardness: H or better.

H. Combination Weather/Smoke Seals:
1. Bottom Bar:
   a. Motor Operated Doors: Combination smoke seal/sensing edge.

2. Guides and Head: Replaceable, UL listed, brush smoke seals sealing against fascia side of curtain

2.4 OPERATION

A. Motor Operation:
1. AlarmGard Advanced Fire Door Motor Operation: UL, cUL listed NEMA 1 enclosure, horsepower as recommended by manufacturer,[115v single phase service. Provide a totally enclosed non ventilated motor, removable without affecting the setting of limit switches; thermal overload protection, planetary gear reduction, adjustable

rotary limit switch mechanism and a transformer with 24v secondary output. All internal electrical components are to be prewired to terminal blocks.

a. Provide a failsafe motor operated door assembly requiring no ancillary or externally mounted release devices, cables, chains, pulleys, reset handles or mechanisms
b. Provide an internal electrical failsafe release device that requires no additional wiring, external cables or mounting locations.
c. Provide an internal solenoid brake mechanism to hold the door at any position during normal door operation.
d. Provide logic for 1 fully monitored safety reversing devices such that the failure of any single monitored device will cause the motor operator to automatically revert to constant pressure to close.
e. Electrically activate door system automatic closure by notification from central alarm system.
f. Provide an automatic alarm closure selectable time delay of zero or ten seconds.
g. Control automatic closure speed with an internal, totally enclosed, variable rate centrifugal governor without the use of electrical pulsation, constant rate viscosity, oscillation type or other exposed governing devices.
h. Maintain automatic closure speed at not more than 9” (229 mm) per second.
i. Enable safety edge function during alarm closing while power is present for 1 cycle. Enable door to rest upon obstruction following this sequence.
j. Electrically reset internal failsafe release device and door operating system upon restoration of electrical power and upon clearing of the alarm signal without requiring human interaction.
k. Provide selectable ability for the door system to automatically self-cycle to the fully open position following automatic reset without requiring human interaction.
l. Provide an integral, non-resettable cycle counter.
m. Ensure that manual resetting of spring tension, release devices, linkages or mechanical dropouts will not be required.
n. Provide minimum #50 roller chain for drive connection from motor drive assembly to the door drive shaft.
o. Install system only with manufacturer supplied or specified fasteners.
p. Notify electrical contractor to mount control station(s) and supply the appropriate disconnect switch, all conduit and wiring per the door system wiring instructions.
q. Drop test and reset door system twice by all means of activation and comply fully with NFPA 80 Section 5.

B. Control Station:
1. Flush mounted: "Open/Close" key switch with Best 7 pin cylinder.
2. Momentary contact to close:
Fail- safe, UL325-2010 Compliant Entrapment Protection for Motor Operation
a. 2-wire, E.L.R. (E.L.R. meets fail-safe/monitored device specifications) electric sensing edge extending full width of door bottom bar. Provide a wireless connection to control circuit.

PART 3 - EXECUTION

3.1 EXAMINATION

A. Examine substrates upon which work will be installed and verify conditions are in accordance with approved shop drawings.

B. Coordinate with responsible entity to perform corrective work on unsatisfactory substrates.

C. Commencement of work by installer is acceptance of substrate.

3.2 INSTALLATION

A. General: Install door and operating equipment with necessary hardware, anchors, inserts, hangers and supports.

B. Comply with NFPA80 and NFPA 105 and follow manufacturer's installation instructions.

3.3 ADJUSTING

A. Following completion of installation, including related work by others, lubricate, test, and adjust doors for ease of operation, free from warp, twist, or distortion.

3.4 FIELD QUALITY CONTROL

A. Site Test: Test doors for normal operation and automatic closing. Coordinate with authorities having jurisdiction to witness test and sign Drop Test Form.

3.5 CLEANING

A. Clean surfaces soiled by work as recommended by manufacturer.

B. Remove surplus materials and debris from the site.

3.6 DEMONSTRATION

A. Demonstrate proper operation, testing and reset procedures to Owner's Representative.

B. Instruct Owner's Representative in maintenance procedures.

END OF SECTION 08 33 43

▲4 SECTION 08 71 00 – DOOR HARDWARE

PART 1 - GENERAL

1.01 RELATED DOCUMENTS

A. Drawings and general provisions of the Contract, including General and Supplementary Conditions and Division 01 Specification Sections, apply to this Section.

1.02 SUMMARY

A. Section includes:

1. Mechanical and electrified door hardware for:

a. Swinging doors.

2. The intent of the hardware specification is to specify the hardware for interior and exterior doors, and to establish a type, continuity, and standard of quality. However, it is the door hardware supplier's responsibility to thoroughly review existing conditions, schedules, specifications, drawings, and other Contract Documents to verify the suitability of the hardware specified.

B. Exclusions: Unless specifically listed in hardware sets, hardware is not specified in this section for:

1. Windows
2. Cabinets (casework), including locks in cabinets
3. Signage
4. Toilet accessories
5. Overhead doors
6. Shower doors
7. Access doors and panels

C. Related Sections:

1. Division 01 Section “Alternates” for alternates affecting this section.
2. Division 07 Section “Joint Sealants” for sealant requirements applicable to threshold installation specified in this section.
3. Division 08 Section “Entrances and Storefront” for hardware requirements applicable to installation of hardware to entrance doors
4. Division 08 Section “Fire Rated Glass and Framing Systems” for requirements for aluminum opening fire rated hardware
5. Division 09 sections for touchup, finishing or refinishing of existing openings modified by this section.
6. Division 26 sections for connections to electrical power system and for low-voltage wiring.
7. Division 28 sections for coordination with other components of electronic access control system.

1.03 REFERENCES

A. UL - Underwriters Laboratories

1. UL 10B - Fire Test of Door Assemblies
2. UL 10C - Positive Pressure Test of Fire Door Assemblies
3. UL 1784 - Air Leakage Tests of Door Assemblies
4. UL 305 - Panic Hardware

B. DHI - Door and Hardware Institute

1. Sequence and Format for the Hardware Schedule
2. Recommended Locations for Builders Hardware
3. Key Systems and Nomenclature

C. ANSI - American National Standards Institute

1. ANSI/BHMA A156.1 - A156.29, and ANSI/BHMA A156.31 - Standards for Hardware and Specialties

D. NFPA – National Fire Protection Association

1. NFPA 70 – National Electrical Code
2. NFPA 80 – Fire Doors and Windows
3. NFPA 105 – Smoke and Draft Control Door Assemblies
4. NFPA 252 – Fire Test of Door Assemblies

E. WHI – Warnock Hersey Incorporated

F. SDI – Steel Door Institute

G. WI – Woodwork Institute

H. AWI – Architectural Woodwork Institute

I. NAAMM – National Association of Architectural Metal Manufacturers

J. Local applicable codes

1.04 SUBMITTALS

A. General:

1. Submit in accordance with Conditions of Contract and Division 01 requirements.
2. Highlight, encircle, or otherwise specifically identify on submittals deviations from Contract Documents, issues of incompatibility or other issues which may detrimentally affect the Work.
3. Prior to forwarding submittal, comply with procedures for verifying existing door and frame compatibility for new hardware, as specified in PART 3, "EXAMINATION" article, herein.

B. Action Submittals:

1. Product Data: Technical product data for each item of door hardware, installation instructions, maintenance of operating parts and finish, and other information necessary to show compliance with requirements.

2. Samples for Verification: If requested by Architect, submit production sample or sample installations of each type of exposed hardware unit in finish indicated, and tagged with full description for coordination with schedule.

    a. Samples will be returned to supplier. Units that are acceptable to Architect may, after final check of operations, be incorporated into Work, within limitations of key coordination requirements.

3. Door Hardware Schedule: Submit schedule with hardware sets in vertical format as illustrated by Sequence of Format for the Hardware Schedule as published by the Door and Hardware Institute. Indicate complete designations of each item required for each door or opening, include:

    a. Door Index; include door number, heading number, and Architects hardware set number.
    b. Opening Lock Function Spreadsheet: List locking device and function for each opening.
    c. Quantity, type, style, function, size, and finish of each hardware item.
    d. Name and manufacturer of each item.
    e. Fastenings and other pertinent information.
    f. Location of each hardware set cross-referenced to indications on Drawings.
    g. Explanation of all abbreviations, symbols, and codes contained in schedule.
    h. Mounting locations for hardware.
    i. Door and frame sizes and materials.
    j. Name and phone number for local manufacturer's representative for each product.
    k. Operational Description of openings with any electrified hardware (locks, exits, electromagnetic locks, electric strikes, automatic operators, door position switches, magnetic holders or closer/holder units, and access control components). Operational description should include operational descriptions for: egress, ingress (access), and fire/smoke alarm connections.
        1) Submittal Sequence: Submit door hardware schedule concurrent with submissions of Product Data, Samples, and Shop Drawings. Coordinate submission of door hardware schedule with scheduling requirements of other work to facilitate fabrication of other work that is critical in Project construction schedule.

4. Key Schedule:

    a. After Keying Conference, provide keying schedule listing levels of keying as well as explanation of key system's function, key symbols used and door numbers controlled.
    b. Provide 3 copies of keying schedule for review prepared and detailed in accordance with referenced DHI publication. Include schematic keying diagram and index each key to unique door designations.
    c. Index keying schedule by door number, keyset, hardware heading number, cross keying instructions, and special key stamping instructions.
    d. Provide one complete bitting list of key cuts and one key system schematic illustrating system usage and expansion.
        1) Forward bitting list, key cuts and key system schematic directly to Owner, by means as directed by Owner.

    e. Prepare key schedule by or under supervision of supplier, detailing Owner’s final keying instructions for locks.

5. Templates: After final approval of hardware schedule, provide templates for doors, frames and other work specified to be factory or shop prepared for door hardware installation.

C. Informational Submittals:

1. Qualification Data: For Supplier, Installer and Architectural Hardware Consultant.
2. Product data for electrified door hardware:

    a. Certify that door hardware approved for use on types and sizes of labeled fire-rated doors complies with listed fire-rated door assemblies.

3. Certificates of Compliance:

    a. UL listings for fire-rated hardware and installation instructions if requested by Architect or Authority Having Jurisdiction.
    b. Installer Training Meeting Certification: Letter of compliance, signed by Contractor, attesting to completion of installer training meeting specified in “QUALITY ASSURANCE” article, herein.
    c. Electrified Hardware Coordination Conference Certification: Letter of compliance, signed by Contractor, attesting to completion of electrified hardware coordination conference, specified in “QUALITY ASSURANCE” article, herein.

4. Warranty: Special warranty specified in this Section.

D. Closeout Submittals:

1. Operations and Maintenance Data: Provide in accordance with Division 01 and include:

    a. Complete information on care, maintenance, and adjustment; data on repair and replacement parts, and information on preservation of finishes.
    b. Catalog pages for each product.
    c. Factory order acknowledgement numbers (for warranty and service)
    d. Name, address, and phone number of local representative for each manufacturer.
    e. Parts list for each product.
    f. Final approved hardware schedule, edited to reflect conditions as-installed.
    g. Final keying schedule
    h. Copies of floor plans with keying nomenclature
    i. As-installed wiring diagrams for each opening connected to power, both low voltage and 110 volts.

j. Copy of warranties including appropriate reference numbers for manufacturers to identify project.

1.05 QUALITY ASSURANCE

A. If discrepancy between drawings and scheduled material in this section, bid the more expensive of the two choices, note the discrepancy in the submittal and request direction from Architect for resolution.

B. Supplier Qualifications and Responsibilities: Recognized architectural hardware supplier with record of successful in-service performance for supplying door hardware similar in quantity, type, and quality to that indicated for this Project and that provides certified Architectural Hardware Consultant (AHC) available to Owner, Architect, and Contractor, at reasonable times during the Work for consultation.

1. Warehousing Facilities: In Project's vicinity.
2. Scheduling Responsibility: Preparation of door hardware and keying schedules.
3. Coordination Responsibility: Assist in coordinating installation of electronic security hardware with Architect and electrical engineers and provide installation and technical data to Architect and other related subcontractors.

C. Architectural Hardware Consultant Qualifications: Person who is experienced in providing consulting services for door hardware installations that are comparable in material, design, and extent to that indicated for this Project and meets these requirements:

1. For door hardware, DHI-certified, Architectural Hardware Consultant (AHC).
2. Can provide installation and technical data to Architect and other related subcontractors.
3. Can inspect and verify components are in working order upon completion of installation.
4. Capable of coordinating installation of electrified hardware with Architect and electrical engineers.

D. Single Source Responsibility: Obtain each type of door hardware from single manufacturer.

1. Bid and submit manufacturer’s updated/improved item if scheduled item is discontinued.

E. Fire-Rated Door Openings: Provide door hardware for fire-rated openings that complies with NFPA 80 and requirements of authorities having jurisdiction. Provide only items of door hardware that are listed products tested by Underwriters Laboratories, Intertek Testing Services, or other testing and inspecting organizations acceptable to authorities having jurisdiction for use on types and sizes of doors indicated, based on testing at positive pressure and according to NFPA 252 or UL 10C and in compliance with requirements of fire-rated door and door frame labels.

F. Electrified Door Hardware: Listed and labeled as defined in NFPA 70, Article 100, by testing agency acceptable to authorities having jurisdiction.

G. Accessibility Requirements: For door hardware on doors in an accessible route, comply with governing accessibility regulations cited in “REFERENCES” article, herein.

H. Keying Conference

1. Incorporate keying conference decisions into final keying schedule after reviewing door hardware keying system including:

a. Function of building, flow of traffic, purpose of each area, degree of security required, and plans for future expansion.
b. Preliminary key system schematic diagram.
c. Requirements for key control system.
d. Requirements for access control.
e. Address for delivery of keys.

I. Pre-installation Conference

1. Review and finalize construction schedule and verify availability of materials, Installer's personnel, equipment, and facilities needed to make progress and avoid delays.
2. Inspect and discuss preparatory work performed by other trades.
3. Inspect and discuss electrical roughing-in for electrified door hardware.
4. Review sequence of operation for each type of electrified door hardware.
5. Review required testing, inspecting, and certifying procedures.

J. Coordination Conferences:

1. Installation Coordination Conference: Prior to hardware installation, schedule and hold meeting to review questions or concerns related to proper installation and adjustment of door hardware.
2. Electrified Hardware Coordination Conference: Prior to ordering electrified hardware, schedule and hold meeting to coordinate door hardware with security, electrical, doors and frames, and other related suppliers.

K. Texas Department of Insurance Windstorm Requirements: This project falls under the Texas Department of Insurance Windstorm Inspection Program for Inland II. All products, materials and installation systems shall be evaluated and approved by the Texas Department of Insurance, Windstorm Inspection Program, and listed in the TDI Product Evaluation Index or approved by the Windstorm Engineer as outlined below. Products, materials and installation systems not presently approved by the Texas Department of Insurance, Windstorm Inspection Program, may be considered for this project however, they must be properly submitted through the Architect for review by the Windstorm Engineer. This submittal shall be a part of the initial submittal process outlines in Section 013400 and requirements for this portion are detailed within the Texas Department of Insurance Windstorm Inspection website at the following location: www.tdi.state.tx.us/wind/submittal_requi.html. Products, materials and installation systems not approved by the Windstorm Engineer shall NOT be installed or utilized on this project.

1.06 DELIVERY, STORAGE, AND HANDLING

A. Inventory door hardware on receipt and provide secure lock-up for hardware delivered to Project site.

B. Tag each item or package separately with identification coordinated with final door hardware schedule, and include installation instructions, templates, and necessary fasteners with each item or package.

1. Deliver each article of hardware in manufacturer’s original packaging.

C. Project Conditions:

1. Maintain manufacturer-recommended environmental conditions throughout storage and installation periods.

2. Provide secure lock-up for door hardware delivered to Project. Control handling and installation of hardware items so that completion of Work will not be delayed by hardware losses both before and after installation.

D. Protection and Damage:

1. Promptly replace products damaged during shipping.
2. Handle hardware in manner to avoid damage, marring, or scratching. Correct, replace or repair products damaged during Work.
3. Protect products against malfunction due to paint, solvent, cleanser, or any chemical agent.

E. Deliver keys and permanent cores to Owner by registered mail or overnight package service.

1.07 COORDINATION

A. Coordinate layout and installation of floor-recessed door hardware with floor construction. Cast anchoring inserts into concrete.

B. Installation Templates: Distribute for doors, frames, and other work specified to be factory or shop prepared. Check Shop Drawings of other work to confirm that adequate provisions are made for locating and installing door hardware to comply with indicated requirements.

C. Security: Coordinate installation of door hardware, keying, and access control with Owner's security consultant.

D. Electrical System Roughing-In: Coordinate layout and installation of electrified door hardware with connections to power supplies and building safety and security systems.

E. Existing Openings: Where existing doors, frames and/or hardware are to remain, field verify existing functions, conditions and preparations and coordinate to suit opening conditions and to provide proper door operation. If conflict between the specified/scheduled hardware and existing conditions, submit request for direction from Architect. Include date of jobsite visit in the submittal.

1.08 WARRANTY

A. Warranty: Manufacturer's standard form in which manufacturer agrees to repair or replace components of door hardware that fail in materials or workmanship within specified warranty period.

1. Warranty Period: Beginning from date of Substantial Completion, for durations indicated.

a. Closers:
1) Mechanical: 30 years

b. Exit Devices:
1) Mechanical: 3 years.
2) Electrified: 1 year.

c. Locksets:
1) Mechanical: 10 years.
2) Electrified: 1 year.

d. Key Blanks: Lifetime

2. Warranty does not cover damage or faulty operation due to improper installation, improper use or abuse.

1.09 MAINTENANCE

A. Maintenance Tools: Furnish complete set of special tools required for maintenance and adjustment of hardware, including changing of cylinders.

PART 2 - PRODUCTS

2.01 MANUFACTURERS

A. The Owner requires use of certain products for their unique characteristics and project suitability to insure continuity of existing and future performance and maintenance standards. After investigating available product offerings, the Awarding Authority has elected to prepare proprietary specifications. These products are specified with the notation: “No Substitute.”

1. Where “No Substitute” is noted, substitution requests for other products will not be considered.

B. Approval of manufacturers and/or products other than those listed as “Scheduled Manufacturer” shall be in accordance with substitution procedure in division 01 25 00. In the individual article for the product category items, shall be in accordance with the QUALITY ASSURANCE article, herein.

C. Approval of products is contingent upon those products providing all functions and features and meeting all requirements of scheduled manufacturer’s product.

D. Where specified hardware is not adaptable to finished shape or size of members requiring hardware, furnish suitable types having same operation and quality as type specified, subject to Architect's approval in accordance with substitution procedure in division 01 25 00.

2.02 MATERIALS

A. Fasteners

1. Provide hardware manufactured to conform to published templates, generally prepared for machine screw installation.
2. Furnish screws for installation with each hardware item. Finish exposed (exposed under any condition) screws to match hardware finish, or, if exposed in surfaces of other work, to match finish of this other work including prepared for paint surfaces to receive painted finish.
3. Provide concealed fasteners for hardware units exposed when door is closed except when no standard units of type specified are available with concealed fasteners. Do not use thru-bolts for installation where bolt head or nut on opposite face is exposed in other work unless thru-bolts are required to fasten hardware securely. Review door specification and advise Architect if thru-bolts are required.
4. Install hardware with fasteners provided by hardware manufacturer.

B. Provide screws, bolts, expansion shields, drop plates and other devices necessary for hardware installation.

1. Where fasteners are exposed to view: Finish to match adjacent door hardware material.

C. Cable and Connectors: Hardwired Electronic Access Control Lockset and Exit Device Trim:

1. Data: 24AWG, 4 conductor shielded, Belden 9843, 9841 or comparable.
2. DC Power: 18 AWG, 2 conductor, Belden 8760 or comparable.
3. Provide type of data and DC power cabling required by access control device manufacturer for this installation.
4. Where scheduled in the hardware sets, provide each item of electrified hardware and wire harnesses with sufficient number and wire gauge with standardized Molex plug connectors to accommodate electric function of specified hardware. Provide Molex connectors that plug directly into connectors from harnesses, electric locking and power transfer devices. Provide through-door wire harness for each electrified locking device installed in a door and wire harness for each electrified hinge, electrified continuous hinge, electrified pivot, and electric power transfer for connection to power supplies.

2.03 HINGES

A. Manufacturers and Products:

1. Scheduled Manufacturer and Product: Ives 5BB series.

B. Requirements:

1. Provide hinges conforming to ANSI/BHMA A156.1.
2. 1-3/4 inch (44 mm) thick doors, up to and including 36 inches (914 mm) wide:

a. Exterior: Standard weight, bronze or stainless steel, 4-1/2 inches (114 mm) high
b. Interior: Standard weight, steel, 4-1/2 inches (114 mm) high

3. 1-3/4 inch (44 mm) thick doors over 36 inches (914 mm) wide:

a. Exterior: Heavy weight, bronze/stainless steel, 5 inches (127 mm) high
b. Interior: Heavy weight, steel, 5 inches (127 mm) high

4. 2 inches or thicker doors:

a. Exterior: Heavy weight, bronze or stainless steel, 5 inches (127 mm) high
b. Interior: Heavy weight, steel, 5 inches (127 mm) high

5. Provide three hinges per door leaf for doors 90 inches (2286 mm) or less in height, and one additional hinge for each 30 inches (762 mm) of additional door height.
6. Where new hinges are specified for existing doors or existing frames, provide new hinges of identical size to hinge preparation present in existing door or existing frame.
7. Hinge Pins: Except as otherwise indicated, provide hinge pins as follows:

a. Steel Hinges: Steel pins
b. Non-Ferrous Hinges: Stainless steel pins
c. Out-Swinging Exterior Doors: Non-removable pins
d. Out-Swinging Interior Lockable Doors: Non-removable pins
e. Interior Non-lockable Doors: Non-rising pins

8. Width of hinges: 4-1/2 inches (114 mm) at 1-3/4 inch (44 mm) thick doors, and 5 inches (127 mm) at 2 inches (51 mm) or thicker doors. Adjust hinge width as required for door, frame, and wall conditions to allow proper degree of opening.

2.04 CONTINUOUS HINGES

A. Aluminum Geared

1. Manufacturers:

a. Scheduled Manufacturer: Ives.

2. Requirements:

a. Provide aluminum geared continuous hinges conforming to ANSI/BHMA A156.26, Grade 1.
b. Provide aluminum geared continuous hinges, where specified in the hardware sets, fabricated from 6063-T6 aluminum.
c. Provide split nylon bearings at each hinge knuckle for quiet, smooth, self-lubricating operation.
d. Provide hinges capable of supporting door weights up to 450 pounds, and successfully tested for 1,500,000 cycles.
e. On fire-rated doors, provide aluminum geared continuous hinges that are classified for use on rated doors by testing agency acceptable to authority having jurisdiction.
f. Provide aluminum geared continuous hinges with electrified option scheduled in the hardware sets. Provide with sufficient number and wire gage to accommodate electric function of specified hardware.
g. Install hinges with fasteners supplied by manufacturer.
h. Provide hinges 1 inch (25 mm) shorter in length than nominal height of door, unless otherwise noted or door details require shorter length and with symmetrical hole pattern.

2.05 ELECTRIC POWER TRANSFER

A. Manufacturers:

a. Scheduled Manufacturer: Von Duprin EPT-10.

B. Provide power transfer with electrified options as scheduled in the hardware sets. Provide with number and gage of wires sufficient to accommodate electric function of specified hardware.

C. Locate electric power transfer per manufacturer’s template and UL requirements, unless interference with operation of door or other hardware items.

2.06 FLUSH BOLTS

A. Manufacturers:

1. Scheduled Manufacturer: Ives.

B. Requirements:

1. Provide automatic, constant latching, and manual flush bolts with forged bronze or stainless-steel face plates, extruded brass levers, and with wrought brass guides and strikes. Provide 12 inch (305 mm) steel or brass rods at doors up to 90 inches (2286 mm) in height. For doors over 90 inches (2286 mm) in height increase top rods by 6 inches (152 mm) for each additional 6 inches (152 mm) of door height. Provide dust-proof strikes at each bottom flush bolt.

2.07 COORDINATORS

A. Manufacturers:

1. Scheduled Manufacturer: Ives.

B. Requirements:

1. Where pairs of doors are equipped with automatic flush bolts, an astragal, or other hardware that requires synchronized closing of the doors, provide bar-type coordinating device, surface applied to underside of stop at frame head.
2. Provide filler bar of correct length for unit to span entire width of opening, and appropriate brackets for parallel arm door closers, surface vertical rod exit device strikes or other stop mounted hardware. Factory-prepared coordinators for vertical rod devices as specified.

2.08 MORTISE LOCKS

A. Manufacturers and Products:

1. Scheduled Manufacturer and Product: Falcon MA series.
2. Acceptable Substitutions: None.

B. Requirements:

1. Provide mortise locks conforming to ANSI/BHMA A156.13 Series 1000, Grade 1, and UL Listed for 3-hour fire doors.
2. Provide locks manufactured from heavy gauge steel, containing components of steel with a zinc dichromate plating for corrosion resistance.
3. Provide lock case that is multi-function and field reversible for handing without opening case. Cylinders: Refer to “KEYING” article, herein.
4. Provide locks with standard 2-3/4 inches (70 mm) backset with full 3/4 inch (19 mm) throw stainless steel mechanical anti-friction latchbolt. Provide deadbolt with full 1-inch (25 mm) throw, constructed of stainless steel.
5. Provide standard ASA strikes unless extended lip strikes are necessary to protect trim.
6. Provide electrified options as scheduled in the hardware sets. Where scheduled, provide a request to exit (RX) switch that is actuated with rotation of inside lever.
7. Lever Trim: Solid brass, bronze, or stainless steel, cast or forged in design specified, with wrought roses and external lever spring cages. Provide thru-bolted levers with 2-piece spindles.

    a. Lever Design: Dane-Gala (DG)

2.09 CYLINDRICAL LOCKS

A. Manufacturers and Products:

1. Scheduled Manufacturer and Product: Schlage ND Series
2. Acceptable Substitutions: None.

B. Requirements:

1. Provide cylindrical locks conforming to ANSI/BHMA A156.2 Series 4000, Grade 1, and UL Listed for 3-hour fire doors.
2. Cylinders: Refer to "KEYING" article, herein.
3. Provide locks with standard 2-3/4 inches (70 mm) backset, unless noted otherwise, with 1/2-inch latch throw. Provide proper latch throw for UL listing at pairs.
4. Provide locksets with separate anti-rotation thru-bolts, and no exposed screws.
5. Provide independently operating levers with two external return spring cassettes mounted under roses to prevent lever sag.
6. Provide standard ASA strikes unless extended lip strikes are necessary to protect trim.
7. Provide electrified options as scheduled in the hardware sets.
8. Lever Trim: Solid cast levers without plastic inserts and wrought roses on both sides.

    a. Lever Design: Rhodes (RHO)

2.10 EXIT DEVICES

A. Manufacturers and Products:

1. Scheduled Manufacturer and Product: Von Duprin 99 series
2. Acceptable Substitutions: None.

B. Requirements:

1. Provide exit devices tested to ANSI/BHMA A156.3 Grade 1 and UL listed for Panic Exit or Fire Exit Hardware.
2. Cylinders: Refer to "KEYING" article, herein.
3. Provide touchpad type exit devices, fabricated of brass, bronze, stainless steel, or aluminum, plated to standard architectural finishes to match balance of door hardware.
4. Touchpad must extend a minimum of one half of door width. No plastic inserts are allowed in touchpads.
5. Provide exit devices with deadlatching feature for security and for future addition of alarm kits and/or other electrified requirements.
6. Provide flush end caps for exit devices.
7. Exterior Trim: Stainless steel vandal resistant trim thru-bolted to device with plastisol coated grip. Night latch function retracts latch with use of key
8. Provide exit devices with manufacturer's approved strikes.
9. Provide exit devices cut to door width and height. Install exit devices at height recommended by exit device manufacturer, allowable by governing building codes, and approved by Architect.
10. Mount mechanism case flush on face of doors or provide spacers to fill gaps behind devices. Where glass trim or molding projects off face of door, provide glass bead kits.
11. Provide cylindrical dogging as specified at non fire-rated openings.
12. Supply rim devices with key removable mullion at all entrances. Surface vertical rods may only be used on cross corridor doors being held open by magnetic hold opens.
13. Concealed vertical rod exit devices WILL NOT be accepted unless required by code.
14. Removable Mullions: 2 inches (51 mm) x 3 inches (76 mm) steel tube. Where scheduled as keyed removable mullion, provide type that can be removed by use of a keyed cylinder, which is self-locking when re-installed.
15. Provide factory drilled weep holes for exit devices used in full exterior application, highly corrosive areas, and where noted in hardware sets.

16. Provide electrified options as scheduled.
17. Provide delayed egress devices, where scheduled, that are UL 294 listed, meet National Fire Protection Association (NFPA) and International Building Code (IBC) governing delayed egress, and/or other local and national fire codes acceptable to authority having jurisdiction as required.

    a. Provide non-handed and field sizable device with 3/4 (19mm) throw deadlocking latch bolt. Device incorporates an internal RX switch that detects attempt to exit from applying less than 15lbs to the push pad, which causes this switch to start an irreversible alarm cycle. Key switch in device is capable of arming, disarming, or resetting the device; and indicator lamp determines status of the device
    b. Provide devices capable of standard 15 second release delay and indefinite release delay as required by code, when tied into fire alarm system will release immediately when an alarm condition exists.
    c. Provide devices with all control inputs – door position input, external inhibit input, fire alarm input; auxiliary locking; nuisance alarm and internal horn; and, remote signaling output self-contained in the device assembly.

18. Top latch mounting: double or single tab mount for steel doors, face mount for aluminum doors eliminating requirement of tabs, and double tab mount for wood doors.
19. Provide exit devices with optional trim designs to match other lever and pull designs used on the project.

    a. Tactile Warning (Knurling): Where required by authority having jurisdiction. Provide on levers on exterior (secure side) of doors serving rooms considered to be hazardous.

2.11 CYLINDERS

A. Manufacturers:

1. Scheduled Manufacturer: Falcon SFIC
2. Acceptable Substitutions: None.

B. Requirements:

1. Provide cylinders/cores, compliant with ANSI/BHMA A156.5; latest revision; cylinder face finished to match lockset, manufacturer's series as indicated. Refer to "KEYING" article, herein.
2. Provide cylinders in the below-listed configuration(s), distributed throughout the Project as indicated.

    a. Conventional Open: Match Owner's Existing SFIC keyway.

3. Replaceable Construction Cores.

    a. Provide temporary construction cores replaceable by permanent cores, furnished in accordance with the following requirements.
        1) 3 construction control keys
        2) 12 construction change (day) keys.

    b. Owner or Owner's Representative will replace temporary construction cores with permanent cores.

2.12 KEYING

A. Provide a factory registered keying system, complying with guidelines in ANSI/BHMA A156.28, incorporating decisions made at keying conference.

B. Provide cylinders/cores keyed into Owner's existing factory registered keying system.

C. Comply with guidelines in ANSI/BHMA A156.28, incorporating decisions made at keying conference.

D. CONTRACTOR will install permanent cylinders/cores.

E. Locksets and cores: keyed at factory of lock manufacturer where permanent records are maintained.

F. Furnish 1 additional key blank for each lock on the project. Provide for a minimum of 100 blanks on each new construction project.

G. Provide 20 uncombinated cores per project matching the finish and keyway of the project.

H. Furnish temporary construction cores at all Construction phase trims to receive future Access Control Trims and Cylinders specified for Card Key Access Doors. Construction phase trims remain OWNERs property.

I. Requirements:

1. Provide permanent cylinders/cores keyed by the manufacturer according to the following key system.

    a. Master Keying system as directed by the Owner.

2. Forward bitting list and keys separately from cylinders, by means as directed by Owner. Failure to comply with forwarding requirements will be cause for replacement of cylinders/cores involved at no additional cost to Owner.
3. Provide keys with the following features:

    a. Material: Nickel silver; minimum thickness of .107-inch (2.3mm)
    b. Patent Protection: Keys and blanks protected by one or more utility patent(s)

4. Identification:

    a. Mark permanent cylinders/cores and keys with applicable blind code per DHI publication "Keying Systems and Nomenclature" for identification. Do not provide blind code marks with actual key cuts.
    b. Identification stamping provisions must be approved by the Architect and Owner.
    c. Stamp cylinders/cores and keys with Owner's unique key system facility code as established by the manufacturer; key symbol and embossed or stamped with "DO NOT DUPLICATE" along with the "PATENTED" or patent number to enforce the patent protection.
    d. Failure to comply with stamping requirements will be cause for replacement of keys involved at no additional cost to Owner.
    e. Forward permanent cylinders/cores to Owner, separately from keys, by means as directed by Owner.

5. Quantity: Furnish in the following quantities.

    a. Change (Day) Keys: 3 per cylinder/core.

b. Permanent Control Keys: 3.
c. Master Keys: 6

2.13 KEY CONTROL SYSTEM

A. Requirements:

1. The local hardware supplier will provide a printed index listing as follow:

   a. Key tag # x room graphics x key change # x key set symbol x foot note remarks.

2. Furnish deluxe 2 tag wall mounted key cabinet complete for each new facility have a capacity to match the quantity of door locks for the project plus 150% (one hundred and fifty percent) expansion.
3. The general CONTRACTOR shall install the key cabinet(s) with spare keys as director by the OWNER.

2.14 DOOR CLOSERS

A. Manufacturers and Products:

1. Scheduled Manufacturer and Product: LCN 4040XP series (Exterior & High Traffic Locations).
2. Acceptable Substitutions: None.

B. Requirements:

1. Provide door closers conforming to ANSI/BHMA A156.4 Grade 1 requirements by BHMA certified independent testing laboratory. ISO 9000 certify closers. Stamp units with date of manufacture code.
2. Provide door closers with fully hydraulic, full rack and pinion action with high strength cast iron cylinder, and full complement bearings at shaft.
3. Cylinder Body: 1-1/2 inch (38 mm) diameter with 3/4 inch (19 mm) diameter double heat-treated pinion journal.
4. Hydraulic Fluid: Fireproof, passing requirements of UL10C, and requiring no seasonal closer adjustment for temperatures ranging from 120 degrees F to -30 degrees F.
5. Spring Power: Continuously adjustable over full range of closer sizes, and providing reduced opening force as required by accessibility codes and standards.
6. Hydraulic Regulation: By tamper-proof, non-critical valves, with separate adjustment for latch speed, general speed, and backcheck.
7. Provide closers with solid forged steel main arms and factory assembled heavy-duty forged forearms for parallel arm closers.
8. Pressure Relief Valve (PRV) Technology: Not permitted.
9. Finish for Closer Cylinders, Arms, Adapter Plates, and Metal Covers: Powder coating finish which has been certified to exceed 100 hours salt spray testing as described in ANSI Standard A156.4 and ASTM B117, or has special rust inhibitor (SRI).
10. Provide special templates, drop plates, mounting brackets, or adapters for arms as required for details, overhead stops, and other door hardware items interfering with closer mounting.

2.15 DOOR CLOSERS

A. Manufacturers and Products:

1. Scheduled Manufacturer and Product: LCN 1460 series (Interior Locations)
2. Acceptable Substitutions: None.

B. Requirements:

1. Provide door closers conforming to ANSI/BHMA A156.4 Grade 1 requirements by BHMA certified independent testing laboratory.
2. Provide door closers with fully hydraulic, full rack and pinion action cast iron cylinder.
3. Closer Body: 1-1/4-inch (32 mm) diameter, with 5/8-inch (16 mm) diameter heat-treated pinion journal.
4. Hydraulic Fluid: Fireproof, passing requirements of UL10C, and requiring no seasonal closer adjustment for temperatures ranging from 120 degrees F to -30 degrees F.
5. Spring Power: Continuously adjustable over full range of closer sizes, and providing reduced opening force as required by accessibility codes and standards.
6. Hydraulic Regulation: By tamper-proof, non-critical valves, with separate adjustment for latch speed, general speed, and backcheck.
7. Pressure Relief Valve (PRV) Technology: Not permitted.
8. Provide special templates, drop plates, mounting brackets, or adapters for arms as required for details, overhead stops, and other door hardware items interfering with closer mounting.

2.16 DOOR TRIM

A. Manufacturers:

1. Scheduled Manufacturer: Ives.

B. Requirements:

1. Provide push plates 4 inches (102 mm) wide by 16 inches (406 mm) high by 0.050 inch (1 mm) thick and beveled 4 edges. Where width of door stile prevents use of 4 inches (102 mm) wide plate, adjust width to fit.
2. Provide push bars of solid bar stock, diameter and length as scheduled. Provide push bars of sufficient length to span from center to center of each stile. Where required, mount back to back with pull.
3. Provide offset pulls of solid bar stock, diameter and length as scheduled. Where required, mount back to back with push bar.
4. Provide flush pulls as scheduled. Where required, provide back-to-back mounted model.
5. Provide pulls of solid bar stock, diameter and length as scheduled. Where required, mount back to back with push bar.
6. Provide pull plates 4 inches (102 mm) wide by 16 inches (406 mm) high by 0.050 inch (1 mm) thick, beveled 4 edges, and prepped for pull. Where width of door stile prevents use of 4 inches (102 mm) wide plate, adjust width to fit.
7. Provide wire pulls of solid bar stock, diameter and length as scheduled.
8. Provide decorative pulls as scheduled. Where required, mount back to back with pull.

2.17 PROTECTION PLATES

A. Manufacturers:

1. Scheduled Manufacturer: Ives.

B. Requirements:

1. Provide kick plates, mop plates, and armor plates minimum of 0.050 inch (1 mm) thick, beveled four edges as scheduled. Furnish with sheet metal or wood screws, finished to match plates.
2. Sizes of plates:

a. Kick Plates: 10 inches (254 mm) high by 2 inches (51 mm) less width of door on single doors, 1 inch (25 mm) less width of door on pairs
b. Mop Plates: 4 inches (102 mm) high by 2 inches (51 mm) less width of door on single doors, 1 inch (25 mm) less width of door on pairs
c. Armor Plates: 36 inches (914 mm) high by 2 inches (51 mm) less width of door on single doors, 1 inch (25 mm) less width of door on pairs.

2.18 DOOR STOPS AND HOLDERS

A. Manufacturers:

1. Scheduled Manufacturer: Ives.

B. Provide door stops at each door leaf:

1. Provide wall stops wherever possible. Provide convex type where mortise type locks are used and concave type where cylindrical type locks are used.
2. Where a wall stop cannot be used, provide universal floor stops for low or high rise options.
3. Where wall or floor stop cannot be used, provide medium duty surface mounted overhead stop.

2.19 OVERHEAD STOPS AND OVERHEAD STOP/HOLDERS

A. Manufacturers:

1. Scheduled Manufacturers: Glynn-Johnson.

B. Requirements:

1. Provide heavy duty concealed mounted overhead stop or holder as specified for exterior and interior vestibule single acting doors.
2. Provide heavy duty concealed mounted overhead stop or holder as specified for double acting doors.
3. Provide heavy or medium duty and concealed or surface mounted overhead stop or holder for interior doors as specified. Provide medium duty surface mounted overhead stop for interior doors and at any door that swings more than 140 degrees before striking wall, open against equipment, casework, sidelights, and where conditions do not allow wall stop or floor stop presents tripping hazard.
4. Where overhead holders are specified provide friction type at doors without closer and positive type at doors with closer.

2.20 THRESHOLDS, SEALS, DOOR SWEEPS, AUTOMATIC DOOR BOTTOMS, AND GASKETING

A. Manufacturers:

1. Scheduled Manufacturer: Zero International.

B. Requirements:

1. Provide thresholds, weather-stripping (including door sweeps, seals, and astragals) and gasketing systems (including smoke, sound, and light) as specified and per architectural details. Match finish of other items.
2. Smoke- and Draft-Control Door Assemblies: Where smoke- and draft-control door assemblies are required, provide door hardware that meets requirements of assemblies tested according to UL 1784 and installed in compliance with NFPA 105.
3. Size of thresholds:

    a. Saddle Thresholds: 1/2 inch (13 mm) high by jamb width by door width
    b. Bumper Seal Thresholds: 1/2 inch (13 mm) high by 5 inches (127 mm) wide by door width

4. Provide door sweeps, seals, astragals, and auto door bottoms only of type where resilient or flexible seal strip is easily replaceable and readily available.

2.21 SILENCERS

A. Manufacturers:

1. Scheduled Manufacturer: Ives.

B. Requirements:

1. Provide "push-in" type silencers for hollow metal or wood frames.
2. Provide one silencer per 30 inches (762 mm) of height on each single frame, and two for each pair frame.
3. Omit where gasketing is specified.

2.22 FINISHES

A. Finish: BHMA 626/652 (US26D); except:

1. Hinges at Exterior Doors: BHMA 630 (US32D)
2. Continuous Hinges: BHMA 630 (US32D)
3. Continuous Hinges: BHMA 628 (US28)
4. Push Plates, Pulls, and Push Bars: BHMA 630 (US32D)
5. Protection Plates: BHMA 630 (US32D)
6. Overhead Stops and Holders: BHMA 630 (US32D)
7. Door Closers: Powder Coat to Match
8. Wall Stops: BHMA 630 (US32D)
9. Latch Protectors: BHMA 630 (US32D)
10. Weatherstripping: Clear Anodized Aluminum
11. Thresholds: Mill Finish Aluminum

PART 3 - EXECUTION

3.01 EXAMINATION

A. Prior to installation of hardware, examine doors and frames, with Installer present, for compliance with requirements for installation tolerances, labeled fire-rated door assembly construction, wall and floor construction, and other conditions affecting performance.

B. Examine roughing-in for electrical power systems to verify actual locations of wiring connections before electrified door hardware installation.

C. Proceed with installation only after unsatisfactory conditions have been corrected.

3.02 INSTALLATION

A. Mount door hardware units at heights to comply with the following, unless otherwise indicated or required to comply with governing regulations.

1. Standard Steel Doors and Frames: ANSI/SDI A250.8.
2. Custom Steel Doors and Frames: HMMA 831.
3. Wood Doors: DHI WDHS.3, "Recommended Locations for Architectural Hardware for Wood Flush Doors."

B. Install each hardware item in compliance with manufacturer’s instructions and recommendations, using only fasteners provided by manufacturer.

C. Do not install surface mounted items until finishes have been completed on substrate. Protect all installed hardware during painting.

D. Set units level, plumb and true to line and location. Adjust and reinforce attachment substrate as necessary for proper installation and operation.

E. Drill and countersink units that are not factory prepared for anchorage fasteners. Space fasteners and anchors according to industry standards.

F. Install operating parts so they move freely and smoothly without binding, sticking, or excessive clearance.

G. Hinges: Install types and in quantities indicated in door hardware schedule but not fewer than quantity recommended by manufacturer for application indicated or one hinge for every 30 inches (750 mm) of door height, whichever is more stringent, unless other equivalent means of support for door, such as spring hinges or pivots, are provided.

H. Lock Cylinders: Install construction cores to secure building and areas during construction period.

1. Replace construction cores with permanent cores as indicated in keying section.

I. Wiring: Coordinate with Division 26, ELECTRICAL sections for:

1. Conduit, junction boxes and wire pulls.
2. Connections to and from power supplies to electrified hardware.
3. Connections to fire/smoke alarm system and smoke evacuation system.

4. Connection of wire to door position switches and wire runs to central room or area, as directed by Architect.
5. Testing and labeling wires with Architect's opening number.

J. Key Control System: Tag keys and place them on markers and hooks in key control system cabinet, as determined by final keying schedule.

K. Door Closers: Mount closers on room side of corridor doors, inside of exterior doors, and stair side of stairway doors from corridors. Mount closers so they are not visible in corridors, lobbies and other public spaces unless approved by Architect.

L. Closer/Holders: Mount closer/holders on room side of corridor doors, inside of exterior doors, and stair side of stairway doors.

M. Power Supplies: Locate power supplies as indicated or, if not indicated, above accessible ceilings or in equipment room, or alternate location as directed by Architect.

N. Thresholds: Set thresholds in full bed of sealant complying with requirements specified in Division 07 Section "Joint Sealants."

O. Stops: Provide floor stops for doors unless wall or other type stops are indicated in door hardware schedule. Do not mount floor stops where they may impede traffic or present tripping hazard.

P. Perimeter Gasketing: Apply to head and jamb, forming seal between door and frame.

Q. Meeting Stile Gasketing: Fasten to meeting stiles, forming seal when doors are closed.

R. Door Bottoms: Apply to bottom of door, forming seal with threshold when door is closed.

3.03 FIELD QUALITY CONTROL

A. Engage qualified manufacturer trained representative to perform inspections and to prepare inspection reports.

1. Representative will inspect door hardware and state in each report whether installed work complies with or deviates from requirements, including whether door hardware is properly installed and adjusted.

3.04 ADJUSTING

A. Initial Adjustment: Adjust and check each operating item of door hardware and each door to ensure proper operation or function of every unit. Replace units that cannot be adjusted to operate as intended. Adjust door control devices to compensate for final operation of heating and ventilating equipment and to comply with referenced accessibility requirements.

1. Door Closers: Adjust sweep period to comply with accessibility requirements and requirements of authorities having jurisdiction.

B. Occupancy Adjustment: Approximately three to six months after date of Substantial Completion, Installer's Architectural Hardware Consultant must examine and readjust each item of door hardware, including adjusting operating forces, as necessary to ensure function of doors and door hardware.

3.05 CLEANING AND PROTECTION

A. Clean adjacent surfaces soiled by door hardware installation.

B. Clean operating items as necessary to restore proper function and finish.

C. Provide final protection and maintain conditions that ensure door hardware is without damage or deterioration at time of Substantial Completion.

3.06 DOOR HARDWARE SCHEDULE

A. Hardware items are referenced in the following hardware. Refer to the above-specifications for special features, options, cylinders/keying, and other requirements.

B. Hardware Sets:

Hardware Group No. 001
PROVIDE EACH RU DOOR(S) WITH THE FOLLOWING:

QTY		DESCRIPTION	CATALOG NUMBER	FINISH	MFR
1	EA	SFIC MORTISE CYLINDER	C987 W/ KEYED CONST. CORE	626	FAL
1	EA	SFIC CORE	C607	626	FAL
1	EA	NOTE	REMAINDER OF HARDWARE BY DOOR MFR.		

-COORDINATE HARDWARE WITH DOOR MFR.

Hardware Group No. 103
PROVIDE EACH SGL DOOR(S) WITH THE FOLLOWING:

QTY		DESCRIPTION	CATALOG NUMBER	FINISH	MFR
3	EA	HINGE	5BB1 4.5 X 4.5	652	IVE
1	EA	ENTRANCE/OFFICE LOCK	ND50HD RHO	626	SCH
1	EA	SFIC CORE	C607	626	FAL
1	EA	WALL STOP	WS406/407CCV	630	IVE
1	EA	GASKETING	488S PSA H & J (USE SILENCERS @ NON-RATED DOORS)	BK	ZER

Hardware Group No. 103S
PROVIDE EACH SGL DOOR(S) WITH THE FOLLOWING:

QTY		DESCRIPTION	CATALOG NUMBER	FINISH	MFR
3	EA	HINGE	5BB1 4.5 X 4.5	652	IVE
1	EA	ENTRANCE/OFFICE LOCK	ND50HD RHO	626	SCH
1	EA	SFIC CORE	C607	626	FAL
1	EA	OH STOP	900S SERIES X SIZE & MOUNTING AS REQ	630	GLY
1	EA	GASKETING	488S PSA H & J (USE SILENCERS @ NON-RATED DOORS)	BK	ZER

Hardware Group No. 103SX
PROVIDE EACH SGL DOOR(S) WITH THE FOLLOWING:

QTY		DESCRIPTION	CATALOG NUMBER	FINISH	MFR
3	EA	HINGE	5BB1 4.5 X 4.5	652	IVE
1	EA	ENTRANCE/OFFICE LOCK	ND50HD RHO	626	SCH
1	EA	SFIC CORE	C607	626	FAL
1	EA	OH STOP	900S SERIES X SIZE & MOUNTING AS REQ	630	GLY
1	EA	GASKETING	488S PSA H & J (USE SILENCERS @ NON-RATED DOORS)	BK	ZER

NOTE: EXISTING FRAME TO REMAIN. IF NEW HARDWARE IS INCOMPATIBLE WITH EXISTING FRAME, NOTIFY VIA RFI.

Hardware Group No.200
PROVIDE EACH PR DOOR(S) WITH THE FOLLOWING:

QTY		*DESCRIPTION*	*CATALOG NUMBER*	*FINISH*	*MFR*
6	*EA*	*HINGE*	*5BB1 4.5 X 4.5*	*652*	*IVE*
1	*SET*	*AUTO FLUSH BOLT*	*FB31P/FB41P AS REQ*	*630*	*IVE*
1	*EA*	*DUST PROOF STRIKE*	*DP2*	*626*	*IVE*
1	*EA*	*STOREROOM LOCK*	*ND80HD RHO*	*626*	*SCH*
1	*EA*	*SFIC CORE*	*C607*	*626*	*FAL*
1	*EA*	*COORDINATOR*	*COR X FL X MB X HW PREPS X LENGTH AS REQUIRED*	*628*	*IVE*
2	*EA*	*SURFACE CLOSER*	*4040XP RW/PA X MTG BRKT, SPCR & PLATE AS REQ*	*689*	*LCN*
2	*EA*	*WALL STOP*	*WS406/407CCV*	*630*	*IVE*
1	*EA*	*GASKETING*	*488S PSA H & J (USE SILENCERS @ NON-RATED DOORS)*	*BK*	*ZER*
1	*EA*	*MEETING STILE*	*8193AA (2 PCS - 1 SET) HEIGHT AS REQ (OMIT @ NON-RATED DOORS)*	*AA*	*ZER*

Hardware Group No.200W
PROVIDE EACH PR DOOR(S) WITH THE FOLLOWING:

QTY		*DESCRIPTION*	*CATALOG NUMBER*	*FINISH*	*MFR*
6	*EA*	*HINGE*	*5BB1HW 5 X 4.5*	*652*	*IVE*
1	*SET*	*AUTO FLUSH BOLT*	*FB31P/FB41P AS REQ*	*630*	*IVE*
1	*EA*	*DUST PROOF STRIKE*	*DP2*	*626*	*IVE*
1	*EA*	*STOREROOM LOCK*	*ND80HD RHO*	*626*	*SCH*
1	*EA*	*SFIC CORE*	*C607*	*626*	*FAL*
1	*EA*	*COORDINATOR*	*COR X FL X MB X HW PREPS X LENGTH AS REQUIRED*	*628*	*IVE*
2	*EA*	*SURFACE CLOSER*	*4040XP RW/PA X MTG BRKT, SPCR & PLATE AS REQ*	*689*	*LCN*
2	*EA*	*WALL STOP*	*WS406/407CCV*	*630*	*IVE*
1	*EA*	*GASKETING*	*488S PSA H & J (USE SILENCERS @ NON-RATED DOORS)*	*BK*	*ZER*
1	*EA*	*MEETING STILE*	*8193AA (2 PCS - 1 SET) HEIGHT AS REQ (OMIT @ NON-RATED DOORS)*	*AA*	*ZER*

Hardware Group No. 201
PROVIDE EACH SGL DOOR(S) WITH THE FOLLOWING:

QTY		DESCRIPTION	CATALOG NUMBER	FINISH	MFR
3	EA	HINGE	5BB1 4.5 X 4.5	652	IVE
1	EA	STOREROOM LOCK	ND80HD RHO	626	SCH
1	EA	SFIC CORE	C607	626	FAL
1	EA	SURFACE CLOSER	1461 RW/PA FC X MTG BRKT, SPCR & PLATE AS REQ	689	LCN
1	EA	KICK PLATE	8400 10" X 2" LDW B-CS	630	IVE
1	EA	WALL STOP	WS406/407CCV	630	IVE
1	EA	GASKETING	488S PSA H & J (USE SILENCERS @ NON-RATED DOORS)	BK	ZER

NOTE: OPENING R224A TO BE KEYED ON CORRIDOR SIDE. FREE EGRESS FROM CONTROL BOOTH AT ALL TIME.

Hardware Group No.201G
PROVIDE EACH SGL DOOR(S) WITH THE FOLLOWING:

QTY		*DESCRIPTION*	*CATALOG NUMBER*	*FINISH*	*MFR*
3	*EA*	*HINGE*	*5BB1 4.5 X 4.5*	*652*	*IVE*
1	*EA*	*STOREROOM LOCK*	*ND80HD RHO*	*626*	*SCH*
1	*EA*	*SFIC CORE*	*C607*	*626*	*FAL*
1	*EA*	*SURFACE CLOSER*	*1461 RW/PA FC X MTG BRKT, SPCR & PLATE AS REQ*	*689*	*LCN*
1	*EA*	*KICK PLATE*	*8400 10" X 2" LDW B-CS*	*630*	*IVE*
1	*EA*	*WALL STOP*	*WS406/407CCV*	*630*	*IVE*
1	*SET*	*GASKETING*	*770AA H & J*	*AA*	*ZER*
1	*EA*	*DOOR BOTTOM*	*369AA-Z49*	*AA*	*ZER*

Hardware Group No. 201W
PROVIDE EACH SGL DOOR(S) WITH THE FOLLOWING:

QTY		DESCRIPTION	CATALOG NUMBER	FINISH	MFR
3	EA	HINGE	5BB1HW 5 X 4.5	652	IVE
1	EA	STOREROOM LOCK	ND80HD RHO	626	SCH
1	EA	SFIC CORE	C607	626	FAL
1	EA	SURFACE CLOSER	1461 RW/PA FC X MTG BRKT, SPCR & PLATE AS REQ	689	LCN
1	EA	KICK PLATE	8400 10" X 2" LDW B-CS	630	IVE
1	EA	WALL STOP	WS406/407CCV	630	IVE
1	EA	GASKETING	488S PSA H & J (USE SILENCERS @ NON-RATED DOORS)	BK	ZER

Hardware Group No. 203
PROVIDE EACH SGL DOOR(S) WITH THE FOLLOWING:

QTY		DESCRIPTION	CATALOG NUMBER	FINISH	MFR
3	EA	HINGE	5BB1 4.5 X 4.5	652	IVE
1	EA	STOREROOM LOCK	ND80HD RHO	626	SCH
1	EA	SFIC CORE	C607	626	FAL
1	EA	WALL STOP	WS406/407CCV	630	IVE
1	EA	GASKETING	488S PSA H & J (USE SILENCERS @ NON-RATED DOORS)	BK	ZER

Hardware Group No. 203G
PROVIDE EACH SGL DOOR(S) WITH THE FOLLOWING:

QTY		DESCRIPTION	CATALOG NUMBER	FINISH	MFR
~~3~~	~~EA~~	~~HINGE~~	~~5BB1 4.5 X 4.5~~	~~652~~	~~IVE~~
3	*EA*	*CAM-LIFT HINGE*	*MCL-500*	*652*	*OVE*
1	EA	STOREROOM LOCK	ND80HD RHO	626	SCH
1	EA	SFIC CORE	C607	626	FAL
1	EA	WALL STOP	WS406/407CCV	630	IVE
~~2~~	~~EA~~	~~GASKETING~~	~~488S PSA H & J~~	~~BK~~	~~ZER~~
1	*EA*	*SOUND GASKETING*	*BY STC DOOR MNFR*	*BLK*	*OVE*
~~1~~	~~EA~~	~~DOOR BOTTOM~~	~~364AA-Z49~~	~~AA~~	~~ZER~~
1	*EA*	*DOOR BOTTOM*	*BY STC DOOR MNFR*	*BLK*	*OVE*
1	EA	THRESHOLD/TRANSITION STRIP	COORDINATE REQUIREMENTS WITH FLOORING PROVIDER		B/O

NOTE: HARDWARE SET IS A GUIDELINE. VERIFY HARDWARE WITH OVERLY TO ENSURE STC RATING IS MET.

Hardware Group No. 203S
PROVIDE EACH SGL DOOR(S) WITH THE FOLLOWING:

QTY		DESCRIPTION	CATALOG NUMBER	FINISH	MFR
3	EA	HINGE	5BB1 4.5 X 4.5	652	IVE
1	EA	STOREROOM LOCK	ND80HD RHO	626	SCH
1	EA	SFIC CORE	C607	626	FAL
1	EA	OH STOP	900S SERIES X SIZE & MOUNTING AS REQ	630	GLY
1	EA	GASKETING	488S PSA H & J (USE SILENCERS @ NON-RATED DOORS)	BK	ZER

Hardware Group No. 203W
PROVIDE EACH SGL DOOR(S) WITH THE FOLLOWING:

QTY		DESCRIPTION	CATALOG NUMBER	FINISH	MFR
3	EA	HINGE	5BB1HW 5 X 4.5	652	IVE
1	EA	STOREROOM LOCK	ND80HD RHO	626	SCH
1	EA	SFIC CORE	C607	626	FAL
1	EA	WALL STOP	WS406/407CCV	630	IVE
1	EA	GASKETING	488S PSA H & J (USE SILENCERS @ NON-RATED DOORS)	BK	ZER

Hardware Group No. 212
PROVIDE EACH PR DOOR(S) WITH THE FOLLOWING:

QTY		DESCRIPTION	CATALOG NUMBER	FINISH	MFR
6	EA	HINGE	5BB1 4.5 X 4.5	652	IVE
1	SET	CONST LATCHING BOLT	FB51P/FB61P AS REQ	630	IVE
1	EA	DUST PROOF STRIKE	DP2	626	IVE
1	EA	STOREROOM LOCK	ND80HD RHO	626	SCH
1	EA	SFIC CORE	C607	626	FAL
2	EA	WALL STOP	WS406/407CCV	630	IVE
1	EA	MEETING STILE	8193AA (2 PCS - 1 SET) HEIGHT AS REQ (OMIT @ NON-RATED DOORS)	AA	ZER
4	EA	SILENCER	SR64	GRY	IVE

Hardware Group No. 212S
PROVIDE EACH PR DOOR(S) WITH THE FOLLOWING:

QTY		DESCRIPTION	CATALOG NUMBER	FINISH	MFR
6	EA	HINGE	5BB1 4.5 X 4.5	652	IVE
1	SET	CONST LATCHING BOLT	FB51P/FB61P AS REQ	630	IVE
1	EA	DUST PROOF STRIKE	DP2	626	IVE
1	EA	STOREROOM LOCK	ND80HD RHO	626	SCH
1	EA	SFIC CORE	C607	626	FAL
2	EA	OH STOP	900S SERIES X SIZE & MOUNTING AS REQ	630	GLY
1	EA	MEETING STILE	8193AA (2 PCS - 1 SET) HEIGHT AS REQ (OMIT @ NON-RATED DOORS)	AA	ZER
4	EA	SILENCER	SR64	GRY	IVE

~~Hardware Group No.212W~~
~~PROVIDE EACH PR DOOR(S) WITH THE FOLLOWING:~~

~~QTY~~		~~DESCRIPTION~~	~~CATALOG NUMBER~~	~~FINISH~~	~~MFR~~
~~6~~	~~EA~~	~~HINGE~~	~~5BB1HW 5 X 4.5~~	~~652~~	~~IVE~~
~~1~~	~~SET~~	~~CONST LATCHING BOLT~~	~~FB51P/FB61P AS REQ~~	~~630~~	~~IVE~~
~~1~~	~~EA~~	~~DUST PROOF STRIKE~~	~~DP2~~	~~626~~	~~IVE~~
~~1~~	~~EA~~	~~STOREROOM LOCK~~	~~ND80HD RHO~~	~~626~~	~~SCH~~
~~1~~	~~EA~~	~~SFIC CORE~~	~~C607~~	~~626~~	~~FAL~~
~~2~~	~~EA~~	~~WALL STOP~~	~~WS406/407CCV~~	~~630~~	~~IVE~~
~~1~~	~~EA~~	~~MEETING STILE~~	~~8193AA (2 PCS - 1 SET) HEIGHT AS REQ (OMIT @ NON-RATED DOORS)~~	~~AA~~	~~ZER~~
~~4~~	~~EA~~	~~SILENCER~~	~~SR64~~	~~GRY~~	~~IVE~~

Hardware Group No. 303
PROVIDE EACH SGL DOOR(S) WITH THE FOLLOWING:

QTY		DESCRIPTION	CATALOG NUMBER	FINISH	MFR
3	EA	HINGE	5BB1 4.5 X 4.5	652	IVE
1	EA	PRIVACY LOCK	ND40S RHO	626	SCH
1	EA	WALL STOP	WS406/407CCV	630	IVE
1	EA	GASKETING	488S PSA H & J (USE SILENCERS @ NON-RATED DOORS)	BK	ZER

~~Hardware Group No.401C~~
~~PROVIDE EACH SGL DOOR(S) WITH THE FOLLOWING:~~

~~QTY~~		~~DESCRIPTION~~	~~CATALOG NUMBER~~	~~FINISH~~	~~MFR~~
~~3~~	~~EA~~	~~HINGE~~	~~5BB1 4.5 X 4.5~~	~~652~~	~~IVE~~
~~1~~	~~EA~~	~~PASSAGE SET~~	~~ND10S RHO~~	~~626~~	~~SCH~~
~~1~~	~~EA~~	~~SURFACE CLOSER~~	~~1461 SCUSH FC X MTG BRKT, SPCR & PLATE AS REQ~~	~~689~~	~~LCN~~
~~1~~	~~EA~~	~~GASKETING~~	~~488S PSA H & J (USE SILENCERS @ NON-RATED DOORS)~~	~~BK~~	~~ZER~~

Hardware Group No.401CG
PROVIDE EACH SGL DOOR(S) WITH THE FOLLOWING:

QTY		*DESCRIPTION*	*CATALOG NUMBER*	*FINISH*	*MFR*
3	*EA*	*HINGE*	*5BB1 4.5 X 4.5*	*652*	*IVE*
1	*EA*	*PASSAGE SET*	*ND10S RHO*	*626*	*SCH*
1	*EA*	*SURFACE CLOSER*	*1461 SCUSH FC X MTG BRKT, SPCR & PLATE AS REQ*	*689*	*LCN*
1	*SET*	*GASKETING*	*770AA H & J*	*AA*	*ZER*
1	*EA*	*DOOR BOTTOM*	*369AA-Z49*	*AA*	*ZER*

Hardware Group No. 403
PROVIDE EACH SGL DOOR(S) WITH THE FOLLOWING:

QTY		DESCRIPTION	CATALOG NUMBER	FINISH	MFR
3	EA	HINGE	5BB1 4.5 X 4.5	652	IVE
1	EA	PASSAGE SET	ND10S RHO	626	SCH
1	EA	WALL STOP	WS406/407CCV	630	IVE
1	EA	GASKETING	488S PSA H & J (USE SILENCERS @ NON-RATED DOORS)	BK	ZER

Hardware Group No. 403G
PROVIDE EACH SGL DOOR(S) WITH THE FOLLOWING:

QTY		DESCRIPTION	CATALOG NUMBER	FINISH	MFR
~~3~~	~~EA~~	~~HINGE~~	~~5BB1 4.5 X 4.5~~	~~652~~	~~IVE~~
3	*EA*	*CAM-LIFT HINGE*	*MCL-500*	*652*	*OVE*
1	EA	PASSAGE SET	ND10S RHO	626	SCH
1	EA	WALL STOP	WS406/407CCV	630	IVE
~~2~~	~~EA~~	~~GASKETING~~	~~488S PSA H & J~~	~~BK~~	~~ZER~~
1	*EA*	*SOUND GASKETING*	*BY STC DOOR MNFR*	*BLK*	*OVE*
~~1~~	~~EA~~	~~DOOR BOTTOM~~	~~364AA-Z49~~	~~AA~~	~~ZER~~
1	*EA*	*DOOR BOTTOM*	*BY STC DOOR MNFR*	*BLK*	*OVE*
1	EA	THRESHOLD/TRANSITION STRIP	COORDINATE REQUIREMENTS WITH FLOORING PROVIDER		B/O

NOTE: HARDWARE SET IS A GUIDELINE. VERIFY HARDWARE WITH OVERLY TO ENSURE STC RATING IS MET.

Hardware Group No. 403S
PROVIDE EACH SGL DOOR(S) WITH THE FOLLOWING:

QTY		DESCRIPTION	CATALOG NUMBER	FINISH	MFR
3	EA	HINGE	5BB1 4.5 X 4.5	652	IVE
1	EA	PASSAGE SET	ND10S RHO	626	SCH
1	EA	OH STOP	900S SERIES X SIZE & MOUNTING AS REQ	630	GLY
1	EA	GASKETING	488S PSA H & J (USE SILENCERS @ NON-RATED DOORS)	BK	ZER

Hardware Group No. 503
PROVIDE EACH SGL DOOR(S) WITH THE FOLLOWING:

QTY		DESCRIPTION	CATALOG NUMBER	FINISH	MFR
3	EA	HINGE	5BB1 4.5 X 4.5	652	IVE
1	EA	CLASSROOM LOCK	ND70HD RHO	626	SCH
1	EA	SFIC CORE	C607	626	FAL
1	EA	WALL STOP	WS406/407CCV	630	IVE
1	EA	GASKETING	488S PSA H & J (USE SILENCERS @ NON-RATED DOORS)	BK	ZER

Hardware Group No. 503S
PROVIDE EACH SGL DOOR(S) WITH THE FOLLOWING:

QTY		DESCRIPTION	CATALOG NUMBER	FINISH	MFR
3	EA	HINGE	5BB1 4.5 X 4.5	652	IVE
1	EA	CLASSROOM LOCK	ND70HD RHO	626	SCH
1	EA	SFIC CORE	C607	626	FAL
1	EA	OH STOP	900S SERIES X SIZE & MOUNTING AS REQ	630	GLY
1	EA	GASKETING	488S PSA H & J (USE SILENCERS @ NON-RATED DOORS)	BK	ZER

Hardware Group No. 503W
PROVIDE EACH SGL DOOR(S) WITH THE FOLLOWING:

QTY		DESCRIPTION	CATALOG NUMBER	FINISH	MFR
3	EA	HINGE	5BB1HW 5 X 4.5	652	IVE
1	EA	CLASSROOM LOCK	ND70HD RHO	626	SCH
1	EA	SFIC CORE	C607	626	FAL
1	EA	WALL STOP	WS406/407CCV	630	IVE
1	EA	GASKETING	488S PSA H & J (USE SILENCERS @ NON-RATED DOORS)	BK	ZER

Hardware Group No.700CGM
PROVIDE EACH PR DOOR(S) WITH THE FOLLOWING:

QTY		*DESCRIPTION*	*CATALOG NUMBER*	*FINISH*	*MFR*
6	*EA*	*HINGE*	*5BB1HW 4.5 X 4.5*	*652*	*IVE*
1	*EA*	*REMOVABLE MULLION*	*KR4954*	*689*	*VON*
1	*EA*	*PANIC HARDWARE*	*CD-99-L-DT-06*	*626*	*VON*
1	*EA*	*PANIC HARDWARE*	*CD-99-L-NL-06*	*626*	*VON*
1	*EA*	*SFIC RIM CYLINDER*	*C953 W/ KEYED CONST. CORE*	*626*	*FAL*
2	*EA*	*SFIC MORTISE CYLINDER*	*C987 W/ KEYED CONST. CORE*	*626*	*FAL*
3	*EA*	*SFIC CORE*	*C607*	*626*	*FAL*
2	*EA*	*SURFACE CLOSER*	*4040XP SCUSH X MTG BRKT, SPCR & PLATE AS REQ*	*689*	*LCN*
2	*EA*	*KICK PLATE*	*8400 10" X 2" LDW B-CS*	*630*	*IVE*
1	*SET*	*GASKETING*	*770AA H & J*	*AA*	*ZER*
1	*EA*	*MULLION SEAL*	*8780NBK PSA*	*BK*	*ZER*
2	*EA*	*DOOR BOTTOM*	*369AA-Z49*	*AA*	*ZER*
1	*EA*	*MEETING STILE*	*555AA*	*AA*	*ZER*
1	*EA*	*MEETING STILE*	*55AA*	*AA*	*ZER*

Hardware Group No.700CGT
PROVIDE EACH PR DOOR(S) WITH THE FOLLOWING:

QTY		*DESCRIPTION*	*CATALOG NUMBER*	*FINISH*	*MFR*
6	*EA*	*HINGE*	*5BB1HW 4.5 X 4.5*	*652*	*IVE*
1	*EA*	*PANIC HARDWARE*	*CD-9947-L-DT-LBR-06*	*626*	*VON*
1	*EA*	*PANIC HARDWARE*	*CD-9947-L-NL-LBR-06*	*626*	*VON*
1	*EA*	*SFIC RIM CYLINDER*	*C953 W/ KEYED CONST. CORE*	*626*	*FAL*
2	*EA*	*SFIC MORTISE CYLINDER*	*C987 W/ KEYED CONST. CORE*	*626*	*FAL*
3	*EA*	*SFIC CORE*	*C607*	*626*	*FAL*
2	*EA*	*SURFACE CLOSER*	*4040XP SCUSH X MTG BRKT, SPCR & PLATE AS REQ*	*689*	*LCN*
2	*EA*	*KICK PLATE*	*8400 10" X 2" LDW B-CS*	*630*	*IVE*
1	*SET*	*GASKETING*	*770AA H & J*	*AA*	*ZER*
2	*EA*	*DOOR BOTTOM*	*369AA-Z49*	*AA*	*ZER*
1	*EA*	*MEETING STILE*	*555AA*	*AA*	*ZER*
1	*EA*	*MEETING STILE*	*55AA*	*AA*	*ZER*

NOTE: MULLION NOT AVAILABLE FOR TALL DOORS. CONCEALED VERTICAL ROD DEVICES REQUIRED WITH USE OF EXTENSION RODS.

Hardware Group No. 700CM
PROVIDE EACH PR DOOR(S) WITH THE FOLLOWING:

QTY		DESCRIPTION	CATALOG NUMBER	FINISH	MFR
6	EA	HINGE	5BB1HW 4.5 X 4.5	652	IVE
1	EA	REMOVABLE MULLION	KR4954	689	VON
1	EA	PANIC HARDWARE	CD-99-L-DT-06	626	VON
1	EA	PANIC HARDWARE	CD-99-L-NL-06	626	VON
1	EA	SFIC RIM CYLINDER	C953 W/ KEYED CONST. CORE	626	FAL
2	EA	SFIC MORTISE CYLINDER	C987 W/ KEYED CONST. CORE	626	FAL
3	EA	SFIC CORE	C607	626	FAL
2	EA	SURFACE CLOSER	4040XP SCUSH X MTG BRKT, SPCR & PLATE AS REQ	689	LCN
2	EA	KICK PLATE	8400 10" X 2" LDW B-CS	630	IVE
1	EA	MULLION SEAL	8780NBK PSA	BK	ZER
4	EA	SILENCER	SR64	GRY	IVE

Hardware Group No. 700CMX
PROVIDE EACH PR DOOR(S) WITH THE FOLLOWING:

QTY		DESCRIPTION	CATALOG NUMBER	FINISH	MFR
6	EA	HINGE	5BB1HW 4.5 X 4.5	652	IVE
1	EA	REMOVABLE MULLION	KR4954	689	VON
1	EA	PANIC HARDWARE	CD-99-L-DT-06	626	VON
1	EA	PANIC HARDWARE	CD-99-L-NL-06	626	VON
1	EA	SFIC RIM CYLINDER	C953 W/ KEYED CONST. CORE	626	FAL
2	EA	SFIC MORTISE CYLINDER	C987 W/ KEYED CONST. CORE	626	FAL
3	EA	SFIC CORE	C607	626	FAL
2	EA	SURFACE CLOSER	4040XP SCUSH X MTG BRKT, SPCR & PLATE AS REQ	689	LCN
2	EA	KICK PLATE	8400 10" X 2" LDW B-CS	630	IVE
1	EA	MULLION SEAL	8780NBK PSA	BK	ZER
4	EA	SILENCER	SR64	GRY	IVE

NOTE: EXISTING FRAME TO REMAIN. IF NEW HARDWARE IS INCOMPATIBLE WITH EXISTING FRAME, NOTIFY VIA RFI.

~~Hardware Group No.700CT~~
~~PROVIDE EACH PR DOOR(S) WITH THE FOLLOWING:~~

~~QTY~~		~~DESCRIPTION~~	~~CATALOG NUMBER~~	~~FINISH~~	~~MFR~~
~~6~~	~~EA~~	~~HINGE~~	~~5BB1HW 4.5 X 4.5~~	~~652~~	~~IVE~~
~~1~~	~~EA~~	~~PANIC HARDWARE~~	~~CD-9947-L-DT-LBR-06~~	~~626~~	~~VON~~
~~1~~	~~EA~~	~~PANIC HARDWARE~~	~~CD-9947-L-NL-LBR-06~~	~~626~~	~~VON~~
~~1~~	~~EA~~	~~SFIC RIM CYLINDER~~	~~C953 W/ KEYED CONST. CORE~~	~~626~~	~~FAL~~
~~2~~	~~EA~~	~~SFIC MORTISE CYLINDER~~	~~C987 W/ KEYED CONST. CORE~~	~~626~~	~~FAL~~
~~3~~	~~EA~~	~~SFIC CORE~~	~~C607~~	~~626~~	~~FAL~~
~~2~~	~~EA~~	~~SURFACE CLOSER~~	~~4040XP SCUSH X MTG BRKT, SPCR & PLATE AS REQ~~	~~689~~	~~LCN~~
~~2~~	~~EA~~	~~KICK PLATE~~	~~8400 10" X 2" LDW B-CS~~	~~630~~	~~IVE~~
~~1~~	~~EA~~	~~MULLION SEAL~~	~~8780NBK PSA~~	~~BK~~	~~ZER~~
~~4~~	~~EA~~	~~SILENCER~~	~~SR64~~	~~GRY~~	~~IVE~~

~~NOTE: MULLION NOT AVAILABLE FOR TALL DOORS. CONCEALED VERTICAL ROD DEVICES REQUIRED WITH USE OF EXTENSION RODS.~~

Hardware Group No.700GM
PROVIDE EACH PR DOOR(S) WITH THE FOLLOWING:

QTY		*DESCRIPTION*	*CATALOG NUMBER*	*FINISH*	*MFR*
6	*EA*	*HINGE*	*5BB1HW 4.5 X 4.5*	*652*	*IVE*
1	*EA*	*REMOVABLE MULLION*	*KR4954*	*689*	*VON*
1	*EA*	*PANIC HARDWARE*	*CD-99-L-DT-06*	*626*	*VON*
1	*EA*	*PANIC HARDWARE*	*CD-99-L-NL-06*	*626*	*VON*
1	*EA*	*SFIC RIM CYLINDER*	*C953 W/ KEYED CONST. CORE*	*626*	*FAL*
2	*EA*	*SFIC MORTISE CYLINDER*	*C987 W/ KEYED CONST. CORE*	*626*	*FAL*
3	*EA*	*SFIC CORE*	*C607*	*626*	*FAL*
2	*EA*	*SURFACE CLOSER*	*4040XP RW/PA X MTG BRKT, SPCR & PLATE AS REQ*	*689*	*LCN*
2	*EA*	*KICK PLATE*	*8400 10" X 2" LDW B-CS*	*630*	*IVE*
2	*EA*	*WALL STOP*	*WS406/407CCV*	*630*	*IVE*
1	*SET*	*GASKETING*	*770AA H & J*	*AA*	*ZER*
2	*EA*	*DOOR BOTTOM*	*369AA-Z49*	*AA*	*ZER*
1	*EA*	*MEETING STILE*	*555AA*	*AA*	*ZER*
1	*EA*	*MEETING STILE*	*55AA*	*AA*	*ZER*

Hardware Group No. 700M
PROVIDE EACH PR DOOR(S) WITH THE FOLLOWING:

QTY		DESCRIPTION	CATALOG NUMBER	FINISH	MFR
6	EA	HINGE	5BB1HW 4.5 X 4.5	652	IVE
1	EA	REMOVABLE MULLION	KR4954	689	VON
1	EA	PANIC HARDWARE	CD-99-L-DT-06	626	VON
1	EA	PANIC HARDWARE	CD-99-L-NL-06	626	VON
1	EA	SFIC RIM CYLINDER	C953 W/ KEYED CONST. CORE	626	FAL
2	EA	SFIC MORTISE CYLINDER	C987 W/ KEYED CONST. CORE	626	FAL
3	EA	SFIC CORE	C607	626	FAL
2	EA	SURFACE CLOSER	4040XP RW/PA X MTG BRKT, SPCR & PLATE AS REQ	689	LCN
2	EA	KICK PLATE	8400 10" X 2" LDW B-CS	630	IVE
2	EA	WALL STOP	WS406/407CCV	630	IVE
1	EA	MULLION SEAL	8780NBK PSA	BK	ZER
4	EA	SILENCER	SR64	GRY	IVE

Hardware Group No. 701
PROVIDE EACH SGL DOOR(S) WITH THE FOLLOWING:

QTY		DESCRIPTION	CATALOG NUMBER	FINISH	MFR
3	EA	HINGE	5BB1HW 4.5 X 4.5	652	IVE
1	EA	PANIC HARDWARE	CD-99-L-NL-06	626	VON
1	EA	SFIC RIM CYLINDER	C953 W/ KEYED CONST. CORE	626	FAL
1	EA	SFIC MORTISE CYLINDER	C987 W/ KEYED CONST. CORE	626	FAL
2	EA	SFIC CORE	C607	626	FAL
1	EA	SURFACE CLOSER	4040XP RW/PA X MTG BRKT, SPCR & PLATE AS REQ	689	LCN
1	EA	WALL STOP	WS406/407CCV	630	IVE
4	EA	SILENCER	SR64	GRY	IVE

Hardware Group No. 701AC
PROVIDE EACH SGL DOOR(S) WITH THE FOLLOWING:

QTY		DESCRIPTION	CATALOG NUMBER	FINISH	MFR
1	EA	CONT. HINGE	112XY HEIGHT AS REQ	628	IVE
1	EA	PANIC HARDWARE	CD-99-L-NL-06	626	VON
1	EA	SFIC RIM CYLINDER	C953 W/ KEYED CONST. CORE	626	FAL
1	EA	SFIC MORTISE CYLINDER	C987 W/ KEYED CONST. CORE	626	FAL
2	EA	SFIC CORE	C607	626	FAL
1	EA	SURFACE CLOSER	4040XP SCUSH X MTG BRKT, SPCR & PLATE AS REQ	689	LCN
1	SET	SEAL	PERIMETER SEAL BY FRAME MFR.		

Hardware Group No. 701C
PROVIDE EACH SGL DOOR(S) WITH THE FOLLOWING:

QTY		DESCRIPTION	CATALOG NUMBER	FINISH	MFR
3	EA	HINGE	5BB1HW 4.5 X 4.5	652	IVE
1	EA	PANIC HARDWARE	CD-99-L-NL-06	626	VON
1	EA	SFIC RIM CYLINDER	C953 W/ KEYED CONST. CORE	626	FAL
1	EA	SFIC MORTISE CYLINDER	C987 W/ KEYED CONST. CORE	626	FAL
2	EA	SFIC CORE	C607	626	FAL
1	EA	SURFACE CLOSER	4040XP SCUSH X MTG BRKT, SPCR & PLATE AS REQ	689	LCN
4	EA	SILENCER	SR64	GRY	IVE

Hardware Group No. 701CG
PROVIDE EACH SGL DOOR(S) WITH THE FOLLOWING:

QTY		DESCRIPTION	CATALOG NUMBER	FINISH	MFR
~~3~~	~~EA~~	~~HINGE~~	~~5BB1HW 4.5 X 4.5~~	~~652~~	~~IVE~~
3	*EA*	*CAM-LIFT HINGE*	*MCL-500*	*652*	*OVE*
1	EA	PANIC HARDWARE	CD-99-L-NL-06	626	VON
1	EA	SFIC RIM CYLINDER	C953 W/ KEYED CONST. CORE	626	FAL
1	EA	SFIC MORTISE CYLINDER	C987 W/ KEYED CONST. CORE	626	FAL
2	EA	SFIC CORE	C607	626	FAL
1	EA	SURFACE CLOSER	4040XP SCUSH X MTG BRKT, SPCR & PLATE AS REQ	689	LCN
~~2~~	~~EA~~	~~GASKETING~~	~~488S PSA H & J~~	~~BK~~	~~ZER~~
1	*EA*	*SOUND GASKETING*	*BY STC DOOR MNFR*	*BLK*	*OVE*
~~1~~	~~EA~~	~~DOOR BOTTOM~~	~~364AA-Z49~~	~~AA~~	~~ZER~~
1	*EA*	*DOOR BOTTOM*	*BY STC DOOR MNFR*	*BLK*	*OVE*
1	EA	THRESHOLD/TRANSITION STRIP	COORDINATE REQUIREMENTS WITH FLOORING PROVIDER		B/O

NOTE: HARDWARE SET IS A GUIDELINE. VERIFY HARDWARE WITH OVERLY TO ENSURE STC RATING IS MET.

Hardware Group No. 701CGW
PROVIDE EACH SGL DOOR(S) WITH THE FOLLOWING:

QTY		DESCRIPTION	CATALOG NUMBER	FINISH	MFR
~~3~~	~~EA~~	~~HINGE~~	~~5BB1HW 5 X 4.5~~	~~652~~	~~IVE~~
3	*EA*	*CAM-LIFT HINGE*	*MCL-500*	*652*	*OVE*
1	EA	PANIC HARDWARE	CD-99-L-NL-06	626	VON
1	EA	SFIC RIM CYLINDER	C953 W/ KEYED CONST. CORE	626	FAL
1	EA	SFIC MORTISE CYLINDER	C987 W/ KEYED CONST. CORE	626	FAL
2	EA	SFIC CORE	C607	626	FAL
1	EA	SURFACE CLOSER	4040XP SCUSH X MTG BRKT, SPCR & PLATE AS REQ	689	LCN
~~2~~	~~EA~~	~~GASKETING~~	~~488S PSA H & J~~	~~BK~~	~~ZER~~
1	*EA*	*SOUND GASKETING*	*BY STC DOOR MNFR*	*BLK*	*OVE*
~~1~~	~~EA~~	~~DOOR BOTTOM~~	~~364AA-Z49~~	~~AA~~	~~ZER~~
1	*EA*	*DOOR BOTTOM*	*BY STC DOOR MNFR*	*BLK*	*OVE*
1	EA	THRESHOLD/TRANSITION STRIP	COORDINATE REQUIREMENTS WITH FLOORING PROVIDER		B/O

NOTE: HARDWARE SET IS A GUIDELINE. VERIFY HARDWARE WITH OVERLY TO ENSURE STC RATING IS MET.

Hardware Group No.701CW
PROVIDE EACH SGL DOOR(S) WITH THE FOLLOWING:

QTY		DESCRIPTION	CATALOG NUMBER	FINISH	MFR
3	EA	HINGE	5BB1HW 5 X 4.5	652	IVE
1	EA	PANIC HARDWARE	CD-99-L-NL-06	626	VON
1	EA	SFIC RIM CYLINDER	C953 W/ KEYED CONST. CORE	626	FAL
1	EA	SFIC MORTISE CYLINDER	C987 W/ KEYED CONST. CORE	626	FAL
2	EA	SFIC CORE	C607	626	FAL
1	EA	SURFACE CLOSER	4040XP SCUSH X MTG BRKT, SPCR & PLATE AS REQ	689	LCN
4	EA	SILENCER	SR64	GRY	IVE

Hardware Group No.701G
PROVIDE EACH SGL DOOR(S) WITH THE FOLLOWING:

QTY		*DESCRIPTION*	*CATALOG NUMBER*	*FINISH*	*MFR*
3	*EA*	*HINGE*	*5BB1HW 4.5 X 4.5*	*652*	*IVE*
1	*EA*	*PANIC HARDWARE*	*CD-99-L-NL-06*	*626*	*VON*
1	*EA*	*SFIC RIM CYLINDER*	*C953 W/ KEYED CONST. CORE*	*626*	*FAL*
1	*EA*	*SFIC MORTISE CYLINDER*	*C987 W/ KEYED CONST. CORE*	*626*	*FAL*
2	*EA*	*SFIC CORE*	*C607*	*626*	*FAL*
1	*EA*	*SURFACE CLOSER*	*4040XP RW/PA X MTG BRKT, SPCR & PLATE AS REQ*	*689*	*LCN*
1	*EA*	*WALL STOP*	*WS406/407CCV*	*630*	*IVE*
1	*SET*	*GASKETING*	*770AA H & J*	*AA*	*ZER*
1	*EA*	*DOOR BOTTOM*	*369AA-Z49*	*AA*	*ZER*

Hardware Group No.710CMRX
PROVIDE EACH PR DOOR(S) WITH THE FOLLOWING:

QTY		DESCRIPTION	CATALOG NUMBER	FINISH	MFR
6	EA	HINGE	5BB1HW 4.5 X 4.5	652	IVE
1	EA	FIRE RATED REMOVABLE MULLION	KR9954	689	VON
1	EA	FIRE EXIT HARDWARE	99-EO-F	626	VON
1	EA	FIRE EXIT HARDWARE	99-L-F-06	626	VON
1	EA	SFIC RIM CYLINDER	C953 W/ KEYED CONST. CORE	626	FAL
1	EA	SFIC MORTISE CYLINDER	C987 W/ KEYED CONST. CORE	626	FAL
2	EA	SFIC CORE	C607	626	FAL
2	EA	SURFACE CLOSER	4040XP SCUSH X MTG BRKT, SPCR & PLATE AS REQ	689	LCN
2	EA	KICK PLATE	8400 10" X 2" LDW B-CS	630	IVE
4	EA	GASKETING	488S PSA H & J	BK	ZER
1	EA	MULLION SEAL	8780NBK PSA	BK	ZER

NOTE: EXISTING FRAME TO REMAIN. IF NEW HARDWARE IS INCOMPATIBLE WITH EXISTING FRAME, NOTIFY VIA RFI.

Hardware Group No. 710M
PROVIDE EACH PR DOOR(S) WITH THE FOLLOWING:

QTY		DESCRIPTION	CATALOG NUMBER	FINISH	MFR
6	EA	HINGE	5BB1HW 4.5 X 4.5	652	IVE
1	EA	REMOVABLE MULLION	KR4954	689	VON
1	EA	PANIC HARDWARE	LD-99-L-DT-06	626	VON
1	EA	PANIC HARDWARE	LD-99-L-NL-06	626	VON
1	EA	SFIC RIM CYLINDER	C953 W/ KEYED CONST. CORE	626	FAL
2	EA	SFIC MORTISE CYLINDER	C987 W/ KEYED CONST. CORE	626	FAL
3	EA	SFIC CORE	C607	626	FAL
2	EA	SURFACE CLOSER	4040XP RW/PA X MTG BRKT, SPCR & PLATE AS REQ	689	LCN
2	EA	KICK PLATE	8400 10" X 2" LDW B-CS	630	IVE
2	EA	WALL STOP	WS406/407CCV	630	IVE
1	EA	MULLION SEAL	8780NBK PSA	BK	ZER
4	EA	SILENCER	SR64	GRY	IVE

Hardware Group No.730GM
PROVIDE EACH PR DOOR(S) WITH THE FOLLOWING:

QTY		*DESCRIPTION*	*CATALOG NUMBER*	*FINISH*	*MFR*
6	*EA*	*HINGE*	*5BB1HW 4.5 X 4.5*	*652*	*IVE*
1	*EA*	*REMOVABLE MULLION*	*KR4954*	*689*	*VON*
2	*EA*	*PANIC HARDWARE*	*99-L-BE-06*	*626*	*VON*
1	*EA*	*SFIC MORTISE CYLINDER*	*C987 W/ KEYED CONST. CORE*	*626*	*FAL*
1	*EA*	*SFIC CORE*	*C607*	*626*	*FAL*
2	*EA*	*SURFACE CLOSER*	*4040XP RW/PA X MTG BRKT, SPCR & PLATE AS REQ*	*689*	*LCN*
2	*EA*	*KICK PLATE*	*8400 10" X 2" LDW B-CS*	*630*	*IVE*
2	*EA*	*WALL STOP*	*WS406/407CCV*	*630*	*IVE*
1	*SET*	*GASKETING*	*770AA H & J*	*AA*	*ZER*
1	*EA*	*MULLION SEAL*	*8780NBK PSA*	*BK*	*ZER*
2	*EA*	*DOOR BOTTOM*	*369AA-Z49*	*AA*	*ZER*
1	*EA*	*MEETING STILE*	*555AA*	*AA*	*ZER*
1	*EA*	*MEETING STILE*	*55AA*	*AA*	*ZER*

Hardware Group No.730GMR
PROVIDE EACH PR DOOR(S) WITH THE FOLLOWING:

QTY		*DESCRIPTION*	*CATALOG NUMBER*	*FINISH*	*MFR*
6	*EA*	*HINGE*	*5BB1HW 4.5 X 4.5*	*652*	*IVE*
1	*EA*	*FIRE RATED REMOVABLE MULLION*	*KR9954*	*689*	*VON*
2	*EA*	*FIRE EXIT HARDWARE*	*99-L-BE-F-06*	*626*	*VON*
1	*EA*	*SFIC MORTISE CYLINDER*	*C987 W/ KEYED CONST. CORE*	*626*	*FAL*
1	*EA*	*SFIC CORE*	*C607*	*626*	*FAL*
2	*EA*	*SURFACE CLOSER*	*4040XP RW/PA X MTG BRKT, SPCR & PLATE AS REQ*	*689*	*LCN*
2	*EA*	*KICK PLATE*	*8400 10" X 2" LDW B-CS*	*630*	*IVE*
2	*EA*	*WALL STOP*	*WS406/407CCV*	*630*	*IVE*
1	*SET*	*GASKETING*	*770AA H & J*	*AA*	*ZER*
1	*EA*	*MULLION SEAL*	*8780NBK PSA*	*BK*	*ZER*
2	*EA*	*DOOR BOTTOM*	*369AA-Z49*	*AA*	*ZER*
1	*EA*	*MEETING STILE*	*555AA*	*AA*	*ZER*
1	*EA*	*MEETING STILE*	*55AA*	*AA*	*ZER*

Hardware Group No. 730M
PROVIDE EACH PR DOOR(S) WITH THE FOLLOWING:

QTY		DESCRIPTION	CATALOG NUMBER	FINISH	MFR
6	EA	HINGE	5BB1HW 4.5 X 4.5	652	IVE
1	EA	REMOVABLE MULLION	KR4954	689	VON
2	EA	PANIC HARDWARE	99-L-BE-06	626	VON
1	EA	SFIC MORTISE CYLINDER	C987 W/ KEYED CONST. CORE	626	FAL
1	EA	SFIC CORE	C607	626	FAL
2	EA	SURFACE CLOSER	4040XP RW/PA X MTG BRKT, SPCR & PLATE AS REQ	689	LCN
2	EA	KICK PLATE	8400 10" X 2" LDW B-CS	630	IVE
2	EA	WALL STOP	WS406/407CCV	630	IVE
1	EA	MULLION SEAL	8780NBK PSA	BK	ZER
4	EA	SILENCER	SR64	GRY	IVE

Hardware Group No. 731
PROVIDE EACH SGL DOOR(S) WITH THE FOLLOWING:

QTY		DESCRIPTION	CATALOG NUMBER	FINISH	MFR
3	EA	HINGE	5BB1HW 4.5 X 4.5	652	IVE
1	EA	PANIC HARDWARE	99-L-BE-06	626	VON
1	EA	SURFACE CLOSER	4040XP RW/PA X MTG BRKT, SPCR & PLATE AS REQ	689	LCN
1	EA	WALL STOP	WS406/407CCV	630	IVE
4	EA	SILENCER	SR64	GRY	IVE

~~Hardware Group No.731C~~
~~PROVIDE EACH SGL DOOR(S) WITH THE FOLLOWING:~~

~~QTY~~		~~DESCRIPTION~~	~~CATALOG NUMBER~~	~~FINISH~~	~~MFR~~
~~3~~	~~EA~~	~~HINGE~~	~~5BB1HW 4.5 X 4.5~~	~~652~~	~~IVE~~
~~1~~	~~EA~~	~~PANIC HARDWARE~~	~~99-L-BE-06~~	~~626~~	~~VON~~
~~1~~	~~EA~~	~~SURFACE CLOSER~~	~~4040XP SCUSH X MTG BRKT, SPCR & PLATE AS REQ~~	~~689~~	~~LCN~~
4	~~EA~~	~~SILENCER~~	~~SR64~~	~~GRY~~	~~IVE~~

Hardware Group No.731CGR
PROVIDE EACH SGL DOOR(S) WITH THE FOLLOWING:

QTY		*DESCRIPTION*	*CATALOG NUMBER*	*FINISH*	*MFR*
3	*EA*	*HINGE*	*5BB1HW 4.5 X 4.5*	*652*	*IVE*
1	*EA*	*FIRE EXIT HARDWARE*	*99-L-BE-F-06*	*626*	*VON*
1	*EA*	*SURFACE CLOSER*	*4040XP SCUSH X MTG BRKT, SPCR & PLATE AS REQ*	*689*	*LCN*
1	*SET*	*GASKETING*	*770AA H & J*	*AA*	*ZER*
1	*EA*	*DOOR BOTTOM*	*369AA-Z49*	*AA*	*ZER*

Hardware Group No.731CR
PROVIDE EACH SGL DOOR(S) WITH THE FOLLOWING:

QTY		DESCRIPTION	CATALOG NUMBER	FINISH	MFR
3	EA	HINGE	5BB1HW 4.5 X 4.5	652	IVE
1	EA	FIRE EXIT HARDWARE	99-L-BE-F-06	626	VON
1	EA	SURFACE CLOSER	4040XP SCUSH X MTG BRKT, SPCR & PLATE AS REQ	689	LCN
1	EA	GASKETING	488S PSA H & J	BK	ZER

Hardware Group No.731G
PROVIDE EACH SGL DOOR(S) WITH THE FOLLOWING:

QTY		*DESCRIPTION*	*CATALOG NUMBER*	*FINISH*	*MFR*
3	*EA*	*HINGE*	*5BB1HW 4.5 X 4.5*	*652*	*IVE*
1	*EA*	*PANIC HARDWARE*	*99-L-BE-06*	*626*	*VON*
1	*EA*	*SURFACE CLOSER*	*4040XP RW/PA X MTG BRKT, SPCR & PLATE AS REQ*	*689*	*LCN*
1	*EA*	*WALL STOP*	*WS406/407CCV*	*630*	*IVE*
1	*SET*	*GASKETING*	*770AA H & J*	*AA*	*ZER*
1	*EA*	*DOOR BOTTOM*	*369AA-Z49*	*AA*	*ZER*

Hardware Group No.731R
PROVIDE EACH SGL DOOR(S) WITH THE FOLLOWING:

QTY		DESCRIPTION	CATALOG NUMBER	FINISH	MFR
3	EA	HINGE	5BB1HW 4.5 X 4.5	652	IVE
1	EA	FIRE EXIT HARDWARE	99-L-BE-F-06	626	VON
1	EA	SURFACE CLOSER	4040XP RW/PA X MTG BRKT, SPCR & PLATE AS REQ	689	LCN
1	EA	WALL STOP	WS406/407CCV	630	IVE
1	EA	GASKETING	488S PSA H & J	BK	ZER

Hardware Group No.738MR
PROVIDE EACH PR DOOR(S) WITH THE FOLLOWING:

QTY		DESCRIPTION	CATALOG NUMBER	FINISH	MFR
6	EA	HINGE	5BB1HW 4.5 X 4.5	652	IVE
1	EA	FIRE RATED REMOVABLE MULLION	KR9954	689	VON
2	EA	FIRE EXIT HARDWARE	99-L-BE-F-06	626	VON
1	EA	SFIC MORTISE CYLINDER	C987 W/ KEYED CONST. CORE	626	FAL
1	EA	SFIC CORE	C607	626	FAL
2	EA	SURFACE CLOSER	4040XP RW/PA X MTG BRKT, SPCR & PLATE AS REQ	689	LCN
2	EA	KICK PLATE	8400 10" X 2" LDW B-CS	630	IVE
2	EA	FIRE/LIFE WALL MAG	SEM7800 SERIES	689	LCN
1	EA	GASKETING	488S PSA H & J	BK	ZER
1	EA	MULLION SEAL	8780NBK PSA	BK	ZER

-WIRE THE MAGNETIC HOLD OPENS TO THE FIRE ALARM SYSTEM.
-THE MAGNETIC HOLD OPENS ARE TO RELEASE UPON ACTIVATION OF THE FIRE ALARMS SYSTEM.

Hardware Group No. 801
PROVIDE EACH SGL DOOR(S) WITH THE FOLLOWING:

QTY		DESCRIPTION	CATALOG NUMBER	FINISH	MFR
3	EA	HINGE	5BB1HW 4.5 X 4.5	652	IVE
1	EA	PUSH PLATE	8200 4" X 16"	630	IVE
1	EA	PULL PLATE	8303 10" 4" X 16"	630	IVE
1	EA	SURFACE CLOSER	4040XP RW/PA X MTG BRKT, SPCR & PLATE AS REQ	689	LCN
1	EA	KICK PLATE	8400 10" X 2" LDW B-CS	630	IVE
1	EA	WALL STOP	WS406/407CCV	630	IVE
4	EA	SILENCER	SR64	GRY	IVE

Hardware Group No. C201
PROVIDE EACH SGL DOOR(S) WITH THE FOLLOWING:

QTY		DESCRIPTION	CATALOG NUMBER	FINISH	MFR
2	EA	HINGE	5BB1 4.5 X 4.5	652	IVE
1	EA	ELECTRIC HINGE	5BB1 4.5 X 4.5 CON TW8	652	IVE
1	EA	EU STOREROOM LOCK	ND80HDEU RHO RX CON 12V/24V DC	626	SCH
1	EA	SFIC CORE	C607	626	FAL
1	EA	SURFACE CLOSER	1461 RW/PA FC X MTG BRKT, SPCR & PLATE AS REQ	689	LCN
1	EA	WALL STOP	WS406/407CCV	630	IVE
1	EA	GASKETING	488S PSA H & J (USE SILENCERS @ NON-RATED DOORS)	BK	ZER
1	EA	HARNESS (IN DOOR)	ALLEGION CONNECT TYPE & LENGTH AS REQ		SCH
1	EA	HARNESS (TO POWER SUPPLY)	CON-6W - CONNECTION LEADS		SCH
1	EA	MULTITECH READER	MT11/MT15 - BY DIVISION 28	BLK	SCE
1	EA	DOOR CONTACT	679-05 TYPE AS REQ	WHT	SCE
1	EA	POWER SUPPLY	BY DIVISION 28		

OPERATIONAL DESCRIPTION: DOOR NORMALLY CLOSED AND LOCKED. ENTRY BY VALID CARD READ OR MANUAL KEY OVERRIDE. FREE EGRESS AT ALL TIME. UPON LOSS OF POWER, DOOR TO REMAIN LOCKED.

Hardware Group No. CW205
PROVIDE EACH SGL DOOR(S) WITH THE FOLLOWING:

QTY		DESCRIPTION	CATALOG NUMBER	FINISH	MFR
1	EA	CONT. HINGE	112XY EPT HEIGHT AS REQ	628	IVE
1	EA	POWER TRANSFER	EPT10 CON	689	VON
1	EA	EU STOREROOM LOCK	ND80HDEU RHO RX CON 12V/24V DC	626	SCH
1	EA	SFIC CORE	C607	626	FAL
1	EA	SURFACE CLOSER	4040XP SCUSH X MTG BRKT, SPCR & PLATE AS REQ	689	LCN
1	EA	KICK PLATE	8400 10" X 2" LDW B-CS	630	IVE
1	EA	RAIN DRIP	11A	A	ZER
1	EA	GASKETING	488S PSA H & J	BK	ZER
1	EA	DOOR SWEEP	FAS-SEAL		STE
1	EA	THRESHOLD	566A-NH	A	ZER
1	EA	HARNESS (IN DOOR)	ALLEGION CONNECT TYPE & LENGTH AS REQ		SCH
1	EA	HARNESS (TO POWER SUPPLY)	CON-6W - CONNECTION LEADS		SCH
1	EA	MULTITECH READER	MT11/MT15 - BY DIVISION 28	BLK	SCE
1	EA	DOOR CONTACT	679-05 TYPE AS REQ	WHT	SCE
1	EA	POWER SUPPLY	BY DIVISION 28		

NOTE: VERIFY WINDSTORM “CERTIFICATION” OF SPECIFIED HARDWARE W/DOOR SYSTEM. HARDWARE BUILT AS BASIS-OF-DESIGN AROUND STEELCRAFT DOOR SYSTEM.
OPERATIONAL DESCRIPTION: DOOR NORMALLY CLOSED AND LOCKED. ENTRY BY VALID CARD READ OR MANUAL KEY OVERRIDE. FREE EGRESS AT ALL TIME. UPON LOSS OF POWER, DOOR TO REMAIN LOCKED.

Hardware Group No. CW214
PROVIDE EACH PR DOOR(S) WITH THE FOLLOWING:

QTY		DESCRIPTION	CATALOG NUMBER	FINISH	MFR
1	EA	CONT. HINGE	112XY HEIGHT AS REQ	628	IVE
1	EA	CONT. HINGE	112XY EPT HEIGHT AS REQ	628	IVE
1	EA	POWER TRANSFER	EPT10 CON	689	VON
2	SET	SNB PACKAGE	09-350-604 SB360	US2C	IVE
2	SET	MS STRIKE PACKAGE	09-82-604 SB360	US2C	IVE
2	EA	MANUAL FLUSH BOLT	FB458-12"	626	IVE
2	EA	SURFACE BOLT	SB360 12"	US2C	IVE
1	EA	EU STOREROOM LOCK	ND80HDEU RHO RX CON 12V/24V DC	626	SCH
1	EA	SFIC CORE	C607	626	FAL
1	EA	OH STOP	900S SERIES X SIZE & MOUNTING AS REQ (INACTIVE LEAF)	630	GLY
1	EA	SURFACE CLOSER	4040XP SCUSH X MTG BRKT, SPCR & PLATE AS REQ (ACTIVE LEAF)	689	LCN
2	EA	KICK PLATE	8400 10" X 1" LDW B-CS	630	IVE
1	EA	RAIN DRIP	11A	A	ZER
1	EA	GASKETING	488S PSA H & J	BK	ZER
1	EA	ASTRAGAL	"Z" STEEL ASTRAGAL		STE
2	EA	DOOR SWEEP	FAS-SEAL		STE
1	EA	THRESHOLD	566A-NH	A	ZER
1	EA	HARNESS (IN DOOR)	ALLEGION CONNECT TYPE & LENGTH AS REQ		SCH
1	EA	HARNESS (TO POWER SUPPLY)	CON-6W - CONNECTION LEADS		SCH
1	EA	MULTITECH READER	MT11/MT15 - BY DIVISION 28	BLK	SCE
2	EA	DOOR CONTACT	679-05 TYPE AS REQ	WHT	SCE
1	EA	POWER SUPPLY	BY DIVISION 28		

NOTE: VERIFY WINDSTORM “CERTIFICATION” OF SPECIFIED HARDWARE W/DOOR SYSTEM. HARDWARE BUILT AS BASIS-OF-DESIGN AROUND STEELCRAFT DOOR SYSTEM.
OPERATIONAL DESCRIPTION: DOORS NORMALLY CLOSED AND LOCKED. ENTRY BY VALID CARD READ OR MANUAL KEY OVERRIDE. FREE EGRESS AT ALL TIME. UPON LOSS OF POWER, DOORS TO REMAIN LOCKED.

Hardware Group No. CW714AM
PROVIDE EACH PR DOOR(S) WITH THE FOLLOWING:

QTY		DESCRIPTION	CATALOG NUMBER	FINISH	MFR
2	EA	PIVOT SET	7222 SET	626	IVE
4	EA	INTERMEDIATE PIVOT	7222 INT	626	IVE
2	EA	POWER TRANSFER	EPT10 CON	689	VON
1	EA	FIRE RATED REMOVABLE MULLION	KR9954	689	VON
2	EA	ELEC PANIC HARDWARE	RX-QEL-XP99-EO-CON 24 VDC	626	VON
1	EA	SFIC RIM CYLINDER	C953 W/ KEYED CONST. CORE	626	FAL
1	EA	SFIC MORTISE CYLINDER	C987 W/ KEYED CONST. CORE	626	FAL
2	EA	SFIC CORE	C607	626	FAL
1	EA	DOOR PULL	VR910 DT	630	IVE
2	EA	DOOR PULL	VR910 NL	630	IVE
2	EA	SURFACE CLOSER	4040XP SCUSH X MTG BRKT, SPCR & PLATE AS REQ	689	LCN
1	SET	SEAL	PERIMETER SEAL BY FRAME MFR.		
1	SET	ASTRAGAL	MEETING STILE SEAL BY DOOR MFR.		
2	EA	DOOR SWEEP	APPROVED FOR USE WITH OPENING SYSTEM	AL	ZER
1	EA	THRESHOLD	APPROVED FOR USE WITH OPENING SYSTEM	AL	ZER
2	EA	HARNESS (IN DOOR)	ALLEGION CONNECT TYPE & LENGTH AS REQ		SCH
2	EA	HARNESS (TO POWER SUPPLY)	CON-6W - CONNECTION LEADS		SCH
1	EA	MULTITECH READER	MT11/MT15 - BY DIVISION 28	BLK	SCE
2	EA	DOOR CONTACT	679-05 TYPE AS REQ	WHT	SCE
1	EA	POWER SUPPLY	BY DIVISION 28		

NOTE: VERIFY WINDSTORM “CERTIFICATION” OF SPECIFIED HARDWARE W/DOOR SYSTEM. HARDWARE BUILT AS BASIS-OF-DESIGN AROUND KAWNEER 500IR DOOR SYSTEM. OPERATIONAL DESCRIPTION: DOORS NORMALLY CLOSED AND LOCKED. ENTRY BY VALID CARD READ OR MANUAL KEY OVERRIDE. FREE EGRESS AT ALL TIME. UPON LOSS OF POWER, DOORS TO REMAIN LOCKED.

Hardware Group No. CW715
PROVIDE EACH SGL DOOR(S) WITH THE FOLLOWING:

QTY		DESCRIPTION	CATALOG NUMBER	FINISH	MFR
1	EA	CONT. HINGE	112XY EPT HEIGHT AS REQ	628	IVE
1	EA	POWER TRANSFER	EPT10 CON	689	VON
1	EA	ELEC PANIC HARDWARE	RX-QEL-HH-99-EO-299F-CON-SNB 24 VDC	626	VON
1	EA	SFIC RIM CYLINDER	C953 W/ KEYED CONST. CORE	626	FAL
1	EA	SFIC CORE	C607	626	FAL
1	EA	SURFACE CLOSER	4040XP SCUSH X MTG BRKT, SPCR & PLATE AS REQ	689	LCN
1	EA	KICK PLATE	8400 10" X 2" LDW B-CS	630	IVE
1	EA	RAIN DRIP	11A	A	ZER
1	EA	GASKETING	488S PSA H & J	BK	ZER
1	EA	DOOR SWEEP	FAS-SEAL		STE
1	EA	THRESHOLD	566A-NH	A	ZER
1	EA	HARNESS (IN DOOR)	ALLEGION CONNECT TYPE & LENGTH AS REQ		SCH
1	EA	HARNESS (TO POWER SUPPLY)	CON-6W - CONNECTION LEADS		SCH
1	EA	MULTITECH READER	MT11/MT15 - BY DIVISION 28	BLK	SCE
1	EA	DOOR CONTACT	679-05 TYPE AS REQ	WHT	SCE
1	EA	POWER SUPPLY	BY DIVISION 28		

NOTE: VERIFY WINDSTORM “CERTIFICATION” OF SPECIFIED HARDWARE W/DOOR SYSTEM. HARDWARE BUILT AS BASIS-OF-DESIGN AROUND STEELCRAFT DOOR SYSTEM.
OPERATIONAL DESCRIPTION: DOOR NORMALLY CLOSED AND LOCKED. ENTRY BY VALID CARD READ OR MANUAL KEY OVERRIDE. FREE EGRESS AT ALL TIME. UPON LOSS OF POWER, DOOR TO REMAIN LOCKED.

Hardware Group No. CWX714M
PROVIDE EACH PR DOOR(S) WITH THE FOLLOWING:

QTY		DESCRIPTION	CATALOG NUMBER	FINISH	MFR
2	EA	CONT. HINGE	112XY EPT HEIGHT AS REQ	628	IVE
2	EA	POWER TRANSFER	EPT10 CON	689	VON
1	EA	REMOVABLE MULLION	KR4954	689	VON
2	EA	ELEC PANIC HARDWARE	RX-QEL-HH-99-EO-299F-CON-SNB 24 VDC	626	VON
1	EA	SFIC RIM CYLINDER	C953 W/ KEYED CONST. CORE	626	FAL
1	EA	SFIC MORTISE CYLINDER	C987 W/ KEYED CONST. CORE	626	FAL
2	EA	SFIC CORE	C607	626	FAL
1	EA	DOOR PULL	VR910 DT	630	IVE
1	EA	DOOR PULL	VR910 NL	630	IVE
2	EA	SURFACE CLOSER	4040XP SCUSH X MTG BRKT, SPCR & PLATE AS REQ	689	LCN
2	EA	KICK PLATE	8400 10" X 2" LDW B-CS	630	IVE
1	EA	RAIN DRIP	11A	A	ZER
1	EA	GASKETING	488S PSA H & J	BK	ZER
1	EA	ASTRAGAL GASKETING	8150SBK PSA	BK	ZER
1	EA	MULLION SEAL	8780NBK PSA	BK	ZER
2	EA	DOOR SWEEP	FAS-SEAL		STE
1	EA	THRESHOLD	566A-NH	A	ZER
2	EA	HARNESS (IN DOOR)	ALLEGION CONNECT TYPE & LENGTH AS REQ		SCH
2	EA	HARNESS (TO POWER SUPPLY)	CON-6W - CONNECTION LEADS		SCH
1	EA	MULTITECH READER	MT11/MT15 - BY DIVISION 28	BLK	SCE
2	EA	DOOR CONTACT	679-05 TYPE AS REQ	WHT	SCE
1	EA	POWER SUPPLY	BY DIVISION 28		

NOTE: VERIFY WINDSTORM “CERTIFICATION” OF SPECIFIED HARDWARE W/DOOR SYSTEM. HARDWARE BUILT AS BASIS-OF-DESIGN AROUND STEELCRAFT DOOR SYSTEM.
OPERATIONAL DESCRIPTION: DOORS NORMALLY CLOSED AND LOCKED. ENTRY BY VALID CARD READ OR MANUAL KEY OVERRIDE. FREE EGRESS AT ALL TIME. UPON LOSS OF POWER, DOORS TO REMAIN LOCKED.
NOTE: EXISTING FRAME TO REMAIN. IF NEW HARDWARE IS INCOMPATIBLE WITH EXISTING FRAME, NOTIFY VIA RFI.

Hardware Group No. G203
PROVIDE EACH SGL DOOR(S) WITH THE FOLLOWING:

QTY		DESCRIPTION	CATALOG NUMBER	FINISH	MFR
1	SET	GATE HINGE/CLOSER	BY GATE MANUFACTURER	626	B/O
1	EA	STOREROOM LOCK	ND80HD RHO	626	SCH
1	EA	SFIC CORE	C607	626	FAL

NOTE: HARDWARE SET IS A GUIDELINE. COORDINATE ALL GATE HARDWARE WITH MNFR PRIOR TO ORDERING.

Hardware Group No.G204
PROVIDE EACH PR DOOR(S) WITH THE FOLLOWING:

QTY		*DESCRIPTION*	*CATALOG NUMBER*	*FINISH*	*MFR*
2	*SET*	*GATE HINGE/CLOSER*	*BY GATE MANUFACTURER*	*626*	*B/O*
2	*EA*	*SURFACE BOLT*	*SB360 12"*	*US2C*	*IVE*
1	*EA*	*STOREROOM LOCK*	*ND80HD RHO*	*626*	*SCH*
1	*EA*	*SFIC CORE*	*C607*	*626*	*FAL*

NOTE: HARDWARE SET IS A GUIDELINE. COORDINATE ALL GATE HARDWARE WITH MNFR PRIOR TO ORDERING.

Hardware Group No.M001
PROVIDE EACH RU DOOR(S) WITH THE FOLLOWING:

QTY		*DESCRIPTION*	*CATALOG NUMBER*	*FINISH*	*MFR*
2	*EA*	*SFIC MORTISE CYLINDER*	*C987 W/ KEYED CONST. CORE*	*626*	*FAL*
2	*EA*	*SFIC CORE*	*C607*	*626*	*FAL*
1	*EA*	*KEY SWITCH*	*653-0505*	*630*	*SCE*
1	*EA*	*NOTE*	*REMAINDER OF HARDWARE BY DOOR MFR.*		

-COORDINATE HARDWARE WITH DOOR MFR.

Hardware Group No. S001
PROVIDE EACH SL DOOR(S) WITH THE FOLLOWING:

QTY		DESCRIPTION	CATALOG NUMBER	FINISH	MFR
1	EA	SFIC MORTISE CYLINDER	C987 W/ KEYED CONST. CORE	626	FAL
1	EA	SFIC CORE	C607	626	FAL
1	EA	NOTE	REMAINDER OF HARDWARE BY DOOR MFR.		

-COORDINATE HARDWARE WITH DOOR MFR.

Hardware Group No. W205
PROVIDE EACH SGL DOOR(S) WITH THE FOLLOWING:

QTY		DESCRIPTION	CATALOG NUMBER	FINISH	MFR
1	EA	CONT. HINGE	112XY HEIGHT AS REQ	628	IVE
1	EA	STOREROOM LOCK	ND80HD RHO	626	SCH
1	EA	SFIC CORE	C607	626	FAL
1	EA	SURFACE CLOSER	4040XP SCUSH X MTG BRKT, SPCR & PLATE AS REQ	689	LCN
1	EA	KICK PLATE	8400 10" X 2" LDW B-CS	630	IVE
1	EA	RAIN DRIP	11A	A	ZER
1	EA	GASKETING	488S PSA H & J	BK	ZER
1	EA	DOOR SWEEP	FAS-SEAL		STE
1	EA	THRESHOLD	566A-NH	A	ZER
1	EA	DOOR CONTACT	679-05 TYPE AS REQ	WHT	SCE

NOTE: VERIFY WINDSTORM “CERTIFICATION” OF SPECIFIED HARDWARE W/DOOR SYSTEM. HARDWARE BUILT AS BASIS-OF-DESIGN AROUND STEELCRAFT DOOR SYSTEM.
NOTE: @ ROOF TOP: DOOR TO BE KEYED ON INSIDE. FREE EGRESS FROM THE ROOF AT ALL TIME.

Hardware Group No. W305
PROVIDE EACH SGL DOOR(S) WITH THE FOLLOWING:

QTY		DESCRIPTION	CATALOG NUMBER	FINISH	MFR
1	EA	CONT. HINGE	112XY HEIGHT AS REQ	628	IVE
1	EA	ENTRANCE/OFFICE LOCK	ND50HD RHO	626	SCH
1	EA	SFIC CORE	C607	626	FAL
1	EA	SURFACE CLOSER	4040XP SCUSH X MTG BRKT, SPCR & PLATE AS REQ	689	LCN
1	EA	KICK PLATE	8400 10" X 2" LDW B-CS	630	IVE
1	EA	RAIN DRIP	11A	A	ZER
1	EA	GASKETING	488S PSA H & J	BK	ZER
1	EA	DOOR SWEEP	FAS-SEAL		STE
1	EA	THRESHOLD	566A-NH	A	ZER
1	EA	DOOR CONTACT	679-05 TYPE AS REQ	WHT	SCE

NOTE: VERIFY WINDSTORM “CERTIFICATION” OF SPECIFIED HARDWARE W/DOOR SYSTEM. HARDWARE BUILT AS BASIS-OF-DESIGN AROUND STEELCRAFT DOOR SYSTEM.

Hardware Group No. W505
PROVIDE EACH SGL DOOR(S) WITH THE FOLLOWING:

QTY		DESCRIPTION	CATALOG NUMBER	FINISH	MFR
1	EA	CONT. HINGE	112XY HEIGHT AS REQ	628	IVE
1	EA	CLASSROOM LOCK	ND70HD RHO	626	SCH
1	EA	SFIC CORE	C607	626	FAL
1	EA	SURFACE CLOSER	4040XP SCUSH X MTG BRKT, SPCR & PLATE AS REQ	689	LCN
1	EA	KICK PLATE	8400 10" X 2" LDW B-CS	630	IVE
1	EA	RAIN DRIP	11A	A	ZER
1	EA	GASKETING	488S PSA H & J	BK	ZER
1	EA	DOOR SWEEP	FAS-SEAL		STE
1	EA	THRESHOLD	566A-NH	A	ZER
1	EA	DOOR CONTACT	679-05 TYPE AS REQ	WHT	SCE

NOTE: VERIFY WINDSTORM “CERTIFICATION” OF SPECIFIED HARDWARE W/DOOR SYSTEM. HARDWARE BUILT AS BASIS-OF-DESIGN AROUND STEELCRAFT DOOR SYSTEM.

Hardware Group No. W714AM
PROVIDE EACH PR DOOR(S) WITH THE FOLLOWING:

QTY		DESCRIPTION	CATALOG NUMBER	FINISH	MFR
2	EA	PIVOT SET	7222 SET	626	IVE
4	EA	INTERMEDIATE PIVOT	7222 INT	626	IVE
1	EA	FIRE RATED REMOVABLE MULLION	KR9954	689	VON
2	EA	PANIC HARDWARE	XP99-EO	626	VON
1	EA	SFIC RIM CYLINDER	C953 W/ KEYED CONST. CORE	626	FAL
1	EA	SFIC MORTISE CYLINDER	C987 W/ KEYED CONST. CORE	626	FAL
2	EA	SFIC CORE	C607	626	FAL
2	EA	DOOR PULL	VR910 DT	630	IVE
1	EA	DOOR PULL	VR910 NL	630	IVE
2	EA	SURFACE CLOSER	4040XP SCUSH X MTG BRKT, SPCR & PLATE AS REQ	689	LCN
1	SET	SEAL	PERIMETER SEAL BY FRAME MFR.		
1	SET	ASTRAGAL	MEETING STILE SEAL BY DOOR MFR.		
2	EA	DOOR SWEEP	APPROVED FOR USE WITH OPENING SYSTEM	AL	ZER
1	EA	THRESHOLD	APPROVED FOR USE WITH OPENING SYSTEM	AL	ZER
2	EA	DOOR CONTACT	679-05 TYPE AS REQ	WHT	SCE

NOTE: VERIFY WINDSTORM “CERTIFICATION” OF SPECIFIED HARDWARE W/DOOR SYSTEM. HARDWARE BUILT AS BASIS-OF-DESIGN AROUND KAWNEER 500IR DOOR SYSTEM.

Hardware Group No.W714M
PROVIDE EACH PR DOOR(S) WITH THE FOLLOWING:

QTY		DESCRIPTION	CATALOG NUMBER	FINISH	MFR
2	EA	CONT. HINGE	112XY HEIGHT AS REQ	628	IVE
1	EA	REMOVABLE MULLION	KR4954	689	VON
2	EA	PANIC HARDWARE	HH-99-EO-299F-SNB	626	VON
1	EA	SFIC RIM CYLINDER	C953 W/ KEYED CONST. CORE	626	FAL
1	EA	SFIC MORTISE CYLINDER	C987 W/ KEYED CONST. CORE	626	FAL
2	EA	SFIC CORE	C607	626	FAL
1	EA	DOOR PULL	VR910 DT	630	IVE
1	EA	DOOR PULL	VR910 NL	630	IVE
2	EA	SURFACE CLOSER	4040XP SCUSH X MTG BRKT, SPCR & PLATE AS REQ	689	LCN
2	EA	KICK PLATE	8400 10" X 2" LDW B-CS	630	IVE
1	EA	RAIN DRIP	11A	A	ZER
1	EA	GASKETING	488S PSA H & J	BK	ZER
1	EA	ASTRAGAL GASKETING	8150SBK PSA	BK	ZER
1	EA	MULLION SEAL	8780NBK PSA	BK	ZER
2	EA	DOOR SWEEP	FAS-SEAL		STE
1	EA	THRESHOLD	566A-NH	A	ZER
2	EA	DOOR CONTACT	679-05 TYPE AS REQ	WHT	SCE

NOTE: VERIFY WINDSTORM “CERTIFICATION” OF SPECIFIED HARDWARE W/DOOR SYSTEM. HARDWARE BUILT AS BASIS-OF-DESIGN AROUND STEELCRAFT DOOR SYSTEM.

Hardware Group No.W715
PROVIDE EACH SGL DOOR(S) WITH THE FOLLOWING:

QTY		DESCRIPTION	CATALOG NUMBER	FINISH	MFR
1	EA	CONT. HINGE	112XY HEIGHT AS REQ	628	IVE
1	EA	PANIC HARDWARE	HH-99-EO-299F-SNB	626	VON
1	EA	SFIC RIM CYLINDER	C953 W/ KEYED CONST. CORE	626	FAL
1	EA	SFIC CORE	C607	626	FAL
1	EA	SURFACE CLOSER	4040XP SCUSH X MTG BRKT, SPCR & PLATE AS REQ	689	LCN
1	EA	KICK PLATE	8400 10" X 2" LDW B-CS	630	IVE
1	EA	RAIN DRIP	11A	A	ZER
1	EA	GASKETING	488S PSA H & J	BK	ZER
1	EA	DOOR SWEEP	FAS-SEAL		STE
1	EA	THRESHOLD	566A-NH	A	ZER
1	EA	DOOR CONTACT	679-05 TYPE AS REQ	WHT	SCE

NOTE: VERIFY WINDSTORM “CERTIFICATION” OF SPECIFIED HARDWARE W/DOOR SYSTEM. HARDWARE BUILT AS BASIS-OF-DESIGN AROUND STEELCRAFT DOOR SYSTEM.

Hardware Group No. WX205
PROVIDE EACH SGL DOOR(S) WITH THE FOLLOWING:

QTY		DESCRIPTION	CATALOG NUMBER	FINISH	MFR
1	EA	CONT. HINGE	112XY HEIGHT AS REQ	628	IVE
1	EA	STOREROOM LOCK	ND80HD RHO	626	SCH
1	EA	SFIC CORE	C607	626	FAL
1	EA	SURFACE CLOSER	4040XP SCUSH X MTG BRKT, SPCR & PLATE AS REQ	689	LCN
1	EA	KICK PLATE	8400 10" X 2" LDW B-CS	630	IVE
1	EA	RAIN DRIP	11A	A	ZER
1	EA	GASKETING	488S PSA H & J	BK	ZER
1	EA	DOOR SWEEP	FAS-SEAL		STE
1	EA	THRESHOLD	566A-NH	A	ZER
1	EA	DOOR CONTACT	679-05 TYPE AS REQ	WHT	SCE

NOTE: VERIFY WINDSTORM “CERTIFICATION” OF SPECIFIED HARDWARE W/DOOR SYSTEM. HARDWARE BUILT AS BASIS-OF-DESIGN AROUND STEELCRAFT DOOR SYSTEM.
NOTE: EXISTING FRAME TO REMAIN. IF NEW HARDWARE IS INCOMPATIBLE WITH EXISTING FRAME, NOTIFY VIA RFI.

Hardware Group No. WX214
PROVIDE EACH PR DOOR(S) WITH THE FOLLOWING:

QTY		DESCRIPTION	CATALOG NUMBER	FINISH	MFR
2	EA	CONT. HINGE	112XY HEIGHT AS REQ	628	IVE
2	SET	SNB PACKAGE	09-350-604 SB360	US2C	IVE
2	SET	MS STRIKE PACKAGE	09-82-604 SB360	US2C	IVE
2	EA	MANUAL FLUSH BOLT	FB458-12"	626	IVE
2	EA	SURFACE BOLT	SB360 12"	US2C	IVE
1	EA	STOREROOM LOCK	ND80HD RHO	626	SCH
1	EA	SFIC CORE	C607	626	FAL
1	EA	OH STOP	900S SERIES X SIZE & MOUNTING AS REQ (INACTIVE LEAF)	630	GLY
1	EA	SURFACE CLOSER	4040XP SCUSH X MTG BRKT, SPCR & PLATE AS REQ (ACTIVE LEAF)	689	LCN
2	EA	KICK PLATE	8400 10" X 1" LDW B-CS	630	IVE
1	EA	RAIN DRIP	11A	A	ZER
1	EA	GASKETING	488S PSA H & J	BK	ZER
1	EA	ASTRAGAL	"Z" STEEL ASTRAGAL		STE
2	EA	DOOR SWEEP	FAS-SEAL		STE
1	EA	THRESHOLD	566A-NH	A	ZER
2	EA	DOOR CONTACT	679-05 TYPE AS REQ	WHT	SCE

NOTE: VERIFY WINDSTORM “CERTIFICATION” OF SPECIFIED HARDWARE W/DOOR SYSTEM. HARDWARE BUILT AS BASIS-OF-DESIGN AROUND STEELCRAFT DOOR SYSTEM.
NOTE: EXISTING FRAME TO REMAIN. IF NEW HARDWARE IS INCOMPATIBLE WITH EXISTING FRAME, NOTIFY VIA RFI.

END OF SECTION

▲4 SECTION 11 66 00 - GYMNASIUM EQUIPMENT

PART 1 - GENERAL

1.1 RELATED DOCUMENTS

A. Drawings and general provisions of the Contract, including General and Supplementary Conditions and other Division 01 Specification Sections, apply to this Section.

1.2 SUMMARY

A. Section Includes: Requirements including but not limited to:
   1. Basketball equipment.
   2. Volleyball equipment.
   3. Safety pads.
   4. Accessories necessary for a complete installation.

1.3 DEFINITIONS

A. NFHS: National Federation of State High School Associations.

1.4 PERFORMANCE REQUIREMENTS

A. Seismic Performance: Basketball backstops and anchors shall withstand the effects of earthquake motions determined according to ASCE/SEI 7.

1.5 SUBMITTALS

A. Product Data: Technical data for each type of product, including assembly, disassembly, and storage instructions for removable equipment and to indicate the performance, fabrication procedures, product variations, and accessories
   1. If applicable, include assembly, disassembly, and storage instructions for removable equipment.
   2. Motors: Show nameplate data, ratings, characteristics, and mounting arrangements.

B. Shop Drawings: Submit plans, elevations, sections, details, and attachments to other work.
   1. Include details of field assembly for removable equipment, connections, installation, mountings, floor inserts, attachments to other work, and operational clearances.
   2. Include transport and storage accessories for removable equipment.

C. Samples: For the following products:
   1. Pad Fabric: Wall padding not less than 3 inches (76 mm) square, and corner and column samples not less than 3 inches (76 mm) long, with specified treatments applied. Mark face of material.

D. Coordination Drawings: Court layout plans, drawn to scale, and coordinated with floor inserts, game lines, and markers applied to finished flooring.

E. Product Certificates: For each type of gymnasium equipment.

F. Operation and Maintenance Data: For gymnasium equipment to include in emergency, operation, and maintenance manuals.

1.6 FIELD CONDITIONS

A. Environmental Limitations: Do not install gymnasium equipment until spaces are enclosed and weatherproof, wet work in spaces is complete and dry, and ambient temperature and humidity conditions are maintained at the levels indicated for Project when occupied for its intended use.

B. Field Measurements: Verify position and elevation of floor inserts and layout for gymnasium equipment.

1.7 COORDINATION

A. Coordinate installation of floor inserts with structural floors and finish flooring installation and with court layout and game lines and markers on finish flooring.

B. Coordinate layout and installation of overhead supported gymnasium equipment and suspension system components with other construction including light fixtures, HVAC equipment, fire suppression system components, and partition assemblies.

1.8 WARRANTY

A. Written warranty in which manufacturer agrees to repair or replace components of gymnasium equipment that fail in materials or workmanship within specified warranty period.
   1. Failures include, but are not limited to, the following:
      a. Basketball backboard failures including glass breakage.
      b. Faulty operation of basketball backstops.

   2. Warranty Period: 25 years from date of Substantial Completion.

PART 2 - PRODUCTS

2.1 MATERIALS

A. Aluminum: Alloy and temper recommended by manufacturer for use and finish type indicated.
   1. Extruded Bars, Profiles, and Tubes: ASTM B 221 (ASTM B 221M).
   2. Cast Aluminum: ASTM B 179.
   3. Flat Sheet: ASTM B 209 (ASTM B 209M).

B. Steel: Comply with the following:
   1. Steel Plates, Shapes, and Bars: ASTM A 36/A 36M.
   2. Steel Tubing: ASTM A 500/A 500M or ASTM A 513, cold formed.
   3. Steel Sheet: ASTM A 1011/A 1011M.

C. Support Cable: 1/4 inch (6 mm) diameter, 7x19 galvanized stranded steel wire rope with breaking strength of 7000 lb (3175 kg). Provide fittings complying with wire rope manufacturer's written instructions for size, number, and installation method.

D. Support Chain and Fittings: For chains used for overhead lifting, provide Grade 80 heat treated alloy steel chains, complying with ASTM A 391/A 391M, with commercial quality, hot dip galvanized or zinc plated steel connectors and hangars.

E. General Purpose Chain: For chains not used for overhead lifting, provide carbon steel chain, complying with ASTM A 413/A 413M, Grade 30 proof coil chain or other grade recommended by gymnasium equipment manufacturer. Provide coating type, chain size, number, and installation method complying with manufacturer's written instructions.

F. Castings and Hangers: Malleable iron, complying with ASTM A 47/A 47M; grade required for structural loading.

G. Softwood Plywood: DOC PS 1, exterior.

H. Anchors, Fasteners, Fittings, and Hardware: Corrosion resistant or noncorrodible units; concealed; tamperproof, vandal and theft resistant design.

I. Grout: Nonshrink, nonmetallic, premixed, factory packaged, nonstaining, noncorrosive, nongaseous grout, complying with ASTM C 1107/C 1107 with minimum strength recommended in writing by gymnasium equipment manufacturer.

2.2 BASKETBALL EQUIPMENT

A. Basis of Design: Performance Sports Systems. Other manufacturers are subject to compliance with requirements.
1. AALCO Manufacturing.
2. ADP Lemco.
3. Arizona Courtlines, Inc.
4. Basketball Products International.
5. Bison, Inc.
6. Douglas Industries, Inc.
7. Draper Inc.
8. IPI by Bison.
9. Jaypro Sports, LLC.
10. L. A. Steelcraft Products, Inc.
11. P. W. Athletic Mfg. Co.
12. Performance Sports Systems.
13. Schelde North America.
14. Spalding Equipment.

B. Protruding fasteners or exposed bolt heads on front face of backboards are not permitted.

C. Provide manufacturer's recommended connections complying with Section 05 50 00 of size and type required to transfer loads to building structure.

D. Overhead Supported Backstops:
1. Folding Type: Provide manufacturer's standard assembly for backward folding backstop, with hardware and fittings to permit folding.
2. Framing: Steel pipe, tubing, and shapes. Design framing to minimize vibration during play.
   a. Dual Mast Frame: Welded and bolted or clamped with cross bracing.
   b. Finish: Polyester powder coat finish.

3. Goal Height Adjuster: Adjustable from 8 to 10 feet (2.4 to 3 m) with gear drive mechanism, locking in any position within adjustment range, with visible height scale attached to side of framing.
   a. Operation: Manual with detachable crank handle.
   b. Operation: Electric with integral gear-drive motor, with limit switches preset to goal heights and the following:
      1) Key switch control.
      2) One detachable electric control device(s).
      3) Wireless remote control.

E. Backstop Safety Device: Designed to limit free fall if support cable, chains, pulleys, fittings, winch, or related components fail; with mechanical automatic reset; 6000 lb (2722-kg) load capacity; one per folding backstop.

F. Winch: Hoist, consisting of heavy duty, fully enclosed worm gear; brake; cable drum; cable; and fittings, for mounting on wall with equipment mounting board; designed to move and hold backboard in any raised or lowered position.
   1. Operation: Manual winch with detachable hand crank.
   2. Portable Winch Operator: One portable electric motor-drive device(s) including adaptor to fit crank mechanism.

G. Backstop Electric Operator: Provide operating machine of size and capacity recommended by manufacturer for equipment specified, with electric motor and factory prewired motor controls, starter, gear reduction unit, and remote controls. Coordinate wiring requirements and electrical characteristics with building electrical system.
   1. Electrical Components, Devices, and Accessories: Listed and labeled as defined in NFPA 70, by a qualified testing agency, and marked for intended location and application.
   2. Operator Type: Cable drum with grooved drum and cable tension device to automatically take up cable slack and retain cable in grooves.
   3. Operator Mounting: Wall mounted board.
   4. Motor Electrical Characteristics:
      a. Voltage: NEMA standard voltage selected to operate on nominal circuit voltage to which motor is connected.
      b. Horsepower: 1 hp.
      c. Phase: Single.

   5. Remote Control Station(s): NEMA ICS 6, Type 1 enclosure for recessed or flush mounting and momentary contact, three position, switch operated control with up, down, and off functions.
      a. Group Key Switch Control Stations: One switch per two backstops.
      b. Keys: Provide dual keys, one key for up and one for down per station.
      c. Switches, Ganged: Single faceplate with multiple switch cut outs for six switches operating 12 backstops.
      d. Control Station Enclosure: Provide prime-painted metal enclosure with key access with two sets of keys per enclosure.
      e. Radio Controls: Digital system consisting of code compatible universal coaxial receiver, one per backstop winch, and two portable multiple channel transmitters for operating up to nine backstops individually with up and down functions.

   6. Limit Switches: Adjustable switches, interlocked with motor controls and set to automatically stop basketball equipment at fully retracted and fully lowered positions.

H. Basketball Backboards:
   1. Shape and Size:
      a. Rectangular, 72 inches by 48 inches (1800 mm by 1200 mm) width by height.

   2. Backboard Material: With predrilled holes or preset inserts for mounting goals, and as follows:
      a. Fiberglass: Not less than 1-1/2 inch (38 mm) thick, composite backboard consisting of not less than two 3/16 inch (5 mm) thick, molded fiberglass panels laminated together over faces and edges encapsulating a 3/4 inch (19 mm) honeycomb core, reinforced at goal and backboard mountings, or a wood panel product core; with threaded inserts or embedded anchors for mounting backboard corners to support framing at standard mounting centers.

b. Glass: Not less than 1/2 inch (13 mm) thick, transparent tempered glass complying with ASTM C 1048 Kind FT (fully tempered) and with impact testing requirements in 16 CFR 1201 Category II or ANSI Z97.1 Class A for safety glazing.
   1) Provide glass with impact absorbing resilient rubber or PVC gasket around perimeter in a fully welded, brushed natural finish, extruded aluminum frame, with steel subframe, reinforcement, bracing, and mounting slots for mounting backboard frame to backboard support framing.
   2) Standard Mount: Provide steel corner reinforcement with mounting slots for mounting backboard frame to backstop at standard mounting centers. Provide center strut frame reinforcement.
   3) Rim Restraining Device: Complying with NCAA and NFHS rules and designed to ensure that basket remains attached if glass backboard breaks.

3. Target Area and Border Markings: Permanently etched in white color, marked in pattern and stripe width according to referenced rules.

I. Goal Mounting Assembly: Compatible with goal, backboard, and support framing; with hole pattern 5 inches (127 mm) o.c. horizontally and vertically for goal attachment.
   1. Glass Backboard Goal Mounting Assembly: Goal support framing and reinforcement designed to transmit load from goal to backboard frame and to minimize stresses on glass backboard.
   2. Direct Mount: Designed for mounting goal directly and independently to center mast of backboard support framing so no force, transmitted by ring, is directly applied to backboard, and rigidity and stability of goal are maximized.

J. Basketball Goals: Complete with flanges, braces, attachment plate, and evenly spaced loops welded around underside of ring.
   1. Single Rim Basket Ring Competition Goal: Materials, dimensions, and fabrication complying with referenced rules.
   2. Type: Movable, breakaway design with breakaway mechanism and rebound characteristics identical to those of fixed, nonmovable ring.
   3. Breakaway Characteristics: Positive lock movable breakaway design, with breakaway mechanism including preset pressure release, set to release at 230 lb (105 kg) load, and automatic reset. Provide movable ring with rebound characteristics identical to those of fixed, nonmovable ring.

K. Basketball Nets: 12 loop mesh net, between 15 inches and 18 inches (380 mm to 460 mm) long, sized to fit rim diameter:
   1. Cord: Made from white nylon.
   2. Competition Cord: Antiwhip, made from white nylon cord not less than 120 gm thread and not more than 144 gm thread.

L. Backboard Safety Pads: Designed for backboard thickness indicated and extending continuously along bottom and up sides of backboard and over goal mounting and backboard supports required by referenced rules.
   1. Attachment: Peel and stick tape.
   2. Color: Selected by Architect.

~~**2.3 VOLLEYBALL EQUIPMENT**~~

~~A. Basis of Design: Performance Sports Systems. Other manufacturers are subject to compliance with requirements.~~
~~1. AALCO Manufacturing.~~
~~2. ADP Lemco.~~
~~3. American Athletic, Inc.~~
~~4. Arizona Courtlines, Inc.~~

5. Bison, Inc.
6. Douglas Industries, Inc.
7. Draper Inc.
8. IPI by Bison.
9. Jaypro Sports, LLC.
10. L. A. Steelcraft Products, Inc.
11. P. W. Athletic Mfg. Co.
12. Porter Athletic Equipment Company.
13. Schelde North America.
14. Spalding Equipment.
15. Sports Imports.

B. Floor Insert: Chrome finished steel floor plate; and steel pipe sleeve, concealed by floor plate, with capped bottom end, sized with ID to fit post standards, not less than required to securely anchor pipe sleeve indicated; with anchors designed for securing floor insert to floor substrate indicated;quantity as indicated.
1. Floor Plate: Self locking, hinged access cover, designed to be flush with adjacent flooring. Provide one tool(s) for unlocking access covers.
2. Floor Plate: Self locking, hinged access cover, recessed to accept finish flooring matching and designed to be level with adjacent flooring. Provide one tool(s) for unlocking access covers.
3. Floor Plate: Lockable swivel access cover, designed for use with floating wood floors and to be flush with adjacent flooring. Provide two tool(s) for unlocking access covers.

C. Post Standards: Removable, paired volleyball post standards and a center post standard for multicourt play as indicated. Fixed height. Designed for easy removal from permanently placed floor insert supports. Fabricated from combined steel and extruded aluminum pipe or tubing, with nonmarking plastic or rubber end cap or floor bumper to protect permanent flooring. Finished with factory applied, polyester powder coat finish complying with finish manufacturer's written instructions for surface preparation, including pretreatment, application, baking, and minimum dry film thickness or plated metal finish.
1. Nominal Pipe or Tubing Diameter: 4 inch (102 mm) OD at base.
2. Net Height Adjuster: Track or rail system and lock mechanism designed for infinite height adjustment, complete with fittings; designed for positioning net at heights indicated.
3. Telescopic and Net Height Adjuster System: Provide infinitely adjustable system consisting of screw rod, gear, and crank or constant tension spring and pulley assist and] [incrementally adjustable system with predrilled holes and pin locking device, telescopic post, and fittings for holding net at selected height; designed for height adjustment of post standard to position net at heights indicated.
4. Height Markers: Clearly marked at regulation play heights for middle school.

D. Net: 32 feet (9.75 m) long; two per every center post standard;
1. Width and Mesh: 36 inches (910 mm) with 4-1/2 inch (114 mm) square mesh made of black polyester string.
   a. Hem Band Edges: White, 2 inch (50 mm) wide top binding; black, 1 inch (25 mm) wide bottom and side bindings; tie offs at top and bottom of each side end of net; and 1/4 inch (6 mm) diameter rope, at least 42 feet (12.8 m) long, threaded through top hem of binding.

2. Width and Mesh: Competition volleyball net, 36 inches (910 mm) with 4 inch (102 mm) square knotless mesh made of black nylon string.
   a. Hem Band Edges: White, not less than 2 inch (50 mm) wide top, bottom, and side bindings; tie offs at top, bottom, and midpoint of each side end of net] [not less than 1 inch (25 mm) wide tension straps at top, bottom, and midpoint of each side end of net; end sleeves for dowels; and lines with linkage fittings threaded through top and

bottom hems of binding. Provide lengths of lines and linkage fittings as required to properly connect to and set up net for post standard spacing indicated on Drawings.
1) Top Line: Not less than 1/4 inch (6 mm) diameter rope.
2) Bottom Line: Not less than 1/4 inch (6 mm) diameter rope.

3. Dowels: Not less than 1/2 inch (13 mm) diameter fiberglass or 1 inch (25 mm) diameter wood. Provide two dowels per net threaded through each side hem sleeve for straightening net side edges.
4. Net Antennas: 3/8 inch (9.5 mm) diameter, high tensile strength, extruded fiberglass or plastic rods, 72 inches (1800 mm) long, extending above top hem band of net, with alternating white and red bands according to competition rules. Provide two antennas per net.
   a. Clamps: Designed to secure antenna to top and bottom of net.

5. Boundary Tape Markers: 2 inch (50 mm) wide white strip with sleeve for securing net antenna, secured to net top and bottom with hook and loop attachment. Provide two tape markers per net for marking court boundaries.

E. Net Tensioning System: Designed to adjust and hold tension of net. Fully enclosed, nonslip worm gear type winch with cable length and fittings for connecting to net lines, positive release mechanism, and permanently fixed handle. Mount net tensioner on post standard at side away from court.] Provide end post with post top pulley. Provide opposing post with welded-steel loops, hooks, pins, or other devices for net attachment and post top grooved line guide.

F. Bottom Net Lock Tightener: Provide quick release type tension strap; a spring loaded, self locking tensioner; a turnbuckle; a pulley; or other device and linkage fittings designed to quickly and easily tighten bottom line or net.

G. Judges' Stands: Provide adjustable height units designed to be freestanding, folding for storage with wheels for transporting Fabricate welded steel tubing units with finish and color to match post standards.

H. Safety Pads: Comply with NCAA and NFHS requirements. Provide pads consisting of not less than 1-1/4 inch (32 mm) thick, multiple impact resistant crosslinked or closed cell polyethylene foam filler covered by puncture and tear resistant fabric cover not less than 14 oz./sq. yd. (475 g/sq. m) nylon reinforced PVC; with fire test response characteristics indicated , and lined with fire retardant liner. Provide pads with hook and loop closure or attachments for the following components:
1. Post Standards: Wraparound style, designed to totally enclose each standard to a height of not less than 72 inches (1800 mm); one per post.
2. Net Lines: Four per net minimum or as indicated on the drawings.
3. Judges' Stands: Designed to totally enclose each unit.
4. Fabric Cover Flame Resistance Ratings: Complies with NFPA 701.
5. Fabric Color: Selected by Architect.
6. Graphics: Custom graphics as indicated.

I. Post Standard Transporter: Wheeled unit designed for transporting a single post.

J. Wall Storage Rack: Unit designed for mounting on walls and for storing post standards in vertical position with retaining arms, fittings for padlock, and mounting hardware; number of units as required to provide storage for specified equipment.

K. Storage Cart: Wheeled unit designed for transporting and storing volleyball equipment and passing through 36 inch (910 mm) wide door openings. Fabricate welded steel tubing units with heavy duty casters, including no fewer than two swivel casters. Fabricate wheels from materials

~~that do not damage or mark floors; number of units as required to provide transport and storage for specified equipment.~~

2.3 VOLLEYBALL EQUIPMENT

A. Basis of Design: Sports Imports. Other manufacturers are subject to compliance with requirements.
   1. AALCO Manufacturing.
   2. ADP Lemco.
   3. American Athletic, Inc.
   4. Arizona Courtlines, Inc.
   5. Bison, Inc.
   6. Douglas Industries, Inc.
   7. Draper Inc.
   8. IPI by Bison.
   9. Jaypro Sports, LLC.
   10. L. A. Steelcraft Products, Inc.
   11. P. W. Athletic Mfg. Co.
   12. Performance Sports Systems.
   13. Porter Athletic Equipment Company.
   14. Schelde North America.
   15. Spalding Equipment.
   16. Sports Imports.

B. Floorplate and Sleeves:
   1. Basis of Design: Model KA25 as manufactured by Sports Imports.
   2. Floorplate shall be solid brass of 6 5/8" diameter with hinged access cover and a 3 11/16" opening.
   3. Removable, threaded, or pin swivel covers are unacceptable.
   4. Plate shall be .25" thick and shall be designed to be compatible with all floor surfaces.
   5. In a wood floor, the plate shall be fastened only to the wood floor so that it can move with any expansion or contraction of the floor.
   6. Sleeve shall be DOM tubular steel of .140" thickness, 8 7/8" long and 3 1/16" internal diameter. Seamed tubing or pipe is unacceptable.
   7. Sleeve shall have three pre-drilled flanges for attachment to the plate during the installation in accordance with manufacturer's instructions and shall have a nitrated finish to resist corrosion.
   8. The bottom of the sleeve shall be 10" from the floor surface.

C. Post Standards:
   1. Basis of Design: Model ST-1 & Model HDNR-B as manufactured by Sports Imports.
   2. Lower section shall be a pultruded high tensile carbon fiber with 3" external diameter tube 6 feet in length, with a wall thickness of .313"; the first 30" being reinforced with a wall thickness of .563".
   3. The upper section shall be of the same pultruded high tensile carbon fiber with an OD of 2.375" and a wall thickness of .25".
   4. The pole shall have twenty (20) permanent heights, including competition height indicators for juniors', men's and women's height settings and have net height internal adjustments from 6'6" to 8'2". Net height should be maintained using a steel pin.
   5. Pole should not exceed a weight of 20 lbs.
   6. Pole shall have a molded polycarbonate pulley wheel to direct cable.
   7. The bottom pole shall have a non-skid, non-marking rubber insert to protect the gym floor. The net tensioning device shall have a self-lubricating take up axle and a positive release mechanism for easy release of net tension with removable crank handle for safety.
   8. This device should be leaderless, with chains and steel cables unacceptable.
   9. The tightening device should not be mounted on the court side of the pole.

D. Net:
   1. Basis of Design: Model HM50 as manufactured by Sports Imports.
   2. Net shall be 32' in length and 1 meter (39") wide with black, knotless, nylon mesh measuring 4" X 4" square.
   3. Net shall have white double thickness, 2", vinyl binding on the top and sides, with end sleeves capable of accepting wooden dowels.
   4. The bottom rope is encased in a 1 1/2" double thick white nylon material.
   5. There shall be a ¼" diameter aramid Technora fiber cable, 47' in length, through the top of the net and continuous nylon rope 43 feet in length through the bottom of the net.
   6. The net shall also include dowel rods, net-locks with covers, hook and loop sideline markers and hook and look side straps.
   7. Customized top tape available.

E. Net Antenna:
   1. Basis of Design: Model NA2 as manufactured by Sports Imports.
   2. Shall be plastic, red and white in color, and have mechanical clamps for attachment to the top and bottom cables of the net.
   3. Antenna shall be adjustable to fit either 36" or 1-meter wide nets and can be attached to the net while standing on the floor.
   4. Attachment via rope, hook and loop straps or into a pocket are unacceptable.
   5. Antenna should not have a removable rubber cap at the bottom

F. Bottom Net Lock Tightener: Provide quick release type tension strap; a spring loaded, self locking tensioner; a turnbuckle; a pulley; or other device and linkage fittings designed to quickly and easily tighten bottom line or net.

G. Official Stand and Pads: The pads are ASTM E-84-08a flame retardant
   1. Basis of Design: Model PSP1 (Portable) as manufactured by Sports Imports.
   2. Shall be constructed of 1¼" tubular steel with steel platform and non-adjustable tubular legs with non-marring rubber caps.
   3. Stand shall be free standing and shall fold up and have wheels for easy transport.
   4. Stand dimensions are: 70"H x 33"W x 45"D (12" folded).
   5. Safety bars will be located 30" above the platform.
   6. Padding will be polyfoam with vinyl covering and will attach around the platform and legs with hook and loop straps.
   7. Padding is available in ten different colors. Architect to select from manufacturer's full range of colors.

H. Pole Protective Padding: ASTM E-84-08a flame retardant.
   1. Basis of Design: Model FP1 as manufactured by Sports Imports.
   2. Pads shall be single piece with three panels of 2" firm flexible urethane foam core.
   3. Pads shall measure 5'7" in height and have a 35" X 2" slot on the front panel to allow net cable access.
   4. Slot is closed by two (2) straps with hook and loop fasteners.
   5. Side panels close away from the court and close with four (4) straps with hook and loop fasteners.
   6. The entire assembly is covered with 14-ounce, phthalate free vinyl.
   7. Pads are available in 10 standard, in-stock colors and can be customized with team name/logo and PMS color.

I. Safety Pads: Comply with NCAA and NFHS requirements. Provide pads consisting of not less than 1-1/4 inch (32 mm) thick, multiple impact resistant crosslinked or closed cell polyethylene foam filler covered by puncture and tear resistant fabric cover not less than 14 oz./sq. yd. (475 g/sq. m) nylon reinforced PVC; with fire test response characteristics indicated , and lined with fire retardant liner. Provide pads with hook and loop closure or attachments for the following components:

1. Post Standards: Wraparound style, designed to totally enclose each standard to a height of not less than 72 inches (1800 mm); one per post.
2. Net Lines: Four per net minimum or as indicated on the drawings.
3. Judges' Stands: Designed to totally enclose each unit.
4. Fabric Cover Flame Resistance Ratings: Complies with NFPA 701.
5. Fabric Color: Selected by Architect.
6. Graphics: Custom graphics as indicated.

J. Post Standard Transporter: Wheeled unit designed for transporting a single post.

K. Wall Storage Rack:
1. Basis of Design: Model WR10 as manufactured by Sports Imports.
2. Rack shall be of steel construction with appropriate openings for 3/8" anchoring devices. The rack measures 11.75” wide and extends 8.25” from the wall.
3. Each rack shall have two concave receptacles for volleyball or badminton/pickleball pole storage.
4. Each rack will have a spring-loaded retaining arm to restrict movement or removal of poles.
5. A locking bar can be provided to prevent any unauthorized removal of poles (WR10-L).

L. Storage Cart: Wheeled unit designed for transporting and storing volleyball equipment and passing through 36 inch (910 mm) wide door openings. Fabricate welded steel tubing units with heavy duty casters, including no fewer than two swivel casters. Fabricate wheels from materials that do not damage or mark floors; number of units as required to provide transport and storage for specified equipment.

2.4 SAFETY PADS

A. Basis of Design: Performance Sports Systems. Other manufacturers are subject to compliance with requirements.
1. AALCO Manufacturing.
2. ADP Lemco.
3. American Athletic, Inc.
4. Bison, Inc.
5. Draper Inc.
6. IPI by Bison.
7. Jaypro Sports, LLC.
8. Porter Athletic Equipment Company.
9. Spalding Equipment.

B. Safety Pad Surface Burning Characteristics: ASTM E 84 by UL or another testing and inspecting agency acceptable to authorities having jurisdiction:
1. Flame Spread Index: 25 or less.
2. Smoke Developed Index: 450 or less.

C. Pad Coverings: Provide safety pad fabric covering that is fabricated from puncture and tear resistant, PVC coated polyester or nylon reinforced PVC fabric, not less than 14 oz./sq. yd (475 g/sq. m) and treated with fungicide for mildew resistance; with surface burning characteristics indicated, and lined with fire retardant liner.

D. Wall Safety Pads: Padded wall wainscot panels designed to be attached in a continuous row; each panel section consisting of fill laminated to backer board with visible surfaces fully covered by seamless fabric covering, free of sag and wrinkles and firmly attached to back of backer board.
1. Backer Board: Not less than 3/8 inch (9.5 mm) thick fire retardant treated plywood according to AWPA U1, UCFA Fire Retardant Interior.
2. Fire Resistive Fill: Multiple impact resistant foam not less than 1-1/2 inch (38 mm) thick, fire resistive neoprene; 6.0 lb/cu. ft. (96 kg/cu. m) density.

3. Size: Each panel section, 48 inches wide by not less than 144 inches long.
4. Number of Modular Panel Sections: As indicated.
5. Installation Method: Concealed mounting Z clips.
6. Fabric Covering Color(s): Selected by Architect for two color(s).
7. Graphics: Custom graphics as indicated.

E. Cut out Trim: Provide flanged cut out trim kits for fitting pads around switches, receptacles, and other obstructions.
1. Color: Architect to select color.

PART 3 - EXECUTION

3.1 EXAMINATION

A. Examine substrates, areas, and conditions for compliance with requirements for play court layout, alignment of mounting substrates, installation tolerances, operational clearances, accurate locations of connections to building electrical system, and other conditions affecting performance of the Work.

1. Verify critical dimensions.
2. Examine supporting structure, subgrades, subfloors, and footings below finished floor.
3. Examine wall assemblies, where reinforced to receive anchors and fasteners, to verify that locations of concealed reinforcements are clearly marked. Locate reinforcements and mark locations.

B. Proceed with installation after correcting unsatisfactory conditions.

3.2 INSTALLATION

A. Comply with manufacturer's written installation instructions and competition rules indicated for each type of gymnasium equipment. Complete equipment field assembly where required.

B. Unless otherwise indicated, install gymnasium equipment after other finishing operations, including painting, are completed.

C. Permanently Placed Gymnasium Equipment and Components: Install rigid, level, plumb, square, and true; anchored securely to supporting structure; positioned at locations and elevations indicated; in proper relation to adjacent construction; and aligned with court layout.
1. Floor Insert Location: Coordinate location with application of game lines and markers , and core drill floor for inserts after game lines are applied.
2. Floor Insert Elevation: Coordinate installed heights of floor insert with installation and field finishing of finish flooring and floor-plate type.
3. Operating Gymnasium Equipment: Verify clearances for movable components of gymnasium equipment throughout entire range of operation and for access to operating components.

D. Floor Insert Setting: Position sleeve in oversized, recessed voids in concrete slabs and Footings. Clean voids of debris. Fill void around sleeves with grout, mixed and placed to comply with grout manufacturer's written instructions. Protect portion of sleeve above subfloor and footing from splatter. Verify that sleeves are set plumb, aligned, and at correct height and spacing; hold in position during placement and finishing operations until grout is sufficiently cured. Set insert so top surface of completed unit is flush with finished flooring surface.

E. Safety Pads: Mount with bottom edge at 4 inches (102 mm**)** dimension indicated on Drawings above finished floor.

F. Cut out Trim: Limit cuts in face of padding from trim unit's corner to corner outside dimensions. Install with ends of cuts concealed behind trim flange.

G. Anchoring to In Place Construction: Use anchors and fasteners where necessary to secure built in and permanently placed gymnasium equipment to structural support and to properly transfer load to in place construction.

H. Connections: Connect electric operators to building electrical system.

I. Removable Gymnasium Equipment and Components: Assemble in place to verify that equipment and components are complete and in proper working order. Instruct Owner's designated personnel in properly handling, assembling, adjusting, disassembling, transporting, storing, and maintaining units. Disassemble removable gymnasium equipment after assembled configuration is approved by Architect and Owner, and store units in location indicated on Drawings.

3.3 ADJUSTING

A. Adjust movable components of gymnasium equipment to operate safely, smoothly, easily, and quietly, free from binding, warp, distortion, nonalignment, misplacement, disruption, or malfunction, throughout entire operational range. Lubricate hardware and moving parts.

3.4 CLEANING

A. After completing gymnasium equipment installation, inspect components. Remove spots, dirt, and debris and touch up damaged shop applied finishes according to manufacturer's written instructions.

B. Replace gymnasium equipment and finishes that cannot be cleaned and repaired, in a manner approved by Architect, before time of Substantial Completion.

3.5 DEMONSTRATION

A. Engage a factory authorized service representative to train Owner's maintenance personnel to adjust, operate, and maintain gymnasium equipment.

END OF SECTION 11 66 00

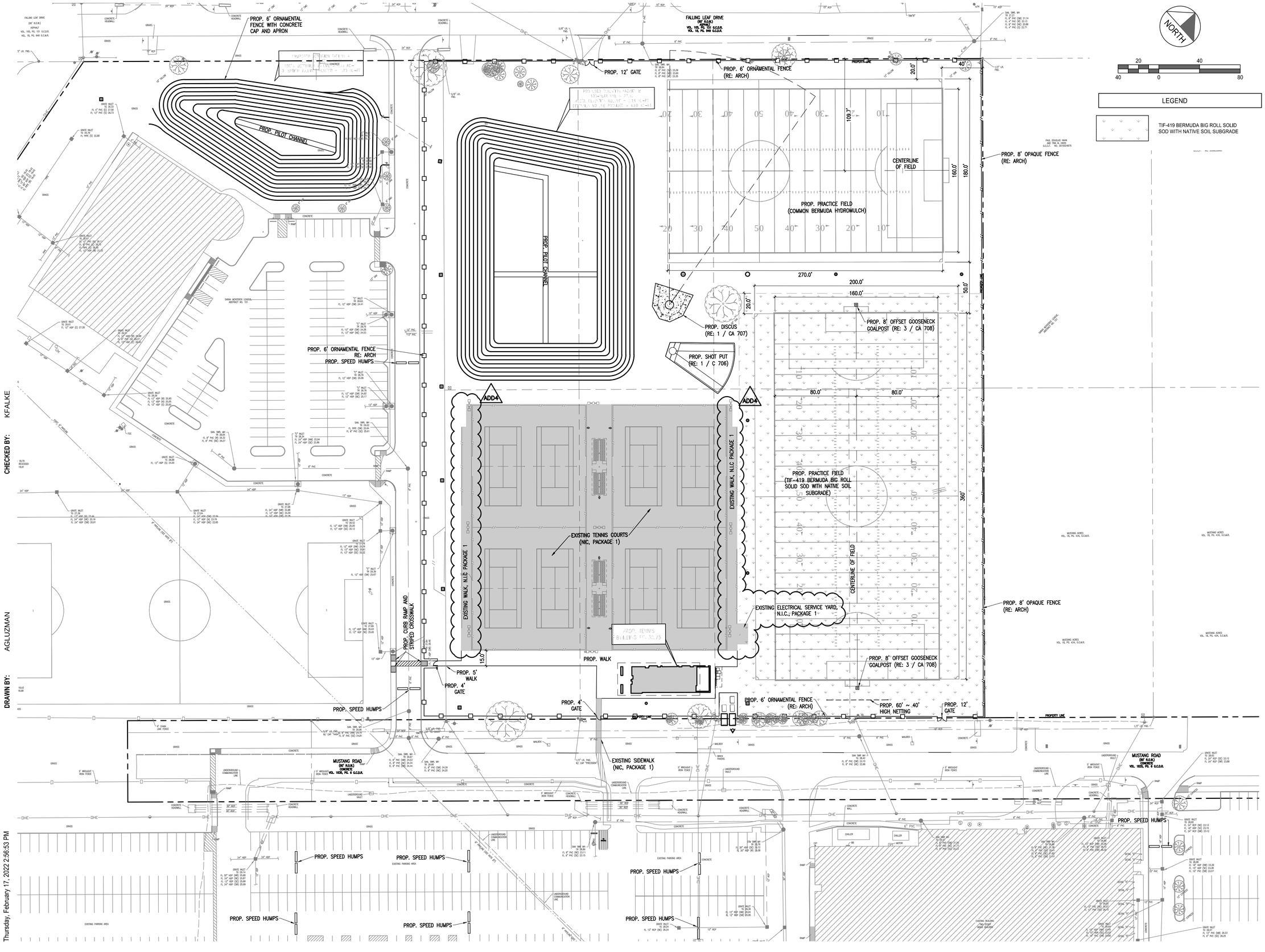

PBK

ARCHITECT PBK Architects, Inc.
HOUSTON
11 Greenway Plaza, 22nd Floor
Houston, TX 77046
713-965-0608 P
713-961-4571 F
TX Firm: BR 1608

CIVIL
DIO
T 713-965-0608
SPORTS
PBK SPORTS
T 281-528-1697
STRUCTURAL
KUBALA ENGINEERS
T 800-248-3674
MEP
LEAF ENGINEERS
T 713-940-3300
ENVELOPE
BEAM
T 713-940-3201
AV / ACOUSTIC
JAFFE HOLDEN
T 713-807-7100
THEATER
SCHULER SHOOK
T 214-747-8300
FOOD SERVICE
FOOD DESIGN PROFESSIONAL
T 281-350-2323

FRIENDSWOOD HIGH SCHOOL ADDITIONS AND RENOVATIONS

702 Greenbriar Dr
Friendswood, TX 77546

ISSUE FOR PROPOSAL

H.F. SCHNEIDER, III
69402
REGISTERED PROFESSIONAL ENGINEER
02/17/2022

CLIENT
FRIENDSWOOD ISD

DATE	PROJECT NUMBER
02/02/2022	20381

DRAWING HISTORY

No.	Description	Date
ADD4	ADDENDUM 4	2/17/2022

ISSUE FOR PROPOSAL

PRELIMINARY SITE PLAN (AREA A)

C 102

CHECKED BY: KFALKE
DRAWN BY: AGLUZMAN
B:\20\20381\Div8-Dwgs\8a BIM CAD\02 Civil_Package 2 Building Expansion\C 102 SITE PLAN (AREA A).dwg Last Saved: KFALKE
Thursday, February 17, 2022 2:56:53 PM

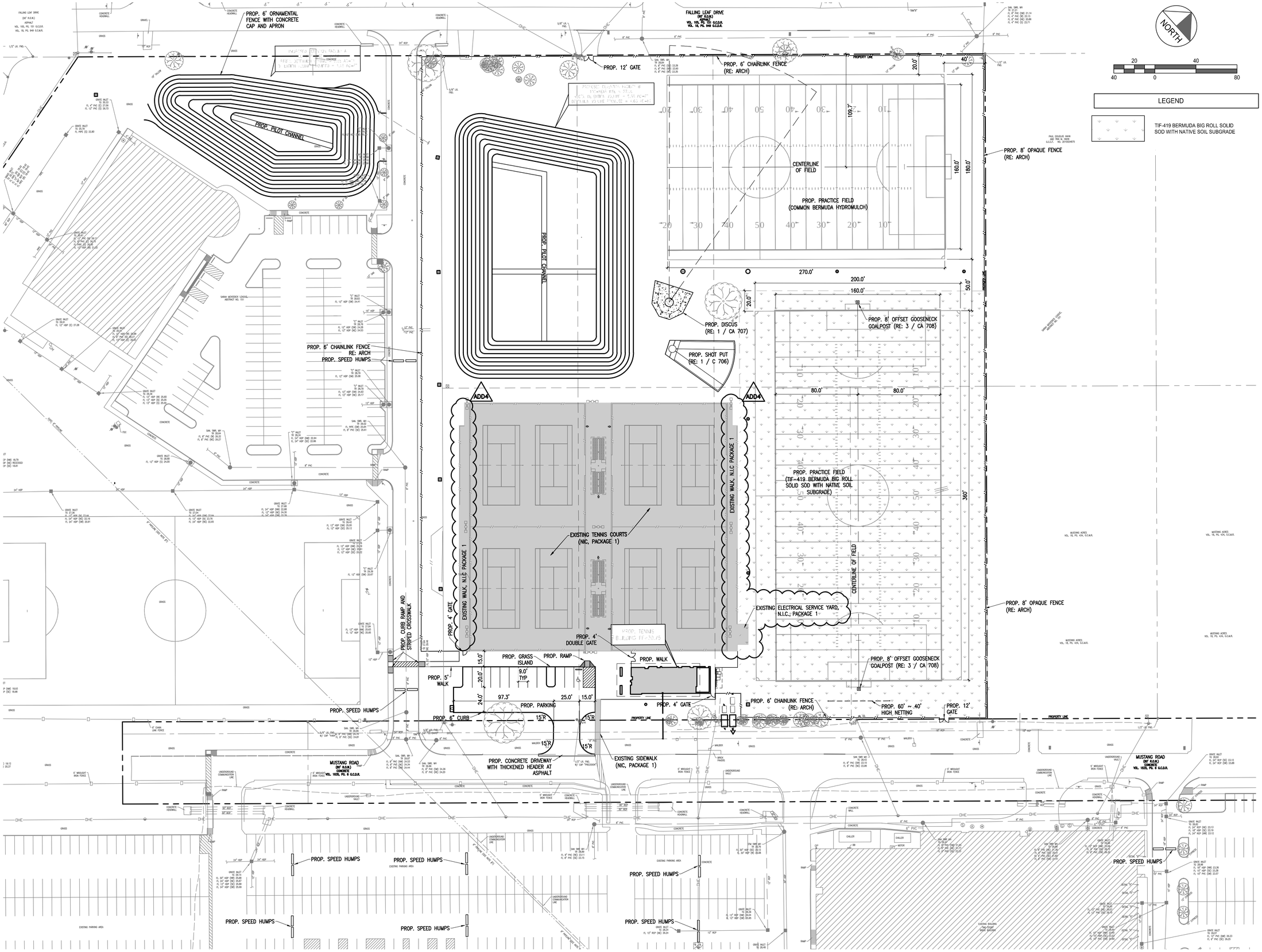

CHECKED BY: KFALKE

DRAWN BY: AGLUZMAN

B:\20\20381\Div8-Dwgs\8a BIM CAD\02 Civil_Package 2 Building Expansion\C 103 SITE PLAN (AREA A) - ALTERNATE.dwg Last Saved: KFALKE

Thursday, February 17, 2022 1:06:28 PM

PBK

ARCHITECT PBK Architects, Inc.
HOUSTON PBK.com
11 Greenway Plaza, 22nd Floor
Houston, TX 77046
713-965-0608 P
713-961-4571 F
TX Firm: BR 1608

CIVIL
DBG
T 713-965-0608

SPORTS
PBK SPORTS
T 281-528-1697

STRUCTURAL
KUBALA ENGINEERS
T 800-248-3674

MEP/T
LEAF ENGINEERS
T 713-940-3300

ENVELOPE
BEAM
T 713-940-3201

AV / ACOUSTIC
JEFFE HOLDEN
T 713-807-7100

THEATER
SCHULER SHOOK
T 214-747-8300

FOOD SERVICE
FOOD DESIGN PROFESSIONAL
T 281-350-2323

FRIENDSWOOD HIGH SCHOOL ADDITIONS AND RENOVATIONS

702 Greenbriar Dr
Friendswood, TX 77546

ISSUE FOR PROPOSAL

H.F. SCHNEIDER, III 69402 LICENSED STATE OF TEXAS PROFESSIONAL ENGINEER 02/17/2022

CLIENT
FRIENDSWOOD ISD

DATE	PROJECT NUMBER
02/02/2022	20381

DRAWING HISTORY

No.	Description	Date
ADD4	ADDENDUM 4	2/17/2022

ISSUE FOR PROPOSAL

PRELIMINARY SITE PLAN (AREA A) - ALTERNATE

C 103

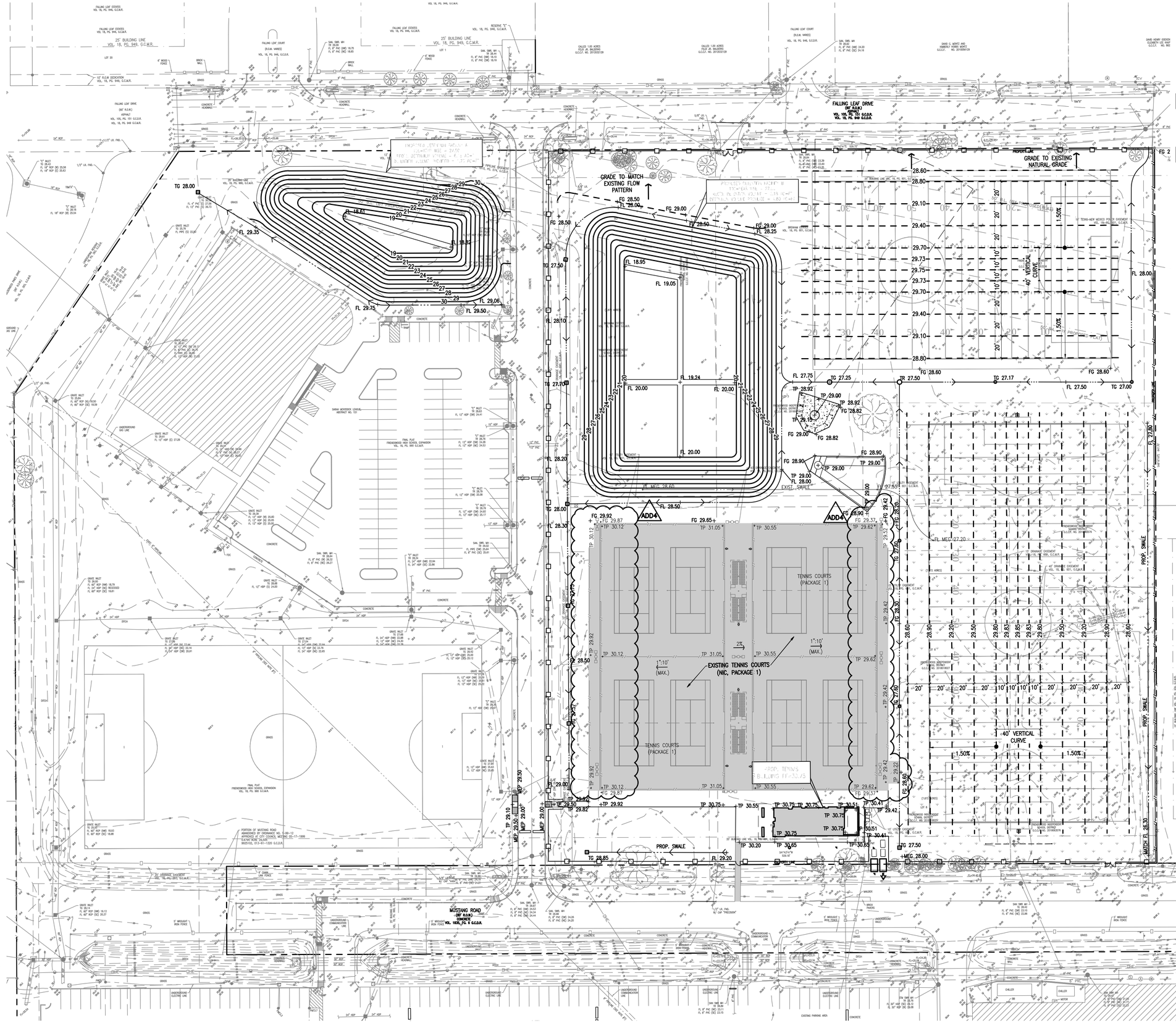

NORTH

20 0 40 80

NOTES TO SHEET

1. REFER TO LANDSCAPE PLANS FOR SPOT ELEVATIONS, GRADES, AND CONTOUR LABELS IN COURTYARD AREA BETWEEN PERFORMING ARTS CENTER AND PROPOSED GYMNASIUM WHERE NO PROPOSED GRADES ARE SHOWN.

LEGEND

TC	TOP OF CURB
FL	FLOW LINE
TP	TOP OF PAVEMENT
TR	TOP OF RIM
TG	TOP OF GRATE
A - X	AREA INLET
ID - X	INLINE DRAIN
CB - X	CATCH BASIN
MEG	MATCH EXISTING GRADE
MEP	MATCH EXISTING PAVEMENT

- CONCRETE SIDEWALK
- 5" CONCRETE PAVING
- 6" CONCRETE PAVING
- 7" CONCRETE PAVING

PBK

ARCHITECT PBK Architects, Inc.

HOUSTON PBK.com
11 Greenway Plaza, 22nd Floor
Houston, TX 77046
713-965-0608 P
713-961-4571 F
TX Firm: BR 1608

CIVIL
DBG
T 713-965-0608

SPORTS
PBK SPORTS
T 281-539-1697

STRUCTURAL
KUBALA ENGINEERS
T 800-249-3674

MEP/FP
LEAF ENGINEERS
T 713-940-3300

ENVELOPE
BEAM
T 713-940-3201

AV / ACOUSTIC
JEFFE HOLDEN
T 713-807-7100

THEATER
SCHULER SHOOK
T 214-747-8300

FOOD SERVICE
FOOD DESIGN PROFESSIONAL
T 281-350-2323

FRIENDSWOOD HIGH SCHOOL ADDITIONS AND RENOVATIONS

702 Greenbriar Dr
Friendswood, TX 77546

ISSUE FOR PROPOSAL

FRIENDSWOOD INDEPENDENT SCHOOL DISTRICT

H.F. SCHNEIDER, III
69402
LICENSED PROFESSIONAL ENGINEER
2/17/2022

CLIENT
FRIENDSWOOD ISD

DATE	PROJECT NUMBER
02/02/2022	20381

DRAWING HISTORY

No.	Description	Date
ADD2	ADDENDUM 2	2/15/2022
ADD4	ADDENDUM 4	2/17/2022

ISSUE FOR PROPOSAL

PRELIMINARY GRADING PLAN (AREA A)

C 501

CHECKED BY: KFALKE
DRAWN BY: AGLUZMAN
B:\2012038\1Div6-Dwgs\8a BIM CAD\02 Civil_Package 2 Building Expansion\C 501 GRADING PLAN (AREA A).dwg Last Saved: KFALKE
Thursday, February 17, 2022 12:59:27 PM

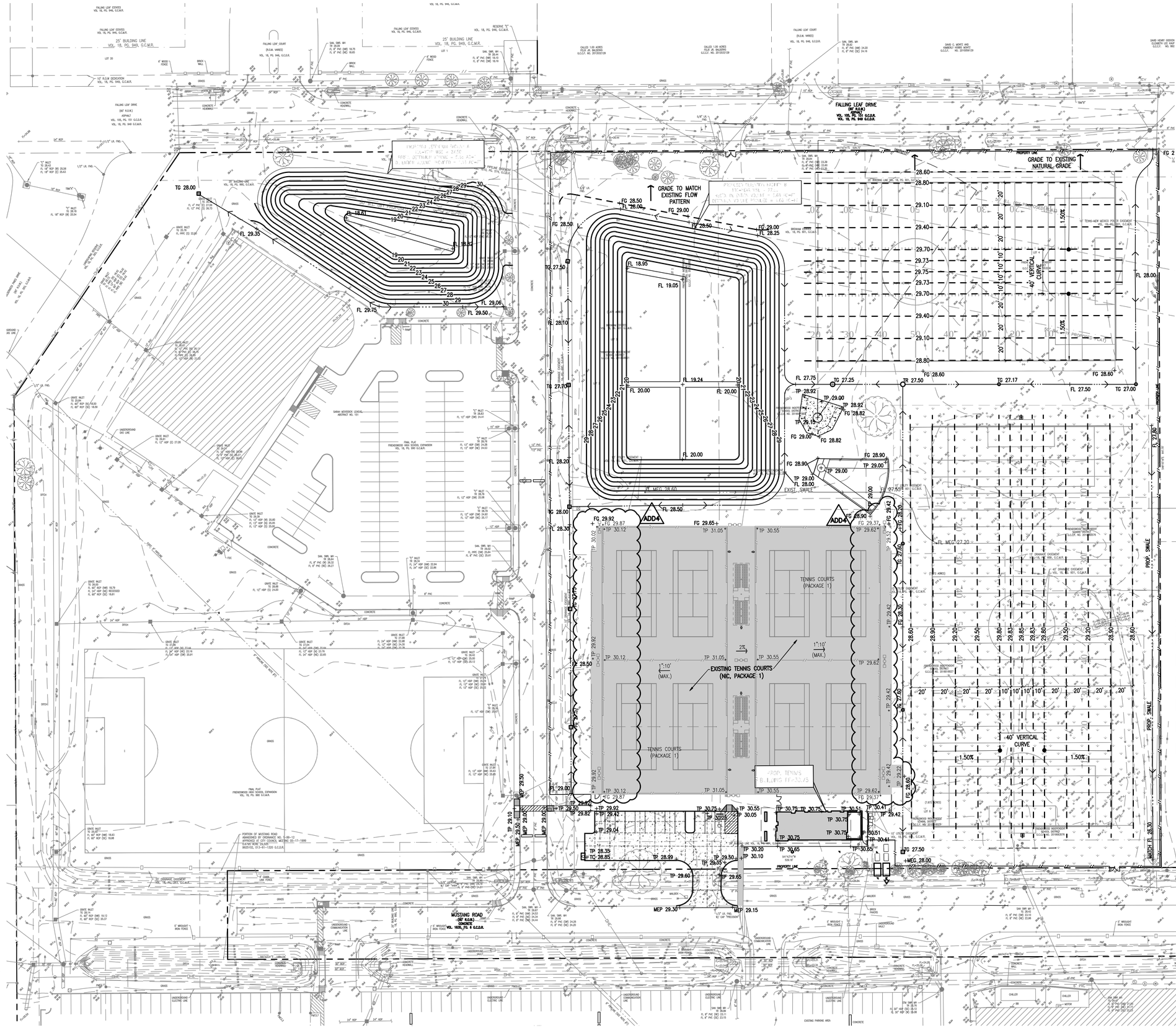

PBK

ARCHITECT PBK Architects, Inc.
HOUSTON PBK.com
11 Greenway Plaza, 22nd Floor
Houston, TX 77046
713-965-0608 P
713-961-4571 F
TX Firm: BR 1608

CIVIL
DBC
T 713-965-0608

SPORTS
PBK SPORTS
T 281-539-1697

STRUCTURAL
KUBALA ENGINEERS
T 800-249-3674

MEP/FP
LEAF ENGINEERS
T 713-940-3300

ENVELOPE
BEAM
T 713-940-3201

AV / ACOUSTIC
JEFFE HOLDEN
T 713-807-7100

THEATER
SCHULER SHOOK
T 214-747-9300

FOOD SERVICE
FOOD DESIGN PROFESSIONAL
T 281-350-2323

FRIENDSWOOD HIGH SCHOOL ADDITIONS AND RENOVATIONS

702 Greenbriar Dr
Friendswood, TX 77546
ISSUE FOR PROPOSAL

FRIENDSWOOD INDEPENDENT SCHOOL DISTRICT

H.F. SCHNEIDER, III
69402
LICENSED PROFESSIONAL ENGINEER
2/17/2022

CLIENT
FRIENDSWOOD ISD

DATE 02/02/2022
PROJECT NUMBER 20381

DRAWING HISTORY

No.	Description	Date
ADD2	ADDENDUM 2	2/15/2022
ADD4	ADDENDUM 4	2/17/2022

ISSUE FOR PROPOSAL

PRELIMINARY GRADING PLAN (AREA A) - ALTERNATE

C 502

CHECKED BY: KFALKE
DRAWN BY: AGLUZMAN
B:\2012038\1Div8-Dwgs\8a BIM CAD\02 Civil_Package 2 Building Expansion\C 502 GRADING PLAN (AREA A) - ALTERNATE.dwg Last Saved: KFALKE
Thursday, February 17, 2022 3:02:40 PM

FOUNDATION AND 1ST FLOOR PLAN - AREA Q

S-101Q

FOR BLUEBEAM LABELING/OCR:

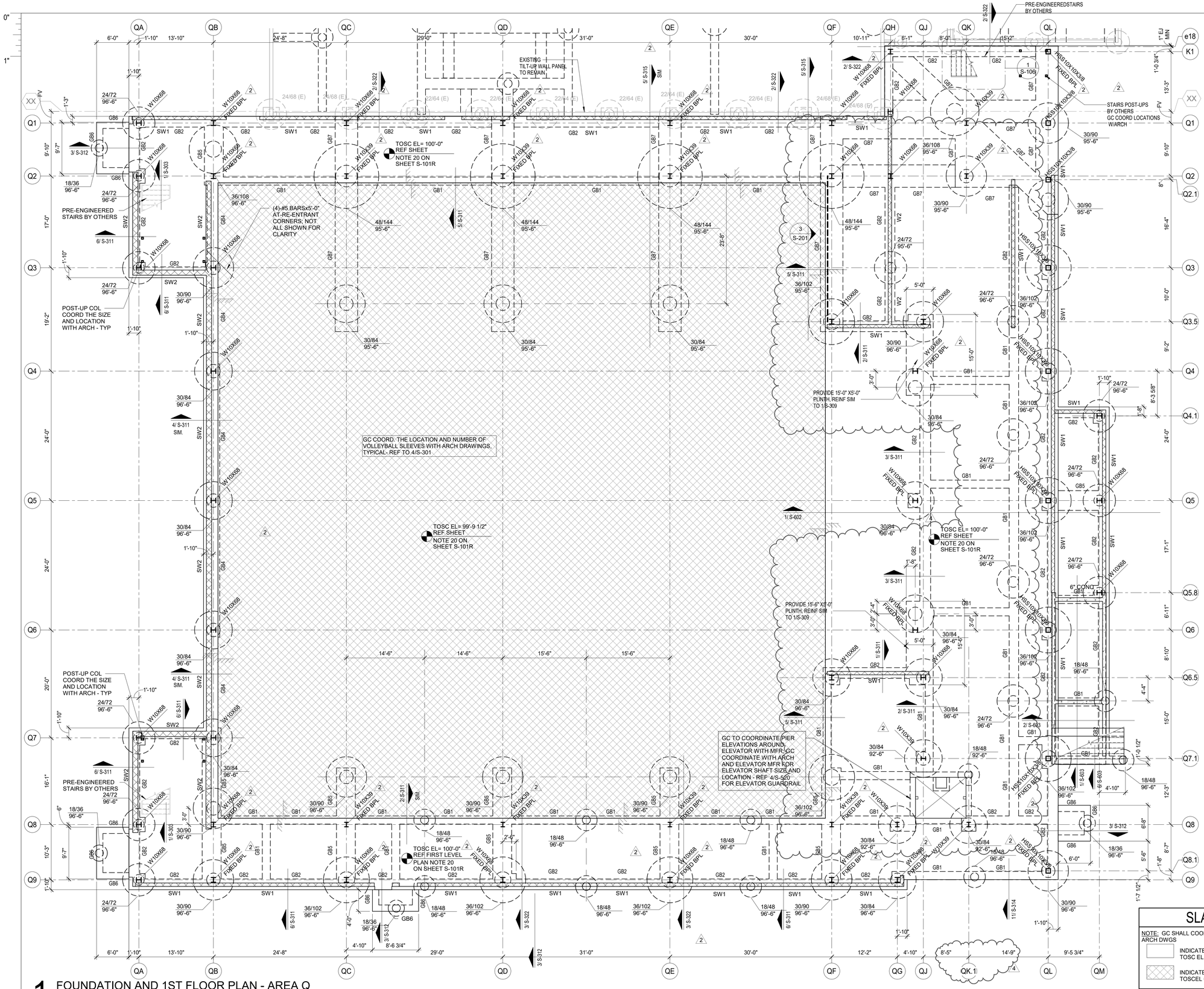

1 FOUNDATION AND 1ST FLOOR PLAN - AREA Q

1/8" = 1'-0"

1ST FLOOR PLAN NOTES

1. FOUNDATION PLAN NOTES ARE NOT SHOWN FOR CLARITY. REFER TO SHEET S-101R FOR PLAN NOTES.

2. STRUCTURAL SLAB SCHEDULE & NOTES ARE NOT SHOWN FOR CLARITY. REFER TO SHEET S-101R FOR SCHEDULE.

3. SLAB LEGEND AND NOTES ARE NOT SHOWN FOR CLARITY. REFER TO SHEET S-101R FOR LEGEND.

4. COORDINATE LOCATION AND DEPTH OF SLAB DEPRESSIONS WITH ARCHITECT PRIOR TO CONSTRUCTION.

SLAB LEGEND

NOTE: GC SHALL COORDINATE RECESS LOCATIONS WITH ARCH DWGS

INDICATES NO SLAB DEPRESSION; TOSC EL = REF PLAN.

INDICATES NEW 2 1/2" SLAB DEPRESSION; TOSCEL = REF PLAN.

PBK

ARCHITECT
PBK Architects, Inc.
PBK.com
HOUSTON
11 Greenway Plaza, 22nd Floor
Houston, TX 77046
713-965-0608 P
713-961-4571 F
TX Firm: BR 1608

CIVIL
SSG
T 713-965-0608

SPORTS
PBK SPORTS
T 281-528-1697

STRUCTURAL
KUBALA ENGINEERS
T 800-248-3674

MEP/T
LEAF ENGINEERS
T 713-940-3300

ENVELOPE
BEAM
T 713-940-3201

AV / ACOUSTIC
JAFFE HOLDEN
T 713-807-7100

THEATER
SCHULER SHOOK
T 214-747-5300

FOOD SERVICE
FOOD DESIGN PROFESSIONAL
T 281-350-2323

FRIENDSWOOD HIGH SCHOOL ADDITIONS AND RENOVATIONS

702 Greenbriar Dr
Friendswood, TX 77546

ISSUE FOR PROPOSAL

KEY PLAN

NORTH: PLAN TRUE

JOHN R. KUBALA
106120
LICENSED PROFESSIONAL ENGINEER
STATE OF TEXAS
02/17/2022
Kubala Engineers
F-3709

CLIENT
FRIENDSWOOD ISD

DATE	PROJECT NUMBER
02/02/2022	20381

DRAWING HISTORY

No.	Description	Date
2	ADDENDUM #2	02/14/2022
4	ADDENDUM #4	02/17/2022

ISSUE FOR PROPOSAL

Kubala ENGINEERS
Ph: 800.248.3674
www.kubalaengineers.com
TX. REG. NO. F-3709

FOUNDATION AND 1ST FLOOR PLAN - AREA Q

S-101Q

File Path: C:_Revit\Local\ST21-20381-FHS_Central_amer.taghibiLLC29.rvt

CHECKED BY:
Checker
DRAWN BY:
Author
Plot Stamp:
2/17/2022 12:30:40 PM

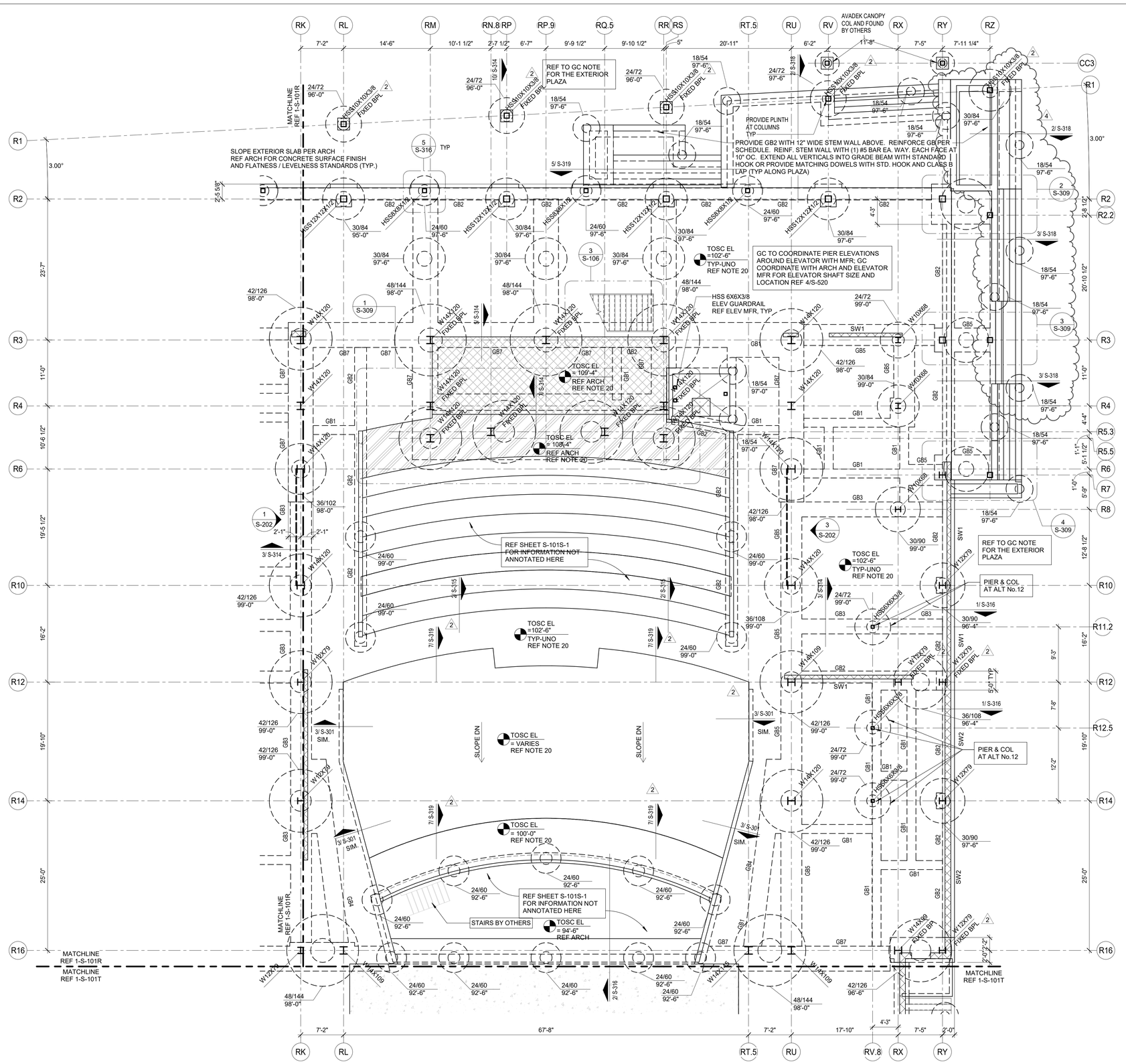

1 FOUNDATION AND 1ST FLOOR PLAN - AREA S
1/8" = 1'-0"

FOUNDATION AND 1ST FLOOR PLAN NOTES

1. REFER TO PLAN FOR TOP OF STRUCTURAL CONCRETE ELEVATIONS (TOSC EL). II-animal ELEVATIONS SHOWN ON THE PLAN ARE BASED ON A LEVEL ONE REFERENCE ELEVATION = 100'-0". THIS REFERENCE ELEVATION IS EQUIVALENT TO THE LEVEL ONE MEAN SEA LEVEL ELEVATION = REF CIVIL SHOWN IN THE CIVIL AND ARCHITECTURAL DRAWINGS AND IS NOT INTENDED TO ESTABLISH THE ACTUAL SEA LEVEL ELEVATION OF ANY PORTION OF THE STRUCTURE.
2. REFER TO ARCHITECTURAL DRAWINGS FOR EXTENTS AND DIMENSIONS OF RAISED OR DEPRESSED SLAB AREAS, SLOPES, CURBS, AND DRAINS. REFER TO TYPICAL DETAILS FOR REINFORCEMENT REQUIREMENTS.
3. REFER TO MECHANICAL, ELECTRICAL, AND PLUMBING DRAWINGS FOR SLAB PENETRATIONS AND UNDERGROUND UTILITIES. REFER TO TYPICAL DETAILS FOR ADDITIONAL REINFORCEMENT REQUIREMENTS.
4. CONTRACTOR TO FIELD VERIFY ALL EXISTING CONDITIONS AND DIMENSIONS. NOTIFY ARCHITECT AND STRUCTURAL ENGINEER OF ANY DISCREPANCIES.
5. CONTRACTOR TO VERIFY ALL SLAB EDGE DIMENSIONS WITH ARCHITECTURAL DRAWINGS PRIOR TO CONSTRUCTION.
6. PROVIDE ADDITIONAL SLAB REINFORCEMENT RE-ENTRANT CORNERS AND SLAB CORNERS, TYP. INCLUDING RE-ENTRANT CORNERS AROUND THE PERIMETER OF THE BUILDINGS, FLOOR RECESSES AND OPENINGS. REF 1/S-302 .
7. VERIFY THE SIZE AND EXTENT OF ALL BRICK LEDGES SHOWN ON PLAN OR DETAILS WITH ARCHITECTURAL DRAWINGS.
8. REF S-0.xx SERIES DRAWINGS FOR GENERAL NOTES AND TYP DETAILS.
9. REF S-2.xx SERIES DRAWINGS FOR STEEL BRACE ELEVATIONS AND DETAILS. — — — — INDICATES BRACE FRAME (TYP.)
10. REF S-3.xx SERIES DRAWINGS FOR FOUNDATION AND STRUCTURAL SLAB DETAILS.
11. REF S-4.xx SERIES DRAWINGS FOR CMU DETAILS.
12. REF PLAN FOR COLUMN SIZES.
13. UNLESS NOTED OTHERWISE ON PLAN, TOP OF PLINTH ELEVATION IS = 99'-0" IN "GYM AND TENNIS" BUILDINGS (AREAS Q AND U), AND TOP OF PLINTH ELEVATION VAREIS IN "PAC" BUILDING (AREAS R, S AND T). REF DETAILS SHOWN ON PLAN.
14. GC COORD WITH ARCH AND PLUMBING DWGS FOR THE SIZE, NUMBER AND LOCATION OF ALL THE TRENCHES AND FLOOR DRAINS. REF 3/S-302 FOR TRENCH DETAIL AND REF 4/S-302 FOR FLOOR DRAIN DETAIL.
15. AT INTERIOR CMU WALL LOCATIONS, WHERE THE GRADE BEAM IS NOT SHOWN, PROVIDE DOWELS PER DETAILS 4/S-314 . GC SHALL COORDINATE CMU WALL LOCATIONS WITH ARCH DRAWINGS.
16. PIERS/FOOTINGS WITHOUT CENTERLINES SHOWN ON PLANS, SECTIONS AND/OR DETAILS SHALL BE LOCATED AS FOLLOWS:
    A. COLUMNS AND PILASTERS: CENTERLINE OF THE COLUMN.
    B. GRADE BEAMS AND WALLS: CENTERLINE OF THE GRADE BEAM OR WALL.
    C. ALONG THE LENGTH OF GRADE BEAMS AND WALLS: INTERMEDIATE PIERS/FOOTINGS SHALL BE SPACED EQUALLY BETWEEN PIERS/FOOTINGS THAT ARE DIMENSIONALLY SET ON PLAN OR AS NOTED ABOVE.
    D. PIERS SUPPORTING SLABS ON CARTON FORMS: UNLESS NOTED OTHERWISE, PIERS NOT DIMENSIONED SHALL BE SPACED EQUALLY BETWEEN PIERS THAT ARE DIMENSIONALLY SET ON PLAN.
17. GC TO COORDINATE THE LOCATION OF ALL CONC CURBS WITH ARCH DWGS. REF 6/S-301 FOR DETAIL TYP.
18. GC COORDINATE THE LOCATION OF ALL CANOPY COLUMNS WITH ARCH DRAWINGS.
19. ▨ ALL CMU SHOWN ON PLAN ARE PART OF THE STRUCTURAL LATERAL FORCE RESISTING SYSTEM AND SUPPORTS GRAVITY LOADS. NON-STRUCTURAL CMU EXISTS IN OTHER LOCATION (REF ARCH DWGS). A 3/8" VERT CONTROL JOINT SHALL BE PROVIDED WHEREVER STRUCTURAL AND NON-STRUCTURAL CMU ABUT. REF 1/S-402 FOR SHEAR WALL REINF SCHED.
20. 6" NW CONCRETE SLAB-ON-GRADE REINFORCED WITH #4 AT 12" OC EACH WAY ON 3 1/2" CHAIRS SPACED AT 36" OC EACH WAY. PLACE THE SLAB ON 15 MIL WATER VAPOR BARRIER OVER COMPACTED SELECT FILL (SOIL REPORT). REF TO SLAB JOINT 1/S302 AND 2/S302.

GC NOTE FOR THE EXTERIOR PLAZA

1. THE EXTERIOR PLAZA-TYPE CONCRETE BY STRUCTURAL EOR. THESE WALLS DO RETAIN SOILS, BUT HAVE BEEN DESIGNED AS CONVENTIONAL STEM-WALLS WITH NO ABILITY TO CANTILEVER OUT OF THE GROUND LIKE A RETAINING WALL-TYPE STRUCTURE; THEREFORE, THE GC SHALL PROVIDE TEMPORARY SHORING FOR BOTH WALLS WHICH SHALL REMAIN IN PLACE UNTIL THE FULL ASSEMBLY (PLAZA AND BOTH WALLS) HAVE BEEN CAST AND CURED TO FULL STRENGTH) TYP.
2. EXTERIOR STRUCTURAL SLAB/PLAZA. SLAB TO BE 6" THICK WITH #4 BARS AT 12" OC EACH WAY ON PREPARED SUBGRADE. IN ADDITION TO ALL STRUCTURAL REQUIREMENTS GC SHALL PROVIDE MIN 1'-0" THICK LIME STABILIZED LAYER DIRECTLY BELOW THE SLAB
GC PLEASE NOTE: EXTERIOR SLAB WILL BE THE ONLY STRUCTURAL SLAB AREAS ALLOWED TO HAVE SAW-CUTS. GC MUST COORDINATE SAW-CUT LOCATIONS WITH STRUCTURAL EOR. PROVIDE SAW-CUTS 1/4" WIDE X 1 1/2" DEEP AT SPACING NOT TO EXCEED 16' ON CENTER (TYP.) AFTER SAW-CUTTING INFILL SAWCUT WITH MM-80 OR EUCO 700.
3. SLOPE EXTERIOR SLAB PER ARCH. REF ARCH FOR CONCRETE SURFACE FINISH AND FLATNESS / LEVELNESS STANDARDS (TYP.)
4. AROUND FULL PERIMETER OF OUTDOOR PLAZA AREA GC TO PROVIDEPROVIDE GB1 WITH 12" WIDE STEM WALL ABOVE. REINFORCE GB PER SCHEDULE. REINF. STEM WALL WITH (1) #5 BAR EA. WAY. EACH FACE AT 10" OC. EXTEND ALL VERTICALS INTO GRADE BEAM WITH STANDARD HOOK OR PROVIDE MATCHING DOWELS WITH STD. HOOK AND CLASS B LAP (TYP ALONG PLAZA). FORMED EXTERIOR STAIRS SHALL MERGE INTO GRADE BEAM AS SHOWN IN DETAILS, GC COORDINATE.
5. REF TO DETAILS 3/S-319 , 4/S-319 AT WATER GARDENS

SLAB LEGEND

NOTE: GC SHALL COORDINATE RECESS LOCATIONS WITH ARCH DWGS.

- INDICATES NO SLAB DEPRESSION; TOSC EL = RE: PLAN.
- INDICATES 3 3/4" SLAB DEPRESSION; TOSC EL = REF PLAN.
- INDICATES 82" ELEVATED SLAB ; TOSC EL = REF PLAN.
- INDICATES 72" ELEVATED SLAB; TOSC EL = REF PLAN.

Kubala ENGINEERS
Ph: 800.246.3674
www.kubalaengineers.com
TX. REG. NO. F-3709

PBK
ARCHITECT PBK Architects, Inc. PBK.com
HOUSTON
11 Greenway Plaza, 22nd Floor
Houston, TX 77046
713-965-0608 P
713-961-4571 F
TX Firm: BR 1608
CIVIL
SSG
T 713-965-0608
SPORTS
PBK SPORTS
T 281-528-1697
STRUCTURAL
KUBALA ENGINEERS
T 800-246-3674
MEPT
LEAF ENGINEERS
T 713-960-3300
ENVELOPE
BEAM
T 713-960-3201
AV / ACOUSTIC
JAFFE HOLDEN
T 713-807-7100
THEATER
SCHULER SHOOK
T 214-747-5300
FOOD SERVICE
FOOD DESIGN PROFESSIONAL
T 281-350-2323

FRIENDSWOOD HIGH SCHOOL ADDITIONS AND RENOVATIONS

702 Greenbriar Dr
Friendswood, TX 77546

ISSUE FOR PROPOSAL

U
K J H E D A L F N M G C B P Q R S T
KEY PLAN
NORTH: PLAN TRUE

STATE OF TEXAS
JOHN R. KUBALA
106120
LICENSED PROFESSIONAL ENGINEER
02/17/2022
Kubala Engineers
F-3709

CLIENT
FRIENDSWOOD ISD

DATE	PROJECT NUMBER
02/02/2022	20381

DRAWING HISTORY

No.	Description	Date
2	ADDENDUM #2	02/14/2022
4	ADDENDUM #4	02/17/2022

ISSUE FOR PROPOSAL

FOUNDATION AND 1ST FLOOR PLAN - AREA S

S-101S

FOUNDATION AND 1ST FLOOR PLAN - AREA S
S-101S
FOR BLUEBEAM LABELING/OCR:

File Path: C:_Revit\Local\ST21-20381-FHS_Central_amer.taghleb\LLC29.rvt
CHECKED BY:
Checker
DRAWN BY:
Author
Plot Stamp:
2/17/2022 12:30:40 PM

FOUNDATION AND 1ST FLOOR PLAN - AREA T

S-101T

FOR BLUEBEAM LABELING/OCR:

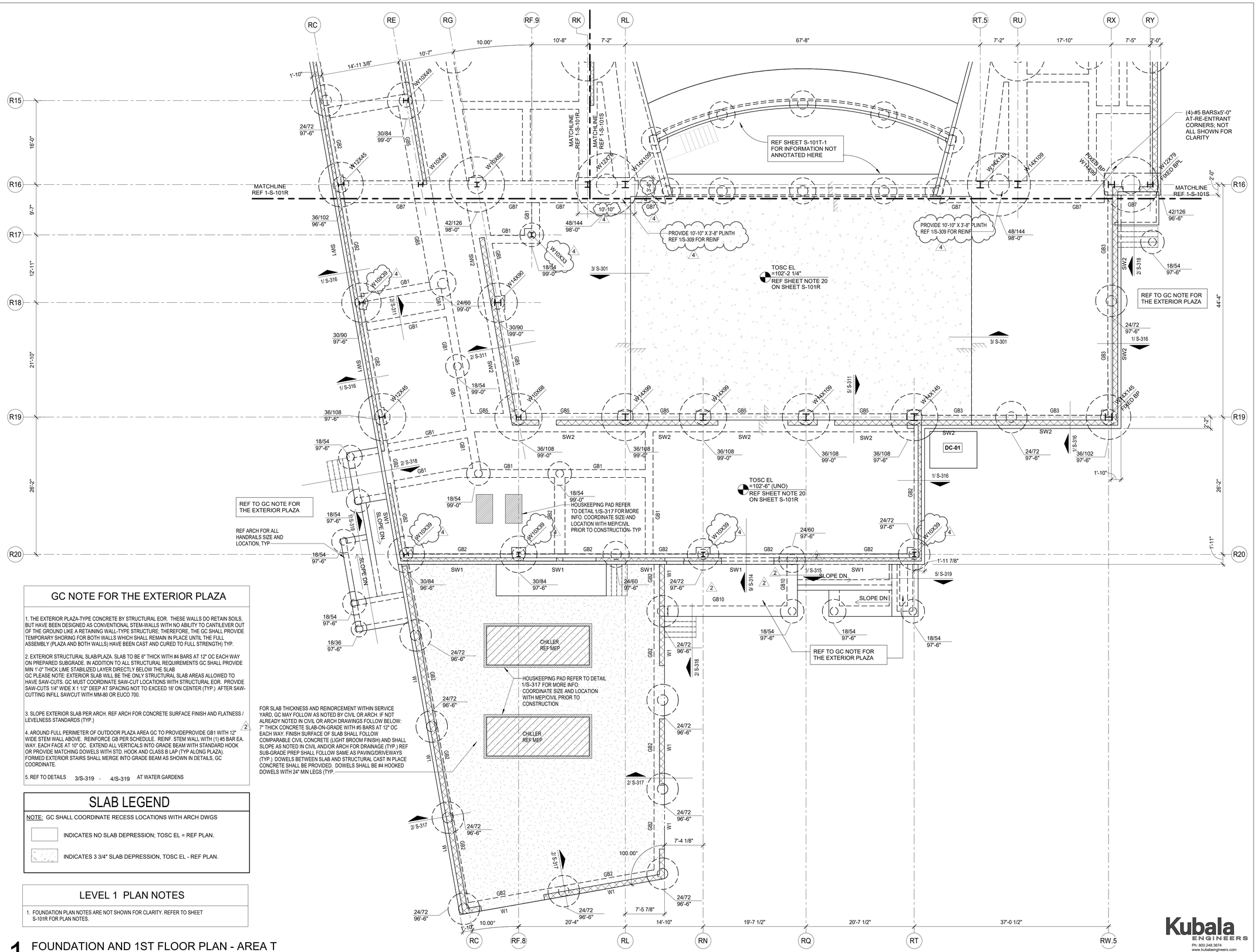

GC NOTE FOR THE EXTERIOR PLAZA

1. THE EXTERIOR PLAZA-TYPE CONCRETE BY STRUCTURAL EOR. THESE WALLS DO RETAIN SOILS, BUT HAVE BEEN DESIGNED AS CONVENTIONAL STEM-WALLS WITH NO ABILITY TO CANTILEVER OUT OF THE GROUND LIKE A RETAINING WALL-TYPE STRUCTURE; THEREFORE, THE GC SHALL PROVIDE TEMPORARY SHORING FOR BOTH WALLS WHICH SHALL REMAIN IN PLACE UNTIL THE FULL ASSEMBLY (PLAZA AND BOTH WALLS) HAVE BEEN CAST AND CURED TO FULL STRENGTH) TYP.

2. EXTERIOR STRUCTURAL SLAB/PLAZA. SLAB TO BE 6" THICK WITH #4 BARS AT 12" OC EACH WAY ON PREPARED SUBGRADE. IN ADDITION TO ALL STRUCTURAL REQUIREMENTS GC SHALL PROVIDE MIN 1'-0" THICK LIME STABILIZED LAYER DIRECTLY BELOW THE SLAB
GC PLEASE NOTE: EXTERIOR SLAB WILL BE THE ONLY STRUCTURAL SLAB AREAS ALLOWED TO HAVE SAW-CUTS. GC MUST COORDINATE SAW-CUT LOCATIONS WITH STRUCTURAL EOR. PROVIDE SAW-CUTS 1/4" WIDE X 1 1/2" DEEP AT SPACING NOT TO EXCEED 16' ON CENTER (TYP.) AFTER SAW-CUTTING INFILL SAWCUT WITH MM-80 OR EUCO 700.

3. SLOPE EXTERIOR SLAB PER ARCH. REF ARCH FOR CONCRETE SURFACE FINISH AND FLATNESS / LEVELNESS STANDARDS (TYP.)

4. AROUND FULL PERIMETER OF OUTDOOR PLAZA AREA GC TO PROVIDEPROVIDE GB1 WITH 12" WIDE STEM WALL ABOVE. REINFORCE GB PER SCHEDULE. REINF. STEM WALL WITH (1) #5 BAR EA. WAY. EACH FACE AT 10" OC. EXTEND ALL VERTICALS INTO GRADE BEAM WITH STANDARD HOOK OR PROVIDE MATCHING DOWELS WITH STD. HOOK AND CLASS B LAP (TYP ALONG PLAZA). FORMED EXTERIOR STAIRS SHALL MERGE INTO GRADE BEAM AS SHOWN IN DETAILS, GC COORDINATE.

5. REF TO DETAILS 3/S-319 , 4/S-319 AT WATER GARDENS

SLAB LEGEND

NOTE: GC SHALL COORDINATE RECESS LOCATIONS WITH ARCH DWGS

INDICATES NO SLAB DEPRESSION; TOSC EL = REF PLAN.

INDICATES 3 3/4" SLAB DEPRESSION, TOSC EL - REF PLAN.

LEVEL 1 PLAN NOTES

1. FOUNDATION PLAN NOTES ARE NOT SHOWN FOR CLARITY. REFER TO SHEET S-101R FOR PLAN NOTES.

1 FOUNDATION AND 1ST FLOOR PLAN - AREA T
1/8" = 1'-0"

File Path: C:_Revit\Local\ST21-20381-FHS_Central_amer.taghibiLLC29.rvt

CHECKED BY: Checker
DRAWN BY: Author
Plot Stamp: 2/17/2022 12:30:43 PM

PBK

ARCHITECT PBK Architects, Inc. PBK.com
HOUSTON
11 Greenway Plaza, 22nd Floor
Houston, TX 77046
713-965-0608 P
713-961-4571 F
TX Firm: BR 1608

CIVIL
SSG
T 713-965-0608
SPORTS
PBK SPORTS
T 281-528-1697
STRUCTURAL
KUBALA ENGINEERS
T 800-248-3674
MEP/T
LEAF ENGINEERS
T 713-940-3300
ENVELOPE
BEAM
T 713-940-3201
AV / ACOUSTIC
JAFFE HOLDEN
T 713-807-7100
THEATER
SCHULER SHOOK
T 214-747-9300
FOOD SERVICE
FOOD DESIGN PROFESSIONAL
T 281-350-2323

FRIENDSWOOD HIGH SCHOOL ADDITIONS AND RENOVATIONS

702 Greenbriar Dr
Friendswood, TX 77546

ISSUE FOR PROPOSAL

FRIENDSWOOD INDEPENDENT SCHOOL DISTRICT

U
K J
H E D A
L F
N M G C B
P
Q R S
T

KEY PLAN
NORTH: PLAN TRUE

STATE OF TEXAS
JOHN R. KUBALA
106120
LICENSED PROFESSIONAL ENGINEER
02/17/2022
Kubala Engineers
F-3709

CLIENT
FRIENDSWOOD ISD

DATE	PROJECT NUMBER
02/02/2022	20381

DRAWING HISTORY

No.	Description	Date
2	ADDENDUM #2	02/14/2022
4	ADDENDUM #4	02/17/2022

ISSUE FOR PROPOSAL

FOUNDATION AND 1ST FLOOR PLAN - AREA T

Kubala ENGINEERS
Ph: 800.248.3674
www.kubalaengineers.com
TX. REG. NO. F-3709

S-101T

2ND FLOOR - FRAMING PLAN - AREA E

S-102E

FOR BLUEBEAM LABELING/OCR:

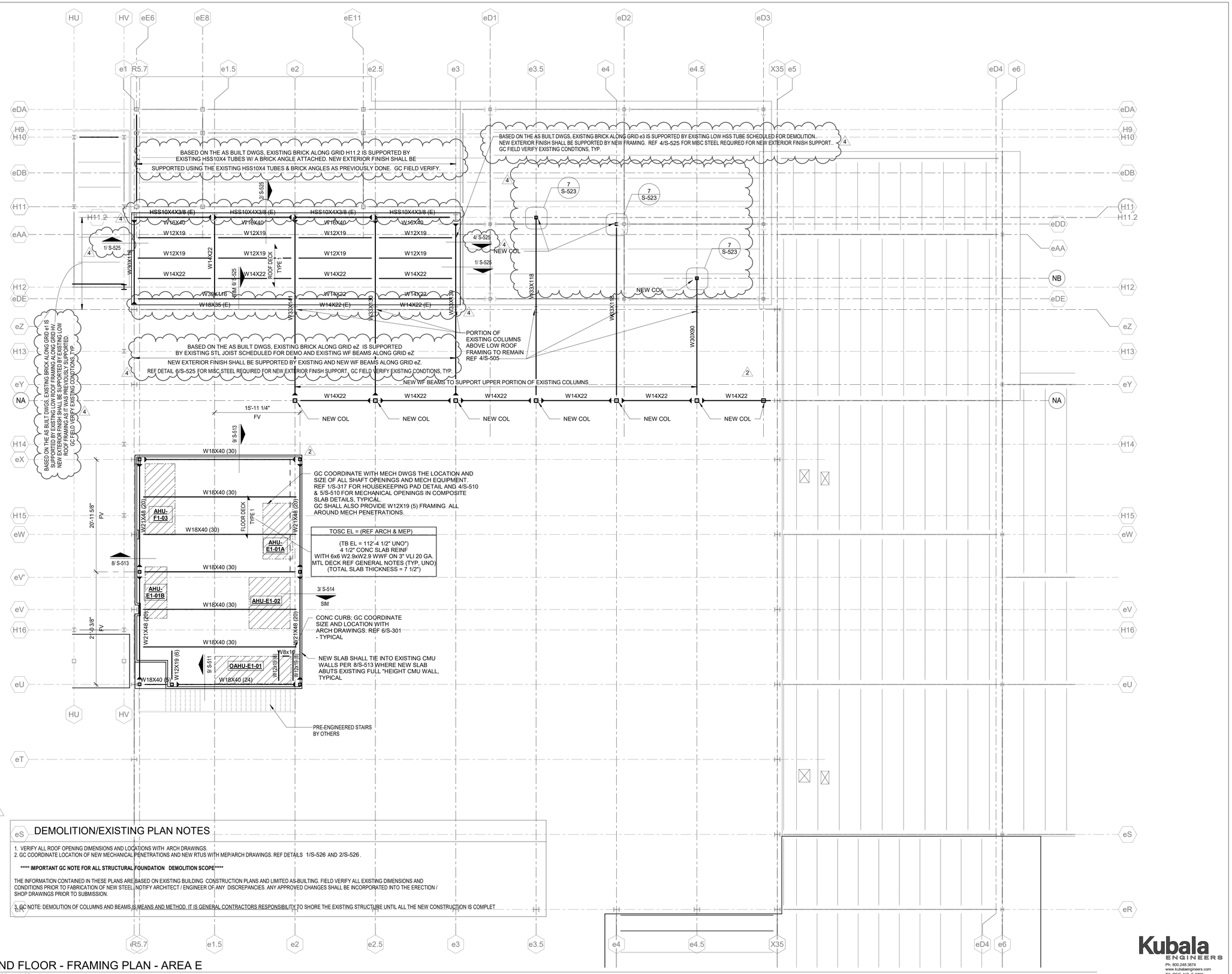

DEMOLITION/EXISTING PLAN NOTES

1. VERIFY ALL ROOF OPENING DIMENSIONS AND LOCATIONS WITH ARCH DRAWINGS.
2. GC COORDINATE LOCATION OF NEW MECHANICAL PENETRATIONS AND NEW RTUS WITH MEP/ARCH DRAWINGS. REF DETAILS 1/S-526 AND 2/S-526 .

***** IMPORTANT GC NOTE FOR ALL STRUCTURAL FOUNDATION DEMOLITION SCOPE*****

THE INFORMATION CONTAINED IN THESE PLANS ARE BASED ON EXISTING BUILDING CONSTRUCTION PLANS AND LIMITED AS-BUILTING. FIELD VERIFY ALL EXISTING DIMENSIONS AND CONDITIONS PRIOR TO FABRICATION OF NEW STEEL. NOTIFY ARCHITECT / ENGINEER OF ANY DISCREPANCIES. ANY APPROVED CHANGES SHALL BE INCORPORATED INTO THE ERECTION / SHOP DRAWINGS PRIOR TO SUBMISSION.

3. GC NOTE: DEMOLITION OF COLUMNS AND BEAMS IS MEANS AND METHOD. IT IS GENERAL CONTRACTORS RESPONSIBILITY TO SHORE THE EXISTING STRUCTURE UNTIL ALL THE NEW CONSTRUCTION IS COMPLET

1 2ND FLOOR - FRAMING PLAN - AREA E
1/8" = 1'-0"

File Path: C:_Revit Local\ST21-20381-FHS_Central_amer.taghiebiLLC29.rvt

CHECKED BY: Checker
DRAWN BY: Author
Plot Stamp: 2/17/2022 12:30:45 PM

PBK

ARCHITECT PBK Architects, Inc. PBK.com
HOUSTON
11 Greenway Plaza, 22nd Floor
Houston, TX 77046
713-965-0608 P
713-961-4571 F
TX Firm: BR 1608

CIVIL
SSG
T 713-965-0608
SPORTS
PBK SPORTS
T 281-528-1697
STRUCTURAL
KUBALA ENGINEERS
T 800-248-3674
MEPT
LEAF ENGINEERS
T 713-940-3300
ENVELOPE
BEAM
T 713-940-3201
AV / ACOUSTIC
JAFFE HOLDEN
T 713-807-7100
THEATER
SCHULER SHOOK
T 214-747-5300
FOOD SERVICE
FOOD DESIGN PROFESSIONAL
T 281-350-2323

FRIENDSWOOD HIGH SCHOOL ADDITIONS AND RENOVATIONS

702 Greenbriar Dr
Friendswood, TX 77546

ISSUE FOR PROPOSAL

KEY PLAN
NORTH: PLAN TRUE

JOHN R. KUBALA
106120
PROFESSIONAL ENGINEER
STATE OF TEXAS
02/17/2022
Kubala Engineers
F-3709

CLIENT
FRIENDSWOOD ISD

DATE	PROJECT NUMBER
02/02/2022	20381

DRAWING HISTORY

No.	Description	Date
2	ADDENDUM #2	02/14/2022
4	ADDENDUM #4	02/17/2022

ISSUE FOR PROPOSAL

2ND FLOOR - FRAMING PLAN - AREA E

Kubala ENGINEERS
Ph: 800.248.3674
www.kubalaengineers.com
TX. REG. NO. F-3709

S-102E

S-102Q

2ND FLOOR - FRAMING PLAN - AREA Q

FOR BLUEBEAM LABELING/OCR:

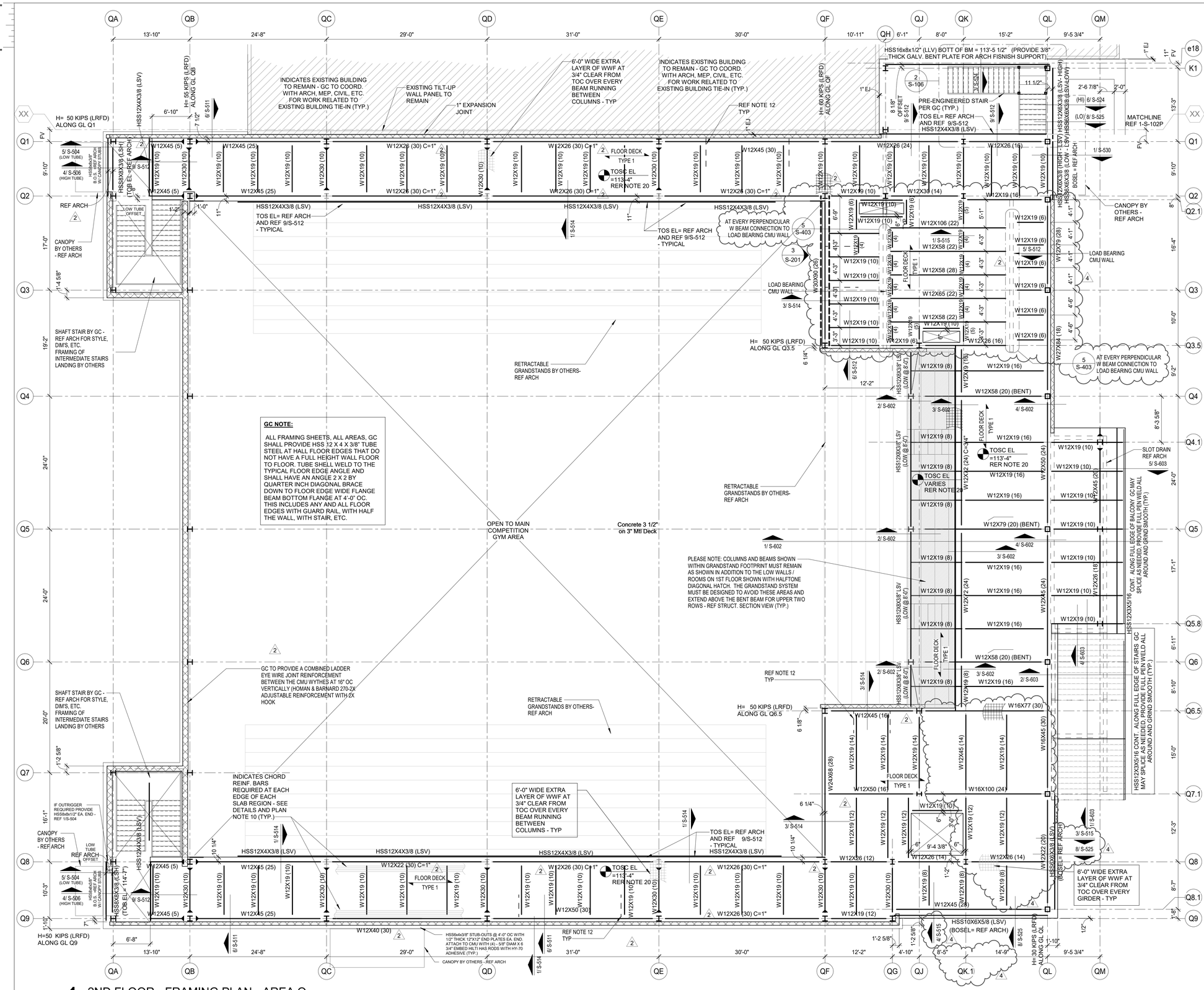

1 2ND FLOOR - FRAMING PLAN - AREA Q
1/8" = 1'-0"

COMPOSITE FLOOR PLAN NOTES

COMPOSITE FLOOR PLAN NOTES ARE NOT SHOWN FOR CLARITY. REFER TO SHEET S-102S FOR PLAN NOTES.

PBK

ARCHITECT
PBK Architects, Inc.
PBK.com
HOUSTON
11 Greenway Plaza, 22nd Floor
Houston, TX 77046
713-965-0608 P
713-961-4571 F
TX Firm: BR 1608

CIVIL
SSG
T 713-965-0608

SPORTS
PBK SPORTS
T 281-528-1697

STRUCTURAL
KUBALA ENGINEERS
T 800-248-3674

MEP/T
LEAF ENGINEERS
T 713-940-3300

ENVELOPE
BEAM
T 713-940-3201

AV / ACOUSTIC
JAFFE HOLDEN
T 713-807-7100

THEATER
SCHULER SHOOK
T 214-747-9300

FOOD SERVICE
FOOD DESIGN PROFESSIONAL
T 281-350-2323

FRIENDSWOOD HIGH SCHOOL ADDITIONS AND RENOVATIONS

702 Greenbriar Dr
Friendswood, TX 77546

ISSUE FOR PROPOSAL

KEY PLAN
NORTH: PLAN TRUE

JOHN R. KUBALA
106120
LICENSED PROFESSIONAL ENGINEER
02/17/2022
Kubala Engineers
F-3709

CLIENT
FRIENDSWOOD ISD

DATE	PROJECT NUMBER
02/02/2022	20381

DRAWING HISTORY

No.	Description	Date
2	ADDENDUM #2	02/14/2022
4	ADDENDUM #4	02/17/2022

ISSUE FOR PROPOSAL

2ND FLOOR - FRAMING PLAN - AREA Q

S-102Q

Kubala ENGINEERS
Ph: 800.248.3674
www.kubalaengineers.com
TX. REG. NO. F-3709

File Path: C:_Revit Local\ST21-20381-FHS_Central_amer.taghibiLLC29.rvt

CHECKED BY:
Checker
DRAWN BY:
Author
Plot Stamp:
2/17/2022 12:30:48 PM

ROOF - FRAMING PLAN - AREA E

S-103E

FOR BLUEBEAM LABELING/OCR:

0"

1"

DEMOLITION/EXISTING PLAN NOTES

1. VERIFY ALL ROOF OPENING DIMENSIONS AND LOCATIONS WITH ARCH DRAWINGS.
2. GC COORDINATE LOCATION OF NEW MECHANICAL PENETRATIONS AND NEW RTUS WITH MEP/ARCH DRAWINGS. REF DETAILS 1/S-526 AND 2/S-526.

***** IMPORTANT GC NOTE FOR ALL STRUCTURAL FOUNDATION DEMOLITION SCOPE*****

THE INFORMATION CONTAINED IN THESE PLANS ARE BASED ON EXISTING BUILDING CONSTRUCTION PLANS AND LIMITED AS-BUILTING. FIELD VERIFY ALL EXISTING DIMENSIONS AND CONDITIONS PRIOR TO FABRICATION OF NEW STEEL. NOTIFY ARCHITECT / ENGINEER OF ANY DISCREPANCIES. ANY APPROVED CHANGES SHALL BE INCORPORATED INTO THE ERECTION / SHOP DRAWINGS PRIOR TO SUBMISSION.

3. GC NOTE: DEMOLITION OF COLUMNS AND BEAMS IS MEANS AND METHOD. IT IS GENERAL CONTRACTORS RESPONSIBILITY TO SHORE THE EXISTING STRUCTURE UNTIL ALL THE NEW CONSTRUCTION IS COMPLET

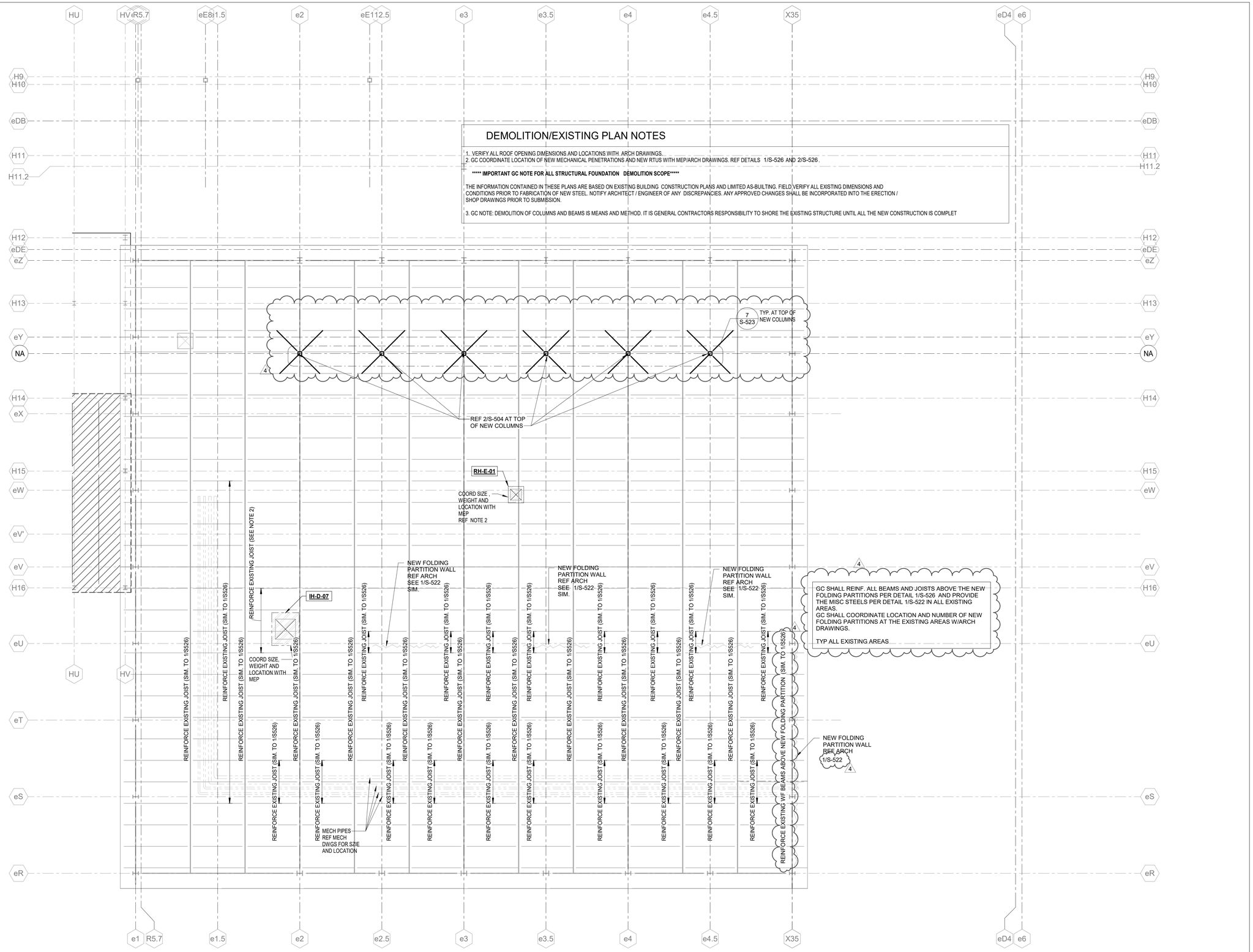

1 ROOF - FRAMING PLAN - AREA E

1/8" = 1'-0"

File Path: C:_RevitLocal\S121-20381-FHS_Central_amer.taghleblLLC29.rvt

CHECKED BY:
Checker
DRAWN BY:
Author
Plot Stamp:
2/17/2022 12:30:50 PM

PBK

ARCHITECT PBK Architects, Inc.
PBK.com
HOUSTON
11 Greenway Plaza, 22nd Floor
Houston, TX 77046
713-965-0608 P
713-961-4571 F
TX Firm: BR 1608

CIVIL
SIIG
T 713-965-0608
SPORTS
PBK SPORTS
T 281-528-1697
STRUCTURAL
KUBALA ENGINEERS
T 800-248-3674
MEPT
LEAF ENGINEERS
T 713-940-3300
ENVELOPE
BEAM
T 713-940-3201
AV / ACOUSTIC
JAFFE HOLDEN
T 713-807-7100
THEATER
SCHULER SHOOK
T 214-747-5300
FOOD SERVICE
FOOD DESIGN PROFESSIONAL
T 281-350-2323

FRIENDSWOOD HIGH SCHOOL ADDITIONS AND RENOVATIONS

702 Greenbriar Dr
Friendswood, TX 77546

ISSUE FOR PROPOSAL

FRIENDSWOOD INDEPENDENT SCHOOL DISTRICT

U

K J
H E D A
L F
N M G C B
P
Q R S
T

KEY PLAN

NORTH: PLAN TRUE

STATE OF TEXAS
JOHN R. KUBALA
106120
LICENSED PROFESSIONAL ENGINEER
02/17/2022
Kubala Engineers
F-3709

CLIENT
FRIENDSWOOD ISD

DATE	PROJECT NUMBER
02/02/2022	20381

DRAWING HISTORY

No.	Description	Date
4	ADDENDUM #4	02/17/2022

ISSUE FOR PROPOSAL

ROOF - FRAMING PLAN - AREA E

S-103E

Kubala ENGINEERS
Ph: 800.248.3674
www.kubalaengineers.com
TX. REG. NO. F-3709

HIGH ROOF - FRAMING PLAN - AREA H

S-103H

FOR BLUEBEAM LABELING/OCR:

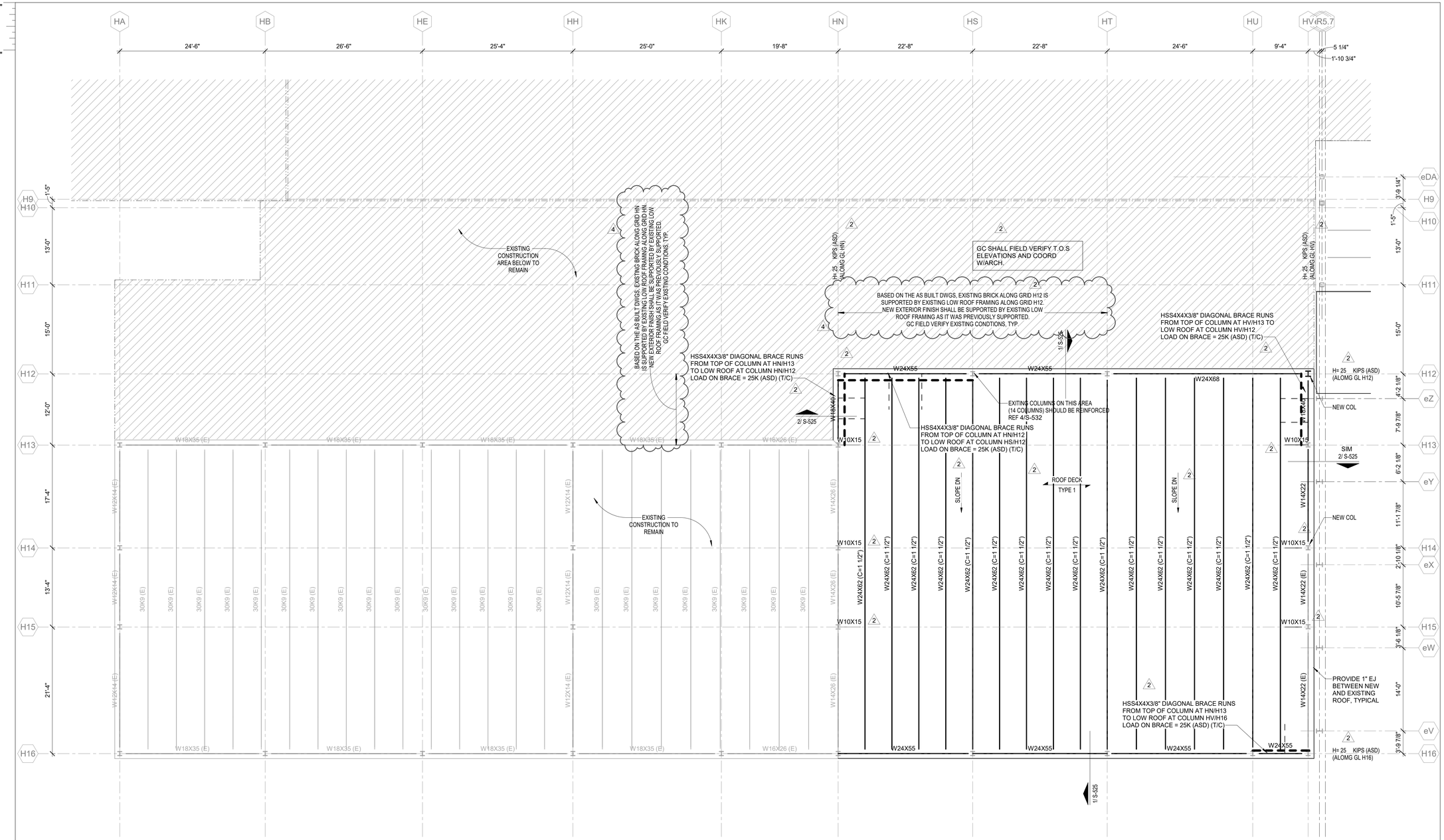

1 HIGH ROOF FRAMING PLAN - AREA H

1/8" = 1'-0"

DEMOLITION/EXISTING PLAN NOTES

1. VERIFY ALL ROOF OPENING DIMENSIONS AND LOCATIONS WITH ARCH DRAWINGS.
2. GC COORDINATE LOCATION OF NEW MECHANICAL PENETRATIONS AND NEW RTUS WITH MEP/ARCH DRAWINGS. REF DETAILS 1/S-526 AND 2/S-526 .

******* IMPORTANT GC NOTE FOR ALL STRUCTURAL FOUNDATION DEMOLITION SCOPE*******

THE INFORMATION CONTAINED IN THESE PLANS ARE BASED ON EXISTING BUILDING CONSTRUCTION PLANS AND LIMITED AS-BUILTING. FIELD VERIFY ALL EXISTING DIMENSIONS AND CONDITIONS PRIOR TO FABRICATION OF NEW STEEL. NOTIFY ARCHITECT / ENGINEER OF ANY DISCREPANCIES. ANY APPROVED CHANGES SHALL BE INCORPORATED INTO THE ERECTION / SHOP DRAWINGS PRIOR TO SUBMISSION.

2 3. GC NOTE: DEMOLITION OF COLUMNS AND BEAMS IS MEANS AND METHOD. IT IS GENERAL CONTRACTORS RESPONSIBILITY TO SHORE THE EXISTING STRUCTURE UNTIL ALL THE NEW CONSTRUCTION IS COMPLET

GC NOTE FOR THE BRIDGING

UPLIFT X-BRIDGING NOT SHOWN ON PLANS FOR CLARITY. GC SHALL PROVIDE X-BRIDGING BETWEEN ADJACENT WF BEAMS AT ROOF PER DETAIL 5/S-523

Kubala ENGINEERS
Ph: 800.248.3674
www.kubalaengineers.com
TX. REG. NO. F-3709

PBK

ARCHITECT PBK Architects, Inc. PBK.com
HOUSTON
11 Greenway Plaza, 22nd Floor
Houston, TX 77046
713-965-0608 P
713-961-4571 F
TX Firm: BR 1608

CIVIL
SSG
T 713-965-0608
SPORTS
PBK SPORTS
T 281-528-1697
STRUCTURAL
KUBALA ENGINEERS
T 800-248-3674
MEPT
LEAF ENGINEERS
T 713-940-3300
ENVELOPE
BEAM
T 713-940-3201
AV / ACOUSTIC
JAFFE HOLDEN
T 713-807-7100
THEATER
SCHULER SHOOK
T 214-747-6300
FOOD SERVICE
FOOD DESIGN PROFESSIONAL
T 281-350-2323

FRIENDSWOOD HIGH SCHOOL ADDITIONS AND RENOVATIONS

702 Greenbriar Dr
Friendswood, TX 77546

ISSUE FOR PROPOSAL

FRIENDSWOOD INDEPENDENT SCHOOL DISTRICT

U

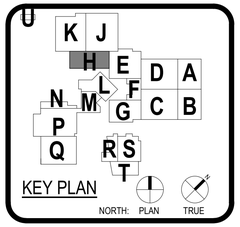

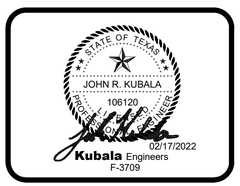

CLIENT
FRIENDSWOOD ISD

DATE	PROJECT NUMBER
02/02/2022	20381

DRAWING HISTORY

No.	Description	Date
2	ADDENDUM #2	02/14/2022
4	ADDENDUM #4	02/17/2022

ISSUE FOR PROPOSAL

HIGH ROOF - FRAMING PLAN - AREA H

S-103H

File Path: C:_Revit\Local\ST21-20381-FHS_Central_amer.taghiebiLLC29.rvt

CHECKED BY:
Checker
DRAWN BY:
Author
Plot Stamp:
2/17/2022 12:30:52 PM

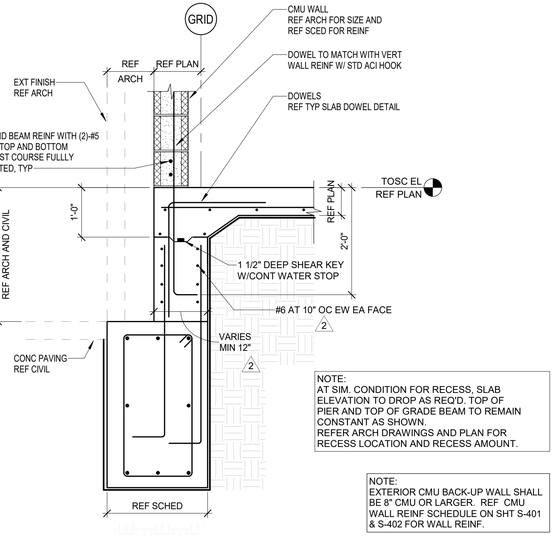

NOTE:
AT SIM. CONDITION FOR RECESS, SLAB ELEVATION TO DROP AS REQ'D. TOP OF PIER AND TOP OF GRADE BEAM TO REMAIN CONSTANT AS SHOWN.
REFER ARCH DRAWINGS AND PLAN FOR RECESS LOCATION AND RECESS AMOUNT.

NOTE:
EXTERIOR CMU BACK-UP WALL SHALL BE 8" CMU OR LARGER. REF CMU WALL REINF SCHEDULE ON SHT S-401 & S-402 FOR WALL REINF.

1 EXTERIOR GRADE BEAM AT CMU WALL
NO SCALE

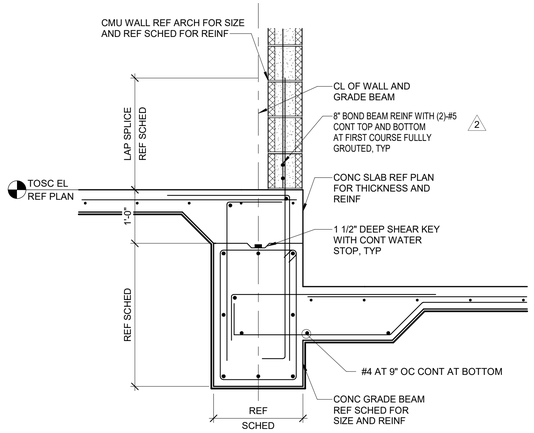

3 CMU WALL AT INT GRADE BEAM
3/4" = 1'-0"

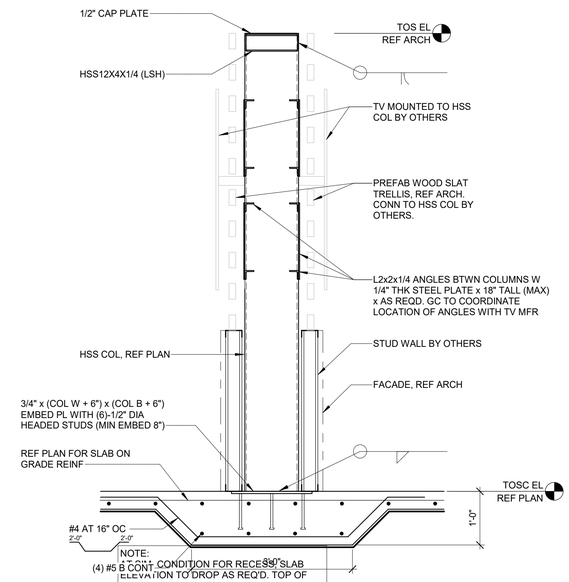

NOTE:
AT SIM. CONDITION FOR RECESS, SLAB ELEVATION TO DROP AS REQ'D. TOP OF PIER AND TOP OF GRADE BEAM TO REMAIN CONSTANT AS SHOWN.
REFER ARCH DRAWINGS AND PLAN FOR RECESS LOCATION AND RECESS AMOUNT.

4 BEAM AT EXTERIOR CMU WALL
3/4" = 1'-0"

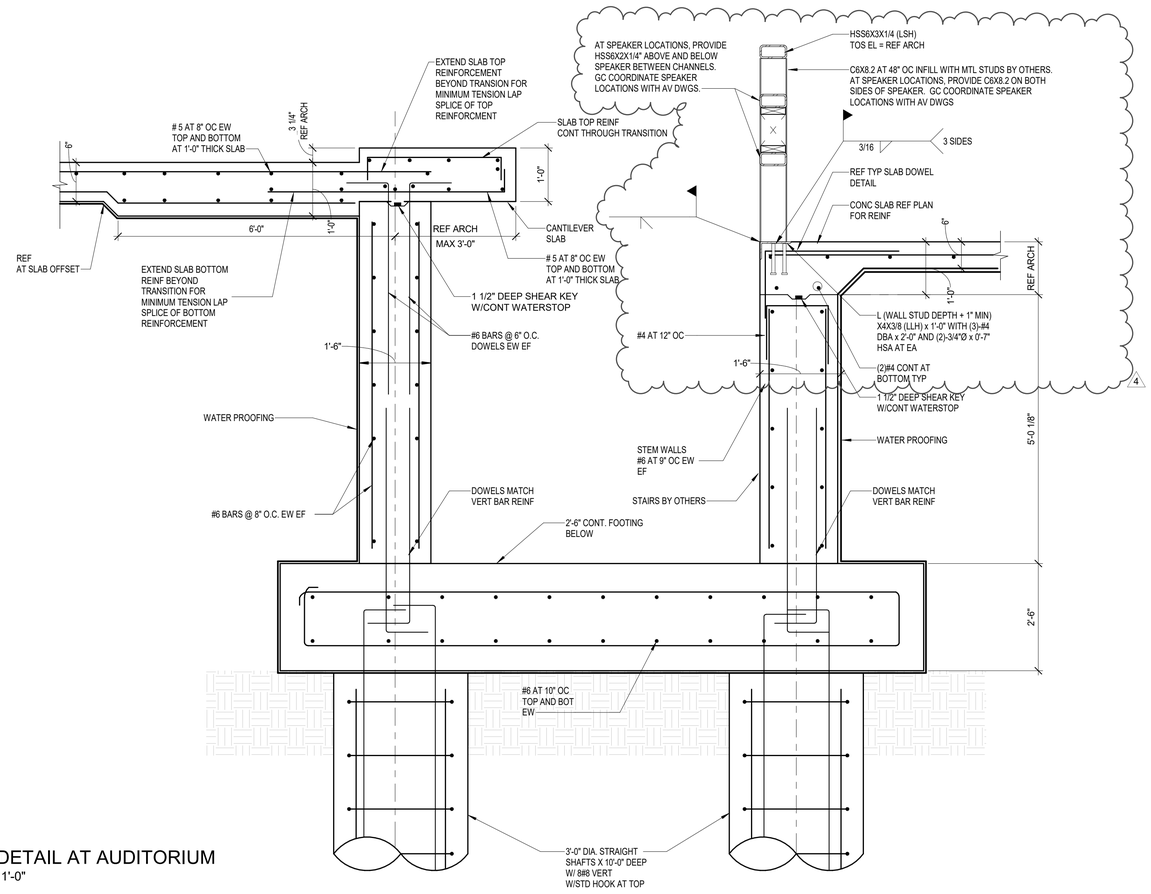

2 PIT DETAIL AT AUDITORIUM
3/4" = 1'-0"

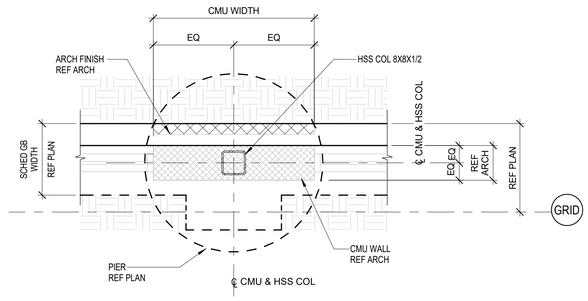

5 TYPICAL SECTION FOR COL INSIDE CMU WALL
1/2" = 1'-0"

Kubala ENGINEERS
Ph: 800.248.3674
www.kubalaengineers.com
TX. REG. NO. F-3709

File Path: C:_RevitLocalST21-20381-FHS_Central_amer.tagliebiLLC29.rvt

CHECKED BY:
Checker
DRAWN BY:
Author
Plot Stamp:
2/17/2022 12:30:54 PM

PBK

ARCHITECT
PBK Architects, Inc.
PBK.com
HOUSTON
11 Greenway Plaza, 22nd Floor
Houston, TX 77046
713-965-0608 P
713-961-4571 F
TX Firm: BR 1608

CIVIL
SSG
T 713-965-0608
SPORTS
PBK SPORTS
T 281-528-1697
STRUCTURAL
KUBALA ENGINEERS
T 800-248-3674
MEPT
LEAF ENGINEERS
T 713-940-3300
ENVELOPE
BEAM
T 713-940-3201
AV / ACOUSTIC
JAFFE HOLDEN
T 713-807-7100
THEATER
SCHULER SHOOK
T 214-747-5300
FOOD SERVICE
FOOD DESIGN PROFESSIONAL
T 281-350-2323

FRIENDSWOOD HIGH SCHOOL ADDITIONS AND RENOVATIONS

702 Greenbriar Dr
Friendswood, TX 77546

ISSUE FOR PROPOSAL

STATE OF TEXAS
JOHN R. KUBALA
106120
LICENSED PROFESSIONAL ENGINEER
02/17/2022
Kubala Engineers
F-3709

CLIENT
FRIENDSWOOD ISD

DATE	PROJECT NUMBER
02/02/2022	20381

DRAWING HISTORY

No.	Description	Date
2	ADDENDUM #2	02/14/2022
4	ADDENDUM #4	02/17/2022

ISSUE FOR PROPOSAL

FOUNDATION SECTIONS AND DETAILS

S-316

FOUNDATION SECTIONS AND DETAILS

S-319

FOR BLUEBEAM LABELING/OCR:

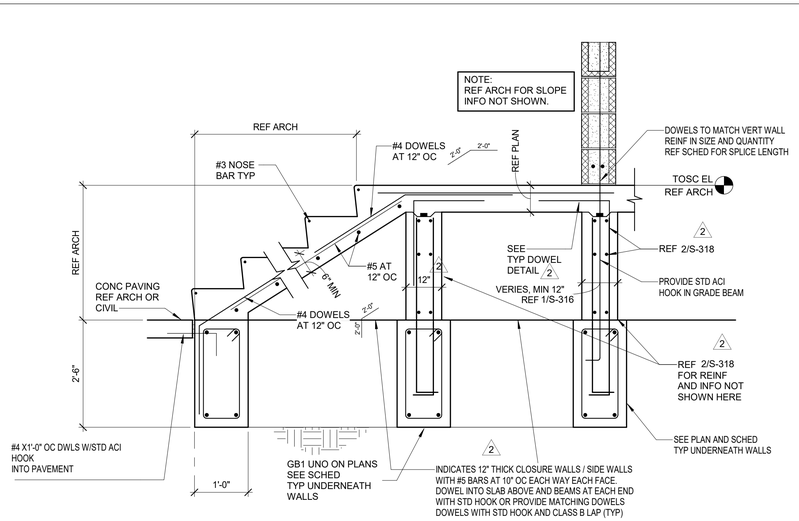

1 CONCRETE STAIR DETAIL
3/4" = 1'-0"

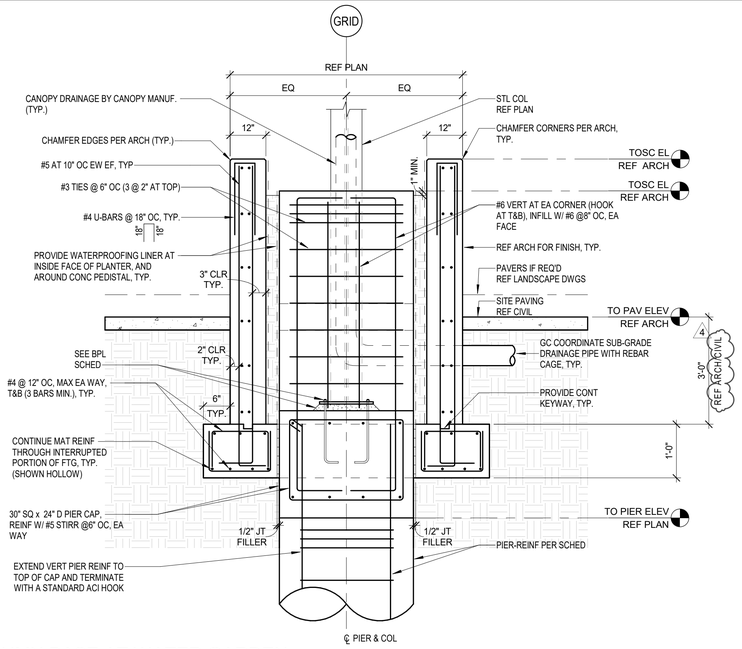

4 COLUMN BASE AT WATER GARDEN
NO SCALE

4

NOT USED

2 SECTION AT WATER GARDEN
NO SCALE

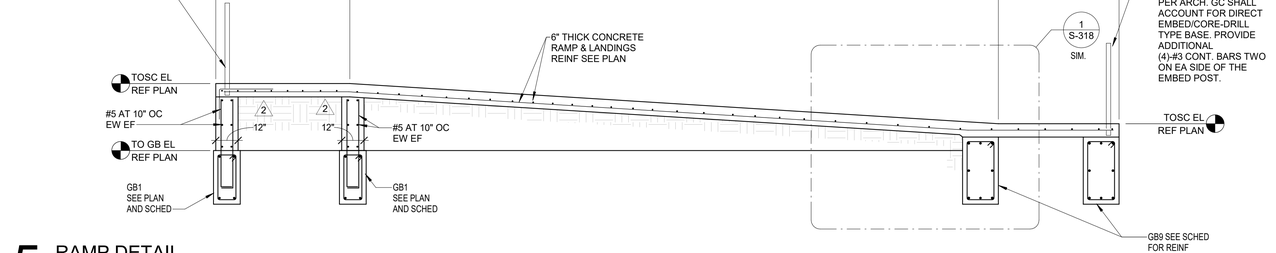

5 RAMP DETAIL
3/8" = 1'-0"

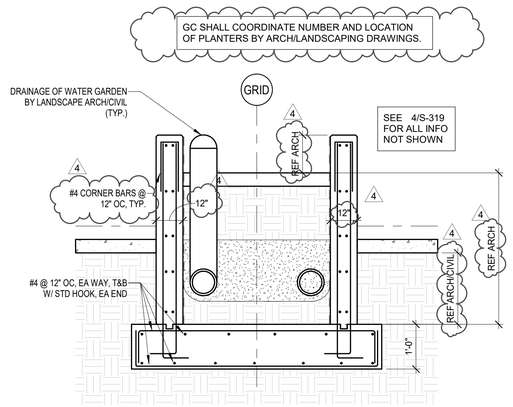

3 SECTION AT WATER GARDEN
NO SCALE

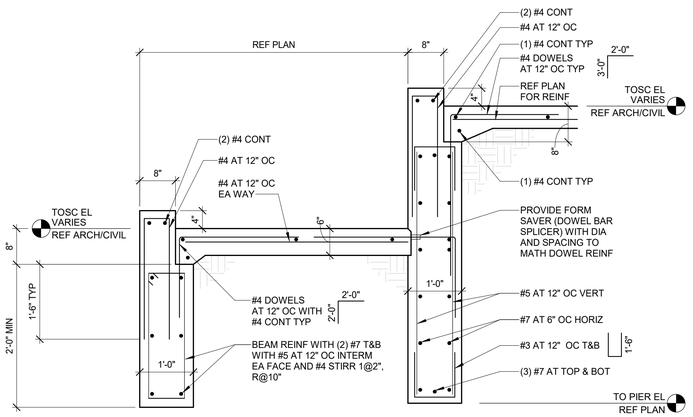

6 CONCRETE RAMP DETAIL
3/4" = 1'-0"

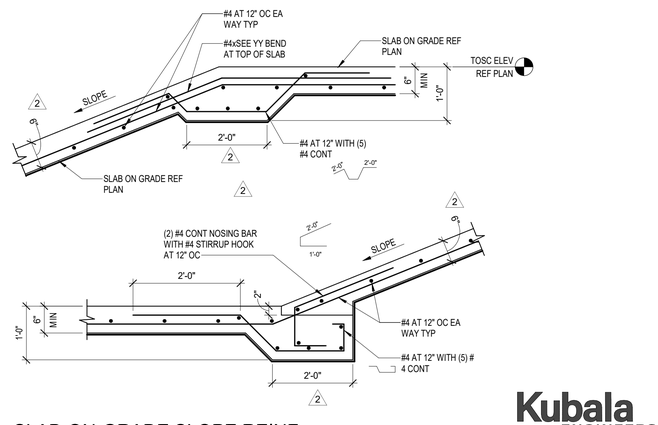

7 SLAB-ON-GRADE SLOPE REINF
NO SCALE

Kubala ENGINEERS
Ph: 800.248.3674
www.kubalaengineers.com
TX. REG. NO. F-3709

PBK

ARCHITECT
PBK Architects, Inc.
PBK.com
HOUSTON
11 Greenway Plaza, 22nd Floor
Houston, TX 77046
713-965-0608 P
713-961-4571 F
TX Firm: BR 1608

CIVIL
SSG
T 713-965-0608
SPORTS
PBK SPORTS
T 281-528-1697
STRUCTURAL
KUBALA ENGINEERS
T 800-248-3674
MEPT
LEAF ENGINEERS
T 713-940-3300
ENVELOPE
BEAM
T 713-940-3201
AV / ACOUSTIC
JAFFE HOLDEN
T 713-807-7100
THEATER
SCHULER SHOOK
T 214-747-5300
FOOD SERVICE
FOOD DESIGN PROFESSIONAL
T 281-350-2323

FRIENDSWOOD HIGH SCHOOL ADDITIONS AND RENOVATIONS

702 Greenbriar Dr
Friendswood, TX 77546

ISSUE FOR PROPOSAL

JOHN R. KUBALA
106120
LICENSED PROFESSIONAL ENGINEER
STATE OF TEXAS
02/17/2022
Kubala Engineers
F-3709

CLIENT
FRIENDSWOOD ISD

DATE	PROJECT NUMBER
02/02/2022	20381

DRAWING HISTORY

No.	Description	Date
2	ADDENDUM #2	02/14/2022
4	ADDENDUM #4	02/17/2022

ISSUE FOR PROPOSAL

FOUNDATION SECTIONS AND DETAILS

S-319

File Path: C:_Revit_Local\ST21-20381-FHS_Central_amer.taghleiLLC29.rvt

CHECKED BY:
Checker
DRAWN BY:
Author
Plot Stamp:
2/17/2022 12:30:57 PM

GENERAL CMU NOTES AND TYP DETAILS

S-402

FOR BLUEBEAM LABELING/OCR:

	SW TAG	CMU (SIZE)	MEAN ROOF HEIGHT (SIMPLE SPAN)	VERT REINF (IN FULLY GROUTED CELLS)	HORIZ REINF (IN FULLY GROUTED CELLS)	JAMB / JOINT REINF (IN FULLY GROUTED CELLS)
EXTERIOR WALL	SW1	8"	16'-0"	#6 @ 24" OC EF	#5 @ 48" OC	(2) #6 PER CELL IN FIRST 3 CELLS
			>16'-0" ..... 28'-0"	#6 @ 8" OC EF	#5 @ 32" OC	(2) #6 PER CELL IN FIRST 3 CELLS
	SW2	12"	16'-0"	#6 @ 40" OC EF	#5 @ 32" OC	(2) #6 PER CELL IN FIRST 3 CELLS
			>16'-0" ..... 28'-0"	#6 @ 16" OC EF	#5 @ 32" OC EF	(2) #6 PER CELL IN FIRST 3 CELLS
	W1	12"	13'-0"	#7 @ 16" OC EF	#5 @ 32" OC EF	(2) #6 PER CELL IN FIRST 3 CELLS
INTERIOR WALL	SW1	8"	16'-0"	#6 @ 32" OC	#5 @ 32" OC	(2) #6 PER CELL IN FIRST 4 CELLS
			>16'-0" ..... 28'-0"	#6 @ 16" OC EF	#5 @ 32" OC	(2) #6 PER CELL IN FIRST 4 CELLS
	W2 (LOAD BEARING)	8"	16'-0"	#6 @ 8" OC EF (BOND BEAMS AT 4'-0" OC VERT WITH (2)#5 IN EA BOND BM	#6 @ 8" OC EF (BOND BEAMS AT 4'-0" OC VERT WITH (2)#5 IN EA BOND BM	(2) #6 PER CELL IN FIRST 3 CELLS

NOTES:

1. UNLESS NOTED OTHERWISE, REFER TO THE SCHEDULE ABOVE FOR VERTICAL WALL REINFORCING REQUIREMENTS AT ALL STRUCTURAL CMU WALLS.
2. THE STRUCTURAL MASONRY SHOWN ON THE PLANS IS PART OF THE LATERAL LOAD RESISTING SYSTEM OF THE BUILDING. THE STRUCTURAL DETAILS, INCLUDING CLIP ANGLES, DOWELS AND ADDITIONAL SECONDARY FRAMING MEMBERS, ETC., SHOWN ARE CRITICAL TO THE LATERAL PERFORMANCE OF THE BUILDING. THE TEMPORARY STEEL FRAME BRACING PROVIDED DURING CONSTRUCTION SHALL NOT BE REMOVED UNTIL ALL STRUCTURAL LATERAL BRACING SYSTEMS (INCLUDING STRUCTURAL MASONRY WALLS) HAVE BEENINSTALLED AND CONNECTED TO THE STEEL FRAMING.
3. THE FIRST (3) CELLS AT CORNERS (IN EA DIRECTION), ENDS OF WALLS AND EACH SIDE OF THE CONTROL JOINTS SHALL BE REINFORCED WITH THE SAME SIZE AND NUMBER OF REINFORCING BARS AS SPECIFIED FOR THE OTHER REINFORCED CELLS IN THE WALL AND GROUTED FULL.
4. AT OPENINGS, PROVIDE EXTRA REINFORCED GROUTED FULL HEIGHT CONSECUTIVE CELLS EACH SIDE OF THE OPENING EQUAL TO ONE HALF THE TOTAL NUMBER OF THE CELLS INTERRUPTED BY THE OPENING. REINFORCE EACH CELL WITH THE SAME SIZE AND NUMBER OF BARS AS SPECIFIED FOR THE INTERRUPTED CELLS.PROVIDE A MINIMUM OF (2) REINFORCED GROUTED CELLS EACH SIDE OF OPENING. REFER TO 'TYPICAL CMU WALL OPENING DIAGRAM AND SCHEDULE FOR ADDITIONAL INFORMATION.
5. HOLD VERTICAL REINFORCING IN POSITION AT TOP AND BOTTOM AND AT 8'-0" OC MAXIMUM.
6. REFER TO GENERAL NOTES, SPECIFICATIONS AND SECTIONS/DETAILS FOR INFORMATION NOT SHOWN.
7. VERTICAL BARS MAY BE SPLICED IN 8'-0" (+ or -) LENGTHS. SPLICES LOCATED IN ADJACENT CELLS SHALL BE STAGGERED SUCH THAT NOT MORE THAN 50 PERCENT OF THE BARS ARE SPLICED AT THE SAME LOCATION.

1 TYPICAL STRUCTURAL MASONRY CMU WALL REINF. SCHEDULE
NO SCALE

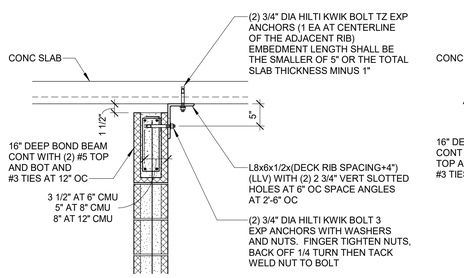

AT RIBBED SLAB PERPENDICULAR TO WALL

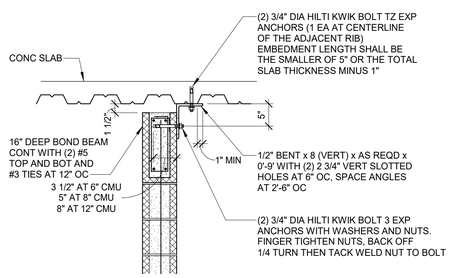

AT RIBBED SLAB PARALLEL TO WALL

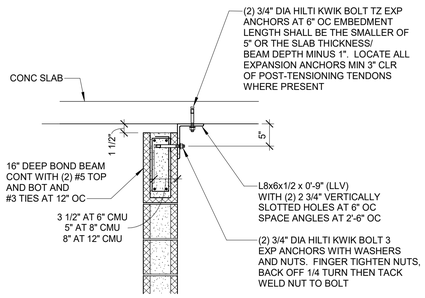

AT CONCRETE SLAB/ BEAM

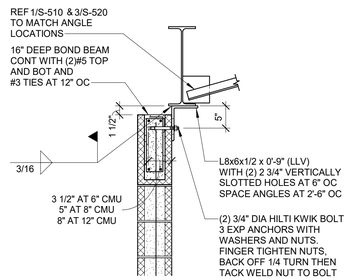

AT STEEL BEAM

2 TYPICAL BRACING AT TOP OF STRUCTURAL CMU SHEAR WALLS AND NON STRUCTURAL EXTERIOR CMU WALLS
3/4" = 1'-0"

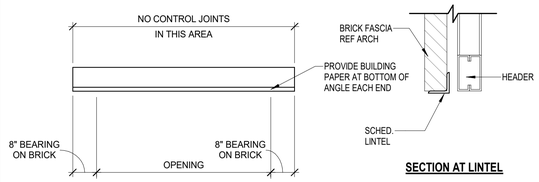

SECTION AT LINTEL

CLEAR OPENING	MINIMUM ANGLE SIZE
0 TO LESS THAN 6'-0"	L 3 1/2 x 3 1/2 x 5/16
6'-0" TO LESS THAN 7'-0"	L 5 x 3 1/2 x 5/16 (LLV)
7'-0" TO LESS THAN 8'-0"	L 6 x 3 1/2 x 5/16 (LLV)
8'-0" - 10'-0"	L 7 x 4 x 3/8 (LLV)

NOTES:

1. REF ARCHITECTURAL DRAWINGS FOR SIZE AND LOCATIONS OF OPENINGS.
2. PROVIDE 1" OF BEARING @ EACH JAMB FOR EACH FOOT OF CLEARSPAN BUT NOT LESS THAN 8".
3. WHERE MIN. BEARING CANNOT BE ACHIEVED, PROVIDE ADEQUATE CONNECTION TO STRUCTURAL MEMBERS OR PROVIDE VERTICAL SUPPORTS AS REQ'D. SUCH DETAILS SHALL BE APPROVED BY THE ENGINEER OF RECORD.

3 TYPICAL STEEL LOOSE LINTEL SCHEDULE
NO SCALE

NOTE: EXTERIOR CMU BACK-UP WALL SHALL BE 8" CMU OR LARGER. REF CMU WALL S-401' SS-402\ULE ON SHT S-401 & S-402 FOR WALL REINF.

4 TYPICAL OVERHEAD COILING DOOR ATTACHMENT TO CMU BACKUP WALL DETAIL
3/4" = 1'-0"

5 TYPICAL LINTEL WITH SHELF ANGLE
NO SCALE

NOTES:

1. EXTEND BOND BEAM CONTINUOUSLY BETWEEN PILASTERS FOR EACH CANOPY LEVEL.
2. GALVANIZE ALL PARTS THAT EXTEND THROUGH ARCHL WALL MATERIALS.
3. CONNECTION APPLIES FOR CANOPY ROOF FRAMING BEAMS AND HANGERS.
4. REF SHELF ANGLE 5/S-402 2 FOR TYPICAL LINTEL WITH

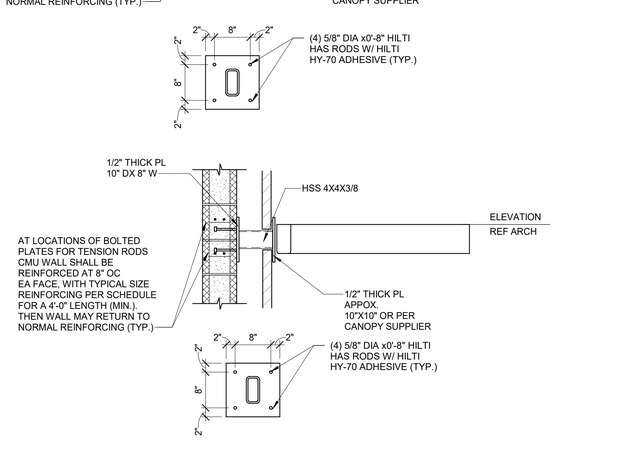

6 AVADECK CANOPY CONNECTION DETAIL
3/4" = 1'-0"

Kubala ENGINEERS
Ph: 800.248.3674
www.kubalaengineers.com
TX. REG. NO. F-3709

PBK

ARCHITECT PBK Architects, Inc.
HOUSTON PBK.com
11 Greenway Plaza, 22nd Floor
Houston, TX 77046
713-965-0608 P
713-961-4571 F
TX Firm: BR 1608

CIVIL
SSG
T 713-965-0608
SPORTS
PBK SPORTS
T 281-528-1697
STRUCTURAL
KUBALA ENGINEERS
T 800-248-3674
MEPT
LEAF ENGINEERS
T 713-940-3300
ENVELOPE
BEAM
T 713-940-3201
AV / ACOUSTIC
JAFFE HOLDEN
T 713-807-7100
THEATER
SCHULER SHOOK
T 214-747-9300
FOOD SERVICE
FOOD DESIGN PROFESSIONAL
T 281-350-2323

FRIENDSWOOD HIGH SCHOOL ADDITIONS AND RENOVATIONS

702 Greenbriar Dr
Friendswood, TX 77546

ISSUE FOR PROPOSAL

U

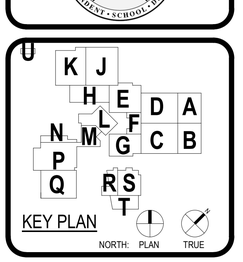

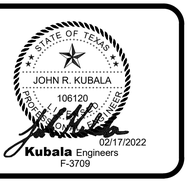

CLIENT
FRIENDSWOOD ISD

DATE	PROJECT NUMBER
02/02/2022	20381

DRAWING HISTORY

No.	Description	Date
2	ADDENDUM #2	02/14/2022
4	ADDENDUM #4	02/17/2022

ISSUE FOR PROPOSAL

GENERAL CMU NOTES AND TYP DETAILS

S-402

File Path: C:_Revit Local\S721-20381-FHS_Central_amer.taghleb.LLC29.rvt

CHECKED BY: Checker
DRAWN BY: Author
Plot Stamp: 2/17/2022 12:30:59 PM

GENERAL STEEL NOTES AND TYP DETAILS

S-500

FOR BLUEBEAM LABELING/OCR:

STRUCTURAL STEEL:

MATERIAL:

1. STRUCTURAL STEEL IS TO CONFORM TO THE FOLLOWING ASTM SPECIFICATIONS, AND IS TO BE FABRICATED AND ERECTED IN ACCORDANCE WITH THE LATEST EDITION OF THE AISC SPECIFICATIONS:
A. STEEL WIDE FLANGE AND WT SECTIONS..... ASTM A992 OR ASTM A572 - GRADE 50
B. MISCELLANEOUS STEEL SECTIONS (ANGLES, CHANNELS AND BARS)..... ASTM A36
C. HOLLOW STEEL SECTIONS..... ASTM A500, GRADE B
D. STEEL PIPE SECTIONS..... ASTM A53, GRADE B
E. BOLTS AND NUTS (HEAVY-HEX)..... ASTM A325
F. SHEAR-STUD CONNECTORS..... ASTM A108
G. ANCHOR RODS..... ASTM F1554, GRADE 36, GRADE 55 OR GRADE 105
H. PLATES..... ASTM A36 OR A572 GRADE 50
K. WASHERS..... ASTM F436

2. ALL STEEL SHALL BE DOMESTICALLY (INCLUDING CANADA) MILLED AND FABRICATED. FOREIGN STEEL SHALL NOT BE UTILIZED WITHOUT PRIOR APPROVAL FROM THE STRUCTURAL ENGINEER. THE APPROVAL PROCESS SHALL TAKE PLACE DURING BIDDING TIME. ANY REQUEST TO UTILIZE FOREIGN STEEL MADE AFTER BIDDING SHALL BE REJECTED.

3. STRUCTURAL STEEL, MISCELLANEOUS METAL, AND EMBEDS EXPOSED TO THE EXTERIOR ARE TO BE HOT DIP GALVANIZED AFTER FABRICATION, EXCEPT AS NOTED ON THE DRAWINGS. TUBE SHAPE MEMBERS EXPOSED TO THE EXTERIOR SHALL HAVE CAP PLATES SEAL WELDED, UNLESS NOTED OTHERWISE ON THE DRAWINGS.

4. STRUCTURAL STEEL IS TO BE PREPARED AND PRIMED ACCORDING TO THE PROJECT SPECIFICATIONS. STRUCTURAL STEEL LOCATED IN CRAWL SPACES OR OTHERWISE INACCESSIBLE AREAS IS TO RECEIVE 2 COATS OF PRIMER.

5. CONTINUITY PLATES (FULL DEPTH COLUMN STIFFENERS ALIGNED WITH BEAM FLANGES, OR FULL DEPTH BEAM STIFFENERS ALIGNED WITH COLUMN FLANGES) SHALL MATCH THE STEEL GRADE OF THE BASE MEMBER.

6. IN ADDITION TO THE STEEL INDICATED ON THE DRAWINGS, THE CONTRACTOR SHALL INCLUDE THREE (3) PERCENT OF TOTAL TONNAGE OF FABRICATED STEEL (LABOR FOR ERECTION SHALL BE INCLUDED) DURING THE PROCESS OF WORK AS MAY BE DIRECTED BY THE ARCHITECT/ENGINEER OF RECORD. IF STEEL IS NOT USED DURING THE COURSE OF THE PROJECT, OWNER IS TO RECEIVE A CREDIT FOR THE PORTION NOT USED.

CONNECTIONS:

1. ALL STRUCTURAL STEEL DETAILS AND CONNECTIONS SHALL CONFORM TO STANDARDS OF THE AISC. DOUBLE CONNECTIONS THROUGH COLUMN WEBS, BEAM TO BEAM CONNECTIONS AND BEAMS THAT FRAME OVER THE TOP OF COLUMNS REQUIRE A BEAM ERECTION SEAT OR A STAGGERED CONNECTION WITH AT LEAST ONE INSTALLED BOLT REMAINING IN PLACE TO SUPPORT THE FIRST BEAM WHILE THE SECOND BEAM IS BEING ERECTED.

2. CONNECTIONS THAT ARE NOT DETAILED ON THE DRAWINGS SHALL BE SELECTED FROM THE TABLES IN PART 10 OF THE LATEST EDITION OF THE MANUAL OF STEEL CONSTRUCTION OF THE AICSC. TABLE 10-1 MAY BE USED FOR ALL-BOLTED DOUBLE ANGLE CONNECTIONS. TABLE 10-2 MAY BE USED FOR WELDED/BOLTED DOUBLE ANGLE CONNECTIONS. TABLE 10-3 MAY BE USED FOR ALL-WELDED DOUBLE ANGLE CONNECTIONS. BEAM REACTIONS SHALL BE ONE-HALF THE TOTAL ALLOWABLE UNIFORM LOAD GIVEN IN TABLE 3-6 THROUGH 3-9 IN PART 3 OF THE MANUALOF STEEL CONSTRUCTION OF AISC. CONNECTIONS FOR COMPOSITE BEAMS SHALL HAVE THE STANDARD AISC CAPACITY INCREASED BY 35 PERCENT.

3. PROVIDE ALL NECESSARY HOLES IN STRUCTURAL STEEL MEMBERS FOR ATTACHMENT OF ALL NON-STRUCTURAL ITEMS (IE: HOLES FOR WINDOW HEAD ANCHORS). SEE ARCHITECTURAL DRAWINGS FOR ANY REQUIREMENTS.

4. SPLICING OF STRUCTURAL STEEL MEMBERS MUST BE APPROVED BY THE STRUCTURAL ENGINEER, IF NOT ALREADY SHOWN ON THE DRAWINGS.

5. SHOP BOLTED CONNECTIONS ARE PERMISSIBLE IF SUFFICIENT BOLT CLEARANCE IS AVAILABLE FOR TIGHTENING OF HIGH STRENGTH BOLTS. CLEARANCES SHALL BE IN ACCORDANCE WITH TABLE 7-16 AND 7-17 OF THE LATEST EDITION OF THE MANUAL OF STEEL CONSTRUCTION OF THE AISC. ALL STEEL MEMBERSAND ASSEMBLIES SHALL BE SHOP FABRICATED TO THE GREATEST EXTENT POSSIBLE. TRUSSES SHALL BE FULLY SHOP ASSEMBLED. FIELD SPLICES FOR SHIPPING PURPOSES SHALL ONLY BE AS APPROVED BY THE ENGINEER OF RECORD. THE STEEL FABRICATOR AND THE STEEL ERECTOR SHALL COORDINATE THE SHOP FABRICATION, SHIPPING AND ERECTION OF ALL STRUCTURAL MEMBERS AND ASSEMBLIES.

6. ALL CONNECTION BOLTS FOR STRUCTURAL STEEL MEMBERS MUST CONFORM TO ASTM A325 OR A490 UNLESS NOTED OTHERWISE. MINIMUM SIZE SHALL BE 3/4 INCH DIAMETER. STRUCTURAL STEEL CONNECTIONS SHALL BE DESIGNED BY THE CONTRACTOR IN ACCORDANCE WITH THE MINIMUM REQUIREMENTS SPECIFIED ON S501. BOLTS SHALL BE DIRECT TENSION INDICATING BOLTS CONFORMING TO ASTM F1852 WITH HARDENED WASHERS UNDER THE NUT AND SACRIFICIAL SPLINES. HEX NUTS MUST CONFORM TO ASTM A563 AND WASHERS MUST CONFORM TO ASTM F436.

7. ALL MOMENT CONNECTIONS SHALL BE FULL WELDED CONNECTIONS DESIGNED TO DEVELOP THE FULL CROSS-SECTION OF THE MEMBER. STIFFENER PLATES, WHERE SHOWN, ARE MANDATORY AND MAY NOT BE OMITTED. MOMENT CONNECTIONS ARE INDICATED ON THE PLANS BY A TRIANGULAR BULB ON THE END OF THE BEAM, OR BY THE LETTERS "MC".

8. EMBED PLATES TO BE INSTALLED IN THE FOUNDATION AND/OR SLAB SHALL BE SUBMITTED FOR REVIEW WITH THE ANCHOR BOLTS.

9. BOLTS SHALL BE TIGHTENED BY THE AISC "SNUG TIGHT" METHOD UNLESS NOTED OTHERWISE

10. CANTILEVER BEAMS MOMENT CONNECTED TO THE FRAME SHALL BE THE SAME SIZE AS THE BACK-UP SPAN IF NO SIZE IS GIVEN.

11. SHELF ANGLES SHOWN AS CONTINUOUS IN THE SECTIONS SHALL BE INSTALLED IN 20'-0" MAXIMUM LENGTHS, LEAVING A 1/4" GAP BETWEEN ENDS AND AT CORNERS. LOCATE GAPS TO MATCH MASONRY CONTROL JOINTS. AT BUILDING EXPANSION JOINT, LEAVE A GAP TO MATCH EXPANSION JOINT WIDTH.

12. CONNECT MISCELLANEOUS STEEL MEMBERS USING FILLET WELDS SUFFICIENT TO DEVELOP THE TENSILE STRENGTH OF THE SMALLER MEMBER AT THE JOINT UNLESS SHOWN OTHERWISE.

13. STEEL MEMBERS SHOWN TO BE CURVED SHALL BE ROLLED IN A MANNER THAT WILL NOT CAUSE DISTORTION OR BUCKLING. SHOULD ALTERATIONS TO THE MEMBER SIZE, SUCH AS A THICKER FLANGE OR WEB, BE REQUIRED TO ENSURE THIS OUTCOME, THE ADDITIONAL STEEL SHALL BE PROVIDED AT NO ADDITIONAL COST TO THE CONTRACT.

WELDING:

1. ALL WELDING MUST CONFORM TO THE AMERICAN WELDING SOCIETY ANSI/AWS D1.1 STANDARDS, AND SHALL CONFORM TO THE STANDARDS OF THE LATEST EDITION OF THE MANUAL OF STEEL CONSTRUCTION. ALL WELDERS MUST BE CERTIFIED IN ACCORDANCE WITH AWS D1.1. WELDING OF REINFORCING BARS SHALL COMPLY TO THE AMERICAN WELDING SOCIETY AWS D1.4. SHORT CIRCUIT TRANSFER FOR THE GAS METAL ARC WELDING PROCESS IS NOT PERMITTED.

2. ELECTRODES FOR ALL FIELD AND SHOP WELDING SHALL BE CLASS E70XX. ELECTRODES FOR MOMENT CONNECTIONS SHALL BE CLASS E7018 WITH A CHARPY TOUGHNESS OF AT LEAST 20 FT-LBS AT -20 DEGREES FAHRENHEIT.

3. ALL MISCELLANEOUS WELDS SHALL BE MINIMUM SIZE FILLET ALL AROUND AND MUST BE IN ACCORDANCE WITH AISC. WELDING OF CONTINUOUS MEMBERS SHALL BE A MINIMUM OF 2 INCHES OF 3/16 INCH FILLET STITCH WELDS AT 12 INCHES O.C., STAGGERED EACH SIDE, UNLESS SHOWN OTHERWISE ON THE DRAWINGS. COLUMN BASE PLATES, STIFFENER PLATES AND CAP PLATES SHALL BE WELDED ALL AROUND.

4. HEADED STUDS SHALL BE WELDED TO EMBED PLATES BY A METHOD IN WHICH THE CONNECTION CAN DEVELOP THE FULL TENSION AND SHEAR CAPACITY OF THE STUD.

BASE PLATE NOTES:

1. ALL ANCHOR RODS SHALL BE F1554 GRADE 55 UNLESS NOTED OTHERWISE.

2. SIZE WELDS PER AISC MINIMUM FILLET REQUIREMENTS, 5/16" MINIMUM.

3. UNLESS NOTED OTHERWISE, ALL ANCHOR ROD NUTS SHALL BE TIGHTENED TO A "SNUG TIGHT" CONDITION AS DEFINED BY AISC AFTER THE CONCRETE IS AT LEAST 14 DAYS OLD.

4. USE OVERSIZED HOLES FOR ANCHOR RODS ACCORDING TO AMERICAN INSTITUTE OF STEEL CONSTRUCTION. PLATE WASHERS WITH STANDARD HOLES SHALL BE INSTALLED OVER OVERSIZED HOLES.

5. CONTRACTOR SHALL PROVIDE TEMPLATE FOR ANCHOR ROD INSTALLATION.

6. NON-SHRINK GROUT FOR BASE PLATES AND BEARING PLATES:

ALL GROUT USED UNDER STEEL COLUMN BASE PLATES OR BEARING PLATES SHALL BE A NON-METALLIC, SHRINKAGE RESISTANT COMPOUND CONFORMING TO ASTM C1090 AND THE CORPS OF ENGINEERS SPECIFICATION CRD-C-621. THE GROUT SHALL HAVE A MINIMUM STRENGTH OF 6,000 PSI WHEN BEARING ON 3,000 PSI CONCRETE OR LESS, A STRENGTH OF 8,000 PSI WHEN BEARING ON CONCRETE BETWEEN 3,000 AND 4,000 PSI, AND, UNLESS NOTED OTHERWISE ON THE DRAWINGS, A STRENGTH OF 8,000 PSI WHEN BEARING ON CONCRETE GREATER THAN 4,000 PSI. 100 PERCENT OF VOID UNDER ALL BASE PLATES IS TO BE GROUTED. ALL BASE PLATES WITH A DIMENSION GREATER THAN 24" SHALL HAVE TWO 1" DIAMETER GROUT HOLES. IF THE SPACE UNDER A COLUMN BASE PLATE IS LESS THAN 1/4", A PRESSURE INJECTION SYSTEM SHALL BE USED.

GROUT THICKNESS SCHEDULE	
ANCHOR BOLT SIZE	MINIMUM GROUT THICKNESS
LESS THAN 1 1/4"	2"
GREATER THAN 1 1/4"	3"

NOTES:

1. REFER TO SPECIFICATIONS AND GENERAL NOTES FOR GROUT REQUIREMENTS.

2. GROUT MAY BE BEVELED OR FORMED BUT SHALL EXTEND A MIN OF 1 1/2" BEYOND FACE OF BASE PLATE.

1 GROUT SCHEDULE
NO SCALE

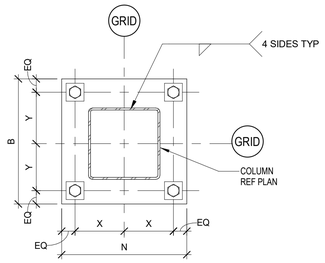

TYPE 1 HSS BASE PLATE
NTS

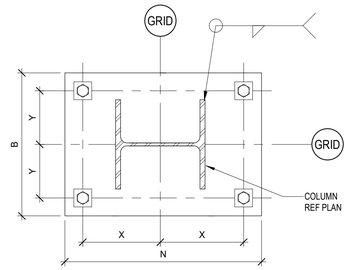

TYPE 2 WIDE FLANGE BASE PLATE
NTS

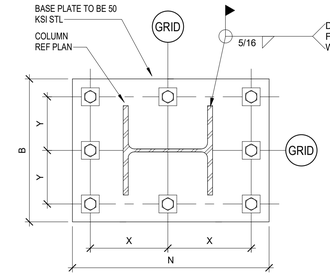

TYPE 3 WIDE FLANGE MOMENT BASE PLATE
NTS

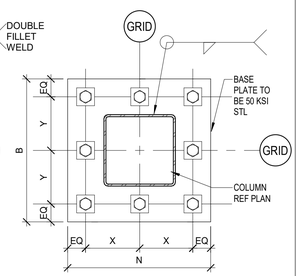

TYPE 4 MOMENT BASE PLATE
NTS

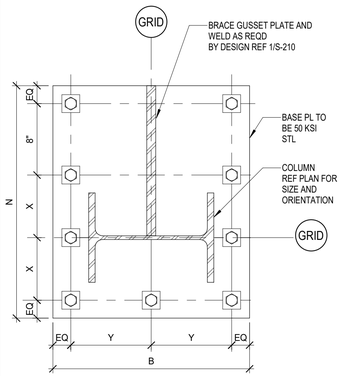

TYPE 5 VERTICAL BRACE BASE PLATE
NTS

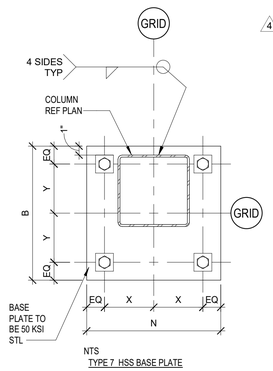

NTS
TYPE 7 HSS BASE PLATE

BASE PLATE SCHEDULE

MARK	COLUMN SIZE	BASE PLATE TYPE	BASE PLATE DIMENSIONS					ANCHOR RODS				NOTES
			N LENGTH (IN)	B WIDTH (IN)	T THICKNESS (IN)	X (IN)	Y (IN)	NUMBER	DIA (IN)	EMBED LENGTH (IN)	ANCHOR ROD GRADE	
-	W10x33 - W10X39	2	18	16	1	7	6	4	1	18	36	-
-	W10x45 - W10X68	2	19	16	1 1/4	7 1/2	6	4	1	18	36	-
-	W12X40 - W12X58	2	20	18	1 1/2	8	7	4	1 1/4	18	36	-
-	W12X65 - W12X87	2	21	18	1 1/2	8 1/2	7	4	1 1/4	18	36	-
-	W14X90 - W14X145	2	27	27	2	10 1/2	10 1/2	6	2	22	105	BASE PLATE TO 50 KSI STL
-	HSS4X4	1	11	11	1	4	4	4	3/4	18	36	-
-	HSS6X6	1	13	13	1	5	5	4	3/4	18	36	-
-	HSS8X8	1	16	16	1	6	6	4	1	18	36	-
-	HSS10X10	1	19	19	1 1/4	7	7	4	1 1/4	18	36	-
-	HSS12X12	1	22	22	1 1/4	8 1/2	8 1/2	4	1 1/4	18	36	-
-	W10 VERT BRACE	5	32	22	2	9	8	9	1 1/2	18	105	-
-	W14 VERT BRACE	5	35	27	2 1/2	10 1/2	10 1/2	9	2	18	105	-
-	W10 BRACE COL W/O VERT BRACE AT BASE PL	3	22	22	2	8	8	8	1 1/2	18	105	USED FOR W10 COLUMNS THAT ARE PART OF A VERTICAL BRACE, BUT DO NOT RECEIVE A DIAGONAL BRACE AT THEIR BASE PL
-	W12 BRACE COL W/O VERT BRACE AT BASE PL	3	24	24	2 1/2	9	9	8	1 3/4	18	105	USED FOR W12 COLUMNS THAT ARE PART OF A VERTICAL BRACE, BUT DO NOT RECEIVE A DIAGONAL BRACE AT THEIR BASE PL
-	W14 BRACE COL W/O VERT BRACE AT BASE PL	3	27	27	2 1/2	10 1/2	10 1/2	8	2	18	105	USED FOR W14 COLUMNS THAT ARE PART OF A VERTICAL BRACE, BUT DO NOT RECEIVE A DIAGONAL BRACE AT THEIR BASE PL
FIXED BPL	W10 FIXED BP	3	21	16	2	8	5 1/2	8	1 1/2	18	105	-
FIXED BPL	W12 FIXED BP	3	24	18	2	9 1/2	6 1/2	8	1 1/2	24	105	-
FIXED BPL	W14 FIXED BP	3	29	24	2 1/2	11	8 1/2	8	2	24	105	3/4" FLANGE FILLET DOUBLE WELD
FIXED BPL	HSS10X10 FIXED BP	4	21	20	2	8	7 1/2	8	1 1/2	18	105	-

NOTES:

1. USE OVERSIZED HOLES FOR ANCHOR RODS ACCORDING TO AMERICAN INSTITUTE OF STEEL CONSTRUCTION.
2. PLATE WASHERS WITH STANDARD HOLES SHALL BE INSTALLED OVER OVERSIZED HOLES.
3. CONTRACTOR SHALL PROVIDE TEMPLATE FOR ANCHOR ROD INSTALLATION.
4. MINIMUM GROUT THICKNESS PER GROUT THICKNESS SCHEDULE.
5. SIZE WELDS PER AISC MINIMUM FILLET REQUIREMENTS, 5/16" MINIMUM.

2 COLUMN BASE PLATE AND ANCHOR ROD SCHEDULE
1 1/2" = 1'-0"

Kubala ENGINEERS
Ph: 800.248.3674
www.kubalaengineers.com
TX. REG. NO. F-3709

PBK
ARCHITECT PBK Architects, Inc. PBK.com
HOUSTON
11 Greenway Plaza, 22nd Floor
Houston, TX 77046
713-965-0608 P
713-961-4571 F
TX Firm: BR 1608

CIVIL
SSG
T 713-965-0608
SPORTS
PBK SPORTS
T 281-528-1697
STRUCTURAL
KUBALA ENGINEERS
T 800-248-3674
MEPT
LEAF ENGINEERS
T 713-940-3300
ENVELOPE
BEAM
T 713-940-3201
AV / ACOUSTIC
JAFFE HOLDEN
T 713-807-7100
THEATER
SCHULER SHOOK
T 214-747-9300
FOOD SERVICE
FOOD DESIGN PROFESSIONAL
T 281-350-2323

FRIENDSWOOD HIGH SCHOOL ADDITIONS AND RENOVATIONS

702 Greenbriar Dr
Friendswood, TX 77546

ISSUE FOR PROPOSAL

STATE OF TEXAS
JOHN R. KUBALA
106120
LICENSED PROFESSIONAL ENGINEER
02/17/2022
Kubala Engineers
F-3709

CLIENT
FRIENDSWOOD ISD

DATE	PROJECT NUMBER
02/02/2022	20381

DRAWING HISTORY

No.	Description	Date
2	ADDENDUM #2	02/14/2022
4	ADDENDUM #4	02/17/2022

ISSUE FOR PROPOSAL

GENERAL STEEL NOTES AND TYP DETAILS

S-500

File Path: C:_RevitLocal\ST21-20381-FHS_Central_amer.taghibiLLC29.rvt

CHECKED BY:
Checker
DRAWN BY:
Author
Plot Stamp:
2/17/2022 12:31:01 PM

0"
1"

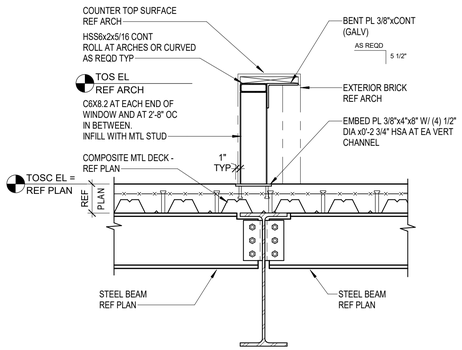

1 SECTION AT COUNTER TOP
3/4" = 1'-0"

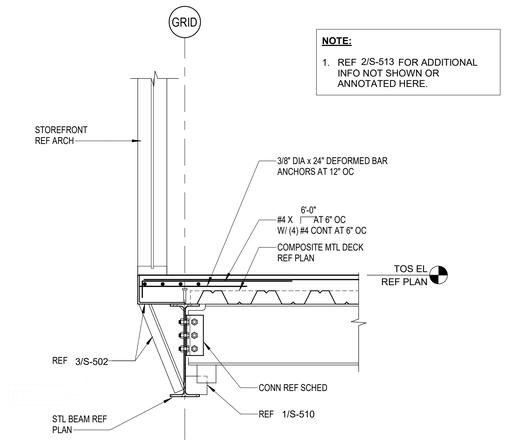

4 BEAM AT STOREFRONT
NO SCALE
4

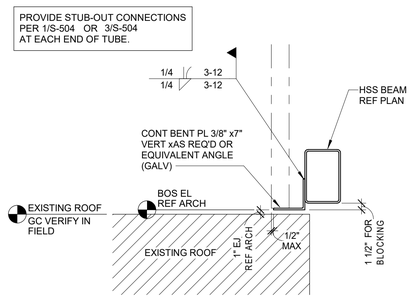

2 BRICK SUPPORT ABOVE EXISTING ROOF
3/4" = 1'-0"
4

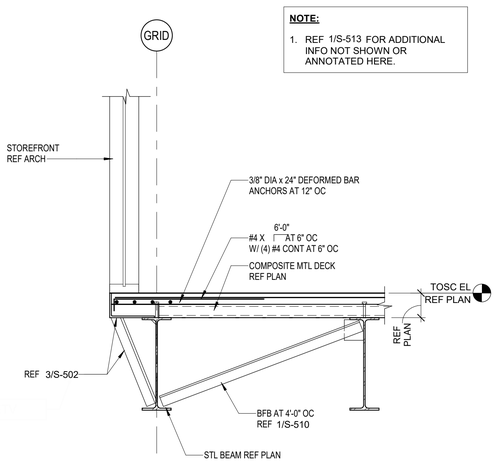

3 BEAM AT STOREFRONT
NO SCALE
4

PBK
ARCHITECT
PBK Architects, Inc.
PBK.com
HOUSTON
11 Greenway Plaza, 22nd Floor
Houston, TX 77046
713-965-0608 P
713-961-4571 F
TX Firm: BR 1608
CIVIL
SSG
T 713-965-0608
SPORTS
PBK SPORTS
T 281-528-1697
STRUCTURAL
KUBALA ENGINEERS
T 800-248-3674
MEPT
LEAF ENGINEERS
T 713-940-3300
ENVELOPE
BEAM
T 713-940-3201
AV / ACOUSTIC
JAFFE HOLDEN
T 713-807-7100
THEATER
SCHULER SHOOK
T 214-747-6300
FOOD SERVICE
FOOD DESIGN PROFESSIONAL
T 281-350-2323

FRIENDSWOOD HIGH SCHOOL ADDITIONS AND RENOVATIONS

702 Greenbriar Dr
Friendswood, TX 77546

ISSUE FOR PROPOSAL

FRIENDSWOOD INDEPENDENT SCHOOL DISTRICT

U
K J
H E D A
N L F
M G C B
P
Q R S
T

KEY PLAN
NORTH: PLAN TRUE

STATE OF TEXAS
JOHN R. KUBALA
106120
PROFESSIONAL ENGINEER
02/17/2022
Kubala Engineers
F-3709

CLIENT
FRIENDSWOOD ISD

DATE	PROJECT NUMBER
02/02/2022	20381

DRAWING HISTORY

No.	Description	Date
2	ADDENDUM #2	02/14/2022
4	ADDENDUM #4	02/17/2022

ISSUE FOR PROPOSAL

COMPOSITE FRAMING DETAILS

S-515
2

File Path: C:_Revit Local\ST21-20381-FHS_Central_amer.taghlebiLLCC29.rvt
CHECKED BY:
Checker
DRAWN BY:
Author
Plot Stamp:
2/17/2022 12:31:02 PM

TYPICAL STEEL DETAILS AND SECTIONS

S-523

FOR BLUEBEAM LABELING/OCR:

0"

1"

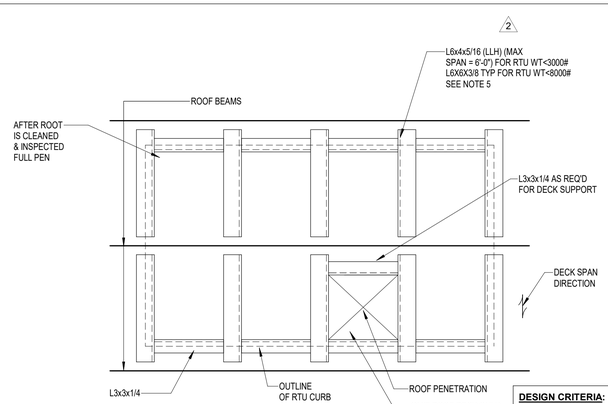

UNIT PARALLEL TO FRAMING

DESIGN CRITERIA:
INTERNATIONAL BUILDING CODE 2021
WIND VELOCITY = 152 MPH (3-SEC)
EXPOSURE = C
RISK CATEGORY III

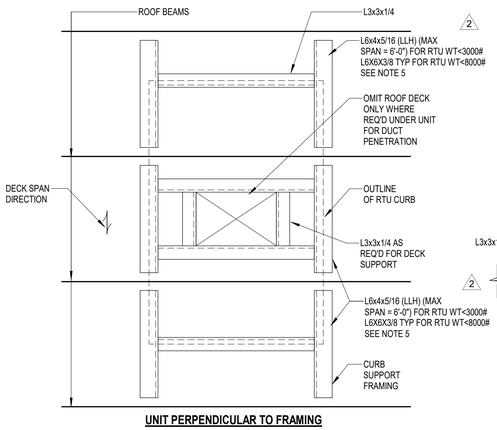

UNIT PERPENDICULAR TO FRAMING

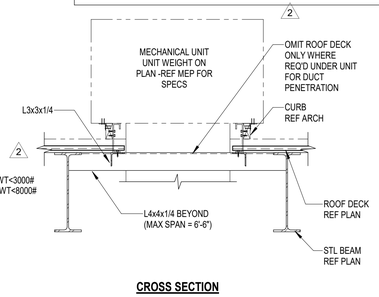

CROSS SECTION

NOTES:

1. VERIFY SIZE OF FRAME W/ MECH CONTRACTOR.
2. VERIFY UNIT LOCATION ON SITE PRIOR TO FRAME FABRICATION.
3. CONTRACTOR TO VERIFY UNIT WEIGHT WITH WEIGHT SHOWN ON PLAN.
4. REF TO 2/S-523 FOR RTU CURB SUPPORT AT 3" DECK.
5. USE C10X15.3 FOR OPENING SUPPORT INSTEAD OF ANGLES WHERE JOIST/BEAM SPACING OR ANGLE SPAN IS LARGER THAN 6'-0

1 TYPICAL SUPPORT AT MECHANICAL UNIT DETAIL
NO SCALE

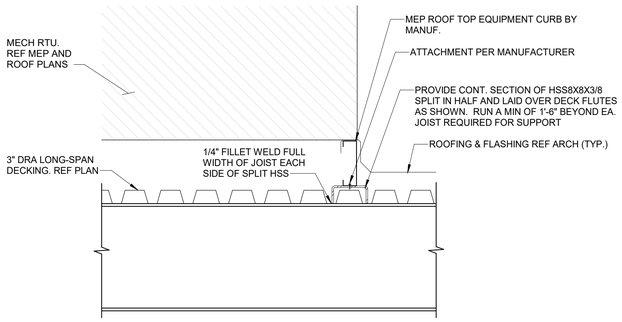

2 TYPICAL RTU SUPPORT
3/4" = 1'-0"

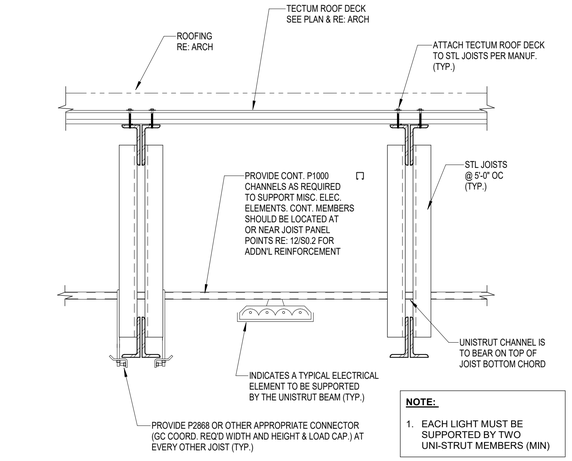

NOTE:

1. EACH LIGHT MUST BE SUPPORTED BY TWO UNI-STRUT MEMBERS (MIN)

3 UNISTRUT DETAIL FOR ELECTRICAL SUPPORT
NO SCALE

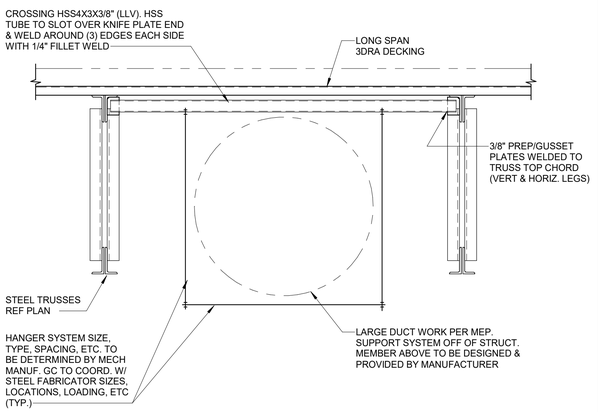

4 LARGE DUCTWORK SUPPORT
1/2" = 1'-0"

PURLIN SPAN LENGTH (FEET)	# OF ROWS OF BRIDGING	BRIDGING ANGLE SIZE
LESS THAN 10'-0"	- 0 -	L2x2x1/4"
10'-0" - 15'-0"	- 1 -	L2x2x1/4"
15'-0" - 20'-0"	- 1 -	L2x2x1/4"
20'-0" - 25'-0"	- 2 -	L2x2x1/4"
25'-0" - 30'-0"	- 2 -	L2x2x1/4"
30'-0" - 35'-0"	- 2 -	L2x2x1/4"
40'-0" - 50'-0"	- 3 -	L3x3x1/4"
50'-0" - 55'-0"	- 3 -	L3x3x1/4"
55'-0" - 60'-0"	- 4 -	L2x2x1/4"
60'-0" - 65'-0"	- 4 -	L3x3x1/4"
65'-0" - 70'-0"	- 5 -	L3x3x1/4"
70'-0" - 75'-0"	- 5 -	L3x3x1/4"
75'-0" - 80'-0"	- 5 -	L3x3x1/4"

ROOF DECK NOT SHOWN FOR CLARITY

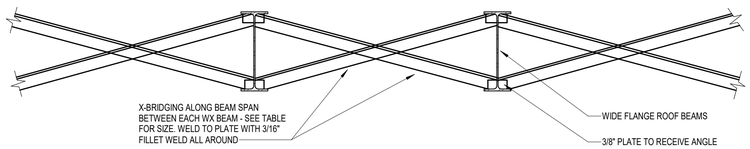

5 TYPICAL UPLIFT BRIDGING DETAIL
3/4" = 1'-0"

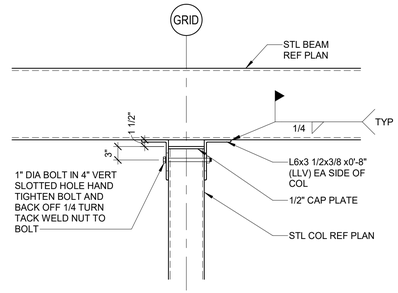

6 FRAMING SECTION
3/4" = 1'-0"

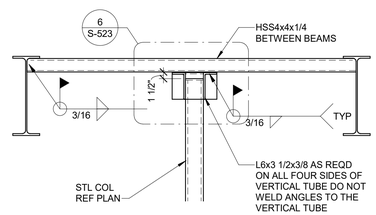

7 FRAMING SECTION
3/4" = 1'-0"

PBK

ARCHITECT
PBK Architects, Inc.
PBK.com
HOUSTON
11 Greenway Plaza, 22nd Floor
Houston, TX 77046
713-965-0608 P
713-961-4571 F
TX Firm: BR 1608

CIVIL
SSG
T 713-965-0608

SPORTS
PBK SPORTS
T 281-528-1697

STRUCTURAL
KUBALA ENGINEERS
T 800-248-3674

MEPT
LEAF ENGINEERS
T 713-940-3300

ENVELOPE
BEAM
T 713-940-3201

AV / ACOUSTIC
JAFFE HOLDEN
T 713-807-7100

THEATER
SCHULER SHOOK
T 214-747-9300

FOOD SERVICE
FOOD DESIGN PROFESSIONAL
T 281-350-2323

FRIENDSWOOD HIGH SCHOOL ADDITIONS AND RENOVATIONS

702 Greenbriar Dr
Friendswood, TX 77546

ISSUE FOR PROPOSAL

JOHN R. KUBALA
106120
LICENSED PROFESSIONAL ENGINEER
STATE OF TEXAS
02/17/2022
Kubala Engineers
F-3709

CLIENT
FRIENDSWOOD ISD

DATE	PROJECT NUMBER
02/02/2022	20381

DRAWING HISTORY

No.	Description	Date
2	ADDENDUM #2	02/14/2022
4	ADDENDUM #4	02/17/2022

ISSUE FOR PROPOSAL

TYPICAL STEEL DETAILS AND SECTIONS

S-523

Kubala ENGINEERS
Ph: 800.248.3674
www.kubalaengineers.com
TX. REG. NO. F-3709

File Path: C:_Revit_Local\ST21-20381-FHS_Central_amer.taghlebLLC29.rvt

CHECKED BY:
Checker
DRAWN BY:
Author
Plot Stamp:
2/17/2022 12:31:04 PM

CATWALK FRAMING DETAILS

S-528

FOR BLUEBEAM LABELING/OCR:

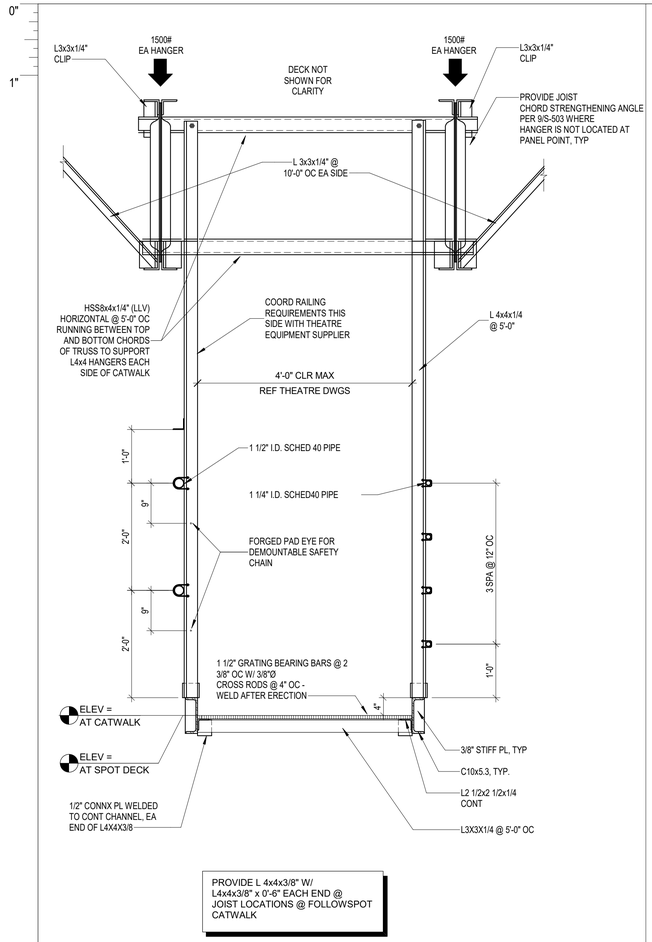

1 AUDITORIUM CATWALK DETAIL
3/4" = 1'-0"

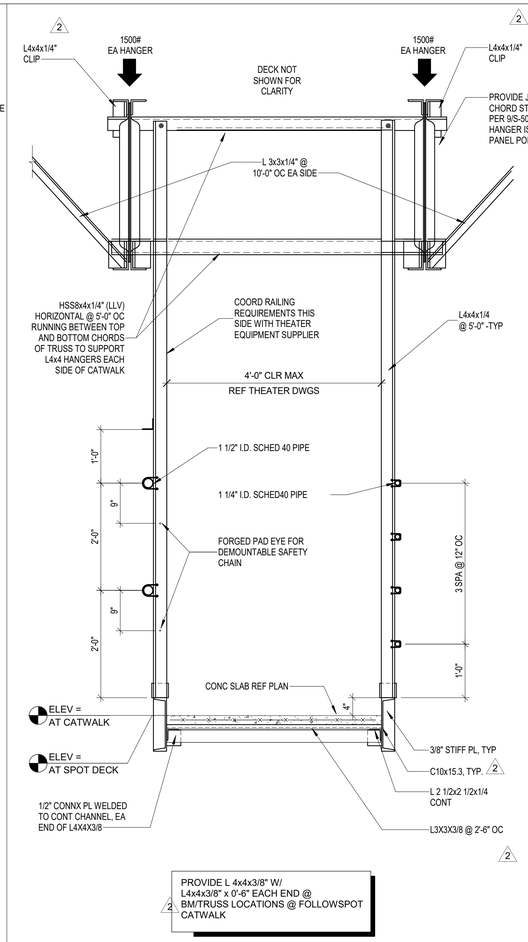

2 AUDITORIUM CATWALK DETAIL
3/4" = 1'-0"

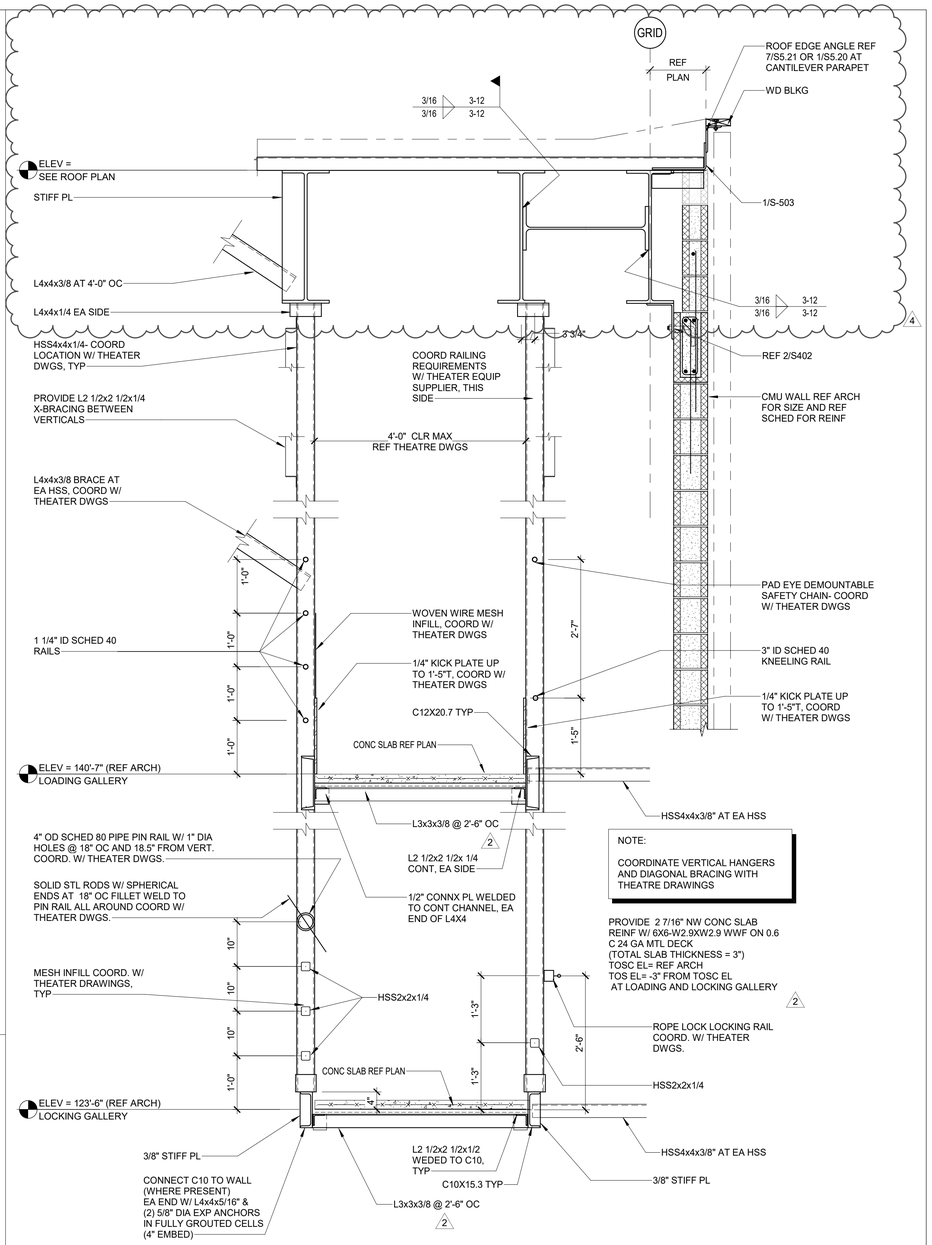

3 LOADING/LOCKING GALLERY DETAIL
3/4" = 1'-0"

PBK

ARCHITECT
PBK Architects, Inc.
PBK.com
HOUSTON
11 Greenway Plaza, 22nd Floor
Houston, TX 77046
713-965-0608 P
713-961-4571 F
TX Firm: BR 1608

CIVIL
SSG
T 713-965-0608
SPORTS
PBK SPORTS
T 281-528-1697
STRUCTURAL
KUBALA ENGINEERS
T 800-248-3674
MEPT
LEAF ENGINEERS
T 713-940-3300
ENVELOPE
BEAM
T 713-940-3201
AV / ACOUSTIC
JAFFE HOLDEN
T 713-807-7100
THEATER
SCHULER SHOOK
T 214-747-5300
FOOD SERVICE
FOOD DESIGN PROFESSIONAL
T 281-350-2323

FRIENDSWOOD HIGH SCHOOL ADDITIONS AND RENOVATIONS

702 Greenbriar Dr
Friendswood, TX 77546

ISSUE FOR PROPOSAL

JOHN R. KUBALA
106120
LICENSED PROFESSIONAL ENGINEER
STATE OF TEXAS
02/17/2022
Kubala Engineers
F-3709

CLIENT
FRIENDSWOOD ISD

DATE	PROJECT NUMBER
02/02/2022	20381

DRAWING HISTORY

No.	Description	Date
2	ADDENDUM #2	02/14/2022
4	ADDENDUM #4	02/17/2022

ISSUE FOR PROPOSAL

CATWALK FRAMING DETAILS

S-528

Kubala ENGINEERS
Ph: 800.248.3674
www.kubalaengineers.com
TX. REG. NO. F-3709

File Path: C:_Revit Local\ST21-20381-FHS_Central_amer.taghlebiLLC29.rvt
CHECKED BY:
Checker
DRAWN BY:
Author
Plot Stamp:
2/17/2022 12:31:06 PM

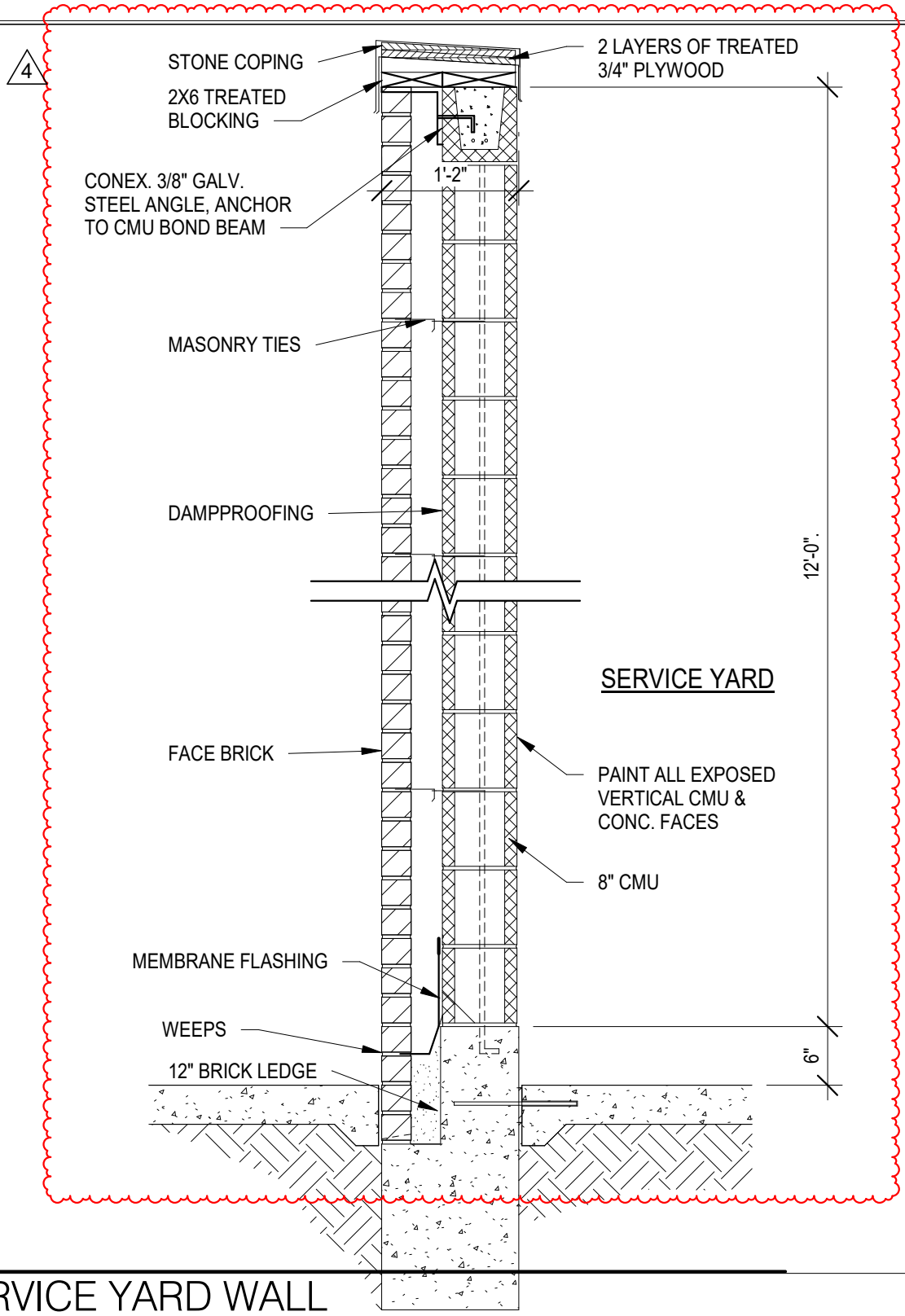

1 SERVICE YARD WALL

3/4" = 1'-0"

PBK

HOUSTON
11 Greenway Plaza, 22nd Floor
Houston, TX 77046
713-965-0608 P
713-961-4571 F
TX Firm: F-1608

PROJECT:
FRIENDSWOOD HIGH SCHOOL
ADDITIONS AND RENOVATIONS

PROJECT No: 20381

RFI No:

REF SHEET: AS403

CURRENT REVISION DESCRIPTION:
ADDENDUM 04
~~ADDENDUM 03~~

2/17/2022 5:31:34 PM

SKETCH NUMBER:
SK-08

SCALE:	DRW BY:	CHK BY:
3/4" = 1'-0"	EV	BT

REGISTERED ARCHITECT
GREGORY A. PRINCE
27199
STATE OF TEXAS

02/17/2022

ROOM 115: DEMO EXISTING EXTERIOR WALL FOR NEW DOOR
SEALED CONCRETE FLOOR
PAINTED CMU WALLS
ALL WALLS GO UP TO DECK
EXTERIOR HM DOOR 1 HR
DOOR HARDWARE W205

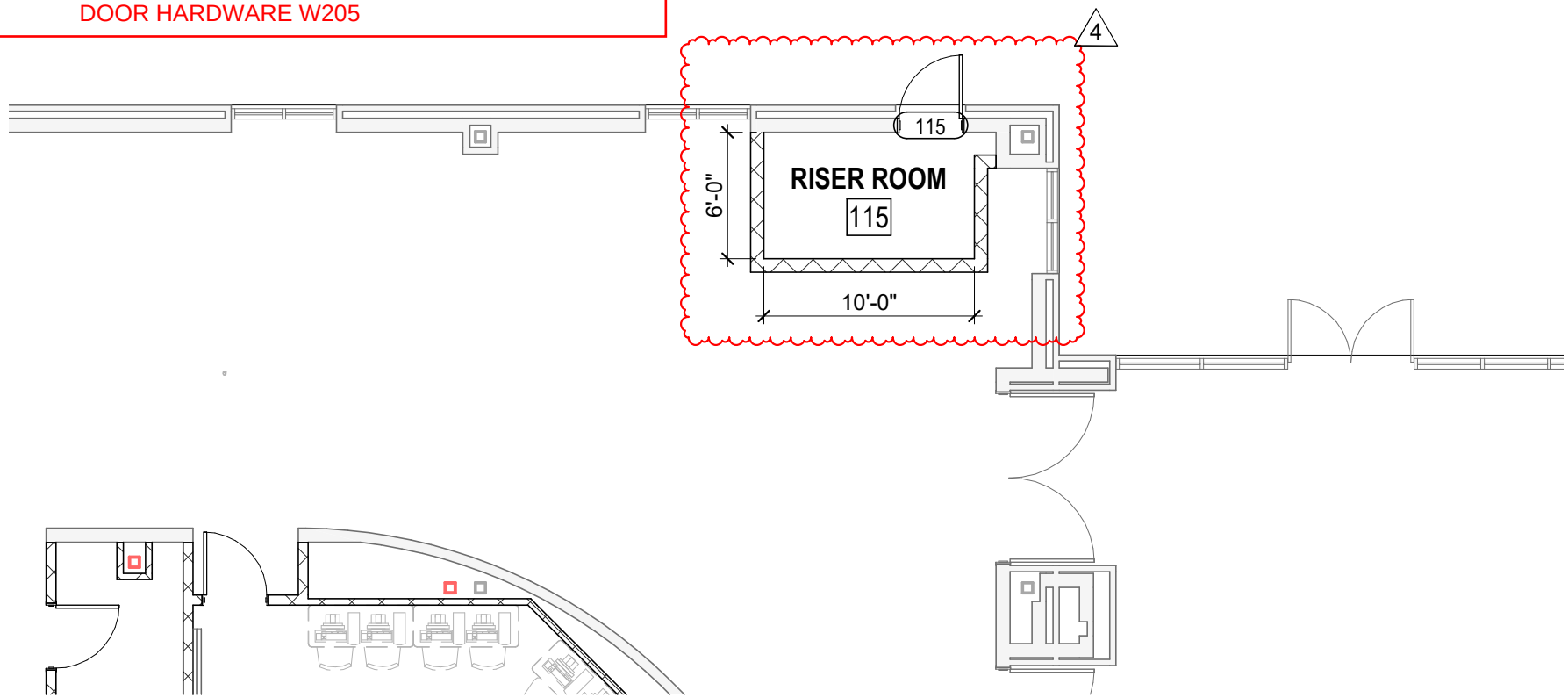

1 1ST FLOOR PLAN AREA E - RISER ROOM

1/8" = 1'-0"

PBK
HOUSTON
11 Greenway Plaza, 22nd Floor
Houston, TX 77046
713-965-0608 P
713-961-4571 F
TX Firm: F-1608

PROJECT:
FRIENDSWOOD HIGH SCHOOL ADDITIONS AND RENOVATIONS

CURRENT REVISION DESCRIPTION:
ADDENDUM 04

SCALE:	DRW BY:	CHK BY:
1/8" = 1'-0"	Author	Checker

PROJECT No: 20381
RFI No:
REF SHEET:
2/17/2022 3:20:54 PM
SKETCH NUMBER:
SK-09

REGISTERED ARCHITECT
GREGORY A. PRINCE
27199
STATE OF TEXAS

02/17/2022

ALTERNATE #04

A-101F.1

FOR BLUEBEAM LABELING/OCR:

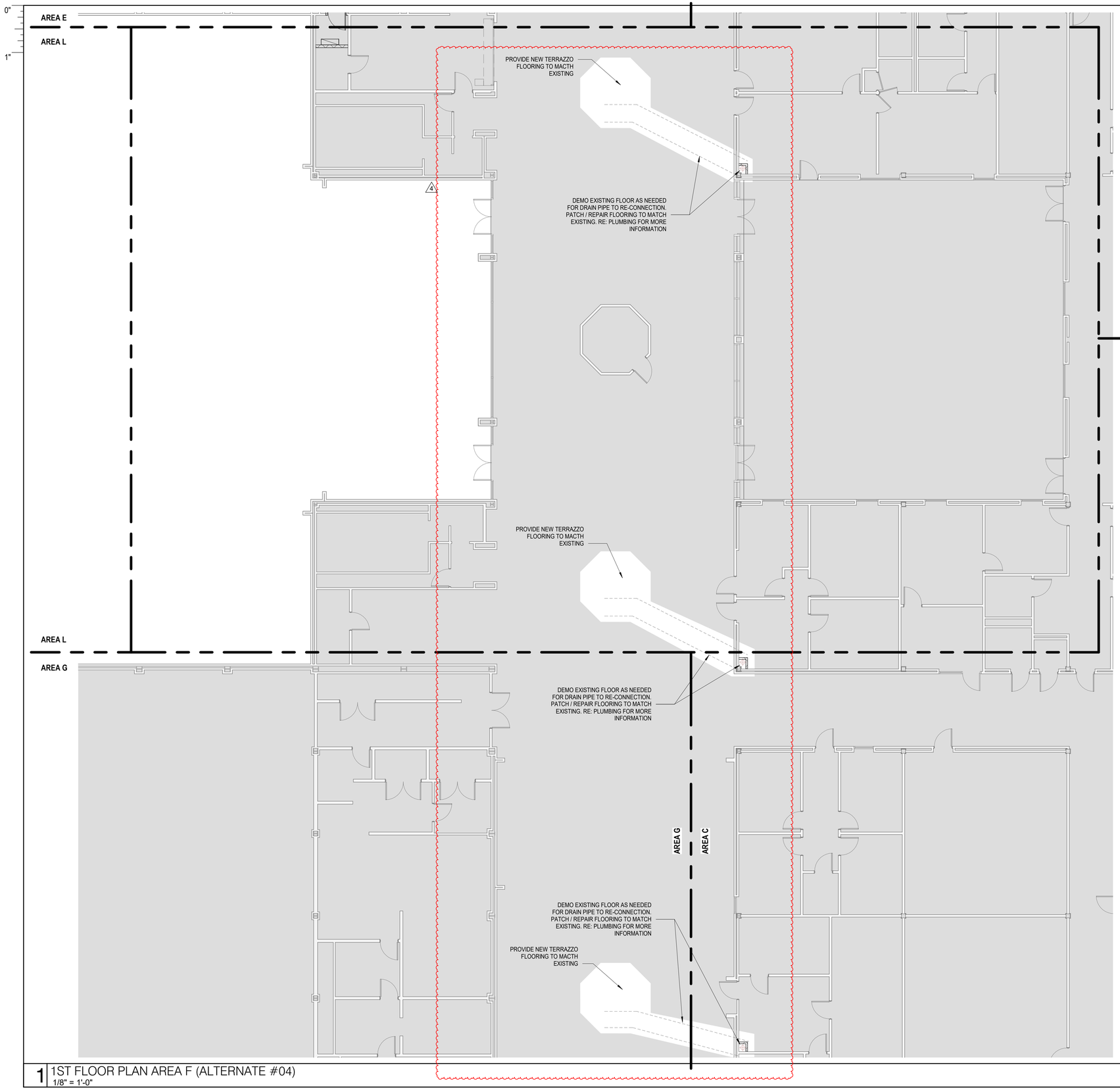

1 1ST FLOOR PLAN AREA F (ALTERNATE #04)
1/8" = 1'-0"

GENERAL ARCH PLAN NOTES

1. DO NOT SCALE DRAWINGS, WRITTEN DIMENSIONS TAKE PRECEDENCE, CONTACT ARCH IF CLARIFICATION IS NECESSARY IN ORDER TO DETERMINE THE INTENT OF THE CONTRACT DOCUMENTS
2. DRAWINGS NOTED AS "N.T.S" OR "NTS" ARE NOT TO SCALE
3. ALL DIMENSIONS ARE TO STRUCTURAL COLUMN LINES OR THE SURFACE OF PARTITION ASSEMBLY U.N.O.
4. FIELD VERIFY ALL DIMENSIONS AND EXISTING CONDITIONS BEFORE COMMENCING WORK. NOTIFY ARCH. OF ANY DISCREPANCIES PRIOR TO PROCEEDING WITH AFFECTED WORK
5. NOTES OR DIMENSIONS NOTED AS "TYPICAL" OR "TYP." OR "TYP" SHALL APPLY TO CONDITIONS THAT ARE THE SAME OR SIMILAR
6. DIMENSIONS NOTED AS "FIELD VERIFY" OR "V.I.F." OR "VIF" SHALL BE MEASURED AND CONFIRMED AT THE PROJECT SITE BY THE CONTRACTOR AND REVIEWED WITH THE ARCH. BEFORE INCORPORATING INTO THE WORK
7. DIMENSIONS NOTED AS "CLEAR" OR "CLEAR INSIDE" REQUIRE SPECIFIC COORDINATION AMONG DISCIPLINES AND OR MANUFACTURERS
8. REFER TO PARTITION TYPES ON A-800 SERIES SHEETS
9. ALL INTERIOR PARTITIONS THIS SHEET, EXCEPT FOR FURR-OUT PARTITIONS, SHALL BE PARTITION TYPE M6 U.N.O.
10. ALL INTERIOR FURR-OUT PARTITIONS THIS SHEET SHALL BE PARTITION TYPE M2B U.N.O.
11. ALIGN FINISHED FACE OF WALLS WHERE WALL PARTITIONS OF DIFFERING THICKNESS ABUT AND OR ADJOIN IN THE SAME PLANE
12. PROVIDE AND INSTALL CONT. REVEAL TRIM AT JOINT WHERE GYPSUM BOARD WALL PARTITIONS ABUT AND OR ADJOIN MASONRY WALL PARTITIONS IN THE SAME PLANE
13. ALL INTERIOR CMU OUTSIDE CORNERS SHALL HAVE BULLNOSE U.N.O.
14. ALL DOORS SHALL BE SET 6 INCHES OFF THE ADJACENT PERPENDICULAR WALL ON THE HINGE SIDE OF THE DOOR U.N.O., NOTIFY ARCH. OF ANY DOOR-RELATED CONFLICTS, INCLUDING BUT NOT LIMITED TO CONFLICTS CONCERNING ACCESSIBILITY STANDARDS
15. ALL DOOR THRESHOLDS AT ALL EXTERIOR DOORS SHALL BE SET IN FULL BED OF SEALANT
16. COORD. ALL ROOF DRAIN LEADER LOCATIONS WITH FLOOR PLAN PRIOR TO FLOOR SLAB CONSTRUCTION
17. ALL FLOOR SLOPES TO FLOOR DRAINS SHALL NOT EXCEED 1:48
18. PROVIDE AND INSTALL SELF-LEVELING UNDERLAYMENT WHERE UNEVEN FLOOR SLAB EXISTS PRIOR TO INSTALLATION OF FLOOR FINISHES
19. COORD. HOUSEKEEPING PAD LOCATIONS AND DIMENSIONS WITH EQUIPMENT TO BE INSTALLED
20. ALL FLOOR FINISH CHANGES SHALL OCCUR AT THE CENTERLINE OF DOORS U.N.O.
21. ALL FLOOR FINISH MATERIAL CHANGES SHALL HAVE REDUCER STRIPS
22. ALL REQUIRED ACCESSIBLE CLEARANCES FOR ALL ITEMS, INCLUDING BUT NOT LIMITED TO ALL COUNTER TOPS, ALL PLUMBING FIXTURES, ALL DRINKING FOUNTAINS, ALL ELECTRIC WATER COOLERS, ALL LAVATORIES, ALL URINALS, ALL TOILETS SHALL BE STRICTLY ENFORCED
23. APPLY BITUMINOUS COATING TO ALL CONCEALED STRUCTURAL STEEL MEMBERS AT ALL EXTERIOR CANOPY LOCATIONS
24. REFER TO OTHER DISCIPLINE DOCUMENTS FOR ADDITIONAL SCOPE OF WORK

PBK

ARCHITECT PBK Architects, Inc.
PBK.com
HOUSTON
11 Greenway Plaza, 22nd Floor
Houston, TX 77046
713-965-0608 P
713-961-4571 F
TX Firm: BR 1608

CIVIL
DIG
T 713-965-0608

SPORTS
PBK SPORTS
T 281-528-1697

LANDSCAPE
EDGELAND
T 713-965-0608

STRUCTURAL
KUBALA ENGINEERS
T 800-248-3674

MEPT
LEAF ENGINEERS
T 713-940-3300

ENVELOPE
BEAM
T 713-940-3201

AV / ACOUSTIC
JAFFE HOLDEN
T 713-807-7100

THEATRICAL
SCHILLER SHOOK
T 214-747-8300

FOOD SERVICE
FOOD DESIGN PROFESSIONALS
T 281-350-2323

FRIENDSWOOD HIGH SCHOOL ADDITIONS AND RENOVATIONS

702 Greenbriar Dr
Friendswood, TX 77546

ISSUE FOR PROPOSAL

FRIENDSWOOD INDEPENDENT SCHOOL DISTRICT

U

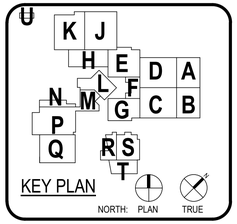

02/17/2022

CLIENT
FRIENDSWOOD ISD

DATE	PROJECT NUMBER
02/02/2022	20381

DRAWING HISTORY

No.	Description	Date
4	ADDENDUM 04	02/17/2022

ISSUE FOR PROPOSAL

ALTERNATE #04

A-101F.1

File Path: C:_Revit\Local\AR21 20381 FHS Central_btran.rvt

CHECKED BY:
Checker
DRAWN BY:
Author
Plot Stamp:
2/17/2022 1:28:06 PM

INTERIOR ELEVATION

A-518

FOR BLUEBEAM LABELING/OCR:

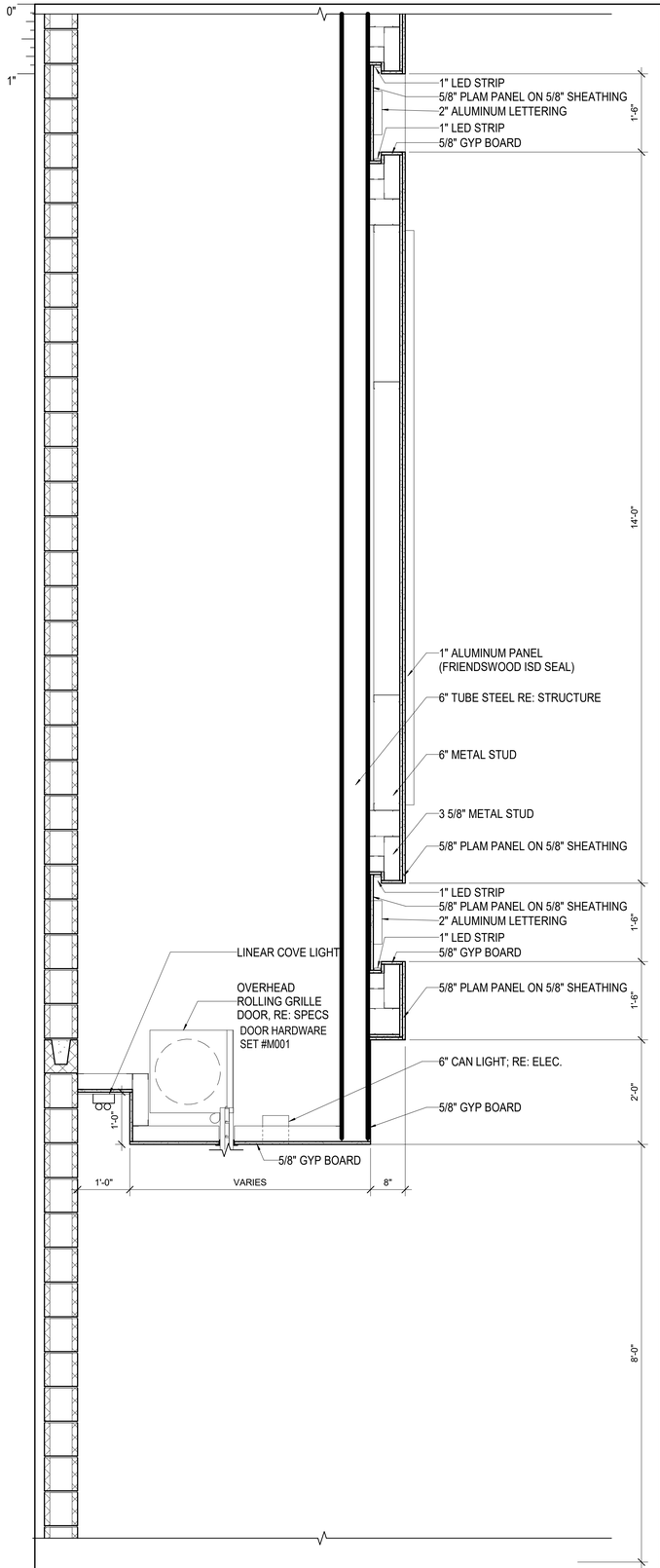

05 FISD SEAL DETAIL
3/4" = 1'-0"

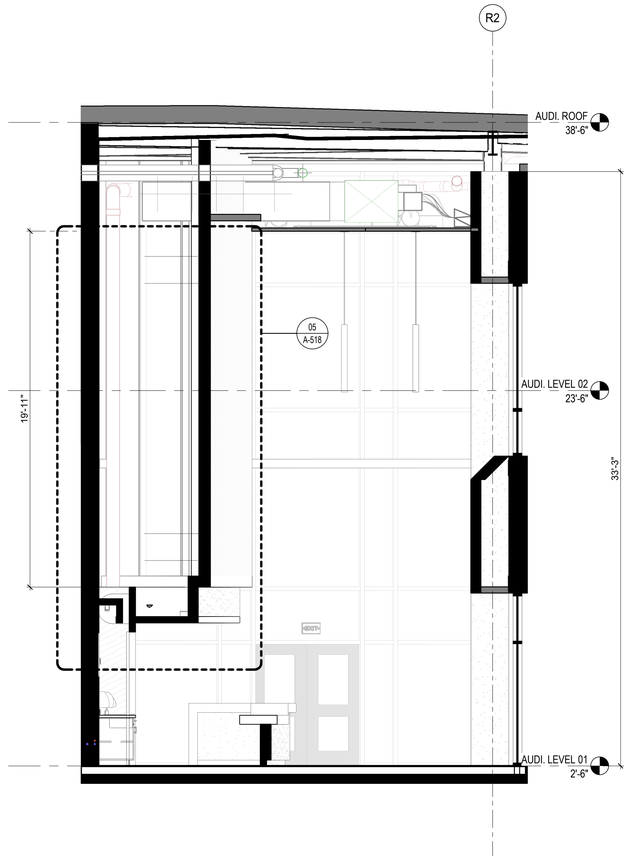

04 CONCESSION SECTION
1/4" = 1'-0"

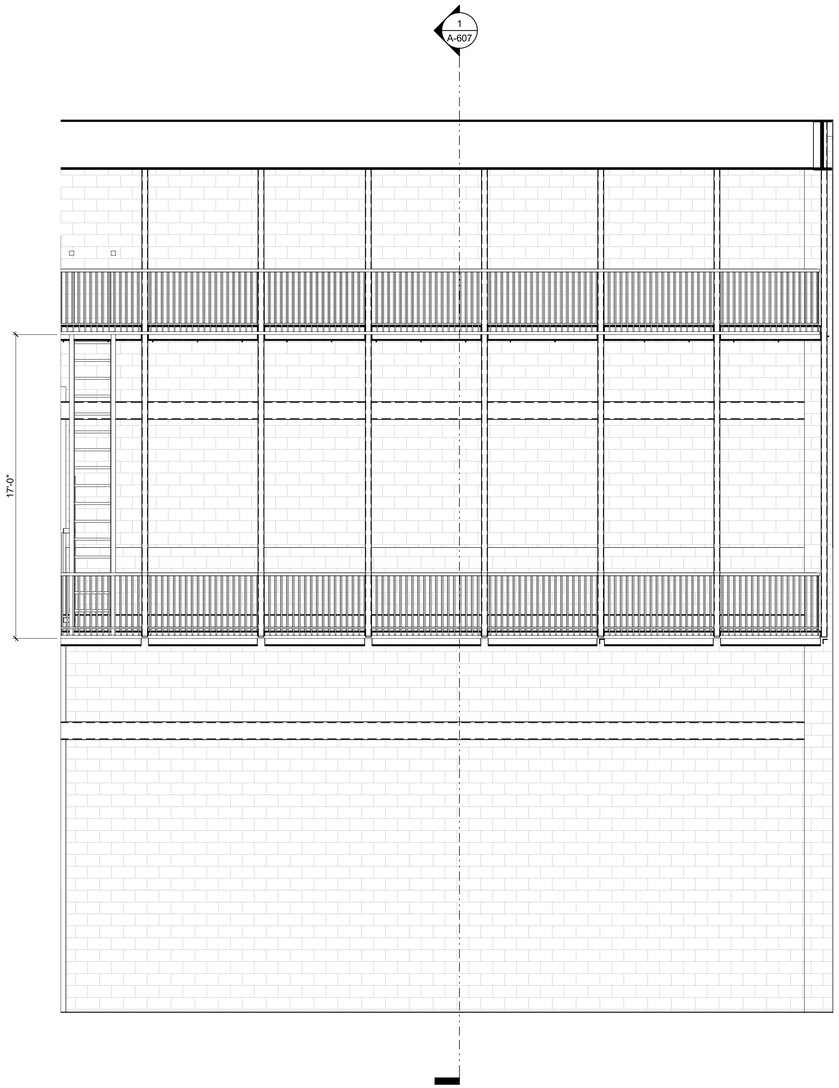

03 CATWALK INTERIOR ELEVATION
1/4" = 1'-0"

PBK

ARCHITECT PBK Architects, Inc.
PBK.com
HOUSTON
11 Greenway Plaza, 22nd Floor
Houston, TX 77046
713-965-0608 P
713-961-4571 F
TX Firm: BR 1608

CIVIL
DIG
T 713-965-0608

SPORTS
PBK SPORTS
T 281-528-1697

LANDSCAPE
EDGELAND
T 713-965-0608

STRUCTURAL
KUBALA ENGINEERS
T 800-248-3674

MEPT
LEAF ENGINEERS
T 713-940-3300

ENVELOPE
BEAM
T 713-940-3201

AV / ACOUSTIC
JAFFE HOLDEN
T 713-807-7100

THEATRICAL
SCHILER SHOOK
T 214-747-8300

FOOD SERVICE
FOOD DESIGN PROFESSIONALS
T 281-350-2323

FRIENDSWOOD HIGH SCHOOL ADDITIONS AND RENOVATIONS

702 Greenbriar Dr
Friendswood, TX 77546

ISSUE FOR PROPOSAL

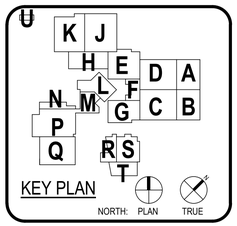

02/17/2022

CLIENT
FRIENDSWOOD ISD

DATE	PROJECT NUMBER
02/02/2022	20381

DRAWING HISTORY

No.	Description	Date
4	ADDENDUM 04	02/17/2022

ISSUE FOR PROPOSAL

INTERIOR ELEVATION

A-518

4

File Path: C:_Revit Local\AR21 20381 FHS Central_roman.rvt

CHECKED BY:
Checker
DRAWN BY:
Author
Plot Stamp:
2/17/2022 11:32:40 AM

ENLARGED - SECTIONS

A-641

FOR BLUEBEAM LABELING/OCR:

0"

1"

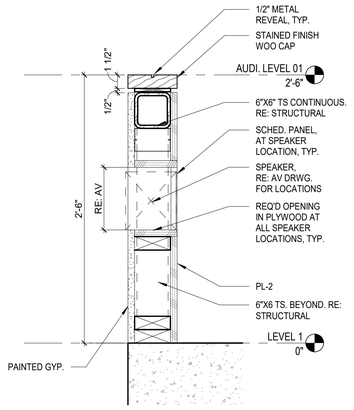

15 PAC PIT ENLARGED SECTION DETAIL
1 1/2" = 1'-0"

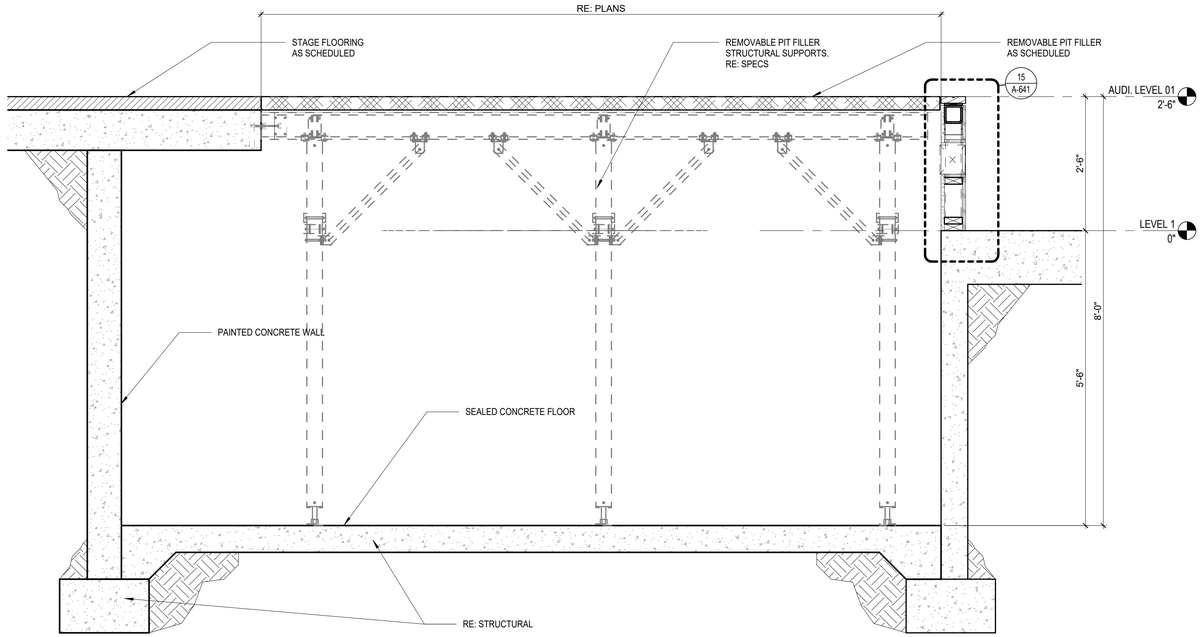

14 PAC PIT SECTION DETAIL
3/4" = 1'-0"

4

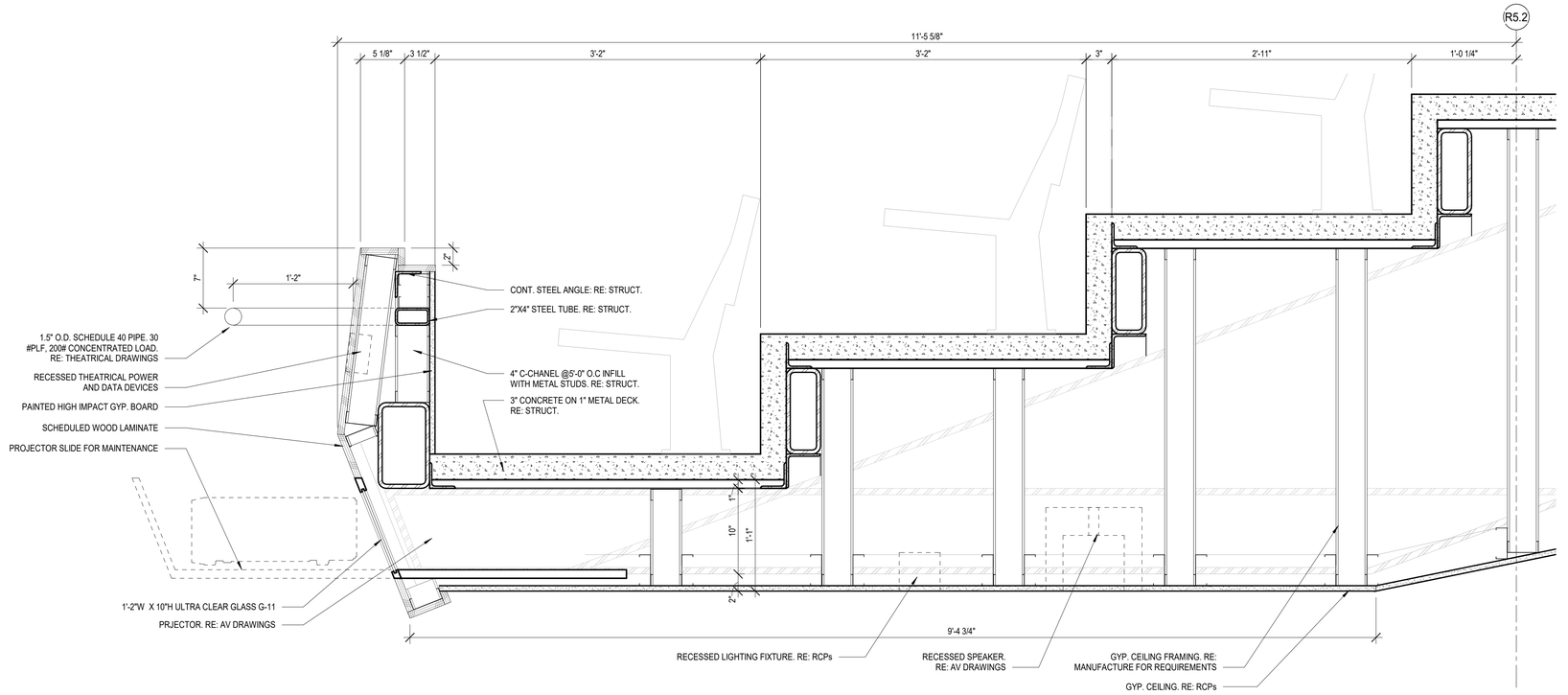

04 PAC BALCONY DETAIL
1 1/2" = 1'-0"

File Path: C:_Revit\Local\AR21 20381 FHS Central_btran.rvt

CHECKED BY:
Checker
DRAWN BY:
Author
Plot Stamp:
2/17/2022 10:32:23 AM

PBK

ARCHITECT
PBK Architects, Inc.
PBK.com
HOUSTON
11 Greenway Plaza, 22nd Floor
Houston, TX 77046
713-965-0608 P
713-961-4571 F
TX Firm: BR 1608

CIVIL
DIG
T 713-965-0608

SPORTS
PBK SPORTS
T 281-528-1697

LANDSCAPE
EDGELAND
T 713-965-0608

STRUCTURAL
KUBALA ENGINEERS
T 800-248-3674

MEPT
LEAF ENGINEERS
T 713-940-3300

ENVELOPE
BEAM
T 713-940-3201

AV / ACOUSTIC
JAFFE HOLDEN
T 713-807-7100

THEATRICAL
SCHILER SHOOK
T 214-747-8300

FOOD SERVICE
FOOD DESIGN PROFESSIONALS
T 281-350-2323

FRIENDSWOOD HIGH SCHOOL ADDITIONS AND RENOVATIONS

702 Greenbriar Dr
Friendswood, TX 77546

ISSUE FOR PROPOSAL

FRIENDSWOOD INDEPENDENT SCHOOL DISTRICT

U

K J
H E D A
L F
N M G C B
P
Q R S
T

KEY PLAN
NORTH: PLAN TRUE

REGISTERED ARCHITECT
GREGORY A. PRINCE
27193
02/17/2022

CLIENT
FRIENDSWOOD ISD

DATE	PROJECT NUMBER
02/02/2022	20381

DRAWING HISTORY

No.	Description	Date
4	ADDENDUM 04	02/17/2022

ISSUE FOR PROPOSAL

ENLARGED - SECTIONS

A-641

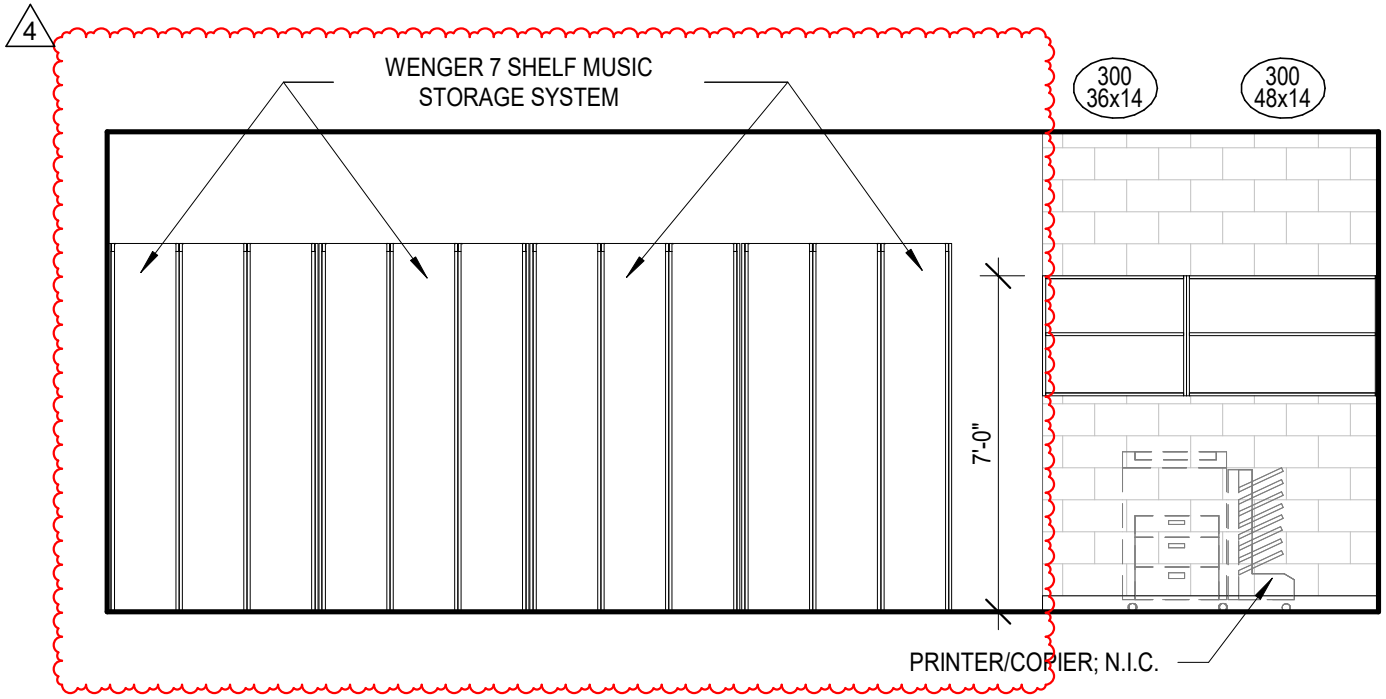

1 1009C LIBRARY EAST ELEVATION

1/4" = 1'-0"

PBK
HOUSTON
11 Greenway Plaza, 22nd Floor
Houston, TX 77046
713-965-0608 P
713-961-4571 F
TX Firm: F-1608

PROJECT:
FRIENDSWOOD HIGH SCHOOL ADDITIONS AND RENOVATIONS

CURRENT REVISION DESCRIPTION:
ADDENDUM 04

SCALE:	DRW BY:	CHK BY:
1/4" = 1'-0"	EV	Checker

PROJECT No: 20381
RFI No:
REF SHEET:
2/17/2022 10:39:32 AM
SKETCH NUMBER:
SK-06

REGISTERED ARCHITECT
GREGORY A. PRINCE
27199
STATE OF TEXAS

02/17/2022