ADDENDUM NO. 02
February 15, 2022

To Drawings and Specifications dated February 2, 2022.

FRIENDSWOOD HIGH SCHOOL ADDITIONS & RENOVATIONS
FOR FRIENDSWOOD I.S.D.

Prepared by: PBK
11 Greenway Plaza, 22nd Floor
Houston, TX 77046-1104
PBK Project No: 20381

Notice to Bidders

A. Receipt of this Addendum shall be acknowledged on the Bid Form.

B. This Addendum forms part of the Contract documents for the above referenced project and shall be incorporated integrally therewith.

C. Each bidder shall make necessary adjustments and submit his proposal with full knowledge of all modifications, clarifications, and supplemental data included therein. Where provisions of the following supplemental data differ from those of the original Contract Documents, this Addendum shall govern.

SPECIFICATIONS

Item No. 1 **Section 10 51 13: Metal Lockers and Benches:** Replace section in its entirety.

Item No. 2 **Section 10 73 13: Aluminum Canopy:** Add the following paragraph to Part 2.1, A:
12. Oklahoma Canopies & Awnings, Tulsa, OK.

Item No. 3 **Section 11 61 13: Acoustical Shells:** Replace section in its entirety.

Item No. 4 **Section 11 61 25: Orchestra Pit Filler:** Add the following paragraph to Part 2.1, B:
3. Approved manufacturer: Staging Concepts, Minneapolis, MN.

Item No. 5 **Section 22 11 16: Domestic Water Piping:** Add section in its entirety.

Item No. 6 **Section 22 13 16: Sanitary Waste and Vent Piping:** Remove verbiage in subsection 2.2(A.(3.)) calling for tracer wire on sanitary sewer piping below slab.

Item No. 7 **Section 22 14 13: Storm Drainage Piping:** Remove verbiage in subsection 2.2(B.(2.)) calling for tracer wire on storm water piping below slab.

Item No. 8 **Section 22 20 23: Gas Piping:** Remove references to press and threaded connections for interior piping in subsections 2.2 and 2.4. All interior gas piping shall be welded connections.

Item No. 9 **Section 22 22 00: Condensate Piping:** Remove section in its entirety.

Item No. 10 **Section 26 05 19: Low Voltage Electrical Power Conductors and Cables:** Add E under 3.3 INSTALLATION: Aluminum feeders 1/0 AWG and larger shall only be permitted for incoming feeders to the switchgear, feeders going out from the switchgear to the distribution board, transformers and panels. Aluminum feeders shall also be permitted from distribution board to transformer, from distribution board to panels and from transformers to panel and panel to panel. Aluminum feeders are not permitted to be used for branch circuits and motor feeds.

Item No. 11 **Section 26 05 33: Raceway and Boxes for Electrical Systems:** 1.4 DESIGN REQUIREMENTS: change minimum raceway size from 3/4” to 1/2”.

Item No. 12 **Section 26 09 23: Lighting Control Devices:** Delete sections 2.5, 2.6, and 2.7.

Item No. 13 **Section 26 09 43: Digital Lighting Controls:** Add section in its entirety.

Item No. 14 **Section 26 20 00: Electrical Distribution Equipment:** 2.1 MANUFACTURERS: Remove Cutler Hammer from acceptable manufacturers list.

Item No. 15 **Section 27 10 00: Structured Cabling:**
a) Final layout of jack colors for data are:
1. Phones - Dark Green
2. Data – Blue

3. Access Points – Red
4. CCTV – Orange
5. Security – Yellow
6. PA Systems – White
7. Signage TVs – Gray

b) Fiber should now be single mode for MDF to IDF connections instead of multimode.
c) 3.03 E – District standard calls for keystone jacks (and 3.06 c).
d) 3.03 F – Patch cord length – 7' for closet end and 15' for user end, and to confirm with owner.
e) 3.05 A 1 – Copper distribution equipment should be Leviton.
f) 3.05 B 1 a – Fiber distribution equipment should be Corning.

Item No. 16 **Section 27 53 19: Distributed Antenna System:** Delete section 1.2 text. Section 1.2 shall read: "Under the base bid, contractor shall arrange for testing of the existing high school campus. Test results shall be reported to the AHJ and engineer. If a DAS system is required based on the test, the scheduled allowance shall be used to provide the design and installation of this system."

Item No. 17 **Section 28 13 00: Access Control System:** Add to the beginning of the section the following information: "The existing campus intrusion detection system is RS2. Provide new wiring and modules as required and integrate into existing system. Provide licenses as required."

Item No. 18 **Section 28 16 00: Intrusion Detection System:** Add to the beginning of the section the following information: "The existing campus intrusion detection system is Bosch. Provide new wiring and modules as required and integrate into existing system. Provide licenses as required."

Item No. 19 **Section 28 23 00: IP Security Camera System:**

a) Delete line 1.01 F.
b) Section 2.01 A – delete 'security camera' from in front of 'data cabling contractor'.
c) Delete Section 2.02, except the more general B and C sections.
d) Change a number of references to 6A in this spec to 6.
e) Section 2.07 – the cameras we need for this project are 3, 4, 5 and 7 – the others were removed.
f) Delete references to a security office and providing a separate LCD for monitoring.

Item No. 20 **Section 28 31 00: Fire Detection and Notification System:** Remove references to the University of Houston.

DRAWINGS

Item No. 21 **Sheet C 201:** Replace sheet in its entirety.
Item No. 22 **Sheet C 202:** Replace sheet in its entirety.
Item No. 23 **Sheet C 203:** Replace sheet in its entirety.
Item No. 24 **Sheet C 204:** Replace sheet in its entirety.
Item No. 25 **Sheet C 501:** Replace sheet in its entirety.
Item No. 26 **Sheet C 502:** Replace sheet in its entirety.
Item No. 27 **Sheet L1.04:** Drainage system to be installed with cast-in-place concrete planters at PAC entry/stairs. Reference SKL-001.
Item No. 28 **Sheet L2.00:** Replace sheet in its entirety.
Item No. 29 **Sheet L3.02:** Detail shows to include drainage mat, non-woven filter fabric, drainage gravel, and sub-surface atrium drain. Reference SKL-002.
Item No. 30 **Sheet S-101D:** Replace sheet in its entirety.
Item No. 31 **Sheet S-101E:** Replace sheet in its entirety.
Item No. 32 **Sheet S-101H:** Replace sheet in its entirety.
Item No. 33 **Sheet S-101P:** Scope of work related to the new folding partition added to alternate #03.
Item No. 34 **Sheet S-101Q:** Replace sheet in its entirety.
Item No. 35 **Sheet S-101R:** Replace sheet in its entirety.
Item No. 36 **Sheet S-101S:** Replace sheet in its entirety.
Item No. 37 **Sheet S-101T:** Replace sheet in its entirety.
Item No. 38 **Sheet S-102D:** Location of new RTUs and mechanical penetrations revised. Refer to MEP and Arch drawings for locations.
Item No. 39 **Sheet S-102E:** Replace sheet in its entirety.
Item No. 40 **Sheet S-102F:** Location of new RTUs and mechanical penetrations revised. Refer to MEP and Arch drawings for locations.
Item No. 41 **Sheet S-102G:** Location of new RTUs and mechanical penetrations revised. Refer to MEP and Arch drawings for locations.

Item No. 42 **Sheet S-102H:** Location of new RTUs and mechanical penetrations revised. Refer to MEP and Arch drawings for locations.
Item No. 43 **Sheet S-102P:** Replace sheet in its entirety.
Item No. 44 **Sheet S-102Q:** Replace sheet in its entirety.
Item No. 45 **Sheet S-102R:** Replace sheet in its entirety.
Item No. 46 **Sheet S-102S:** Replace sheet in its entirety.
Item No. 47 **Sheet S-102S-ALT:** Replace sheet in its entirety.
Item No. 48 **Sheet S-102T:** Replace sheet in its entirety.
Item No. 49 **Sheet S-102U:** Roof deck changed to type 1. TOS=BOD ELEV= 112'- 10 ¾".
Item No. 50 **Sheet S-103H:** Replace sheet in its entirety.
Item No. 51 **Sheet S-103P:** Location of new RTUs and mechanical penetrations revised. Refer to MEP and Arch drawings for locations.
Item No. 52 **Sheet S-103Q:** Replace sheet in its entirety.
Item No. 53 **Sheet S-103R:** Replace sheet in its entirety.
Item No. 54 **Sheet S-103S:** Replace sheet in its entirety.
Item No. 55 **Sheet S-103T:** Replace sheet in its entirety.
Item No. 56 **Sheet S-103T-2:** Replace sheet in its entirety.
Item No. 57 **Sheet S-104S:** Replace sheet in its entirety.
Item No. 58 **Sheet S-105S:** Replace sheet in its entirety.
Item No. 59 **Sheet S-105T:** Replace sheet in its entirety.
Item No. 60 **Sheet S-201:** Brace elevations #1 and # 2 deleted.
Item No. 61 **Sheet S-210:** Note #2 changed to "MEMBER CONNECTIONS TO BE DESIGNED FOR FORCES (KIPS) SHOWN. FORCES INDICATED ARE (ASD). WHERE FORCES ARE NOT GIVEN, DESIGN FOR THE TENSILE CAPACITY OF THE DIAGONAL MEMBERS."
Item No. 62 **Sheet S-300:** Conc mix design table revised for the retaining walls. 28 day strength (psi) equals to 4500 psi for retaining wall.
Item No. 63 **Sheet S-301:** General notes #4 on slab-on-grade revised to "JOINT FILLER SHALL BE USED ON ALL JOINTS THAT DO NOT GET COVERED BY AN ARCHITECTURAL FLOOR COVERING. ACCEPTABLE PRODUCTS INCLUDE EDGE PRO 90. STRICTLY FOLLOW MANUFACTURER-WRITTEN ECOMMENDATIONS FOR INSTALLATION. DELAY JOINT FILLING AS LONG AS PRACTICAL TO ALLOW FOR MAXIMUM CONCRETE SHRINKAGE."
Item No. 64 **Sheet S-305:** Replace sheet in its entirety.
Item No. 65 **Sheet S-307:** Note #10 revised to "THE PRICE FOR CASING OF PIERS SHALL BE INCLUDED WITHIN THE BASE BID FOR ALL PIERS ON THE PROJECT. CONTRACTOR SHALL PROVIDE AN ALLOWANCE FOR 100% CASING OF DRILLED PIERS. CONTRACTOR SHALL ALSO PROVIDE UNIT PRICE FOR EACH SIZE OF CASING UTILIZED ON THE PROJECT. PAYMENT FOR CASING SHALL BE BASED UPON NET LENGTH OF CASING UTILIZED MULTIPLIED BY THE UNIT."
Item No. 66 **Sheet S-309:** Replace sheet in its entirety.
Item No. 67 **Sheet S-311:**
a) Following note added to details #2 to #7. "PROVIDE AN 8" BOND BEAM REINF WITH (2)-#5 CONT TOP AND BOTTOM AT FIRST COURSE FULLLY GROUTED"
b) Detail#7,change vertical pilaster reinf. To #6 vert. at 8" oc.
Item No. 68 **Sheet S-314:** Replace sheet in its entirety.
Item No. 69 **Sheet S-315:** Replace sheet in its entirety.
Item No. 70 **Sheet S-316:** Following note added to detail #1. "PROVIDE AN 8" BOND BEAM REINF WITH (2)-#5 CONT TOP AND BOTTOM AT FIRST COURSE FULLLY GROUTED". Stem wall reinforcement changed to #6 at 10" oc each way each face.
Item No. 71 **Sheet S-317:** Following note added to detail #2. "PROVIDE AN 8" BOND BEAM REINF WITH (2)-#5 CONT TOP AND BOTTOM AT FIRST COURSE FULLLY GROUTED".
Item No. 72 **Sheet S-318:** Replace sheet in its entirety.
Item No. 73 **Sheet S-319:** Replace sheet in its entirety.
Item No. 74 **Sheet S-321:**
a) Detail #2, provide 12" wide and 12' deep thickened slab instead of 8".
b) Detail #3, Dowel note changed to "DOWEL SIZE MATCH WITH VERT CMU REINF
c) REF 7/S-320 FOR INFO NOT SHOWN HERE.
Item No. 75 **Sheet S-322:** Replace sheet in its entirety.
Item No. 76 **Sheet S-402:** Replace sheet in its entirety.

Item No. 77 **Sheet S-403:**

a) Detail #2, refer to detail 5/S-402 for information not shown.

b) Following note added to detail #4. “PROVIDE AN 8" BOND BEAM REINF WITH (2)-#5 CONT TOP AND BOTTOM AT FIRST COURSE FULLLY GROUTED”.

c) Detail#9 not used.

Item No. 78 **Sheet S-405:** Refer to detail 5/S-402 added for the bond beam and angle information.

Item No. 79 **Sheet S-500:** Replace sheet in its entirety.

Item No. 80 **Sheet S-501:** Embed shear stud connectors note added as following “SHEAR-STUD CONNECTIONS SHALL BE NELSON FLUXED SHEAR CONNECTORS (SC) OR APPROVED EQUAL. STUDS SHALL BE AUTOMATICALLY END WELDED IN THE SHOP OR IN THE FIELD. ALL STUD WELDS SHALL BE MANUFACTURED IN ACCORDANCE WITH ECOMMENDATIONS OF THE NELSON STUD WELDING DIVISION, LORAIN, OHIO. SHEAR-STUDS SHALL BE MANUFACTURED OF C1015, C1017, OR C1020 COLD DRAWN STEEL CONFORMING TO ASTM A108”.

Item No. 81 **Sheet S-503:** Replace sheet in its entirety.

Item No. 82 **Sheet S-506:** Note on detail 10 revised to “BFB AT EACH INTERSECTING BEAM OR AT 4'-0" OC MAX AT PARALLEL FRAMING CONDITION. REF 1/S-510”.

Item No. 83 **Sheet S-511:** Replace sheet in its entirety.

Item No. 84 **Sheet S-512:** Replace sheet in its entirety.

Item No. 85 **Sheet S-513:**

a) Conc curb and reference added to the detail #8. Refer to detail 6/S-301 for more information.

b) Conc curb and reference added to the detail #9. Refer to detail 6/S-301 for more information.

Item No. 86 **Sheet S-514:** Replace sheet in its entirety.

Item No. 87 **Sheet S-515:** Add sheet in its entirety.

Item No. 88 **Sheet S-520:** Name of detail #2 changed to “Roof deck transition at blackbox”.

Item No. 89 **Sheet S-521:** Replace sheet in its entirety.

Item No. 90 **Sheet S-523:** Replace sheet in its entirety.

Item No. 91 **Sheet S-524:** Replace sheet in its entirety.

Item No. 92 **Sheet S-528:** Replace sheet in its entirety.

Item No. 93 **Sheet S-531:** Replace sheet in its entirety.

Item No. 94 **Sheet S-535:** Add sheet in its entirety.

Item No. 95 **Sheet S-536:** Add sheet in its entirety.

Item No. 96 **Sheet S-600:** Replace sheet in its entirety.

Item No. 97 **Sheet S-601:** Replace sheet in its entirety.

Item No. 98 **Sheet S-602:** Replace sheet in its entirety.

Item No. 99 **Sheet S-603:** Replace sheet in its entirety.

Item No. 100 **Sheet M-101E:** At new closet accessed from Engineer Playfield 101, add a supply and return grille and connection to adjacent supply trunk. Provide openings above the ceiling as required to allow air movement.

Item No. 101 **Sheet M-101Q:** Replace sheet in its entirety.

Item No. 102 **Sheet M-102Q:** Replace sheet in its entirety.

Item No. 103 **Sheet EPD101P:**

Added conduits that need to be demolished to the plan Southeast of the plan where the new corridor Q100 will be located at when the new work is completed. Added of the keyed note #4 that will read:

Demo existing conduits on exterior wall that will now become Corridor Q100. These conduits currently feed the existing tennis courts and the sprinkler system. Contractor shall coordinate these conduits with the owner prior to demolition.

Item No. 104 **Sheet ES103:** Revised keyed note #6 to read:

REFER TO LANDSCAPE ARCHITECT DRAWINGS FOR EXACT LOCATION PRIOR TO INSTALLATION.

Item No. 105 **Sheet ES103-ALT:** Added 6 more type “LA” fixtures to the trellis columns so that there will be fixtures on both sides of the columns.

Item No. 106 **Sheet EP-101D:** Modified the receptacles at the teacher’s stations from one duplex receptacle and one quad receptacle to only one quad receptacle in classroom 227, 224, and 223.

Item No. 107 **Sheet EP-101E:**

a) Modified the receptacles at the teacher’s stations from one duplex receptacle and one quad receptacle to only one quad receptacle in classroom 103, 104, and 102.

b) Removed keyed note #3 for the removal of the trap primers in the riser room 107B and shop 106.

Item No. 108 **Sheet EP-101F:** At new closet accessed from Engineer Playfield 101, provide duplex receptacle within new partition, facing new closet and connection to adjacent 120V circuit 2LE-44. Provide (2) type 'C' lighting fixtures, surface mounted with local occupancy sensor switches.

Item No. 109 **Sheet EP-101H:**

a) Modified the receptacle at the teacher's stations from one duplex receptacle to one quad receptacle in classroom 1009.

b) Removed keyed note #3 for the removal of the trap primers in the ice machine room 1013 and mechanical room G117.

Item No. 110 **Sheet EP-101P:** Removed keyed note #15 for the removal of the trap primers in boiler 142 and laundry K145.

Item No. 111 **Sheet EP-101Q:** Removed keyed note #17 for the removal of the trap primers in fire riser room Q106.

Item No. 112 **Sheet EP-101R:** Replace sheet in its entirety.

Item No. 113 **Sheet EP-101S:** Replace sheet in its entirety.

Item No. 114 **Sheet EP-101T:** Replace sheet in its entirety.

Item No. 115 **Sheet EP-101U:**

a) Relocated one WP/GF receptacle from the exterior wall of the concessions U101 to the new outside bench. Added one additional WP-GF receptacle to the other new outside bench and extended branch circuit LTB-27 to power both new bench receptacles.

b) Removed keyed note #3 for trap primer in storage U107.

Item No. 116 **Sheet EP-102E:** Removed keyed note #2 for the removal of the trap primers in mechanical mezzanine 201.

Item No. 117 **Sheet EP-102Q:** Removed keyed note #3 for the removal of the trap primers in concessions and added power to motorized grille.

Item No. 118 **Sheet EP-102S:** Replace sheet in its entirety.

Item No. 119 **Sheet EP-102T:** Replace sheet in its entirety.

Item No. 120 **Sheet EL-201D:** Removed 5 type "D" fixtures from coffee bar 226.

Item No. 121 **Sheet EL-201Q:** Removed 7 type "D" fixtures and replaced them with 7 type "D1" fixtures in lobby Q104.

Item No. 122 **Sheet EL-201T:** Removed 10 type "A" fixtures and replaced them with 10 type "A1" fixtures in Corridor R100.

Item No. 123 **Sheet EL-201R:**

a) Removed wall pack at the Southwest exterior door at the lobby.

b) Added 4 type "J" fixtures to the concessions area.

c) Relocated one ceiling mounted occupancy sensor to the concessions area.

Item No. 124 **Sheet EL-201S:**

a) Added keyed note #6 for the fixtures at the box seats to be provided as part of an alternate. Keyed note #6:

FIXTURES SHALL BE PROVIDED AS PART OF ALTERNATE #12.

b) Removed wall pack from the Southeast corner of the lobby.

Item No. 125 **Sheet EL-202R:**

a) Removed 1 type "C" fixture and replaced them with 1 type "C1" fixture in plan Southwest corner of Mechanical Mezzanine R202.

b) Added fixture type "C" designation to the lighting fixture in IDF 1018.

Item No. 126 **Sheet EL-202S:** Added contactor C11-1 for fixture type F in lobby.

Item No. 127 **Sheet E-401:** Added keyed note #5, added junction box for power to access control. Keyed note #5 shall read as follows:

JUNCTION BOX FOR POER CONNECTION OT ACCESS CONROL. CONTRACTOR SHALL FIELD COORDINATE EXACT LOCATION PRIOR TO INSTALLATION.

Item No. 128 **Sheet E6.01:**

a) Added fixture type "D".

b) Modified fixture type "D1", "D2".

c) Removed fixture type "SF".

d) Modified fixture type "T3".

D	AMERICAN LINEAR	3R-X-LD-40-UNV-T1-WH
D1	SLG	TPS24-55-G1-FSK

D2	SLG	TPS24-45-G1-FSK
SF	NOT USED	
T3	LIGHTOLIER	C6PDL-35-840-W-DMX-U-CCX / PENDANT LENGTH TBD

Item No. 129 **Sheet E6.03:** Modified contactor schedule.

CSH1 (4)	1HH-14	20	1	277	DDC	1HH-14	ASCO 918 REMOTE CONTROL SWITCH	
CSH1	SPARE		2					
C9	1HQ-9	20	1	277	DDC	1HQ-9	ASCO 918 REMOTE CONTROL SWITCH	
C9	SPARE		2					
C3 (2)	1HMPC1-25	20	1	277	DDC	1HMPC1-25	ASCO 918 REMOTE CONTROL SWITCH	
C3	SPARE		2					
C4	1HMPC2-21	20	1	277	DDC	1HMPC2-21	ASCO 918 REMOTE CONTROL SWITCH	
C4	SPARE		2					
C5 (5)	1HMPC2-19	20	1	277	DDC	1HMPC2-19	ASCO 918 REMOTE CONTROL SWITCH	
C5	SPARE		2					
C10	1HQ-17	20	1	277	DDC	1HQ-17	ASCO 918 REMOTE CONTROL SWITCH	
C10	1HQ-25	20	2	277	DDC	1HQ-25	ASCO 918 REMOTE CONTROL SWITCH	
C10	SPARE		3					
C10	SPARE		4					
C11	1HMPC-13	20	1	277	DDC	1HMPC-13	ASCO 918 REMOTE CONTROL SWITCH	
C11	SPARE		2					

Item No. 130 **Sheet E7.02:** Added 1P-20A breaker for access control at pole position #20 on panel 1LK. Wiring shall be 2#12, 1#12G., ¾"C.

Item No. 131 **Sheet E7.03:** Breakers 20 and 22 are now spare on panel 1LH.

Item No. 132 **Sheet E7.04:** Breakers 48, 50 and 52 are now spare on panel 2LE1. Breaker 58 are now spare on panel 1LQ.

Item No. 133 **Sheet E7.05:** Breaker 21 is now spare on panel 1LQ1. Breakers 53 and 55 are now spare on panel 1LP.

Item No. 134 **Sheet E7.07:** Breaker 8 is now spare on panel 1LPC1. Breakers 52, 54, 56, 58, and 60 are now spare on panel 1LPC3.

Item No. 135 **Sheet E7.08:** Breaker 18 is now spare on panel 1LPC5.

Item No. 136 **Sheet E7.09:** Breaker 12 is now spare on panel LTB.

Item No. 137 **Sheet E7.10:** Added 1P-20A breakers to breaker positions 21, 23, 25, 27, and 29 for AV equipment. Wiring shall be 2#12, 1#12G., ¾"C.

Item No. 138 **Sheet P-000:** Add note at Water Hammer Arrester Schedule to read, "Air chambers or shock arrestors shall be provided to all fixture runout and shall be sized according to local plumbing code (AHJ) & PDI. Air chambers or shock arrestors shall be sized and installed per manufacturer's requirements. The device shall have lifetime warranty and be installed without requiring access doors and panels."

Item No. 139 **Sheet PU-101R:**

a) Modify underfloor sanitary piping serving BOYS R108 and GIRLS R109.

b) Modify underfloor sanitary piping serving floor sinks in MECHANICAL MEZZANINE R202 to avoid structure.

Item No. 140 **Sheet PU-101S:**

a) Modify underfloor sanitary piping serving MEN R116 and WOMEN R117 to avoid structure.

b) Modify underfloor sanitary piping serving floor sinks in MECHANICAL MEZZANINE R206 to avoid structure.

Item No. 141 **Sheet PU-101T:**

a) Extend 4"SS serving SK – 5 in SET CONSTRUCTION SHOP R113 plan north to opposite wall and aligned with new location per architecture background.

b) Shift FCO – 4" in SET CONSTRUCTION SHOP R113 accordingly with extended 4"SS piping.

Item No. 142 **Sheet P-101F:** At new closet accessed from Engineer Playfield 101, provide sleeve around existing domestic cold water line at the new partition.

Item No. 143 **Sheet P-101Q:** Shift grease waste piping serving 3"FS – 2 in CONCESSIONS L201 to align with shifted foodservice fixture location.

Item No. 144 **Sheet P-101R:**

a) Combine vent piping in BOYS R108 and GIRLS R109, 3"V up to vent thru roof as required.

b) Clarify floor drain in PIANO STORAGE R101E receiving mechanical condensate to be 3"FD – 2 fixture type.
c) Modify sanitary and vent piping serving floor sinks in MECHANICAL MEZZANINE R202 to avoid structure.

Item No. 145 **Sheet P-101S:**
a) Shift plumbing fixtures and associated piping in MEN R116 and WOMEN R117 to align with adjusted wall serving return air chase.
b) Combine vent piping in MEN R116 and WOMEN R117, 3"V up to vent thru roof as required.
c) Modify sanitary and vent piping serving floor sinks in MECHANICAL MEZZANINE R206 to avoid structure.

Item No. 146 **Sheet P-101T:**
a) Shift fixture SK - 5 and associated piping in SET CONSTRUCTION SHOP R113 plan north to opposite wall and aligned with new location per architecture background.
b) Modify boiler CFH values to reflect mechanical schedules, B-01 and B-02 to be 1000 CFH in BOILERS R112.

Item No. 147 **Sheet P-102Q:** Shift 3"FS – 2 and domestic hot / cold water piping serving three-compartment sink in CONCESSIONS L201 to align with shifted foodservice fixture location.

Item No. 148 **Sheet P-102R:**
a) Combine vent piping in BOYS R108 and GIRLS R109, 3"V up to vent thru roof as required.
b) Modify sanitary and vent piping serving floor sinks in MECHANICAL MEZZANINE R202 to avoid structure.
c) Shift 4" storm piping serving 4"RD – 1 above BLACK BOX R104 and add new 4"RD – 1 above BLACK BOX R104 with added 4" storm piping.

Item No. 149 **Sheet P-102S:**
a) Modify sanitary and vent piping serving floor sinks in MECHANICAL MEZZANINE R206 to avoid structure.
b) Modify domestic hot, cold, and hot water return piping serving EWH-2 in MECHANICAL MEZZANINE R206.

Item No. 150 **Sheet P-102T:** Modify domestic hot, cold, and hot water return piping serving SK – 5 in SET CONSTRUCTION SHOP R113 to align with new location per architecture background.

Item No. 151 **Sheet P-301:** Shift 4"RD – 1 above Area 'R' and add new 4"RD – 1 above Area 'R'.

Item No. 152 **Sheet P-302:** Modify gas piping serving MAU-01, MAU-02, MAU-03 & MAU-04 to reflect updated mechanical background.

Item No. 153 **Sheet P-701:** Add sheet in its entirety.

Item No. 154 **Sheet P-702:** Add sheet in its entirety.

Item No. 155 **Sheets T-000 – T-502:**
a) Exterior cameras are shaded.
b) Updated keyed note 22 to have Wolfvision cameras connected to separate LCD's in the kitchen.
c) Updated Technology Notes to Contractor, added to note 16 the following: The entire existing campus will be re-numbered. Provide programming so that the intrusion and access control systems match the final room number layout.

Item No. 156 **Sheet TS-101:**
a) Keyed Note 20 changed to the following: Indicates the location of plenum rated 12 strand single mode fiber routed through corridor plenum.
b) Added the following to Keyed Note 9: Install and Provide 12 strand single mode fiber to each IDF in this building.
c) Keyed Note 24, Added 12 Strand single mode to this note.

Item No. 157 **Sheet T-101R:**
a) Removed corner data drops from Black Box R104.
b) Added tag to CMP in Theater Classroom/Makerspace R105.
c) Added Card Reader to plan north double exterior doors.

Item No. 158 **Sheet T-101S:**
a) Added on more LCD to TV wall in Pac Lobby R100, (7 total).
b) Moved plan north 360 cameras inside Auditorium R101 18'-0" plan south.
c) Removed plan south 360 cameras from Auditorium R101.
d) Added Card Reader to plan north double exterior doors.

Item No. 159 **Sheet T-102R:** Added D2 for the Building Automation System plan west wall of Mechanical Mezzanine R202.

Item No. 160 **Sheet T-102S:** Moved AP's mounted on plan east and west walls 16'-0" plan north, above box seat area.

Item No. 161 **Sheet TF-101:** Fire Alarm Notes to Contractor, added note 4 that says: "The entire existing campus will be re-numbered. Provide programming so that the fire alarm system matches the final room number layout".

Item No. 162 **Sheet TF-101E:** Intercom speakers in Egress Corridor 108, IT 107A, and stairs near Shop A 105 shall be non-IP speakers.

Item No. 163 **Sheet TF-101F:** At new closet accessed from Engineer Playfield 101, provide an additional smoke detector and horn/ strobe. Relocate the existing devices so as not to conflict with new partition.

Item No. 164 **Sheet TF-101H:**

a) Intercom speakers in Storage 1009A and Vest 1005 shall be non-IP speakers.
b) Added non-IP intercom speakers to Uniform Storage 1005L and Instrument Storage 1005J.

Item No. 165 **Sheet TF-101P:**

a) Note inside Auxiliary Gym K140 basketball court changed to the following: "All non-IP speakers on this sheet shall be on two zones, 1 gym and 2 everything else non-IP. Provide IP Zone paging modules".
b) Intercom speaker in IDF K143 and Intercom speakers in the two entrances to Girls RR & Showers K149 shall be non-IP speakers.

Item No. 166 **Sheet TF-101Q:** Note inside Competition Gym Q101 basketball court changed to the following: "All non-IP speakers on this sheet shall be on two zones, 1 gym and 2 everything else non-IP. Provide IP Zone paging modules".

Item No. 167 **Sheet TF-101R:** Replaced all smoke detectors with heat detectors in Black Box R104 and Vest R104A and Vest R104B.

Item No. 168 **Sheet TF-101S:** IP speakers in Lobby R100, Booth Lobby R101A, Women R117 shall be non-IP speakers.

Item No. 169 **Sheet TF-101T:**

a) Added CO2 detector to room Boilers R112.
b) Removed CO2 detectors in Set Construction Shop R113.
c) Added Ip intercom speaker in Set Construction Set R113.

Item No. 170 **Sheet TF-102R:** Removed CO2 detectors from Mechanical Mezzanine R202.

Item No. 171 **Sheet TF-102S:** Removed CO2 detectors from Mechanical Mezzanine R206.

Item No. 172 **Sheet TF-102T:** Removed CO2 detectors from Set / Prop Storage M204.

Item No. 173 **Sheet T-503:** Add sheet in its entirety.

QUESTIONS

Item No. 174 **Keyed note W4 is shown on the Landscape Material Plans but the legend on Sheet L2.00 states "not used". Please clarify** Answer: Refer to Sheet L2.00: W4 to be cast in place seat wall 18" tall X 18" wide (length varies, reference plan) with form liner finish.

Item No. 175 **Just want to clarify that type L sit down lockers are single tier. Specification say double tier but that's not what sit down lockers usually are.** Answer: This item has been addressed in this addendum – refer to the Specifications items above.

Item No. 176 **S103Q – Roof framing plan. There is a small bump-out area in the top left corner that calls for roof deck type 3, which is a 3" composite deck, implying that it is Nomenclature K with normal weight concrete and rigid insulation. The balance of the roof on this building is 1.0 22ga vented metal deck Nomenclature L. Is this an error?** Answer: Roof deck type 2 should be provided for the entire roof at area Q. Roof deck type 2 changed from 3dr 20 ga to 3c 20 ga.

Item No. 177 **S-102-U Roof Framing. The note calls for this to be Type 1 which is 22ga. However the note calls it to be 1" CSV 20ga. Which is it 22ga or 20ga?** Answer: Roof deck Type 1 (1" CSV 22 GA) should be provided for Area U.

Item No. 178 **S-103S 0 Catwalks. The note calls for 2" NW concrete on 1.0 CSV 20ga deck for the catwalks. This is not a roof should it really be vented deck?** Answer: Roof deck Type 4 (0.6 C 24 GA) should be used.

Item No. 179 **S-103T-2 Loading and Locking Gallery Framing – Again this call for a roof metal deck for a floor. Does this need to be vented.** Answer: Roof deck Type 4 (0.6 C 24 GA) should be used.

Item No. 180 **S-503 Deck Type 3 - 3DR 20ga. This does not indicate an acoustical deck. Should this be an acoustical deck? If it is acoustical, can we use NDCA 18/20G90 primed on the bottom Acoustical by New Millennium? Or as an equal 3NPA 18/20 G90 prime painted bottom**

Acoustical by Vulcraft? If it is not acoustical can we use 3" Type N by either New Millennium or Vulcraft? Answer: Roof at gym (Type 2) is not acoustical. Roof deck Type 2 changed from 3DR 20 GA to 3C 20 GA. Type 3N can not be used due to the lower capacity.

Item No. 181 **Please confirm that Sound Doors on A101H1 for Practice Rooms are part of spec section 13 21 48 Sound Conditioned Rooms or 13 20 00 Special Purpose Rooms.** Answer: Sound doors on A101H1 are part of the specs section 08 11 13. Only Door 1009D is to be part of section 13 20 00.

Item No. 182 **Please advise where the Tuba/Sousaphone Wall Brackets are on the drawings, that are referenced in section 12 35 00, Part 2, C.** Answer: There are no Tuba/Sousaphone wall brackets to be used in this project.

Item No. 183 **Is item 1117 on drawing A101H the Music Library System specified in section 12 35 00?** Answer: Yes

Item No. 184 **Do you know what fire panel or system you have in place right now? I'm wondering if it is ours (Simplex -Johnson Controls) And if its in compliance with the local codes.** Answer: They currently have two systems, Simplex and Notifier I believe, Simplex being the master and the one we are going to add and integrate to. The fire alarm scope is also shown in detail by campus area on the fire alarm site plan.

Attachments include 107 additional sheets and ends with drawing T-503 dated 02/15/22.

02/15/2022

Δ SECTION 10 51 13 - METAL LOCKERS AND BENCHES

PART 1 - GENERAL

1.1 RELATED DOCUMENTS

A. Drawings and general provisions of the Contract, including General and Supplementary Conditions and other Division 01 Specification Sections, apply to this Section.

1.1 SUMMARY

A. Section Includes: Requirements including but not limited to:
   1. Welded corridor lockers and benches.
   2. Accessories necessary for a complete installation.

1.2 SUBMITTALS

B. Product Data:
   1. Manufacturer's schedules, charts, literature, and illustrations to indicate the performance, fabrication procedures, product variations, and accessories.
   2. Manufacturer's installation instructions.

C. Shop Drawings: Indicate size, material, and finish. Show location and installation procedures. Include details of joints, attachments and clearances.

D. Locker/Lock Schedule: Schedule indicating locker number, serial number of the lock installed, key number, or combinations, as applicable, for each locker. Submit schedule in spread sheet format. Submit three hard copies and one electronic file.

E. Sample: Provide half size locker samples to Architect for approval showing all fasteners and door types for locks.

1.2 QUALITY ASSURANCE

A. Regulatory Requirements:
   1. Accessibility Requirements: Comply with applicable requirements.
      a. U.S. Architectural and Transportation Barriers Compliance Board Americans with Disabilities Act Accessibility Guidelines for Buildings and Facilities (ADAAG) 2010.
      b. ICC/ANSI A117.1 Accessible and Useable Building and Facilities.
      c. Texas Accessibility Standards (TAS) 2012.

B. Source Limitations: Obtain metal lockers and accessories from single source from single locker manufacturer.
   1. Obtain locks from single lock manufacturer.

C. Preinstallation Conference: Conduct conference at site.

1.3 WARRANTY

A. Warrant the work specified herein for ten (10) years against becoming unserviceable or causing an objectionable appearance resulting from either defective or nonconforming materials or workmanship.

B. Defects shall include, but not be limited to, the following:

1. Rapid deterioration of finish.
2. Loose or missing parts.
3. Non-functioning components and mechanisms.
4. Rust, delamination, warp, rot or breakage.

PART 2 - PRODUCTS

2.1 MANUFACTURERS

A. Basis of Design: List Industries. Other manufacturers are subject to compliance with requirements.
1. ASI Storage Solutions, Inc.; (901) 312-6195.
2. DeBourgh Manufacturing Co.; (800) 328-8829.
3. Superior Lockers as manufactured by List Industries, Inc. Deerfield Beach, FL; (800) 776-1342.
4. Penco Products, Inc.; (800) 562-1000.
5. Republic Storage Systems Co., Inc.; (800) 477-1255.
6. Scranton Products; (570) 348-0997.
7. WEC Manufacturing, Germantown, TN; (901) 367-3923.

2.2 LOCKERS

A. Athletic Lockers: All welded construction.
1. Material: Prime, high grade Class l mild annealed, cold-rolled steel.
2. General Construction: Pre-assembled, bolts, screws or rivets used in the assembly of the locker bodies are not permitted. Welds shall be free of burrs.
3. Body: 16 gauge, flanged.
4. Backs: 18 gauge, one-piece
5. Door Frame: 16 gauge, channels or angles, with continuous door strike. Multiple tiered assemblies shall have intermediate cross frame welded to vertical framing members.
6. Door: 14 gauge formed door constructed of single piece cold rolled steel. Full channel shaped on lock side, formed channel formation on hinge side, right angle shaped on horizontal sides.
7. Ventilation: Six (6) louvers per door, top and bottom, minimum 7 percent ventilation.
8. Hinges: Two (2) inches high minimum, five (5) knuckle, full loop, tight pin. Weld to door and frame. Two (2) per door for lockers 42 inches high or less; three (3) per door for lockers over 42 inches high.
9. Latching: one-piece, pre-lubricated spring steel, completely contained within the lock bar under tension to provide rattle-free operation. Provide three (3) latching points for lockers over 42 inches in height and two (2) latching points on for all tiered lockers 42 inches and under in height.
10. Pre-Locking Device: Lockers shall be equipped with a positive automatic pre-locking device whereby the locker may be locked while the door is open and then closed without unlocking and without damaging the locking mechanism.
11. Handles: Recessed, stainless steel with non-protruding lifting trigger.
12. Number Plates: Aluminum with etched figures at least 3/8 inches high, attached near top of door with two (2) aluminum rivets. Number plates shall be in order as directed by the Architect.
13. Finish: Baked enamel. Colors shall be as selected by Architect from manufacturer's standard colors. Lockers shall be painted inside and outside with the same color.
14. Fasteners/Anchors: Provide fasteners and anchors of type, size and finish as recommended by manufacturer for attaching or anchoring lockers to walls and floor.
15. Free-Standing Lockers: Provide front and end closed bases.
16. Base: Lockers shall rest on bases as detailed on drawings.
17. Locks: Master Lock Built-In Combination with five (5) Master / Control keys and metal dial. Furnish locker/lock schedule as specified above.

18. Top Closures, Closure Strips, and Fillers: Provide where shown, factory fabricated and finished to match lockers, unless noted otherwise.

B. Athletic Lockers: All welded construction.
1. Material: Mild Cold Rolled Commercial Quality Steel.
2. Foot Locker: Mini Louvered 14 gauge front panel, single point latch with padlock eye and 14 gauge reinforced seat.
3. Security Box: 14 gauge lockable door with 16 gauge side panel.
4. Finish: Baked Pure TGIC Powder Coat. Colors shall be as selected by Architect from manufacturer's standard colors. Lockers shall be painted inside and outside with the same color.
5. Construction: Welded One-Piece Structure.
6. Bottom: 16 gauge.
7. Top: 16 gauge.
8. Side: 16 gauge, 3/4 inch x 1-1/2 inch diamond perforated.
9. Back: 16 gauge.
10. Shelf: 16 gauge.
11. Interior Equipment: (2) SGL Prong Wall Hooks, (1) Coat Rod per Opening.
12. Number Plate: Polished Aluminum Plate, Riveted.
13. Assembly: All-welded.
14. Slope Top or Hood: No.
15. Lock: No.
16. Legs: No.
17. Base: 4 inch concrete base.
18. Recess Trim: No.
19. Accessible Student Locker: Accessible lockers with recessed handles, single tier or the lower opening of double tier locker. Locker bottom shall be a minimum of 15 inches off the floor, or an extra shelf placed 15 inches off the floor with bottom or shelf turned down to close resultant opening.

C. Accessible Student Locker: Accessible lockers with recessed handles, single tier or the lower opening of double tier locker. Locker bottom shall be a minimum of 15 inches off the floor, or an extra shelf placed 15 inches off the floor with bottom or shelf turned down to close resultant opening.

2.3 LOCKER TYPES

A. Type A - Athletic Lockers: 15 inches wide by 15 inches deep by 72 inches high, single tier, with interior hooks, louvered door, solid back, dividers, ends, fillers, sloped tops, and four (4) inch high CMU base. Colors shall be as selected by Architect from manufacturer’s standard colors.

B. Type B - Athletic Lockers: ~~18~~ 15 inches wide by ~~18~~ 15 inches deep by 72 inches high, double tier (36 inches high for each tier), with interior hooks, louvered door, solid back, dividers, ends, fillers, sloped tops, and four (4) inch high CMU base. Colors shall be as selected by Architect from manufacturer’s standard colors.

C. Type C - Culinary Lockers: ~~15~~ 12 inches wide by 18 inches deep by 72 inches high, triple tier (24 inches high for each tier), with interior hooks, louvered door, solid back, dividers, ends, fillers, sloped tops, and four (4) inch high CMU base. Colors shall be as selected by Architect from manufacturer’s standard colors.

D. Type ~~L~~ D – Athletic Sit-In Lockers: ~~48~~ 24 inches wide by ~~24~~ 18 inches deep by 72 inches high, ~~double tier~~ single tier, interior hooks, solid back, dividers, solid back, ends, fillers, flat tops, and four (4) inch high CMU base. Colors shall be as selected by Architect from manufacturer’s standard colors.

2.4 LOCKER ROOM BENCHES

A. Benches:
1. Bench Material: Shall be laminated hardwood maple.
2. Size: Shall be 9-1/2 inches deep x 1-1/4 inch thick x lengths as shown on drawings.
3. Finish: Manufacturer's two (2) coat clear acrylic finish.

B. Pedestals:
1. Manufacturer’s heavy-duty cast iron pedestal supports not more than 6 feet-0 inches o.c., with provisions for attaching pedestals to bottom of bench and anchoring pedestals to floor.
2. Height: 17-3/4 inches
3. Finish: Manufacturer's baked enamel finish in selected color by Architect to match lockers, unless noted otherwise.

C. Anchorages: Provide screw fasteners for attaching each pedestal to bottom of bench and two (2) suitable anchors per pedestal for anchoring pedestals to floor.

2.5 ADA BENCHES

A. Benches:
1. Bench Material: Shall be laminated hardwood maple.
2. Size: Shall be 24 inches deep x 48 inches long x thickness recommended by manufacturer to suit application.
3. Finish: Manufacturer's two (2) coat clear acrylic finish. Finish shall be slip-resistant.

B. Pedestals:
1. Manufacturer’s heavy-duty cast iron pedestal supports, with provisions for attaching pedestals to bottom of bench and anchoring pedestals to floor.
2. Height: As shown on drawings, but not less than 17 inches and not more than 19 inches from floor.
3. Finish: Manufacturer's baked enamel finish in selected color by Architect to match lockers, unless noted otherwise.

C. Anchorages:
1. Pedestal Attachment: Provide screw fasteners for attaching each pedestal to bottom of bench and two (2) suitable anchors per pedestal for anchoring pedestals to floor in location shown on drawings.

2.6 OTHER MATERIALS:

A. Provide other materials, not specifically described but required for a complete and proper locker installation.

PART 3 - EXECUTION

3.1 INSTALLATION

A. Assemble and install lockers plumb, level, and flush in the locations shown on the drawings in accordance with the manufacturer’s instructions. Lockers shall have no sharp metal edges.

B. Install and anchor lockers to the floor and wall as instructed by the manufacturer.

C. Install sloping hoods, metal fillers, end panels and trim to close openings, and accessories where shown on drawings or required to complete installation. Install using concealed fasteners. Provide flush hairline joints against adjacent surfaces.

D. Ensure number plates are installed in order directed by the Architect.

3.2 ADJUST AND CLEAN

A. Adjust doors and latches to operate without binding and positive latching and automatic locking.

B. Touch up marred finishes on lockers with manufacturer's supplied paint.

END OF SECTION 10 51 13

Δ 11 61 13 – ACOUSTICAL SHELLS

PART 1 GENERAL

1.1 SECTION INCLUDES

A. Theater and stage equipment including the following:
   1. Acoustical shells, Maestro.

1.2 REFERENCES

A. American Hardboard Association (AHA):
   1. AHA A135.4-95: Basic Hardboard.

B. American Plywood Association (APA).
   1. Performance Standards and Policies for Structural Use Panels.

C. American Society of Civil Engineers (ASCE):
   1. ASCE 7 - Minimum Design Loads for Buildings and Other Structures.

D. Architectural Woodwork Institute (AWI):
   1. Quality Manual, 8th Edition.

E. ASTM International (ASTM):
   1. ASTM A36/A 36M - Standard Specification for Carbon Structural Steel.
   2. ASTM A500 -Standard Specification for Cold-Formed Welded and Seamless Carbon Steel Structural Tubing in Rounds and Shapes.
   3. ASTM A513 - Standard Specification for Electric-Resistance-Welded Carbon and Alloy Steel Mechanical Tubing.
   4. ASTM A1011 - Standard Specification for Steel, Sheet and Strip, Hot Rolled, Carbon, Structural, High-Strength Low Alloy, High-Strength Low Alloy With Improved Formability, and Ultra High Strength.
   5. ASTM B85 - Standard Specification for Aluminum Alloy Die Castings.
   6. ASTM B209 - Specification for Aluminum and Aluminum-Alloy Sheet and Plate.
   7. ASTM B221 - Specification for Aluminum and Aluminum-Alloy Extruded Bars, Rods, Wire, Profiles, and Tubes.
   8. ASTM B429 - Specification for Aluminum-Alloy Extruded Structural Pipe and Tube.
   9. ASTM C423 - Standard Test Method for Sound Absorption and Sound Absorption Coefficients by the Reverberation Room Method.
   10. ASTM E84 - Standard Test Method for Surface Burning Characteristics of Building Materials.
   11. ASTM E 413 - Classification for Rating Sound Transmission.

F. International Building Code (IBC).
   1. IBC 2018, Chapter 8.

G. National Association of Architectural Metal Manufacturers (NAAMM): Metal Finishes Manual for Architectural and Metal Products.

H. National Electrical Manufacturers Association (NEMA): NEMA LD 3-2000 - High Pressure Decorative Laminates.

I. U.S. Department of Commerce, National Institute of Standards and Technology: DOC PS 1: U.S. Product Standard for Construction and Industrial Plywood.

J. US Green Building Council (USGBC): Leadership in Energy and Environmental Design

(LEED).

1.3 SUBMITTALS

A. Submit under provisions of Section 01 30 00 - Administrative Requirements.

B. Product Data: Manufacturer's data sheets on each product to be used, including:
   1. Provide test results by certified independent testing laboratory indicating compliance with performance requirements.
   2. Rated capacities, construction details, material descriptions, dimensions of individual components, profiles, and finishes.
   3. Maintenance instructions and recommendations.
   4. Acoustical testing data demonstrating minimal compliance with required acoustical performance criteria.
   5. Photometric data for light fixtures, if applicable to the product.

C. LEED Submittals:
   1. Manufacturer's certificate indicating that composite wood products and adhesives contain no added urea formaldehyde.
   2. Manufacturer's certificate indicating percentages by weight of post-consumer and pre-consumer recycled content. Include statement indicating costs for each product having recycled content.
   3. Credit EQ 4.4: Manufacturer's Signed Confirmation indicating that composite wood products and adhesives used in acoustical shells contain no urea formaldehyde.

D. Shop Drawings:
   1. Submit component and project specific installation drawings, cut sheets, and schedules showing all information necessary to fully explain the design features, appearance, function, fabrication, installation, and use of system components in all phases of operation. Submit for approval before beginning any fabrication, installation, or erection.
   2. Include fabrication and installation details. Distinguish between factory and field work.
   3. Include plans, elevations, sections, attachments and work by other trades.
   4. Include wiring diagrams when applicable.
   5. Indicate seismic bracing and fastening requirements as applicable.

E. Product Schedule:
   1. Use designations indicated on the Drawings.
   2. Include room locations, dimensions, accessories, finishes, and project specific notes.

F. Verification Samples:
   1. Exposed Finishes and Finish Materials: Not less than 4 by 4 inches (102 by 102 mm), for each type, color, pattern, surface and material selected.

G. Closeout Submittals:
   1. Operation and Maintenance Data: For adjusting, repairing and replacing components and accessories.
   2. Warranty: Submit manufacturer's warranty.
   3. As-Built Drawings: For completed work.

1.4 QUALITY ASSURANCE

A. Source Limitations: Obtain all products from a single manufacturer through one source providing a comprehensive material and installation package:

B. Manufacturer Qualifications: Minimum 5 years' experience in design and manufacturing of similar products on projects of similar size, scope and complexity, and with the production

capacity to meet the construction and installation schedule.

C. Installer Qualifications: ESTA-certified and experienced in installation of the work of this section and acceptable to the manufacturer and in the regular employ of the manufacturer.

D. Electrical Components: Listed and labeled per NFPA 70, Article 100 by a testing agency acceptable to Authorities Having Jurisdiction (AHJ).

E. Regulatory Requirements: Where components are indicated to comply with accessibility requirements, comply with the U.S. Architectural and Transportation Barriers Compliance Board's "Americans with Disabilities Act (ADA) and Architectural Barriers Act (ABA) Accessibility Guidelines for Buildings and Facilities".

1.5 DELIVERY, STORAGE, AND HANDLING

A. Deliver materials in manufacturer's original unopened containers with manufacturer's labels attached. Do not deliver material until spaces to receive them are clean, dry, and ready for their installation. Ship to jobsite only after roughing-in, painting and other finishing work has been completed, installation areas are ready to accept work.

B. Handle and install materials to avoid damage.

1.6 PROJECT CONDITIONS

A. Environmental Limitations: Do not deliver or install materials until spaces are enclosed and weather tight, wet work in spaces is complete and dry, HVAC system is operating and maintaining ambient temperature at occupancy levels during the remainder of the construction period.

PART 2 PRODUCTS

2.1 MANUFACTURERS

A. Requests for substitutions shall be considered in accordance with provisions of Section 01 60 00 - Product Requirements.
   1. Manufacturers seeking approval shall submit the following:
      a. Product data, including third-party certified acoustical data and proposed graphic/drawing layout for this project.
      b. Project references: Minimum of 5 installations not less than 3 years old, of comparable size, scope and complexity of this project, complete with owner contact information.
      c. Sample warranty.
   2. Submit substitution request not less than required days prior to bid date.
   3. Approval shall be indicated by issuance of written Addendum.
   4. Approved manufacturers shall meet separate requirements of Submittals Article.
   5. Manufacturers' products that are either listed as pre-approved in these Specifications or who have been granted approval as an alternate must still demonstrate all of the material performance and operational characteristics required by this Section.

2.2 ACOUSTICAL SHELLS (MAESTRO)

A. Basis of Design: Maestro Acoustical Shells as manufactured by Wenger Corporation. Full stage acoustical shell system consisting of mobile acoustical shell towers and adjustable acoustical shell ceiling.

B. Materials:
   1. Aluminum Extruded Bars, Profiles, and Tubes: ASTM B 221 (ASTM B 221M), 6063T alloy.

2. Steel Tube: ASTM A 500, hot formed steel tubing.
3. Cold-Rolled Steel Sheet: ASTM A 1008/A 1008M, commercial steel, Type B.
4. LPL (Low pressure laminate) Thermally fused polyester resin impregnated paper.
5. Veneer-Faced Panel Products (MDF core): Meets all CARB-2 requirements for formaldehyde emissions.
6. Hardboard: AHA A135.4, Class 1 Tempered - formaldehyde free.
7. Thermally-fused polyester surfacing that meets performance requirements of NEMA LD 3 for VGS grade.
8. High-Pressure Decorative Laminate: NEMA LD 3, Grade VGS.
   a. HPDL with urea formaldehyde-free adhesive.

C. Acoustical Panel Sound Transmission: Provide third party test results indicating acoustical shell system comprised of acoustical shell panels have the following sound transmission requirements:
   1. Sound Transmission Class (STC): Minimum 20 per ASTM E 413.

D. Acoustical Shell Panels, General: Manufacturer's standard stressed-skin composite acoustical shell panels, with a minimum of STC 20 to meet performance requirements, designed to mix and blend sound and reflect a maximum range of audible frequencies to both audience and performers.
   1. Core; 1-1/2 inches thick (38 mm) honeycomb core material shall have an open geometric pattern with cell walls vertical to panel skins and defined by alternating straight and sine wave layers. Height of sine wave shall be 1/2 inch; wall thickness shall correspond to 60 lb. kraft. Bonding of core material to panel faces shall be with permanently cured formaldehyde free urethane adhesive. Foam core materials and contact adhesives shall not be permitted.
   2. Face, Low Pressure Laminate Panel: 1/8 inch (3 mm) thick hardboard stressed skin with a thermally-fused polyester surfacing. Material and finish as indicated, with no exposed fasteners. This panel assembly shall have a minimum of STC 20.
   3. Back: 1/8 inch (3 mm) thick hardboard stressed skin, black.
   4. Panel Edge Frame: Straight panel edges are reinforced with extruded aluminum edge frame.
   5. Acclimate panel face and back materials in a temperature and humidity controlled environment so that they reach appropriate equilibrium condition prior to lamination to improve dimensional stability of finished laminated panels.
      a. Documentation of specified process must be available for review.

E. Mobile Acoustical Towers: Free-standing, self-supporting, movable towers for stage back and side walls. Towers consist of acoustical shell panels in rigid, diagonally-braced vertical steel frame, with center panel and two hinged wing panels, in nesting configuration minimizing required storage space. Wing panel on tower equipped with latching hardware and stage access door where indicated. Counterweighted tower base with adjustable front leveling pads concealed by removable access panel.
   1. Tower Size: 12 foot (3660 mm) wide or 10 foot (3050 mm) wide; consisting of one 4 foot (1220 mm) center panel and two 4 foot (1220 mm) wing panels; or one 4 foot (1220 mm) center panel and two 3 foot (914 mm) wing panels for the 10' option.
   2. Tower Panel Radius: 8 foot (2438 mm).
   3. Tower Panel Face Finish:
      a. LPL - Thermally fused polyester resin impregnated paper.
   4. Door and Wing Panel Hardware:
      a. Hinges: steel tube with self-lubricating sintered bronze bearings which pivot on a 5/16 inch (8 mm) diameter steel pin that are designed for silent operation and requiring no replacement parts. Metal-on-metal hinges without self-lubricating materials on towers are not acceptable.
      b. Slide-lock mechanism, pull handle, and adjustable wing stay.
   5. Tower Frame:

a. Tubular steel vertical tower frames with welded steel structure.

6. Stage Tower Transporter: Wheeled mover shall be a one stroke lifting design using mechanical leverage to lift the tower. The wheeled mover shall incorporate casters that are a minimum of 6" in diameter. A wheeled mover requiring a hydraulic pump shall not be accepted.

F. Adjustable Acoustical Shell Ceiling: Acoustical shell ceiling consisting of adjustable-angle acoustical shell ceiling panels supported by integral steel frame, suspended from stage rigging pipe batten, and stored in fly-loft in vertical position.

1. Ceiling Panel Size and Configuration: As indicated on drawings.
2. Ceiling Panel Radius: 10 foot (3050 mm).
3. Hanger Arms:
   a. The integral steel frame provides the structure to allow 1 inch (25 mm) square, 11 gauge steel hanger arms to be located next to the stage rigging cables, which is the strongest point to support the weight of the ceiling assembly. Hanger arms that are located more than 2 inches (25 mm) from the rigging cables are not acceptable.
4. Ceiling Performance Angle Adjustment:
   a. Poly strap with adjustable length allows the ceiling to be easily set into the performance position. The strap is adjustable to preferred angles in approximately 1 degree increments from 0 to 45 degrees.

G. Integrated LED Light Fixture: The fixture shall be the Lieto Acoustic Shell Fixture by the Wenger Corporation, headquartered at 555 Park Drive Owatonna, Minnesota 55060;

1. No known equal. If providing alternate fixture for approval, submit a proposed fixture layout and photometric point by point calculations generated by an industry accepted computer modeling platform e.g. AGI32 that demonstrates a minimum of 100 foot candles and a uniformity ratio no greater than 3:1 (Max:Min) within the shell for review in accordance with Division 01 procedures.
   a. Orchestra Shell lighting fixture models requiring quantities of fixtures in excess of the quantity indicated on the project drawings in order to develop any of the specified photometric performance criteria shall not be accepted.
2. The orchestra shell manufacturer shall provide and install lighting required by this section based on its photometric performance, the required characteristics of the lighting fixtures and other features of the installation including interconnections and all requirements as expressed herein.
3. The shell manufacturer shall determine the model, quantity and layout of the lighting fixtures required to satisfactorily accomplish and achieve all of the design criteria required herein and include costs for the provision and installation of the requisite bill of materials in their bid for the Work of this Section.
4. All orchestra shell lighting scope described herein shall be completed by the orchestra shell manufacturer for a complete and operating system.

H. Lighting Layout:

1. Ceiling panels shall include integral, recessed lighting fixtures with attributes as specified below that appropriately spaced across each ceiling row and interconnected providing power and control to each individual lighting fixture.
2. The provided array of Orchestra Shell lighting fixtures shall combine to create a uniform, diffuse distribution of lighting across the entirety of the performance area below that is defined as that located within the footprint of the orchestra shell enclosure.

I. Lighting Fixture Attributes:

1. Individual lighting fixtures shall provide the following features and performance characteristics:
   a. Correlated Color Temperature (CCT): 3000 degrees Kelvin.

b. Color Rendering Index (CRI): 80.
c. Minimum Rated LED Life (L70): 70,000 Hours.
d. Cooling Fans: Not Allowed.
e. Noise Criteria (maximum allowed): NC-17.

2. Fixtures must be designed so that they can be independently aimed from below the ceiling panel without requiring the use of tools. The fixture's total adjustable three-axis range of motion shall be a minimum of 30 degrees
3. Fixtures shall be available with trim rings on the face side of the panels for a clean installation and to shield, cover and limit visibility around the fixture.
4. Fixtures shall use DMX512 (ANSI E1.11) controlled drivers that dim smoothly to 1 percent light output without visible stepping, flash or flicker.
5. Fixtures shall include RJ45 connector(s) or 5-pin XLR connector(s) supporting the input/output (daisy-chain) connection of DMX512 lighting control system protocol.
6. Fixtures shall include Powercon style twist-lock connector(s) supporting the input/output (daisy-chain) connection of electrical power.
7. Fixtures shall be individually addressable using - Remote Device Management (RDM - ANSI E1.20) control standards. Fixtures shall maintain all RDM connection and functionality regardless of whether fixtures are in their "playing" position (horizontal orientation) or "storage" position (vertical orientation.)
8. Fixtures shall produce an even beam of light, uniformly spread throughout the field.
9. Fixtures shall be available in models that produce symmetrical and asymmetrical beam spread patterns.
10. Fixtures proposed for the Work of this Section shall be available with IES format photometric files associated with each fixture model proposed for use herein. IES files can be used in lighting fixture performance computer modeling and analysis software such as AGI32 to demonstrate that the lighting performance meets the design criteria required herein.
11. Fixtures proposed for the Work of this Section shall be submitted for third-party, independent testing laboratory characterization and quantification of the fixture's relative sound pressure levels during normal operation. Include printed lighting fixture product data with the stated Noise Criteria (NC) level of the tested fixture as part of submittal process.
12. Fixtures shall produce no Ultra-Violet (UV) or Infra-Red (IR) radiation or Radio Frequency Interference (RFI.)
13. Fixtures shall be flicker free and suitable for use with video.
14. Fixtures shall be individually listed as a "Directly Controlled Luminaire" for use with UL 924 Emergency Lighting Control.
15. Fixtures shall include a safety cable.
16. Fixture depth shall be minimal such that the presence of the lighting fixture(s) does not increase the stored depth of the ceiling row.
17. Fixtures shall be available with optional glare control accessories including concentric ring louver, hexcel style "egg-crate" louver and homogenizing lens.
18. Fixtures shall be listed, carry the label of a nationally recognized testing laboratory and shall be RoHS compliant.
19. Fixtures pre-approved as meeting the "Basis of Design" criteria established herein for the orchestra shell lighting fixtures shall be the Lieto manufactured by the Wenger Corporation.
    a. Requests for substitutions associated with other lighting fixtures shall be submitted no less than 10 days before the scheduled bid date and shall be considered based on the following criteria and submitted data:
        1) Product Data: Manufacturer's data sheets associated with each product to be included.
        2) Test results from certified independent testing laboratory indicating compliance with performance requirements required herein.
        3) Maintenance instructions and recommendations.
        4) Acoustical testing data from a certified independent testing laboratory

demonstrating minimal compliance with required acoustical performance
5) Photometric Analysis Document as indicated in paragraph D.3., below
6) Sample warranty
b. Approval of substitution requests shall be solely indicated by issuance of written Addendum.

J. Lighting Performance:
1. Photometric Performance:
a. A minimum intensity level 100 foot-candles* *average illuminance measured 30 inches (762 mm) above the stage floor.
b. Uniformity ratio (max:min): Less than 3.0:1.
c. Uniformity ratio (avg:min): Less than 2.5:1.
2. Each fixture shall be located and aimed so as to minimize light "scalloping" on the tower walls.
3. Photometric Analysis Document:
a. The photometric performance of the lighting produced by the shell manufacturer's proposed lighting system shall be computer modeled and submitted for the review and approval of the specifier as part of the shop drawing submittal process. The purpose of the submitted analysis is to demonstrate that the manufacturer's quantity and layout of selected lighting fixtures complies with each of the specific photometric requirements called out herein. The computer modeling shall be performed using commercially available lighting analysis software such as AGI32.
b. Include at least the following information in the submitted "point-by-point" photometric analysis document:
1) Lighting Fixture Schedule - Lighting fixture description including fixture manufacturer, fixture model, output wattage, beam spread, lumens produced, produced CCT and CRI, accessories, IES filename, Light Loss Factor (LLF) setting.
2) Calculation Summary - including:
a) Average Illuminance in Footcandles.
b) Maximum Illuminance in Footcandles.
c) Minimum Illuminance in Footcandles.
d) Uniformity ratio (max:min).
e) Uniformity ratio (avg:min).
3) Isocontour lines set at 10 footcandle increments across the entire range of lighting studied in the analysis document.
4) Calculation grid at 30 inches (762 mm) above the finished floor (a.f.f.) with calculation points spaced at increments no greater than 5 feet (1524 mm).
5) The manufacturer, product name and revision number of the software used to create the analysis document.
6) Date completed and identification of the software operator/technician responsible for the preparation of the analysis document.

K. Control, Wiring and Interconnections:
1. Each fixture shall be equipped with an integral, electronic tilt switch that shall maintain all RDM connection and functionality at all times regardless of whether fixtures are in their "playing" position (horizontal orientation) or "storage" position (vertical orientation.)
2. Lighting Control System Data Cabling (DMX512):
a. DMX512 lighting control system data cables shall be provided by the shell manufacturer to facilitate the interface of the orchestra shell lighting with the stage lighting system infrastructure.
b. DMX512 lighting control system cabling to the ceiling row (provided under another Section) shall be by a theatrically rigged connection direct to the first

lighting fixture in that ceiling panel's row.

c. Orchestra shell manufacturers shall provide DMX512 control data system jumper cables of required length(s) using the fixtures' RJ45 or 5-Pin XLR connectors to daisy-chain control to each of the panel's orchestra shell lighting fixtures.

d. Fixtures shall be provided with on-board, software selectable, 120 ohm, DMX512 terminator resistor capability.

e. Secure, dress and organize all data cables to ensure that they do not snag or catch adjacent rigging equipment, scenery and draperies.

3. Electrical Power:

a. Each ceiling panel's lighting fixture array shall receive its power (provided under another Section) via a theatrically rigged, "strain-relieved" connection terminated at the ceiling panel's junction box.

b. Jumper cables with PowerCon style connectors shall be used to daisy-chain supply of electrical power from the junction box to each fixture in turn, on the ceiling panel.

c. Organize, secure and dress all power cables to ensure that they do not snag or catch adjacent rigging equipment, scenery and drapery.

4. Warranty:

a. The fixture shall carry a five-year warranty against defects in materials and workmanship. Warranty coverage shall commence at project "acceptance," not with factory shipment. See the Wenger warranty card for service contact information, specifics and Integrated Lighting: Manufacturer's standard UL-approved fixtures located as indicated.

L. Stage Rigging and Battens: Rigging and battens supporting acoustical shell ceiling are part of the work of stage curtains, specified elsewhere in this Section.

M. Miscellaneous Supports: Channels, and other miscellaneous supports are part of the work of Division 05 Section "Metal Fabrications."

N. Finishes:

1. Steel Finish: Immediately after cleaning and pretreating, electrostatically apply thermosetting TGIC polyester powder coating or wet paint.
2. Opaque Painted Finish for Acoustical Shell Panel: 100 percent acrylic latex, 2-coat, eggshell finish.
3. Transparent Wood Finish for Acoustical Shell Panel Face: Manufacturer's standard finish, comparable to AWI custom grade acrylic lacquer.

PART 3 EXECUTION

3.1 INSTALLATION OF THEATER AND STAGE EQUIPMENT

A. Orchestra Shell Installation: Install orchestra shell components in accordance with manufacturer's written instructions.

1. Position all components accurately as indicated on Drawings and true, plumb, and level.
2. Note any deviations required to adjust for field obstructions and report to required persons to incorporate changes into as-built drawings.
3. Installation supervisor shall be a currently certified ETCP Rigger for Theatre.
4. Utilize only qualified riggers for installation, trim, and adjustment.
5. Clean and touch up all field welds and abraded paint finishes with matching materials.

3.2 INSTALLATION OF INTEGRATED CONTROLS FOR LIGHTING

A. Install in accordance with manufacturer's instructions.

B. On-site project management services shall be provided by a direct ETCP certified employee of the TSI. Services provided by sales reps and freelancers shall not be deemed equal, as they lack accountability, training, and certification necessary for performance venue project management tasks.

C. On-site turn-on, programming, troubleshooting, and owner instruction services shall be provided by technician(s) trained and certified by each equipment manufacturer.

D. Equipment shall be installed per plans and specifications. Equipment shall be aligned, adjusted, and trimmed for the most efficient operations, the greatest safety, and for the best visual appearance.

E. Inspect installed work to verify compliance with requirements. Verify that electrical work complies with manufacturer's submittals and written installation requirements. Perform installation and startup checks as recommended by manufacturer. Prepare inspection reports and submit to Architect.

3.3 INSPECTION AND TESTING OF RIGGING SYSTEMS

A. Inspection: During the installation of equipment the Rigging Contractor shall arrange for access as necessary for inspection of equipment by the Owner's representatives.

B. System Pre-Testing By Rigging Contractor: On completion of installation the Rigging Contractor shall conduct a complete test of the system to ensure it is working properly and in conformance with this specification.

C. Completion Testing: Upon completing the installation, the Rigging Contractor shall notify the Owner or Owner's Representative, who shall schedule inspection and testing of the full rigging system. At the time of testing, the Rigging Contractor shall furnish sufficient workers to operate all equipment and to perform such adjustments and tests as may be required by the Owner's representative. All testing equipment and personnel shall be at the Rigging Contractor's expense. Any equipment, which fails to meet with approval, shall be repaired or replaced with suitable equipment and the inspection shall be re-scheduled under the same conditions as previously specified. At the time of these inspections, no other work shall be performed in the auditorium and stage areas. All temporary bracing, scaffolding, etc. shall be removed to permit full operation of, and access to, all equipment. Final approval shall be withheld until all systems have been thoroughly tested and found to be in full working order and meets requirements herein.
   1. Manual counterweight rigging shall be tested in accordance with ANSI E1.4 "Entertainment Technology Manual Counterweight Rigging Systems".
   2. Powered rigging shall be tested. Each hoist shall be operated over five full continuous cycles at 1.25 times its full working load at full speed and travel distance. The emergency stop function shall be tested at 100 percent WLL in both the ascending and descending directions.
      a. Demonstrate that all over travel limit switches have been correctly set for the actual field conditions of the specific project.
      b. If it applies to the project, demonstrate that all position encoders have been correctly set for the actual field conditions of the specific project.
   3. Provide written recommendations to the Owner for necessary repairs or changes not included in the warranty. Provide a copy to the rigging equipment Manufacturer and in the Operations Manual.

D. The Owner or Owner's Representative shall witness and sign off on the inspection. A copy of the certificate shall be included in the permanent log turned over to the owner.

E. Upon completion of the work, the Rigging Contractor shall submit 3 copies of a comprehensive Operating and Maintenance Manual including as-built shop drawings,

equipment descriptions, and parts lists. The Rigging Contractor shall provide a safety and instruction class with personnel designated by the owner to demonstrate and explain the operation and maintenance of the systems.

F. Signage with basic operating instructions and warnings shall be posted in the area where the equipment shall be operated. Signage shall be in conformance with ANSI-Z535.

END OF SECTION 11 61 13

SECTION 22 11 16 - DOMESTIC WATER PIPING

PART 1 – GENERAL

1.1 RELATED DOCUMENTS

A. Drawings and general provisions of the Contract, including General and Supplementary Conditions and Division 01 Specification Sections, apply to this Section.

B. SECTION 22 05 00 – COMMON WORK RESULT FOR PLUMBING

C. SECTION 22 05 16 – EXPANSION FITTINGS AND LOOPS FOR PLUMBING PIPING

D. SECTION 22 05 29 – PLUMBING PIPE HANGERS AND SUPPORTS

E. SECTION 22 05 48.13 – VIBRATION CONTROLS FOR PLUMBING PIPING AND EQUIPMENT

1.3 SUMMARY

A. Provide a complete domestic water piping system.

B. Provide pressure gauge with all materials, equipment, appurtenances, accessories, connections, labor, etc. required and/or necessary to completely install, clean, inspect, adjust, test, and leave in safe and proper operating condition all systems.

C. All materials and equipment for the potable water system shall meet the latest mandates and requirements for lead free required by law that goes into effect January 2014.

1.4 SUBMITTALS

A. Product Data:
1. Piping: Submit data on pipe materials, fittings, and accessories.
2. Valves: Submit manufacturers catalog information with valve data and ratings for each service.
3. Gauge: Submit product description, model, dimensions, component sizes, rough-in requirements, service sizes, and manufacturer instruction.
4. Domestic Water Specialties: Submit manufacturers catalog information, component sizes, rough-in requirements, service sizes, and finishes.

1.5 DELIVERY, STORAGE, AND HANDLING

A. Provide temporary end caps and closures on piping and fittings. Maintain in place until installation.

B. Protect piping systems from entry of foreign materials by temporary covers, completing sections of the work, and isolating parts of completed system.

1.6 ENVIRONMENTAL REQUIREMENTS

A. Do not install underground piping when bedding is wet or frozen.

1.7 EXTRA MATERIALS

A. Furnish two (2) packing kits for each size valve and two (2) loose keys for outside hydrants.

PART 2 - PRODUCTS

2.1 PIPE MATERIALS

A. Products and materials listed herein are for references of approved materials.

B. Unless noted otherwise, the contract documents (schedule sheet) will specify the products and materials that are to be used for this project.

2.2 WATER PIPING, BELOW GRADE

A. Copper Tubing: ASTM B88, Type K.
   1. Fittings: ASME B16.22 wrought copper and bronze.
   2. Joints: AWS A5.8, BCuP silver braze.

B. PEX-a Tubing: ASTM F876/F877, AWWA C904
   1. Fittings: ASTM F1960 engineered polymer and lead-free brass.
   2. Joints: ASTM F1960 cold expansion with PEX reinforcing ring.

2.3 WATER PIPING, ABOVE GRADE

A. Copper Tubing 4” and smaller: ASTM B88, Type L hard drawn.
   1. Fittings: ASME B16.18, cast copper alloy or ASME B16.22, wrought copper and bronze.
   2. Joints:
      a. Solder, lead free, ASTM B32, 95-5TA (tin-antimony), or tin and silver, with melting range 430 to 535 degrees F. [Braze, AWS A5.8 BCuP silver/phosphorus/copper alloy with melting range 1190 to 1480 degrees F.]
      b. Bronze Flanges: ASME B16.24, Class 150, with solder-joint ends.
      c. Appurtenances for Grooved-End Copper Tubing:
         1) Bronze Fittings for Grooved-End, Copper Tubing: ASTM B 75 copper tube or ASTM B 584 bronze castings.
         2) Mechanical Couplings for Grooved-End Copper Tubing:
            a) Copper-tube dimensions and design similar to AWWA C606.
            b) Ferrous housing sections.
            c) EPDM-rubber gaskets suitable for hot and cold water.
            d) Bolts and nuts.
            e) Minimum Pressure Rating: 300 psig.
   3. At the contractor’s option, Press connection copper fittings manufactured by NIBCO INC. or approved equal will be acceptable. Building services piping –20 degrees to +250 degrees up to 200 PSI. Fittings shall comply with NSF-61, CSA, UPC. Seals shall be made of EPDM material and manufactured with an inboard bead design. The fittings shall include the Smart Connect feature to identify unpressed connections during system testing. All fittings shall be installed in accordance with the manufacturer’s installation instructions and according to local plumbing and mechanical codes.
      a. Approved manufacturer(s):
         1) Nibco

2) Viega
3) Anvil Press Fittings

B. Pipe 2” and smaller (NON-EXPOSED): PEX-a (Engel-Method Crosslinked Polyethylene) Piping: ASTM F 876 and F877 (CAN/CSA-B137.5) by Uponor and tested for compliance by an independent third party agency.
1. Type: Wirsbo AQUAPEX. Standard grade hydrostatic design and pressure ratings from PPI. Fire-rated assembly listings in accordance with ANSI/UL 263.
2. Fittings: elbows, adapters, couplings, plugs, tees and multi-port tees (1/2 inch through 3 inch nominal pipe size): ASTM F1960 cold-expansion fitting manufactured from the following material types:
   a. UNS No. C69300 Lead-free (LF) Brass
   b. UNS No. C27453 Lead-free (LF) Brass
   c. 20% glass-filled polysulfone as specified in ASTM D 6394
   d. Unreinforced polysulfone (group 01, class 1, grade 2) as specified in ASTM D 6394
   e. Polyphenylsulfone (group 03, class 1, grade 2) as specified in ASTM D 6394
   f. Blend of polyphenylsulfone (55-80%) and unreinforced polysulfone (rem.) as specified in ASTM D 6394
   g. Reinforcing cold-expansion rings shall be manufactured from the same source as PEX-a piping manufacturer and marked "F1960"
3. Accessories: Angle stops and straight stops that are compatible with PEX tubing are supplied by the PEX tubing manufacturer. Bend supports designed for maintaining tight radius bends are supplied by the PEX tubing manufacturer. ProPEX expander tool to install the ASTM F1960 compatible fittings are supplied by the PEX tubing manufacturer. The tubing manufacturer provides clips and/or PEX rails for supporting tubing runs. All horizontal tubing hangers and riser clamps are epoxy-coated material.
4. PEX-to-Metal Transition Fittings:
   a. Manufacturers: Provide fittings from the same manufacturer of the piping.
   b. PEX-a to Threaded Brass Transition: One-piece brass fitting with male or female threaded adapter and ASTM F 1960 cold-expansion end, with PEX-a reinforcing cold-expansion ring.
   c. PEX-a to Brass Sweat Transition: One-piece brass fitting with sweat adapter and ASTM F 1960 cold-expansion end, with PEX-a reinforcing cold-expansion ring.
   d. PEX-a to Flange Transition: Two-piece fitting with one steel flange conforming to ASME B 16.5and one lead free (LF) brass adapter conforming to ASTM F 1960.
   e. PEX-a to Groove Transition: One-piece lead free (LF) brass fitting with one CSA B242-05 groove end in either iron pipe size (IPS) or copper tube size (CTS) and one ASTM F1960 cold-expansion end, with PEX-a reinforcing cold-expansion ring.
   f. PEX-a to Water Meter Transition: Two-piece fitting with one NPSM union thread and one ASTM F 1960 cold-expansion end, with PEX-a reinforcing cold-expansion ring.
   g. PEX-a to Copper Press Transition: One-piece lead free (LF) brass fitting with one ASME B16.51 copper press end and one ASTM F1960 cold-expansion end, with PEX-a reinforcing cold-expansion ring.
5. PEX-to-Thermoplastic Transition Fittings:
   a. PEX-a to CPVC Transition: Thermoplastic fitting with one spigot or socket end and one ASTM F 1960 cold-expansion end, with PEX-a reinforcing cold-expansion ring.

C. PEX-a Tubing 3” : ASTM F876/F877

1. Fittings: ASTM F1960 engineered polymer and lead-free brass.
2. Joints: ASTM F1960 cold expansion with PEX reinforcing ring.
3. Basis of design Uponor AquaPEX pipe and ProPEX engineered polymer or lead-free brass fittings. All fittings shall be installed in accordance with the manufacturer's installation instructions and according to local plumbing and mechanical codes.

2.4 FLANGES, UNIONS, AND COUPLINGS

A. Pipe Size two (2) inches and Smaller:
1. Ferrous pipe: Class 150 malleable iron threaded unions.
2. Copper tube and pipe: Class 150 bronze unions with soldered joints.

B. Pipe Size 2-1/2 inches and Larger:
1. Ferrous pipe: Class 150 malleable iron threaded or forged steel slip-on flanges; preformed neoprene gaskets (Victaulic split ring flange is not allowed).
2. Copper tube and pipe: Class 150 slip-on bronze flanges; preformed neoprene gaskets.
3. PEX-a tube and pipe: Class 150 ASME B16.5 flanges; ASTM F1960 joints.

2.5 GALVANIC PROTECTION

A. Insulate joints between dissimilar metals with suitable isolation gasket and bolts with fiber ferrules and washers and/or suitable armored insulation fittings by Clearflow, Crane, Capital, or Epco, so there will be no contact between the metals or with insulating bushings.

B. Dielectric Connections:
1. Two (2) inches and smaller union with galvanized or plated steel threaded end, copper solder end, water impervious isolation barrier.
2. 2-1/2 inches and larger, forged steel flanges, screwed neck, 1/16 inch thick performed neoprene gasket. (Same as paragraph B, above.)

C. Dielectric connections are not to be used. The connection between dissimilar piping materials shall be made with approved brass fittings. Braised, welded, soldered, or screwed – as required by the material being connected.

2.6 VALVES

A. General
1. Valves shall be located to permit easy operation, replacement and repair. They shall be installed where shown on the Drawings, or as herein specified.
2. Control valves shall be provided for the domestic hot and cold water supply to all risers and specific areas such as restrooms, fixture groups, shock absorbers, equipment, hose bibbs and wall hydrants, food service areas and building separations. Valves shall be located in back-of-house or service areas with access panels or above lay-in ceilings. No access panels will be permitted in public spaces with gypsum ceilings.

B. Ball Valves:
1. Manufacturers:
a. NIBCO INC.
b. Milwaukee.

c. Apollo.
d. Bray.
e. Kitz.

2. Two (2) inches and Smaller: Nibco S/T-585-80-LF, full-port, MSS SP 110, Class 150, 600 psi CWP, silicon bronze, two piece body, chrome plated silicon bronze ball, teflon seats and stuffing box ring, blow-out proof stem, lever handle with balancing stops, solder or threaded ends. No Lead.
3. Where piping is insulated, ball valves shall be equipped with two (2) inch extended handles of non-thermal conductive CPVC material that meets UL 2043 approved for inside air plenum. Also provide a protective sleeve that allows operation of the valve without breaking the vapor seal or disturbing the insulation. Memory stops, which are fully adjustable after insulation is applied, shall be included.
4. Ball valves installed outdoors or in-ground shall have stainless steel handle.
5. Ball Valves for PEX-a Two (2) inches and smaller: NSF 359, Class 150, 250 psi CWP, forged brass, two piece body, brass ball, Teflon (PTFE) seats, blow-out proof stem, lever handle, ASTM F1960 ends. No Lead. Basis of design Uponor Lead-free Commercial Ball Valves.
6. Provide stem extensions of a non-thermal conducting material for valves in insulated lines to allow unobstructed operation.
7. Provide memory stops on all ball valves installed in domestic hot water return lines. Memory stops shall be adjustable after pipe insulation is applied.

C. Shut-off Valves:
1. Manufacturers:
a. NIBCO INC.
b. Milwaukee.
c. Apollo.
d. Bray.
e. Kitz.
2. Line Shut-Off Valves 2-1/2” to 3” where system operating pressure will not exceed 300 p.s.i.g. shall be 300 WOG LEAD-FREE ductile iron body with non-rising stem, ductile iron wheel handle, bronze stem and flange ends. Acceptable valves are Nibco F-619-RWS, or approved equivalent model by Kitz, Bray, Milwaukee, or Apollo.
3. Line Shut-Off Valves 4” and larger where system operating pressure will not exceed 300 p.s.i.g. shall be 300 CWP ductile iron body gate valve with non rising stem, resilient wedge, flange ends, EPDM liner and seal. Acceptable valves are NIBCO Model F-619-RWS/SON, or approved equal.
4. Provide stem extensions of a non-thermal conducting material for valves in insulated lines to allow unobstructed operation.

D. Swing Check Valves:
1. Manufacturers:
a. NIBCO INC.
b. Milwaukee.
c. Apollo.
d. Kitz.
2. Two (2) inches and Smaller: Nibco S-413-LF Series, class 125, MSS SP 80, silicon bronze body, stainless steel and PTFE disc, and soldered ends. No Lead.
3. 2-1/2 inches and Larger: NIBCO INC. F918-SS Series, MSS SP 71, cast iron body, stainless steel fitted, stainless steel disc, flanged ends. No Lead.

E. Balancing Valves (Hot Water Recirculation)
1. Balancing valves shall be venturi orifice type, bronze or brass body with brass or chrome ball, a minimum of two differential pressure read-out ports, 300 psi

maximum working pressure. A compatible positive shutoff ball valve with memory stop is to be provided if not included with the balancing valve assembly.

2. Balancing valves shall be Flow Design Incorporated (FDI) model AC or MC or approved equal by ITT or Bell and Gossett.
3. Ball valves are not acceptable for balancing the hot water return system.

2.7 RELIEF VALVES

A. Manufacturers: Watts Industries, or approved equal.

B. Temperature and Pressure Relief:
1. ANSI Z21.22 certified, bronze body, teflon seat, stainless steel stem and springs, automatic, direct pressure actuated, temperature relief maximum 210 degrees Fahrenheit, capacity ASME Section IV certified and labeled.

C. Vacuum Relief Valves:
1. Watts N36 Lead Free Series.

2.8 STRAINERS

A. Manufacturer: NIBCO INC., Mueller Steam Specialty, or approved equal.

B. Two (2) inches and Smaller: Threaded bronze body for 200 psi CWP, Y pattern with 1/32 inch stainless steel perforated screen. NIBCO INC., 221 Series.

C. 2-1/2 and Larger: Class 125, flanged iron body, Y pattern with 1/16-inch stainless steel perforated screen. NIBCO INC., F-721 Series.

D. Lead Free.

2.9 GAGES AND TAPS

A. Manufacturers: For portable water system (Lead Free)
1. Weiss
2. Marsh Bellofram
3. Weksler
4. Dwyer

B. Gage: ASME B40.1, UL 404 with bourdon tube, rotary brass movement, brass socket, front calibration adjustment, black scale on white background.

1. Case: Stainless steel.
2. Bourdon Tube: Phosphor bronze.
3. Dial Size: 4-1/2 diameter.
4. Mid-Scale Accuracy: One (1) percent.
5. Scale: Psi.

C. Needle Valve: Brass, 1/4 inch NPT for minimum 300 psi.

D. Ball Valve: Brass 1/4 inch NPT for 250 psi.

E. Pulsation Damper: Pressure snubber, brass with 1/4 inch NPT connections.

F. Siphon: Brass, 1/4 inch NPT angle or straight pattern.

PART 3 - EXECUTION

3.1 EXAMINATION

A. Verify excavations are to required grade, dry, and not over-excavated.

3.2 PREPARATION

A. Ream pipe and tube ends. Remove burrs. Bevel plain end ferrous pipe.

B. Remove scale and dirt, on inside and outside, before assembly.

3.3 INSTALLATION - BURIED PIPING SYSTEMS

A. Verify connection size, location, and invert are as indicated on Drawings.

B. Establish elevations of buried piping with not less than two (2) feet of cover.

C. Establish minimum separation from other services piping in accordance with code.

D. Remove scale and dirt on inside of piping before assembly.

E. Install pipe on prepared bedding.

F. Route pipe in straight line.

G. Install pipe to allow for expansion and contraction without stressing pipe or joints.

H. Do not use lead bearing solder materials.

I. Pipe Cover and Backfilling:
   1. After hydrostatic test, evenly backfill entire trench width by hand placing backfill material and hand tamping in four (4) inches compacted layers to 12 inches minimum cover over top of jacket. Compact to 95 percent maximum density.
   2. Evenly and continuously backfill remaining trench depth in uniform layers with backfill material.
   3. Do not use wheeled or tracked vehicles for tamping.

J. Provide tracer wire for all piping routed below slab locate wire leads in accessible location for use in future line trouble shooting.

3.4 INSTALLATION - ABOVE GROUND PIPING

A. Insulate all piping installed in exterior walls, above food service areas, and any area exposed to temperatures below 40 degrees Fahrenheit.

B. Install non-conducting dielectric connections wherever jointing dissimilar metals.

C. Insulate all domestic hot water supply and return lines.

D. Install piping to maintain headroom without interfering with use of space or taking more space than necessary.

E. Group piping whenever practical at common elevations.

F. Install piping to allow for expansion and contraction without stressing pipe, joints, or connected equipment. Refer to Section 22 05 16.

G. Provide expansion tank for each domestic water heater, install per manufacturer's recommendations.

H. Provide clearance in hangers and from structure and other equipment for installation of insulation and access to valves and fittings. Refer to Section 22 05 29.

I. Provide access where valves and fittings are not accessible. Coordinate size and location of access doors with Architect.

J. Establish elevations of buried piping outside the building to obtain not less than one (1) foot of cover.

K. Where pipe support members are welded to structural building framing, scrape, brush clean, and apply one coat of zinc rich primer to welding.

L. Install water piping in accordance with ASME B31.9.

M. Sleeve pipes passing through partitions, walls and floors.

N. Install unions downstream of valves and at equipment or apparatus connections.

O. Install valves with stems upright or horizontal, not inverted.

P. Install brass male adapters each side of valves in copper piped system. Solder adapters to pipe.

Q. Install ball valves for shut-off and to isolate equipment at branch to each fixture bank and at each plumbing appliance or water heater.

R. Provide check valves on discharge of all water circulating pumps.

S. Install potable water protection devices on plumbing lines where contamination of domestic water may occur; on boiler feed water lines, janitor rooms, fire sprinkler systems, premise isolation, irrigation systems, flush valves, interior and exterior hose bibs.

T. Pipe relief from valves, back-flow preventers and drains to nearest floor drain.

U. Install water hammer arrestors complete with accessible isolation valve on hot and cold water supply piping to all equipment with solenoid valves.

V. Route all domestic water piping inside building in climate controlled space not subject to freezing.

W. Do not use lead bearing solder materials.

X. In natatorium, including equipment rooms, all exposed plumbing piping shall be insulated and protected by a complete aluminum jacketing system. Refer to Section 23 07 16 for specification on jacketing. Provide color coded, printed pipe label 10’ on center identifying pipe service type (gas, domestic water, storm water, etc.).

Y. Install PEX-a piping with the following maximum horizontal spacing:
   1. Three (3) inches and smaller: 32 inches for bare pipe or
   2. ¾" and smaller: 72 inches when a continuous support channel is used.
   3. 1" and larger: 96 inches when a continuous support channel is used.

Z. Install supports for vertical PEX-a piping:
   1. Every 60 inches for non-riser, in-wall applications.
   2. At the base and mid-level of each floor, and top of every-other floor for hot water risers.
   3. At the base and mid-level of each floor, and top of every-fourth floor for cold water risers.

AA. Press-Connect Joints for Copper Tubing: Join copper tube and press-connect fittings with tools recommended by fitting manufacturer.

BB. Install PEX-a piping in accordance with manufacturer's installation instructions.

CC. Lead Free.

3.5 INSTALLATION - SERVICE CONNECTIONS

A. At each incoming water service line provide approved reduced pressure back-flow preventer. Coordinate with division 23 to install gas flow meter provided by division 23 and install by this contractor.

B. Provide a cast iron sleeve around service main to six (6) inches above floor and six (6) inches minimum below grade beam. Size for minimum of two (2) inches of loose batt insulation stuffing.

C. Optionally, where building structural components permit, water service entrance may be composed of a single extended 90 degree fitting of fabricated 304 stainless steel tubing, maximum Working pressure of 175 psi with grooved-end connection on the outlet (building) side and a cast iron pipe size coupler on the underground (inlet) side.

3.6 INSTALLATION - BACKFLOW PREVENTERS

A. Provide at each make up connection to a hot water boiler, cooling tower, chilled water system, kitchen equipment, and at each piece of equipment requiring a make-up connection.

B. Provide at water supply to fire protection system.

C. Provide a floor drain within six (6) feet of each backflow preventer.

D. Backflow preventer shall be certified by Contractor.

E. Lead Free.

3.7 INSTALLATION – PRESSURE GAGES

A. Install pressure gages for each pump, locate taps before strainers and on suction and discharge of pump; pipe to gage.

B. Install gage taps in piping with isolation valves.

C. Install pressure gages at main water entry. Provide needle valve or ball valve to isolate each gage. Extend nipples to allow clearance from insulation.

D. Install gage in piping to each inlet and outlet of water heater.

E. Install gage in piping to each end of backflow preventer.

F. Install gage in piping to each end of double check valves.

G. Install gage in piping to each inlet and outlet of water softener.

H. Install gage in piping to each inlet of water filter.

I. Install gage in piping to each inlet of commercial dishwasher machine.

3.8 DOMESTIC HOT WATER SYSTEM BALANCING

A. The test and balance contractor shall provide testing, adjusting and balancing of the hot water system, once the system is fully installed and operational. Preliminary and final reports shall be prepared and issued to the General Contractor, Architect and Engineer.

B. Preparation of the hot water system for balancing:

1. Confirm outlet temperature of the system at water heaters and/or storage tanks.
2. Verify recirculation pump operation and rotation.
3. Confirm/adjust setpoint of each individual riser balancing valve to flow a minimum of 0.5 gpm or as otherwise noted on the documents.

C. The test and balance report shall indicate the following:

1. Pressure, temperature and flow in gpm at the discharge side of each balancing valve referencing the valve tag number.
2. Pressure, temperature and flow in gpm at the suction side of each recirculating pump.

D. Copies of the final approved balancing report are to be included in the O and M manuals as noted in “Permits” under Part 1 of Section 22 00 00.

3.9 FIELD QUALITY CONTROL

A. Pressure test all domestic water piping.

B. After installation and prior to backfill or cover-up, rinse piping system of particulate contaminants, cap and subject to static water pressure of 125 psig for four (4) hours.

C. Repair leaks and defects and re-test any portion of piping system that fails.

D. Provide written test report including date and time of test, pass or fail indication, summary of remedial work required and date and time of each re-test.

E. Installers for PEX-a piping shall have completed the applicable training courses per manufacturer’s requirements.

END OF SECTION 22 11 16

26 09 43 – DIGITAL LIGHTING CONTROLS

PART 1 GENERAL

1.1 SECTION INCLUDES

A. Distributed Digital Lighting Control System: System includes
   1. Digital Lighting and Plug Load Controls
   2. Relay Panels
   3. Emergency Lighting Control.

1.2 RELATED SECTIONS

A. Section 27 05 39 - Surface Raceways for Communications Systems

B. Section 26 50 00 - Lighting.

C. Section 26 52 00 - Emergency Lighting.

D. Section 25 55 00 - Integrated Automation Control of HVAC- Integrated Automation, Building integrator shall provide integration of the lighting control system with Building Automation Systems.

1.3 REFERENCES

A. NFPA 70 - National Electrical Code; National Fire Protection Association.

B. NEMA - National Electrical Manufacturers Association

C. FCC emission standards

D. UL - Underwriters Laboratories, Inc. Listings

E. UL 2043 - Standard for Fire Test for Heat and Visible Smoke Release for Discrete Products Installed in Air-Handling Spaces.

F. UL 20 - General Use Switches, Plug Load Controls

G. UL 924 - Standard for Emergency Lighting and Power Equipment

H. ULC - Underwriter Laboratories of Canada Listings

1.4 DESIGN / PERFORMANCE REQUIREMENTS

A. Digital Lighting Management System shall accommodate the square-footage coverage requirements for each area controlled, utilizing room controllers, digital occupancy sensors, switches, daylighting sensors and accessories that suit the required lighting and electrical system parameters.

B. System shall conform to requirements of NFPA 70.

C. System shall comply with FCC emission standards specified in part 15, sub-part J for commercial and residential application.

D. System shall be listed under UL sections 916 and/or 508.

1.5 SUBMITTALS

A. Submit under provisions of Section 01 30 00 - Administrative Requirements.

B. Product Data: Manufacturer's data sheets on each product to be used, including:
   1. Catalog sheets and specifications.
   2. Ratings, configurations, standard wiring diagrams, dimensions, colors, service condition requirements, and installed features.
   3. Storage and handling requirements and recommendations.
   4. Installation instructions.

C. Shop Drawings: Wiring diagrams a for the various components of the System specified including:
   1. Composite wiring and/or schematic diagram of each control circuit as proposed to be installed.
   2. Show location of all devices, including at minimum sensors, load controllers, and switches/dimmers for each area on reflected ceiling plans.
   3. Provide room/area details including products and sequence of operation for each room or area. Illustrate typical acceptable room/area connection topologies.
   4. Network riser diagram including floor and building level details. Include network cable specification. Illustrate points of connection to integrated systems. Coordinate integration with mechanical and/or other trades.

D. Manufacturer's Certificates: Certify products meet or exceed specified requirements.

E. Closeout Submittals:
   1. Project Record Documents: Record actual installed locations and settings for lighting control devices.
   2. Operation and Maintenance Manual:
      a. Include approved Shop Drawings and Product Data.
      b. Include Sequence of Operation, identifying operation for each room or space.
      c. Include manufacturer's maintenance information.
      d. Operation and Maintenance Data: Include detailed information on device programming and setup.
      e. Include startup and test reports.

1.6 QUALITY ASSURANCE

A. Manufacturer Qualifications: Company specializing in manufacturing of centralized and distributed lighting control systems with a minimum of 10 years documented experience.

B. Installer Qualifications: Company certified by the manufacturer and specializing in installation of networked lighting control products with minimum three years documented experience.

C. System Components: Demonstrate that individual components have undergone quality control and testing prior to shipping.

1.7 PRE-INSTALLATION MEETINGS

A. Convene minimum two weeks prior to commencing Work of this section. Meeting to be attended by Contractor, Architect, system installer, factory authorized manufacturer's representative, and representative of all trades related to the system installation.

B. Review installation procedures and coordination required with related Work and the following:
   1. Confirm the location and mounting of all devices, with special attention to placement of switches, dimmers, and any sensors.

2. Review the specifications for low voltage control wiring and termination.
3. Discuss the functionality and configuration of all products, including sequences of operation, per design requirements.
4. Discuss requirements for integration with other trades

C. Inspect and make notes of job conditions prior to installation:
1. Record minutes of the conference and provide copies to all parties present.
2. Identify all outstanding issues in writing designating the responsible party for follow-up action and the timetable for completion.
3. Installation shall not begin until all outstanding issues are resolved to the satisfaction of the Architect.

1.8 DELIVERY, STORAGE, AND HANDLING

A. Store products in a clean, dry space in original manufacturer's packaging in accordance with manufacturer's written instructions until ready for installation

1.9 PROJECT CONDITIONS

A. Maintain environmental conditions (temperature, humidity, and ventilation) within limits recommended by manufacturer for optimum results. Do not install products under environmental conditions outside manufacturer's absolute limits.

B. Do not install equipment until following conditions can be maintained in spaces to receive equipment:
1. Ambient temperature: 32 to 104 degrees F (0 to 40 degrees C).
2. Relative humidity: Maximum 90 percent, non-condensing.

1.10 WARRANTY

A. Products Warranty: Manufacturer shall provide a 5 year limited warranty on products within this installation, except where otherwise noted, and consisting of a one for one device replacement.

PART 2 PRODUCTS

2.1 MANUFACTURERS

A. Acceptable Manufacturer: Wattstopper Digital Lighting Management (DLM). System shall not be integrated to BAS.

B. Substitutions: Not permitted.

C. Requests for substitutions will be considered in accordance with provisions of Section 01 60 00 - Product Requirements.

2.2 DISTRIBUTED DIGITAL LIGHTING CONTROL SYSTEM

A. System General: Provide a WattStopper, Provide Digital Lighting Management System (DLM) complete with all necessary enclosures, wiring, and system components to ensure a complete and properly functioning system as indicated on the Drawings and specified herein. If a conflict is identified, between the Drawing and this Specification, contact the Architect for clarification prior to proceeding.

1. Daylit Areas: Provide daylight-responsive automatic control in all spaces (conditioned or unconditioned) where daylight contribution is available as defined by relevant local building energy code:
    a. All luminaires within code-defined daylight zones shall be controlled separately from luminaires outside of daylit zones.
    b. Daytime setpoints for total ambient illumination (combined daylight and electric light) levels that initiate dimming shall be programmed in compliance with relevant local building energy codes.
    c. Multiple-level switched daylight harvesting controls may be utilized for areas marked on drawings.
    d. Provide smooth and continuous daylight dimming for areas marked on drawings. Daylighting control system may be designed to turn off electric lighting when daylight is at or above required lighting levels, only if system functions to turn lamps back on at dimmed level, rather than turning full-on prior to dimming.

B. Equipment Required: Lighting Control and Automation system as defined under this section covers the following equipment.
1. Digital Lighting Management (DLM) local network: Free topology, plug-in wiring system (Cat 5e) for power and data to room devices.
2. Digital Room Controllers: Self-configuring, digitally addressable one, two or three relay plenum-rated controllers for on/off control. Selected models include 0-10 volt or line voltage forward phase control dimming outputs and integral current monitoring capabilities.
3. Digital Occupancy Sensors: Self-configuring, digitally addressable, calibrated occupancy sensors with LCD display and two-way active infrared (IR) communications.
4. Digital Switches: Self-configuring, digitally addressable pushbutton on/off, dimming, and scene switches with two-way active infrared (IR) communications.
5. Handheld remotes for personal control: On/Off, dimming and scene remotes for control using infrared (IR) communications. Remote may be configured in the field to control selected loads or scenes without special tools.
6. Digital Daylighting Sensors: Single-zone closed loop, multi-zone open loop and single-zone dual-loop daylighting sensors with two-way active infrared (IR) communications for daylight harvesting using switching, bi-level, tri-level or dimming control.
7. Configuration Tools: Handheld remote for room configuration and relay panel programming provides two way infrared (IR) communications to digital devices and allows complete configuration and reconfiguration of the device / room from up to 30 feet away.
8. Emergency Lighting Control Unit (ELCU): Allows a standard lighting control device to control emergency lighting in conjunction with normal lighting in any area within a building

C. Local Network LMRJ-Series: DLM local network is a free topology lighting control physical connection and communication protocol designed to control a small area of a building.
1. Features of the DLM local network include:
    a. Plug n' Go automatic configuration and binding of occupancy sensors, switches and lighting loads to the most energy-efficient sequence of operation based upon the device attached.
    b. Simple replacement of any device in the local DLM network with a standard off the shelf unit without requiring significant commissioning, configuration or setup.
    c. Push n' Learn configuration to change the automatic configuration, including binding and load parameters without tools, using only the buttons on the digital devices in the local network.

d. Two-way infrared communications for control by handheld remotes, and configuration by a handheld tool including adjusting load parameters, sensor configuration and binding, within a line of sight of up to 30 feet from a sensor, wall switch or IR receiver.

2. Digital room devices connect to the local network using pre-terminated Cat 5e cables with RJ-45 connectors, which provide both data and power to room devices. Systems that utilize RJ-45 patch cords but do not provide serial communication data from individual end devices are not acceptable.
3. If manufacturer's pre-terminated Cat5e cables are not used for the installation each cable must be individually tested and observed by authorized service representative following installation.

2.3 DIGITAL LOAD CONTROLLERS (ROOM, PLUG LOAD AND FIXTURE CONTROLLERS)

A. Digital Load Controllers: Digital controllers for lighting zones, fixtures and/or plug loads automatically bind room loads to the connected control devices in the space without commissioning or the use of any tools. Provide controllers to match the room lighting and plug load control requirements. Controllers are simple to install, and do not have dip switches/potentiometers, or require special configuration for standard Plug n' Go applications. Control units include the following features

1. Automatic room configuration to the most energy-efficient sequence of operation based upon the devices in the room.
2. Simple replacement using the default automatic configuration capabilities, a room controller may be replaced with an off-the-shelf device.
3. Multiple room controllers connected together in a local network must automatically arbitrate with each other, without requiring any configuration or setup, so that individual load numbers are assigned starting with load 1 to a maximum of 64, assigned based on each controller's device ID's from highest to lowest.
4. Device Status LEDs to indicate:
   a. Data transmission
   b. Device has power
   c. Status for each load
   d. Configuration status
5. Quick installation features including:
   a. Standard junction box mounting
   b. Quick low voltage connections using standard RJ-45 patch cable
6. Based on individual configuration, each load shall be capable of the following behavior on power up following the loss of normal power:
   a. Turn on to 100 percent
   b. Turn off
   c. Turn on to last level
7. Each load be configurable to operate in the following sequences based on occupancy:
   a. Auto-on/Auto-off (Follow on and off)
   b. Manual-on/Auto-off (Follow off only)
8. Polarity of each load output shall be reversible, via digital configuration, so that on is off and off is on.
9. BACnet object information shall be available for the following objects:
   a. Load status
   b. Schedule state, normal or after-hours
   c. Demand Response enable and disable
   d. Room occupancy status
   e. Total room lighting and plug loads watts
   f. Electrical current
   g. Total watts per controller
   h. Total room watts/sq ft.

i. Force on/off all loads
10. UL 2043 plenum rated
11. Manual override and LED indication for each load
12. Zero cross circuitry for each load
13. All digital parameter data programmed into an individual room controller or plug load controller shall be retained in non-volatile FLASH memory within the controller itself. Memory shall have an expected life of no less than 10 years.
14. Dimming Room Controllers shall share the following features:
    a. Each load shall have an independently configurable preset on level for Normal Hours and After Hours events to allow different dimmed levels to be established at the start of both Normal Hours and After Hours events.
    b. Fade rates for dimming loads shall be specific to bound switch buttons, and the load shall maintain a default value for any bound buttons that do not specify a unique value.
    c. The following dimming attributes may be changed or selected using a wireless configuration tool:
        1) Establish preset level for each load from 0-100 percent
        2) Set high and low trim for each load
        3) Initiate lamp burn in for each load of either 0, 12 or 100 hours
    d. Override button for each load provides the following functions:
        1) Press and release for on/off control
        2) Press and hold for dimming control
    e. Each dimming output channel shall have an independently configurable minimum and maximum calibration trim level to set the dimming range to match the true dynamic range of the connected ballast or driver. LED level indicators on bound dimming switches shall utilize this new maximum and minimum trim.
    f. Each dimming output channel shall have an independently configurable minimum and maximum trim level to set the dynamic range of the output within the new 0-100 percent dimming range defined by the minimum and maximum calibration trim.
    g. Calibration and trim levels must be set per output channel. Devices that set calibration or trim levels per controller (as opposed to per load) are not acceptable.
    h. All configuration shall be digital. Devices that set calibration or trim levels per output channel via trim pots or dip-switches are not acceptable.

B. On/Off Room Controllers shall include:
1. Dual voltage (120/277 VAC, 60 Hz) capable rated for 20A total load
2. One or two relay configuration
3. Simple 150 mA switching power supply (Only 4 100 series devices on a Cat 5e local network)
4. Three RJ-45 DLM local network ports with integral strain relief and dust cover
5. WattStopper product numbers: LMRC-101, LMRC-102

C. On/Off/0-10V Dimming KO Mount Room Controllers shall include:
1. Dual voltage (120/277 VAC, 60 Hz) capable rated for 10A total load
2. Optional real time current and voltage monitoring (with - M Monitoring option).
3. One or two relays configurations
4. Smart 150 mA switching power supply
5. Two RJ-45 DLM local network ports. Provide molded strain relief ring
6. One dimming output per relay
    a. 0-10V Dimming - Where indicated, one 0-10 volt analog output per relay for control of compatible ballasts and LED drivers. The 0-10 volt output shall automatically open upon loss of power to the Room Controller to assure full light output from the controlled lighting

7. Units capable of providing both Class 1 or Class 2 wiring for the 0-10V output
8. WattStopper product numbers: LMRC-111, LMRC-111-M, LMRC-112, or LMRC-112-M.

2.4 DIGITAL WALL OR CEILING MOUNTED OCCUPANCY SENSOR

A. Digital Occupancy Sensors shall provide graphic LCD display for digital calibration and electronic documentation. Features include the following:
   1. Digital calibration and pushbutton configuration for the following variables:
      a. Sensitivity, 0-100 percent in 10 percent increments
      b. Time delay, 1-30 minutes in 1 minute increments
      c. Test mode, Five second time delay
      d. Detection technology, PIR, Ultrasonic or Dual Technology activation and/or re-activation.
      e. Walk-through mode
   2. Load parameters including Auto/Manual-ON, blink warning, and daylight enable/disable when photosensors are included in the DLM local network.
   3. Programmable control functionality including:
      a. Each sensor may be programmed to control specific loads within a local network.
      b. Sensor shall be capable of activating one of 16 user-definable lighting scenes.
      c. Adjustable retrigger time period for manual-on loads. Load will retrigger (turn on) automatically within a configurable period of time (default 10 seconds) after turning off.
      d. On dual technology sensors, independently configurable trigger modes are available for both Normal (NH) and After Hours (AH) time periods. The retrigger mode can be programmed to use the following technologies:
      e. Ultrasonic and Passive Infrared
      f. Ultrasonic or Passive Infrared
      g. Ultrasonic only
      h. Passive Infrared only
      i. Independently configurable sensitivity settings for passive infrared and ultrasonic technologies (on dual technology sensors) for both Normal (NH) and After Hour (AH) time periods.
   4. One or two RJ-45 port(s) for connection to DLM local network.
   5. Two-way infrared (IR) transceiver to allow remote programming through handheld commissioning tool and control by remote personal controls.
   6. Device Status LEDs, which may be disabled for selected applications, including:
      a. PIR detection
      b. Ultrasonic detection
      c. Configuration mode
      d. Load binding
   7. Assignment of occupancy sensor to a specific load within the room without wiring or special tools.
   8. Manual override of controlled loads.
   9. All digital parameter data programmed into an individual occupancy sensor shall be retained in non-volatile FLASH memory within the sensor itself. Memory shall have an expected life of no less than 10 years.

B. BACnet object information shall be available for the following objects:
   1. Detection state
   2. Occupancy sensor time delay
   3. Occupancy sensor sensitivity, PIR and Ultrasonic

C. Units shall not have any dip switches or potentiometers for field settings

D. Multiple occupancy sensors may be installed in a room by simply connecting them to the free topology DLM local network. No additional configuration will be required.

E. WattStopper product numbers: LMPX, LMDX, LMPC, LMUC, LMDC

2.5 Wired Low Voltage Isolated Relay Interface:

1. Module provides a single Form C contact relay rated for 24VAC or VDC.
2. Relay module will provide a contact closure on the Normally Open side of the relay (and contact open on the Normally Closed side) while any occupancy sensor on the local Cat 5e IRB network is in the occupied mode. This function is non-programmable and works automatically using the unit's internal circuitry.
3. LED on the device to provide status of the relay
4. This device is ideally suited to connect to HVAC inputs in the space that are looking for a dry contact whenever the space is occupied to enhance their specific sequence of operation.
5. Wattstopper product number LMRL-100

2.6 DIGITAL WALL SWITCHES

A. Low voltage momentary pushbutton switches in 1, 2, 3, 4, 5 and 8 button configuration. Wall switches shall include the following features:

1. Two-way infrared (IR) transceiver for use with personal and configuration remote controls.
2. Removable buttons for field replacement with engraved buttons and/or alternate color buttons. Button replacement may be completed without removing the switch from the wall.
3. Configuration LED on each switch that blinks to indicate data transmission.
4. Load/Scene Status LED on each switch button with the following characteristics:
   a. Bi-level LED
   b. Dim locator level indicates power to switch
   c. Bright status level indicates that load or scene is active
   d. Dimming switches shall include seven bi-level LEDs to indicate load levels using 14 steps.
5. Programmable control functionality including:
   a. Button priority may be configured to any BACnet priority level, from 1-16, corresponding to networked operation allowing local actions to utilize life safety priority
   b. Scene patterns may be saved to any button other than dimming rockers. Once set, buttons may be digitally locked to prevent overwriting of the preset levels.
6. All digital parameter data programmed into an individual wall switch shall be retained in non-volatile FLASH memory within the wall switch itself. Memory shall have an expected life of no less than 10 years.

B. BACnet object information shall be available for the following objects:

1. Button state
2. Switch lock control
3. Switch lock status

C. Two RJ-45 ports for connection to DLM local network.

D. Multiple digital wall switches may be installed in a room by simply connecting them to the free topology DLM local network. No additional configuration shall be required to achieve multi-way switching.

E. Load and Scene button function may be reconfigured for individual buttons from Load to Scene, and vice versa.
   1. Individual button function may be configured to Toggle, On only or Off only.
   2. Individual scenes may be locked to prevent unauthorized change.
   3. Fade Up and Fade Down times for individual scenes may be adjusted from 0 seconds to 18 hours.
   4. Ramp rate may be adjusted for each dimmer switch.
   5. Switch buttons may be bound to any load on any load controller or relay panel and are not load type dependent; each button may be bound to multiple loads.
   6. WattStopper product numbers: LMSW-101, LMSW-102, LMSW-103, LMSW-104, LMSW-105, LMSW-108, LMDM-101. Available in white, light almond, ivory, grey, red and black; compatible with wall plates with decorator opening.

2.7 DLM HANDHELD USER INTERFACE REMOTES

A. Battery-operated handheld devices in 1, 2 and 5 button configurations for remote switching or dimming control. Remote controls shall include the following features:
   1. Two-way infrared (IR) transceiver for line of sight communication with DLM local network within up to 30 feet.
   2. LED on each button confirms button press.
   3. Load buttons may be bound to any load on a load controller or relay panel and are not load type dependent; each button may be bound to multiple loads.
   4. Inactivity timeout to save battery life.

B. Provide with a wall mount holster and mounting hardware for each remote.

C. WattStopper part numbers: LMRH-101, LMRH-102, LMRH-105.

2.8 DIGITAL DAYLIGHTING SENSORS

A. Digital daylighting sensors shall work with load controllers and relay panels to provide automatic switching, bi-level, or tri-level or dimming daylight harvesting capabilities for any load type connected to the controller or panel. Daylighting sensors shall be interchangeable without the need for rewiring.
   1. Closed loop sensors measure the ambient light in the space and control a single lighting zone.
   2. Open loop sensors measure incoming daylight in the space, and are capable of controlling up to three lighting zones.
   3. Dual loop sensors measure both ambient and incoming daylight in the space to insure that proper light levels are maintained as changes to reflective materials are made in a single zone

B. Digital daylighting sensors shall include the following features:
   1. Sensor's internal photodiode shall only measure lightwaves within the visible spectrum. The photodiode's spectral response curve shall closely match the entire photopic curve. Photodiode shall not measure energy in either the ultraviolet or infrared spectrums. Photocell shall have a sensitivity of less than 5 percent for any wavelengths less than 400 nanometers or greater than 700 nanometers.
   2. Sensor light level range shall be from 1-6,553 foot-candles (fc).
   3. Capability of ON/OFF, bi-level or tri-level switching, or dimming, for each controlled zone, depending on the selection of load controller(s) and load binding to controller(s).
   4. For switching daylight harvesting, the photosensor shall provide a field-selectable deadband, or a separation, between the "ON Setpoint" and the "OFF Setpoint" that will prevent the lights from cycling excessively after they turn off.
   5. For dimming daylight harvesting, the photosensor shall provide the option, when the daylight contribution is sufficient, of turning lights off or dimming lights to a field-

selectable minimum level.

6. Photosensors shall have a digital, independently configurable fade rate for both increasing and decreasing light level in units of percent per second.
7. Photosensors shall provide adjustable cut-off time. Cut-off time is defined by the number of selected minutes the load is at the minimum output before the load turns off. Selectable range between 0-240 minutes including option to never cut-off.
8. Integral infrared (IR) transceiver for configuration and/or commissioning with a handheld configuration tool, to transmit detected light level to wireless configuration tool, and for communication with personal remote controls.
9. Configuration LED status light on device that blinks to indicate data transmission.
10. Status LED indicates test mode, override mode and load binding.
11. Recessed switch on device to turn controlled load(s) ON and OFF.
12. BACnet object information shall be available for the following daylighting sensor objects, based on the specific photocell's settings:
    a. Light level
    b. Day and night setpoints
    c. Off time delay
    d. On and off setpoints
    e. Up to three zone setpoints
    f. Operating mode - on/off, bi-level, tri-level or dimming
13. One RJ-45 port for connection to DLM local network.
14. A choice of accessories to accommodate multiple mounting methods and building materials. Photosensors may be mounted on a ceiling tile, skylight light well, suspended lighting fixture or backbox. Standard tube photosensors accommodate mounting materials from 0-0.62 inch thick (LMLS-400, LMLS-500). Extended tube photosensors accommodate mounting materials from 0.62 to 1.25 inches thick (LMLS-400-L, LMLS-500-L). Mounting brackets are compatible with J boxes (LMLS-MB1) and wall mounting (LMLS-MB2). LMLS-600 photosensor to be mounted on included bracket below skylight well.
15. Any load or group of loads in the room can be assigned to a daylighting zone
16. Each load within a daylighting zone can be individually enabled or disabled for discrete control (load independence).
17. All digital parameter data programmed into a photosensor shall be retained in non-volatile FLASH memory within the photosensor itself. Memory shall have an expected life of no less than 10 years.

C. Closed loop digital photosensors shall include the following additional features:
1. An internal photodiode that measures light in a 100-degree angle, cutting off the unwanted light from bright sources outside of this cone.
2. Automatic self-calibration, initiated from the photosensor, a wireless configuration tool or a PC with appropriate software.
3. Automatically establishes application-specific setpoints following self-calibration. For switching operation, an adequate deadband between the ON and OFF setpoints shall prevent the lights from cycling; for dimming operation a sliding setpoint control algorithm with separate Day and Night setpoints shall prevent abrupt ramping of loads.
4. WattStopper Product Number: LMLS-400, LMLS-400-L.

D. Open loop digital photosensors shall include the following additional features:
1. An internal photodiode that measures light in a 60-degree angle (cutting off the unwanted light from the interior of the room).
2. Automatically establishes application-specific setpoints following manual calibration using a wireless configuration tool or a PC with appropriate software. For switching operation, an adequate deadband between the ON and OFF setpoints for each zone shall prevent the lights from cycling; for dimming operation, a proportional control

algorithm shall maintain the design lighting level in each zone.
3. Each of the three discrete daylight zones can include any non overlapping group of loads in the room.
4. WattStopper Product Number: LMLS-500, LMLS-500-L.

2.9 DIGITAL PARTITION CONTROLS

A. Partition controls shall enable manual or automatic coordination of lighting controls in flexible spaces with up to four moveable walls by reconfiguring the connected digital switches and occupancy sensors.

B. Four-button low voltage pushbutton switch for manual control.
1. Two-way infrared (IR) transceiver for use with configuration remote control.
2. Removable buttons for field replacement with engraved buttons and/or alternate color buttons. Button replacement may be completed without removing the switch from the wall.
3. Configuration LED on each switch that blinks to indicate data transmission.
4. Each button represents one wall; Green button LED indicates status.
5. Two RJ-45 ports for connection to DLM local network.
6. WattStopper part number: LMPS-104. Available in white, light almond, ivory, grey and black; compatible with wall plates with decorator opening.

C. Coordinate contact closure interface for automatic control via input from limit switches on movable walls specified in Section 10 22 43 - Sliding Partitions .
1. Operates on Class 2 power supplied by DLM local network.
2. Includes 24VDC output and four input terminals for maintained third party contract closure inputs.
3. Input max. sink/source current: 1-5mA
4. Logic input signal voltage High: > 18VDC
5. Logic input signal voltage Low: < 2VDC
6. Four status LEDs under hinged cover indicate if walls are open or closed; supports LMPS-104 as remote status indicator.
7. Two RJ-45 ports for connection to DLM local network.
8. WattStopper part number: LMIO-102

2.10 HANDHELD CONFIGURATION TOOLS

A. Provide a wireless configuration tool to facilitate customization of DLM local networks using two-way infrared communications, and/or PC software that connects to each local network via a USB interface.

B. Features and functionality of the wireless configuration tool shall include but not be limited to:
1. Two-way infrared (IR) communication with DLM IR-enabled devices within a range of approximately 30 feet.
2. High visibility organic LED (OLED) display, pushbutton user interface and menu-driven operation.
3. Must be able to read and modify parameters for load controllers and relay panels, occupancy sensors, wall switches, daylighting sensors, network bridges, and identify DLM devices by type and serial number.
4. Save up to eight occupancy sensor setting profiles, and apply profiles to selected sensors.
5. Temporarily adjust light level of any load(s) on the local network, and incorporate those levels in scene setting. Set room mode for testing of Normal Hours (NH) and After Hours (AH) parameter settings.
6. Adjust or fine-tune daylighting settings established during auto-configuration, and

input light level data to complete configuration of open loop daylighting controls.
7. Set room mode for testing of Normal Hours (NH) and After Hours (AH) parameter settings.
8. Verify status of building level network devices.

C. WattStopper Product Numbers: Handheld LMCT-100

2.11 PROGRAMMING, CONFIGURATION AND DOCUMENTATION SOFTWARE

A. PC-native application for optional programming of detailed technician-level parameter information for all DLM products, including all parameters not accessible via BACnet and the handled IR configuration tool. Software must be capable of accessing room-level parameter information locally within the room when connected via the optional LMCI-100 USB programming adapter, or globally for many segment networks simultaneously utilizing standard BACnet/IP communication.

B. Additional parameters exposed through this method include but are not limited to:
1. Occupancy sensor detection LED disable for performance and other aesthetic spaces where blinking LEDs present a distraction.
2. Six occupancy sensor action behaviors for each controlled load, separately configurable for normal hours and after hours modes. Modes include: No Action, Follow Off Only, Follow On Only, Follow On and Off, Follow On Only with Override Time Delay, Follow Off Only with Blink Warn Grace Time, Follow On and Off with Blink Warn Grace Time.
3. Separate fade time adjustments per load for both normal and after hours from 0 - 4 hours.
4. Configurable occupancy sensor re-trigger grace period from 0 - 4 minutes separate for both normal hours and after hours.
5. Separate normal hours and after hours per-load button mode with modes including: Do nothing, on only, off only, on and off.
6. Load control polarity reversal so that on events turn loads off and vice versa.
7. Per-load DR (demand response) shed level in units of percent.
8. Load output pulse mode in increments of 1second.
9. Fade trip point for each load for normal hours and after hours that establishes the dimmer command level at which a switched load closes its relay to allow for staggered On of switched loads in response to a dimmer.

C. Generation of reports at the whole file, partial file, or room level. Reports include but are not limited to:
1. Device list report: All devices in a project listed by type.
2. Load binding report: All load controller bindings showing interaction with sensors, switches, and daylighting.
3. BACnet points report: Per room Device ID report of the valid BACnet points for a given site's BOM.
4. Room summary report: Device manifest for each room, aggregated by common BOM, showing basic sequence of operations.
5. Device parameter report: Per-room lists of all configured parameters accessible via hand held IR programmer for use with O&M documentation.
6. Scene report: All project scene pattern values not left at defaults (i.e. 1 = all loads 100 percent, 2 = all loads 75 percent, 3 = all loads 50 percent, 4 = all loads 25 percent, 5-16 = same as scene 1).
7. Occupancy sensor report: Basic settings including time delay and sensitivities for all occupancy sensors.

D. Network-wide programming of parameter data in a spreadsheet-like programming environment including but not limited to the following operations:

1. Set, copy/paste an entire project site of sensor time delays.
2. Set, copy/paste an entire project site of sensor sensitivity settings.
3. Search based on room name and text labels.
4. Filter by product type (i.e. LMRC-212) to allow parameter set by product.
5. Filter by parameter value to search for product with specific configurations.

E. Network-wide firmware upgrading remotely via the BACnet/IP network.
1. Mass firmware update of entire rooms.
2. Mass firmware update of specifically selected rooms or areas.
3. Mass firmware upgrade of specific products

F. WattStopper Product Number: LMCS-100, LMCI-100

2.12 EMERGENCY LIGHTING CONTROL DEVICES

A. Emergency Lighting Control Unit - A UL 924 listed device that monitors a switched circuit providing normal lighting to an area. The unit provides normal ON/OFF control of emergency lighting along with the normal lighting. Upon normal power failure the emergency lighting circuit will close, forcing the emergency lighting ON until normal power is restored. Features include:
1. 120/277 volts, 50/60 Hz, 20 amp ballast rating
2. Push to test button
3. Auxiliary contact for remote test or fire alarm system interface

B. WattStopper Product Numbers: ELCU-100, ELCU-200.

PART 3 EXECUTION

3.1 PREPARATION

A. Do not begin installation until measurements have been verified and work areas have been properly prepared.

B. If preparation is the responsibility of another installer, notify Architect of unsatisfactory preparation before proceeding.

C. Verify that required pre-installation meeting specified in Part 1 of this specification has been completed, recorded meeting minutes have been distributed and all outstanding issues noted have been resolved prior to the start of installation.

3.2 INSTALLATION

A. Install system in accordance with the approved system shop drawings and manufacturer's instructions.

B. Install all room/area devices using manufacturer's factory-tested Cat 5e cable with pre-terminated RJ-45 connectors.
1. If pre-terminated cable is not used for room/area wiring, each field-terminated cable shall be tested following installation and testing results submitted to the Manufacturer's Representative for approval prior to proceeding with the Work.
2. If fixtures have internal DLM Control Modules, ensure that they are also connected with Cat 5e cable.
3. Install all room to room network devices using manufacturer-supplied LM-MSTP

network wire or wireless devices. Network wire substitution is not permitted and may result in loss of product warranty.
4. Low voltage wiring topology must comply with manufacturer's specifications.
5. Route network wiring as indicated on the Drawings as closely as possible. Document final wiring location, routing and topology on as built drawings.

C. All line voltage connections shall be tagged to indicate circuit and switched legs.

D. Test all devices to ensure proper communication.

E. Calibrate all sensor time delays and sensitivity to guarantee proper detection of occupants and energy savings. Adjust time delay so that controlled area remains lighted while occupied.

F. Provide written or computer-generated documentation on the configuration of the system including room by room description including:
1. Sensor parameters, time delays, sensitivities, and daylighting setpoints.
2. Sequence of operation, (e.g. manual ON, Auto OFF. etc.)
3. Load Parameters (e.g. blink warning, etc.)

G. Post start-up tuning - Adjust sensor time delays and sensitivities to meet the Owner's requirements 30 days from beneficial occupancy. Provide a detailed report to the Architect / Owner of post start-up activity.

H. Tighten all panel Class I conductors from both circuit breaker and to loads to torque ratings as marked on enclosure UL label.

I. All Class II cabling shall enter enclosures from within low-voltage wiring areas and shall remain within those areas. No Class I conductors shall enter a low-voltage area.

J. Run separate neutrals for any phase dimmed branch load circuit. Different types of dimming loads shall have separate neutral.

K. Verify all non-panel-based lighting loads to be free from short circuits prior to connection to room controllers.

L. Remote Access for Network Systems: If "REMOTE ACCESS AND ENHANCED WARRANTY FOR NETWORKED SYSTEMS" is specified in Part 1 of this specification, ensure Segment Manager enclosure is installed in a location with good to excellent cellular phone coverage based on building orientation and geographic location, and mount magnetic antenna for the modem. For cases where alternate mounting locations are not available and a stronger cellular signal is needed, the manufacturer shall offer additional antenna options to improve signal quality. Verify final mounting location with Engineer and Owner prior to proceeding with the Work.

3.3 FIELD QUALITY CONTROL

A. Manufacturer's Field Service: Engage a factory-authorized service representative to inspect components, assemblies, and equipment installations, including connections, and to assist in testing. Notify Architect and Manufacturer in writing a minimum of 3 weeks prior to system start-up and testing.

B. Tests and Inspections: Manufacturer's service representative shall perform the following inspections and prepare reports.
1. Verify Class I and II wiring connections are terminated properly by validating system performance.
2. Set IP addresses and other network settings of system front end hardware per

facilities IT instructions.
3. Verify / complete task programming for all switches, dimmers, time clocks, and sensors.
4. Verify that the control of each space complies with the Sequence of Operation.
5. Correct any system issues and retest.

C. Provide a report in table format with drawings, or using a software file that can be opened in the manufacturer's system software including each room or space that has lighting control installed. Indicate the following:
1. Date of test or inspection.
2. Loads per space, or Fixture Address identification.
3. Quantity and Type of each device installed
4. Reports providing each device's settings.

3.4 DEMONSTRATION AND TRAINING

A. Before Substantial Completion, arrange and provide a one-day Owner instruction period to designated Owner personnel. Set-up, starting of the lighting control system and Owner instruction includes:
1. Confirmation of entire system operation and communication to each device.
2. Confirmation of operation of individual relays, switches, and sensors.
3. Confirmation of system Programming, photocell settings, override settings, etc.
4. Provide training to cover installation, programming, operation, and troubleshooting of the lighting control system.

3.5 PRODUCT SUPPORT AND SERVICE

A. Factory telephone support shall be available at no cost to the Owner following acceptance. Factory assistance shall consist of assistance in solving application issues pertaining to the control equipment.

END OF SECTION 26 09 43

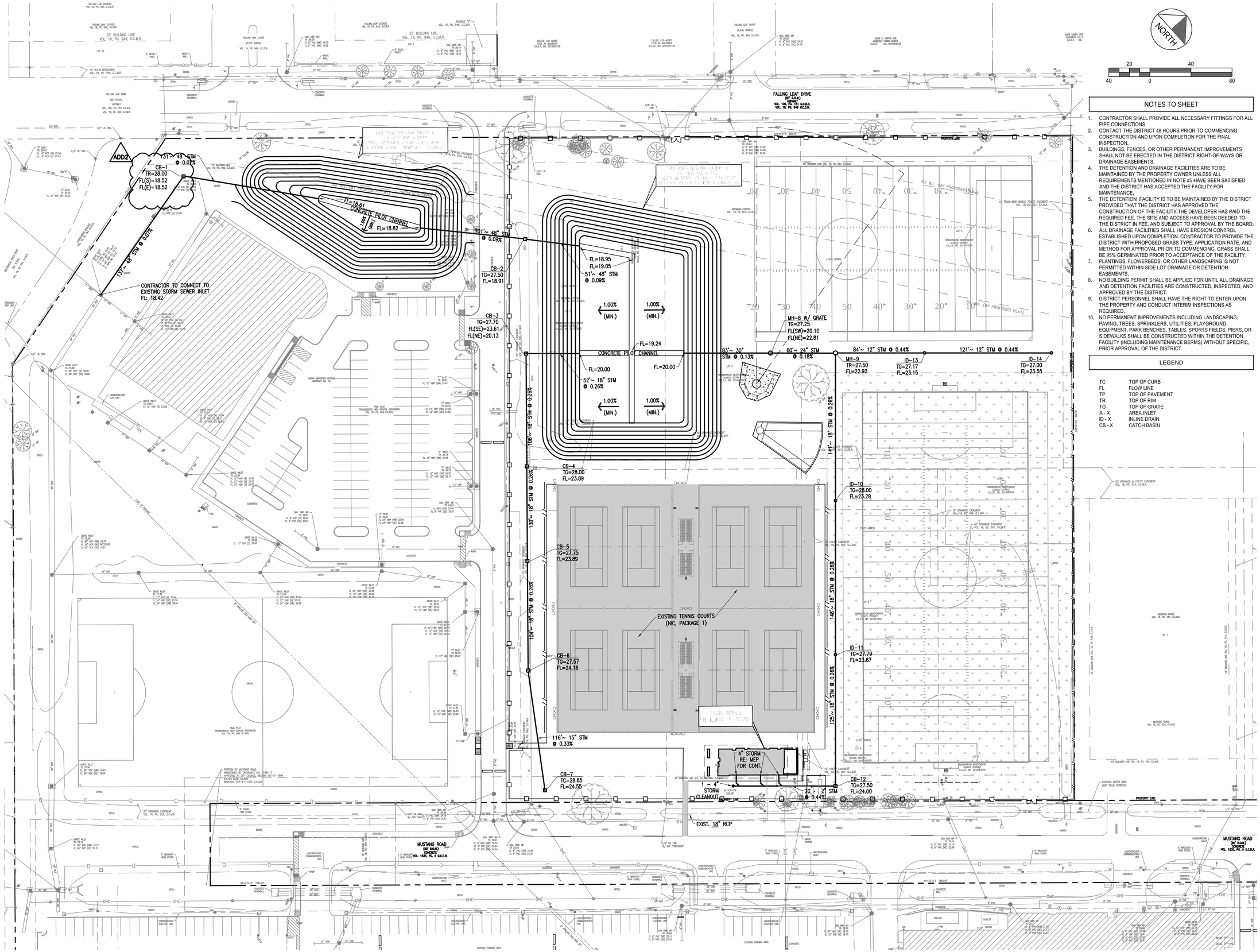

NOTES TO SHEET

1. CONTRACTOR SHALL PROVIDE ALL NECESSARY FITTINGS FOR ALL PIPE CONNECTIONS.
2. CONTACT THE DISTRICT 48 HOURS PRIOR TO COMMENCING CONSTRUCTION AND UPON COMPLETION FOR THE FINAL INSPECTION.
3. BUILDINGS, FENCES, OR OTHER PERMANENT IMPROVEMENTS SHALL NOT BE ERECTED IN THE DISTRICT RIGHT-OF-WAYS OR DRAINAGE EASEMENTS.
4. THE DETENTION AND DRAINAGE FACILITIES ARE TO BE MAINTAINED BY THE PROPERTY OWNER UNLESS ALL REQUIREMENTS MENTIONED IN NOTE #5 HAVE BEEN SATISFIED AND THE DISTRICT HAS ACCEPTED THE FACILITY FOR MAINTENANCE.
5. THE DETENTION FACILITY IS TO BE MAINTAINED BY THE DISTRICT PROVIDED THAT THE DISTRICT HAS APPROVED THE CONSTRUCTION OF THE FACILITY,THE DEVELOPER HAS PAID THE REQUIRED FEE, THE SITE AND ACCESS HAVE BEEN DEEDED TO THE DISTRICT IN FEE, AND SUBJECT TO APPROVAL BY THE BOARD.
6. ALL DRAINAGE FACILITIES SHALL HAVE EROSION CONTROL ESTABLISHED UPON COMPLETION. CONTRACTOR TO PROVIDE THE DISTRICT WITH PROPOSED GRASS TYPE, APPLICATION RATE, AND METHOD FOR APPROVAL PRIOR TO COMMENCING. GRASS SHALL BE 95% GERMINATED PRIOR TO ACCEPTANCE OF THE FACILITY.
7. PLANTINGS, FLOWERBEDS, OR OTHER LANDSCAPING IS NOT PERMITTED WITHIN SIDE LOT DRAINAGE OR DETENTION EASEMENTS.
8. NO BUILDING PERMIT SHALL BE APPLIED FOR UNTIL ALL DRAINAGE AND DETENTION FACILITIES ARE CONSTRUCTED, INSPECTED, AND APPROVED BY THE DISTRICT.
9. DISTRICT PERSONNEL SHALL HAVE THE RIGHT TO ENTER UPON THE PROPERTY AND CONDUCT INTERIM INSPECTIONS AS REQUIRED.
10. NO PERMANENT IMPROVEMENTS INCLUDING LANDSCAPING, PAVING, TREES, SPRINKLERS, UTILITIES, PLAYGROUND EQUIPMENT, PARK BENCHES, TABLES, SPORTS FIELDS, PIERS, OR SIDEWALKS SHALL BE CONSTRUCTED WITHIN THE DETENTION FACILITY (INCLUDING MAINTENANCE BERMS) WITHOUT SPECIFIC, PRIOR APPROVAL OF THE DISTRICT.

LEGEND

TC	TOP OF CURB
FL	FLOW LINE
TP	TOP OF PAVEMENT
TR	TOP OF RIM
TG	TOP OF GRATE
A - X	AREA INLET
ID - X	INLINE DRAIN
CB - X	CATCH BASIN

PBK

ARCHITECT PBK Architects, Inc.
HOUSTON PBK.com
11 Greenway Plaza, 22nd Floor
Houston, TX 77046
713-965-0608 P
713-961-4571 F
TX Firm: BR 1608

CIVIL
DIG
T 713-965-0608

SPORTS
PBK SPORTS
T 281-528-1697

STRUCTURAL
KUBALA ENGINEERS
T 800-248-3674

MEP/T
LEAF ENGINEERS
T 713-940-3300

ENVELOPE
BEAM
T 713-940-3201

AV / ACOUSTIC
JAFFE HOLDEN
T 713-807-7100

THEATER
SCHULER SHOOK
T 214-747-8300

FOOD SERVICE
FOOD DESIGN PROFESSIONAL
T 281-350-2323

FRIENDSWOOD HIGH SCHOOL ADDITIONS AND RENOVATIONS

702 Greenbriar Dr
Friendswood, TX 77546

ISSUE FOR PROPOSAL

H.F. SCHNEIDER, III
69402
STATE OF TEXAS
02/15/2022

CLIENT	
FRIENDSWOOD ISD	
DATE 02/02/2022	PROJECT NUMBER 20381

DRAWING HISTORY

No.	Description	Date
ADD2	ADDENDUM 2	2/15/2022

ISSUE FOR PROPOSAL

PRELIMINARY DRAINAGE PLAN (AREA A)

C 201

CHECKED BY: KFALKE
DRAWN BY: AGLUZMAN
B:\20\20381\Div8-Dwgs\8a BIM CAD\02 Civil_Package 2 Building Expansion\C 201 DRAINAGE PLAN (AREA A) .dwg Last Saved: KFALKE
Monday, February 14, 2022 8:46:57 AM

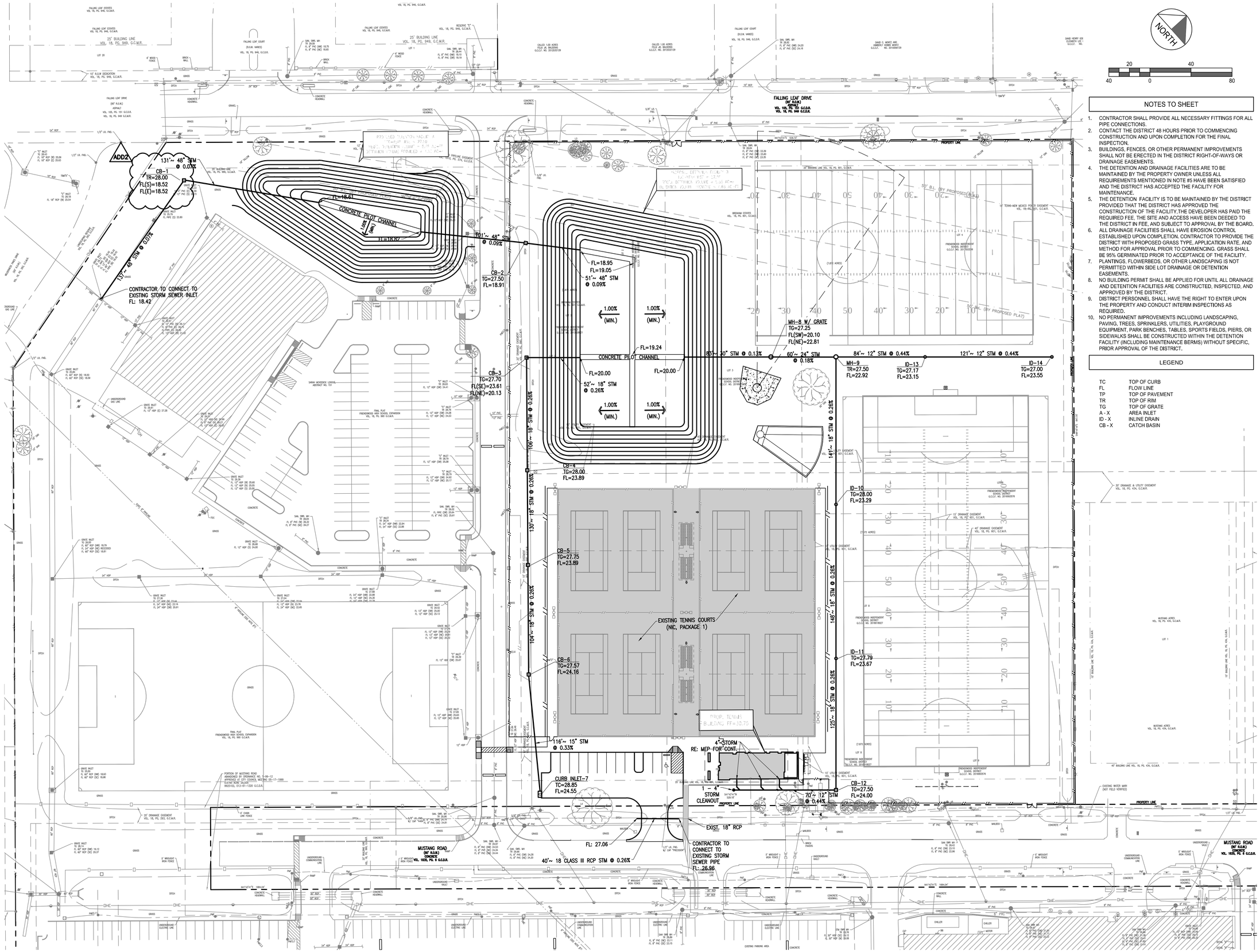

CHECKED BY: KFALKE

DRAWN BY: AGLUZMAN

B:\2012\20381\Div8-Dwgs\8a BIM CAD\02 Civil_Package 2 Building Expansion\C 202 DRAINAGE PLAN (AREA A) - ALTERNATE.dwg Last Saved: KFALKE

Monday, February 14, 2022 8:57:57 AM

NORTH

20 40
40 0 80

NOTES TO SHEET

1. CONTRACTOR SHALL PROVIDE ALL NECESSARY FITTINGS FOR ALL PIPE CONNECTIONS.
2. CONTACT THE DISTRICT 48 HOURS PRIOR TO COMMENCING CONSTRUCTION AND UPON COMPLETION FOR THE FINAL INSPECTION.
3. BUILDINGS, FENCES, OR OTHER PERMANENT IMPROVEMENTS SHALL NOT BE ERECTED IN THE DISTRICT RIGHT-OF-WAYS OR DRAINAGE EASEMENTS.
4. THE DETENTION AND DRAINAGE FACILITIES ARE TO BE MAINTAINED BY THE PROPERTY OWNER UNLESS ALL REQUIREMENTS MENTIONED IN NOTE #5 HAVE BEEN SATISFIED AND THE DISTRICT HAS ACCEPTED THE FACILITY FOR MAINTENANCE.
5. THE DETENTION FACILITY IS TO BE MAINTAINED BY THE DISTRICT PROVIDED THAT THE DISTRICT HAS APPROVED THE CONSTRUCTION OF THE FACILITY,THE DEVELOPER HAS PAID THE REQUIRED FEE, THE SITE AND ACCESS HAVE BEEN DEEDED TO THE DISTRICT IN FEE, AND SUBJECT TO APPROVAL BY THE BOARD.
6. ALL DRAINAGE FACILITIES SHALL HAVE EROSION CONTROL ESTABLISHED UPON COMPLETION. CONTRACTOR TO PROVIDE THE DISTRICT WITH PROPOSED GRASS TYPE, APPLICATION RATE, AND METHOD FOR APPROVAL PRIOR TO COMMENCING. GRASS SHALL BE 95% GERMINATED PRIOR TO ACCEPTANCE OF THE FACILITY.
7. PLANTINGS, FLOWERBEDS, OR OTHER LANDSCAPING IS NOT PERMITTED WITHIN SIDE LOT DRAINAGE OR DETENTION EASEMENTS.
8. NO BUILDING PERMIT SHALL BE APPLIED FOR UNTIL ALL DRAINAGE AND DETENTION FACILITIES ARE CONSTRUCTED, INSPECTED, AND APPROVED BY THE DISTRICT.
9. DISTRICT PERSONNEL SHALL HAVE THE RIGHT TO ENTER UPON THE PROPERTY AND CONDUCT INTERIM INSPECTIONS AS REQUIRED.
10. NO PERMANENT IMPROVEMENTS INCLUDING LANDSCAPING, PAVING, TREES, SPRINKLERS, UTILITIES, PLAYGROUND EQUIPMENT, PARK BENCHES, TABLES, SPORTS FIELDS, PIERS, OR SIDEWALKS SHALL BE CONSTRUCTED WITHIN THE DETENTION FACILITY (INCLUDING MAINTENANCE BERMS) WITHOUT SPECIFIC, PRIOR APPROVAL OF THE DISTRICT.

LEGEND

TC	TOP OF CURB
FL	FLOW LINE
TP	TOP OF PAVEMENT
TR	TOP OF RIM
TG	TOP OF GRATE
A - X	AREA INLET
ID - X	INLINE DRAIN
CB - X	CATCH BASIN

PBK

ARCHITECT PBK Architects, Inc.
HOUSTON PBK.com
11 Greenway Plaza, 22nd Floor
Houston, TX 77046
713-965-0608 P
713-961-4571 F
TX Firm: BR 1608

CIVIL
DIG
T 713-965-0608

SPORTS
PBK SPORTS
T 281-528-1697

STRUCTURAL
KUBALA ENGINEERS
T 800-248-3674

MEP/FP
LEAF ENGINEERS
T 713-940-3300

ENVELOPE
BEAM
T 713-940-3201

AV / ACOUSTIC
JAYNE HOLDEN
T 713-807-7100

THEATER
SCHULER SHOOK
T 214-747-8300

FOOD SERVICE
FOOD DESIGN PROFESSIONAL
T 281-350-2323

FRIENDSWOOD HIGH SCHOOL ADDITIONS AND RENOVATIONS

702 Greenbriar Dr
Friendswood, TX 77546

ISSUE FOR PROPOSAL

H.F. SCHNEIDER, III
69402
STATE OF TEXAS
02/15/2022

CLIENT
FRIENDSWOOD ISD

DATE	PROJECT NUMBER
02/02/2022	20381

DRAWING HISTORY

No.	Description	Date
ADD2	ADDENDUM 2	2/15/2022

ISSUE FOR PROPOSAL

PRELIMINARY DRAINAGE PLAN (AREA A) - ALTERNATE

C 202

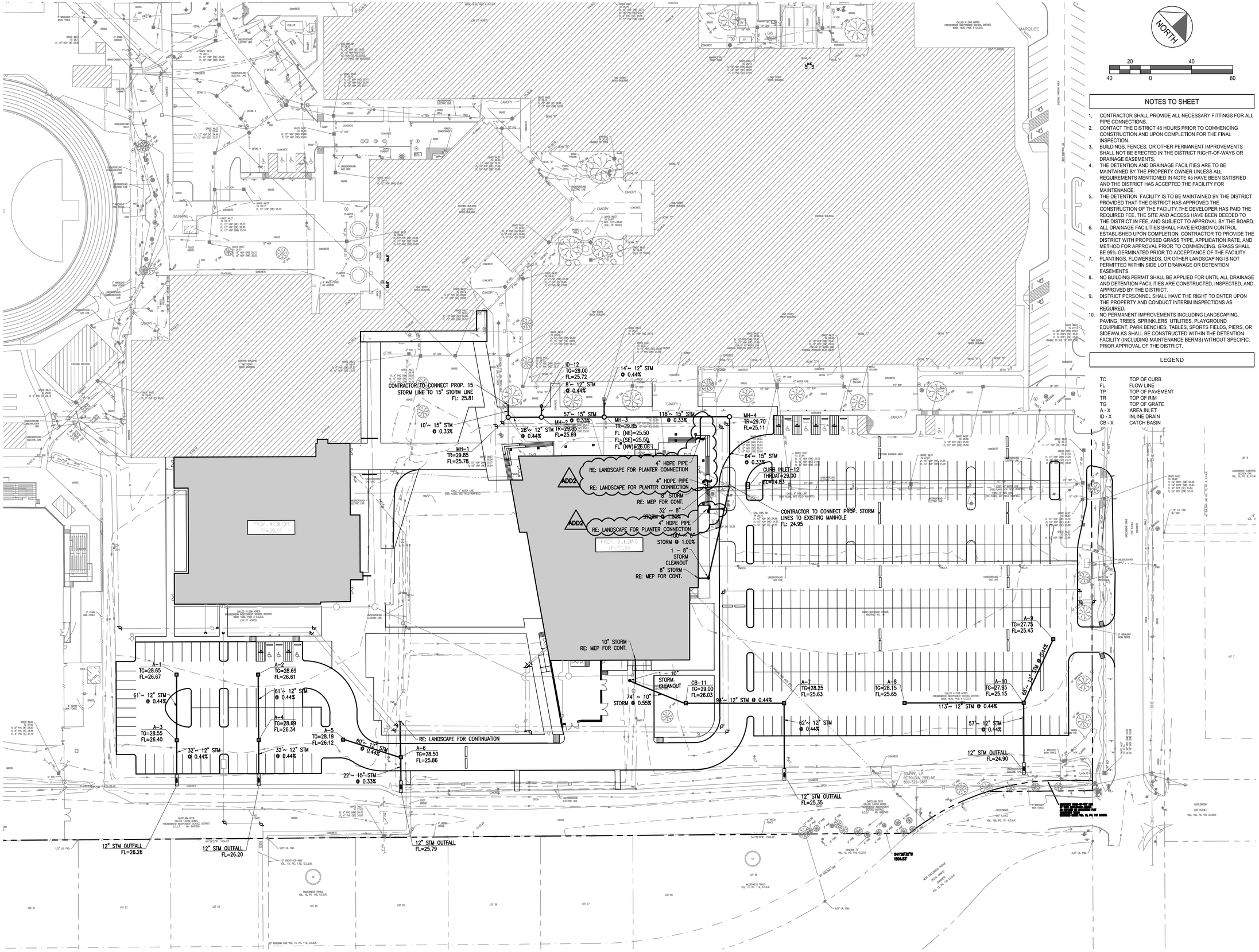

NOTES TO SHEET

1. CONTRACTOR SHALL PROVIDE ALL NECESSARY FITTINGS FOR ALL PIPE CONNECTIONS.
2. CONTACT THE DISTRICT 48 HOURS PRIOR TO COMMENCING CONSTRUCTION AND UPON COMPLETION FOR THE FINAL INSPECTION.
3. BUILDINGS, FENCES, OR OTHER PERMANENT IMPROVEMENTS SHALL NOT BE ERECTED IN THE DISTRICT RIGHT-OF-WAYS OR DRAINAGE EASEMENTS.
4. THE DETENTION AND DRAINAGE FACILITIES ARE TO BE MAINTAINED BY THE PROPERTY OWNER UNLESS ALL REQUIREMENTS MENTIONED IN NOTE #5 HAVE BEEN SATISFIED AND THE DISTRICT HAS ACCEPTED THE FACILITY FOR MAINTENANCE.
5. THE DETENTION FACILITY IS TO BE MAINTAINED BY THE DISTRICT PROVIDED THAT THE DISTRICT HAS APPROVED THE CONSTRUCTION OF THE FACILITY,THE DEVELOPER HAS PAID THE REQUIRED FEE, THE SITE AND ACCESS HAVE BEEN DEEDED TO THE DISTRICT IN FEE, AND SUBJECT TO APPROVAL BY THE BOARD.
6. ALL DRAINAGE FACILITIES SHALL HAVE EROSION CONTROL ESTABLISHED UPON COMPLETION. CONTRACTOR TO PROVIDE THE DISTRICT WITH PROPOSED GRASS TYPE, APPLICATION RATE, AND METHOD FOR APPROVAL PRIOR TO COMMENCING. GRASS SHALL BE 95% GERMINATED PRIOR TO ACCEPTANCE OF THE FACILITY.
7. PLANTINGS, FLOWERBEDS, OR OTHER LANDSCAPING IS NOT PERMITTED WITHIN SIDE LOT DRAINAGE OR DETENTION EASEMENTS.
8. NO BUILDING PERMIT SHALL BE APPLIED FOR UNTIL ALL DRAINAGE AND DETENTION FACILITIES ARE CONSTRUCTED, INSPECTED, AND APPROVED BY THE DISTRICT.
9. DISTRICT PERSONNEL SHALL HAVE THE RIGHT TO ENTER UPON THE PROPERTY AND CONDUCT INTERIM INSPECTIONS AS REQUIRED.
10. NO PERMANENT IMPROVEMENTS INCLUDING LANDSCAPING, PAVING, TREES, SPRINKLERS, UTILITIES, PLAYGROUND EQUIPMENT, PARK BENCHES, TABLES, SPORTS FIELDS, PIERS, OR SIDEWALKS SHALL BE CONSTRUCTED WITHIN THE DETENTION FACILITY (INCLUDING MAINTENANCE BERMS) WITHOUT SPECIFIC, PRIOR APPROVAL OF THE DISTRICT.

LEGEND

TC	TOP OF CURB
FL	FLOW LINE
TP	TOP OF PAVEMENT
TR	TOP OF RIM
TG	TOP OF GRATE
A - X	AREA INLET
ID - X	INLINE DRAIN
CB - X	CATCH BASIN

PBK

ARCHITECT PBK Architects, Inc.
HOUSTON PBK.com
11 Greenway Plaza, 22nd Floor
Houston, TX 77046
713-965-0608 P
713-961-4571 F
TX Firm: BR 1608

CIVIL
DIG
T 713-965-0608
SPORTS
PBK SPORTS
T 281-528-1697
STRUCTURAL
KUBALA ENGINEERS
T 800-248-3674
MEP/T
LEAF ENGINEERS
T 713-940-3300
ENVELOPE
BEAM
T 713-940-3201
AV / ACOUSTIC
JAFFE HOLDEN
T 713-807-7100
THEATER
SCHULER SHOOK
T 214-747-8300
FOOD SERVICE
FOOD DESIGN PROFESSIONAL
T 281-350-2323

FRIENDSWOOD HIGH SCHOOL ADDITIONS AND RENOVATIONS

702 Greenbriar Dr
Friendswood, TX 77546

ISSUE FOR PROPOSAL

H.F. SCHNEIDER, III
69402
STATE OF TEXAS
02/15/2022

CLIENT
FRIENDSWOOD ISD

DATE	PROJECT NUMBER
02/02/2022	20381

DRAWING HISTORY

No.	Description	Date
ADD2	ADDENDUM 2	2/15/2022

ISSUE FOR PROPOSAL

PRELIMINARY DRAINAGE PLAN (AREA B)

C 203

CHECKED BY: KFALKE
DRAWN BY: AGLUZMAN

B:\20\20381\Div8-Dwgs\8a BIM CAD\02 Civil_Package 2 Building Expansion\C 203 DRAINAGE PLAN (AREA B) .dwg Last Saved: KFALKE
Tuesday, February 15, 2022 10:10:20 AM

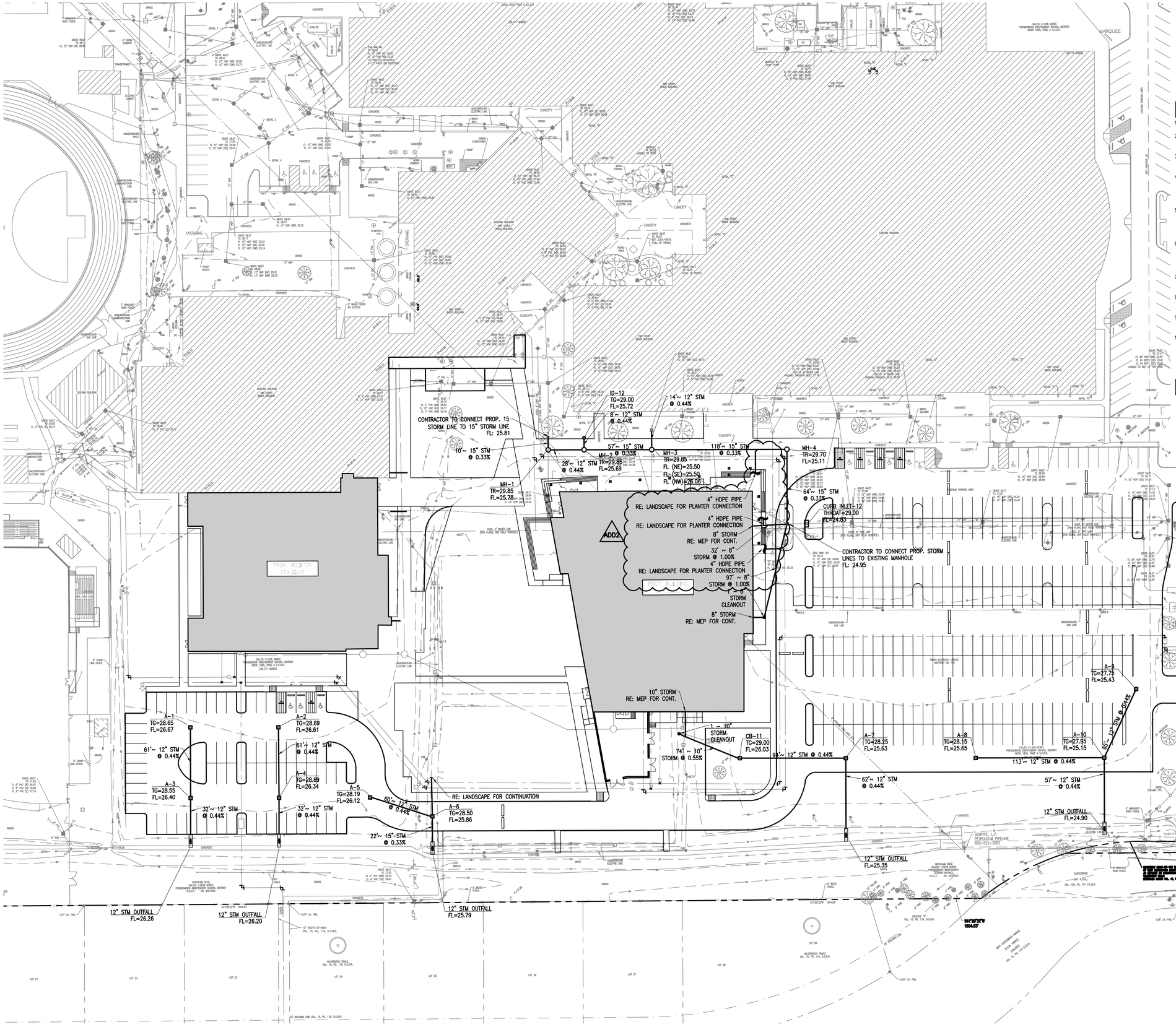

NOTES TO SHEET

1. CONTRACTOR SHALL PROVIDE ALL NECESSARY FITTINGS FOR ALL PIPE CONNECTIONS.
2. CONTACT THE DISTRICT 48 HOURS PRIOR TO COMMENCING CONSTRUCTION AND UPON COMPLETION FOR THE FINAL INSPECTION.
3. BUILDINGS, FENCES, OR OTHER PERMANENT IMPROVEMENTS SHALL NOT BE ERECTED IN THE DISTRICT RIGHT-OF-WAYS OR DRAINAGE EASEMENTS.
4. THE DETENTION AND DRAINAGE FACILITIES ARE TO BE MAINTAINED BY THE PROPERTY OWNER UNLESS ALL REQUIREMENTS MENTIONED IN NOTE #5 HAVE BEEN SATISFIED AND THE DISTRICT HAS ACCEPTED THE FACILITY FOR MAINTENANCE.
5. THE DETENTION FACILITY IS TO BE MAINTAINED BY THE DISTRICT PROVIDED THAT THE DISTRICT HAS APPROVED THE CONSTRUCTION OF THE FACILITY. THE DEVELOPER HAS PAID THE REQUIRED FEE, THE SITE AND ACCESS HAVE BEEN DEEDED TO THE DISTRICT IN FEE, AND SUBJECT TO APPROVAL BY THE BOARD.
6. ALL DRAINAGE FACILITIES SHALL HAVE EROSION CONTROL ESTABLISHED UPON COMPLETION. CONTRACTOR TO PROVIDE THE DISTRICT WITH PROPOSED GRASS TYPE, APPLICATION RATE, AND METHOD FOR APPROVAL PRIOR TO COMMENCING. GRASS SHALL BE 95% GERMINATED PRIOR TO ACCEPTANCE OF THE FACILITY.
7. PLANTINGS, FLOWERBEDS, OR OTHER LANDSCAPING IS NOT PERMITTED WITHIN SIDE LOT DRAINAGE OR DETENTION EASEMENTS.
8. NO BUILDING PERMIT SHALL BE APPLIED FOR UNTIL ALL DRAINAGE AND DETENTION FACILITIES ARE CONSTRUCTED, INSPECTED, AND APPROVED BY THE DISTRICT.
9. DISTRICT PERSONNEL SHALL HAVE THE RIGHT TO ENTER UPON THE PROPERTY AND CONDUCT INTERIM INSPECTIONS AS REQUIRED.
10. NO PERMANENT IMPROVEMENTS INCLUDING LANDSCAPING, PAVING, TREES, SPRINKLERS, UTILITIES, PLAYGROUND EQUIPMENT, PARK BENCHES, TABLES, SPORTS FIELDS, PIERS, OR SIDEWALKS SHALL BE CONSTRUCTED WITHIN THE DETENTION FACILITY (INCLUDING MAINTENANCE BERMS) WITHOUT SPECIFIC, PRIOR APPROVAL OF THE DISTRICT.

LEGEND

TC	TOP OF CURB
FL	FLOW LINE
TP	TOP OF PAVEMENT
TR	TOP OF RIM
TG	TOP OF GRATE
A - X	AREA INLET
ID - X	INLINE DRAIN
CB - X	CATCH BASIN

PBK

ARCHITECT PBK Architects, Inc.
HOUSTON PBK.com
11 Greenway Plaza, 22nd Floor
Houston, TX 77046
713-965-0608 P
713-961-4571 F
TX Firm: BR 1608

CIVIL
DIG
T 713-965-0608
SPORTS
PBK SPORTS
T 281-528-1697
STRUCTURAL
KUBALA ENGINEERS
T 800-248-3674
MEP/FP
LEAF ENGINEERS
T 713-940-3300
ENVELOPE
BEAM
T 713-940-3201
AV / ACOUSTIC
JAFRE HOLDEN
T 713-807-7100
THEATER
SCHULER SHOOK
T 214-747-8300
FOOD SERVICE
FOOD DESIGN PROFESSIONAL
T 281-350-2323

FRIENDSWOOD HIGH SCHOOL ADDITIONS AND RENOVATIONS

702 Greenbriar Dr
Friendswood, TX 77546

ISSUE FOR PROPOSAL

H.F. SCHNEIDER, III
69402
STATE OF TEXAS
02/15/2022

CLIENT	
FRIENDSWOOD ISD	
DATE 02/02/2022	PROJECT NUMBER 20381

DRAWING HISTORY

No.	Description	Date
ADD2	ADDENDUM 2	2/15/2022

ISSUE FOR PROPOSAL

PRELIMINARY DRAINAGE PLAN (AREA B) - ALTERNATE

C 204

CHECKED BY: KFALKE
DRAWN BY: AGLUZMAN
B:\20\20381\Div8-Dwgs\8a BIM CAD\02 Civil_Package 2 Building Expansion\C 204 DRAINAGE PLAN (AREA B) - ALTERNATE.dwg Last Saved: KFALKE
Tuesday, February 15, 2022 10:10:28 AM

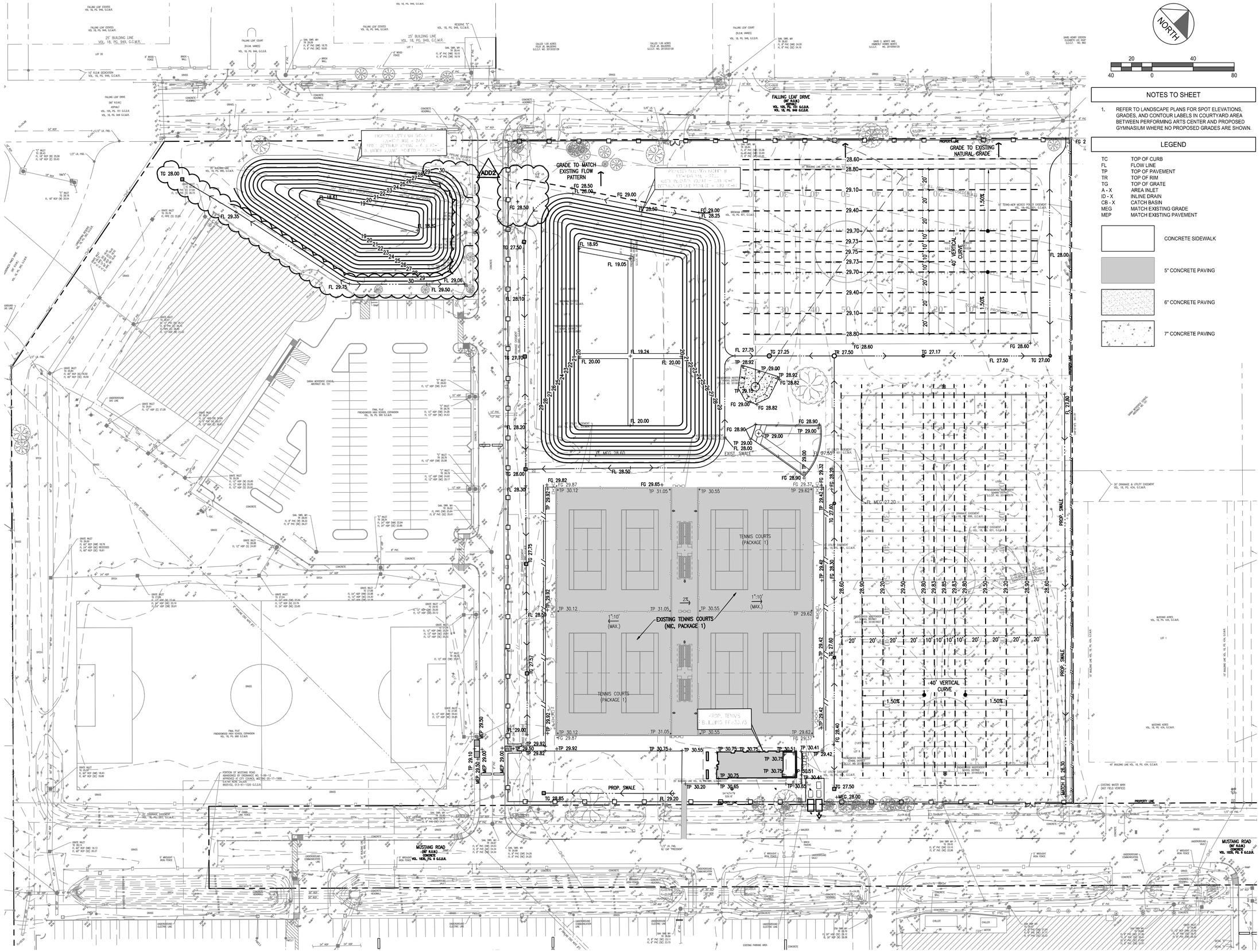

NOTES TO SHEET

1. REFER TO LANDSCAPE PLANS FOR SPOT ELEVATIONS, GRADES, AND CONTOUR LABELS IN COURTYARD AREA BETWEEN PERFORMING ARTS CENTER AND PROPOSED GYMNASIUM WHERE NO PROPOSED GRADES ARE SHOWN.

LEGEND

TC	TOP OF CURB
FL	FLOW LINE
TP	TOP OF PAVEMENT
TR	TOP OF RIM
TG	TOP OF GRATE
A - X	AREA INLET
ID - X	INLINE DRAIN
CB - X	CATCH BASIN
MEG	MATCH EXISTING GRADE
MEP	MATCH EXISTING PAVEMENT

CONCRETE SIDEWALK

5" CONCRETE PAVING

6" CONCRETE PAVING

7" CONCRETE PAVING

PBK

ARCHITECT PBK Architects, Inc.
HOUSTON PBK.com
11 Greenway Plaza, 22nd Floor
Houston, TX 77046
713-965-0608 P
713-961-4571 F
TX Firm: BR 1608

CIVIL
DIG
T 713-965-0608

SPORTS
PBK SPORTS
T 281-528-1697

STRUCTURAL
KUBALA ENGINEERS
T 800-248-3674

MEP/FP
LEAF ENGINEERS
T 713-940-3300

ENVELOPE
BEAM
T 713-940-3201

AV / ACOUSTIC
JAYNE HOLDEN
T 713-807-7100

THEATER
SCHULER SHOOK
T 214-747-8300

FOOD SERVICE
FOOD DESIGN PROFESSIONAL
T 281-350-2323

FRIENDSWOOD HIGH SCHOOL ADDITIONS AND RENOVATIONS

702 Greenbriar Dr
Friendswood, TX 77546

ISSUE FOR PROPOSAL

H.F. SCHNEIDER, III
69402
02/15/2022

CLIENT
FRIENDSWOOD ISD

DATE	PROJECT NUMBER
02/02/2022	20381

DRAWING HISTORY

No.	Description	Date
ADD2	ADDENDUM 2	2/15/2022

ISSUE FOR PROPOSAL

PRELIMINARY GRADING PLAN (AREA A)

C 501

CHECKED BY: KFALKE
DRAWN BY: AGLUZMAN
B:\2012\20381\Div6-Dwgs\8a BIM CAD\02 Civil_Package 2 Building Expansion\C 501 GRADING PLAN (AREA A).dwg Last Saved: KFALKE
Tuesday, February 15, 2022 12:36:07 PM

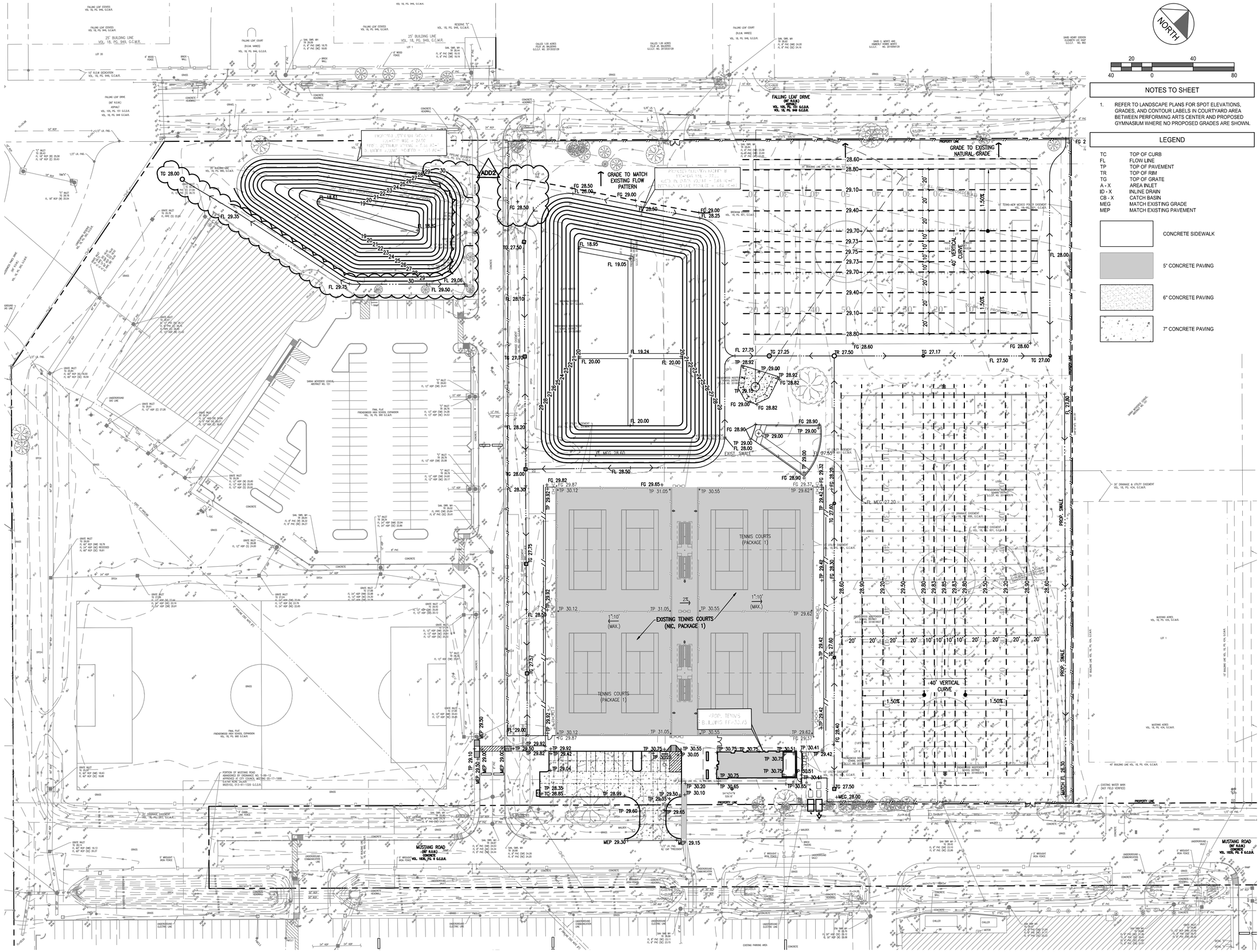

NOTES TO SHEET

1. REFER TO LANDSCAPE PLANS FOR SPOT ELEVATIONS, GRADES, AND CONTOUR LABELS IN COURTYARD AREA BETWEEN PERFORMING ARTS CENTER AND PROPOSED GYMNASIUM WHERE NO PROPOSED GRADES ARE SHOWN.

LEGEND

TC	TOP OF CURB
FL	FLOW LINE
TP	TOP OF PAVEMENT
TR	TOP OF RIM
TG	TOP OF GRATE
A - X	AREA INLET
ID - X	INLINE DRAIN
CB - X	CATCH BASIN
MEG	MATCH EXISTING GRADE
MEP	MATCH EXISTING PAVEMENT

CONCRETE SIDEWALK

5" CONCRETE PAVING

6" CONCRETE PAVING

7" CONCRETE PAVING

PBK

ARCHITECT PBK Architects, Inc.
HOUSTON PBK.com
11 Greenway Plaza, 22nd Floor
Houston, TX 77046
713-965-0608 P
713-961-4571 F
TX Firm: BR 1608

CIVIL
DIG
T 713-965-0608

SPORTS
PBK SPORTS
T 281-528-1697

STRUCTURAL
KUBALA ENGINEERS
T 800-248-3674

MEP/FP
LEAF ENGINEERS
T 713-940-3300

ENVELOPE
BEAM
T 713-940-3201

AV / ACOUSTIC
JAYRE HOLDEN
T 713-807-7100

THEATER
SCHULER SHOOK
T 214-747-8300

FOOD SERVICE
FOOD DESIGN PROFESSIONAL
T 281-350-2323

FRIENDSWOOD HIGH SCHOOL ADDITIONS AND RENOVATIONS

702 Greenbriar Dr
Friendswood, TX 77546

ISSUE FOR PROPOSAL

H.F. SCHNEIDER, III
69402
02/15/2022

CLIENT
FRIENDSWOOD ISD

DATE	PROJECT NUMBER
02/02/2022	20381

DRAWING HISTORY

No.	Description	Date
ADD2	ADDENDUM 2	2/15/2022

ISSUE FOR PROPOSAL

PRELIMINARY GRADING PLAN (AREA A) - ALTERNATE

C 502

CHECKED BY: KFALKE

DRAWN BY: AGLUZMAN

B:\2012\20381\Dwg\8a BIM CAD\02 Civil_Package 2 Building Expansion\C 502 GRADING PLAN (AREA A) - ALTERNATE.dwg Last Saved: KFALKE

Tuesday, February 15, 2022 12:35:57 PM

REGISTERED LANDSCAPE ARCHITECT
JACOB T. GALLES
3022
STATE OF TEXAS
02/15/22

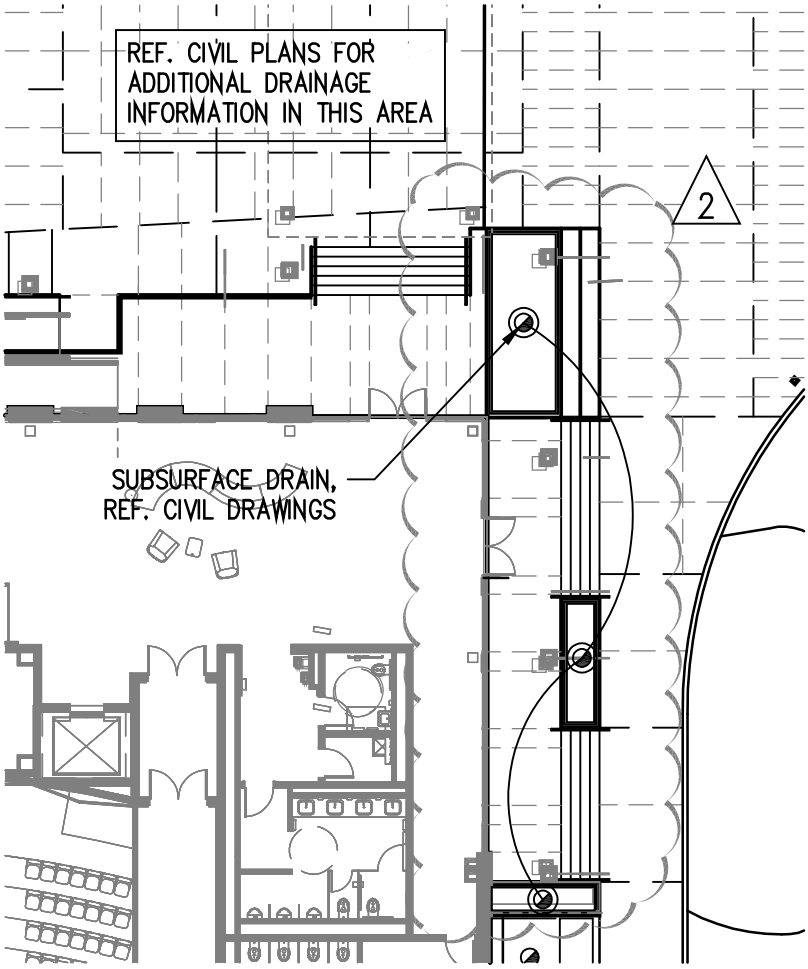

01 PLAN–PLANTER DRAINAGE
1"=20'-0"

EDGELAND
11 Greenway Plaza, 22nd Floor
Houston, TX 77046

Issue: ADDENDUM 2

Project: 2097.00

Subject: FRIENDSWOOD HIGH SCHOOL ADDITIONS AND RENOVATIONS

Date: 2/15/22

Sheet
SKL-001

A-101D
FOR BLUEBEAM LABELING/OCR:

AMENITY SCHEDULE (A)

KEY	DESCRIPTION	MATERIAL	SUPPLIER	SIZE	COLOR	QUANTITIES	REMARK	DETAIL
A1	BOLLARD: REMOVABLE AT FIRE LANE; TOR600-B REMOVABLE	STEEL	HESS	23.6"	BLACK	10	-INSTALL PER MAN.	10/L3.01
A2	SHADE STRUCTURE	METAL	AVADEK	20'-8"X5.3'-8"	COLOR TO MATCH BUILDING, REF. ARCH	1	-AVADEK @ 713.944.0988 -SHOP DRAWINGS TO BE PROVIDED BY AVADEK	-

FENCE SCHEDULE (F)

KEY	DESCRIPTION	MATERIAL	SUPPLIER	SIZE	COLOR	FINISH	REMARK	DETAIL
F1.1	ORNAMENTAL PEDESTRIAN FENCE	ALUMINUM	-	8'TALL	BLACK	-	REF. ARCH	
F2.1	ORNAMENTAL PEDESTRIAN SLIDE GATE	ALUMINUM	-	8'TALL	BLACK	-	-REF. ARCH -HARDWARE AND ACCESS CONTROL BY OTHERS	
F2.2	ORNAMENTAL VEHICULAR SLIDE GATE	ALUMINUM	-	8'TALL	BLACK	-	-REF. ARCH -HARDWARE AND ACCESS CONTROL BY OTHERS	

PAVING SCHEDULE (P)

SYMBOL	KEY	DESCRIPTION	SUPPLIER	MATERIAL	SIZE	COLOR	FINISH	REMARK	DETAIL
	P1	CONCRETE PAVING, MEDIUM DUTY WITH SAWCUT JOINTS	-	CONCRETE	-	NATURAL GREY	MED. BROOM FINISH	-CONTRACTOR SHALL SUBMIT 5'X5' MOCK UP FOR LA APPROVAL	01/L3.01
	P2	CONCRETE PAVING, MEDIUM DUTY WITH SAWCUT JOINTS	-	CONCRETE	-	NATURAL GREY	TOP-CAST 05	-CONTRACTOR SHALL SUBMIT 5'X5' MOCK UP FOR LA APPROVAL	01/L3.01
	P3	CONCRETE PAVING, SALT FINISH WITH SAWCUT JOINTS WITH INTEGRAL COLOR	BUTTERFIELD COLOR	CONCRETE	-	CHARCOAL	MED BROOM FINISH	-CONTRACTOR SHALL SUBMIT 5'X5' MOCK UP FOR LA APPROVAL	01/L3.01
	P4	DECOMPOSED GRANITE PAVING, INSTALL WITH POLYPAVEMENT HARDENING AGENT	ALAMO STONE	GRANITE	2" MINUS	SALADO ROSE	-	HARDENING AGENT TO BE INTEGRAL	06/L3.01
	P5	TURF CELL	ATLANTIS AMERICA	-	52 MM	-	-	-INSTALL PER MANUFACTURER'S SPECIFICATIONS -REF CIVIL	
	P6	NOT USED	-	-	-	-	-	-	
	P7	CONCRETE MAINTENANCE BAND, 18"WIDE	-	-	-	-	-	-	08/L3.01
	SE	STEEL EDGING	COL-MET	STEEL	3/16"TX 5"X8'	BLACK	MATTE	REF. SPECS	07/L4.06
EJ		EXPANSION JOINT	-	-	-	-	-	REF. DETAIL	05/L3.01

PAVING NOTE(S):
1. 5'(FT)X5'(FT) MOCK-UPS TO BE PROVIDED FOR ALL PAVING SYSTEMS, LANDSCAPE ARCHITECT TO PROVIDE APPROVAL BEFORE INSTALLATION
2. CONTRACTOR TO PROVIDE SHOP DRAWINGS FOR ALL CONTROL AND EXPANSION JOINTS

STEP AND WALL SCHEDULE (W)

KEY	DESCRIPTION	MATERIAL	SUPPLIER	SIZE	COLOR	FINISH	REMARK	DETAIL
W1	BANDING: CONCRETE BAND 10" WIDE	CONCRETE	-	10" WIDE	-	-	-	09/L3.01
W2	STAIR: CIP	CONCRETE	-	-	-	-	REF. ARCH	
W3	SOCIAL STAIR: CIP	CONCRETE	-	-	-	-	-	02/L3.02
W4	CIP SEATWALL	CONCRETE	-	18"WX18"T	NATURAL	-FORMLINER: 1235 BY SPEC FORMLINERS, INC -SMOOTH TOP	REF. DETAIL	03/L3.02
W5	RETAINING WALL: CIP WITH FORMLINER FINISH	CONCRETE	-	-	-	-	-FORMLINER: 1235 BY SPEC FORMLINERS, INC	
W6	CURB: ROLL-UP, REF. CIVIL	CONCRETE	-	-	-	-	REF. CIVIL	
H1	HANDRAIL, MATCH ARCHITECTURE	-	-	-	-	-	REF. ARCH	
H2	GUARDRAIL, MATCH ARCHITECTURE	-	-	-	-	-	REF. ARCH	
R1	CURB RAMP: TYP. CONCRETE CURB RAMP	-	-	-	-	-	REF. ARCH	
R2	RAMP: ADA ACCESS RAMP WITH ASSOCIATED HANDRAILS	-	-	-	-	-	REF. ARCH	

2

LIGHTING SCHEDULE

SYMBOL	KEY	DESCRIPTION	SUPPLIER	COLOR TEMP.	SIZE	COLOR	FINISH	REMARK	DETAIL
	L1	PEDESTRIAN POLE LIGHT. SLVT-72L 335-4K7 2 STND_MNT CL UNV MOUNT TO PR4 4R12-125-BL	HUBBELL	3000K	BY OTHERS	BLACK	POWDERCOAT	CONTACT BLAKE MEYERS @ LAI (281) 744-9285	-
	L2	ARNE LIGHT WITH TWO HEADS	LANDSCAPE FORMS	3000K	-	-	-	REF. ELECTRICAL PLANS	-

LIGHTING NOTE(S):
1. FOUNDATION FOR PEDESTRIAN POLES TO BE MAX 4" ABOVE ADJACENT PAVING, CLARIFY ANY CONFLICTS WITH LANDSCAPE ARCHITECT
2. REF ELECTRICAL SERVICE SITE PLANS BY MEP FOR LINE DISTRIBUTION FOR LANDSCAPE SITE LIGHTING
3. ALL SITE LIGHTING SUBMITTALS SHALL BE REVIEWED AND APPROVED BY LANDSCAPE ARCHITECT AND ELECTRICAL ENGINEER
4. ALL EXTERIOR LIGHTING SHALL BE CONTROLLED BY PHOTO CELL

PBK

ARCHITECT PBK Architects, Inc.
HOUSTON PBK.com
11 Greenway Plaza, 22nd Floor
Houston, TX 77046
713-965-0608 P
713-961-4571 F
TX Firm: BR 1608

CIVIL
DIG
T 713-965-0608
SPORTS
PBK SPORTS
T 281-528-1697
STRUCTURAL
KUBALA ENGINEERS
T 832-248-3674
MEP1
LEAF ENGINEERS
T 713-940-3300
ENVELOPE
BEAM
T 713-940-3201
AV / ACOUSTIC
JAFFE HOLDEN
T 713-807-7100
THEATER
SCHULER SHOOK
T 214-747-6300
FOOD SERVICE
FOOD DESIGN PROFESSIONAL
T 281-350-2323

FRIENDSWOOD HIGH SCHOOL ADDITIONS AND RENOVATIONS

702 Greenbriar Dr
Friendswood, TX 77546
ISSUE FOR PROPOSAL

KEY PLAN
NORTH: PLAN TRUE

REGISTERED LANDSCAPE ARCHITECT
JACOB T. GALLAGHER
3022
STATE OF TEXAS
02/15/22

CLIENT
FRIENDSWOOD ISD

DATE	PROJECT NUMBER
02/02/2021	20381

DRAWING HISTORY

No.	Description	Date
2	ADDENDUM 2	02/15/2022

ISSUE FOR PROPOSAL

MATERIALS SCHEDULE
L2.00

File Path: C:_RevitLocal\AR21 20381 FHS Central_jason.mai\MJN5M.rvt
CHECKED BY:
Checker
DRAWN BY:
Author
Plot Stamp:

REGISTERED LANDSCAPE ARCHITECT
JACOB T. GALLES
3022
STATE OF TEXAS
02/15/22

2

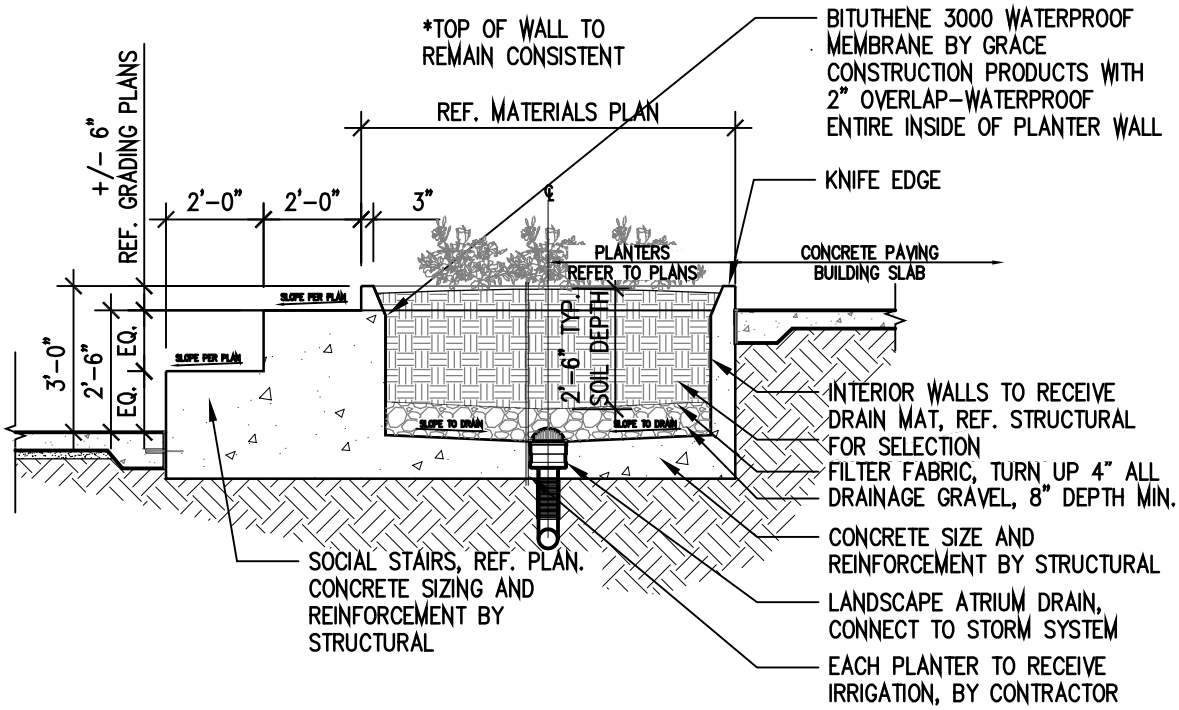

01 SECTION-PLANTER
NOT TO SCALE

EDGELAND
11 Greenway Plaza, 22nd Floor
Houston, TX 77046

Issue: ADDENDUM 2

Project: 2097.00

Subject: FRIENDSWOOD HIGH SCHOOL ADDITIONS AND RENOVATIONS

Date: 2/15/22

Sheet
SKL-002

NEW FOUNDATION AND EXISTING FIRST FLOOR PLAN - AREA D

S-101D

FOR BLUEBEAM LABELING/OCR:

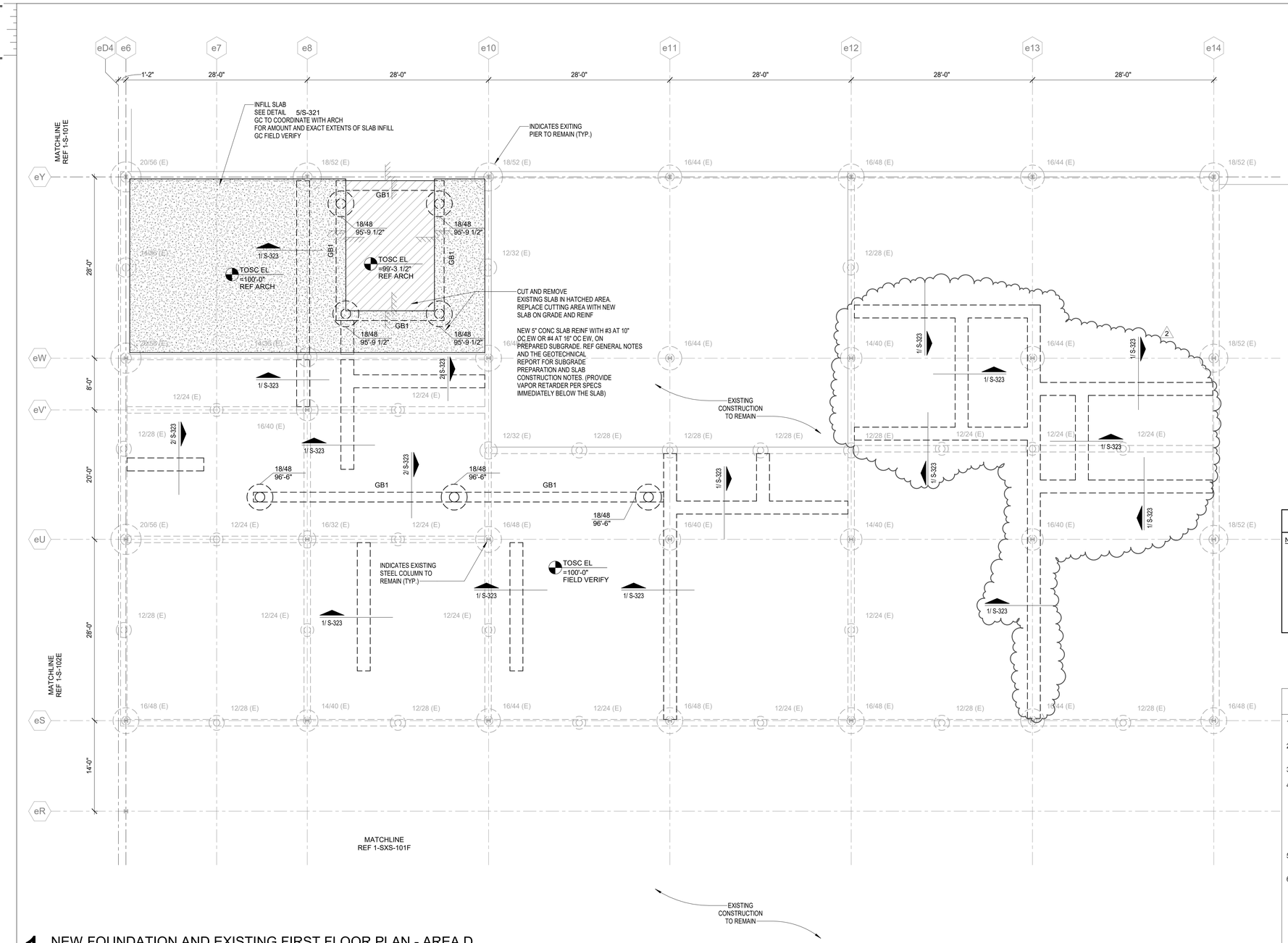

1 NEW FOUNDATION AND EXISTING FIRST FLOOR PLAN - AREA D

1/8" = 1'-0"

SLAB LEGEND

NOTE: GC SHALL COORDINATE RECESS LOCATIONS WITH ARCH DWGS

- INDICATES EXISTING SLAB-ON-GRADE TO REMAIN.
- INDICATES NEW 8 1/2" SLAB DEPRESSION - REF PLAN FOR REINF.
- INDICATES NEW 5" SLAB OVER GEO-FOAM- REF PLAN FOR REINF.

FOUNDATION PLAN NOTES

1. VERIFY ALL WALL OPENING DIMENSIONS AND LOCATIONS WITH ARCH DRAWINGS.
2. REFER TO SHEETS S000 SERIES FOR GENERAL NOTES, SCHEDULES AND DESIGN CRITERIA.
3. REFER TO SHEETS S400 SERIES FOR ALL CMU WALLS AND DETAILS.
4. AT INTERIOR CMU WALL LOCATIONS, WHERE THE 6" CMU WALL HEIGHT IS LESS THAN 14'-0", PROVIDE SLAB TURNDOWN. SEE SHEETS S-320, TO S-323 TYPICAL.
   AT INTERIOR 6" CMU WALL LOCATIONS, WHERE THE CMU WALL HEIGHT IS MORE THAN 14'-0" PROVIDE GRADE BEAM. SEE SHEETS SHEETS S-320, TO S-323 TYPICAL.
   AT ALL INTERIOR 8" CMU WALL LOCATIONS PROVIDE GRADE BEAM. SEE SHEETS S-320 TO S-323 TYPICAL.
5. GC TO COORDINATE THE LOCATION OF ALL NEW CMU WALLS WITH ARCH DRAWINGS.
6. THE INFORMATION CONTAINED IN THESE PLANS ARE BASED ON THE LIMITED EXISTING BUILDING CONSTRUCTION PLANS AND LIMITED AS-BUILTING. FIELD VERIFY ALL EXISTING DIMENSIONS AND CONDITIONS PRIOR TO FABRICATION OF NEW STEEL. NOTIFY ARCHITECT / ENGINEER OF ANY DISCREPANCIES. ANY APPROVED CHANGES SHALL BE INCORPORATED INTO THE ERECTION / SHOP DRAWINGS PRIOR TO SUBMISSION.

******* IMPORTANT GC NOTE FOR ALL STRUCTURAL FOUNDATION DEMOLITION SCOPE*******

ANY FOUNDATIONS THAT ARE DEMOLISHED MUST BE INFILLED WITH COMPACTED SELECT FILL PER THE GENERAL NOTES & THE GEOTECHNICAL REPORT, AND MUST BE OBSERVED BY THE GEOTECHINCAL TESTING AND INSPECTIONS COMPANY TO ENSURE THAT NO UNFAIR INFILL OF EXISTING HOLES IS PROVIDED. THIS IS ESPECIALLY CRITICAL WHERE NEW FOUNDATIONS MAY OVERLAP WITH EXISTING INFILL (TYP.) ADDITIONALLY, THE GENERAL CONTRACTOR SHALL BE SOLEY RESPONSIBLE TO SURVEY ALL LOCATIONS WHERE FOUDNATION DEOLITION HAS AND/OR WILL OCCUR REGARDLESS IF THE FOUNDATION IS BROKEN OFF (3'-0" BELOW EXISTING NATURAL GRADE) AND LEFT IN PLACE OR FULLY REMOVED AND INFILLED. THIS SURVEY MUST BE PERFORMED BY A PROFESSIONAL SURVEYING COMPANY AND PROVIDED THE OWNER AND THE DESGIN TEAM FOR THEIR USE ON THE PROJECT FOR POTENTIAL UNKNOWN OR UNREALIZED FOUNDATION CONFLICTS (TYP.)

FOUNDATION PLAN NOTES-DEMOLITION

******* GC PLEASE NOTE: *******

1- HATCH INDICATES THAT SOME PORTION OF THE EXISTING SLAB IN THIS AREA MAY NEED TO BE SAW-CUT, REMOVED AND REPLACED WITH NEW SLAB DUE TO PLANNED ARCHITECTURAL, FOOD SERVICE, AND/OR MEP SCOPE/RENOVATIONS. IT IS THE GENERAL CONTRACTORS SOLE RESPONSIBILITY TO DETERMINE THE MOST APPROPRIATE MEANS AND METHODS WITH WHICH TO CONSTRUCT AND INSTALL THE OVERALL PROJECT SCOPE; THEREFORE, IF SAW CUTTING OF THE EXISTING SLAB IS PLANNED THE EXACT LOCATIONS AND THE OVERALL EXTENT OF THE SAW CUTS FOR EACH AREA ARE FOR THE CONTRACTOR TO DETERMINE BASED ON PLANNED SCOPE FOR OTHER DISCIPLINES. WE HAVE MADE EVERY EFFORT TO SHOW THE AREAS OF SIGNIFICANT SAW CUT SCOPE POTENTIAL; HOWEVER, AREAS WITH MORE MINIMAL SCOPE HAVE NOT BEEN SHOWN, AND THE GC MUST ACCOUNT FOR THESE ADDITIONAL AREAS NOT SHOWN. TO THE BEST OF OUR KNOWLEDGE, THIS DRAWING WAS CREATED WITH THE LATEST ARCHITECTURAL, FOOD SERVICE AND MEP DRAWINGS, THE STRUCTURAL ENGINEER CANNOT KNOW OF REVISIONS THAT MAY HAVE BEEN MADE TO OTHER DISCIPLINES DRAWINGS AND/OR EQUIPMENT THAT HAS BEEN SELECTED DIFFERENT THAN THOSE CURRENTLY SHOWN IN THE CD'S; THEREFORE IT IS THE GENERAL CONTRACTORS SOLE RESPONSIBILITY TO DETERMINE IF THE SAW CUTS AREAS SHOWN ARE APPROPRIATE AND/OR IF OTHER CONCRETE MODIFICATIONS ARE REQUIRED IN ANY OTHER AREAS NOT CURRENTLY SHOWN. ASSUMING THAT SAW CUTTING OF THE EXISTING SLAB WILL BE UTILIZED THE STRUCTURAL ENGINEER HAS PROVIDED SOME GENERAL DETAILS FOR GUIDANCE. THESE DETAIL ARE NOTED AS TYPICAL AND THE GENERAL CONTRACTOR SHALL USE THEM WHERE DEEMED APPROPRIATE FOR THE PLANNED SCOPE. THE DETAILS MAY BE FOUND ON SHEETS S320, S321, S322 AND S323. WHEN SAW CUTTING, REMOVAL AND REPLACEMENT IS UTILIZED THE NEW SLAB SHALL BE 5" THICK AND SHALL BE REINFORCED WITH #3 @ 10" OC EACH WAY OR #4 @ 16" OC EACH WAY ON 3" CHAIRS. ADDITIONALLY THE GENERAL CONTRACTOR SHALL VERIFY THAT THE SUBGRADE IS COMPACTED AND MOISTURE CONDITIONED AS REQUIRED FOR SLAB ON GRADE (REFERENCE THE GENERAL NOTES) PRIOR TO PLACEMENT OF THE NEW SLAB. PROVIDE APPROVED WATER VAPOR BARRIER BELOW SLAB (REFERENCE GENERAL NOTES & SPECIFICATIONS). CONTROL JOINTS PER THE GENERAL NOTES SHALL BE INSTALLED FOR ANY NEW PORTIONS OF CONCRETE. WHERE EXISTING CONTROL JOINTS TERMINATE INTO A NEW CONCRETE SLAB THE GENERAL CONTRACTOR SHALL CONTINUE THE CONTROL JOINT INTO AND ACROSS THE NEW SLAB SECTION.

2- THE CURRENT DRAWINGS REPRESENT THE NEW SCOPE OF WORK AT EXISTING AREAS , WHERE THE SLAB WAS TO BE SAWCUT, DEMOLISHED, AND THE SUBGRADE SOILS SHALL BE REMOVED AND REPLACED FOR A 12" DEPTH FOR ENTIRE PLAN AREAS/ROOMS. REFER GC NOTE ON DEMOLITION PLANS.

ADDITIONALLY, ALONG ALL SIDES OF ALL SLAB SAWCUTTING / REPLACEMENT (FULL PERIMETER AT EACH INSTANCE) THE GC SHALL RE-TIE ALL SLAB BARS TOGETHER WITH EITHER TENSION LAP SPLICES PER THE LAP SCHEDULE, BY PROVIDING DRILLED AND EPOXIED BARS WITH 10" EMBED WITH HILTI HY-200 ADHESIVE, OR WITH MECHANICAL COUPLERS (PREFERRED METHOD).

Kubala ENGINEERS
Ph: 800.248.3674
www.kubalaengineers.com
TX. REG. NO. F-3709

PBK

ARCHITECT PBK Architects, Inc.
PBK.com
HOUSTON
11 Greenway Plaza, 22nd Floor
Houston, TX 77046
713-965-0608 P
713-961-4571 F
TX Firm: BR 1608

CIVIL
DIG
T 713-965-0608
SPORTS
PBK SPORTS
T 281-528-1697
STRUCTURAL
KUBALA ENGINEERS
T 800-248-3674
MEPT
LEAF ENGINEERS
T 713-940-3300
ENVELOPE
SEAM
T 713-940-3201
AV / ACOUSTIC
JAFFE HOLDEN
T 713-807-7100
THEATER
SCHULER SHOOK
T 214-747-6300
FOOD SERVICE
FOOD DESIGN PROFESSIONAL
T 281-350-2323

FRIENDSWOOD HIGH SCHOOL ADDITIONS AND RENOVATIONS

702 Greenbriar Dr
Friendswood, TX 77546

ISSUE FOR PROPOSAL

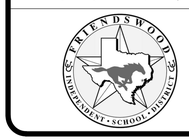

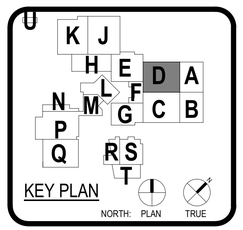

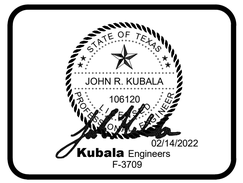

CLIENT
FRIENDSWOOD ISD

DATE	PROJECT NUMBER
02/02/2022	20381

DRAWING HISTORY

No.	Description	Date
2	ADDENDUM #2	02/14/2022

ISSUE FOR PROPOSAL

NEW FOUNDATION AND EXISTING FIRST FLOOR PLAN - AREA D

S-101D

File Path: C:_Revit\Local\ST21-20381-FHS_Central_amer.taghlebiLLCZ9.rvt

CHECKED BY:
Checker
DRAWN BY:
Author
Plot Stamp:
2/14/2022 6:43:50 PM

NEW FOUNDATION AND EXISTING FIRST FLOOR PLAN - AREA E

S-101E

FOR BLUEBEAM LABELING/OCR:

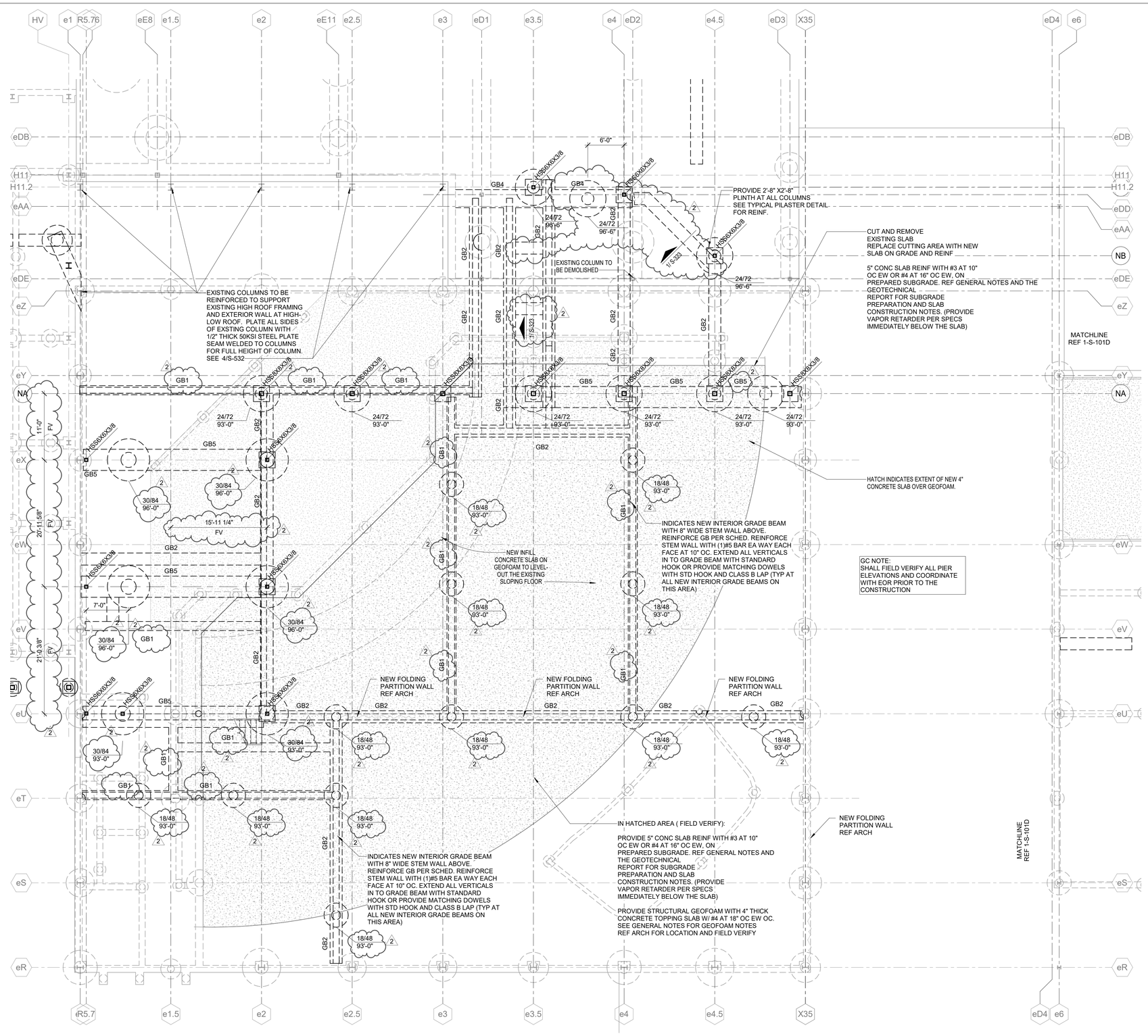

1 NEW FOUNDATION AND EXISTING FIRST FLOOR PLAN - AREA E

1/8" = 1'-0"

FOUNDATION PLAN NOTES-DEMOLITION

******* GC PLEASE NOTE: *******

THE CURRENT DRAWINGS REPRESENT THE NEW SCOPE OF WORK AT EXISTING AREAS , WHERE THE SLAB WAS TO BE SAWCUT, DEMOLISHED, AND THE SUBGRADE SOILS SHALL BE REMOVED AND REPLACED FOR A 12" DEPTH FOR ENTIRE PLAN AREAS/ROOMS. REFER GC NOTE ON DEMOLITION PLANS.

FOR NEW SCOPE OF WORK RELATED TO SLAB TREATMENT PRICING OPTION 2, THE GC SHALL UNDERSTAND THAT DEMO OF SLAB AND TRENCHING OF SUBGRADE IS TO BE MEANS AND METHODS AND SHALL BE PROVIDED STRATEGICALLY WHERE NEEDED FOR AREAS OF NEW PIPING, CONDUIT, CMU WALLS, SHOWERS, RECESSES, ETC. THE TRENCHING SHALL BE FILLED WITH CEMENT STABILIZED SAND AND THE SLAB INFILL DETAILS SHALL FOLLOW THE TYPICAL DETAILS, INCLUDED BUT NOT LIMITED TO:

- **AT FLOOR DRAINS PER DETAIL** 6/S-320
- **AT TRENCH DRAINS PER DETAIL** 1/S-320
- **AT NEW PLUMBING TRENCH PER DETAIL** 3/S-320
- **AT NEW INTERIOR CMU WALLS PER SHEET S-323**

ADDITIONALLY, ALONG ALL SIDES OF ALL SLAB SAWCUTTING / REPLACEMENT (FULL PERIMETER AT EACH INSTANCE) THE GC SHALL RE-TIE ALL SLAB BARS TOGETHER WITH EITHER TENSION LAP SPLICES PER THE LAP SCHEDULE, BY PROVIDING DRILLED AND EPOXIED BARS WITH 10" EMBED WITH HILTI HY-200 ADHESIVE, OR WITH MECHANICAL COUPLERS (PREFERRED METHOD).

FOUNDATION PLAN NOTES

1. VERIFY ALL WALL OPENING DIMENSIONS AND LOCATIONS WITH ARCH DRAWINGS.
2. REFER TO SHEETS S000 SERIES FOR GENERAL NOTES, SCHEDULES AND DESIGN CRITERIA.
3. REFER TO SHEETS S400 SERIES FOR ALL CMU WALLS AND DETAILS.
4. AT INTERIOR CMU WALL LOCATIONS, WHERE THE 6" CMU WALL HEIGHT IS LESS THAN 14'-0", PROVIDE SLAB TURNDOWN. SEE SHEETS S-320, TO S-323 TYPICAL.
   AT INTERIOR 6" CMU WALL LOCATIONS, WHERE THE CMU WALL HEIGHT IS MORE THAN 14'-0" PROVIDE GRADE BEAM. SEE SHEETS SHEETS S-320, TO S-323 TYPICAL.
   AT ALL INTERIOR 8" CMU WALL LOCATIONS PROVIDE GRADE BEAM. SEE SHEETS S-320 TO S-323 TYPICAL.
5. GC TO COORDINATE THE LOCATION OF ALL NEW CMU WALLS WITH ARCH DRAWINGS.
6. THE INFORMATION CONTAINED IN THESE PLANS ARE BASED ON THE LIMITED EXISTING BUILDING CONSTRUCTION PLANS AND LIMITED AS-BUILTING. FIELD VERIFY ALL EXISTING DIMENSIONS AND CONDITIONS PRIOR TO FABRICATION OF NEW STEEL. NOTIFY ARCHITECT / ENGINEER OF ANY DISCREPANCIES. ANY APPROVED CHANGES SHALL BE INCORPORATED INTO THE ERECTION / SHOP DRAWINGS PRIOR TO SUBMISSION.

******* IMPORTANT GC NOTE FOR ALL STRUCTURAL FOUNDATION DEMOLITION SCOPE*******

ANY FOUNDATIONS THAT ARE DEMOLISHED MUST BE INFILLED WITH COMPACTED SELECT FILL PER THE GENERAL NOTES & THE GEOTECHNICAL REPORT, AND MUST BE OBSERVED BY THE GEOTECHINCAL TESTING AND INSPECTIONS COMPANY TO ENSURE THAT NO UNFAIR INFILL OF EXISTING HOLES IS PROVIDED. THIS IS ESPECIALLY CRITICAL WHERE NEW FOUNDATIONS MAY OVERLAP WITH EXISTING INFILL (TYP.) ADDITIONALLY, THE GENERAL CONTRACTOR SHALL BE SOLEY RESPONSIBLE TO SURVEY ALL LOCATIONS WHERE FOUDNATION DEOLITION HAS AND/OR WILL OCCUR REGARDLESS IF THE FOUNDATION IS BROKEN OFF (3'-0" BELOW EXISTING NATURAL GRADE) AND LEFT IN PLACE OR FULLY REMOVED AND INFILLED. THIS SURVEY MUST BE PERFORMED BY A PROFESSIONAL SURVEYING COMPANY AND PROVIDED THE OWNER AND THE DESGIN TEAM FOR THEIR USE ON THE PROJECT FOR POTENTIAL UNKNOWN OR UNREALIZED FOUNDATION CONFLICTS (TYP.)

Kubala ENGINEERS
Ph: 800.248.3674
www.kubalaengineers.com
TX. REG. NO. F-3709

PBK

ARCHITECT PBK Architects, Inc.
PBK.com
HOUSTON
11 Greenway Plaza, 22nd Floor
Houston, TX 77046
713-965-0608 P
713-961-4571 F
TX Firm: BR 1608

CIVIL
DIG
T 713-965-0608
SPORTS
PBK SPORTS
T 281-528-1697
STRUCTURAL
KUBALA ENGINEERS
T 800-248-3674
MEPT
LEAF ENGINEERS
T 713-940-3300
ENVELOPE
SEAM
T 713-940-3201
AV / ACOUSTIC
JAFFE HOLDEN
T 713-807-7100
THEATER
SCHULER SHOOK
T 214-747-6300
FOOD SERVICE
FOOD DESIGN PROFESSIONAL
T 281-350-2323

FRIENDSWOOD HIGH SCHOOL ADDITIONS AND RENOVATIONS

702 Greenbriar Dr
Friendswood, TX 77546

ISSUE FOR PROPOSAL

KEY PLAN

NORTH: PLAN TRUE

STATE OF TEXAS
JOHN R. KUBALA
106120
PROFESSIONAL ENGINEER
02/14/2022
Kubala Engineers
F-3709

CLIENT
FRIENDSWOOD ISD

DATE	PROJECT NUMBER
02/02/2022	20381

DRAWING HISTORY

No.	Description	Date
2	ADDENDUM #2	02/14/2022

ISSUE FOR PROPOSAL

NEW FOUNDATION AND EXISTING FIRST FLOOR PLAN - AREA E

S-101E

File Path: C:_RevitLocal\ST21-20381-FHS_Central_amer.taghebiLLC29.rvt

CHECKED BY:
Checker
DRAWN BY:
Author
Plot Stamp:
2/14/2022 6:43:52 PM

NEW FOUNDATION AND EXISTING FIRST FLOOR PLAN - AREA H

S-101H

FOR BLUEBEAM LABELING/OCR:

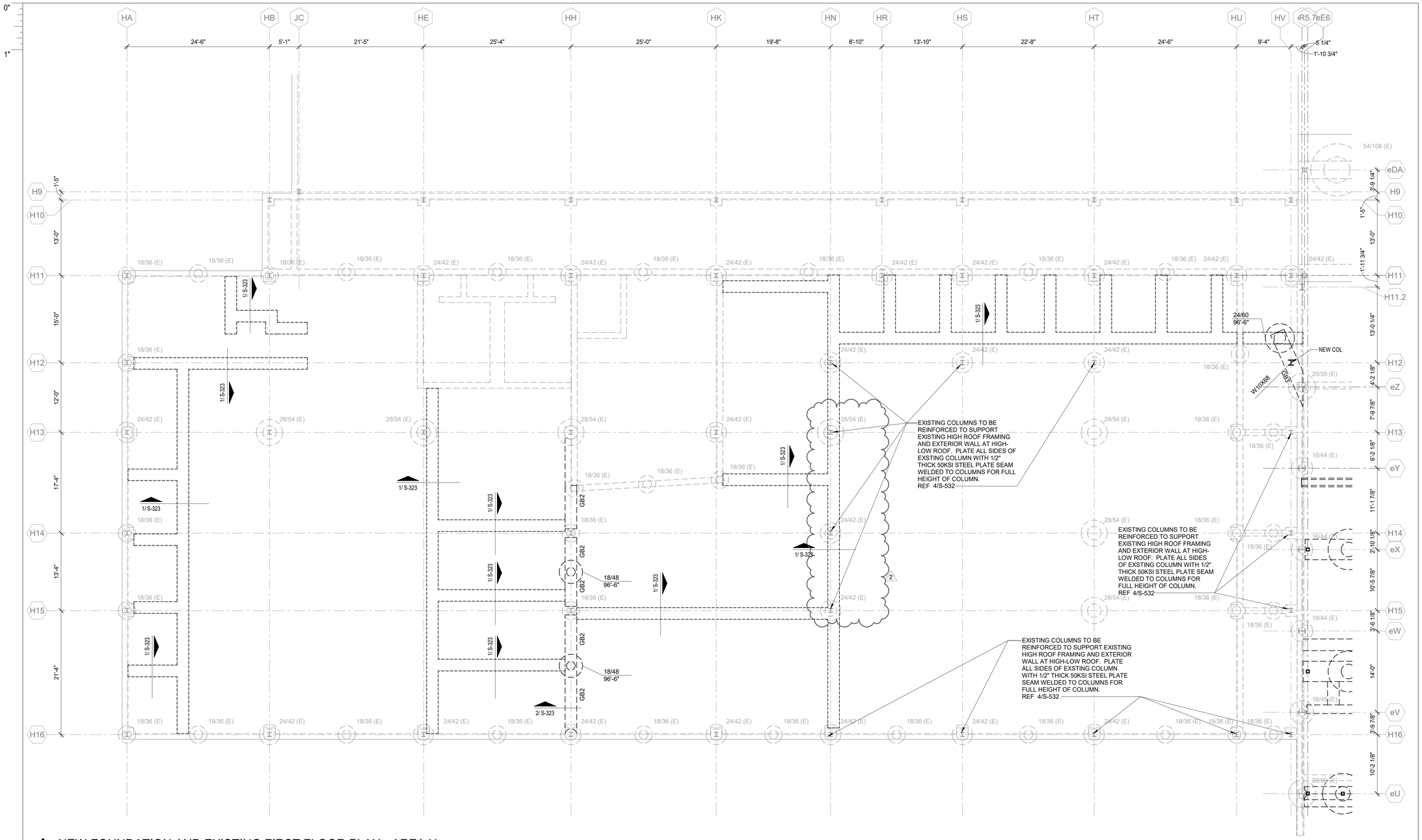

1 NEW FOUNDATION AND EXISTING FIRST FLOOR PLAN - AREA H

1/8" = 1'-0"

FOUNDATION PLAN NOTES

1. VERIFY ALL WALL OPENING DIMENSIONS AND LOCATIONS WITH ARCH DRAWINGS.

2. REFER TO SHEETS S000 SERIES FOR GENERAL NOTES, SCHEDULES AND DESIGN CRITERIA.

3. REFER TO SHEETS S400 SERIES FOR ALL CMU WALLS AND DETAILS.

4. AT INTERIOR CMU WALL LOCATIONS, WHERE THE 6" CMU WALL HEIGHT IS LESS THAN 14'-0", PROVIDE SLAB TURNDOWN. SEE SHEETS S320 TO S-323 ; TYPICAL.
   AT INTERIOR 6" CMU WALL LOCATIONS, WHERE THE CMU WALL HEIGHT IS MORE THAN 14'-0" PROVIDE GRADE BEAM. SEE SHEETS S-320 TO S-323 ; TYPICAL.
   AT INTERIOR 8" CMU WALL LOCATIONS PROVIDE GRADE BEAM. SEE SHEETS S-320 TO S-323 ; TYPICAL.

5. GC TO COORDINATE THE LOCATION OF ALL NEW CMU WALLS WITH ARCH DRAWINGS.

6. THE INFORMATION CONTAINED IN THESE PLANS ARE BASED ON EXISTING BUILDING CONSTRUCTION PLANS AND LIMITED AS-BUILTING. FIELD VERIFY ALL EXISTING DIMENSIONS AND CONDITIONS PRIOR TO FABRICATION OF NEW STEEL. NOTIFY ARCHITECT / ENGINEER OF ANY DISCREPANCIES. ANY APPROVED CHANGES SHALL BE INCORPORATED INTO THE ERECTION / SHOP DRAWINGS PRIOR TO SUBMISSION.

******* IMPORTANT GC NOTE FOR ALL STRUCTURAL FOUNDATION DEMOLITION SCOPE*******

ANY FOUNDATIONS THAT ARE DEMOLISHED MUST BE INFILLED WITH COMPACTED SELECT FILL PER THE GENERAL NOTES & THE GEOTECHNICAL REPORT, AND MUST BE OBSERVED BY THE GEOTECHINCAL TESTING AND INSPECTIONS COMPANY TO ENSURE THAT NO UNFAIR INFILL OF EXISTING HOLES IS PROVIDED. THIS IS ESPECIALLY CRITICAL WHERE NEW FOUNDATIONS MAY OVERLAP WITH EXISTING INFILL (TYP.) ADDITIONALLY, THE GENERAL CONTRACTOR SHALL BE SOLEY RESPONSIBLE TO SURVEY ALL LOCATIONS WHERE FOUDNATION DEOLITION HAS AND/OR WILL OCCUR REGARDLESS IF THE FOUNDATION IS BROKEN OFF (3'-0" BELOW EXISTING NATURAL GRADE) AND LEFT IN PLACE OR FULLY REMOVED AND INFILLED. THIS SURVEY MUST BE PERFORMED BY A PROFESSIONAL SURVEYING COMPANY AND PROVIDED THE OWNER AND THE DESGIN TEAM FOR THEIR USE ON THE PROJECT FOR POTENTIAL UNKNOWN OR UNREALIZED FOUNDATION CONFLICTS (TYP.)

FOUNDATION PLAN NOTES-DEMOLITION

******* GC PLEASE NOTE: *******
THE CURRENT DRAWINGS REPRESENT THE NEW SCOPE OF WORK AT EXISTING AREAS , WHERE THE SLAB WAS TO BE SAWCUT, DEMOLISHED, AND THE SUBGRADE SOILS SHALL BE REMOVED AND REPLACED FOR A 12" DEPTH FOR ENTIRE PLAN AREAS/ROOMS. REFER GC NOTE ON DEMOLITION PLANS.

FOR NEW SCOPE OF WORK RELATED TO SLAB TREATMENT PRICING OPTION 2, THE GC SHALL UNDERSTAND THAT DEMO OF SLAB AND TRENCHING OF SUBGRADE IS TO BE MEANS AND METHODS AND SHALL BE PROVIDED STRATEGICALLY WHERE NEEDED FOR AREAS OF NEW PIPING, CONDUIT, CMU WALLS, SHOWERS, RECESSES, ETC. THE TRENCHING SHALL BE FILLED WITH CEMENT STABILIZED SAND AND THE SLAB INFILL DETAILS SHALL FOLLOW THE TYPICAL DETAILS, INCLUDED BUT NOT LIMITED TO:

- **AT FLOOR DRAINS PER DETAIL** 6/S-320
- **AT TRENCH DRAINS PER DETAIL** 1/S-320
- **AT NEW PLUMBING TRENCH PER DETAIL** 3/S-320
- **AT NEW INTERIOR CMU WALLS PER SHEET S-323**

ADDITIONALLY, ALONG ALL SIDES OF ALL SLAB SAWCUTTING / REPLACEMENT (FULL PERIMETER AT EACH INSTANCE) THE GC SHALL RE-TIE ALL SLAB BARS TOGETHER WITH EITHER TENSION LAP SPLICES PER THE LAP SCHEDULE, BY PROVIDING DRILLED AND EPOXIED BARS WITH 10" EMBED WITH HILTI HY-200 ADHESIVE, OR WITH MECHANICAL COUPLERS (PREFERRED METHOD).

Kubala ENGINEERS
Ph: 800.248.3674
www.kubalaengineers.com
TX. REG. NO. F-3709

PBK

ARCHITECT PBK Architects, Inc.
PBK.com
HOUSTON
11 Greenway Plaza, 22nd Floor
Houston, TX 77046
713-965-0608 P
713-961-4571 F
TX Firm: BR 1608

CIVIL
DIG
T 713-965-0608
SPORTS
PBK SPORTS
T 281-528-1697
STRUCTURAL
KUBALA ENGINEERS
T 800-248-3674
MEPT
LEAF ENGINEERS
T 713-940-3300
ENVELOPE
SEAM
T 713-940-3201
AV / ACOUSTIC
JAFFE HOLDEN
T 713-807-7100
THEATER
SCHULER SHOOK
T 214-747-6300
FOOD SERVICE
FOOD DESIGN PROFESSIONAL
T 281-350-2323

FRIENDSWOOD HIGH SCHOOL ADDITIONS AND RENOVATIONS - SPECIFIC USE PERMIT

702 Greenbriar Dr
Friendswood, TX 77546

ISSUE FOR PROPOSAL

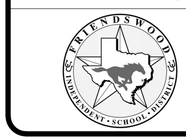

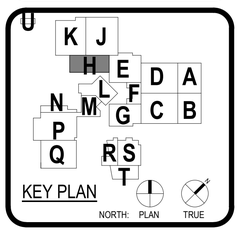

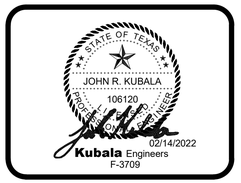

CLIENT
FRIENDSWOOD ISD

DATE	PROJECT NUMBER
02/02/2022	20381

DRAWING HISTORY

No.	Description	Date
2	ADDENDUM #2	02/14/2022

ISSUE FOR PROPOSAL

NEW FOUNDATION AND EXISTING FIRST FLOOR PLAN - AREA H

S-101H

File Path: C:_Revit.local\ST21-20381-FHS_Central_amer.taghiebiLLCZ9.rvt

CHECKED BY:
Checker
DRAWN BY:
Author
Plot Stamp:
2/14/2022 6:43:54 PM

FOUNDATION AND 1ST FLOOR PLAN - AREA Q

S-101Q

FOR BLUEBEAM LABELING/OCR:

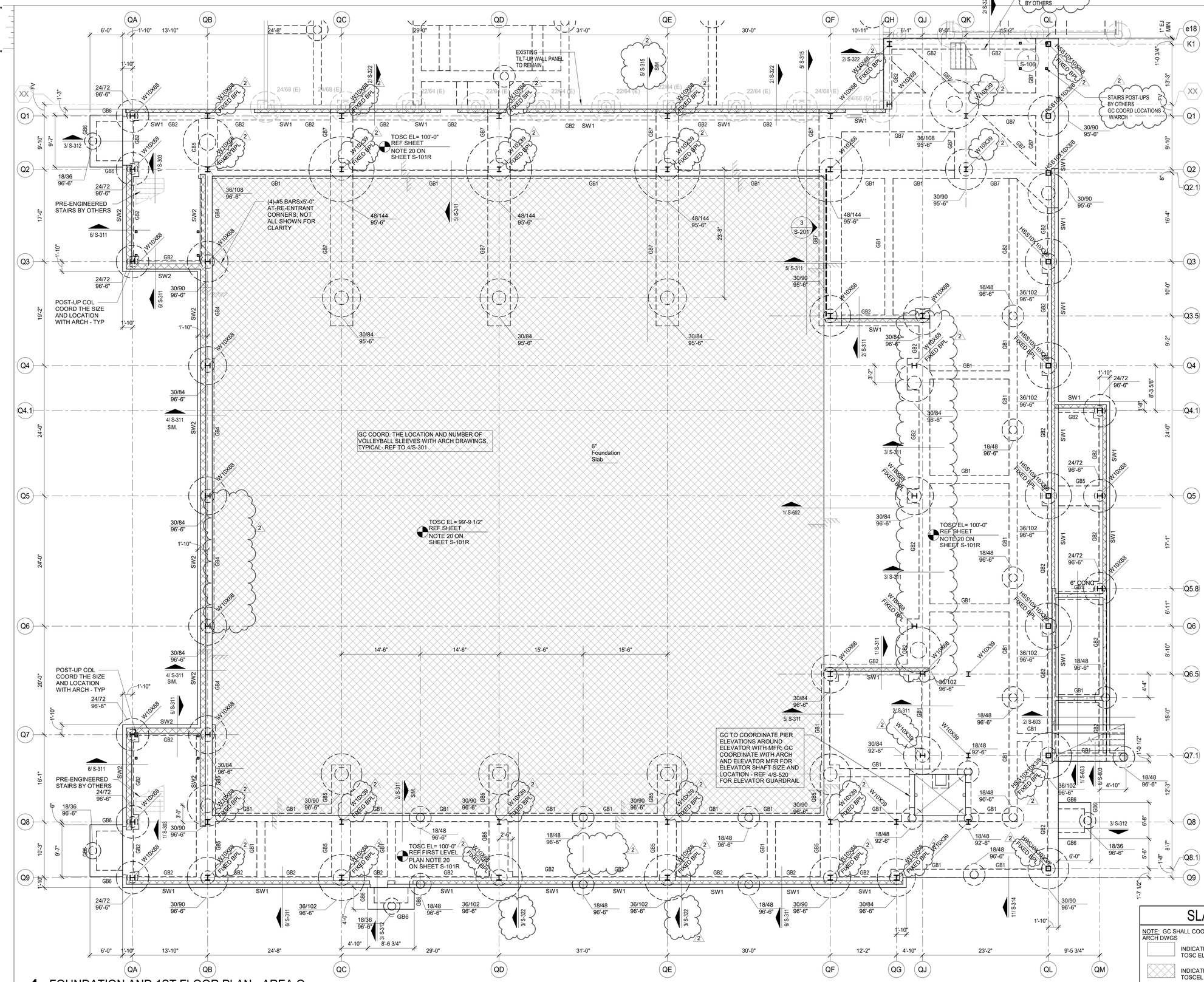

1 FOUNDATION AND 1ST FLOOR PLAN - AREA Q

1/8" = 1'-0"

1ST FLOOR PLAN NOTES

1. FOUNDATION PLAN NOTES ARE NOT SHOWN FOR CLARITY. REFER TO SHEET S-101R FOR PLAN NOTES.

2. STRUCTURAL SLAB SCHEDULE & NOTES ARE NOT SHOWN FOR CLARITY. REFER TO SHEET S-101R FOR SCHEDULE.

3. SLAB LEGEND AND NOTES ARE NOT SHOWN FOR CLARITY. REFER TO SHEET S-101R FOR LEGEND.

4. COORDINATE LOCATION AND DEPTH OF SLAB DEPRESSIONS WITH ARCHITECT PRIOR TO CONSTRUCTION.

SLAB LEGEND

NOTE: GC SHALL COORDINATE RECESS LOCATIONS WITH ARCH DWGS

INDICATES NO SLAB DEPRESSION; TOSC EL = REF PLAN.

INDICATES NEW 2 1/2" SLAB DEPRESSION; TOSCEL = REF PLAN.

Kubala ENGINEERS
Ph: 800.248.3674
www.kubalaengineers.com
TX. REG. NO. F-3709

PBK

ARCHITECT PBK Architects, Inc.
HOUSTON
11 Greenway Plaza, 22nd Floor
Houston, TX 77046
713-965-0608 P
713-961-4571 F
TX Firm: BR 1608
PBK.com

CIVIL
DIG
T 713-965-0608
SPORTS
PBK SPORTS
T 281-528-1697
STRUCTURAL
KUBALA ENGINEERS
T 800-248-3674
MEPT
LEAF ENGINEERS
T 713-940-3300
ENVELOPE
BEAM
T 713-940-3201
AV / ACOUSTIC
JAFFE HOLDEN
T 713-807-7100
THEATER
SCHULER SHOOK
T 214-747-5300
FOOD SERVICE
FOOD DESIGN PROFESSIONAL
T 281-350-2323

FRIENDSWOOD HIGH SCHOOL ADDITIONS AND RENOVATIONS

702 Greenbriar Dr
Friendswood, TX 77546

ISSUE FOR PROPOSAL

KEY PLAN

NORTH: PLAN TRUE

STATE OF TEXAS
JOHN R. KUBALA
106120
LICENSED PROFESSIONAL ENGINEER
02/14/2022
Kubala Engineers
F-3709

CLIENT
FRIENDSWOOD ISD

DATE	PROJECT NUMBER
02/02/2022	20381

DRAWING HISTORY

No.	Description	Date
2	ADDENDUM #2	02/14/2022

ISSUE FOR PROPOSAL

FOUNDATION AND 1ST FLOOR PLAN - AREA Q

S-101Q

File Path: C:_Revit\Local\ST21-20381-FHS_Central_amer.taghebiLLC29.rvt

CHECKED BY:
Checker
DRAWN BY:
Author
Plot Stamp:
2/14/2022 6:43:58 PM

FOUNDATION AND 1ST FLOOR PLAN - AREA R

S-101R

FOR BLUEBEAM LABELING/OCR:

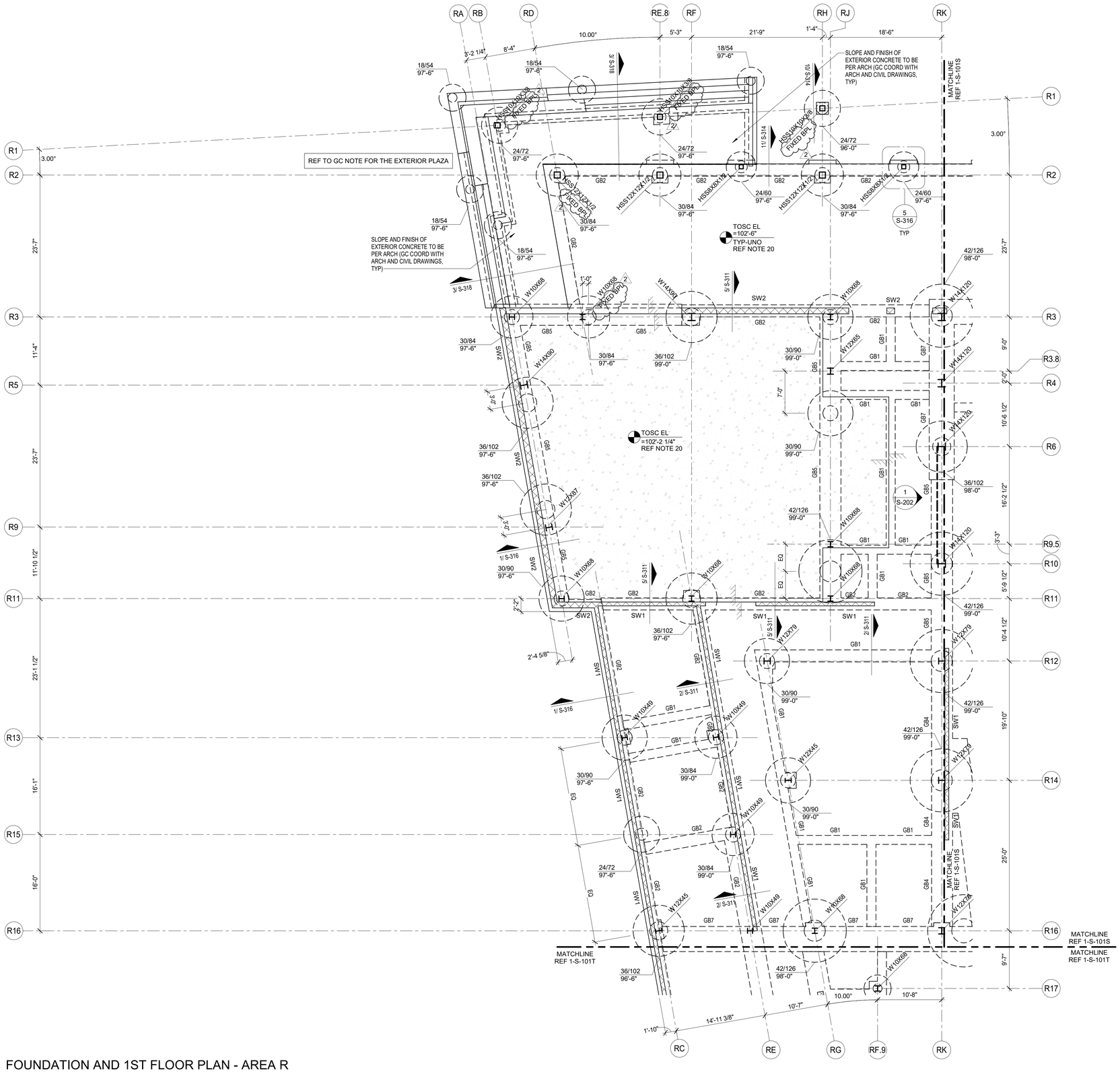

1 FOUNDATION AND 1ST FLOOR PLAN - AREA R

1/8" = 1'-0"

FOUNDATION AND 1ST FLOOR PLAN NOTES

1. REFER TO PLAN FOR TOP OF STRUCTURAL CONCRETE ELEVATIONS (TOSC EL). Ll-animal ELEVATIONS SHOWN ON THE PLAN ARE BASED ON A LEVEL ONE REFERENCE ELEVATION = 100'-0". THIS REFERENCE ELEVATION IS EQUIVALENT TO THE LEVEL ONE MEAN SEA LEVEL ELEVATION = REF CIVIL SHOWN IN THE CIVIL AND ARCHITECTURAL DRAWINGS AND IS NOT INTENDED TO ESTABLISH THE ACTUAL SEA LEVEL ELEVATION OF ANY PORTION OF THE STRUCTURE.
2. REFER TO ARCHITECTURAL DRAWINGS FOR EXTENTS AND DIMENSIONS OF RAISED OR DEPRESSED SLAB AREAS, SLOPES, CURBS, AND DRAINS. REFER TO TYPICAL DETAILS FOR REINFORCEMENT REQUIREMENTS.
3. REFER TO MECHANICAL, ELECTRICAL, AND PLUMBING DRAWINGS FOR SLAB PENETRATIONS AND UNDERGROUND UTILITIES. REFER TO TYPICAL DETAILS FOR ADDITIONAL REINFORCEMENT REQUIREMENTS.
4. CONTRACTOR TO FIELD VERIFY ALL EXISTING CONDITIONS AND DIMENSIONS. NOTIFY ARCHITECT AND STRUCTURAL ENGINEER OF ANY DISCREPANCIES.
5. CONTRACTOR TO VERIFY ALL SLAB EDGE DIMENSIONS WITH ARCHITECTURAL DRAWINGS PRIOR TO CONSTRUCTION.
6. PROVIDE ADDITIONAL SLAB REINFORCEMENT RE-ENTRANT CORNERS AND SLAB CORNERS, TYP. INCLUDING RE-ENTRANT CORNERS AROUND THE PERIMETER OF THE BUILDINGS, FLOOR RECESSES AND OPENINGS. REF 1/S-302 .
7. VERIFY THE SIZE AND EXTENT OF ALL BRICK LEDGES SHOWN ON PLAN OR DETAILS WITH ARCHITECTURAL DRAWINGS.
8. REF S-0.xx SERIES DRAWINGS FOR GENERAL NOTES AND TYP DETAILS.
9. REF S-2.xx SERIES DRAWINGS FOR STEEL BRACE ELEVATIONS AND DETAILS. — — — — INDICATES BRACE FRAME (TYP.)
10. REF S-3.xx SERIES DRAWINGS FOR FOUNDATION AND STRUCTURAL SLAB DETAILS.
11. REF S-4.xx SERIES DRAWINGS FOR CMU DETAILS.
12. REF PLAN FOR COLUMN SIZES.
13. UNLESS NOTED OTHERWISE ON PLAN, TOP OF PLINTH ELEVATION IS = 99'-0" IN "GYM AND TENNIS" BUILDINGS (AREAS Q AND U), AND TOP OF PLINTH ELEVATION VAREIS IN "PAC" BUILDING (AREAS R, S AND T). REF DETAILS SHOWN ON PLAN.
14. GC COORD WITH ARCH AND PLUMBING DWGS FOR THE SIZE, NUMBER AND LOCATION OF ALL THE TRENCHES, AND FLOOR DRAINS. REF 3/S-302 FOR TRENCH DETAIL AND REF 4/S-302 FOR FLOOR DRAIN DETAIL.
15. AT INTERIOR CMU WALL LOCATIONS, WHERE THE GRADE BEAM IS NOT SHOWN, PROVIDE DOWELS PER DETAILS 4/S-314 . GC SHALL COORDINATE CMU WALL LOCATIONS WITH ARCH DRAWINGS.
16. PIERS/FOOTINGS WITHOUT CENTERLINES SHOWN ON PLANS, SECTIONS AND/OR DETAILS SHALL BE LOCATED AS FOLLOWS:
    A. COLUMNS AND PILASTERS: CENTERLINE OF THE COLUMN.
    B. GRADE BEAMS AND WALLS: CENTERLINE OF THE GRADE BEAM OR WALL.
    C. ALONG THE LENGTH OF GRADE BEAMS AND WALLS: INTERMEDIATE PIERS/FOOTINGS SHALL BE SPACED EQUALLY BETWEEN PIERS/FOOTINGS THAT ARE DIMENSIONALLY SET ON PLAN OR AS NOTED ABOVE.
    D. PIERS SUPPORTING SLABS ON CARTON FORMS: UNLESS NOTED OTHERWISE, PIERS NOT DIMENSIONED SHALL BE SPACED EQUALLY BETWEEN PIERS THAT ARE DIMENSIONALLY SET ON PLAN.
17. GC TO COORDINATE THE LOCATION OF ALL CONC CURBS WITH ARCH DWGS. REF 6/S-301 FOR DETAIL TYP.
18. GC COORDINATE THE LOCATION OF ALL CANOPY COLUMNS WITH ARCH DRAWINGS.
19. ▨ ALL CMU SHOWN ON PLAN ARE PART OF THE STRUCTURAL LATERAL FORCE RESISTING SYSTEM AND SUPPORTS GRAVITY LOADS. NON-STRUCTURAL CMU EXISTS IN OTHER LOCATION (REF ARCH DWGS). A 3/8" VERT CONTROL JOINT SHALL BE PROVIDED WHEREVER STRUCTURAL AND NON-STRUCTURAL CMU ABUT. REF 1/S-402 FOR SHEAR WALL REINF SCHED.
20. 6" NW CONCRETE SLAB-ON-GRADE REINFORCED WITH #4 AT 12" OC EACH WAY ON 3 1/2" CHAIRS SPACED AT 36" OC EACH WAY. PLACE THE SLAB ON 15 MIL WATER VAPOR BARRIER OVER COMPACTED SELECT FILL (SOIL REPORT). REF TO SLAB JOINT 1/S302 AND 2/S302.

SLAB LEGEND

NOTE: GC SHALL COORDINATE RECESS LOCATIONS WITH ARCH DWGS

INDICATES NO SLAB DEPRESSION; TOSC EL = REF PLAN.

INDICATES 3 3/4" SLAB DEPRESSION, TOSC EL - REF PLAN.

GC NOTE FOR THE EXTERIOR PLAZA

1. THE EXTERIOR PLAZA-TYPE CONCRETE BY STRUCTURAL EOR. THESE WALLS DO RETAIN SOILS, BUT HAVE BEEN DESIGNED AS CONVENTIONAL STEM-WALLS WITH NO ABILITY TO CANTILEVER OUT OF THE GROUND LIKE A RETAINING WALL-TYPE STRUCTURE; THEREFORE, THE GC SHALL PROVIDE TEMPORARY SHORING FOR BOTH WALLS WHICH SHALL REMAIN IN PLACE UNTIL THE FULL ASSEMBLY (PLAZA AND BOTH WALLS) HAVE BEEN CAST AND CURED TO FULL STRENGTH) TYP.

2. EXTERIOR STRUCTURAL SLAB/PLAZA. SLAB TO BE 6" THICK WITH #4 BARS AT 12" OC EACH WAY ON PREPARED SUBGRADE. IN ADDITION TO ALL STRUCTURAL REQUIREMENTS GC SHALL PROVIDE MIN 1'-0" THICK LIME STABILIZED LAYER DIRECTLY BELOW THE SLAB
GC PLEASE NOTE: EXTERIOR SLAB WILL BE THE ONLY STRUCTURAL SLAB AREAS ALLOWED TO HAVE SAW-CUTS. GC MUST COORDINATE SAW-CUT LOCATIONS WITH STRUCTURAL EOR. PROVIDE SAW-CUTS 1/4" WIDE X 1 1/2" DEEP AT SPACING NOT TO EXCEED 16' ON CENTER (TYP.) AFTER SAW-CUTTING INFILL SAWCUT WITH MM-80 OR EUCO 700.

3. SLOPE EXTERIOR SLAB PER ARCH. REF ARCH FOR CONCRETE SURFACE FINISH AND FLATNESS / LEVELNESS STANDARDS (TYP.)

4. AROUND FULL PERIMETER OF OUTDOOR PLAZA AREA GC TO PROVIDEPROVIDE GB1 WITH 12" WIDE STEM WALL ABOVE. REINFORCE GB PER SCHEDULE. REINF. STEM WALL WITH (1) #5 BAR EA. WAY. EACH FACE AT 10" OC. EXTEND ALL VERTICALS INTO GRADE BEAM WITH STANDARD HOOK OR PROVIDE MATCHING DOWELS WITH STD. HOOK AND CLASS B LAP (TYP ALONG PLAZA). FORMED EXTERIOR STAIRS SHALL MERGE INTO GRADE BEAM AS SHOWN IN DETAILS, GC COORDINATE.

5. REF TO DETAILS 2/S-319 , 3/S-319 , 4/S-319 AT WATER GARDENS

Kubala ENGINEERS
Ph: 800.248.3674
www.kubalaengineers.com
TX. REG. NO. F-3709

PBK

ARCHITECT PBK Architects, Inc.
HOUSTON PBK.com
11 Greenway Plaza, 22nd Floor
Houston, TX 77046
713-965-0608 P
713-961-4571 F
TX Firm: BR 1608

CIVIL
DIG
T 713-965-0608
SPORTS
PBK SPORTS
T 281-528-1697
STRUCTURAL
KUBALA ENGINEERS
T 800-248-3674
MEPT
LEAF ENGINEERS
T 713-940-3300
ENVELOPE
BEAM
T 713-940-3201
AV / ACOUSTIC
JAFFE HOLDEN
T 713-807-7100
THEATER
SCHULER SHOOK
T 214-747-6300
FOOD SERVICE
FOOD DESIGN PROFESSIONAL
T 281-350-2323

FRIENDSWOOD HIGH SCHOOL ADDITIONS AND RENOVATIONS

702 Greenbriar Dr
Friendswood, TX 77546

ISSUE FOR PROPOSAL

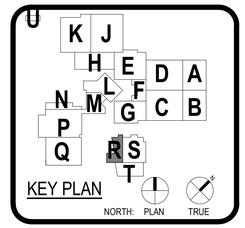

STATE OF TEXAS
JOHN R. KUBALA
106120
PROFESSIONAL ENGINEER
02/14/2022
Kubala Engineers
F-3709

CLIENT
FRIENDSWOOD ISD

DATE	PROJECT NUMBER
02/02/2022	20381

DRAWING HISTORY

No.	Description	Date
2	ADDENDUM #2	02/14/2022

ISSUE FOR PROPOSAL

FOUNDATION AND 1ST FLOOR PLAN - AREA R

S-101R

File Path: C:_RevitLocal\ST21-20381-FHS_Central_amer.taghiebiLLCZ9.rvt

CHECKED BY:
Checker
DRAWN BY:
Author
Plot Stamp:
2/14/2022 6:44:01 PM

FOUNDATION AND 1ST FLOOR PLAN - AREA S

S-101S

FOR BLUEBEAM LABELING/OCR:

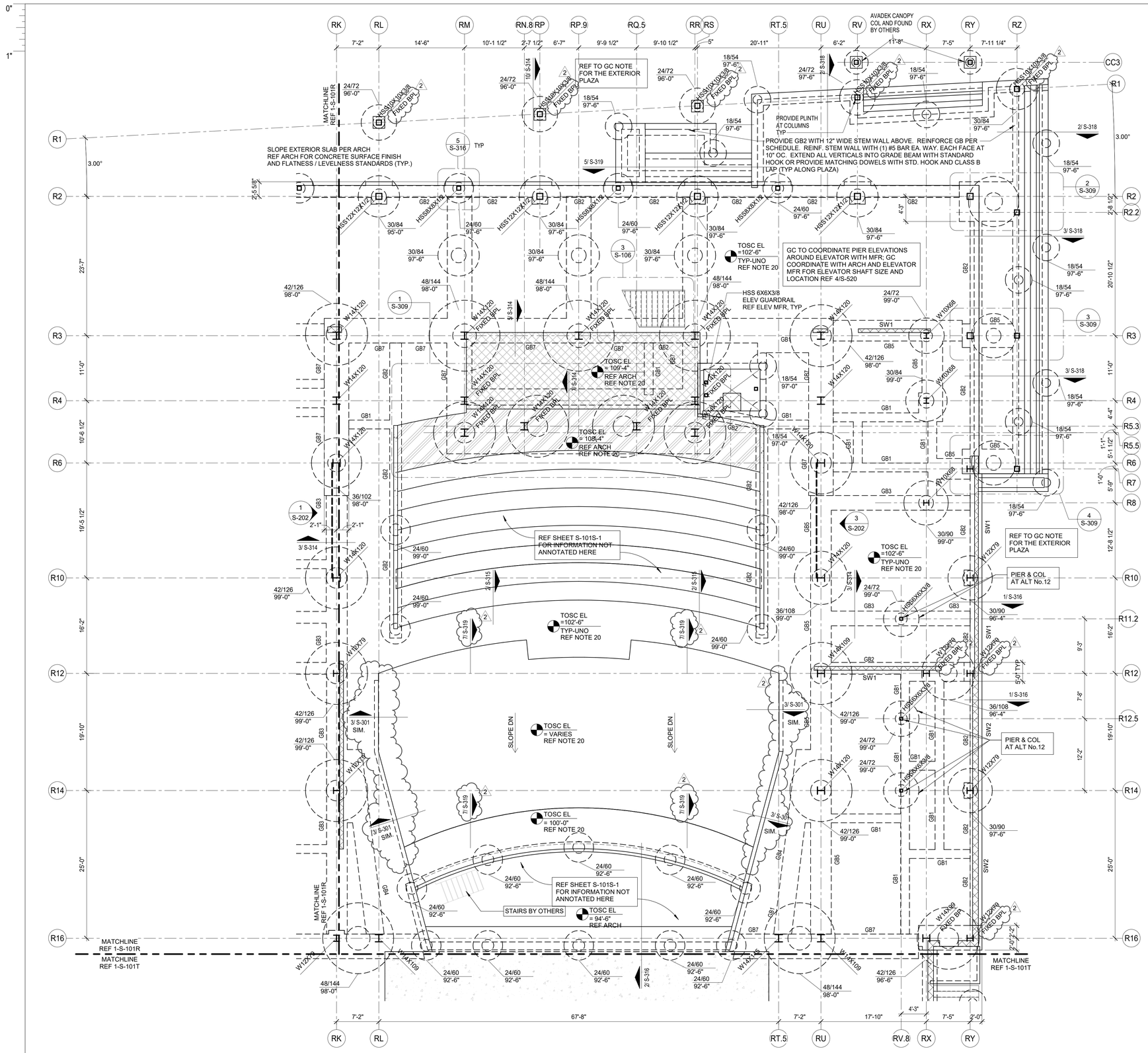

1 FOUNDATION AND 1ST FLOOR PLAN - AREA S

1/8" = 1'-0"

FOUNDATION AND 1ST FLOOR PLAN NOTES

1. REFER TO PLAN FOR TOP OF STRUCTURAL CONCRETE ELEVATIONS (TOSC EL). Il-animal ELEVATIONS SHOWN ON THE PLAN ARE BASED ON A LEVEL ONE REFERENCE ELEVATION = 100'-0". THIS REFERENCE ELEVATION IS EQUIVALENT TO THE LEVEL ONE MEAN SEA LEVEL ELEVATION = REF CIVIL SHOWN IN THE CIVIL AND ARCHITECTURAL DRAWINGS AND IS NOT INTENDED TO ESTABLISH THE ACTUAL SEA LEVEL ELEVATION OF ANY PORTION OF THE STRUCTURE.
2. REFER TO ARCHITECTURAL DRAWINGS FOR EXTENTS AND DIMENSIONS OF RAISED OR DEPRESSED SLAB AREAS, SLOPES, CURBS, AND DRAINS. REFER TO TYPICAL DETAILS FOR REINFORCEMENT REQUIREMENTS.
3. REFER TO MECHANICAL, ELECTRICAL, AND PLUMBING DRAWINGS FOR SLAB PENETRATIONS AND UNDERGROUND UTILITIES. REFER TO TYPICAL DETAILS FOR ADDITIONAL REINFORCEMENT REQUIREMENTS.
4. CONTRACTOR TO FIELD VERIFY ALL EXISTING CONDITIONS AND DIMENSIONS. NOTIFY ARCHITECT AND STRUCTURAL ENGINEER OF ANY DISCREPANCIES.
5. CONTRACTOR TO VERIFY ALL SLAB EDGE DIMENSIONS WITH ARCHITECTURAL DRAWINGS PRIOR TO CONSTRUCTION.
6. PROVIDE ADDITIONAL SLAB REINFORCEMENT RE-ENTRANT CORNERS AND SLAB CORNERS, TYP INCLUDING RE-ENTRANT CORNERS AROUND THE PERIMETER OF THE BUILDINGS, FLOOR RECESSES AND OPENINGS. REF 1/S-302 .
7. VERIFY THE SIZE AND EXTENT OF ALL BRICK LEDGES SHOWN ON PLAN OR DETAILS WITH ARCHITECTURAL DRAWINGS.
8. REF S-0.xx SERIES DRAWINGS FOR GENERAL NOTES AND TYP DETAILS.
9. REF S-2.xx SERIES DRAWINGS FOR STEEL BRACE ELEVATIONS AND DETAILS. — — — — INDICATES BRACE FRAME (TYP.)
10. REF S-3.xx SERIES DRAWINGS FOR FOUNDATION AND STRUCTURAL SLAB DETAILS.
11. REF S-4.xx SERIES DRAWINGS FOR CMU DETAILS.
12. REF PLAN FOR COLUMN SIZES.
13. UNLESS NOTED OTHERWISE ON PLAN, TOP OF PLINTH ELEVATION IS = 99'-0" IN "GYM AND TENNIS" BUILDINGS (AREAS Q AND U). AND TOP OF PLINTH ELEVATION VAREIS IN "PAC" BUILDING (AREAS R, S AND T). REF DETAILS SHOWN ON PLAN.
14. GC COORD WITH ARCH AND PLUMBING DWGS FOR THE SIZE, NUMBER AND LOCATION OF ALL THE TRENCHES AND FLOOR DRAINS. REF 3/S-302 FOR TRENCH DETAIL AND REF 4/S-302 FOR FLOOR DRAIN DETAIL.
15. AT INTERIOR CMU WALL LOCATIONS, WHERE THE GRADE BEAM IS NOT SHOWN, PROVIDE DOWELS PER DETAILS 4/S-314 . GC SHALL COORDINATE CMU WALL LOCATIONS WITH ARCH DRAWINGS.
16. PIERS/FOOTINGS WITHOUT CENTERLINES SHOWN ON PLANS, SECTIONS AND/OR DETAILS SHALL BE LOCATED AS FOLLOWS:
    A. COLUMNS AND PILASTERS: CENTERLINE OF THE COLUMN.
    B. GRADE BEAMS AND WALLS: CENTERLINE OF THE GRADE BEAM OR WALL.
    C. ALONG THE LENGTH OF GRADE BEAMS AND WALLS: INTERMEDIATE PIERS/FOOTINGS SHALL BE SPACED EQUALLY BETWEEN PIERS/FOOTINGS THAT ARE DIMENSIONALLY SET ON PLAN OR AS NOTED ABOVE.
    D. PIERS SUPPORTING SLABS ON CARTON FORMS: UNLESS NOTED OTHERWISE, PIERS NOT DIMENSIONED SHALL BE SPACED EQUALLY BETWEEN PIERS THAT ARE DIMENSIONALLY SET ON PLAN.
17. GC TO COORDINATE THE LOCATION OF ALL CONC CURBS WITH ARCH DWGS. REF 6/S-301 FOR DETAIL TYP.
18. GC COORDINATE THE LOCATION OF ALL CANOPY COLUMNS WITH ARCH DRAWINGS.
19. ▨ ALL CMU SHOWN ON PLAN ARE PART OF THE STRUCTURAL LATERAL FORCE RESISTING SYSTEM AND SUPPORTS GRAVITY LOADS. NON-STRUCTURAL CMU EXISTS IN OTHER LOCATION (REF ARCH DWGS). A 3/8" VERT CONTROL JOINT SHALL BE PROVIDED WHEREVER STRUCTURAL AND NON-STRUCTURAL CMU ABUT. REF 1/S-402 FOR SHEAR WALL REINF SCHED.
20. 6" NW CONCRETE SLAB-ON-GRADE REINFORCED WITH #4 AT 12" OC EACH WAY ON 3 1/2" CHAIRS SPACED AT 36" OC EACH WAY. PLACE THE SLAB ON 15 MIL WATER VAPOR BARRIER OVER COMPACTED SELECT FILL (SOIL REPORT). REF TO SLAB JOINT 1/S302 AND 2/S302.

GC NOTE FOR THE EXTERIOR PLAZA

1. THE EXTERIOR PLAZA-TYPE CONCRETE BY STRUCTURAL EOR. THESE WALLS DO RETAIN SOILS, BUT HAVE BEEN DESIGNED AS CONVENTIONAL STEM-WALLS WITH NO ABILITY TO CANTILEVER OUT OF THE GROUND LIKE A RETAINING WALL-TYPE STRUCTURE; THEREFORE, THE GC SHALL PROVIDE TEMPORARY SHORING FOR BOTH WALLS WHICH SHALL REMAIN IN PLACE UNTIL THE FULL ASSEMBLY (PLAZA AND BOTH WALLS) HAVE BEEN CAST AND CURED TO FULL STRENGTH) TYP.

2. EXTERIOR STRUCTURAL SLAB/PLAZA. SLAB TO BE 6" THICK WITH #4 BARS AT 12" OC EACH WAY ON PREPARED SUBGRADE. IN ADDITION TO ALL STRUCTURAL REQUIREMENTS GC SHALL PROVIDE MIN 1'-0" THICK LIME STABILIZED LAYER DIRECTLY BELOW THE SLAB
GC PLEASE NOTE: EXTERIOR SLAB WILL BE THE ONLY STRUCTURAL SLAB AREAS ALLOWED TO HAVE SAW-CUTS. GC MUST COORDINATE SAW-CUT LOCATIONS WITH STRUCTURAL EOR. PROVIDE SAW-CUTS 1/4" WIDE X 1 1/2" DEEP AT SPACING NOT TO EXCEED 16' ON CENTER (TYP.) AFTER SAW-CUTTING INFILL SAWCUT WITH MM-80 OR EUCO 700.

3. SLOPE EXTERIOR SLAB PER ARCH. REF ARCH FOR CONCRETE SURFACE FINISH AND FLATNESS / LEVELNESS STANDARDS (TYP.)

4. AROUND FULL PERIMETER OF OUTDOOR PLAZA AREA GC TO PROVIDEPROVIDE GB1 WITH 12" WIDE STEM WALL ABOVE. REINFORCE GB PER SCHEDULE. REINF. STEM WALL WITH (1) #5 BAR EA. WAY. EACH FACE AT 10" OC. EXTEND ALL VERTICALS INTO GRADE BEAM WITH STANDARD HOOK OR PROVIDE MATCHING DOWELS WITH STD. HOOK AND CLASS B LAP (TYP ALONG PLAZA). FORMED EXTERIOR STAIRS SHALL MERGE INTO GRADE BEAM AS SHOWN IN DETAILS, GC COORDINATE.

5. REF TO DETAILS 2/S-319 , 3/S-319 , 4/S-319 AT WATER GARDENS

SLAB LEGEND

NOTE: GC SHALL COORDINATE RECESS LOCATIONS WITH ARCH DWGS.

- INDICATES NO SLAB DEPRESSION; TOSC EL = RE: PLAN.
- INDICATES 3 3/4" SLAB DEPRESSION; TOSC EL = REF PLAN.
- INDICATES 82" ELEVATED SLAB ; TOSC EL = REF PLAN.
- INDICATES 72" ELEVATED SLAB; TOSC EL = REF PLAN.

Kubala ENGINEERS
Ph: 800.248.3674
www.kubalaengineers.com
TX. REG. NO. F-3709

PBK

ARCHITECT PBK Architects, Inc.
HOUSTON PBK.com
11 Greenway Plaza, 22nd Floor
Houston, TX 77046
713-965-0608 P
713-961-4571 F
TX Firm: BR 1608

CIVIL
DIG
T 713-965-0608
SPORTS
PBK SPORTS
T 281-528-1697
STRUCTURAL
KUBALA ENGINEERS
T 800-248-3674
MEPT
LEAF ENGINEERS
T 713-940-3300
ENVELOPE
BEAM
T 713-940-3201
AV / ACOUSTIC
JAFFE HOLDEN
T 713-807-7100
THEATER
SCHULER SHOOK
T 214-747-8300
FOOD SERVICE
FOOD DESIGN PROFESSIONAL
T 281-350-2323

FRIENDSWOOD HIGH SCHOOL ADDITIONS AND RENOVATIONS

702 Greenbriar Dr
Friendswood, TX 77546

ISSUE FOR PROPOSAL

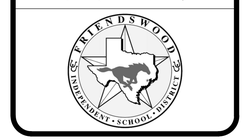

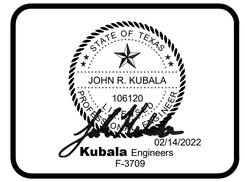

CLIENT
FRIENDSWOOD ISD

DATE	PROJECT NUMBER
02/02/2022	20381

DRAWING HISTORY

No.	Description	Date
2	ADDENDUM #2	02/14/2022

ISSUE FOR PROPOSAL

FOUNDATION AND 1ST FLOOR PLAN - AREA S

S-101S

File Path: C:_Revit\Local\ST21-20381-FHS_Central_amer.taghebiLLC29.rvt

CHECKED BY:
Checker
DRAWN BY:
Author
Plot Stamp:
2/14/2022 6:44:04 PM

FOUNDATION AND 1ST FLOOR PLAN - AREA T

S-101T

FOR BLUEBEAM LABELING/OCR:

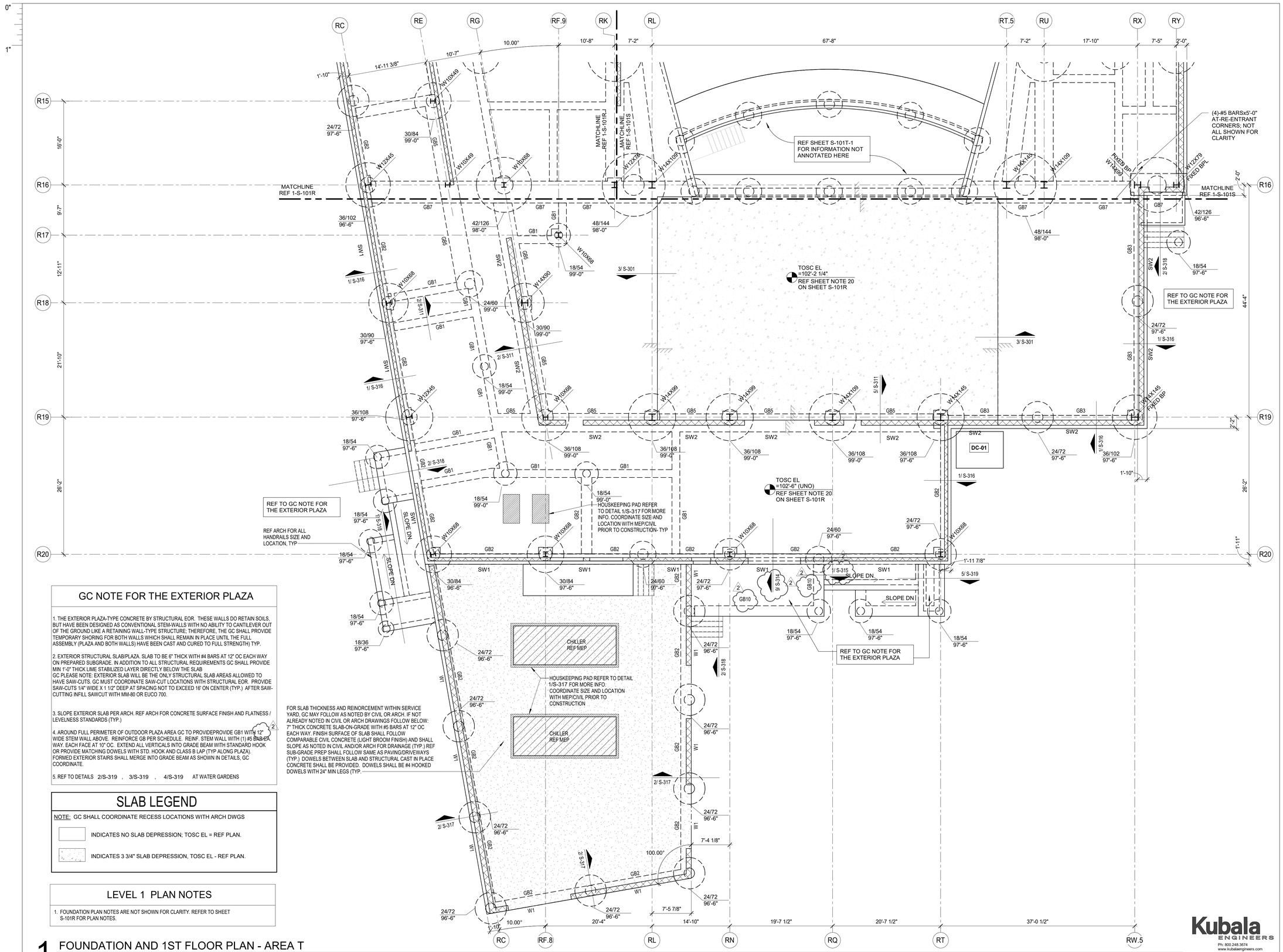

GC NOTE FOR THE EXTERIOR PLAZA

1. THE EXTERIOR PLAZA-TYPE CONCRETE BY STRUCTURAL EOR. THESE WALLS DO RETAIN SOILS, BUT HAVE BEEN DESIGNED AS CONVENTIONAL STEM-WALLS WITH NO ABILITY TO CANTILEVER OUT OF THE GROUND LIKE A RETAINING WALL-TYPE STRUCTURE; THEREFORE, THE GC SHALL PROVIDE TEMPORARY SHORING FOR BOTH WALLS WHICH SHALL REMAIN IN PLACE UNTIL THE FULL ASSEMBLY (PLAZA AND BOTH WALLS) HAVE BEEN CAST AND CURED TO FULL STRENGTH) TYP.

2. EXTERIOR STRUCTURAL SLAB/PLAZA. SLAB TO BE 6" THICK WITH #4 BARS AT 12" OC EACH WAY ON PREPARED SUBGRADE. IN ADDITION TO ALL STRUCTURAL REQUIREMENTS GC SHALL PROVIDE MIN 1'-0" THICK LIME STABILIZED LAYER DIRECTLY BELOW THE SLAB
GC PLEASE NOTE: EXTERIOR SLAB WILL BE THE ONLY STRUCTURAL SLAB AREAS ALLOWED TO HAVE SAW-CUTS. GC MUST COORDINATE SAW-CUT LOCATIONS WITH STRUCTURAL EOR. PROVIDE SAW-CUTS 1/4" WIDE X 1 1/2" DEEP AT SPACING NOT TO EXCEED 16' ON CENTER (TYP.) AFTER SAW-CUTTING INFILL SAWCUT WITH MM-80 OR EUCO 700.

3. SLOPE EXTERIOR SLAB PER ARCH. REF ARCH FOR CONCRETE SURFACE FINISH AND FLATNESS / LEVELNESS STANDARDS (TYP.)

4. AROUND FULL PERIMETER OF OUTDOOR PLAZA AREA GC TO PROVIDEPROVIDE GB1 WITH 12" WIDE STEM WALL ABOVE. REINFORCE GB PER SCHEDULE. REINF. STEM WALL WITH (1) #5 BAR EA. WAY. EACH FACE AT 10" OC. EXTEND ALL VERTICALS INTO GRADE BEAM WITH STANDARD HOOK OR PROVIDE MATCHING DOWELS WITH STD. HOOK AND CLASS B LAP (TYP ALONG PLAZA). FORMED EXTERIOR STAIRS SHALL MERGE INTO GRADE BEAM AS SHOWN IN DETAILS, GC COORDINATE.

5. REF TO DETAILS 2/S-319 , 3/S-319 , 4/S-319 AT WATER GARDENS

SLAB LEGEND

NOTE: GC SHALL COORDINATE RECESS LOCATIONS WITH ARCH DWGS

INDICATES NO SLAB DEPRESSION; TOSC EL = REF PLAN.

INDICATES 3 3/4" SLAB DEPRESSION, TOSC EL - REF PLAN.

LEVEL 1 PLAN NOTES

1. FOUNDATION PLAN NOTES ARE NOT SHOWN FOR CLARITY. REFER TO SHEET S-101R FOR PLAN NOTES.

1 FOUNDATION AND 1ST FLOOR PLAN - AREA T
1/8" = 1'-0"

Kubala ENGINEERS
Ph: 800.248.3674
www.kubalaengineers.com
TX. REG. NO. F-3709

PBK

ARCHITECT PBK Architects, Inc.
HOUSTON
11 Greenway Plaza, 22nd Floor
Houston, TX 77046
713-965-0608 P
713-961-4571 F
TX Firm: BR 1608
CIVIL
CIVIL
T 713-965-0608
SPORTS
PBK SPORTS
T 281-528-1697
STRUCTURAL
KUBALA ENGINEERS
T 800-248-3674
MEPT
LEAF ENGINEERS
T 713-940-3300
ENVELOPE
SEAM
T 713-940-3201
AV / ACOUSTIC
JAFFE HOLDEN
T 713-807-7100
THEATER
SCHULER SHOOK
T 214-747-6300
FOOD SERVICE
FOOD DESIGN PROFESSIONAL
T 281-350-2323

FRIENDSWOOD HIGH SCHOOL ADDITIONS AND RENOVATIONS

702 Greenbriar Dr
Friendswood, TX 77546

ISSUE FOR PROPOSAL

KEY PLAN

NORTH: PLAN TRUE

STATE OF TEXAS
JOHN R. KUBALA
106120
LICENSED PROFESSIONAL ENGINEER
02/14/2022
Kubala Engineers
F-3709

CLIENT
FRIENDSWOOD ISD

DATE	PROJECT NUMBER
02/02/2022	20381

DRAWING HISTORY

No.	Description	Date
2	ADDENDUM #2	02/14/2022

ISSUE FOR PROPOSAL

FOUNDATION AND 1ST FLOOR PLAN - AREA T

S-101T

File Path: C:_Revit\Local\ST21-20381-FHS_Central_amer.taghieb\LLC29.rvt

CHECKED BY:
Checker
DRAWN BY:
Author
Plot Stamp:
2/14/2022 6:44:07 PM

2ND FLOOR - FRAMING PLAN - AREA E

S-102E

FOR BLUEBEAM LABELING/OCR:

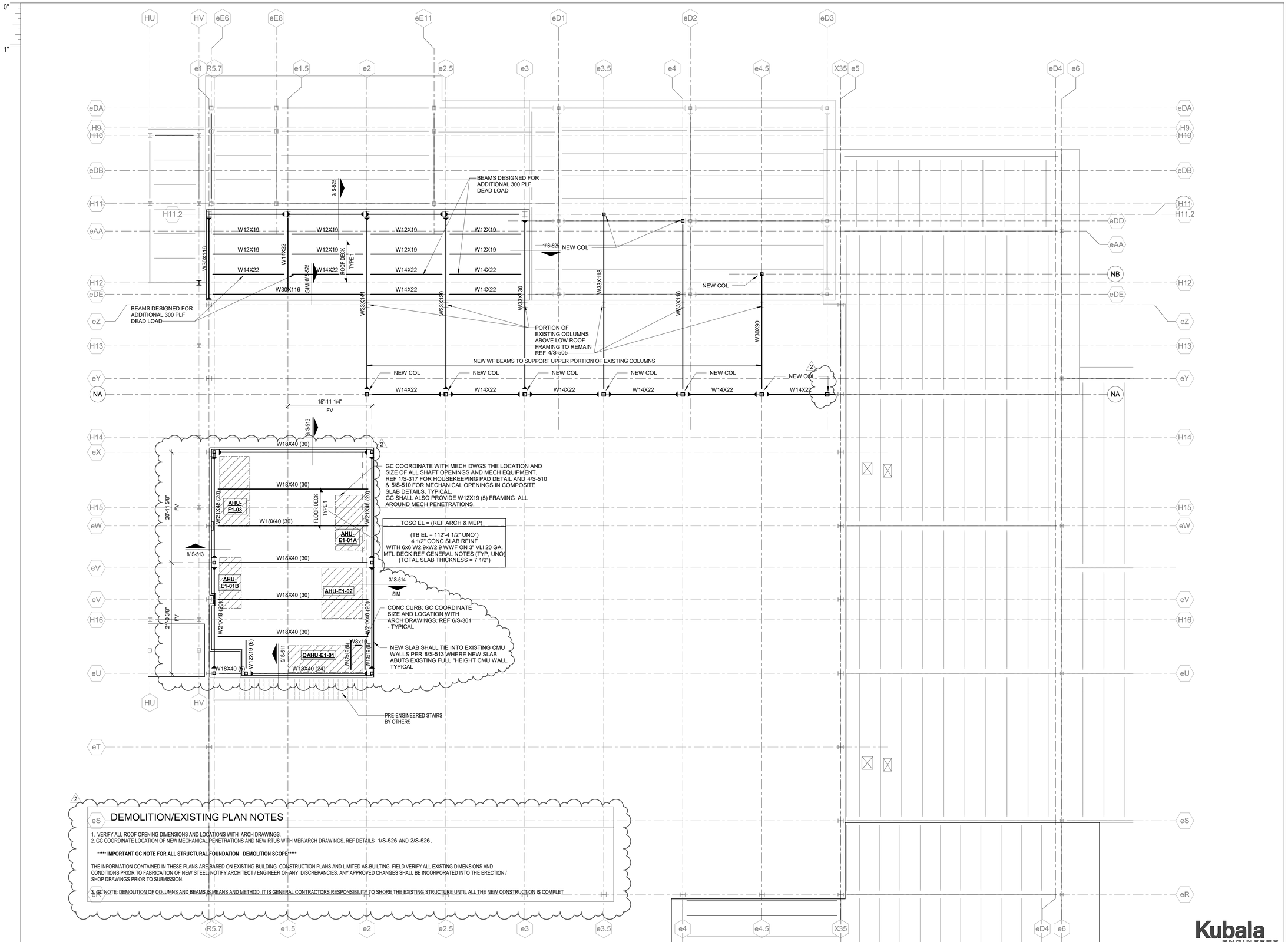

DEMOLITION/EXISTING PLAN NOTES

1. VERIFY ALL ROOF OPENING DIMENSIONS AND LOCATIONS WITH ARCH DRAWINGS.
2. GC COORDINATE LOCATION OF NEW MECHANICAL PENETRATIONS AND NEW RTUS WITH MEP/ARCH DRAWINGS. REF DETAILS 1/S-526 AND 2/S-526 .

******* IMPORTANT GC NOTE FOR ALL STRUCTURAL FOUNDATION DEMOLITION SCOPE*******

THE INFORMATION CONTAINED IN THESE PLANS ARE BASED ON EXISTING BUILDING CONSTRUCTION PLANS AND LIMITED AS-BUILTING. FIELD VERIFY ALL EXISTING DIMENSIONS AND CONDITIONS PRIOR TO FABRICATION OF NEW STEEL. NOTIFY ARCHITECT / ENGINEER OF ANY DISCREPANCIES. ANY APPROVED CHANGES SHALL BE INCORPORATED INTO THE ERECTION / SHOP DRAWINGS PRIOR TO SUBMISSION.

3. GC NOTE: DEMOLITION OF COLUMNS AND BEAMS IS MEANS AND METHOD. IT IS GENERAL CONTRACTORS RESPONSIBILITY TO SHORE THE EXISTING STRUCTURE UNTIL ALL THE NEW CONSTRUCTION IS COMPLET

1 2ND FLOOR - FRAMING PLAN - AREA E
1/8" = 1'-0"

File Path: C:_Revit\Local\ST21-20381-FHS_Central_amer.taghleb\LLC29.rvt

CHECKED BY:
Checker
DRAWN BY:
Author
Plot Stamp:
2/14/2022 6:44:09 PM

PBK

ARCHITECT PBK Architects, Inc.
PBK.com
HOUSTON
11 Greenway Plaza, 22nd Floor
Houston, TX 77046
713-965-0608 P
713-961-4571 F
TX Firm: BR 1608

CIVIL
DIG
T 713-965-0608
SPORTS
PBK SPORTS
T 281-528-1697
STRUCTURAL
KUBALA ENGINEERS
T 800-248-3674
MEPT
LEAF ENGINEERS
T 713-940-3300
ENVELOPE
BEAM
T 713-940-3201
AV / ACOUSTIC
JAFFE HOLDEN
T 713-807-7100
THEATER
SCHULER SHOOK
T 214-747-5300
FOOD SERVICE
FOOD DESIGN PROFESSIONAL
T 281-350-2323

FRIENDSWOOD HIGH SCHOOL ADDITIONS AND RENOVATIONS

702 Greenbriar Dr
Friendswood, TX 77546

ISSUE FOR PROPOSAL

KEY PLAN

NORTH: PLAN TRUE

STATE OF TEXAS
JOHN R. KUBALA
106120
LICENSED PROFESSIONAL ENGINEER
02/14/2022
Kubala Engineers
F-3709

CLIENT
FRIENDSWOOD ISD

DATE	PROJECT NUMBER
02/02/2022	20381

DRAWING HISTORY

No.	Description	Date
2	ADDENDUM #2	02/14/2022

ISSUE FOR PROPOSAL

2ND FLOOR - FRAMING PLAN - AREA E

Kubala ENGINEERS
Ph: 800.248.3674
www.kubalaengineers.com
TX. REG. NO. F-3709

S-102E

LOW ROOF FRAMING PLAN - AREA P

S-102P

FOR BLUEBEAM LABELING/OCR:

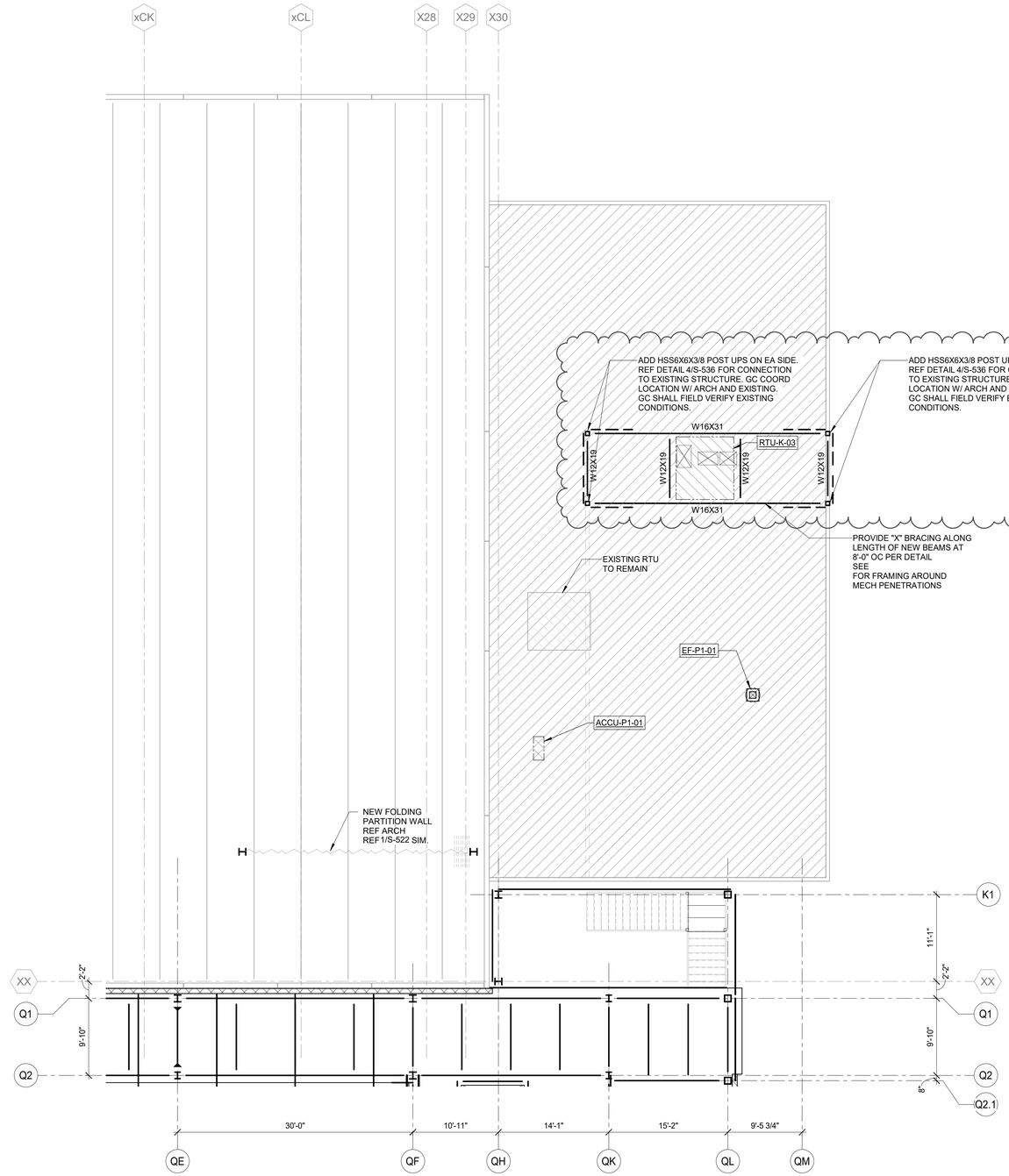

1 EXSTING LOW ROOF FRAMING PLAN -AREA P

1/8" = 1'-0"

DEMOLITION/EXISTING PLAN NOTES

1. VERIFY ALL ROOF OPENING DIMENSIONS AND LOCATIONS WITH ARCH DRAWINGS.
2. GC COORDINATE LOCATION OF NEW MECHANICAL PENETRATIONS AND NEW RTUS WITH MEP/ARCH DRAWINGS. REF DETAILS 1/S-526 AND 2/S-526.

******* IMPORTANT GC NOTE FOR ALL STRUCTURAL FOUNDATION DEMOLITION SCOPE*******

THE INFORMATION CONTAINED IN THESE PLANS ARE BASED ON EXISTING BUILDING CONSTRUCTION PLANS AND LIMITED AS-BUILTING. FIELD VERIFY ALL EXISTING DIMENSIONS AND CONDITIONS PRIOR TO FABRICATION OF NEW STEEL. NOTIFY ARCHITECT / ENGINEER OF ANY DISCREPANCIES. ANY APPROVED CHANGES SHALL BE INCORPORATED INTO THE ERECTION / SHOP DRAWINGS PRIOR TO SUBMISSION.

3. GC NOTE: DEMOLITION OF COLUMNS AND BEAMS IS MEANS AND METHOD. IT IS GENERAL CONTRACTORS RESPONSIBILITY TO SHORE THE EXISTING STRUCTURE UNTIL ALL THE NEW CONSTRUCTION IS COMPLET

Kubala ENGINEERS
Ph: 800.248.3674
www.kubalaengineers.com
TX. REG. NO. F-3709

PBK

ARCHITECT PBK Architects, Inc.
PBK.com
HOUSTON
11 Greenway Plaza, 22nd Floor
Houston, TX 77046
713-965-0608 P
713-961-4571 F
TX Firm: BR 1608

CIVIL
DIG
T 713-965-0608
SPORTS
PBK SPORTS
T 281-528-1697
STRUCTURAL
KUBALA ENGINEERS
T 800-248-3674
MEPT
LEAF ENGINEERS
T 713-940-3300
ENVELOPE
BEAM
T 713-940-3201
AV / ACOUSTIC
JAFFE HOLDEN
T 713-807-7100
THEATER
SCHULER SHOOK
T 214-747-5300
FOOD SERVICE
FOOD DESIGN PROFESSIONAL
T 281-350-2323

FRIENDSWOOD HIGH SCHOOL ADDITIONS AND RENOVATIONS

702 Greenbriar Dr
Friendswood, TX 77546

ISSUE FOR PROPOSAL

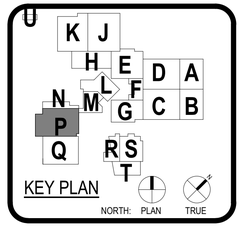

STATE OF TEXAS
JOHN R. KUBALA
106120
LICENSED PROFESSIONAL ENGINEER
02/14/2022
Kubala Engineers
F-3709

CLIENT
FRIENDSWOOD ISD

DATE	PROJECT NUMBER
02/02/2022	20381

DRAWING HISTORY

No.	Description	Date
2	ADDENDUM #2	02/14/2022

ISSUE FOR PROPOSAL

LOW ROOF FRAMING PLAN - AREA P

S-102P

File Path: C:_RevitLocal\ST21-20381-FHS_Central_amer.taghlebiLLC29.rvt

CHECKED BY:
Checker
DRAWN BY:
Author
Plot Stamp:
2/14/2022 6:44:11 PM

2ND FLOOR - FRAMING PLAN - AREA Q

S-102Q

FOR BLUEBEAM LABELING/OCR:

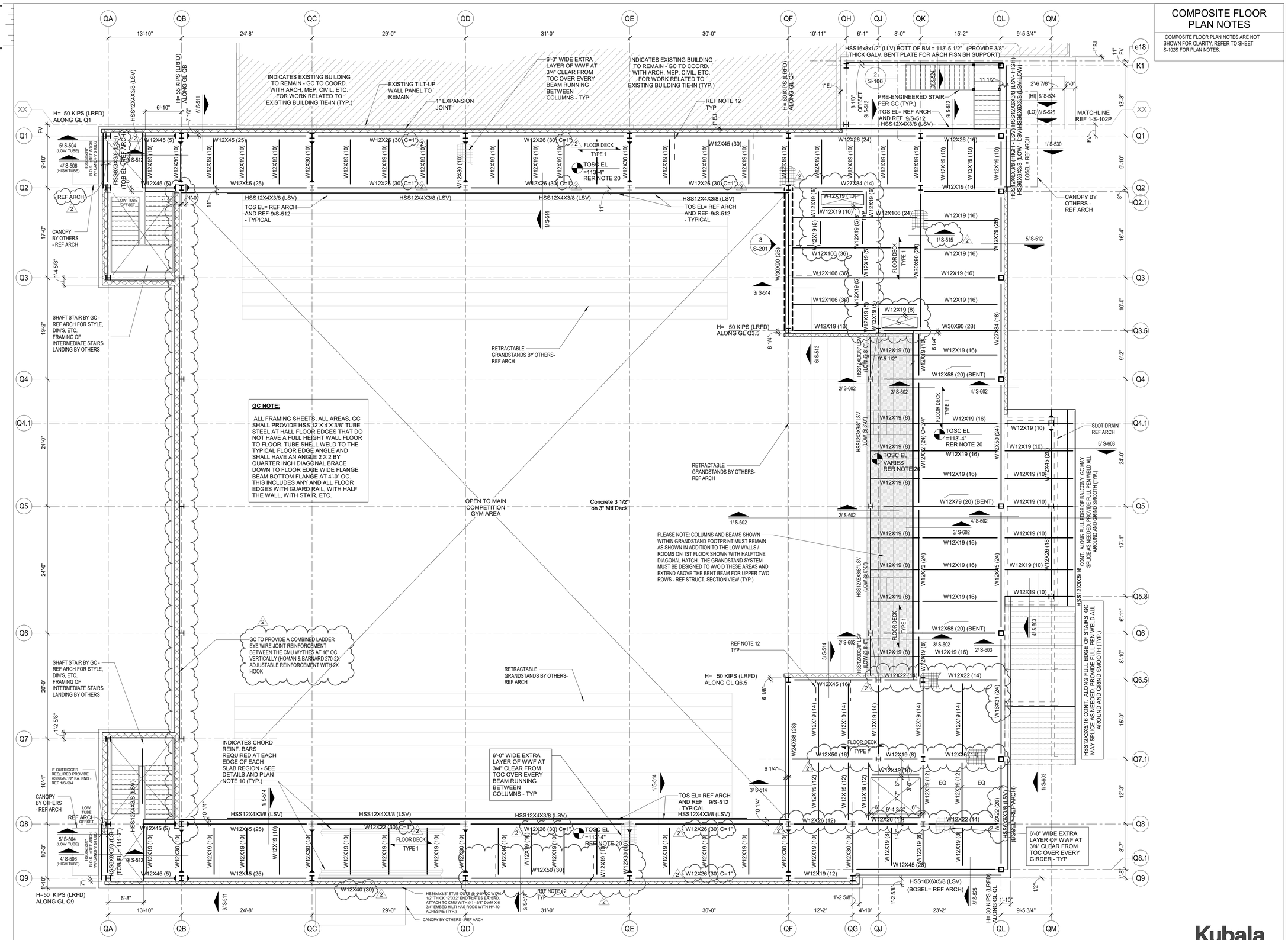

1 2ND FLOOR - FRAMING PLAN - AREA Q

1/8" = 1'-0"

COMPOSITE FLOOR PLAN NOTES

COMPOSITE FLOOR PLAN NOTES ARE NOT SHOWN FOR CLARITY. REFER TO SHEET S-102S FOR PLAN NOTES.

PBK

ARCHITECT
PBK Architects, Inc.
PBK.com
HOUSTON
11 Greenway Plaza, 22nd Floor
Houston, TX 77046
713-965-0608 P
713-961-4571 F
TX Firm: BR 1608

CIVIL
DIG
T 713-965-0608
SPORTS
PBK SPORTS
T 281-528-1697
STRUCTURAL
KUBALA ENGINEERS
T 800-248-3674
MEPT
LEAF ENGINEERS
T 713-940-3300
ENVELOPE
BEAM
T 713-940-3201
AV / ACOUSTIC
JAFFE HOLDEN
T 713-807-7100
THEATER
SCHULER SHOOK
T 214-747-8300
FOOD SERVICE
FOOD DESIGN PROFESSIONAL
T 281-350-2323

FRIENDSWOOD HIGH SCHOOL ADDITIONS AND RENOVATIONS

702 Greenbriar Dr
Friendswood, TX 77546

ISSUE FOR PROPOSAL

KEY PLAN

NORTH: PLAN TRUE

STATE OF TEXAS
JOHN R. KUBALA
106120
02/14/2022
Kubala Engineers
F-3709

CLIENT
FRIENDSWOOD ISD

DATE	PROJECT NUMBER
02/02/2022	20381

DRAWING HISTORY

No.	Description	Date
2	ADDENDUM #2	02/14/2022

ISSUE FOR PROPOSAL

2ND FLOOR - FRAMING PLAN - AREA Q

S-102Q

Kubala ENGINEERS
Ph: 800.248.3674
www.kubalaengineers.com
TX. REG. NO. F-3709

File Path: C:_Revit\Local\ST21-20381-FHS_Central_amer.taghebiLLC29.rvt

CHECKED BY:
Checker
DRAWN BY:
Author
Plot Stamp:
2/14/2022 6:44:14 PM

2ND FLOOR- FRAMING PLAN - AREA R

S-102R

FOR BLUEBEAM LABELING/OCR:

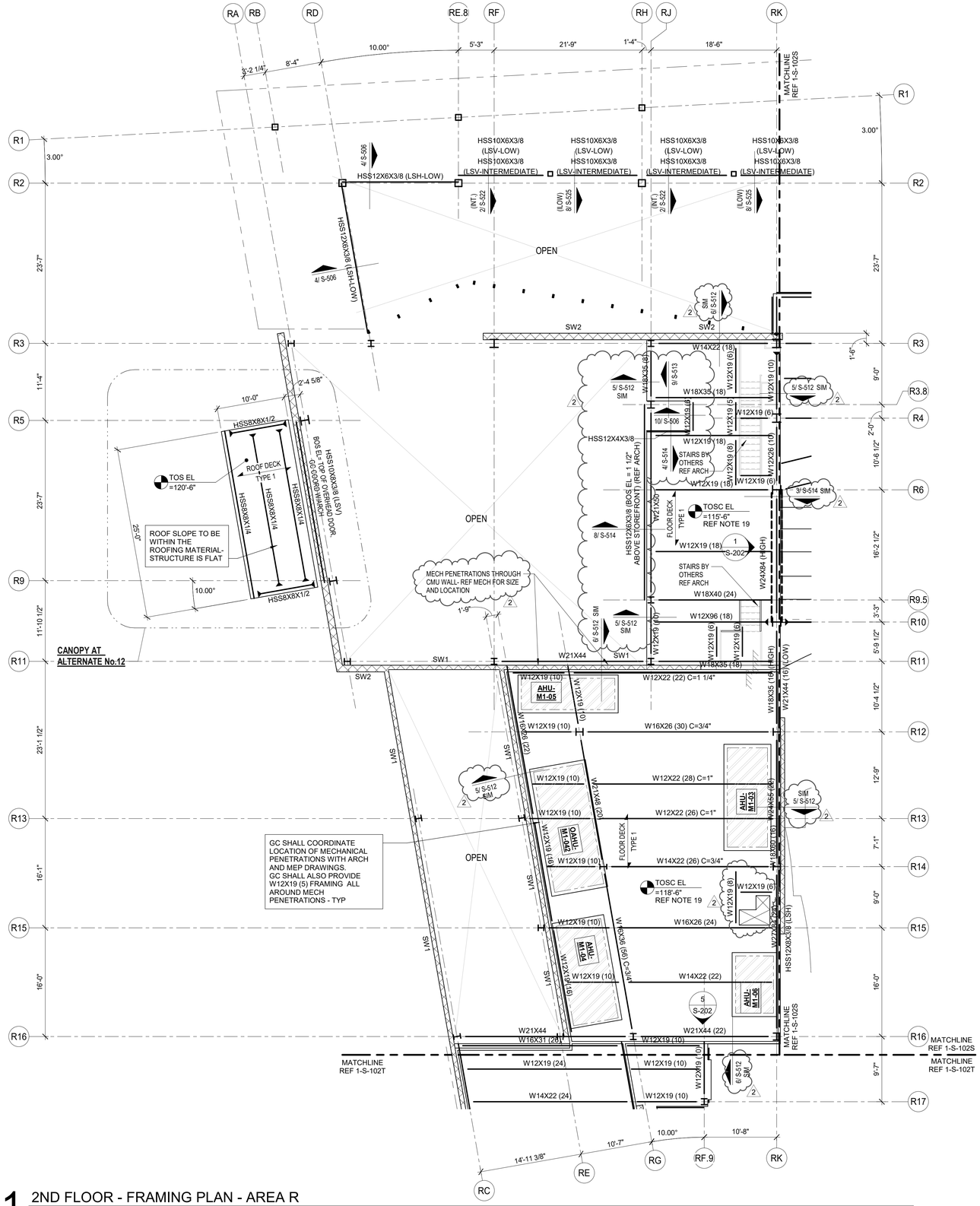

1 2ND FLOOR - FRAMING PLAN - AREA R
1/8" = 1'-0"

COMPOSITE FLOOR PLAN NOTES

1. REF PLAN FOR TOP OF SLAB ELEVATION.
2. ALL ELEVATIONS ARE BASED ON TOSC EL = 100'-0"
3. STEEL DECK SHALL BE PLACED WITH TWO-SPAN CONDITION MINIMUM. NO SINGLE SPANS ARE ALLOWED WITHOUT THE WRITTEN APPROVAL OF THE ENGINEER-OF-RECORD.
4. COMPOSITE BEAM CONSTRUCTION IS UNSHORED.
5. DETAILING OF ALL MEMBER CONNECTIONS TO THE SUPPORTS SHALL BE PERFORMED TO SATISFY LATEST OSHA ERECTION REQUIREMENTS.
6. TOS EL = BOTTOM OF DECK.
7. UNLESS SHOWN OTHERWISE, STEEL BEAMS OR JOISTS ARE CENTERED ON AND EQUALLY SPACED BETWEEN COLUMN CENTERLINES.
8. ALL STRUCTURAL STEEL THAT IS PERMANENTLY EXPOSED TO THE EXTERIOR OR IS PERMANENTLY IN UNCONDITIONED SPACE SHALL BE HOT-DIPPED GALVANIZED.
9. REFER TO MECHANICAL, ELECTRICAL, AND PLUMBING DRAWINGS FOR PENETRATIONS NOT SHOWN. REFER TO TYPICAL DETAILS FOR ADDITIONAL REINFORCEMENT REQUIREMENTS AT OPENINGS.
10. PROVIDE ADDITIONAL (5) - #6 CONT. BARS IN COMPOSITE SLAB ALONG FULL PERIMETER OF SLAB AND AROUND OPENINGS. EXTEND BARS 10'-0" PAST CORNERS OF OPENINGS. PROVIDE STD HOOK AT TERMINATION ENDS. ALL LAPS IN REINFORCING SHALL BE WITH MECHANICAL COUPLERS OR 20'-0" LAP SPLICE (TYP).
11. CONTRACTOR TO VERIFY ALL SLAB EDGE DIMENSIONS WITH ARCHITECTURAL DRAWINGS PRIOR TO CONSTRUCTION.
12. INDICATES WIND BRACE BEAM BOTTOM FLANGE BRACING PER 1/S-510 TYP ALONG ENTIRE GRID AT ALL BRACE FRAMES. NOT SHOWN IN PLAN FOR CLARITY.
13. REF DETAIL 7/S-511 FOR ADDITIONAL REINF UNDER INTERIOR CMU WALLS PARALLEL TO DECK SPAN. GC TO COORDINATE THE LOCATION OF ALL CMU WALLS WITH ARCH DRAWINGS.
14. REF S-000 SERIES DRAWINGS FOR GENERAL NOTES AND TYP DETAILS.
15. REF S-200 SERIES DRAWINGS FOR STEEL BRACE ELEVATIONS AND DETAILS.
16. REF S-400 SERIES DRAWINGS FOR CMU DETAILS.
17. REF S-500 SERIES DRAWINGS FOR STEEL FRAMING DETAILS.
18. ▨ ALL CMU SHOWN ON PLAN ARE PART OF THE STRUCTURAL LATERAL FORCE RESISTING SYSTEM AND SUPPORTS GRAVITY LOADS. NON-STRUCTURAL CMU EXISTS IN OTHER LOCATION (REF ARCH DWGS). A 3/8" VERT CONTROL JOINT SHALL BE PROVIDED WHEREVER STRUCTURAL AND NON-STRUCTURAL CMU ABUT.
19. FLOOR STRUCTURE CONSISTS OF 4 1/2" NORMAL WEIGHT CONCRETE ON 3" DEEP VLI 20 GAGE GALVANIZED (G90) COMPOSITE STEEL DECK (7 1/2" TOTAL THICKNESS). STEEL DECK SHALL BE PLACED WITH TWO-SPAN CONDITION MINIMUM. NO SINGLE SPANES ARE ALLOWED WITHOUT WRITTEN APPROVAL OF ENGINEER-OF-RECORD. COMPOSITE SLAB SHALL BE REINFORCED WITH WWF 6x6-W2.9xW2.9; UNLESS NOTED OTHERWISE (PAC BUILDING)
20. FLOOR STRUCTURE CONSISTS OF 3 1/2" NORMAL WEIGHT CONCRETE ON 3" DEEP VLI 20 GAGE GALVANIZED (G90) COMPOSITE STEEL DECK (6 1/2" TOTAL THICKNESS). STEEL DECK SHALL BE PLACED WITH TWO-SPAN CONDITION MINIMUM. NO SINGLE SPANES ARE ALLOWED WITHOUT WRITTEN APPROVAL OF ENGINEER-OF-RECORD. COMPOSITE SLAB SHALL BE REINFORCED WITH WWF 6x6-W2.9xW2.9; UNLESS NOTED OTHERWISE. (GYM BUILDING)

PBK

ARCHITECT PBK Architects, Inc.
PBK.com
HOUSTON
11 Greenway Plaza, 22nd Floor
Houston, TX 77046
713-965-0608 P
713-961-4571 F
TX Firm: BR 1608

CIVIL
DIG
T 713-965-0608
SPORTS
PBK SPORTS
T 281-528-1697
STRUCTURAL
KUBALA ENGINEERS
T 800-248-3674
MEPT
LEAF ENGINEERS
T 713-940-3300
ENVELOPE
BEAM
T 713-940-3201
AV / ACOUSTIC
JAFFE HOLDEN
T 713-807-7100
THEATER
SCHULER SHOOK
T 214-747-5300
FOOD SERVICE
FOOD DESIGN PROFESSIONAL
T 281-350-2323

FRIENDSWOOD HIGH SCHOOL ADDITIONS AND RENOVATIONS

702 Greenbriar Dr
Friendswood, TX 77546

ISSUE FOR PROPOSAL

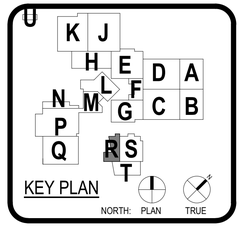

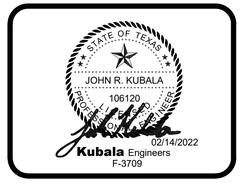

CLIENT
FRIENDSWOOD ISD

DATE	PROJECT NUMBER
02/02/2022	20381

DRAWING HISTORY

No.	Description	Date
2	ADDENDUM #2	02/14/2022

ISSUE FOR PROPOSAL

2ND FLOOR- FRAMING PLAN - AREA R

S-102R

Kubala ENGINEERS
Ph: 800.248.3674
www.kubalaengineers.com
TX. REG. NO. F-3709

File Path: C:_Revit\Local\ST21-20381-FHS_Central_amer.taghleb\LLC29.rvt

CHECKED BY:
Checker
DRAWN BY:
Author
Plot Stamp:
2/14/2022 6:44:16 PM

2ND FLOOR- FRAMING PLAN - AREA S

S-102S

FOR BLUEBEAM LABELING/OCR:

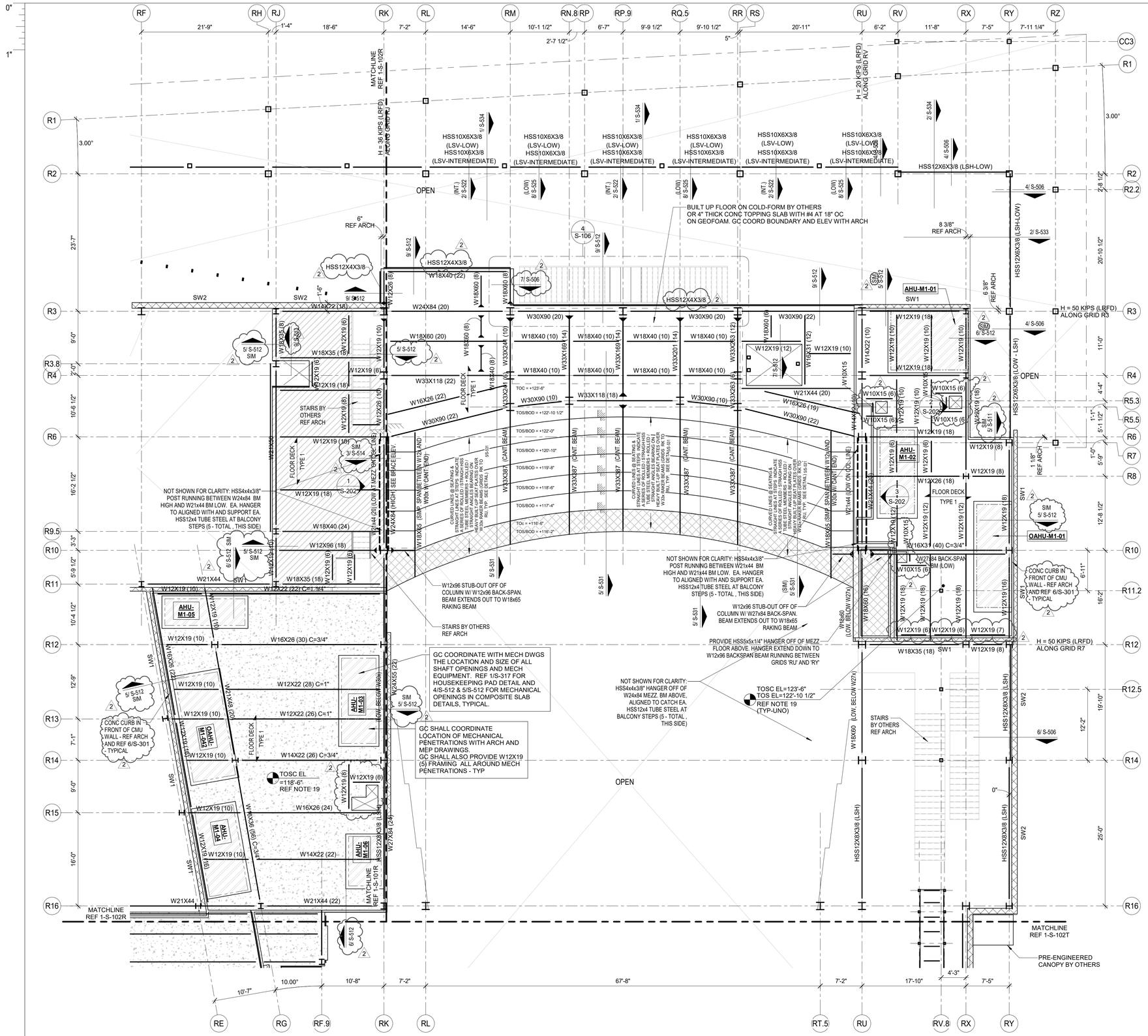

1 2ND FLOOR - FRAMING PLAN - AREA S
1/8" = 1'-0"

COMPOSITE FLOOR PLAN NOTES

1. REF PLAN FOR TOP OF SLAB ELEVATION.
2. ALL ELEVATIONS ARE BASED ON TOSC EL = 100'-0"
3. STEEL DECK SHALL BE PLACED WITH TWO-SPAN CONDITION MINIMUM. NO SINGLE SPANS ARE ALLOWED WITHOUT THE WRITTEN APPROVAL OF THE ENGINEER-OF-RECORD.
4. COMPOSITE BEAM CONSTRUCTION IS UNSHORED.
5. DETAILING OF ALL MEMBER CONNECTIONS TO THE SUPPORTS SHALL BE PERFORMED TO SATISFY LATEST OSHA ERECTION REQUIREMENTS.
6. TOS EL = BOTTOM OF DECK.
7. UNLESS SHOWN OTHERWISE, STEEL BEAMS OR JOISTS ARE CENTERED ON AND EQUALLY SPACED BETWEEN COLUMN CENTERLINES.
8. ALL STRUCTURAL STEEL THAT IS PERMANENTLY EXPOSED TO THE EXTERIOR OR IS PERMANENTLY IN UNCONDITIONED SPACE SHALL BE HOT-DIPPED GALVANIZED.
9. REFER TO MECHANICAL, ELECTRICAL, AND PLUMBING DRAWINGS FOR PENETRATIONS NOT SHOWN. REFER TO TYPICAL DETAILS FOR ADDITIONAL REINFORCEMENT REQUIREMENTS AT OPENINGS.
10. PROVIDE ADDITIONAL (5) - #6 CONT. BARS IN COMPOSITE SLAB ALONG FULL PERIMETER OF SLAB AND AROUND OPENINGS. EXTEND BARS 10'-0" PAST CORNERS OF OPENINGS. PROVIDE STD HOOK AT TERMINATION ENDS. ALL LAPS IN REINFORCING SHALL BE WITH MECHANICAL COUPLERS OR 20'-0" LAP SPLICE (TYP).
11. CONTRACTOR TO VERIFY ALL SLAB EDGE DIMENSIONS WITH ARCHITECTURAL DRAWINGS PRIOR TO CONSTRUCTION.
12. INDICATES WIND BRACE BEAM BOTTOM FLANGE BRACING PER 1/S-510 TYP ALONG ENTIRE GRID AT ALL BRACE FRAMES. NOT SHOWN IN PLAN FOR CLARITY.
13. REF DETAIL 7/S-511 FOR ADDITIONAL REINF UNDER INTERIOR CMU WALLS PARALLEL TO DECK SPAN. GC TO COORDINATE THE LOCATION OF ALL CMU WALLS WITH ARCH DRAWINGS.
14. REF S-000 SERIES DRAWINGS FOR GENERAL NOTES AND TYP DETAILS.
15. REF S-200 SERIES DRAWINGS FOR STEEL BRACE ELEVATIONS AND DETAILS.
16. REF S-400 SERIES DRAWINGS FOR CMU DETAILS.
17. REF S-500 SERIES DRAWINGS FOR STEEL FRAMING DETAILS.
18. ALL CMU SHOWN ON PLAN ARE PART OF THE STRUCTURAL LATERAL FORCE RESISTING SYSTEM AND SUPPORTS GRAVITY LOADS. NON-STRUCTURAL CMU EXISTS IN OTHER LOCATION (REF ARCH DWGS). A 3/8" VERT CONTROL JOINT SHALL BE PROVIDED WHEREVER STRUCTURAL AND NON-STRUCTURAL CMU ABUT.
19. FLOOR STRUCTURE CONSISTS OF 4 1/2" NORMAL WEIGHT CONCRETE ON 3" DEEP VLI 20 GAGE GALVANIZED (G90) COMPOSITE STEEL DECK (7 1/2" TOTAL THICKNESS). STEEL DECK SHALL BE PLACED WITH TWO-SPAN CONDITION MINIMUM. NO SINGLE SPANES ARE ALLOWED WITHOUT WRITTEN APPROVAL OF ENGINEER-OF-RECORD. COMPOSITE SLAB SHALL BE REINFORCED WITH WWF 6x6-W2.9xW2.9; UNLESS NOTED OTHERWISE (PAC BUILDING)
20. FLOOR STRUCTURE CONSISTS OF 3 1/2" NORMAL WEIGHT CONCRETE ON 3" DEEP VLI 20 GAGE GALVANIZED (G90) COMPOSITE STEEL DECK (6 1/2" TOTAL THICKNESS). STEEL DECK SHALL BE PLACED WITH TWO-SPAN CONDITION MINIMUM. NO SINGLE SPANES ARE ALLOWED WITHOUT WRITTEN APPROVAL OF ENGINEER-OF-RECORD. COMPOSITE SLAB SHALL BE REINFORCED WITH WWF 6x6-W2.9xW2.9; UNLESS NOTED OTHERWISE. (GYM BUILDING)

SLAB LEGEND

NOTE: GC SHALL COORDINATE SLAB EDGES AND ELEVATIONS WITH ARCH DWGS.

- INDICATES 2ND LEVEL SLAB ; TOSC EL = REF PLAN
- INDICATES MEZZANINE SLAB ; TOSC EL = REF PLAN
- INDICATES LOW MEZZANINE SLAB ; TOSC EL = REF PLAN
- INDICATES BALCONY SLAB ; TOSC EL = REF PLAN

PBK

ARCHITECT PBK Architects, Inc.
PBK.com
HOUSTON
11 Greenway Plaza, 22nd Floor
Houston, TX 77046
713-965-0608 P
713-961-4571 F
TX Firm: BR 1608

CIVIL
DIG
T 713-965-0608
SPORTS
PBK SPORTS
T 281-528-1697
STRUCTURAL
KUBALA ENGINEERS
T 800-248-3674
MEPT
LEAF ENGINEERS
T 713-940-3300
ENVELOPE
BEAM
T 713-940-3201
AV / ACOUSTIC
JAFFE HOLDEN
T 713-807-7100
THEATER
SCHULER SHOOK
T 214-747-8300
FOOD SERVICE
FOOD DESIGN PROFESSIONAL
T 281-350-2323

FRIENDSWOOD HIGH SCHOOL ADDITIONS AND RENOVATIONS

702 Greenbriar Dr
Friendswood, TX 77546

ISSUE FOR PROPOSAL

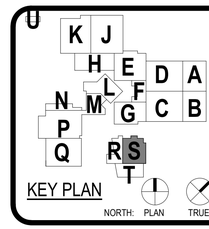

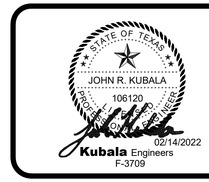

CLIENT
FRIENDSWOOD ISD

DATE	PROJECT NUMBER
02/02/2022	20381

DRAWING HISTORY

No.	Description	Date
2	ADDENDUM #2	02/14/2022

ISSUE FOR PROPOSAL

2ND FLOOR- FRAMING PLAN - AREA S

S-102S

Kubala ENGINEERS
Ph: 800.248.3674
www.kubalaengineers.com
TX. REG. NO. F-3709

File Path: C:_Revit\Local\ST21-20381-FHS_Central_amer.taghleb\LLC29.rvt

CHECKED BY:
Checker
DRAWN BY:
Author
Plot Stamp:
2/14/2022 6:44:19 PM

FOR BLUEBEAM LABELING/OCR:
S-102S-ALT
2ND FLOOR- FRAMING PLAN - AREA S (ALTERNATE No.12)

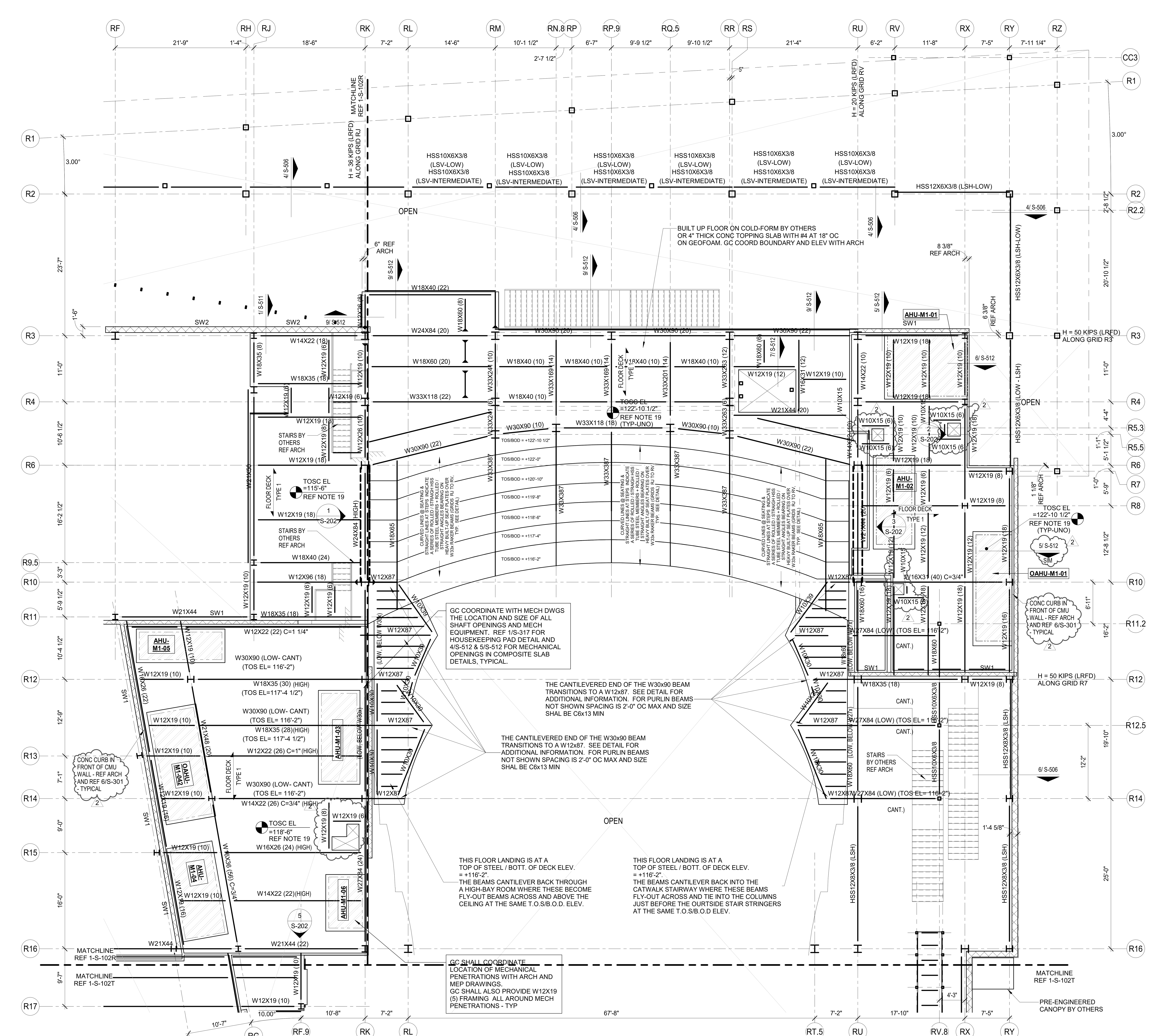

1 2ND FLOOR - FRAMING PLAN - AREA S (ALTERNATE No. 12)
1/8" = 1'-0"

REFER TO SHEET S-102S FOR ALL OTHER INFORMATION NOT ANNOTATED HERE.

COMPOSITE FLOOR PLAN NOTES

1. REF PLAN FOR TOP OF SLAB ELEVATION.
2. ALL ELEVATIONS ARE BASED ON TOSC EL = 100'-0"
3. STEEL DECK SHALL BE PLACED WITH TWO-SPAN CONDITION MINIMUM. NO SINGLE SPANS ARE ALLOWED WITHOUT THE WRITTEN APPROVAL OF THE ENGINEER-OF-RECORD.
4. COMPOSITE BEAM CONSTRUCTION IS UNSHORED.
5. DETAILING OF ALL MEMBER CONNECTIONS TO THE SUPPORTS SHALL BE PERFORMED TO SATISFY LATEST OSHA ERECTION REQUIREMENTS.
6. TOS EL = BOTTOM OF DECK.
7. UNLESS SHOWN OTHERWISE, STEEL BEAMS OR JOISTS ARE CENTERED ON AND EQUALLY SPACED BETWEEN COLUMN CENTERLINES.
8. ALL STRUCTURAL STEEL THAT IS PERMANENTLY EXPOSED TO THE EXTERIOR OR IS PERMANENTLY IN UNCONDITIONED SPACE SHALL BE HOT-DIPPED GALVANIZED.
9. REFER TO MECHANICAL, ELECTRICAL, AND PLUMBING DRAWINGS FOR PENETRATIONS NOT SHOWN. REFER TO TYPICAL DETAILS FOR ADDITIONAL REINFORCEMENT REQUIREMENTS AT OPENINGS.
10. PROVIDE ADDITIONAL (5) - #6 CONT. BARS IN COMPOSITE SLAB ALONG FULL PERIMETER OF SLAB AND AROUND OPENINGS. EXTEND BARS 10'-0" PAST CORNERS OF OPENINGS. PROVIDE STD HOOK AT TERMINATION ENDS. ALL LAPS IN REINFORCING SHALL BE WITH MECHANICAL COUPLERS OR 20'-0" LAP SPLICE (TYP).
11. CONTRACTOR TO VERIFY ALL SLAB EDGE DIMENSIONS WITH ARCHITECTURAL DRAWINGS PRIOR TO CONSTRUCTION.
12. INDICATES WIND BRACE BEAM BOTTOM FLANGE BRACING PER 1/S-510 TYP ALONG ENTIRE GRID AT ALL BRACE FRAMES. NOT SHOWN IN PLAN FOR CLARITY.
13. REF DETAIL 7/S-511 FOR ADDITIONAL REINF UNDER INTERIOR CMU WALLS PARALLEL TO DECK SPAN. GC TO COORDINATE THE LOCATION OF ALL CMU WALLS WITH ARCH DRAWINGS.
14. REF S-000 SERIES DRAWINGS FOR GENERAL NOTES AND TYP DETAILS.
15. REF S-200 SERIES DRAWINGS FOR STEEL BRACE ELEVATIONS AND DETAILS.
16. REF S-400 SERIES DRAWINGS FOR CMU DETAILS.
17. REF S-500 SERIES DRAWINGS FOR STEEL FRAMING DETAILS.
18. ALL CMU SHOWN ON PLAN ARE PART OF THE STRUCTURAL LATERAL FORCE RESISTING SYSTEM AND SUPPORTS GRAVITY LOADS. NON-STRUCTURAL CMU EXISTS IN OTHER LOCATION (REF ARCH DWGS). A 3/8" VERT CONTROL JOINT SHALL BE PROVIDED WHEREVER STRUCTURAL AND NON-STRUCTURAL CMU ABUT.
19. FLOOR STRUCTURE CONSISTS OF 4 1/2" NORMAL WEIGHT CONCRETE ON 3" DEEP VLI 20 GAGE GALVANIZED (G90) COMPOSITE STEEL DECK (7 1/2" TOTAL THICKNESS). STEEL DECK SHALL BE PLACED WITH TWO-SPAN CONDITION MINIMUM. NO SINGLE SPANES ARE ALLOWED WITHOUT WRITTEN APPROVAL OF ENGINEER-OF-RECORD. COMPOSITE SLAB SHALL BE REINFORCED WITH WWF 6x6-W2.9xW2.9; UNLESS NOTED OTHERWISE (PAC BUILDING)
20. FLOOR STRUCTURE CONSISTS OF 3 1/2" NORMAL WEIGHT CONCRETE ON 3" DEEP VLI 20 GAGE GALVANIZED (G90) COMPOSITE STEEL DECK (6 1/2" TOTAL THICKNESS). STEEL DECK SHALL BE PLACED WITH TWO-SPAN CONDITION MINIMUM. NO SINGLE SPANES ARE ALLOWED WITHOUT WRITTEN APPROVAL OF ENGINEER-OF-RECORD. COMPOSITE SLAB SHALL BE REINFORCED WITH WWF 6x6-W2.9xW2.9; UNLESS NOTED OTHERWISE. (GYM BUILDING)

SLAB LEGEND

NOTE: GC SHALL COORDINATE SLAB EDGES AND ELEVATIONS WITH ARCH DWGS.

- INDICATES 2ND LEVEL SLAB ; TOSC EL = REF PLAN
- INDICATES MEZZANINE SLAB ; TOSC EL = REF PLAN
- INDICATES LOW MEZZANINE SLAB ; TOSC EL = REF PLAN
- INDICATES BALCONY SLAB ; TOSC EL = REF PLAN

ARCHITECT PBK Architects, Inc.
HOUSTON
11 Greenway Plaza, 22nd Floor
Houston, TX 77046
713-965-0608 P
713-961-4571 F
TX Firm: BR 1608
PBK.com

CIVIL
DIG
T 713-965-0608
SPORTS
PBK SPORTS
T 281-528-1697
STRUCTURAL
KUBALA ENGINEERS
T 800-248-3674
MEPT
LEAF ENGINEERS
T 713-940-3300
ENVELOPE
BEAM
T 713-940-3201
AV / ACOUSTIC
JAFFE HOLDEN
T 713-807-7100
THEATER
SCHULER SHOOK
T 214-747-8300
FOOD SERVICE
FOOD DESIGN PROFESSIONAL
T 281-350-2323

FRIENDSWOOD HIGH SCHOOL ADDITIONS AND RENOVATIONS

702 Greenbriar Dr
Friendswood, TX 77546
ISSUE FOR PROPOSAL

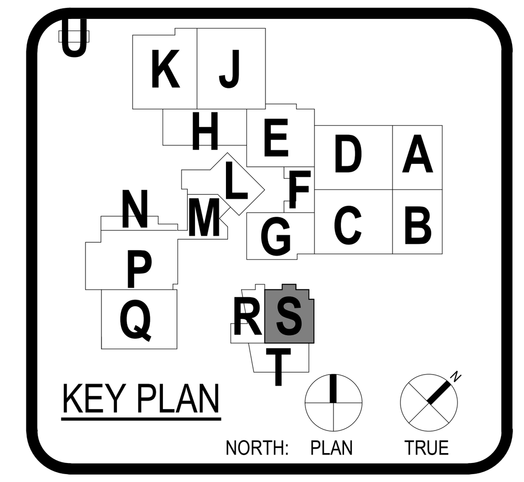

STATE OF TEXAS
JOHN R. KUBALA
106120
LICENSED PROFESSIONAL ENGINEER
02/14/2022
Kubala Engineers
F-3709

CLIENT
FRIENDSWOOD ISD

DATE	PROJECT NUMBER
02/02/2022	20381

DRAWING HISTORY

No.	Description	Date
2	ADDENDUM #2	02/14/2022

ISSUE FOR PROPOSAL

2ND FLOOR- FRAMING PLAN - AREA S (ALTERNATE No.12)

S-102S-ALT

Kubala ENGINEERS
Ph: 800.248.3674
www.kubalaengineers.com
TX. REG. NO. F-3709

File Path: C:_RevitLocal\ST21-20381-FHS_Central_amer.taghiebLLC29.rvt

CHECKED BY:
Checker
DRAWN BY:
Author
Plot Stamp:
2/14/2022 6:44:22 PM

2ND FLOOR- FRAMING PLAN - AREA T

S-102T

FOR BLUEBEAM LABELING/OCR:

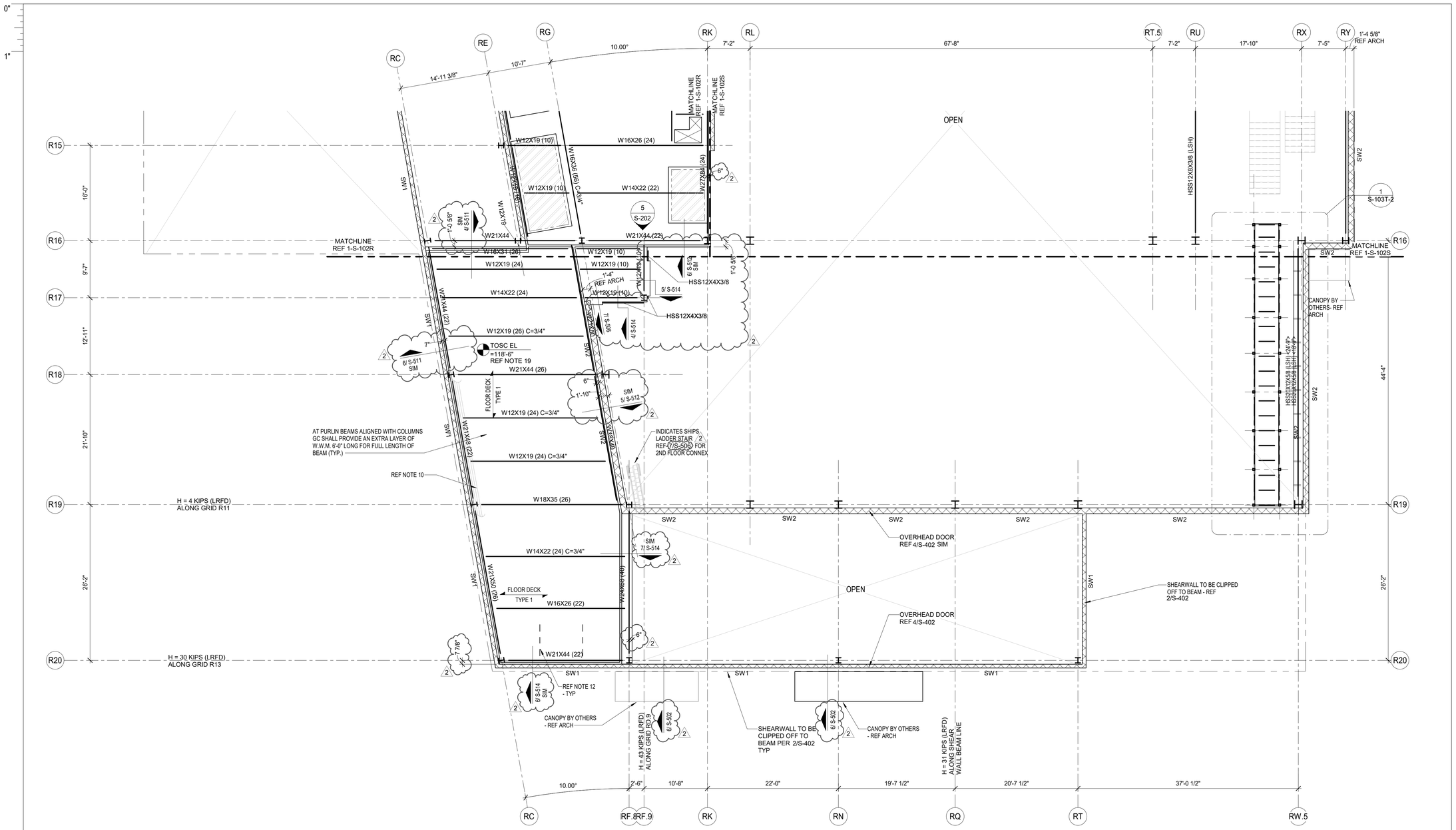

1 2ND FLOOR - FRAMING PLAN - AREA T

1/8" = 1'-0"

GC NOTE:

ALL FRAMING SHEETS, ALL AREAS, GC SHALL PROVIDE HSS 12 X 4 X 3/8" TUBE STEEL AT HALL FLOOR EDGES THAT DO NOT HAVE A FULL HEIGHT WALL FLOOR TO FLOOR. TUBE SHELL WELD TO THE TYPICAL FLOOR EDGE ANGLE AND SHALL HAVE AN ANGLE 2 X 2 BY QUARTER INCH DIAGONAL BRACE DOWN TO FLOOR EDGE WIDE FLANGE BEAM BOTTOM FLANGE AT 4'-0" OC. THIS INCLUDES ANY AND ALL FLOOR EDGES WITH GUARD RAIL, WITH HALF THE WALL, WITH STAIR, ETC.

COMPOSITE FLOOR PLAN NOTES

1. REF PLAN FOR TOP OF SLAB ELEVATION.
2. ALL ELEVATIONS ARE BASED ON TOSC EL = 100'-0"
3. STEEL DECK SHALL BE PLACED WITH TWO-SPAN CONDITION MINIMUM. NO SINGLE SPANS ARE ALLOWED WITHOUT THE WRITTEN APPROVAL OF THE ENGINEER-OF-RECORD.
4. COMPOSITE BEAM CONSTRUCTION IS UNSHORED.
5. DETAILING OF ALL MEMBER CONNECTIONS TO THE SUPPORTS SHALL BE PERFORMED TO SATISFY LATEST OSHA ERECTION REQUIREMENTS.
6. TOS EL = BOTTOM OF DECK.
7. UNLESS SHOWN OTHERWISE, STEEL BEAMS OR JOISTS ARE CENTERED ON AND EQUALLY SPACED BETWEEN COLUMN CENTERLINES.
8. ALL STRUCTURAL STEEL THAT IS PERMANENTLY EXPOSED TO THE EXTERIOR OR IS PERMANENTLY IN UNCONDITIONED SPACE SHALL BE HOT-DIPPED GALVANIZED.
9. REFER TO MECHANICAL, ELECTRICAL, AND PLUMBING DRAWINGS FOR PENETRATIONS NOT SHOWN. REFER TO TYPICAL DETAILS FOR ADDITIONAL REINFORCEMENT REQUIREMENTS AT OPENINGS.
10. PROVIDE ADDITIONAL (5) - #6 CONT. BARS IN COMPOSITE SLAB ALONG FULL PERIMETER OF SLAB AND AROUND OPENINGS. EXTEND BARS 10'-0" PAST CORNERS OF OPENINGS. PROVIDE STD HOOK AT TERMINATION ENDS. ALL LAPS IN REINFORCING SHALL BE WITH MECHANICAL COUPLERS OR 20'-0" LAP SPLICE (TYP).
11. CONTRACTOR TO VERIFY ALL SLAB EDGE DIMENSIONS WITH ARCHITECTURAL DRAWINGS PRIOR TO CONSTRUCTION.
12. INDICATES WIND BRACE BEAM BOTTOM FLANGE BRACING PER TYP 3/S-520 ALONG ENTIRE GRID AT ALL BRACE FRAMES. NOT SHOWN IN PLAN FOR CLARITY.
13. REF DETAIL 7/S-511 FOR ADDITIONAL REINF UNDER INTERIOR CMU WALLS PARALLEL TO DECK SPAN. GC TO COORDINATE THE LOCATION OF ALL CMU WALLS WITH ARCH DRAWINGS.
14. REF S0.xx SERIES DRAWINGS FOR GENERAL NOTES AND TYP DETAILS.
15. REF S2.xx SERIES DRAWINGS FOR STEEL BRACE ELEVATIONS AND DETAILS.
16. REF S4.xx SERIES DRAWINGS FOR CMU DETAILS.
17. REF S5.xx SERIES DRAWINGS FOR STEEL FRAMING DETAILS.
18. ALL CMU SHOWN ON PLAN ARE PART OF THE STRUCTURAL LATERAL FORCE RESISTING SYSTEM AND SUPPORTS GRAVITY LOADS. NON-STRUCTURAL CMU EXISTS IN OTHER LOCATION (REF ARCH DWGS). A 3/8" VERT CONTROL JOINT SHALL BE PROVIDED WHEREVER STRUCTURAL AND NON-STRUCTURAL CMU ABUT.

Kubala ENGINEERS
Ph: 800.248.3674
www.kubalaengineers.com
T.X. REG. NO. F-3709

File Path: C:_Revit\Local\ST21-20381-FHS_Central_amer.taghiebi.LLC29.rvt

CHECKED BY:
Checker
DRAWN BY:
Author
Plot Stamp:
2/14/2022 6:44:24 PM

PBK

ARCHITECT PBK Architects, Inc.
PBK.com
HOUSTON
11 Greenway Plaza, 22nd Floor
Houston, TX 77046
713-965-0608 P
713-961-4571 F
TX Firm: BR 1608

CIVIL
DIG
T 713-965-0608
SPORTS
PBK SPORTS
T 281-528-1697
STRUCTURAL
KUBALA ENGINEERS
T 800-248-3674
MEPT
LEAF ENGINEERS
T 713-940-3300
ENVELOPE
BEAM
T 713-940-3201
AV / ACOUSTIC
JAFFE HOLDEN
T 713-807-7100
THEATER
SCHULER SHOOK
T 214-747-5300
FOOD SERVICE
FOOD DESIGN PROFESSIONAL
T 281-350-2323

FRIENDSWOOD HIGH SCHOOL ADDITIONS AND RENOVATIONS

702 Greenbriar Dr
Friendswood, TX 77546

ISSUE FOR PROPOSAL

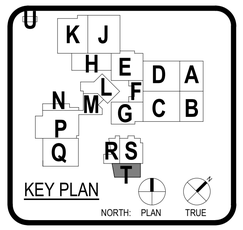

STATE OF TEXAS
JOHN R. KUBALA
106120
PROFESSIONAL ENGINEER
02/14/2022
Kubala Engineers
F-3709

CLIENT
FRIENDSWOOD ISD

DATE	PROJECT NUMBER
02/02/2022	20381

DRAWING HISTORY

No.	Description	Date
2	ADDENDUM #2	02/14/2022

ISSUE FOR PROPOSAL

2ND FLOOR- FRAMING PLAN - AREA T

S-102T

HIGH ROOF - FRAMING PLAN - AREA H

S-103H

FOR BLUEBEAM LABELING/OCR:

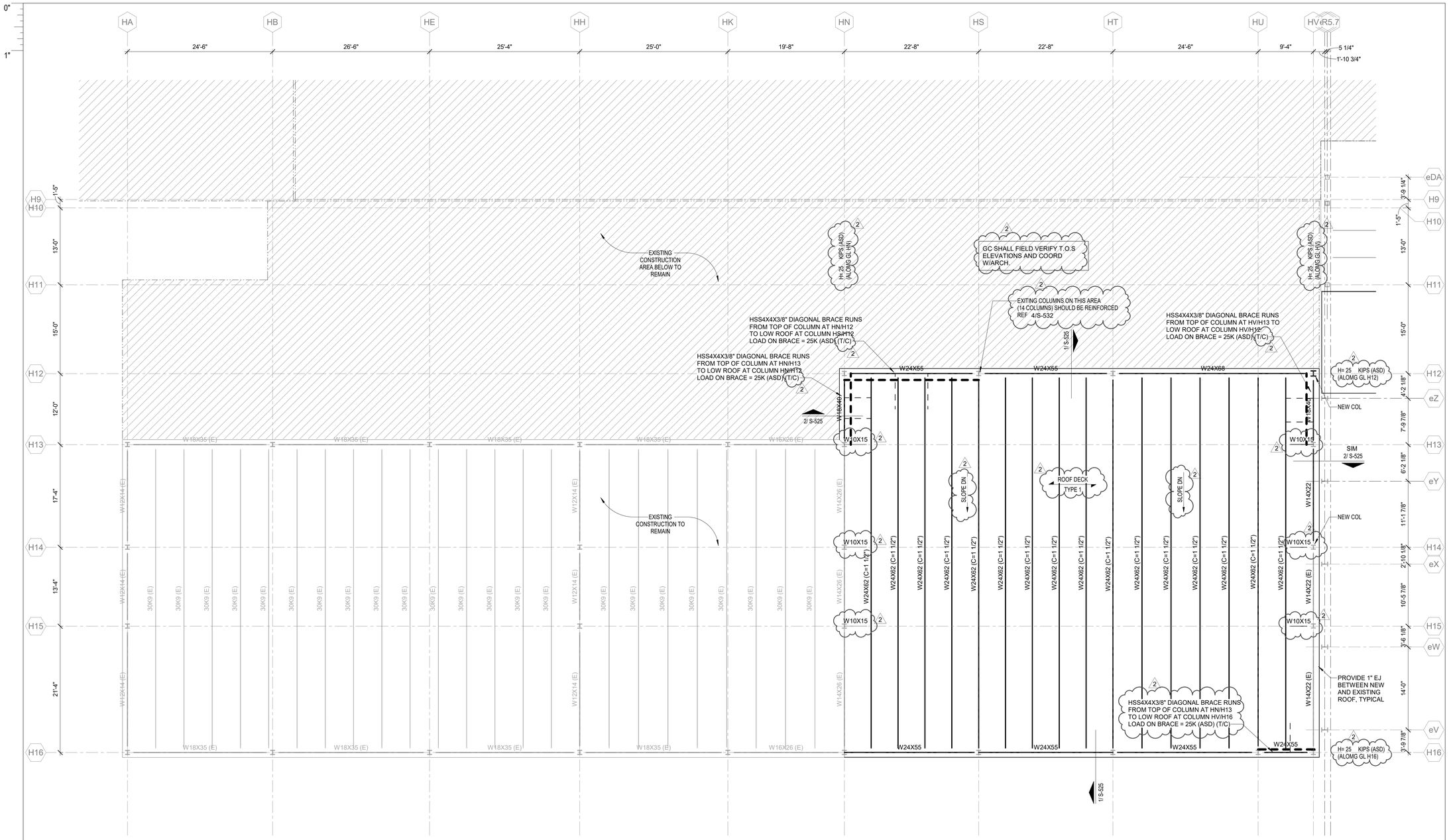

1 HIGH ROOF FRAMING PLAN - AREA H

1/8" = 1'-0"

DEMOLITION/EXISTING PLAN NOTES

1. VERIFY ALL ROOF OPENING DIMENSIONS AND LOCATIONS WITH ARCH DRAWINGS.
2. GC COORDINATE LOCATION OF NEW MECHANICAL PENETRATIONS AND NEW RTUS WITH MEP/ARCH DRAWINGS. REF DETAILS 1/S-526 AND 2/S-526 .

******* IMPORTANT GC NOTE FOR ALL STRUCTURAL FOUNDATION DEMOLITION SCOPE*******

THE INFORMATION CONTAINED IN THESE PLANS ARE BASED ON EXISTING BUILDING CONSTRUCTION PLANS AND LIMITED AS-BUILTING. FIELD VERIFY ALL EXISTING DIMENSIONS AND CONDITIONS PRIOR TO FABRICATION OF NEW STEEL. NOTIFY ARCHITECT / ENGINEER OF ANY DISCREPANCIES. ANY APPROVED CHANGES SHALL BE INCORPORATED INTO THE ERECTION / SHOP DRAWINGS PRIOR TO SUBMISSION.

2 3. GC NOTE: DEMOLITION OF COLUMNS AND BEAMS IS MEANS AND METHOD. IT IS GENERAL CONTRACTORS RESPONSIBILITY TO SHORE THE EXISTING STRUCTURE UNTIL ALL THE NEW CONSTRUCTION IS COMPLET

GC NOTE FOR THE BRIDGING

UPLIFT X-BRIDGING NOT SHOWN ON PLANS FOR CLARITY. GC SHALL PROVIDE X-BRIDGING BETWEEN ADJACENT WF BEAMS AT ROOF PER DETAIL 5/S-523

Kubala ENGINEERS
Ph: 800.248.3674
www.kubalaengineers.com
TX. REG. NO. F-3709

PBK

ARCHITECT PBK Architects, Inc.
PBK.com
HOUSTON
11 Greenway Plaza, 22nd Floor
Houston, TX 77046
713-965-0608 P
713-961-4571 F
TX Firm: BR 1608

CIVIL
DIG
T 713-965-0608
SPORTS
PBK SPORTS
T 281-528-1697
STRUCTURAL
KUBALA ENGINEERS
T 800-248-3674
MEPT
LEAF ENGINEERS
T 713-940-3300
ENVELOPE
BEAM
T 713-940-3201
AV / ACOUSTIC
JAFFE HOLDEN
T 713-807-7100
THEATER
SCHULER SHOOK
T 214-747-5300
FOOD SERVICE
FOOD DESIGN PROFESSIONAL
T 281-350-2323

FRIENDSWOOD HIGH SCHOOL ADDITIONS AND RENOVATIONS

702 Greenbriar Dr
Friendswood, TX 77546

ISSUE FOR PROPOSAL

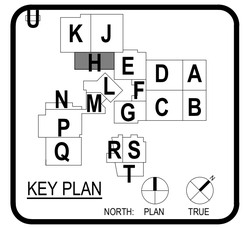

STATE OF TEXAS
JOHN R. KUBALA
106120
PROFESSIONAL ENGINEER
02/14/2022
Kubala Engineers
F-3709

CLIENT
FRIENDSWOOD ISD

DATE	PROJECT NUMBER
02/02/2022	20381

DRAWING HISTORY

No.	Description	Date
2	ADDENDUM #2	02/14/2022

ISSUE FOR PROPOSAL

HIGH ROOF - FRAMING PLAN - AREA H

S-103H

File Path: C:_Revit\Local\ST21-20381-FHS_Central_amer.taghieb.LLC29.rvt

CHECKED BY:
Checker
DRAWN BY:
Author
Plot Stamp:
2/14/2022 6:44:26 PM

ROOF - FRAMING PLAN - AREA Q

S-103Q

FOR BLUEBEAM LABELING/OCR:

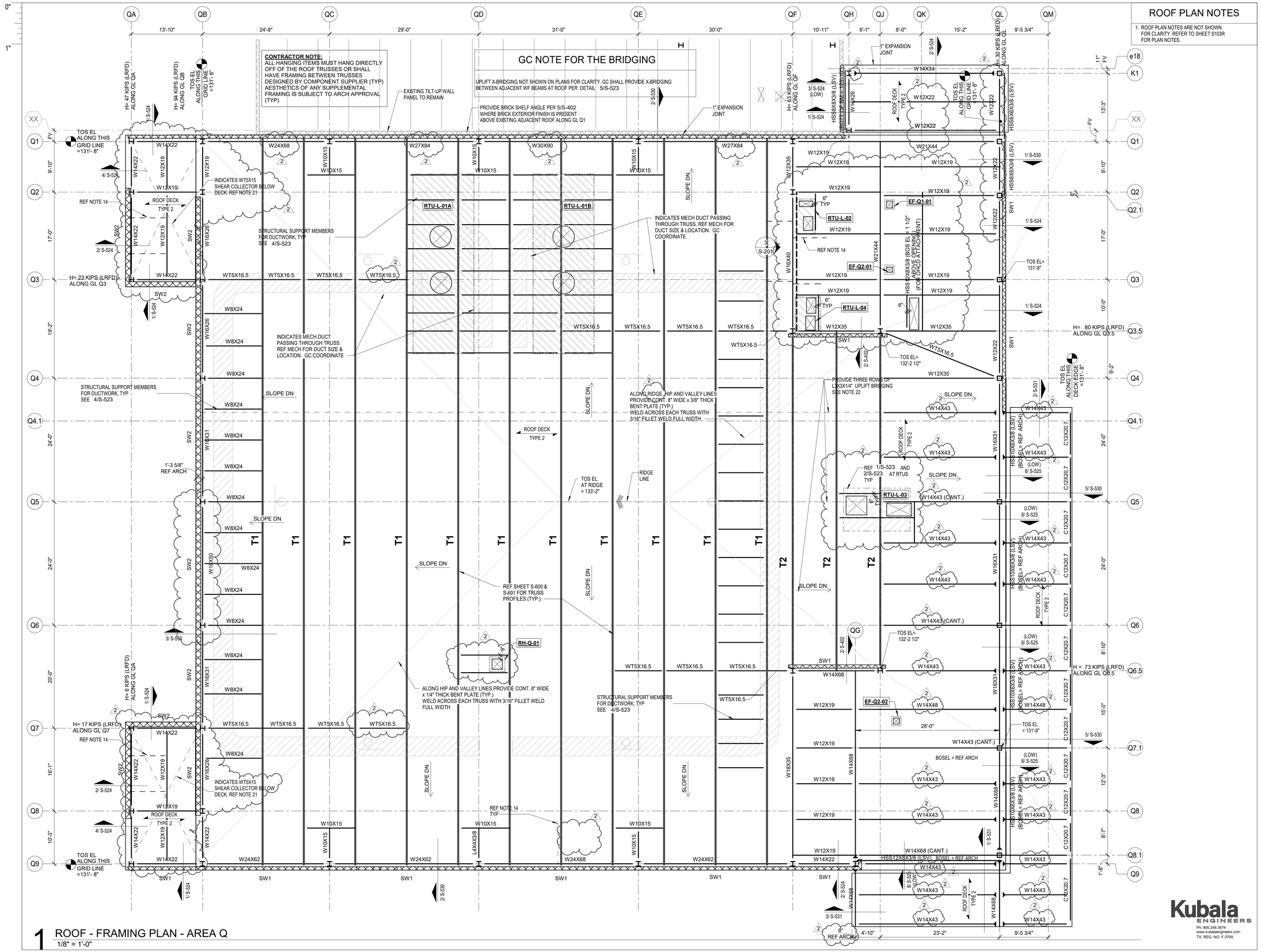

1 ROOF - FRAMING PLAN - AREA Q
1/8" = 1'-0"

ROOF PLAN NOTES

1. ROOF PLAN NOTES ARE NOT SHOWN FOR CLARITY. REFER TO SHEET S103R FOR PLAN NOTES.

PBK

ARCHITECT
PBK Architects, Inc.
PBK.com
HOUSTON
11 Greenway Plaza, 22nd Floor
Houston, TX 77046
713-965-0608 P
713-961-4571 F
TX Firm: BR 1608

CIVIL
DIG
T 713-965-0608
SPORTS
PBK SPORTS
T 281-528-1697
STRUCTURAL
KUBALA ENGINEERS
T 800-248-3674
MEPT
LEAF ENGINEERS
T 713-940-3300
ENVELOPE
BEAM
T 713-940-3201
AV / ACOUSTIC
JAFFE HOLDEN
T 713-807-7100
THEATER
SCHULER SHOOK
T 214-747-5300
FOOD SERVICE
FOOD DESIGN PROFESSIONAL
T 281-350-2323

FRIENDSWOOD HIGH SCHOOL ADDITIONS AND RENOVATIONS

702 Greenbriar Dr
Friendswood, TX 77546

ISSUE FOR PROPOSAL

KEY PLAN

NORTH: PLAN TRUE

STATE OF TEXAS
JOHN R. KUBALA
106120
PROFESSIONAL ENGINEER
02/14/2022
Kubala Engineers
F-3709

CLIENT
FRIENDSWOOD ISD

DATE	PROJECT NUMBER
02/02/2022	20381

DRAWING HISTORY

No.	Description	Date
2	ADDENDUM #2	02/14/2022

ISSUE FOR PROPOSAL

ROOF - FRAMING PLAN - AREA Q

Kubala ENGINEERS
Ph: 800.248.3674
www.kubalaengineers.com
TX. REG. NO. F-3709

S-103Q

File Path: C:_Revit\Local\ST21-20381-FHS_Central_amer.taghieb\LLC29.rvt

CHECKED BY:
Checker
DRAWN BY:
Author
Plot Stamp:
2/14/2022 6:44:29 PM

LOW ROOF - FRAMING PLAN - AREA R

S-103R

FOR BLUEBEAM LABELING/OCR:

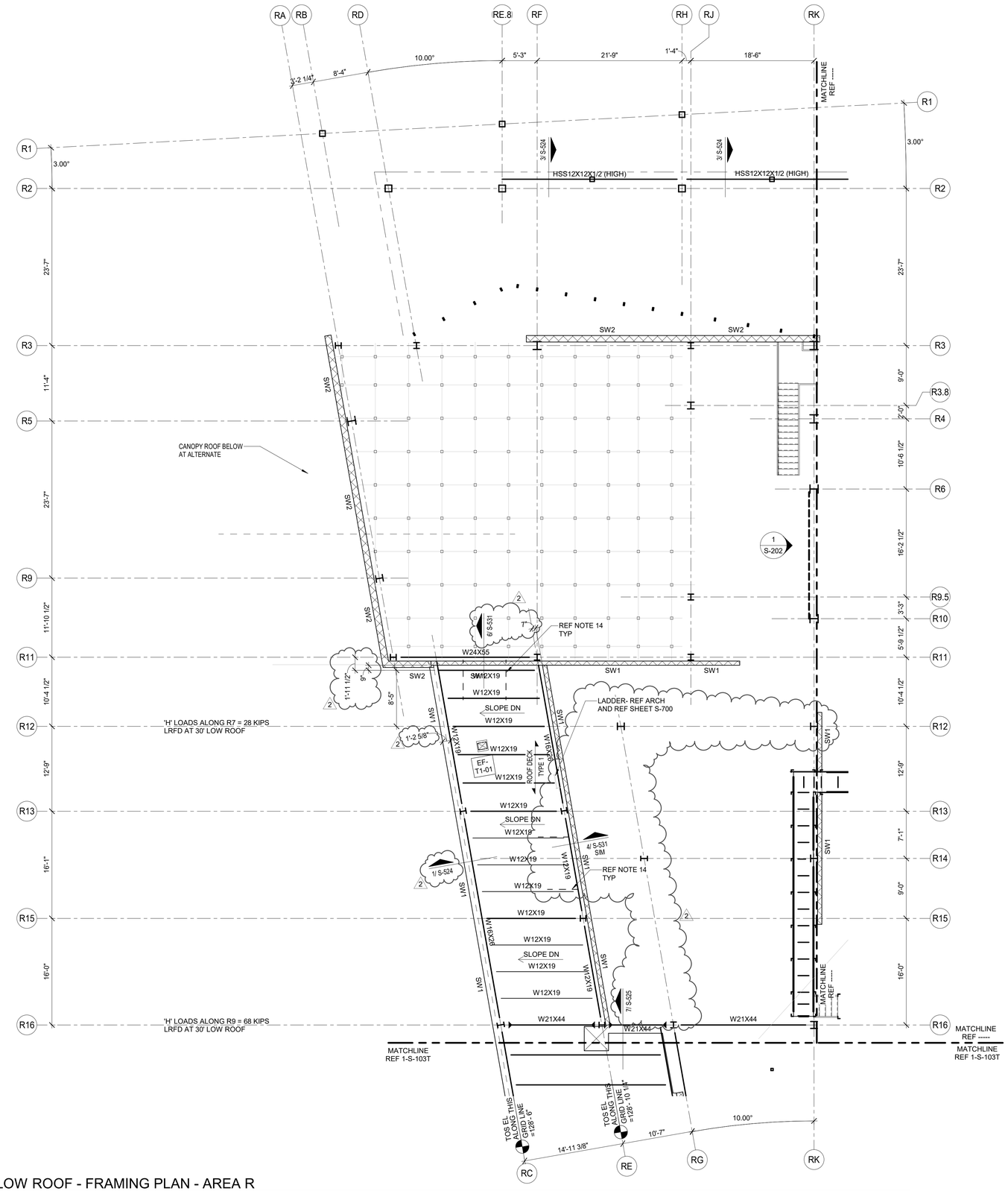

1 LOW ROOF - FRAMING PLAN - AREA R

1/8" = 1'-0"

ROOF PLAN NOTES

1. REF PLAN FOR TOP OF SLAB ELEVATION.
2. ALL ELEVATIONS ARE BASED ON TOSC EL = 100'-0".
3. TOP OF ROOF STRUCTURE IS SLOPED FOR DRAINAGE. REF ELEVATIONS NOTED ON PLAN. SLOPES SHALL BE UNIFORM BETWEEN COLUMN CENTERLINES UNLESS SHOWN OTHERWISE.
3. STEEL DECK SHALL BE PLACED WITH TWO-SPAN CONDITION MINIMUM. NO SINGLE SPANS ARE ALLOWED WITHOUT THE WRITTEN APPROVAL OF THE ENGINEER-OF-RECORD.
5. JOIST MFR NOTE:
   BRIDGING NOT SHOWN ON PLAN. MANUFACTURER SHALL PROVIDE STANDARD BRIDGING COMPLYING WITH SJI SPECIFICATIONS OF LATEST ADOPTION, TYPICAL FOR GRAVITY AND UPLIFT LOADS SUPERIMPOSED ON ALL JOISTS. DIAGONAL BRIDGING SHALL BE PROVIDED BETWEEN ADJACENT JOISTS WHENEVER BOTTOM CHORD HORIZONTAL BRIDGING IS DISCONTINUOUS.
6. REFER TO THE ROOF DIAPHRAGM CONNECTION SCHEDULE FOR DECK ATTACHMENT TO ROOF FRAMING MEMBERS AND DECK FASTENER TYPE, SIZE AND SPACING.
7. REF ARCH FOR TOP OF WALL ELEVATIONS.
8. DETAILING OF ALL MEMBER CONNECTIONS TO THE SUPPORTS SHALL BE PERFORMED TO SATISFY LATEST OSHA ERECTION REQUIREMENTS.
9. TOS EL = BOTTOM OF DECK.
10. UNLESS SHOWN OTHERWISE, STEEL BEAMS OR JOISTS ARE CENTERED ON AND EQUALLY SPACED BETWEEN COLUMN CENTERLINES.
11. ALL STRUCTURAL STEEL THAT IS PERMANENTLY EXPOSED TO THE EXTERIOR OR IS PERMANENTLY IN UNCONDITIONED SPACE SHALL BE HOT-DIPPED GALVANIZED.
12. REFER TO MECHANICAL, ELECTRICAL, AND PLUMBING DRAWINGS FOR PENETRATIONS NOT SHOWN. REFER TO TYPICAL DETAILS FOR ADDITIONAL REINFORCEMENT REQUIREMENTS AT OPENINGS.
13. CONTRACTOR TO VERIFY ALL SLAB EDGE DIMENSIONS WITH ARCHITECTURAL DRAWINGS PRIOR TO CONSTRUCTION.
14. INDICATES WIND BRACE BEAM BOTTOM FLANGE BRACING PER 3/S-520 TYP ALONG ENTIRE GRID AT ALL BRACE FRAMES. NOT SHOWN IN PLAN FOR CLARITY.
15. REF DETAIL 1/S-523 HERE ROOF TOP EQUIPMENT REQUIRES A STRUCTURAL CURB. JOISTS THAT ARE SUPPORTING ROOF TOP EQUIPMENT SHALL BE DESIGNED FOR AN ADDITIONAL CONCENTRATED DEAD LOAD (AS SHOWN ON PLAN AT ANY POINT ALONG JOIST SPAN). GC SHALL COORDINATE WITH MEP, ARCHITECTURE AND EQUIPMENT CUTSHEETS FOR FINAL WEIGHT, DIMENSIONS, LOCATION, ETC.
16. ———— INDICATES PIPING RUN. REF MEP DRAWINGS; GC SHALL COORDINATE GIVEN LOAD WITH JOIST MANUFACTURER. REF X/XX
17. REF S0.xx SERIES DRAWINGS FOR GENERAL NOTES AND TYP DETAILS
18. REF S2.xx SERIES DRAWINGS FOR STEEL BRACE ELEVATIONS AND DETAILS.
    - - - - - - - - INDICATES BRACE FRAME (TYP.)
19. REF S4.xx SERIES DRAWINGS FOR CMU DETAILS.
20. REF S5.xx SERIES DRAWINGS FOR STEEL FRAMING DETAILS.
21. INDICATES PLAN DIAGONAL STRUT WT5x15. COPE WEB AT BEAMS AND OVERLAP FLANGE 4". WELD TO TOP FLANGE AND COLUMNS WITH 5/16" FILLET WELD 3-SIDES (TYP.)

GC NOTE FOR THE BRIDGING

UPLIFT X-BRIDGING NOT SHOWN ON PLANS FOR CLARITY. GC SHALL PROVIDE X-BRIDGING BETWEEN ADJACENT WF BEAMS AT ROOF PER DETAIL 5/S-523

PBK

ARCHITECT PBK Architects, Inc.
PBK.com
HOUSTON
11 Greenway Plaza, 22nd Floor
Houston, TX 77046
713-965-0608 P
713-961-4571 F
TX Firm: BR 1608

CIVIL
DIG
T 713-965-0608
SPORTS
PBK SPORTS
T 281-528-1697
STRUCTURAL
KUBALA ENGINEERS
T 800-248-3674
MEPT
LEAF ENGINEERS
T 713-940-3300
ENVELOPE
BEAM
T 713-940-3201
AV / ACOUSTIC
JAFFE HOLDEN
T 713-807-7100
THEATER
SCHULER SHOOK
T 214-747-5300
FOOD SERVICE
FOOD DESIGN PROFESSIONAL
T 281-350-2323

FRIENDSWOOD HIGH SCHOOL ADDITIONS AND RENOVATIONS

702 Greenbriar Dr
Friendswood, TX 77546

ISSUE FOR PROPOSAL

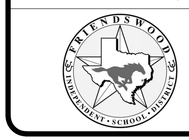

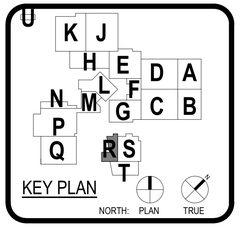

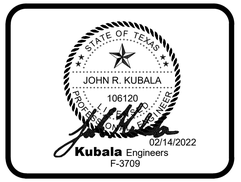

CLIENT
FRIENDSWOOD ISD

DATE	PROJECT NUMBER
02/02/2022	20381

DRAWING HISTORY

No.	Description	Date
2	ADDENDUM #2	02/14/2022

ISSUE FOR PROPOSAL

LOW ROOF - FRAMING PLAN - AREA R

S-103R

Kubala ENGINEERS
Ph: 800.248.3674
www.kubalaengineers.com
TX. REG. NO. F-3709

File Path: C:_Revit\Local\ST21-20381-FHS_Central_amer.taghlebi.LLC29.rvt

CHECKED BY:
Checker
DRAWN BY:
Author
Plot Stamp:
2/14/2022 6:44:31 PM

CATWALK FRAMING PLAN - AREA S

S-103S

FOR BLUEBEAM LABELING/OCR:

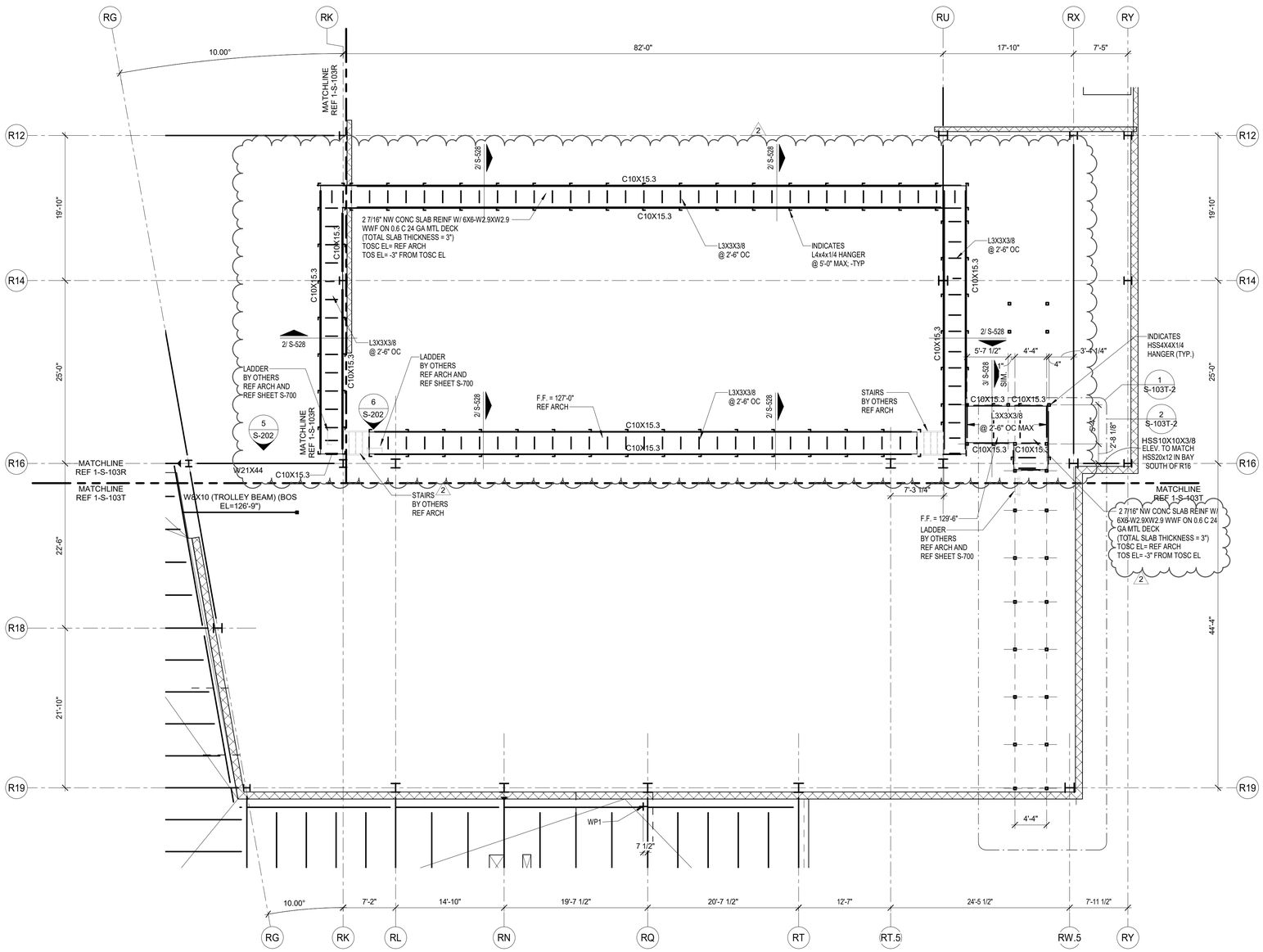

1 CATWALK FRAMING PLAN - AREA S

1/8" = 1'-0"

COMPOSITE FLOOR PLAN NOTES

1. REF PLAN FOR TOP OF SLAB ELEVATION.
2. ALL ELEVATIONS ARE BASED ON TOSC EL = 100'-0"
3. STEEL DECK SHALL BE PLACED WITH TWO-SPAN CONDITION MINIMUM. NO SINGLE SPANS ARE ALLOWED WITHOUT THE WRITTEN APPROVAL OF THE ENGINEER-OF-RECORD.
4. COMPOSITE BEAM CONSTRUCTION IS UNSHORED.
5. DETAILING OF ALL MEMBER CONNECTIONS TO THE SUPPORTS SHALL BE PERFORMED TO SATISFY LATEST OSHA ERECTION REQUIREMENTS.
6. TOS EL = BOTTOM OF DECK.
7. UNLESS SHOWN OTHERWISE, STEEL BEAMS OR JOISTS ARE CENTERED ON AND EQUALLY SPACED BETWEEN COLUMN CENTERLINES.
8. ALL STRUCTURAL STEEL THAT IS PERMANENTLY EXPOSED TO THE EXTERIOR OR IS PERMANENTLY IN UNCONDITIONED SPACE SHALL BE HOT-DIPPED GALVANIZED.
9. REFER TO MECHANICAL, ELECTRICAL, AND PLUMBING DRAWINGS FOR PENETRATIONS NOT SHOWN. REFER TO TYPICAL DETAILS FOR ADDITIONAL REINFORCEMENT REQUIREMENTS AT OPENINGS.
10. PROVIDE ADDITIONAL (5) - #6 CONT. BARS IN COMPOSITE SLAB ALONG FULL PERIMETER OF SLAB AND AROUND OPENINGS. EXTEND BARS 10'-0" PAST CORNERS OF OPENINGS. PROVIDE STD HOOK AT TERMINATION ENDS. ALL LAPS IN REINFORCING SHALL BE WITH MECHANICAL COUPLERS OR 20'-0" LAP SPLICE (TYP).
11. CONTRACTOR TO VERIFY ALL SLAB EDGE DIMENSIONS WITH ARCHITECTURAL DRAWINGS PRIOR TO CONSTRUCTION.
12. INDICATES WIND BRACE BEAM BOTTOM FLANGE BRACING PER 1/S-510 TYP ALONG ENTIRE GRID AT ALL BRACE FRAMES. NOT SHOWN IN PLAN FOR CLARITY.
13. REF DETAIL 7/S-511 FOR ADDITIONAL REINF UNDER INTERIOR CMU WALLS PARALLEL TO DECK SPAN. GC TO COORDINATE THE LOCATION OF ALL CMU WALLS WITH ARCH DRAWINGS.
14. REF S-000 SERIES DRAWINGS FOR GENERAL NOTES AND TYP DETAILS.
15. REF S-200 SERIES DRAWINGS FOR STEEL BRACE ELEVATIONS AND DETAILS.
16. REF S-400 SERIES DRAWINGS FOR CMU DETAILS.
17. REF S-500 SERIES DRAWINGS FOR STEEL FRAMING DETAILS.
18. ALL CMU SHOWN ON PLAN ARE PART OF THE STRUCTURAL LATERAL FORCE RESISTING SYSTEM AND SUPPORTS GRAVITY LOADS. NON-STRUCTURAL CMU EXISTS IN OTHER LOCATION (REF ARCH DWGS). A 3/8" VERT CONTROL JOINT SHALL BE PROVIDED WHEREVER STRUCTURAL AND NON-STRUCTURAL CMU ABUT.
19. FLOOR STRUCTURE CONSISTS OF 4 1/2" NORMAL WEIGHT CONCRETE ON 3" DEEP VLI 20 GAGE GALVANIZED (G90) COMPOSITE STEEL DECK (7 1/2" TOTAL THICKNESS). STEEL DECK SHALL BE PLACED WITH TWO-SPAN CONDITION MINIMUM. NO SINGLE SPANES ARE ALLOWED WITHOUT WRITTEN APPROVAL OF ENGINEER-OF-RECORD. COMPOSITE SLAB SHALL BE REINFORCED WITH WWF 6x6-W2.9xW2.9; UNLESS NOTED OTHERWISE (PAC BUILDING)
20. FLOOR STRUCTURE CONSISTS OF 3 1/2" NORMAL WEIGHT CONCRETE ON 3" DEEP VLI 20 GAGE GALVANIZED (G90) COMPOSITE STEEL DECK (6 1/2" TOTAL THICKNESS). STEEL DECK SHALL BE PLACED WITH TWO-SPAN CONDITION MINIMUM. NO SINGLE SPANES ARE ALLOWED WITHOUT WRITTEN APPROVAL OF ENGINEER-OF-RECORD. COMPOSITE SLAB SHALL BE REINFORCED WITH WWF 6x6-W2.9xW2.9; UNLESS NOTED OTHERWISE. (GYM BUILDING)

PBK

ARCHITECT PBK Architects, Inc.
PBK.com
HOUSTON
11 Greenway Plaza, 22nd Floor
Houston, TX 77046
713-965-0608 P
713-961-4571 F
TX Firm: BR 1608

CIVIL
CIG
T 713-965-0608
SPORTS
PBK SPORTS
T 281-528-1697
STRUCTURAL
KUBALA ENGINEERS
T 800-248-3674
MEPT
LEAF ENGINEERS
T 713-940-3300
ENVELOPE
BEAM
T 713-940-3201
AV / ACOUSTIC
JAFFE HOLDEN
T 713-807-7100
THEATER
SCHULER SHOOK
T 214-747-5300
FOOD SERVICE
FOOD DESIGN PROFESSIONAL
T 281-350-2323

FRIENDSWOOD HIGH SCHOOL ADDITIONS AND RENOVATIONS

702 Greenbriar Dr
Friendswood, TX 77546

ISSUE FOR PROPOSAL

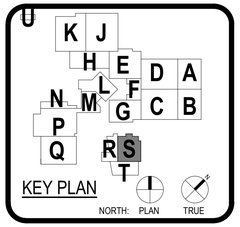

STATE OF TEXAS
JOHN R. KUBALA
106120
LICENSED PROFESSIONAL ENGINEER
02/14/2022
Kubala Engineers
F-3709

CLIENT
FRIENDSWOOD ISD

DATE	PROJECT NUMBER
02/02/2022	20381

DRAWING HISTORY

No.	Description	Date
2	ADDENDUM #2	02/14/2022

ISSUE FOR PROPOSAL

CATWALK FRAMING PLAN - AREA S

S-103S

Kubala ENGINEERS
Ph: 800.248.3674
www.kubalaengineers.com
TX. REG. NO. F-3709

File Path: C:_Revit\Local\ST21-20381-FHS_Central_amer.taghlebiLLC29.rvt

CHECKED BY:
Checker
DRAWN BY:
Author
Plot Stamp:
2/14/2022 6:44:33 PM

LOW ROOF - FRAMING PLAN - AREA T

S-103T

FOR BLUEBEAM LABELING/OCR:

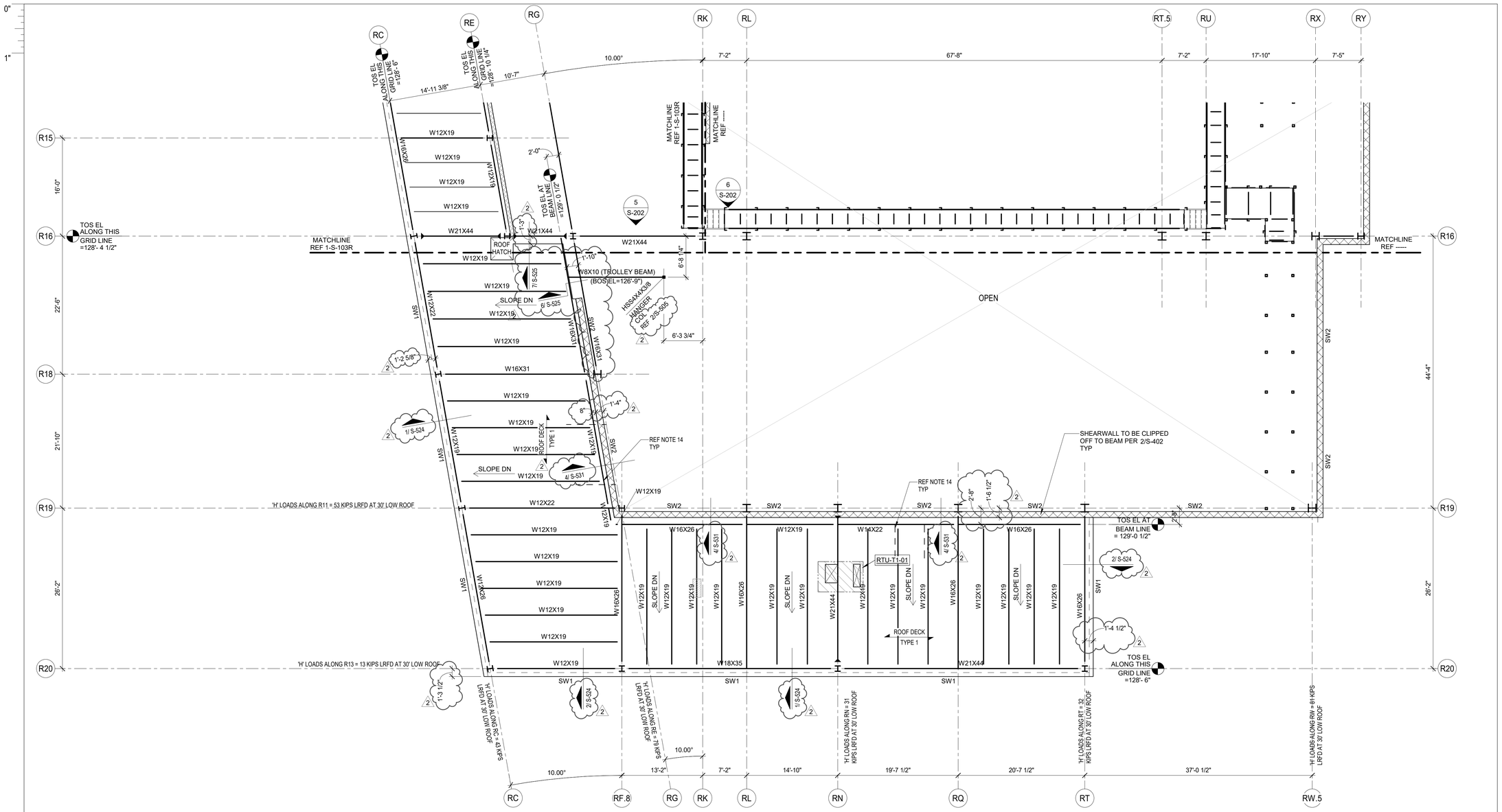

1 LOW ROOF - FRAMING PLAN - AREA T

1/8" = 1'-0"

GC NOTE FOR THE BRIDGING

UPLIFT X-BRIDGING NOT SHOWN ON PLANS FOR CLARITY. GC SHALL PROVIDE X-BRIDGING BETWEEN ADJACENT WF BEAMS AT ROOF PER DETAIL 5/S-523

ROOF PLAN NOTES

1. REF PLAN FOR TOP OF SLAB ELEVATION.
2. ALL ELEVATIONS ARE BASED ON TOSC EL = 100'-0".
3. TOP OF ROOF STRUCTURE IS SLOPED FOR DRAINAGE. REF ELEVATIONS NOTED ON PLAN. SLOPES SHALL BE UNIFORM BETWEEN COLUMN CENTERLINES UNLESS SHOWN OTHERWISE.
3. STEEL DECK SHALL BE PLACED WITH TWO-SPAN CONDITION MINIMUM. NO SINGLE SPANS ARE ALLOWED WITHOUT THE WRITTEN APPROVAL OF THE ENGINEER-OF-RECORD.
5. JOIST MFR NOTE:
   BRIDGING NOT SHOWN ON PLAN. MANUFACTURER SHALL PROVIDE STANDARD BRIDGING COMPLYING WITH SJI SPECIFICATIONS OF LATEST ADOPTION, TYPICAL FOR GRAVITY AND UPLIFT LOADS SUPERIMPOSED ON ALL JOISTS. DIAGONAL BRIDGING SHALL BE PROVIDED BETWEEN ADJACENT JOISTS WHENEVER BOTTOM CHORD HORIZONTAL BRIDGING IS DISCONTINUOUS.
6. REFER TO THE ROOF DIAPHRAGM CONNECTION SCHEDULE FOR DECK ATTACHMENT TO ROOF FRAMING MEMBERS AND DECK FASTENER TYPE, SIZE AND SPACING.
7. REF ARCH FOR TOP OF WALL ELEVATIONS.
8. DETAILING OF ALL MEMBER CONNECTIONS TO THE SUPPORTS SHALL BE PERFORMED TO SATISFY LATEST OSHA ERECTION REQUIREMENTS.
9. TOS EL = BOTTOM OF DECK.
10. UNLESS SHOWN OTHERWISE, STEEL BEAMS OR JOISTS ARE CENTERED ON AND EQUALLY SPACED BETWEEN COLUMN CENTERLINES.
11. ALL STRUCTURAL STEEL THAT IS PERMANENTLY EXPOSED TO THE EXTERIOR OR IS PERMANENTLY IN UNCONDITIONED SPACE SHALL BE HOT-DIPPED GALVANIZED.
12. REFER TO MECHANICAL, ELECTRICAL, AND PLUMBING DRAWINGS FOR PENETRATIONS NOT SHOWN. REFER TO TYPICAL DETAILS FOR ADDITIONAL REINFORCEMENT REQUIREMENTS AT OPENINGS.
13. CONTRACTOR TO VERIFY ALL SLAB EDGE DIMENSIONS WITH ARCHITECTURAL DRAWINGS PRIOR TO CONSTRUCTION.
14. INDICATES WIND BRACE BEAM BOTTOM FLANGE BRACING PER 3/S-520TYP ALONG ENTIRE GRID AT ALL BRACE FRAMES. NOT SHOWN IN PLAN FOR CLARITY.
15. REF DETAIL 1/S-523 WHERE ROOF TOP EQUIPMENT REQUIRES A STRUCTURAL CURB. JOISTS THAT ARE SUPPORTING ROOF TOP EQUIPMENT SHALL BE DESIGNED FOR AN ADDITIONAL CONCENTRATED DEAD LOAD (AS SHOWN ON PLAN AT ANY POINT ALONG JOIST SPAN). GC SHALL COORDINATE WITH MEP, ARCHITECTURE AND EQUIPMENT CUTSHEETS FOR FINAL WEIGHT, DIMENSIONS, LOCATION, ETC.
16. ———— INDICATES PIPING RUN, REF MEP DRAWINGS; GC SHALL COORDINATE GIVEN LOAD WITH JOIST MANUFACTURER. REF GENERAL NOTES AND MEP DRAWINGS.
17. REF S-0.xx SERIES DRAWINGS FOR GENERAL NOTES AND TYP DETAILS
18. REF S-2.xx SERIES DRAWINGS FOR STEEL BRACE ELEVATIONS AND DETAILS.
19. REF S-4.xx SERIES DRAWINGS FOR CMU DETAILS.
20. REF S-5.xx SERIES DRAWINGS FOR STEEL FRAMING DETAILS.

Kubala ENGINEERS
Ph: 800.248.3674
www.kubalaengineers.com
TX. REG. NO. F-3709

File Path: C:_Revit\Local\ST21-20381-FHS_Central_amer.taghleb\LLC29.rvt

CHECKED BY:
Checker
DRAWN BY:
Author
Plot Stamp:
2/14/2022 6:44:35 PM

PBK
ARCHITECT PBK Architects, Inc.
PBK.com
HOUSTON
11 Greenway Plaza, 22nd Floor
Houston, TX 77046
713-965-0608 P
713-961-4571 F
TX Firm: BR 1608
CIVIL
DIG
T 713-965-0608
SPORTS
PBK SPORTS
T 281-528-1697
STRUCTURAL
KUBALA ENGINEERS
T 800-248-3674
MEPT
LEAF ENGINEERS
T 713-940-3300
ENVELOPE
BEAM
T 713-940-3201
AV / ACOUSTIC
JAFFE HOLDEN
T 713-807-7100
THEATER
SCHULER SHOOK
T 214-747-5300
FOOD SERVICE
FOOD DESIGN PROFESSIONAL
T 281-350-2323

FRIENDSWOOD HIGH SCHOOL ADDITIONS AND RENOVATIONS

702 Greenbriar Dr
Friendswood, TX 77546

ISSUE FOR PROPOSAL

KEY PLAN

NORTH: PLAN TRUE

STATE OF TEXAS
JOHN R. KUBALA
106120
PROFESSIONAL ENGINEER
02/14/2022
Kubala Engineers
F-3709

CLIENT
FRIENDSWOOD ISD

DATE	PROJECT NUMBER
02/02/2022	20381

DRAWING HISTORY

No.	Description	Date
2	ADDENDUM #2	02/14/2022

ISSUE FOR PROPOSAL

LOW ROOF - FRAMING PLAN - AREA T

S-103T

LOADING & LOCKING GALLERY FRAMING PLANS - AREA T

S-103T-2

FOR BLUEBEAM LABELING/OCR:

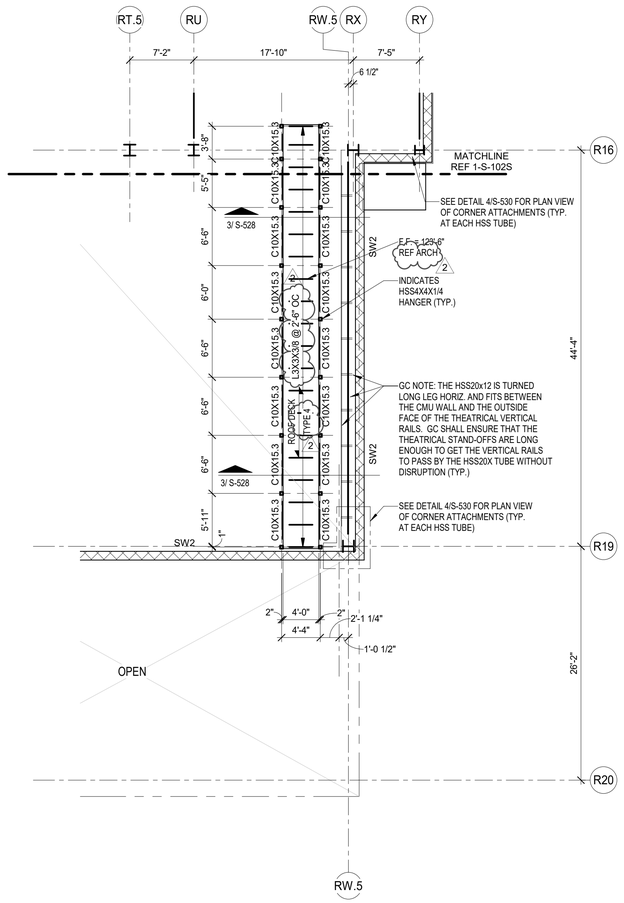

1 LOCKING GALLERY FRAMING PLAN - AREA T

1/8" = 1'-0"

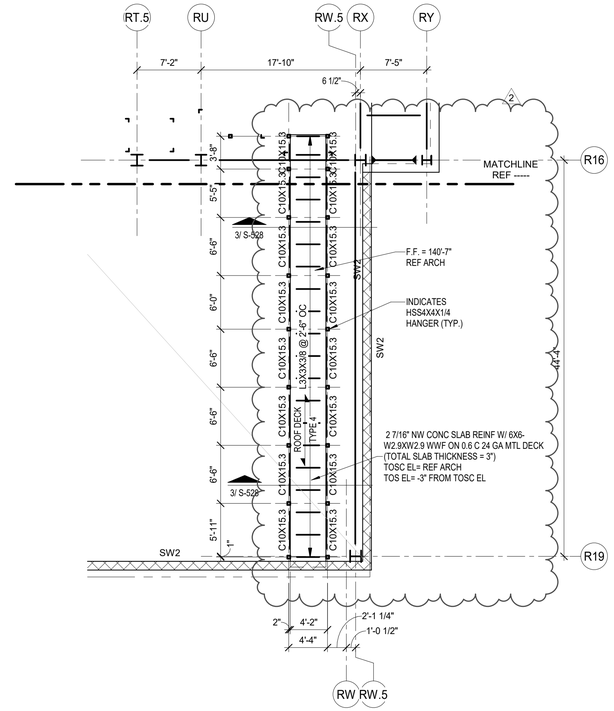

2 LOADING GALLERY FRAMING PLAN - AREA T

1/8" = 1'-0"

Kubala ENGINEERS
Ph: 800.248.3674
www.kubalaengineers.com
TX. REG. NO. F-3709

File Path: C:_RevitLocal\ST21-20381-FHS_Central_amer.taghleb\LLC29.rvt

CHECKED BY:
Checker
DRAWN BY:
Author
Plot Stamp:
2/14/2022 6:44:37 PM

PBK

ARCHITECT PBK Architects, Inc.
PBK.com
HOUSTON
11 Greenway Plaza, 22nd Floor
Houston, TX 77046
713-965-0608 P
713-961-4571 F
TX Firm: BR 1608

CIVIL
DIG
T 713-965-0608
SPORTS
PBK SPORTS
T 281-528-1697
STRUCTURAL
KUBALA ENGINEERS
T 800-248-3674
MEPT
LEAF ENGINEERS
T 713-940-3300
ENVELOPE
BEAM
T 713-940-3201
AV / ACOUSTIC
JAFFE HOLDEN
T 713-807-7100
THEATER
SCHULER SHOOK
T 214-747-5300
FOOD SERVICE
FOOD DESIGN PROFESSIONAL
T 281-350-2323

FRIENDSWOOD HIGH SCHOOL ADDITIONS AND RENOVATIONS

702 Greenbriar Dr
Friendswood, TX 77546

ISSUE FOR PROPOSAL

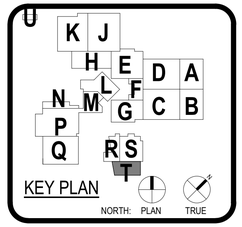

STATE OF TEXAS
JOHN R. KUBALA
106120
PROFESSIONAL ENGINEER
02/14/2022
Kubala Engineers
F-3709

CLIENT
FRIENDSWOOD ISD

DATE	PROJECT NUMBER
02/02/2022	20381

DRAWING HISTORY

No.	Description	Date
2	ADDENDUM #2	02/14/2022

ISSUE FOR PROPOSAL

LOADING & LOCKING GALLERY FRAMING PLANS - AREA T

S-103T-2

ROOF - FRAMING PLAN - AREA S

S-104S

FOR BLUEBEAM LABELING/OCR:

GC NOTE FOR THE BRIDGING

UPLIFT X-BRIDGING NOT SHOWN ON PLANS FOR CLARITY. GC SHALL PROVIDE X-BRIDGING BETWEEN ADJACENT WF BEAMS AT ROOF PER DETAIL 5/S-523

ROOF PLAN NOTES

1. ROOF PLAN NOTES ARE NOT SHOWN FOR CLARITY. REFER TO SHEET S103R FOR PLAN NOTES.

1 ROOF - FRAMING PLAN - AREA S

1/8" = 1'-0"

Kubala ENGINEERS
Ph: 800.248.3674
www.kubalaengineers.com
TX. REG. NO. F-3709

PBK

ARCHITECT PBK Architects, Inc.
HOUSTON
11 Greenway Plaza, 22nd Floor
Houston, TX 77046
713-965-0608 P
713-961-4571 F
TX Firm: BR 1608
CIVIL DIG T 713-965-0608
SPORTS PBK SPORTS T 281-528-1697
STRUCTURAL KUBALA ENGINEERS T 800-248-3674
MEPT LEAF ENGINEERS T 713-940-3300
ENVELOPE BEAM T 713-940-3201
AV / ACOUSTIC JAFFE HOLDEN T 713-807-7100
THEATER SCHULER SHOOK T 214-747-8300
FOOD SERVICE FOOD DESIGN PROFESSIONAL T 281-350-2323

FRIENDSWOOD HIGH SCHOOL ADDITIONS AND RENOVATIONS

702 Greenbriar Dr
Friendswood, TX 77546

ISSUE FOR PROPOSAL

KEY PLAN

NORTH: PLAN TRUE

STATE OF TEXAS
JOHN R. KUBALA
106120
LICENSED PROFESSIONAL ENGINEER
02/14/2022
Kubala Engineers
F-3709

CLIENT
FRIENDSWOOD ISD

DATE	PROJECT NUMBER
02/02/2022	20381

DRAWING HISTORY

No.	Description	Date
2	ADDENDUM #2	02/14/2022

ISSUE FOR PROPOSAL

ROOF - FRAMING PLAN - AREA S

S-104S

File Path: C:_Revit\Local\ST21-20381-FHS_Central_amer.taghleb\LLC29.rvt

CHECKED BY:
Checker
DRAWN BY:
Author
Plot Stamp:
2/14/2022 6:44:41 PM

HIGH ROOF - FRAMING PLAN - AREA S

S-105S

FOR BLUEBEAM LABELING/OCR:

GC NOTE FOR THE BRIDGING

UPLIFT X-BRIDGING NOT SHOWN ON PLANS FOR CLARITY. GC SHALL PROVIDE X-BRIDGING BETWEEN ADJACENT WF BEAMS AT ROOF PER DETAIL 5/S-523

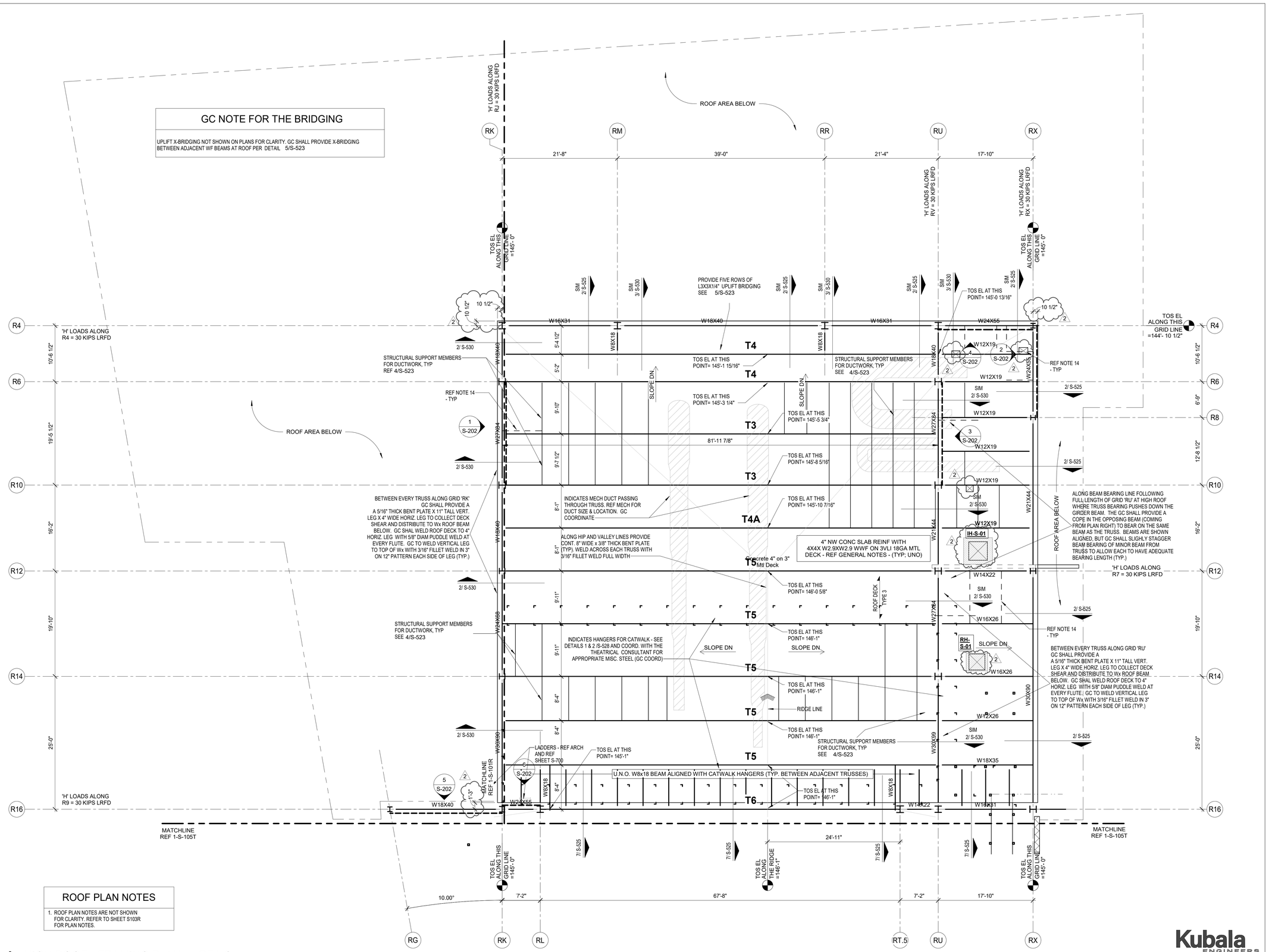

ROOF PLAN NOTES

1. ROOF PLAN NOTES ARE NOT SHOWN FOR CLARITY. REFER TO SHEET S103R FOR PLAN NOTES.

1 HIGH ROOF - FRAMING PLAN - AREA S

1/8" = 1'-0"

File Path: C:_RevitLocal\S721-20381-FHS_Central_amer.taghleb.LLC29.rvt

CHECKED BY: Checker

DRAWN BY: Author

Plot Stamp: 2/14/2022 6:44:43 PM

PBK

ARCHITECT PBK Architects, Inc.
PBK.com
HOUSTON
11 Greenway Plaza, 22nd Floor
Houston, TX 77046
713-965-0608 P
713-961-4571 F
TX Firm: BR 1608

CIVIL
CIVIL
T 713-965-0608
SPORTS
PBK SPORTS
T 281-528-1697
STRUCTURAL
KUBALA ENGINEERS
T 800-248-3674
MEPT
LEAF ENGINEERS
T 713-940-3300
ENVELOPE
BEAM
T 713-940-3201
AV / ACOUSTIC
JAFFE HOLDEN
T 713-807-7100
THEATER
SCHULER SHOOK
T 214-747-6300
FOOD SERVICE
FOOD DESIGN PROFESSIONAL
T 281-350-2323

FRIENDSWOOD HIGH SCHOOL ADDITIONS AND RENOVATIONS

702 Greenbriar Dr
Friendswood, TX 77546

ISSUE FOR PROPOSAL

KEY PLAN

NORTH: PLAN TRUE

STATE OF TEXAS
JOHN R. KUBALA
106120
LICENSED PROFESSIONAL ENGINEER
02/14/2022
Kubala Engineers
F-3709

CLIENT
FRIENDSWOOD ISD

DATE	PROJECT NUMBER
02/02/2022	20381

DRAWING HISTORY

No.	Description	Date
2	ADDENDUM #2	02/14/2022

ISSUE FOR PROPOSAL

HIGH ROOF - FRAMING PLAN - AREA S

S-105S

Kubala ENGINEERS
Ph: 800.248.3674
www.kubalaengineers.com
TX. REG. NO. F-3709

HIGH ROOF - FRAMING PLAN - AREA T

S-105T

FOR BLUEBEAM LABELING/OCR:

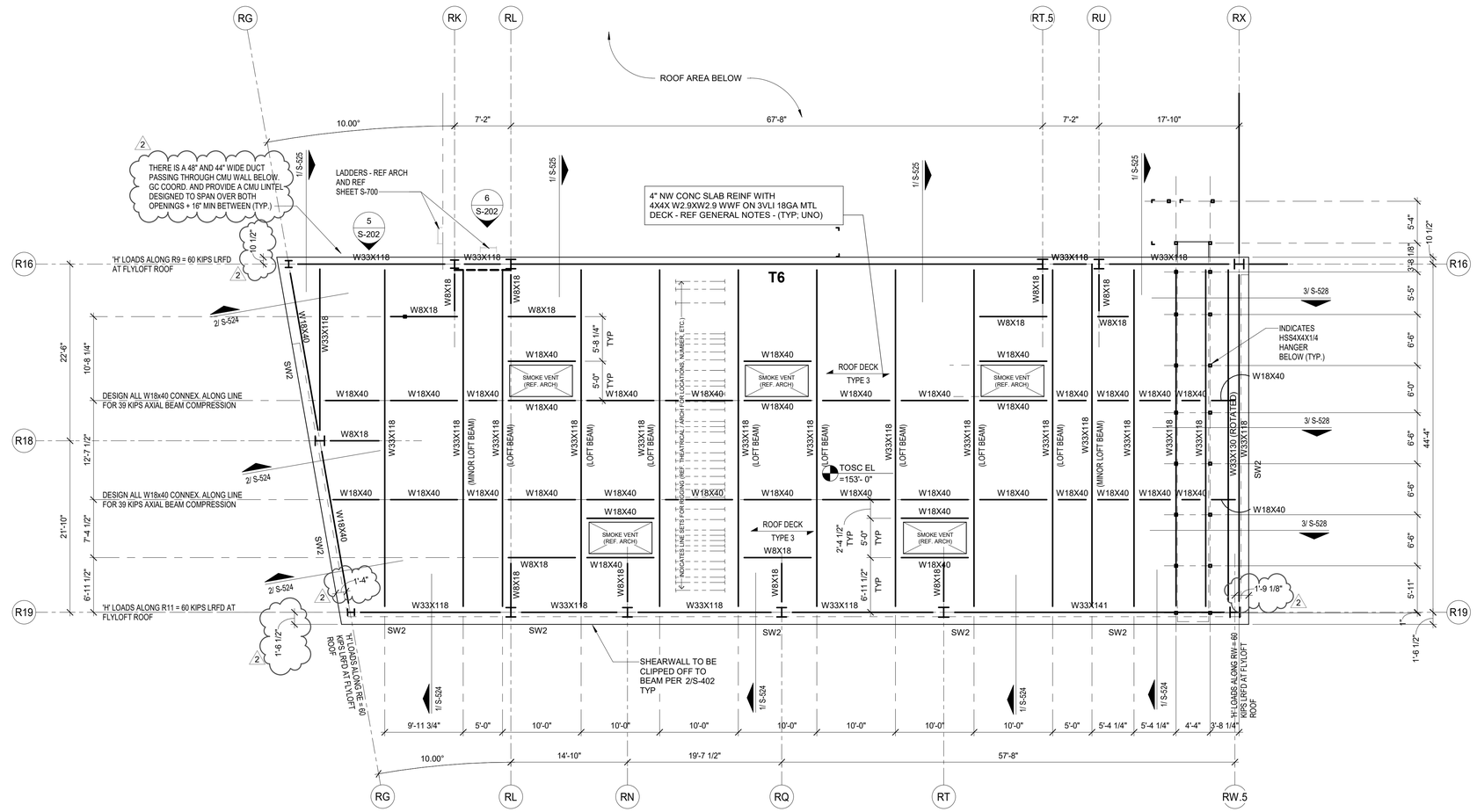

1 HIGH ROOF - FRAMING PLAN - AREA T

1/8" = 1'-0"

ROOF PLAN NOTES

1. REF PLAN FOR TOP OF SLAB ELEVATION.
2. ALL ELEVATIONS ARE BASED ON TOSC EL = 100'-0".
3. TOP OF ROOF STRUCTURE IS SLOPED FOR DRAINAGE. REF ELEVATIONS NOTED ON PLAN. SLOPES SHALL BE UNIFORM BETWEEN COLUMN CENTERLINES UNLESS SHOWN OTHERWISE.
3. STEEL DECK SHALL BE PLACED WITH TWO-SPAN CONDITION MINIMUM. NO SINGLE SPANS ARE ALLOWED WITHOUT THE WRITTEN APPROVAL OF THE ENGINEER-OF-RECORD.
5. JOIST MFR NOTE:
   BRIDGING NOT SHOWN ON PLAN. MANUFACTURER SHALL PROVIDE STANDARD BRIDGING COMPLYING WITH SJI SPECIFICATIONS OF LATEST ADOPTION, TYPICAL FOR GRAVITY AND UPLIFT LOADS SUPERIMPOSED ON ALL JOISTS. DIAGONAL BRIDGING SHALL BE PROVIDED BETWEEN ADJACENT JOISTS WHENEVER BOTTOM CHORD HORIZONTAL BRIDGING IS DISCONTINUOUS.
6. REFER TO THE ROOF DIAPHRAGM CONNECTION SCHEDULE FOR DECK ATTACHMENT TO ROOF FRAMING MEMBERS AND DECK FASTENER TYPE, SIZE AND SPACING.
7. REF ARCH FOR TOP OF WALL ELEVATIONS.
8. DETAILING OF ALL MEMBER CONNECTIONS TO THE SUPPORTS SHALL BE PERFORMED TO SATISFY LATEST OSHA ERECTION REQUIREMENTS.
9. TOS EL = BOTTOM OF DECK.
10. UNLESS SHOWN OTHERWISE, STEEL BEAMS OR JOISTS ARE CENTERED ON AND EQUALLY SPACED BETWEEN COLUMN CENTERLINES.
11. ALL STRUCTURAL STEEL THAT IS PERMANENTLY EXPOSED TO THE EXTERIOR OR IS PERMANENTLY IN UNCONDITIONED SPACE SHALL BE HOT-DIPPED GALVANIZED.
12. REFER TO MECHANICAL, ELECTRICAL, AND PLUMBING DRAWINGS FOR PENETRATIONS NOT SHOWN. REFER TO TYPICAL DETAILS FOR ADDITIONAL REINFORCEMENT REQUIREMENTS AT OPENINGS.
13. CONTRACTOR TO VERIFY ALL SLAB EDGE DIMENSIONS WITH ARCHITECTURAL DRAWINGS PRIOR TO CONSTRUCTION.
14. INDICATES WIND BRACE BEAM BOTTOM FLANGE BRACING PER 3/S-520TYP ALONG ENTIRE GRID AT ALL BRACE FRAMES. NOT SHOWN IN PLAN FOR CLARITY.
15. REF DETAIL1/S-523 WHERE ROOF TOP EQUIPMENT REQUIRES A STRUCTURAL CURB. JOISTS THAT ARE SUPPORTING ROOF TOP EQUIPMENT SHALL BE DESIGNED FOR AN ADDITIONAL CONCENTRATED DEAD LOAD (AS SHOWN ON PLAN AT ANY POINT ALONG JOIST SPAN). GC SHALL COORDINATE WITH MEP, ARCHITECTURE AND EQUIPMENT CUTSHEETS FOR FINAL WEIGHT, DIMENSIONS, LOCATION, ETC.
16. ———— INDICATES PIPING RUN, REF MEP DRAWINGS; GC SHALL COORDINATE GIVEN LOAD WITH JOIST MANUFACTURER. REF GENERAL NOTES AND MEP DRAWINGS.
17. REF S-0.xx SERIES DRAWINGS FOR GENERAL NOTES AND TYP DETAILS
18. REF S-2.xx SERIES DRAWINGS FOR STEEL BRACE ELEVATIONS AND DETAILS.
19. REF S-4.xx SERIES DRAWINGS FOR CMU DETAILS.
20. REF S-5.xx SERIES DRAWINGS FOR STEEL FRAMING DETAILS.

Kubala ENGINEERS
Ph: 800.248.3674
www.kubalaengineers.com
TX. REG. NO. F-3709

File Path: C:_RevitLocal\ST21-20381-FHS_Central_amer.taghebiLLC29.rvt

CHECKED BY:
Checker
DRAWN BY:
Author
Plot Stamp:
2/14/2022 6:44:45 PM

PBK

ARCHITECT PBK Architects, Inc.
PBK.com
HOUSTON
11 Greenway Plaza, 22nd Floor
Houston, TX 77046
713-965-0608 P
713-961-4571 F
TX Firm: BR 1608

CIVIL
DIG
T 713-965-0608
SPORTS
PBK SPORTS
T 281-528-1697
STRUCTURAL
KUBALA ENGINEERS
T 800-248-3674
MEPT
LEAF ENGINEERS
T 713-940-3300
ENVELOPE
BEAM
T 713-940-3201
AV / ACOUSTIC
JAFFE HOLDEN
T 713-807-7100
THEATER
SCHULER SHOOK
T 214-747-6300
FOOD SERVICE
FOOD DESIGN PROFESSIONAL
T 281-350-2323

FRIENDSWOOD HIGH SCHOOL ADDITIONS AND RENOVATIONS

702 Greenbriar Dr
Friendswood, TX 77546

ISSUE FOR PROPOSAL

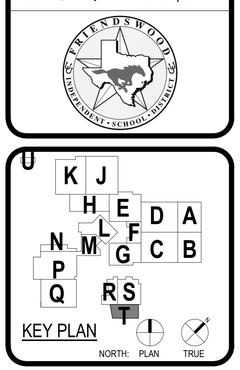

STATE OF TEXAS
JOHN R. KUBALA
106120
PROFESSIONAL ENGINEER
02/14/2022
Kubala Engineers
F-3709

CLIENT
FRIENDSWOOD ISD

DATE	PROJECT NUMBER
02/02/2022	20381

DRAWING HISTORY

No.	Description	Date
2	ADDENDUM #2	02/14/2022

ISSUE FOR PROPOSAL

HIGH ROOF - FRAMING PLAN - AREA T

S-105T

GENERAL GRADE BEAM NOTES AND TYP DETAILS

S-305

FOR BLUEBEAM LABELING/OCR:

GRADE BEAM:

1. GRADE BEAM DIMENSIONS AND/OR LOCATIONS SHALL NOT BE ALTERED WITHOUT APPROVAL OF THE ENGINEER OF RECORD. SIDES OF GRADE BEAMS SHALL BE FORMED. EARTH FORMING OF GRADE BEAMS IS NOT ALLOWED UNLESS GRADE BEAMS MAY BE EARTH FORMED SO LONG AS THE SIDES ARE PLUMB AND SOUND AND ANY POR_ION OF THE BEAMS/SLAB THAT EXTENDS ABOVE GRADE/ EXPOSED IS BOARD FORMED. THE WALLS MUST NOT SLOUGH OFF MORE THAN ½" OUT OF PLANE OF THE PLUMB LINE. WHERE THIS OCCURS A BOARD FORM MAY BE LAID IN THE EARTH TO SMOOTH THE SIDE LOCALLY AT THE IMPERFECTION TO MAINTAIN WALL FLATNESS TOLLERANCE.

2. GRADE BEAMS SHALL BE POURED MONOLITHICALLY AROUND CORNERS AND AT INTERSECTIONS. SEE TYPICAL GRADE BEAM CONSTRUCTION JOINT DETAIL FOR ACCEPTABLE CONSTRUCTION JOINT LOCATIONS.

3. GENERAL CONTRACTOR SHALL COORDINATE LOCATION, SIZE, AND ELEVATION AND INCLUDE IN HIS CONTRACT PRICE ALL REQUIRED HORIZONTAL PENETRATIONS THROUGH CONCRETE BEAMS WHETHER SHOWN ON STRUCTURAL DRAWINGS OR NOT. WHERE BEAM PENETRATIONS ARE REQUIRED BUT ARE NOT SPECIFICALLY DETAILED ON THE STRUCTURAL DRAWINGS, CONTRACTOR SHALL SUBMIT DRAWINGS SHOWING DIMENSIONS AND LOCATIONS OF ALL REQUIRED PENETRATIONS FOR REVIEW AND APPROVAL.

4. GRADE BEAMS AT DOCKS AND SIMILAR CONDITIONS (BOTH EXTERIOR AND INTERIOR) WHERE BACKFILL IS PLACED UP TO OR NEAR THE TOP OF THE BEAM OR WALL ON ONE SIDE AND THE GRADE ON THE OTHER SIDE OF THE BEAM OR WALL IS MORE THAN 2'-0" LOWER SHALL BE LATERALLY BRACED FROM THE LOW SIDE PRIOR TO PLACING THE FILL ON THE OTHER SIDE. THIS BRACING SHALL REMAIN UNTIL THE FLOOR SLAB AT THE TOP OF THE BEAM OR WALL HAS BEEN CONSTRUCTED AND HAS ATTAINED ITS SPECIFIED 28 DAY STRENGTH.

GRADE BEAM SCHEDULE

MARK	SIZE		REINFORCING			TIES		REMARKS
	WIDTH	DEPTH	TOP	BOTTOM	MIDDLE	SIZE	SPACING	
GB1	1'-6"	2'-6"	3#9	3#9	-	#4	1 @ 2", R @10", 1@2",R @6"@CANTI	TYPE S1 TIES
GB2	2'-0"	2'-6"	4#9	4#9	-	#4	1 @ 2", R @10", 1@2",R @6"@CANTI	TYPE S1 TIES
GB3	2'-6"	2'-6"	7#8	7#8	-	#4	1 @ 2", R @10", 1@2",R @6"@CANTI	TYPE S1 TIES
GB4	3'-0"	2'-6"	8#9	8#9	-	#4	1 @ 2", R @10", 1@2",R @6"@CANTI	TYPE S1 TIES
GB5	3'-6"	2'-6"	10#10	10#10	-	#4	1 @ 2", R @6"	TYPE S1 TIES
GB6 (STOOPS)	1'-2"	2'-6"	3#7	3#7	-	#4	1 @ 2", R @10", 1@2",R @6"@CANTI	TYPE S1 TIES
GB7	4'-2"	3'-6"	12#10	12#10	5#3	#4	1 @ 2", R @6"	TYPE S1 TIES
GB8	1'-0"	2'-6"	2#6	2#6	-	#4	1 @ 2", R @10", 1@2",R @6"@CANTI	TYPE S1 TIES
GB9	1'-0"	3'-0"	2#8	2#8	-	#4	1 @ 2", R @10", 1@2",R @6"@CANTI	TYPE S1 TIES
GB10	2'-0"	5'-0"	3#9	3#9	5#5	#4	1 @ 2", R @10", 1@2",R @6"@CANTI	TYPE S1 TIES

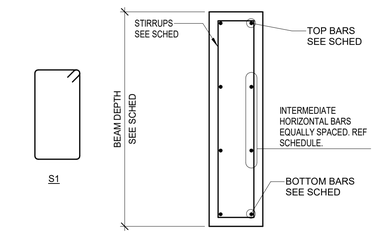

INTERMEDIATE BAR SCHEDULE

BEAM DEPTH	NUMBER OF BARS EA FACE	SIZE OF BAR
> 36" - 48"	5	#3
49" - 54"	5	#4
55" - 60"	5	#5
61" - 66"	6	#5
67" - 78"	7	#5
79" AND ABOVE	AT 9" OC	#5

1 GRADE BEAM SCHEDULE
NO SCALE

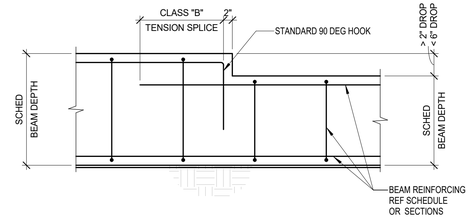

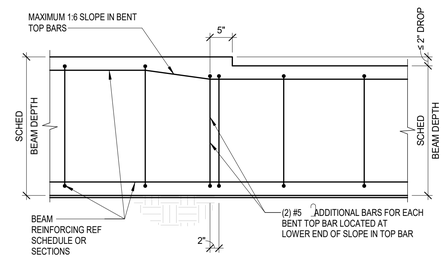

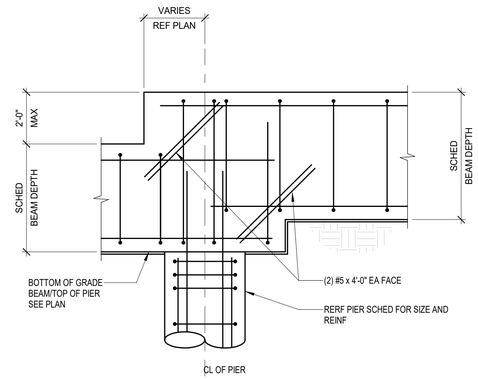

2 TYPICAL GRADE BEAM STEPDOWN DETAIL
NO SCALE

NOTES:

1. CLEAR SPACING BETWEEN PENETRATIONS SHALL BE 24" MINIMUM UNLESS NOTED OTHERWISE BY THE STRUCTURAL ENGINEER.
2. PENETRATIONS SHALL BE LOCATED ACCORDING TO THE FOLLOWING CRITERIA:
   a. FOR BEAMS NOT SUPPORTING INTERSECTING BEAMS LOCATE PENETRATIONS WITHIN TWO FEET EITHER SIDE OF BEAM MIDSPAN.
   b. FOR BEAMS SUPPORTING INTERSECTING BEAMS CHECK WITH STRUCTURAL ENGINEER.
3. PENETRATION WIDTH MUST NOT EXCEED PENETRATION HEIGHT, UNLESS NOTED OTHERWISE ON THE STRUCTURAL DRAWINGS.
4. FOR LOCATIONS AND/OR SIZES OF PENETRATIONS NOT CONFORMING TO THE ABOVE CRITERIA AND NOT OTHERWISE DETAILED ON THE STRUCTURAL DRAWINGS, CONTRACTOR SHALL COORDINATE REQUIRED ADDITIONAL REINFORCEMENT WITH THE STRUCTURAL ENGINEER.
5. PROVIDE THE FOLLOWING REINFORCEMENT AT EACH SLEEVE, UNLESS NOTED OTHERWISE ON THE STRUCTURAL DRAWINGS:
   1-#5 TOP AND BOTTOM AT BEAMS WITH WIDTHS LESS THAN 9".
   2-#5 TOP AND BOTTOM AT BEAMS WITH 2-LEG STIRRUPS.
   4-#5 TOP AND BOTTOM AT BEAMS WITH 4-LEG STIRRUPS.
   "N"-#5 TOP AND BOTTOM AT BEAMS WITH "N"-LEG STIRRUPS.
6. PROVIDE ADDITIONAL STIRRUPS ABOVE AND BELOW PENETRATIONS AT SPACING NOT TO EXCEED ONE THIRD OF THE SCHEDULED STIRRUP SPACING, UNLESS DETAILED OTHERWISE ON THE STRUCTURAL DRAWINGS.
7. SCHEDULED BEAM STIRRUPS NOT SHOWN FOR CLARITY.

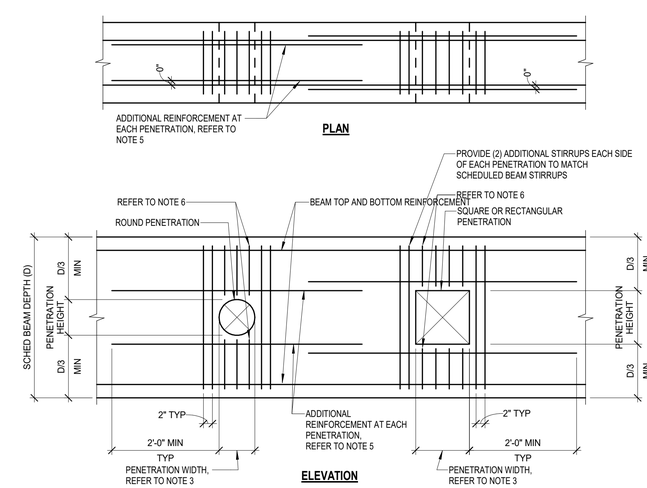

4 TYPICAL HORIZONTAL PENETRATION IN CONCRETE BEAM
NO SCALE

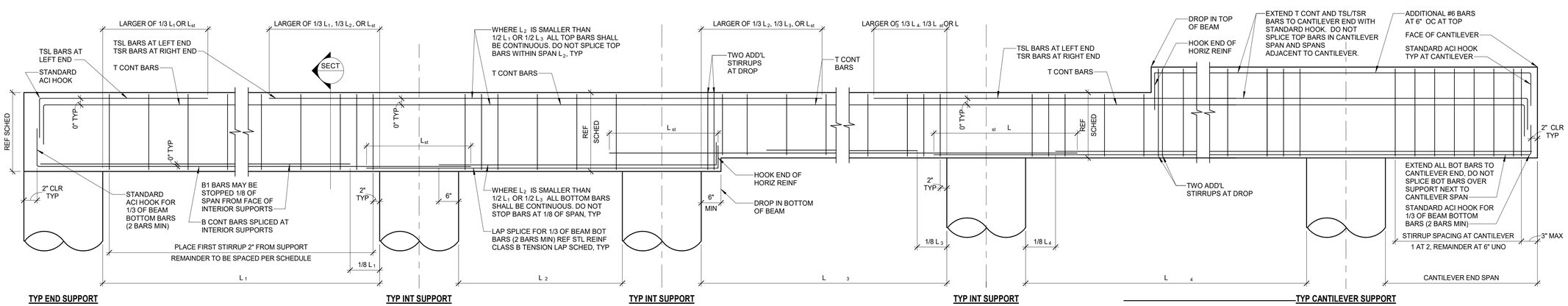

NOTES:

1. L_{st} = LAP SPLICE LENGTH - REF TYP STL REINF CLASS B TENSION LAP SCHED 4/S-300
2. SCHEDULED LEFT AND RIGHT END OF MEMBERS READ ON PLAN AS LEFT AND RIGHT OF THE SHEET OR BOTTOM AND TOP OF THE SHEET RESPECTIVELY AS SHOWN BELOW. SCHEDULED LEFT AND RIGHT END OF MEMBERS SHOWN DIAGONALLY ON PLAN READ AS LEFT AND RIGHT ON SHEET AS SHOWN BELOW:

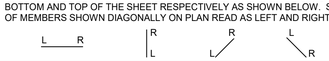

3. T CONT BARS MAY BE SPLICED AT MID-SPAN OF BEAM ONLY. EXCEPT AT CANTILEVER SPANS, SPANS ADJACENT TO CANTILEVER SPANS AND SPANS WITH LENGTH NOT GREATER THAN ONE HALF OF THE ADJACENT SPAN LENGTH.
4. ALL HOOKS SHOWN ARE STANDARD HOOKS (90° OR 180°).
5. SPLICES IN SCHEDULED BARS LESS THAN 60'-0" LENGTH ARE ONLY PERMITTED AT THE SPECIFIED LOCATIONS SHOWN. SPLICES IN SCHEDULED BARS MORE THAN 60'-0" LENGTH SHALL BE REFERRED TO ENGINEER FOR APPROVAL.

3 TYPICAL GRADE BEAM ELEVATION
NO SCALE

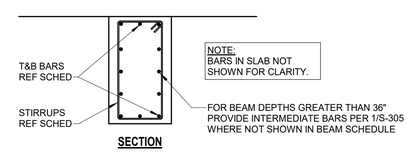

Kubala ENGINEERS
Ph: 800.248.3674
www.kubalaengineers.com
TX. REG. NO. F-3709

PBK

ARCHITECT PBK Architects, Inc.
HOUSTON PBK.com
11 Greenway Plaza, 22nd Floor
Houston, TX 77046
713-965-0608 P
713-961-4571 F
TX Firm: BR 1608

CIVIL
DIG
T 713-965-0608
SPORTS
PBK SPORTS
T 281-528-1697
STRUCTURAL
KUBALA ENGINEERS
T 800-248-3674
MEPT
LEAF ENGINEERS
T 713-940-3300
ENVELOPE
BEAM
T 713-940-3201
AV / ACOUSTIC
JAFFE HOLDEN
T 713-807-7100
THEATER
SCHULER SHOOK
T 214-747-5300
FOOD SERVICE
FOOD DESIGN PROFESSIONAL
T 281-350-2323

FRIENDSWOOD HIGH SCHOOL ADDITIONS AND RENOVATIONS

702 Greenbriar Dr
Friendswood, TX 77546

ISSUE FOR PROPOSAL

STATE OF TEXAS
JOHN R. KUBALA
106120
PROFESSIONAL ENGINEER
02/14/2022
Kubala Engineers
F-3709

CLIENT
FRIENDSWOOD ISD

DATE	PROJECT NUMBER
02/02/2022	20381

DRAWING HISTORY

No.	Description	Date
2	ADDENDUM #2	02/14/2022

ISSUE FOR PROPOSAL

GENERAL GRADE BEAM NOTES AND TYP DETAILS

S-305

File Path: C:_Revit\Local\ST21-20381-FHS_Central_amer.taghebiLLC29.rvt

CHECKED BY:
Checker
DRAWN BY:
Author
Plot Stamp:
2/14/2022 6:44:48 PM

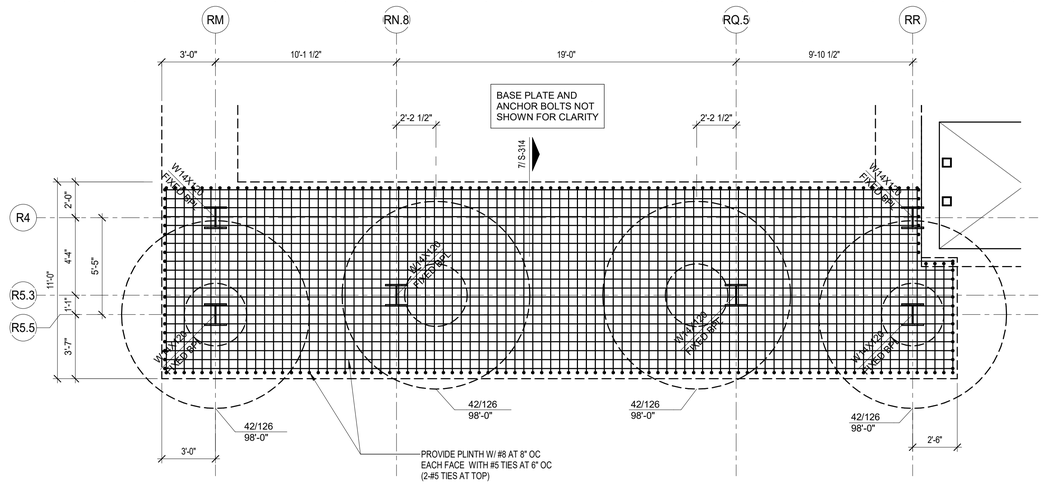

1 FOUNATION PARTIAL PLAN - AREA S - ALONG GRID LINES "R4", "R5.3 & "R5.5"
1/4" = 1'-0"

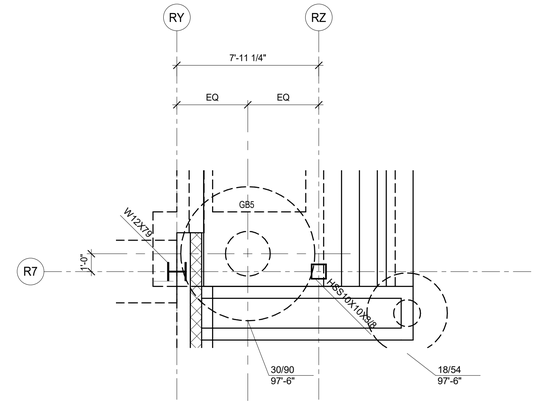

4 FOUNDATION PARTIAL PLAN - AREA S - ALONG GRID LINE "R7"
1/4" = 1'-0"

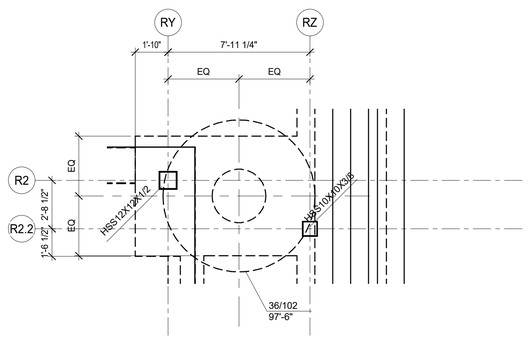

2 FOUNDATION PARTIAL PLAN - AREA S - ALONG GRID LINES "R2" & "R2.2"
1/4" = 1'-0"

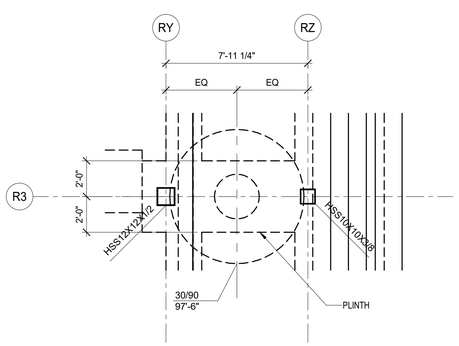

3 FOUNDATION PARTIAL PLAN - AREA S - ALONG GRID LINE "R3"
1/4" = 1'-0"

Kubala ENGINEERS
Ph: 800.248.3674
www.kubalaengineers.com
TX. REG. NO. F-3709

PAC - FOUNDATION PARTIAL PLANS
S-309
FOR BLUEBEAM LABELING/OCR:

File Path: C:_Revit\Local\ST21-20381-FHS_Central_amer.taghleb\LLC29.rvt

CHECKED BY:
Checker
DRAWN BY:
Author
Plot Stamp:
2/14/2022 6:44:50 PM

PBK

ARCHITECT
PBK Architects, Inc.
PBK.com
HOUSTON
11 Greenway Plaza, 22nd Floor
Houston, TX 77046
713-965-0608 P
713-961-4571 F
TX Firm: BR 1608

CIVIL
DIG
T 713-965-0608
SPORTS
PBK SPORTS
T 281-528-1697
STRUCTURAL
KUBALA ENGINEERS
T 800-248-3674
MEPT
LEAF ENGINEERS
T 713-940-3300
ENVELOPE
BEAM
T 713-940-3201
AV / ACOUSTIC
JAFFE HOLDEN
T 713-807-7100
THEATER
SCHULER SHOOK
T 214-747-5300
FOOD SERVICE
FOOD DESIGN PROFESSIONAL
T 281-350-2323

FRIENDSWOOD HIGH SCHOOL ADDITIONS AND RENOVATIONS

702 Greenbriar Dr
Friendswood, TX 77546
ISSUE FOR PROPOSAL

FRIENDSWOOD INDEPENDENT SCHOOL DISTRICT

STATE OF TEXAS
JOHN R. KUBALA
106120
PROFESSIONAL ENGINEER
02/14/2022
Kubala Engineers
F-3709

CLIENT
FRIENDSWOOD ISD

DATE	PROJECT NUMBER
02/02/2022	20381

DRAWING HISTORY

No.	Description	Date
2	ADDENDUM #2	02/14/2022

ISSUE FOR PROPOSAL

PAC - FOUNDATION PARTIAL PLANS

S-309

FOUNDATION SECTIONS AND DETAILS
S-314
FOR BLUEBEAM LABELING/OCR:

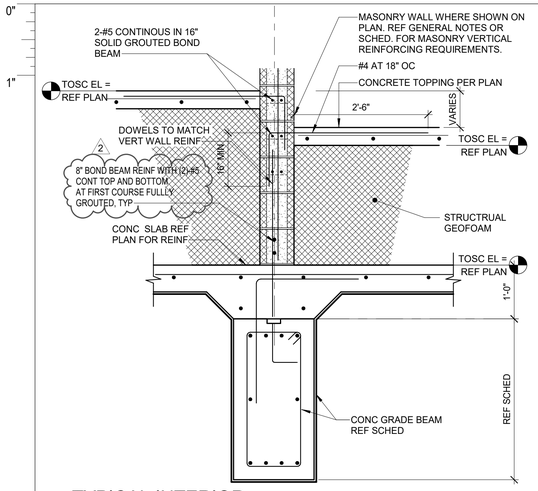

1 TYPICAL INTERIOR CMU WALL ON SOG
3/4" = 1'-0"

NOTE:
1. SIM MEANS DEPRESSION ON TERRAZO SEIDE. REF ARCH FOR AMOUNT AND LOCATION OF DEPRESSION

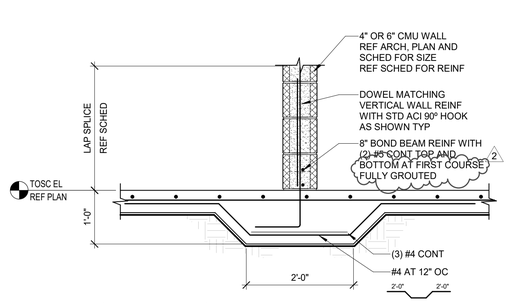

4 TYPICAL INTERIOR CMU WALL ON SLAB ON GRADE
3/4" = 1'-0"

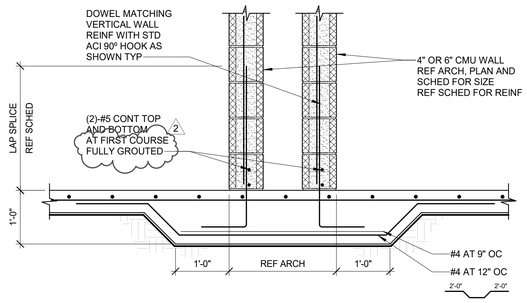

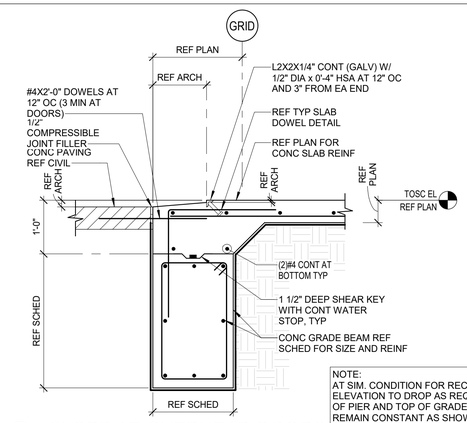

NOTE:
AT SIM. CONDITION FOR RECESS, SLAB ELEVATION TO DROP AS REQ'D. TOP OF PIER AND TOP OF GRADE BEAM TO REMAIN CONSTANT AS SHOWN. REFER ARCH DRAWINGS AND PLAN FOR RECESS LOCATION AND RECESS AMOUNT.

9 SLOPE AT OVERHEAD DOORS
3/4" = 1'-0"

NOT USED

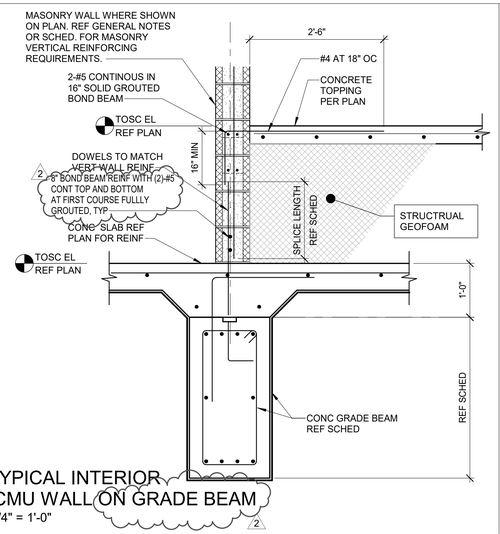

5 TYPICAL INTERIOR CMU WALL ON GRADE BEAM
3/4" = 1'-0"

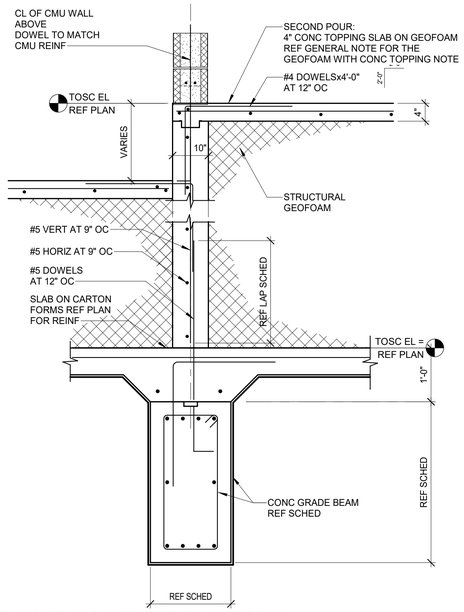

7 RAISED CONCRETE PLATFORM ON SOG
3/4" = 1'-0"

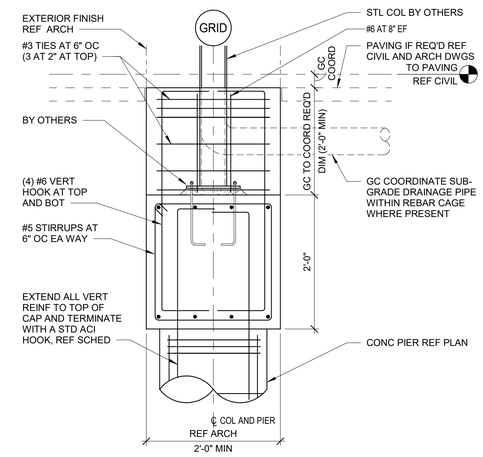

10 CANOPY COLUMN FOUNDATION
3/4" = 1'-0"

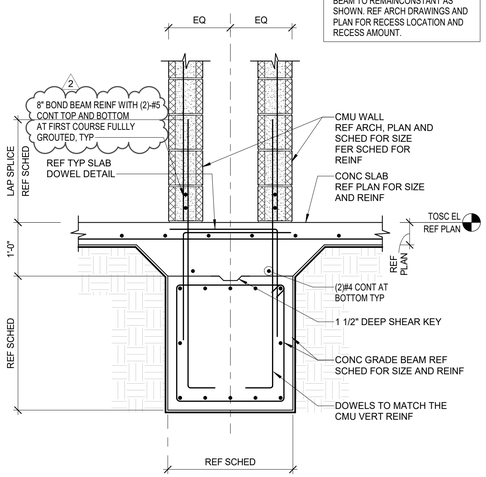

NOTE:
1. AT SIM. CONDITION FOR RECESS, SLAB ELEVATION TO DROP AS REQ'D. TOP OF PIER AND TOP OF GRADE BEAM TO REMAINCONSTANT AS SHOWN. REF ARCH DRAWINGS AND PLAN FOR RECESS LOCATION AND RECESS AMOUNT.

3 FOUNDATION DETAIL
3/4" = 1'-0"

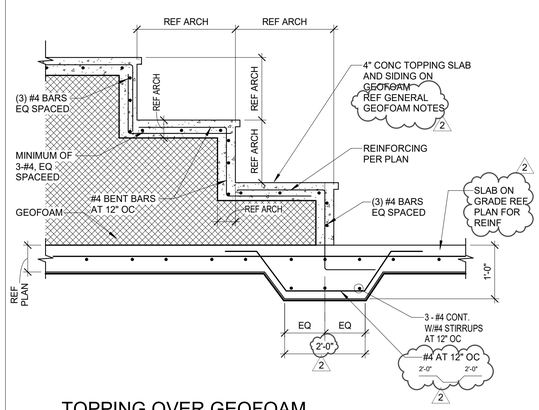

6 TOPPING OVER GEOFOAM AT THE STAIRS OR STEPS
3/4" = 1'-0"

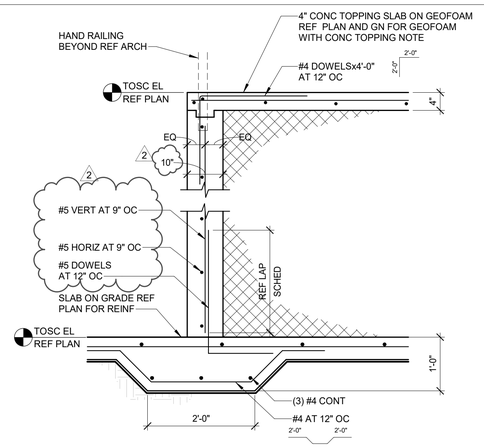

8 RAISED CONCRETE PLATFORM AT SLAB
3/4" = 1'-0"

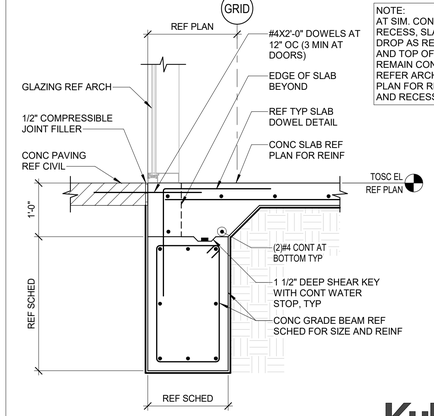

NOTE:
AT SIM. CONDITION FOR RECESS, SLAB ELEVATION TO DROP AS REQ'D. TOP OF PIER AND TOP OF GRADE BEAM TO REMAIN CONSTANT AS SHOWN. REFER ARCH DRAWINGS AND PLAN FOR RECESS LOCATION AND RECESS AMOUNT.

11 TYPICAL GLAZIN AT GRADE BEAM
3/4" = 1'-0"

Kubala ENGINEERS
Ph: 800.248.3674
www.kubalaengineers.com
TX. REG. NO. F-3709

File Path: C:_Revit\Local\ST21-20381-FHS_Central_amer.taghleb\LLC29.rvt

CHECKED BY:
Checker
DRAWN BY:
Author
Plot Stamp:
2/14/2022 6:44:53 PM

PBK

ARCHITECT
PBK Architects, Inc.
PBK.com
HOUSTON
11 Greenway Plaza, 22nd Floor
Houston, TX 77046
713-965-0608 P
713-961-4571 F
TX Firm: BR 1608

CIVIL
DIG
T 713-965-0608
SPORTS
PBK SPORTS
T 281-528-1697
STRUCTURAL
KUBALA ENGINEERS
T 800-248-3674
MEPT
LEAF ENGINEERS
T 713-940-3300
ENVELOPE
BEAM
T 713-940-3201
AV / ACOUSTIC
JAFFE HOLDEN
T 713-807-7100
THEATER
SCHULER SHOOK
T 214-747-6300
FOOD SERVICE
FOOD DESIGN PROFESSIONAL
T 281-350-2323

FRIENDSWOOD HIGH SCHOOL ADDITIONS AND RENOVATIONS

702 Greenbriar Dr
Friendswood, TX 77546

ISSUE FOR PROPOSAL

STATE OF TEXAS
JOHN R. KUBALA
106120
PROFESSIONAL ENGINEER
02/14/2022
Kubala Engineers
F-3709

CLIENT
FRIENDSWOOD ISD

DATE	PROJECT NUMBER
02/02/2022	20381

DRAWING HISTORY

No.	Description	Date
2	ADDENDUM #2	02/14/2022

ISSUE FOR PROPOSAL

FOUNDATION SECTIONS AND DETAILS

S-314

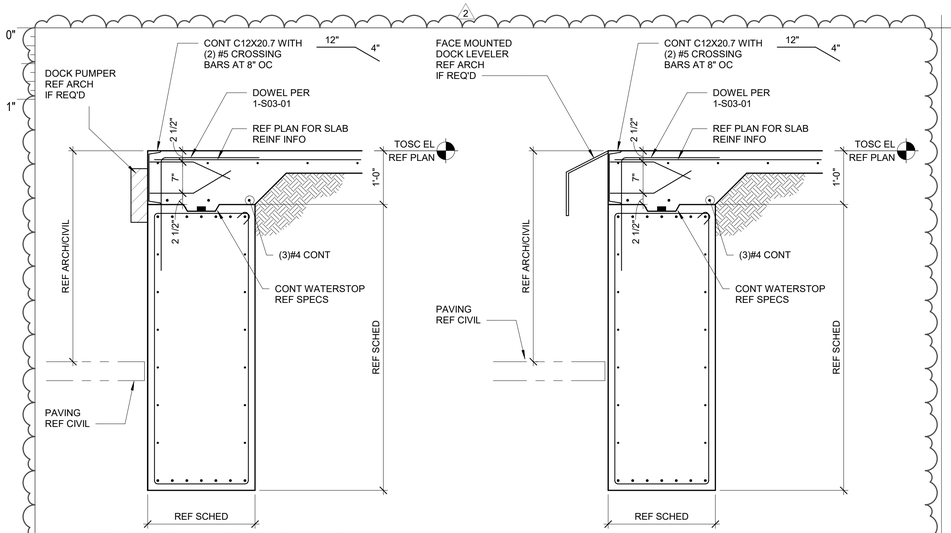

1 GRADE BEAM AT LOADING DOCK
3/4" = 1'-0"

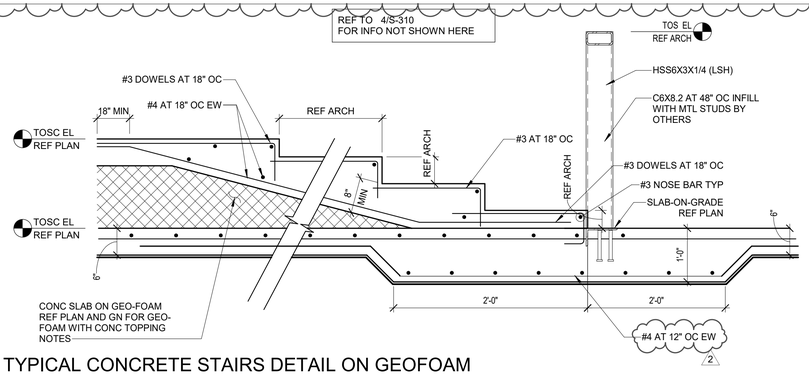

2 TYPICAL CONCRETE STAIRS DETAIL ON GEOFOAM
3/4" = 1'-0"

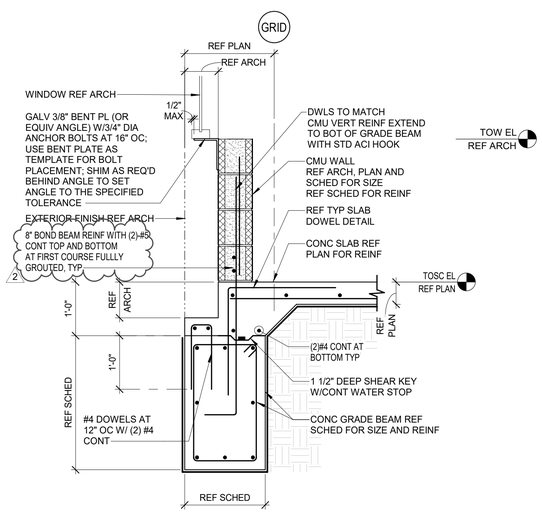

NOTE: EXTERIOR CMU BACK-UP WALL SHALL BE 8" CMU OR LARGER. REF CMU WALL REINF SCHEDULE ON SHT S-401 & S-402 FOR WALL REINF.

NOTE:
AT SIM. CONDITION FOR RECESS, SLAB ELEVATION TO DROP AS REQ'D. TOP OF PIER AND TOP OF GRADE BEAM TO REMAIN CONSTANT AS SHOWN.
REFER ARCH DRAWINGS AND PLAN FOR RECESS LOCATION AND RECESS AMOUNT.

3 SECTION AT WINDOW
3/4" = 1'-0"

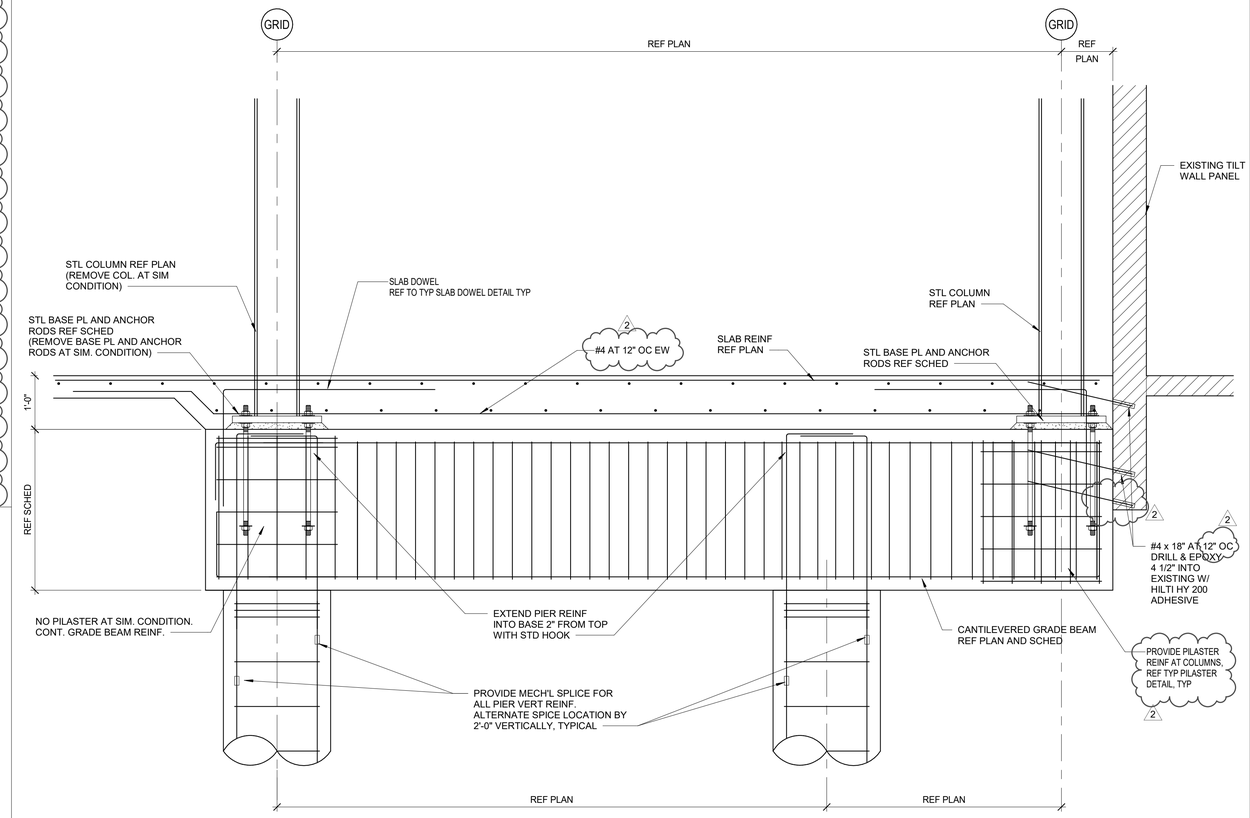

4 DETAIL AT EXISTING
3/4" = 1'-0"

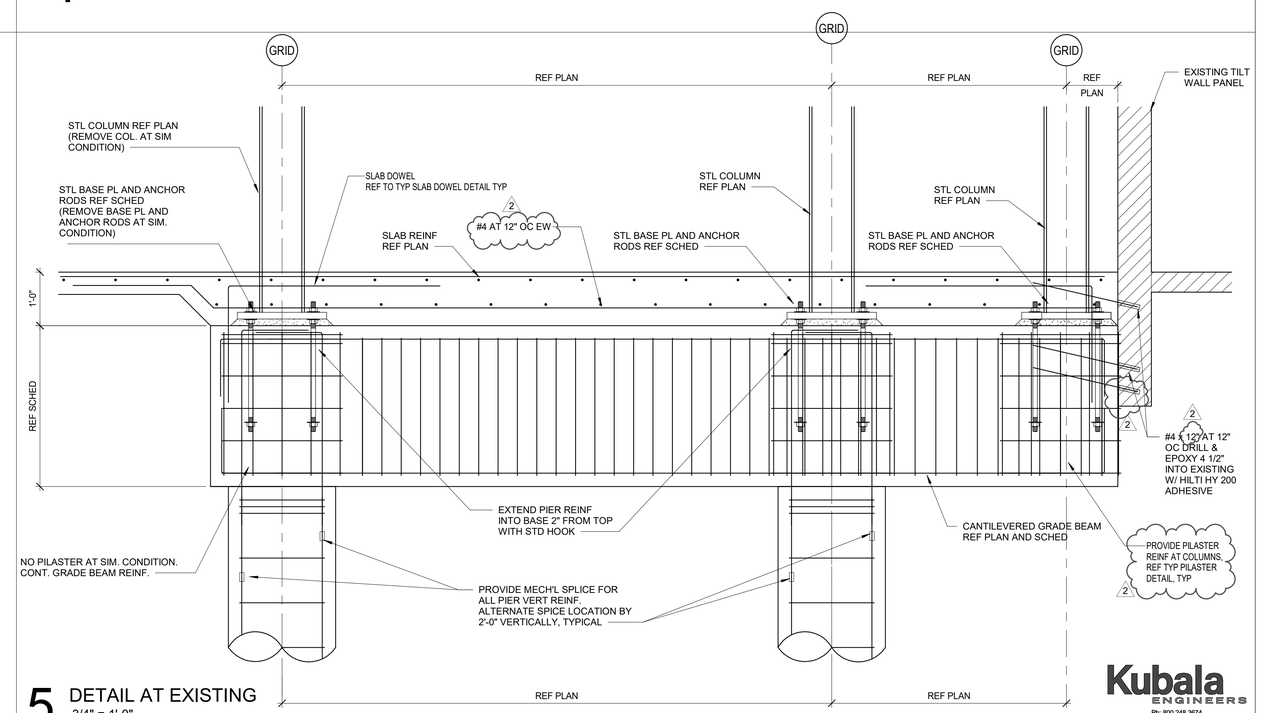

5 DETAIL AT EXISTING
3/4" = 1'-0"

Kubala ENGINEERS
Ph: 800.248.3674
www.kubalaengineers.com
TX. REG. NO. F-3709

PBK

ARCHITECT PBK Architects, Inc.
HOUSTON PBK.com
11 Greenway Plaza, 22nd Floor
Houston, TX 77046
713-965-0608 P
713-961-4571 F
TX Firm: BR 1608

CIVIL
DIG
T 713-965-0608
SPORTS
PBK SPORTS
T 281-528-1697
STRUCTURAL
KUBALA ENGINEERS
T 800-248-3674
MEPT
LEAF ENGINEERS
T 713-940-3300
ENVELOPE
BEAM
T 713-940-3201
AV / ACOUSTIC
JAFFE HOLDEN
T 713-807-7100
THEATER
SCHULER SHOOK
T 214-747-6300
FOOD SERVICE
FOOD DESIGN PROFESSIONAL
T 281-350-2323

FRIENDSWOOD HIGH SCHOOL ADDITIONS AND RENOVATIONS

702 Greenbriar Dr
Friendswood, TX 77546

ISSUE FOR PROPOSAL

STATE OF TEXAS
JOHN R. KUBALA
106120
PROFESSIONAL ENGINEER
02/14/2022
Kubala Engineers
F-3709

CLIENT
FRIENDSWOOD ISD

DATE	PROJECT NUMBER
02/02/2022	20381

DRAWING HISTORY

No.	Description	Date
2	ADDENDUM #2	02/14/2022

ISSUE FOR PROPOSAL

FOUNDATION SECTIONS AND DETAILS

S-315

FOUNDATION SECTIONS AND DETAILS
S-315
FOR BLUEBEAM LABELING/OCR:

File Path: C:_Revit\Local\ST21-20381-FHS_Central_amer.taghieb.LLC29.rvt

CHECKED BY:
Checker
DRAWN BY:
Author
Plot Stamp:
2/14/2022 6:44:54 PM

FOUNDATION SECTIONS AND DETAILS
S-318
FOR BLUEBEAM LABELING/OCR:

0"
1"

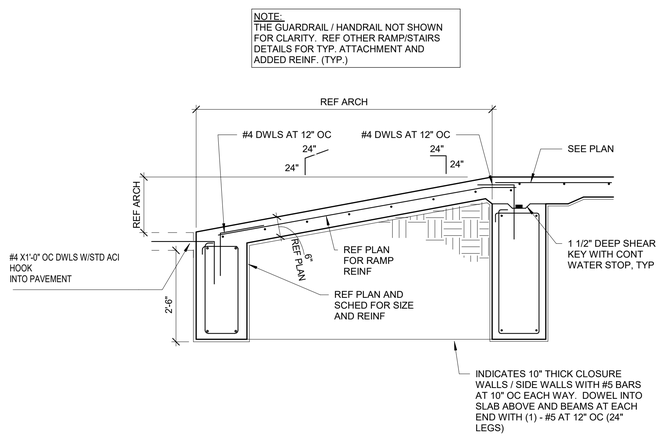

1 CONCRETE RAMP DETAIL
3/4" = 1'-0"

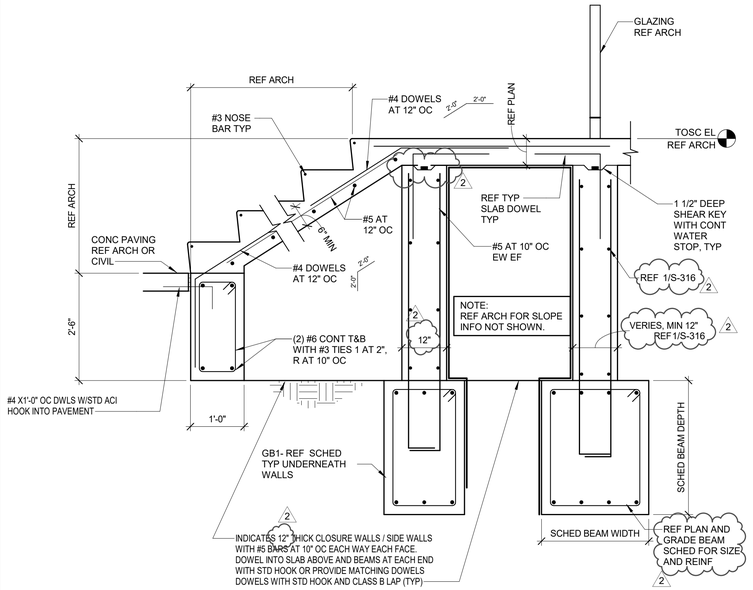

3 CONCRETE STAIR DETAIL
3/4" = 1'-0"

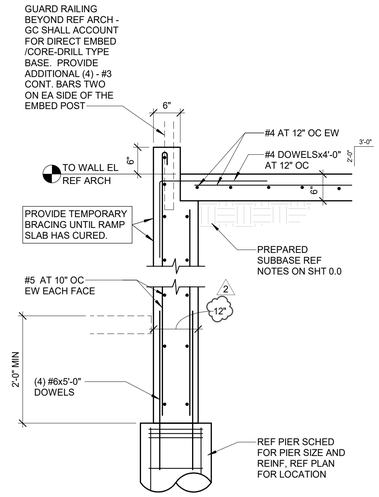

5 RAMP AT PIER
3/4" = 1'-0"

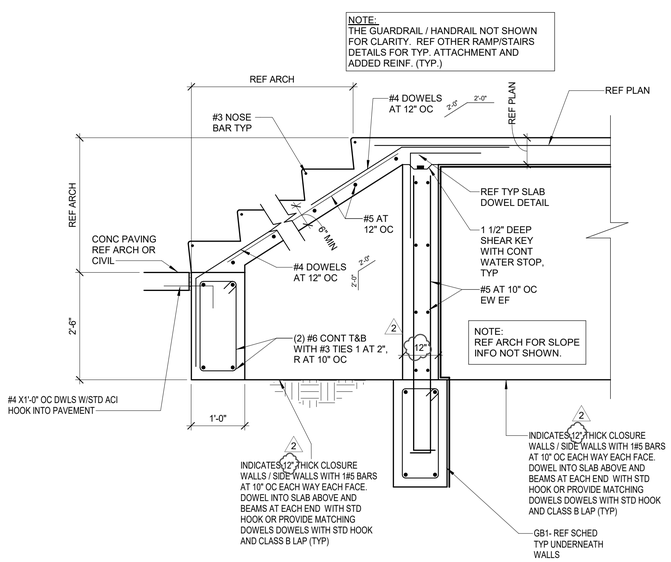

2 CONCRETE STAIR DETAIL
3/4" = 1'-0"

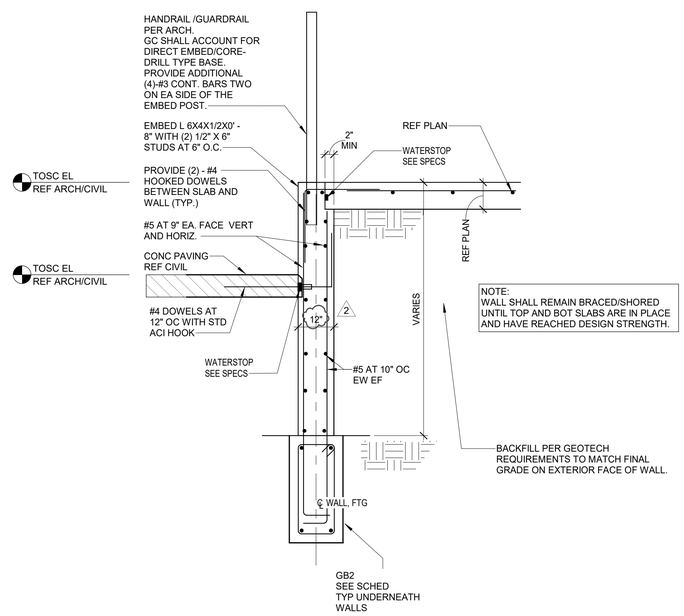

4 CONCRETE WALL
3/4" = 1'-0"

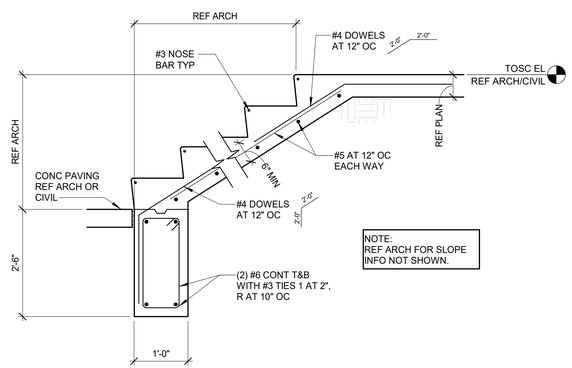

6 CONCRETE STAIR DETAIL
3/4" = 1'-0"

Kubala ENGINEERS
Ph: 800.248.3674
www.kubalaengineers.com
TX. REG. NO. F-3709

PBK

ARCHITECT
PBK Architects, Inc.
PBK.com
HOUSTON
11 Greenway Plaza, 22nd Floor
Houston, TX 77046
713-965-0608 P
713-961-4571 F
TX Firm: BR 1608
CIVIL
CIG
T 713-965-0608
SPORTS
PBK SPORTS
T 281-528-1697
STRUCTURAL
KUBALA ENGINEERS
T 800-248-3674
MEPT
LEAF ENGINEERS
T 713-940-3300
ENVELOPE
BEAM
T 713-940-3201
AV / ACOUSTIC
JAFFE HOLDEN
T 713-807-7100
THEATER
SCHULER SHOOK
T 214-747-6300
FOOD SERVICE
FOOD DESIGN PROFESSIONAL
T 281-350-2323

FRIENDSWOOD HIGH SCHOOL ADDITIONS AND RENOVATIONS

702 Greenbriar Dr
Friendswood, TX 77546

ISSUE FOR PROPOSAL

STATE OF TEXAS
JOHN R. KUBALA
106120
LICENSED PROFESSIONAL ENGINEER
02/14/2022
Kubala Engineers
F-3709

CLIENT
FRIENDSWOOD ISD

DATE	PROJECT NUMBER
02/02/2022	20381

DRAWING HISTORY

No.	Description	Date
2	ADDENDUM #2	02/14/2022

ISSUE FOR PROPOSAL

FOUNDATION SECTIONS AND DETAILS

S-318

File Path: C:_RevitLocal\ST21-20381-FHS_Central_amer.taghleb\LLC29.rvt

CHECKED BY:
Checker
DRAWN BY:
Author
Plot Stamp:
2/14/2022 6:44:56 PM

FOUNDATION SECTIONS AND DETAILS
S-319
FOR BLUEBEAM LABELING/OCR:

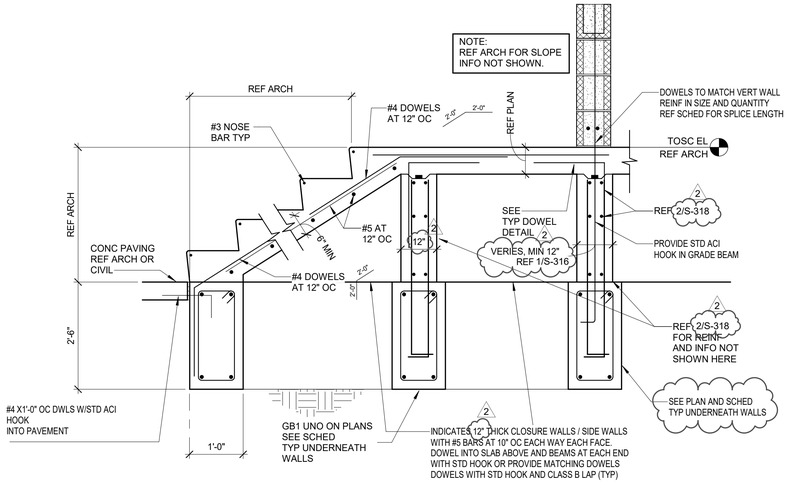

1 CONCRETE STAIR DETAIL
3/4" = 1'-0"

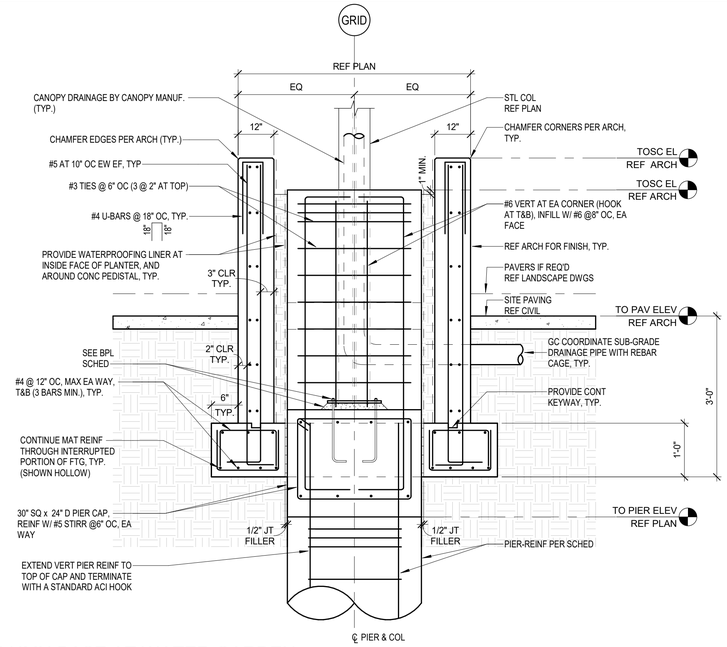

4 COLUMN BASE AT WATER GARDEN
NO SCALE

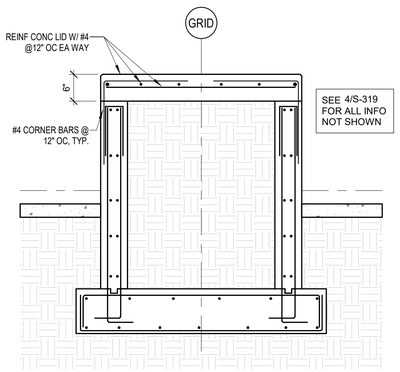

2 SECTION AT WATER GARDEN
NO SCALE

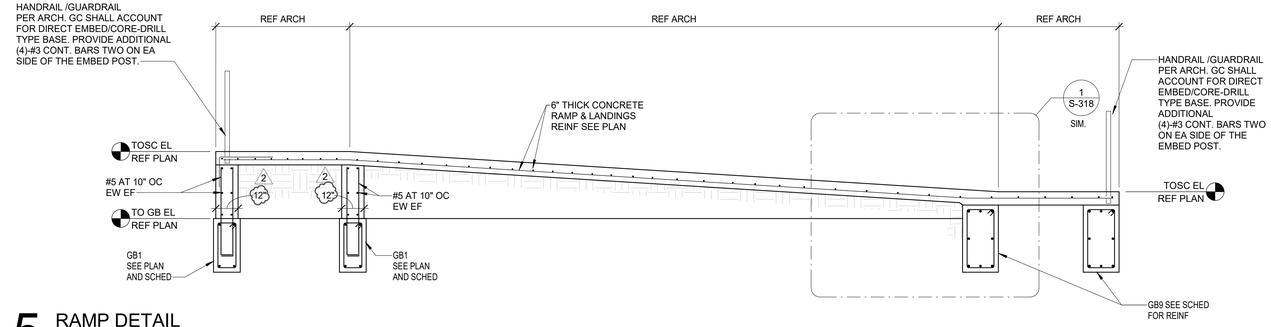

5 RAMP DETAIL
3/8" = 1'-0"

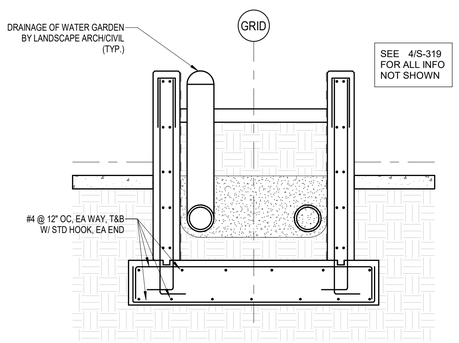

3 SECTION AT WATER GARDEN
NO SCALE

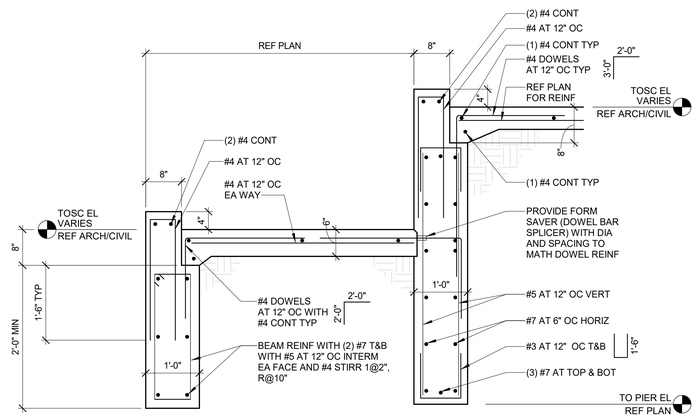

6 CONCRETE RAMP DETAIL
3/4" = 1'-0"

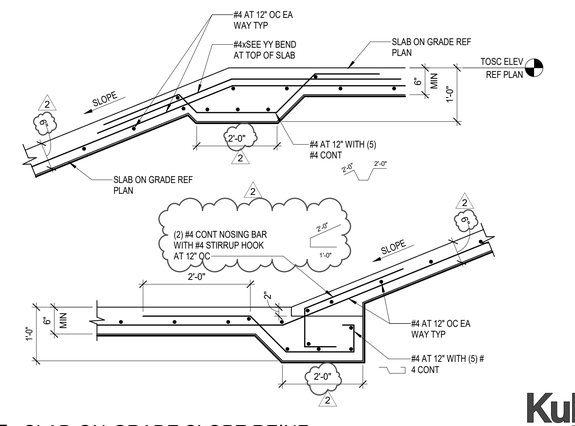

7 SLAB-ON-GRADE SLOPE REINF
NO SCALE

Kubala ENGINEERS
Ph: 800.248.3674
www.kubalaengineers.com
TX. REG. NO. F-3709

PBK

ARCHITECT PBK Architects, Inc.
PBK.com
HOUSTON
11 Greenway Plaza, 22nd Floor
Houston, TX 77046
713-965-0608 P
713-961-4571 F
TX Firm: BR 1608

CIVIL
DIG
T 713-965-0608
SPORTS
PBK SPORTS
T 281-528-1697
STRUCTURAL
KUBALA ENGINEERS
T 800-248-3674
MEPT
LEAF ENGINEERS
T 713-940-3300
ENVELOPE
BEAM
T 713-940-3201
AV / ACOUSTIC
JAFFE HOLDEN
T 713-807-7100
THEATER
SCHULER SHOOK
T 214-747-5300
FOOD SERVICE
FOOD DESIGN PROFESSIONAL
T 281-350-2323

FRIENDSWOOD HIGH SCHOOL ADDITIONS AND RENOVATIONS

702 Greenbriar Dr
Friendswood, TX 77546

ISSUE FOR PROPOSAL

STATE OF TEXAS
JOHN R. KUBALA
106120
LICENSED PROFESSIONAL ENGINEER
02/14/2022
Kubala Engineers
F-3709

CLIENT
FRIENDSWOOD ISD

DATE	PROJECT NUMBER
02/02/2022	20381

DRAWING HISTORY

No.	Description	Date
2	ADDENDUM #2	02/14/2022

ISSUE FOR PROPOSAL

FOUNDATION SECTIONS AND DETAILS

S-319

File Path: C:_Revit\Local\ST21-20381-FHS_Central_amer.taghleiLLC29.rvt

CHECKED BY:
Checker
DRAWN BY:
Author
Plot Stamp:
2/14/2022 6:44:59 PM

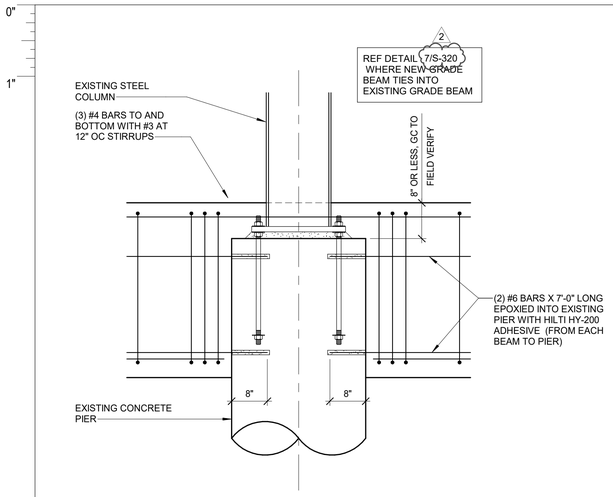

1 NEW GRADE BEAM AT EXISTING PIER AND COLUMN
3/4" = 1'-0"

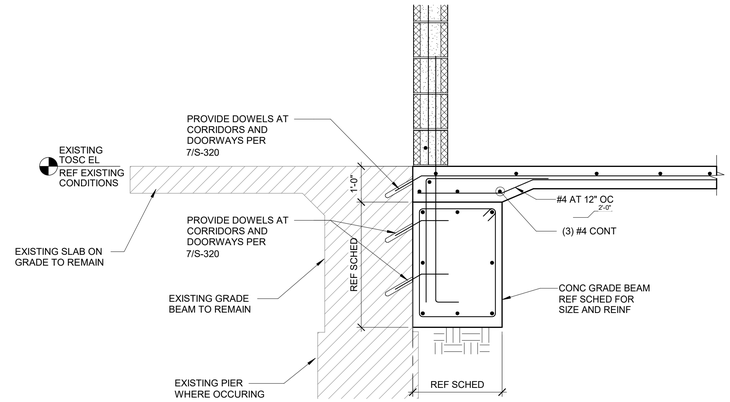

2 DETAIL AT THE EXISTING
3/4" = 1'-0"

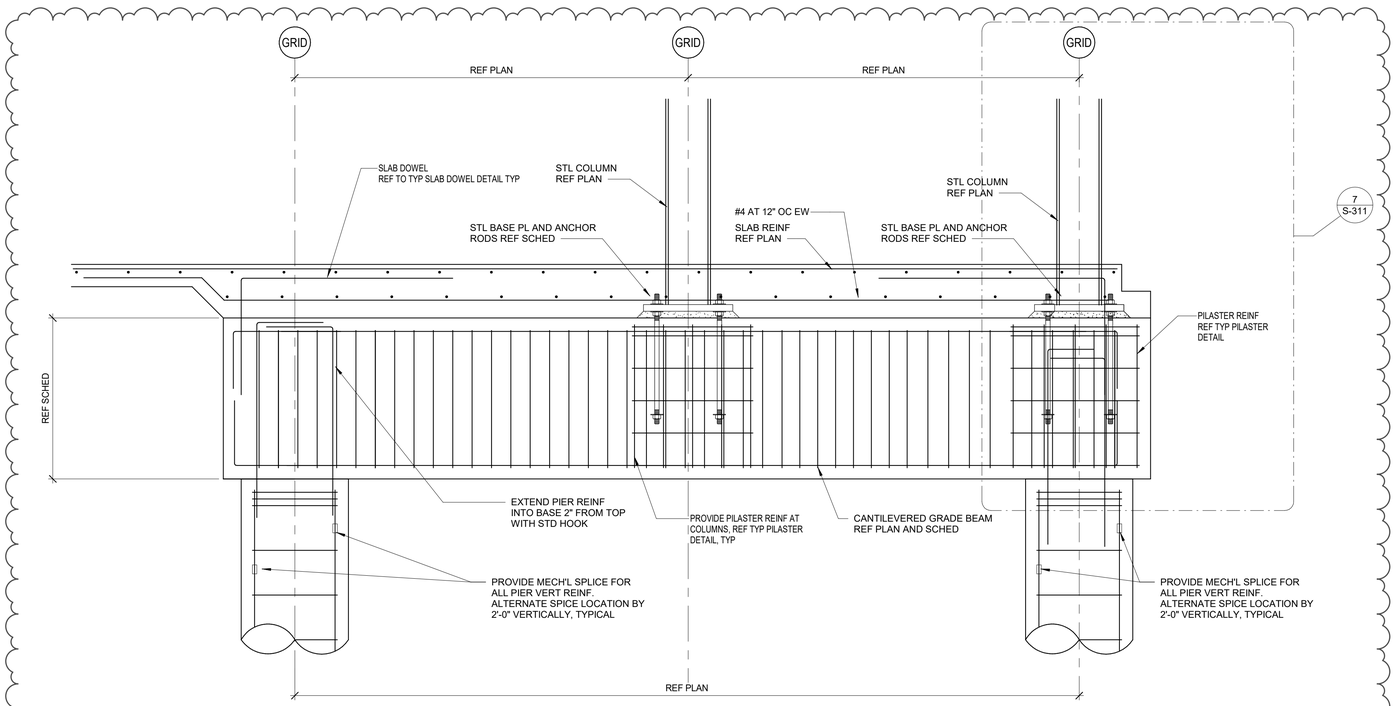

3 DETAIL AT OFFSET PIER
3/4" = 1'-0"

TYPICAL EXISTING FOUNDATION DETAILS
S-322
FOR BLUEBEAM LABELING/OCR:

File Path: C:_RevitLocal\ST21-20381-FHS_Central_amer.taghlebiLLC29.rvt

CHECKED BY:
Checker
DRAWN BY:
Author
Plot Stamp:
2/14/2022 6:45:00 PM

Kubala ENGINEERS
Ph: 800.248.3674
www.kubalaengineers.com
TX. REG. NO. F-3709

PBK

ARCHITECT PBK Architects, Inc.
PBK.com
HOUSTON
11 Greenway Plaza, 22nd Floor
Houston, TX 77046
713-965-0608 P
713-961-4571 F
TX Firm: BR 1608

CIVIL
DIG
T 713-965-0608
SPORTS
PBK SPORTS
T 281-528-1697
STRUCTURAL
KUBALA ENGINEERS
T 800-248-3674
MEPT
LEAF ENGINEERS
T 713-940-3300
ENVELOPE
BEAM
T 713-940-3201
AV / ACOUSTIC
JAFFE HOLDEN
T 713-807-7100
THEATER
SCHULER SHOOK
T 214-747-5300
FOOD SERVICE
FOOD DESIGN PROFESSIONAL
T 281-350-2323

FRIENDSWOOD HIGH SCHOOL ADDITIONS AND RENOVATIONS

702 Greenbriar Dr
Friendswood, TX 77546
ISSUE FOR PROPOSAL

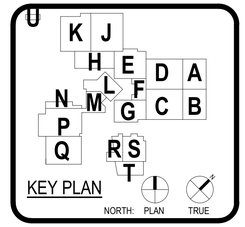

STATE OF TEXAS
JOHN R. KUBALA
106120
PROFESSIONAL ENGINEER
02/14/2022
Kubala Engineers
F-3709

CLIENT
FRIENDSWOOD ISD

DATE	PROJECT NUMBER
02/02/2022	20381

DRAWING HISTORY

No.	Description	Date
2	ADDENDUM #2	02/14/2022

ISSUE FOR PROPOSAL

TYPICAL EXISTING FOUNDATION DETAILS

S-322

GENERAL CMU NOTES AND TYP DETAILS
S-402
FOR BLUEBEAM LABELING/OCR:

0"
1"

	SW TAG	CMU (SIZE)	MEAN ROOF HEIGHT (SIMPLE SPAN)	VERT REINF (IN FULLY GROUTED CELLS)	HORIZ REINF (IN FULLY GROUTED CELLS)	JAMB / JOINT REINF (IN FULLY GROUTED CELLS)
EXTERIOR WALL	SW1	8"	16'-0"	#6 @ 24" OC EF	#5 @ 48" OC	(2) #6 PER CELL IN FIRST 3 CELLS
			>16'-0" ..... 28'-0"	#6 @ 8" OC EF	#5 @ 32" OC	(2) #6 PER CELL IN FIRST 3 CELLS
	SW2	12"	16'-0"	#6 @ 40" OC EF	#5 @ 32" OC	(2) #6 PER CELL IN FIRST 3 CELLS
			>16'-0" ..... 28'-0"	#6 @ 16" OC EF	#5 @ 32" OC EF	(2) #6 PER CELL IN FIRST 3 CELLS
	W1	12"	13'-0"	#7 @ 16" OC EF	#5 @ 32" OC EF	(2) #6 PER CELL IN FIRST 3 CELLS
INTERIOR WALL	SW1	8"	16'-0"	#6 @ 32" OC	#5 @ 32" OC	(2) #6 PER CELL IN FIRST 4 CELLS
			>16'-0" ..... 28'-0"	#6 @ 16" OC EF	#5 @ 32" OC	(2) #6 PER CELL IN FIRST 4 CELLS

NOTES:

1. UNLESS NOTED OTHERWISE, REFER TO THE SCHEDULE ABOVE FOR VERTICAL WALL REINFORCING REQUIREMENTS AT ALL STRUCTURAL CMU WALLS.
2. THE STRUCTURAL MASONRY SHOWN ON THE PLANS IS PART OF THE LATERAL LOAD RESISTING SYSTEM OF THE BUILDING. THE STRUCTURAL DETAILS, INCLUDING CLIP ANGLES, DOWELS AND ADDITIONAL SECONDARY FRAMING MEMBERS, ETC., SHOWN ARE CRITICAL TO THE LATERAL PERFORMANCE OF THE BUILDING. THE TEMPORARY STEEL FRAME BRACING PROVIDED DURING CONSTRUCTION SHALL NOT BE REMOVED UNTIL ALL STRUCTURAL LATERAL BRACING SYSTEMS (INCLUDING STRUCTURAL MASONRY WALLS) HAVE BEENINSTALLED AND CONNECTED TO THE STEEL FRAMING.
3. THE FIRST (3) CELLS AT CORNERS (IN EA DIRECTION), ENDS OF WALLS AND EACH SIDE OF THE CONTROL JOINTS SHALL BE REINFORCED WITH THE SAME SIZE AND NUMBER OF REINFORCING BARS AS SPECIFIED FOR THE OTHER REINFORCED CELLS IN THE WALL AND GROUTED FULL.
4. AT OPENINGS, PROVIDE EXTRA REINFORCED GROUTED FULL HEIGHT CONSECUTIVE CELLS EACH SIDE OF THE OPENING EQUAL TO ONE HALF THE TOTAL NUMBER OF THE CELLS INTERRUPTED BY THE OPENING. REINFORCE EACH CELL WITH THE SAME SIZE AND NUMBER OF BARS AS SPECIFIED FOR THE INTERRUPTED CELLS.PROVIDE A MINIMUM OF (2) REINFORCED GROUTED CELLS EACH SIDE OF OPENING. REFER TO 'TYPICAL CMU WALL OPENING DIAGRAM AND SCHEDULE FOR ADDITIONAL INFORMATION.
5. HOLD VERTICAL REINFORCING IN POSITION AT TOP AND BOTTOM AND AT 8'-0" OC MAXIMUM.
6. REFER TO GENERAL NOTES, SPECIFICATIONS AND SECTIONS/DETAILS FOR INFORMATION NOT SHOWN.
7. VERTICAL BARS MAY BE SPLICED IN 8'-0" (+ or -) LENGTHS. SPLICES LOCATED IN ADJACENT CELLS SHALL BE STAGGERED SUCH THAT NOT MORE THAN 50 PERCENT OF THE BARS ARE SPLICED AT THE SAME LOCATION.

1 TYPICAL STRUCTURAL MASONRY CMU WALL REINF. SCHEDULE
NO SCALE

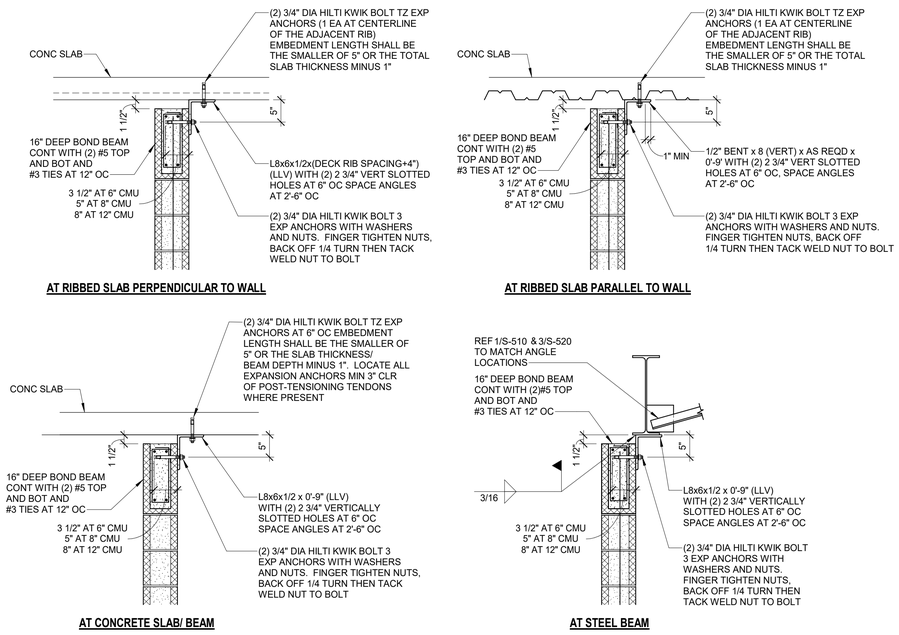

2 TYPICAL BRACING AT TOP OF STRUCTURAL CMU SHEAR WALLS AND NON STRUCTURAL EXTERIOR CMU WALLS
3/4" = 1'-0"

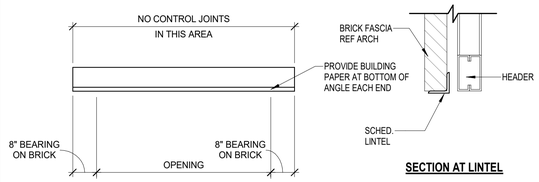

CLEAR OPENING	MINIMUM ANGLE SIZE
0 TO LESS THAN 6'-0"	L 3 1/2 x 3 1/2 x 5/16
6'-0" TO LESS THAN 7'-0"	L 5 x 3 1/2 x 5/16 (LLV)
7'-0" TO LESS THAN 8'-0"	L 6 x 3 1/2 x 5/16 (LLV)
8'-0" - 10'-0"	L 7 x 4 x 3/8 (LLV)

NOTES:

1. REF ARCHITECTURAL DRAWINGS FOR SIZE AND LOCATIONS OF OPENINGS.
2. PROVIDE 1" OF BEARING @ EACH JAMB FOR EACH FOOT OF CLEARSPAN BUT NOT LESS THAN 8".
3. WHERE MIN. BEARING CANNOT BE ACHIEVED, PROVIDE ADEQUATE CONNECTION TO STRUCTURAL MEMBERS OR PROVIDE VERTICAL SUPPORTS AS REQ'D. SUCH DETAILS SHALL BE APPROVED BY THE ENGINEER OF RECORD.

3 TYPICAL STEEL LOOSE LINTEL SCHEDULE
NO SCALE

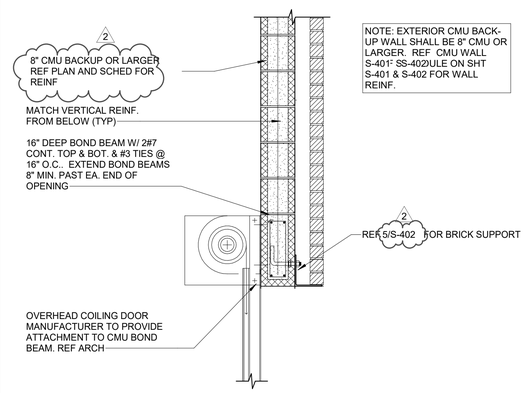

4 TYPICAL OVERHEAD COILING DOOR ATTACHMENT TO CMU BACKUP WALL DETAIL
3/4" = 1'-0"

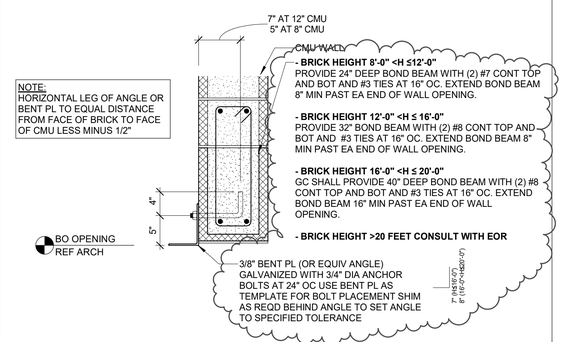

5 TYPICAL LINTEL WITH SHELF ANGLE
NO SCALE

NOTES:

1. EXTEND BOND BEAM CONTINUOUSLY BETWEEN PILASTERS FOR EACH CANOPY LEVEL.
2. GALVANIZE ALL PARTS THAT EXTEND THROUGH ARCHL WALL MATERIALS.
3. CONNECTION APPLIES FOR CANOPY ROOF FRAMING BEAMS AND HANGERS.
4. REF SHELF ANGLE 5/S-402 2 FOR TYPICAL LINTEL WITH

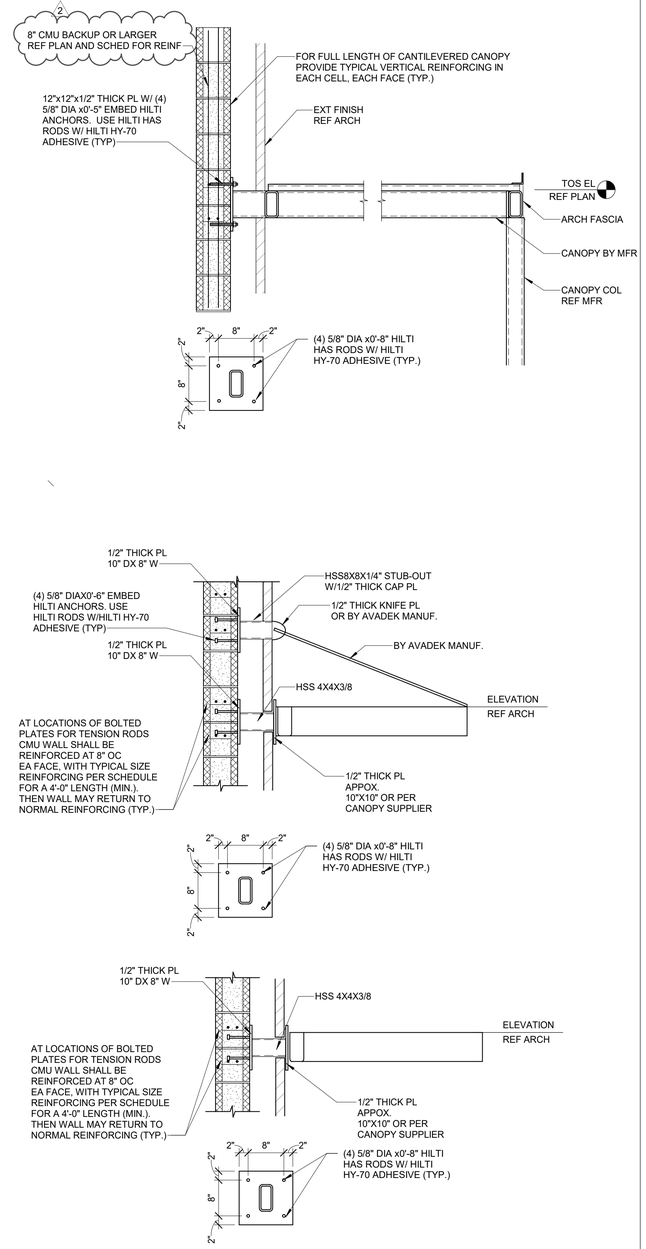

6 AVADECK CANOPY CONNECTION DETAIL
3/4" = 1'-0"

Kubala ENGINEERS
Ph: 800.248.3674
www.kubalaengineers.com
TX. REG. NO. F-3709

PBK

ARCHITECT PBK Architects, Inc.
PBK.com
HOUSTON
11 Greenway Plaza, 22nd Floor
Houston, TX 77046
713-965-0608 P
713-961-4571 F
TX Firm: BR 1608
CIVIL
CIVIL
T 713-965-0608
SPORTS
PBK SPORTS
T 281-528-1697
STRUCTURAL
KUBALA ENGINEERS
T 800-248-3674
MEPT
LEAF ENGINEERS
T 713-940-3300
ENVELOPE
BEAM
T 713-940-3201
AV / ACOUSTIC
JAFFE HOLDEN
T 713-807-7100
THEATER
SCHULER SHOOK
T 214-747-5300
FOOD SERVICE
FOOD DESIGN PROFESSIONAL
T 281-350-2323

FRIENDSWOOD HIGH SCHOOL ADDITIONS AND RENOVATIONS

702 Greenbriar Dr
Friendswood, TX 77546

ISSUE FOR PROPOSAL

U
K J H E D A L F N M G C B P Q R S T
KEY PLAN
NORTH: PLAN TRUE

STATE OF TEXAS
JOHN R. KUBALA
106120
PROFESSIONAL ENGINEER
02/14/2022
Kubala Engineers
F-3709

CLIENT
FRIENDSWOOD ISD

DATE	PROJECT NUMBER
02/02/2022	20381

DRAWING HISTORY

No.	Description	Date
2	ADDENDUM #2	02/14/2022

ISSUE FOR PROPOSAL

GENERAL CMU NOTES AND TYP DETAILS

S-402

File Path: C:_RevitLocal\S721-20381-FHS_Central_amer.taghleb\LLC29.rvt
CHECKED BY: Checker
DRAWN BY: Author
Plot Stamp: 2/14/2022 6:45:02 PM

GENERAL STEEL NOTES AND TYP DETAILS

S-500

FOR BLUEBEAM LABELING/OCR:

STRUCTURAL STEEL:

MATERIAL:

1. STRUCTURAL STEEL IS TO CONFORM TO THE FOLLOWING ASTM SPECIFICATIONS, AND IS TO BE FABRICATED AND ERECTED IN ACCORDANCE WITH THE LATEST EDITION OF THE AISC SPECIFICATIONS:
A. STEEL WIDE FLANGE AND WT SECTIONS..... ASTM A992 OR ASTM A572 - GRADE 50
B. MISCELLANEOUS STEEL SECTIONS (ANGLES, CHANNELS AND BARS)..... ASTM A36
C. HOLLOW STEEL SECTIONS..... ASTM A500, GRADE B
D. STEEL PIPE SECTIONS..... ASTM A53, GRADE B
E. BOLTS AND NUTS (HEAVY-HEX)..... ASTM A325
F. SHEAR-STUD CONNECTORS..... ASTM A108
G. ANCHOR RODS..... ASTM F1554, GRADE 36, GRADE 55 OR GRADE 105
H. PLATES..... ASTM A36 OR A572 GRADE 50
K. WASHERS..... ASTM F436

2. ALL STEEL SHALL BE DOMESTICALLY (INCLUDING CANADA) MILLED AND FABRICATED. FOREIGN STEEL SHALL NOT BE UTILIZED WITHOUT PRIOR APPROVAL FROM THE STRUCTURAL ENGINEER. THE APPROVAL PROCESS SHALL TAKE PLACE DURING BIDDING TIME. ANY REQUEST TO UTILIZE FOREIGN STEEL MADE AFTER BIDDING SHALL BE REJECTED.

3. STRUCTURAL STEEL, MISCELLANEOUS METAL, AND EMBEDS EXPOSED TO THE EXTERIOR ARE TO BE HOT DIP GALVANIZED AFTER FABRICATION, EXCEPT AS NOTED ON THE DRAWINGS. TUBE SHAPE MEMBERS EXPOSED TO THE EXTERIOR SHALL HAVE CAP PLATES SEAL WELDED, UNLESS NOTED OTHERWISE ON THE DRAWINGS.

4. STRUCTURAL STEEL IS TO BE PREPARED AND PRIMED ACCORDING TO THE PROJECT SPECIFICATIONS. STRUCTURAL STEEL LOCATED IN CRAWL SPACES OR OTHERWISE INACCESSIBLE AREAS IS TO RECEIVE 2 COATS OF PRIMER.

5. CONTINUITY PLATES (FULL DEPTH COLUMN STIFFENERS ALIGNED WITH BEAM FLANGES, OR FULL DEPTH BEAM STIFFENERS ALIGNED WITH COLUMN FLANGES) SHALL MATCH THE STEEL GRADE OF THE BASE MEMBER.

6. IN ADDITION TO THE STEEL INDICATED ON THE DRAWINGS, THE CONTRACTOR SHALL INCLUDE THREE (3) PERCENT OF TOTAL TONNAGE OF FABRICATED STEEL (LABOR FOR ERECTION SHALL BE INCLUDED) DURING THE PROCESS OF WORK AS MAY BE DIRECTED BY THE ARCHITECT/ENGINEER OF RECORD. IF STEEL IS NOT USED DURING THE COURSE OF THE PROJECT, OWNER IS TO RECEIVE A CREDIT FOR THE PORTION NOT USED.

CONNECTIONS:

1. ALL STRUCTURAL STEEL DETAILS AND CONNECTIONS SHALL CONFORM TO STANDARDS OF THE AISC. DOUBLE CONNECTIONS THROUGH COLUMN WEBS, BEAM TO BEAM CONNECTIONS AND BEAMS THAT FRAME OVER THE TOP OF COLUMNS REQUIRE A BEAM ERECTION SEAT OR A STAGGERED CONNECTION WITH AT LEAST ONE INSTALLED BOLT REMAINING IN PLACE TO SUPPORT THE FIRST BEAM WHILE THE SECOND BEAM IS BEING ERECTED.

2. CONNECTIONS THAT ARE NOT DETAILED ON THE DRAWINGS SHALL BE SELECTED FROM THE TABLES IN PART 10 OF THE LATEST EDITION OF THE MANUAL OF STEEL CONSTRUCTION OF THE AICSC. TABLE 10-1 MAY BE USED FOR ALL-BOLTED DOUBLE ANGLE CONNECTIONS. TABLE 10-2 MAY BE USED FOR WELDED/BOLTED DOUBLE ANGLE CONNECTIONS. TABLE 10-3 MAY BE USED FOR ALL-WELDED DOUBLE ANGLE CONNECTIONS. BEAM REACTIONS SHALL BE ONE-HALF THE TOTAL ALLOWABLE UNIFORM LOAD GIVEN IN TABLE 3-6 THROUGH 3-9 IN PART 3 OF THE MANUALOF STEEL CONSTRUCTION OF AISC. CONNECTIONS FOR COMPOSITE BEAMS SHALL HAVE THE STANDARD AISC CAPACITY INCREASED BY 35 PERCENT.

3. PROVIDE ALL NECESSARY HOLES IN STRUCTURAL STEEL MEMBERS FOR ATTACHMENT OF ALL NON-STRUCTURAL ITEMS (IE: HOLES FOR WINDOW HEAD ANCHORS). SEE ARCHITECTURAL DRAWINGS FOR ANY REQUIREMENTS.

4. SPLICING OF STRUCTURAL STEEL MEMBERS MUST BE APPROVED BY THE STRUCTURAL ENGINEER, IF NOT ALREADY SHOWN ON THE DRAWINGS.

5. SHOP BOLTED CONNECTIONS ARE PERMISSIBLE IF SUFFICIENT BOLT CLEARANCE IS AVAILABLE FOR TIGHTENING OF HIGH STRENGTH BOLTS. CLEARANCES SHALL BE IN ACCORDANCE WITH TABLE 7-16 AND 7-17 OF THE LATEST EDITION OF THE MANUAL OF STEEL CONSTRUCTION OF THE AISC. ALL STEEL MEMBERSAND ASSEMBLIES SHALL BE SHOP FABRICATED TO THE GREATEST EXTENT POSSIBLE. TRUSSES SHALL BE FULLY SHOP ASSEMBLED. FIELD SPLICES FOR SHIPPING PURPOSES SHALL ONLY BE AS APPROVED BY THE ENGINEER OF RECORD. THE STEEL FABRICATOR AND THE STEEL ERECTOR SHALL COORDINATE THE SHOP FABRICATION, SHIPPING AND ERECTION OF ALL STRUCTURAL MEMBERS AND ASSEMBLIES.

6. ALL CONNECTION BOLTS FOR STRUCTURAL STEEL MEMBERS MUST CONFORM TO ASTM A325 OR A490 UNLESS NOTED OTHERWISE. MINIMUM SIZE SHALL BE 3/4 INCH DIAMETER. STRUCTURAL STEEL CONNECTIONS SHALL BE DESIGNED BY THE CONTRACTOR IN ACCORDANCE WITH THE MINIMUM REQUIREMENTS SPECIFIED ON S501. BOLTS SHALL BE DIRECT TENSION INDICATING BOLTS CONFORMING TO ASTM F1852 WITH HARDENED WASHERS UNDER THE NUT AND SACRIFICIAL SPLINES. HEX NUTS MUST CONFORM TO ASTM A563 AND WASHERS MUST CONFORM TO ASTM F436.

7. ALL MOMENT CONNECTIONS SHALL BE FULL WELDED CONNECTIONS DESIGNED TO DEVELOP THE FULL CROSS-SECTION OF THE MEMBER. STIFFENER PLATES, WHERE SHOWN, ARE MANDATORY AND MAY NOT BE OMITTED. MOMENT CONNECTIONS ARE INDICATED ON THE PLANS BY A TRIANGULAR BULB ON THE END OF THE BEAM, OR BY THE LETTERS "MC".

8. EMBED PLATES TO BE INSTALLED IN THE FOUNDATION AND/OR SLAB SHALL BE SUBMITTED FOR REVIEW WITH THE ANCHOR BOLTS.

9. BOLTS SHALL BE TIGHTENED BY THE AISC "SNUG TIGHT" METHOD UNLESS NOTED OTHERWISE

10. CANTILEVER BEAMS MOMENT CONNECTED TO THE FRAME SHALL BE THE SAME SIZE AS THE BACK-UP SPAN IF NO SIZE IS GIVEN.

11. SHELF ANGLES SHOWN AS CONTINUOUS IN THE SECTIONS SHALL BE INSTALLED IN 20'-0" MAXIMUM LENGTHS, LEAVING A 1/4" GAP BETWEEN ENDS AND AT CORNERS. LOCATE GAPS TO MATCH MASONRY CONTROL JOINTS. AT BUILDING EXPANSION JOINT, LEAVE A GAP TO MATCH EXPANSION JOINT WIDTH.

12. CONNECT MISCELLANEOUS STEEL MEMBERS USING FILLET WELDS SUFFICIENT TO DEVELOP THE TENSILE STRENGTH OF THE SMALLER MEMBER AT THE JOINT UNLESS SHOWN OTHERWISE.

13. STEEL MEMBERS SHOWN TO BE CURVED SHALL BE ROLLED IN A MANNER THAT WILL NOT CAUSE DISTORTION OR BUCKLING. SHOULD ALTERATIONS TO THE MEMBER SIZE, SUCH AS A THICKER FLANGE OR WEB, BE REQUIRED TO ENSURE THIS OUTCOME, THE ADDITIONAL STEEL SHALL BE PROVIDED AT NO ADDITIONAL COST TO THE CONTRACT.

WELDING:

1. ALL WELDING MUST CONFORM TO THE AMERICAN WELDING SOCIETY ANSI/AWS D1.1 STANDARDS, AND SHALL CONFORM TO THE STANDARDS OF THE LATEST EDITION OF THE MANUAL OF STEEL CONSTRUCTION. ALL WELDERS MUST BE CERTIFIED IN ACCORDANCE WITH AWS D1.1. WELDING OF REINFORCING BARS SHALL COMPLY TO THE AMERICAN WELDING SOCIETY AWS D1.4. SHORT CIRCUIT TRANSFER FOR THE GAS METAL ARC WELDING PROCESS IS NOT PERMITTED.

2. ELECTRODES FOR ALL FIELD AND SHOP WELDING SHALL BE CLASS E70XX. ELECTRODES FOR MOMENT CONNECTIONS SHALL BE CLASS E7018 WITH A CHARPY TOUGHNESS OF AT LEAST 20 FT-LBS AT -20 DEGREES FAHRENHEIT.

3. ALL MISCELLANEOUS WELDS SHALL BE MINIMUM SIZE FILLET ALL AROUND AND MUST BE IN ACCORDANCE WITH AISC. WELDING OF CONTINUOUS MEMBERS SHALL BE A MINIMUM OF 2 INCHES OF 3/16 INCH FILLET STITCH WELDS AT 12 INCHES O.C., STAGGERED EACH SIDE, UNLESS SHOWN OTHERWISE ON THE DRAWINGS. COLUMN BASE PLATES, STIFFENER PLATES AND CAP PLATES SHALL BE WELDED ALL AROUND.

4. HEADED STUDS SHALL BE WELDED TO EMBED PLATES BY A METHOD IN WHICH THE CONNECTION CAN DEVELOP THE FULL TENSION AND SHEAR CAPACITY OF THE STUD.

BASE PLATE NOTES:

1. ALL ANCHOR RODS SHALL BE F1554 GRADE 55 UNLESS NOTED OTHERWISE.

2. SIZE WELDS PER AISC MINIMUM FILLET REQUIREMENTS, 5/16" MINIMUM.

3. UNLESS NOTED OTHERWISE, ALL ANCHOR ROD NUTS SHALL BE TIGHTENED TO A "SNUG TIGHT" CONDITION AS DEFINED BY AISC AFTER THE CONCRETE IS AT LEAST 14 DAYS OLD.

4. USE OVERSIZED HOLES FOR ANCHOR RODS ACCORDING TO AMERICAN INSTITUTE OF STEEL CONSTRUCTION. PLATE WASHERS WITH STANDARD HOLES SHALL BE INSTALLED OVER OVERSIZED HOLES.

5. CONTRACTOR SHALL PROVIDE TEMPLATE FOR ANCHOR ROD INSTALLATION.

6. NON-SHRINK GROUT FOR BASE PLATES AND BEARING PLATES:

ALL GROUT USED UNDER STEEL COLUMN BASE PLATES OR BEARING PLATES SHALL BE A NON-METALLIC, SHRINKAGE RESISTANT COMPOUND CONFORMING TO ASTM C1090 AND THE CORPS OF ENGINEERS SPECIFICATION CRD-C-621. THE GROUT SHALL HAVE A MINIMUM STRENGTH OF 6,000 PSI WHEN BEARING ON 3,000 PSI CONCRETE OR LESS, A STRENGTH OF 8,000 PSI WHEN BEARING ON CONCRETE BETWEEN 3,000 AND 4,000 PSI, AND, UNLESS NOTED OTHERWISE ON THE DRAWINGS, A STRENGTH OF 8,000 PSI WHEN BEARING ON CONCRETE GREATER THAN 4,000 PSI. 100 PERCENT OF VOID UNDER ALL BASE PLATES IS TO BE GROUTED. ALL BASE PLATES WITH A DIMENSION GREATER THAN 24" SHALL HAVE TWO 1" DIAMETER GROUT HOLES. IF THE SPACE UNDER A COLUMN BASE PLATE IS LESS THAN 1/4", A PRESSURE INJECTION SYSTEM SHALL BE USED.

GROUT THICKNESS SCHEDULE	
ANCHOR BOLT SIZE	MINIMUM GROUT THICKNESS
LESS THAN 1 1/4"	2"
GREATER THAN 1 1/4"	3"

NOTES:

1. REFER TO SPECIFICATIONS AND GENERAL NOTES FOR GROUT REQUIREMENTS.

2. GROUT MAY BE BEVELED OR FORMED BUT SHALL EXTEND A MIN OF 1 1/2" BEYOND FACE OF BASE PLATE.

1 GROUT SCHEDULE
NO SCALE

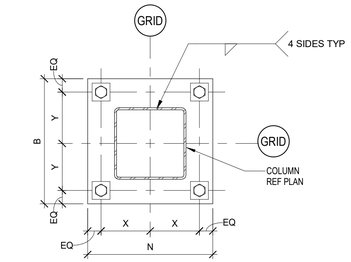

TYPE 1 HSS BASE PLATE
NTS

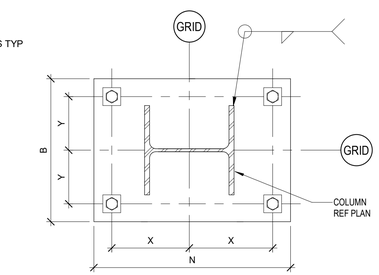

TYPE 2 WIDE FLANGE BASE PLATE
NTS

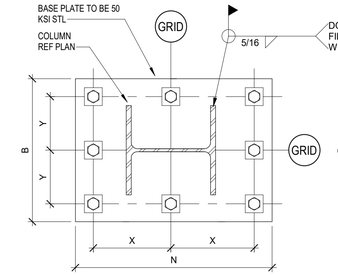

TYPE 3 WIDE FLANGE MOMENT BASE PLATE
NTS

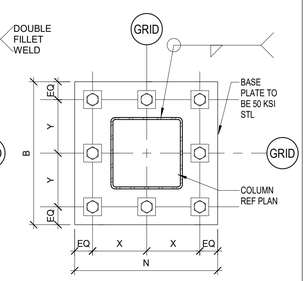

TYPE 4 MOMENT BASE PLATE
NTS

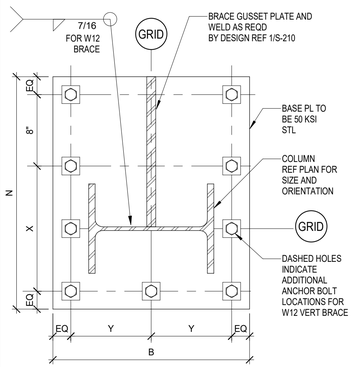

TYPE 5 VERTICAL BRACE BASE PLATE
NTS

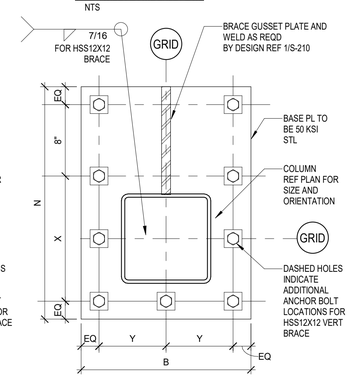

TYPE 6 VERTICAL BRACE BASE PLATE
NTS

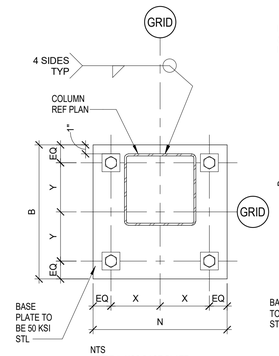

NTS
TYPE 7 HSS BASE PLATE

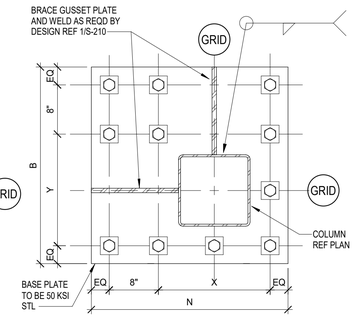

TYPE 8 2-DIRECTION VERTICAL BRACE BASE PLATE
NTS

BASE PLATE SCHEDULE

MARK	COLUMN SIZE	BASE PLATE TYPE	BASE PLATE DIMENSIONS					ANCHOR RODS				NOTES
			N LENGTH (IN)	B WIDTH (IN)	T THICKNESS (IN)	X (IN)	Y (IN)	NUMBER	DIA (IN)	EMBED LENGTH (IN)	ANCHOR ROD GRADE	
-	W10x33 - W10X39	2	18	16	1	7	6	4	1	18	36	-
-	W10x45 - W10X68	2	19	16	1 1/4	7 1/2	6	4	1	18	36	-
-	W12X40 - W12X58 2	2	20	18	1 1/2	8	7	4	1 1/4	18	36	-
-	W12X65 - W12X87	2	21	18	1 1/2	8 1/2	7	4	1 1/4	18	36	-
-	W14X90 - W14X145	2	27	27	2	10 1/2	10 1/2 2	6	2	22	105	BASE PLATE TO 50 KSI STL
-	HSS4X4	1	11	11	1	4	4	4	3/4	18	36	- 2
-	HSS6X6	1	13	13	1	5	5	4	3/4	18	36	-
-	HSS8X8	1	16	16	1	6	6	4	1	18	36	-
-	HSS10X10	1	19	19	1 1/4	7	7	4	1 1/4	18	36	-
-	HSS12X12	1	22	22	1 1/4	8 1/2	8 1/2	4	1 1/4	18	36	-
-	HSS14X14	1	24	24	1 1/2	9 1/2	9 1/2	4	1 1/2	18	36	-
-	W10 VERT BRACE	5	32	20	2	18	7	7	1 1/2	18	105	-
-	W12 VERT BRACE	5	34	22	2 1/2	20	8	9	1 3/4	18	105	-
-	W10 VERT BRACE 2-DIRECTIONS	9	32	32	2	18	18	11	1 1/2	18	105	-
-	W12 VERT BRACE 2-DIRECTIONS	9	34	34	2 1/2	20	20	11	1 3/4	18	105	-
-	HSS8X8 VERT BRACE	6	28	20	2	14	7	7	1 1/2	18	105	-
-	HSS10X10 VERT BRACE	6	30	22	2	16	8	9	1 1/2	18	105	-
-	HSS12X12 VERT BRACE	6	32	24	2 1/2	18	9	9	1 3/4	18	105	-
-	HSS8X8 VERT BRACE 2-DIRECTIONS	8	28	28	2	14	14	11	1 1/2	18	105	-
-	HSS10X10 VERT BRACE 2-DIRECTIONS	8	30	30	2	16	16	11	1 1/2	18	105	-
FIXED BPL	W10 FIXED BP	3	21	16	2	8	5 1/2	8	1 1/2	18	105	-
FIXED BPL	W12 FIXED BP	3	24	18	2	9 1/2	6 1/2	8	1 1/2	24	105	-
FIXED BPL	W14 FIXED BP	3	29	24	2 1/2	11	8 1/2	8	2	24	105	3/4" FLANGE FILLET DOUBLE WELD
FIXED BPL 2	HSS10X10 FIXED BP	4	21	20	2	8	7 1/2	8	1 1/2	18	105	-

2 COLUMN BASE PLATE AND ANCHOR ROD SCHEDULE
1 1/2" = 1'-0"

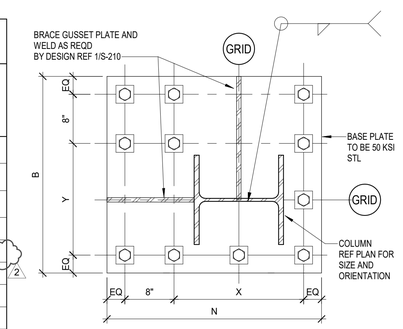

TYPE 9 2-DIRECTION VERTICAL BRACE BASE PLATE
NTS

NOTES:

1. USE OVERSIZED HOLES FOR ANCHOR RODS ACCORDING TO AMERICAN INSTITUTE OF STEEL CONSTRUCTION.

2. PLATE WASHERS WITH STANDARD HOLES SHALL BE INSTALLED OVER OVERSIZED HOLES.

3. CONTRACTOR SHALL PROVIDE TEMPLATE FOR ANCHOR ROD INSTALLATION.

4. MINIMUM GROUT THICKNESS PER GROUT THICKNESS SCHEDULE.

5. SIZE WELDS PER AISC MINIMUM FILLET REQUIREMENTS, 5/16" MINIMUM.

Kubala ENGINEERS
Ph: 800.248.3674
www.kubalaengineers.com
TX. REG. NO. F-3709

PBK

ARCHITECT PBK Architects, Inc.
HOUSTON PBK.com
11 Greenway Plaza, 22nd Floor
Houston, TX 77046
713-965-0608 P
713-961-4571 F
TX Firm: BR 1608

CIVIL
DIG
T 713-965-0608
SPORTS
PBK SPORTS
T 281-528-1697
STRUCTURAL
KUBALA ENGINEERS
T 800-248-3674
MEPT
LEAF ENGINEERS
T 713-940-3300
ENVELOPE
BEAM
T 713-940-3201
AV / ACOUSTIC
JAFFE HOLDEN
T 713-807-7100
THEATER
SCHULER SHOOK
T 214-747-6300
FOOD SERVICE
FOOD DESIGN PROFESSIONAL
T 281-350-2323

FRIENDSWOOD HIGH SCHOOL ADDITIONS AND RENOVATIONS

702 Greenbriar Dr
Friendswood, TX 77546

ISSUE FOR PROPOSAL

STATE OF TEXAS
JOHN R. KUBALA
106120
LICENSED PROFESSIONAL ENGINEER
02/14/2022
Kubala Engineers
F-3709

CLIENT
FRIENDSWOOD ISD

DATE	PROJECT NUMBER
02/02/2022	20381

DRAWING HISTORY

No.	Description	Date
2	ADDENDUM #2	02/14/2022

ISSUE FOR PROPOSAL

GENERAL STEEL NOTES AND TYP DETAILS

S-500

File Path: C:_Revit\Local\ST21-20381-FHS_Central_amer.taghebiLLC29.rvt

CHECKED BY:
Checker
DRAWN BY:
Author
Plot Stamp:
2/14/2022 6:45:04 PM

GENERAL STEEL NOTES AND TYP DETAILS

S-503

FOR BLUEBEAM LABELING/OCR:

0"

1"

STEEL JOIST FRAMING:

1. OPEN WEB STEEL JOISTS SHALL BE DESIGNED, MANUFACTURED AND ERECTED PER THE LATEST STEEL JOIST INSTITUTE (SJI) SPECIFICATIONS. JOISTS SHALL BE CAMBERED FOR DEAD LOAD. PROVIDE THE STANDARD SJI AMOUNT OF CAMBER UNLESS NOTED OTHERWISE ON THE DRAWINGS. THE JOIST SUPPLIER SHALL ADJUST CAMBERS AT JOISTS ADJACENT TO EACH OTHER THAT HAVE VARYING LENGTHS AND AT JOISTS ADJACENT TO STEEL BEAMS WITH SET ELEVATIONS SO THAT THE ELEVATIONS FOR ADJACENT MEMBERS, PRIOR TO ERECTION OF DECK, DO NOT VARY BY MORE THAN 1".

2. STAGGER JOISTS ENDS AS REQUIRED (AT NARROW BEAMS) IN ORDER TO ACHIEVE 2 1/2 INCH MINIMUM BEARING. HORIZONTAL AND DIAGONAL BRIDGING SHALL BE PROVIDED PER SJI SPECIFICATIONS, AND SHALL BE WELDED TO STEEL BEAMS AND DECK SUPPORT ANGLES AT ENDS.

3. AT JOIST SPANS WHERE REQUIRED BY SJI, BOLTED DIAGONAL BRIDGING NEAREST THE CENTER OF THE SPAN SHALL BE INSTALLED AT EACH JOIST PRIOR TO THE SLACKENING OF HOIST LINES. FOR JOISTS THAT SPAN 40 FEET AND GREATER, THE JOIST SHALL HAVE ALL JOISTS BOLTED TO THE SUPPORT AT EACH END.

4. FOR THE THREE JOISTS NEAREST EACH COLUMN, THE BOTTOM CHORDS SHALL BE EXTENDED. BOTTOM CHORD EXTENSION CONNECTIONS SHALL NOT BE MADE UNTIL AFTER THE FULL DEAD LOAD IS APPLIED. A 6 INCH x 6 INCH STABILIZER PLATE SHALL BE PROVIDED IN ORDER TO RECEIVE THE JOIST BOTTOM CHORDS AT ALL COLUMN LOCATIONS. THE PLATE SHALL EXTEND A MINIMUM OF 3" BELOW THE BOTTOM OF THE BOTTOM CHORDS. PROVIDE A 13/16" DIAMETER HOLE IN THE STABILIZER PLATE FOR GUYING CABLES.

5. JOISTS THAT REQUIRE REPAIRS OR MODIFICATIONS DUE TO FABRICATION ERRORS OR TO DAMAGES CAUSED DURING THE SHIPPING PROCESS, SHALL BE REPLACED WITH NEW JOISTS.

6. ALL STEEL JOISTS AND JOIST GIRDERS SHALL BE DESIGNED UNDER THE DIRECT SUPERVISION OF A STRUCTURAL ENGINEER REGISTERED IN THE STATE WHERE THE PROJECT IS LOCATED.

7. PROVIDE STANDARD DEPTH OF BEARING FOR ALL JOISTS AS SHOWN BELOW UNLESS NOTED OTHERWISE ON THE DRAWING OR DICTATED BY JOIST SLOPE:

7.1) ALL K SERIES: 2 1/2" DEEP
7.2) LH SERIES WITH JOIST SECTION NUMBER LESS THAN 18: 5" DEEP
7.3) ALL DLH SERIES JOIST AND LH SERIES JOIST WITH SECTION NUMBER GREATER THAN 18: 7 1/2" DEEP
7.4) WHERE JOISTS WITH DIFFERENT SEAT DEPTHS BUT THE SAME TOP OF JOIST ELEVATION BEAR ON THE SAME SUPPORTING ELEMENT, PROVIDE THE DEEPER JOIST SEAT FOR ALL JOIST BEARING ON THAT ELEMENT UNLESS SPECIFICALLY DETAILED OTHERWISE IN THE CONTRACT DOCUMENTS.

8. HANGERS SUPPORTING MECHANICAL EQUIPMENT, SPRINKLER LINES, ETC., FROM THE CHORD OF STEEL JOISTS, SHALL BE LOCATED AT THE PANEL POINTS OF THE JOISTS OR THE JOIST CHORD SHALL BE REINFORCED TO SUPPORT THE ADDITIONAL LOAD, EXCEPT AS FOLLOWS: HANGERS SUPPORTING LESS THAN 50 POUNDS FROM THE BOTTOM CHORD OR 150 POUNDS FROM THE TOP CHORD DO NOT HAVE TO BE PLACED AT PANEL POINTS. DO NOT SUSPEND ANYTHING FROM JOIST BRIDGING.

9. JOISTS SHALL BE DESIGNED TO RESIST THE NET UPLIFTS TABULATED IN THE "DESIGN LOADS" GENERAL NOTES. PROVIDE EXTRA BRIDGING, WHERE REQUIRED, TO BRACE THE BOTTOM CHORD IN COMPRESSION.

10. SEE ROOF PLANS FOR JOIST TOP CHORDS TO BE DESIGNED AS DRAG STRUTS FOR HORIZONTAL FORCES (NOTED H = _____ KIPS) IN COMBINATION WITH GRAVITY LOADS. THIS FORCE MAY BE EITHER COMPRESSION OR TENSION. STRESSES MAY NOT BE INCREASED FOR WIND.

11. IF BEAM FLANGES ARE NOT WIDE ENOUGH TO ACCOMMODATE BEARING SEATS FROM BOTH SIDES, JOISTS MAY BE OFFSET AND SEATS OVERLAPPED. CONTRACTOR TO COORDINATE DECK LAYOUT SO END LAPS ALWAYS OCCUR OVER JOISTS. JOISTS ON COLUMN LINES MUST STILL BRACE COLUMNS WITH EXTENDED BOTTOM CHORDS.

12. JOIST MANUFACTURER SHALL DESIGN JOIST TOP CHORD EXTENSIONS FOR A UNIFORM TOTAL LOAD OF 300 PLF, OF WHICH 180 IS LIVE LOAD. LIMIT DEFLECTION OF JOIST TOP CHORD EXTENSIONS TO L/120 FOR TOTAL LOAD AND L/180 FOR LIVE LOAD. BUT IN NO CASE SHALL THE DIFFERENTIAL DEFLECTION BETWEEN ADJACENT JOISTS EXCEED 3/8" FOR TOTAL LOAD. "L" IS THE CANTILEVER LENGTH OF THE TOP CHORD EXTENSION.

13. STEEL JOISTS, BRIDGING, AND THEIR CONNECTIONS SHALL BE DESIGNED FOR A NET UPLIFT EQUAL TO THE UPWARD COMPONENT AND CLADDING WIND PRESSURES SHOWN ON THE STRUCTURAL DRAWINGS MINUS 3 PSF OF DEAD LOAD.

14. PROVIDE ALL NECESSARY ERECTION BOLTS, STABILIZER PLATES, BOTTOM CHORD CONNECTIONS, ERECTION BRIDGING, ETC., IN COMPLIANCE WITH OSHA REGULATIONS GOVERNING SAFETY IN THE WORKPLACE. CONNECTION DETAILS SHOWN ARE ADEQUATE FOR FINAL IN PLACE CONDITIONS AND DO NOT NECESSARILY PROVIDE FOR CONSTRUCTION SAFETY.

15. ALL STEEL SHALL BE DOMESTICALLY (INCLUDING CANADA) MILLED AND FABRICATED. FOREIGN STEEL SHALL NOT BE UTILIZED WITH OUT PRIOR APPROVAL FROM THE STRUCTURAL ENGINEER. THE APPROVAL PROCESS SHALL TAKE PLACE DURING BIDDING TIME. ANY REQUEST TO UTILIZE FOREIGN STEEL MADE AFTER BIDDING SHALL BE REJECTED.

16. OPEN WEB STEEL JOIST SUPPLIER IS TO SUBMIT SHOP DRAWINGS PREPARED UNDER THE SUPERVISION OF A LICENSED ENGINEER IN THE STATE IN WHICH THE PROJECT IS BEING PERFORMED TO THE ARCHITECT/ENGINEER FOR REVIEW FOR GENERAL CONFORMANCE WITH THE CONTRACT DOCUMENTS. SEE THE SPECIFICATIONS FOR OTHER SUBMITTAL REQUIREMENTS.

17. FOR OPEN WEB JOISTS, SOME U.L. RATINGS REQUIRE SPECIAL SIZES. THE JOIST MANUFACTURER SHALL VERIFY AND RE-DESIGN ANY/ALL JOISTS AS REQUIRED, TO MEET THE U.L. FIRE RESISTANCE DIRECTORY.

18. ROOF MOUNTED MECHANICAL UNIT LOCATIONS AND DESIGN WEIGHTS ARE SHOWN ON THE ROOF FRAMING PLANS. JOIST MANUFACTURER SHALL DESIGN JOISTS TO SUPPORT THIS ADDITIONAL LOAD. CONTRACTOR SHALL NOTIFY THE ENGINEER IF ACTUAL SIZES, WEIGHTS, OR LOCATIONS DIFFER FROM THOSE SHOWN ON THE ROOF FRAMING PLANS. PROVIDE ADDITIONAL STEEL FRAMING, AS DETAILED, FOR SUPPORT OF RTU CURBS AND PROVIDE DECK SUPPORT ANGLES AT ALL ROOF OPENINGS

GENERAL INFO.:

1. FOR ANY STEEL BEAM OR COLUMN THAT DOES NOT MEET THE MINIMUM SIZE REQUIRED,DUE TO THE U.L. DESIGN NUMBER (SELECTED BY THE ARCHITECT), THE THICKNESS OF THE SPRAYED FIRE PROTECTION MATERIAL MUST BE INCREASED AS REQUIRED BY THE FORMULA SHOWN IN THE U.L. FIRE RESISTANCE DIRECTORY (LATEST EDITION).

2. AT BRICK SUPPORT ANGLES, DURING CONSTRUCTION, THE BRICK SHALL BE INSTALLED WITHOUT SHORING THE SUPPORT ANGLE. SHORING THE BRICK DURING CONSTRUCTION CAN CAUSE HORIZONTAL BED JOINT CRACKING WHEN THE SHORES ARE REMOVED.

3. HEADED ANCHORS/STUDS SHALL BE MANUFACTURED FROM COLD DRAWN MATERIALS PER ASTM A108. ANCHORS/STUDS SHALL BE OF GRADE 50 WITH SOLID FLUX FILLED HEADS. ANCHORS/STUDS STUDS SHALL BE AUTOMATICALLY END WELDED WITH IN ACCORDANCE WITH AWS D1.1. ANCHORS/STUDS FOR EMBEDDED PLATES AND OTHER ANCHORS SHALL BE SHOP WELDED. STUDS FOR COMPOSITE BEAMS MUST BE FIELD WELDED.

4. AT BUILDINGS, WHERE SPLICED COLUMNS ARE REQUIRED, THE STEEL COLUMNS MUST BE SPLICED AT A MINIMUM OF 4'-0" ABOVE THE FINISH FLOOR. COLUMNS SHALL BE SPLICED AT EVERY OTHER LEVEL. AT WIDE FLANGE COLUMNS, PROVIDE HOLES IN THE WEBS FOR 3/4" DIAMETER SAFETY CABLES. AT TUBE OR PIPE COLUMNS, PROVIDE PLATES WITH HOLES WELDED TO THE COLUMNS FOR SAFETY CABLE CONNECTIONS. A L3x3x1/4 DECK SUPPORT ANGLE SHALL BE PROVIDED ON ALL SIDES OF THE COLUMN.

5. ALL STRUCTURAL STEEL OUTSIDE OF THE BUILDING ENVELOPE SHALL BE HOT DIPPED GALVANIZED. WITH A MINIMUM ZINC COATING CLASS OF G90, MEETING THE REQUIREMENTS OF ASTM 123, AND SHALL BE APPLIED AFTER FABRICATION. ALL FIELD WELDS SHALL REQUIRED SHALL BE GROUND SMOOTH AND TOUCHED UP WITH A ZINC RICH PAINT.

6. THE GENERAL CONTRACTOR AND HIS SUBCONTRACTOR'S SHALL COMPLY TO OSHA 29 CFR 1926 SUBPART R, SAFETY STANDARDS FOR STEEL ERECTION.

7. THE DRAWINGS AND SPECIFICATIONS MAY NOT INDICATE OR DESCRIBE ALL OF THE WORK REQUIRED FOR THE PERFORMANCE AND COMPLETION OF THE PROJECT. THE CONTRACTOR SHALL BE RESPONSIBLE FOR THE FABRICATION AND INSTALLATION OF ALL MISCELLANEOUS METAL ITEMS INDICATED, DESCRIBED, OR IMPLIED ON THE STRUCTURAL AND/OR THE ARCHITECTURAL DRAWINGS. MISCELLANEOUS STEEL ITEMS, WITHIN AN ASSEMBLY AND NOT ATTACHED TO THE STRUCTURE, ARE THE RESPONSIBILITY OF THE GENERAL CONTRACTOR AND HIS SUBCONTRACTORS, WHETHER OR NOT THEY ARE SHOWN ON THE ARCHITECTURAL OR STRUCTURAL DRAWINGS. SUCH ASSEMBLIES INCLUDE, BUT ARE NOT LIMITED TO, EXTERIOR AND INTERIOR WALL ASSEMBLIES, CEILING ASSEMBLIES, PARTITION ASSEMBLIES, SHELF AND CABINET ASSEMBLIES AND ALL OTHER SIMILAR ASSEMBLIES. ANY MISCELLANEOUS METAL ITEMS INDICATED ON THE ARCHITECTURAL DRAWINGS AND NOT SHOWN ON STRUCTURAL DRAWINGS SHALL BE A MINIMUM OF L4x4x1/2", C7x9.8, 3/8" PLATE OR HSS4x4x3/8" UNLESS OTHERWISE APPROVED BY THE STRUCTURAL ENGINEER.

8. THE GENERAL CONTRACTOR AND THE ELEVATOR SUPPLIER SHALL REVIEW THE STRUCTURAL DRAWINGS FOR FLOOR TO FLOOR AND FLOOR TO ROOF HEIGHTS FOR THE REQUIRED DISTANCE BETWEEN BRACE POINTS, FOR THEIR RAIL DESIGN. PROVIDE A W18x50 MINIMUM HOIST BEAM SIZE, IF NO OTHER SIZE IS PROVIDED ON THE PLANS. BRACING REQUIREMENTS FOR THE TOP OF THE RAIL OR INTERMEDIATE RAIL BRACE POINTS, SHALL BE COORDINATED WITH THE STRUCTURAL DRAWINGS. IF BRACING IS REQUIRED BUT NOT SHOWN, PROVIDE A MINIMUM OF TS6x6X1/4 VERTICAL POST OR HANGER ATTACHED TO THE STRUCTURE WITH W8x12 BEAMS OR C7x9.8 CHANNELS SPANNING BETWEEN THE FRAMING MEMBERS. ALL MISCELLANEOUS STEEL MEMBERS REQUIRED TO ATTACH RAILS AT THE RAIL BRACE POINTS SHALL BE SUPPLIED BY THE ELEVATOR SUPPLIER. ELEVATOR MACHINE BEAM OR SHIVE BEAM LOADS SHALL BE COORDINATED WITH THE STRUCTURAL DRAWINGS. LOADS AND LOAD LOCATIONS VARYING FROM THE LOADS SHOWN ON THE STRUCTURAL DRAWINGS SHALL BE VERIFIED WITH THE STRUCTURAL ENGINEER OF RECORD. THE FRAMING AND INFORMATION SHOWN ON THE STRUCTURAL DRAWINGS IS BASED ON:
- ELEVATOR MODEL NO.PER SPEC.
- MANUFACTURED BYPER SPEC.
IF THE ELEVATOR MANUFACTURER AND/OR MODEL NUMBER CHANGES, THE GENERAL CONTRACTOR IS RESPONSIBLE FOR COORDINATING ALL REVISIONS TO THE FOUNDATIONS AND THE FLOOR AND ROOF FRAMING AS REQUIRED DUE TO THE CHANGE IN THE ELEVATOR TYPE.

METAL ROOF DECKING:

1. 19. METAL ROOF DECK OF SIZE NOTED ON PLANS SHALL HAVE THE FOLLOWING MINIMUM PROPERTIES:

METAL DECK SCHEDULE

DECK DESIGNATION ON PLAN	DECK TYPE	DECK GAUGE	SDI DECK TYPE	DECK DEPTH (IN)	Ip (IN4)	In (IN4)	Sp (IN3)	Sn (IN3)	Fy (KSI)	METAL DECK CONNECTION SCHEDULE: FASTEN DECK TO SUPPORT MEMBERS: ATTACHMENT PATTERN (W/N)	FASTEN DECK TO SUPPORT MEMBERS: SUPPORT FASTENERS	SIDELAP FASTENERS
TYPE 1	1.0 CSV	22	CONFORM	1.0	0.073	0.073	0.130	0.134	60	33/4	5/8" PUDDLE WELD	10#10 TEK SCREWS
TYPE 2	3C	20	CONFORM	3.0	0.907	0.909	0.512	0.538	50	36/4	5/8" PUDDLE WELD	12#10 TEK SCREWS
TYPE 3	3VLI	18	COMPOSITE	3.0	1.252	1.252	0.761	0.794	50	36/4	5/8" PUDDLE WELD	12#10 TEK SCREWS
TYPE 4	0.6 C	24	CONFORM	9/16	0.088	0.019	0.019	0.057	60	36/4	5/8" PUDDLE WELD	8#10 TEK SCREWS
	2											2

Ip: POSITIVE MOMENT OF INERTIA
In: NEGATIVE MOMENT OF INERTIA
Sp: POSITIVE SECTION MODULUS
Sn: NEGATIVE SECTION MODULUS
FY:YIELD STRENGTH
W/N: SHEET WIDTH / NUMBER OF CONNECTIONS EACH SHEET

2. SEE ROOF FRAMING PLAN FOR ROOF DECK SEZES.

3. THE METAL ROOF DECK ON THIS PROJECT IS REQUIRED TO PERFORM AS A STRUCTURAL DIAPHRAGM, ALL WELDS AND SCREWS ARE CRITICAL TO THE SUCCESSFUL PERFORMANCE OF THE DIAPHRAGM.

4. STEEL ROOF DECK (WITH RIGID INSULATION BOARD):

ROOF DECK SHALL BE 1 1/2" DEEP, 22 GAGE, WIDE RIB, TYPE B DECK CONFORMING TO ASTM A611 OR A653-99 WITH Fy=33 KSI. DECK SHALL BE GALVANIZED, CONFORMING TO ASTM A924, WITH A MINIMUM ZINC COATING CLASS OF G90 PER ASTM A653-99. DECK SHALL HAVE A MINIMUM MOMENT OF INERTIA OF 0.155 INCH TO THE FOURTH PER FOOT OF WIDTH. FASTEN SIDELAPS WITH #10 TEK SCREWS; ONE AT MIDSPAN OR 3'-0" ON CENTER MAX. WELD DECK THROUGH 5/8" DIAMETER PUDDLE WELDS TO EACH STRUCTURAL SUPPORTING MEMBER AT 1'-0" ON CENTER AT END LAPS AND AT INTERMEDIATE SUPPORTS. AT SPANDREL BEAMS AND DECK SUPPORT ANGLES, AND FOR A 10'-0" SQUARE AREA AT ROOF CORNERS, THE DECK SHALL BE WELDED TO ALL SUPPORTS AT 6" ON CENTER.

4. STEEL ROOF DECK (WITH LIGHTWEIGHT INSULATION FILL):

4.1. LIGHTWEIGHT INSULATION CONCRETE FILL USED OVER ROOF DECKING SHALL HAVE A MIX RATIO OF ONE SACK PORTLAND CEMENT TO SIX CUBIC FEET OF LIGHTWEIGHT CONCRETE AGGREGATE. PERLITE OR VERMICULITE AGGREGATE MUST CONFORM TO ASTM C332. PERLITE SHALL HAVE A MAXIMUM WET DENSITY OF 42 POUNDS PER CUBIC FOOT (PCF), AND VERMICULITE SHALL HAVE A MAXIMUM WET DENSITY OF 60 PCF AT THE POINT OF DICHARGE. BOTH SHALL HAVE A MAX DRY DENSITY OF 32 PCF, AND MUST HAVE A COMPRESSIVE STRENGTH (f'c) OF 200 PSI IN 28 DAYS.

4.2 ROOF DECK SHALL BE CORRUGATED DECK CONFORMING TO ASTM A611 OR A653-99 WITH Fy=60 KSI. DECK SHALL BE GALVANIZED, CONFORMING TO ASTM A924, WITH A MINIMUM ZINC COATING CLASS OF G90 PER ASTM A653-99. DECK SHALL BE 22 GAGE METAL FORMS, 1" DEEP WITH VENTING SLOTS IN VALLEY OF EACH CORRUGATION. DECK SHALL HAVE A MINIMUM SECTION MODULUS OF 0.130 INCHES CUBED PER FOOT OF WIDTH. FASTEN SIDELAPS WITH #10 TEK SCREWS. WELD DECK TO EACH STRUCTURAL SUPPORTING MEMBER AT EVERY OTHER CORRUGATION AT END LAPS AND AT INTERMEDIATE SUPPORTS. AT SPANDREL BEAMS AND DECK SUPPORT ANGLES, AND FOR A 20'-0" SQUARE AREA AT ROOF CORNERS, THE DECK SHALL BE WELDED TO ALL SUPPORTS AT EVERY CORRUGATION OR 6" ON CENTER MAXIMUM.

4.3 THE THICKNESS OF THE LIGHTWEIGHT CONCRETE FILL SHALL BE AS SPECIFIED BY THE ARCHITECT. HOWEVER, THE THICKNESS SHALL NOT EXCEED 2.5 INCHES. ROOF SLOPES THAT ARE NOT REFLECTED IN THE SLOPE OF THE STRUCTURAL FRAMING, SUCH AS AT SMALL AREAS, CRICKET AND THE EDGES OF THE ROOF, SHALL BE IMPLEMENTED BY VARYING THE INSULATION THICKNESS IN LIEU OF VARYING THE THICKNESS OF THE LIGHTWEIGHT CONCRETE FILL. DO NOT EXCEED THE MAXIMUM SPECIFIED THICKNESS OF LIGHTWEIGHT CONCRETE FILL.

5. THE STEEL DECK SHALL ALWAYS BE INSTALLED WITH THE DIRECTION OF FLUTES PERPENDICULAR TO THE FRAMING MEMBERS. THE DECK SHALL BE CUT TO INSURE A MINIMUM OF THREE SPANS PER DECK WIDTH.

6. IN ADDITION TO THE DECK CONNECTIONS INDICATED IN THE CONNECTION SCHEDULE, THE DECK SHALL BE CONNECTED AT EACH FLUTE AT EACH SUPPORT WITHIN THE FIRST 10 FEET FROM THE BUILDING PERIMETER.

7. ROOF DECK SHALL BE CONTINUOUS OVER FOUR OR MORE SUPPORTS. AT LOCATIONS WHERE SINGLE OR DOUBLE SPAN CONDITIONS OCCUR, THE CONTRACTOR SHALL EITHER SHORE THE DECK, OR ADJUST THE GAGE THICKNESS OF THE DECK IN ACCORDANCE WITH THE MANUFACTURER'S RECOMMENDATIONS. DECK SHALL BE DESIGNED TO PROVIDE EQUIVALENT OR GREATER LOAD CAPACITY AS THE SPECIFIED DECK SUPPORT OVER FOUR SUPPORTS.

8. COORDINATE METAL DECK LENGTHS WITH THE FINAL JOIST AND BEAM LAYOUT. THE FINAL JOIST AND BEAM LAYOUT CAN BE DIFFERENT THAN THAT SHOWN IN THE CONTRACT DRAWINGS DEPENDING ON WHETHER THE JOIST BEARING SEATS ARE BUTTED OR LAPPED. THE JOIST LOCATIONS SHOWN IN THE CONTRACT DRAWINGS DO NOT ACCOUNT FOR THE SMALL DIFFERENCE IN JOIST LOCATION DUE TO THE VARIOUS JOIST BEARING CONDITIONS THAT COULD EXIST IN THE FIELD.

9. SUSPENDED CEILING, LIGHT FIXTURES, DUCTS OR OTHER UTILITIES SHALL NOT BE SUPPORTED BY THE STEEL DECK.

10. ACOUSTICAL "DOVETAIL" METAL ROOF DECK SHALL BE MANUFACTURED BY EPIC METALS CORPORATION (EPICORE) OR CSI METAL DECK GROUP (VERSA DECK). REFER TO THE ROOF FRAMING PLAN FOR DECK TYPE AND LOCATION.

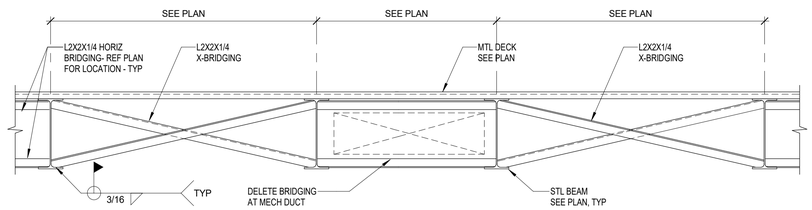

1 TYPICAL BRIDGING
NO SCALE

THIS DETAIL APPLIES FOR OPENINGS GREATER THAN 1'-1" IN ANY DIRECTION. FOR OPENINGS GREATER THAN 6" AND LESS THAN 1'-1" IN ANY DIRECTION, USE A 16 GAGE DOUBLER PLATE WITH A PLAN DIMENSION 3 TIMES THE OPENING SIZE. SCREW PLATE TO DECK WITH #12 SCREWS @ 6" OC.

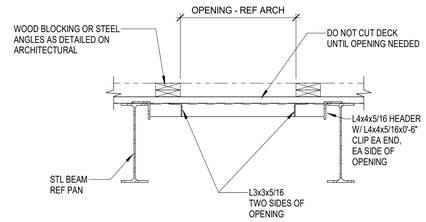

NOTE:

1. PROVIDE L3x3x1/4" FRAME FOR ROOF DRAIN SUPPORT (MIN) UNLESS NOTED OTHERWISE IN ARCHITECTURAL DRAWINGS

2 TYPICAL ROOF OPENING DETAIL
NO SCALE

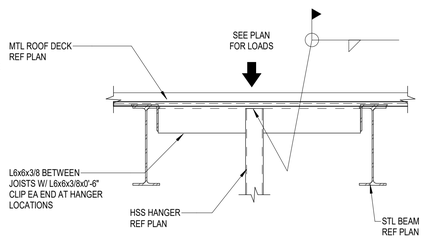

3 DETAIL AT ROOF HANGER SUPPORT
NO SCALE

Kubala ENGINEERS
Ph: 800.248.3674
www.kubalaengineers.com
TX. REG. NO. F-3709

PBK

ARCHITECT PBK Architects, Inc.
PBK.com
HOUSTON
11 Greenway Plaza, 22nd Floor
Houston, TX 77046
713-965-0608 P
713-961-4571 F
TX Firm: BR 1608

CIVIL
DIG
T 713-965-0608
SPORTS
PBK SPORTS
T 281-528-1697
STRUCTURAL
KUBALA ENGINEERS
T 800-248-3674
MEPT
LEAF ENGINEERS
T 713-940-3300
ENVELOPE
BEAM
T 713-940-3201
AV / ACOUSTIC
JAFFE HOLDEN
T 713-807-7100
THEATER
SCHULER SHOOK
T 214-747-9300
FOOD SERVICE
FOOD DESIGN PROFESSIONAL
T 281-350-2323

FRIENDSWOOD HIGH SCHOOL ADDITIONS AND RENOVATIONS

702 Greenbriar Dr
Friendswood, TX 77546

ISSUE FOR PROPOSAL

STATE OF TEXAS
JOHN R. KUBALA
106120
PROFESSIONAL ENGINEER
02/14/2022
Kubala Engineers
F-3709

CLIENT
FRIENDSWOOD ISD

DATE	PROJECT NUMBER
02/02/2022	20381

DRAWING HISTORY

No.	Description	Date
2	ADDENDUM #2	02/14/2022

ISSUE FOR PROPOSAL

GENERAL STEEL NOTES AND TYP DETAILS

S-503

File Path: C:_Revit\Local\ST21-20381-FHS_Central_amer.taghleb.LLC29.rvt

CHECKED BY:
Checker
DRAWN BY:
Author
Plot Stamp:
2/14/2022 6:45:06 PM

COMPOSITE FRAMING DETAILS

S-511

FOR BLUEBEAM LABELING/OCR:

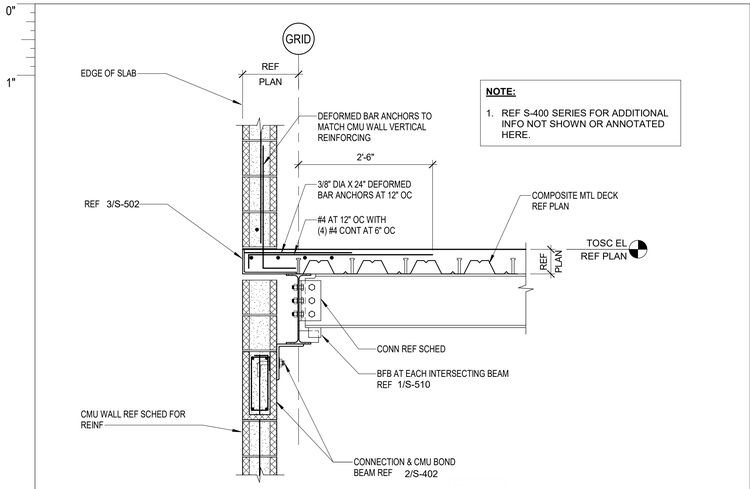

NOTE:

1. REF S-400 SERIES FOR ADDITIONAL INFO NOT SHOWN OR ANNOTATED HERE.

1 BEAM AT INTERIOR CMU WALL
NO SCALE

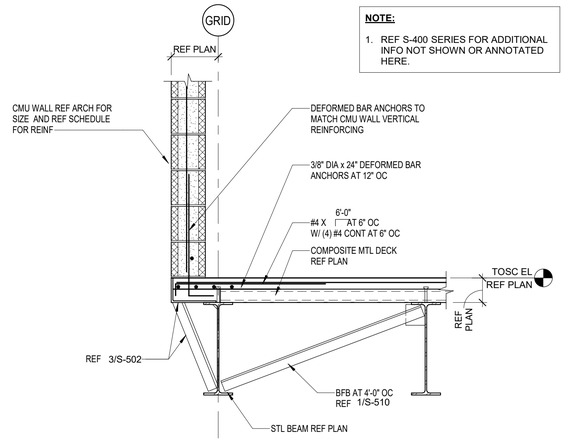

NOTE:

1. REF S-400 SERIES FOR ADDITIONAL INFO NOT SHOWN OR ANNOTATED HERE.

4 BEAM AT CMU WALL
NO SCALE

NOTE:

1. USE FIRE FRAME WALLS INSTEAD OF CMU WALL AT SIM CONDITION

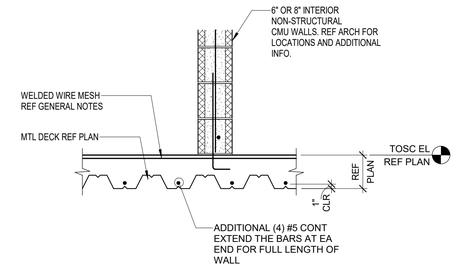

7 TYPICAL ADDITIONAL REINF UNDER INT. WALLS PARALLEL TO DECK SPAN
NO SCALE

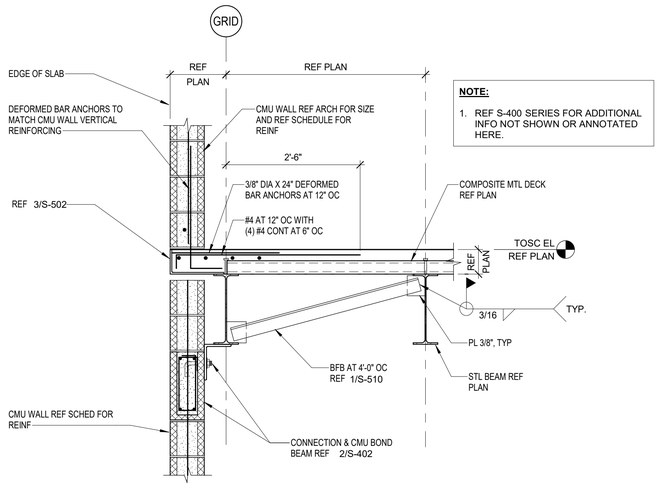

NOTE:

1. REF S-400 SERIES FOR ADDITIONAL INFO NOT SHOWN OR ANNOTATED HERE.

2 BEAM AT INTERIOR CMU WALL
NO SCALE

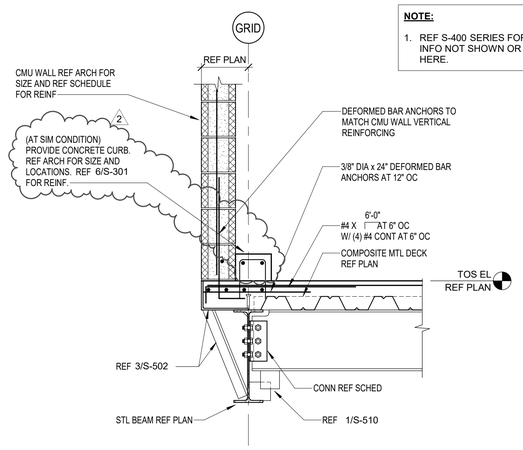

NOTE:

1. REF S-400 SERIES FOR ADDITIONAL INFO NOT SHOWN OR ANNOTATED HERE.

5 BEAM AT CMU WALL
NO SCALE

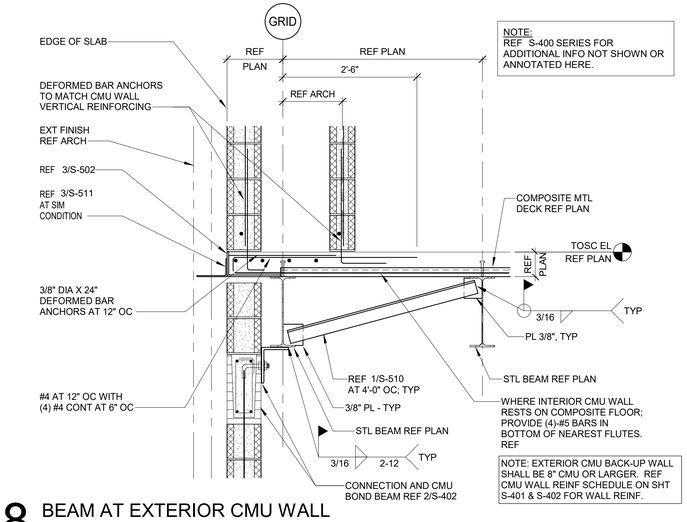

NOTE:
REF S-400 SERIES FOR ADDITIONAL INFO NOT SHOWN OR ANNOTATED HERE.

NOTE: EXTERIOR CMU BACK-UP WALL SHALL BE 8" CMU OR LARGER. REF CMU WALL REINF SCHEDULE ON SHT S-401 & S-402 FOR WALL REINF.

8 BEAM AT EXTERIOR CMU WALL
3/4" = 1'-0"

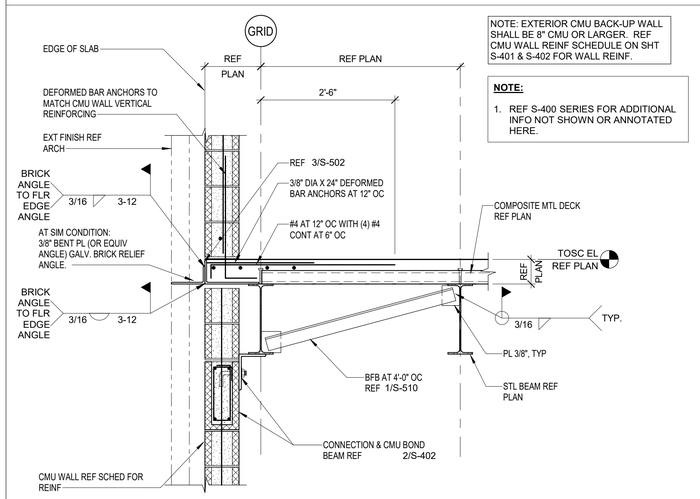

NOTE: EXTERIOR CMU BACK-UP WALL SHALL BE 8" CMU OR LARGER. REF CMU WALL REINF SCHEDULE ON SHT S-401 & S-402 FOR WALL REINF.

NOTE:

1. REF S-400 SERIES FOR ADDITIONAL INFO NOT SHOWN OR ANNOTATED HERE.

3 BEAM AT EXTERIOR CMU WALL
NO SCALE

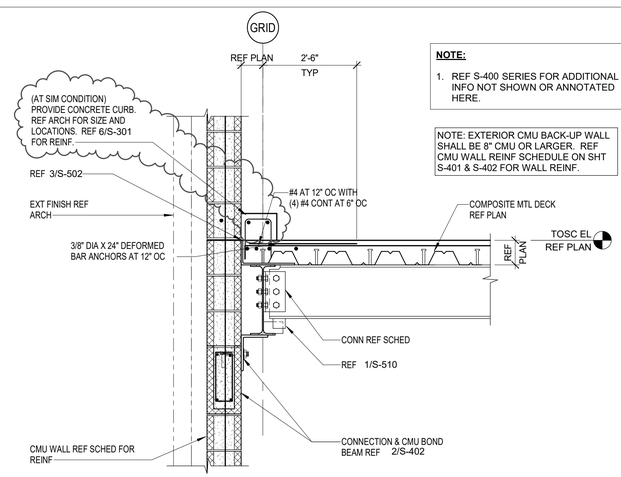

NOTE:

1. REF S-400 SERIES FOR ADDITIONAL INFO NOT SHOWN OR ANNOTATED HERE.

NOTE: EXTERIOR CMU BACK-UP WALL SHALL BE 8" CMU OR LARGER. REF CMU WALL REINF SCHEDULE ON SHT S-401 & S-402 FOR WALL REINF.

6 BEAM AT EXTERIOR CMU WALL
NO SCALE

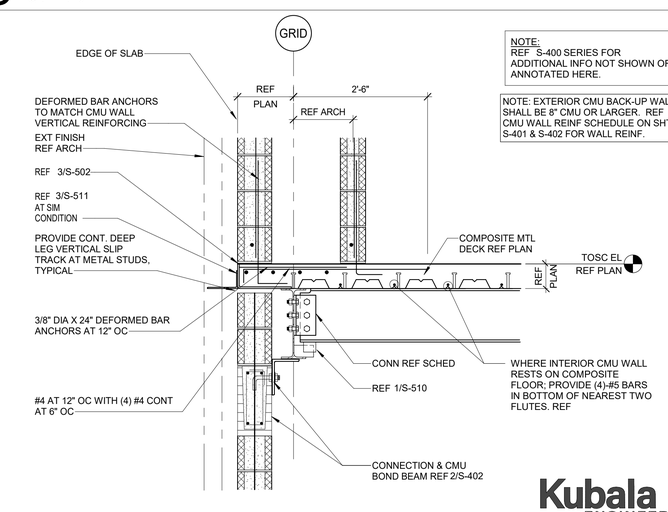

NOTE:
REF S-400 SERIES FOR ADDITIONAL INFO NOT SHOWN OR ANNOTATED HERE.

NOTE: EXTERIOR CMU BACK-UP WALL SHALL BE 8" CMU OR LARGER. REF CMU WALL REINF SCHEDULE ON SHT S-401 & S-402 FOR WALL REINF.

9 BEAM AT EXTERIOR CMU WALL
3/4" = 1'-0"

Kubala ENGINEERS
Ph: 800.248.3674
www.kubalaengineers.com
TX. REG. NO. F-3709

PBK

ARCHITECT PBK Architects, Inc.
PBK.com
HOUSTON
11 Greenway Plaza, 22nd Floor
Houston, TX 77046
713-965-0608 P
713-961-4571 F
TX Firm: BR 1608

CIVIL
DIG
T 713-965-0608
SPORTS
PBK SPORTS
T 281-528-1697
STRUCTURAL
KUBALA ENGINEERS
T 800-248-3674
MEPT
LEAF ENGINEERS
T 713-940-3300
ENVELOPE
BEAM
T 713-940-3201
AV / ACOUSTIC
JAFFE HOLDEN
T 713-807-7100
THEATER
SCHULER SHOOK
T 214-747-5300
FOOD SERVICE
FOOD DESIGN PROFESSIONAL
T 281-350-2323

FRIENDSWOOD HIGH SCHOOL ADDITIONS AND RENOVATIONS

702 Greenbriar Dr
Friendswood, TX 77546

ISSUE FOR PROPOSAL

STATE OF TEXAS
JOHN R. KUBALA
106120
PROFESSIONAL ENGINEER
02/14/2022
Kubala Engineers
F-3709

CLIENT
FRIENDSWOOD ISD

DATE	PROJECT NUMBER
02/02/2022	20381

DRAWING HISTORY

No.	Description	Date
2	ADDENDUM #2	02/14/2022

ISSUE FOR PROPOSAL

COMPOSITE FRAMING DETAILS

S-511

File Path: C:_Revit\Local\ST21-20381-FHS_Central_amer.taghieb.LLC29.rvt

CHECKED BY:
Checker
DRAWN BY:
Author
Plot Stamp:
2/14/2022 6:45:08 PM

COMPOSITE FRAMING DETAILS
S-512
FOR BLUEBEAM LABELING/OCR:

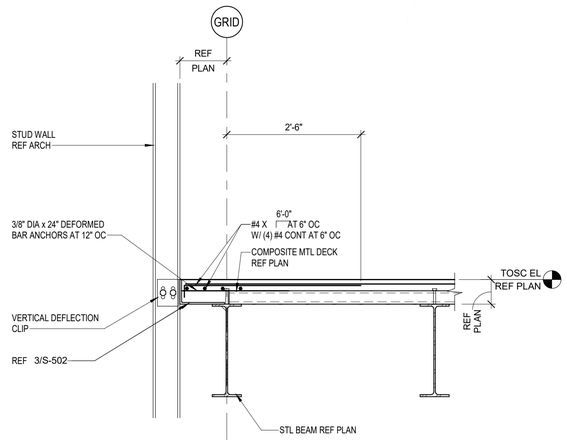

1 FLOOR EDGE DETAIL
NO SCALE

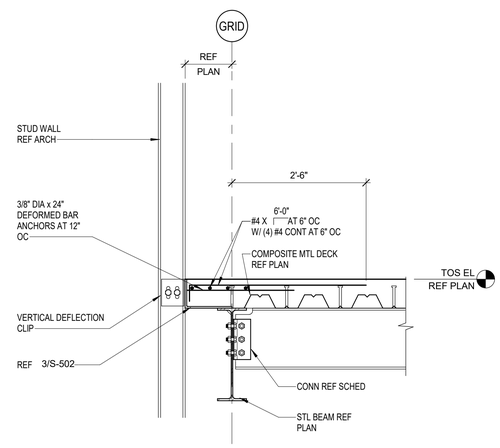

2 FLOOR EDGE DETAIL
NO SCALE

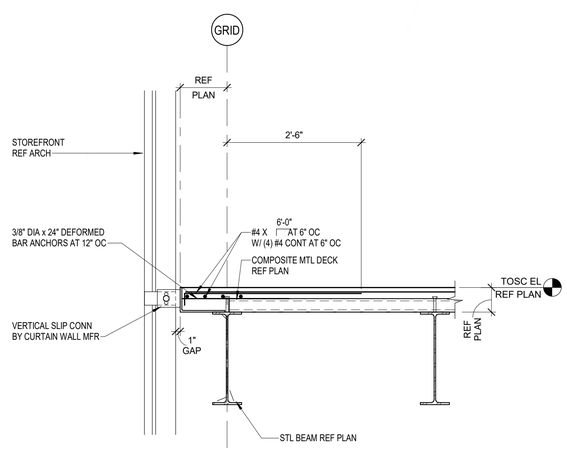

3 FLOOR EDGE DETAIL AT CURTAIN WALL
NO SCALE

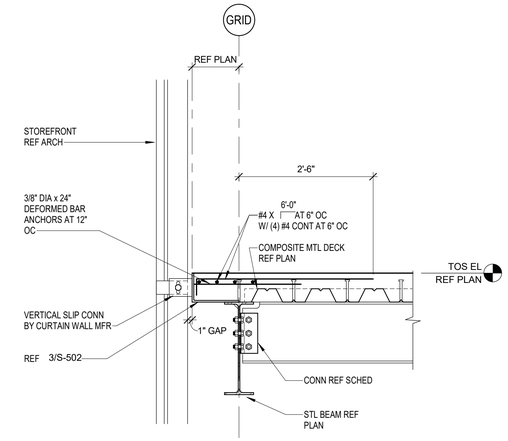

4 FLOOR EDGE DETAIL AT CURTAIN WALL
NO SCALE

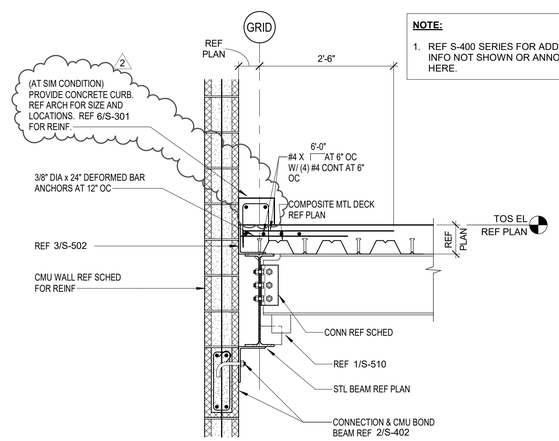

NOTE:
1. REF S-400 SERIES FOR ADDITIONAL INFO NOT SHOWN OR ANNOTATED HERE.

5 FLOOR EDGE DETAIL AT CMU
NO SCALE

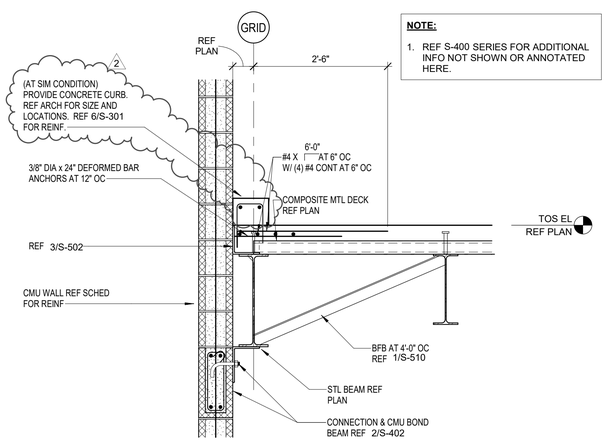

NOTE:
1. REF S-400 SERIES FOR ADDITIONAL INFO NOT SHOWN OR ANNOTATED HERE.

6 FLOOR EDGE DETAIL AT CMU
NO SCALE

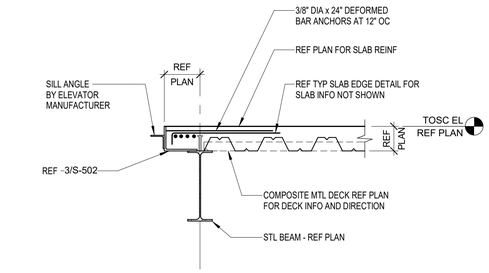

7 TYPICAL SLAB EDGE AT ELEVATOR SILL, STAIR STRINGER AND HANDRAILS
NO SCALE

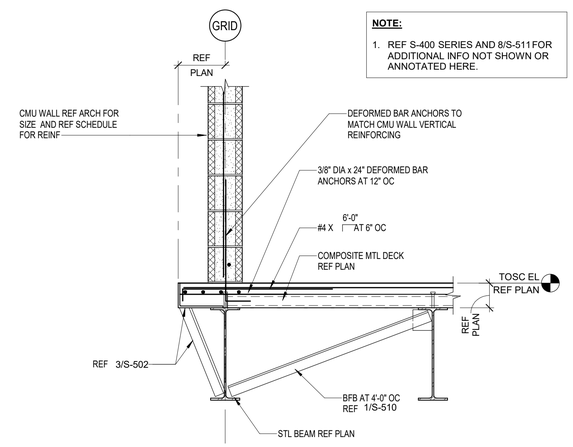

NOTE:
1. REF S-400 SERIES AND 8/S-511FOR ADDITIONAL INFO NOT SHOWN OR ANNOTATED HERE.

8 CMU BEARING ON STEEL BEAM DETAIL
NO SCALE

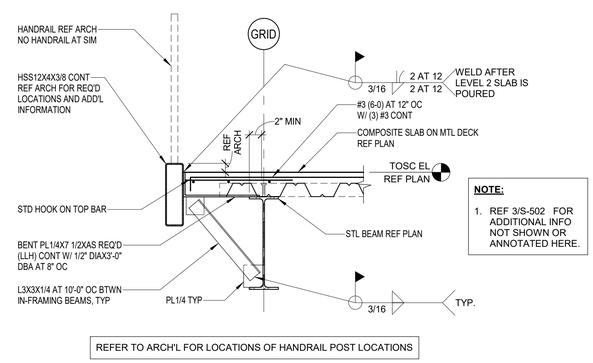

NOTE:
1. REF 3/S-502 FOR ADDITIONAL INFO NOT SHOWN OR ANNOTATED HERE.

REFER TO ARCH'L FOR LOCATIONS OF HANDRAIL POST LOCATIONS

9 TYPICAL SLAB EDGE DETAIL AT GUARDRAILS
NO SCALE

Kubala ENGINEERS
Ph: 800.248.3674
www.kubalaengineers.com
TX. REG. NO. F-3709

PBK

ARCHITECT PBK Architects, Inc.
PBK.com
HOUSTON
11 Greenway Plaza, 22nd Floor
Houston, TX 77046
713-965-0608 P
713-961-4571 F
TX Firm: BR 1608

CIVIL
DIG
T 713-965-0608
SPORTS
PBK SPORTS
T 281-528-1697
STRUCTURAL
KUBALA ENGINEERS
T 800-248-3674
MEPT
LEAF ENGINEERS
T 713-940-3300
ENVELOPE
BEAM
T 713-940-3201
AV / ACOUSTIC
JAFFE HOLDEN
T 713-807-7100
THEATER
SCHULER SHOOK
T 214-747-5300
FOOD SERVICE
FOOD DESIGN PROFESSIONAL
T 281-350-2323

FRIENDSWOOD HIGH SCHOOL ADDITIONS AND RENOVATIONS

702 Greenbriar Dr
Friendswood, TX 77546

ISSUE FOR PROPOSAL

STATE OF TEXAS
JOHN R. KUBALA
106120
LICENSED PROFESSIONAL ENGINEER
02/14/2022
Kubala Engineers
F-3709

CLIENT
FRIENDSWOOD ISD

DATE	PROJECT NUMBER
02/02/2022	20381

DRAWING HISTORY

No.	Description	Date
2	ADDENDUM #2	02/14/2022

ISSUE FOR PROPOSAL

COMPOSITE FRAMING DETAILS

S-512

File Path: C:_RevitLocal\ST21-20381-FHS_Central_amer.taghebiLLC29.rvt

CHECKED BY:
Checker
DRAWN BY:
Author
Plot Stamp:
2/14/2022 6:45:11 PM

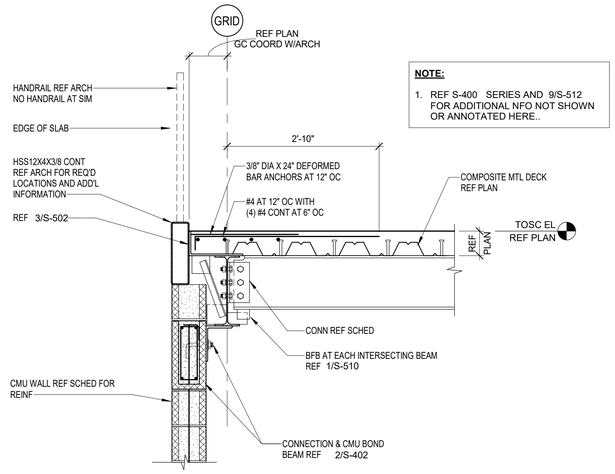

NOTE:

1. REF S-400 SERIES AND 9/S-512 FOR ADDITIONAL NFO NOT SHOWN OR ANNOTATED HERE..

1 FLOOR EDGE DETAIL
NO SCALE

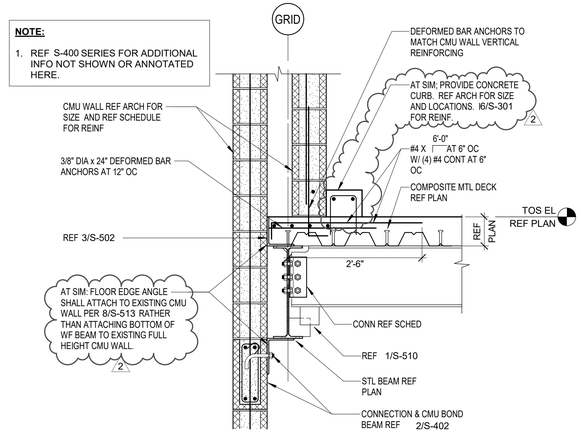

NOTE:

1. REF S-400 SERIES FOR ADDITIONAL INFO NOT SHOWN OR ANNOTATED HERE.

3 FLOOR EDGE DETAIL AT CMU
NO SCALE

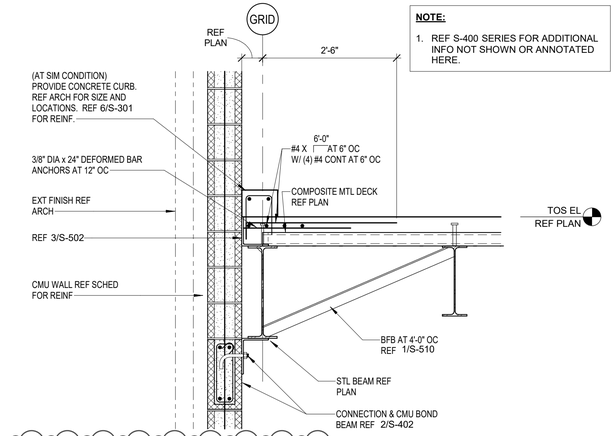

NOTE:

1. REF S-400 SERIES FOR ADDITIONAL INFO NOT SHOWN OR ANNOTATED HERE.

6 FLOOR EDGE DETAIL AT CMU
NO SCALE

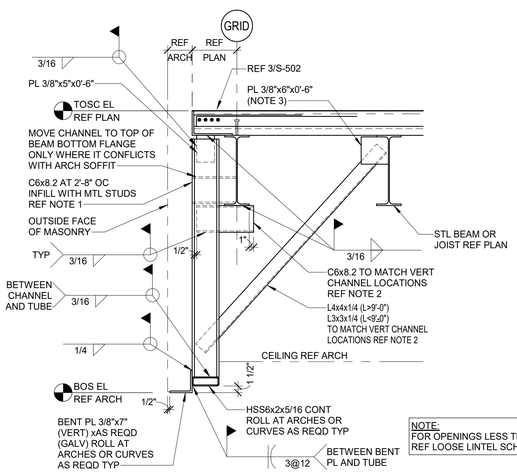

NOTE:
FOR OPENINGS LESS THAN 8'-0"
REF LOOSE LINTEL SCHED

NOTES:
1. LOCATE FIRST VERT CHANNEL AT 6" MAX FROM EACH END OF OPENING AND EACH SIDE OF COLUMN FACE.
2. LOWER END OF THE DIAGONAL ANGLE SHALL BE PLACED LESS THAN 6" ABOVE THE TUBE. RAISE THIS END UP ONLY TO AVOID CONFLICTING WITH THE CEILING.
3. AT JOISTS, PROVIDE JOIST CHORD STRENGTHENING BRACING WHERE BRACING IS NOT AT JOIST TOP CHORD PANEL POINT.

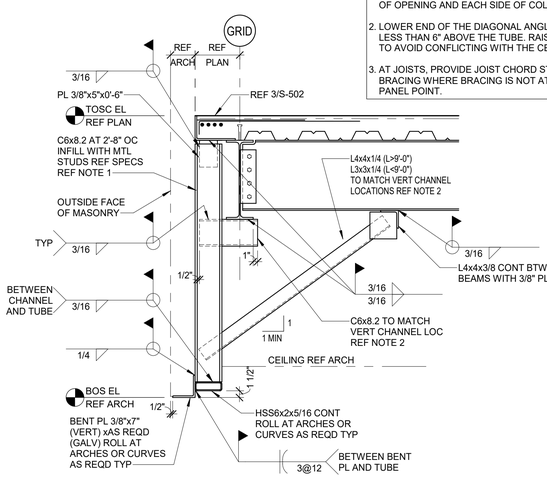

2 TYPICAL MASONRY SUPPORT OVER OPENINGS GREATER THAN 8'-0"
3/4" = 1'-0"

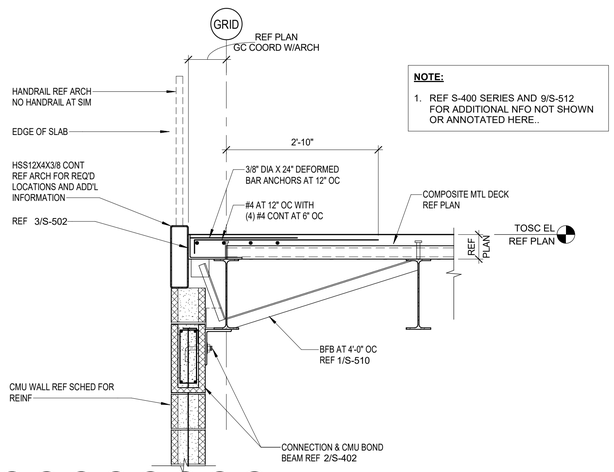

NOTE:

1. REF S-400 SERIES AND 9/S-512 FOR ADDITIONAL NFO NOT SHOWN OR ANNOTATED HERE..

4 FLOOR EDGE DETAIL
NO SCALE

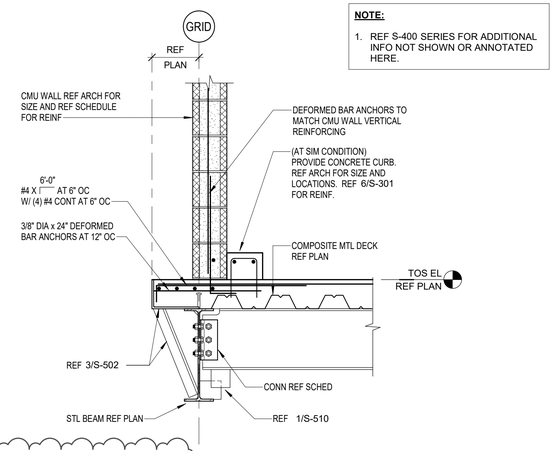

NOTE:

1. REF S-400 SERIES FOR ADDITIONAL INFO NOT SHOWN OR ANNOTATED HERE.

7 BEAM AT CMU WALL
NO SCALE

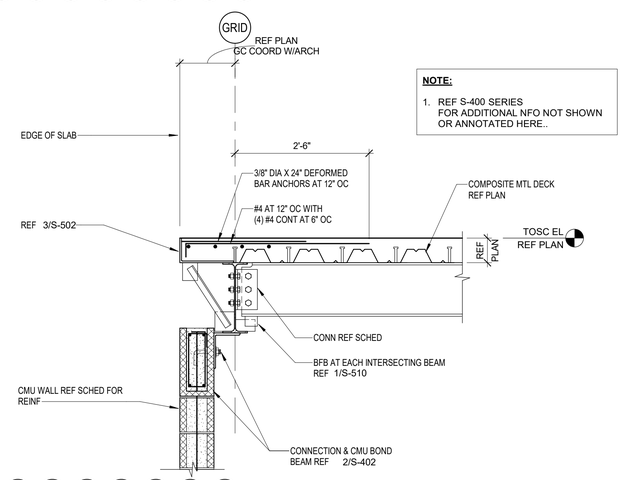

NOTE:

1. REF S-400 SERIES FOR ADDITIONAL INFO NOT SHOWN OR ANNOTATED HERE..

5 FLOOR EDGE DETAIL
NO SCALE

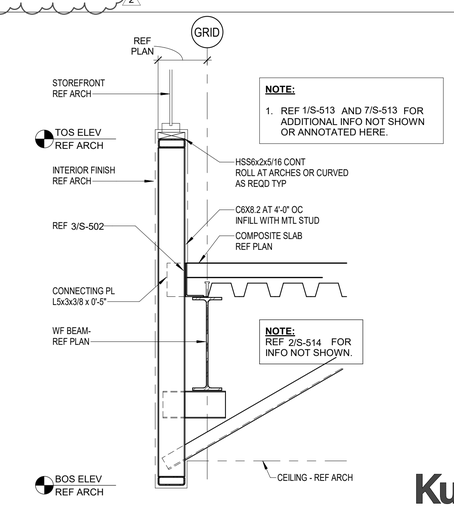

NOTE:

1. REF 1/S-513 AND 7/S-513 FOR ADDITIONAL INFO NOT SHOWN OR ANNOTATED HERE.

NOTE:
REF 2/S-514 FOR INFO NOT SHOWN.

8 DETAIL
3/4" = 1'-0"

Kubala ENGINEERS
Ph: 800.248.3674
www.kubalaengineers.com
TX. REG. NO. F-3709

PBK

ARCHITECT PBK Architects, Inc.
HOUSTON PBK.com
11 Greenway Plaza, 22nd Floor
Houston, TX 77046
713-965-0608 P
713-961-4571 F
TX Firm: BR 1608

CIVIL
DIG
T 713-965-0608
SPORTS
PBK SPORTS
T 281-528-1697
STRUCTURAL
KUBALA ENGINEERS
T 800-248-3674
MEPT
LEAF ENGINEERS
T 713-940-3300
ENVELOPE
BEAM
T 713-940-3201
AV / ACOUSTIC
JAFFE HOLDEN
T 713-807-7100
THEATER
SCHULER SHOOK
T 214-747-5300
FOOD SERVICE
FOOD DESIGN PROFESSIONAL
T 281-350-2323

FRIENDSWOOD HIGH SCHOOL ADDITIONS AND RENOVATIONS

702 Greenbriar Dr
Friendswood, TX 77546

ISSUE FOR PROPOSAL

STATE OF TEXAS
JOHN R. KUBALA
106120
PROFESSIONAL ENGINEER
02/14/2022
Kubala Engineers
F-3709

CLIENT
FRIENDSWOOD ISD

DATE	PROJECT NUMBER
02/02/2022	20381

DRAWING HISTORY

No.	Description	Date
2	ADDENDUM #2	02/14/2022

ISSUE FOR PROPOSAL

COMPOSITE FRAMING DETAILS

S-514

COMPOSITE FRAMING DETAILS
S-514
FOR BLUEBEAM LABELING/OCR:

File Path: C:_Revit_Local\ST21-20381-FHS_Central_amer.taghieblLLC29.rvt

CHECKED BY:
Checker
DRAWN BY:
Author
Plot Stamp:
2/14/2022 6:45:13 PM

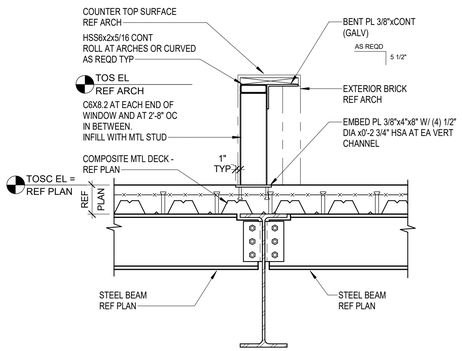

1 SECTION AT COUNTER TOP
3/4" = 1'-0"

COMPOSITE FRAMING DETAILS
S-515
FOR BLUEBEAM LABELING/OCR:

File Path: C:_Revit\Local\ST21-20381-FHS_Central_amer.taghleb\LLC29.rvt

CHECKED BY:
Checker
DRAWN BY:
Author
Plot Stamp:
2/14/2022 6:45:14 PM

PBK

ARCHITECT PBK Architects, Inc.
PBK.com
HOUSTON
11 Greenway Plaza, 22nd Floor
Houston, TX 77046
713-965-0608 P
713-961-4571 F
TX Firm: BR 1608

CIVIL
CIVIL
T 713-965-0608
SPORTS
PBK SPORTS
T 281-528-1697
STRUCTURAL
KUBALA ENGINEERS
T 800-248-3674
MEPT
LEAF ENGINEERS
T 713-940-3300
ENVELOPE
BEAM
T 713-940-3201
AV / ACOUSTIC
JAFFE HOLDEN
T 713-807-7100
THEATER
SCHULER SHOOK
T 214-747-5300
FOOD SERVICE
FOOD DESIGN PROFESSIONAL
T 281-350-2323

FRIENDSWOOD HIGH SCHOOL ADDITIONS AND RENOVATIONS

702 Greenbriar Dr
Friendswood, TX 77546
ISSUE FOR PROPOSAL

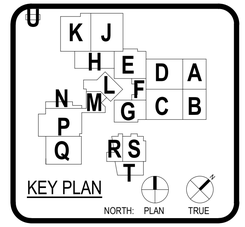

STATE OF TEXAS
JOHN R. KUBALA
106120
LICENSED PROFESSIONAL ENGINEER
02/14/2022
Kubala Engineers
F-3709

CLIENT
FRIENDSWOOD ISD

DATE	PROJECT NUMBER
02/02/2022	20381

DRAWING HISTORY

No.	Description	Date
2	ADDENDUM #2	02/14/2022

ISSUE FOR PROPOSAL

COMPOSITE FRAMING DETAILS

S-515
2

TYPICAL STEEL DETAILS AND SECTIONS
S-521
FOR BLUEBEAM LABELING/OCR:

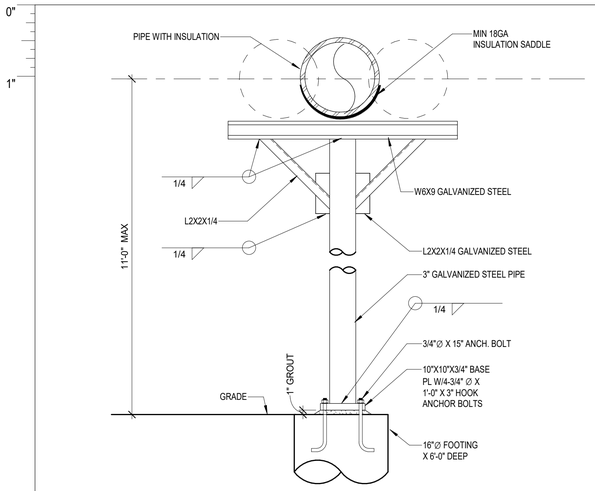

1 SINGLE COLUMN PIPE STANCHION DETAIL
NO SCALE

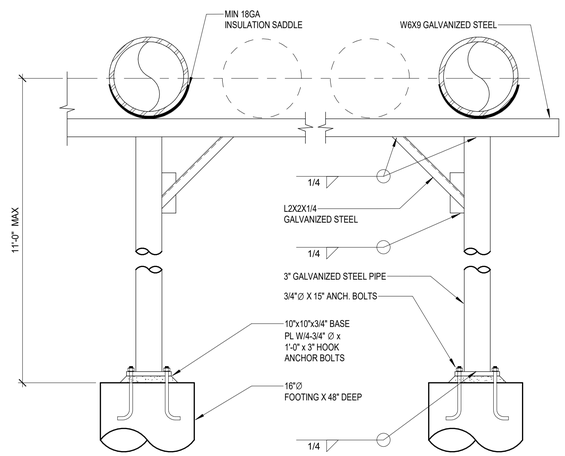

2 DOUBLE PIPE STANCHION PIPE SUPPORT DETAIL
NO SCALE

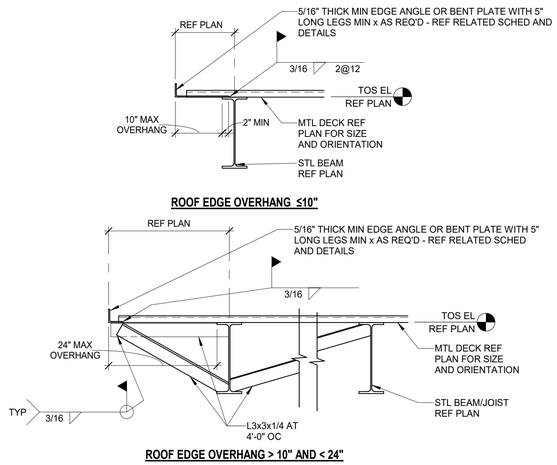

3 TYPICAL ROOF EDGE DETAIL
3/4" = 1'-0"

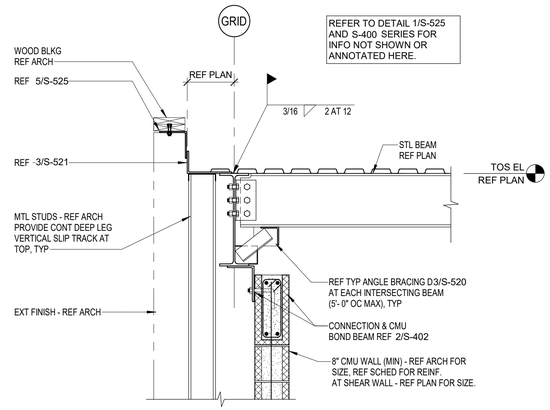

4 EXTERIOR ROOF EDGE DETAIL
NO SCALE
2

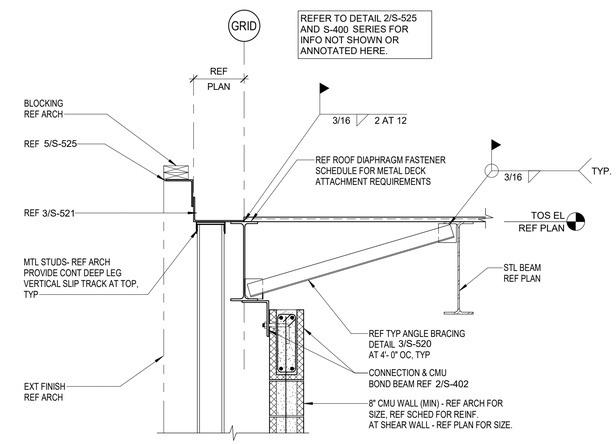

5 EXTERIOR ROOF EDGE DETAIL
NO SCALE
2

File Path: C:_Revit\Local\ST21-20381-FHS_Central_amer.taghlebi.LLC29.rvt

CHECKED BY:
Checker
DRAWN BY:
Author
Plot Stamp:
2/14/2022 6:45:16 PM

Kubala ENGINEERS
Ph: 800.248.3674
www.kubalaengineers.com
TX. REG. NO. F-3709

PBK

ARCHITECT PBK Architects, Inc.
PBK.com
HOUSTON
11 Greenway Plaza, 22nd Floor
Houston, TX 77046
713-965-0608 P
713-961-4571 F
TX Firm: BR 1608

CIVIL
DIG
T 713-965-0608
SPORTS
PBK SPORTS
T 281-528-1697
STRUCTURAL
KUBALA ENGINEERS
T 800-248-3674
MEPT
LEAF ENGINEERS
T 713-940-3300
ENVELOPE
BEAM
T 713-940-3201
AV / ACOUSTIC
JAFFE HOLDEN
T 713-807-7100
THEATER
SCHULER SHOOK
T 214-747-9300
FOOD SERVICE
FOOD DESIGN PROFESSIONAL
T 281-350-2323

FRIENDSWOOD HIGH SCHOOL ADDITIONS AND RENOVATIONS

702 Greenbriar Dr
Friendswood, TX 77546

ISSUE FOR PROPOSAL

STATE OF TEXAS
JOHN R. KUBALA
106120
02/14/2022
Kubala Engineers
F-3709

CLIENT
FRIENDSWOOD ISD

DATE	PROJECT NUMBER
02/02/2022	20381

DRAWING HISTORY

No.	Description	Date
2	ADDENDUM #2	02/14/2022

ISSUE FOR PROPOSAL

TYPICAL STEEL DETAILS AND SECTIONS

S-521

TYPICAL STEEL DETAILS AND SECTIONS
S-523
FOR BLUEBEAM LABELING/OCR:

0"
1"

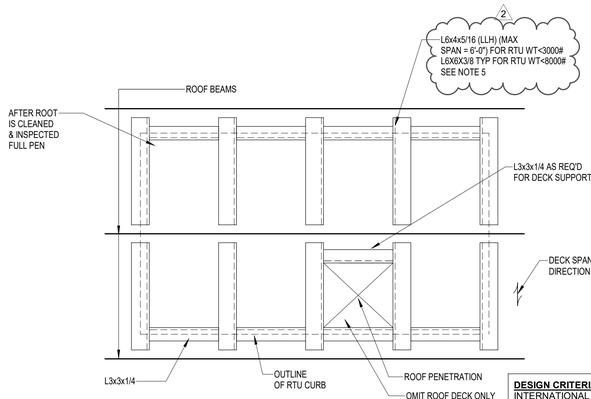

UNIT PARALLEL TO FRAMING

DESIGN CRITERIA:
INTERNATIONAL BUILDING CODE 2021
WIND VELOCITY = 152 MPH (3-SEC)
EXPOSURE = C
RISK CATEGORY III

NOTES:

1. VERIFY SIZE OF FRAME W/ MECH CONTRACTOR.
2. VERIFY UNIT LOCATION ON SITE PRIOR TO FRAME FABRICATION.
3. CONTRACTOR TO VERIFY UNIT WEIGHT WITH WEIGHT SHOWN ON PLAN.
4. REF TO 2/S-523 FOR RTU CURB SUPPORT AT 3" DECK.
5. USE C10X15.3 FOR OPENING SUPPORT INSTEAD OF ANGLES WHERE JOIST/BEAM SPACING OR ANGLE SPAN IS LARGER THAN 5'-0

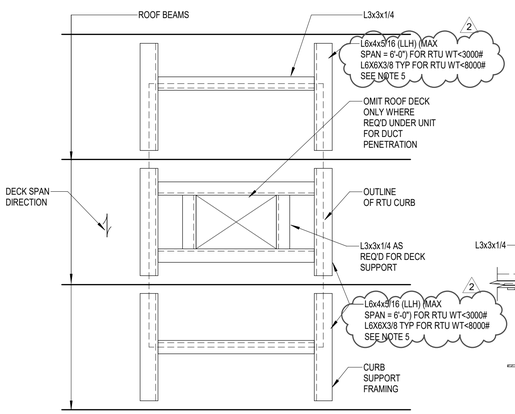

UNIT PERPENDICULAR TO FRAMING

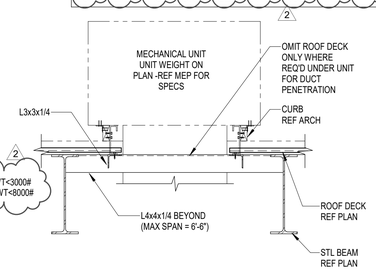

CROSS SECTION

1 TYPICAL SUPPORT AT MECHANICAL UNIT DETAIL
NO SCALE

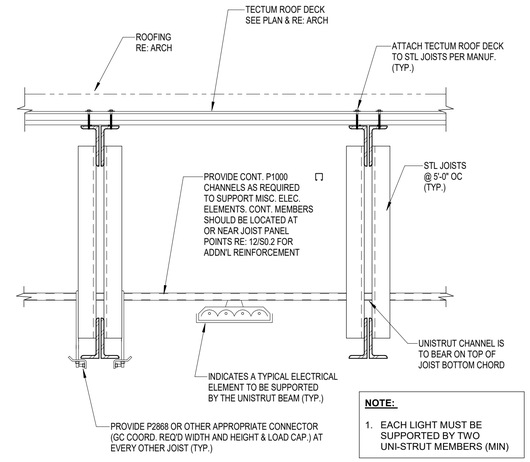

NOTE:

1. EACH LIGHT MUST BE SUPPORTED BY TWO UNI-STRUT MEMBERS (MIN)

3 UNISTRUT DETAIL FOR ELECTRICAL SUPPORT
NO SCALE

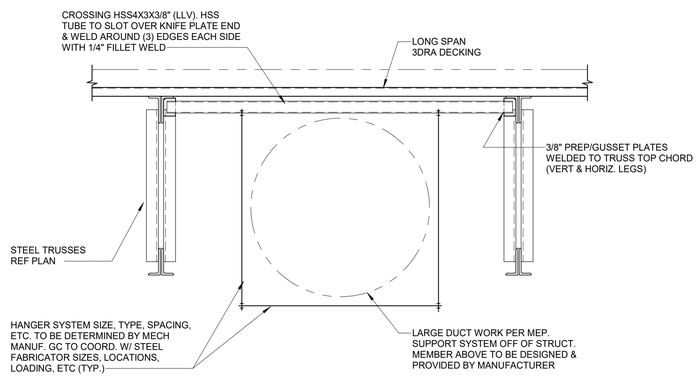

4 LARGE DUCTWORK SUPPORT
1/2" = 1'-0"

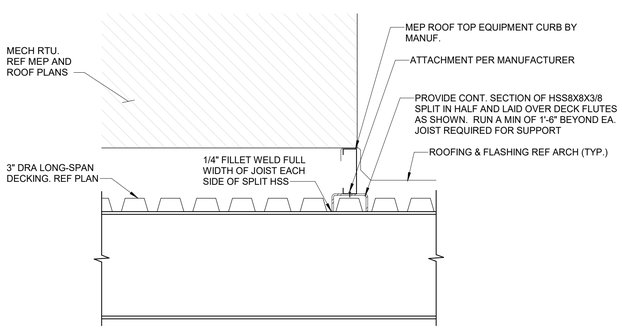

2 TYPICAL RTU SUPPORT
3/4" = 1'-0"

PURLIN SPAN LENGTH (FEET)	# OF ROWS OF BRIDGING	BRIDGING ANGLE SIZE
LESS THAN 10'-0"	**- 0 -**	**L2x2x1/4"**
10'-0" - 15'-0"	**- 1 -**	**L2x2x1/4"**
15'-0" - 20'-0"	**- 1 -**	**L2x2x1/4"**
20'-0" - 25'-0"	**- 2 -**	**L2x2x1/4"**
25'-0" - 30'-0"	**- 2 -**	**L2x2x1/4"**
30'-0" - 35'-0"	**- 2 -**	**L2x2x1/4"**
40'-0" - 50'-0"	**- 3 -**	**L3x3x1/4"**
50'-0" - 55'-0"	**- 3 -**	**L3x3x1/4"**
55'-0" - 60'-0"	**- 4 -**	**L2x2x1/4"**
60'-0" - 65'-0"	**- 4 -**	**L3x3x1/4"**
65'-0" - 70'-0"	**- 5 -**	**L3x3x1/4"**
70'-0" - 75'-0"	**- 5 -**	**L3x3x1/4"**
75'-0" - 80'-0"	**- 5 -**	**L3x3x1/4"**

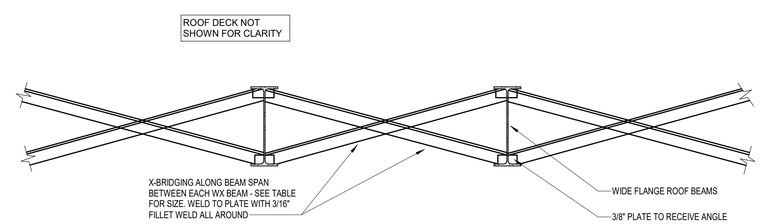

5 TYPICAL UPLIFT BRIDGING DETAIL
3/4" = 1'-0"

Kubala ENGINEERS
Ph: 800.248.3674
www.kubalaengineers.com
TX. REG. NO. F-3709

PBK

ARCHITECT PBK Architects, Inc.
PBK.com
HOUSTON
11 Greenway Plaza, 22nd Floor
Houston, TX 77046
713-965-0608 P
713-961-4571 F
TX Firm: BR 1608

CIVIL
DIG
T 713-965-0608
SPORTS
PBK SPORTS
T 281-528-1697
STRUCTURAL
KUBALA ENGINEERS
T 800-248-3674
MEPT
LEAF ENGINEERS
T 713-940-3300
ENVELOPE
BEAM
T 713-940-3201
AV / ACOUSTIC
JAFFE HOLDEN
T 713-807-7100
THEATER
SCHULER SHOOK
T 214-747-6300
FOOD SERVICE
FOOD DESIGN PROFESSIONAL
T 281-350-2323

FRIENDSWOOD HIGH SCHOOL ADDITIONS AND RENOVATIONS

702 Greenbriar Dr
Friendswood, TX 77546

ISSUE FOR PROPOSAL

STATE OF TEXAS
JOHN R. KUBALA
106120
LICENSED PROFESSIONAL ENGINEER
02/14/2022
Kubala Engineers
F-3709

CLIENT
FRIENDSWOOD ISD

DATE	PROJECT NUMBER
02/02/2022	20381

DRAWING HISTORY

No.	Description	Date
2	ADDENDUM #2	02/14/2022

ISSUE FOR PROPOSAL

TYPICAL STEEL DETAILS AND SECTIONS

S-523

File Path: C:_Revit\Local\ST21-20381-FHS_Central_amer.taghieb.LLC29.rvt

CHECKED BY:
Checker
DRAWN BY:
Author
Plot Stamp:
2/14/2022 6:45:18 PM

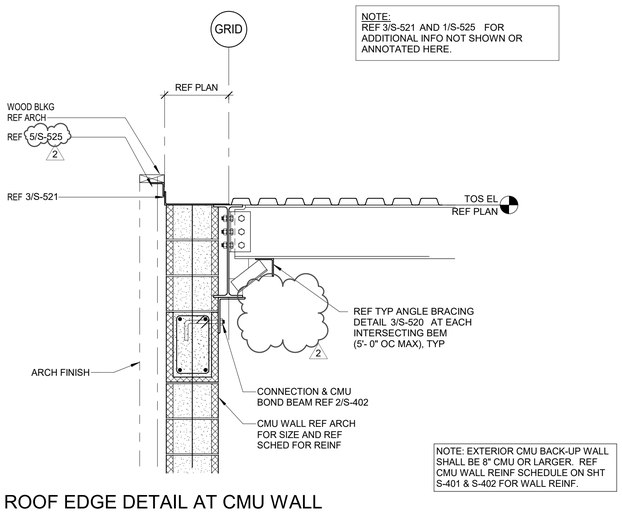

1 ROOF EDGE DETAIL AT CMU WALL
3/4" = 1'-0"

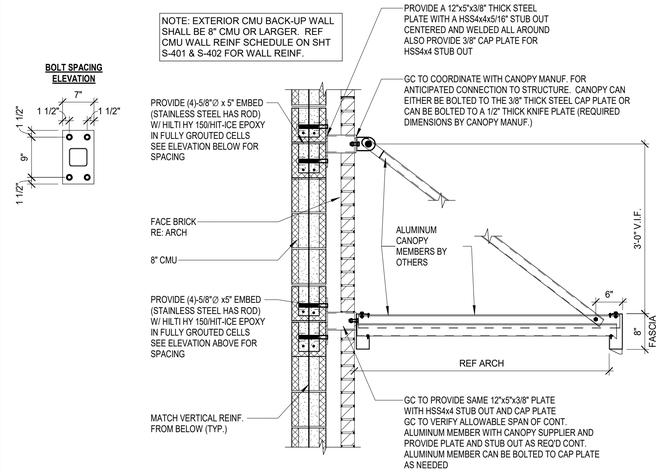

4 TYPICAL CANOPY CONNECTION TO CMU DETAIL
NO SCALE

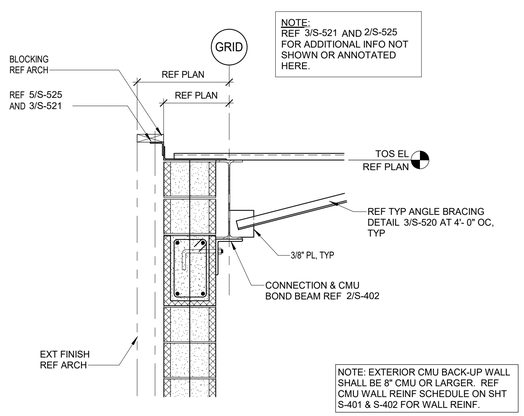

2 ROOF EDGE DETAIL AT CMU WALL
3/4" = 1'-0"

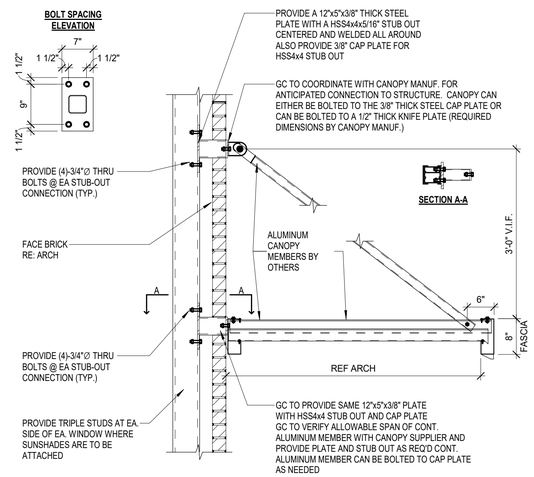

5 TYPICAL CANOPY CONNECTION TO METAL STUD DETAIL
NO SCALE

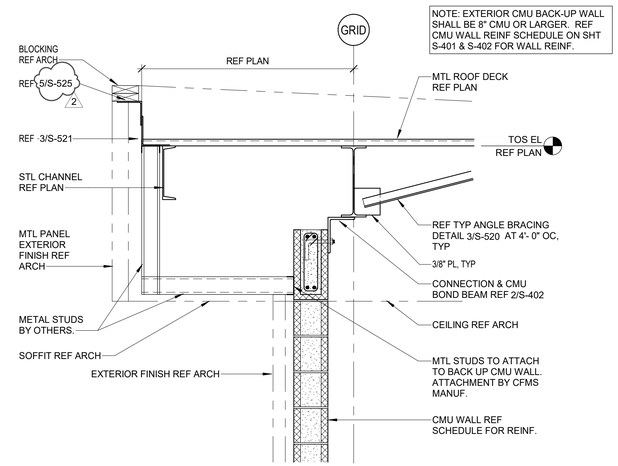

8 ROOF EDGE DETAIL AT TENNIS BLDG
3/4" = 1'-0"

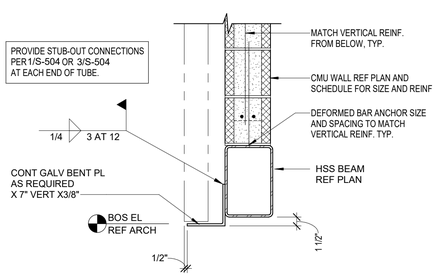

3 TYP LOW TUBE AT BRICK SUPPORT
1" = 1'-0"

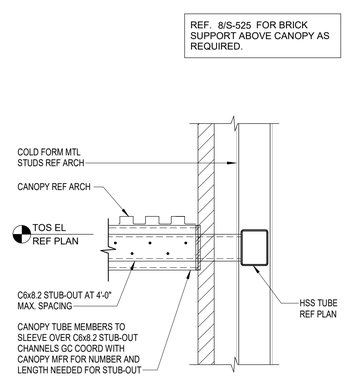

6 PRE-MANUFACTURED CANOPY CONNECTION
3/4" = 1'-0"

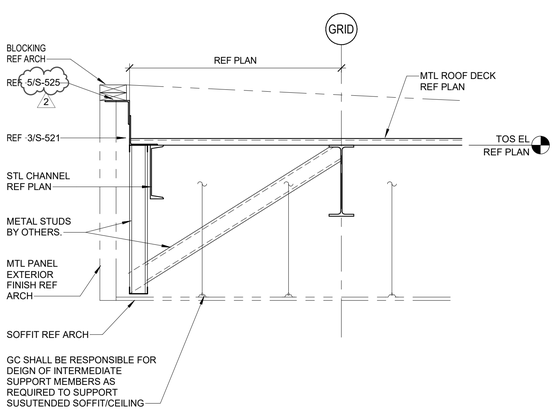

9 ROOF EDGE DETAIL AT TENNIS BLDG
3/4" = 1'-0"

Kubala ENGINEERS
Ph: 800.248.3674
www.kubalaengineers.com
TX. REG. NO. F-3709

PBK

ARCHITECT PBK Architects, Inc.
HOUSTON PBK.com
11 Greenway Plaza, 22nd Floor
Houston, TX 77046
713-965-0608 P
713-961-4571 F
TX Firm: BR 1608

CIVIL
DIG
T 713-965-0608
SPORTS
PBK SPORTS
T 281-528-1697
STRUCTURAL
KUBALA ENGINEERS
T 800-248-3674
MEPT
LEAF ENGINEERS
T 713-940-3300
ENVELOPE
BEAM
T 713-940-3201
AV / ACOUSTIC
JAFFE HOLDEN
T 713-807-7100
THEATER
SCHULER SHOOK
T 214-747-5300
FOOD SERVICE
FOOD DESIGN PROFESSIONAL
T 281-350-2323

FRIENDSWOOD HIGH SCHOOL ADDITIONS AND RENOVATIONS

702 Greenbriar Dr
Friendswood, TX 77546
ISSUE FOR PROPOSAL

STATE OF TEXAS
JOHN R. KUBALA
106120
02/14/2022
Kubala Engineers
F-3709

CLIENT
FRIENDSWOOD ISD

DATE	PROJECT NUMBER
02/02/2022	20381

DRAWING HISTORY

No.	Description	Date
2	ADDENDUM #2	02/14/2022

ISSUE FOR PROPOSAL

STEEL ROOF FRAMING SECTIONS AND DETAILS

S-524

STEEL ROOF FRAMING SECTIONS AND DETAILS
S-524
FOR BLUEBEAM LABELING/OCR:

File Path: C:_RevitLocal\ST21-20381-FHS_Central_amer.taghlebiLLC29.rvt
CHECKED BY:
Checker
DRAWN BY:
Author
Plot Stamp:
2/14/2022 6:45:20 PM

CATWALK FRAMING DETAILS
S-528
FOR BLUEBEAM LABELING/OCR:

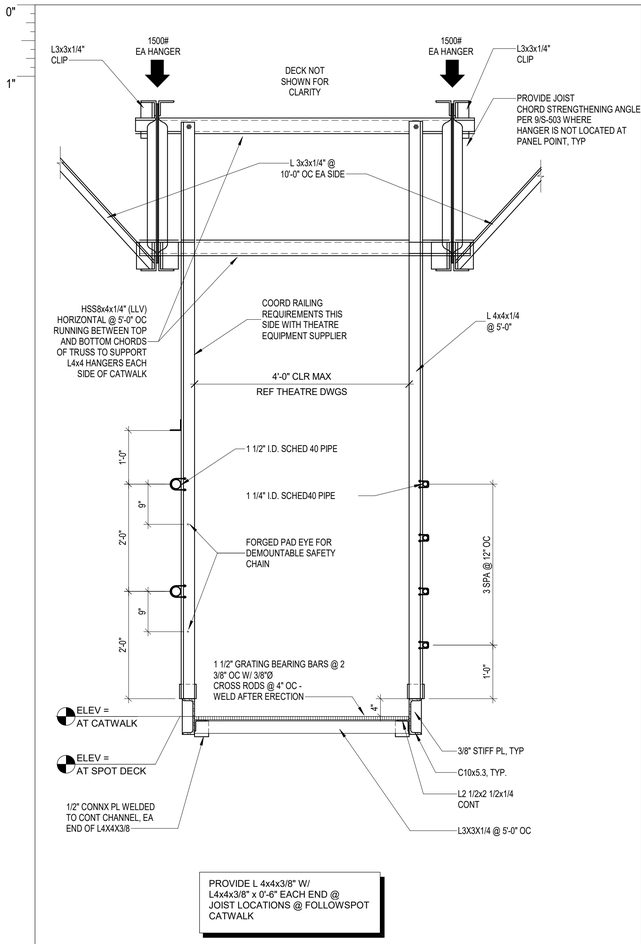

1 AUDITORIUM CATWALK DETAIL
3/4" = 1'-0"

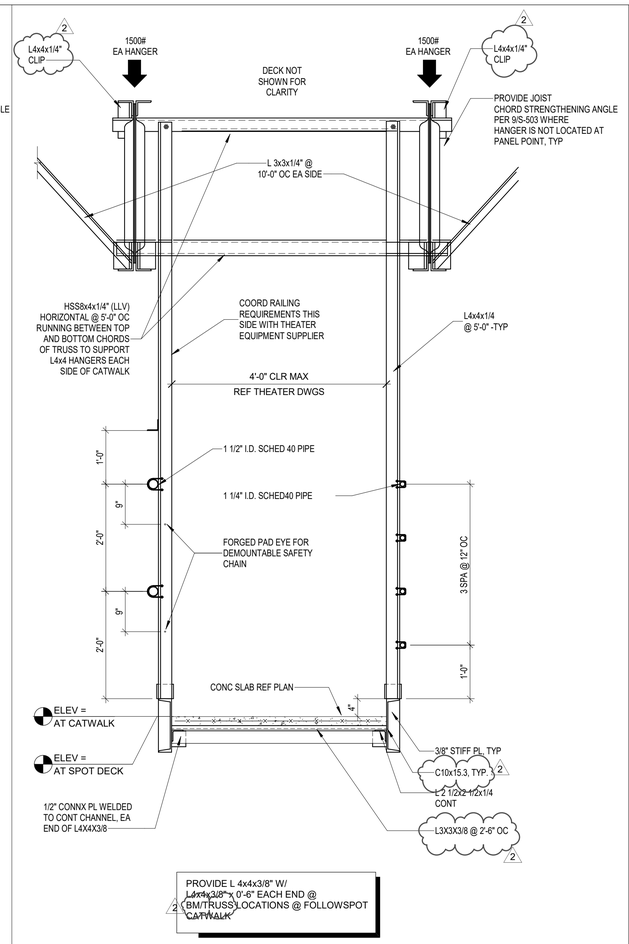

2 AUDITORIUM CATWALK DETAIL
3/4" = 1'-0"

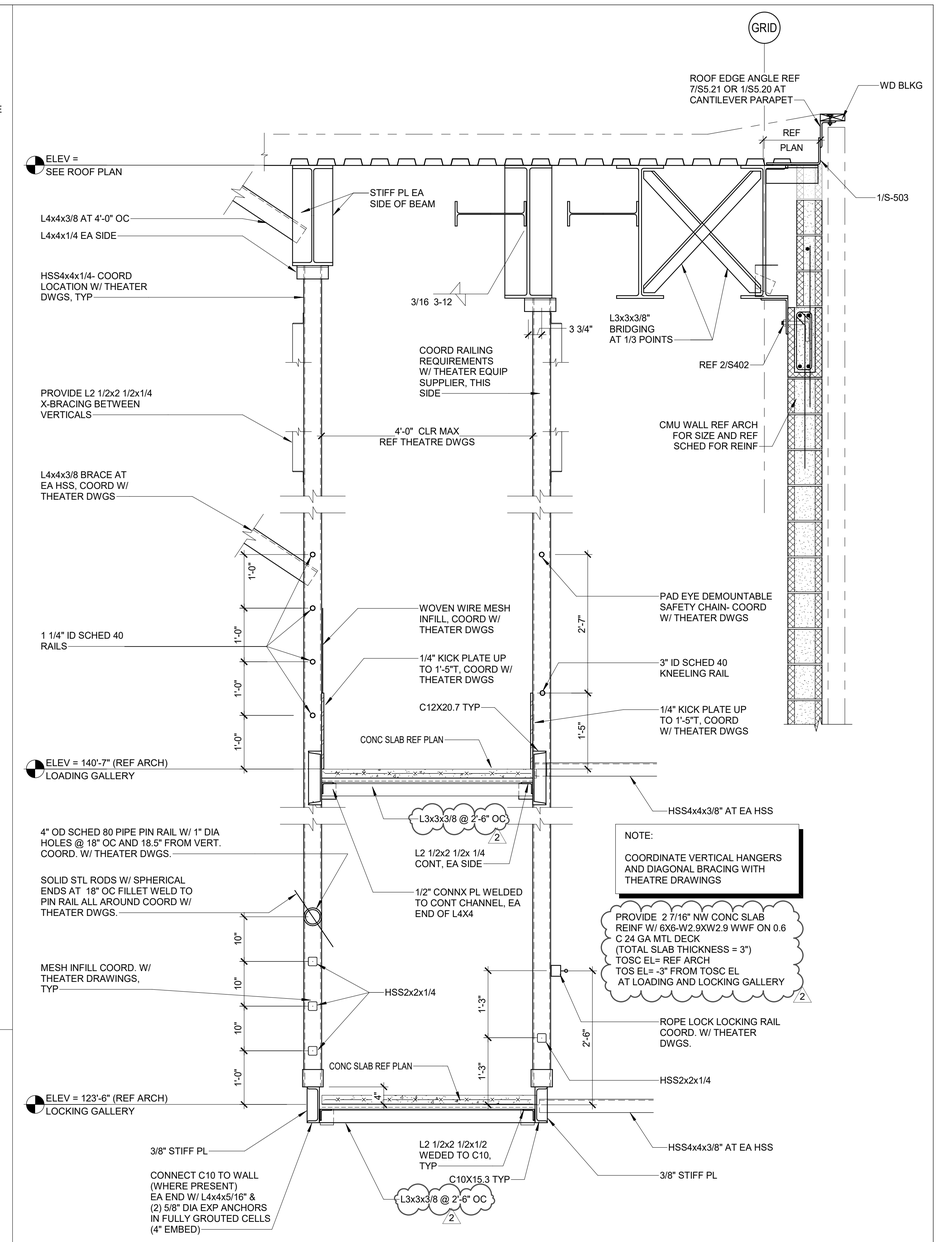

3 LOADING/LOCKING GALLERY DETAIL
3/4" = 1'-0"

Kubala ENGINEERS
Ph: 800.248.3674
www.kubalaengineers.com
TX. REG. NO. F-3709

PBK

ARCHITECT PBK Architects, Inc.
PBK.com
HOUSTON
11 Greenway Plaza, 22nd Floor
Houston, TX 77046
713-965-0608 P
713-961-4571 F
TX Firm: BR 1608
CIVIL
DIG
T 713-965-0608
SPORTS
PBK SPORTS
T 281-528-1697
STRUCTURAL
KUBALA ENGINEERS
T 800-248-3674
MEPT
LEAF ENGINEERS
T 713-940-3300
ENVELOPE
BEAM
T 713-940-3201
AV / ACOUSTIC
JAFFE HOLDEN
T 713-807-7100
THEATER
SCHULER SHOOK
T 214-747-5300
FOOD SERVICE
FOOD DESIGN PROFESSIONAL
T 281-350-2323

FRIENDSWOOD HIGH SCHOOL ADDITIONS AND RENOVATIONS

702 Greenbriar Dr
Friendswood, TX 77546

ISSUE FOR PROPOSAL

STATE OF TEXAS
JOHN R. KUBALA
106120
LICENSED PROFESSIONAL ENGINEER
02/14/2022
Kubala Engineers
F-3709

CLIENT
FRIENDSWOOD ISD

DATE	PROJECT NUMBER
02/02/2022	20381

DRAWING HISTORY

No.	Description	Date
2	ADDENDUM #2	02/14/2022

ISSUE FOR PROPOSAL

CATWALK FRAMING DETAILS

S-528

File Path: C:_Revit\Local\ST21-20381-FHS_Central_amer.taghlebi.LC29.rvt

CHECKED BY:
Checker
DRAWN BY:
Author
Plot Stamp:
2/14/2022 6:45:22 PM

FRAMING SECTIONS
S-531
FOR BLUEBEAM LABELING/OCR:

0"
1"

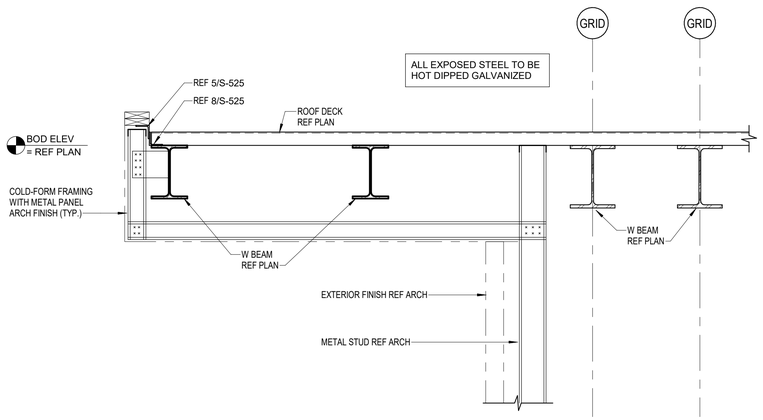

1 SECTION AT GYMNASIUM
3/4" = 1'-0"

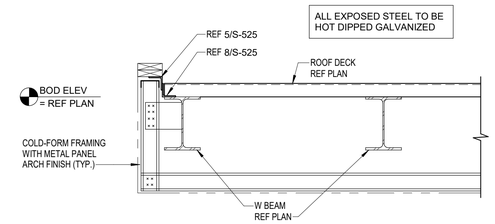

2 SECTION AT GYMNASIUM
3/4" = 1'-0"

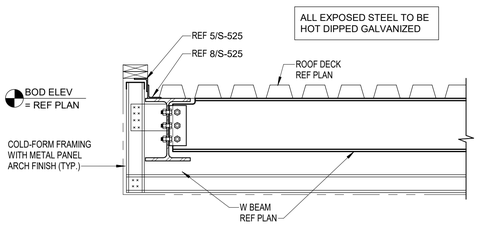

3 SECTION AT GYMNASIUM
3/4" = 1'-0"

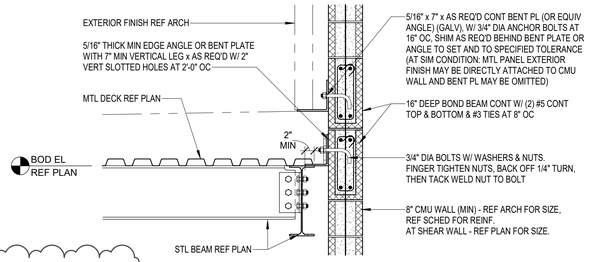

4 LOW ROOF DETAIL
3/4" = 1'-0"

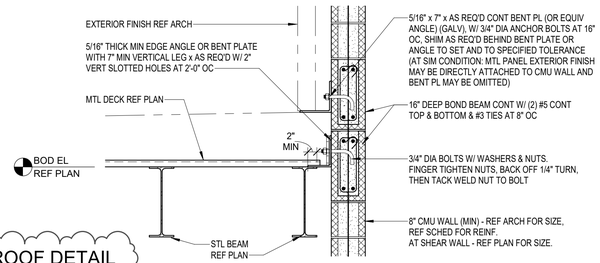

6 LOW ROOF DETAIL
3/4" = 1'-0"

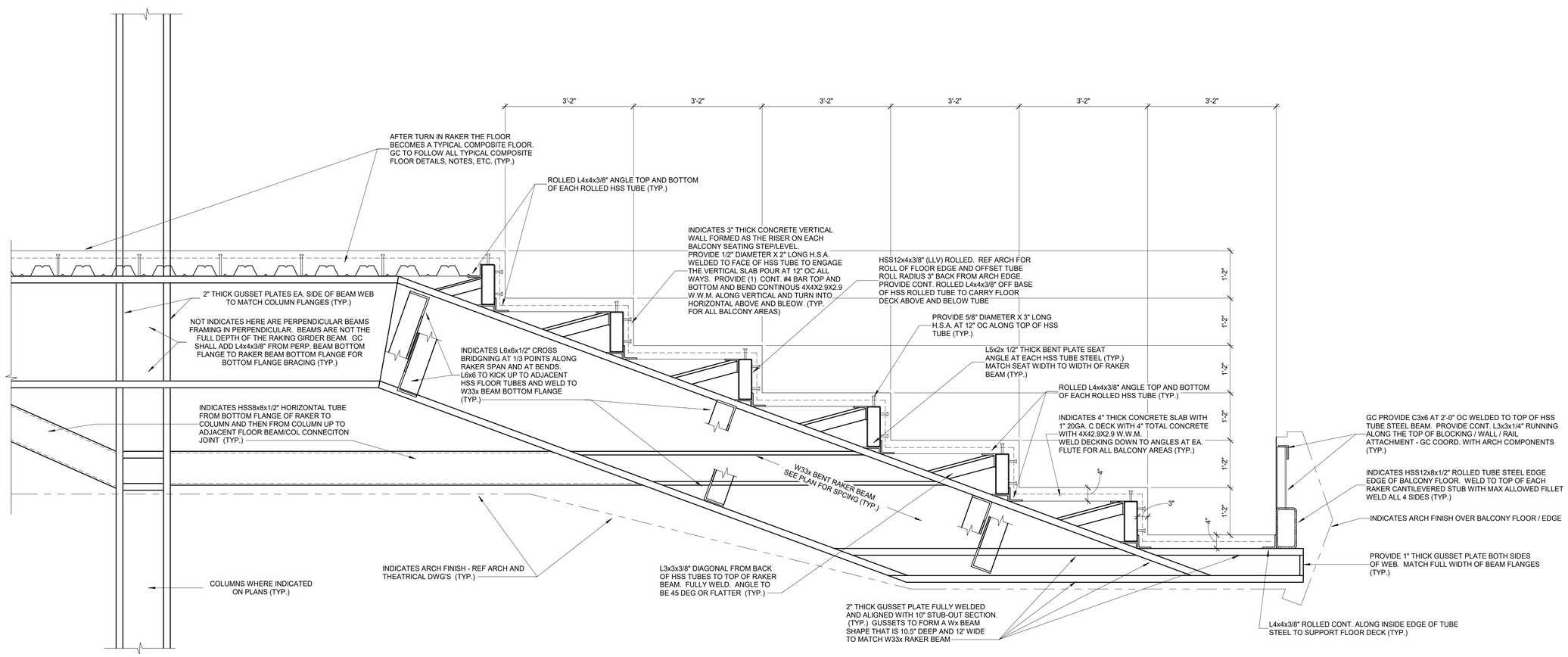

5 SECTION VIEW AT CANTILEVERED BALCONY
3/4" = 1'-0"

Kubala ENGINEERS
Ph: 800.248.3674
www.kubalaengineers.com
TX. REG. NO. F-3709

PBK

ARCHITECT PBK Architects, Inc.
HOUSTON PBK.com
11 Greenway Plaza, 22nd Floor
Houston, TX 77046
713-965-0608 P
713-961-4571 F
TX Firm: BR 1608

CIVIL
DIG
T 713-965-0608
SPORTS
PBK SPORTS
T 281-528-1697
STRUCTURAL
KUBALA ENGINEERS
T 800-248-3674
MEPT
LEAF ENGINEERS
T 713-940-3300
ENVELOPE
BEAM
T 713-940-3201
AV / ACOUSTIC
JAFFE HOLDEN
T 713-807-7100
THEATER
SCHULER SHOOK
T 214-747-5300
FOOD SERVICE
FOOD DESIGN PROFESSIONAL
T 281-350-2323

FRIENDSWOOD HIGH SCHOOL ADDITIONS AND RENOVATIONS

702 Greenbriar Dr
Friendswood, TX 77546
ISSUE FOR PROPOSAL

STATE OF TEXAS
JOHN R. KUBALA
106120
PROFESSIONAL ENGINEER
02/14/2022
Kubala Engineers
F-3709

CLIENT
FRIENDSWOOD ISD

DATE	PROJECT NUMBER
02/02/2022	20381

DRAWING HISTORY

No.	Description	Date
2	ADDENDUM #2	02/14/2022

ISSUE FOR PROPOSAL

FRAMING SECTIONS

S-531

File Path: C:_RevitLocal\ST21-20381-FHS_Central_amer.taghebiLLC29.rvt
CHECKED BY:
Checker
DRAWN BY:
Author
Plot Stamp:
2/14/2022 6:45:26 PM

FRAMING SECTIONS
S-535
FOR BLUEBEAM LABELING/OCR:

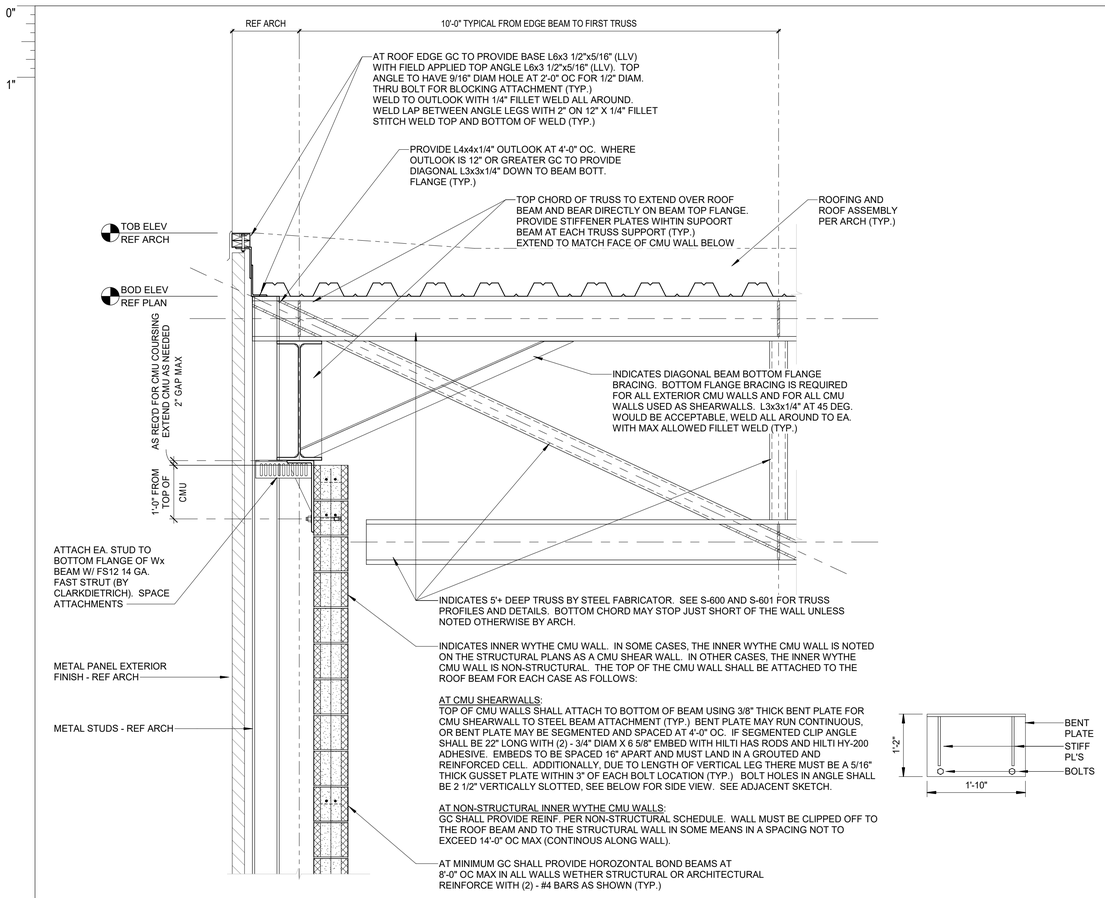

1 DETAIL
3/4" = 1'-0"

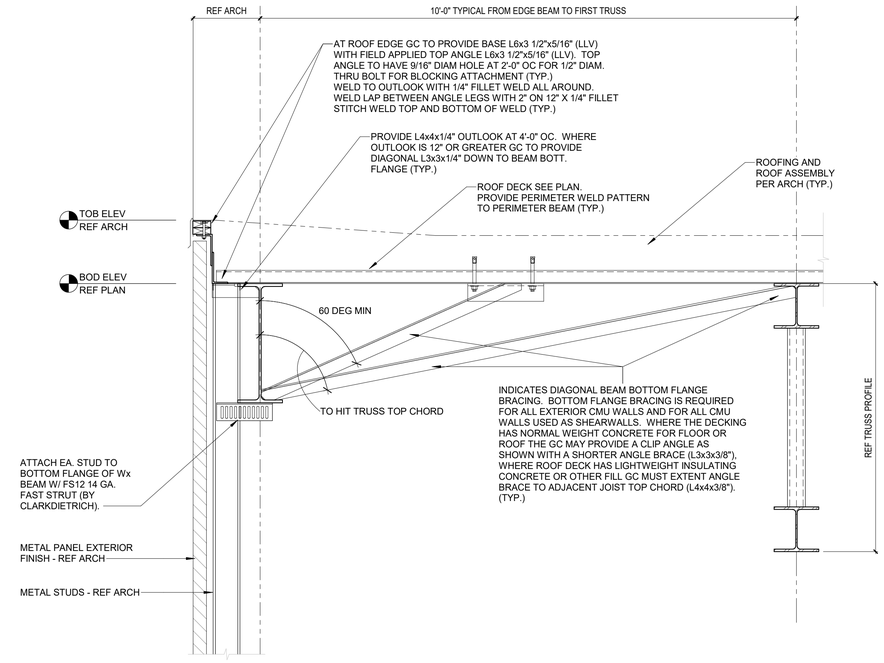

2 DETAIL
3/4" = 1'-0"

PBK

ARCHITECT PBK Architects, Inc.
HOUSTON PBK.com
11 Greenway Plaza, 22nd Floor
Houston, TX 77046
713-965-0608 P
713-961-4571 F
TX Firm: BR 1608

CIVIL
CIVIL
T 713-965-0608
SPORTS
PBK SPORTS
T 281-528-1697
STRUCTURAL
KUBALA ENGINEERS
T 800-248-3674
MEPT
LEAF ENGINEERS
T 713-940-3300
ENVELOPE
BEAM
T 713-940-3201
AV / ACOUSTIC
JAFFE HOLDEN
T 713-807-7100
THEATER
SCHULER SHOOK
T 214-747-5300
FOOD SERVICE
FOOD DESIGN PROFESSIONAL
T 281-350-2323

FRIENDSWOOD HIGH SCHOOL ADDITIONS AND RENOVATIONS

702 Greenbriar Dr
Friendswood, TX 77546

ISSUE FOR PROPOSAL

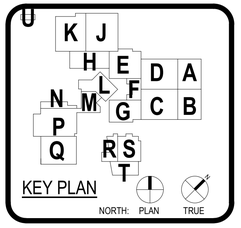

STATE OF TEXAS
JOHN R. KUBALA
106120
PROFESSIONAL ENGINEER
02/14/2022
Kubala Engineers
F-3709

CLIENT
FRIENDSWOOD ISD

DATE	PROJECT NUMBER
02/02/2022	20381

DRAWING HISTORY

No.	Description	Date
2	ADDENDUM #2	02/14/2022

ISSUE FOR PROPOSAL

FRAMING SECTIONS

S-535
2

File Path: C:_RevitLocal\ST21-20381-FHS_Central_amer.taghlebiLLC29.rvt
CHECKED BY:
Checker
DRAWN BY:
Author
Plot Stamp:
2/14/2022 6:45:27 PM

FRAMING SECTIONS
S-536
FOR BLUEBEAM LABELING/OCR:

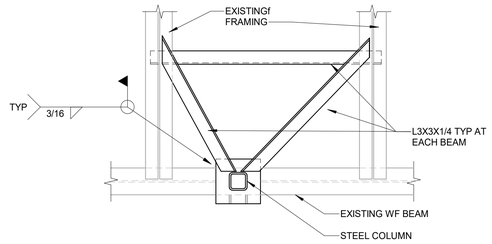

PLAN VIEW OF POST UP COLUMN

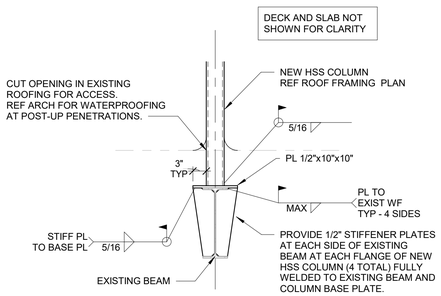

POST-UP COLUMN CONNECTION TO EXISTING WF BEAM

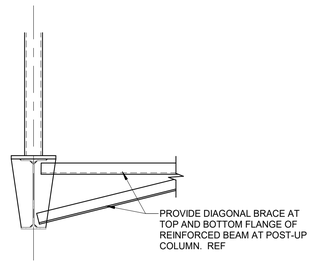

TOP AND BOTTOM FLANGE BRACE REQUIREMENTS AT POST-UP COLUMN

1 TYPICAL POST-UP COLUMN AT EXISTING WF BEAM
3/4" = 1'-0"

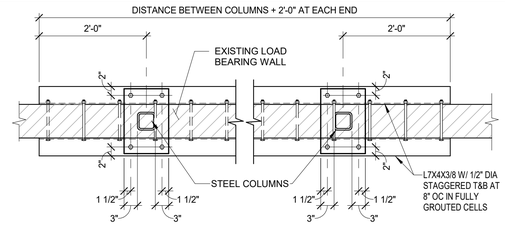

PLAN VIEW OF POST UP COLUMN

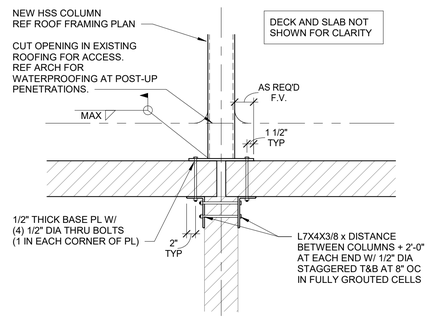

POST-UP COLUMN CONNECTION TO EXISTING WF BEAM

3 TYPICAL POST-UP COLUMN AT EXISTING LOAD BEARING WALL WITH CONCRETE ROOF DECK
3/4" = 1'-0"

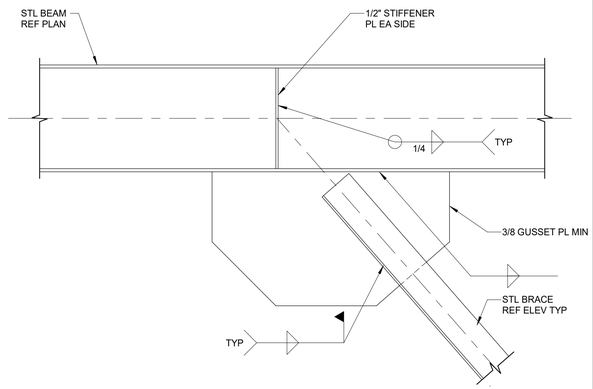

NOTE:
REFER TO WIND/LATERAL BRACE NOTES FOR CONNECTION DESIGN CRITERIA.

6 TYPICAL BRACE DETAIL
3/4" = 1'-0"

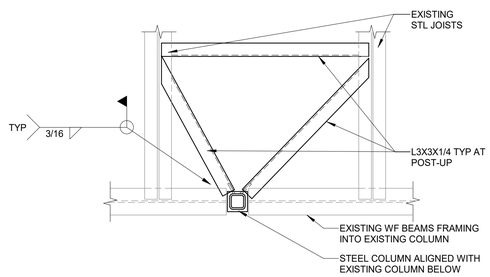

PLAN VIEW OF POST UP COLUMN

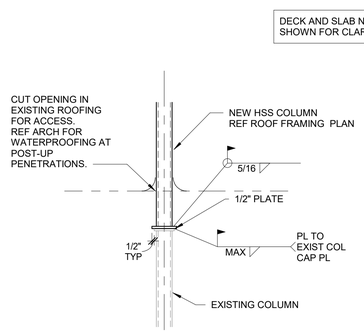

POST-UP COLUMN CONNECTION TO EXISTING WF BEAM

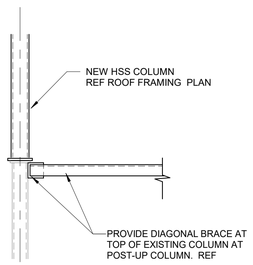

TOP OF COLUMN BRACE REQUIREMENTS AT POST-UP COLUMN

2 TYPICAL POST-UP COLUMN AT EXISTING COLUMN
3/4" = 1'-0"

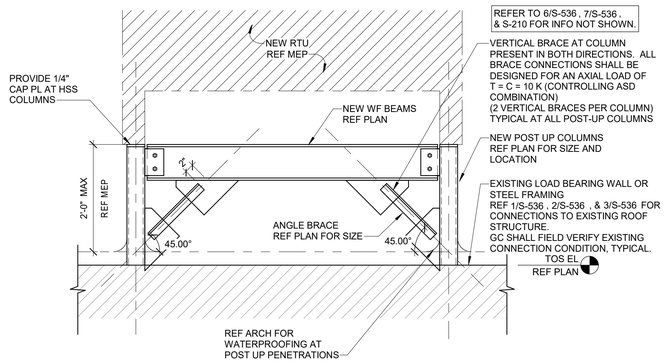

NOTE:
ALL EXPOSED STEEL SHALL BE HOT DIPPED GALVANIZED.

4 RTU FRAMING SECTION
3/4" = 1'-0"

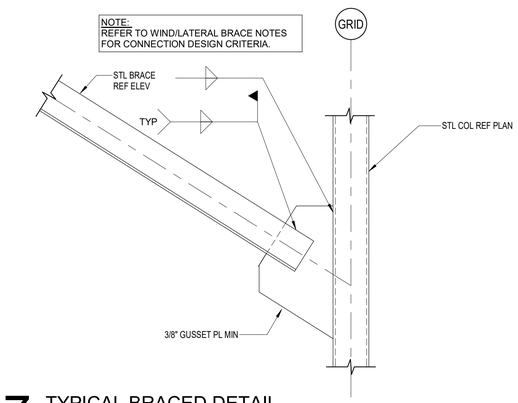

7 TYPICAL BRACED DETAIL
3/4" = 1'-0"

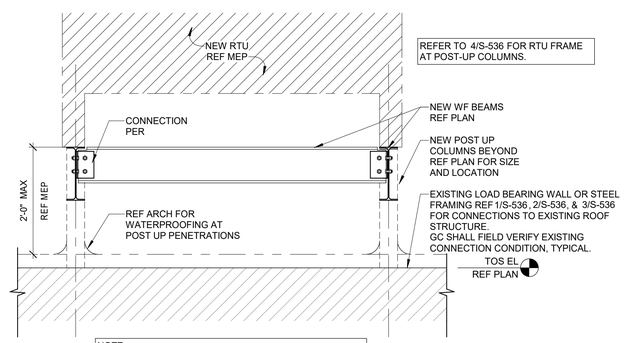

NOTE:
ALL EXPOSED STEEL SHALL BE HOT DIPPED GALVANIZED.

5 RTU FRAMING SECTION
3/4" = 1'-0"

Kubala ENGINEERS
Ph: 800.248.3674
www.kubalaengineers.com
TX. REG. NO. F-3709

PBK
ARCHITECT PBK Architects, Inc.
PBK.com
HOUSTON
11 Greenway Plaza, 22nd Floor
Houston, TX 77046
713-965-0608 P
713-961-4571 F
TX Firm: BR 1608
CIVIL
DIG
T 713-965-0608
SPORTS
PBK SPORTS
T 281-528-1697
STRUCTURAL
KUBALA ENGINEERS
T 800-248-3674
MEPT
LEAF ENGINEERS
T 713-940-3300
ENVELOPE
BEAM
T 713-940-3201
AV / ACOUSTIC
JAFFE HOLDEN
T 713-807-7100
THEATER
SCHULER SHOOK
T 214-747-5300
FOOD SERVICE
FOOD DESIGN PROFESSIONAL
T 281-350-2323

FRIENDSWOOD HIGH SCHOOL ADDITIONS AND RENOVATIONS

702 Greenbriar Dr
Friendswood, TX 77546

ISSUE FOR PROPOSAL

FRIENDSWOOD INDEPENDENT SCHOOL DISTRICT

STATE OF TEXAS
JOHN R. KUBALA
106120
LICENSED PROFESSIONAL ENGINEER
02/14/2022
Kubala Engineers
F-3709

CLIENT
FRIENDSWOOD ISD

DATE	PROJECT NUMBER
02/02/2022	20381

DRAWING HISTORY

No.	Description	Date
2	ADDENDUM #2	02/14/2022

ISSUE FOR PROPOSAL

FRAMING SECTIONS

2

S-536

File Path: C:_RevitLocal\ST21-20381-FHS_Central_amer.taghleblLLC29.rvt
CHECKED BY:
Checker
DRAWN BY:
Author
Plot Stamp:
2/14/2022 6:45:29 PM

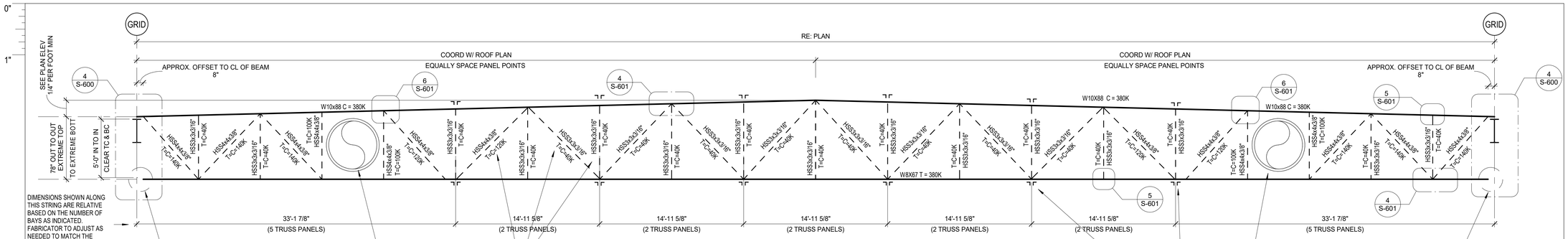

NOTES:

1. BOLTED CONNECTIONS FOR THE TRUSS WEB MEMBERS MAY BE SUBSTITUTED BY THE FABRICATOR FOR THE WELDED CONNECTIONS SHOWN ON THIS ELEVATION PROVIDED THE CONNECTION DESIGNS ARE SUBMITTED TO THE ARCHITECT AND THE EOR FOR REVIEW AND APPROVAL. ALL CONNECTION ANALYSIS AND DESIGN CALCULATIONS SUBMITTED BY THE FABRICATOR SHALL BE SIGNED AND SEALED BY A REGISTERED ENGINEER.
2. THE TRUSS MEMBER AXIAL FORCES SHOWN ON THESE DRAWINGS ARE ULTIMATE (LRFD).

VARIOUS MISC. ROOF FRAMING AND METAL ROOF DECKING NOT SHOWN FOR CLARITY

1 TRUSS "T1"
3/16" = 1'-0"

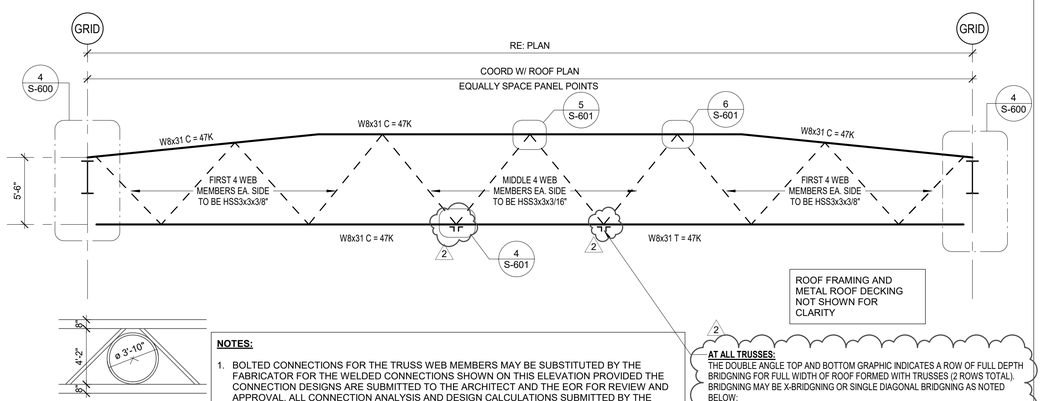

NOTES:

1. BOLTED CONNECTIONS FOR THE TRUSS WEB MEMBERS MAY BE SUBSTITUTED BY THE FABRICATOR FOR THE WELDED CONNECTIONS SHOWN ON THIS ELEVATION PROVIDED THE CONNECTION DESIGNS ARE SUBMITTED TO THE ARCHITECT AND THE EOR FOR REVIEW AND APPROVAL. ALL CONNECTION ANALYSIS AND DESIGN CALCULATIONS SUBMITTED BY THE FABRICATOR SHALL BE SIGNED AND SEALED BY A REGISTERED ENGINEER.
2. THE TRUSS MEMBER AXIAL FORCES SHOWN ON THESE DRAWINGS ARE SERVICE LEVEL (ASD).
3. TRUSS TOP CHORD MEMBER MAY BE SUBJECTED TO ADDITIONAL AXIAL LOADS RESULTING FROM DRAG LOADS (H-LOADS) WHERE SHOWN ON PLAN. REFER TO PLAN FOR H-LOAD LOCATIONS AND MAGNITUDES.

ROOF FRAMING AND METAL ROOF DECKING NOT SHOWN FOR CLARITY

AT ALL TRUSSES: THE DOUBLE ANGLE TOP AND BOTTOM GRAPHIC INDICATES A ROW OF FULL DEPTH BRIDGNING FOR FULL WIDTH OF ROOF FORMED WITH TRUSSES (2 ROWS TOTAL). BRIDGNING MAY BE X-BRIDGNING OR SINGLE DIAGONAL BRIDGNING AS NOTED BELOW:
DOUBLE ANGLE BRIDGNING (X-BRIDGNING) : CROSSING L3x3x3/16" ANGLES
SINGLE DIAGONAL BRIDGNING: L4x4x1/4"
GC SHALL COORDINATE WITH MECHANICAL AND ARCH DRAWINGS FOR LOCATIONS WHERE A SINGLE BAY OF BRIDGING MAY NEED TO RUN HORIZONTAL VS DIAGONAL TO AVOID CONFLICTS WITH THEIR ELEMENTS; HOWEVER, THIS "HORIZONTAL" RUNNING CANNOT BE DONE FOR MORE THAN 1 BAY IN A ROW WITHOUT APPROVAL FROM THE STRUCTURAL EOR (TYP.)

2 TRUSS "T2"
3/16" = 1'-0"

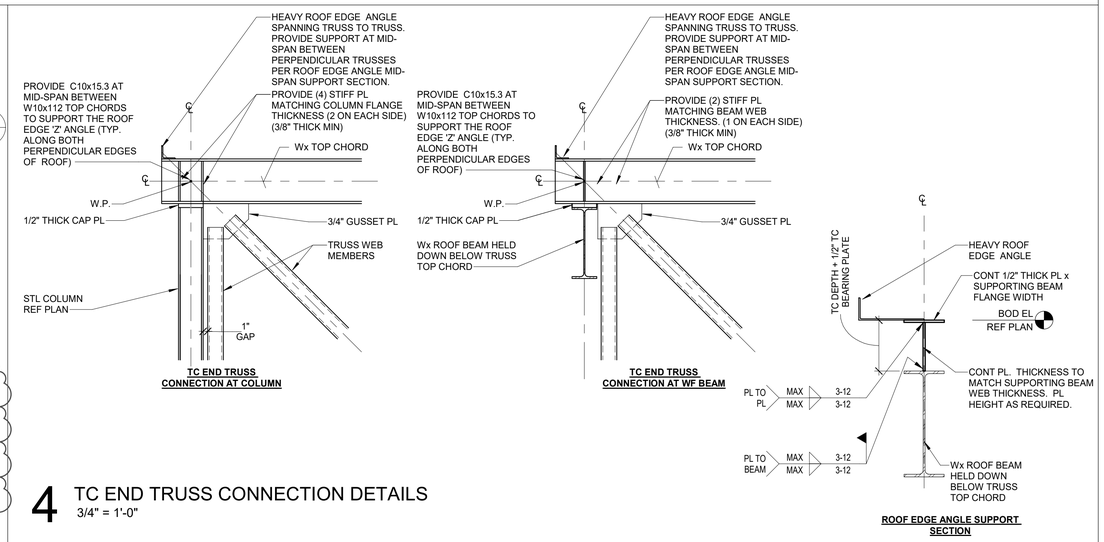

4 TC END TRUSS CONNECTION DETAILS
3/4" = 1'-0"

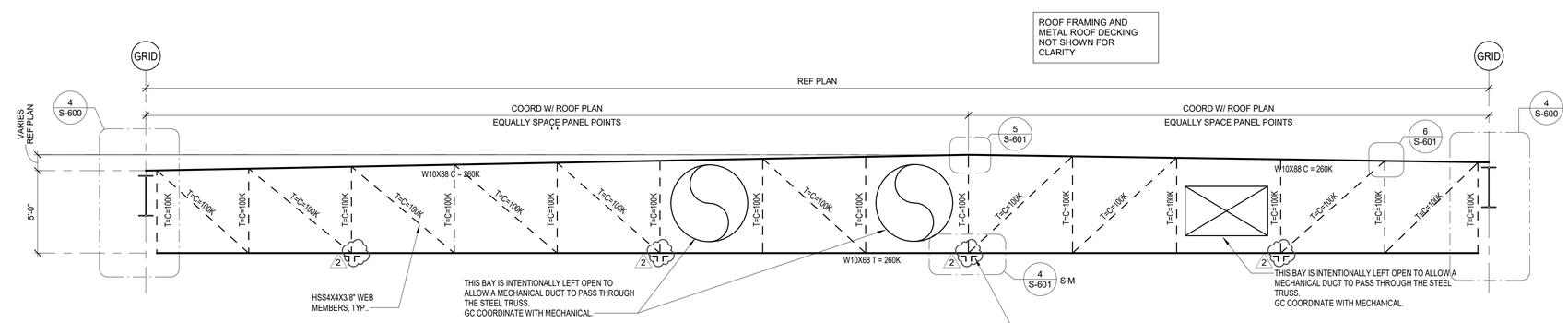

ROOF FRAMING AND METAL ROOF DECKING NOT SHOWN FOR CLARITY

NOTES:

1. BOLTED CONNECTIONS FOR THE TRUSS WEB MEMBERS MAY BE SUBSTITUTED BY THE FABRICATOR FOR THE WELDED CONNECTIONS SHOWN ON THIS ELEVATION PROVIDED THE CONNECTION DESIGNS ARE SUBMITTED TO THE ARCHITECT AND THE EOR FOR REVIEW AND APPROVAL. ALL CONNECTION ANALYSIS AND DESIGN CALCULATIONS SUBMITTED BY THE FABRICATOR SHALL BE SIGNED AND SEALED BY A REGISTERED ENGINEER.
2. THE TRUSS MEMBER AXIAL FORCES SHOWN ON THESE DRAWINGS ARE SERVICE LEVEL (ASD).

AT ALL TRUSSES: THE DOUBLE ANGLE TOP AND BOTTOM GRAPHIC INDICATES A ROW OF FULL DEPTH BRIDGNING FOR FULL WIDTH OF ROOF FORMED WITH TRUSSES (4 ROWS TOTAL). BRIDGNING MAY BE X-BRIDGNING OR SINGLE DIAGONAL BRIDGNING AS NOTED BELOW:
DOUBLE ANGLE BRIDGNING (X-BRIDGNING) : CROSSING L3x3x3/16" ANGLES
SINGLE DIAGONAL BRIDGNING: L4x4x1/4"
GC SHALL COORDINATE WITH MECHANICAL AND ARCH DRAWINGS FOR LOCATIONS WHERE A SINGLE BAY OF BRIDGING MAY NEED TO RUN HORIZONTAL VS DIAGONAL TO AVOID CONFLICTS WITH THEIR ELEMENTS; HOWEVER, THIS "HORIZONTAL" RUNNING CANNOT BE DONE FOR MORE THAN 1 BAY IN A ROW WITHOUT APPROVAL FROM THE STRUCTURAL EOR (TYP.)

3 TRUSS "T3"
1/4" = 1'-0"

Kubala ENGINEERS
Ph: 800.248.3674
www.kubalaengineers.com
TX. REG. NO. F-3709

PBK

ARCHITECT PBK Architects, Inc.
HOUSTON
11 Greenway Plaza, 22nd Floor
Houston, TX 77046
713-965-0608 P
713-961-4571 F
TX Firm: BR 1608
PBK.com
CIVIL
DIG
T 713-965-0608
SPORTS
PBK SPORTS
T 281-528-1697
STRUCTURAL
KUBALA ENGINEERS
T 800-248-3674
MEPT
LEAF ENGINEERS
T 713-940-3300
ENVELOPE
BEAM
T 713-940-3201
AV / ACOUSTIC
JAFFE HOLDEN
T 713-807-7100
THEATER
SCHULER SHOOK
T 214-747-6300
FOOD SERVICE
FOOD DESIGN PROFESSIONAL
T 281-350-2323

FRIENDSWOOD HIGH SCHOOL ADDITIONS AND RENOVATIONS

702 Greenbriar Dr
Friendswood, TX 77546

ISSUE FOR PROPOSAL

JOHN R. KUBALA
106120
02/14/2022
Kubala Engineers
F-3709

CLIENT
FRIENDSWOOD ISD

DATE	PROJECT NUMBER
02/02/2022	20381

DRAWING HISTORY

No.	Description	Date
2	ADDENDUM #2	02/14/2022

ISSUE FOR PROPOSAL

TRUSS PROFILES AND DETAILS

S-600

TRUSS PROFILES AND DETAILS
S-600
FOR BLUEBEAM LABELING/OCR:

File Path: C:_RevitLocal\ST21-20381-FHS_Central_amer.taghleblLLC29.rvt

CHECKED BY:
Checker
DRAWN BY:
Author
Plot Stamp:
2/14/2022 6:45:31 PM

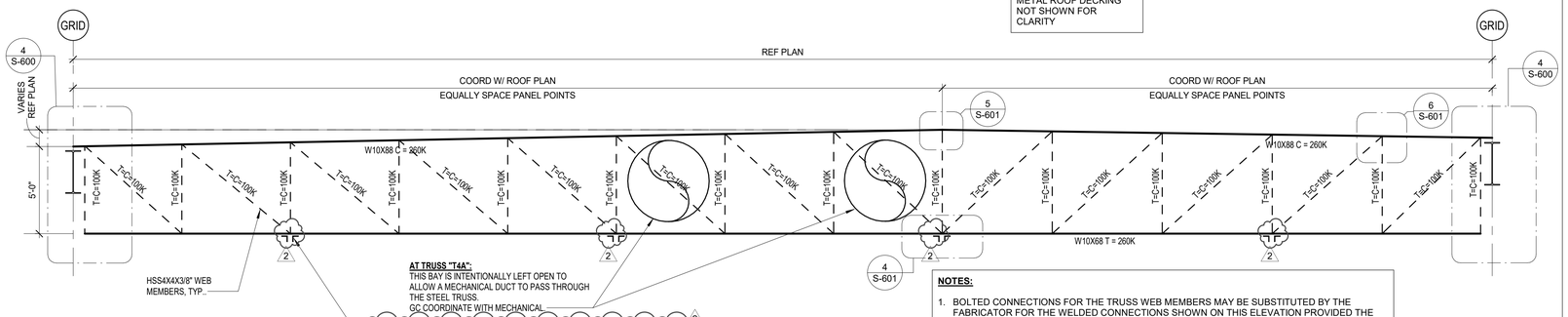

AT ALL TRUSSES:
THE DOUBLE ANGLE TOP AND BOTTOM GRAPHIC INDICATES A ROW OF FULL DEPTH BRIDGNING FOR FULL WIDTH OF ROOF FORMED WITH TRUSSES (4 ROWS TOTAL). BRIDGNING MAY BE X-BRIDGNING OR SINGLE DIAGONAL BRIDGNING AS NOTED BELOW:
DOUBLE ANGLE BRIDGNING (X-BRIDGNING) : CROSSING L3x3x3/16" ANGLES
SINGLE DIAGONAL BRIDGNING: L4x4x1/4"
GC SHALL COORDINATE WITH MECHANICAL AND ARCH DRAWINGS FOR LOCATIONS WHERE A SINGLE BAY OF BRIDGING MAY NEED TO RUN HORIZONTAL VS DIAGONAL TO AVOID CONFLICTS WITH THEIR ELEMENTS; HOWEVER, THIS "HORIZONTAL" RUNNING CANNOT BE DONE FOR MORE THAN 1 BAY IN A ROW WITHOUT APPROVAL FROM THE STRUCTURAL EOR (TYP.)

NOTES:
1. BOLTED CONNECTIONS FOR THE TRUSS WEB MEMBERS MAY BE SUBSTITUTED BY THE FABRICATOR FOR THE WELDED CONNECTIONS SHOWN ON THIS ELEVATION PROVIDED THE CONNECTION DESIGNS ARE SUBMITTED TO THE ARCHITECT AND THE EOR FOR REVIEW AND APPROVAL. ALL CONNECTION ANALYSIS AND DESIGN CALCULATIONS SUBMITTED BY THE FABRICATOR SHALL BE SIGNED AND SEALED BY A REGISTERED ENGINEER.
2. THE TRUSS MEMBER AXIAL FORCES SHOWN ON THESE DRAWINGS ARE SERVICE LEVEL (ASD).

1 TRUSS "T4" AND "T4A"
1/4" = 1'-0"

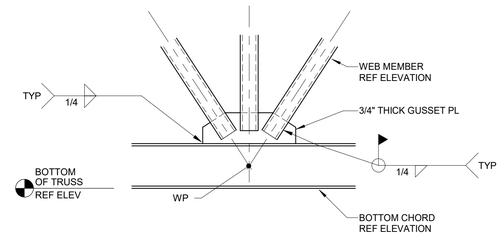

4 TRUSS CONNECTION DETAIL
3/4" = 1'-0"

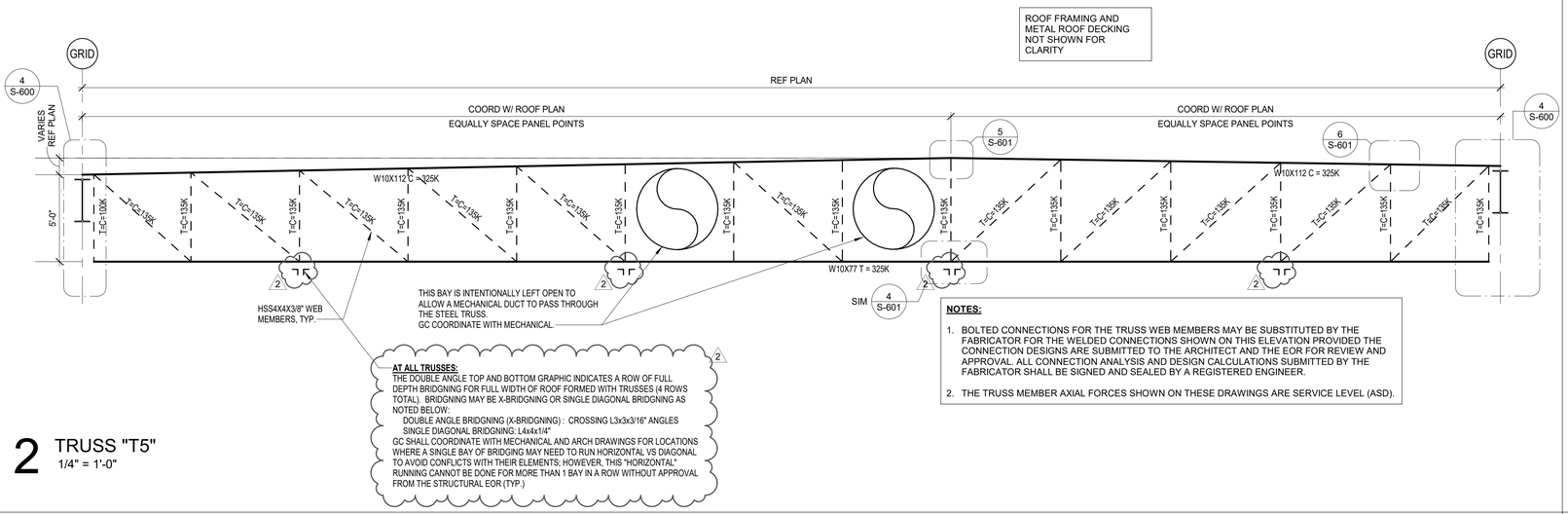

AT ALL TRUSSES:
THE DOUBLE ANGLE TOP AND BOTTOM GRAPHIC INDICATES A ROW OF FULL DEPTH BRIDGNING FOR FULL WIDTH OF ROOF FORMED WITH TRUSSES (4 ROWS TOTAL). BRIDGNING MAY BE X-BRIDGNING OR SINGLE DIAGONAL BRIDGNING AS NOTED BELOW:
DOUBLE ANGLE BRIDGNING (X-BRIDGNING) : CROSSING L3x3x3/16" ANGLES
SINGLE DIAGONAL BRIDGNING: L4x4x1/4"
GC SHALL COORDINATE WITH MECHANICAL AND ARCH DRAWINGS FOR LOCATIONS WHERE A SINGLE BAY OF BRIDGING MAY NEED TO RUN HORIZONTAL VS DIAGONAL TO AVOID CONFLICTS WITH THEIR ELEMENTS; HOWEVER, THIS "HORIZONTAL" RUNNING CANNOT BE DONE FOR MORE THAN 1 BAY IN A ROW WITHOUT APPROVAL FROM THE STRUCTURAL EOR (TYP.)

NOTES:
1. BOLTED CONNECTIONS FOR THE TRUSS WEB MEMBERS MAY BE SUBSTITUTED BY THE FABRICATOR FOR THE WELDED CONNECTIONS SHOWN ON THIS ELEVATION PROVIDED THE CONNECTION DESIGNS ARE SUBMITTED TO THE ARCHITECT AND THE EOR FOR REVIEW AND APPROVAL. ALL CONNECTION ANALYSIS AND DESIGN CALCULATIONS SUBMITTED BY THE FABRICATOR SHALL BE SIGNED AND SEALED BY A REGISTERED ENGINEER.
2. THE TRUSS MEMBER AXIAL FORCES SHOWN ON THESE DRAWINGS ARE SERVICE LEVEL (ASD).

2 TRUSS "T5"
1/4" = 1'-0"

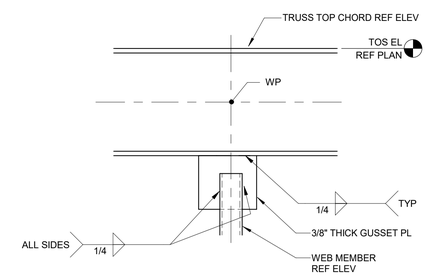

5 TRUSS CONNECTION DETAIL
3/4" = 1'-0"

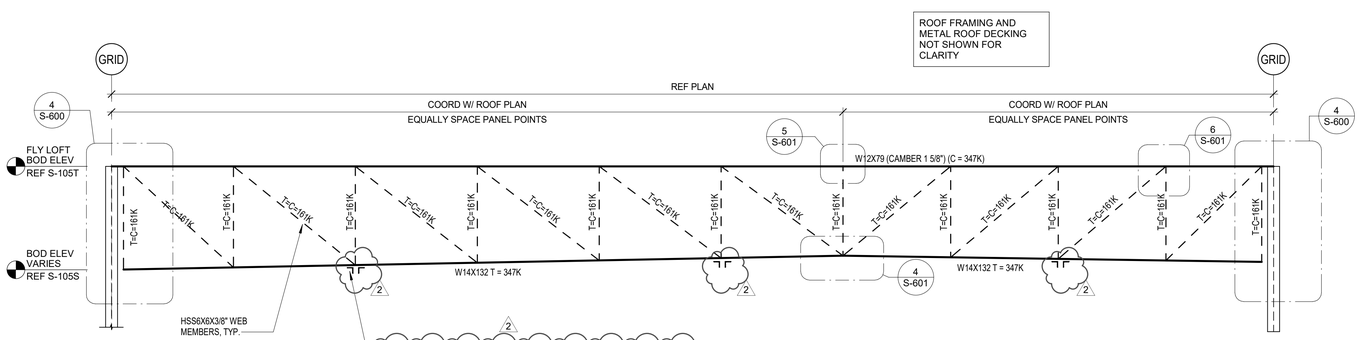

AT ALL TRUSSES:
THE DOUBLE ANGLE TOP AND BOTTOM GRAPHIC INDICATES A ROW OF FULL DEPTH BRIDGNING FOR FULL WIDTH OF ROOF FORMED WITH TRUSSES (3 ROWS TOTAL). BRIDGNING MAY BE X-BRIDGNING OR SINGLE DIAGONAL BRIDGNING AS NOTED BELOW:
DOUBLE ANGLE BRIDGNING (X-BRIDGNING) : CROSSING L3x3x3/16" ANGLES
SINGLE DIAGONAL BRIDGNING: L4x4x1/4"
GC SHALL COORDINATE WITH MECHANICAL AND ARCH DRAWINGS FOR LOCATIONS WHERE A SINGLE BAY OF BRIDGING MAY NEED TO RUN HORIZONTAL VS DIAGONAL TO AVOID CONFLICTS WITH THEIR ELEMENTS; HOWEVER, THIS "HORIZONTAL" RUNNING CANNOT BE DONE FOR MORE THAN 1 BAY IN A ROW WITHOUT APPROVAL FROM THE STRUCTURAL EOR (TYP.)

NOTES:
1. BOLTED CONNECTIONS FOR THE TRUSS WEB MEMBERS MAY BE SUBSTITUTED BY THE FABRICATOR FOR THE WELDED CONNECTIONS SHOWN ON THIS ELEVATION PROVIDED THE CONNECTION DESIGNS ARE SUBMITTED TO THE ARCHITECT AND THE EOR FOR REVIEW AND APPROVAL. ALL CONNECTION ANALYSIS AND DESIGN CALCULATIONS SUBMITTED BY THE FABRICATOR SHALL BE SIGNED AND SEALED BY A REGISTERED ENGINEER.
2. THE TRUSS MEMBER AXIAL FORCES SHOWN ON THESE DRAWINGS ARE SERVICE LEVEL (ASD).

3 TRUSS "T6"
1/4" = 1'-0"

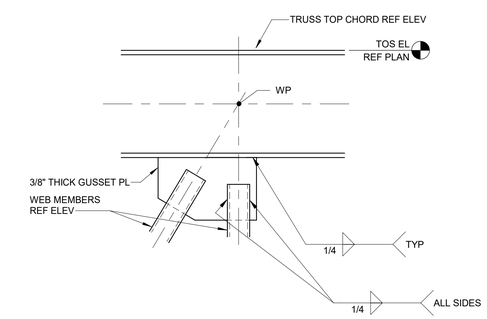

6 TRUSS CONNECTION DETAIL
3/4" = 1'-0"

Kubala ENGINEERS
Ph: 800.248.3674
www.kubalaengineers.com
TX. REG. NO. F-3709

PBK

ARCHITECT PBK Architects, Inc.
PBK.com
HOUSTON
11 Greenway Plaza, 22nd Floor
Houston, TX 77046
713-965-0608 P
713-961-4571 F
TX Firm: BR 1608

CIVIL
DIG
T 713-965-0608
SPORTS
PBK SPORTS
T 281-528-1697
STRUCTURAL
KUBALA ENGINEERS
T 800-248-3674
MEPT
LEAF ENGINEERS
T 713-940-3300
ENVELOPE
SEAM
T 713-940-3201
AV / ACOUSTIC
JAFFE HOLDEN
T 713-807-7100
THEATER
SCHULER SHOOK
T 214-747-5300
FOOD SERVICE
FOOD DESIGN PROFESSIONAL
T 281-350-2323

FRIENDSWOOD HIGH SCHOOL ADDITIONS AND RENOVATIONS

702 Greenbriar Dr
Friendswood, TX 77546

ISSUE FOR PROPOSAL

STATE OF TEXAS
JOHN R. KUBALA
106120
LICENSED PROFESSIONAL ENGINEER
02/14/2022
Kubala Engineers
F-3709

CLIENT
FRIENDSWOOD ISD

DATE	PROJECT NUMBER
02/02/2022	20381

DRAWING HISTORY

No.	Description	Date
2	ADDENDUM #2	02/14/2022

ISSUE FOR PROPOSAL

TRUSS PROFILES AND DETAILS

S-601

TRUSS PROFILES AND DETAILS
S-601
FOR BLUEBEAM LABELING/OCR:

File Path: C:_Revit.local\ST21-20381-FHS_Central_amer.taghlebiLLC29.rvt

CHECKED BY:
Checker
DRAWN BY:
Author
Plot Stamp:
2/14/2022 6:45:33 PM

GYM- SECTIONS
S-602
FOR BLUEBEAM LABELING/OCR:

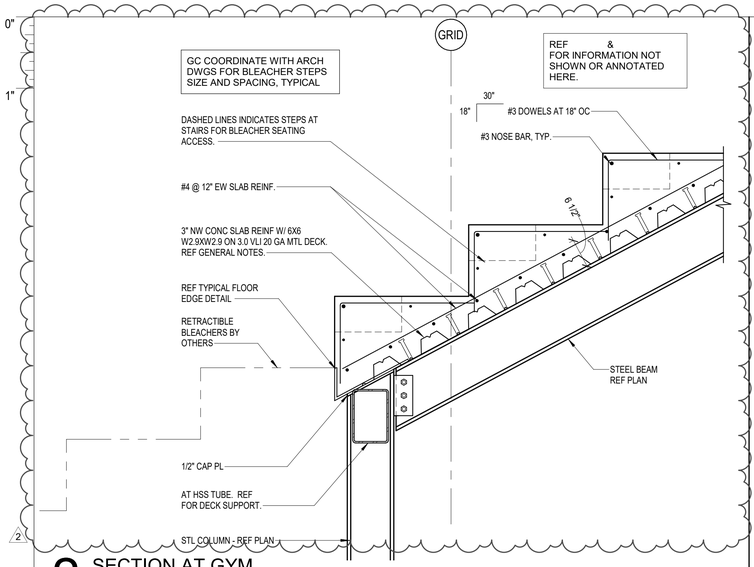

2 SECTION AT GYM
3/4" = 1'-0"

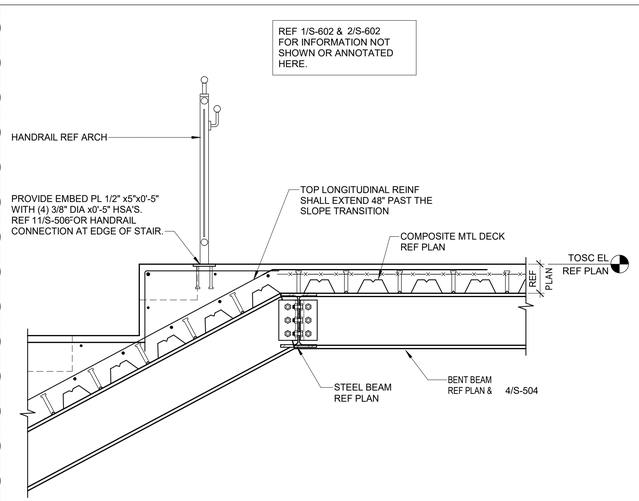

3 SECTION AT GYM
3/4" = 1'-0"

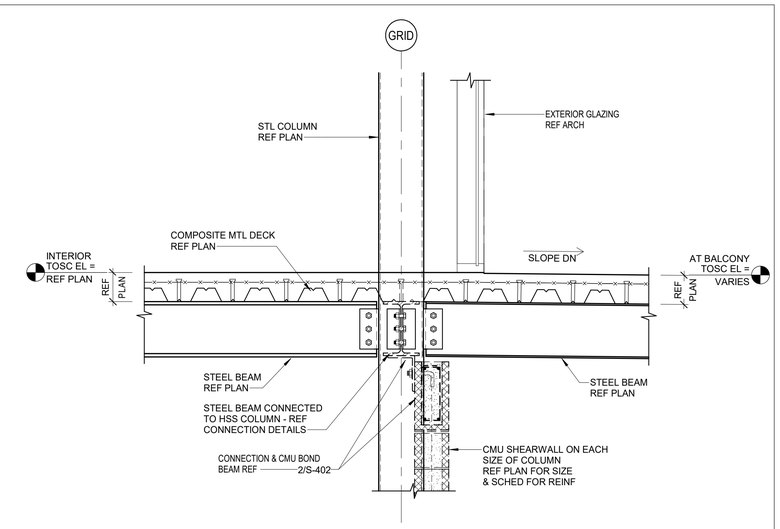

4 SECTION AT GYM
3/4" = 1'-0"

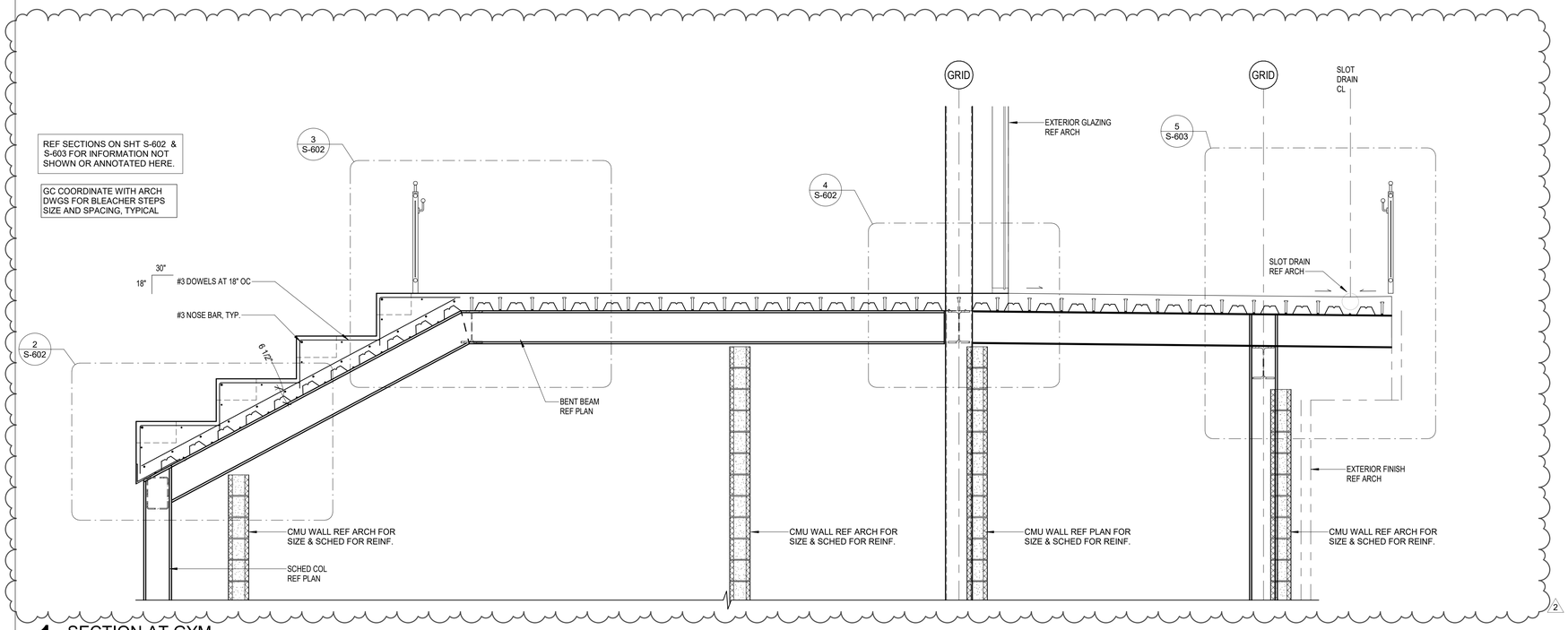

1 SECTION AT GYM
1/2" = 1'-0"

File Path: C:_Revit\Local\ST21-20381-FHS_Central_amer.taghleb\LLC29.rvt

CHECKED BY:
Checker
DRAWN BY:
Author
Plot Stamp:
2/14/2022 6:45:35 PM

Kubala ENGINEERS
Ph: 800.248.3674
www.kubalaengineers.com
TX. REG. NO. F-3709

PBK

ARCHITECT PBK Architects, Inc.
HOUSTON PBK.com
11 Greenway Plaza, 22nd Floor
Houston, TX 77046
713-965-0608 P
713-961-4571 F
TX Firm: BR 1608

CIVIL
DIG
T 713-965-0608
SPORTS
PBK SPORTS
T 281-528-1697
STRUCTURAL
KUBALA ENGINEERS
T 800-248-3674
MEPT
LEAF ENGINEERS
T 713-940-3300
ENVELOPE
BEAM
T 713-940-3201
AV / ACOUSTIC
JAFFE HOLDEN
T 713-807-7100
THEATER
SCHULER SHOOK
T 214-747-5000
FOOD SERVICE
FOOD DESIGN PROFESSIONAL
T 281-350-2323

FRIENDSWOOD HIGH SCHOOL ADDITIONS AND RENOVATIONS

702 Greenbriar Dr
Friendswood, TX 77546
ISSUE FOR PROPOSAL

STATE OF TEXAS
JOHN R. KUBALA
106120
LICENSED PROFESSIONAL ENGINEER
02/14/2022
Kubala Engineers
F-3709

CLIENT
FRIENDSWOOD ISD

DATE	PROJECT NUMBER
02/02/2022	20381

DRAWING HISTORY

No.	Description	Date
2	ADDENDUM #2	02/14/2022

ISSUE FOR PROPOSAL

GYM- SECTIONS

S-602

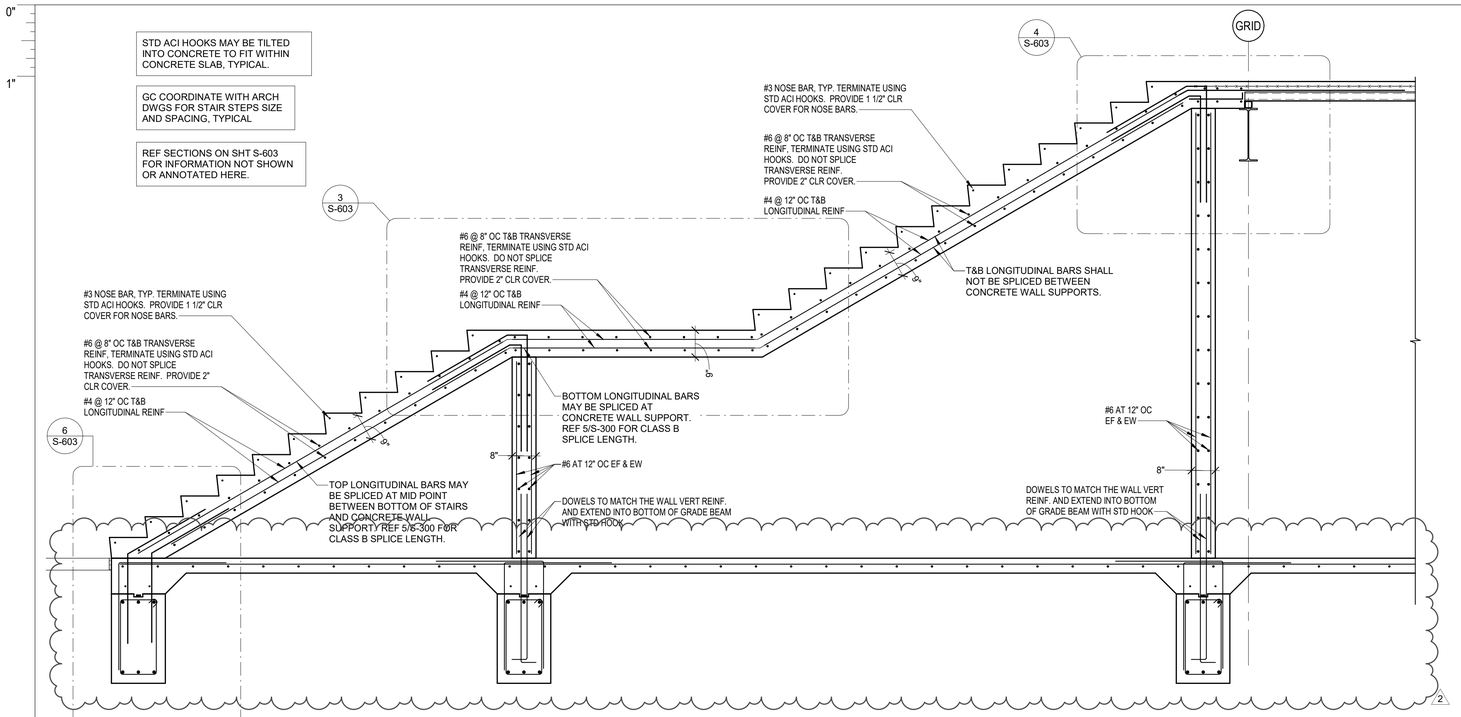

1 ELEVATION AT GYM STAIRS
1/2" = 1'-0"

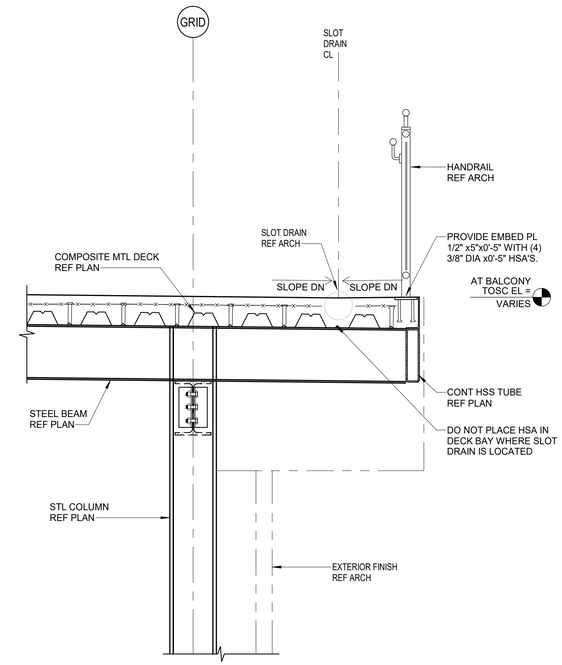

5 SECTION AT GYM BALCONY
3/4" = 1'-0"

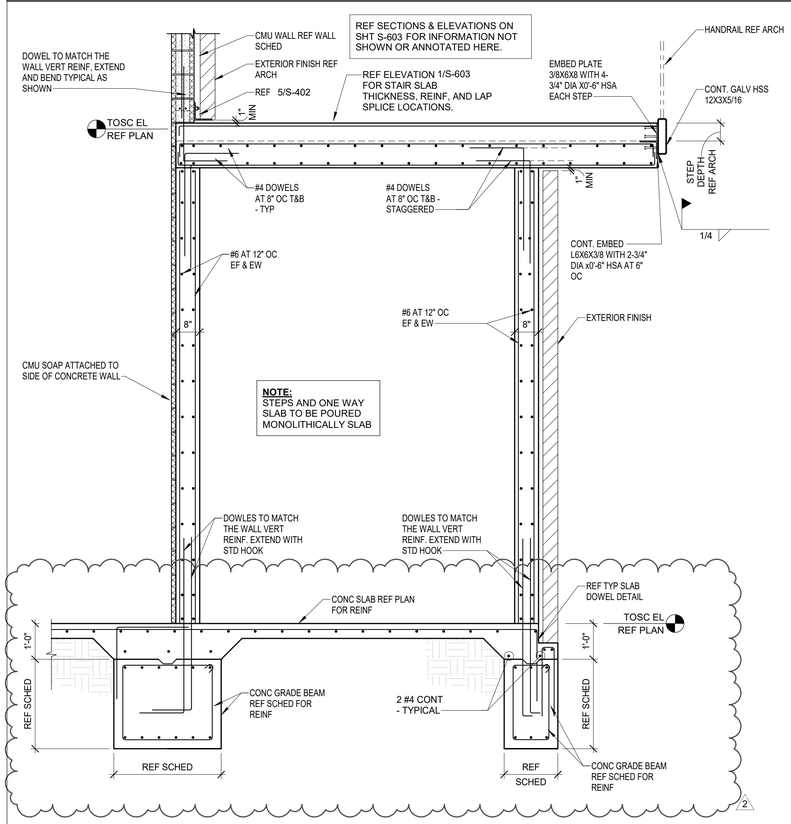

2 SECTION AT GYM STAIRS
1/2" = 1'-0"

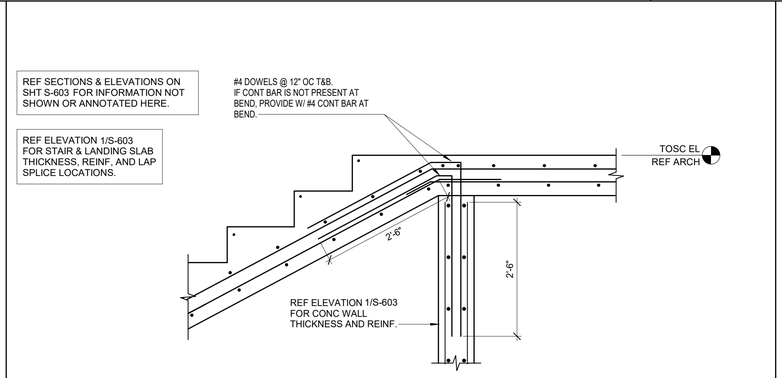

3 SECTION AT GYM STAIRS
3/4" = 1'-0"

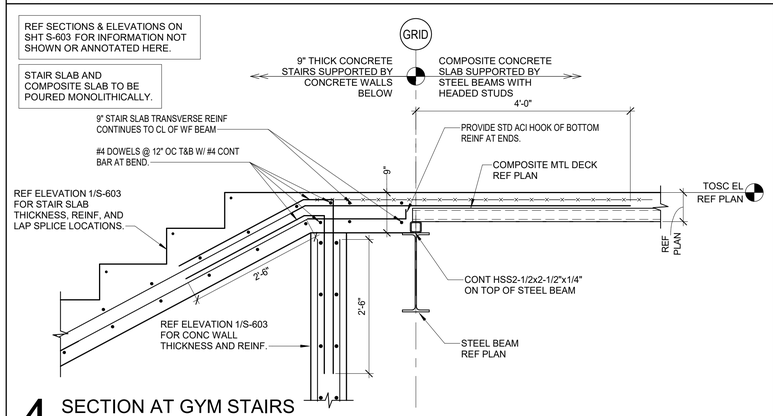

4 SECTION AT GYM STAIRS
3/4" = 1'-0"

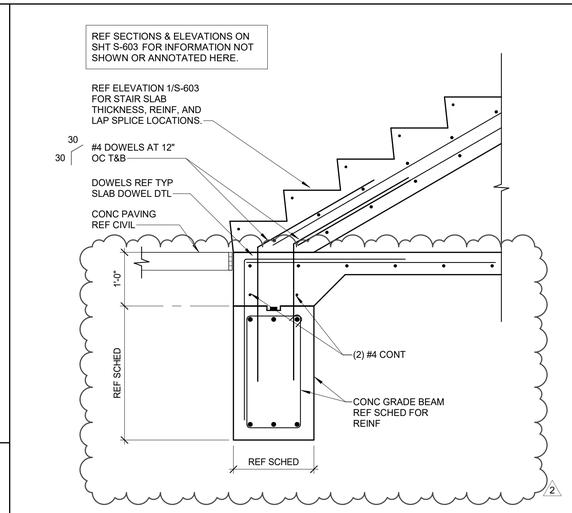

6 SECTION AT GYM STAIRS
3/4" = 1'-0"

Kubala ENGINEERS
Ph: 800.248.3674
www.kubalaengineers.com
TX. REG. NO. F-3709

PBK

ARCHITECT PBK Architects, Inc.
PBK.com
HOUSTON
11 Greenway Plaza, 22nd Floor
Houston, TX 77046
713-965-0608 P
713-961-4571 F
TX Firm: BR 1608
CIVIL
DIG
T 713-965-0608
SPORTS
PBK SPORTS
T 281-528-1697
STRUCTURAL
KUBALA ENGINEERS
T 800-248-3674
MEP/T
LEAF ENGINEERS
T 713-940-3300
ENVELOPE
BEAM
T 713-940-3201
AV / ACOUSTIC
JAFFE HOLDEN
T 713-807-7100
THEATER
SCHULER SHOOK
T 214-747-5300
FOOD SERVICE
FOOD DESIGN PROFESSIONAL
T 281-350-2323

FRIENDSWOOD HIGH SCHOOL ADDITIONS AND RENOVATIONS

702 Greenbriar Dr
Friendswood, TX 77546

ISSUE FOR PROPOSAL

STATE OF TEXAS
JOHN R. KUBALA
106120
PROFESSIONAL ENGINEER
02/14/2022
Kubala Engineers
F-3709

CLIENT
FRIENDSWOOD ISD

DATE	PROJECT NUMBER
02/02/2022	20381

DRAWING HISTORY

No.	Description	Date
2	ADDENDUM #2	02/14/2022

ISSUE FOR PROPOSAL

GYM STAIRS - SECTIONS

S-603

GYM STAIRS - SECTIONS
S-603
FOR BLUEBEAM LABELING/OCR:

File Path: C:_Revit\Local\ST21-20381-FHS_Central_amer.tagnleb\LLC29.rvt

CHECKED BY:
Checker
DRAWN BY:
Author
Plot Stamp:
2/14/2022 6:45:37 PM

MECHANICAL 1ST FLOOR PLAN AREA Q
M-101Q
FOR BLUEBEAM LABELING OCR:

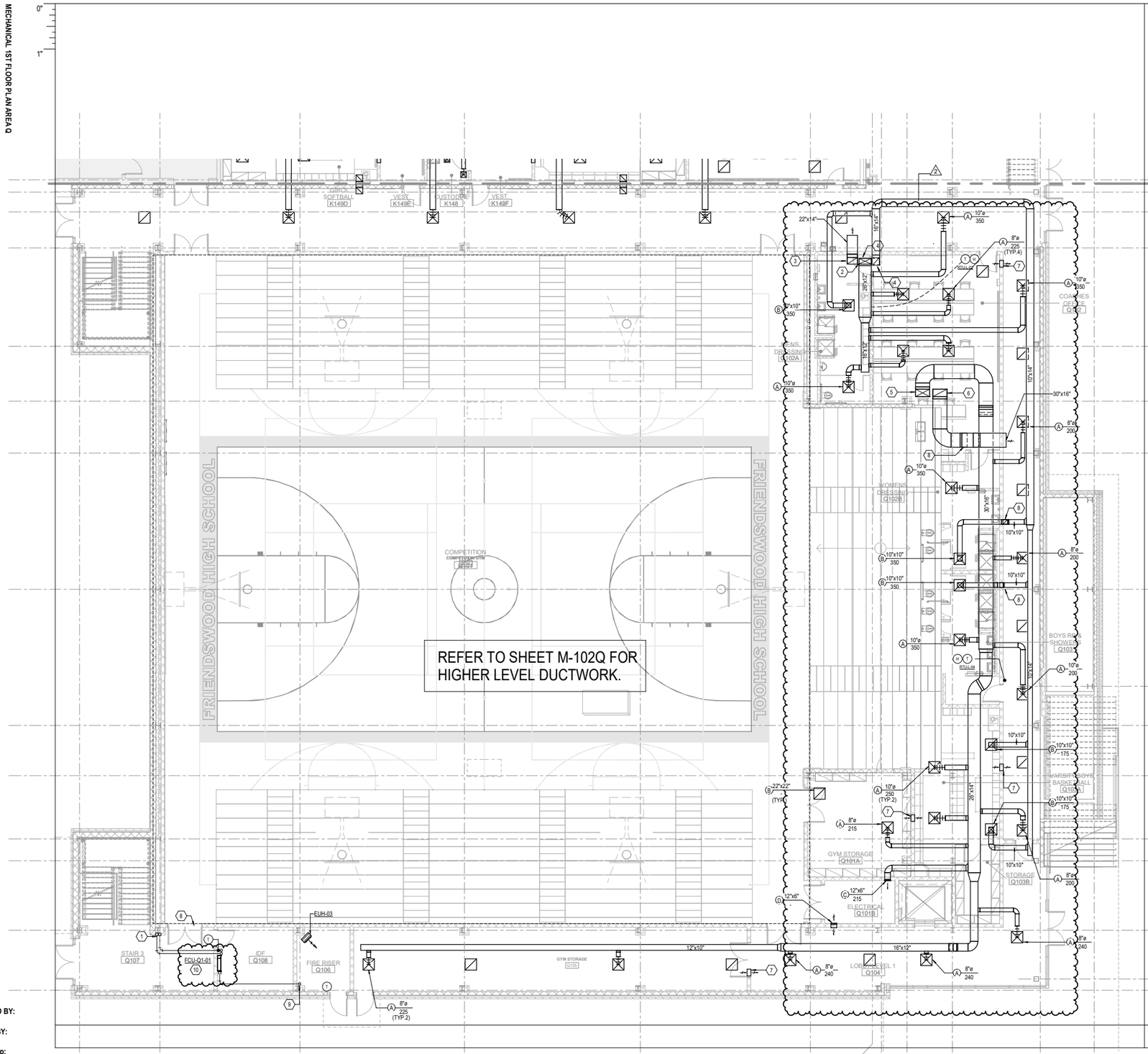

LEGEND:

- NEW DUCTWORK & PIPING
- EXISTING DUCTWORK & PIPING TO REMAIN
- EQUIPMENT TO REMAIN
- EQUIPMENT TO BE DEMOLISHED

GENERAL NOTES:

1. PROVIDE FIRE DAMPERS, SMOKE DAMPERS, OR COMBINATION FIRE/SMOKE DAMPERS IN ALL DUCTWORK AND RETURN AIR OPENINGS WHICH PENETRATE FIRE OR SMOKE RATED WALLS OR FLOOR SLABS. FIRE OR SMOKE RATED WALLS CAN INCLUDE BUT ARE NOT LIMITED TO CORRIDOR WALLS, MECHANICAL ROOMS, ELECTRICAL ROOMS, AND STORAGE ROOMS. REFER TO ARCHITECTURAL PLANS FOR PARTITION AND WALL TYPES INDICATING FIRE OR SMOKE RATED WALL LOCATION AND RATING.
2. REFER TO ARCHITECTURAL LOUVER SCHEDULE AND ELEVATION PLANS FOR LOCATION AND ELEVATION.
3. COORDINATE ALL AIR DEVICES LOCATION WITH FINAL ARCHITECTURAL REFLECTED CEILING PLAN.
4. IF RETURN AIR OPENINGS AREN'T SHOWN FOR WALLS THAT GO TO BOTTOM OF DECK, PROVIDE A MINIMUM 16"x16" R/A OPENING AT EACH ROOM AT WALL ABOVE CEILING NEAR DOOR.
5. PROVIDE 24"x24" ACCESS PANELS IN GYP BOARD CEILING WHERE MECHANICAL EQUIPMENT IS INSTALLED. COORDINATE WITH ARCHITECTURAL PLANS.
6. PRIOR TO INSTALLATION OF EQUIPMENT, VERIFY MANUFACTURER'S RECOMMENDED AND CODE REQUIRED CLEARANCES ARE AVAILABLE.
7. REFER TO SNAP 'N' SHIELD REFRIGERANT PIPING SUPPORT DETAIL FOR REFRIGERANT PIPING SUPPORT.
8. ALL EXPOSED REFRIGERANT AND CONDENSATE PIPING SHALL BE PROVIDED WITH ALUMINUM JACKET.
9. COORDINATE ALL WORK WITH ALL OTHER TRADES.
10. ALL DUCTWORK THAT CAN BE SEEN THROUGH ANY CEILING GAPS SHALL BE PAINTED. COORDINATE PAINT COLOR WITH ARCHITECT.
11. FOR ALL OPEN SPACE (MAIN CORRIDOR, GYM, CAFETERIA, LIBRARY, ETC.) PROVIDE SENSORS IN PROTECTIVE ENCLOSURE.
12. MECHANICAL CONTRACTOR SHALL BE RESPONSIBLE TO MAINTAIN EXISTING BUILDING CLIMATE CONTROLLED DURING CONSTRUCTION. ALL REQUIRED EQUIPMENT AND ASSOCIATED POWER, WIRING SHALL BE PROVIDED BY THE CONTRACTOR.
13. PATCH AND SEAL ALL SLAB, ROOF AND WALL OPENINGS WITH LIKE MATERIAL WHERE MECHANICAL ONCE PENETRATED.
14. UNLESS SHOWN OTHERWISE, CONTRACTOR SHALL UTILIZE EXISTING OPENINGS IN WALLS, ROOF AND FLOOR SLABS FOR PIPING ETC. PROVIDE NEW SLEEVES FOR PIPING AND INFILL ANNULAR SPACES.
15. PROVIDE FLEXIBLE DUCTS TO ALL SUPPLY DIFFUSERS FROM DUCT TAPS.
16. CONTRACTOR TO AVOID EXISTING CABLE RUNS DURING CONSTRUCTION & COORDINATE ALL NEW PIPING & DUCTWORK WITH EXISTING FIRE SPRINKLER PIPING.

KEYED NOTES:

1. LIQUID & SUCTION REFRIGERANT LINES UP TO CONDENSING UNIT ON ROOF THRU SECOND FLOOR. SIZE PER MANUFACTURER'S RECOMMENDATIONS. PROVIDE ALUMINUM JACKETING FOR ALL OUTDOOR REFRIGERANT PIPING.
2. 26"x12" SUPPLY AIR DUCT UP TO ROOF TOP UNIT RTU-U-02. THOURGH SECOND FLOOR SLAB. REFER TO M-102Q FOR CONTINUATION.
3. 22"x14" RETURN AIR DUCT UP TO ROOF TOP UNIT RTU-U-02. THOURGH SECOND FLOOR SLAB. REFER TO M-102Q FOR CONTINUATION.
4. 16"x14" EXHAUST AIR DUCT UP TO EXHAUST FAN EF-Q1-01. THOURGH SECOND FLOOR SLAB. REFER TO M-102Q FOR CONTINUATION.
5. 30"x16" SUPPLY AIR DUCT UP TO ROOF TOP UNIT RTU-U-04 THOURGH SECOND FLOOR SLAB. REFER TO M-102Q FOR CONTINUATION.
6. 30"x16" RETURN AIR DUCT UP TO ROOF TOP UNIT RTU-U-04 THOURGH SECOND FLOOR SLAB. REFER TO M-102Q FOR CONTINUATION.
7. 14"x14" RETURN AIR OPENING ABOVE CEILING.
8. ROUTE DUCT UP AND AVOID CONFLICT.
9. ROUTE 3/4"Ø CONDENSATE DRAIN LINE TO FLOOR DRAIN IN FIRE RISER ROOM. AVOID TRIP HAZARD.
10. PROVIDE WALL MOUNTED AC UNIT WITH CONDENSATE PUMP. ROUTE CONDENSATE ABOVE CEILING TO FLOOR DRAIN IN MECHANICAL ROOM.

PBK

ARCHITECT PBK Architects, Inc.
HOUSTON PBK.com
11 Greenway Plaza, 22nd Floor
Houston, TX 77046
713-965-0608 P
713-961-4571 F
TX Firm: BR 1608

CIVIL
DIG
T.713-953-0608
MEP/FP
ACE GROUP
T.281-324-1001
STRUCTURAL
KUBALA ENGINEERS
T.832-248-3674
MEPT
LEAF ENGINEERS
T.713-943-3300
ENVELOPE
SIGMA
T.713-524-3201
AV / ACOUSTIC
JAFFE HOLDEN
T.713-807-1700
THEATER
SCHULER SHOOK
T.214-747-8300
FOOD SERVICE
FOOD DESIGN PROFESSIONAL
T.281-393-2323

LEAF ENGINEERS

FRIENDSWOOD HIGH SCHOOL ADDITIONS AND RENOVATIONS

702 Greenbriar Dr
Friendswood, TX 77546

ISSUE FOR PROPOSAL

FRIENDSWOOD INDEPENDENT SCHOOL DISTRICT

KEY PLAN

NORTH PLAN TRUE

STATE OF TEXAS
MITAL J. PATEL
111622
LICENSED PROFESSIONAL ENGINEER
02/02/2022
LEAF ENGINEERS
F-18672

CLIENT
FRIENDSWOOD ISD

DATE	PROJECT NUMBER
02/02/2022	20381

DRAWING HISTORY

No.	Description	Date
2	ADD2	02.14.2022

ISSUE FOR PROPOSAL

MECHANICAL 1ST FLOOR PLAN AREA Q

M-101Q

File Path: C:\Users\fsanchez\Documents\MECH_R21 20381 FHS Central_fabian.sanchez8ST83.rvt

CHECKED BY:
Checker
DRAWN BY:
Author
Plot Stamp:
2/14/2022 9:34:38 AM

1 MECHANICAL 1ST FLOOR PLAN AREA Q
1/8" = 1'-0"

MECHANICAL 2ND FLOOR PLAN - AREA Q
M-102Q
FOR BLUEBEAM LABELING OCR:

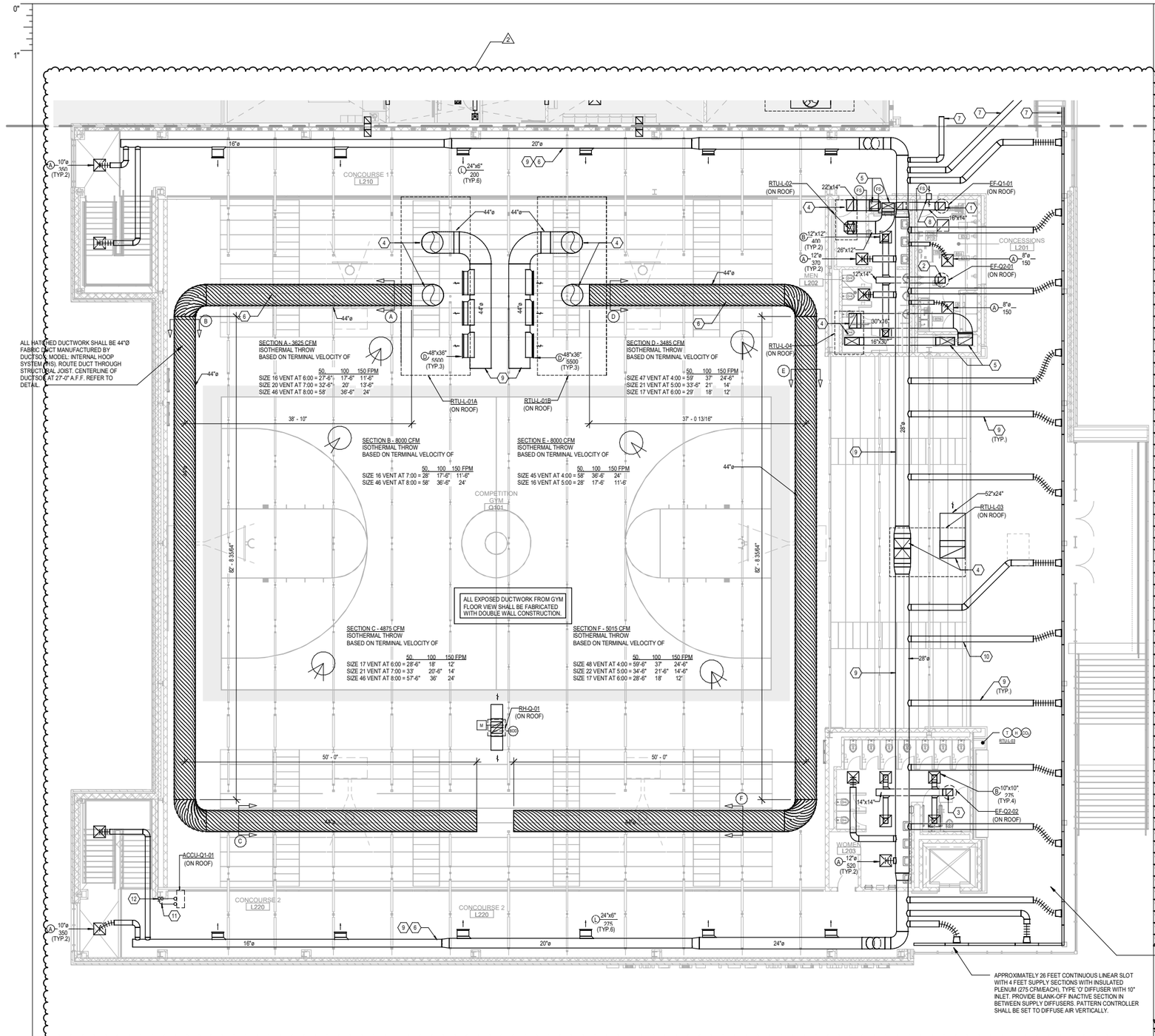

1 MECHANICAL 2ND FLOOR PLAN - AREA Q
1/8" = 1'-0"

LEGEND:

- NEW DUCTWORK & PIPING
- EXISTING DUCTWORK & PIPING TO REMAIN
- EQUIPMENT TO REMAIN
- EQUIPMENT TO BE DEMOLISHED

GENERAL NOTES:

1. PROVIDE FIRE DAMPERS, SMOKE DAMPERS, OR COMBINATION FIRE/SMOKE DAMPERS IN ALL DUCTWORK AND RETURN AIR OPENINGS WHICH PENETRATE FIRE OR SMOKE RATED WALLS OR FLOOR SLABS. FIRE OR SMOKE RATED WALLS CAN INCLUDE BUT ARE NOT LIMITED TO CORRIDOR WALLS, MECHANICAL ROOMS, ELECTRICAL ROOMS, AND STORAGE ROOMS. REFER TO ARCHITECTURAL PLANS FOR PARTITION AND WALL TYPES INDICATING FIRE OR SMOKE RATED WALL LOCATION AND RATING.
2. REFER TO ARCHITECTURAL LOUVER SCHEDULE AND ELEVATION PLANS FOR LOCATION AND ELEVATION.
3. COORDINATE ALL AIR DEVICES LOCATION WITH FINAL ARCHITECTURAL REFLECTED CEILING PLAN.
4. IF RETURN AIR OPENINGS AREN'T SHOWN FOR WALLS THAT GO TO BOTTOM OF DECK, PROVIDE A MINIMUM 16"x16" R/A OPENING AT EACH ROOM AT WALL ABOVE CEILING NEAR DOOR.
5. PROVIDE 24"x24" ACCESS PANELS IN GYP BOARD CEILING WHERE MECHANICAL EQUIPMENT IS INSTALLED. COORDINATE WITH ARCHITECTURAL PLANS.
6. PRIOR TO INSTALLATION OF EQUIPMENT, VERIFY MANUFACTURER'S RECOMMENDED AND CODE REQUIRED CLEARANCES ARE AVAILABLE.
7. REFER TO SNAP 'N SHIELD REFRIGERANT PIPING SUPPORT DETAIL FOR REFRIGERANT PIPING SUPPORT.
8. ALL EXPOSED REFRIGERANT AND CONDENSATE PIPING SHALL BE PROVIDED WITH ALUMINUM JACKET.
9. COORDINATE ALL WORK WITH ALL OTHER TRADES.
10. ALL DUCTWORK THAT CAN BE SEEN THROUGH ANY CEILING GAPS SHALL BE PAINTED. COORDINATE PAINT COLOR WITH ARCHITECT.
11. FOR ALL OPEN SPACE (MAIN CORRIDOR, GYM, CAFETERIA, LIBRARY, ETC.) PROVIDE SENSORS IN PROTECTIVE ENCLOSURE.
12. MECHANICAL CONTRACTOR SHALL BE RESPONSIBLE TO MAINTAIN EXISTING BUILDING CLIMATE CONTROLLED DURING CONSTRUCTION. ALL REQUIRED EQUIPMENT AND ASSOCIATED POWER, WIRING SHALL BE PROVIDED BY THE CONTRACTOR.
13. PATCH AND SEAL ALL SLAB, ROOF AND WALL OPENINGS WITH LIKE MATERIAL WHERE MECHANICAL ONCE PENETRATED.
14. UNLESS SHOWN OTHERWISE, CONTRACTOR SHALL UTILIZE EXISTING OPENINGS IN WALLS, ROOF AND FLOOR SLABS FOR PIPING ETC. PROVIDE NEW SLEEVES FOR PIPING AND INFILL ANNULAR SPACES.
15. PROVIDE FLEXIBLE DUCTS TO ALL SUPPLY DIFFUSERS FROM DUCT TAPS.
16. CONTRACTOR TO AVOID EXISTING CABLE RUNS DURING CONSTRUCTION & COORDINATE ALL NEW PIPING & DUCTWORK WITH EXISTING FIRE SPRINKLER PIPING.

KEYED NOTES:

1. 16"x14" EXHAUST AIR DUCT UPTO EXHAUST FAN EF-Q-1-01 ON ROOF. TRANSITION TO UNIT INLET.
2. 12"x14" EXHAUST AIR DUCT UPTO EXHAUST FAN EF-Q2-01 ON ROOF. TRANSITION TO UNIT INLET.
3. 14"x14" EXHAUST AIR DUCT UPTO EXHAUST FAN EF-Q2-02 ON ROOF. TRANSITION TO UNIT INLET.
4. SUPPLY & RETURN AIR DUCTS UP TO ROOF TOP UNIT ON ROOF. TRANSITION TO UNIT INLET.
5. SUPPLY & RETURN DUCTS DOWN TO FIRST FLOOR. REFER TO M101Q FOR CONTINUATION.
6. ROUTE DUCTWORK THROUGH JOIST WEBBING.
7. REFER TO M-102P FOR CONTINUATION.
8. 10"x10" TRANSFER DUCT IN WALL ABOVE CEILING.
9. DOUBLE WALL K-27 ROUND DUCTWORK. REFER TO SECTION 2.4 OF 23 13 31 METAL DUCTS. ALL DIMENSIONS SHOWN ARE CLEAR INSIDE DIMENSIONS. COORDINATE PAINT COLOR WITH ARCHITECT.
10. ROUTE SUPPLY DUCT TAP THROUGH STRUCTURAL WEBBINGS.
11. REFRIGERANT PIPING SHALL BE THE SIZED PER MANUFACTURERS RECOMMENDATION. ROUTE THE PIPING UP TO THE CONDENSING UNIT ON ROOF. PROVIDE ALUMINUM JACKETING FOR ALL OUTDOOR REFRIGERANT PIPING.
12. ROUTE THE PIPING DOWN THROUGH WALL CAVITY TO THE INDOOR WALL MOUNTED UNIT ON FIRST FLOOR.

PBK

ARCHITECT PBK Architects, Inc.
HOUSTON PBK.com
11 Greenway Plaza, 22nd Floor
Houston, TX 77046
713-965-0608 P
713-961-4571 F
TX Firm: BR 1608
CIVIL
DGI
T.713-963-0608
PLUMBING
ACE GROUP
T.281-324-1007
STRUCTURAL
KUBALA ENGINEERS
T.832-248-3674
MEPT
LEAF ENGINEERS
T.713-943-3300
ELECTRICAL
SESAC
T.713-863-3207
AV / ACOUSTIC
JOHN HOLDEN
T.713-867-7100
THEATER
SCHULTZ BROOK
T.214-747-8300
FOOD SERVICE
FOOD DESIGN PROFESSIONAL
T.281-392-2323
LEAF ENGINEERS

FRIENDSWOOD HIGH SCHOOL ADDITIONS AND RENOVATIONS

702 Greenbriar Dr
Friendswood, TX 77546

ISSUE FOR PROPOSAL

FRIENDSWOOD INDEPENDENT SCHOOL DISTRICT

KEY PLAN
NORTH PLAN TRUE

STATE OF TEXAS
MITAL J. PATEL
111622
LICENSED PROFESSIONAL ENGINEER
02/02/2022
LEAF ENGINEERS
F-18672

CLIENT
FRIENDSWOOD ISD

DATE	PROJECT NUMBER
02/02/2022	20381

DRAWING HISTORY

No.	Description	Date
2	ADD2	02.14.2022

ISSUE FOR PROPOSAL

MECHANICAL 2ND FLOOR PLAN - AREA Q

M-102Q

File Path: C:\Users\fsanchez\Documents\MECH_R21 20381 FHS Central_fabian.sanchez8ST83.rvt
CHECKED BY:
Checker
DRAWN BY:
Author
Plot Stamp:
2/14/2022 9:32:25 AM

1ST FLOOR POWER PLAN AREA R

EP-101R

FOR BLUEBEAM LABELING/OCR:

0"

1"

POWER PLAN GENERAL NOTES:

1. DATA/COMMUNICATION OUTLETS ARE SHOWN ON THIS DRAWING FOR COORDINATION PURPOSES ONLY. PROVIDE AND INSTALL ALL CONDUITS AND BACK BOXES REQUIREDBY LOW VOLTAGE SYSTEMS. COORDINATE WITH 'TS' DRAWINGS, DETIALS, ETC. AND ARCHITECTURALDRAWINGS FOR EXACT QUANTITIES, LOCATIONS AND ADDITIONAL REQUIREMENTS PRIOR TO ROUGH-IN.
2. COORDINATE WITH MECHANICAL CONTRACTOR FOR ALL NEW AND REPLACED EQUIPMENT, PRIOR TO ROUGH-IN.
3. FOR EQUIPMENT OR DEVICES SHOWN ON ARCHITECTURAL DRAWINGS THAT REQUIRE POWER AND NOT IDENTIFIED ON ELECTRICAL PLANS, ASSUME AT A MINIMUM A DUPLEX OUTLET, A DEDICATED CIRCUIT WITH (2) 12 AWG, (1) 12 AWG G., 3/4"C. WITH HOMERUN TO NEAREST 120/208V PANEL. ITEMS SUCH AS BUT NOT LIMITED TO ROOL DOWN DOORS, COUNTER DOORS, OVERHEAD GRILLES, DISPLAY CASES, HAND DRYERS, WATER COOLERS, ICE MAKERS, GARBAGE DISPLOSALS, OSCILLATIONG FANS, LCD'S, PROJECTORS, DISHWASHERS, MOTORIZED PROJECTION SCREENS, ETC.
4. CONTRACTOR TO PROVIDE CONNECTION FROM EXHAUST FANS TO ALL MOTORIZED BACKDRAFT DAMPERS AS REQUIRED, COORDINATE WITH MECHANICAL.
5. FIELD VERIFY ALL NEMA CONNECTIONS PRIOR TO INSTALLATION. VERIFY AND CONFIRM EQUIPMENT LAYOUT DURING CONSTRUCTION, AND ENSURE POWER REQUIREMENTS ARE MET.
6. CONTRACTOR SHALL NOTE THAT ALL 15 AMP AND 20 AMP NON LOCKING-TYPE RECEPTACLES THAT ARE NOT LOCATED WITHIN DEDICATED APPLIANCE SPACE AND ARE BELOW 66" ABOVE FINISHED FLOOR SHALL BE TAMPER-RESISTANT RECEPTACLES PER NEC 406.12

POWER PLAN KEYED NOTES:

1. OUTLET DEDICATED FOR USE BY A/V EQUIPMENT. REFER TO A/V CONSULTANT DRAWINGS FOR EXACT LOCATION AND ADDITIONAL BACKBOX/CONDUIT REQUIREMENTS.
2. PROVIDE JUNCTION BOX FOR POWER TO ELECTRIC HAND DRYER. VERIFY MOUNTING HEIGHT AND LOCATION WITH ARCHITECT PRIOR TO ROUGH-IN.
3. PROVIDE CEILING MOUNTED CORD REEL BY PASS AND SEYMOUR MODEL NO. CRCD128N25R20 (20AMP, 25' CORD LENGTH WITH QUAD RECEPTACLE)
4. OUTLET DEDICATED FOR USE BY A/V EQUIPMENT. REFER TO A/V CONSULTANT DRAWINGS FOR EXACT LOCATION AND ADDITIONAL BACKBOX/CONDUIT REQUIREMENTS.
5. ONE NEMA 5-20R SWITCHED DUPLEX RECEPTACLE MOUNTED AT THE SAME HEIGHT AS THE PIPE GRID. CONTRACTOR SHALL NOTE THAT NO CONDUIT SHALL BE RAN ALONG THE PIPE GRID FOR THIS INSTALLTION. REFER TO ARCHTIECT FOR EXACT LOCATION AND ADDITIONAL INFORMATION PRIOR TO INSTALLATION.

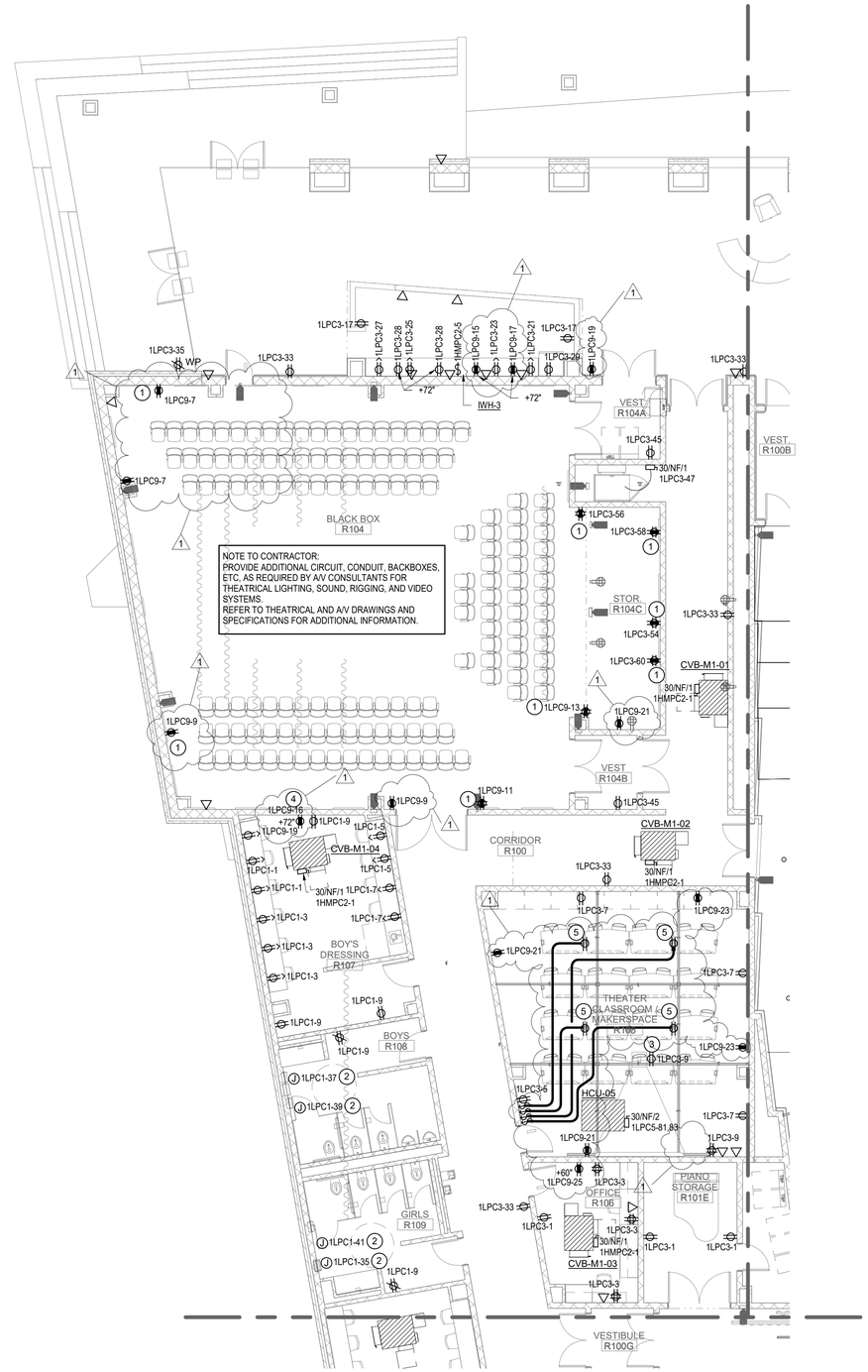

1 1ST FLOOR POWER PLAN AREA R
1/8" = 1'-0"

File Path: C:\Users\tgibbs\Documents\ELEC_R21 20381 FHS Central_tiffiny.gibbs.rvt

CHECKED BY:
Checker
DRAWN BY:
Author
Plot Stamp:
2/14/2022 11:09:16 AM

PBK

ARCHITECT PBK Architects, Inc.
HOUSTON PBK.com
11 Greenway Plaza, 22nd Floor
Houston, TX 77046
713-965-0608 P
713-961-4571 F
TX Firm: BR 1608

CIVIL
DIG
T 713-965-0608
SPORTS
PBK SPORTS
T 281-528-1697
STRUCTURAL
KUBALA ENGINEERS
T 800-246-3674
MEPT
LEAF ENGINEERS
T 713-940-3300
ENVELOPE
BEAM
T 713-940-3201
AV / ACOUSTIC
JAFFE HOLDEN
T 713-807-7100
THEATER
SCHULER SHOOK
T 214-747-8300
FOOD SERVICE
FOOD DESIGN PROFESSIONAL
T 281-350-2323

LEAF ENGINEERS

FRIENDSWOOD HIGH SCHOOL ADDITIONS AND RENOVATIONS

702 Greenbriar Dr
Friendswood, TX 77546

ISSUE FOR PROPOSAL

KEY PLAN
NORTH: PLAN TRUE

STATE OF TEXAS
MATTHEW R. SICKOREZ
107736
LICENSED PROFESSIONAL ENGINEER
02/02/2022
LEAF ENGINEERS
F-18672

CLIENT
FRIENDSWOOD ISD

DATE	PROJECT NUMBER
02/02/2022	20381

DRAWING HISTORY

No.	Description	Date
1	ADDENDUM 02	02/14/2022

ISSUE FOR PROPOSAL

1ST FLOOR POWER PLAN AREA R

EP-101R

1ST FLOOR POWER PLAN AREA S

EP-101S

FOR BLUEBEAM LABELING/OCR:

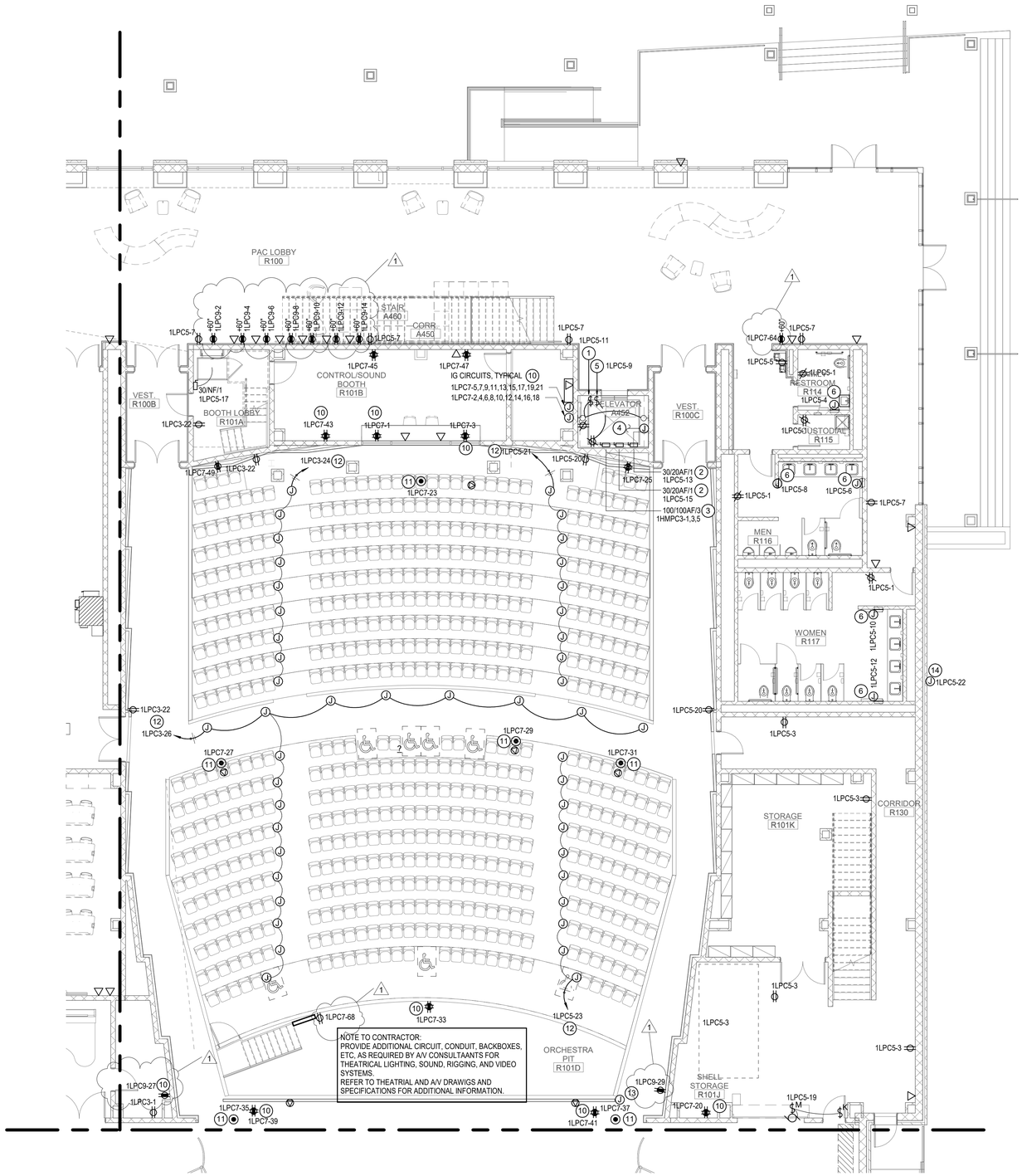

1 1ST FLOOR POWER PLAN AREA S

1/8" = 1'-0"

POWER PLAN GENERAL NOTES:

1. DATA/COMMUNICATION OUTLETS ARE SHOWN ON THIS DRAWING FOR COORDINATION PURPOSES ONLY. PROVIDE AND INSTALL ALL CONDUITS AND BACK BOXES REQUIREDBY LOW VOLTAGE SYSTEMS. COORDINATE WITH 'TS' DRAWINGS, DETIALS, ETC. AND ARCHITECTURALDRAWINGS FOR EXACT QUANTITIES, LOCATIONS AND ADDITIONAL REQUIREMENTS PRIOR TO ROUGH-IN.
2. COORDINATE WITH MECHANICAL CONTRACTOR FOR ALL NEW AND REPLACED EQUIPMENT, PRIOR TO ROUGH-IN.
3. FOR EQUIPMENT OR DEVICES SHOWN ON ARCHITECTURAL DRAWINGS THAT REQUIRE POWER AND NOT IDENTIFIED ON ELECTRICAL PLANS, ASSUME AT A MINIMUM A DUPLEX OUTLET, A DEDICATED CIRCUIT WITH (2) 12 AWG, (1) 12 AWG G., 3/4"C. WITH HOMERUN TO NEAREST 120/208V PANEL. ITEMS SUCH AS BUT NOT LIMITED TO ROOL DOWN DOORS, COUNTER DOORS, OVERHEAD GRILLES, DISPLAY CASES, HAND DRYERS, WATER COOLERS, ICE MAKERS, GARBAGE DISPLOSALS, OSCILLATIONG FANS, LCD'S, PROJECTORS, DISHWASHERS, MOTORIZED PROJECTION SCREENS, ETC.
4. CONTRACTOR TO PROVIDE CONNECTION FROM EXHAUST FANS TO ALL MOTORIZED BACKDRAFT DAMPERS AS REQUIRED, COORDINATE WITH MECHANICAL.
5. FIELD VERIFY ALL NEMA CONNECTIONS PRIOR TO INSTALLATION. VERIFY AND CONFIRM EQUIPMENT LAYOUT DURING CONSTRUCTION, AND ENSURE POWER REQUIREMENTS ARE MET.
6. CONTRACTOR SHALL NOTE THAT ALL 15 AMP AND 20 AMP NON LOCKING-TYPE RECEPTACLES THAT ARE NOT LOCATED WITHIN DEDICATED APPLIANCE SPACE AND ARE BELOW 66" ABOVE FINISHED FLOOR SHALL BE TAMPER-RESISTANT RECEPTACLES PER NEC 406.12

POWER PLAN GENERAL NOTES - MECHANICAL EQUIPMENT:

WHERE WIRE, CONDUIT, AND BREAKER SIZING IS NOT SPECIFICALLY CALLED FOR, CONTRACTOR SHALL PROVIDE ALL MECHANICAL UNITS (INCLUDING BUT NOT LIMITED TO MINI-DEHUMIDIFICATION UNIT, MAKE-UP AIR UNIT, CONDENSING UNITS, AND ROOFTOP UNITS) WITH A MINIMUM OF 30/NF/3 DISCONNECT AND SHALL BE CIRCUITED TO A DEDICATED 30A/3P BREAKER, 480V, 3-PHASE CIRCUIT. PROVIDE MINIMUM 3#10, 1#12 GROUND IN 3/4" CONDUIT.

FOR EXHAUST FANS, PROVIDE MINIMUM OF MOTOR RATED TOGGLE SWITCH AND CIRCUIT TO A DEDICATED 20A/1P BREAKER, 120V, 1-PHASE CIRCUIT. PROVIDE MINIMUM 3#12, 1#12 GROUND IN 3/4"C.

POWER PLAN KEYED NOTES:

1. PROVIDE SWITCH, LIGHT FIXTURE (EXCELINE KALEIDOSCOPE RLW-42-HF-L-G-C-8 SERIES) AND RECEPTACLE LOCATED IN ELEVATOR PIT ALL IN NEMA 4 ENCLOSURES. MOUNT (1) LIGHT FIXTURE ADJACENT TO PIT LADDER AS HIGH AS POSSIBLE AND (1) LIGHT FIXTURE ON OPPOSITE WALL AT THE SAME HEIGHT. COORDINATE EXACT LOCATIONS WITH ELEVATOR SUPPLIER PRIOR TO ROUGH-IN.
2. PROVIDE DISCONNECT SWITCHES FOR ELEVATOR CAB LIGHT(S) AND CONTROLLER. COORDINATE CLEARANCE AROUND DISCONNECT SWITCH PER NEC. 620-72 WITH ELEVATOR INSTALLER. ELECTRICAL CONNECTION FROM SWITCH TO ELEVATOR CAB BY ELEVATOR INSTALLER. INSTALL LOCAL DISCONNECT WITH PADLOCK ACCESSORY FOR HANDLE PER NEC 620-53.
3. ELEVATOR AUTOMATIC SHUTDOWN SWITCH. PROVIDE PER SPECIFICATION 26 09 14. MAKE ALL CONNECTIONS TO ELEVATOR CONTROLLER AS REQUIRED BY ELEV. MFR. VERIFY ELEV. EQUIPMENT LOCATIONS WITH ELEV. SUPPLIER BEFORE ELECT. ROUGH-IN. COORDINATE FUSE SIZE, DISCONNECT SWITCH SIZE, CIRCUIT BREAKER SIZE, CONDUCTOR SIZE AND CONDUIT SIZE FOR ELEVATOR WITH ELEVATOR SUPPLIER AND PER SUPPLIER'S RECOMMENDATION(S) PRIOR TO SUBMITTING ELECTRICAL EQUIPMENT. CONNECTION FROM DISCONNECT SWITCH TO ELEVATOR CONTROLLER BY DIVISION 26. COORDINATE LOCATION OF CONTROLLER WITH ELEVATOR INSTALLER IN FIELD.
4. PROVIDE 1" EMPTY CONDUIT WITH PULL STRING FROM PULL BOX TO TELEPHONE TERMINAL BOARD. TERMINATE CONDUIT 12" AWAY FROM TERMINAL BOARD AND CAP. COORDINATE CONDUIT ROUTING WITH OTHER DISCIPLINE(S) LOCATED ABOVE CEILING.
5. PROVIDE RECEPTACLE AND SWITCH FOR SUMP PUMP IN ELEVATOR PIT ALL IN NEMA 4 ENCLOSURES. COORDINATE LOCATION OF RECEPTACLE AND SWITCH WITH PLUMBING CONTRACTOR PRIOR TO ROUGH-IN.
6. PROVIDE JUNCTION BOX FOR POWER TO ELECTRIC HAND DRYER. VERIFY MOUNTING HEIGHT AND LOCATION WITH ARCHITECT PRIOR TO ROUGH-IN.
7. PROVIDE JUNCTION BOX FOR POWER TO SECURITY SYSTEMS PANEL. COORDINATE EXACT LOCATION WITH TECHNOLOGY PRIOR TO ROUGH-IN.
8. PROVIDE JUNCTION BOX FOR POWER TO FIRE ALARM PANEL. COORDINATE EXACT LOCATION WITH FIRE ALARM CONTRACTOR PRIOR TO ROUGH-IN.
9. CONTRACTOR SHALL PROVIDE (1) L14-30R AND (1) DEDICATED DUPLEX RECEPTACLE ABOVE EACH RACK. CONTRACTOR SHALL COORDIANTE EXACT LOCATION, MOUNTING AND ALL POWER REQUIREMENTS WITH TECHNOLOGY CONTRACTOR PRIOR TO ROUGH-IN..
10. OUTLET DEDICATED FOR USE BY A/V EQUIPMENT. REFER TO A/V CONSULTANT DRAWINGS FOR EXACT LOCATION AND ADDITIONAL BACKBOX/CONDUIT REQUIREMENTS.
11. FLOORBOX AS SPECIFIED BY A/V CONSULTANT. PROVIDE (1) 1"C FOR POWER AND (1) 1-1/4" C FOR DATA ROUTED TO NEAREST WALL CAVITY AND UP TO PLENUM ABOVE. REFER TO A/V DRAWINGS FOR ADDITIONAL REQUIREMENTS.
12. PROVIDE POWER FOR SEAT/AISLE LIGHTING. CONTRACTOR TO INCLUDE IN PRICING ALL REQUIRED TRANSFORMERS, CONDUITS, AND CONNECTION TO THEATRICAL CONTROLS AS REQUIRED. PROVIDE FLUSHED CAST IRON FLOOR BOX WITH COVER PLATE AT EACH SEAT LIGHT LOCATION. WIRE AND CONNECT TO SEAT LIGHTS PER MANUFACTURER'S REQUIREMENTS. CONNECT TO AND PROVIDE 120/12V POWER TRANSFORMERS REQUIRED TO POWER ALL LED LIGHTS. FIELD VERIFY LOCATIONS OF POWER TRANSFORMERS.
13. PROVIDE POWER FOR STAGE SAFETY LIGHTS. COORDINATE ALL REQUIREMENTS WITH THEATRICAL CONSULTANT AND CONTRACTOR.
14. PROVIDE POWER TO ILLUMINATED SIGNAGE. VERIFY EXACT POWER ROUGH-IN LOCATION WITH ARCHITECT PRIOR TO INSTALLATION. REFER TO SIGN MANUFACTURER'S SHOP DRAWINGS FOR CONNECTION REQUIREMENTS. PROVIDE 120V COIL VOLTAGE LIGHTING CONTACTOR AND WIRE TO BAS FOR CONTROLS.

PBK

ARCHITECT PBK Architects, Inc.
HOUSTON PBK.com
11 Greenway Plaza, 22nd Floor
Houston, TX 77046
713-965-0608 P
713-961-4571 F
TX Firm: BR 1608

CIVIL
DIG
T 713-965-0608
SPORTS
PBK SPORTS
T 281-528-1697
STRUCTURAL
KUBALA ENGINEERS
T 800-246-3674
MEP/T
LEAF ENGINEERS
T 713-940-3300
ENVELOPE
SEAM
T 713-940-3201
AV / ACOUSTIC
JAFFE HOLDEN
T 713-807-7100
THEATER
SCHULER SHOOK
T 214-147-8300
FOOD SERVICE
FOOD DESIGN PROFESSIONAL
T 281-350-2323

LEAF ENGINEERS

FRIENDSWOOD HIGH SCHOOL ADDITIONS AND RENOVATIONS

702 Greenbriar Dr
Friendswood, TX 77546

ISSUE FOR PROPOSAL

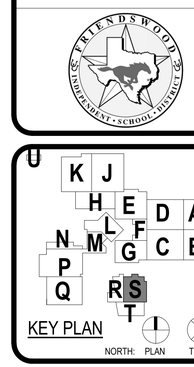

STATE OF TEXAS
MATTHEW R. SICKORE
107736
LICENSED
PROFESSIONAL ENGINEER

02/02/2022
LEAF ENGINEERS
F-18672

CLIENT
FRIENDSWOOD ISD

DATE	PROJECT NUMBER
02/02/2022	20381

DRAWING HISTORY

No.	Description	Date
1	ADDENDUM 02	02/14/2022

ISSUE FOR PROPOSAL

1ST FLOOR POWER PLAN AREA S

EP-101S

File Path: C:\Users\tgibbs\Documents\ELEC_R21 20381 FHS Central_tiffiny.gibbs.rvt

CHECKED BY:
Checker
DRAWN BY:
Author
Plot Stamp:
2/14/2022 11:09:20 AM

1ST FLOOR POWER PLAN AREA T

EP-101T

FOR BLUEBEAM LABELING/OCR:

POWER PLAN GENERAL NOTES:

1. DATA/COMMUNICATION OUTLETS ARE SHOWN ON THIS DRAWING FOR COORDINATION PURPOSES ONLY. PROVIDE AND INSTALL ALL CONDUITS AND BACK BOXES REQUIREDBY LOW VOLTAGE SYSTEMS. COORDINATE WITH 'TS' DRAWINGS, DETIALS, ETC. AND ARCHITECTURALDRAWINGS FOR EXACT QUANTITIES, LOCATIONS AND ADDITIONAL REQUIREMENTS PRIOR TO ROUGH-IN.
2. COORDINATE WITH MECHANICAL CONTRACTOR FOR ALL NEW AND REPLACED EQUIPMENT, PRIOR TO ROUGH-IN.
3. FOR EQUIPMENT OR DEVICES SHOWN ON ARCHITECTURAL DRAWINGS THAT REQUIRE POWER AND NOT IDENTIFIED ON ELECTRICAL PLANS, ASSUME AT A MINIMUM A DUPLEX OUTLET, A DEDICATED CIRCUIT WITH (2) 12 AWG, (1) 12 AWG G., 3/4"C. WITH HOMERUN TO NEAREST 120/208V PANEL. ITEMS SUCH AS BUT NOT LIMITED TO ROOL DOWN DOORS, COUNTER DOORS, OVERHEAD GRILLES, DISPLAY CASES, HAND DRYERS, WATER COOLERS, ICE MAKERS, GARBAGE DISPLOSALS, OSCILLATIONG FANS, LCD'S, PROJECTORS, DISHWASHERS, MOTORIZED PROJECTION SCREENS, ETC.
4. CONTRACTOR TO PROVIDE CONNECTION FROM EXHAUST FANS TO ALL MOTORIZED BACKDRAFT DAMPERS AS REQUIRED, COORDINATE WITH MECHANICAL.
5. FIELD VERIFY ALL NEMA CONNECTIONS PRIOR TO INSTALLATION. VERIFY AND CONFIRM EQUIPMENT LAYOUT DURING CONSTRUCTION, AND ENSURE POWER REQUIREMENTS ARE MET.
6. CONTRACTOR SHALL NOTE THAT ALL 15 AMP AND 20 AMP NON LOCKING-TYPE RECEPTACLES THAT ARE NOT LOCATED WITHIN DEDICATED APPLIANCE SPACE AND ARE BELOW 66" ABOVE FINISHED FLOOR SHALL BE TAMPER-RESISTANT RECEPTACLES PER NEC 406.12

POWER PLAN GENERAL NOTES - MECHANICAL EQUIPMENT:

WHERE WIRE, CONDUIT, AND BREAKER SIZING IS NOT SPECIFICALLY CALLED FOR, CONTRACTOR SHALL PROVIDE ALL MECHANICAL UNITS (INCLUDING BUT NOT LIMITED TO MINI-DEHUMIDIFICATION UNIT, MAKE-UP AIR UNIT, CONDENSING UNITS, AND ROOFTOP UNITS) WITH A MINIMUM OF 30/NF/3 DISCONNECT AND SHALL BE CIRCUITED TO A DEDICATED 30A/3P BREAKER, 480V, 3-PHASE CIRCUIT. PROVIDE MINIMUM 3#10, 1#12 GROUND IN 3/4" CONDUIT.

FOR EXHAUST FANS, PROVIDE MINIMUM OF MOTOR RATED TOGGLE SWITCH AND CIRCUIT TO A DEDICATED 20A/1P BREAKER, 120V, 1-PHASE CIRCUIT. PROVIDE MINIMUM 3#12, 1#12 GROUND IN 3/4"C.

POWER PLAN KEYED NOTES:

1. PROVIDE POWER FOR MOTORIZED OVERHEAD DOOR. WIRE THROUGH LOCAL UP/DOWN CONTROL SWITCH. VERIFY EXACT SWITCH LOCATION WITH ARCHITECT PRIOR TO INSTALLATION.
2. FIRE RATED ENCLOSUR FOR FIRE PUMP FEEDER. REFER TO ARCHITECT FOR ADDIOTNAL INFORMATION.
3. PROVIDE (2) 120V DEDICATED CIRCUITS FOR POWER TO WON FIRE DOORS IN THIS CORRIDOR. WIRE EACH DEDICATED CIRCUIT TO 20A/1P BREAKER IN NEW 208/120V PANELBOARD SERVING THIS AREA VIA 2#12, 1#12G, 3/4"C. PROVIDE CONDUIT FOR CONTROL WIRING AS REQUIRED. REFER TO ARCHITECTURAL DRAWINGS FOR EXACT DOOR LOCATIONS.
4. PROVIDE POWER TO MOTORIZED CONTROL VALVE. REFER TO MECHANICAL DRAWINGS FOR ADDITIONAL INFORMATION.
5. PROVIDE JUNCTION BOX FOR POWER TO BUILDING AUTOMATION SYSTEMS PANEL. COORDINATE EXACT MOUNTING LOCATION WITH MECHANICAL CONTROLS CONTRACTOR PRIOR TO ROUGH-IN.
6. PROVIDE CEILING MOUNTED CORD REEL BY PASS AND SEYMOUR MODEL NO. CRCD123N25R20 (20 AMP, 25' CORD LENGTH WITH QUAD RECEPTACLE)
7. OUTLET DEDICATED FOR USE BY A/V EQUIPMENT. REFER TO A/V CONSULTANT DRAWINGS FOR EXACT LOCATION AND ADDITIONAL BACKBOX/CONDUIT REQUIREMENTS.
8. PROVIDE POWER TO GAS WATER HEATER CONTROL PANEL. COORDINATE CONNECTION WITH PLUMBING DRAWINGS AND WATER HEATER SHOP DRAWINGS PRIOR TO ROUGH-IN.
9. RECEPTACLE FOR TROLLEY. REFER TO ARCHITECT FOR EXACT LOCATION AND ADDITIONAL INFORMATION PRIOR TO INSTALLATION.

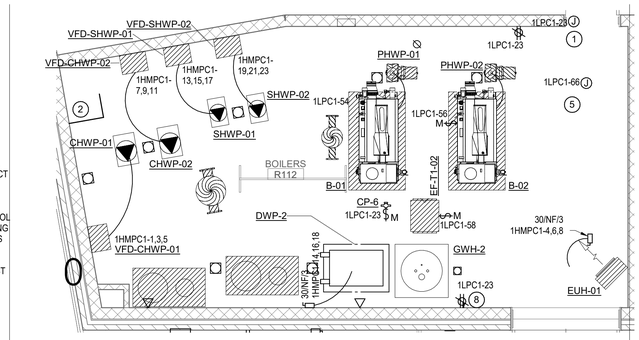

2 1ST FLOOR POWER PLAN AREA T - ENLARGED BOILERS #M112

1/4" = 1'-0"

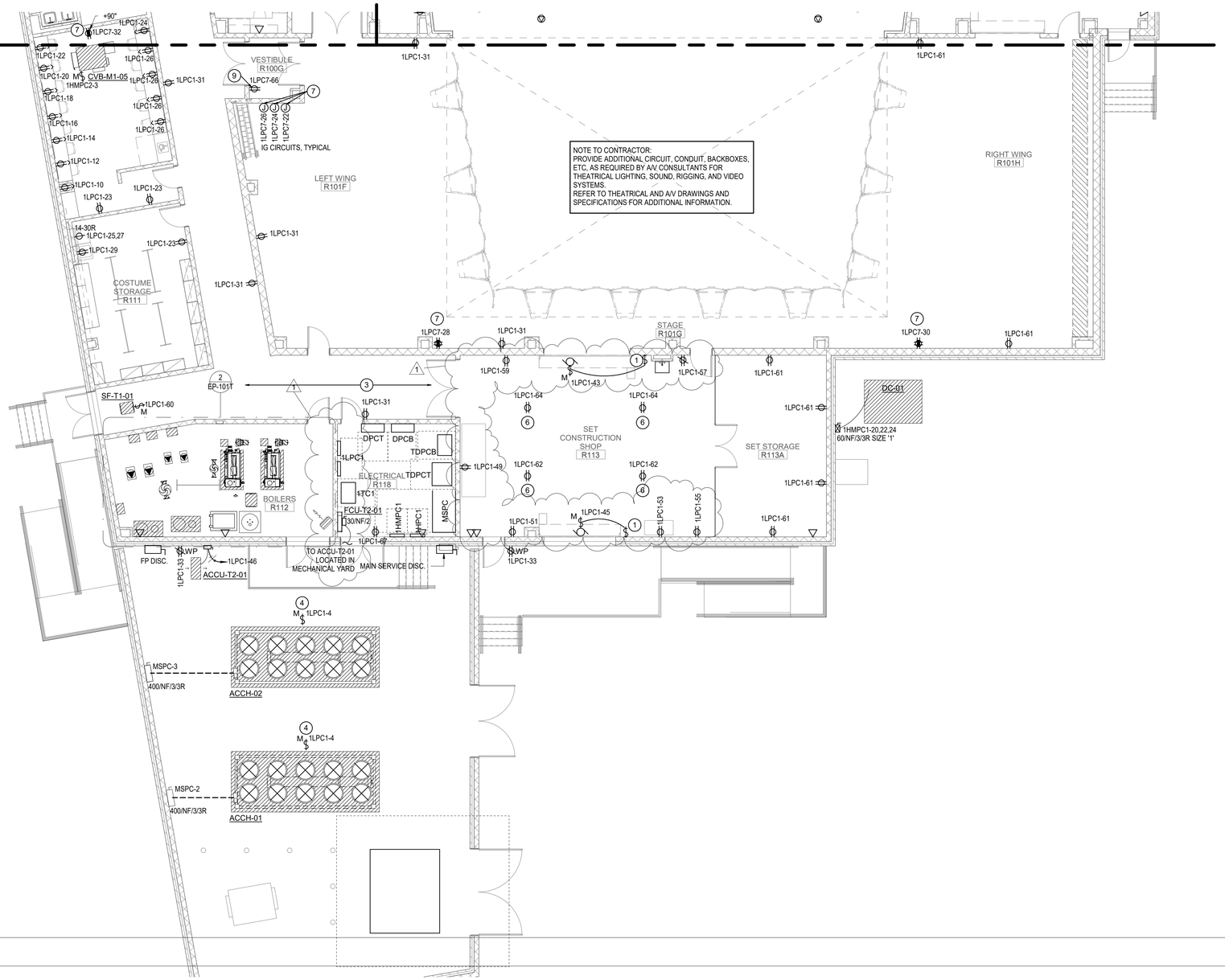

1 1ST FLOOR POWER PLAN AREA T

1/8" = 1'-0"

PBK

ARCHITECT PBK Architects, Inc.
HOUSTON PBK.com
11 Greenway Plaza, 22nd Floor
Houston, TX 77046
713-965-0608 P
713-961-4571 F
TX Firm: BR 1608

CIVIL DIG T 713-965-0608
SPORTS PBK SPORTS T 281-528-1697
STRUCTURAL KUBALA ENGINEERS T 800-246-3674
MEP/T LEAF ENGINEERS T 713-940-3300
ENVELOPE SEAM T 713-940-3201
AV / ACOUSTIC JAFFE HOLDEN T 713-807-7100
THEATER SCHULER SHOOK T 214-747-8300
FOOD SERVICE FOOD DESIGN PROFESSIONAL T 281-350-2323

LEAF ENGINEERS

FRIENDSWOOD HIGH SCHOOL ADDITIONS AND RENOVATIONS

702 Greenbriar Dr
Friendswood, TX 77546

ISSUE FOR PROPOSAL

FRIENDSWOOD INDEPENDENT SCHOOL DISTRICT

KEY PLAN

K J H E D A L F N M G C B P Q R S T

NORTH: PLAN TRUE

STATE OF TEXAS
MATTHEW R. SICKOREZ
107736
LICENSED
PROFESSIONAL ENGINEER

02/02/2022
LEAF ENGINEERS
F-18672

CLIENT
FRIENDSWOOD ISD

DATE	PROJECT NUMBER
02/02/2022	20381

DRAWING HISTORY

No.	Description	Date
1	ADDENDUM 02	02/14/2022

ISSUE FOR PROPOSAL

1ST FLOOR POWER PLAN AREA T

EP-101T

File Path: C:\Users\tgibs\Documents\ELEC_R21 20381 FHS Central_tiffiny.gibbs.rvt

CHECKED BY:
Checker
DRAWN BY:
Author
Plot Stamp:
2/14/2022 11:09:26 AM

2ND FLOOR POWER PLAN - AREA S

EP-102S

FOR BLUEBEAM LABELING/OCR:

0"

1"

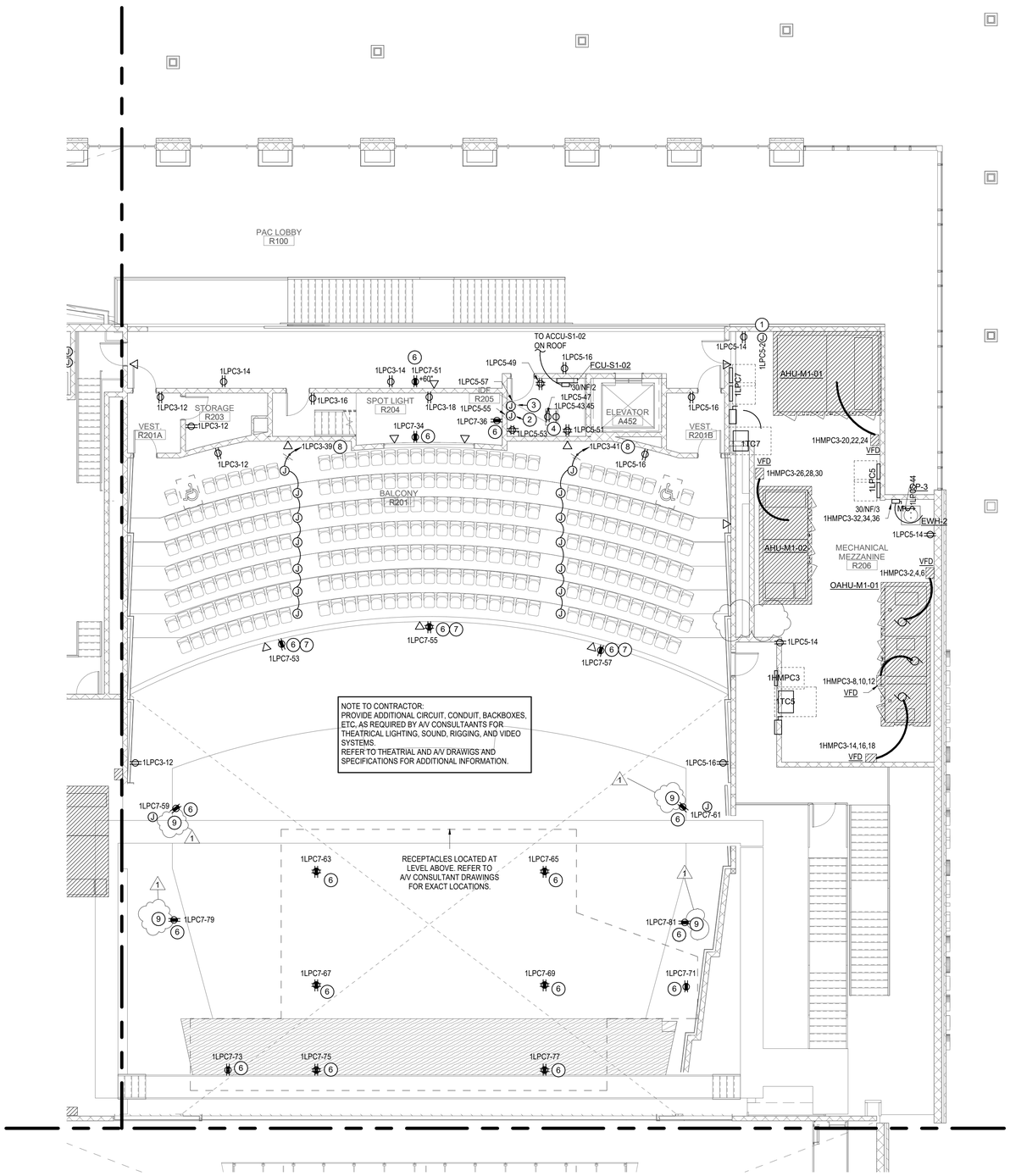

POWER PLAN GENERAL NOTES:

1. DATA/COMMUNICATION OUTLETS ARE SHOWN ON THIS DRAWING FOR COORDINATION PURPOSES ONLY. PROVIDE AND INSTALL ALL CONDUITS AND BACK BOXES REQUIREDBY LOW VOLTAGE SYSTEMS. COORDINATE WITH 'TS' DRAWINGS, DETIALS, ETC. AND ARCHITECTURALDRAWINGS FOR EXACT QUANTITIES, LOCATIONS AND ADDITIONAL REQUIREMENTS PRIOR TO ROUGH-IN.
2. COORDINATE WITH MECHANICAL CONTRACTOR FOR ALL NEW AND REPLACED EQUIPMENT, PRIOR TO ROUGH-IN.
3. FOR EQUIPMENT OR DEVICES SHOWN ON ARCHITECTURAL DRAWINGS THAT REQUIRE POWER AND NOT IDENTIFIED ON ELECTRICAL PLANS, ASSUME AT A MINIMUM A DUPLEX OUTLET, A DEDICATED CIRCUIT WITH (2) 12 AWG, (1) 12 AWG G., 3/4"C. WITH HOMERUN TO NEAREST 120/208V PANEL. ITEMS SUCH AS BUT NOT LIMITED TO ROOL DOWN DOORS, COUNTER DOORS, OVERHEAD GRILLES, DISPLAY CASES, HAND DRYERS, WATER COOLERS, ICE MAKERS, GARBAGE DISPLOSALS, OSCILLATIONG FANS, LCD'S, PROJECTORS, DISHWASHERS, MOTORIZED PROJECTION SCREENS, ETC.
4. CONTRACTOR TO PROVIDE CONNECTION FROM EXHAUST FANS TO ALL MOTORIZED BACKDRAFT DAMPERS AS REQUIRED, COORDINATE WITH MECHANICAL.
5. FIELD VERIFY ALL NEMA CONNECTIONS PRIOR TO INSTALLATION. VERIFY AND CONFIRM EQUIPMENT LAYOUT DURING CONSTRUCTION, AND ENSURE POWER REQUIREMENTS ARE MET.
6. CONTRACTOR SHALL NOTE THAT ALL 15 AMP AND 20 AMP NON LOCKING-TYPE RECEPTACLES THAT ARE NOT LOCATED WITHIN DEDICATED APPLIANCE SPACE AND ARE BELOW 66" ABOVE FINISHED FLOOR SHALL BE TAMPER-RESISTANT RECEPTACLES PER NEC 406.12

POWER PLAN GENERAL NOTES - MECHANICAL EQUIPMENT:

WHERE WIRE, CONDUIT, AND BREAKER SIZING IS NOT SPECIFICALLY CALLED FOR, CONTRACTOR SHALL PROVIDE ALL MECHANICAL UNITS (INCLUDING BUT NOT LIMITED TO MINI-DEHUMIDIFICATION UNIT, MAKE-UP AIR UNIT, CONDENSING UNITS, AND ROOFTOP UNITS) WITH A MINIMUM OF 30/NF/3 DISCONNECT AND SHALL BE CIRCUITED TO A DEDICATED 30A/3P BREAKER, 480V, 3-PHASE CIRCUIT. PROVIDE MINIMUM 3#10, 1#12 GROUND IN 3/4" CONDUIT.

FOR EXHAUST FANS, PROVIDE MINIMUM OF MOTOR RATED TOGGLE SWITCH AND CIRCUIT TO A DEDICATED 20A/1P BREAKER, 120V, 1-PHASE CIRCUIT. PROVIDE MINIMUM 3#12, 1#12 GROUND IN 3/4"C.

POWER PLAN KEYED NOTES:

1. PROVIDE JUNCTION BOX FOR POWER TO BUILDING AUTOMATION SYSTEMS PANEL. COORDINATE EXACT MOUNTING LOCATION WITH MECHANICAL CONTROLS CONTRACTOR PRIOR TO ROUGH-IN.
2. PROVIDE JUNCTION BOX FOR POWER TO SECURITY SYSTEMS PANEL. COORDINATE EXACT LOCATION WITH TECHNOLOGY PRIOR TO ROUGH-IN.
3. PROVIDE JUNCTION BOX FOR POWER TO FIRE ALARM PANEL. COORDINATE EXACT LOCATION WITH FIRE ALARM CONTRACTOR PRIOR TO ROUGH-IN.
4. CONTRACTOR SHALL PROVIDE (1) L14-30R AND (1) DEDICATED DUPLEX RECEPTACLE ABOVE EACH RACK. CONTRACTOR SHALL COORDIANTE EXACT LOCATION, MOUNTING AND ALL POWER REQUIREMENTS WITH TECHNOLOGY CONTRACTOR PRIOR TO ROUGH-IN.
5. (NOT USED)
6. OUTLET DEDICATED FOR USE BY A/V EQUIPMENT. REFER TO A/V CONSULTANT DRAWINGS FOR EXACT LOCATION AND ADDITIONAL BACKBOX/CONDUIT REQUIREMENTS.
7. MOUNT RECEPTACLE AT PROJECTOR.
8. PROVIDE POWER FOR SEAT/AISLE LIGHTING. CONTRACTOR TO INCLUDE IN PRICING ALL REQUIRED TRANSFORMERS, CONDUITS, AND CONNECTION TO THEATRICAL CONTROLS AS REQUIRED. PROVIDE FLUSHED CAST IRON FLOOR BOX WITH COVER PLATE AT EACH SEAT LIGHT LOCATION. WIRE AND CONNECT TO SEAT LIGHTS PER MANUFACTURER'S REQUIREMENTS. CONNECT TO AND PROVIDE 120/12V POWER TRANSFORMERS REQUIRED TO POWER ALL LED LIGHTS. FIELD VERIFY LOCATIONS OF POWER TRANSFORMERS.
9. PROVIDE AS PART OF ALTERNATE 12.

1 2ND FLOOR POWER PLAN AREA S

1/8" = 1'-0"

PBK

ARCHITECT PBK Architects, Inc.
HOUSTON PBK.com
11 Greenway Plaza, 22nd Floor
Houston, TX 77046
713-965-0608 P
713-961-4571 F
TX Firm: BR 1608

CIVIL
DIG
T 713-965-0608
SPORTS
PBK SPORTS
T 281-528-1697
STRUCTURAL
KUBALA ENGINEERS
T 800-246-3674
MEPT
LEAF ENGINEERS
T 713-940-3300
ENVELOPE
BEAM
T 713-940-3201
AV / ACOUSTIC
JAFFE HOLDEN
T 713-807-7100
THEATER
SCHULER SHOOK
T 214-147-8300
FOOD SERVICE
FOOD DESIGN PROFESSIONAL
T 281-350-2323

LEAF ENGINEERS

FRIENDSWOOD HIGH SCHOOL ADDITIONS AND RENOVATIONS

702 Greenbriar Dr
Friendswood, TX 77546

ISSUE FOR PROPOSAL

FRIENDSWOOD INDEPENDENT SCHOOL DISTRICT

U

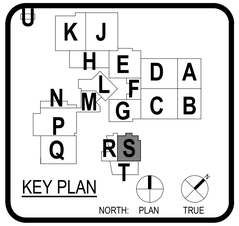

STATE OF TEXAS
MATTHEW R. SICKORE
107736
LICENSED
PROFESSIONAL ENGINEER

02/02/2022
LEAF ENGINEERS
F-18672

CLIENT
FRIENDSWOOD ISD

DATE	PROJECT NUMBER
02/02/2022	20381

DRAWING HISTORY

No.	Description	Date
1	ADDENDUM 02	02/14/2022

ISSUE FOR PROPOSAL

2ND FLOOR POWER PLAN - AREA S

EP-102S

File Path: C:\Users\tgibbs\Documents\ELEC_R21 20381 FHS Central_tiffiny.gibbs.rvt

CHECKED BY:
Checker
DRAWN BY:
Author
Plot Stamp:
2/14/2022 11:09:30 AM

2ND FLOOR POWER PLAN - AREA T

EP-102T

FOR BLUEBEAM LABELING/OCR:

0"

1"

POWER PLAN GENERAL NOTES:

1. DATA/COMMUNICATION OUTLETS ARE SHOWN ON THIS DRAWING FOR COORDINATION PURPOSES ONLY. PROVIDE AND INSTALL ALL CONDUITS AND BACK BOXES REQUIREDBY LOW VOLTAGE SYSTEMS. COORDINATE WITH 'TS' DRAWINGS, DETIALS, ETC. AND ARCHITECTURALDRAWINGS FOR EXACT QUANTITIES, LOCATIONS AND ADDITIONAL REQUIREMENTS PRIOR TO ROUGH-IN.
2. COORDINATE WITH MECHANICAL CONTRACTOR FOR ALL NEW AND REPLACED EQUIPMENT, PRIOR TO ROUGH-IN.
3. FOR EQUIPMENT OR DEVICES SHOWN ON ARCHITECTURAL DRAWINGS THAT REQUIRE POWER AND NOT IDENTIFIED ON ELECTRICAL PLANS, ASSUME AT A MINIMUM A DUPLEX OUTLET, A DEDICATED CIRCUIT WITH (2) 12 AWG, (1) 12 AWG G., 3/4"C. WITH HOMERUN TO NEAREST 120/208V PANEL. ITEMS SUCH AS BUT NOT LIMITED TO ROOL DOWN DOORS, COUNTER DOORS, OVERHEAD GRILLES, DISPLAY CASES, HAND DRYERS, WATER COOLERS, ICE MAKERS, GARBAGE DISPLOSALS, OSCILLATIONG FANS, LCD'S, PROJECTORS, DISHWASHERS, MOTORIZED PROJECTION SCREENS, ETC.
4. CONTRACTOR TO PROVIDE CONNECTION FROM EXHAUST FANS TO ALL MOTORIZED BACKDRAFT DAMPERS AS REQUIRED, COORDINATE WITH MECHANICAL.
5. FIELD VERIFY ALL NEMA CONNECTIONS PRIOR TO INSTALLATION. VERIFY AND CONFIRM EQUIPMENT LAYOUT DURING CONSTRUCTION, AND ENSURE POWER REQUIREMENTS ARE MET.
6. CONTRACTOR SHALL NOTE THAT ALL 15 AMP AND 20 AMP NON LOCKING-TYPE RECEPTACLES THAT ARE NOT LOCATED WITHIN DEDICATED APPLIANCE SPACE AND ARE BELOW 66" ABOVE FINISHED FLOOR SHALL BE TAMPER-RESISTANT RECEPTACLES PER NEC 406.12

POWER PLAN GENERAL NOTES - MECHANICAL EQUIPMENT:

WHERE WIRE, CONDUIT, AND BREAKER SIZING IS NOT SPECIFICALLY CALLED FOR, CONTRACTOR SHALL PROVIDE ALL MECHANICAL UNITS (INCLUDING BUT NOT LIMITED TO MINI-DEHUMIDIFICATION UNIT, MAKE-UP AIR UNIT, CONDENSING UNITS, AND ROOFTOP UNITS) WITH A MINIMUM OF 30/NF/3 DISCONNECT AND SHALL BE CIRCUITED TO A DEDICATED 30A/3P BREAKER, 480V, 3-PHASE CIRCUIT. PROVIDE MINIMUM 3#10, 1#12 GROUND IN 3/4" CONDUIT.

FOR EXHAUST FANS, PROVIDE MINIMUM OF MOTOR RATED TOGGLE SWITCH AND CIRCUIT TO A DEDICATED 20A/1P BREAKER, 120V, 1-PHASE CIRCUIT. PROVIDE MINIMUM 3#12, 1#12 GROUND IN 3/4"C.

POWER PLAN KEYED NOTES:

1. (NOT USED)
2. OUTLET DEDICATED FOR USE BY A/V EQUIPMENT. REFER TO A/V CONSULTANT DRAWINGS FOR EXACT LOCATION AND ADDITIONAL BACKBOX/CONDUIT REQUIREMENTS.

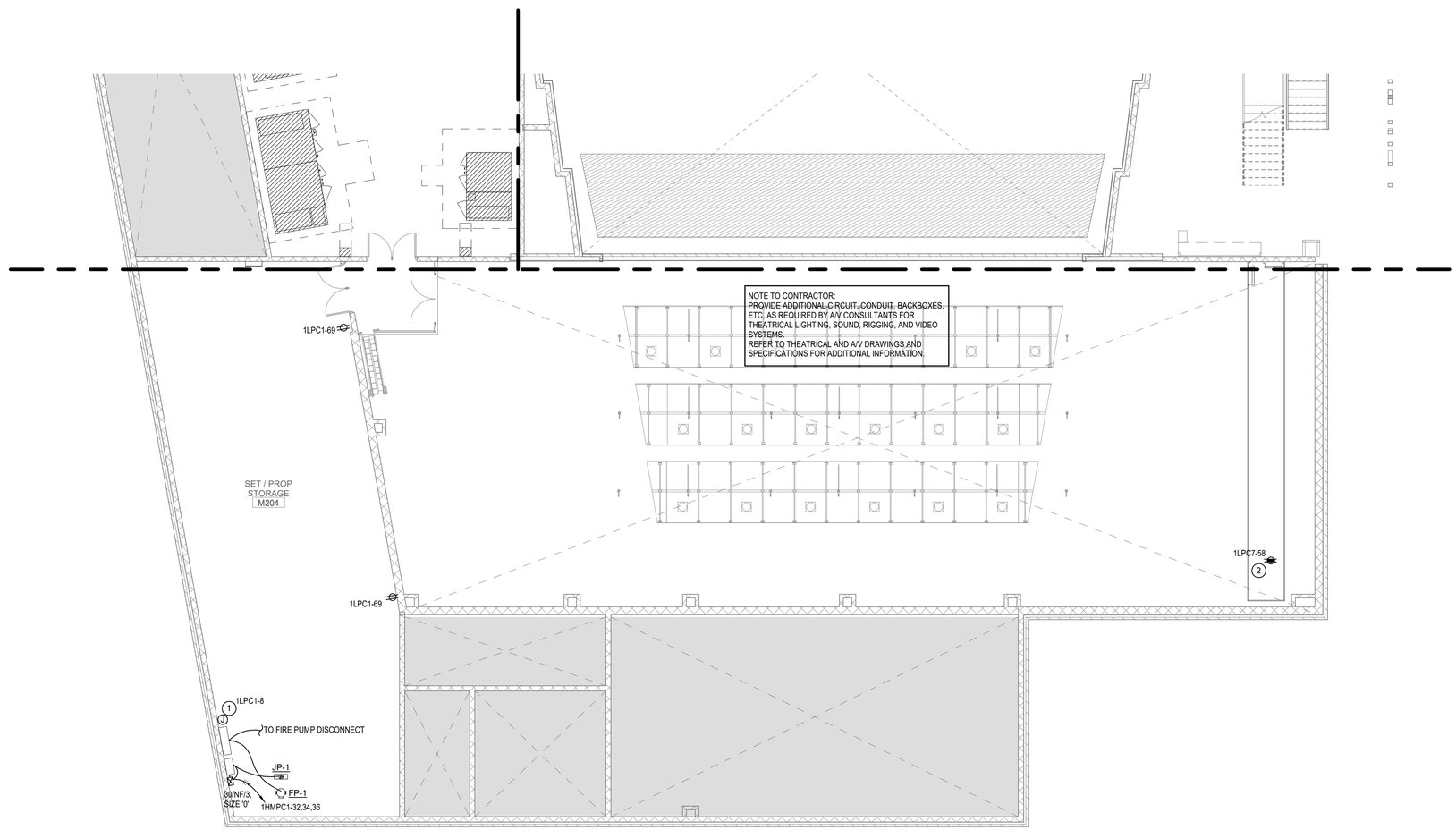

1 2ND FLOOR POWER PLAN AREA T

1/8" = 1'-0"

File Path: C:\Users\gibbs\Documents\ELEC_R21 20381 FHS Central_tiffiny.gibbs.rvt

CHECKED BY:
Checker
DRAWN BY:
Author
Plot Stamp:
2/14/2022 11:09:32 AM

PBK

ARCHITECT PBK Architects, Inc.
HOUSTON PBK.com
11 Greenway Plaza, 22nd Floor
Houston, TX 77046
713-965-0608 P
713-961-4571 F
TX Firm: BR 1608

CIVIL
DIG
T 713-965-0608
SPORTS
PBK SPORTS
T 281-528-1697
STRUCTURAL
KUBALA ENGINEERS
T 800-246-3674
MEPT
LEAF ENGINEERS
T 713-940-3300
ENVELOPE
BEAM
T 713-940-3201
AV / ACOUSTIC
JAFFE HOLDEN
T 713-807-7100
THEATER
SCHULER SHOOK
T 214-747-8300
FOOD SERVICE
FOOD DESIGN PROFESSIONAL
T 281-350-2323

LEAF ENGINEERS

FRIENDSWOOD HIGH SCHOOL ADDITIONS AND RENOVATIONS

702 Greenbriar Dr
Friendswood, TX 77546

ISSUE FOR PROPOSAL

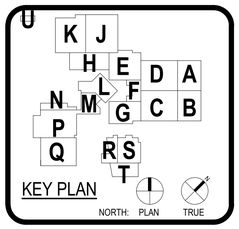

CLIENT
FRIENDSWOOD ISD

DATE	PROJECT NUMBER
02/02/2022	20381

DRAWING HISTORY

No.	Description	Date
1	ADDENDUM 02	02/14/2022

ISSUE FOR PROPOSAL

2ND FLOOR POWER PLAN - AREA T

EP-102T

PLUMBING RISER DIAGRAM

P-701

FOR BLUEBEAM LABELING/OCR:

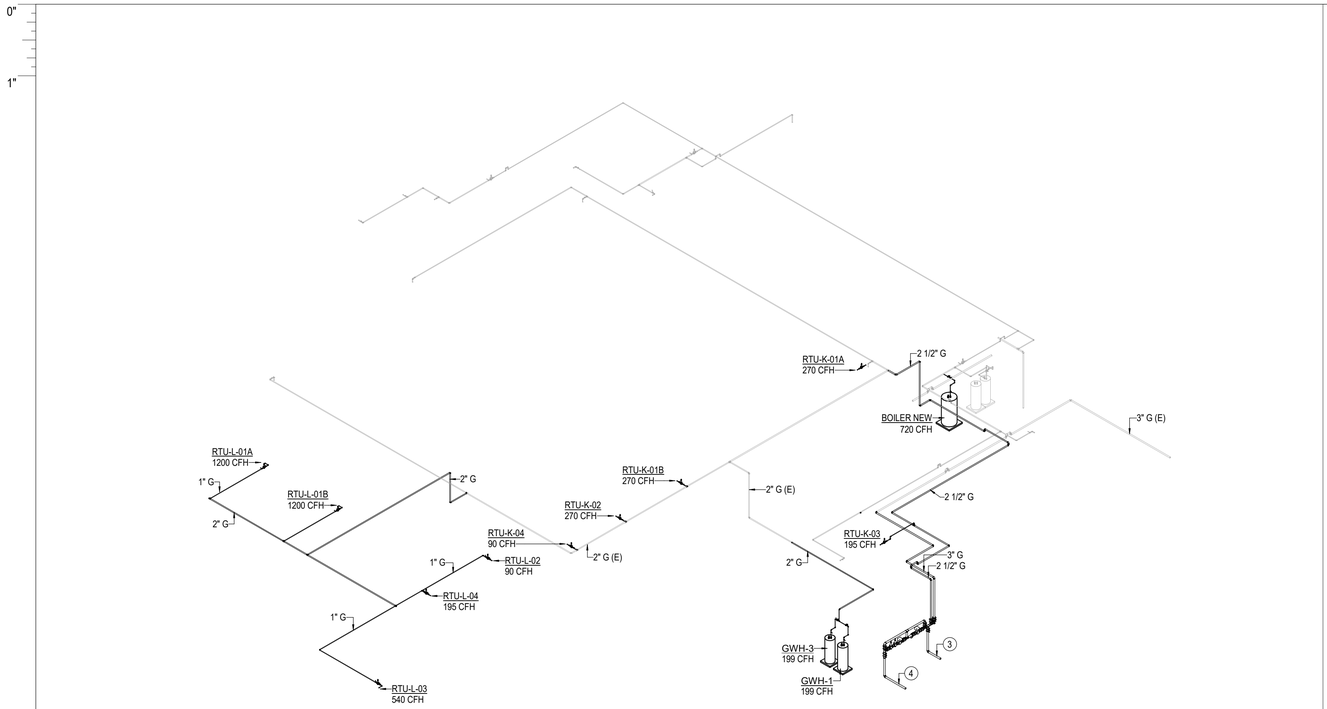

3 GAS RISER DIAGRAM - GYMS

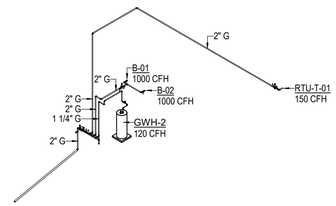

2 GAS RISER DIAGRAM - AUDITORIUM

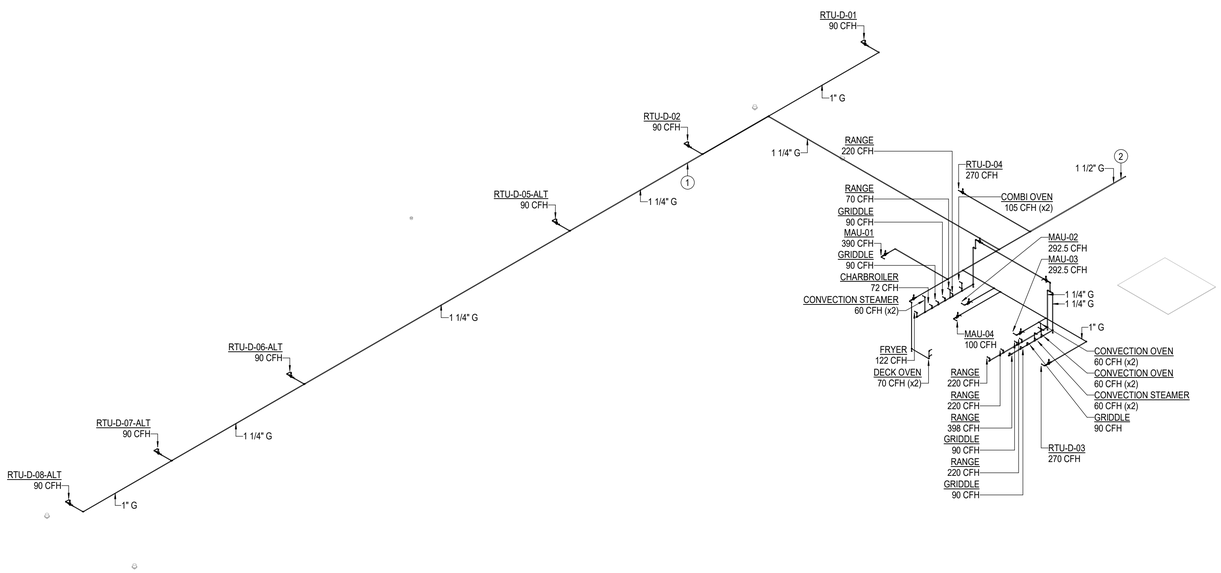

1 GAS RISER DIAGRAM - KITCHEN

GENERAL NOTES - PLUMBING PLAN

A. THE CONTRACTOR SHALL COMPLY WITH ALL AUTHORITIES HAVING JURISDICTION.

B. ALL FINAL CONNECTIONS TO FIXTURES AND EQUIPMENT SHALL BE MADE BY THE PLUMBING CONTRACTOR.

C. ALL PLUMBING PIPING SHALL BE COORDINATED WITH ALL OTHER TRADES PRIOR TO ANY INSTALLATION OF ALL PLUMBING FIXTURES AND EQUIPMENT BY THE PLUMBING CONTRACTOR.

D. ALL FLOOR DRAINS AND FLOOR SINKS SHOWN ON THIS DRAWING SHALL BE COORDINATED WITH ALL OTHER TRADES PRIOR TO INSTALLATION.

E. REFER TO ARCHITECTURAL DRAWING FOR EXACT LOCATIONS OF FIXTURES, EQUIPMENT, ETC. DO NOT SCALE FROM PLUMBING DRAWINGS.

F. ALL WALL CLEAN-OUTS SHALL BE ACCESSIBLE BY AN ACCESS PANEL.

G. PROVIDE AND INSTALL A DOUBLE EXTERIOR CLEAN-OUT (DFCO) ON ALL SANITARY LINES EXITING THE BUILDING.

H. ALL FLOOR DRAINS AND FLOOR SINKS SHALL BE PROVIDED WITH A TRAP PRIMER AND INSTALLED BY THE PLUMBING CONTRACTOR.

I. FIXTURES DESIGNATED AS ADA ACCESSIBLE BY ARCHITECT SHALL BE INSTALLED AT ADA ACCESSIBLE HEIGHT PER ARCHITECTURAL DETAILS.

J. ALL DOMESTIC COLD AND HOT WATER TAKE-OFFS SHALL HAVE AN ISOLATION SHUT-OFF VALVE.

K. FLOOR DRAINS AND FLOOR SINKS IN MECHANICAL ROOMS SHALL BE SET NOT LESS THAN 6" FROM HOUSEKEEPING PADS. RE: MECHANICAL DRAWINGS. DO NOT PLACE ON, OR IN, HOUSEKEEPING PAD, OR UNDERNEATH EQUIPMENT.

L. CONTRACTOR SHALL DEWATER ANY AREA AT OR BELOW GRADE PRIOR TO SETTING EQUIPMENT.

M. CONTRACTOR SHALL PROVIDE AND INSTALL A TRAP PRIMER, TP-1, AND A HOSE BIBB, HB-3, IN ALL MECHANICAL ROOMS.

N. CONTRACTOR SHALL PROVIDE AND INSTALL A HOSE BIBB WITH WHEEL HANDLE IN ALL MECHANICAL ROOMS, HB-3.

O. ANY AND ALL WATER PIPING EXPOSED TO OUTSIDE ELEMENTS SHALL BE INSULATED AND HEAT TRACED TO PREVENT FREEZING.

P. ALL SANITARY 3" OR ABOVE SHALL BE INSPECTED BY A CAMERA PRIOR TO SUBSTANTIAL COMPLETION.

KEYNOTES - PLUMBING PLAN

1 ALTERNATE (4) SCOPE: IF ALTERNATE ACCEPTED, EXTEND 1-1/4" GAS PIPING TO SERVE MECHANICAL UNITS.

2 CONNECT NEW 1-1/2"G TO EXISTING GAS METER. TEE FROM EXISTING GAS METER, ROUTE TO ROOF, AND ROUTE AS INDICATED TO SERVE NEW MECHANICAL EQUIPMENT AND NEW CULINARY KITCHEN.

3 RELOCATED EXISTING GAS DOWN BELOW GRADE. RE-CONNECT TO EXISTING GAS SERVICE BELOW GRADE. CONTRACTOR SHALL FIELD VERIFY EXISTING CONDITIONS PRIOR TO COMMENCING ANY WORK.

4 INCOMING GAS SERVICE FROM PROVIDER.

PBK

ARCHITECT PBK Architects, Inc.
HOUSTON PBK.com
11 Greenway Plaza, 22nd Floor
Houston, TX 77046
713-965-0608 P
713-961-4571 F
TX Firm: BR 1608

CIVIL
DIG
T 713-965-0608
SPORTS
PBK SPORTS
T 281-528-1697
STRUCTURAL
KUBALA ENGINEERS
T 800-246-3674
MEPT
LEAF ENGINEERS
T 713-940-3300
ENVELOPE
BEAM
T 713-940-3201
AV / ACOUSTIC
JAFFE HOLDEN
T 713-807-7100
THEATER
SCHULER SHOOK
T 214-747-8300
FOOD SERVICE
FOOD DESIGN PROFESSIONAL
T 281-350-2323

LEAF ENGINEERS

FRIENDSWOOD HIGH SCHOOL ADDITIONS AND RENOVATIONS

702 Greenbriar Dr
Friendswood, TX 77546

ISSUE FOR PROPOSAL

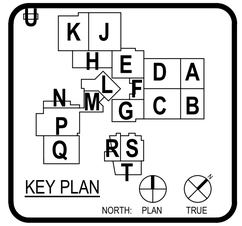

STATE OF TEXAS
DONALD C. RICHARDS
61526
LICENSED
PROFESSIONAL ENGINEER

02/02/2022
LEAF ENGINEERS
F-18672

CLIENT
FRIENDSWOOD ISD

DATE	PROJECT NUMBER
02/02/2022	20381

DRAWING HISTORY

No.	Description	Date
2	ADDENDUM 02	02/14/2022

ISSUE FOR PROPOSAL

PLUMBING RISER DIAGRAM

P-701

File Path: C:\Users\scargo\Documents\PLUM_R21 20381 FHS Central_sam.cargoNAVDR.rvt

CHECKED BY:
Checker
DRAWN BY:
Author
Plot Stamp:
2/14/2022 5:20:40 PM

PLUMBING RISER DIAGRAM
P-702
FOR BLUEBEAM LABELING/OCR:

0"
1"

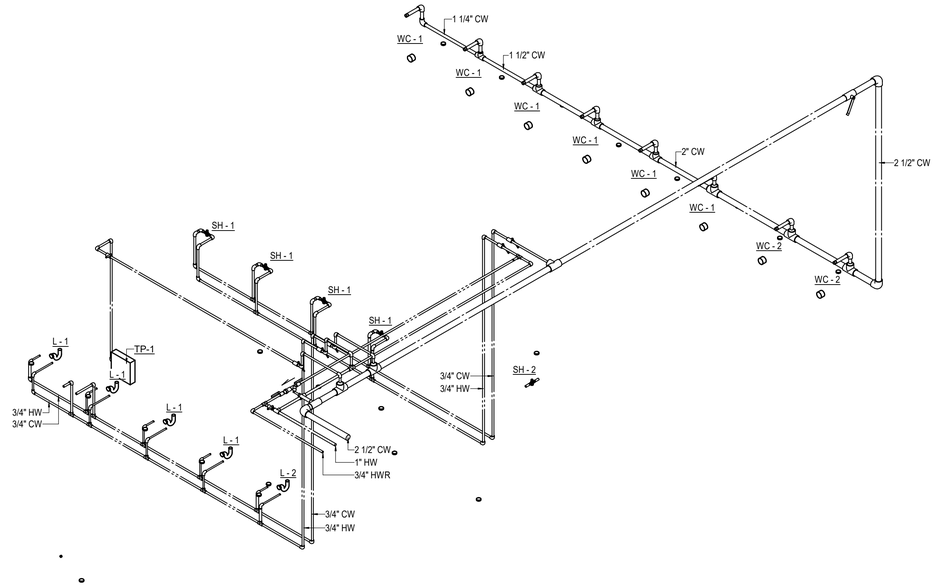

2 DOMESTIC RISER DIAGRAM - GIRLS RR & SHOWERS K149

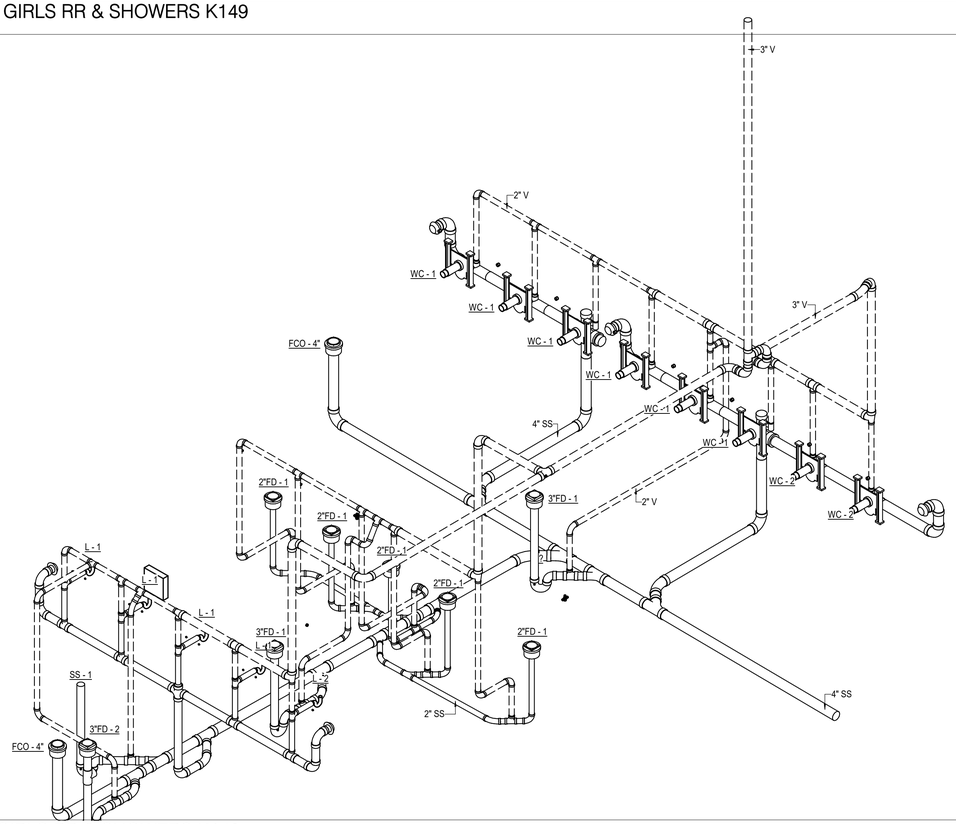

1 SANITARY RISER DIAGRAM - GIRLS RR & SHOWERS K149

GENERAL NOTES - PLUMBING PLAN

A. THE CONTRACTOR SHALL COMPLY WITH ALL AUTHORITIES HAVING JURISDICTION.

B. ALL FINAL CONNECTIONS TO FIXTURES AND EQUIPMENT SHALL BE MADE BY THE PLUMBING CONTRACTOR.

C. ALL PLUMBING PIPING SHALL BE COORDINATED WITH ALL OTHER TRADES PRIOR TO ANY INSTALLATION OF ALL PLUMBING FIXTURES AND EQUIPMENT BY THE PLUMBING CONTRACTOR.

D. ALL FLOOR DRAINS AND FLOOR SINKS SHOWN ON THIS DRAWING SHALL BE COORDINATED WITH ALL OTHER TRADES PRIOR TO INSTALLATION.

E. REFER TO ARCHITECTURAL DRAWING FOR EXACT LOCATIONS OF FIXTURES, EQUIPMENT, ETC. DO NOT SCALE FROM PLUMBING DRAWINGS.

F. ALL WALL CLEAN-OUTS SHALL BE ACCESSIBLE BY AN ACCESS PANEL.

G. PROVIDE AND INSTALL A DOUBLE EXTERIOR CLEAN-OUT (DFCO) ON ALL SANITARY LINES EXITING THE BUILDING.

H. ALL FLOOR DRAINS AND FLOOR SINKS SHALL BE PROVIDED WITH A TRAP PRIMER AND INSTALLED BY THE PLUMBING CONTRACTOR.

I. FIXTURES DESIGNATED AS ADA ACCESSIBLE BY ARCHITECT SHALL BE INSTALLED AT ADA ACCESSIBLE HEIGHT PER ARCHITECTURAL DETAILS.

J. ALL DOMESTIC COLD AND HOT WATER TAKE-OFFS SHALL HAVE AN ISOLATION SHUT-OFF VALVE.

K. FLOOR DRAINS AND FLOOR SINKS IN MECHANICAL ROOMS SHALL BE SET NOT LESS THAN 6" FROM HOUSEKEEPING PADS. RE: MECHANICAL DRAWINGS. DO NOT PLACE ON, OR IN, HOUSEKEEPING PAD, OR UNDERNEATH EQUIPMENT.

L. CONTRACTOR SHALL DEWATER ANY AREA AT OR BELOW GRADE PRIOR TO SETTING EQUIPMENT.

M. CONTRACTOR SHALL PROVIDE AND INSTALL A TRAP PRIMER, TP-1, AND A HOSE BIBB, HB-3, IN ALL MECHANICAL ROOMS.

N. CONTRACTOR SHALL PROVIDE AND INSTALL A HOSE BIBB WITH WHEEL HANDLE IN ALL MECHANICAL ROOMS, HB-3.

O. ANY AND ALL WATER PIPING EXPOSED TO OUTSIDE ELEMENTS SHALL BE INSULATED AND HEAT TRACED TO PREVENT FREEZING.

P. ALL SANITARY 3" OR ABOVE SHALL BE INSPECTED BY A CAMERA PRIOR TO SUBSTANTIAL COMPLETION.

KEYNOTES - PLUMBING PLAN

PBK

ARCHITECT PBK Architects, Inc.
HOUSTON PBK.com
11 Greenway Plaza, 22nd Floor
Houston, TX 77046
713-965-0608 P
713-961-4571 F
TX Firm: BR 1608

CIVIL
DIG
T 713-965-0608
SPORTS
PBK SPORTS
T 281-528-1697
STRUCTURAL
KUBALA ENGINEERS
T 800-246-3674
MEPT
LEAF ENGINEERS
T 713-940-3300
ENVELOPE
BEAM
T 713-940-3201
AV / ACOUSTIC
JAFFE HOLDEN
T 713-807-7100
THEATER
SCHULER SHOOK
T 214-747-8300
FOOD SERVICE
FOOD DESIGN PROFESSIONAL
T 281-350-2323

LEAF ENGINEERS

FRIENDSWOOD HIGH SCHOOL ADDITIONS AND RENOVATIONS

702 Greenbriar Dr
Friendswood, TX 77546

ISSUE FOR PROPOSAL

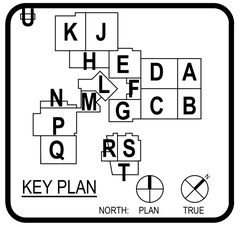

STATE OF TEXAS
DONALD C. RICHARDS
61525
LICENSED
PROFESSIONAL ENGINEER
02/02/2022
LEAF ENGINEERS
F-18672

CLIENT
FRIENDSWOOD ISD

DATE	PROJECT NUMBER
02/02/2022	20381

DRAWING HISTORY

No.	Description	Date
2	ADDENDUM 02	02/14/2022

ISSUE FOR PROPOSAL

PLUMBING RISER DIAGRAM

P-702

File Path: C:\Users\scargo\Documents\PLUM_R21 20381 FHS Central_sam.cargoNAVDR.rvt

CHECKED BY:
Checker
DRAWN BY:
Author
Plot Stamp:
2/14/2022 5:31:31 PM

NETWORK DATA COUNTS

T-503

FOR BLUEBEAM LABELING/OCR:

MDF/IDF DATA COUNT

DEVICE TYPE	DESCRIPTION	DEVICE COUNT	NETWORK COUNT
		0	0
CAM	CAM	3	3
CEILING MOUNTED AP	AP	2	4
WALL MOUNTED D2	D2	3	6
WALL MOUNTED LCD	LCD	4	4
		12	17
Default			
		0	0
		0	0
CAM	CAM	13	13
CEILING MOUNTED AP	AP	18	36
CEILING MOUNTED CAMERA	CAM	7	7
WALL MOUNTED LCD	LCD	4	4
		42	60
IDF - MECH F105			
		0	0
CEILING MOUNTED AP	AP	17	34
CEILING MOUNTED D2	D2	9	18
CEILING MOUNTED PROJECTOR	CMP	1	1
SMART PANEL	SP	4	4
WALL MOUNTED D1	D1	96	96
WALL MOUNTED D2	D2	16	32
WALL MOUNTED D3	D3	8	24
WALL MOUNTED LCD	LCD	5	5
		156	214
IDF K143			
		0	0
CAM	CAM	2	2
CEILING MOUNTED AP	AP	12	24
WALL MOUNTED D1	D1	2	2
WALL MOUNTED D2	D2	1	2
WALL MOUNTED D3	D3	2	6
WALL MOUNTED LCD	LCD	3	3
		22	39
IDF Q108			
		0	0
CAM	CAM	10	10
CEILING MOUNTED AP	AP	11	22
CEILING MOUNTED CAMERA	CAM	3	3
WALL MOUNTED D1	D1	18	18
WALL MOUNTED D2	D2	1	2
WALL MOUNTED LCD	LCD	6	6
		49	61
IDF R101A			
		0	0
CAM	CAM	7	7
CEILING MOUNTED AP	AP	23	46
CEILING MOUNTED CAMERA	CAM	9	9
CEILING MOUNTED PROJECTOR	CMP	1	1
FLOOR MOUNTED D1	D1	4	4
WALL MOUNTED D1	D1	2	2
WALL MOUNTED D2	D2	6	12
WALL MOUNTED D3	D3	1	3
WALL MOUNTED LCD	LCD	4	4
		57	88
IDF R205			
		0	0
CAM	CAM	4	4
CEILING MOUNTED AP	AP	10	20
WALL MOUNTED D1	D1	5	5
WALL MOUNTED D2	D2	3	6
		22	35
IDF U102			
		0	0
CAM	CAM	2	2
CEILING MOUNTED AP	AP	4	8
CEILING MOUNTED CAMERA	CAM	1	1
WALL MOUNTED D1	D1	1	1
WALL MOUNTED D2	D2	4	8
		12	20
MDF C103			
		0	0
CAM	CAM	3	3
CEILING MOUNTED AP	AP	8	16
CEILING MOUNTED CAMERA	CAM	5	5
CEILING MOUNTED D1	D1	2	2
CEILING MOUNTED LCD	LCD	1	1
CEILING MOUNTED PROJECTOR	CMP	2	2
FLOOR MOUNTED D4	D4	2	8
WALL MOUNTED D1	D1	50	50
WALL MOUNTED D2	D2	6	12
WALL MOUNTED D3	D3	4	12
WALL MOUNTED LCD	LCD	7	7
		90	118
644		462	652

PBK

ARCHITECT PBK Architects, Inc.
HOUSTON PBK.com
11 Greenway Plaza, 22nd Floor
Houston, TX 77046
713-965-0608 P
713-961-4571 F
TX Firm: BR 1608

CIVIL
DIG
T 713-965-0608

MEP/T
LEAF ENGINEERS
T 713-940-3300

LEAF ENGINEERS

FRIENDSWOOD HIGH SCHOOL ADDITIONS AND RENOVATIONS - PACKAGE TWO

702 Greenbriar Dr
Friendswood, TX 77546

ISSUE FOR PROPOSAL

STATE OF TEXAS
DONALD C. RICHARDS
61525
LICENSED
PROFESSIONAL ENGINEER

02/02/2022
LEAF ENGINEERS
F-18672

CLIENT
FRIENDSWOOD ISD

DATE	PROJECT NUMBER
02/02/2022	20381

DRAWING HISTORY

No.	Description	Date
2	ADDENDUM 02	02/14/2022

ISSUE FOR PROPOSAL

NETWORK DATA COUNTS

T-503

File Path: C:\Users\jalatorre\Documents\TECH_R21 20381 FHS Central_Jesse.alatorre.rvt

CHECKED BY:
Checker
DRAWN BY:
Author
Plot Stamp:
2/14/2022 11:26:57 AM