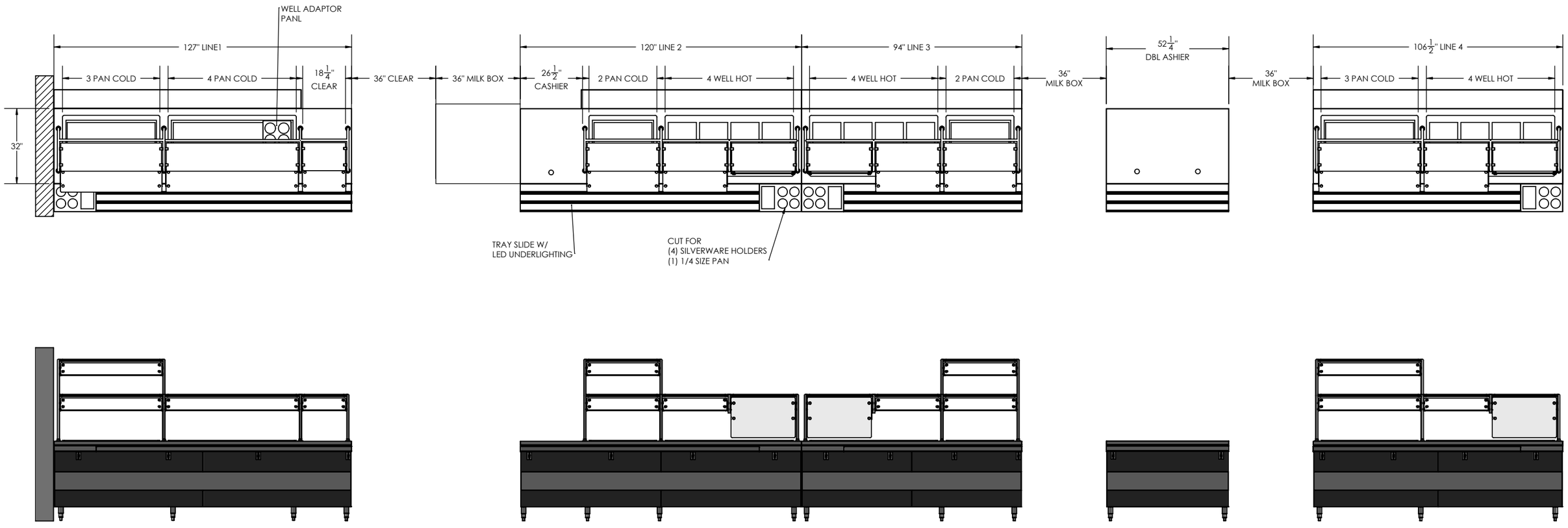

ALL STAINLESS STEEL USED IN MANUFACTURING
IS NON-MAGNETIC, NSF APPROVED, TYPE 304 OR TYPE 201

ATLANTA CUSTOM FABRICATORS		
JOB: DODGE CO HIGH SCHOOL		
DRAWN BY: TPH	DEALER: ---	
SCALE: NOTED	DATE: 10.19.21	SHEET NO. 1 OF 7
REVISION: XX.XX.XX		FAB NO. --

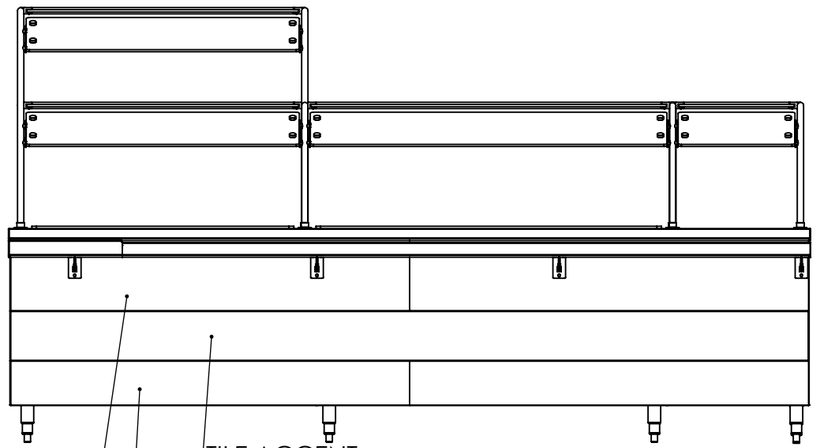

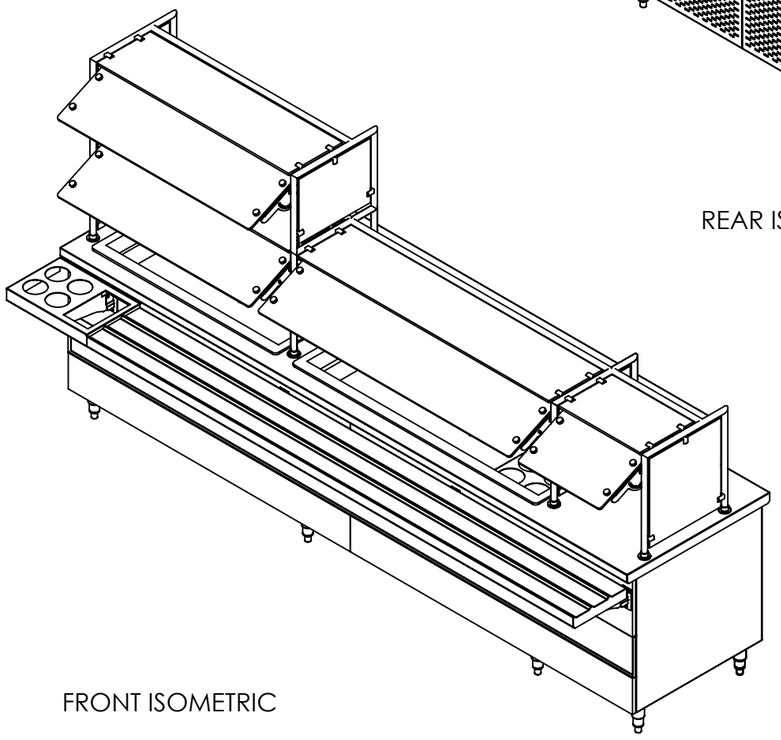

FRONT ISOMETRIC

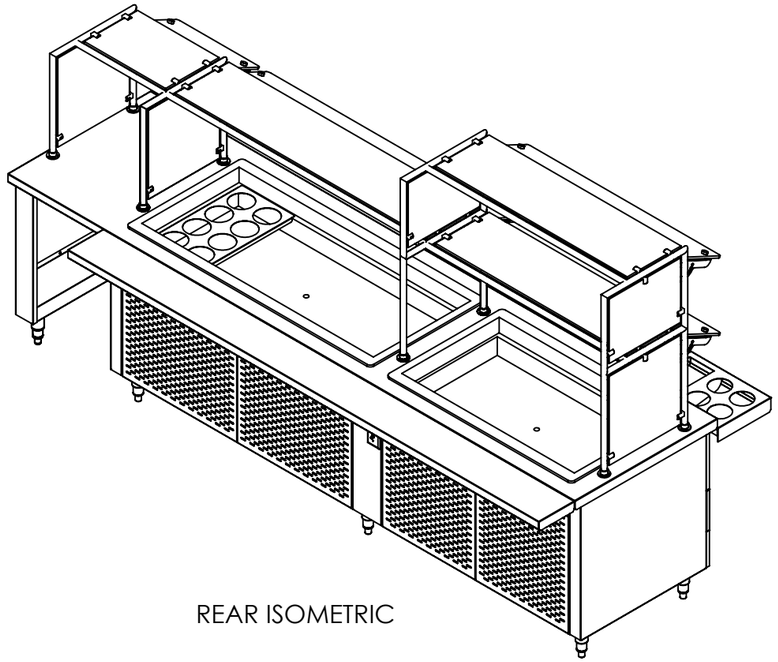

REAR ISOMETRIC

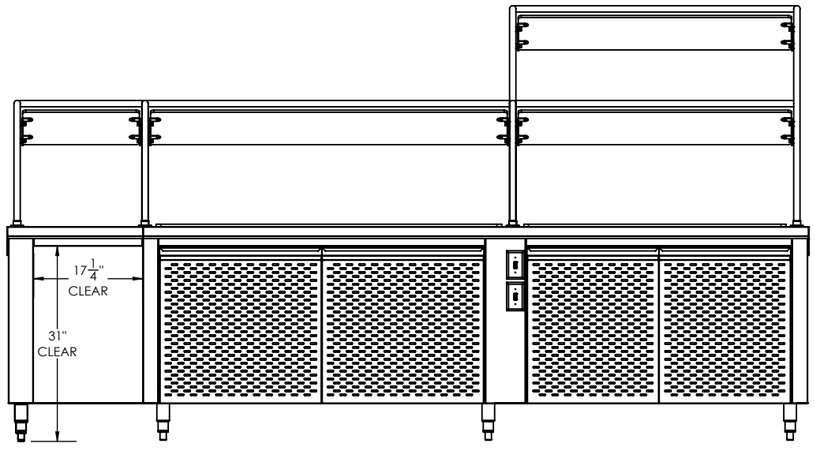

ITEM 1 : SERVING LINE

ONE REQUIRED (1)

ALL STAINLESS STEEL USED IN MANUFACTURING
IS NON-MAGNETIC, NSF APPROVED, TYPE 304 OR TYPE 201

ATLANTA CUSTOM FABRICATORS		
JOB: DODGE CO HIGH SCHOOL		
DRAWN BY: TPH	DEALER: ---	
SCALE: NOTED	DATE: 10.19.21	SHEET NO. 2OF7
REVISION: XX.XX.XX		FAB NO. --

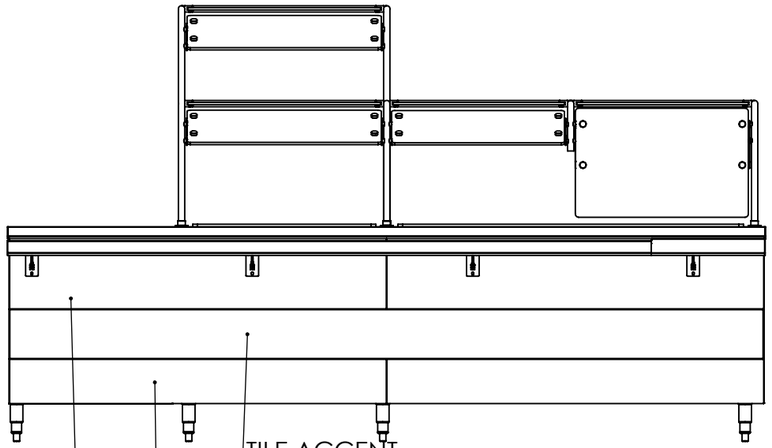

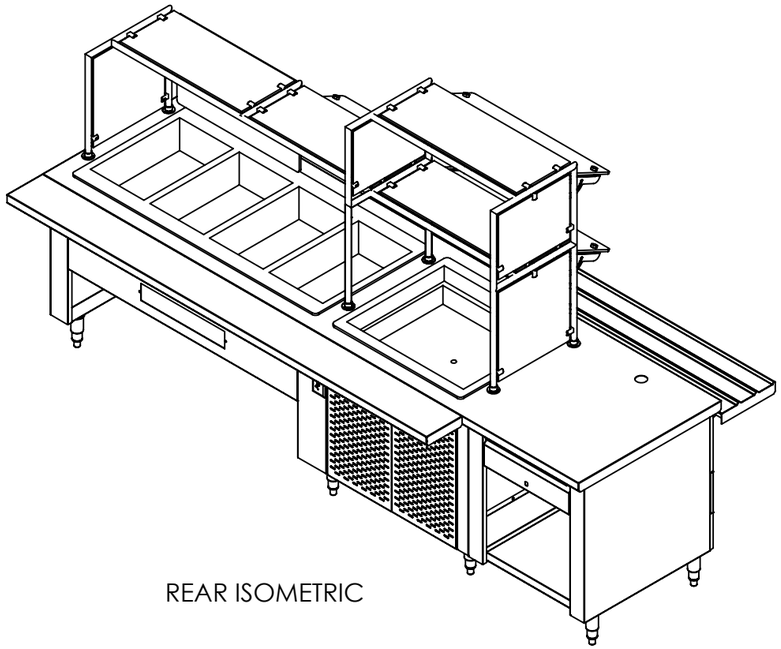

REAR ISOMETRIC

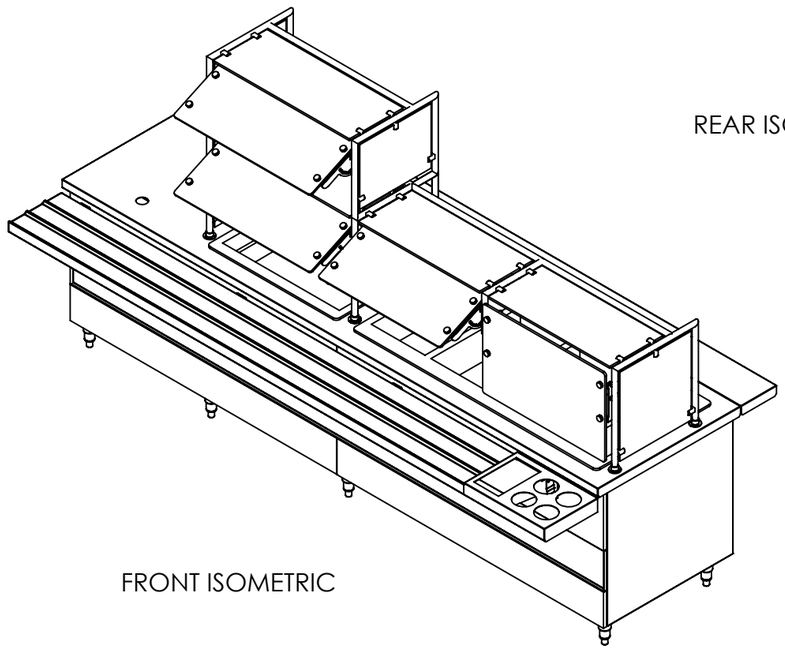

FRONT ISOMETRIC

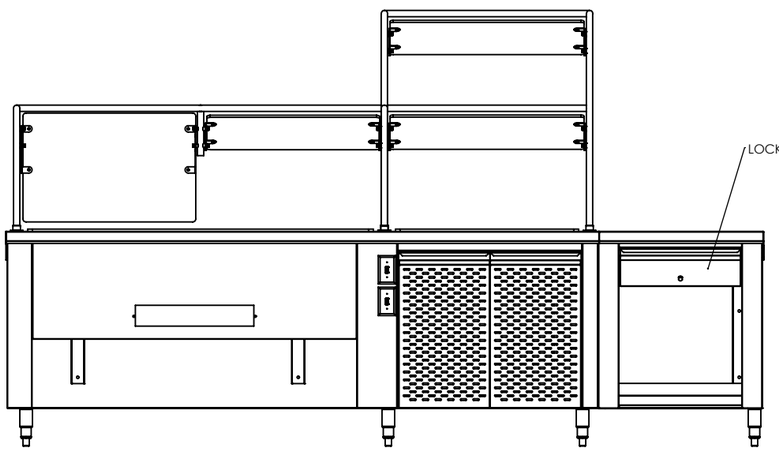

ITEM 2 : SERVING LINE

ONE REQUIRED (1)

ALL STAINLESS STEEL USED IN MANUFACTURING
IS NON-MAGNETIC, NSF APPROVED, TYPE 304 OR TYPE 201

ATLANTA CUSTOM FABRICATORS		
JOB: DODGE CO HIGH SCHOOL		
DRAWN BY: TPH	DEALER: ---	
SCALE: NOTED	DATE: 10.19.21	SHEET NO. 3OF7
REVISION: XX.XX.XX		FAB NO. --

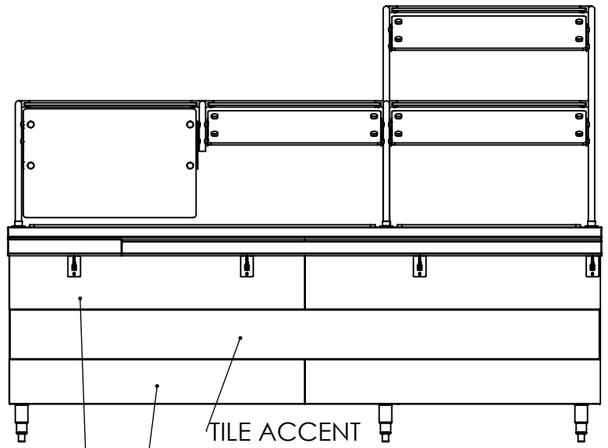

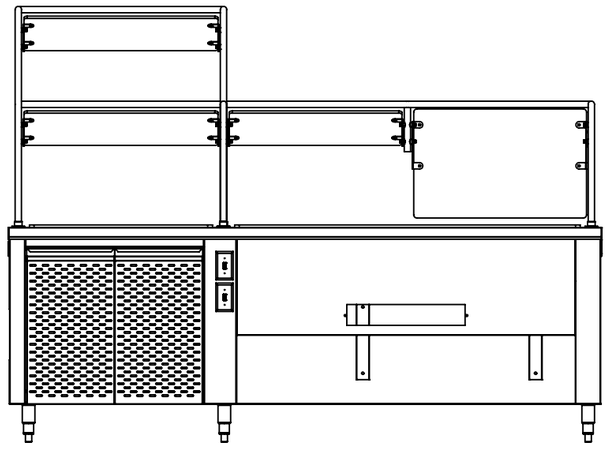

ITEM 3 : SERVING LINE

ONE REQUIRED (1)

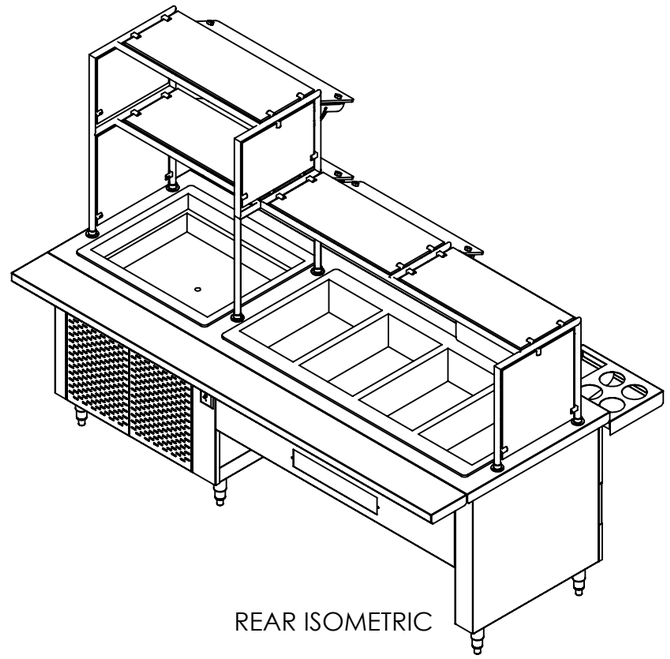

REAR ISOMETRIC

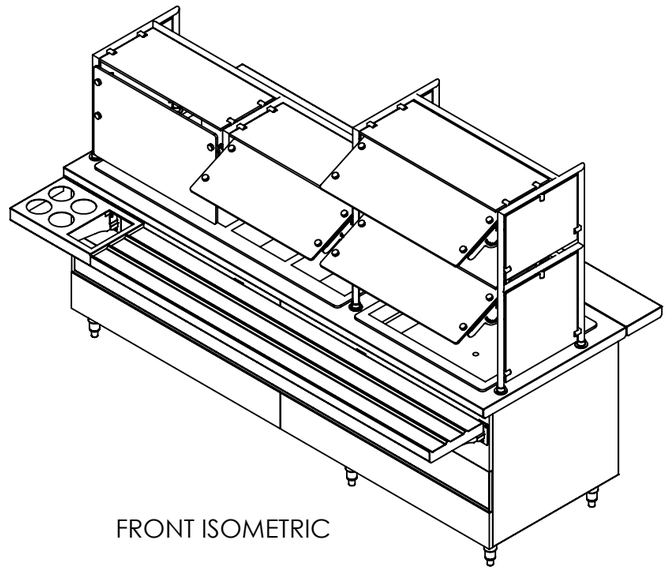

FRONT ISOMETRIC

ALL STAINLESS STEEL USED IN MANUFACTURING
IS NON-MAGNETIC, NSF APPROVED, TYPE 304 OR TYPE 201

ATLANTA CUSTOM FABRICATORS		
JOB: DODGE CO HIGH SCHOOL		
DRAWN BY: TPH	DEALER: ---	
SCALE: NOTED	DATE: 10.19.21	SHEET NO. 4OF7
REVISION: XX.XX.XX		FAB NO. --

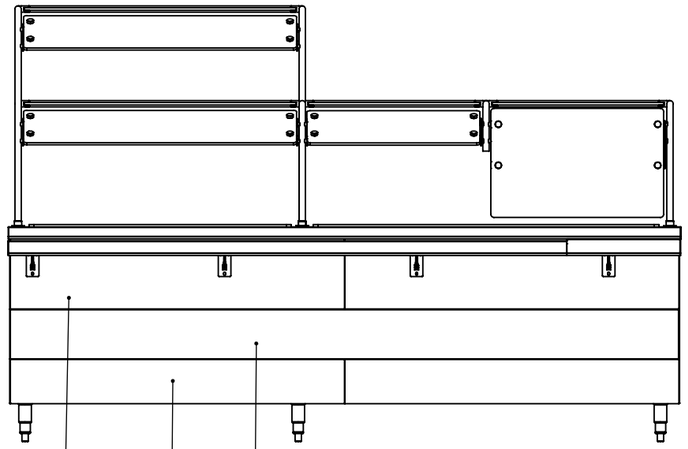

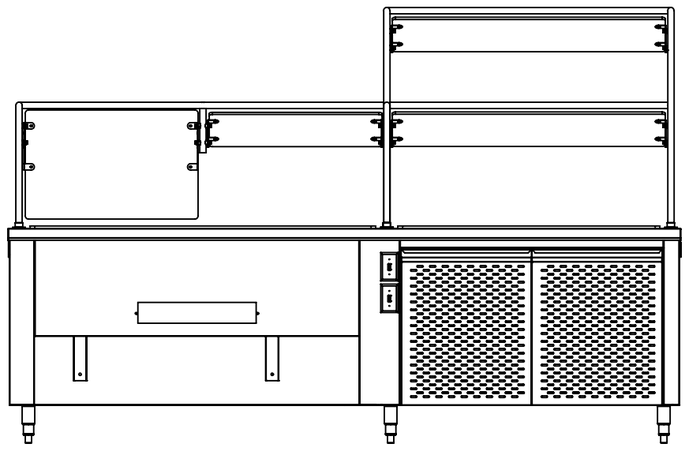

ITEM 4 : SERVING LINE

ONE REQUIRED (1)

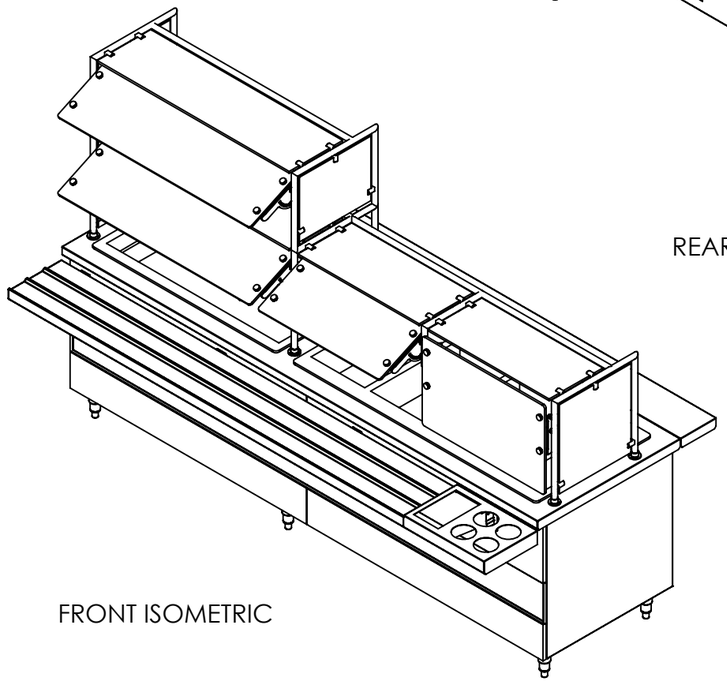

FRONT ISOMETRIC

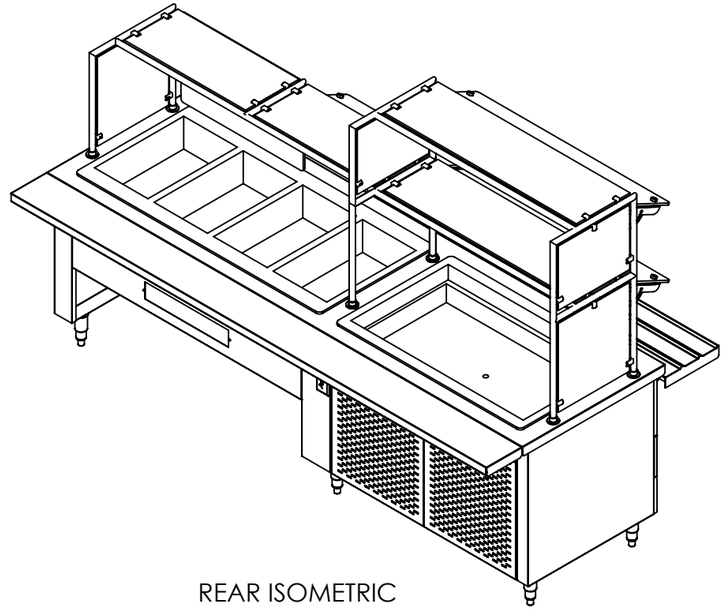

REAR ISOMETRIC

ALL STAINLESS STEEL USED IN MANUFACTURING
IS NON-MAGNETIC, NSF APPROVED, TYPE 304 OR TYPE 201

ATLANTA CUSTOM FABRICATORS		
JOB: DODGE CO HIGH SCHOOL		
DRAWN BY: TPH	DEALER: ---	
SCALE: NOTED	DATE: 10.19.21	SHEET NO. 5OF7
REVISION: XX.XX.XX		FAB NO. --

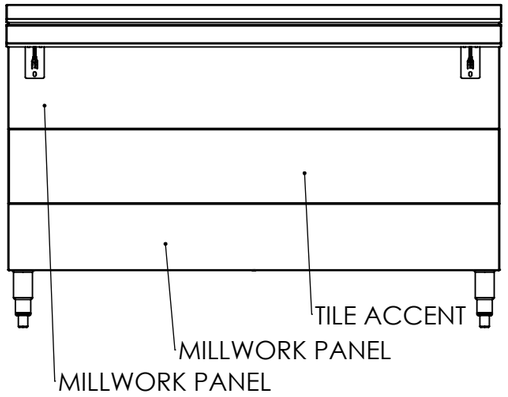

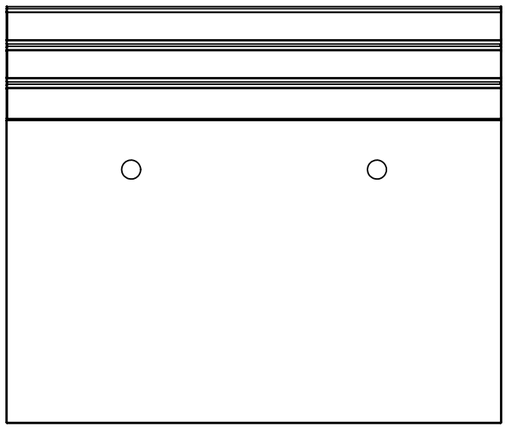

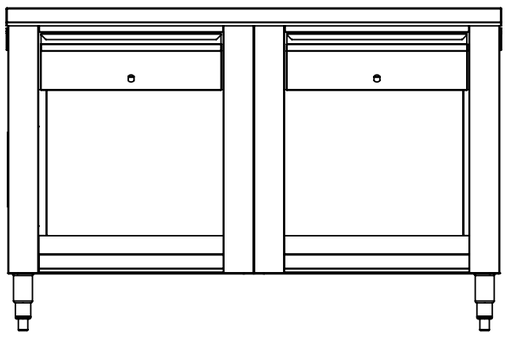

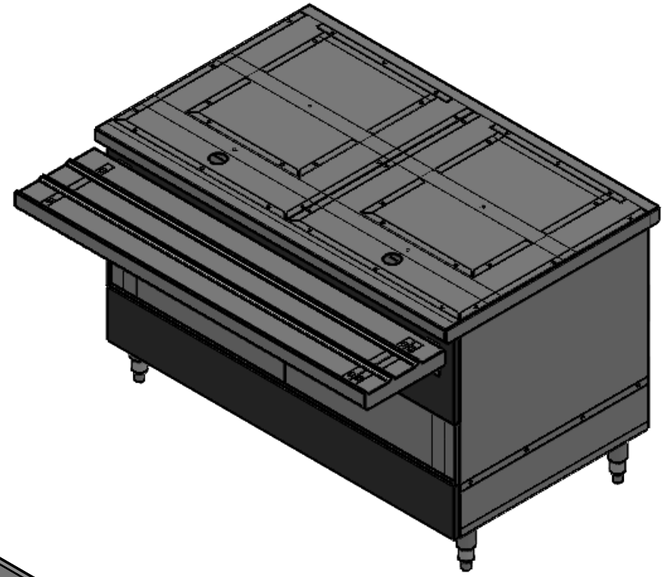

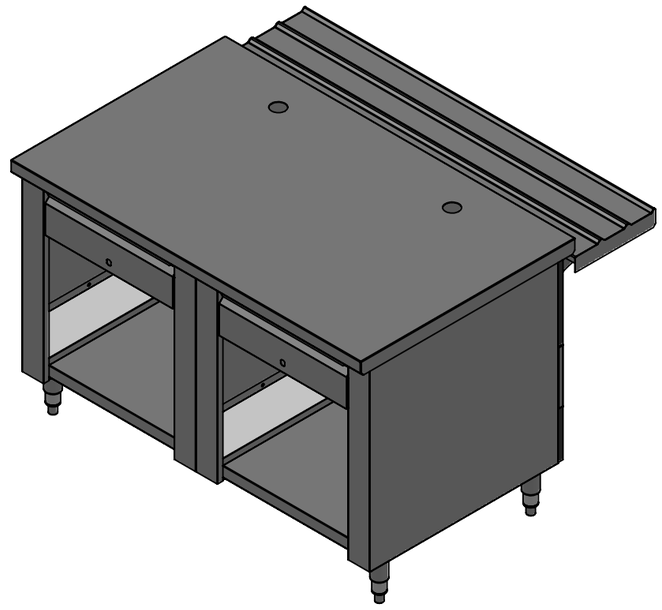

ITEM 5 : DOUBLE CASHIER

ONE REQUIRED (1)

ALL STAINLESS STEEL USED IN MANUFACTURING
IS NON-MAGNETIC, NSF APPROVED, TYPE 304 OR TYPE 201

ATLANTA CUSTOM FABRICATORS		
JOB: DODGE CO HIGH SCHOOL		
DRAWN BY: TPH	DEALER: ---	
SCALE: NOTED	DATE: 10.19.21	SHEET NO. 6OF7
REVISION: XX.XX.XX		FAB NO. --

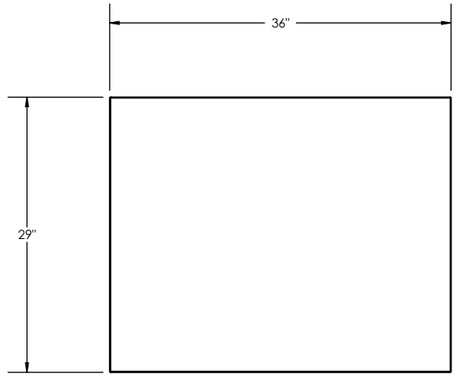

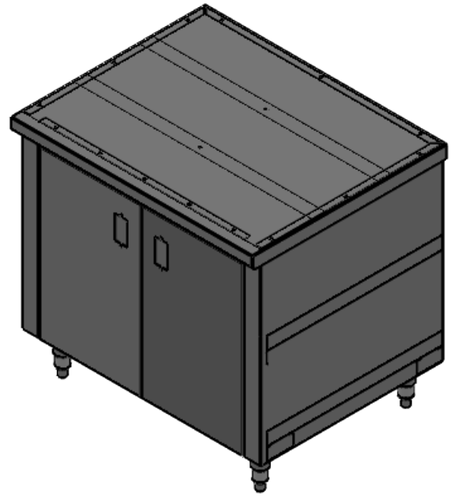

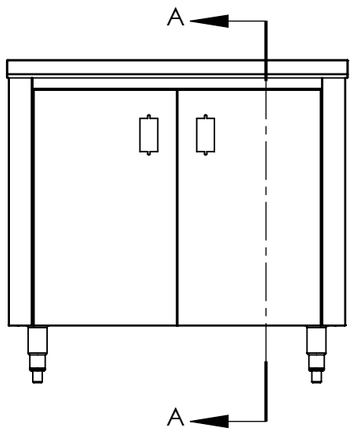

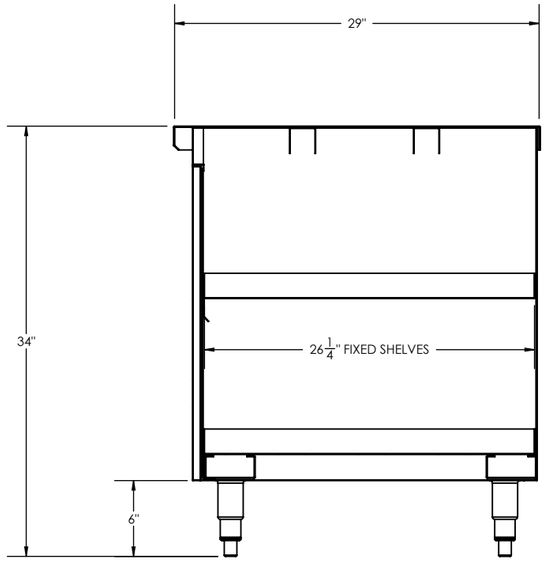

SECTION A-A
SCALE 1 : 12

ITEM 6 : BEVERAGE COUNTER

ONE REQUIRED (1)

ALL STAINLESS STEEL USED IN MANUFACTURING
IS NON-MAGNETIC, NSF APPROVED, TYPE 304 OR TYPE 201

ATLANTA CUSTOM FABRICATORS		
JOB: DODGE CO HIGH SCHOOL		
DRAWN BY: TPH	DEALER: ---	
SCALE: NOTED	DATE: 10.19.21	SHEET NO. 7 OF 7
REVISION: XX.XX.XX		FAB NO. --