CITY OF NEW BRITAIN
DEPARTMENT OF PUBLIC WORKS

PLANS FOR

PHASE VI STREETSCAPE
MYRTLE STREET/EAST MAIN STREET

IN THE CITY OF
NEW BRITAIN, CONNECTICUT

JUNE 19, 2019

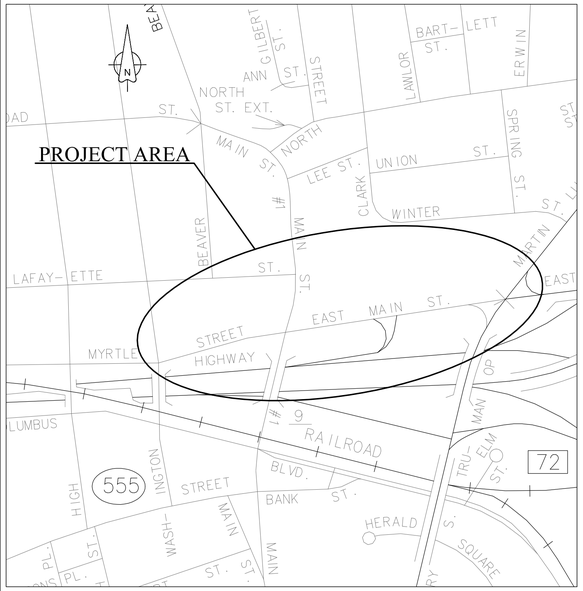

LOCATION MAP
(NOT TO SCALE)

CITY OF NEW BRITAIN
(NOT TO SCALE)

BID No. 3972
STATE PROJECT No. L088-0002

TO BE MAINTAINED BY THE CITY OF NEW BRITAIN

LIST OF DRAWINGS

SHEET NO.	TITLE
1	TITLE SHEET
2	DETAILED ESTIMATE
3	GENERAL NOTES, STANDARD CONVENTIONS, AND ABBREVIATIONS
4	TYPICAL SECTIONS
5	INDEX PLAN
6-9	ROADWAY PLAN
10-13	ROADWAY PROFILE
14-42	CROSS SECTIONS
43-46	GRADING, DRAINAGE, UTILITY AND SEDIMENTATION & EROSION CONTROL PLAN
47-50	PAVEMENT MARKING AND SIGNING PLAN
51	INTERSECTION GRADING PLAN
52-53	MISCELLANEOUS DETAILS
54	CATCH BASIN AND DROP INLET DETAILS
55	SIGNS DETAILS
56-59	SIDEWALK RAMP DETAILS
60	TRAFFIC CONTROL SIGNAL LAYOUT (MLK DRIVE AT EAST MAIN STREET)
61-64	PLANTING AND LIGHTING PLAN
65	PLANTING AND LIGHTING DETAILS
66-67	TRAFFIC CONTROL SIGNAL PLANS (EAST MAIN STREET AT ROUTE 72 ON-RAMP)
68-70	MAST ARM ASSEMBLY DETAILS

CTDOT STANDARD DRAWINGS

SHEET NO.	TITLE
HW-507_03	TYPE "C" , "C-L" & DOUBLE GRATE - TYPE II
HW-507_04	TYPE "C" , "C-L" AND ROUND PRECAST CONCRETE CB
HW-507_07	TYPE "C" , "C-L" CATCH BASIN TOPS AND CURBS
HW-507_08	CATCH BASIN FRAMES AND GRATES
HW-507_10	MANHOLE - FRAME & COVER
HW-651_01	C.C.M. PIPE INSTALLATIONS IN FILL & ROCK SLOPES & PIPE TRENCH DETAIL
TR-1000_01	GENERAL CLAUSES (TEST PROCEDURES)
TR-1001_01	TRENCHING & BACKFILLING, ELECTRICAL CONDUIT
TR-1002_01	TRAFFIC CONTROL FOUNDATIONS
TR-1010_01	CONCRETE HANDHOLE
TR-1102_01	PEDESTALS, PEDESTRIAN SIGNALS
TR-1105_01	TRAFFIC SIGNALS AND CABLE ASSIGNMENTS
TR-1107_01	PEDESTRIAN PUSH BUTTON
TR-1108_01	CONTROLLERS
TR-1113_01	CONTROL CABLE
TR-1205_01	DELINEATION, DELINEATORS AND OBJECT MARKER DETAILS
TR-1208_01	SIGN PLACEMENT AND RETROFLECTIVE STRIP DETAILS
TR-1208_02	METAL SIGN POSTS AND SIGN MOUNTING DETAILS
TR-1210_04	PAVEMENT MARKING LINES AND SYMBOLS
TR-1210_08	PAVEMENT MARKINGS FOR NON FREEWAYS
TR-1210_09	PAVEMENT MARKINGS FOR BICYCLE LANES, PARKING STALLS, AND RAILROAD GRADE CROSSINGS
TR-1220_01	SIGNS FOR CONSTRUCTION AND PERMIT OPERATIONS
TR-1220_02	CONSTRUCTION SIGN SUPPORTS AND CHANNELIZING DEVICES

NOTES:

1) ELEVATIONS ARE BASED ON NAVD 88
2) NORTH ARROW AND BEARING ARE BASED ON THE CONNECTICUT STATE PLANE COORDINATE SYSTEM (NAD 1983)

SPECIFICATIONS AND STANDARD DETAILS THAT GOVERN THIS PROJECT ARE:

1) THE CTDOT "STANDARD SPECIFICATIONS FOR ROADS, BRIDGES, FACILITIES AND INCIDENTAL CONSTRUCTION" FORM 817 DATED 2016, AS SUPPLEMENTED JULY 2018 AND SPECIAL PROVISIONS.

DESIGN SPEED
30 M.P.H.

HONORABLE ERIN E. STEWART - MAYOR

MARK E. MORIARTY, P.E. - DIRECTOR OF PUBLIC WORKS

ROBERT TROTTIER, P.E. - CITY ENGINEER

MICHAEL J. CARUSO III, L.S. - CITY SURVEYOR

CARDINAL
ENGINEERING ASSOCIATES
3 Colony Street | Meriden, CT 06451 | 203-238-1969

P:\Civil 3d Projects-2014\NewBritain EMainMyrtle\Production Drawings\Title_Sheet.dwg, Title Sheet, 6/19/2019 11:26:59 AM,
DWG To PDF.pc3, ARCH expand D (24.00x36.00 Inches)

HIGHWAY ITEMS

ITEM NO.	2010001A	2020000	2024051A	2025030A	2025130A	2025290	2050040	2090010	2112000A	2131000A	2190010	2190110A	3040020A	4041000A	4060020A	4061700	4061710	4062360	4062750A
DESCRIPTION	CLEARING AND GRUBBING	EARTH EXCAVATION	TEST PIT EXCAVATION	REMOVAL OF CONCRETE CURBING	REMOVAL OF CONCRETE SIDEWALK	CUT BITUMINOUS CONCRETE PAVEMENT	ROCK IN TRENCH EXCAVATION (0' - 10' DEEP)	FORMATION OF SUBGRADE	SUBBASE	GRANULAR FILL	SEDIMENTATION CONTROL SYSTEM	SEDIMENT CONTROL SYSTEM AT CATCH BASIN	PROCESSED AGGREGATE BASE	BITUMINOUS CONCRETE PATCHING - FULL DEPTH	TEMPORARY PAVEMENT	HMA S1.0	HMA S0.5	MATERIAL FOR TACK COAT	FINE MILLING OF BITUMINOUS CONCRETE (0" TO 4")
UNIT	LS	CY	CY	LF	SY	LF	CY	SY	CY	CY	LF	EA	CY	SY	SY	TON	TON	GAL	SY
ALL ROADWAYS	1	5390	20	1230	1300	2100	25	7710	2610	25	900	35	1410	40	40	1910	1700	1270	6110
SUBTOTAL	1	5390	20	1230	1300	2100	25	7710	2610	25	900	35	1410	40	40	1910	1700	1270	6110
UNASSIGNED																			
TOTAL QUANTITY	1	5390	20	1230	1300	2100	25	7710	2610	25	900	35	1410	40	40	1910	1700	1270	6110

HIGHWAY ITEMS

ITEM NO.	5077580A	5860010.10	5860010.20	5860010.20	5860130.10	5860701	5860703	5860750	5867900.10	6129940	6860000.12	6860020.12	6862000.12	6862010.12	8110010A	8130210A	8130310A	9210010A	9210050A	9210050A	9210980A	9220020A
DESCRIPTION	RESET MANHOLE (STORM)	TYPE "C" CATCH BASIN 0'-10' DEEP	TYPE "C" CATCH BASIN 0'-20' DEEP	OFFSET TYPE "C" CATCH BASIN 0'-10'DEEP	CONVERT CB TO TYPE 'C-L' CATCH BASIN	CONVERT CB TO MANHOLE	TYPE "C" CATCH BASIN TOP	REMOVE DRAINAGE STRUCTURE 0'-10' DEEP	CONCRETE CYLINDER CURING BOX	12" R.C. PIPE 0'-10' DEEP	12" R.C. PIPE (CLASS V) 0'-10' DEEP	12" PVC PIPE 0'-10' DEEP	12" PVC PIPE 0'-20' DEEP	CONCRETE CURBING	6" GRANITE STONE CURBING	6" GRANITE CURVED STONE CURBING	CONCRETE SIDEWALK	CONCRETE SIDEWALK RAMP	BRICK PAVER SIDEWALK	DETECTABLE WARNING CAST IRON PAVER	FLEXI-PAVE PAVEMENT AT EXISTING TREE	TEMPORARY BITUMINOUS CONCRETE SIDEWALK
UNIT	EA	EA.	EA.	EA.	EA	EA	EA.	EA	EA	LF	LF	LF	LF	LF	LF	LF	SF	SF	SF	EA	SF	SY
ALL ROADWAYS	12	11	1	2	3	1	2	10	1	60	24	50	30	320	2900	650	14200	1500	13700	18	300	40
SUBTOTAL	12	11	1	2	3	1	2	10	1	60	24	50	30	320	2900	650	14200	1500	13700	18	300	40
UNASSIGNED																						
TOTAL QUANTITY	12	11	1	2	3	1	2	10	1	60	24	50	30	320	2900	650	14200	1500	13700	18	300	40

HIGHWAY ITEMS

ITEM NO.	0922501	0924006A	0942001	0944101A	0949000A	0949572A	0950005A	0970007	0971001A	0975004	0976002	0978002	0979003	0980001	0981100	1205202	1206023A	1208931A	1209114	1209124	1210101	1210102	1210103	1210105	1211001	1220027	1302046A	1302054A	1302061A	1302062A	1302195A	1302204A	1403501A	1500209A
DESCRIPTION	BITUMINOUS CONCRETE DRIVEWAY	CONCRETE DRIVEWAY RAMP	CALCIUM CHLORIDE FOR DUST CONTROL	PLACING TOPSOIL	TRIPLE SHREDDED HARDWOOD MULCH	ZELKOVA SERRATA - VILLAGE GREEN ZELKOVA, 3 1/2"-4" CAL. B&B	TURF ESTABLISHMENT	TRAFFIC PERSON (UNIFORMED FLAGGER)	MAINTENANCE AND PROTECTION OF TRAFFIC	MOBILIZATION AND PROJECT CLOSE-OUT	BARRICADE WARNING LIGHTS - HIGH INTENSITY	TRAFFIC DRUM	CONSTRUCTION BARRICADE TYPE III	CONSTRUCTION STAKING	42" TRAFFIC CONE	TYPE DE-2 DELINEATOR	REMOVAL AND RELOCATION OF EXISTING SIGNS	SIGN FACE SHEET ALUMINUM (TYPE IX RETROREFLECTIVE SHEETING)	HOT-APPLIED PAVEMENT MARKINGS 4" YELLOW	HOT-APPLIED PAVEMENT MARKINGS 4" WHITE	4" WHITE EPOXY RESIN PAVEMENT MARKINGS	4" YELLOW EPOXY RESIN PAVEMENT MARKINGS	6" WHITE EPOXY RESIN PAVEMENT MARKINGS	EPOXY RESIN PAVEMENT MARKINGS, SYMBOLS AND LEGENDS	REMOVAL OF PAVEMENT MARKINGS	CONSTRUCTION SIGNS	RESET MANHOLE (WATER)	REPLACE CURB BOX	ADJUST GATE BOX (WATER)	ADJUST GATE BOX (GAS)	REMOVE HYDRANT (WATER MAIN)	HYDRANT ASSEMBLY (WATER MAIN)	RESET MANHOLE (SANITARY SEWER)	RESET MANHOLE (TELEPHONE)
UNIT	SY	SF	TON	CY	CY	EA	SY	HR	LS	LS	DAY	EA	EA	LS	EA	EA	L.S.	SF	LF	LF	LF	LF	LF	SF	SF	SF	EA	EA	EA	EA	EA	EA	EA	EA
ALL ROADWAYS	120	550	5	310	100	37	1300	200	1	1	2100	20	12	1	25	2	1	380	2000	1000	3300	3600	3000	3100	100	370	4	5	10	10	3	3	12	20
SUBTOTAL	120	550	5	310	100	37	1300	200	1	1	2100	20	12	1	25	2	1	380	2000	1000	3300	3600	3000	3100	100	370	4	5	10	10	3	3	12	20
UNASSIGNED																																		
TOTAL QUANTITY	120	550	5	310	100	37	1300	200	1	1	2100	20	12	1	25	2	1	380	2000	1000	3300	3600	3000	3100	100	370	4	5	10	10	3	3	12	20

TRAFFIC AND LIGHTING ITEMS

ITEM NO.	1001001	1001004	1002015	1002130A	1002202	1002203
DESCRIPTION	TRENCHING AND BACKFILLING	ROCK IN TRENCH EXCAVATION (0' - 4' DEEP)	ROCK IN FOUNDATION EXCAVATION	INSTALL CITY FURNISHED LIGHT STANDARD FOUNDATION	TRAFFIC CONTROL FOUNDATION-MAST ARM	TRAFFIC CONTROL FOUNDATION-PEDESTAL TYPE 1
UNIT	L.F.	C.Y.	V.F.	EA	EA.	EA.
ALL ROADWAYS	75	20	15	38	3	4
SUBTOTAL	75	20	15	38	3	4
UNASSIGNED						
TOTAL QUANTITY	75	20	15	38	3	4

TRAFFIC AND LIGHTING ITEMS

ITEM NO.	1002208	1008115	1008117	1008127A	1008129A	1008215	1010001	1010011	1010021	1010052A	1010054A	1017034A	1102002A	1102009A	1104028A	1104033A	1105101A	1105103A	1105303A	1106001A	1106003A	1107011A	1108118A	1108727A	1108843A	1111201A	1111451A	1111600A	1112207A	1112242A	1112284A	1112286A	1112289A	1113004	1113030A	1113050	1113102	1113103	1113104	1113725A	1118012A
DESCRIPTION	TRAFFIC CONTROL FOUNDATION-CONTROLLER TYPE IV	2" RIGID METAL CONDUIT IN TRENCH	3" RIGID METAL CONDUIT IN TRENCH	2-INCH SCH 80 PVC CONDUIT	3-INCH SCH 80 PVC CONDUIT	2" RIGID METAL CONDUIT UNDER ROADWAY	CONCRETE HANDHOLE	CONCRETE HANDHOLE-TYPE I	CONCRETE HANDHOLE-TYPE II	CAST IRON HANDHOLE COVER	CAST IRON HANDHOLE COVER - TYPE II	INSTALL SERVICE	8' ALUMINUM PEDESTAL	10' ALUMINUM PEDESTAL	30' STEEL MAST ARM ASSEMBLY	40' STEEL MAST ARM ASSEMBLY	1 WAY, 1 SECTION MAST ARM TRAFFIC SIGNAL	1 WAY, 3 SECTION MAST ARM TRAFFIC SIGNAL	1 WAY, 3 SECTION PEDESTAL MOUNTED TRAFFIC SIGNAL	1 WAY PEDESTRIAN SIGNAL POLE MOUNTED	1 WAY PEDESTRIAN SIGNAL PEDESTAL MOUNTED	ACCESSIBLE PEDESTRIAN SIGNAL AND DETECTOR (TYPE A)	NEMA TS2, TYPE 2 TRAFFIC CONTROLLER AND CABINET	PHASE SELECTOR (AUDIO)	12-POSITION WALL MOUNTED FIBER OPTIC PATCH PANEL	TEMPORARY DETECTION (SITE No, 1)	LOOP DETECTOR SAWCUT	EXTENSION BRACKET	SIREN DETECTOR	FIBER OPTIC SPLICE ENCLOSURE (SIGNAL)	VEHICLE DETECTION MONITOR	360-DEGREE CAMERA ASSEMBLY	360-DEGREE CLOSED LOOP SYSTEM VIDEO DETECTION PROCESSOR	2 CONDUCTOR NO. 8 AWG TYPE SE STYLE THW	12 STRAND FIBER OPTIC INTERCONNECT CABLE	2 CONDUCTOR NO. 14 CABLE	5 CONDUCTOR NO. 14 CABLE	7 CONDUCTOR NO. 14 CABLE	9 CONDUCTOR NO. 14 CABLE	23 AWG 4 TWISTED PAIR CATEGORY 6 CABLE	REMOVAL AND/OR RELOCATION OF TRAFFIC SIGNAL EQUIPMENT
UNIT	EA.	L.F.	L.F.	LF	LF	L.F.	EA.	EA.	EA.	EA.	EA.	EA.	EA.	EA.	EA.	EA.	EA.	EA.	EA.	EA.	EA.	EA.	EA.	EA.	EA.	L.S.	LF	EA.	EA.	EA.	EA.	EA.	EA.	L.F.	L.F.	L.F.	L.F.	L.F.	L.F.	L.F.	L.S.
ALL ROADWAYS	1	100	15	3000	350	525	3	7	4	10	4	1	3	1	2	1	4	6	1	2	4	6	1	1	1	1	140	2	2	1	1	2	1	125	750	300	800	700	300	300	1
SUBTOTAL	1	100	15	3000	350	525	3	7	4	10	4	1	3	1	2	1	4	6	1	2	4	6	1	1	1	1	140	2	2	1	1	2	1	125	750	300	800	700	300	300	1
UNASSIGNED																																									
TOTAL QUANTITY	1	100	15	3000	350	525	3	7	4	10	4	1	3	1	2	1	4	6	1	2	4	6	1	1	1	1	140	2	2	1	1	2	1	125	750	300	800	700	300	300	1

DETAILED ESTIMATE

CARDINAL ENGINEERING ASSOCIATES
3 Colony Street | Meriden, CT 06451 | 203-238-1969

DESIGNED BY: A. DOORNWEERD
DRAWN BY: D. ROULEAU
CHECKED BY: B. SKONIECZNY
DATE: 6/19/2019

PHASE VI STREETSCAPE
MYRTLE STREET/EAST MAIN STREET
STATE PROJECT No. L088-002
NEW BRITAIN, CONNECTICUT

REV.	DATE	DESCRIPTION	BY	APP'D

SCALE

JOB NO. 2261

SHEET NO. 2

P:\Civil 3d Projects 2014\NewBritain EMainMyrtleProduction Drawings\2261-DES-01.dwg, Layout1, 6/19/2019 10:59:41 AM,
DWG To PDF.pc3, ARCH expand (8.00 x 36.00 Inches)

GENERAL NOTES

1. ALL CONSTRUCTION METHODS AND MATERIALS SHALL CONFORM WITH SECTIONS 2 THRU 18 OF THE CONNECTICUT DEPARTMENT OF TRANSPORTATION STANDARD SPECIFICATIONS FOR ROADS, BRIDGES, FACILITIES AND INCIDENTAL CONSTRUCTION, FORM 817, 2016 WITH LATEST REVISIONS UNLESS OTHERWISE SPECIFIED IN THE TECHNICAL SPECIFICATIONS.
2. ALL DIMENSIONS ARE FEET UNLESS OTHERWISE NOTED.
3. PLANIMETRIC AND TOPOGRAPHIC FEATURES ARE BASED ON FIELD SURVEY PERFORMED BY CARDINAL ENGINEERING ASSOCIATES, FROM 2017 TO 2018. SURVEY BASELINE CONFORMS TO CLASS A-2 HORIZONTAL ACCURACY. STREETLINE AND PROPERTY LINE INFORMATION (IF SHOWN) ARE APPROXIMATE AND BASED ON LIMITED FIELD SURVEY. ALL ELEVATIONS ARE BASED ON NAVD88. HORIZONTAL COORDINATES ARE BASED ON THE CONNECTICUT COORDINATE GRID. VERTICAL ACCURACY IS CLASS T-2.
4. ALL DIMENSIONS AND ELEVATIONS MUST BE VERIFIED IN THE FIELD BY THE CONTRACTOR PRIOR TO THE START OF MANUFACTURING AND CONSTRUCTION, AND NECESSARY ADJUSTMENTS MADE AS ORDERED BY THE ENGINEER.
5. EROSION AND SEDIMENT CONTROL MEASURES WILL BE CONSTRUCTED IN ACCORDANCE WITH THE CONNECTICUT DEPARTMENT OF TRANSPORTATION STANDARD SPECIFICATIONS FOR ROADS, BRIDGES, FACILITIES AND INCIDENTAL CONSTRUCTION, FORM 817, 2016 WITH LATEST REVISIONS, 2002 CONNECTICUT GUIDELINES FOR SOIL EROSION AND SEDIMENT CONTROL, DEP BULLETIN 34, UNLESS OTHERWISE SPECIFIED IN THE TECHNICAL SPECIFICATIONS.
6. THE CONTRACTOR SHALL SUBMIT A DETAILED SCHEDULE WITH A STAGING PLAN AND SEDIMENT AND EROSION CONTROL PLAN FOR APPROVAL PRIOR TO COMMENCING CONSTRUCTION.
7. ALL DISTURBED AREAS THAT WILL NOT BE PAVED SHALL RECEIVE 4" OF TOPSOIL AND TURF ESTABLISHMENT.
8. THE CONTRACTOR SHALL WALK THE PROJECT PRIOR TO CONSTRUCTION WITH A REPRESENTATIVE FROM THE CITY AND THE ENGINEER. TREES TO BE REMOVED SHALL BE MARKED IN THE FIELD. EXTREME CARE SHALL BE EXERCISED TO PROTECT ALL TREES NOT DESIGNATED FOR REMOVAL. NO TREES SHALL BE REMOVED UNTIL AUTHORIZATION IS GIVEN BY THE CITY. COST IS INCLUDED IN THE ITEM "CLEARING AND GRUBBING".
9. ANY PHYSICAL FEATURES DISTURBED BY THE CONTRACTOR SHALL BE REPLACED OR RECONSTRUCTED AS DIRECTED BY THE ENGINEER TO A CONDITION EQUAL TO OR BETTER THAN PRIOR TO CONSTRUCTION AT THE CONTRACTORS EXPENSE.
10. THE CONTRACTOR SHALL MAINTAIN ALL ROAD NAME SIGNS AS INDICATED ON THE PLANS AND SHALL MAINTAIN ALL TRAFFIC SIGNS AS NEEDED DURING CONSTRUCTION AND AS DIRECTED BY THE ENGINEER. COST IS INCLUDED IN THE ITEM "REMOVAL AND RELOCATION OF EXISTING SIGNS".
11. THE UTILITY INFORMATION SHOWN ON THESE PLANS IS BASED ON LIMITED INVESTIGATIONS AND IS IN NO WAY WARRANTED TO INDICATE THE TRUE CONDITIONS OR ACTUAL QUANTITIES OF WORK REQUIRED. LOCATIONS OF EXISTING UTILITIES AND UNDERGROUND STRUCTURES HAVE BEEN COMPILED FROM THE BEST AVAILABLE INFORMATION. THIS INFORMATION WAS COMPILED UTILIZING UTILITY COMPANY & CITY RECORD MAPS AND FIELD SURVEY AND THEREFORE, IS CONSIDERED TO BE APPROXIMATE. ALL UTILITIES AND UNDERGROUND STRUCTURES MAY NOT BE SHOWN. THE CONTRACTOR SHALL BE SOLELY RESPONSIBLE FOR DETERMINING THE ACTUAL LOCATION OF ALL UTILITIES. THE CITY SHALL NOTIFY UTILITY COMPANIES OF NECESSARY RELOCATIONS. THE CONTRACTOR SHALL BE RESPONSIBLE FOR COORDINATING ALL WORK WITH THAT OF THE UTILITY COMPANIES. UTILITY LINES DAMAGED BY THE CONTRACTOR SHALL BE BROUGHT TO THE IMMEDIATE ATTENTION OF THE ENGINEER AND THE UTILITY COMPANY AND THE COST OF REPAIR WORK SHALL BE BORNE BY THE CONTRACTOR. THE CONTRACTOR SHALL CONTACT CALL BEFORE-U-DIG AT 1-800-922-4455 FOR MARKING OF EXISTING UTILITIES AT LEAST FORTY-EIGHT (48) HOURS IN ADVANCE OF EXCAVATION (MONDAY THROUGH FRIDAY, EXCLUDING HOLIDAYS).
12. IF TEST PITS ARE SHOWN ON THE PLANS AND/OR THERE IS A BID ITEM, THE CONTRACTOR SHALL PERFORM TEST PITS AS NECESSARY OR AS DIRECTED BY THE ENGINEER PRIOR TO THE START OF CONSTRUCTION TO CONFIRM THE LOCATION OF UTILITIES.
13. WATER, GAS, AND SANITARY SEWER SERVICE CONNECTION LOCATIONS ARE APPROXIMATE ONLY. THE ACTUAL LOCATION SHALL BE VERIFIED BY THE CONTRACTOR PRIOR TO CONSTRUCTION. ANY CONFLICTS SHALL BE BROUGHT TO THE ATTENTION OF THE ENGINEER. THE CONTRACTOR SHALL PERFORM THE REQUIRED SEWER RELOCATIONS AND COORDINATE ANY OTHER REQUIRED RELOCATIONS WITH THE RESPECTIVE UTILITY COMPANIES.
14. CONTRACTOR TO SUPPLY UTILITY COMPANIES WITH SUFFICIENT VERTICAL AND HORIZONTAL STAKEOUT OF PROPOSED STORM DRAINAGE, PROPOSED ROADWAY, AND OTHER PROPOSED IMPROVEMENTS TO PERFORM UTILITY RELOCATIONS. THE COST OF THIS WORK SHALL BE INCLUDED IN THE ITEM "CONSTRUCTION STAKING."
15. ANTICIPATED UTILITY POLE RELOCATIONS ARE EITHER SHOWN ON THE PLANS OR SHOWN ON INFORMATIONAL UTILITY PLAN SHEETS. ADDITIONAL POLE RELOCATIONS MAY BE REQUIRED. CONTRACTOR TO PROVIDE STAKEOUT OF PROPOSED IMPROVEMENTS PRIOR TO COMMENCEMENT OF WORK TO DETERMINE IF ADDITIONAL POLE RELOCATIONS ARE REQUIRED. POLE RELOCATIONS MAY NOT BE COMPLETED PRIOR TO THE INSTALLATION OF STORM DRAINAGE AND ROADWAY IMPROVEMENTS. THE COST OF THIS WORK SHALL BE INCIDENTAL TO THE PROJECT.
16. ALL REQUIRED UTILITY RELOCATIONS FOR GAS, CABLE & ELECTRIC FACILITIES SHALL BE PERFORMED BY THE RESPECTIVE UTILITY COMPANY UNLESS OTHERWISE SPECIFIED. THE CONTRACTOR SHALL CONTACT THE UTILITY COMPANIES PRIOR TO ANY WORK AND COORDINATE HIS WORK WITH THE UTILITY COMPANY WORK. THE CONTRACTOR SHALL COORDINATE WITH THE RESPECTIVE UTILITY COMPANY FOR THE UTILITY COMPANY TO HOLD ANY POLES THAT NEED TO BE SUPPORTED DURING THE CONTRACTOR'S TRENCHING OPERATIONS. THE COST TO COORDINATE THIS WORK WITH THE UTILITY COMPANIES SHALL BE INCIDENTAL TO THE PROJECT. THERE WILL BE NO COMPENSATION FOR DELAYS.
17. THE CONTRACTOR SHALL BE RESPONSIBLE TO COORDINATE WITH THE PRIVATE UTILITY COMPANIES (ELECTRIC AND CABLE) TO RESET ALL UTILITY MANHOLES TO FINISHED GRADE. THERE WILL BE NO SEPARATE PAYMENT TO COORDINATE THIS WORK OR CLAIM FOR TIME EXTENSION.
18. RESETTING SANITARY MANHOLES WILL BE PAID UNDER THE CONTRACT UNIT PRICE. HYDRANT REMOVALS, RELOCATIONS AND NEW INSTALLATIONS WILL BE PAID UNDER THE CONTRACT UNIT PRICE.
19. FOR LAYOUT PURPOSES, PIPE LENGTHS INDICATED ON THE PLANS ARE FROM CENTER OF CATCH BASIN/MANHOLE TO CENTER OF CATCH BASIN/MANHOLE, FACE OF ENDWALL OR OUTLET END OF FLARED END AND THE LENGTH OF THE FLARED END SECTION IS INCLUDED IN PIPE LENGTH. PAYMENT SHALL BE THE ACTUAL LENGTH INSTALLED MEASURED FROM THE INSIDE FACE OF THE STRUCTURE TO THE INSIDE FACE OF A STRUCTURE OR THE FACE OF AN ENDWALL AND SHALL NOT INCLUDE THE LENGTH OF THE CULVERT END. CULVERT ENDS ARE PAID SEPARATELY.
20. ALL TOP OF FRAME ELEVATIONS REFLECT THE ELEVATION WITH THE STANDARD DEPRESSION AS SHOWN ON "DETAILS OF DEPRESSED GUTTER STRIP" AND CTDOT STANDARD SHEETS HW-507_1, HW-507_2, AND HW-507_3 ENTITLED "TYPE "C", "C-L" DROP INLET CATCH BASINS", "TYPE "C", "C-L" DOUBLE GRATE TYPE I," AND "TYPE "C", "C-L" DOUBLE GRATE TYPE II." THE ELEVATION IS APPLIED AT THE FACE OF CURB. OFFSETS NOTED ON THESE PLANS ARE TO THE CENTERLINE OF THE CATCH BASIN STRUCTURE, NOT TO THE FACE OF CURB. THE CENTERLINE OF TYPE "C" CATCH BASINS (SINGLE GRATE AND DOUBLE GRATE TYPE II) ARE 10 ± INCHES IN FRONT OF THE FACE OF CURB. THE CENTERLINE OF TYPE "C" CATCH BASIN DOUBLE GRATE TYPE I STRUCTURES ARE 18 INCHES IN FRONT OF THE FACE OF CURB.
21. RCP SHALL BE CLASS IV UNLESS NOTED OTHERWISE. RCP PIPE WITH LESS THAN 2.O FEET OF COVER SHALL BE CLASS V. ALL RCP SHALL HAVE PREFORMED PLASTIC OR RUBBER-TYPE GASKETS. PVC PIPE SHALL BE SDR-35 AND INSTALLED IN A TYPE II INSTALLATION WITH BEDDING MATERIAL FROM 4" BELOW (IN EARTH, 12" IN ROCK) TO 12" ABOVE THE PIPE. DUCTILE IRON PIPE SHALL BE CLASS 52.
22. ALL EXISTING DRAINAGE PIPES AND CULVERTS WITHIN THE PROJECT SLOPE LIMITS THAT ARE DESIGNATED TO BE REMOVED SHALL BE REMOVED AND BACKFILLED AS SPECIFIED IN SECTION 2.05 "TRENCH EXCAVATION" UNLESS OTHERWISE SPECIFIED ON THE PLANS OR AS DIRECTED BY THE ENGINEER. COORDINATE THIS WORK WITH THE RECONNECTION OF ANY EXISTING FOUNDATION AND OTHER DRAINS TO THE PROPOSED DRAINAGE SYSTEM.
23. ALL TRENCHES SHALL BE BACKFILLED AND PAVED DAILY UNLESS OTHERWISE AUTHORIZED BY THE CITY.
24. FRAMES AND COVERS ON ABANDONED MANHOLES SHALL BE REMOVED AND SALVAGED. THEY SHALL BE STORED AND TRANSPORTED TO THE CITY YARD OR DISPOSED OF AS ORDERED BY THE ENGINEER. THERE WILL BE NO SEPARATE PAYMENT FOR THIS WORK.
25. ALL EXCAVATED MATERIALS, CONSTRUCTION EQUIPMENT AND NEW MATERIALS FOR THE WORK SHALL BE PLACED SO AS NOT TO INJURE THE WORK OR ENDANGER PERSONS AND TO ALLOW FREE ACCESS AT ALL TIMES TO ALL PARTS OF THE WORK INCLUDING PUBLIC UTILITY INSTALLATIONS. MATERIALS SHALL BE STORED AT LOCATIONS WHICH WILL CAUSE A MINIMUM OF INCONVENIENCE TO PUBLIC TRAVEL OR THE ADJOINING TENANTS AND MINIMUM DAMAGE TO GRASSED OR OTHERWISE IMPROVED AREAS. LOCATION OF ALL STORED MATERIALS IS SUBJECT TO APPROVAL OF THE ENGINEER AND OWNER.

STANDARD CONVENTIONS

EXISTING		PROPOSED
	APPROXIMATE LIMIT OF CUT SLOPE	
	APPROXIMATE LIMIT OF FILL SLOPE	
	APPROXIMATE PROPERTY LINE	
	APPROXIMATE STREET LINE	
	TAKING LINE	
	BASELINE STATION	0+00
bit	BITUMINOUS CONCRETE DRIVEWAY	
	BORING NUMBER B10 (SEE BORING LOG SHEET)	B9 approx. location; B-10 surveyed
	CATCH BASIN	
	CONTROL POINT	
conc	CONCRETE DRIVEWAY RAMP, FLARE & SLOPED SIDEWALK	
	CULVERT END	
	DRAINAGE DITCH	BOT. WIDTH & SIDE SLOPES
size & type	DRAINAGE PIPE	SIZE & TYPE
	EASEMENT LINE (PERMANENT)	
	EASMENT LINE (TEMPORARY)	
E	ELECTRIC LINE (UNDERGROUND)	
type X	FENCE (CHAIN LINK)	TYPE
type	FENCE (SPLIT RAIL)	TYPE
type	FENCE (STOCKADE)	TYPE
G	GAS LINE	
TP G1	GAS TEST PIT	
gv wv	GAS VALVE or WATER VALVE	wv
Number or Name	HOUSE/ STRUCTURE	
	HYDRANT	
FED WL CT WL	INLAND WETLAND LIMITS	
	MAILBOX	
S D	MANHOLE, SANITARY (S), DRAINAGE (D)	
mon	MONUMENT	MON
	NORTH ARROW	
OH	OVERHEAD TELEPHONE, CABLE AND/OR ELECTRIC	
	RETAINING WALL	
	RIPRAP APRON	
	SANITARY SERVICE CONNECTION	
size & type	SANITARY SEWER	SIZE & TYPE
	SEDIMENTATION CONTROL SYSTEM	
	SIGN	
x 33.2	SPOT ELEVATION	x 33.2
	STONE WALL	
T	TELEPHONE LINE (UNDERGROUND)	
	TREE	
	TREE LINE	
Size & Type	UNDERDRAIN	SIZE & TYPE
	"U" SHAPED STONE DIKE	
number & owner	UTILITY POLE	
	WATER COURSE	
W	WATER LINE	
TP W15 M W7	WATER TEST PIT (TP) / MEASUREMENT AT VALVE (M)	

LIST OF ABBREVIATIONS

AGGR	AGGREGATE	NOM	NOMINAL
AH	AHEAD	NO	NUMBER
A	ALGEBRAIC DIFFERENCE IN GRADES	OF	OUTFALL
APPROX	APPROXIMATE	PERF	PERFORATED
ASPH	ASPHALT	PCPP	PERFORATED CORRUGATED POLYETHYLENE PIPE
BK	BACK	PLNTR	PLANTER
℄	BASELINE	POB	POINT OF BEGINNING
BM	BENCHMARK	PCC	POINT OF COMPOUND CURVATURE
BIT	BITUMINOUS	PC	POINT OF CURVATURE
BCLC	BITUMINOUS CONCRETE LIP CURBING	POE	POINT OF ENDING
BC	BOTTOM OF CURB	PGA	POINT OF GRADE APPLICATION
CGR	CABLE GUIDERAIL	PI	POINT OF INTERSECTION
CI / CIP	CAST IRON PIPE	PRC	POINT OF REVERSE CURVE
CB	CATCH BASIN	PT	POINT OF TANGENCY
℄	CENTERLINE	PVC	POINT OF VERTICAL CURVATURE
CC	CONCRETE CURBING	PVCC	POINT OF VERTICAL COMPOUND CURVATURE
CL	CLASS	PVI	POINT OF VERTICAL INTERSECTION
CO	CONDUIT	PVRC	POINT OF VERTICAL REVERSE CURVATURE
CONC	CONCRETE	PVT	POINT OF VERTICAL TANGENCY
CP	CONTROL POINT	POC	POINT ON CURVE
COR	CORNER	POT	POINT ON TANGENT
CMP	CORRUGATED METAL PIPE	PVC	POLYVINYL CHLORIDE PIPE
CPFE	CORRUGATED POLYETHYLENE FLARED END	℄	PROPERTY LINE
CPP	CORRUGATED POLYETHYLENE PIPE	R	RADIUS
CY	CUBIC YARD	RR	RAILROAD
DIA	DIAMETER	K	RATE OF VERTICAL CURVATURE
DBL	DOUBLE	REINF	REINFORCED
DRIVE	DRIVEWAY	RCCE	REINFORCED CONCRETE CULVERT END
DI / DIP	DUCTILE IRON PIPE	RCP	REINFORCED CONCRETE PIPE
EA	EACH	REQD	REQUIRED
ESMT	EASEMENT	RT	RIGHT
EOP	EDGE OF PAVEMENT	ROW	RIGHT OF WAY
EL / ELEV	ELEVATION	RSC	RIGID STEEL CONDUIT
EW	ENDWALL	RD	ROAD
EX / EXIST	EXISTING	SAN	SANITARY
FG	FINISHED GRADE	SS	SANITARY SEWER
FP	FLAGPOLE	SED	SEDIMENTATION
FE	FLARED END	SCB	SEDIMENT CONTROL BALES
FL	FLOW LINE	SCS	SEDIMENT CONTROL SYSTEM
FT	FOOT	SHLDR	SHOULDER
FND	FOUND	SF	SQUARE FOOT
FOUND	FOUNDATION	SY	SQUARE YARD
G	GAS	STD	STANDARD
GV	GAS VALVE	STA	STATION
GSC / GC	GRANITE STONE CURBING	SSD	STOPPING SIGHT DISTANCE
HP	HIGH POINT	ST	STREET
HORIZ	HORIZONTAL	SL	STREET LINE
HRS	HOURS	TBD	TO BE DETERMINED
HYD	HYDRANT	TC	TOP OF CURB
INV	INVERT	TF	TOP OF FRAME
IE	INVERT ELEVATION	TYP	TYPICAL
IP	IRON PIN	U'DRN	UNDERDRAIN
ISD	INTERSECTION SIGHT DISTANCE	VERT	VERTICAL
LT	LEFT	VC	VERTICAL CURVE
L	LENGTH	VF	VERTICAL FEET
LVC	LENGTH OF VERTICAL CURVE	VCP	VITRIFIED CLAY PIPE
LTP	LIGHT POLE	W	WATER
LF	LINEAR FEET	W/F	WOOD FRAME
LP	LOW POINT	WV	WATER VALVE
LS	LUMP SUM		
MB	MAILBOX		
MH	MANHOLE		
MAX	MAXIMUM		
MBR	METAL BEAM RAIL		
MCE	METAL CULVERT END		
MIN	MINIMUM		
MON	MONUMENT		
N/F	NOW OR FORMERLY		
NTS	NOT TO SCALE		

GENERAL NOTES, STANDARD CONVENTIONS, AND ABBREVIATIONS

CARDINAL ENGINEERING ASSOCIATES
3 Colony Street | Meriden, CT 06451 | 203-238-1969

DESIGNED BY: A. DOORNWEERD
DRAWN BY: D. ROULEAU
CHECKED BY: B. SKONIECZNY
DATE: 3/29/2019

PHASE VI STREETSCAPE
MYRTLE STREET/EAST MAIN STREET
STATE PROJECT No. L088-002
NEW BRITAIN, CONNECTICUT

REV.	DATE	DESCRIPTION	BY	APP'D

SCALE 1"=20'
JOB NO. 2261

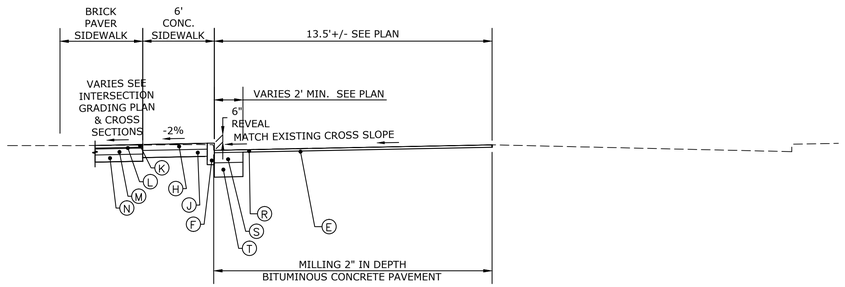

TYPICAL SECTION – HARRY TRUMAN OVERPASS

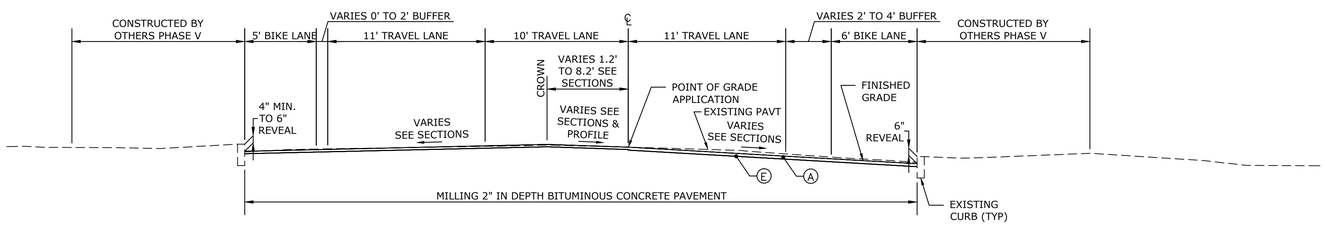

TYPICAL SECTION – MAIN STREET

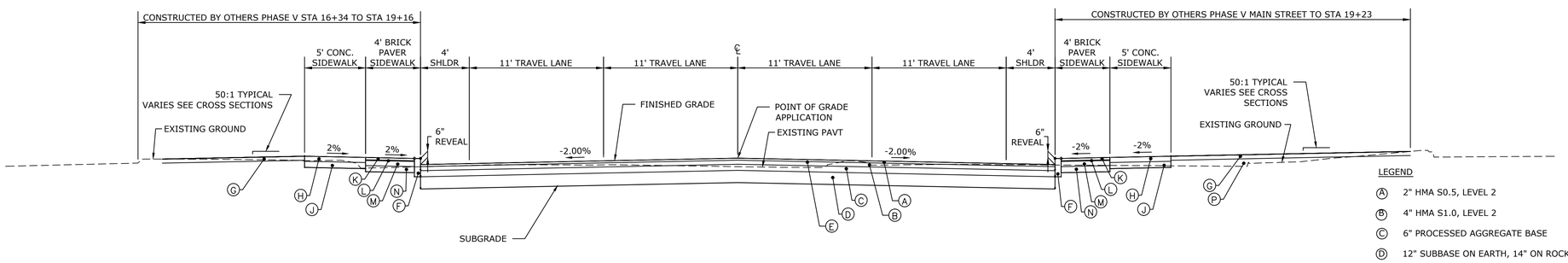

TYPICAL SECTION – EAST MAIN STREET

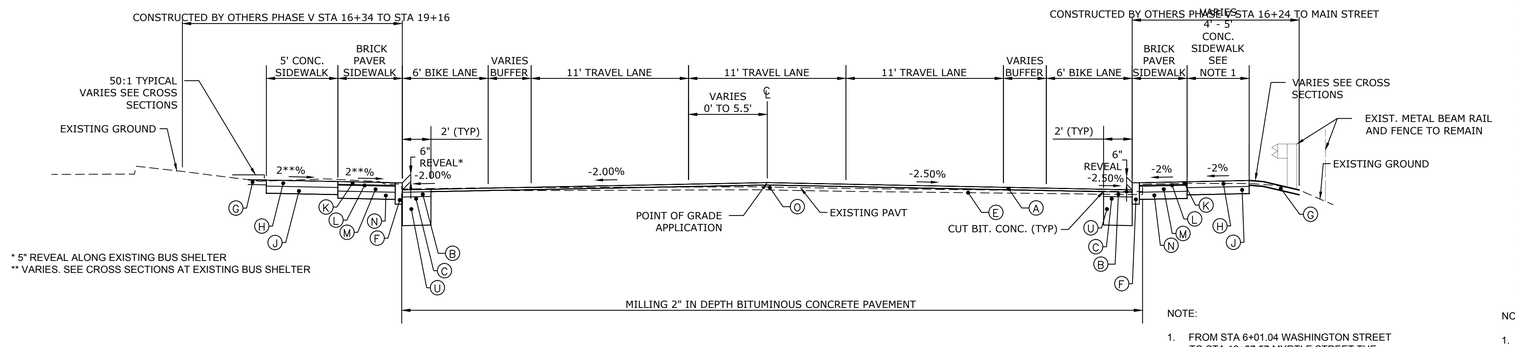

* 5" REVEAL ALONG EXISTING BUS SHELTER
** VARIES. SEE CROSS SECTIONS AT EXISTING BUS SHELTER

TYPICAL SECTION – MYRTLE STREET

NOTE:

1. FROM STA 6+01.04 WASHINGTON STREET TO STA 12+57.57 MYRTLE STREET THE CONCRETE SIDEWALK ABUTS THE EXISTING CONCRETE WALL.

LEGEND

- (A) 2" HMA S0.5, LEVEL 2
- (B) 4" HMA S1.0, LEVEL 2
- (C) 6" PROCESSED AGGREGATE BASE
- (D) 12" SUBBASE ON EARTH, 14" ON ROCK
- (E) MATERIAL FOR TACK COAT
- (F) GRANITE CURBING - SEE DETAILS SHEET 52
- (G) 4" TOPSOIL AND TURF ESTABLISHMENT. SEE NOTE 2.
- (H) 5" CONCRETE SIDEWALK (WHERE CALLED FOR ON PLANS)
- (J) 6" PROCESSED AGGREGATE BASE
- (K) 2 1/4" BRICK PAVERS
- (L) 3/4" COMPACTED BITUMINOUS SETTING BED
- (M) 5" CONCRETE BASE
- (N) 6" PROCESSED STONE BASE
- (O) WEDGE COURSE HMA S0.5, THICKNESS VARIES 0" - 4"
- (P) SUITABLE ON-SITE EXCAVATED MATERIAL. SEE NOTE 2.
- (R) 2" HMA S0.5 LEVEL 2
- (S) 6" HMA S1, LEVEL 2
- (T) 10" SUBBASE
- (U) 18" PROCESSED AGGREGATE BASE

NOTES:

1. SEE CROSS SECTIONS, PLANS, PROFILES AND INTERSECTION GRADING PLAN FOR ADDITIONAL INFORMATION ON ROAD WIDTHS AND CROSS SLOPES.
2. PLACE ADDITIONAL 4" OF TOPSOIL IN AREAS THAT WERE PREVIOUSLY COVERED BY IMPERVIOUS PAVEMENT/SIDEWALK.

TYPICAL SECTIONS

CARDINAL ENGINEERING ASSOCIATES
3 Colony Street | Meriden, CT 06451 | 203-238-1969

DESIGNED BY: A. DOORNWEERD
DRAWN BY: D. ROULEAU
CHECKED BY: B. SKONIECZNY
DATE: 4/10/2019

PHASE VI STREETSCAPE
MYRTLE STREET/EAST MAIN STREET
STATE PROJECT No. L088-002
NEW BRITAIN, CONNECTICUT

REV.	DATE	DESCRIPTION	BY	APP'D

SCALE 1"=5'
JOB NO. 2261
SHEET NO. 4

P:\Civil 3d Projects 2018\NewBritain EMainMyrtle\Production Drawings\EMainSIC3dExport.dwg, TYP SECTION, 4/10/2019 1:40:42 PM, GWS-Z-PDF.pc3, ANSI expand D (34.00 x 22.00 Inches)

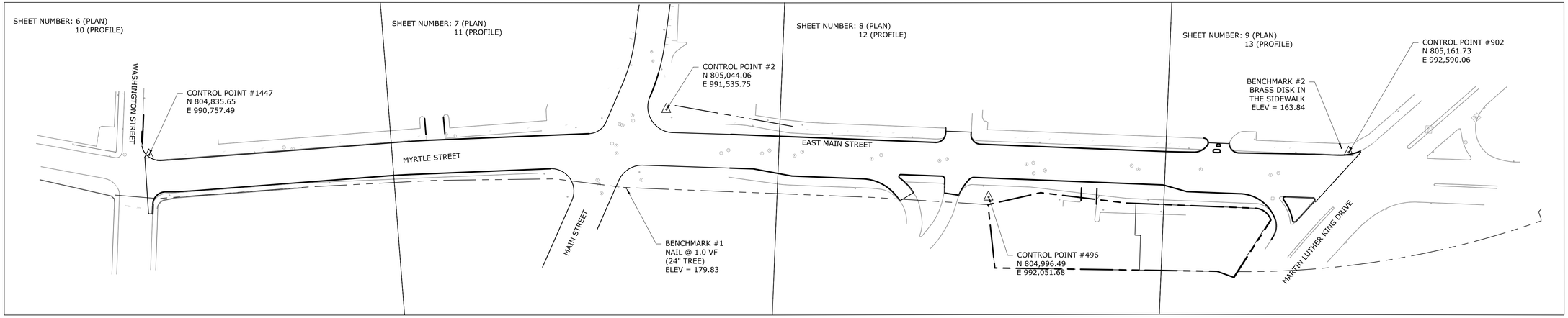

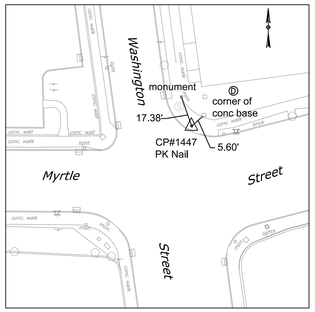

CONTROL POINT #1447
N 804,835.65
E 990,757.49

NOT TO SCALE

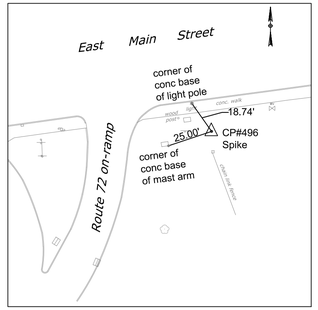

CONTROL POINT #496
N 804,996.49
E 992,051.68

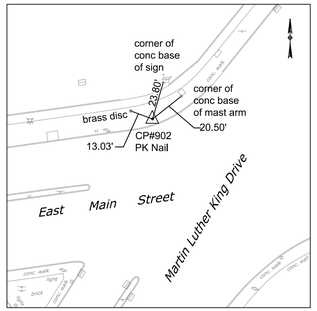

CONTROL POINT #902
N 805,161.73
E 992,590.06

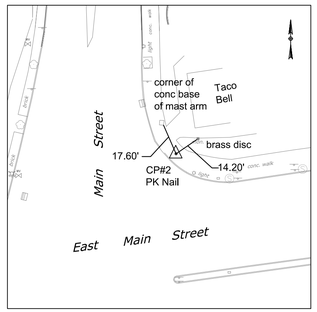

CONTROL POINT #2
N 805,044.06
E 991,535.75

INDEX AND SURVEY LAYOUT PLAN

CARDINAL ENGINEERING ASSOCIATES
3 Colony Street | Meriden, CT 06451 | 203-238-1969

DESIGNED BY: A. DOORNWEERD
DRAWN BY: D. ROULEAU
CHECKED BY: B. SKONIECZNY
DATE: 3/29/2019

PHASE VI STREETSCAPE
MYRTLE STREET/EAST MAIN STREET
STATE PROJECT No. L088-002
NEW BRITAIN, CONNECTICUT

REV.	DATE	DESCRIPTION	BY	APP'D
	4			

SCALE 1"=80'

JOB NO. 2261

SHEET NO. 5

Curve Table: Alignments					
Curve #	Radius	Length	Chord Direction	Start Point	End Point
C1	200.00	37.87	N84° 58' 56.56"E	(990735.39,804804.40)	(990773.07,804807.71)
C2	994.50	69.15	N77° 33' 56.05"E	(990804.83,804813.57)	(990872.35,804828.45)
C3	296.00	79.09	N5° 40' 13.58"E	(991486.00,805056.67)	(991493.79,805135.14)
C6	73.00	86.82	S63° 39' 36.08"E	(992432.55,805082.73)	(992505.85,805046.44)
C7	43.00	36.92	S4° 59' 19.30"E	(992505.85,805046.44)	(992508.96,805010.77)
C4	83.00	73.97	S72° 12' 02.88"E	(991851.60,805003.86)	(991919.72,804981.99)
C5	88.00	65.23	S25° 26' 03.83"E	(991919.72,804981.99)	(991947.10,804924.42)

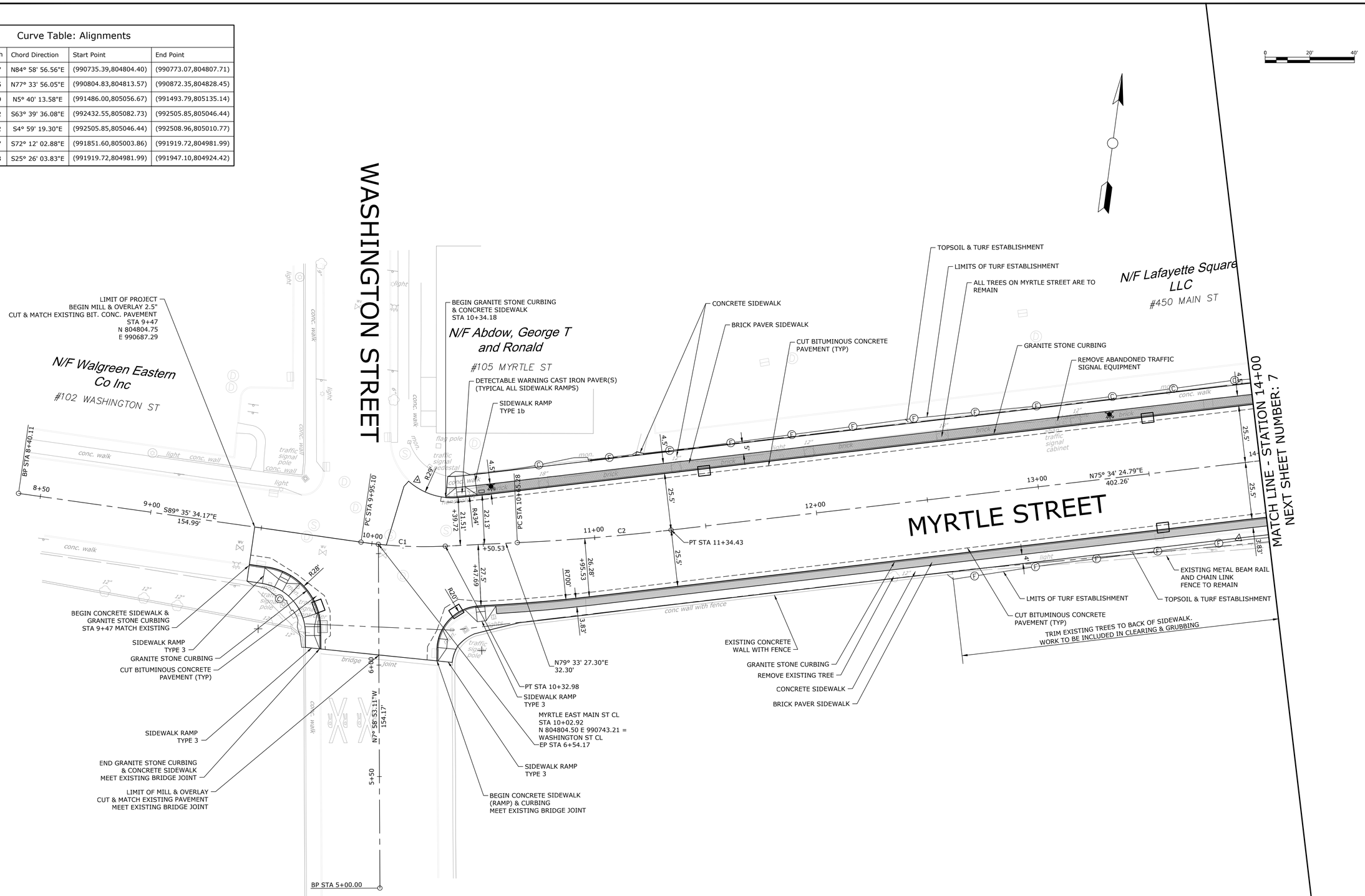

ROADWAY PLAN

CARDINAL ENGINEERING ASSOCIATES
3 Colony Street | Meriden, CT 06451 | 203-238-1969

DESIGNED BY: A. DOORNWEERD
DRAWN BY: D. ROULEAU
CHECKED BY: B. SKONIECZNY
DATE: 4/10/2019

PHASE VI STREETSCAPE
MYRTLE STREET/EAST MAIN STREET
STATE PROJECT No. L088-002
NEW BRITAIN, CONNECTICUT

REV.	DATE	DESCRIPTION	BY	APP'D

SCALE 1"=20'

JOB NO. 2261

SHEET NO. 6

P:\Civil 3d Projects\2261 Walgreen Expansion\Drawings\Site Drawings\Plan Sets\Phase VI - MYRTLE EAST MAIN ST CL - rd - 1(Using PLH & 2)(4)(2)(3) PNG
DWG To PDF.pc3 ARCH expand D (24.00 x 36.00 Inches)

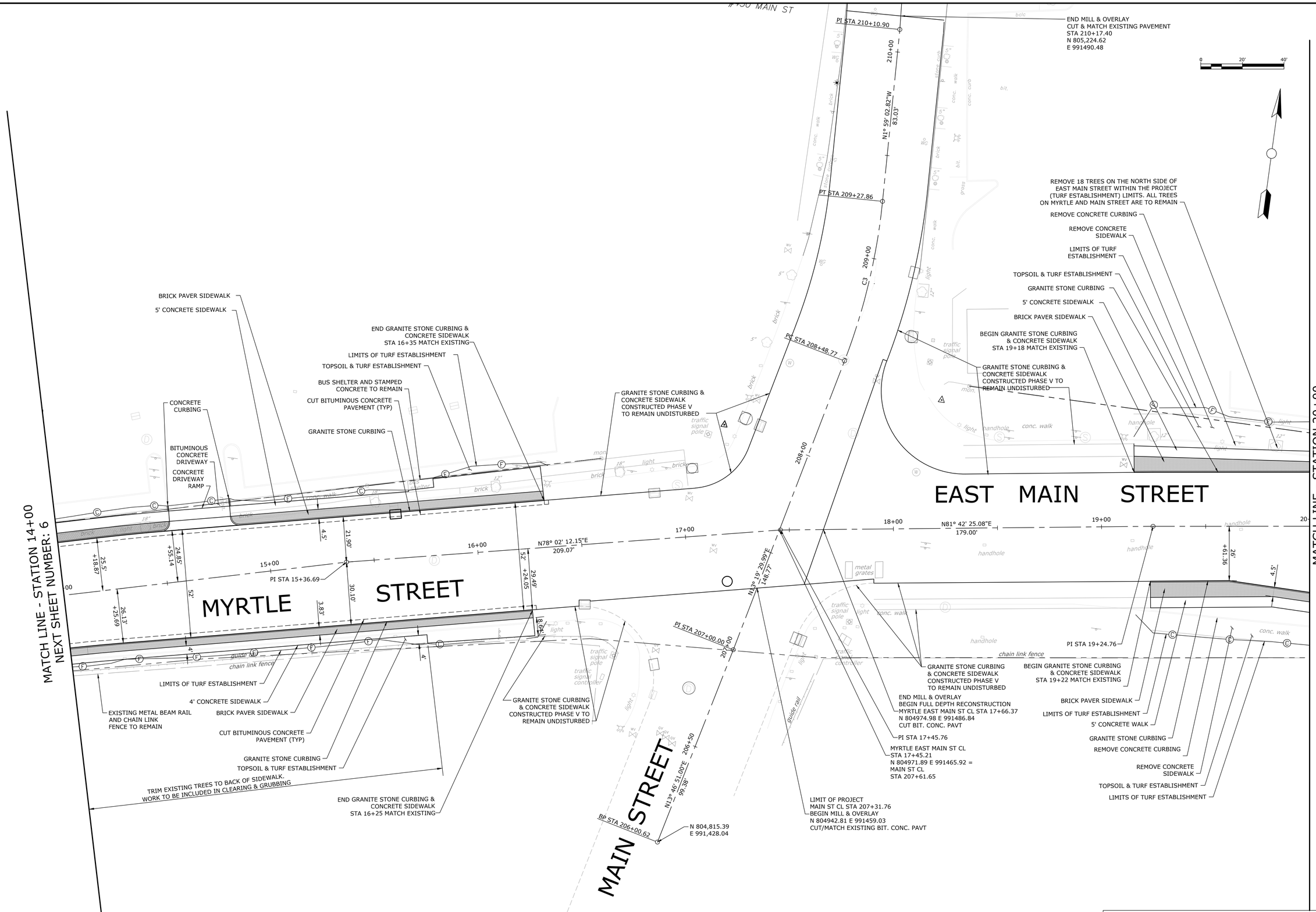

ROADWAY PLAN

CARDINAL ENGINEERING ASSOCIATES
3 Colony Street | Meriden, CT 06451 | 203-238-1969

DESIGNED BY: A. DOORNWEERD
DRAWN BY: D. ROULEAU
CHECKED BY: B. SKONIECZNY
DATE: 4/10/2019

PHASE VI STREETSCAPE
MYRTLE STREET/EAST MAIN STREET
STATE PROJECT No. L088-002
NEW BRITAIN, CONNECTICUT

REV.	DATE	DESCRIPTION	BY	APP'D

SCALE 1"=20'

JOB NO. 2261

SHEET NO. 7

Plotted by: Plotter, Alex Woodman Autodesk Vault Server: Autodesk Vault Project: C:\Autodesk Vault Projects\Projects\Myrtle East Main St L088-002 - Phase 6 Streetscape\Plot Styles\Plot Styles\DWG To PDF.pc3 Layout: 7 - Roadway Plan Date/Time: 4/10/2019 2:47:49 PM
DWG To PDF.pc3, ARCH expand D (24.00 x 36.00 Inches)

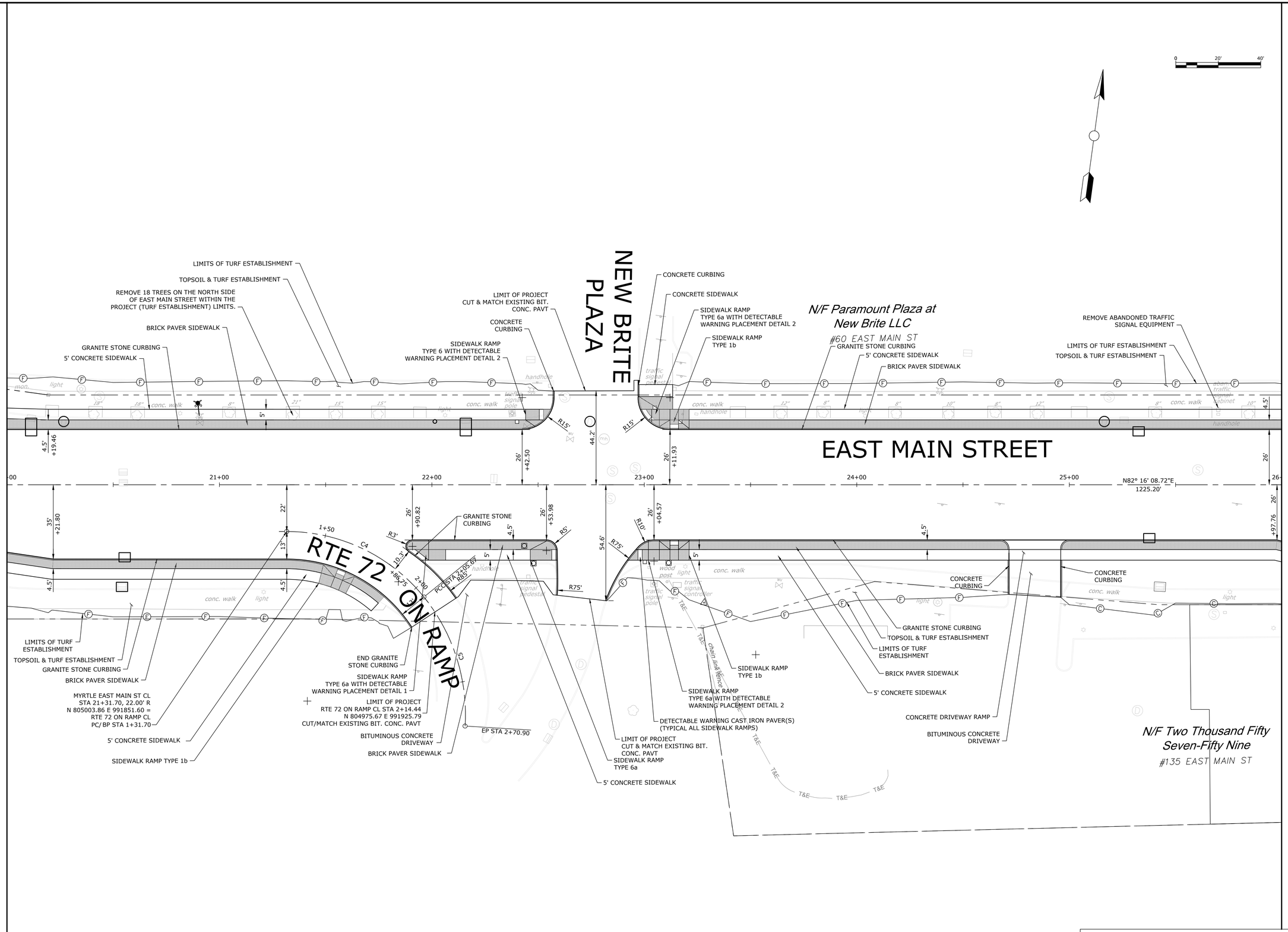

ROADWAY PLAN

CARDINAL ENGINEERING ASSOCIATES
3 Colony Street | Meriden, CT 06451 | 203-238-1969

DESIGNED BY: A. DOORNWEERD
DRAWN BY: D. ROULEAU
CHECKED BY: B. SKONIECZNY
DATE: 4/10/2019

PHASE VI STREETSCAPE
MYRTLE STREET/EAST MAIN STREET
STATE PROJECT No. L088-002
NEW BRITAIN, CONNECTICUT

REV.	DATE	DESCRIPTION	BY	APP'D

SCALE 1"=20'

JOB NO. 2261

SHEET NO. 8

P:\Acad-Projects-2018\Myrtle St Streetscape\Drawings\Base Drawings\Phase 6 Myrtle East Main St CL - Alt - (18).dwg, PLAN-8, 5/28/2019 2:28:37 PM,
DWG To PDF.pc3, ARCH expand D (24.00 x 36.00 Inches)

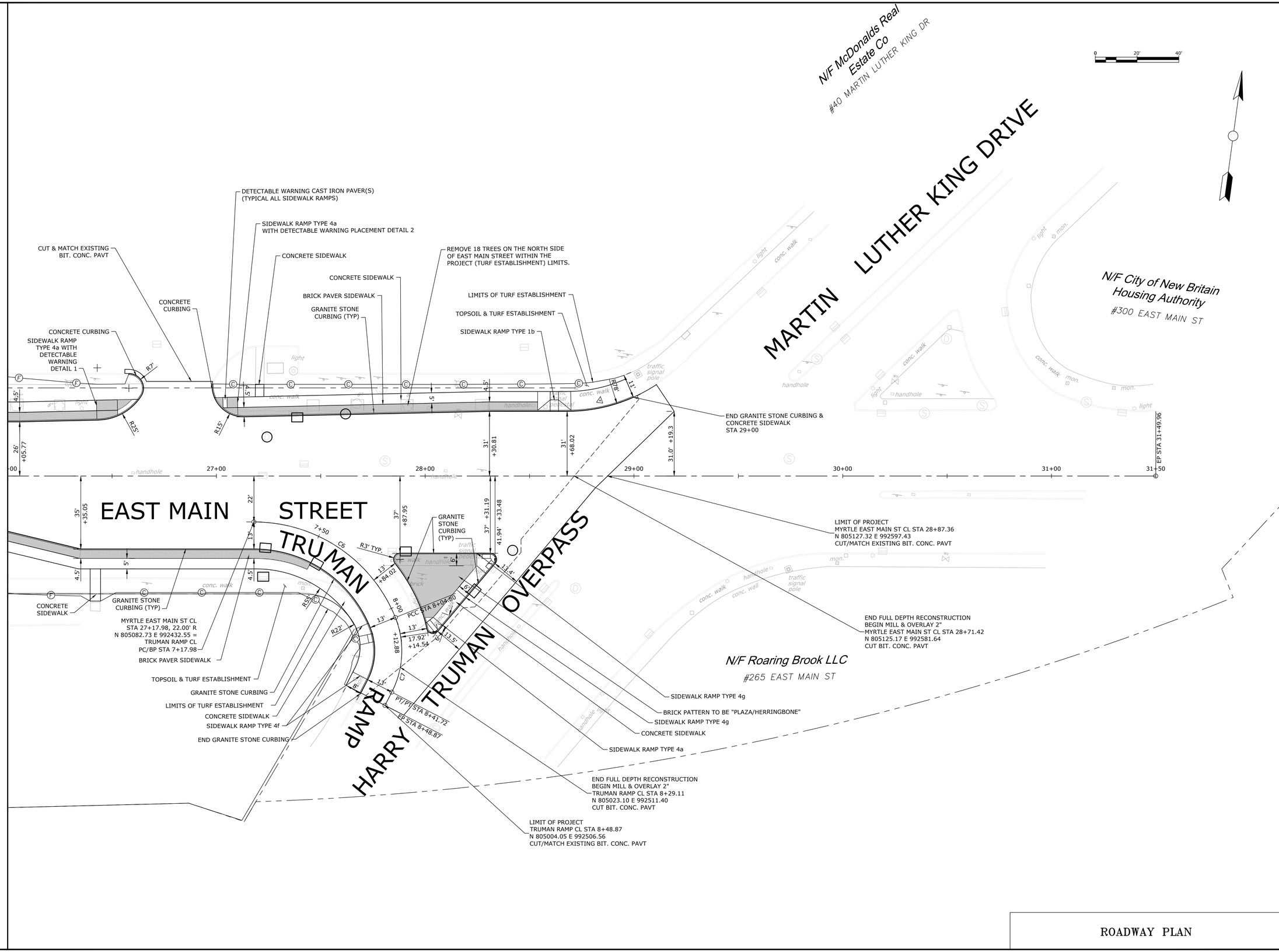

ROADWAY PLAN

CARDINAL ENGINEERING ASSOCIATES
3 Colony Street | Meriden, CT 06451 | 203-238-1969

DESIGNED BY: A. DOORNWEERD
DRAWN BY: D. ROULEAU
CHECKED BY: B. SKONIECZNY
DATE: 4/10/2019

PHASE VI STREETSCAPE
MYRTLE STREET/EAST MAIN STREET
STATE PROJECT No. L088-002
NEW BRITAIN, CONNECTICUT

REV.	DATE	DESCRIPTION	BY	APP'D

SCALE 1"=20'

JOB NO. 2261

SHEET NO. 9

P:\Civil 3d Projects\EastNewBrit\EastMainStSource\Drawings\Plan Sheets\Plan Sheets - MYRTLE EAST MAIN ST CL - (4) - (19).dwg, PLAN 4, 3/28/2019 2:59:19 PM,
DWG To PDF.pc3, ARCH expand D (24.00 x 36.00 Inches)

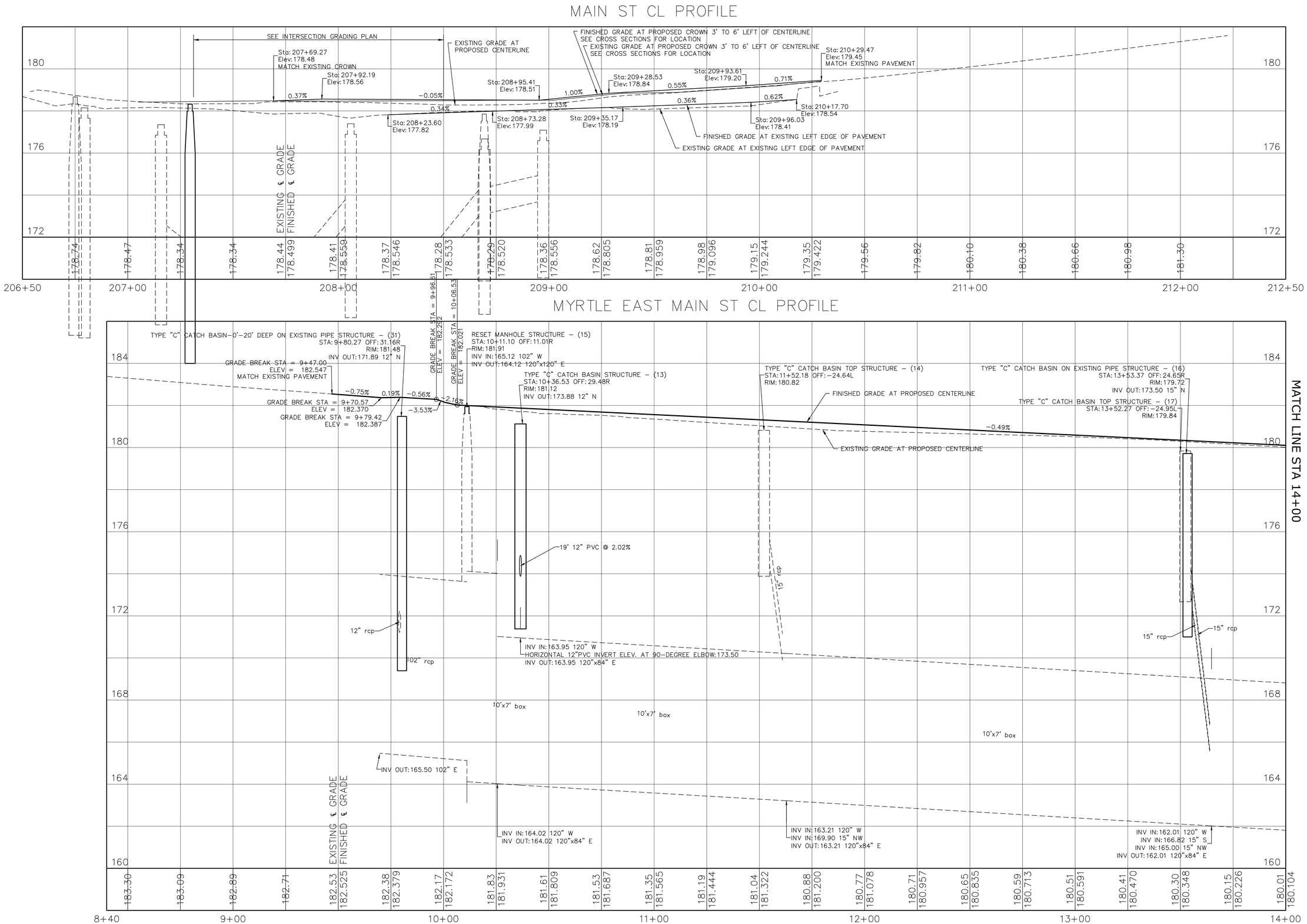

PROFILE

CARDINAL ENGINEERING ASSOCIATES
3 Colony Street | Meriden, CT 06451 | 203-238-1969

DESIGNED BY: A. DOORNWEERD
DRAWN BY: D. ROULEAU
CHECKED BY: B. SKONIECZNY
DATE: 3/29/2019

PHASE VI STREETSCAPE
MYRTLE STREET/EAST MAIN STREET
STATE PROJECT No. L088-002
NEW BRITAIN, CONNECTICUT

REV.	DATE	DESCRIPTION	BY	APP'D

SCALE
HOR. 1"=20'
VERT. 1"=2'
JOB NO. 2261

SHEET NO. 10

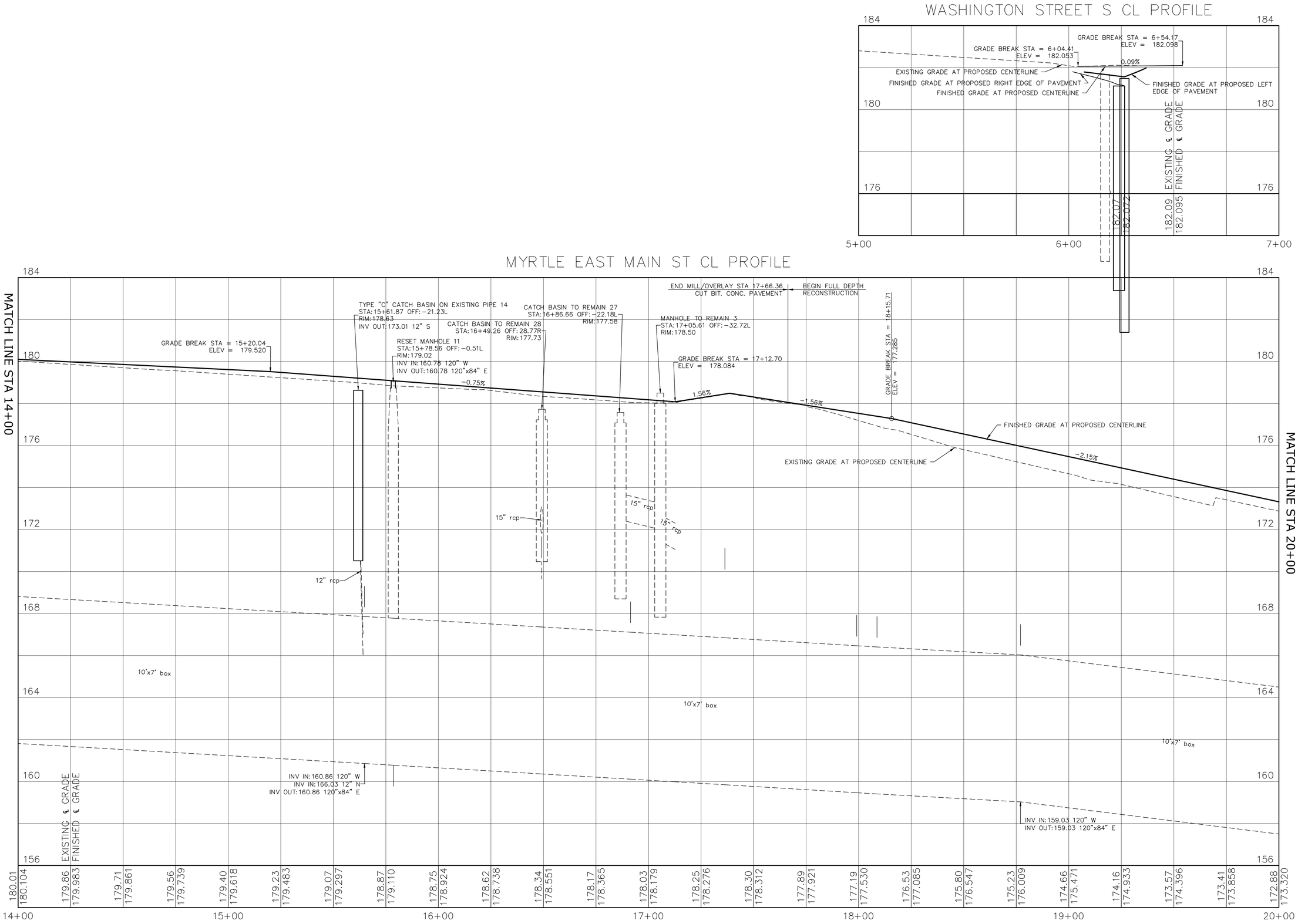

PROFILE

CARDINAL ENGINEERING ASSOCIATES
3 Colony Street | Meriden, CT 06451 | 203-238-1969

DESIGNED BY: A. DOORNWEERD
DRAWN BY: D. ROULEAU
CHECKED BY: B. SKONIECZNY
DATE: 3/29/2019

PHASE VI STREETSCAPE
MYRTLE STREET/EAST MAIN STREET
STATE PROJECT No. L088-002
NEW BRITAIN, CONNECTICUT

REV.	DATE	DESCRIPTION	BY	APP'D

SCALE
HOR. 1"=20'
VERT. 1"=2'
JOB NO. 2261

SHEET NO. 11

MYRTLE EAST MAIN ST CL PROFILE

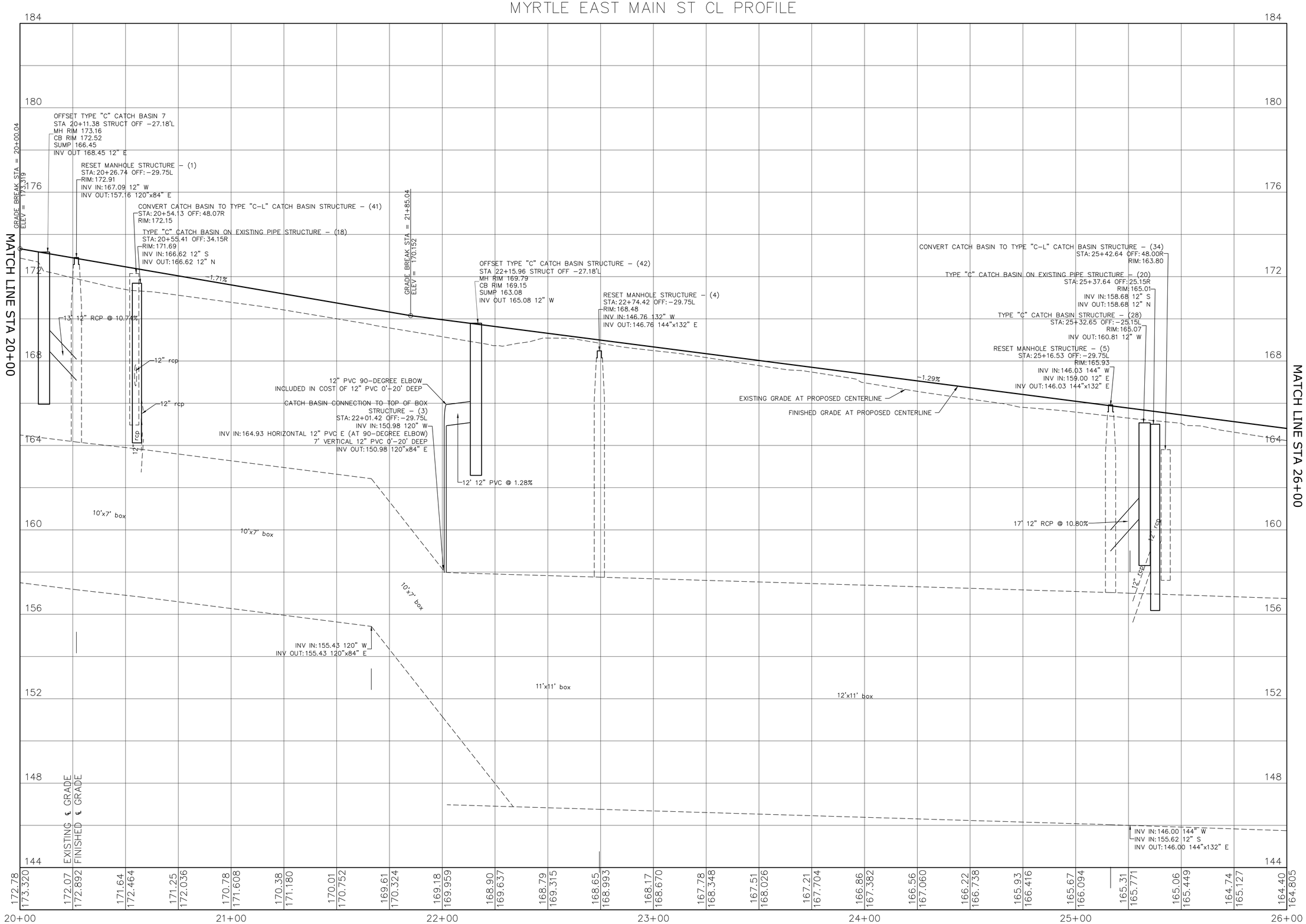

PROFILE

CARDINAL ENGINEERING ASSOCIATES
3 Colony Street | Meriden, CT06451 | 203-238-1969

DESIGNED BY: A. DOORNWEERD
DRAWN BY: D. ROULEAU
CHECKED BY: B. SKONIECZNY
DATE: 3/29/2019

PHASE VI STREETSCAPE
MYRTLE STREET/EAST MAIN STREET
STATE PROJECT No. L088-002
NEW BRITAIN, CONNECTICUT

REV.	DATE	DESCRIPTION	BY	APP'D

SCALE
HOR. 1"=20'
VERT. 1"=2'

JOB NO. 2261

SHEET NO. 12

RTE 72 ON RAMP CL PROFILE

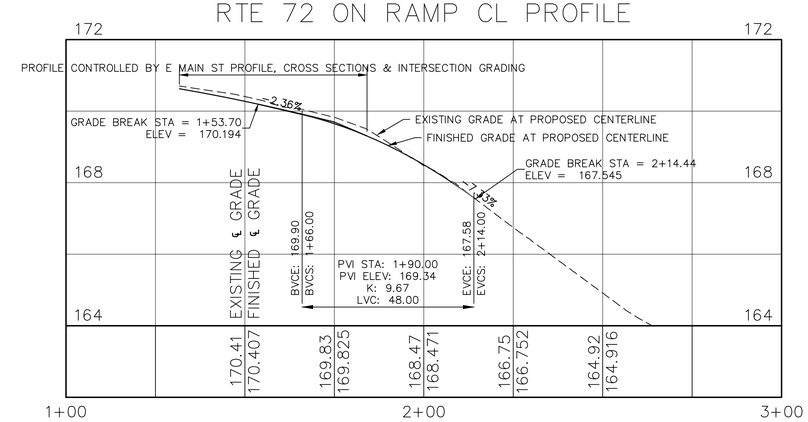

MYRTLE EAST MAIN ST CL PROFILE

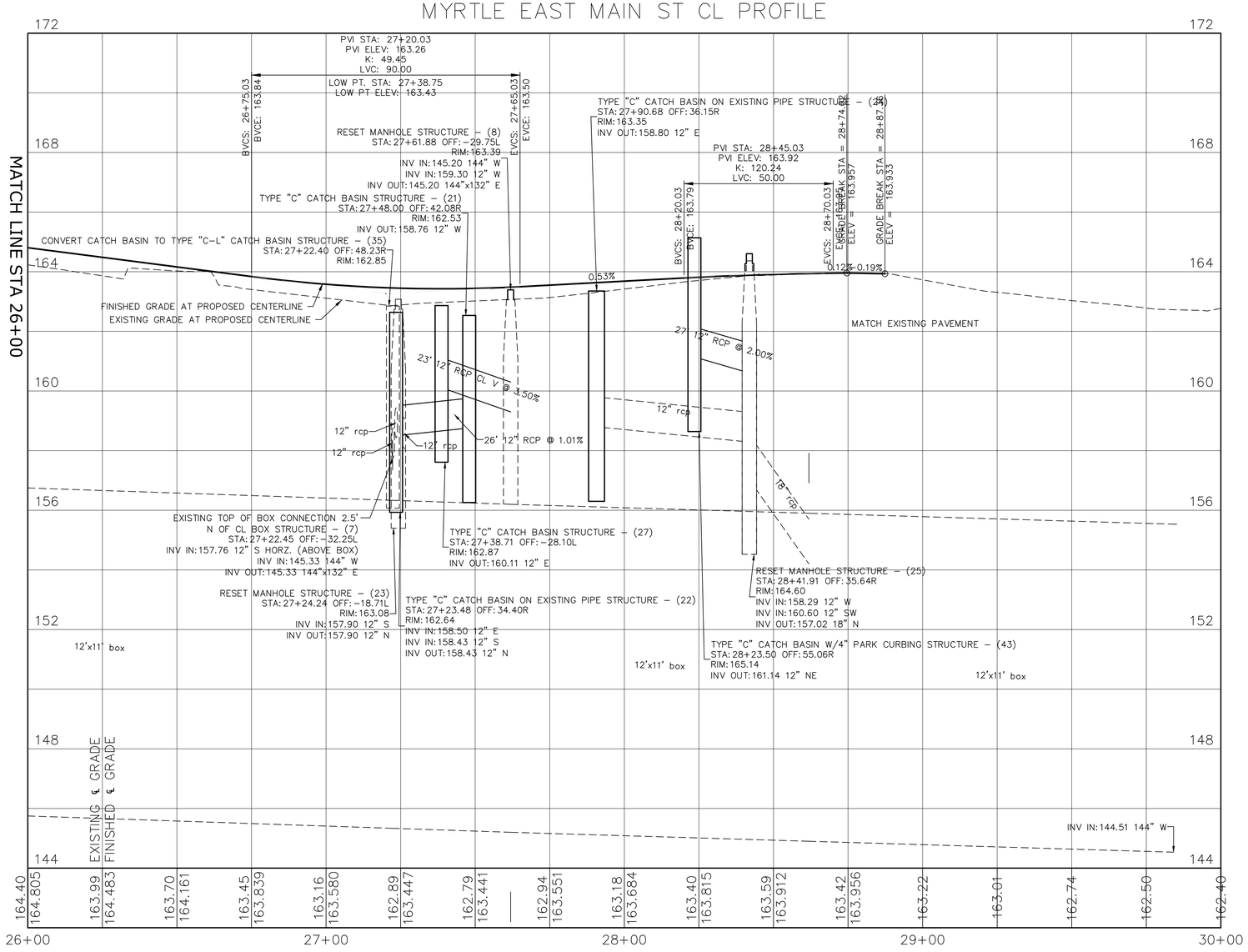

TRUMAN RAMP CL PROFILE

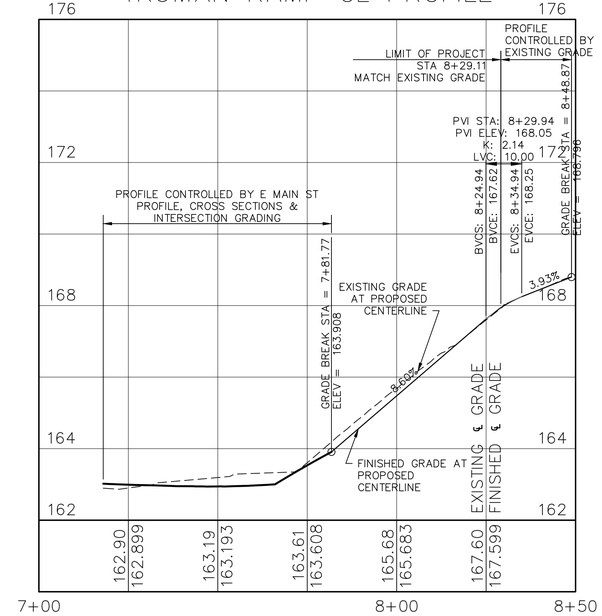

PROFILE

CARDINAL ENGINEERING ASSOCIATES
3 Colony Street | Meriden, CT 06451 | 203-238-1969

DESIGNED BY: A. DOORNWEERD
DRAWN BY: D. ROULEAU
CHECKED BY: B. SKONIECZNY
DATE: 3/29/2019

PHASE VI STREETSCAPE
MYRTLE STREET/EAST MAIN STREET
STATE PROJECT No. L088-002
NEW BRITAIN, CONNECTICUT

REV.	DATE	DESCRIPTION	BY	APP'D

SCALE
HOR. 1"=20'
VERT. 1"=2'
JOB NO. 2261

SHEET NO. 13

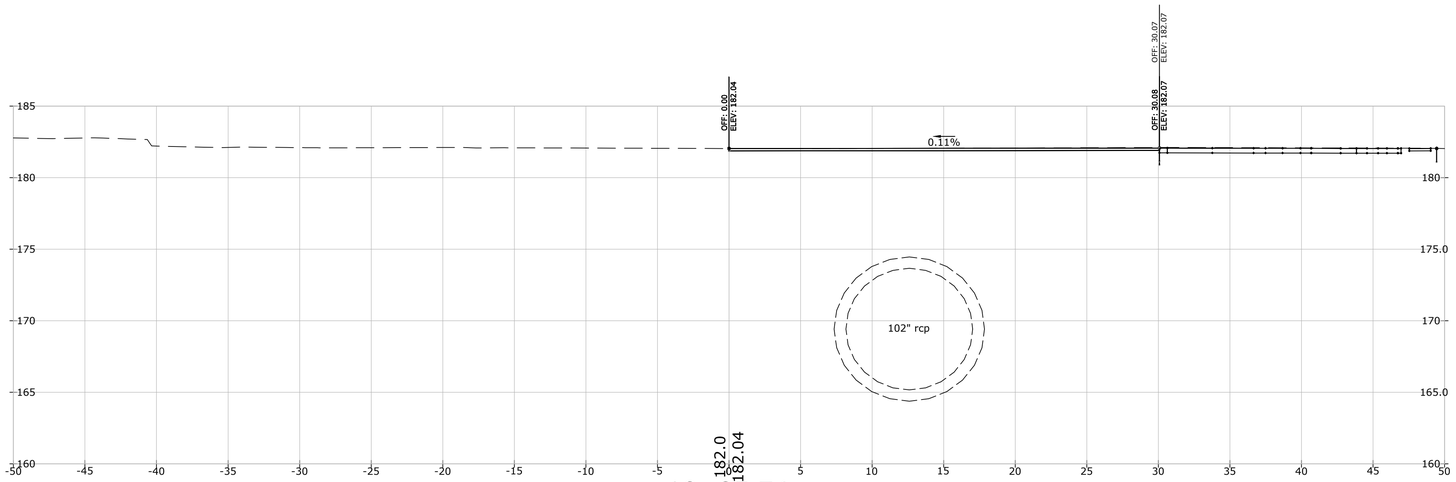

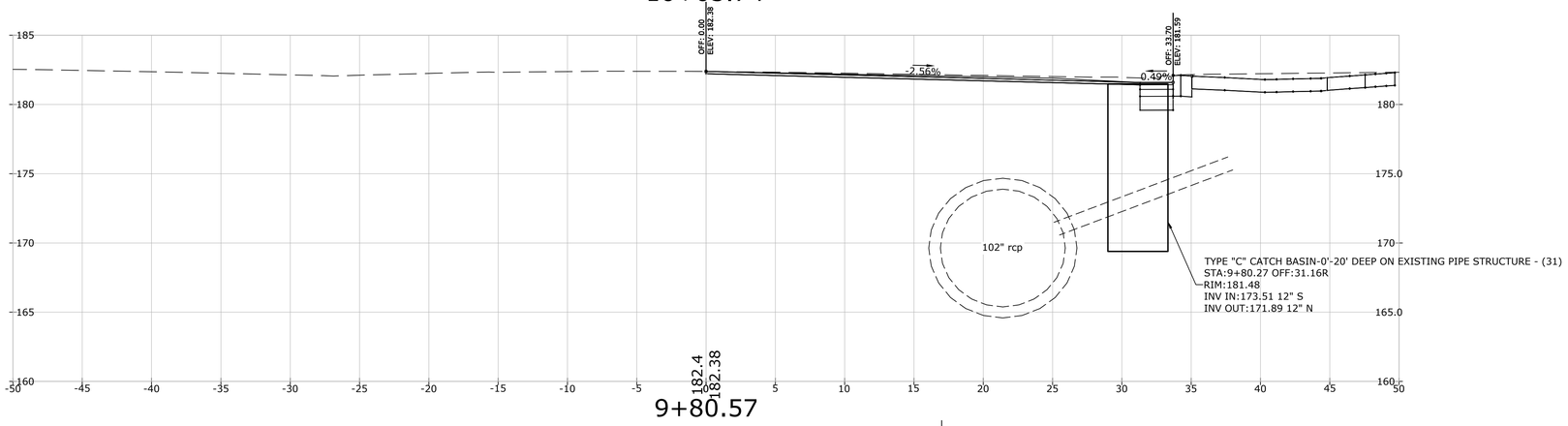

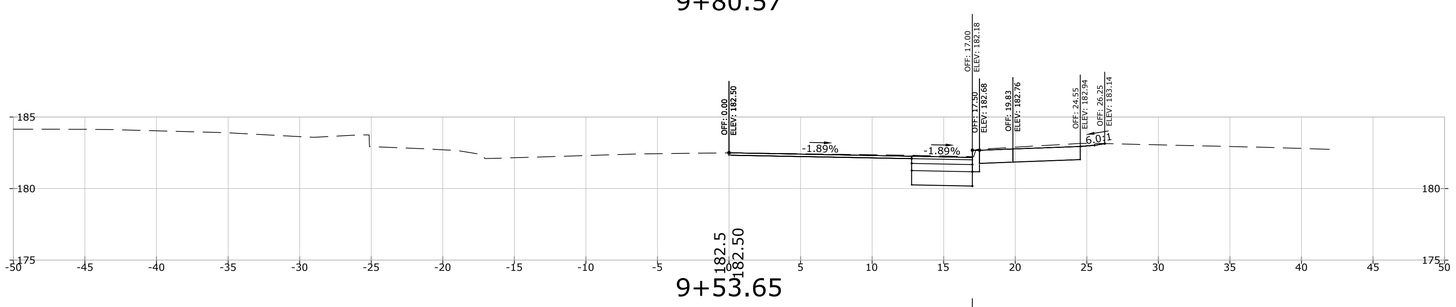

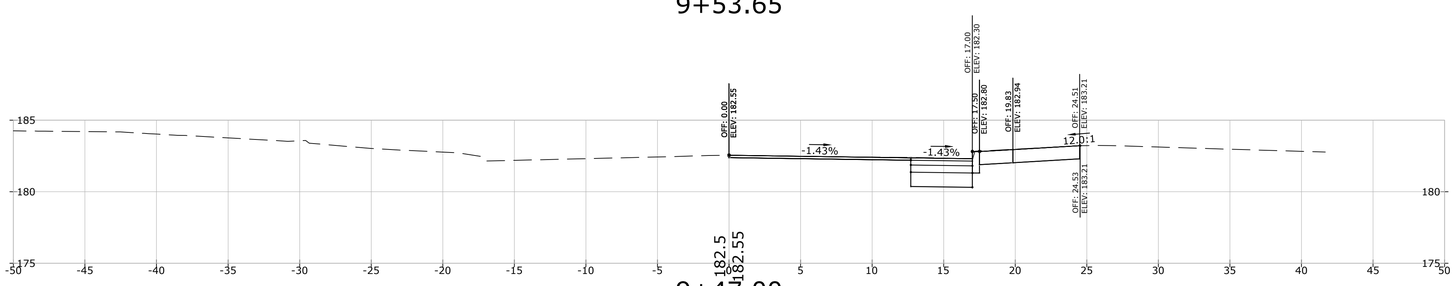

MYRTLE STREET

CROSS SECTIONS

CARDINAL ENGINEERING ASSOCIATES
3 Colony Street | Meriden, CT 06451 | 203-238-1969

DESIGNED BY: A. DOORNWEERD
DRAWN BY: D. ROULEAU
CHECKED BY: B. SKONIECZNY
DATE: 3/29/2019

PHASE VI STREETSCAPE
MYRTLE STREET/EAST MAIN STREET
STATE PROJECT No. L088-002
NEW BRITAIN, CONNECTICUT

REV.	DATE	DESCRIPTION	BY	APP'D

SCALE 1"=5'
JOB NO. 2261
SHEET NO. 14

P:\Civil 3d Projects 2014\NewBritain EMainMyrtle\Production Drawings\CrossSections226L.dwg, XSC 01, 4/1/2019 8:50:05 AM,
DWG To PDF.pc3, ARCH expand D (36.00 - 24.00 Inches)

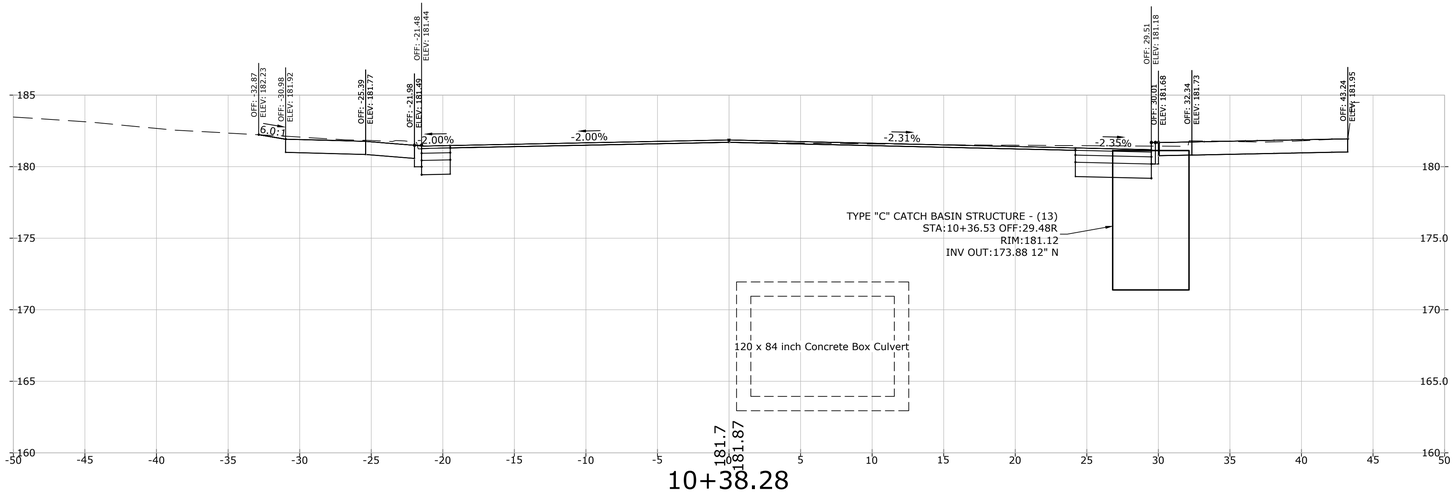

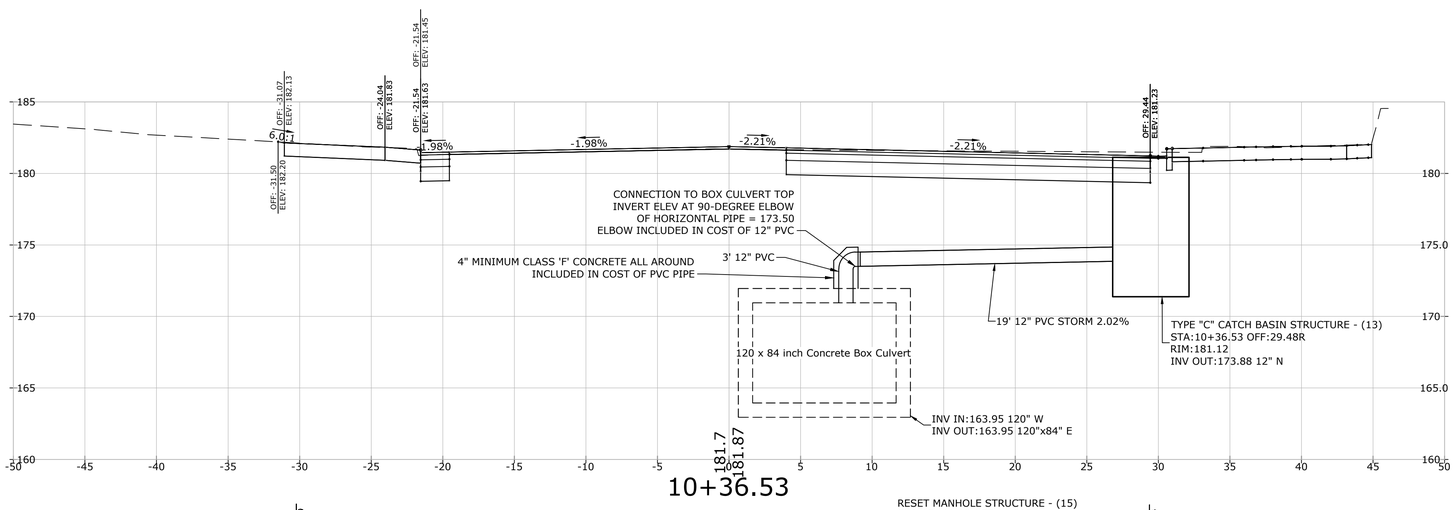

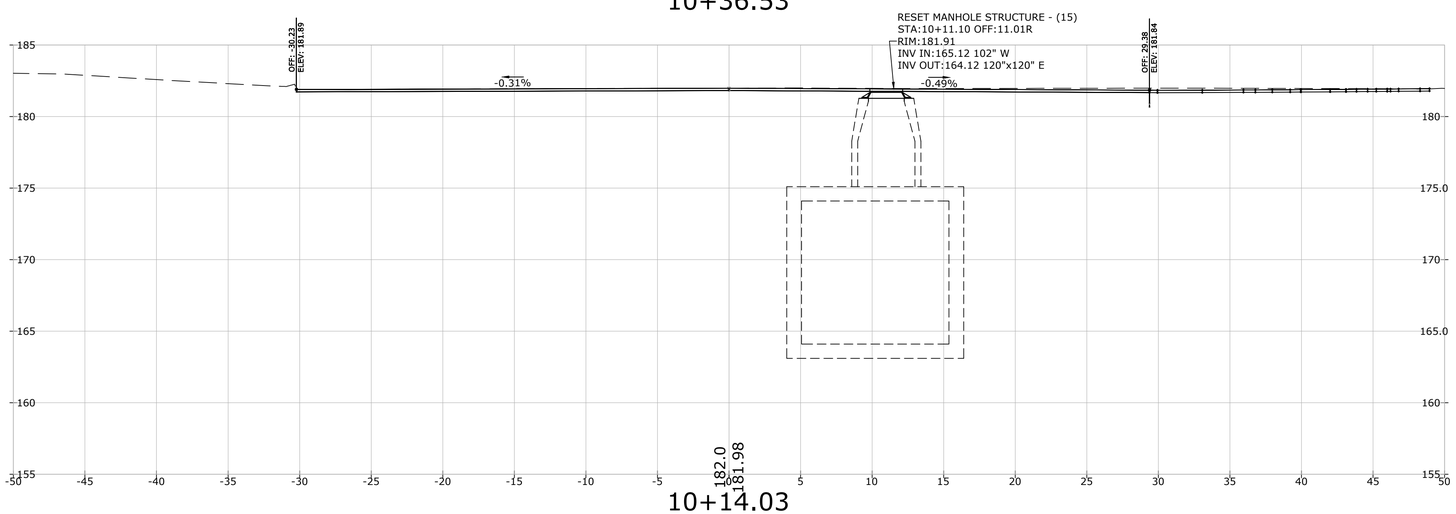

MYRTLE STREET

CROSS SECTIONS

CARDINAL ENGINEERING ASSOCIATES
3 Colony Street | Meriden, CT06451 | 203-238-1969

DESIGNED BY: A. DOORNWEERD
DRAWN BY: D. ROULEAU
CHECKED BY: B. SKONIECZNY
DATE: 3/29/2019

PHASE VI STREETSCAPE
MYRTLE STREET/EAST MAIN STREET
STATE PROJECT No. L088-002
NEW BRITAIN, CONNECTICUT

REV.	DATE	DESCRIPTION	BY	APP'D

SCALE 1"=5'

JOB NO. 2261

SHEET NO. 15

P:\Civil 3d Projects 2014\NewBritain EMainMyrtle\Production Drawings\CrossSections2261.dwg, XSC 02, 4/1/2019 8:50:19 AM,
DWG To PDF.pc3, ANSI expand D (22.00 x 34.00 Inches)

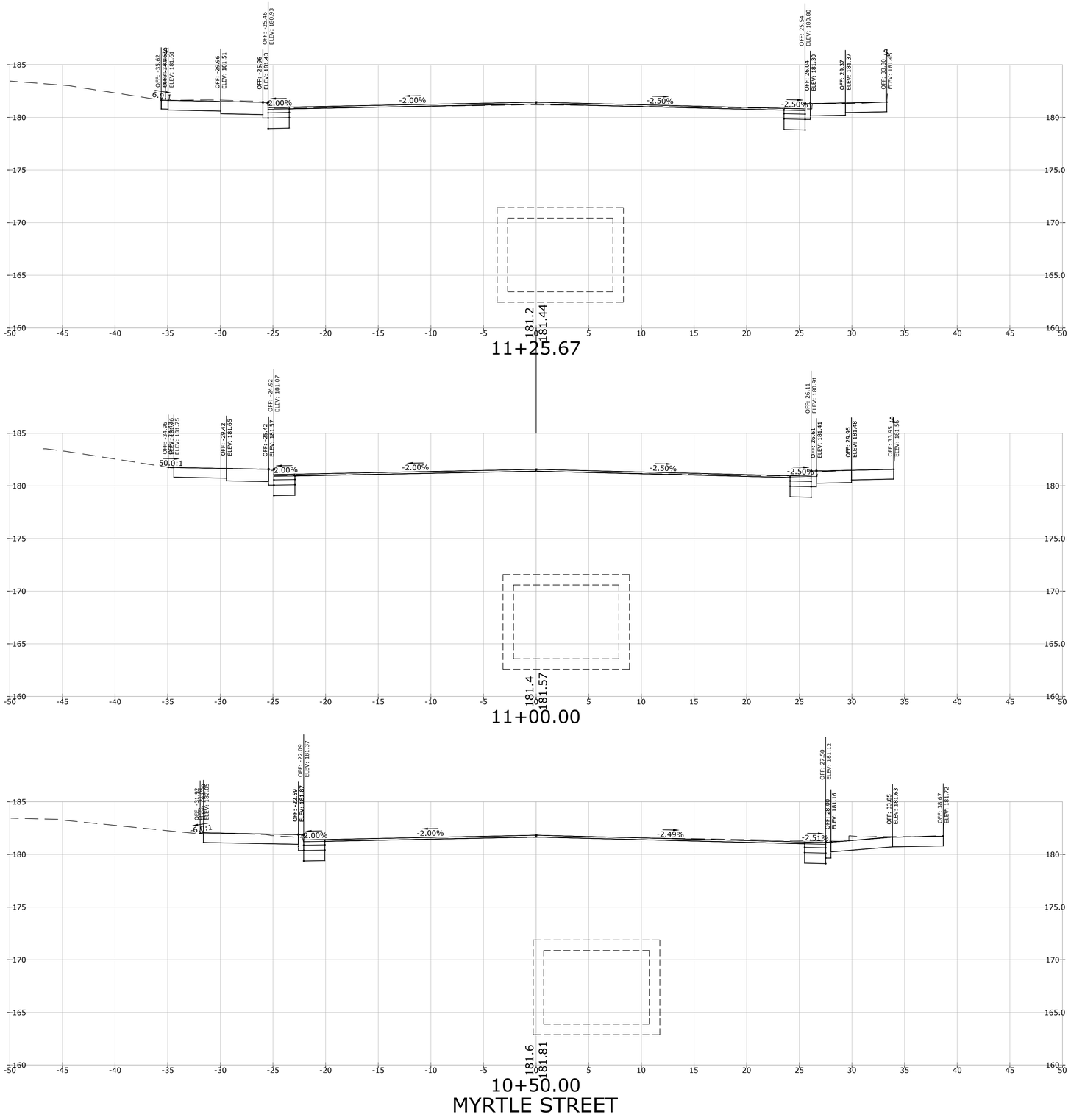

CROSS SECTIONS

CARDINAL ENGINEERING ASSOCIATES
3 Colony Street | Meriden, CT 06451 | 203-238-1969

DESIGNED BY: A. DOORNWEERD
DRAWN BY: D. ROULEAU
CHECKED BY: B. SKONIECZNY
DATE: 3/29/2019

PHASE VI STREETSCAPE
MYRTLE STREET/EAST MAIN STREET
STATE PROJECT No. L088-002
NEW BRITAIN, CONNECTICUT

REV.	DATE	DESCRIPTION	BY	APP'D

SCALE 1"=5'
JOB NO. 2261

SHEET NO. 16

P:\Civil 3d Projects 2014\NewBritain EMainMyrtle\Production Drawings\CrossSections2261.dwg, XSC 03, 4/1/2019 8:50:31 AM,

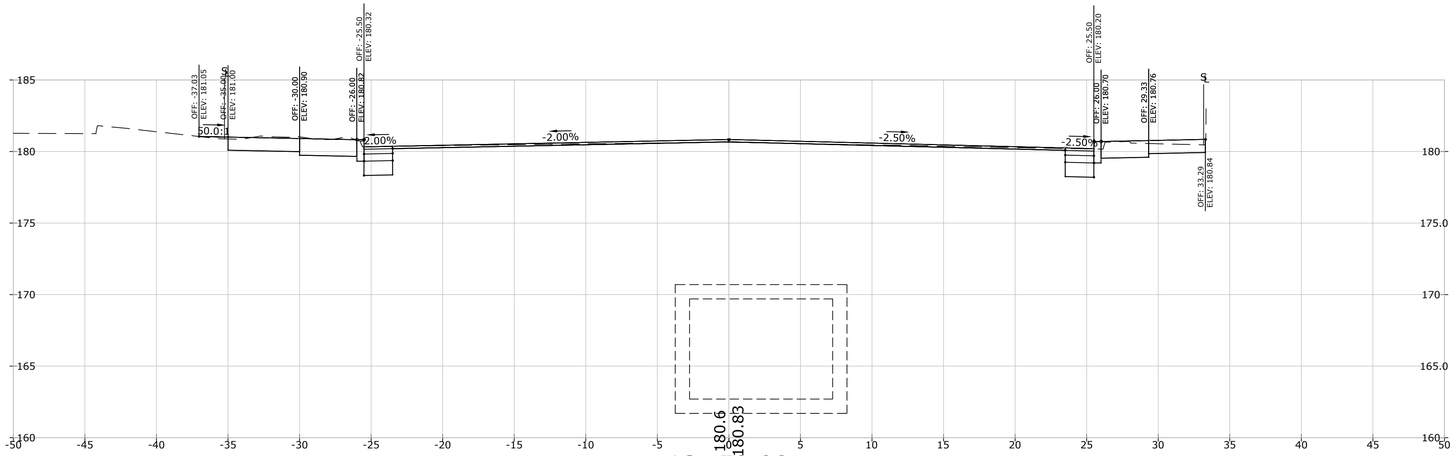

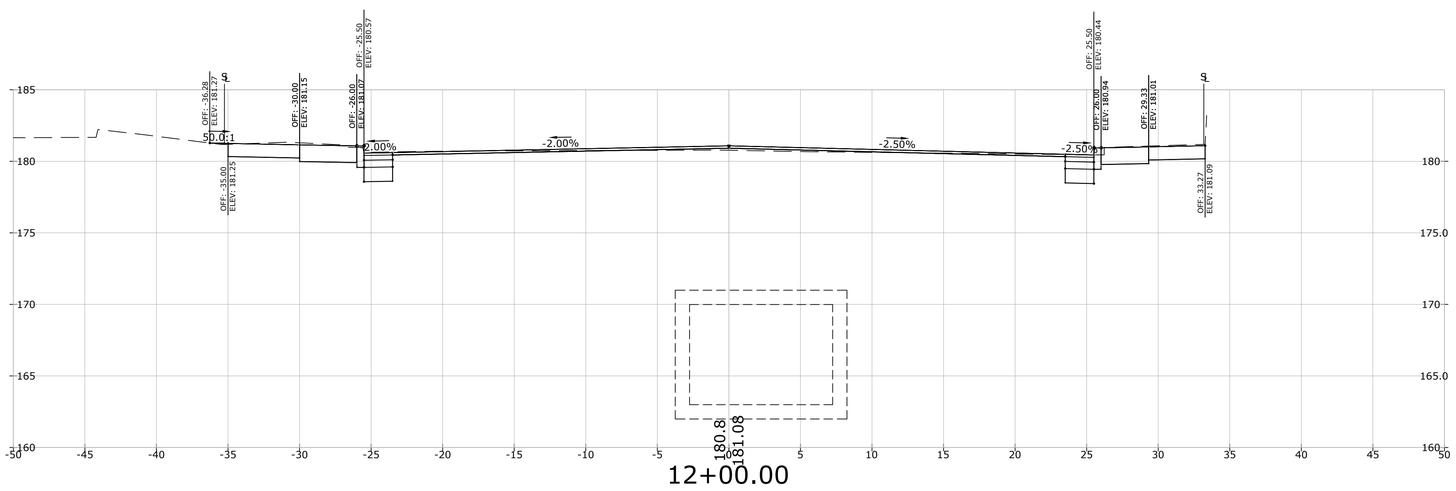

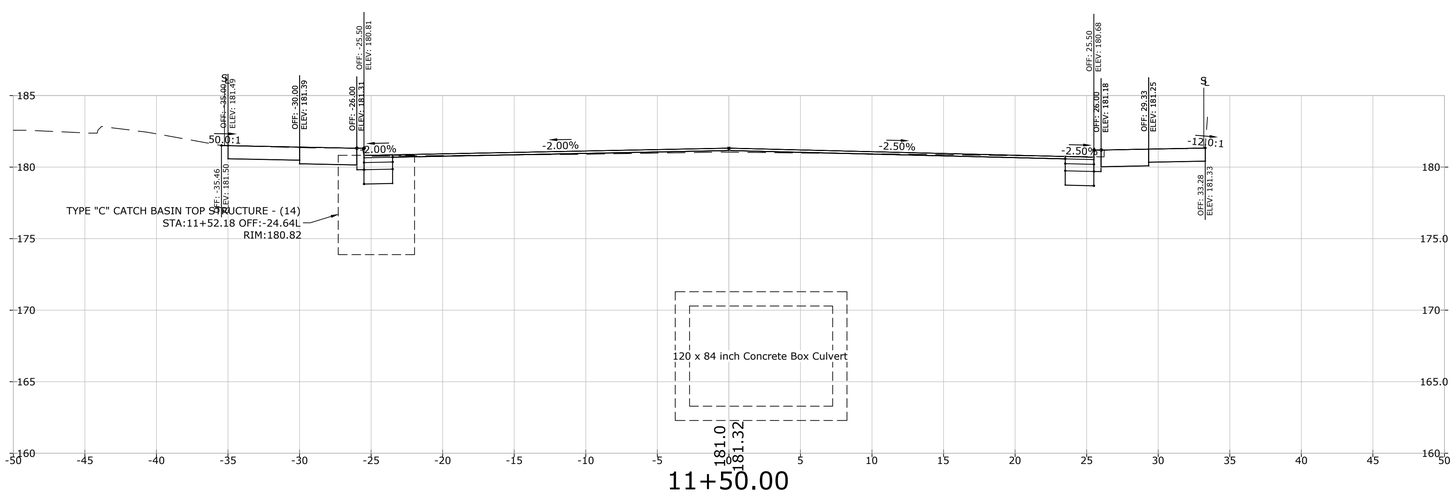

CROSS SECTIONS

CARDINAL ENGINEERING ASSOCIATES
3 Colony Street | Meriden, CT06451 | 203-238-1969

DESIGNED BY: A. DOORNWEERD
DRAWN BY: D. ROULEAU
CHECKED BY: B. SKONIECZNY
DATE: 3/29/2019

PHASE VI STREETSCAPE
MYRTLE STREET/EAST MAIN STREET
STATE PROJECT No. L088-002
NEW BRITAIN, CONNECTICUT

REV.	DATE	DESCRIPTION	BY	APP'D

SCALE 1"=5'
JOB NO. 2261
SHEET NO. 17

P:\Civil 3d Projects 2014\NewBritain EMainMyrtle\Production Drawings\CrossSections2261.dwg, XSC 04, 4/1/2019 8:50:44 AM,
DWG To PDF.pc3, ANSI expand D (34.00 - 22.00 Inches)

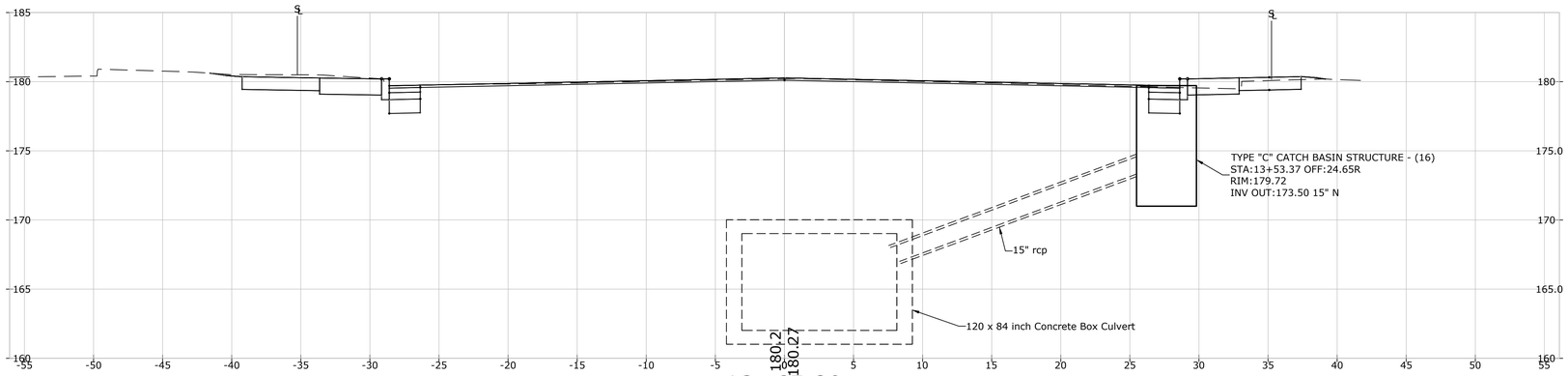

13+65.89
SKEWED SECTION FOLLOWING PIPE CENTERLINE

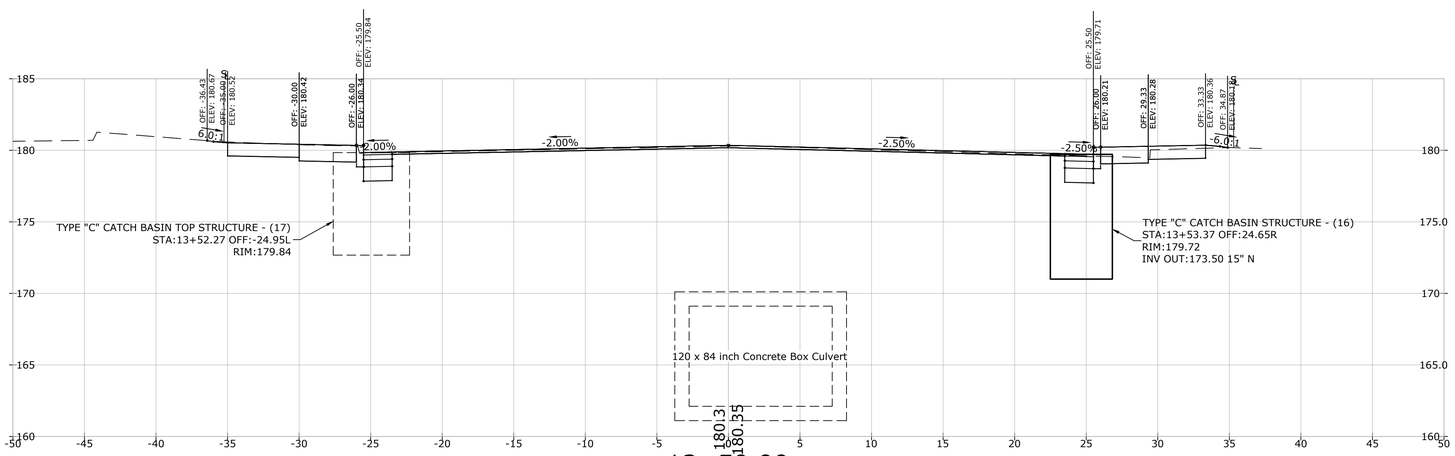

13+50.00

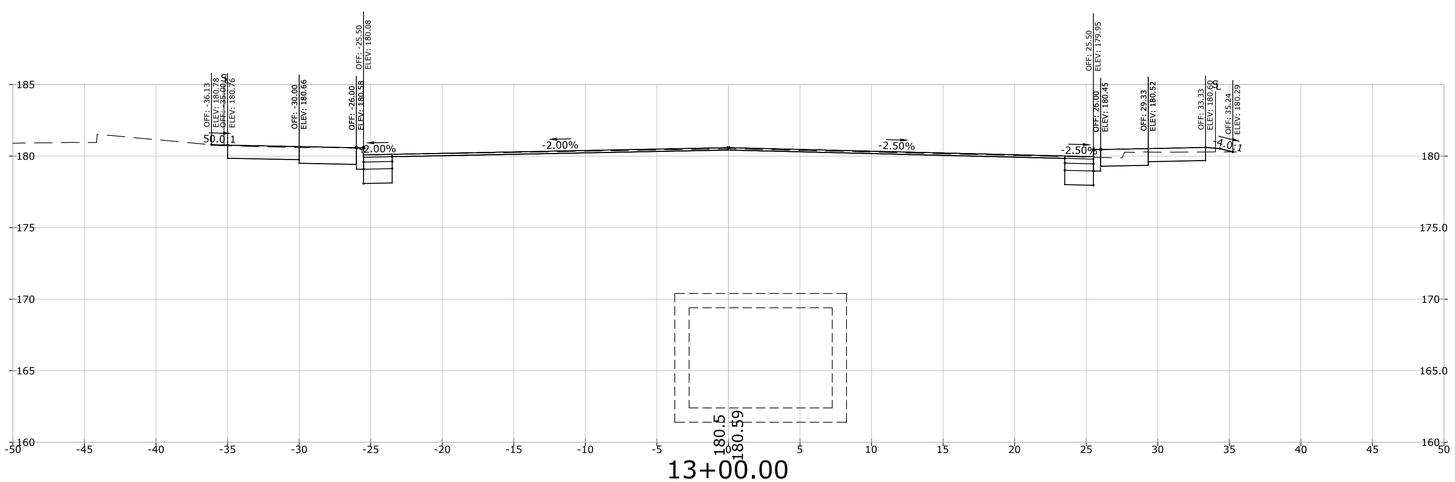

13+00.00
MYRTLE STREET

CROSS SECTIONS

CARDINAL ENGINEERING ASSOCIATES
3 Colony Street | Meriden, CT06451 | 203-238-1969

DESIGNED BY: A. DOORNWEERD
DRAWN BY: D. ROULEAU
CHECKED BY: B. SKONIECZNY
DATE: 3/29/2019

PHASE VI STREETSCAPE
MYRTLE STREET/EAST MAIN STREET
STATE PROJECT No. L088-002
NEW BRITAIN, CONNECTICUT

REV.	DATE	DESCRIPTION	BY	APP'D

SCALE 1"=5'
JOB NO. 2261
SHEET NO. 18

P:\Civil 3d Projects 2016\NewBritain EMainMyrtle\Production Drawings\CrossSections2261.dwg, XSC 05, 4/1/2019 8:50:56 AM, EWC3 - PDF.pc3, ANSI expand D (34.00 - 22.00 Inches)

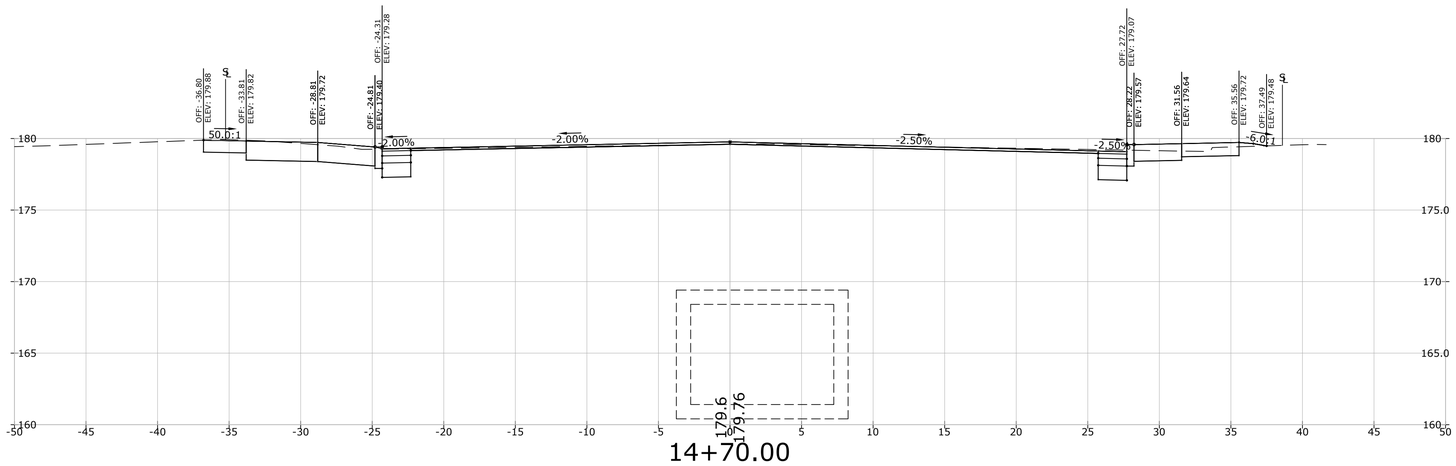

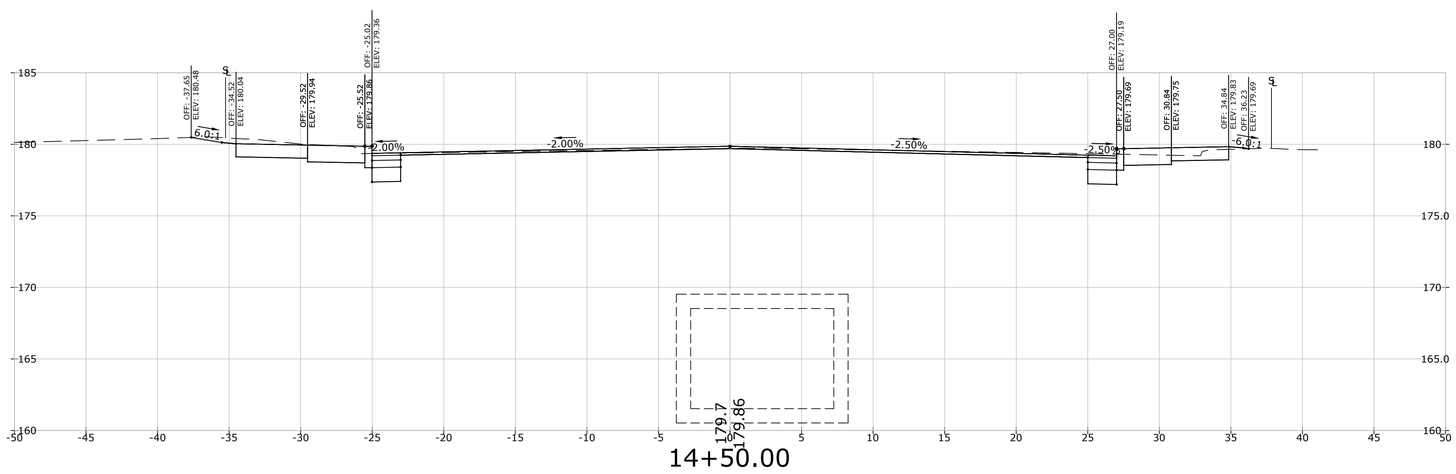

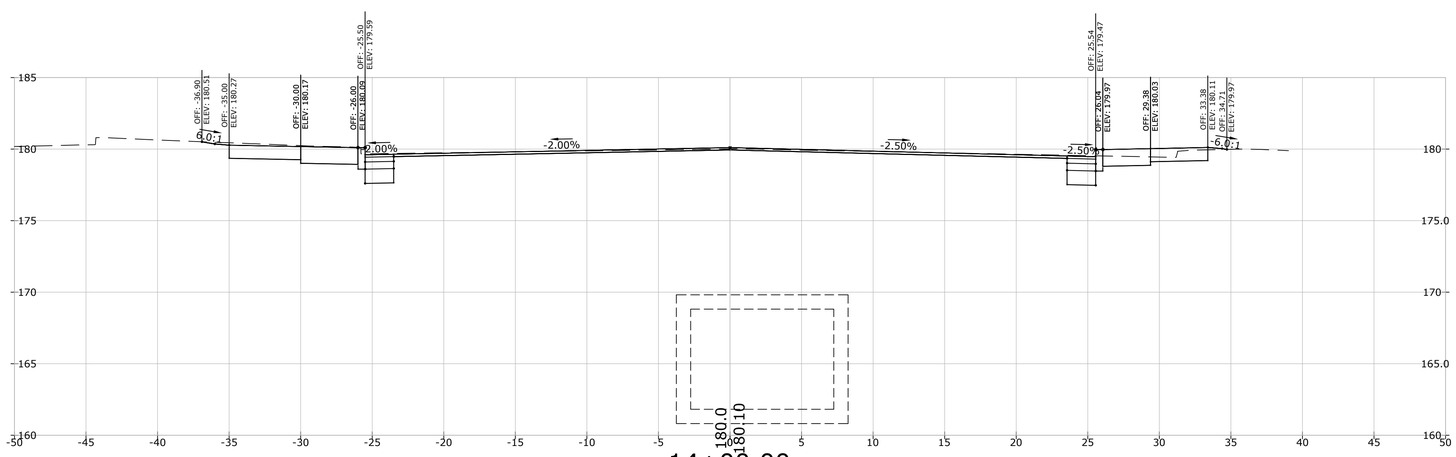

CROSS SECTIONS

CARDINAL
ENGINEERING ASSOCIATES
3 Colony Street | Meriden, CT06451 | 203-238-1969

DESIGNED BY: A. DOORNWEERD
DRAWN BY: D. ROULEAU
CHECKED BY: B. SKONIECZNY
DATE: 3/29/2019

PHASE VI STREETSCAPE
MYRTLE STREET/EAST MAIN STREET
STATE PROJECT No. L088-002
NEW BRITAIN, CONNECTICUT

REV.	DATE	DESCRIPTION	BY	APP'D

SCALE 1"=5'

JOB NO. 2261

SHEET NO. 19

P:\Civil 3d Projects 2014\NewBritain EMainMyrtle\Production Drawings\CrossSections2261.dwg, XSC 06, 4/1/2019 8:51:09 AM,
DWG To PDF.pc3, ARCH expand D (36.00 - 24.00) Inches)

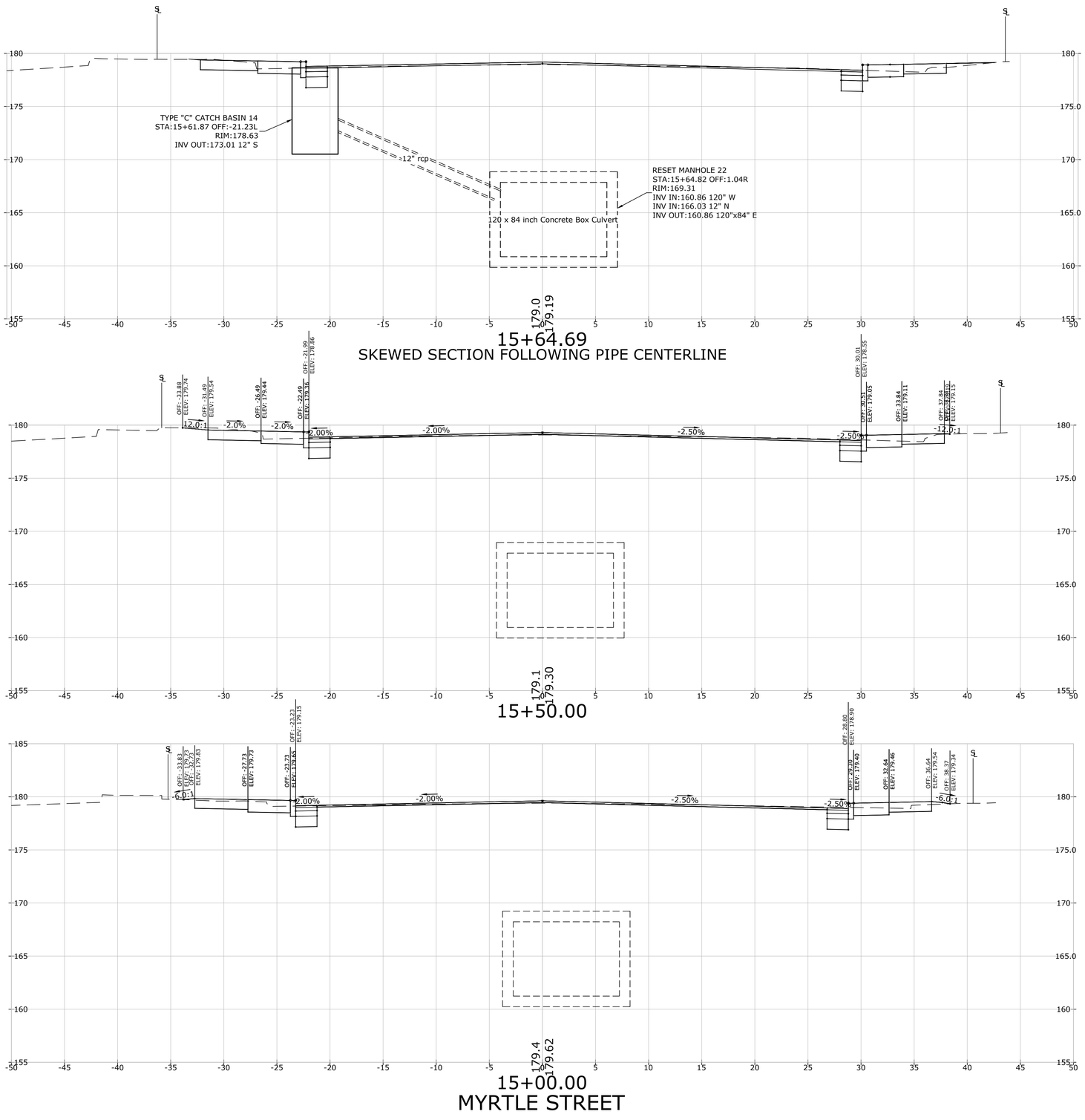

CROSS SECTIONS

CARDINAL ENGINEERING ASSOCIATES
3 Colony Street | Meriden, CT 06451 | 203-238-1969

DESIGNED BY: A. DOORNWEERD
DRAWN BY: D. ROULEAU
CHECKED BY: B. SKONIECZNY
DATE: 3/29/2019

PHASE VI STREETSCAPE
MYRTLE STREET/EAST MAIN STREET
STATE PROJECT No. L088-002
NEW BRITAIN, CONNECTICUT

REV.	DATE	DESCRIPTION	BY	APP'D

SCALE 1"=5'
JOB NO. 2261
SHEET NO. 20

P:\Civil 3d Projects 2014\NewBritain EMainMyrtle\Production Drawings\CrossSections2261.dwg, XSC 07, 4/1/2019 8:51:22 AM,

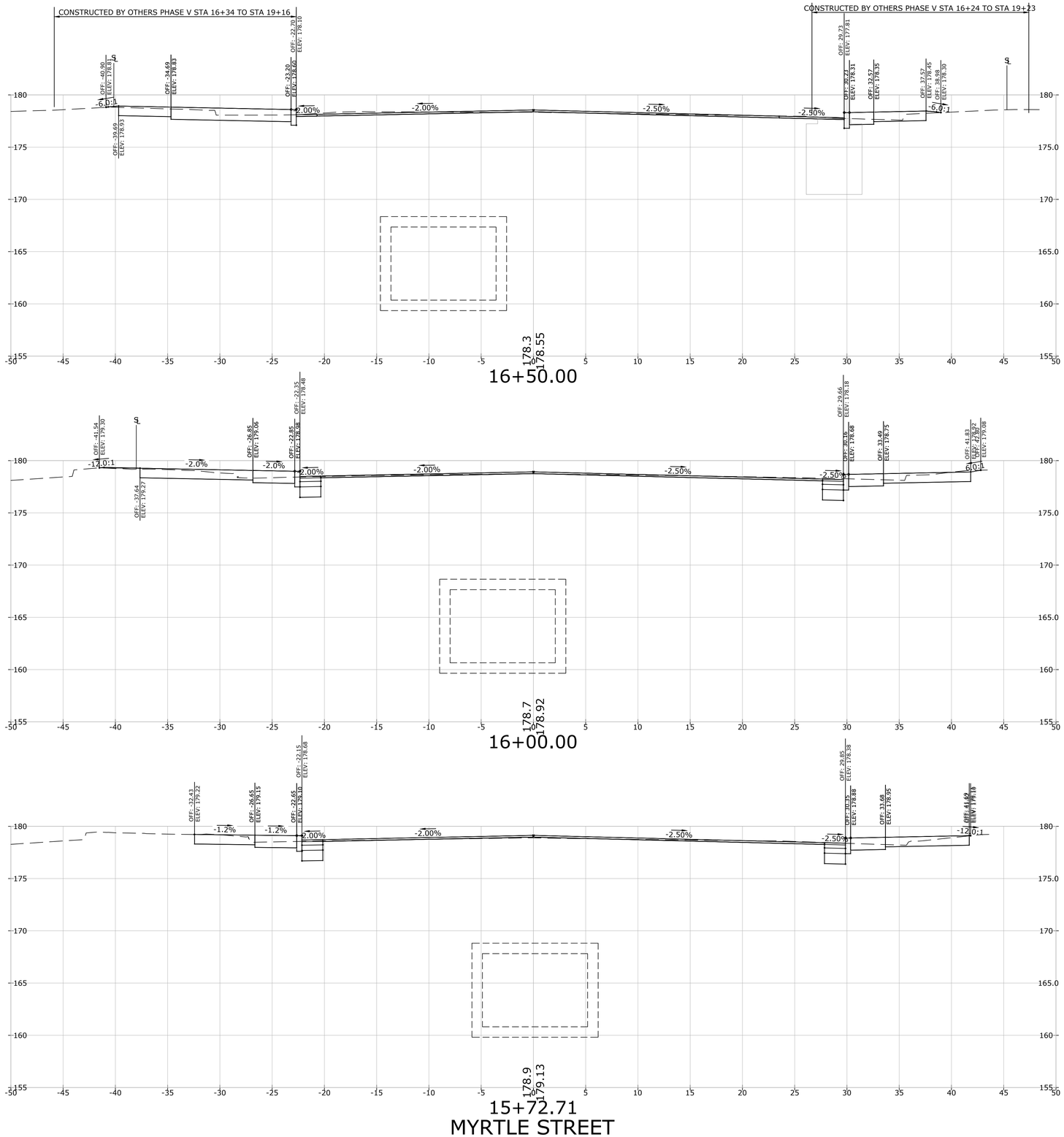

CROSS SECTIONS

CARDINAL ENGINEERING ASSOCIATES
3 Colony Street | Meriden, CT 06451 | 203-238-1969

DESIGNED BY: A. DOORNWEERD
DRAWN BY: D. ROULEAU
CHECKED BY: B. SKONIECZNY
DATE: 3/29/2019

PHASE VI STREETSCAPE
MYRTLE STREET/EAST MAIN STREET
STATE PROJECT No. L088-002
NEW BRITAIN, CONNECTICUT

REV.	DATE	DESCRIPTION	BY	APP'D

SCALE 1"=5'
JOB NO. 2261
SHEET NO. 21

P:\Civil 3d Projects 2014\NewBritain EMainMyrtle\Production Drawings\CrossSections2261.dwg, XSC 08, 4/1/2019 8:51:34 AM,

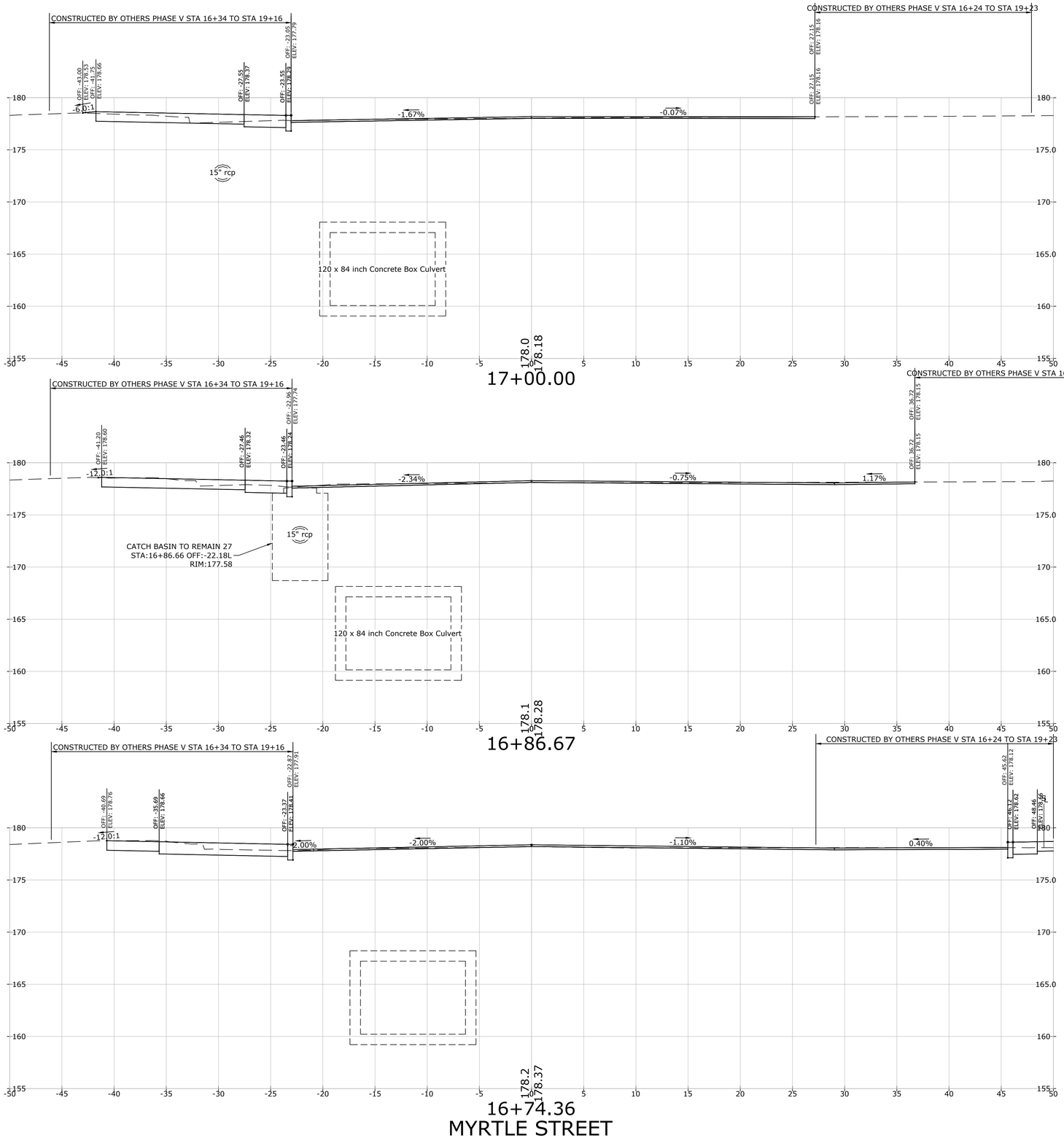

CROSS SECTIONS

CARDINAL ENGINEERING ASSOCIATES
3 Colony Street | Meriden, CT 06451 | 203-238-1969

DESIGNED BY: A. DOORNWEERD
DRAWN BY: D. ROULEAU
CHECKED BY: B. SKONIECZNY
DATE: 3/29/2019

PHASE VI STREETSCAPE
MYRTLE STREET/EAST MAIN STREET
STATE PROJECT No. L088-002
NEW BRITAIN, CONNECTICUT

REV.	DATE	DESCRIPTION	BY	APP'D

SCALE 1"=5'
JOB NO. 2261
SHEET NO. 22

P:\Civil 3d Projects 2014\NewBritain EMainMyrtle\Production Drawings\CrossSections2261.dwg, XSC 09, 4/1/2019 8:51:47 AM,

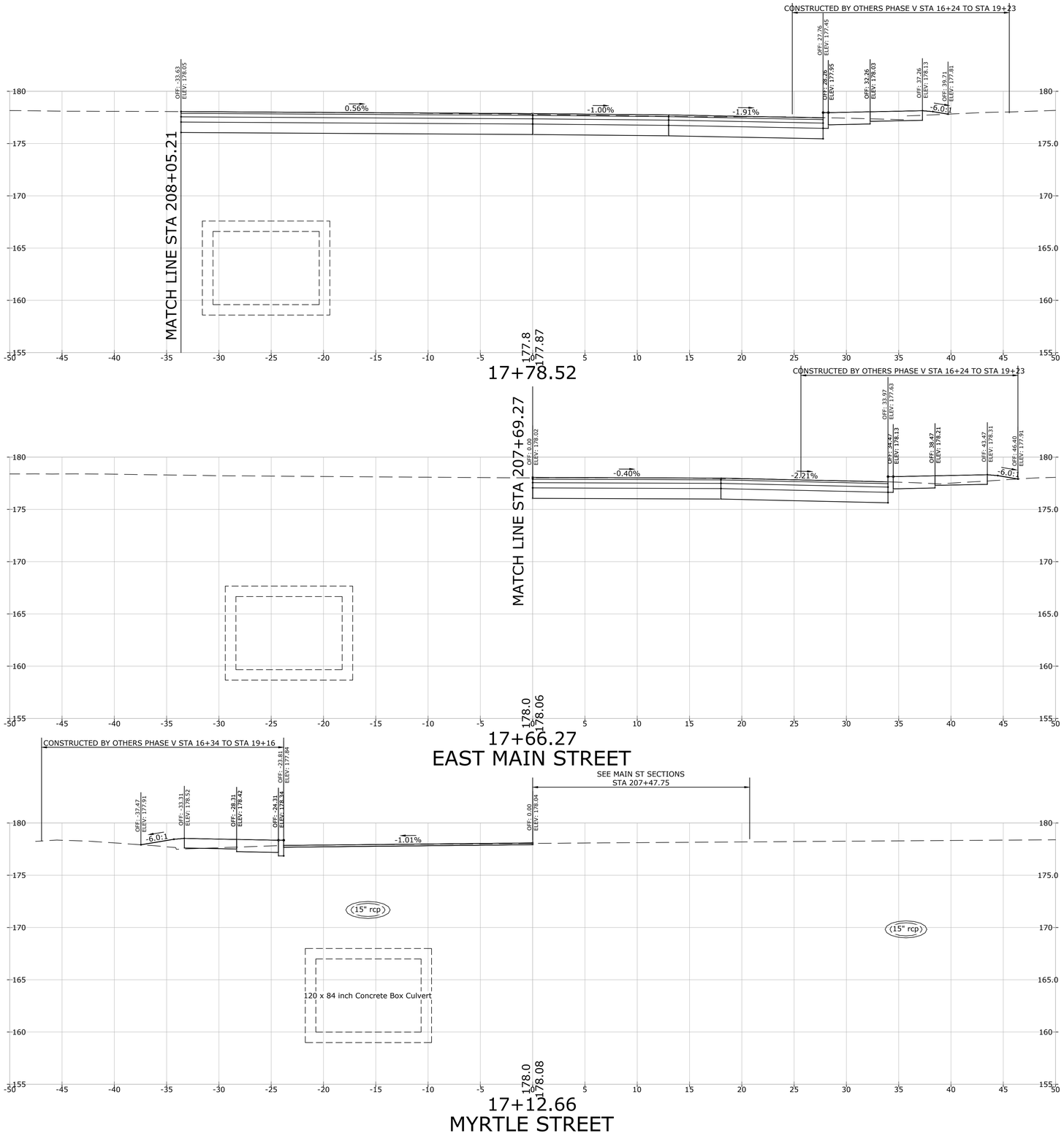

CROSS SECTIONS

CARDINAL ENGINEERING ASSOCIATES
3 Colony Street | Meriden, CT 06451 | 203-238-1969

DESIGNED BY: A. DOORNWEERD
DRAWN BY: D. ROULEAU
CHECKED BY: B. SKONIECZNY
DATE: 3/29/2019

PHASE VI STREETSCAPE
MYRTLE STREET/EAST MAIN STREET
STATE PROJECT No. L088-002
NEW BRITAIN, CONNECTICUT

REV.	DATE	DESCRIPTION	BY	APP'D

SCALE 1"=5'
JOB NO. 2261

SHEET NO. 23

P:\Civil 3d Projects 2014\NewBritain EMainMyrtle\Production Drawings\CrossSections2261.dwg, XSC 10, 4/1/2019 8:51:59 AM,

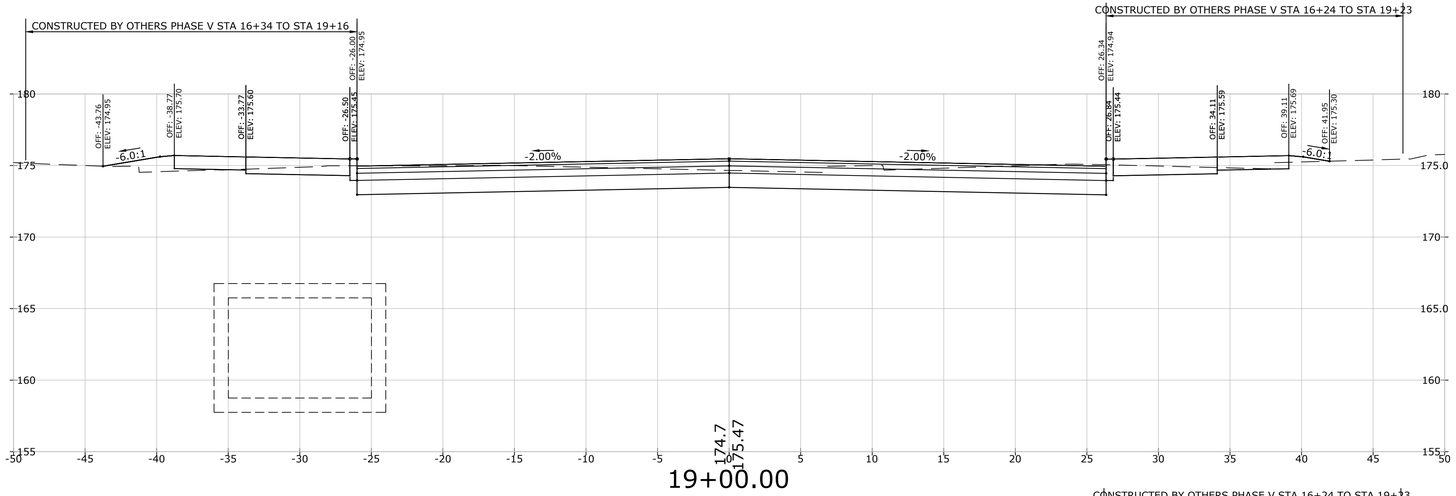

19+00.00

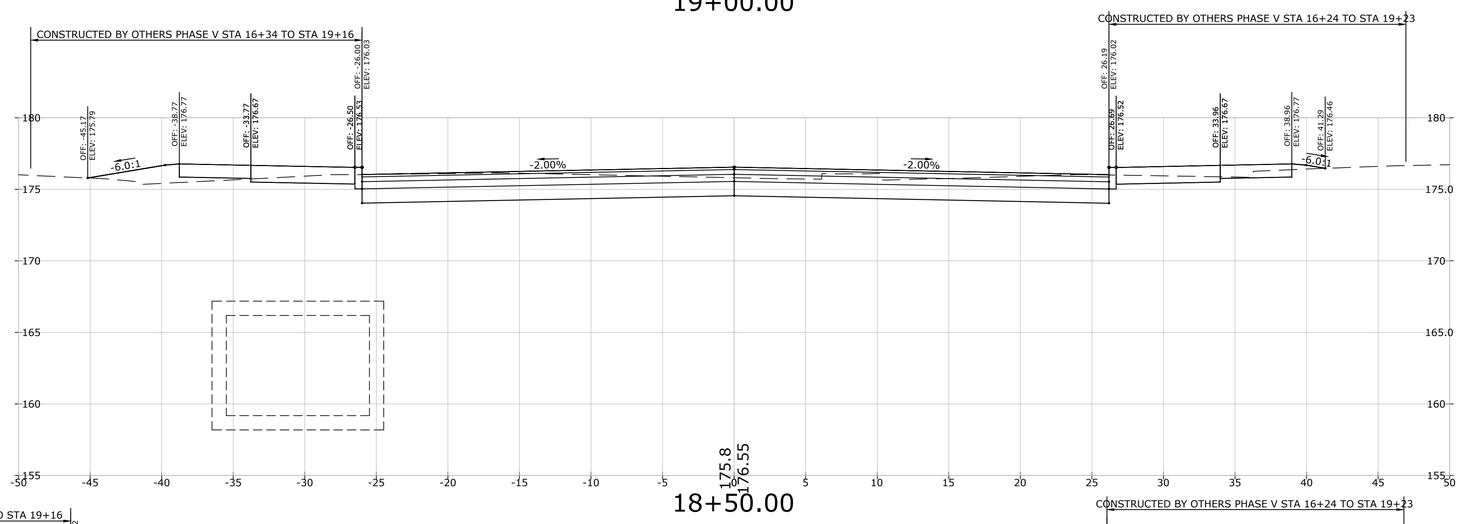

18+50.00

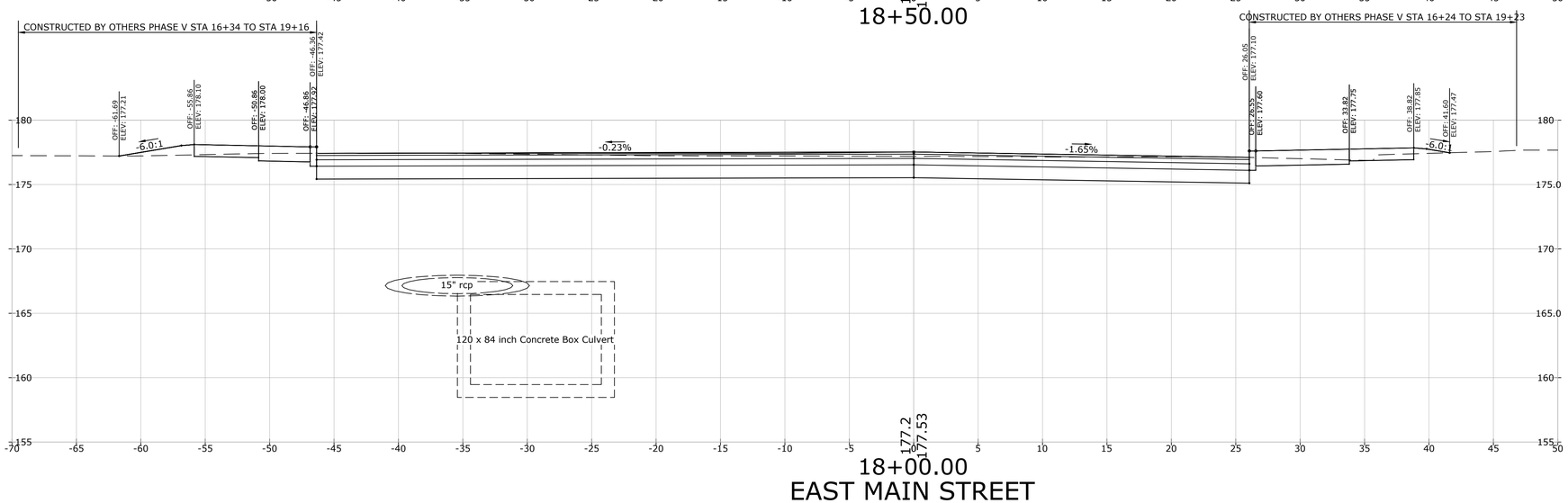

18+00.00

EAST MAIN STREET

CROSS SECTIONS

CARDINAL ENGINEERING ASSOCIATES
3 Colony Street | Meriden, CT 06451 | 203-238-1969

DESIGNED BY: A. DOORNWEERD
DRAWN BY: D. ROULEAU
CHECKED BY: B. SKONIECZNY
DATE: 3/29/2019

PHASE VI STREETSCAPE
MYRTLE STREET/EAST MAIN STREET
STATE PROJECT No. L088-002
NEW BRITAIN, CONNECTICUT

REV.	DATE	DESCRIPTION	BY	APP'D

SCALE 1"=5'
JOB NO. 2261
SHEET NO. 24

P:\Civil 3d Projects 2014\NewBritain EMainMyrtle\Production Drawings\CrossSections2261.dwg, XSC 11, 4/1/2019 8:52:12 AM,

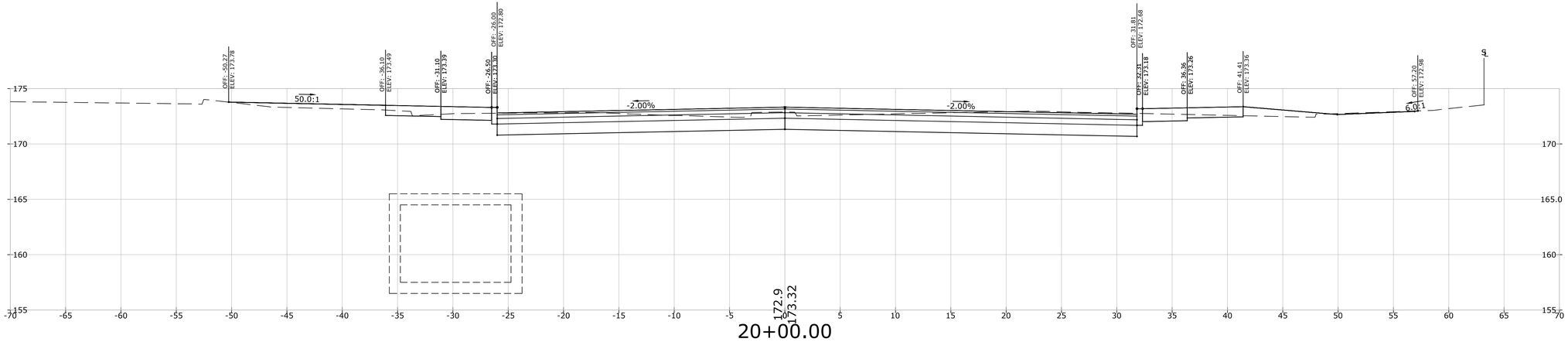

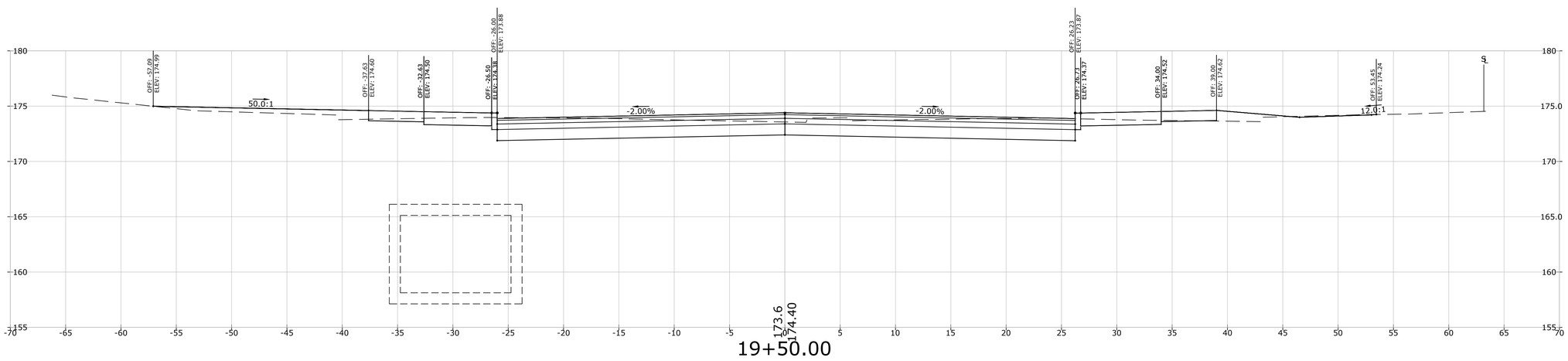

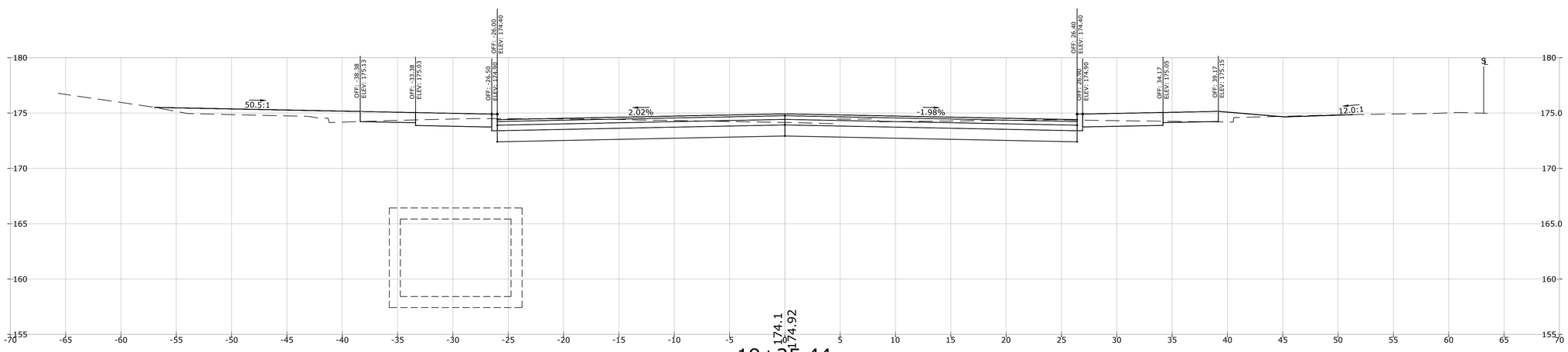

CROSS SECTIONS

CARDINAL ENGINEERING ASSOCIATES
3 Colony Street | Meriden, CT06451 | 203-238-1969

DESIGNED BY: A. DOORNWEERD
DRAWN BY: D. ROULEAU
CHECKED BY: B. SKONIECZNY
DATE: 3/29/2019

PHASE VI STREETSCAPE
MYRTLE STREET/EAST MAIN STREET
STATE PROJECT No. L088-002
NEW BRITAIN, CONNECTICUT

REV.	DATE	DESCRIPTION	BY	APP'D

SCALE 1"=5'
JOB NO. 2261
SHEET NO. 25

P:\Civil 3d Projects 2014\NewBritain EMainMyrtle\Production Drawings\CrossSections2261.dwg, XSC 12, 4/1/2019 8:52:24 AM,
DWG To PDF.pc3, ARCH expand D (36.00 - 24.00 Inches)

P:\Civil 3d Projects 2014\NewBritain EMainMyrtle\Production Drawings\CrossSections2261.dwg, XSC 13, 4/1/2019 8:52:37 AM,
DWG To PDF.pc3, ARCH expand D (36.00 - 24.00 Inches)

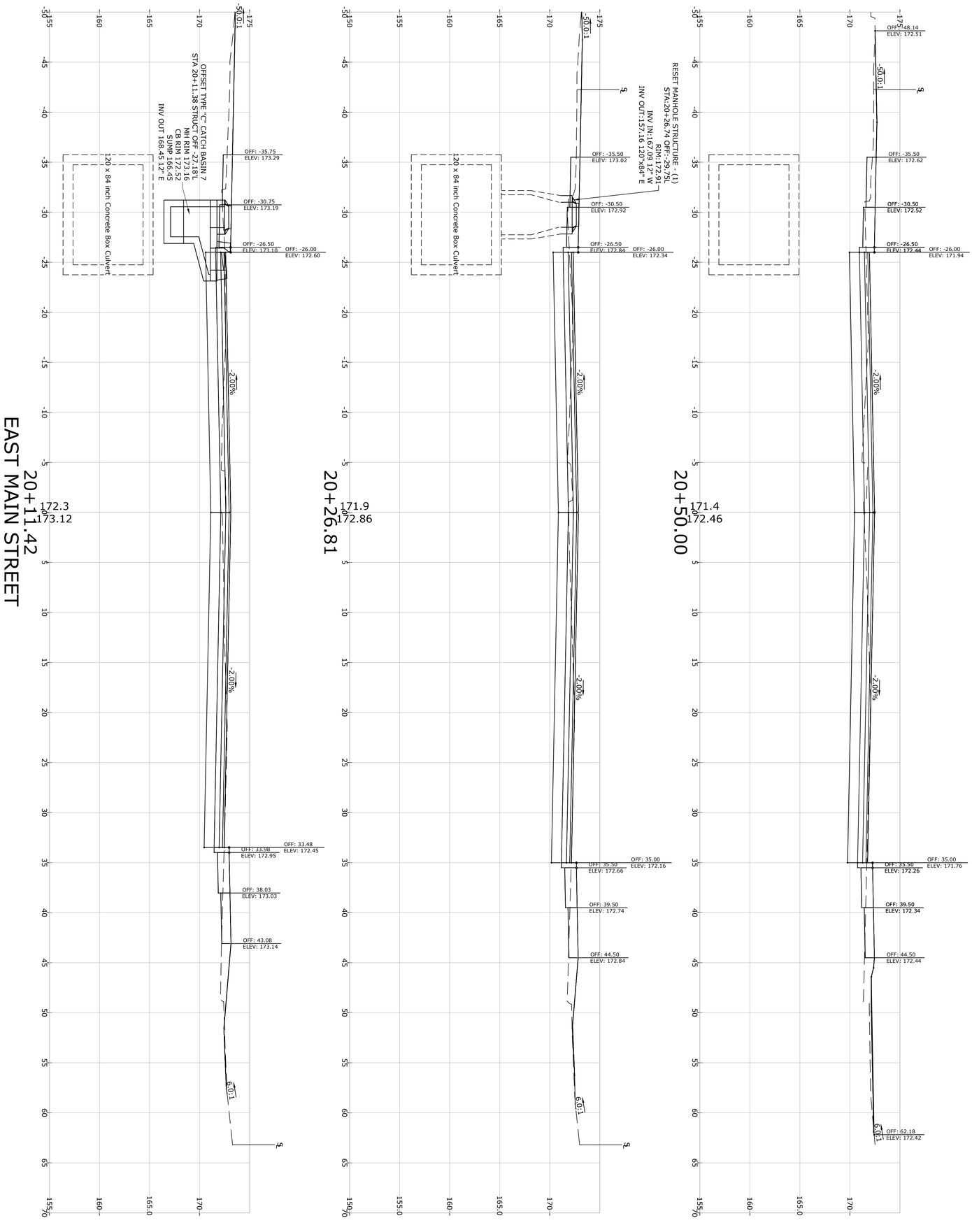

CROSS SECTIONS

SHEET NO.	SCALE	REV.	DATE	DESCRIPTION	BY	APP'D
26	1"=5'					
	JOB NO. 2261					

PHASE VI STREETSCAPE
MYRTLE STREET/EAST MAIN STREET
STATE PROJECT No. L088-002
NEW BRITAIN, CONNECTICUT

DESIGNED BY: A. DOORNWEERD
DRAWN BY: D. ROULEAU
CHECKED BY: B. SKONIECZNY
DATE: 3/29/2019

CARDINAL ENGINEERING ASSOCIATES
3 Colony Street | Meriden, CT 06451 | 203-238-1969

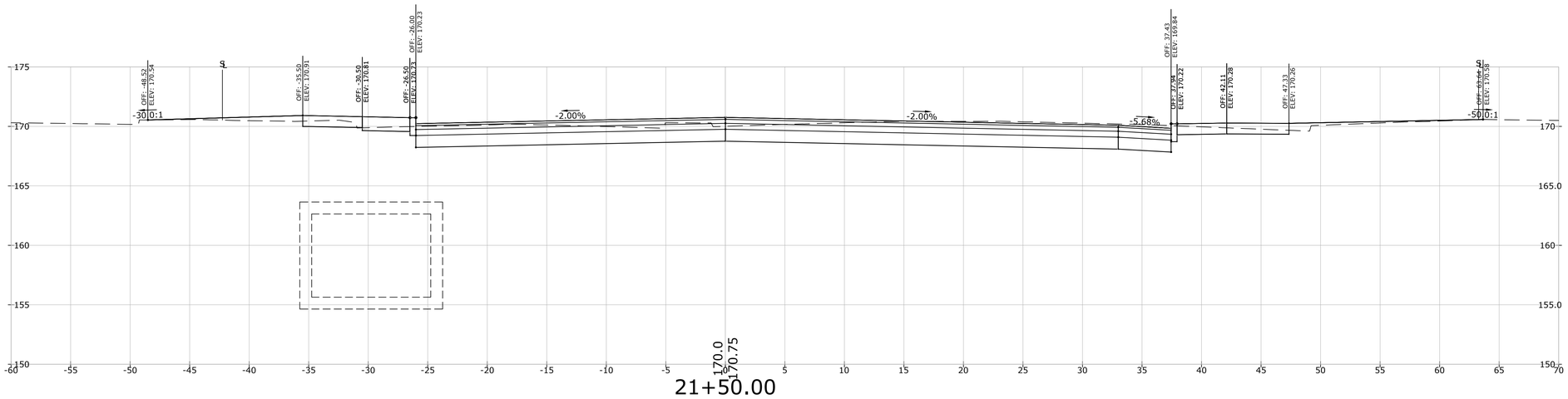

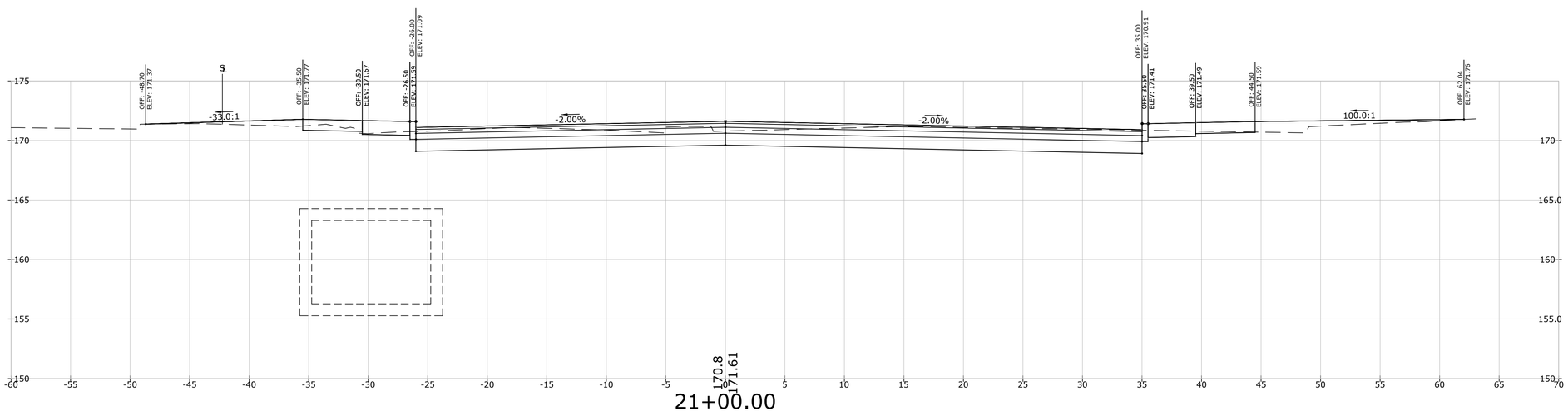

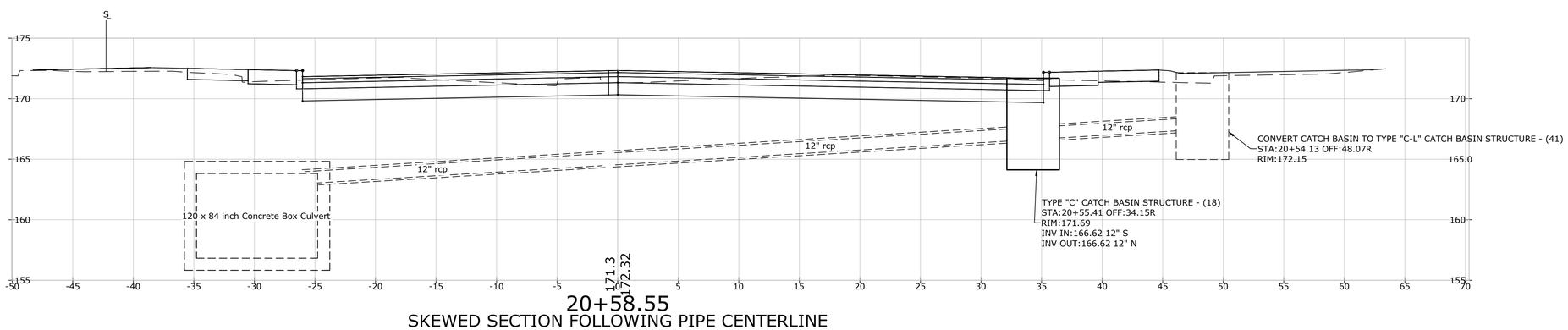

SKEWED SECTION FOLLOWING PIPE CENTERLINE

EAST MAIN STREET

CROSS SECTIONS

CARDINAL ENGINEERING ASSOCIATES
3 Colony Street | Meriden, CT06451 | 203-238-1969

DESIGNED BY: A. DOORNWEERD
DRAWN BY: D. ROULEAU
CHECKED BY: B. SKONIECZNY
DATE: 3/29/2019

PHASE VI STREETSCAPE
MYRTLE STREET/EAST MAIN STREET
STATE PROJECT No. L088-002
NEW BRITAIN, CONNECTICUT

REV.	DATE	DESCRIPTION	BY	APP'D

SCALE 1"=5'

JOB NO. 2261

SHEET NO. 27

P:\Civil 3d Projects 2014\NewBritain EMainMyrtle\Production Drawings\CrossSections2261.dwg, XSC 14, 4/1/2019 8:52:49 AM,
DWG To PDF.pc3, ARCH expand D (36.00 - 24.00 Inches)

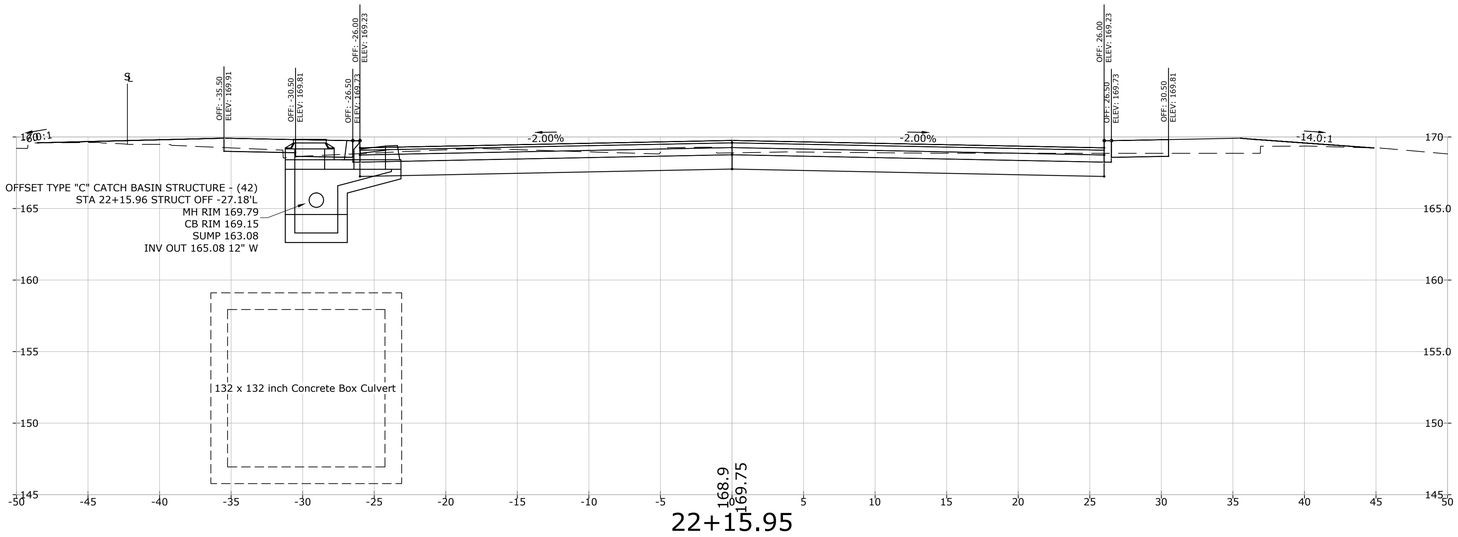

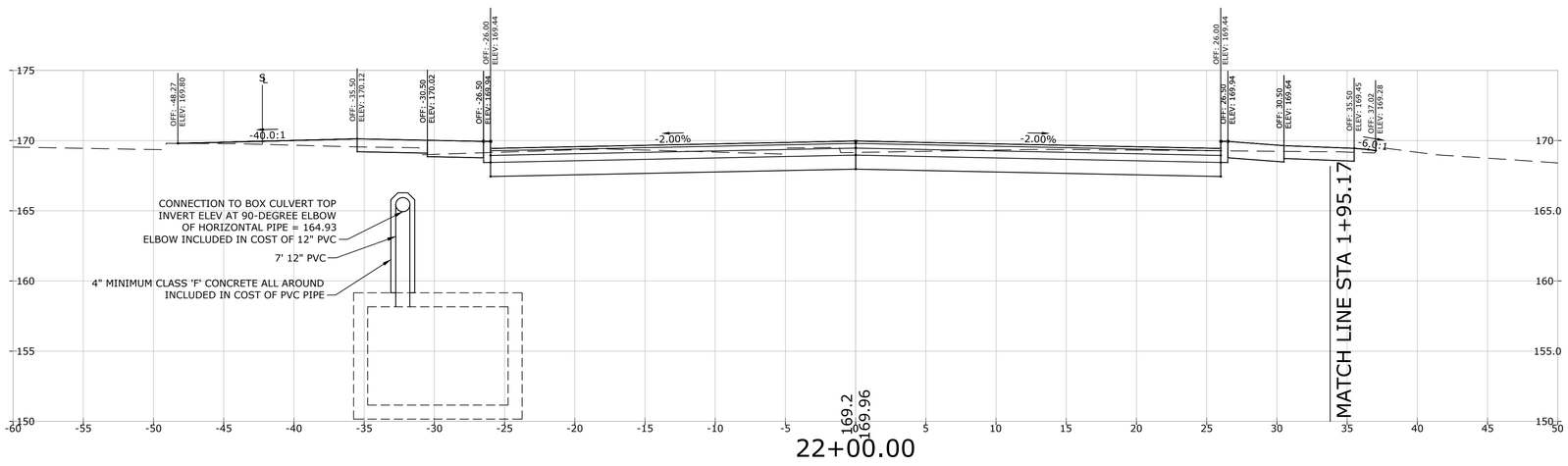

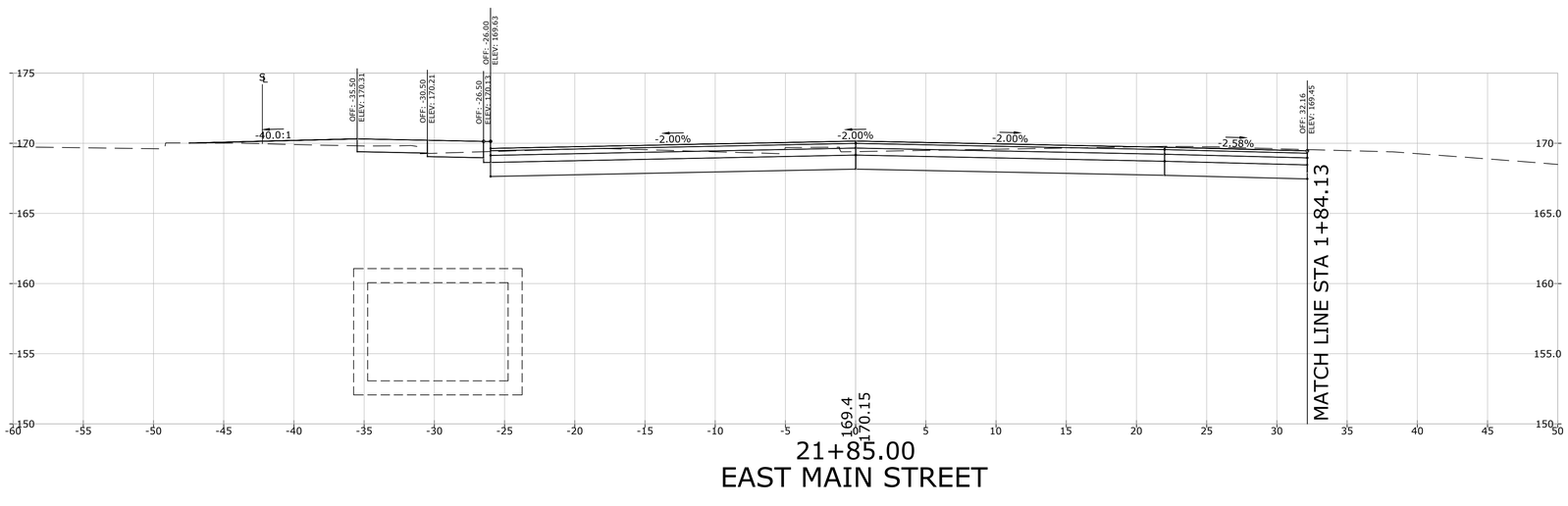

CROSS SECTIONS

CARDINAL
ENGINEERING ASSOCIATES
3 Colony Street | Meriden, CT06451 | 203-238-1969

DESIGNED BY: A. DOORNWEERD
DRAWN BY: D. ROULEAU
CHECKED BY: B. SKONIECZNY
DATE: 3/29/2019

PHASE VI STREETSCAPE
MYRTLE STREET/EAST MAIN STREET
STATE PROJECT No. L088-002
NEW BRITAIN, CONNECTICUT

REV.	DATE	DESCRIPTION	BY	APP'D

SCALE 1"=5'
JOB NO. 2261
SHEET NO. 28

P:\Civil 3d Projects 2014\NewBritain EMainMyrtle\Production Drawings\CrossSections\26L.dwg, XSC 15, 4/1/2019 8:33:02 AM,
BWC 5.PDF.pc3, ANSI expand D (34.00 x 44.00 Inches)

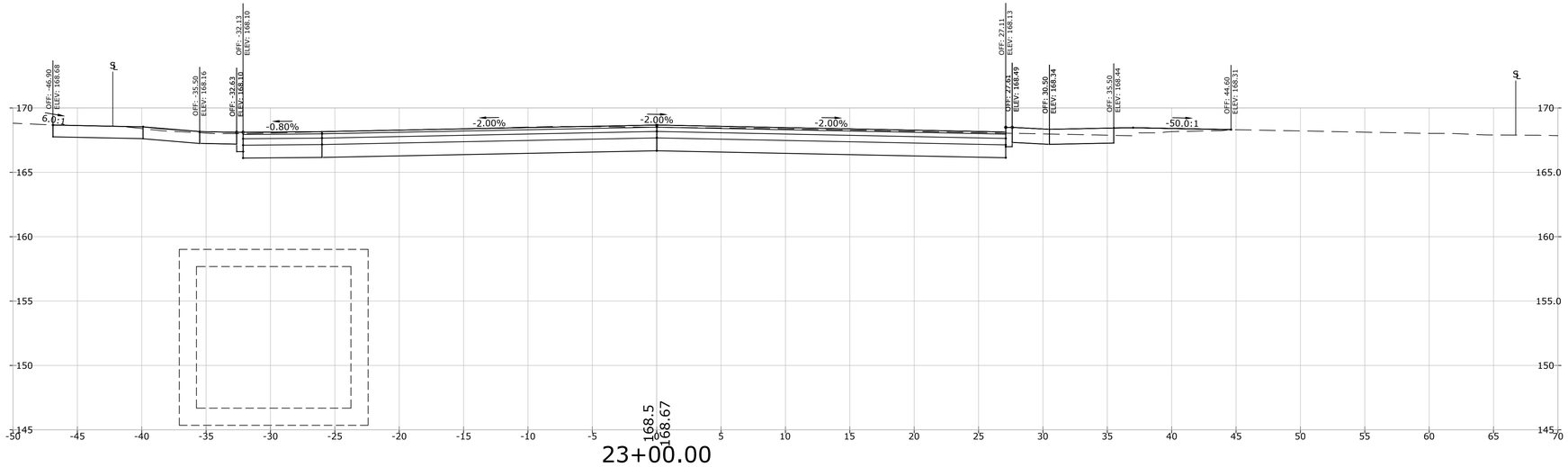

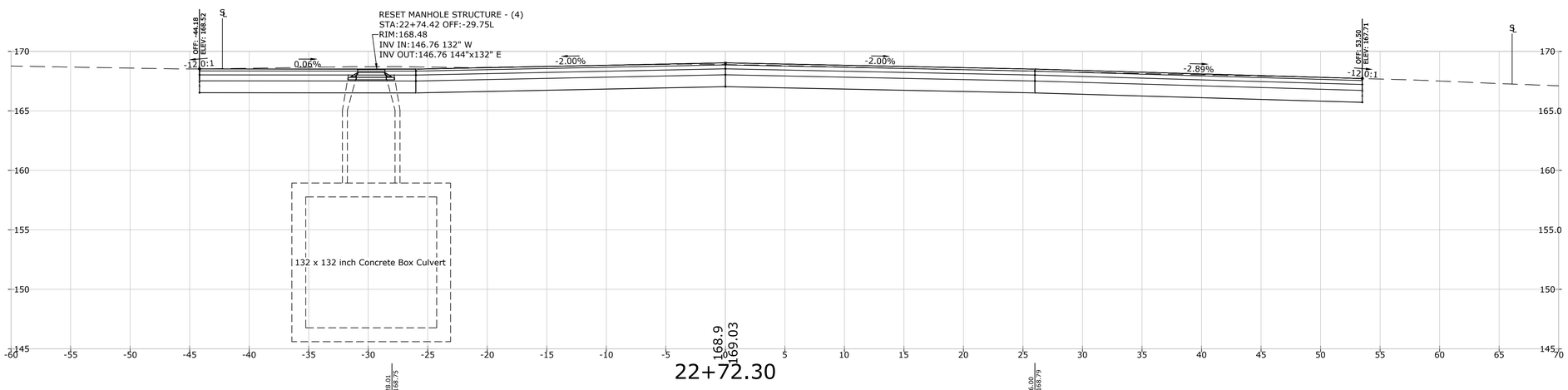

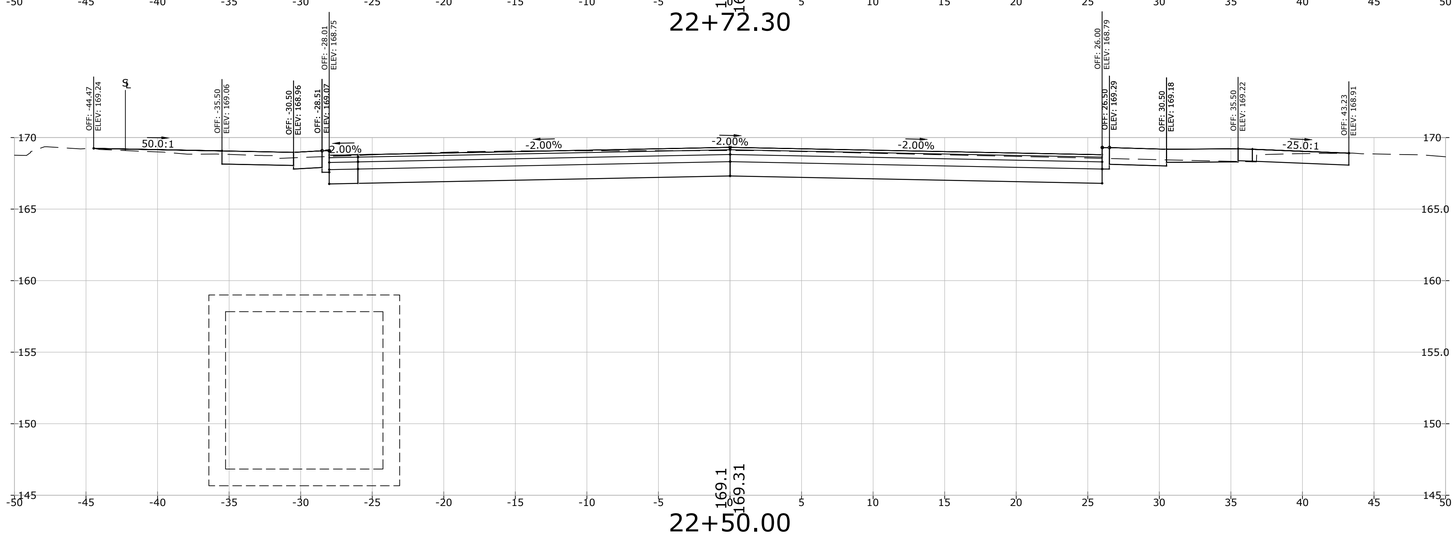

CROSS SECTIONS

CARDINAL ENGINEERING ASSOCIATES
3 Colony Street | Meriden, CT 06451 | 203-238-1969

DESIGNED BY: A. DOORNWEERD
DRAWN BY: D. ROULEAU
CHECKED BY: B. SKONIECZNY
DATE: 3/29/2019

PHASE VI STREETSCAPE
MYRTLE STREET/EAST MAIN STREET
STATE PROJECT No. L088-002
NEW BRITAIN, CONNECTICUT

REV.	DATE	DESCRIPTION	BY	APP'D

SCALE 1"=5'

JOB NO. 2261

SHEET NO. 29

P:\Civil 3d Projects 2018\NewBritain EMainMyrtle\Production Drawings\CrossSections2261.dwg, XSC 16, 4/1/2019 8:53:15 AM, GWCS-16.PIP, pc3, ANSI expand D (34.00 x 22.00 Inches)

P:\Civil 3d Projects 2014\NewBritain EMainMyrtle\Production Drawings\CrossSections2261.dwg, XSC 17, 4/1/2019 8:53:27 AM,
DWG To PDF.pc3, ARCH expand D (36.00 x 24.00 Inches)

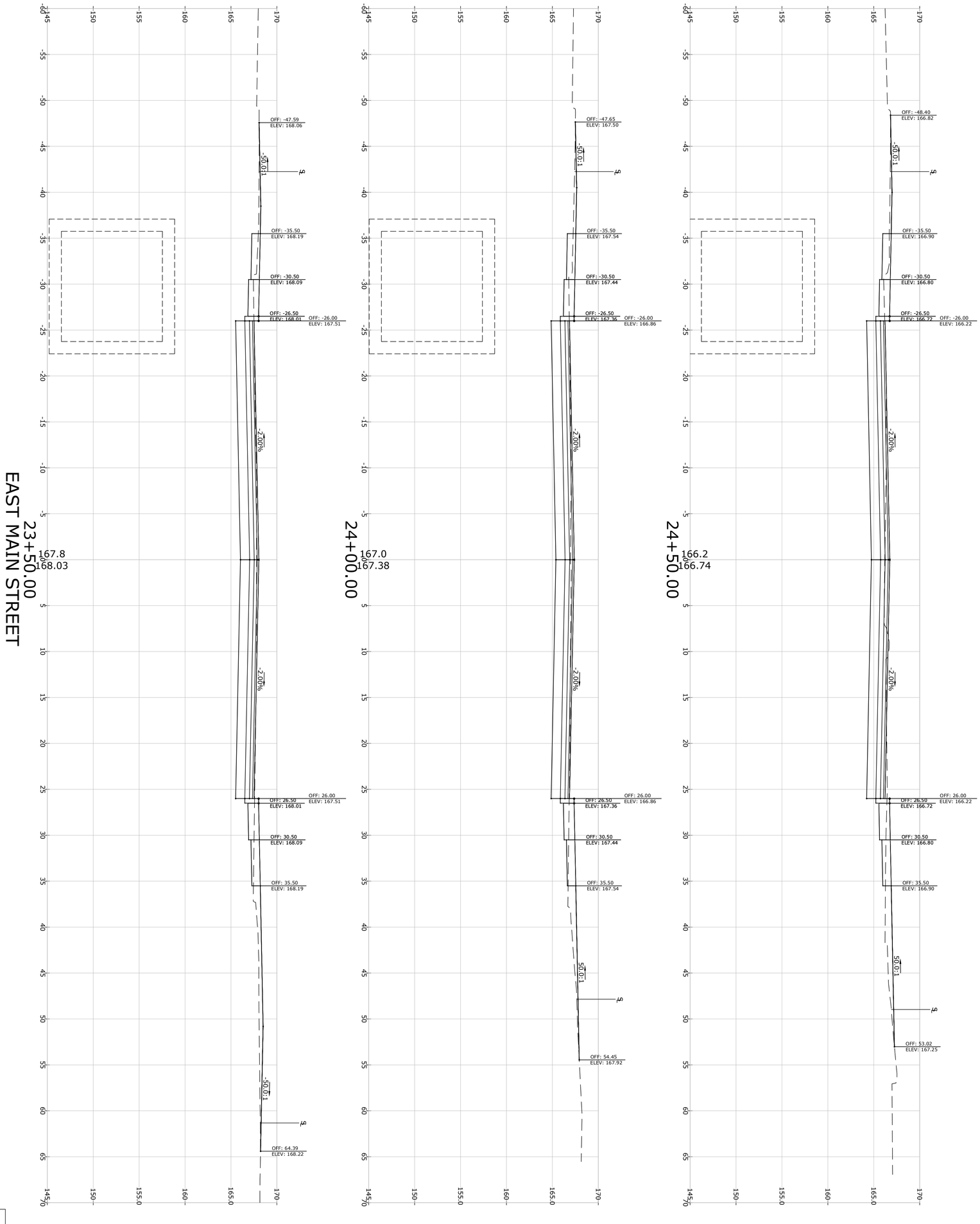

CROSS SECTIONS

SHEET NO.	SCALE	REV.	DATE	DESCRIPTION	BY	APP'D
30	1"=5'					
	JOB NO. 2261					

PHASE VI STREETSCAPE
MYRTLE STREET/EAST MAIN STREET
STATE PROJECT No. L088-002
NEW BRITAIN, CONNECTICUT

DESIGNED BY: A. DOORNWEERD
DRAWN BY: D. ROULEAU
CHECKED BY: B. SKONIECZNY
DATE: 3/29/2019

CARDINAL ENGINEERING ASSOCIATES
3 Colony Street | Meriden, CT 06451 | 203-238-1969

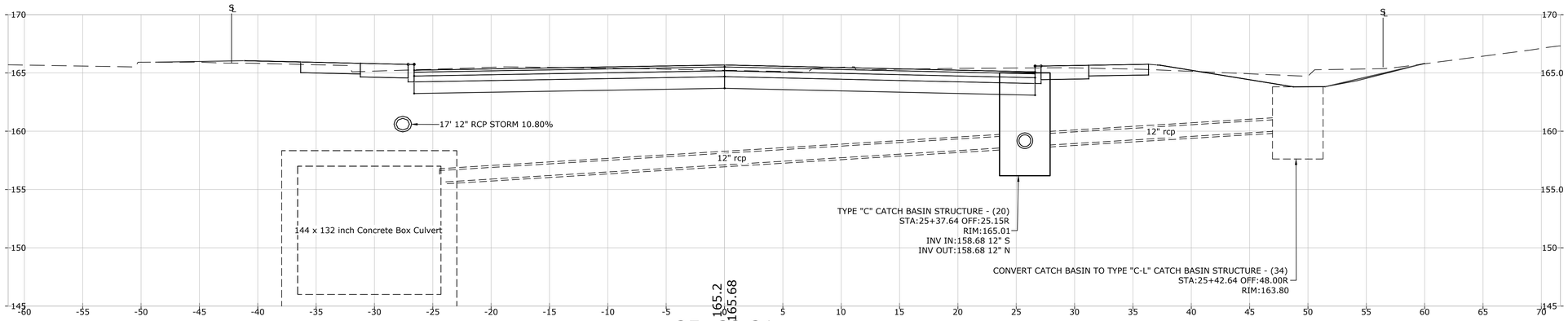

25+32.21

SKEWED SECTION FOLLOWING PIPE CENTERLINE

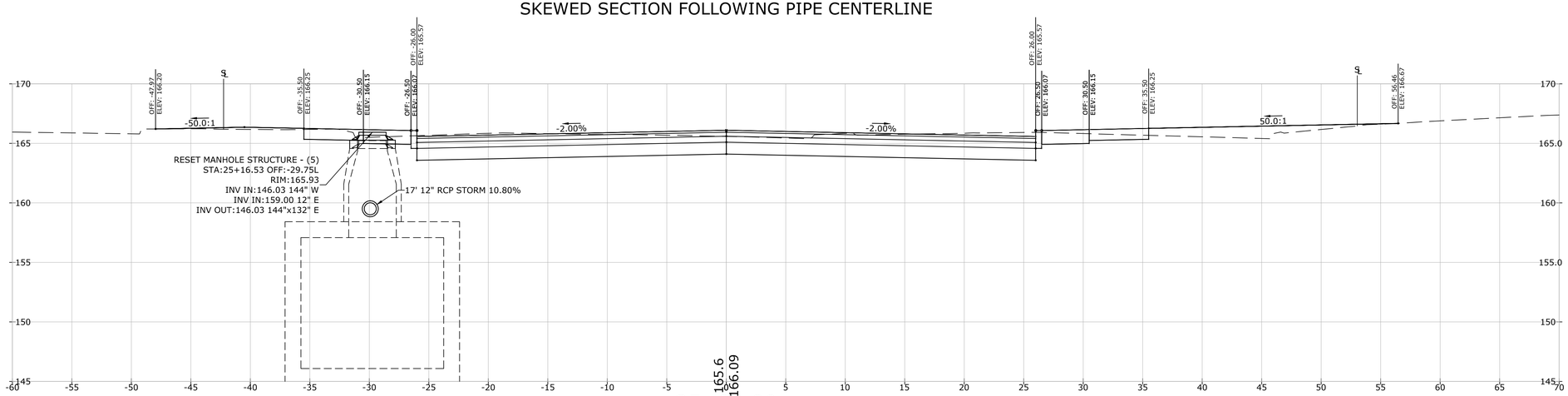

25+00.00

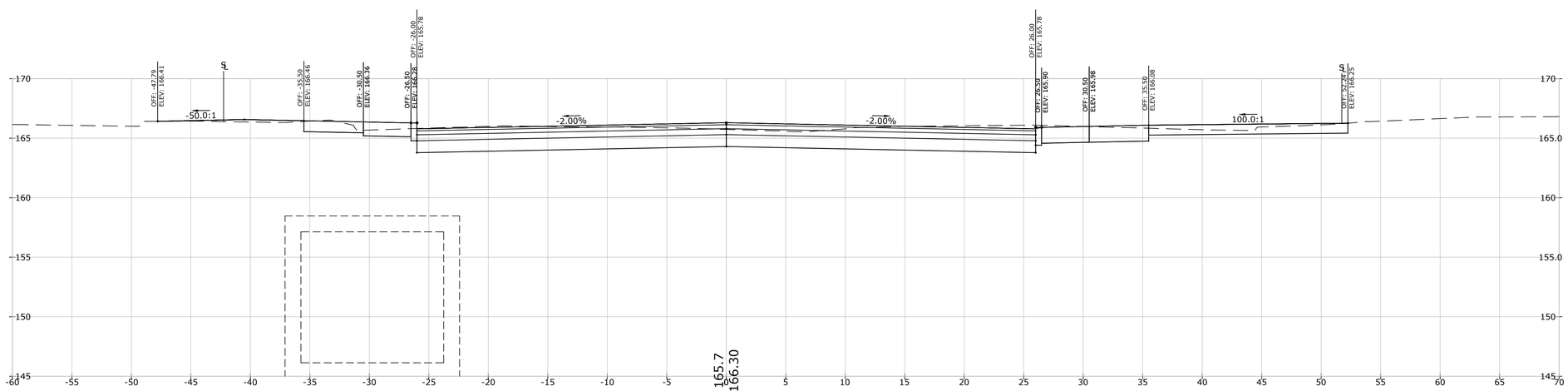

24+84.00

EAST MAIN STREET

CROSS SECTIONS

CARDINAL ENGINEERING ASSOCIATES
3 Colony Street | Meriden, CT06451 | 203-238-1969

DESIGNED BY: A. DOORNWEERD
DRAWN BY: D. ROULEAU
CHECKED BY: B. SKONIECZNY
DATE: 3/29/2019

PHASE VI STREETSCAPE
MYRTLE STREET/EAST MAIN STREET
STATE PROJECT No. L088-002
NEW BRITAIN, CONNECTICUT

REV.	DATE	DESCRIPTION	BY	APP'D

SCALE 1"=5'

JOB NO. 2261

SHEET NO. 31

P:\Civil 3d Projects-2014\NewBritain EMainMyrtle\Production Drawings\CrossSections2261.dwg, XSC 18, 4/1/2019 8:53:40 AM,
DWG To PDF.pc3, ARCH expand D (36.00 x 24.00 Inches)

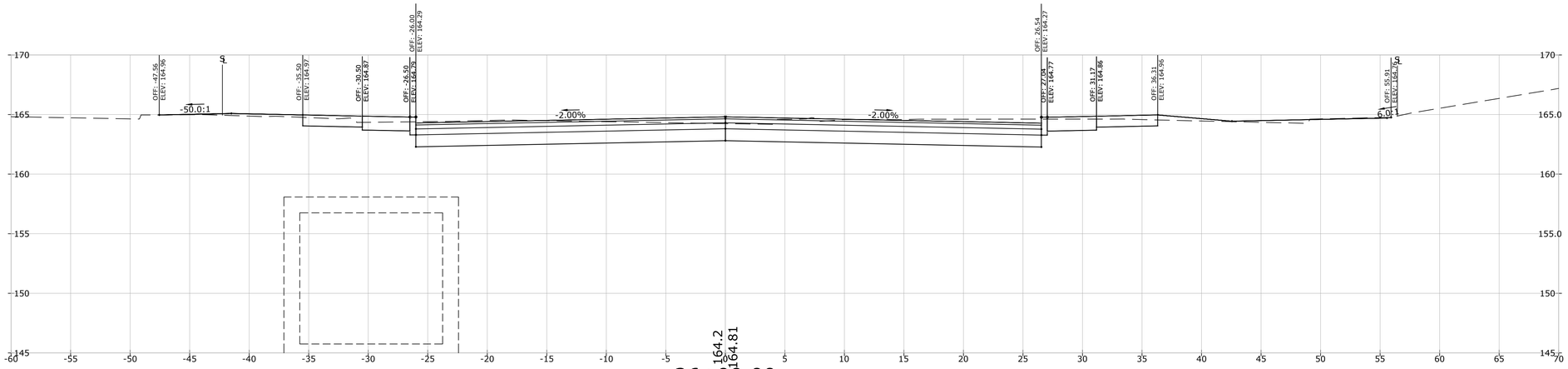

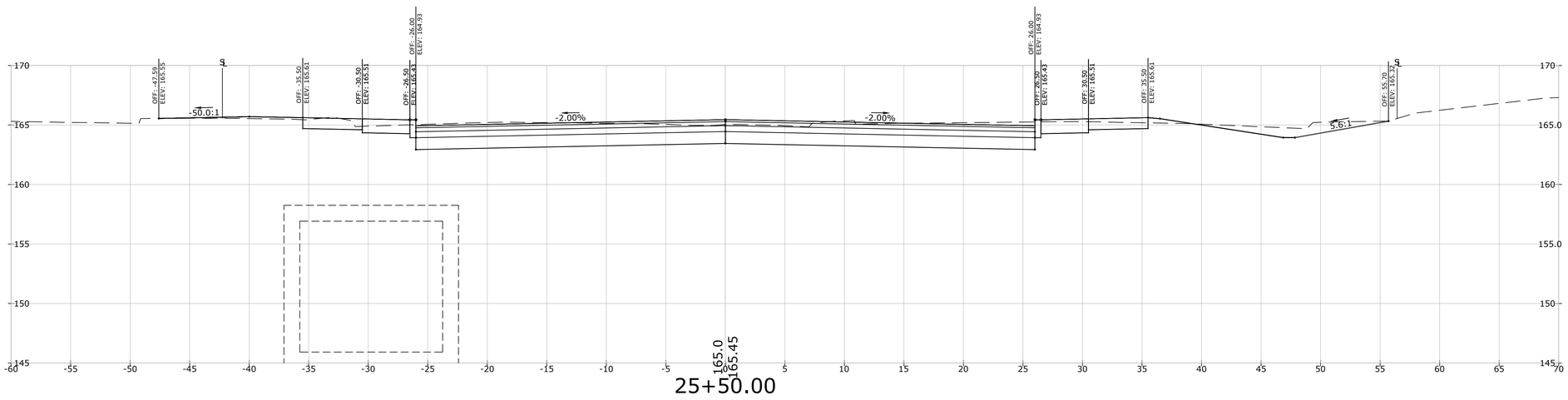

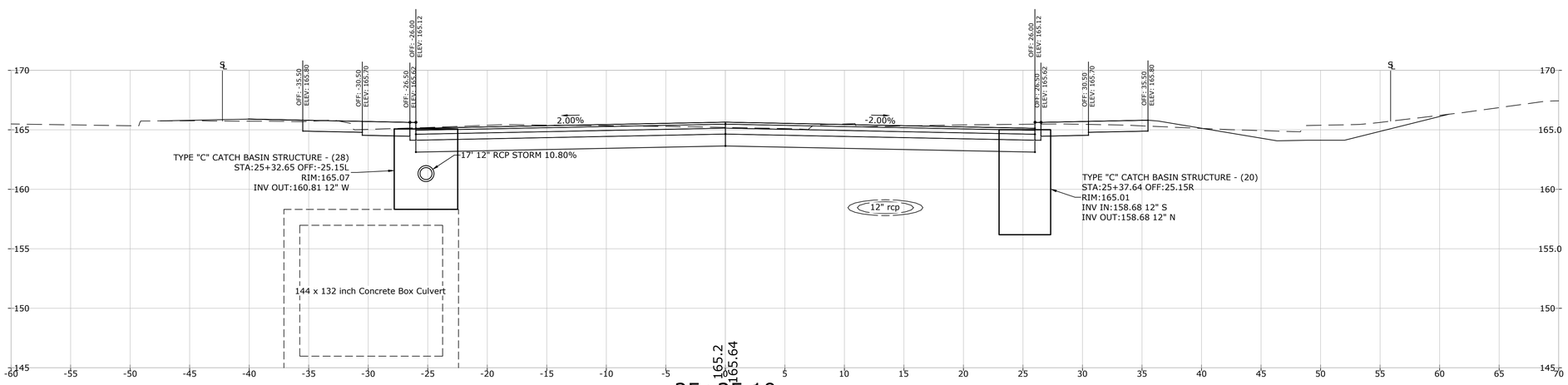

CROSS SECTIONS

CARDINAL ENGINEERING ASSOCIATES
3 Colony Street | Meriden, CT06451 | 203-238-1969

DESIGNED BY: A. DOORNWEERD
DRAWN BY: D. ROULEAU
CHECKED BY: B. SKONIECZNY
DATE: 3/29/2019

PHASE VI STREETSCAPE
MYRTLE STREET/EAST MAIN STREET
STATE PROJECT No. L088-002
NEW BRITAIN, CONNECTICUT

REV.	DATE	DESCRIPTION	BY	APP'D

SCALE 1"=5'
JOB NO. 2261
SHEET NO. 32

P:\Civil 3d Projects 2014\NewBritain EMainMyrtle\Production Drawings\CrossSections2261.dwg, XSC 19, 4/1/2019 8:33:53 AM,
DWG To PDF.pc3, ANSI expand D (34.00 x 44.00 Inches)

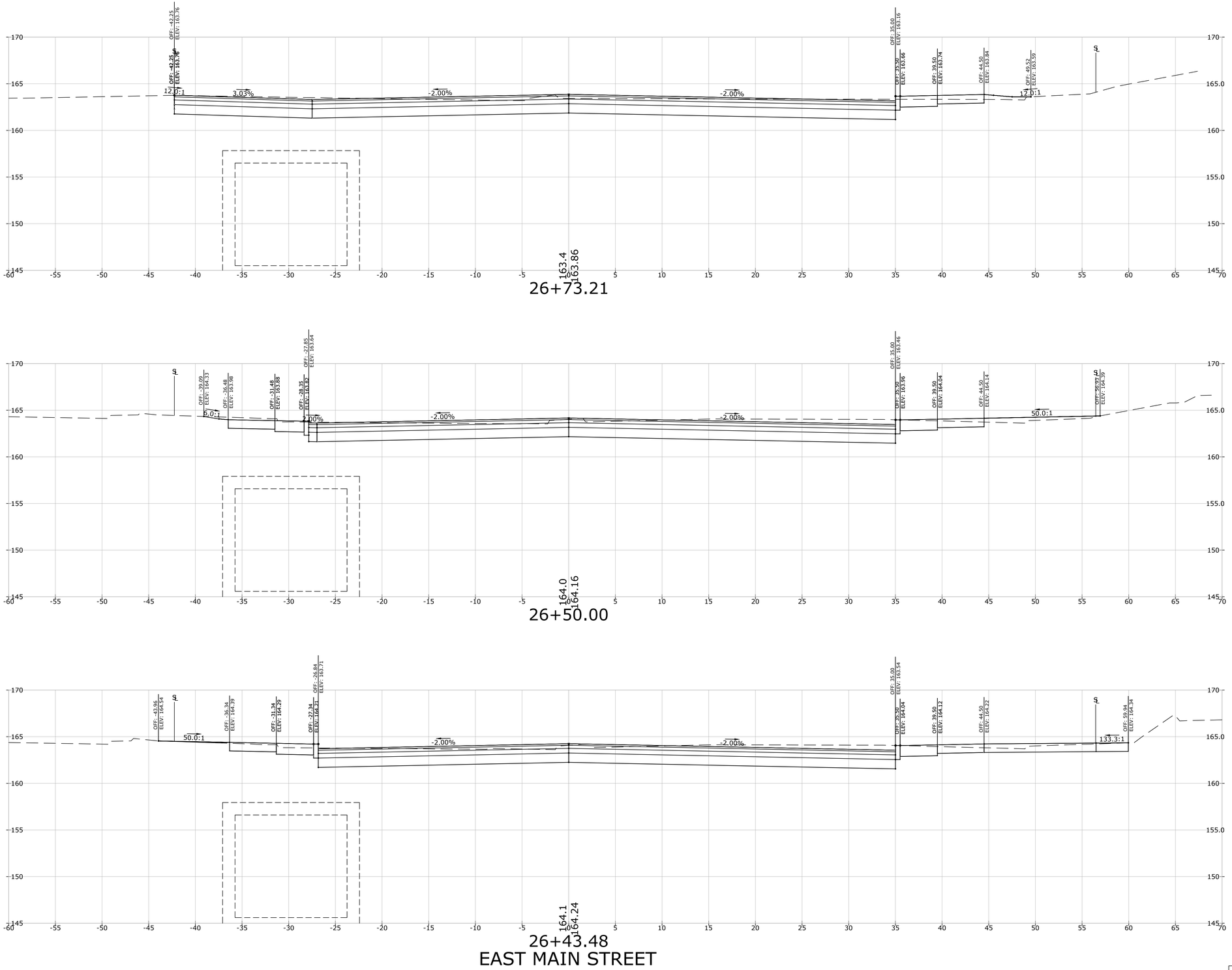

CROSS SECTIONS

CARDINAL ENGINEERING ASSOCIATES
3 Colony Street | Meriden, CT 06451 | 203-238-1969

DESIGNED BY: A. DOORNWEERD
DRAWN BY: D. ROULEAU
CHECKED BY: B. SKONIECZNY
DATE: 3/29/2019

PHASE VI STREETSCAPE
MYRTLE STREET/EAST MAIN STREET
STATE PROJECT No. L088-002
NEW BRITAIN, CONNECTICUT

REV.	DATE	DESCRIPTION	BY	APP'D

SCALE 1"=5'
JOB NO. 2261

SHEET NO. 33

P:\Civil 3d Projects 2014\NewBritain EMainMyrtle\Production Drawings\CrossSections2261.dwg, XSC 20, 4/1/2019 8:54:05 AM,

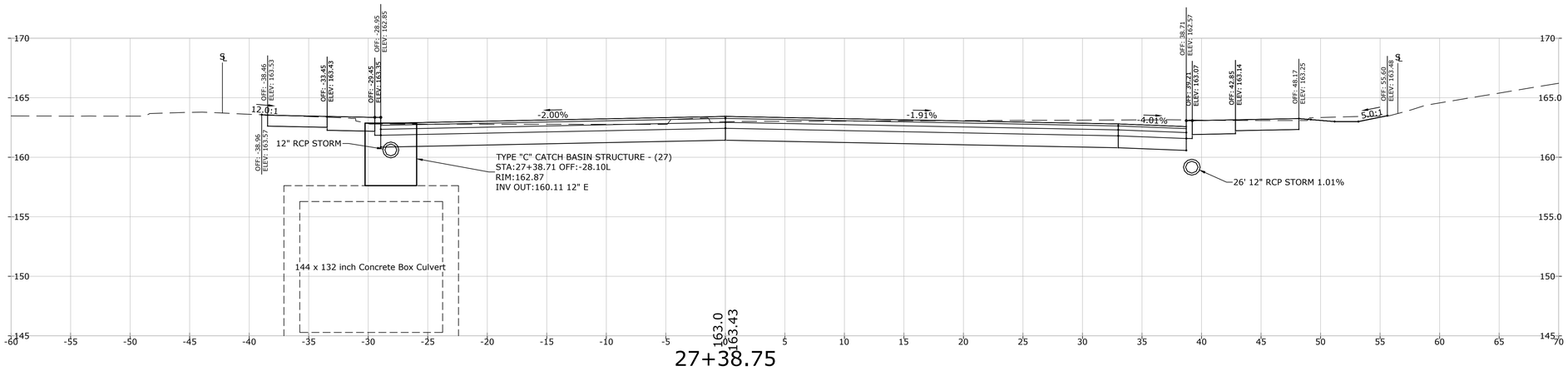

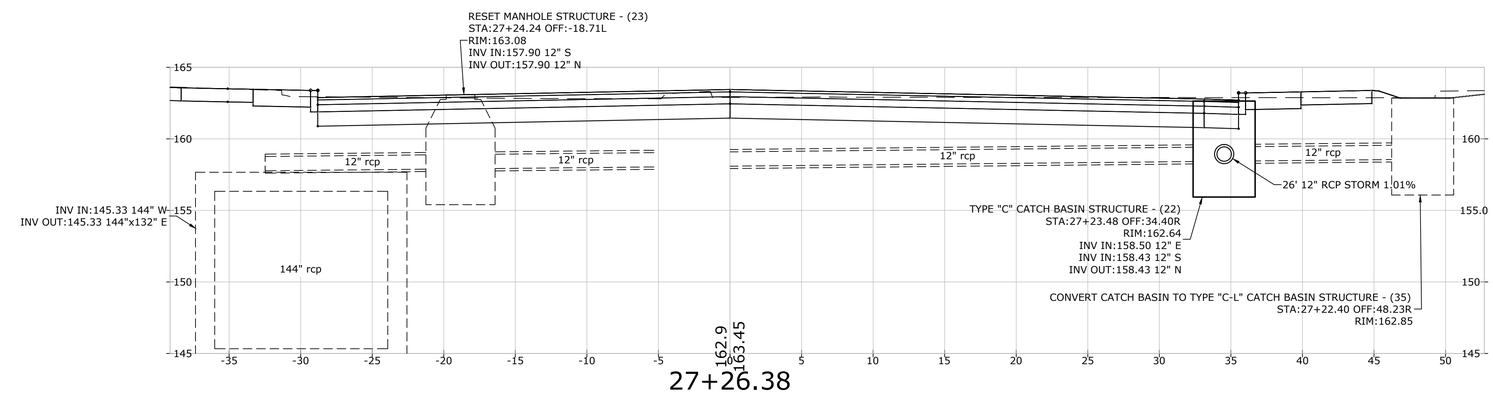

SKEWED SECTION FOLLOWING PIPE CENTERLINE

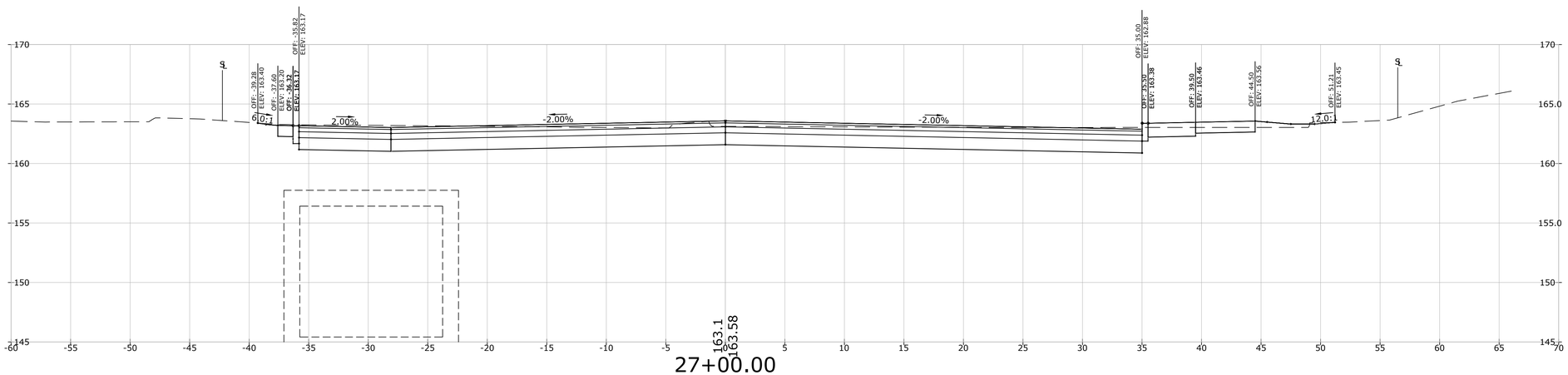

EAST MAIN STREET

CROSS SECTIONS

CARDINAL ENGINEERING ASSOCIATES
3 Colony Street | Meriden, CT06451 | 203-238-1969

DESIGNED BY: A. DOORNWEERD
DRAWN BY: D. ROULEAU
CHECKED BY: B. SKONIECZNY
DATE: 3/29/2019

PHASE VI STREETSCAPE
MYRTLE STREET/EAST MAIN STREET
STATE PROJECT No. L088-002
NEW BRITAIN, CONNECTICUT

REV.	DATE	DESCRIPTION	BY	APP'D

SCALE 1"=5'
JOB NO. 2261
SHEET NO. 34

P:\Civil 3d Projects 2014\NewBritain EMainMyrtle\Production Drawings\CrossSections2261.dwg, XSC 21, 4/1/2019 8:54:18 AM,
DWG To PDF.pc3, ANSI E (44.00 x 34.00 Inches)

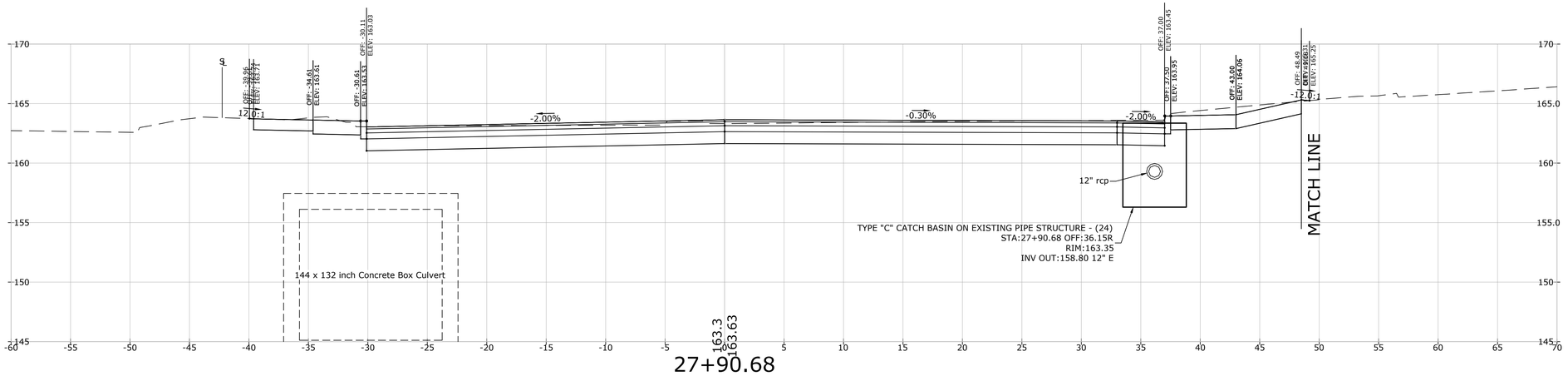

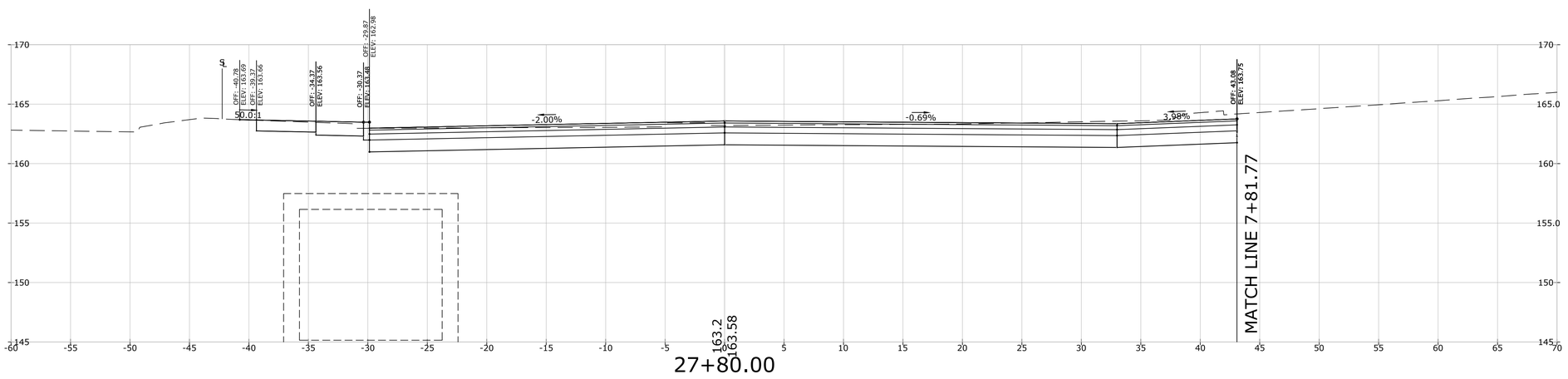

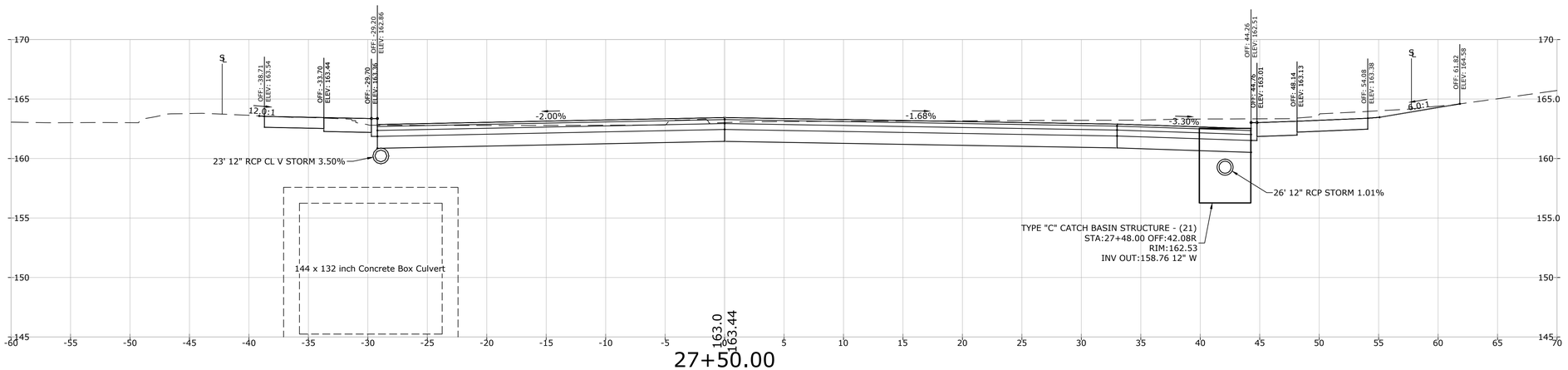

CROSS SECTIONS

CARDINAL ENGINEERING ASSOCIATES
3 Colony Street | Meriden, CT06451 | 203-238-1969

DESIGNED BY: A. DOORNWEERD
DRAWN BY: D. ROULEAU
CHECKED BY: B. SKONIECZNY
DATE: 3/29/2019

PHASE VI STREETSCAPE
MYRTLE STREET/EAST MAIN STREET
STATE PROJECT No. L088-002
NEW BRITAIN, CONNECTICUT

REV.	DATE	DESCRIPTION	BY	APP'D

SCALE 1"=5'
JOB NO. 2261
SHEET NO. 35

P:\Civil 3d Projects 2014\NewBritain EMainMyrtle\Production Drawings\CrossSections226L.dwg, XSC 22, 4/1/2019 8:54:31 AM,
DWG To PDF.pc3, ANSI expand D (34.00 - 22.00 Inches)

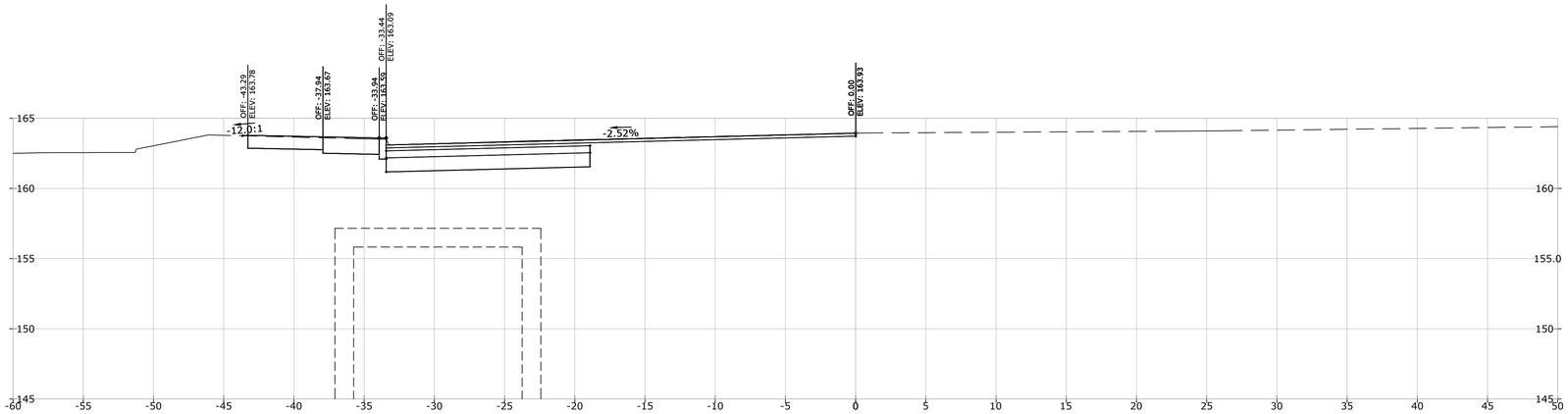

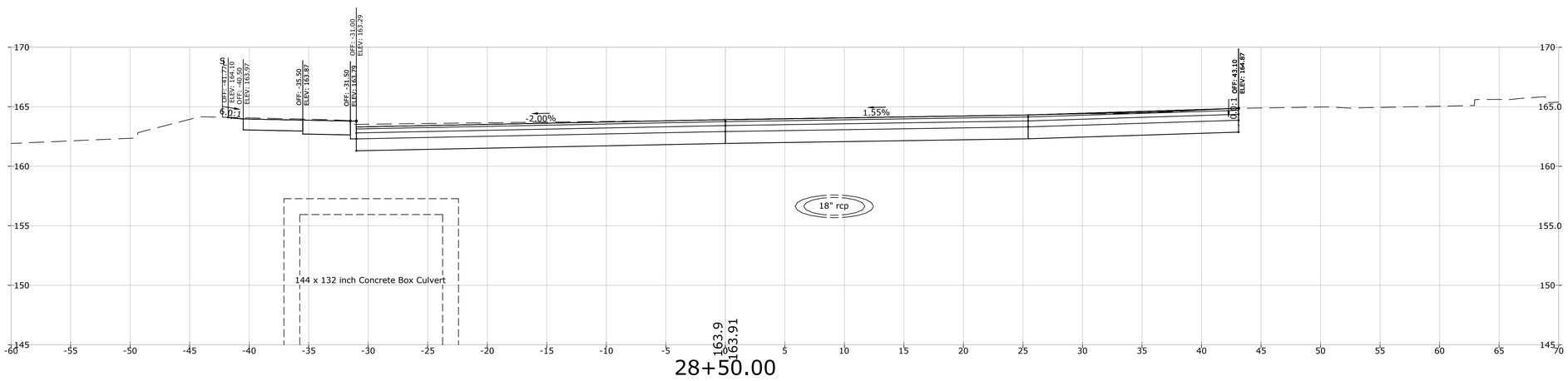

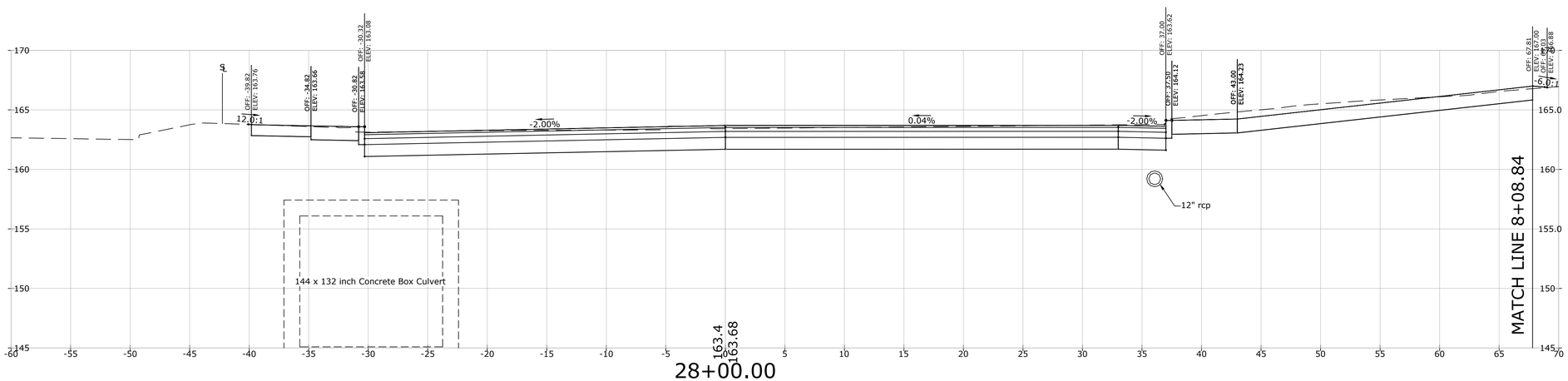

CROSS SECTIONS

CARDINAL ENGINEERING ASSOCIATES
3 Colony Street | Meriden, CT 06451 | 203-238-1969

DESIGNED BY: A. DOORNWEERD
DRAWN BY: D. ROULEAU
CHECKED BY: B. SKONIECZNY
DATE: 3/29/2019

PHASE VI STREETSCAPE
MYRTLE STREET/EAST MAIN STREET
STATE PROJECT No. L088-002
NEW BRITAIN, CONNECTICUT

REV.	DATE	DESCRIPTION	BY	APP'D

SCALE 1"=5'
JOB NO. 2261
SHEET NO. 36

P:\Civil 3d Projects 2014\NewBritain EMainMyrtle\Production Drawings\CrossSections2261.dwg, XSC 23, 4/1/2019 8:54:44 AM,
DWG To PDF.pc3, ANSI expand D (34.00 - 22.00 Inches)

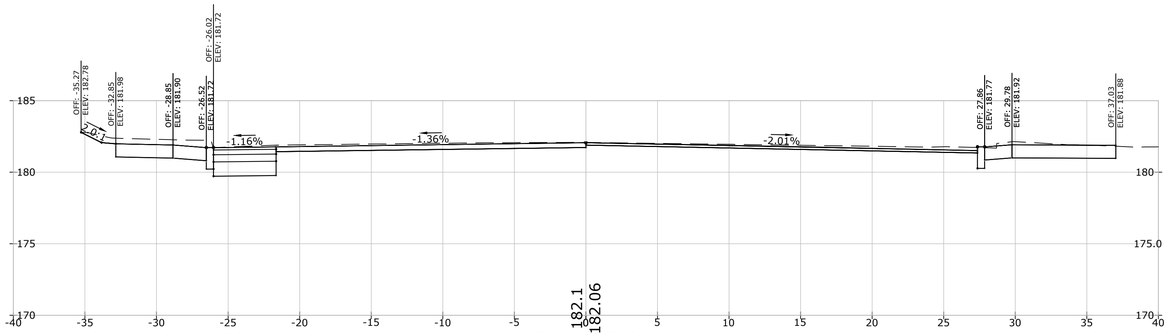

6+13.39

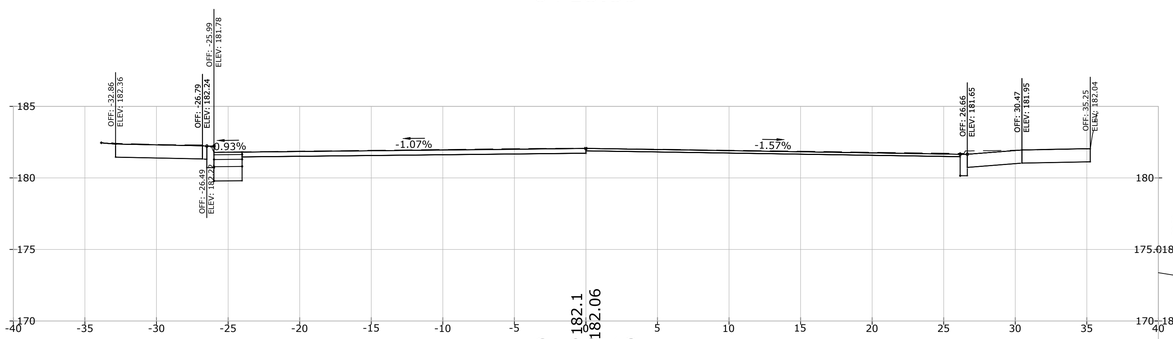

6+08.12

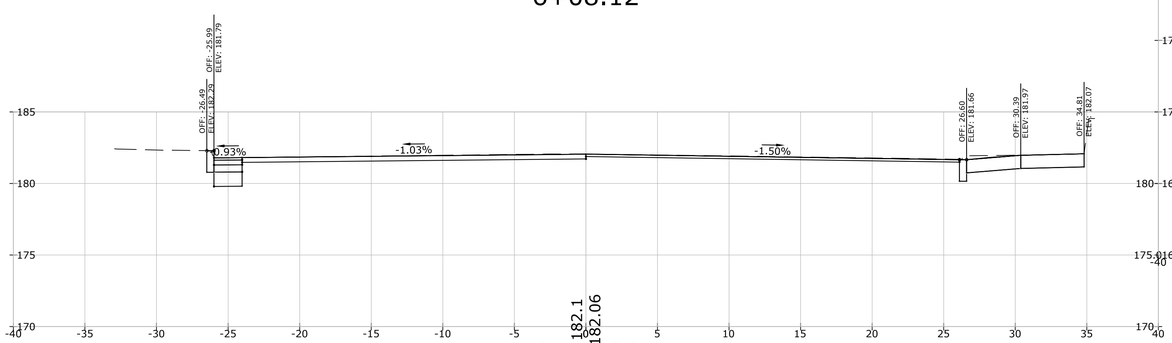

6+07.36

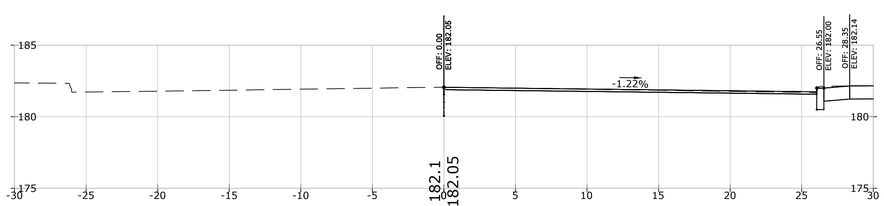

6+04.41

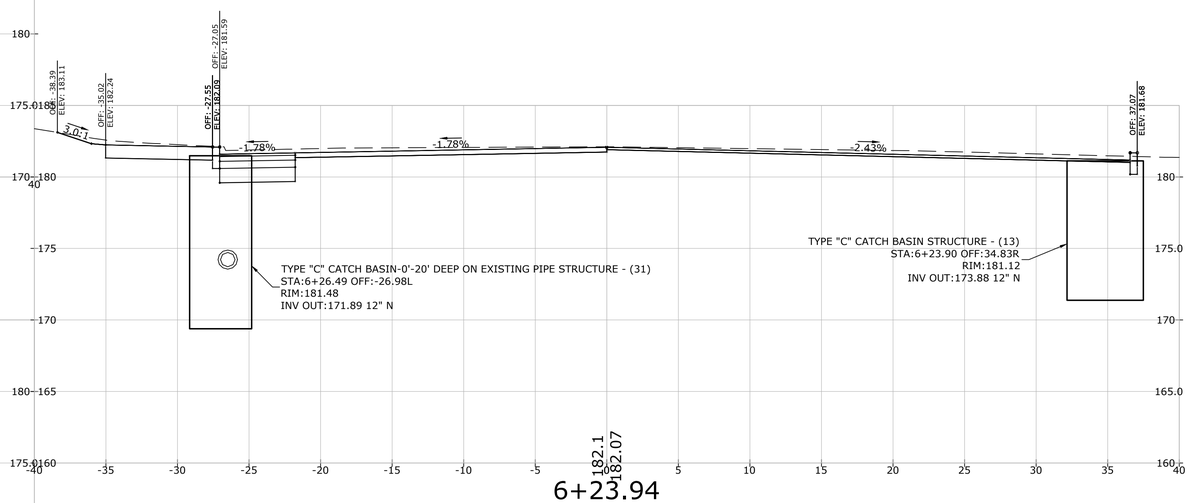

6+23.94

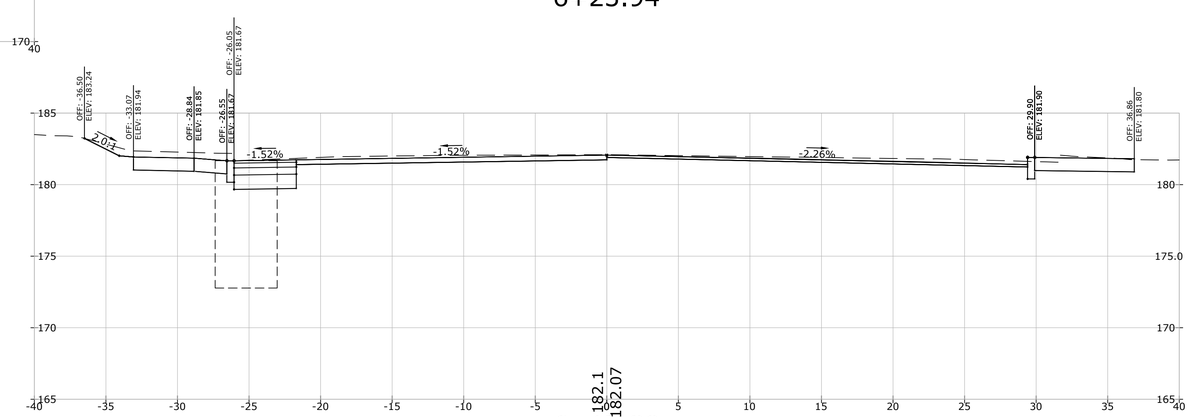

6+17.39

WASHINGTON STREET

CROSS SECTIONS

CARDINAL ENGINEERING ASSOCIATES
3 Colony Street | Meriden, CT 06451 | 203-238-1969

DESIGNED BY: A. DOORNWEERD
DRAWN BY: D. ROULEAU
CHECKED BY: B. SKONIECZNY
DATE: 3/29/2019

PHASE VI STREETSCAPE
MYRTLE STREET/EAST MAIN STREET
STATE PROJECT No. L088-002
NEW BRITAIN, CONNECTICUT

REV.	DATE	DESCRIPTION	BY	APP'D

SCALE 1"=5'
JOB NO. 2261

SHEET NO. 37

P:\Civil 3d Projects 2014\NewBritain EMainMyrtle\Production Drawings\CrossSections2261.dwg, XSC 24, 4/1/2019 8:54:57 AM,

P:\Civil 3d Projects 2014\NewBritain EMainMyrtle\Production Drawings\CrossSections2261.dwg, XSC 25, 4/1/2019 8:55:10 AM,
DWG To PDF.pc3, ARCH expand D (36.00 - 24.00 Inches)

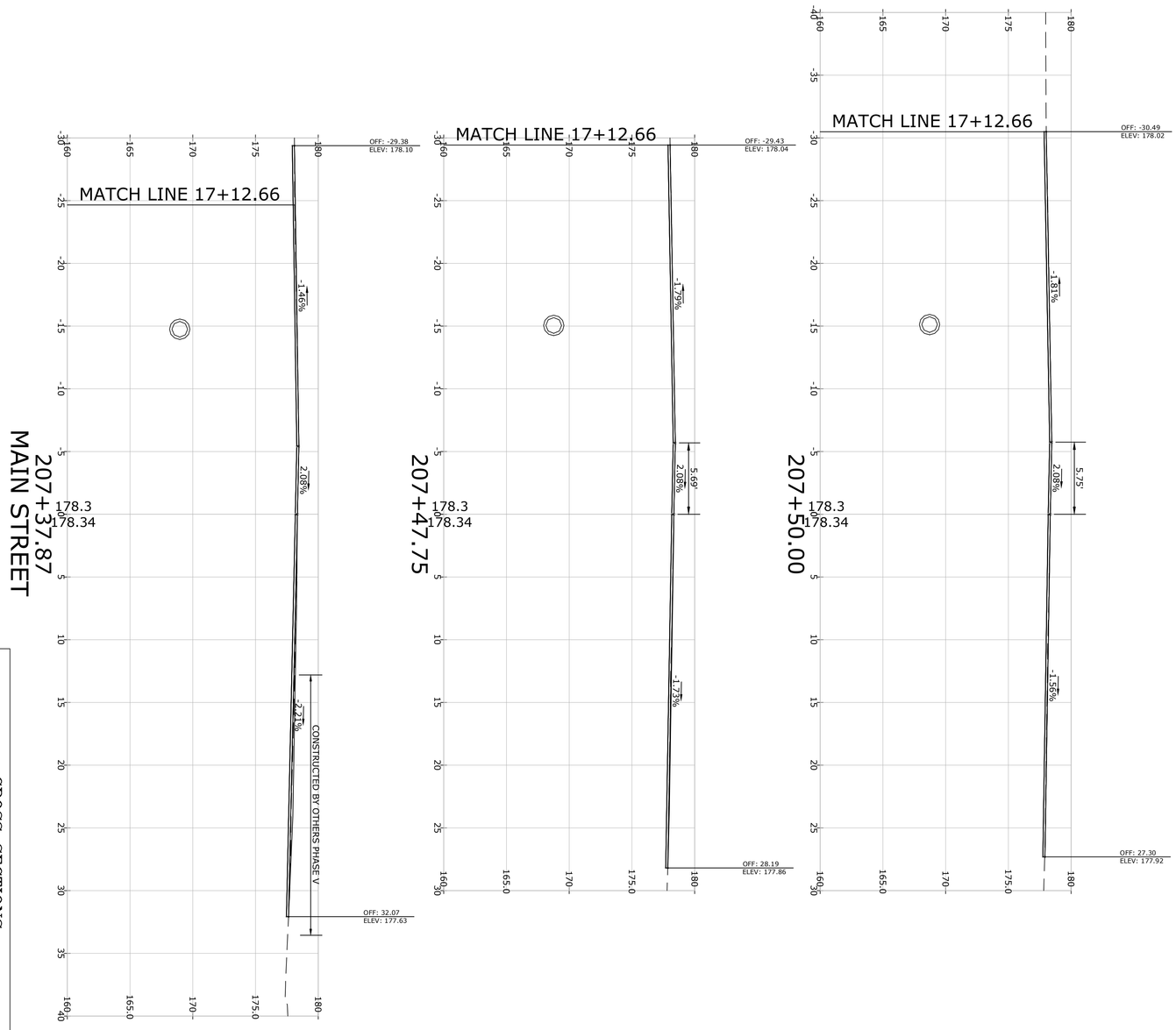

CROSS SECTIONS

SHEET NO.	SCALE	REV.	DATE	DESCRIPTION	BY	APP'D
38	1"=5'					
	JOB NO. 2261					

PHASE VI STREETSCAPE
MYRTLE STREET/EAST MAIN STREET
STATE PROJECT No. L088-002
NEW BRITAIN, CONNECTICUT

DESIGNED BY: A. DOORNWEERD
DRAWN BY: D. ROULEAU
CHECKED BY: B. SKONIECZNY
DATE: 3/29/2019

CARDINAL ENGINEERING ASSOCIATES
3 Colony Street | Meriden, CT 06451 | 203-238-1969

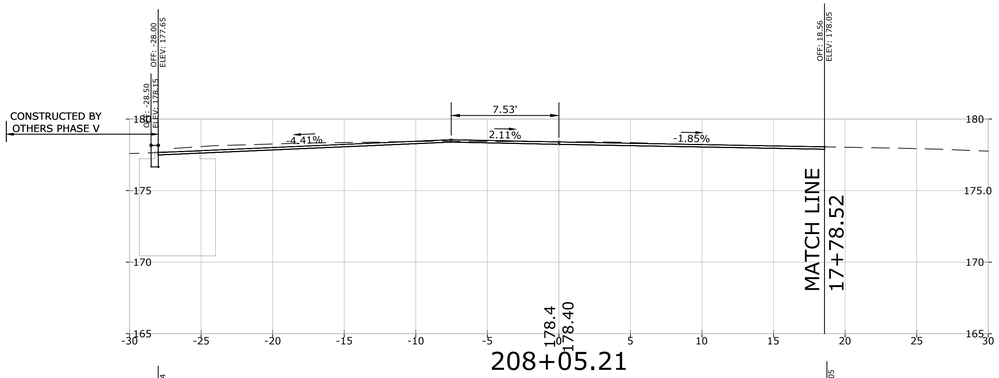

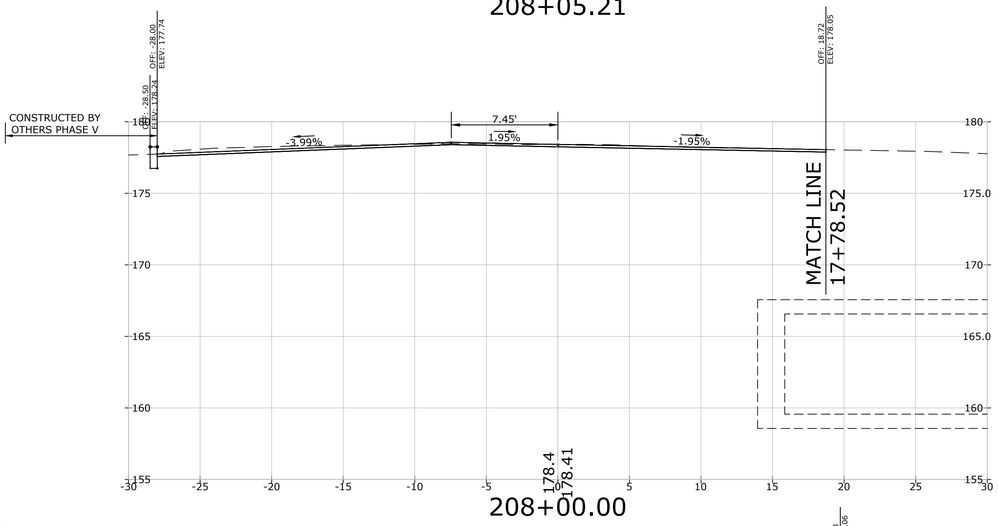

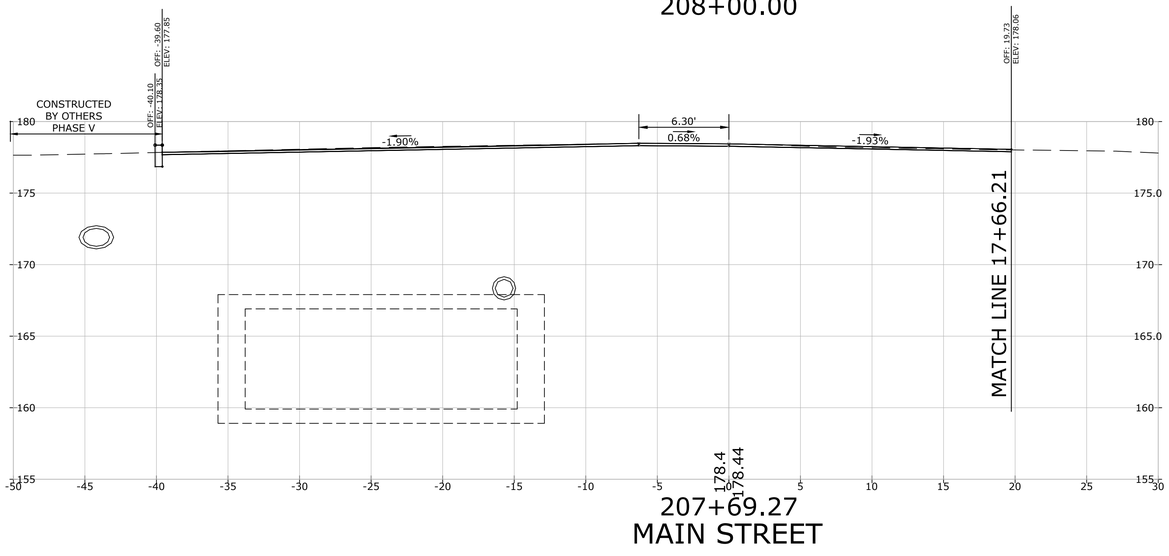

CROSS SECTIONS

CARDINAL ENGINEERING ASSOCIATES
3 Colony Street | Meriden, CT06451 | 203-238-1969

DESIGNED BY: A. DOORNWEERD
DRAWN BY: D. ROULEAU
CHECKED BY: B. SKONIECZNY
DATE: 3/29/2019

PHASE VI STREETSCAPE
MYRTLE STREET/EAST MAIN STREET
STATE PROJECT No. L088-002
NEW BRITAIN, CONNECTICUT

REV.	DATE	DESCRIPTION	BY	APP'D

SCALE 1"=5'

JOB NO. 2261

SHEET NO. 39

P:\Civil 3d Projects 2014\NewBritain EMainMyrtle\Production Drawings\CrossSections2261.dwg, XSC 26, 4/1/2019 8:55:22 AM,
DWG To PDF.pc3, ANSI expand D (34.00 - 22.00 Inches)

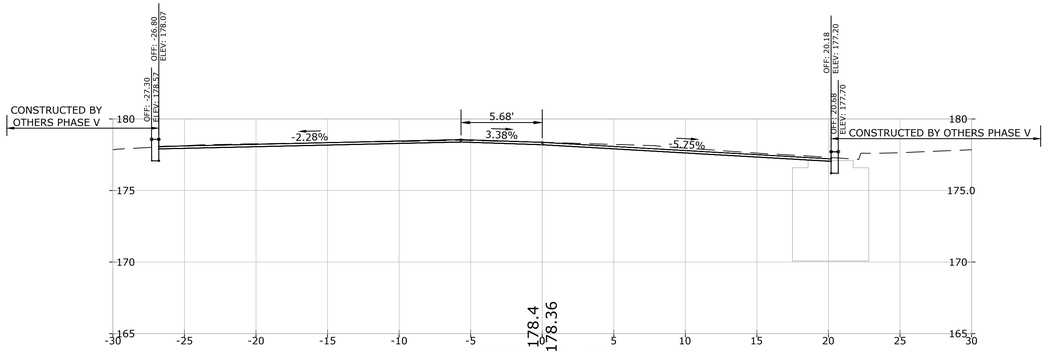

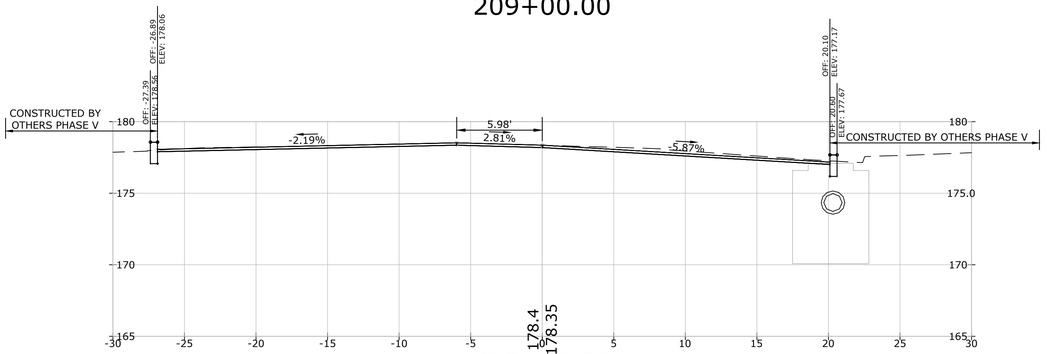

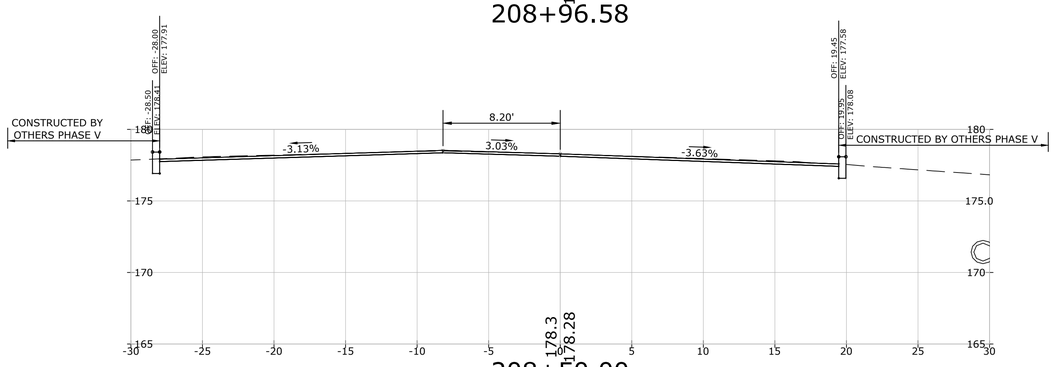

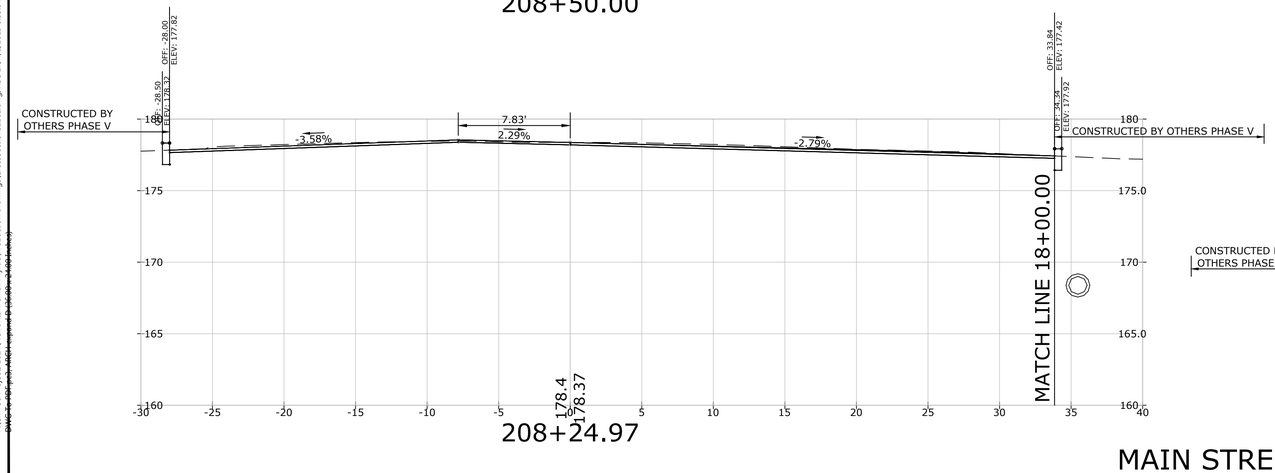

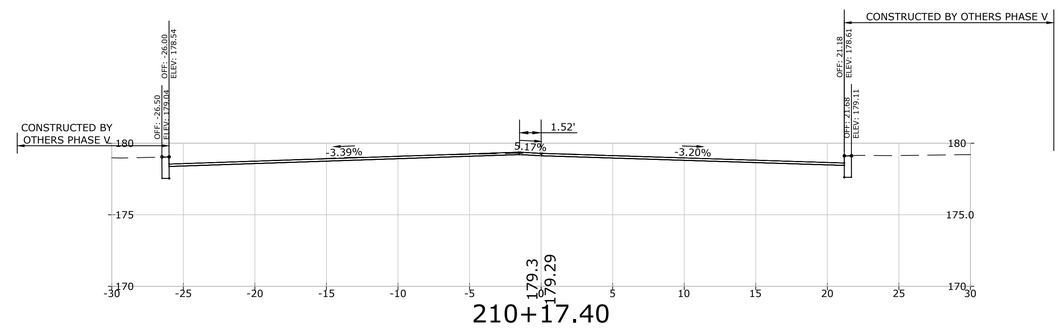

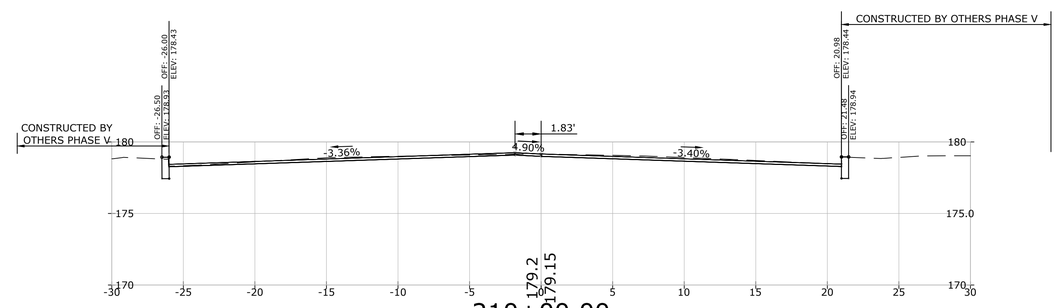

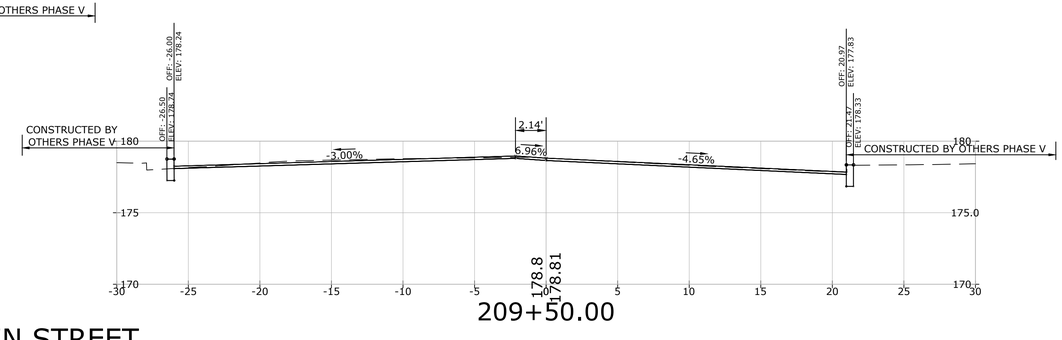

MAIN STREET

CROSS SECTIONS

CARDINAL ENGINEERING ASSOCIATES
3 Colony Street | Meriden, CT06451 | 203-238-1969

DESIGNED BY: A. DOORNWEERD
DRAWN BY: D. ROULEAU
CHECKED BY: B. SKONIECZNY
DATE: 3/29/2019

PHASE VI STREETSCAPE
MYRTLE STREET/EAST MAIN STREET
STATE PROJECT No. L088-002
NEW BRITAIN, CONNECTICUT

REV.	DATE	DESCRIPTION	BY	APP'D

SCALE 1"=5'
JOB NO. 2261
SHEET NO. 40

P:\Civil 3d Projects 2014\NewBritain EMainMyrtle\Production Drawings\CrossSections2261.dwg, XSC 27, 4/1/2019 8:55:34 AM,
DWG To PDF.pc3, ARCH expand (8.50x14.00 - 2.400 inches)

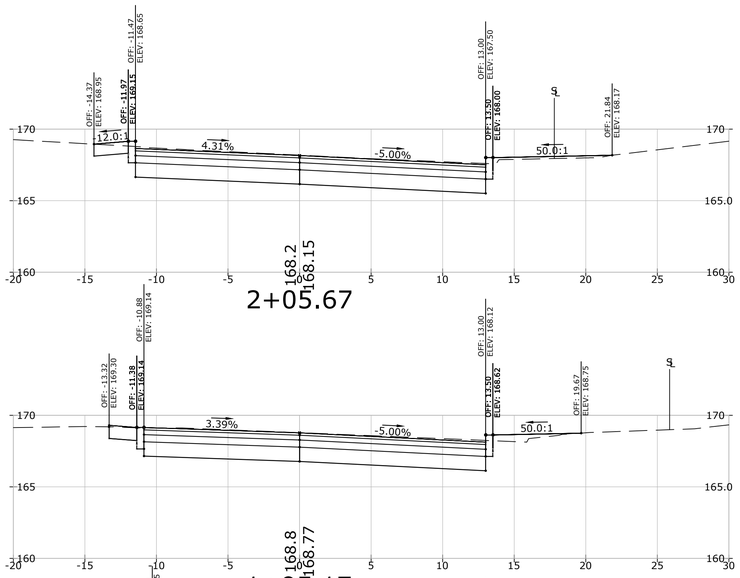

RTE 72 ON RAMP

CROSS SECTIONS

CARDINAL ENGINEERING ASSOCIATES
3 Colony Street | Meriden, CT06451 | 203-238-1969

DESIGNED BY: A. DOORNWEERD
DRAWN BY: D. ROULEAU
CHECKED BY: B. SKONIECZNY
DATE: 3/29/2019

PHASE VI STREETSCAPE
MYRTLE STREET/EAST MAIN STREET
STATE PROJECT No. L088-002
NEW BRITAIN, CONNECTICUT

REV.	DATE	DESCRIPTION	BY	APP'D

SCALE 1"=5'

JOB NO. 2261

SHEET NO. 41

P:\Civil 3d Projects 2014\NewBritain EMainMyrtle\Production Drawings\CrossSections2261.dwg, XSC 28, 4/1/2019 9:09:20 AM,
DWG To PDF.pc3, ANSI expand D (34.00 - 22.00 Inches)

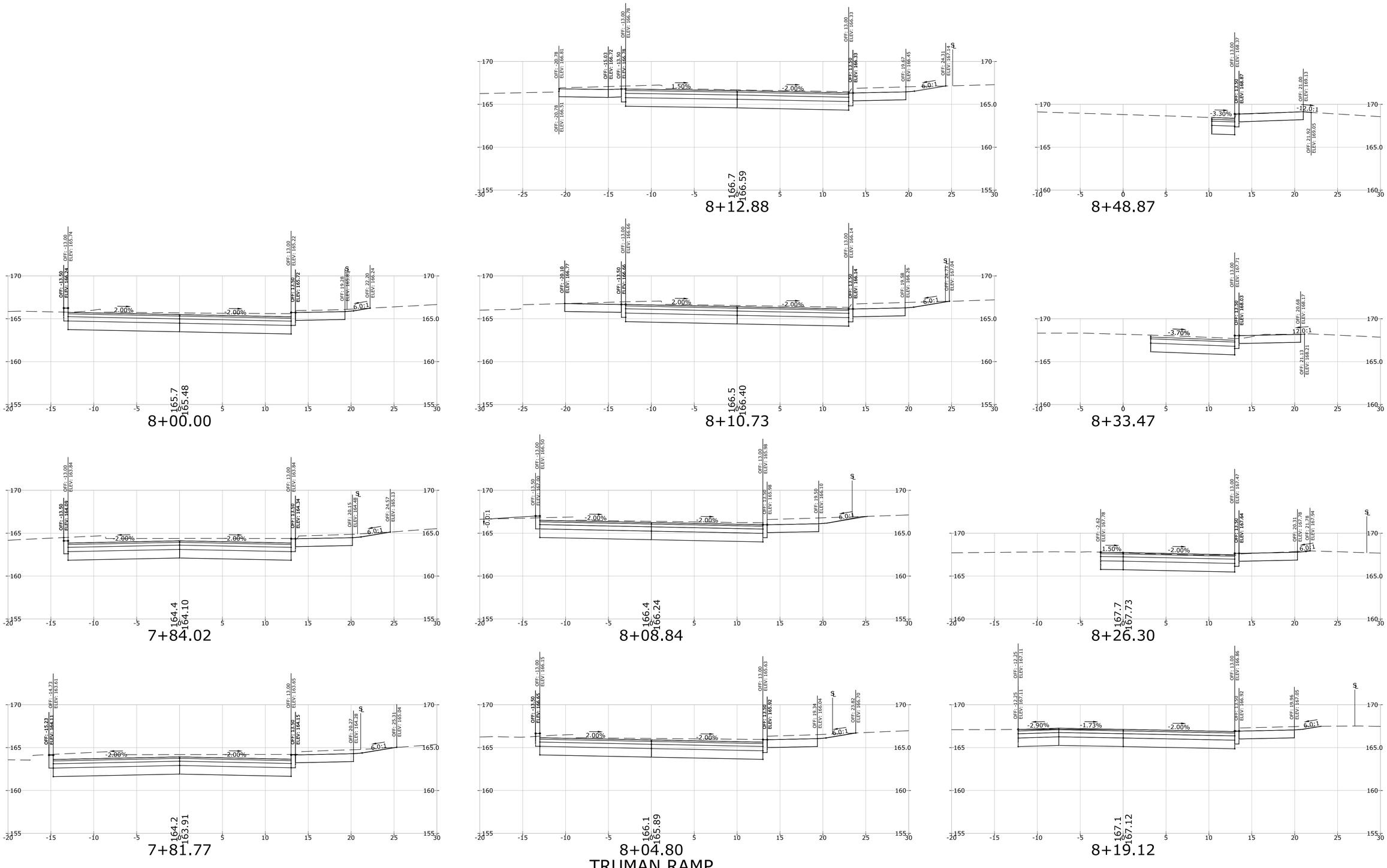

CROSS SECTIONS

CARDINAL ENGINEERING ASSOCIATES
3 Colony Street | Meriden, CT 06451 | 203-238-1969

DESIGNED BY: A. DOORNWEERD
DRAWN BY: D. ROULEAU
CHECKED BY: B. SKONIECZNY
DATE: 3/29/2019

PHASE VI STREETSCAPE
MYRTLE STREET/EAST MAIN STREET
STATE PROJECT No. L088-002
NEW BRITAIN, CONNECTICUT

REV.	DATE	DESCRIPTION	BY	APP'D

SCALE 1"=5'
JOB NO. 2261

SHEET NO. 42

P:\Civil 3d Projects 2014\NewBritain EMainMyrtle\Production Drawings\CrossSections2261.dwg, XSC 29, 4/1/2019 9:09:33 AM,

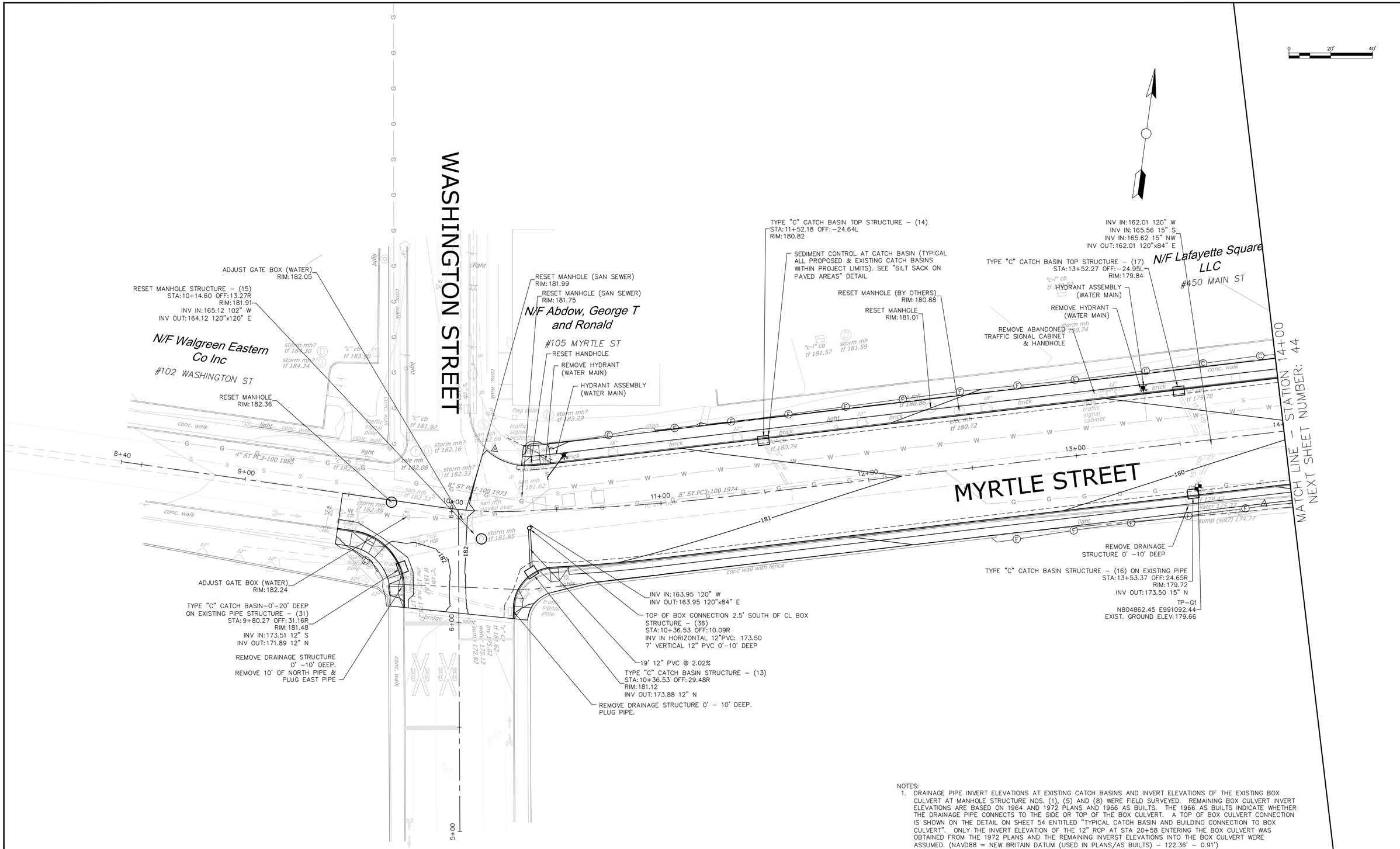

NOTES:

1. DRAINAGE PIPE INVERT ELEVATIONS AT EXISTING CATCH BASINS AND INVERT ELEVATIONS OF THE EXISTING BOX CULVERT AT MANHOLE STRUCTURE NOS. (1), (5) AND (8) WERE FIELD SURVEYED. REMAINING BOX CULVERT INVERT ELEVATIONS ARE BASED ON 1964 AND 1972 PLANS AND 1966 AS BUILTS. THE 1966 AS BUILTS INDICATE WHETHER THE DRAINAGE PIPE CONNECTS TO THE SIDE OR TOP OF THE BOX CULVERT. A TOP OF BOX CULVERT CONNECTION IS SHOWN ON THE DETAIL ON SHEET 54 ENTITLED "TYPICAL CATCH BASIN AND BUILDING CONNECTION TO BOX CULVERT". ONLY THE INVERT ELEVATION OF THE 12" RCP AT STA 20+58 ENTERING THE BOX CULVERT WAS OBTAINED FROM THE 1972 PLANS AND THE REMAINING INVERST ELEVATIONS INTO THE BOX CULVERT WERE ASSUMED. (NAVD88 = NEW BRITAIN DATUM (USED IN PLANS/AS BUILTS) – 122.36' – 0.91')
2. SEE INTERSECTION GRADING PLAN FOR MORE INFORMATION.
3. ALL PROPOSED CATCH BASINS, MANHOLES AND STORM PIPES AND REMOVAL OF EXISTING DRAINAGE STRUCTURES AND PIPES ARE 0' – 10' DEEP UNLESS NOTED OTHERWISE.

GRADING, DRAINAGE, UTILITY,
AND SEDIMENTATION & EROSION
CONTROL PLAN

CARDINAL ENGINEERING ASSOCIATES
3 Colony Street | Meriden, CT 06451 | 203-238-1969

DESIGNED BY: A. DOORNWEERD
DRAWN BY: D. ROULEAU
CHECKED BY: B. SKONIECZNY
DATE: 3/29/2019

PHASE VI STREETSCAPE
MYRTLE STREET/EAST MAIN STREET
STATE PROJECT No. L088–002
NEW BRITAIN, CONNECTICUT

REV.	DATE	DESCRIPTION	BY	APP'D

SCALE 1"=20'

JOB NO. 2261

SHEET NO. 43

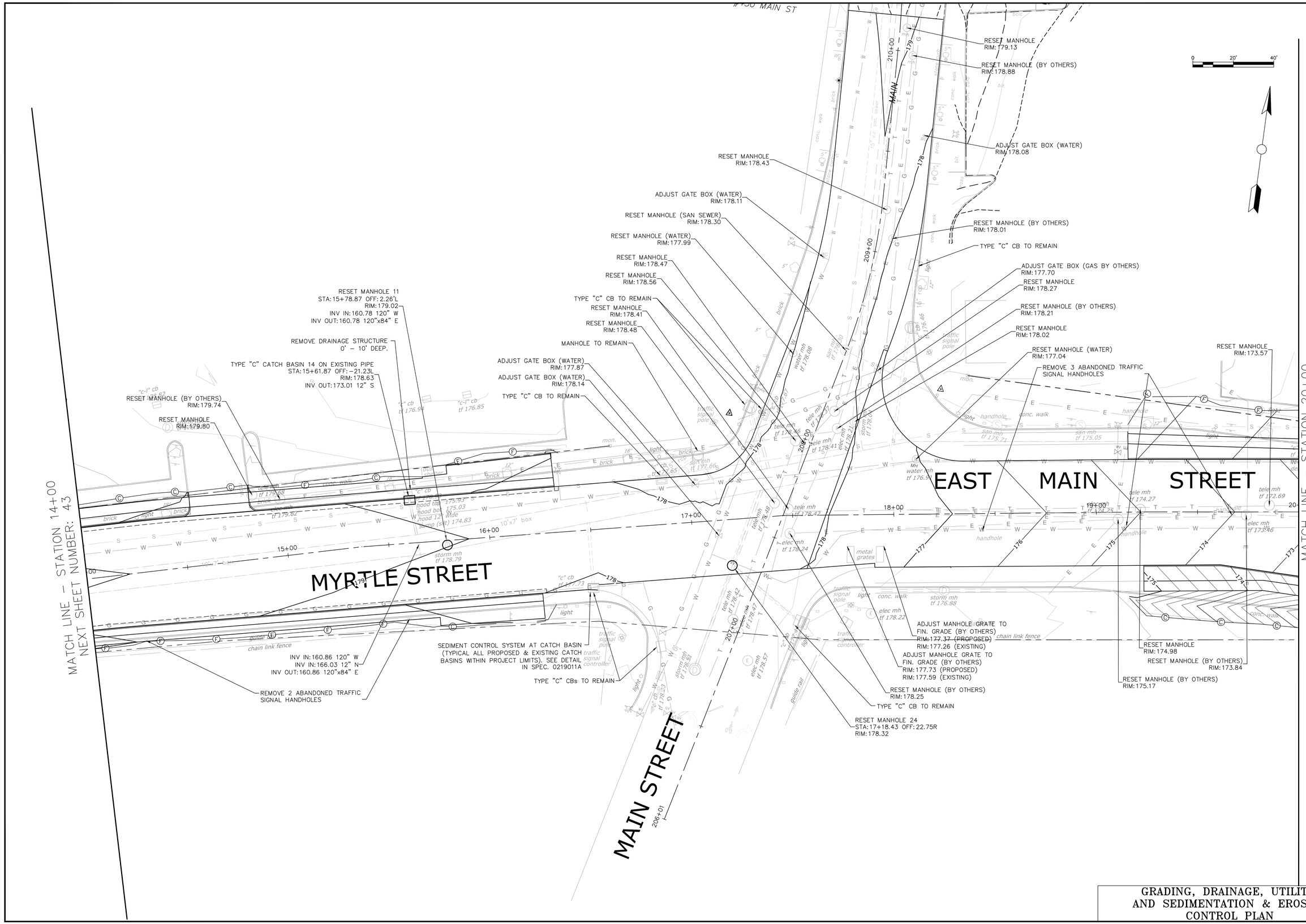

GRADING, DRAINAGE, UTILITY,
AND SEDIMENTATION & EROSION
CONTROL PLAN

SHEET NO. 44

SCALE 1"=20'

JOB NO. 2261

REV.	DATE	DESCRIPTION	BY	APP'D

PHASE VI STREETSCAPE
MYRTLE STREET/EAST MAIN STREET
STATE PROJECT No. L088-002
NEW BRITAIN, CONNECTICUT

DESIGNED BY: A. DOORNWEERD
DRAWN BY: D. ROULEAU
CHECKED BY: B. SKONIECZNY
DATE: 3/29/2019

CARDINAL
ENGINEERING ASSOCIATES
3 Colony Street | Meriden, CT 06451 | 203-238-1969

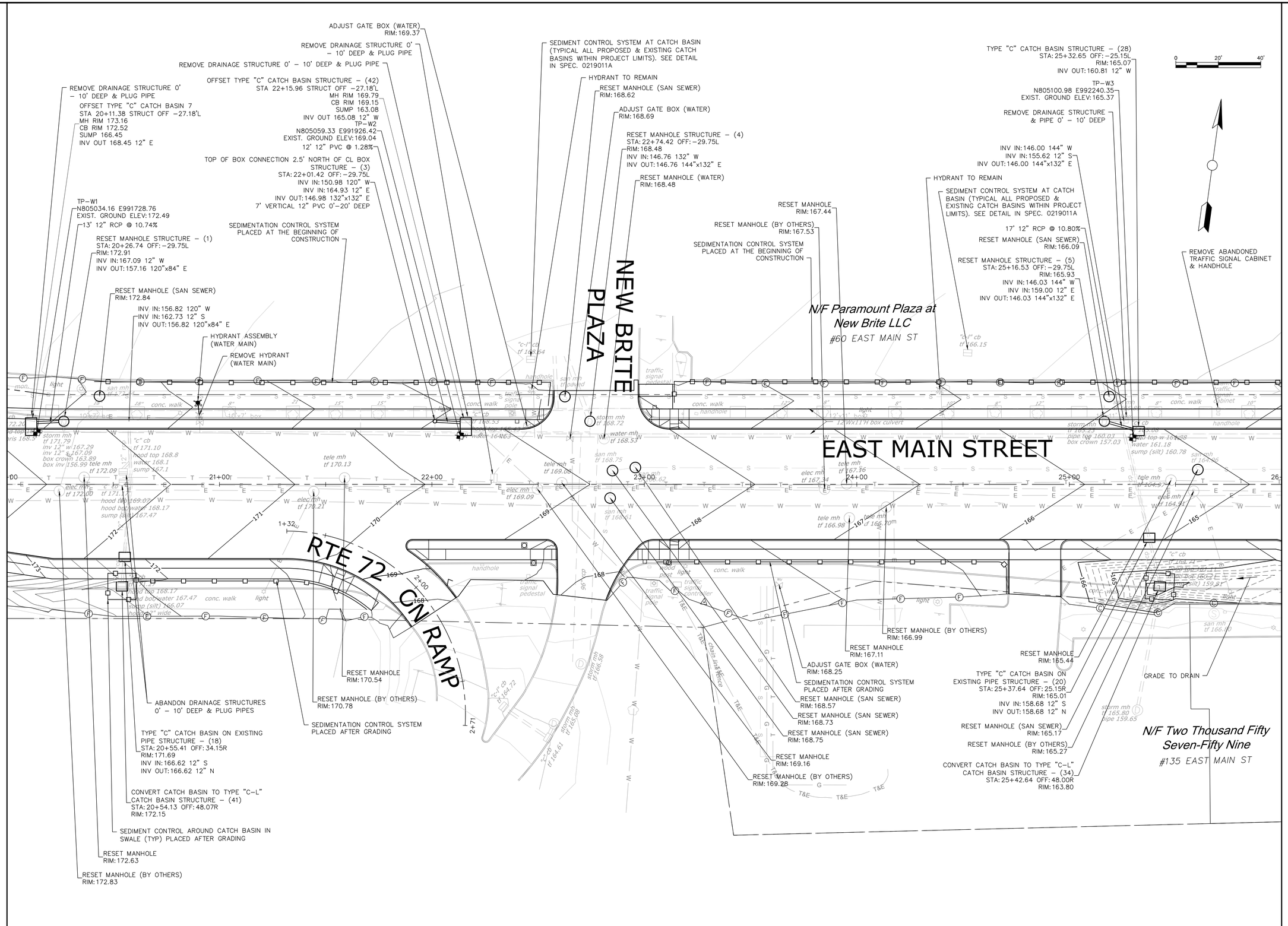

GRADING, DRAINAGE, UTILITY, AND SEDIMENTATION & EROSION CONTROL PLAN

CARDINAL ENGINEERING ASSOCIATES
3 Colony Street | Meriden, CT06451 | 203-238-1969

DESIGNED BY: A. DOORNWEERD
DRAWN BY: D. ROULEAU
CHECKED BY: B. SKONIECZNY
DATE: 3/29/2019

PHASE VI STREETSCAPE
MYRTLE STREET/EAST MAIN STREET
STATE PROJECT No. L088–002
NEW BRITAIN, CONNECTICUT

REV.	DATE	DESCRIPTION	BY	APP'D

SCALE 1"=20'
JOB NO. 2261
SHEET NO. 45

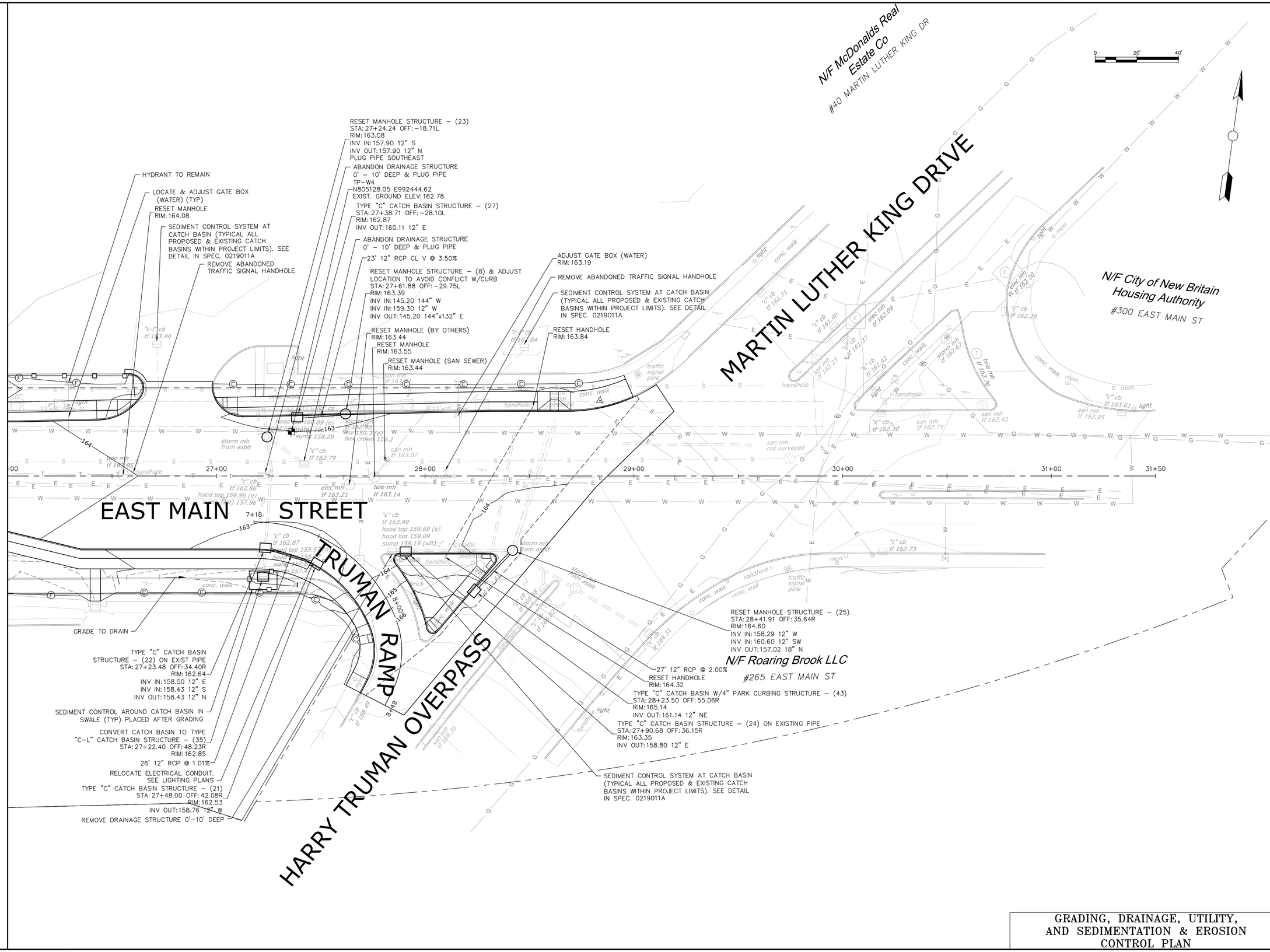

GRADING, DRAINAGE, UTILITY, AND SEDIMENTATION & EROSION CONTROL PLAN

CARDINAL ENGINEERING ASSOCIATES
3 Colony Street | Meriden, CT 06451 | 203-238-1969

DESIGNED BY: A. DOORNWEERD
DRAWN BY: D. ROULEAU
CHECKED BY: B. SKONIECZNY
DATE: 3/29/2019

PHASE VI STREETSCAPE
MYRTLE STREET/EAST MAIN STREET
STATE PROJECT No. L088–002
NEW BRITAIN, CONNECTICUT

REV.	DATE	DESCRIPTION	BY	APP'D

SCALE 1"=20'

JOB NO. 2261

SHEET NO. 46

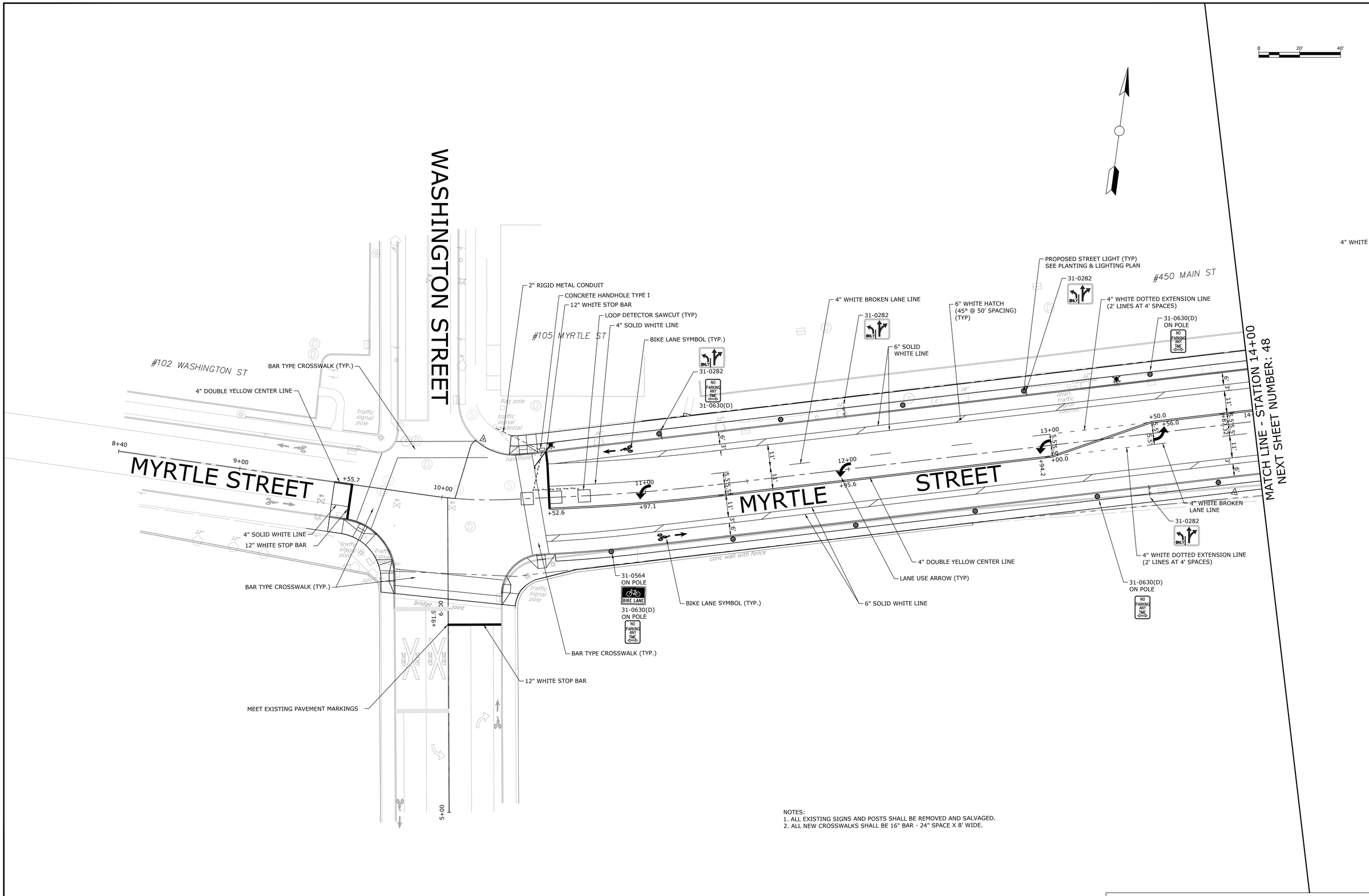

NOTES:
1. ALL EXISTING SIGNS AND POSTS SHALL BE REMOVED AND SALVAGED.
2. ALL NEW CROSSWALKS SHALL BE 16" BAR - 24" SPACE X 8' WIDE.

PAVEMENT MARKING AND SIGNING PLAN

SHEET NO. 47

CARDINAL ENGINEERING ASSOCIATES
3 Colony Street | Meriden, CT 06451 | 203-238-1969

DESIGNED BY: A. DOORNWEERD
DRAWN BY: D. ROULEAU
CHECKED BY: B. SKONIECZNY
DATE: 3/29/2019

PHASE VI STREETSCAPE
MYRTLE STREET/EAST MAIN STREET
STATE PROJECT No. L088-002
NEW BRITAIN, CONNECTICUT

REV.	DATE	DESCRIPTION	BY	APP'D

SCALE 1"=20'
JOB NO. 2261

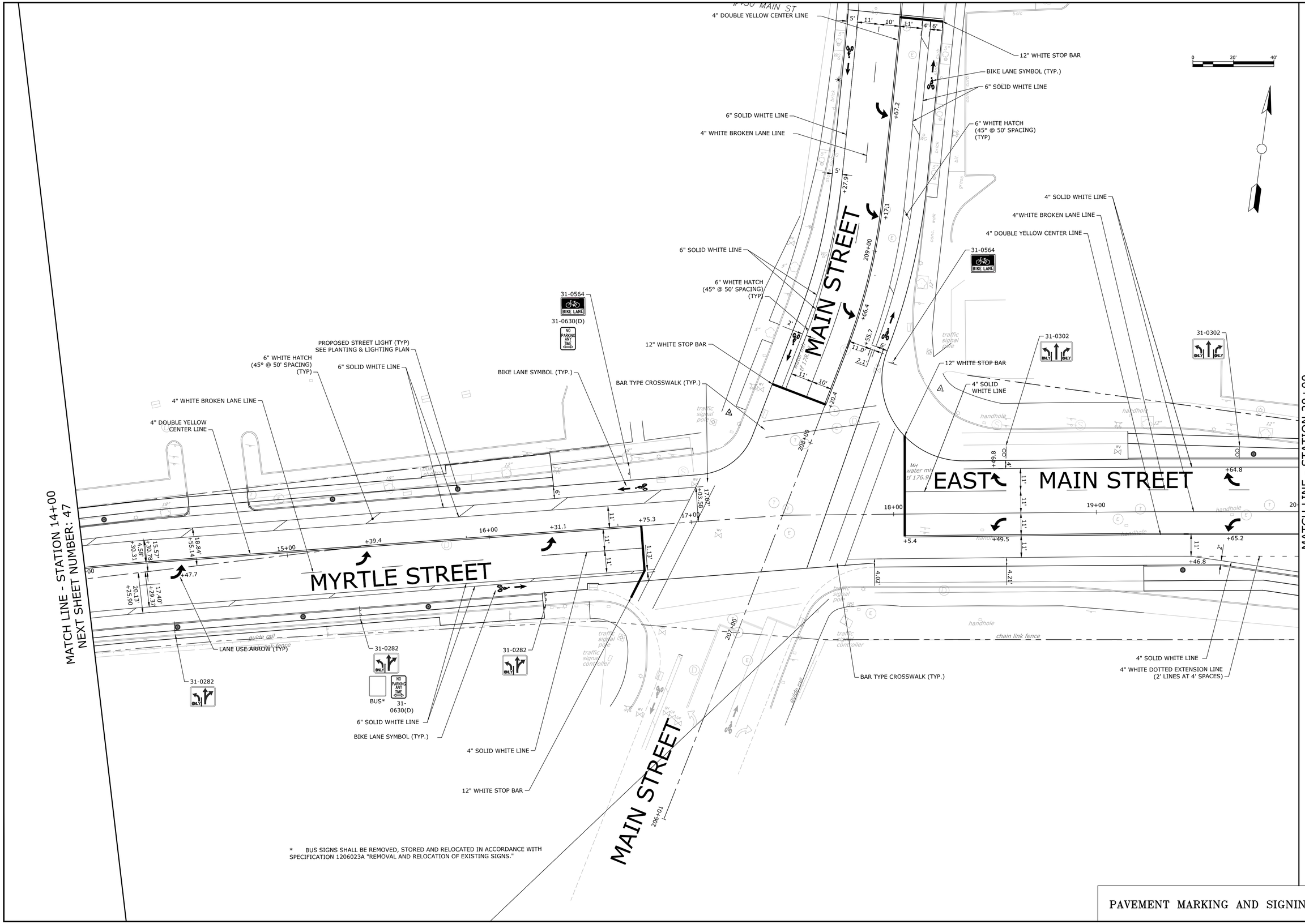

* BUS SIGNS SHALL BE REMOVED, STORED AND RELOCATED IN ACCORDANCE WITH SPECIFICATION 1206023A "REMOVAL AND RELOCATION OF EXISTING SIGNS."

PAVEMENT MARKING AND SIGNING PLAN

SHEET NO. 48

SCALE 1"=20'

JOB NO. 2261

REV.	DATE	DESCRIPTION	BY	APP'D

PHASE VI STREETSCAPE
MYRTLE STREET/EAST MAIN STREET
STATE PROJECT No. L088-002
NEW BRITAIN, CONNECTICUT

DESIGNED BY: A. DOORNWEERD
DRAWN BY: D. ROULEAU
CHECKED BY: B. SKONIECZNY
DATE: 3/29/2019

CARDINAL ENGINEERING ASSOCIATES
3 Colony Street | Meriden, CT 06451 | 203-238-1969

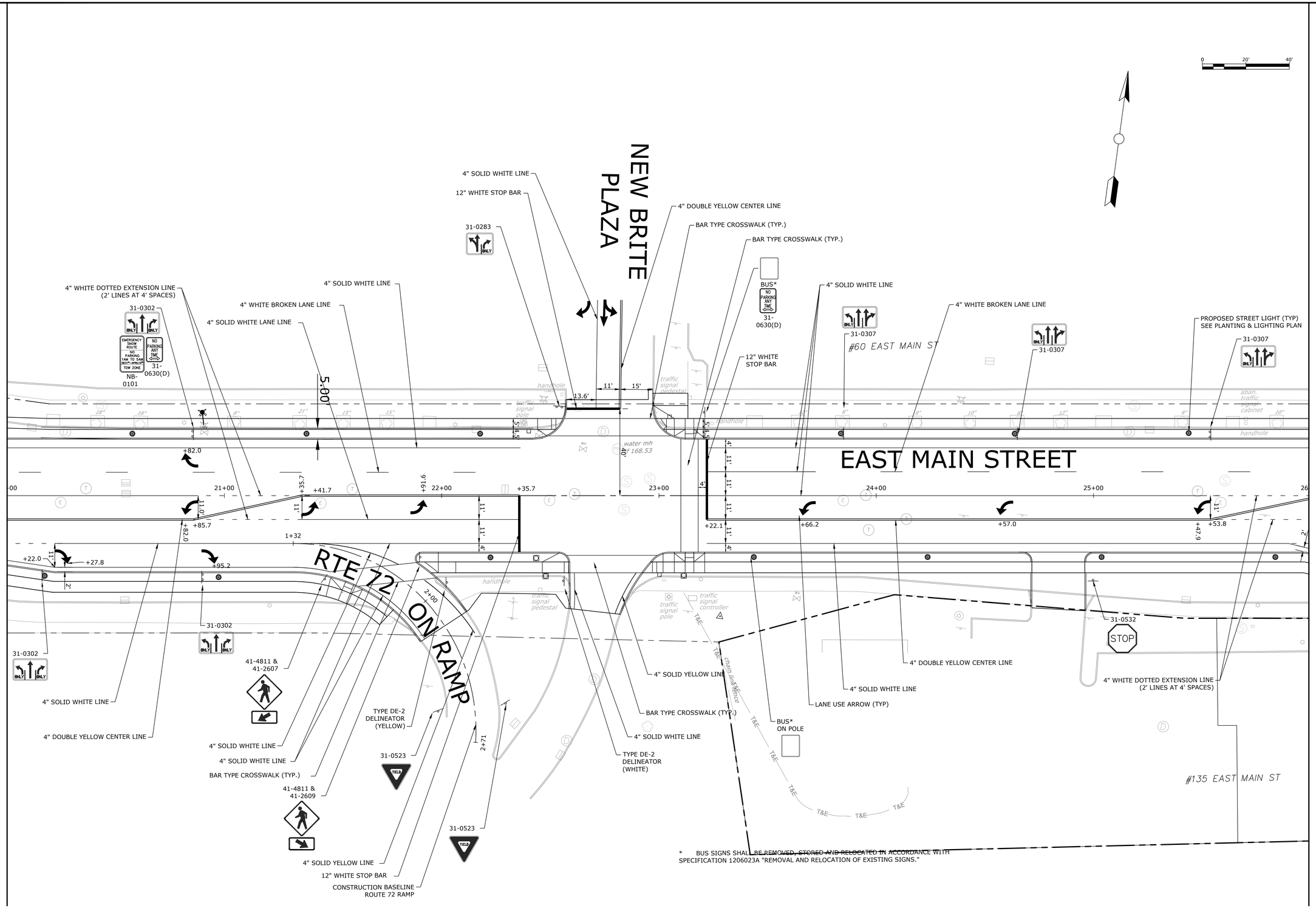

* BUS SIGNS SHALL BE REMOVED, STORED AND RELOCATED IN ACCORDANCE WITH SPECIFICATION 1206023A "REMOVAL AND RELOCATION OF EXISTING SIGNS."

PAVEMENT MARKING AND SIGNING PLAN

SHEET NO. 49

CARDINAL ENGINEERING ASSOCIATES
3 Colony Street | Meriden, CT06451 | 203-238-1969

DESIGNED BY: A. DOORNWEERD
DRAWN BY: D. ROULEAU
CHECKED BY: B. SKONIECZNY
DATE: 3/29/2019

PHASE VI STREETSCAPE
MYRTLE STREET/EAST MAIN STREET
STATE PROJECT No. L088-002
NEW BRITAIN, CONNECTICUT

REV.	DATE	DESCRIPTION	BY	APP'D

SCALE 1"=20'

JOB NO. 2261

MATCH LINE - STATION 26+00
NEXT SHEET NUMBER: 49

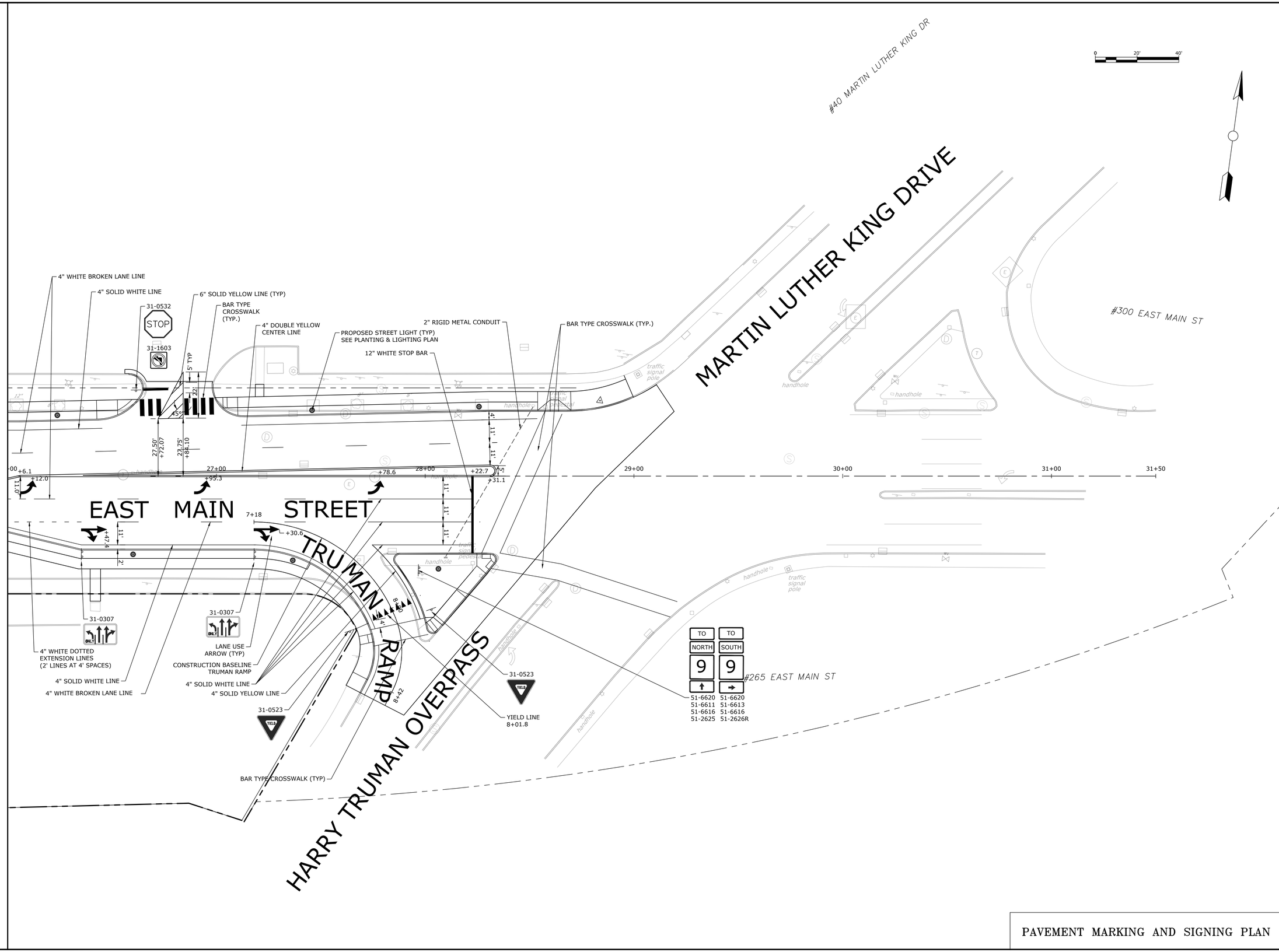

PAVEMENT MARKING AND SIGNING PLAN

SHEET NO. 50

SCALE 1"=20'

JOB NO. 2261

REV.	DATE	DESCRIPTION	BY	APP'D

PHASE VI STREETSCAPE
MYRTLE STREET/EAST MAIN STREET
STATE PROJECT No. L088-002
NEW BRITAIN, CONNECTICUT

DESIGNED BY: A. DOORNWEERD
DRAWN BY: D. ROULEAU
CHECKED BY: B. SKONIECZNY
DATE: 3/29/2019

CARDINAL ENGINEERING ASSOCIATES
3 Colony Street | Meriden, CT 06451 | 203-238-1969

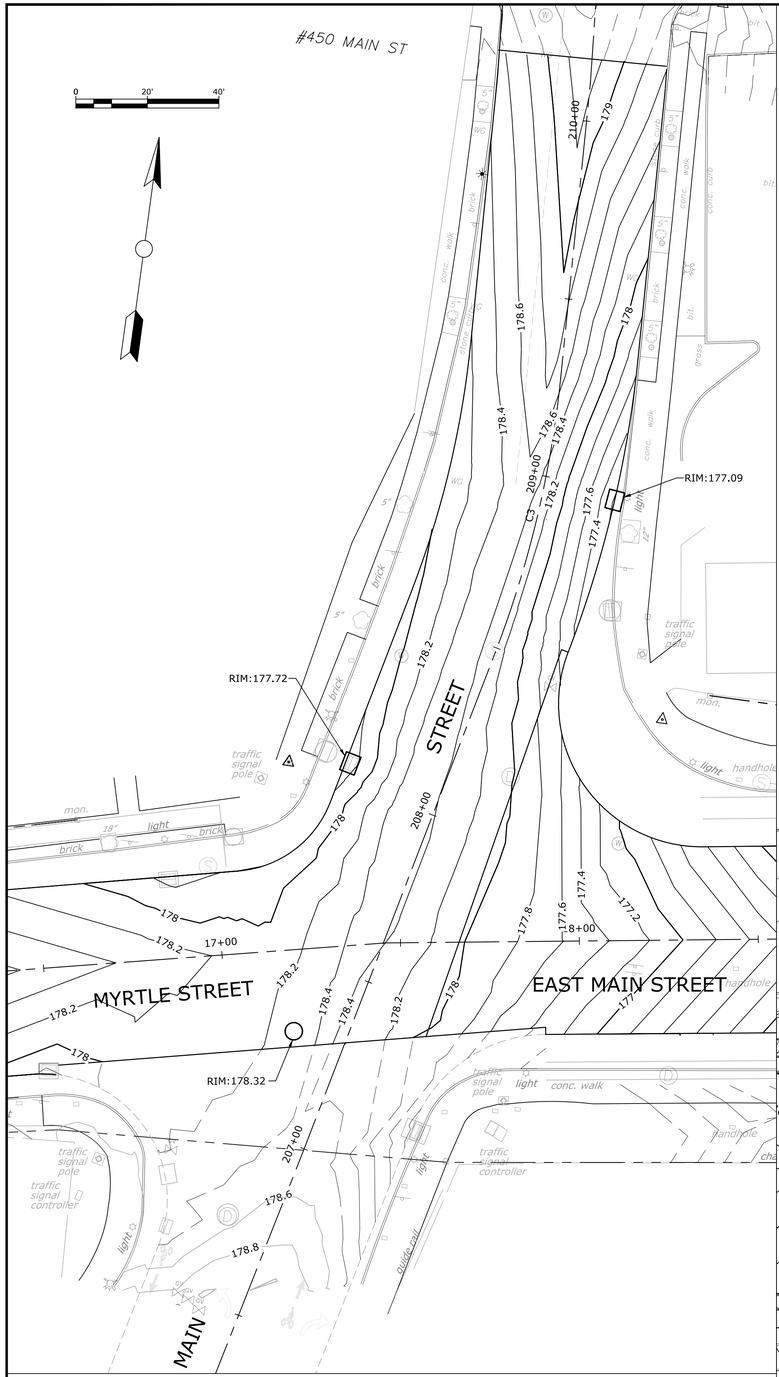

MYRTLE STREET/EAST MAIN STREET AND MAIN STREET

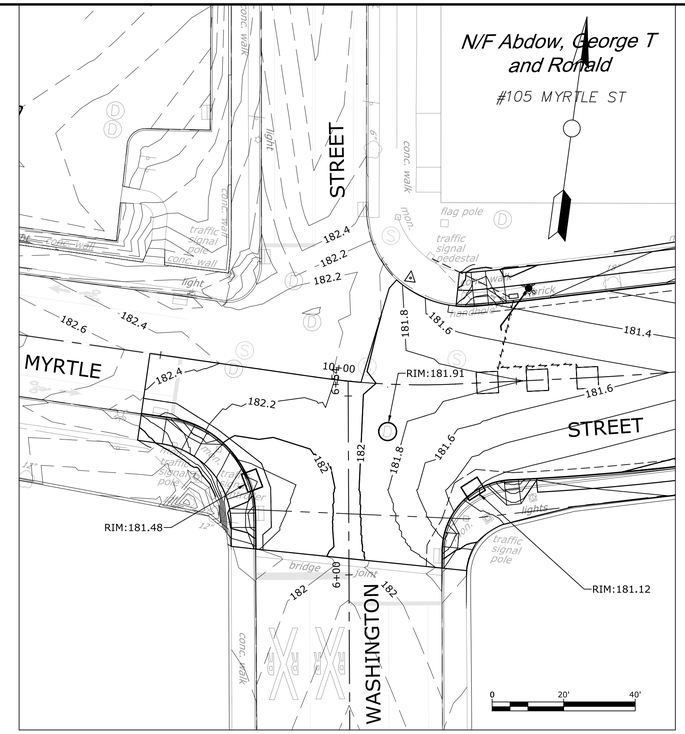

MYRTLE STREET AND WASHINGTON STREET

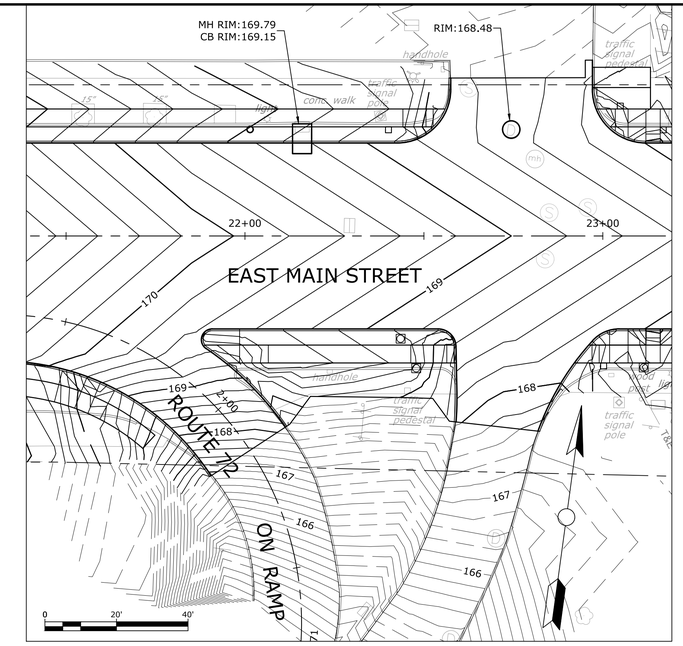

EAST MAIN STREET AND ROUTE 72 SOUTH RAMPS

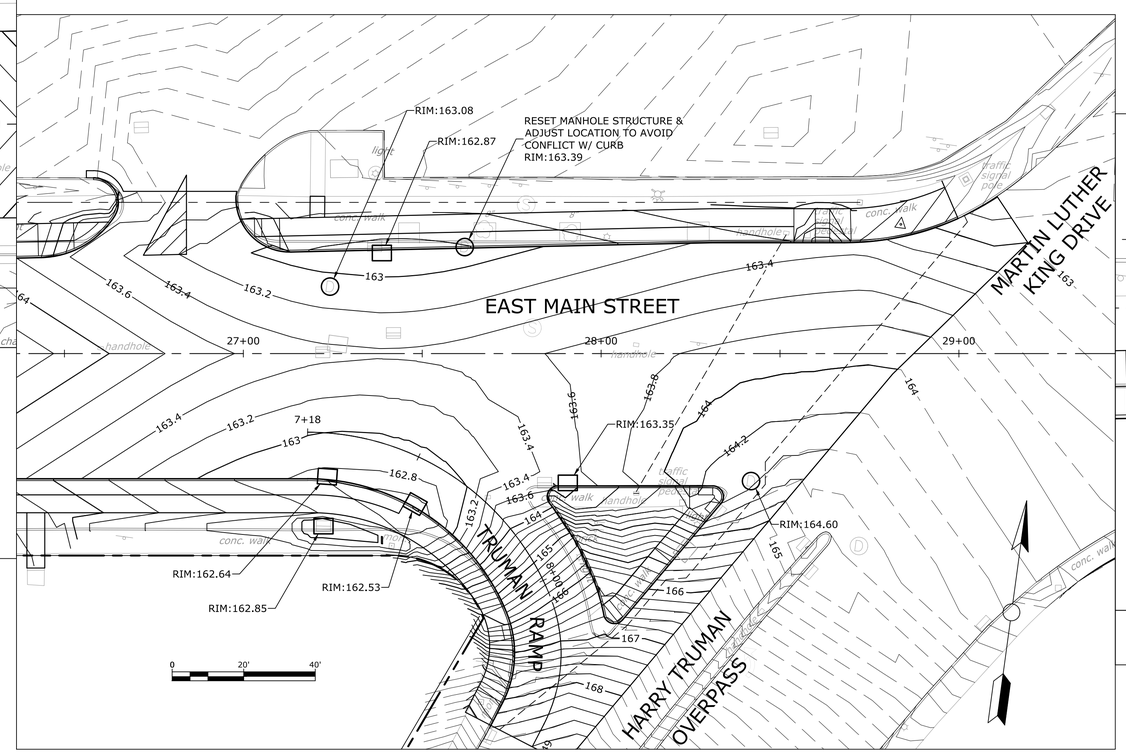

EAST MAIN STREET AND HARRY TRUMAN OVERPASS/MARTIN LUTHER KING DRIVE

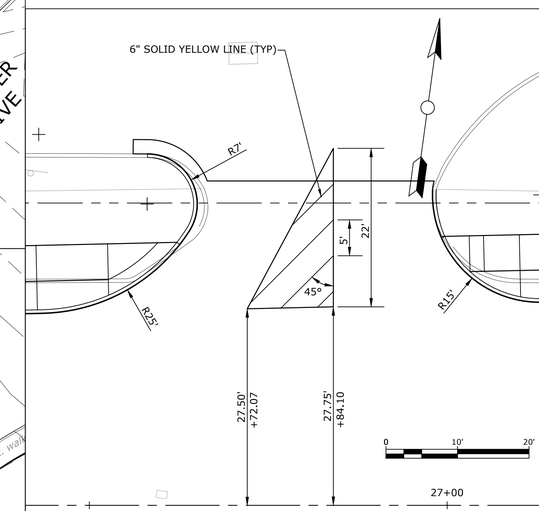

DETAIL OF PAINTED ISLAND

NOTES:

1. TOP OF FRAME ELEVATIONS REFLECT THE ELEVATION WITH THE STANDARD DEPRESSION AS SHOWN ON THE SHEET ENTITLED "CATCH BASIN AND DROP INLET" AND CTDOT STANDARD SHEETS HW-507_2 AND HW-507_3 ENTITLED "TYPE "C", "C-L" DOUBLE GRATE TYPE I" AND "TYPE "C", "C-L" DOUBLE GRATE TYPE II".
2. CONTOURS ON THIS GRADING PLAN DO NOT REFLECT THE ABOVE STANDARD DEPRESSION AND NEED TO BE LOCALLY ADJUSTED.

INTERSECTION GRADING PLAN

CARDINAL ENGINEERING ASSOCIATES
3 Colony Street | Meriden, CT06451 | 203-238-1969

DESIGNED BY: A. DOORNWEERD
DRAWN BY: D. ROULEAU
CHECKED BY: B. SKONIECZNY
DATE: 3/29/2019

PHASE VI STREETSCAPE
MYRTLE STREET/EAST MAIN STREET
STATE PROJECT No. L088-002
NEW BRITAIN, CONNECTICUT

REV.	DATE	DESCRIPTION	BY	APP'D

SCALE: AS NOTED
JOB NO. 2261
SHEET NO. 51

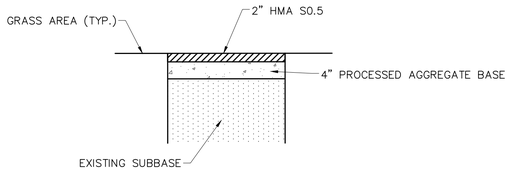

TEMPORARY BITUMINOUS CONCRETE SIDEWALK

NOT TO SCALE

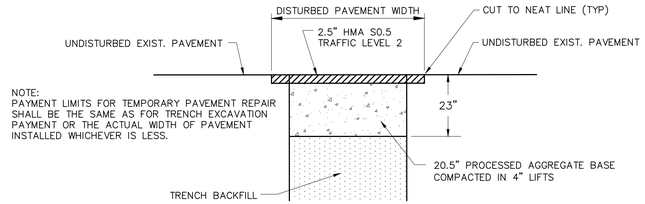

NOTE:
PAYMENT LIMITS FOR TEMPORARY PAVEMENT REPAIR SHALL BE THE SAME AS FOR TRENCH EXCAVATION PAYMENT OR THE ACTUAL WIDTH OF PAVEMENT INSTALLED WHICHEVER IS LESS.

TEMPORARY PAVEMENT REPAIR

NOT TO SCALE

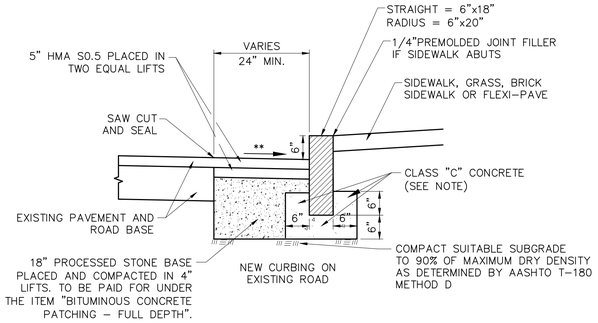

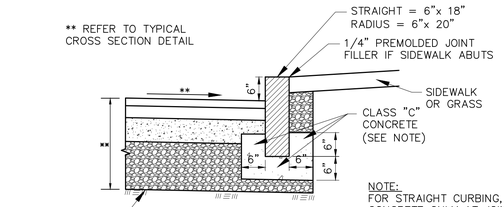

NOTE:
FOR STRAIGHT CURBING, PLACE CONCRETE ONLY AT JOINTS, REMAINDER PROCESSED STONE OR SUBBASE.

FOR RADIUS CURBING (< 100' R), PLACE CONCRETE CONTINUOUSLY

GRANITE CURBING
STRAIGHT OR RADIUS

NOT TO SCALE

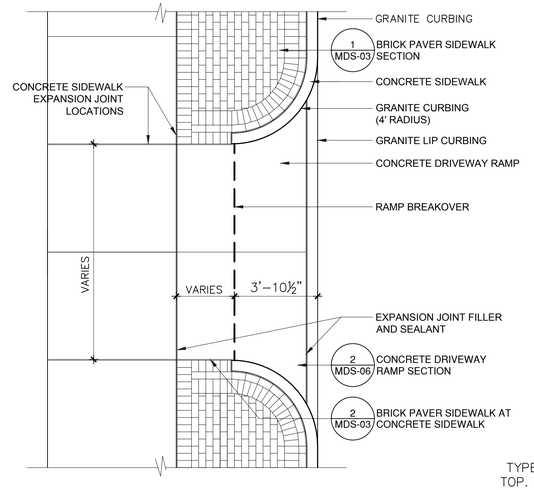

CONCRETE DRIVEWAY RAMP PLAN

NOT TO SCALE

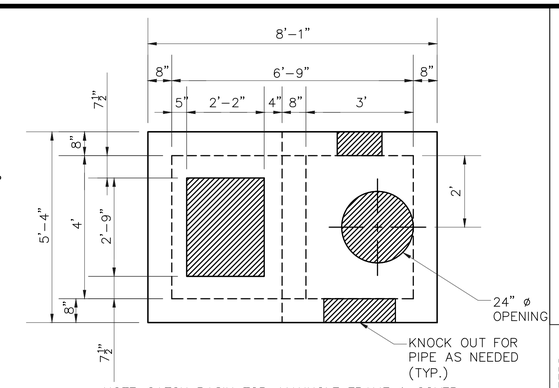

NOTE: CATCH BASIN TOP, MANHOLE FRAME & COVER NOT IN PLAN VIEW SHOWN FOR CLARITY.

PLAN VIEW

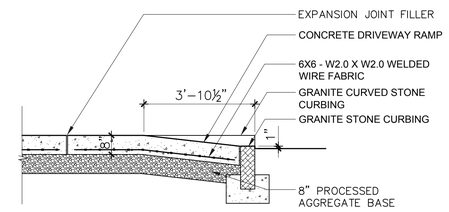

CONCRETE DRIVEWAY RAMP SECTION

NOT TO SCALE

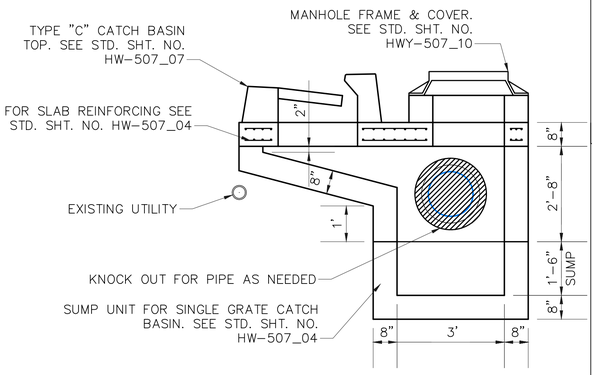

CROSS SECTION

SCALE: ½" = 1'-0"

OFFSET TYPE "C" CATCH BASIN

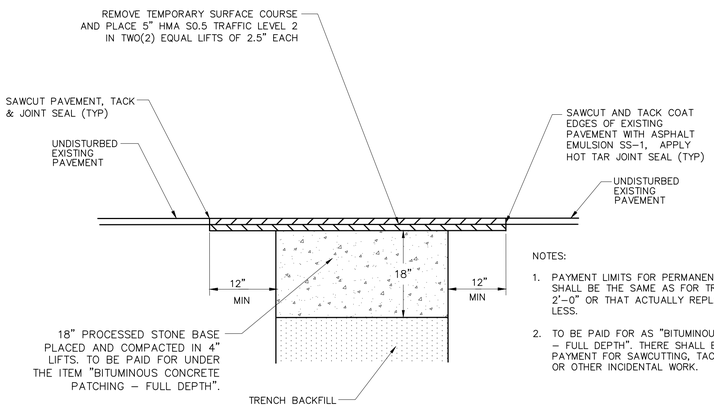

NOTES:

1. PAYMENT LIMITS FOR PERMANENT PAVEMENT REPAIR SHALL BE THE SAME AS FOR TRENCH EXCAVATION + 2'-0" OR THAT ACTUALLY REPLACED, WHICHEVER IS LESS.
2. TO BE PAID FOR AS "BITUMINOUS CONCRETE PATCHING - FULL DEPTH", THERE SHALL BE NO SEPARATE PAYMENT FOR SAWCUTTING, TACK COAT, JOINT SEALING OR OTHER INCIDENTAL WORK.

PERMANENT PAVEMENT REPAIR

NOT TO SCALE

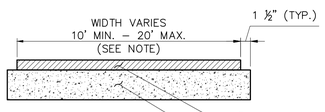

NOTE:
DRIVEWAYS WIDER THAN 20' REQUIRE APPROVAL FROM THE CITY ENGINEER.

TYPICAL SECTION

BITUMINOUS DRIVEWAY

NOT TO SCALE

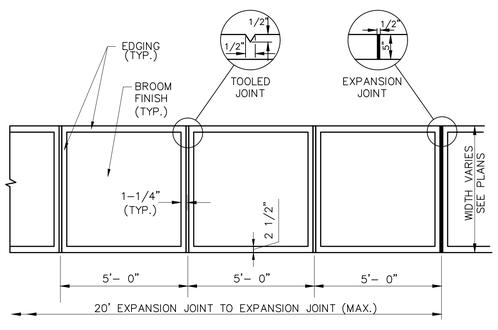

CONCRETE SIDEWALK JOINTING AND EDGING

NOT TO SCALE

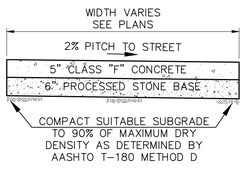

CONCRETE SIDEWALK TYPICAL SECTION

NOT TO SCALE

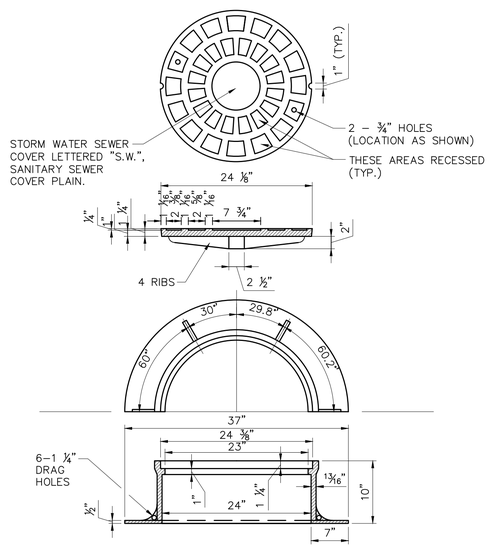

NEW BRITAIN STANDARD MANHOLE CASTING

NOT TO SCALE

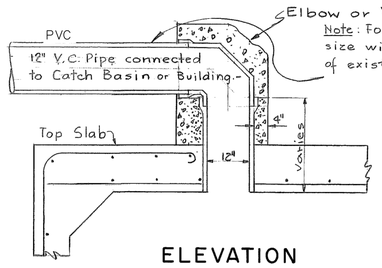

ELEVATION

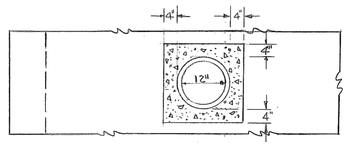

PLAN

CATCH BASIN CONNECTION TO BOX CULVERT TOP

NOT TO SCALE

MISCELLANEOUS DETAILS

CARDINAL ENGINEERING ASSOCIATES
3 Colony Street | Meriden, CT 06451 | 203-238-1969

DESIGNED BY: A. DOORNWEERD
DRAWN BY: D. ROULEAU
CHECKED BY: B. SKONIECZNY
DATE: 3/29/2019

PHASE VI STREETSCAPE
MYRTLE STREET/EAST MAIN STREET
STATE PROJECT No. L088-002
NEW BRITAIN, CONNECTICUT

REV.	DATE	DESCRIPTION	BY	APP'D

SCALE: N.T.S.
JOB NO. 2261
SHEET NO. 52

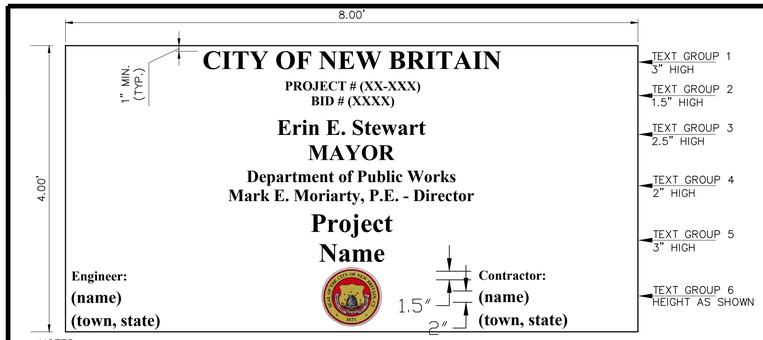

NOTES:
1) SIGN COLORS SHALL BE GOLD LETTERS ON A MAROON BACKGROUND (COLOR SAMPLES AND SEAL MAY BE OBTAINED FROM CITY ON REQUEST).
2) LETTERING FONT SHALL BE "TIMES NEW ROMAN" BOLDED.
3) VERTICAL SPACING OF LINES WITHIN EACH GROUP OF TEXT SHALL BE 50%-70% TEXT HEIGHT.
4) EACH GROUP OF TEXT (6) SHALL BE EVENLY SPACED (VERTICALLY), TO PROVIDE LAYOUT AS SHOWN.
5) SIGN SHALL BE MOUNTED ON SUITABLE SUPPORTS (2) OR ATTACHED TO EXISTING OBJECT, AS DIRECTED BY THE ENGINEER.

TYPICAL PROJECT SIGN
NOT TO SCALE

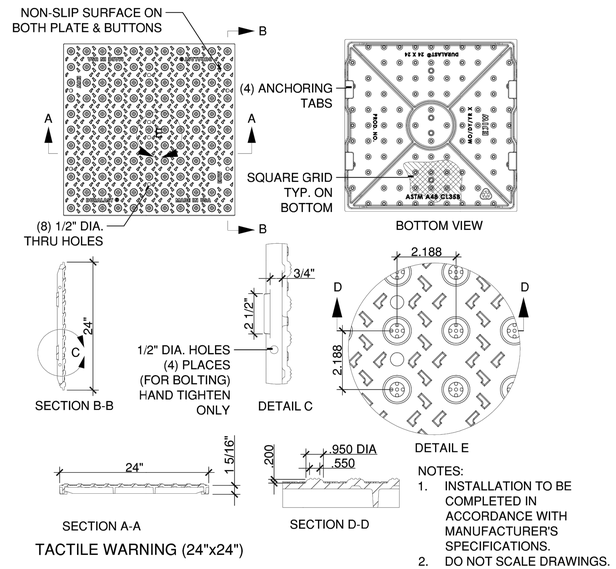

TACTILE WARNING (24"x24")

NOTES:
1. INSTALLATION TO BE COMPLETED IN ACCORDANCE WITH MANUFACTURER'S SPECIFICATIONS.
2. DO NOT SCALE DRAWINGS.

DETECTABLE WARNING CAST IRON PAVER
NOT TO SCALE

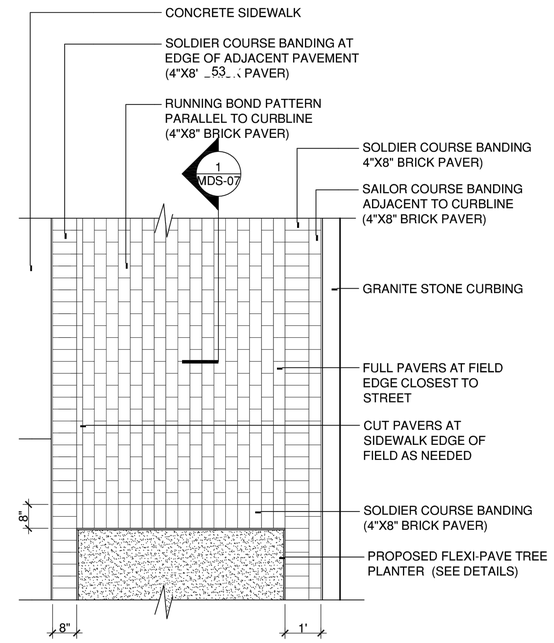

2 BRICK PAVER SIDEWALK
SCALE: 1/2"=1'
Y:\2012024\DETAILS\SIDEWALK PAVEMENT.DWG

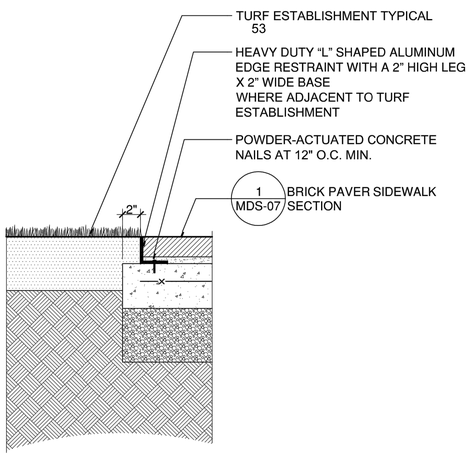

8 BRICK PAVER SIDEWALK EDGE RESTRAINT
SCALE: 1 1/2"=1'
Y:\2012024\4CONDOC\Details\planter edging longitudinal NBSS.dwg

53

53

53

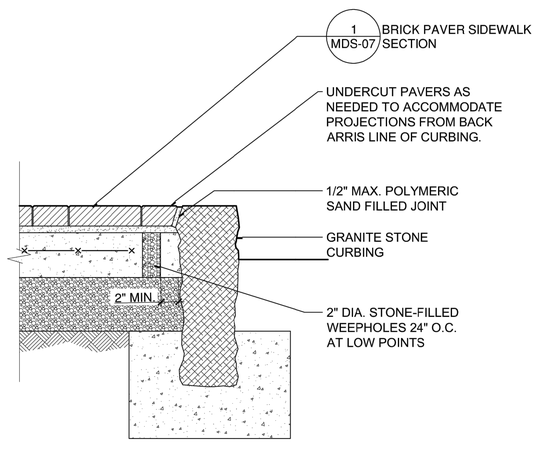

5 BRICK PAVER SIDEWALK AT GRANITE STONE CURBING
SCALE: 1 1/2"=1'
Y:\2012024\4CONDOC\Details\brick sidewalk at granite curb NBSS.dwg

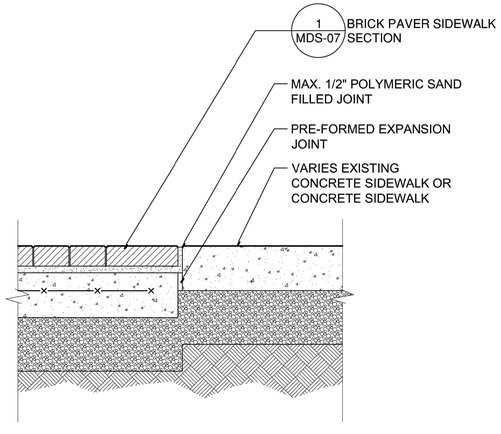

3 BRICK PAVER SIDEWALK AT CONCRETE SIDEWALK
SCALE: 1 1/2"=1'
Y:\2012024\4CONDOC\Details\brick sidewalk at conc pavement NBSS.dwg

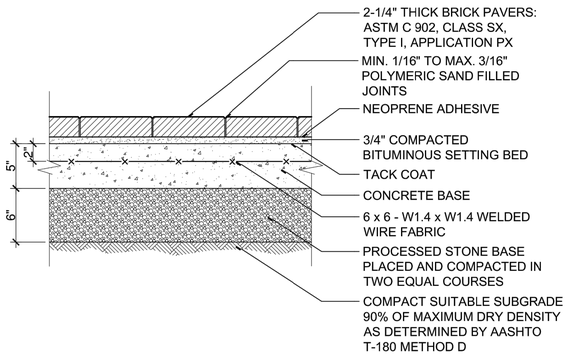

1 BRICK PAVER SIDEWALK SECTION
SCALE: 1 1/2"=1'
Y:\2012024\4CONDOC\Details\brick sidewalk NBSS.dwg

MISCELLANEOUS DETAILS

CARDINAL ENGINEERING ASSOCIATES
3 Colony Street | Meriden, CT 06451 | 203-238-1969

DESIGNED BY: A. DOORNWEERD
DRAWN BY: D. ROULEAU
CHECKED BY: B. SKONIECZNY
DATE: 3/29/2019

PHASE VI STREETSCAPE
MYRTLE STREET/EAST MAIN STREET
STATE PROJECT No. L088-002
NEW BRITAIN, CONNECTICUT

REV.	DATE	DESCRIPTION	BY	APP'D

SCALE: AS NOTED
JOB NO. 2261

SHEET NO. 53

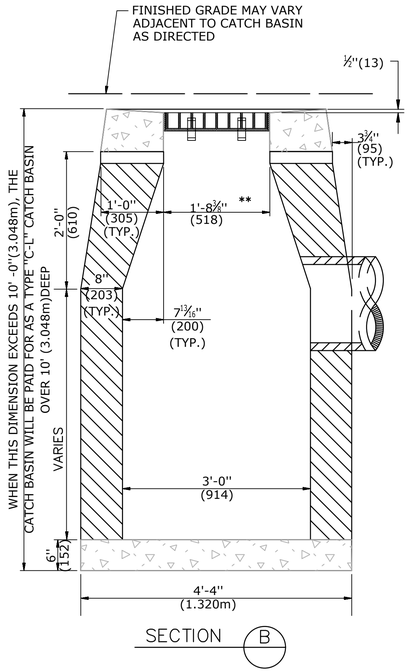

TYPE "C-L" CATCH BASIN

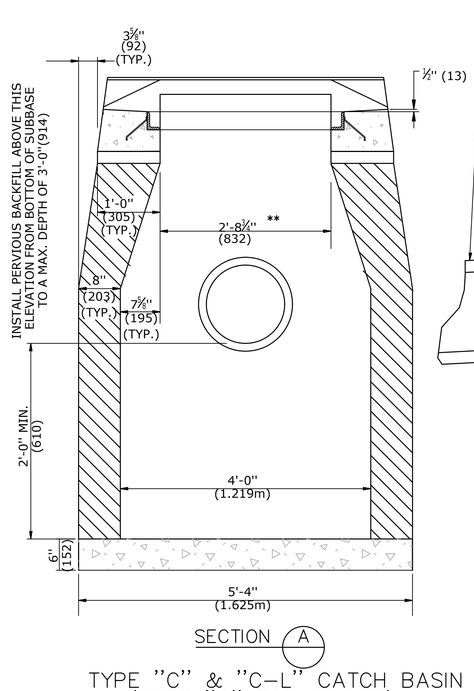

TYPE "C" & "C-L" CATCH BASIN
(TYPE "C" TOP SHOWN)

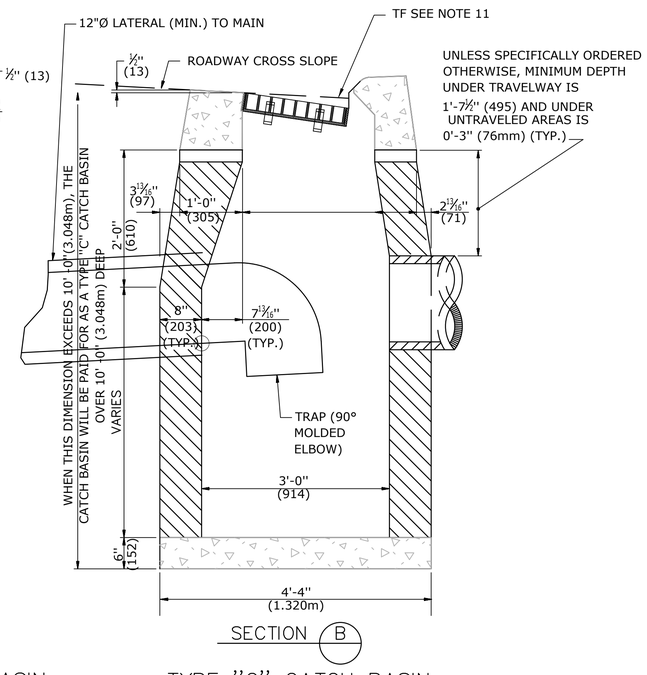

TYPE "C" CATCH BASIN

GENERAL NOTES:

1. FOR DETAILS OF FRAME AND GRATE SEE STANDARD SHEET HW-507_08.
2. USE APPROPRIATE CONCRETE TOP FOR CURBING SHOWN ON PLANS. IF CURBING IS NOT SPECIFIED ON THE PLANS, IT SHALL BE CONSTRUCTED AS DIRECTED BY THE ENGINEER.
3. ALL FACES OF STRUCTURES IN CONTACT WITH CONCRETE PAVEMENT SHALL BE COVERED WITH A LAYER OF TAR PAPER OR APPROVED EQUAL. THE COST FOR THE PAPER SHALL BE INCLUDED IN THE BID PRICE FOR THE TYPE OF CATCH BASIN INSTALLED.
4. USE 6'-0" (1.830m) ON UPGRADE SIDE OF CONTINUOUS GRADE AND 1'-0" (305mm) ON DOWNGRADE SIDE OF CONTINUOUS GRADE OR AS DIRECTED.
5. IF MASONRY UNITS ARE REQUIRED, THE BASIN SHALL BE CONSTRUCTED IN CONFORMANCE WITH THE OVER ALL DIMENSIONS SHOWN HERE AND SECTION 5.07 OF THE STATE OF CONNECTICUT'S STANDARD SPECIFICATIONS. CORBELLING SHALL BE PERMITTED TO A MAXIMUM OF 3" (75mm.) NO PROJECTION SHALL EXTEND INSIDE THE LIMITS NOTED BY **.
6. WALL THICKNESS OF ALL CB'S OVER 10' (3.048m) DEEP SHALL BE INCREASED TO 12" (305mm) THICK. INSIDE DIMENSION SHALL REMAIN THE SAME. 12" (305mm) THICKNESS WILL START AFTER THE FIRST 10' (3.048m).
7. TO CONVEY SUBSURFACE DRAINAGE, OPENINGS SHALL BE FORMED IN THE FOUR WALLS AT OR IMMEDIATELY ABOVE THE BOTTOM OF THE PERVIOUS BACKFILL.
8. MINIMUM CONCRETE COMPRESSIVE STRENGTH OF F'c = 4000 PSI (27,580 kPa) SHALL BE OBTAINED PRIOR TO SHIPPING.
9. LATEST STATE OF CONNECTICUT'S STANDARD SPECIFICATIONS AND SUPPLEMENTALS SHALL GOVERN.
10. SPACER MAY BE CMU OR PRECAST WITH REQUIRED REINFORCING (RECOMMENDED BY THE MANUFACTURER) AS NEEDED TO PROVIDE PROPER GRADE SHOWN ON PLANS.
11. TOP OF FRAME (TF) ELEVATION SHALL BE MEASURED IN THE CENTER OF GRATE @ GUTTER LINE.

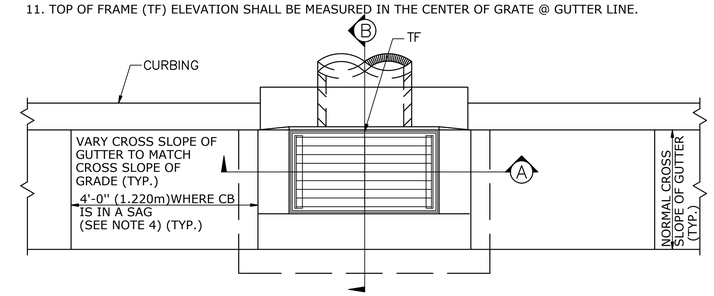

PLAN

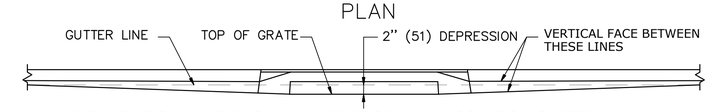

FOR CATCH BASINS IN A LINE OF 4" (102) CONCRETE PARK CURBING OR 4" (102) BITUMINOUS CONCRETE PARK CURBING

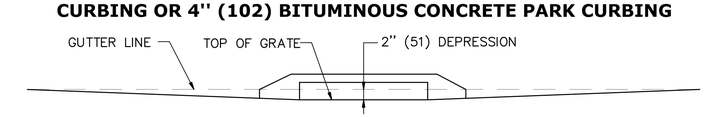

FOR CATCH BASINS WHERE NO CURBING OF ANY TYPE EXISTS OR IS PROPOSED

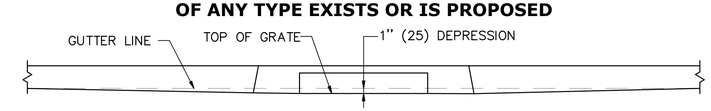

FOR CATCH BASINS IN A LINE OF 6" (152) CONCRETE CURBING OR 6" (152) STONE CURBING

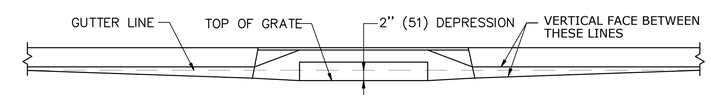

FOR CATCH BASINS IN A LINE OF 6" (152) BITUMINOUS CONCRETE LIP CURBING (MACHINE FORMED)

DETAILS OF DEPRESSED GUTTER STRIP FOR TYPE "C" CATCH BASIN

ALL METRIC DIMENSIONS ARE IN MILLIMETERS (mm) UNLESS OTHERWISE NOTED.

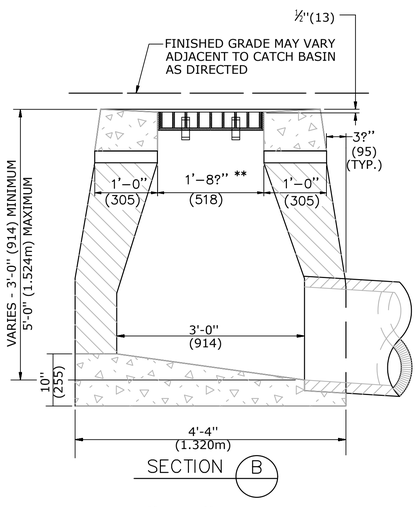

TYPE "C-L" DROP INLET

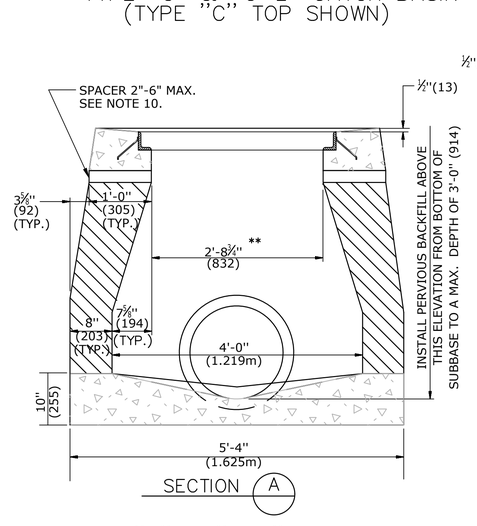

TYPE "C" & "C-L" DROP INLET
(TYPE "C-L" TOP SHOWN)

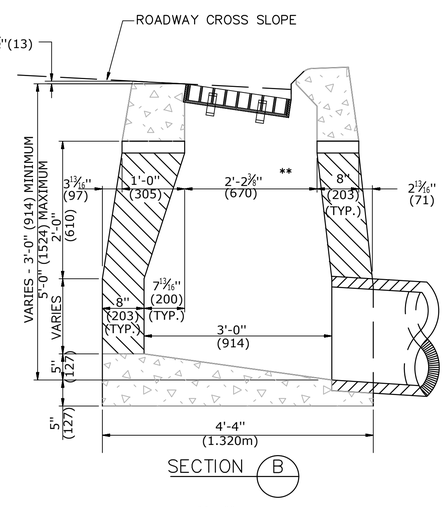

TYPE "C" DROP INLET

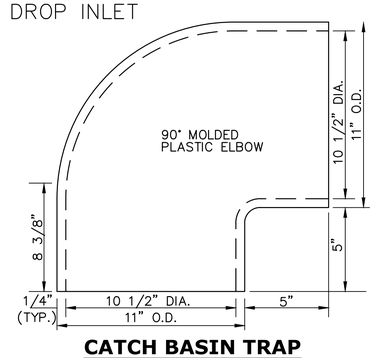

CATCH BASIN TRAP

NOT TO SCALE

CATCH BASIN AND DROP INLET

CARDINAL ENGINEERING ASSOCIATES
3 Colony Street | Meriden, CT06451 | 203-238-1969

DESIGNED BY: A. DOORNWEERD
DRAWN BY: D. ROULEAU
CHECKED BY: B. SKONIECZNY
DATE: 3/29/2019

PHASE VI STREETSCAPE
MYRTLE STREET/EAST MAIN STREET
STATE PROJECT No. L088-002
NEW BRITAIN, CONNECTICUT

REV.	DATE	DESCRIPTION	BY	APP'D

SCALE

JOB NO. 2261

SHEET NO. 54

R3

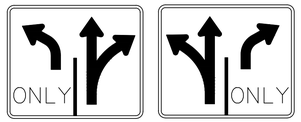

31–0282 31–0283

AREA (SQ. FT)	SIZE (INCHES)	CONN. D.O.T. #	POSTS	ALUM. THK.
7.50	36X30		2	.080

R3

AREA (SQ. FT)	SIZE (INCHES)	CONN. D.O.T. #	POSTS	ALUM. THK.
10.00	48X30	31–0302	2	.100

R3–17

AREA (SQ. FT)	SIZE (INCHES)	CONN. D.O.T. #	COLOR	ALUM. THK.
5.00	30X24	31–0564		0.80

R1–1
*

LEGEND – WHITE
BACKGROUND – RED

AREA (SQ. FT)	SIZE (INCHES)	CONN. D.O.T. #	POSTS	ALUM. THK.
3.31	24	31–0532	1	.080

R1–2
*

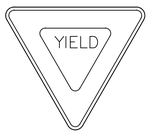

LEGEND – RED
BACKGROUND –WHITE

AREA (SQ. FT)	SIZE (INCHES)	CONN. D.O.T. #	POSTS	ALUM. THK.
3.90	36	31–0523	1	.080
6.77	48	31–0522	2B	.100
10.83	60	31–0528	2B	.100

R3–2

31–1603 OVERHEAD MTD
LEGEND – BLACK
BACKGROUND – WHITE
CIRCLE & DIAGONAL – RED

AREA (SQ. FT)	SIZE (INCHES)	CONN. D.O.T. #	POSTS	ALUM. THK.
4.00	24X24	31–1603		.080
6.25	30X30	31–1619	1	.080
5.00	30X24	31–1620		.080
9.00	36X36	31–1629	2	.080
7.50	36X30	31–1630		.080

R3

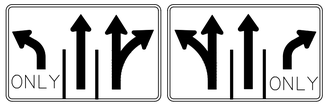

31–0307 31–0372

AREA (SQ. FT)	SIZE (INCHES)	CONN. D.O.T. #	POSTS	ALUM. THK.
10.00	48X30		2	.100

NOTES:

1. THE LEGEND "O.S.T.A." SHALL APPEAR ON ALL R- SERIES SIGNS EXCEPT WHEN SUFFIXED WITH THE LETTER "Z".
2. FOR SPECIFIC SIGN DESIGN CONTACT CONN. D.O.T., DIVISION OF TRAFFIC ENGINEERING. FOR BOLT HOLE PATTERN REFER TO FHWA PUBLICATION "STANDARD HIGHWAY SIGNS". SIGNS OF DIFFERENT DIMENSIONS TO BE ERECTED ON THE SAME POSTS, OR SPAN/MAST ARM MOUNTED, MAY REQUIRE SPECIAL BOLT HOLE PATTERNS.
3. POSTS - SEE STANDARD SHEET TR-1208_02 - "METAL SIGN POSTS AND SIGN MOUNTING DETAILS."
4. POSTS SHALL BE 4 LBS/FT
5. FOR OVERHEAD MOUNTED SIGNS, SEE STANDARD SHEET TR-1114_01 - "BONDING AND UTILITY POLE ATTACHMENT DETAILS, SIGN HANGER, "Y" CLAMP DETAIL."
6. SIGNS SHALL BE FABRICATED OF ONE CONTINUOUS PIECE OF SHEET ALUMINUM. SPLICING OF SHEET ALUMINUM WILL NOT BE ACCEPTED.
7. ALL BACKGROUNDS AND COLORS SHALL BE TYPE IX RETROREFLECTIVE SHEETING, EXCEPT BLACK WHICH SHALL BE OPAQUE OR AS NOTED.
8. FLUORESCENT YELLOW GREEN RETROREFLECTIVE STRIPS SHALL BE INSTALLED ON ALL SIGN POSTS FOR W11-2 SIGNS LOCATED AT CROSSINGS. SEE STANDARD SHEET TR-1208_01 "SIGN PLACEMENT AND RETROREFLECTIVE STRIP DETAILS" FOR RETROREFLECTIVE STRIP DETAILS AND INSTALLATION.

NB–0101

BACKGROUND – WHITE

LEGEND – RED

AREA SQ. FT.	SIZE (INCHES)	CONN. D.O.T. #	POSTS	ALUM. THK.
3	18X24	0101	1	.080

R7–1

BACKGROUND – WHITE

LEGEND – RED

(R)
(D)
(L)

AREA SQ. FT.	SIZE (INCHES)	CONN. D.O.T. #	POSTS	ALUM. THK.
1.50	12X18	31–0630	1	.080

W11–2

AREA (SQ. FT)	SIZE (INCHES)	CONN. D.O.T. #	POSTS	ALUM. THK.
6.25	30	41–4810	1	.080
9.00	36	41–4811	1	.080
16.00	48	41–4812	2	.100

W16–7P

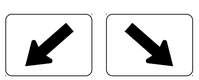

41–2607 41–2609

AREA (SQ. FT)	SIZE (INCHES)	CONN. D.O.T. #	COLOR	ALUM. THK.
2.00	24X12	41–2607		0.80
2.00	24X12	41–2609		0.80

COLORS:

R-SERIES (AND NB-0101)
BACKGROUND - WHITE (SILVER) - EXCEPT AS NOTED.
LEGEND - BLACK - EXCEPT AS NOTED.

M-SERIES
(1) BACKGROUND-BLUE, LEGEND-WHITE
(2) BACKGROUND-WHITE, LEGEND-BLACK

W-SERIES
BACKGROUND - FLUORESCENT YELLOW GREEN - EXCEPT AS NOTED.
LEGEND - BLACK - EXCEPT AS NOTED.

M

AREA (SQ. FT)	SIZE (INCHES)	CONN. D.O.T. #	COLOR	ALUM. THK.
2.00	24X12	51–6620	(2)	.080

M3–1

AREA (SQ. FT)	SIZE (INCHES)	CONN. D.O.T. #	COLOR	ALUM. THK.
2.00	24X12	51–6651	(1)	.080
2.00	24X12	51–6611	(2)	.080
3.12	30X15	51–6671	(1)	.080
3.12	30X15	51–6631	(2)	.080

M3–3

AREA (SQ. FT)	SIZE (INCHES)	CONN. D.O.T. #	COLOR	ALUM. THK.
2.00	24X12	51–6653	(1)	.080
2.00	24X12	51–6613	(2)	.080
3.12	30X15	51–6673	(1)	.080
3.12	30X15	51–6633	(2)	.080

M

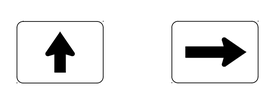

51–2625 51–2626
L or R

AREA (SQ. FT)	SIZE (INCHES)	CONN. D.O.T. #	POSTS	ALUM. THK.
2.19	21X15	51–2625	(2)	.080
2.19	21X15	51–2626	(2)	.080

M

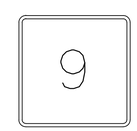

AREA (SQ. FT)	SIZE (INCHES)	CONN. D.O.T. #	POSTS	ALUM. THK.
4.00	24	51–6616	1	.080

SIGNS DETAILS

CARDINAL ENGINEERING ASSOCIATES
3 Colony Street | Meriden, CT 06451 | 203-238-1969

DESIGNED BY: A. DOORNWEERD
DRAWN BY: D. ROULEAU
CHECKED BY: B. SKONIECZNY
DATE: 3/29/2019

PHASE VI STREETSCAPE
MYRTLE STREET/EAST MAIN STREET
STATE PROJECT No. L088-002
NEW BRITAIN, CONNECTICUT

REV.	DATE	DESCRIPTION	BY	APP'D

SCALE
JOB NO. 2261

SHEET NO. 55

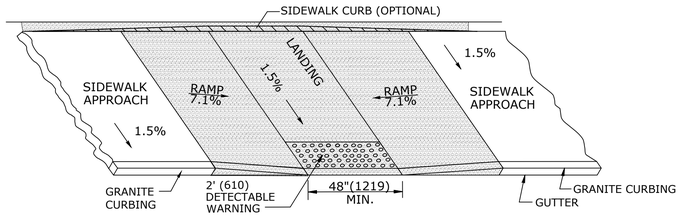

PARALLEL SIDEWALK RAMP (TYPE 1) NO UTILITY STRIP

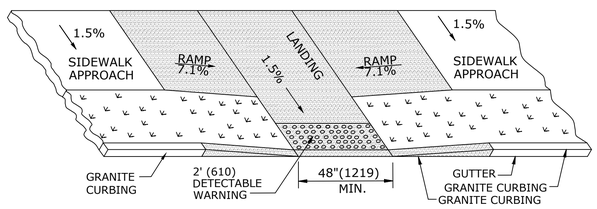

PARALLEL SIDEWALK RAMP (TYPE 1a)
WITH UTILITY / GRASS STRIP

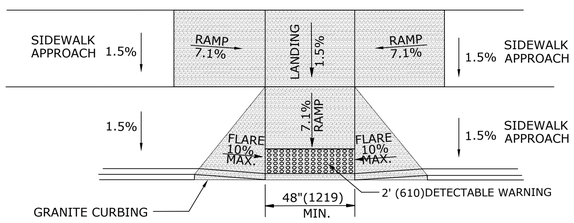

PARALLEL/PERPENDICULAR SIDEWALK RAMP
NO UTILITY/GRASS STRIP (TYPE 1b)

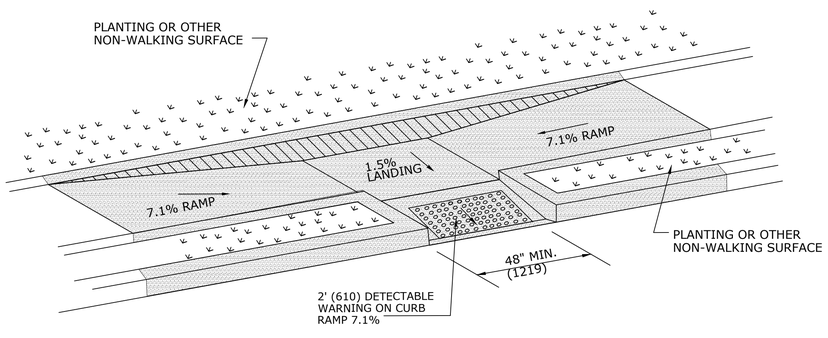

PARALLEL SIDEWALK RAMP (TYPE 1c)
WITH UTILITY / GRASS STRIP

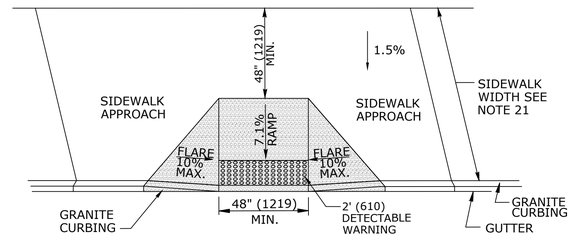

PERPENDICULAR SIDEWALK RAMP
W/ 48" (1219) MIN. BY PASS LANDING (TYPE 2)

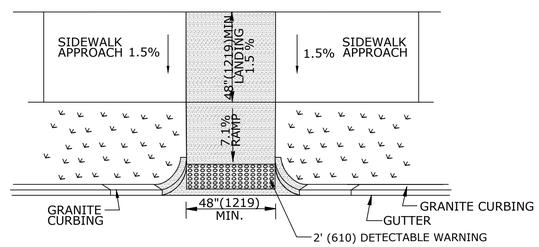

PERPENDICULAR SIDEWALK RAMP
W/CURB RETURNS / UTILITY GRASS STRIP (TYPE 2a)

* OPTIONAL FLARE ONE SIDE OF RAMP

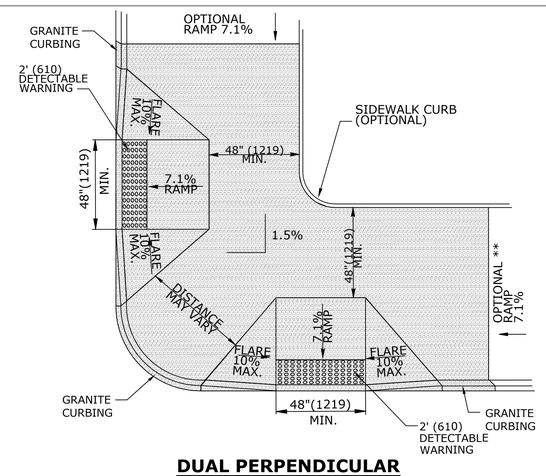

DUAL PERPENDICULAR
SIDEWALK RAMPS (TYPE 3)

SEE NOTE 19

* OPTIONAL CURB RETURN ON ONE SIDE OF RAMP
** SEE NOTE 23

GENERAL NOTES:

1. MAXIMUM SLOPES OF ADJOINING GUTTERS AND ROAD SURFACES IMMEDIATELY ADJACENT TO THE SIDEWALK RAMP SHOULD NOT EXCEED 5%. THE MAXIMUM GRADE DIFFERENCE BETWEEN THE GUTTER AND CURB RAMP SHALL NOT EXCEED 13%. SEE DETAIL 1 ON SHEET 59.
2. RAMP GRADE SHALL BE UNIFORM, FREE OF SAGS AND ABRUPT GRADE CHANGES. RUNNING SLOPES OF RAMPS SHALL NOT EXCEED 8.33% AND SHALL NOT EXCEED 15' (4m) WITHOUT PROVIDING A LANDING.
3. ALL RAMPS SHALL BE CONSTRUCTED OF CLASS "F" CONCRETE IN ACCORDANCE WITH CONNECTICUT STANDARD SPECIFICATIONS.
4. SIDEWALK RAMPS SHALL HAVE A COARSE BROOM FINISH TRANSVERSE TO THE SLOPE OF THE RAMP. THE SURFACE OF ALL SIDEWALK RAMPS SHALL BE STABLE, FIRM AND SLIP RESISTANT. SURFACE DISCONTINUITIES SHALL NOT EXCEED ½" (13) MAX. VERTICAL DISCONTINUITIES BETWEEN ¼" (6.4) AND ½" (13) MAX. SHALL BE BEVELED 1:2 MINIMUM APPLIED ACROSS THE ENTIRE LEVEL CHANGE.
5. DIAGONAL SIDEWALK RAMPS AT MARKED CROSSINGS SHALL BE WHOLLY CONTAINED WITHIN THE MARKINGS, EXCLUDING ANY FLARED SIDES. DIAGONAL AND PERPENDICULAR RAMPS SHALL HAVE THE RAMP CUT PERPENDICULAR TO THE TANGENT OF THE CURB RADIUS FOR THE DESIGNATED ACCESSIBLE ROUTE. BOTH LONGITUDINAL SIDES OF THE RAMP SHOULD BE THE SAME LENGTH. SKEWED RAMPS SHOULD BE AVOIDED. FLARES ARE NOT CONSIDERED PART OF PEDESTRIAN ACCESS ROUTE. DIAGONAL RAMPS SHOULD NOT BE INSTALLED WHERE CURB RADII IS LESS THAN 20'(6096).
6. REMOVAL OF EXISTING SIDEWALK FOR NEW RAMP INSTALLATIONS SHALL BE TO THE NEAREST EXPANSION OR CONTRACTION JOINT. 8.3% MAXIMUM SLOPE MAY NOT BE ACHIEVABLE DUE TO EXISTING SIDEWALK GRADE. IN RECOGNITION OF THIS, A LIMIT OF 15' (4572) FOR REMOVAL SHALL BE USED UNLESS OTHERWISE SHOWN ON THE PLANS OR DIRECTED BY THE ENGINEER. SAW CUT REQUIRED FOR DUMMY JOINTS SHALL BE INCLUDED IN THE COST OF "CONCRETE SIDEWALK RAMP" OR "CONCRETE SIDEWALK".
7. EXPANSION JOINTS IN CONCRETE SHALL MATCH THOSE IN ADJACENT SIDEWALKS BUT IN NO CASE SHALL THE SPACING BETWEEN EXPANSION JOINTS EXCEED 12' (3658) UNLESS OTHERWISE NOTED.
8. CONCRETE SIDEWALK RAMPS, SHALL BE PAID FOR UNDER THE ITEM "CONCRETE SIDEWALK RAMP", AS DEFINED BY THE CONSTRUCTION LIMITS ON THE PLANS AND SHALL BE FIELD VERIFIED.
9. SIDEWALK RAMPS SHALL BE CONSTRUCTED WITH THE TOE AT THE GUTTER CAST INTEGRALLY WITH RAMP UNLESS DIRECTED OTHERWISE BY THE ENGINEER (SEE TYPICAL SECTION ON SHEET 58). CURB REMOVAL AND CAST IN PLACE CURBING REQUIRED FOR THE RAMP, SHALL BE INCLUDED WITH PAY ITEM "CONCRETE SIDEWALK RAMP". CURBING OUTSIDE LIMITS OF RAMP OR LANDING SHOWN ON SHEET 58 SHALL BE CONSTRUCTED AND PAID FOR IN ACCORDANCE WITH CONNECTICUT STANDARD SPECIFICATIONS.
10. PREFERRED LOCATION TO INSTALL DETECTABLE WARNING STRIP SHALL BE 6" (152) FROM THE EDGE OF ROAD ALONG THE FULL WIDTH OF THE RAMP. FOR ALTERNATE LOCATIONS, REFER TO DETECTABLE WARNING PLACEMENT DETAILS ON SHEET 59.
11. TO PERMIT WHEELCHAIR WHEELS TO ROLL BETWEEN DOMES, ALIGN DOMES ON A SQUARE GRID IN THE DIRECTION OF RUNNING SLOPE (PERPENDICULAR TO CURB OR SLOPE BREAK). THE TRANSITION FROM RAMP TO GUTTER SHALL BE FLUSH WITHOUT A LIP.
12. WHERE COMMERCIAL DRIVEWAYS ARE PROVIDED WITH TRAFFIC SIGNALS AND THE SIDEWALK IS CONTINUOUS THROUGH DRIVEWAY, DETECTABLE WARNINGS ARE REQUIRED AT THE JUNCTION BETWEEN THE PEDESTRIAN ROUTE AND DRIVEWAY.
13. CONSTRUCT A SIDEWALK CURB WHEN THERE IS INSUFFICIENT BUFFER AVAILABLE TO GRADE OR WHEN CALLED FOR IN PLANS. PAID FOR WITH SIDEWALK RAMP WHEN REQUIRED FOR RAMP.
14. THE TOP AND BOTTOM OF RAMPS SHOULD BE PROVIDED WITH A 4' x 4' (1219 x 1219) MINIMUM LEVEL LANDING AREA WITH A CROSS SLOPE LESS THAN OR EQUAL TO 2% IN ANY DIRECTION.
15. UTILITY POLES, LUMINAIRE, PEDESTRIAN OR SIGNAL POLES, GRATES, ACCESS COVERS, AND OTHER APPURTENANCES SHALL NOT BE LOCATED ON RAMPS, LANDINGS, BLENDED TRANSITIONS, AND @ GUTTERS WITHIN THE PEDESTRIAN ACCESS ROUTE.
16. APPROACH SIDEWALK WIDTHS, GRASS STRIP OR UTILITY STRIP WIDTHS MAY VARY.
17. APPROACH SIDEWALK AND LANDING CROSS SLOPE SHALL NOT EXCEED 2%.
18. THE RUNNING OR CROSS SLOPES ON LANDINGS AT MID BLOCK CROSSING MAY BE WARPED TO MEET STREET OR HIGHWAY GRADE.
19. FOR PERPENDICULAR CURB RAMPS A MIN. 4'(1.2m) x 4'(1.2m) LEVEL LANDING SHALL BE PROVIDED AT THE TOP OF CURB RAMP. WHERE THE LEVEL LANDING IS RESTRICTED AT THE BACK OF SIDEWALK THE LEVEL LANDING SHALL BE 4'(1.2m) x 5'(1.5m) WITH THE 5'(1.5m) DIMENSION PROVIDED IN THE DIRECTION OF THE RAMP RUN.
20. FOR PARALLEL CURB RAMPS, A MIN. 4'(1.2m) x 4'(1.2m) LEVEL LANDING SHALL BE PROVIDED AT THE BOTTOM OF CURB RAMP. IF THE LEVEL LANDING IS RESTRICTED ON 2 OR MORE SIDES, THE LEVEL LANDING SHALL BE 4'(1.2m)x 5'(1.5m) WITH THE 5' (1.5m) DIMENSION PROVIDED IN THE DIRECTION OF THE PEDESTRIAN STREET CROSSING.
21. WHEN WIDTH OF SIDEWALK IS >48" AND A PERPENDICULAR SIDEWALK RAMP IS INSTALLED, THE FLARED SIDES SHALL BE 10% MAX. IF WIDTH OF SIDEWALK IS <48" THE FLARED SIDES MUST NOT EXCEED 8.33% (12:1).
22. SHADED AREAS ARE TYPICAL PAY LIMITS FOR CONCRETE SIDEWALK RAMP BUT, MAY VARY AS DIRECTED BY THE ENGINEER.
23. OPTIONAL RAMP, WHEN REQUIRED, SHALL BE PAID FOR AS PART OF CONCRETE SIDEWALK RAMP.

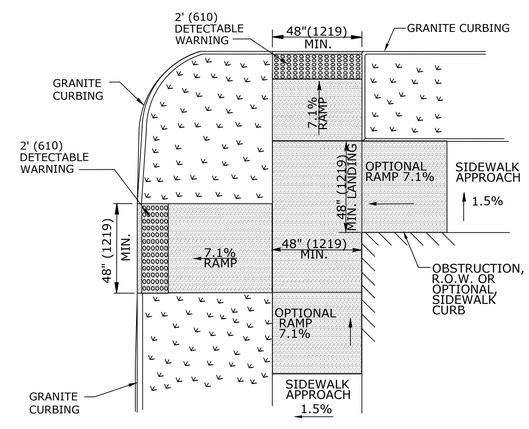

DUAL PERPENDICULAR SIDEWALK RAMPS (TYPE 3a)
WITH UTILITY / GRASS STRIP

SEE NOTE 20

ALL METRIC DIMENSIONS ARE IN MILLIMETERS (mm) UNLESS OTHERWISE NOTED.

CARDINAL ENGINEERING ASSOCIATES
3 Colony Street | Meriden, CT 06451 | 203-238-1969

DESIGNED BY: A. DOORNWEERD
DRAWN BY: D. ROULEAU
CHECKED BY: B. SKONIECZNY
DATE: 3/29/2019

PHASE VI STREETSCAPE
MYRTLE STREET/EAST MAIN STREET
STATE PROJECT No. L088-002
NEW BRITAIN, CONNECTICUT

REV.	DATE	DESCRIPTION	BY	APP'D

SCALE N.T.S.
JOB NO. 2261

SIDEWALK RAMP DETAILS

SHEET NO. 56

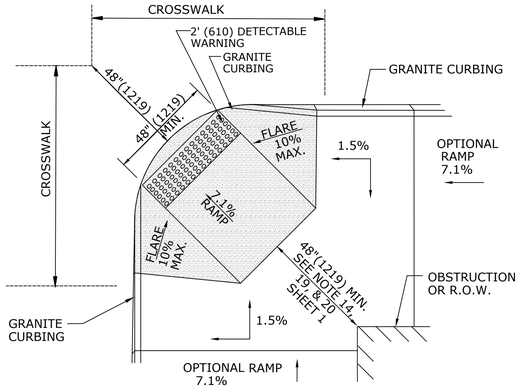

DIAGONAL SIDEWALK RAMP (TYPE 4)
W/LANDING AT TOP

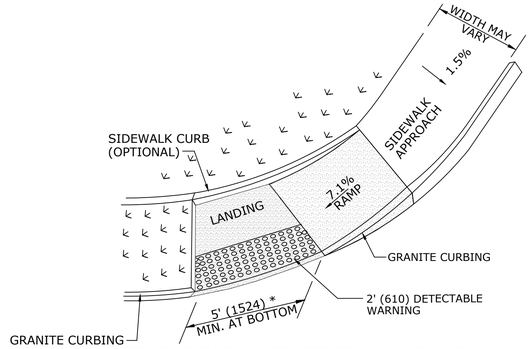

SINGLE PARALLEL SIDEWALK RAMP
W/LANDING AT BOTTOM ON
CORNER (TYPE 4c)

* SEE NOTE 20 SHEET 56

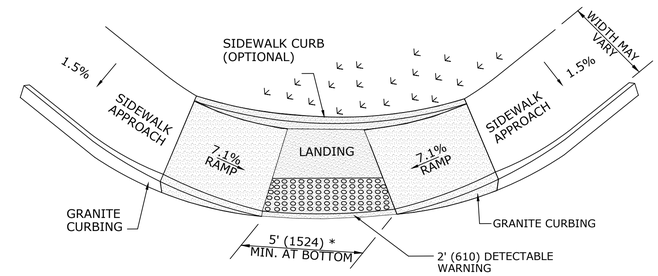

DOUBLE PARALLEL SIDEWALK RAMP
W/LANDING AT BOTTOM ON CORNER (TYPE 4f)

* SEE NOTE 20 SHEET 56

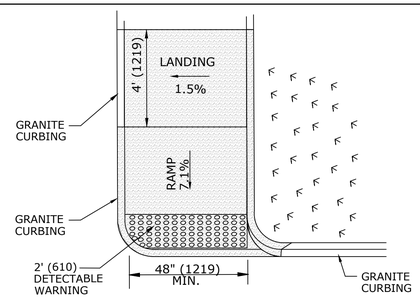

SINGLE DIRECTION
PERPENDICULAR SIDEWALK RAMP
NO / UTILITY GRASS STRIP
(TYPE 4a)

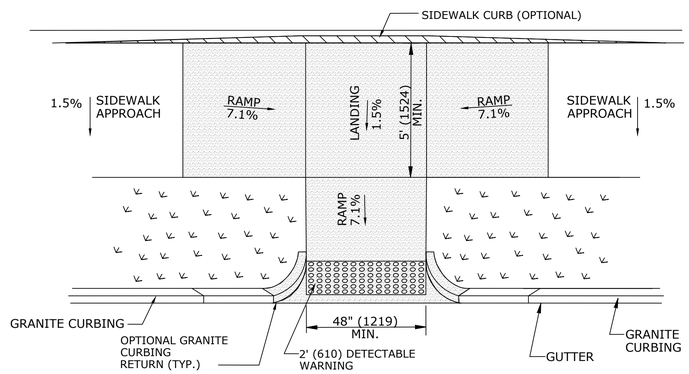

PARALLEL/PERPENDICULAR SIDEWALK RAMP
COMBINATION W/ CURB RETURNS (TYPE 4d)

* OPTIONAL FLARE ONE SIDE

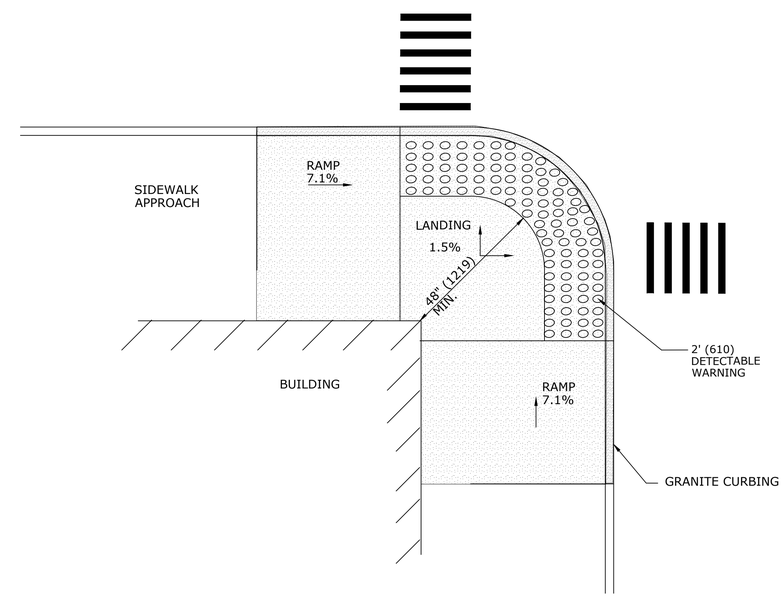

RESTRICTED CONDITION
DIAGONAL SIDEWALK RAMP
(TYPE 4g)

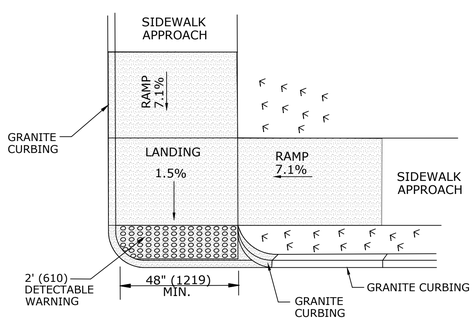

DOUBLE DIRECTION
PARALLEL SIDEWALK RAMP
NO / UTILITY GRASS STRIP
(TYPE 4b)

SEE NOTE 20 SHEET 56

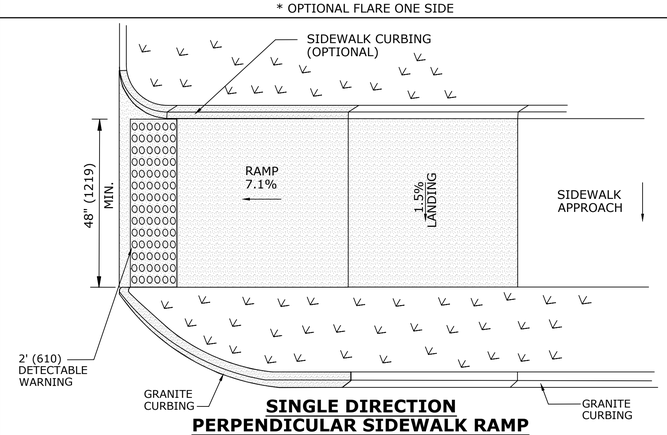

SINGLE DIRECTION
PERPENDICULAR SIDEWALK RAMP
W/ UTILITY GRASS STRIP (TYPE 4e)

REFER TO DETECTABLE WARNING PLACEMENT ON SHEET 59

ALL METRIC DIMENSIONS ARE IN MILLIMETERS (mm) UNLESS OTHERWISE NOTED

SIDEWALK RAMP DETAILS

CARDINAL ENGINEERING ASSOCIATES
3 Colony Street | Meriden, CT 06451 | 203-238-1969

DESIGNED BY: A. DOORNWEERD
DRAWN BY: D. ROULEAU
CHECKED BY: B. SKONIECZNY
DATE: 3/29/2019

PHASE VI STREETSCAPE
MYRTLE STREET/EAST MAIN STREET
STATE PROJECT No. L088-002
NEW BRITAIN, CONNECTICUT

REV.	DATE	DESCRIPTION	BY	APP'D

SCALE N.T.S.
JOB NO. 2261
SHEET NO. 57

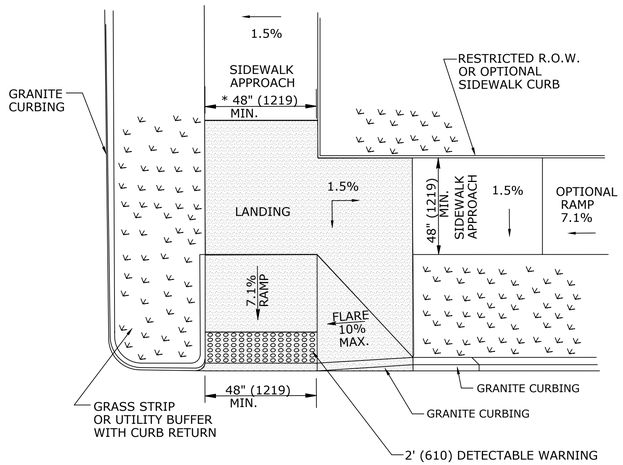

RESTRICTED CORNER PERPENDICULAR SIDEWALK RAMP (TYPE 5)

* SEE NOTE 19 SHEET 56

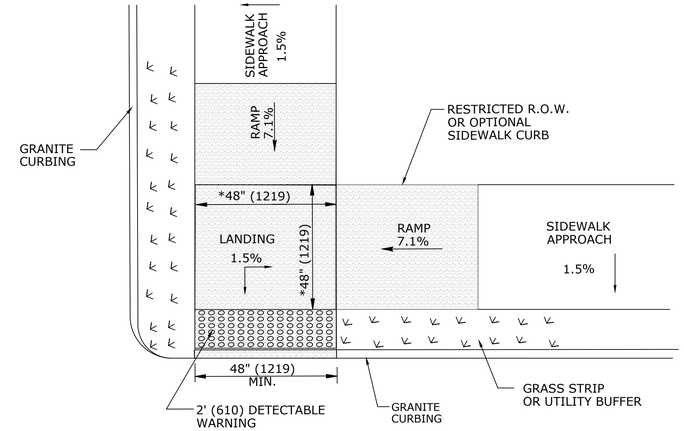

RESTRICTED CORNER PARALLEL DOUBLE SIDEWALK RAMPS W/CENTER LANDING AND UTILITY GRASS STRIP (TYPE 5a)

* SEE NOTE 20 SHEET 56

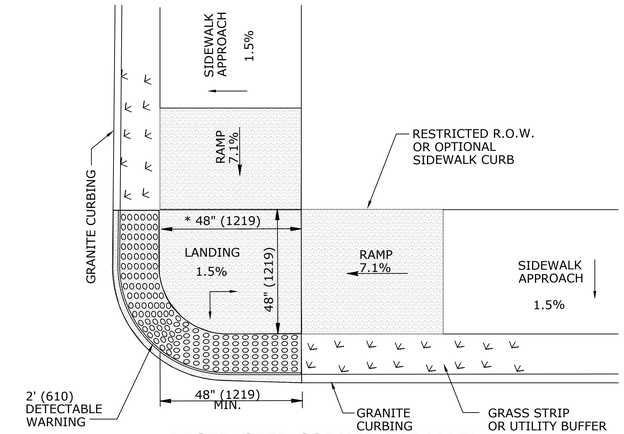

RESTRICTED CORNER PARALLEL SIDEWALK RAMPS W/ CENTER LANDING TWO DIRECTION AND UTILITY GRASS STRIP (TYPE 5b)

* SEE NOTE 20 SHEET 56

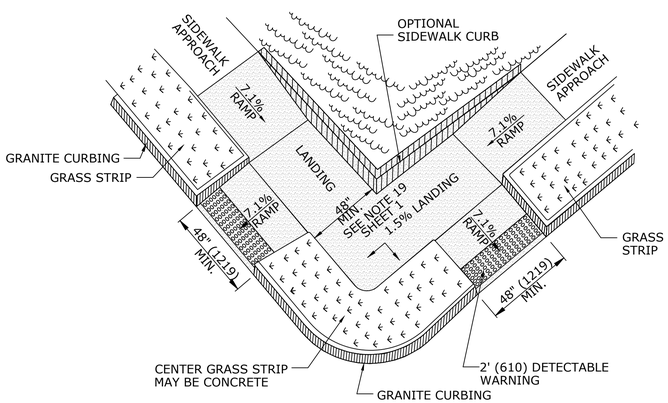

COMBINATION SIDEWALK RAMP (TYPE 6)

* SEE NOTE 19 SHEET 56

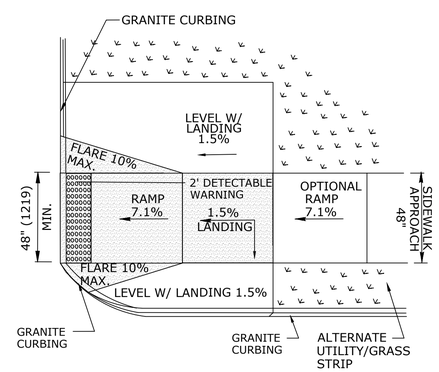

PERPENDICULAR SIDEWALK RAMP ONE DIRECTION ON CORNER (TYPE 6a)

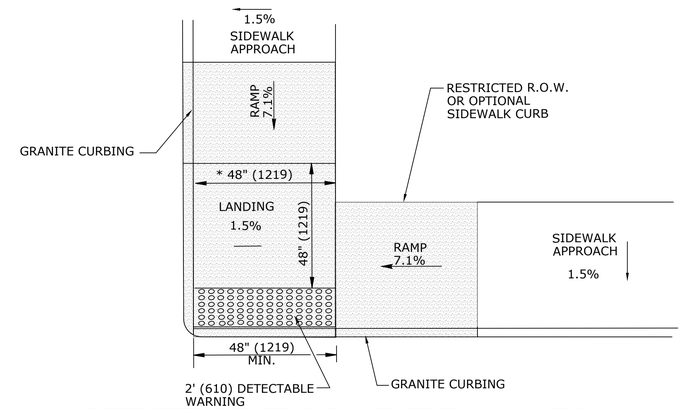

RESTRICTED CORNER PARALLEL SIDEWALK RAMPS W/CENTER LANDING NO GRASS STRIP (TYPE 5c)

* SEE NOTE 20 SHEET 56

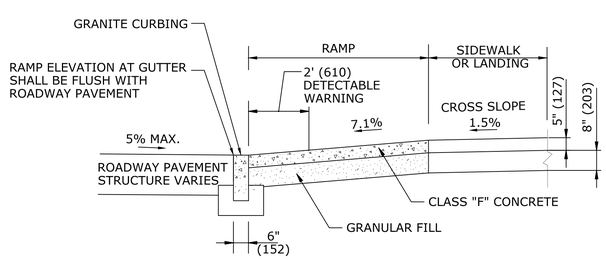

TYPICAL SECTION THRU SIDEWALK RAMP

SEE NOTES 2 AND 17 SHEET 56

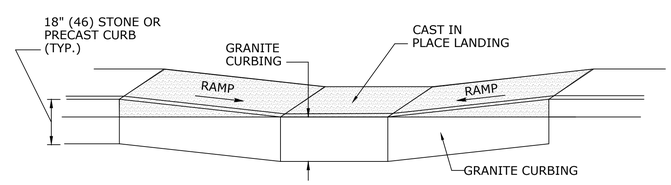

TYPICAL ELEVATION PARALLEL SIDEWALK RAMP WITH CAST IN PLACE GUTTER

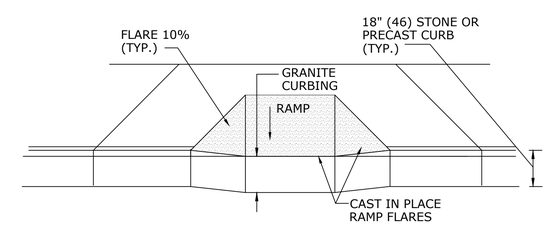

TYPICAL ELEVATION PERPENDICULAR SIDEWALK RAMP WITH CAST IN PLACE GUTTER

ALL METRIC DIMENSIONS ARE IN MILLIMETERS (mm) UNLESS OTHERWISE NOTED

SIDEWALK RAMP DETAILS

CARDINAL ENGINEERING ASSOCIATES
3 Colony Street | Meriden, CT 06451 | 203-238-1969

DESIGNED BY: A. DOORNWEERD
DRAWN BY: D. ROULEAU
CHECKED BY: B. SKONIECZNY
DATE: 3/29/2019

PHASE VI STREETSCAPE
MYRTLE STREET/EAST MAIN STREET
STATE PROJECT No. L088-002
NEW BRITAIN, CONNECTICUT

REV.	DATE	DESCRIPTION	BY	APP'D

SCALE N.T.S.
JOB NO. 2261
SHEET NO. 58

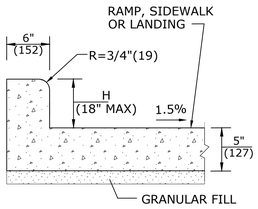

MONOLITHIC CAST CURB

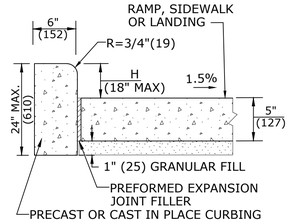

SEPARATELY CAST CURB

SIDEWALK CURB OPTIONS AT BACK OF SIDEWALK

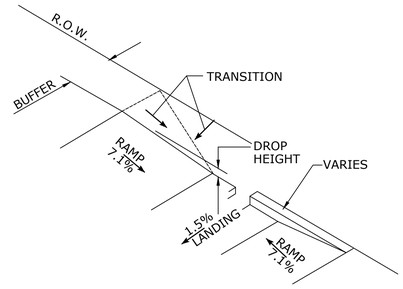

BACK OF SIDEWALK CURB OR BUFFER TRANSITION

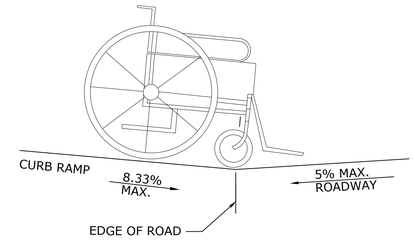

DETAIL 1
SEE GRADE CHANGE AT ROADWAY INTERFACE

SEE NOTE 1 SHEET 56

GENERAL NOTES:

1. RAMPED MEDIANS SHALL HAVE A CURB RAMP AT EITHER END AND LEVEL LANDING A MINIMUM OF 5' x 5' (1.5m x 1.5m) IN BETWEEN. CUT-THROUGH MEDIANS SHALL BE A MINIMUM OF 6' (1.8m) LONG AND 5' (1.5m) WIDE. FOR ALL MEDIANS, CUT-THROUGH OR RAMPED, A 2' (610) STRIP OF DETECTABLE WARNINGS SHALL BE INSTALLED AT THE ENTRANCE AND EXIT.
2. SEE GENERAL NOTES ON SHEET 56.

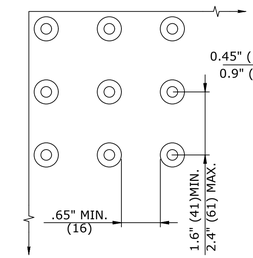

DOME SPACING

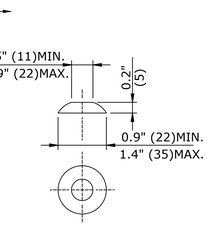

DOME SECTION

STANDARD DOME ON DETECTABLE WARNING TILES

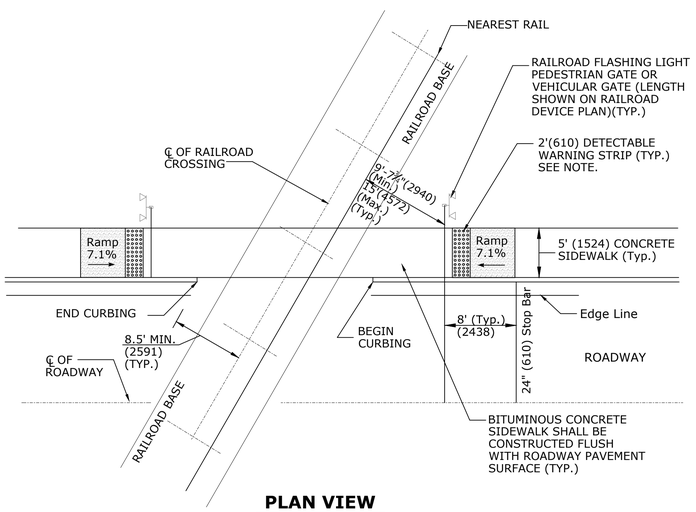

PLAN VIEW

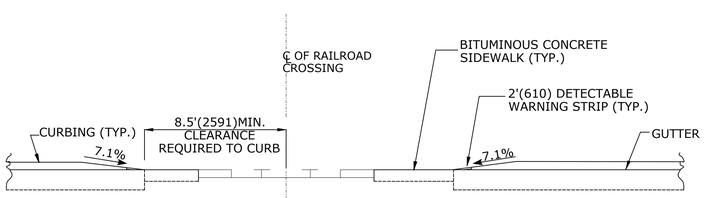

ELEVATION VIEW

DETECTABLE WARNINGS AT RAILROAD CROSSING

NOTE: WHEN NO GATE IS PRESENT, INSTALL DETECTABLE WARNING SURFACE 12' (3.6m) FROM THE NEAREST RAIL. IF GATE IS PRESENT, INSTALL DETECTABLE WARNING 2' (610) PRIOR TO GATE. THE ROWS OF TRUNCATED DOMES IN A DETECTABLE WARNING SURFACE SHALL BE INSTALLED PARALLEL WITH THE DIRECTION OF PEDESTRIAN TRAVEL.

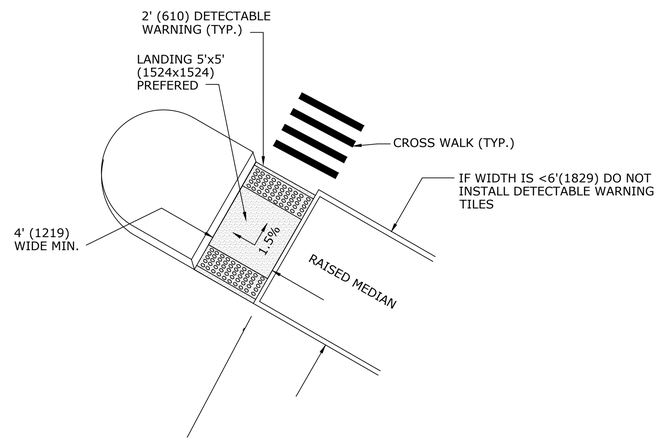

CUT-THROUGH MEDIAN ISLAND

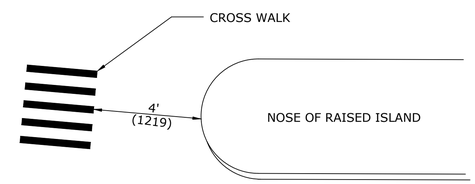

ALTERNATE CROSSWALK WITH MEDIAN ISLAND PULLED BACK

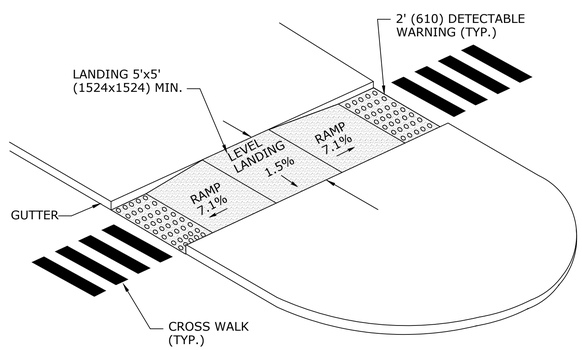

RAISED MEDIAN ISLAND WITH LANDING AND RAMPS

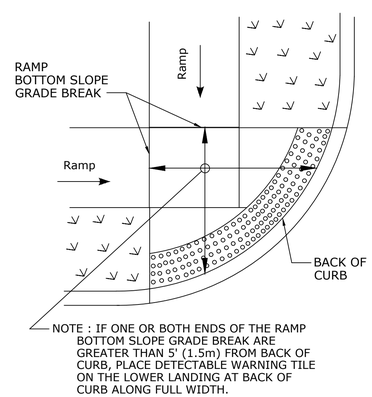

DETECTABLE WARNING PLACEMENT DETAIL 1

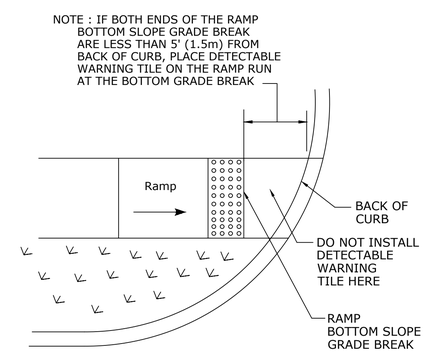

DETECTABLE WARNING PLACEMENT DETAIL 2

ALL METRIC DIMENSIONS ARE IN MILLIMETERS (mm) UNLESS OTHERWISE NOTED

SIDEWALK RAMP DETAILS

SHEET NO. 59

CARDINAL ENGINEERING ASSOCIATES
3 Colony Street | Meriden, CT 06451 | 203-238-1969

DESIGNED BY: A. DOORNWEERD
DRAWN BY: D. ROULEAU
CHECKED BY: B. SKONIECZNY
DATE: 3/29/2019

PHASE VI STREETSCAPE
MYRTLE STREET/EAST MAIN STREET
STATE PROJECT No. L088-002
NEW BRITAIN, CONNECTICUT

REV.	DATE	DESCRIPTION	BY	APP'D

SCALE N.T.S.
JOB NO. 2261

NONE	MOVEMENT DIAGRAM								
NTOR	PHASE 1	PHASE 2	PHASE 3	PHASE 4	PHASE 5	PHASE 6	PHASE 7	PHASE 8	PHASE 9

FACE #		PHASE 1			PHASE 2			PHASE 3			PHASE 4			PHASE 5			PHASE 6			PHASE 7			PHASE 8			PHASE 9		
	FLASH	GRN	CL	CL	GRN	CL	CL	GRN	CL	CL	GRN	CL	CL	GRN	CL	CL	GRN	CL	CL	GRN	CL	CL	GRN	CL	CL	GRN	CL	CL
1	◄R	←	◄¥	◄R	◄R	◄R	◄R	◄R	◄R	◄R	◄R	◄R	◄R	◄R	◄R	◄R	◄R	◄R	◄R	◄R	◄R	◄R	◄R	◄R	◄R	◄R	◄R	◄R
2	R	R	R	R	G	Y	R	R	R	R	R	R	R	R	R	R	R	R	R	R	R	R	R	R	R	R	R	R
3	◄R	◄R	◄R	◄R	◄R	◄R	◄R	←	◄¥	◄R	◄R	◄R	◄R	◄R	◄R	◄R	◄R	◄R	◄R	◄R	◄R	◄R	◄R	◄R	◄R	◄R	◄R	◄R
4	R	R	R	R	R	R	R	R	R	R	G	Y	R	R	R	R	R	R	R	R	R	R	R	R	R	R	R	R
5	◄R	◄R	◄R	◄R	◄R	◄R	◄R	◄R	◄R	◄R	◄R	◄R	◄R	←	◄¥	◄R	◄R	◄R	◄R	◄R	◄R	◄R	◄R	◄R	◄R	◄R	◄R	◄R
6	R	R	R	R	R	R	R	R	R	R	R	R	R	R	R	R	G	Y	R	R	R	R	R	R	R	R	R	R
7	◄R	◄R	◄R	◄R	◄R	◄R	◄R	◄R	◄R	◄R	◄R	◄R	◄R	◄R	◄R	◄R	◄R	◄R	◄R	←	◄¥	◄R	◄R	◄R	◄R	◄R	◄R	◄R
8	R	R	R	R	R	R	R	R	R	R	R	R	R	R	R	R	R	R	R	R	R	R	G	Y	R	R	R	R
9	R	R	R	R	R	R	R	R	R	R	G	Y	R	R	R	R	R	R	R	R	R	R	R	R	R	R	R	R
P1	OFF	◄							DW							►	WØ	◄					DW					►
P2	OFF	◄													DW											WØ	◄	DW ►

INTERVALS	PHASE 1	PHASE 2	PHASE 3	PHASE 4	PHASE 5	PHASE 6	PHASE 7	PHASE 8	PHASE 9
MIN GRN	5	15	5	10	5	15	5	10	
WALK						7			7
PED CLR						7			25
VEH EXT	2	4.0	1.5	3.0	2	4.0	2	3	
MAX 1	25	45	25	35	25	45	25	35	
MAX 2	25	45	25	35	25	45	25	35	
YELLOW	3	3.9	3	3.6	3	3.9	3	3.6	
RED	1	1.0	1.4	2.1	1	1.0	1.4	2.1	
ADD INIT									
MAX INIT									
TBR									
TTR									
MIN GAP									
MODE	NON-LOCK	MIN. RECALL	NON-LOCK	LOCK	NON-LOCK	MIN. RECALL	NON-LOCK	LOCK	NON-LOCK
INT START		THIS PHASE				THIS PHASE			

ENERGY BY- CITY | METER # - N/A | INTERSECTION # 088-261
MAINT LEVEL 5 | SERVICE- MANHOLE

UNMETERED SERVICE

SIGNAL FACES

300 mm (1,3,5,7) · 300 mm (2,4,6,8,9) · 280 mm (P)

ALL INDICATIONS HAVE LED LAMPS AND TUNNEL VISORS.

OFFICE RECORD

REVISION #12
STC # N/A SM # N/A
SIGNAL REVISED 2/6/03
REPLACED SIGNAL EQUIPMENT AND REVISED SEQUENCE AND TIMING IN PROJECT 171-282.
AS-BUILT PLAN DRAWN 7/03.
Revision #13
Job # 88-195 STC # N/A
Traffic Des: Sig Con Elec Des: N/A
Signal Revised: 12/14/06
Revised timings $\phi_1 + \phi_2 + \phi_3 + \phi_4 + \phi_5 + \phi_6 + \phi_7 + \phi_8$

REVISION #14
TIR# N/A SM# N/A
SIGNAL REVISED: 10-10-13
REPLACED 12" RED WITH RED ARROW ON SIGNAL FACES 1,3,5 & 7 AND REMOVED SIGN No. 31-0842.
SIGNAL REVISED UNDER PROJECT No. 170-3084.

DETECTORS

IDENT	SIZE (WXL)	TURNS	MODE
D1	1.8 m X 1.8 m	3	PRESENCE
D2	1.8 m X 1.8 m	4	PRESENCE
D2A	1.8 m X 1.8 m	4	PRESENCE
D3	1.8 m X 1.8 m	3	PRESENCE
D4	1.8 m X 1.8 m	4	PRESENCE
D5	1.8 m X 1.8 m	3	PRESENCE
D6	1.8 m X 1.8 m	4	PRESENCE
D6A	1.8 m X 1.8 m	4	PRESENCE
D6B	1.8 m X 1.8 m	4	PRESENCE
D7	1.8 m X 1.8 m	3	PRESENCE
D8	1.8 m X 1.8 m	4	PRESENCE

PROGRAM

FUNCTION	TIME	DAYS
FLASH	FUTURE	
MAX. 1	ALL TIMES	
MAX. 2	FUTURE	

COORDINATION TYPE- NONE

CYCLE	OFFSET SEC	OFFSET %	Ø1	Ø2	Ø3	Ø4	Ø5	Ø6	Ø7	Ø8	PERMISSIVE PERIOD Ø	PERMISSIVE PERIOD SEC	SYSTEM Loc MASTER

PHASE SPLITS SEC/ %

TECHNICAL NOTES

STANDARD OVERLAP SKIP FEATURES APPLY

P1 TO CALL PHASE 6.

P2 TO CALL PHASE 9.

LEGEND:
R RED · Y YELLOW · G GREEN
◄R RED ARROW · ◄¥ YELLOW ARROW · ◄— GREEN ARROW
WØ WALK/ PED. CLR · D.W. DON'T WALK · FL. FLASHING

STATE OF CONNECTICUT
DEPARTMENT OF TRANSPORTATION
BUR. OF ENGINEERING & HWY OPERATIONS
DIVISION OF TRAFFIC ENGINEERING
TRAFFIC CONTROL SIGNAL

CITY OF NEW BRITAIN
ROUTE 71 (MARTIN LUTHER KING DR. AND TRUMAN-JOHNSON OVERPASS) AT ROUTE 174 (EAST MAIN ST.) AND EAST MAIN STREET

REV #12	TRAFFIC	DATE	ELECTRICAL	DATE
ENGINEER	JPO	12-00	JSS	3-01
DRAFTER	DMB	1-01	DMB	4-01
CHECKED BY	JPO	4-01	MRM	3-01
SUBMITTED BY	RST	5-01	MJG	5-01
APPROVED BY	VINCENT AVINO		VINCENT AVINO	
DATE	5-9-01		5-9-01	

ORIGINAL SIGNED

SIGN LEGEND

(B) EXISTING 31-1526 (KEEP RT.)
(C) EXISTING 31-1526Z (KEEP RT.)
(D) EXISTING 31-0117 (LT. LA MUST TN. LT.)
(E) EXISTING 31-0118 (RT. LA MUST TN. RT.)
(F) EXISTING 31-0523Z (YIELD)
(G) EXISTING 31-0117Z (LT. LA. MUST TN. LT.)
(H) EXISTING 31-0118Z (RT. LA. MUST TN. RT.)
(J) EXISTING POLE MTD. ON LUMINAIRE 31-0118 (RT. TN. MUST TN. RT.)

NOTES:
STATE TO MAINTAIN PAVEMENT MARKINGS AND SIGNS ON ROUTE 71 AND ROUTE 174 AND ALL STOP BARS.
CITY TO MAINTAIN PAVEMENT MARKINGS AND SIGNS ON EAST MAIN STREET.
(S) BAR TYPE CROSSWALK (0.4 m - 0.4 m X 2.4 m MIN.) - STATE MAINTAINED
(T) BAR TYPE CROSSWALK (0.4 m - 0.4 m X 2.4 m MIN.) - CITY MAINTAINED

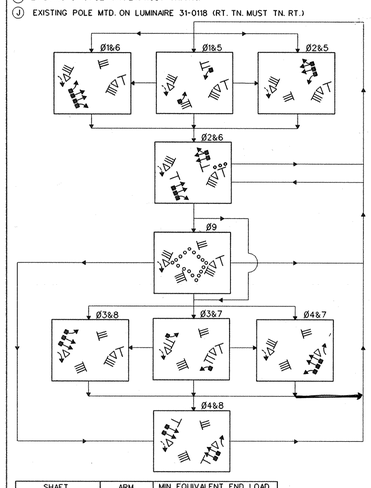

SHAFT LENGTH	SHAFT B.C.	ARM LENGTH	MIN. EQUIVALENT END LOAD FORCE (N)	MIN. EQUIVALENT END LOAD AREA (sq. m)
6400 mm	560 mm	19 000 mm	2000	3.7
6400 mm	510 mm	13 000 mm	1300	3.3

MAST ARM SHALL HAVE AN ADJUSTABLE ARM PER TYPICAL SHEET.
ALL MAST ARM MOUNTED TRAFFIC SIGNALS ARE FIXED MOUNTED TO THE ARM BY USE OF ADJUSTABLE BRACKETS.

REV. #14 | INTERSECTION # 088-261

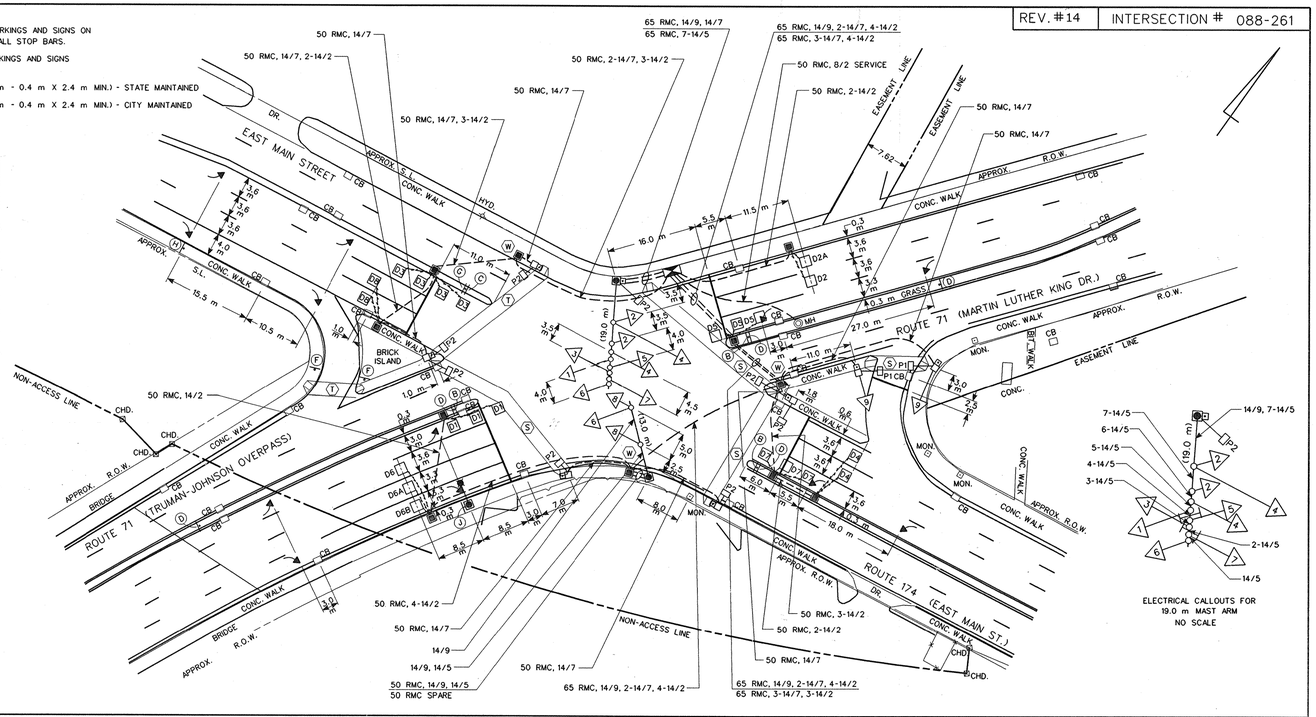

ELECTRICAL CALLOUTS FOR 19.0 m MAST ARM
NO SCALE

LEGEND:
PROPOSED WOOD SPAN POLE · EXISTING WOOD SPAN POLE · PROPOSED MAST ARM · EXISTING STEEL SPAN POLE
PROPOSED UTILITY POLE · EXISTING UTILITY POLE · PEDESTAL MOUNTING · PEDESTRIAN PUSH BUTTON & SIGN
TRAFFIC SIGNAL FACE · PEDESTRIAN SIGNAL FACE · AUDIBLE PEDESTRIAN SIGNAL · LOOP DETECTOR
MAGNETIC DETECTOR · SD SYSTEM DETECTOR · OPTICAL DETECTOR · PROPOSED CONTROLLER
EXISTING CONTROLLER · PROPOSED HANDHOLE · EXISTING HANDHOLE · PROPOSED R.M.C. (RIGID METAL CONDUIT)
EXISTING R.M.C. (RIGID METAL CONDUIT) · CABLE CLOSURE · DET. LEADS IN SAW CUT · AUXILIARY TERMINATION CABINET · AUXILIARY EQUIPMENT CABINET
EXISTING LUMINAIRE · SIDEWALK RAMP

TRAFFIC CONTROL SIGNAL LAYOUT
CADD FILE NAME: p:\projects\dlvar01\0880261xxx.tcs
DATE PLOTTED: 9/18/00
SCALE - 1:500
ALL DIMENSIONS IN MILLIMETERS UNLESS OTHERWISE NOTED.

CITY OF NEW BRITAIN
ROUTE 71 (MARTIN LUTHER KING DR. AND TRUMAN-JOHNSON OVERPASS) AT ROUTE 174 (EAST MAIN ST.) AND EAST MAIN STREET

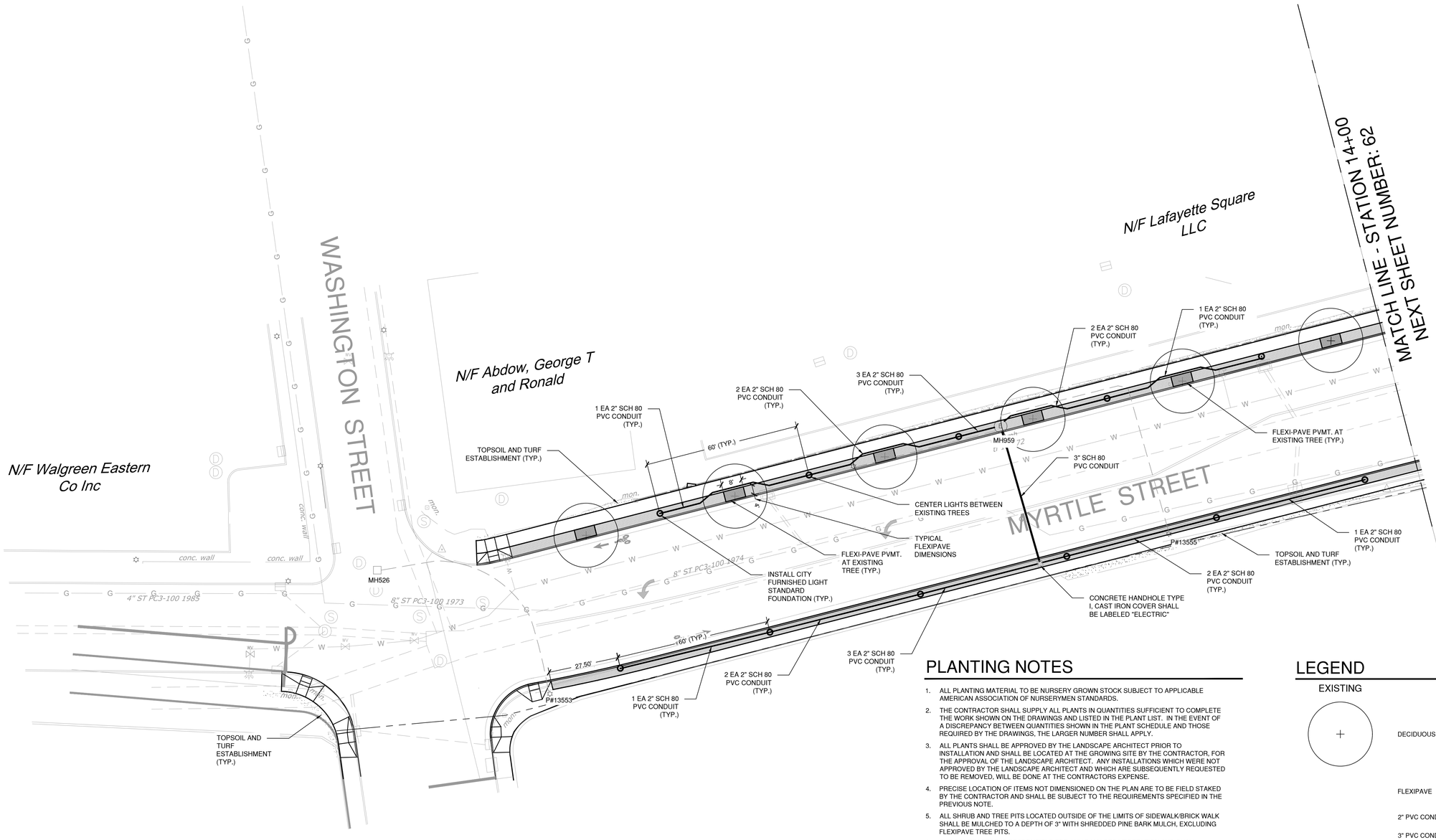

PLANTING NOTES

1. ALL PLANTING MATERIAL TO BE NURSERY GROWN STOCK SUBJECT TO APPLICABLE AMERICAN ASSOCIATION OF NURSERYMEN STANDARDS.
2. THE CONTRACTOR SHALL SUPPLY ALL PLANTS IN QUANTITIES SUFFICIENT TO COMPLETE THE WORK SHOWN ON THE DRAWINGS AND LISTED IN THE PLANT LIST. IN THE EVENT OF A DISCREPANCY BETWEEN QUANTITIES SHOWN IN THE PLANT SCHEDULE AND THOSE REQUIRED BY THE DRAWINGS, THE LARGER NUMBER SHALL APPLY.
3. ALL PLANTS SHALL BE APPROVED BY THE LANDSCAPE ARCHITECT PRIOR TO INSTALLATION AND SHALL BE LOCATED AT THE GROWING SITE BY THE CONTRACTOR, FOR THE APPROVAL OF THE LANDSCAPE ARCHITECT. ANY INSTALLATIONS WHICH WERE NOT APPROVED BY THE LANDSCAPE ARCHITECT AND WHICH ARE SUBSEQUENTLY REQUESTED TO BE REMOVED, WILL BE DONE AT THE CONTRACTORS EXPENSE.
4. PRECISE LOCATION OF ITEMS NOT DIMENSIONED ON THE PLAN ARE TO BE FIELD STAKED BY THE CONTRACTOR AND SHALL BE SUBJECT TO THE REQUIREMENTS SPECIFIED IN THE PREVIOUS NOTE.
5. ALL SHRUB AND TREE PITS LOCATED OUTSIDE OF THE LIMITS OF SIDEWALK/BRICK WALK SHALL BE MULCHED TO A DEPTH OF 3" WITH SHREDDED PINE BARK MULCH, EXCLUDING FLEXIPAVE TREE PITS.
6. THE CONTRACTOR IS RESPONSIBLE FOR ANY DAMAGED VEGETATION AND SHALL REPLACE OR REPAIR ANY DAMAGE, AT HIS OWN EXPENSE.
7. THE CONTRACTOR IS RESPONSIBLE FOR LOCATING ALL UTILITIES IN THE FIELD. WHERE PLANT MATERIAL MAY INTERFERE WITH UTILITIES, THE CONTRACTOR SHALL NOTIFY THE LANDSCAPE ARCHITECT TO COORDINATE THEIR INSTALLATION.
8. PLANTINGS INSTALLED IN THE DRY SUMMER MONTHS AND/OR LAWN SEEDED OUT OF SPRING OR FALL PERIODS, IF ALLOWED BY OWNER, WILL REQUIRE AGGRESSIVE IRRIGATION PROGRAMS, AS DIRECTED BY THE OWNER, AT THE CONTRACTOR'S EXPENSE, UNLESS OTHERWISE DIRECTED BY THE OWNER.
9. SUBSTITUTIONS PERMITTED ONLY UPON WRITTEN APPROVAL OF THE OWNER'S REPRESENTATIVE.
10. PLANT TAGS TO REMAIN ON ALL PLANT MATERIAL UNTIL FINAL ACCEPTANCE. CONTRACTOR TO THEN REMOVE ALL PLANT TAGS.
11. WHERE A SIZE RANGE IS GIVEN IN THE PLANT SCHEDULE, AT LEAST 50% OF THE PLANTS PROVIDED SHALL BE OF THE LARGER SIZE.
12. CONTRACTOR TO GUARANTEE ALL PLANT MATERIAL FOR ONE YEAR AFTER DATE OF FINAL ACCEPTANCE.
13. CONTRACTOR TO MAINTAIN ALL PLANT MATERIAL UNTIL 60 DAYS AFTER FINAL ACCEPTANCE UNLESS NOTED OTHERWISE IN SPECS.
14. TOPSOIL AND ESTABLISH TURF AT ALL AREAS DISTURBED BY CONSTRUCTION ACTIVITIES AND NOT COVERED BY OTHER SITE IMPROVEMENTS.

LEGEND

EXISTING | PROPOSED

- DECIDUOUS TREE
- FLEXIPAVE
- 2" PVC CONDUIT
- 3" PVC CONDUIT
- EXISTING CONDUIT TO BE ABANDONED
- TOPSOIL AND TURF ESTABLISHMENT
- ORNAMENTAL LIGHTING, CITY PROVIDED BASES TO BE INSTALLED BY CONTRACTOR
- SERVICE BOX

20 0 20 40
1" = 20'

NOTE

1. SEE ROADWAY PLANS FOR LAYOUT OF ROAD, PAVERS, AND SIDEWALKS.
2. SEE SHEET 64 FOR PLANTING AND LIGHTING DETAILS.
3. EXISTING STREET LIGHTS AND FOUNDATIONS SHALL BE REMOVED BY OTHERS.

ELECTRICAL SERVICE NOTES

1. PVC IS TO BE ENCASED IN CONCRETE OF MINIMUM PIPE DIAMETER PLUS 1 INCH.
2. EACH LIGHT HAS ITS OWN FEED FROM MANHOLE, HANDHOLE, OR SERVICE BOX.
3. IF INTERCEPTION OF EXISTING CONDUIT FOR NEW SERVICE BOX OR LIGHT, RUN NEW CONDUIT.
4. ELECTRICAL DESIGN ACCOUNTS FOR FEEDS, LOCATIONS, AND TYPE OF FACILITIES, NOT THE TYPE OF LIGHT
5. TYPE OF POLE AND LUMINAIRE TO BE DETERMINED.

PLANT SCHEDULE

CATEGORY	SYM.	NO.	BOTANICAL NAME	COMMON NAME	SIZE	COND.
STREET TREE	ZS	37	ZELKOVA SERRATA 'VILLAGE GREEN'	VILLAGE GREEN ZELKOVA	3 1/2" - 4" CAL.	B&B

PLANTING AND LIGHTING PLAN

CARDINAL ENGINEERING ASSOCIATES
3 Colony Street | Meriden, CT 06451 | 203-238-1949
todesign
114 WEST MAIN STREET SUITE 202
NEW BRITAIN, CT 06051
860-612-1700 todesignllc.com

DESIGNED BY: MWF
DRAWN BY: MWF/MD
CHECKED BY: PB
DATE: 02/06/2019

PHASE VI STREETSCAPE
MYRTLE STREET/EAST MAIN STREET
STATE PROJECT No. L088-002
NEW BRITAIN, CONNECTICUT

REV.	DATE	DESCRIPTION	BY	APP'D

SCALE: AS NOTED
JOB NO. 6230
SHEET 61

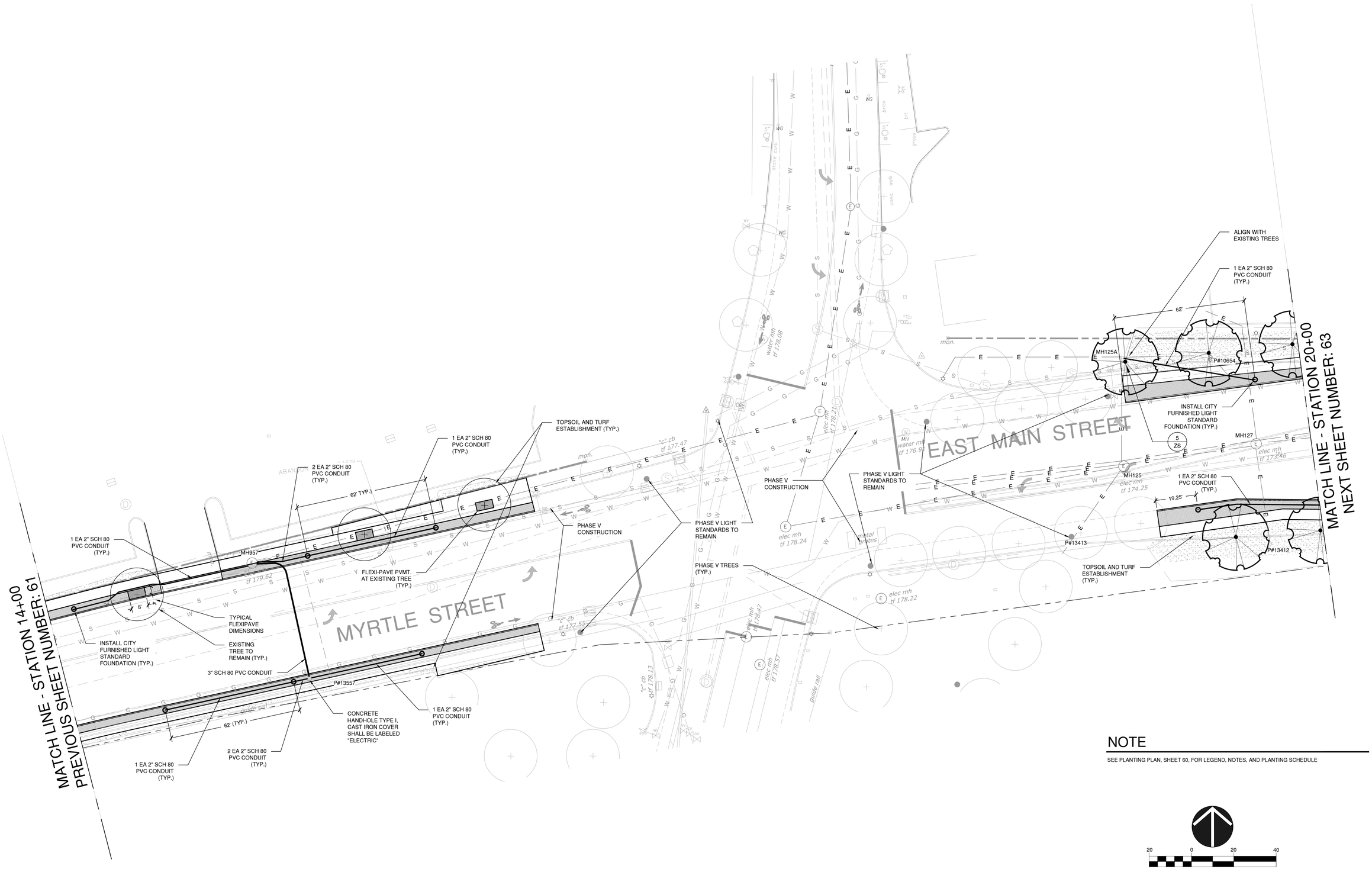

NOTE

SEE PLANTING PLAN, SHEET 60, FOR LEGEND, NOTES, AND PLANTING SCHEDULE

20 0 20 40

1" = 20'

PLANTING AND LIGHTING PLAN

SHEET 62

SCALE: AS NOTED

JOB NO. 6230

REV.	DATE	DESCRIPTION	BY	APP'D

PHASE VI STREETSCAPE
MYRTLE STREET/EAST MAIN STREET
STATE PROJECT No. L088-002
NEW BRITAIN, CONNECTICUT

DESIGNED BY: MWF
DRAWN BY: MWF/MD
CHECKED BY: PB
DATE: 02/06/2019

todesign
114 WEST MAIN STREET
SUITE 202
NEW BRITAIN, CT 06051
860-612-1700 todesignllc.com

CARDINAL ENGINEERING ASSOCIATES
3 Colony Street | Meriden, CT 06451 | 203-238-1949

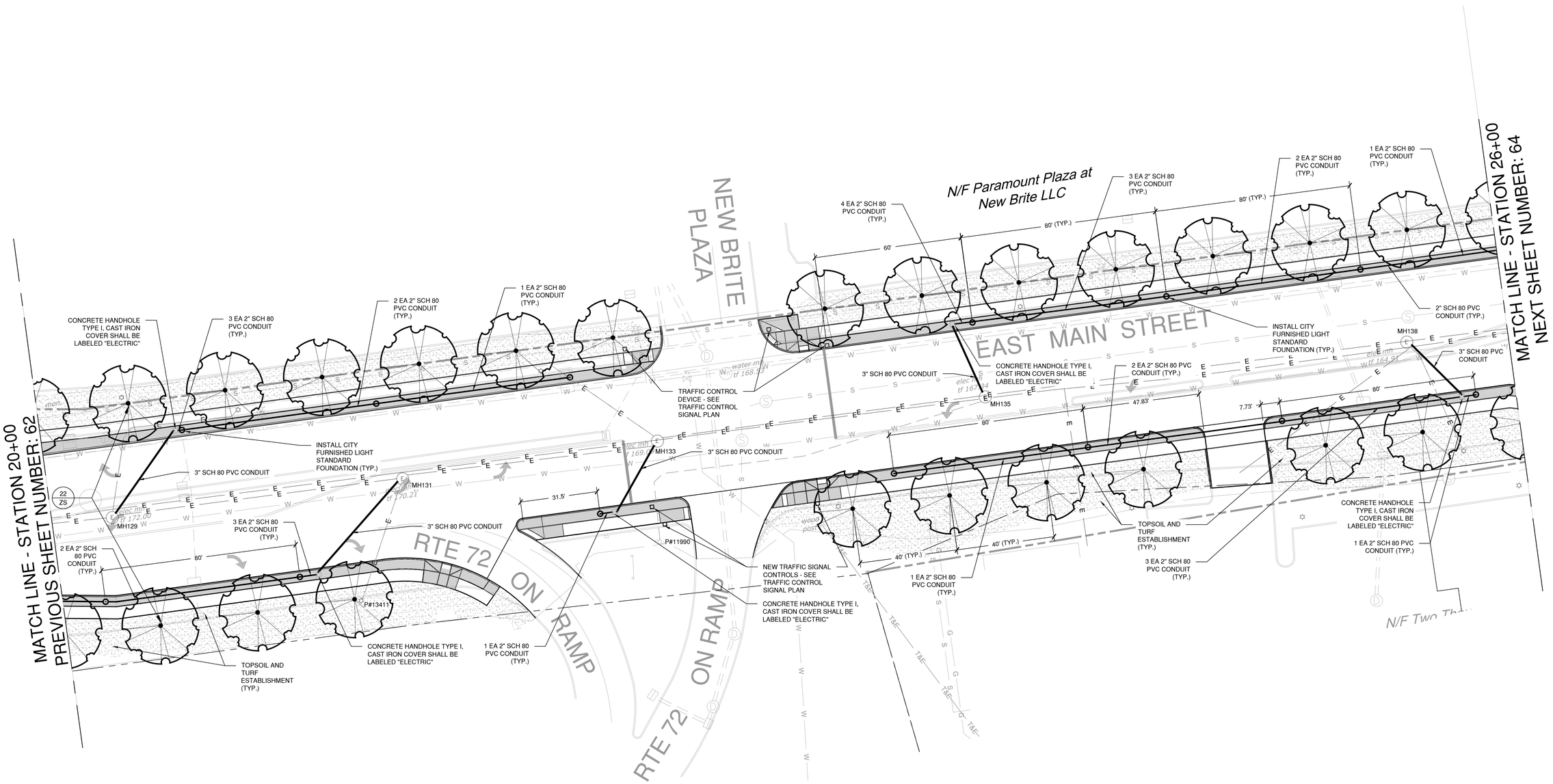

NOTE

SEE PLANTING PLAN, SHEET 60, FOR LEGEND, NOTES, AND PLANTING SCHEDULE

20 0 20 40

1" = 20'

PLANTING AND LIGHTING PLAN

SHEET 63

SCALE: AS NOTED

JOB NO. 6230

REV.	DATE	DESCRIPTION	BY	APP'D

PHASE VI STREETSCAPE
MYRTLE STREET/EAST MAIN STREET
STATE PROJECT No. L088-002
NEW BRITAIN, CONNECTICUT

DESIGNED BY: MWF
DRAWN BY: MWF/MD
CHECKED BY: PB
DATE: 02/06/2019

todesign
114 WEST MAIN STREET
SUITE 202
NEW BRITAIN, CT 06051
860-612-1700 todesignllc.com

CARDINAL ENGINEERING ASSOCIATES
3 Colony Street | Meriden, CT 06451 | 203-238-1949

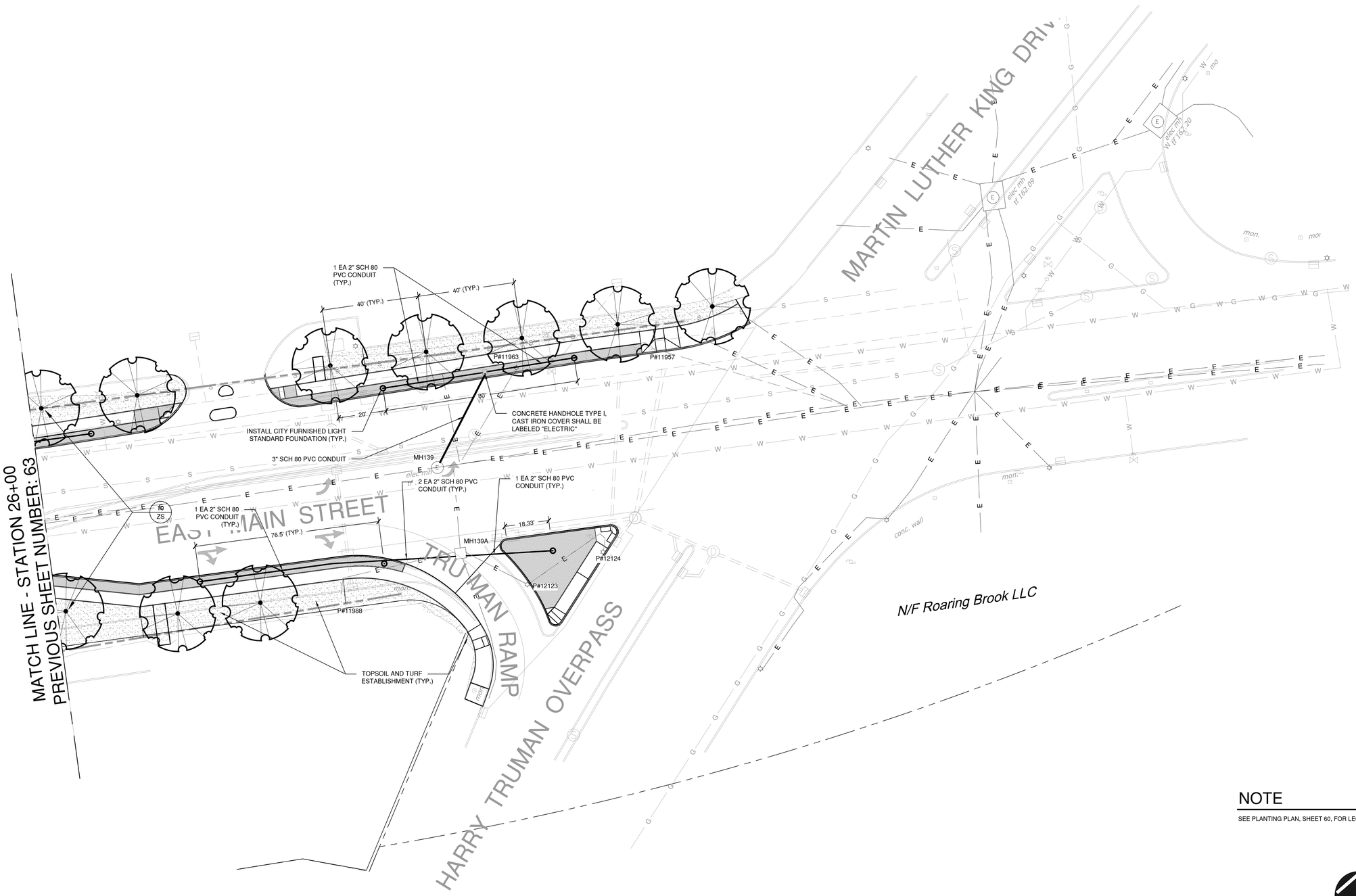

NOTE

SEE PLANTING PLAN, SHEET 60, FOR LEGEND, NOTES, AND PLANTING SCHEDULE

20 0 20 40
1" = 20'

PLANTING AND LIGHTING PLAN

SHEET 64

SCALE: AS NOTED

JOB NO. 6230

REV.	DATE	DESCRIPTION	BY	APP'D

PHASE VI STREETSCAPE
MYRTLE STREET/EAST MAIN STREET
STATE PROJECT No. L088-002
NEW BRITAIN, CONNECTICUT

DESIGNED BY: MWF
DRAWN BY: MWF/MD
CHECKED BY: PB
DATE: 02/06/2019

todesign
114 WEST MAIN STREET
SUITE 202
NEW BRITAIN, CT 06051
860-612-1700 todesignllc.com

CARDINAL ENGINEERING ASSOCIATES
3 Colony Street | Meriden, CT 06451 | 203-238-1949

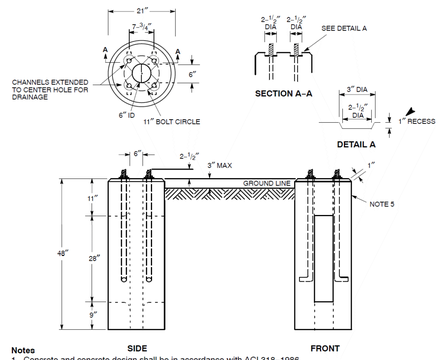

Notes

1. Concrete and concrete design shall be in accordance with ACI 318–1986.
2. Final 28–day concrete strength to be 5000 psi.
3. Anchor bolts to be steel per ASTM A36–1987E1, 3/4" x 24" with 3–inch leg, rolled threads preferred, 4–inch thread, w/galvanized hex nut and round flat galvanized washer. Threaded end to be galvanized a minimum of 6 inches.
4. The 6–inch handhole at center of bolt circle projects into a 6–inch wide slot 28 inches high through the base.
5. Manufacturer's identification and month/year when manufactured shall be legibly marked in/on concrete within 3 inches of the top.
6. NUSCO **SC 0415436** shall be written on side of base with an indelible marker.

ORIGINAL 12/18/00	**BASE – DECORATIVE LIGHT POLE PRECAST CONCRETE – ROUND**			
APPROVED 2/18/13	NORTHEAST UTILITIES	MATERIAL SPECIFICATION	**SPC B–158.01**	**1**

LIGHT STANDARD FOUNDATION

NOT TO SCALE

CONTRACTOR TO INSTALL CITY FURNISHED LIGHT STANDARD FOUNDATION

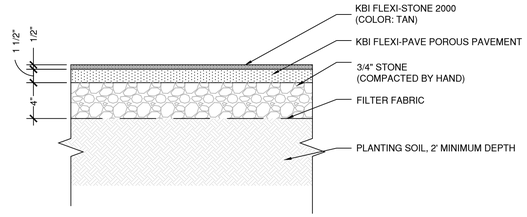

FLEXI-PAVE PAVEMENT

SCALE 1 1/2" = 1'-0"

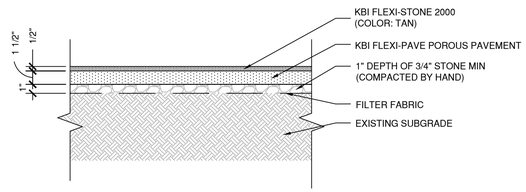

FLEXI-PAVE PAVEMENT AT UNDISTURBED TREE ROOTS

SCALE 1 1/2" = 1'-0"

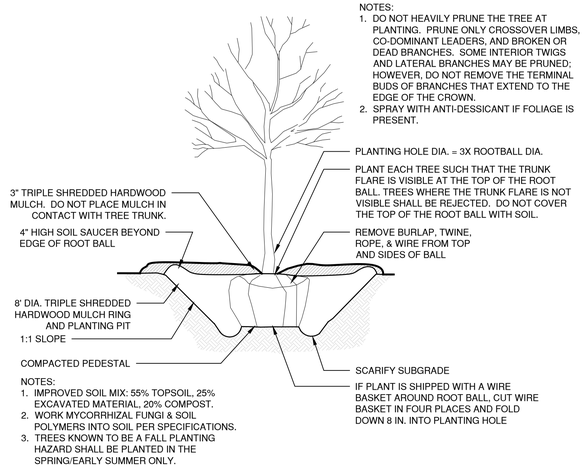

TREE PLANTING

SCALE 1" = 1'-0"

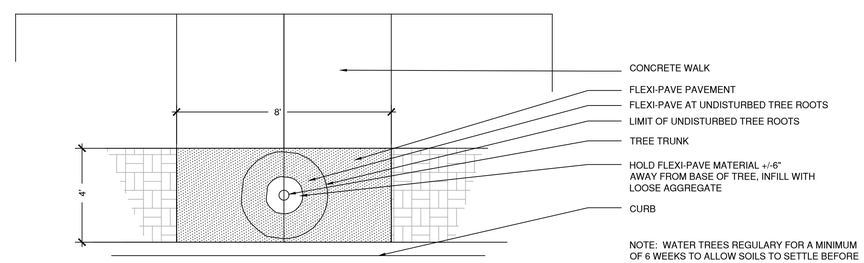

NOTE: WATER TREES REGULARY FOR A MINIMUM OF 6 WEEKS TO ALLOW SOILS TO SETTLE BEFORE INSTALLING FLEXI-PAVE

FLEXI-PAVE PAVEMENT AT EXISTING TREE

3/8"=1'-0"

PLANTING AND LIGHTING DETAILS

CARDINAL ENGINEERING ASSOCIATES
3 Colony Street | Meriden, CT 06451 | 203-238-1969
todesign
114 WEST MAIN STREET
SUITE 202
NEW BRITAIN, CT 06051
860-612-1700 todesignllc.com

DESIGNED BY: MWF
DRAWN BY: MWF/MD
CHECKED BY: PB
DATE: 02/06/2019

PHASE VI STREETSCAPE
MYRTLE STREET/EAST MAIN STREET
STATE PROJECT No. L088–002
NEW BRITAIN, CONNECTICUT

REV.	DATE	DESCRIPTION	BY	APP'D

SCALE: AS NOTED

JOB NO. 6230

SHEET 65

MOVEMENT DIAGRAM

NTOR	PHASE 1	PHASE 2 PRE-EMPT 1	PHASE 3	PHASE 4	PHASE 5	PHASE 6 PRE-EMPT 1	PHASE 7	PHASE 8
NONE	1	2 5	P		5	1 6	7 7	

FACE #	FLASH	GRN	CL	CL	GRN	CL	CL	GRN	CL	CL	GRN	CL	CL	GRN	CL	CL	GRN	CL	CL	GRN	CL	CL	GRN	CL	CL	GRN	CL	CL
1	R	← R	← Y → R	R	R	R	R	R	R	R				R	R	R	G	Y	R	R	R	R						
2	R	R	R	R	G	Y	R	R	R	R				R	R	R	R	R	R	R	R	R						
5	R	R	R	R	G	Y	R	R	R	R				← R	← Y → R	R	R	R	R	R	R	R						
6	R	R	R	R	R	R	R	R	R	R				R	R	R	G	Y	R	R	R	R						
7	R	R	R	R	R	R	R	R	R	R				R	R	R	R	R	R	G	Y	R						
P	OFF	← DW →						WØ	← DW →					← DW →														
					← YIELD PT.												← YIELD PT.											
								W|FDW																				
MIN.		5	3.0	1.0	15	3.0	1.0	4|13	4.0	0.0				5	3.0	1.0	15	3.0	1.0	5	3.0	1.0						
MAX.		20	5.0	3.0	60	5.0	3.0	10|16	4.0	0.0				20	5.0	3.0	60	5.0	3.0	25	5.0	3.0						

INTERVALS	PHASE 1	PHASE 2	PHASE 3	PHASE 5	PHASE 6	PHASE 7
MIN GRN	5	20		5	20	10
WALK			7 ①			
PED CLR			11 ②			
VEH EXT	1.5	3.0		1.5	3.0	1.5
MAX 1	15	40		15	40	20
MAX 2	15	40		15	40	20
YELLOW	3.0	3.3	4.0	3.0	3.3	3.0
RED	1.0	1.6	0.0	1.0	1.6	1.6
ADD INIT						
MAX INIT						
TBR						
TTR						
MIN GAP						
MODE	NON-LOCK	MIN. RECALL	NON-LOCK	NON-LOCK	MIN. RECALL	NON-LOCK
INIT START		THIS PHASE			THIS PHASE	

ACCESSIBLE PEDESTRIAN SIGNAL

COUNTDOWN PEDESTRIAN SIGNAL

	PHASE 8
MIN GRN	
WALK	
PED CLR	
VEH EXT	
MAX 1	
MAX 2	
YELLOW	
RED	
ADD INIT	
MAX INIT	
TBR	
TTR	
MIN GAP	
MODE	OFF
INIT START	

DETECTORS				SYSTEM LOC	COORDINATION TYPE: NONE																		PERMIS PERIOD	
IDENT	SIZE (WXL)	TYPE	MODE	MASTER MASTER 11	PROGRAM FUNCTION	TIME	DAYS	CYCLE	OFFSET SEC	OFFSET %	PHASE SPLITS SEC / % Ø1	Ø2	Ø3	Ø4	Ø5	Ø6	Ø7	Ø8	Ø	SEC
D1	6' x 50'	VIDEO	PRESENCE	MYRTLE AT CURTIS	FLASH	NONE														
D2	6' x 50'	VIDEO	PRESENCE	MYRTLE AT HIGH	MAX 1	ALL TIMES														
D2A	6' x 50'	VIDEO	PRESENCE	MYRTLE AT WASH.	MAX 2	FUTURE														
D5	6' x 50'	VIDEO	PRESENCE	MYRTLE & E. MAIN AT MAIN																
D6	6' x 50'	VIDEO	PRESENCE																	
D7A	6' x 50'	VIDEO	PRESENCE	E. MAIN AT RT. 72 RAMP																
D7B	6' x 50'	VIDEO	6" DELAY																	

TECHNICAL NOTES

STANDARD OVERLAP SKIP FEATURES APPLY
① SPEECH MESSAGE ("THE WALK LIGHT IS ON") ONLY DURING PEDESTRIAN WALK INTERVAL.
② COUNTDOWN ONLY DURING FLASHING PEDESTRIAN CHANGE INTERVAL.
MANUAL AND INTERVAL ADVANCE TO BE DISCONNECTED DURING PHASE 3 PEDESTRIAN CLEARANCE INTERVAL.
PEDESTRIAN PUSH BUTTONS TO ACTIVATE PHASE 3 ONLY.

OFFICE RECORD

REV #	TIR #	SM #	SIGNAL REVISED:
SIGNAL EQUIPMENT REPLACED UNDER SPN L088-0002.			

SIGNAL FACES

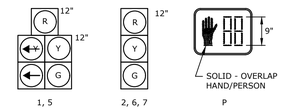

ALL INDICATIONS HAVE LED LAMPS.

PRE-EMPTION SETTINGS

	PRE-EMPT 1
PRIORITY	NO
DET. LOCK	YES
DELAY	0
ALT. MIN. GRN	5
ALT. YELLOW	PARENT
ALT. RED	PARENT
ALT. PED. CLR.	11
HOLD GREEN	20
HOLD YELLOW	3.3
HOLD RED	1.6
HOLD PHASE	2 & 6
EXIT PHASE	7
EXIT CALL	NONE

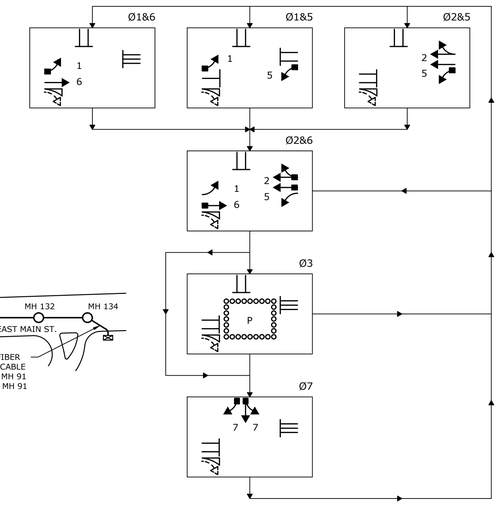

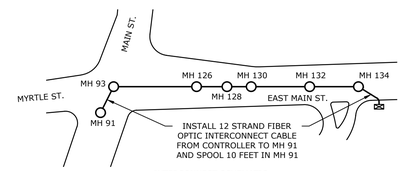

INTERCONNECT SCHEMATIC

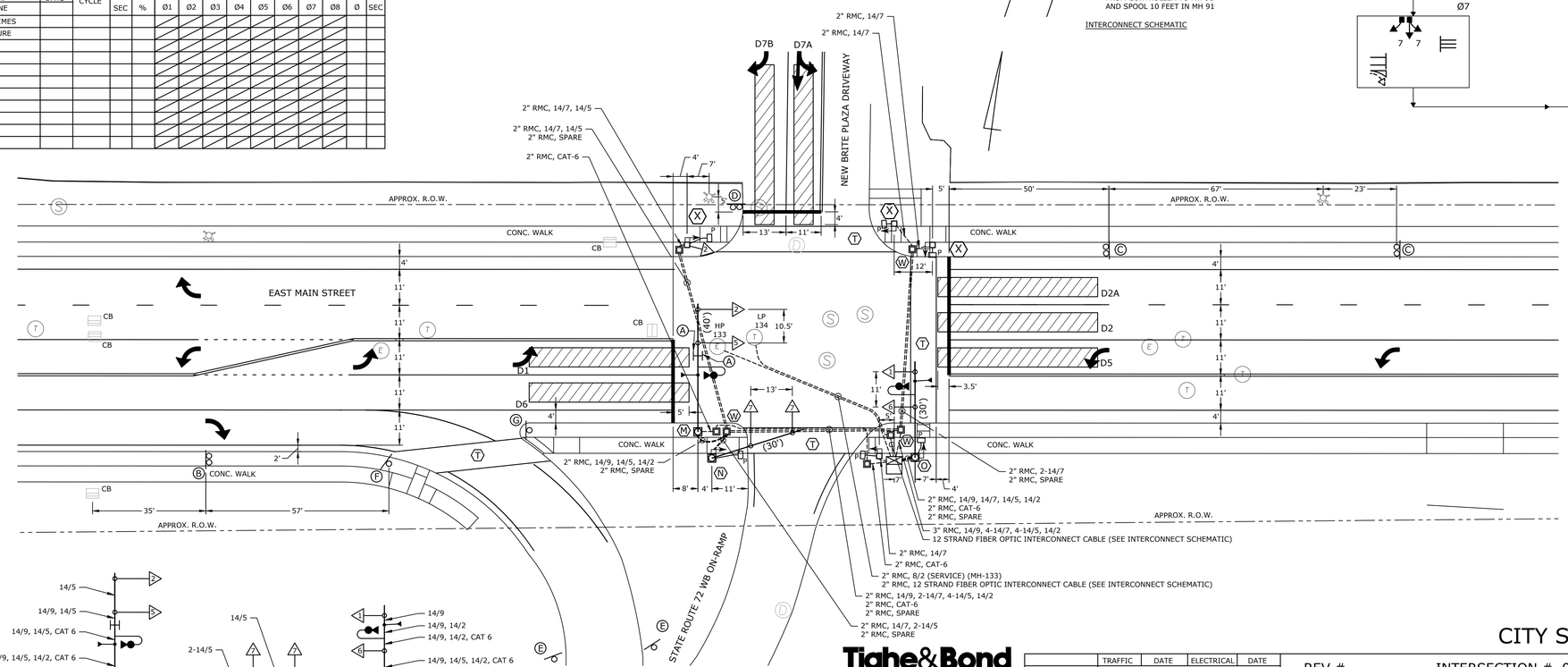

SIGN LEGEND:

- Ⓐ INSTALL MAST ARM MOUNT 31-0135
- Ⓑ INSTALL 31-0302
- Ⓒ INSTALL 31-0307
- Ⓓ INSTALL 31-0283
- Ⓔ INSTALL 31-0523
- Ⓕ INSTALL 41-4811 & 41-2607
- Ⓖ INSTALL 41-4811 & 41-2609

NOTES:

SEE DRAWING NO. TCS-002 FOR MAST ARM CROSS-SECTIONS.

SEE SEPARATE PLANS FOR ROADWAY LAYOUT, ADDITIONAL PAVEMENT MARKINGS, AND ADDITIONAL SIGNING.

CITY OF NEW BRITAIN TO OWN AND MAINTAIN PRE-EMPTION EQUIPMENT.

Ⓣ BAR TYPE CROSSWALK (16" x 16" x 8' MIN.) - CITY MAINTAINED

Ⓦ 30" X 30" HANDHOLE. ALL OTHERS TYPE II.

Ⓧ PEDESTAL TO BE INSTALLED ABOVE DRAINAGE BOX CULVERT. CONTRACTOR TO CONDUCT TEST PITS PRIOR TO EXCAVATION.

MAST ARM INFORMATION

	ID #	LENGTH	ARM MOUNTING HEIGHT	YEAR INSTALLED
Ⓜ	088-281-M	40'	18'	
Ⓝ	088-281-N	30'	17'	
Ⓞ	088-281-O	30'	17.5'	

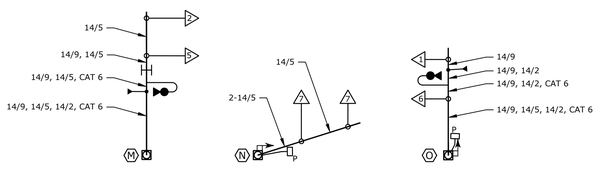

MAST ARM WIRING

Tighe&Bond
www.tighebond.com
213 Court Street
Suite 900
Middletown, CT 06457
(860) 704-4760

CITY SIGNAL

	TRAFFIC	DATE	ELECTRICAL	DATE
ENGINEER	TIGHE & BOND MIDDLETOWN, CONNECTICUT 04-03-2019			
DRAWN BY				
CHECKED BY				
SUBMITTED BY				
APPROVED BY				
APPROVED DATE				

REV # INTERSECTION # 088-281

ENERGY BY CITY | ADDRESS #
MAINT LEVEL CITY | SERVICE POLE MH 133
UNMETERED SERVICE

TOWN: NEW BRITAIN

PROJECT NO. L088-0002

DRAWING NO. TCS-001

DRAWING TITLE: TRAFFIC CONTROL SIGNAL PLAN

SHEET NO. 66

EAST MAIN STREET AT STATE ROUTE 72 (THADDEUS KOSCIUSZKO HIGHWAY) WESTBOUND ON-RAMP & NEW BRITE PLAZA DRIVEWAY

SCALE 1" = 20'

CITY OF NEW BRITAIN
DEPARTMENT OF PUBLIC WORKS

LEGEND:
R, Y, G RED, YEL, GRN
RED ARROW
YELLOW ARROW
GREEN ARROW
WØ WALK/ PED. CLR
D.W. DON'T WALK
FL. FLASHING

PROPOSED WOOD SPAN POLE
EXISTING WOOD SPAN POLE
PROPOSED STEEL SPAN POLE
EXISTING STEEL SPAN POLE
PROPOSED UTILITY POLE
EXISTING UTILITY POLE
PEDESTAL MOUNTING
PEDESTRIAN PUSH BUTTON & SIGN
DIRECTIONAL ARW. FOR PUSH BUTTON

TRAFFIC SIGNAL FACE
PEDESTRIAN SIGNAL FACE
DET. LEADS IN SAW CUT
PROPOSED RMC (RIGID METAL CONDUIT)
EXISTING RMC (RIGID METAL CONDUIT)
AUXILIARY TERMINATION CABINET
AUXILIARY EQUIPMENT CABINET
VIDEO DETECTION ZONE

PROPOSED CONTROLLER
EXISTING CONTROLLER
LOOP DETECTOR
SD SYSTEM DETECTOR
MAGNETIC DETECTOR
OPTICAL DETECTOR
VIDEO DETECTOR
AUDIO DETECTOR

VC VIDEO CAMERA CABLE
CABLE CLOSURE
WIRELESS SENSOR
WIRELESS RECEIVER
WIRELESS TRANSCEIVER
GUY WIRE
PROPOSED HANDHOLE
EXISTING HANDHOLE

DATE PLOTTED : Apr 01, 2019

NO.	DATE	REVISION DESCRIPTION

Border Version 11/29/13

Apr 01, 2019-9:27am Plotted By: CJY
Tighe & Bond, Inc. J:\N\L088 New Britain\002-Phase 6 Streetscape\Drawings_Figures\Sheet\East Main\N\L096002-TCS-001.dwg

OFFICE RECORD			
REV #	TIR #	SM #	SIGNAL REVISED:
SIGNAL EQUIPMENT REPLACED UNDER SPN L088-0002.			

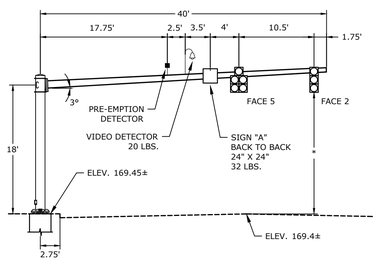

M - EAST MAIN STREET WB AT
ROUTE 72 WB ON-RAMP AND NEW BRITE PLAZA DRIVEWAY
088-281 - M
SCALE: 1" = 10'

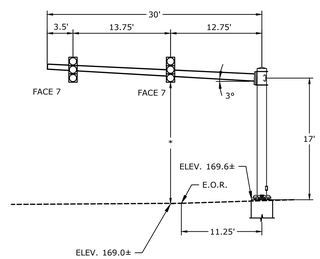

N - NEW BRITE PLAZA DRIVEWAY SB AT
EAST MAIN STREET AND ROUTE 72 WB ON-RAMP
088-281 - N
SCALE: 1" = 10'

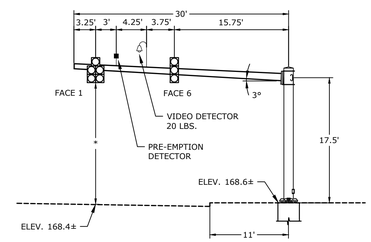

O - EAST MAIN STREET EB AT
ROUTE 72 WB ON-RAMP AND NEW BRITE PLAZA DRIVEWAY
088-281- O
SCALE: 1" = 10'

NOTES:

*DISTANCE BETWEEN PAVEMENT AND SIGNAL HEAD SHALL BE BETWEEN 16' AND 18'. CONTRACTOR TO VERIFY MAST ARM INFORMATION INCLUDING CROSS-SECTIONS AND ELEVATIONS PRIOR TO SUBMITTING WORKING DRAWINGS.

PEDESTRIAN PUSHBUTTON ALIGNMENT

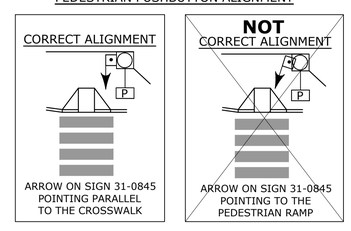

CONSTRUCTION NOTES

ALL MATERIAL AND CONSTRUCTION METHODS SHALL CONFORM TO THE FOLLOWING CURRENT D.O.T. DOCUMENTS WHICH CAN BE ACCESSED ON THE D.O.T. WEBSITE:

- STANDARD SPECIFICATIONS FOR ROADS, BRIDGES, FACILITIES AND INCIDENTAL CONSTRUCTION (FORM 817)
- SUPPLEMENTAL SPECIFICATIONS TO THE STANDARD SPECIFICATIONS
- SPECIAL PROVISIONS TO THE STANDARD SPECIFICATIONS
- STANDARD INSTALLATION AND GUIDE DETAIL SHEETS

ALL TRAFFIC SIGNAL EQUIPMENT IS NEW.

CONTRACTOR SHALL STAKE ALL R.O.W. PRIOR TO EXCAVATION. ALL WORK, INCLUDING ALL FOUNDATIONS SHALL BE WITHIN THE R.O.W.

CONTRACTOR SHALL TELEPHONE "CALL BEFORE YOU DIG" AT 1-800-922-4455 48 HOURS PRIOR TO ANY EXCAVATION. CONTRACTOR SHALL CONTACT UTILITY REPRESENTATIVES AND CITY AGENCIES FOUR WEEKS PRIOR TO EXCAVATION.

COORDINATE WITH UTILITY COMPANY REPRESENTATIVES LISTED IN THE SPECIAL PROVISION, 1.07 - LEGAL RELATIONS AND RESPONSIBILITIES.

ANY PROPOSED REVISIONS TO THE LOCATION OF THE APPURTENANCES SHOWN ON THE PLAN MUST BE SUBMITTED FOR REVIEW AND APPROVED BY THE NEW BRITAIN CITY ENGINEER PRIOR TO INSTALLATION.

THE LOCATION OF TRAFFIC SIGNAL APPURTENANCES (MAST ARMS, PEDESTALS, AND HAND HOLES) WHEN IN OR ADJACENT TO SIDEWALKS SHALL BE VERIFIED PRIOR TO INSTALLATION TO PROVIDE A FREE PATH OF NOT LESS THAN 4 FEET.

THE CONTRACTOR SHALL CONTACT MR. ROBERT TROTTIER, NEW BRITAIN CITY ENGINEER AT (860) 826-3355, PRIOR TO ANY EXCAVATION AND DELIVERY OF ALL SALVAGE MATERIAL.

THE CONTRACTOR SHALL OBTAIN ALL NECESSARY CITY PERMITS TO CONDUCT THE WORK.

CABINET DOOR TO OPEN FIELD SIDE.

ALL SIGNS DAMAGED DURING CONSTRUCTION SHALL BE REPLACED WITH NEW SIGNS AND POSTS, IF NEEDED, IN KIND BY THE CONTRACTOR AT THEIR EXPENSE.

CONTRACTOR SHALL REMOVE ALL EXISTING SIGNS THAT CONFLICT WITH THE PROPOSED SIGNS.

CONTRACTOR SHALL REPLACE IN KIND ALL DISTURBED AREAS (CURBING, SIDEWALK, ETC.) ASSOCIATED WITH THE CONSTRUCTION OF SIGNAL EQUIPMENT. THE LIMIT OF WORK ASSOCIATED WITH THE CONSTRUCTION OF SIGNAL EQUIPMENT SHALL BE A MINIMUM OF TEN (10) FEET UNLESS OTHERWISE SPECIFIED. THE SIDEWALK SHALL BE RESTORED WITHIN 48 HOURS OF DISTURBANCE.

(W) INSTALL 30" X 30" HANDHOLE. ALL OTHERS TYPE II.

INSTALL HANDHOLES APPROX. 1' BEHIND CURB OR SIDEWALK. IF NO CURB OR SIDEWALK, 2' BEHIND EDGE OF ROAD UNLESS OTHERWISE SPECIFIED.

HANDHOLES INSTALLED IN SIDEWALK SHALL HAVE CAST IRON HANDHOLE COVERS.

REMOVE ALL ABANDONED TRAFFIC SIGNAL EQUIPMENT INCLUDING, BUT NOT LIMITED TO FOUNDATIONS, HANDHOLES, CONDUIT RISERS & CABLE, MESSENGER & INTERCONNECT, STEEL POLES, AND WOOD POLES.

PRE-EMPTION AND VIDEO DETECTOR LOCATIONS ARE FOR ILLUSTRATION ONLY. EXACT LOCATIONS SHALL BE DETERMINED BY THE MANUFACTURER OR THEIR DESIGNATED REPRESENTATIVE. DETECTOR CABLES ARE TO BE INSTALLED CONTINUOUS BETWEEN EACH DETECTOR AND THE TRAFFIC SIGNAL CONTROLLER.

ALL MAST ARM MOUNTED TRAFFIC SIGNALS ARE FIXED MOUNTED TO THE ARM BY USE OF ADJUSTABLE BRACKETS.

CONTRACTOR TO VERIFY ALL MAST ARM INFORMATION INCLUDING CROSS SECTIONS AND DIMENSIONS, BASED ON FIELD SURVEY, PRIOR TO SUBMISSION OF WORKING DRAWINGS.

MAST ARMS TO BE LOCATED A MINIMUM OF 2' FROM FACE OF MAST ARM POLE TO BACK OF CURB.

PEDESTRIAN SIGNAL HEADS, TRAFFIC SIGNAL HEADS, HARDWARE, PEDESTALS, MAST ARMS, AND BRACKETS/BANDS SHALL BE BLACK, FEDERAL STANDARD 595, COLOR NO. 37038 PER SPECIAL PROVISIONS.

SERVICE CONNECTION AT MANHOLE TO BE PERFORMED BY AN EVERSOURCE AUTHORIZED CONTRACTOR PER SPECIAL PROVISION.

INSTALL FIBER OPTIC INTERCONNECT CABLE DROP FROM CONTROLLER TO MH 91 INCLUDING FIBER OPTIC SPLICE ENCLOSURE IN VAULT & PATCH PANEL WITH FIBER OPTIC CABLE TERMINATED WITHIN CONTROLLER CABINET PER SPECIAL PROVISIONS. SPOOL 10' EXCESS CABLE IN MH 91 FOR FUTURE CONNECTION TO INTERCONNECT SYSTEM TO BE INSTALLED UNDER A FUTURE PROJECT.

MAINTAIN INTERSECTION SIGNALIZATION THROUGHOUT THE DURATION OF CONSTRUCTION. UTILIZE TEMPORARY DETECTION PER SPECIAL PROVISION.

(X) PEDESTAL TO BE INSTALLED ABOVE DRAINAGE BOX CULVERT. CONTRACTOR TO CONDUCT TEST PITS PRIOR TO EXCAVATION.

REMOVE AND DISPOSE OF EXISTING HANDHOLES AND MAST ARMS, AND SALVAGE REMAINING EXISTING SIGNAL EQUIPMENT AS DIRECTED BY CITY OF NEW BRITAIN PER SPECIAL PROVISION.

CITY SIGNAL

Tighe&Bond
www.tighebond.com
213 Court Street
Suite 900
Middletown, CT 06457
(860) 704-4760

	TRAFFIC	DATE	ELECTRICAL	DATE
ENGINEER	TIGHE & BOND MIDDLETOWN, CONNECTICUT 04-03-2019			
DRAWN BY				
CHECKED BY				
SUBMITTED BY				
APPROVED BY				
APPROVED DATE				

REV # INTERSECTION # 088-281

ENERGY BY CITY | ADDRESS #
MAINT LEVEL CITY | SERVICE POLE MH 133
UNMETERED SERVICE

NO.	DATE	REVISION DESCRIPTION

Border Version 11/29/13

LEGEND:
R, Y, G RED, YEL, GRN
RED ARROW
YELLOW ARROW
GREEN ARROW
WØ WALK/ PED. CLR
D.W. DON'T WALK
FL. FLASHING

PROPOSED WOOD SPAN POLE
EXISTING WOOD SPAN POLE
PROPOSED STEEL SPAN POLE
EXISTING STEEL SPAN POLE
PROPOSED UTILITY POLE
EXISTING UTILITY POLE
PEDESTAL MOUNTING
PEDESTRIAN PUSH BUTTON & SIGN
DIRECTIONAL ARW. FOR PUSH BUTTON

TRAFFIC SIGNAL FACE
PEDESTRIAN SIGNAL FACE
DET. LEADS IN SAW CUT
PROPOSED RMC (RIGID METAL CONDUIT)
EXISTING RMC (RIGID METAL CONDUIT)
AUXILIARY TERMINATION CABINET
AUXILIARY EQUIPMENT CABINET
VIDEO DETECTION ZONE

PROPOSED CONTROLLER
EXISTING CONTROLLER
LOOP DETECTOR
SD SYSTEM DETECTOR
MAGNETIC DETECTOR
OPTICAL DETECTOR
VIDEO DETECTOR
AUDIO DETECTOR

VC VIDEO CAMERA CABLE
CABLE CLOSURE
WIRELESS SENSOR
WIRELESS RECEIVER
WIRELESS TRANSCEIVER
GUY WIRE
PROPOSED HANDHOLE
EXISTING HANDHOLE

DATE PLOTTED : Apr 01, 2019

CITY OF NEW BRITAIN
DEPARTMENT OF PUBLIC WORKS

EAST MAIN STREET AT
STATE ROUTE 72 (THADDEUS KOSCIUSZKO HIGHWAY) WESTBOUND ON-RAMP
& NEW BRITE PLAZA DRIVEWAY

SCALE AS NOTED

TOWN: NEW BRITAIN

DRAWING TITLE: TRAFFIC CONTROL SIGNAL PLAN

PROJECT NO. L088-0002
DRAWING NO. TCS-002
SHEET NO. 67

Apr 01, 2019 9:27am Plotted By: CDY
Tighe & Bond, Inc. J:\W\N1096 New Britain\002-Phase 6 Streetscape\Drawings_Figures\Sheet\East Main\N1096002-TCS-001.dwg

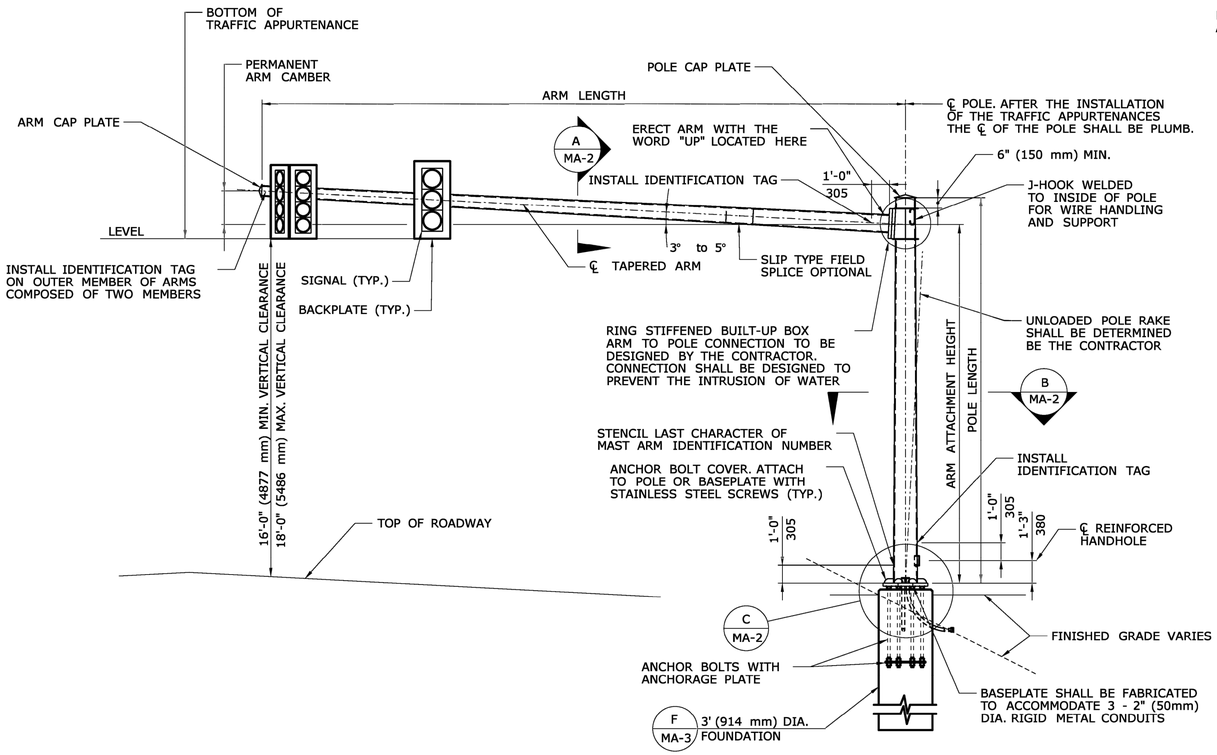

ELEVATION
MAST ARM
SCALE: ¼" = 1'-0"

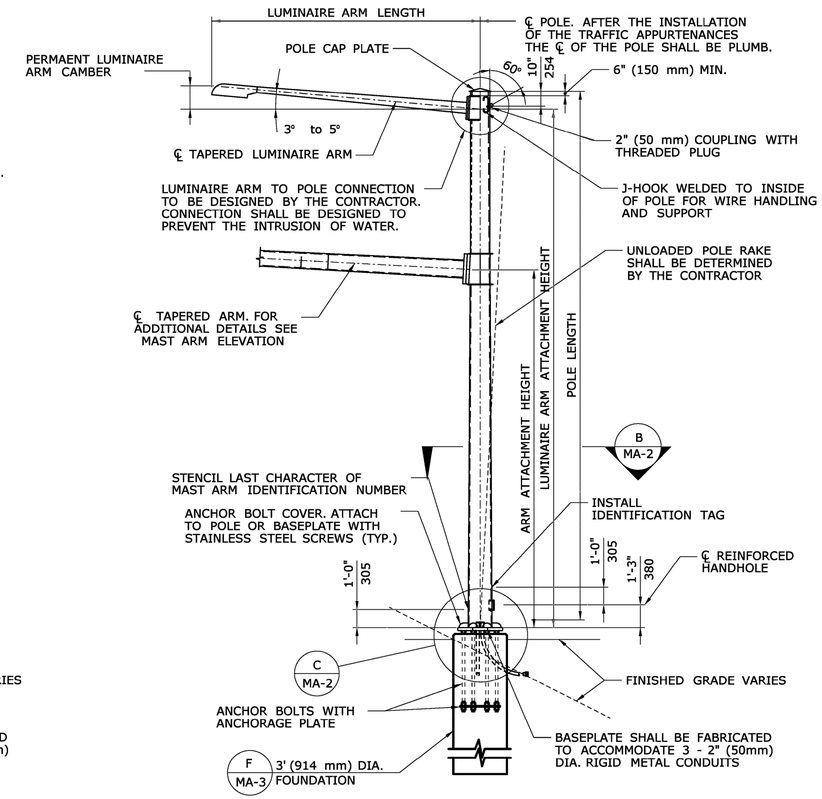

ELEVATION
COMBINATION MAST ARM
SCALE: ¼" = 1'-0"

MAST ARM ASSEMBLY NOTES

THE MAST ARM, INCLUDING THE ANCHORAGE TO THE FOUNDATION, SHALL BE DESIGNED, FABRICATED AND INSTALLED BY THE CONTRACTOR, OF THE SPAN SPECIFIED, IN ACCORDANCE WITH THE SPECIAL PROVISION "XX STEEL MAST ARM ASSEMBLY" OR "XX STEEL COMBINATION MAST ARM ASSEMBLY".

THE DIMENSIONS OF THE MAST ARM ASSEMBLY AND DETAILS OF THE TRAFFIC APPURTENANCES SUPPORTED BY THE MAST ARM ASSEMBLY ARE SHOWN ON THE TRAFFIC SIGNAL PLANS, ELEVATIONS, CROSS-SECTIONS OR IN THE SPECIAL PROVISIONS. THE ARM AND POLE LENGTHS AND THE ATTACHMENT HEIGHTS SHALL BE VERIFIED BY THE CONTRACTOR BASED ON THE FINISHED GRADE AT THE SITE, TOP OF FOUNDATION ELEVATION, THE LOCATIONS OF OVERHEAD UTILITY CABLES AND THE TRAFFIC APPURTENANCE MOUNTING HEIGHTS. IF EITHER THE ARM OR POLE LENGTH IS INADEQUATE, THE CONTRACTOR SHALL NOTIFY THE ENGINEER.

THE MAST ARMS SHALL BE DESIGNED IN ACCORDANCE WITH THE LATEST EDITION OF THE AASHTO STANDARD SPECIFICATIONS FOR STRUCTURAL SUPPORTS FOR HIGHWAY SIGNS, LUMINAIRES AND TRAFFIC SIGNALS, INCLUDING THE LATEST INTERIM SPECIFICATIONS, AS AMENDED BY THE AS SPECIAL PROVISION "XX STEEL MAST ARM ASSEMBLY" OR "XX STEEL COMBINATION MAST ARM ASSEMBLY".

THE MAST ARM SHALL BE DESIGNED FOR THE LOAD EFFECTS DUE TO THE ACTUAL TRAFFIC APPURTENANCES (SIGNALS, SIGNS, LUMINAIRES, CAMERAS, ETC.). THE MAST ARMS SHALL ALSO BE DESIGNED FOR THE EFFECTS OF TRAFFIC APPURTENANCES DURING ALL STAGES OF CONSTRUCTION THAT MAY EXIST DURING THE PROJECT UNDER WHICH THE MAST ARMS ARE INSTALLED.

THE MAST ARMS SHALL BE DESIGNED TO SUPPORT TRAFFIC APPURTENANCES WITH PROPERTIES NO LESS THAN THOSE SHOWN IN THE TABLE ENTITLED "TRAFFIC APPURTENANCE PROPERTIES - MINIMUM DESIGN VALUES".

MA-1: MAST ARM ASSEMBLY DETAILS – 1

Tighe&Bond
www.tighebond.com

DESIGNED BY: C. YANNES
DRAWN BY: C. YANNES
CHECKED BY: C. GRANATINI
DATE: 04/03/19

PHASE VI STREETSCAPE
MYRTLE STREET/EAST MAIN STREET
STATE PROJECT No. L088-0002
NEW BRITAIN, CONNECTICUT

REV.	DATE	DESCRIPTION	BY	APP'D

SCALE: AS NOTED
JOB NO. 6230
SHEET NO. 68

J:\N\N1096 New Britain\002-Phase 6 Streetscape\Drawings_Figures\Sheet\East Main\N1096002-MA-01.dwg

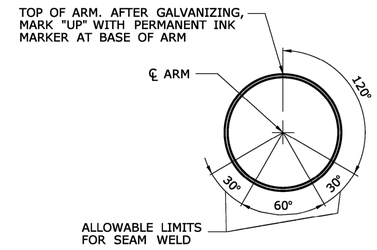

ARM WITH 1 SEAM WELD

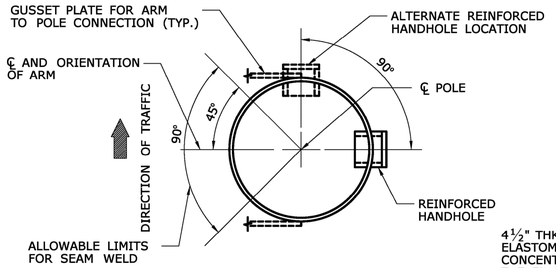

POLE WITH 1 SEAM WELD

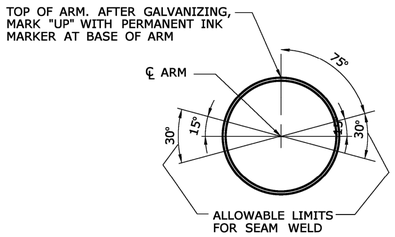

ARM WITH 2 SEAM WELDS

SECTION A / MA-1
SCALE: 1½" = 1'-0"

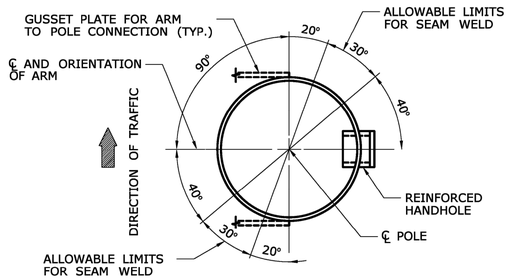

POLE WITH 2 SEAM WELDS

SECTION B / MA-1
SCALE: 1½" = 1'-0"

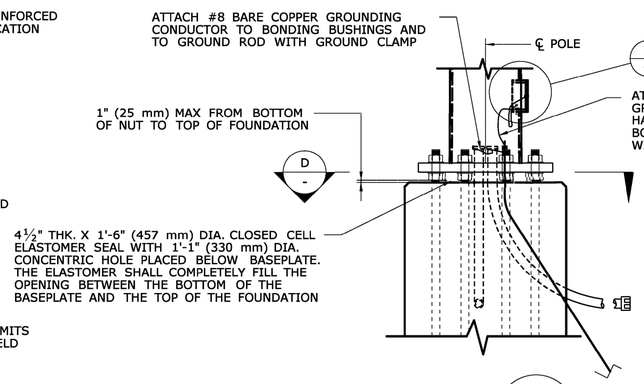

SECTION C / MA-1
SCALE: ¾"=1'-0"

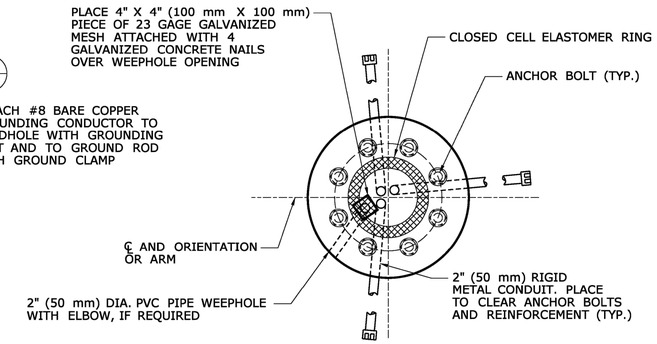

SECTION D
SCALE: ¾"=1'-0"

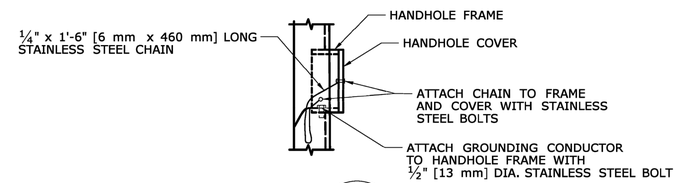

DETAIL E
SCALE: 1½" = 1'-0"

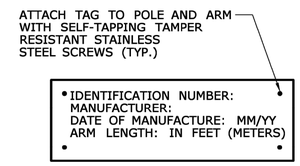

IDENTIFICATION TAG
NTS

TRAFFIC APPURTENANCE PROPERTIES
MINIMUM DESIGN VALUES

	3 SECTION , 12" (305) DIA. TRAFFIC SIGNAL W/ BACKPLATE	4 SECTION , 12" (305) DIA. TRAFFIC SIGNAL W/BACKPLATE	5 SECTION , 12" (305) DIA.TRAFFIC SIGNAL W/ BACKPLATE	5 SECTION , 12" (305) DIA.TRAFFIC SIGNAL W/ BACKPLATE	SHEET ALUMINUM SIGN PANEL
WEIGHT, INCLUDING MOUNTING HARDWARE	65 LBS (29.48 kg)	80 LBS (36.29 kg)	95 LBS (43.09 kg)	105 LBS (47.63 kg)	4 LBS/SQ.FT. (19.53 kg/m^2)
TOTAL SURFACE AREA	28.04 SQ. FT. (2.61 m^2)	35.46 SQ. FT. (3.29 m^2)	45.16 SQ. FT. (4.20 m^2)	41.04 SQ. FT. (3.81 m^2)	BASED ON PANEL DIMENSIONS
PROJECTED AREA, FRONT FACE	8.62 SQ. FT. (0.80 m^2)	10.91 SQ. FT. (1.01 m^2)	13.34 SQ. FT. (1.24 m^2)	13.72 SQ. FT. (1.28 m^2)	BASED ON PANEL DIMENSIONS
PROJECTED AREA, BOTTOM FACE	1.18 SQ. FT. (0.11 m^2)	1.18 SQ. FT. (0.11 m^2)	1.18 SQ. FT. (0.11 m^2)	2.58 SQ. FT. (0.24 m^2)	BASED ON PANEL DIMENSIONS

NOTES:

THE TABULATED VALUES ARE THE MINIMUM VALUES THAT SHALL BE USED FOR THE DESIGN.

MAST ARMS SHALL BE DESIGNED ASSUMING ALL TRAFFIC SIGNALS ARE COMPOSED OF 12" (305 mm) DIAMETER SECTIONS WITH BACKPLATES.

THE PROJECTED FRONT FACE AREA IS IN A PLANE PARALLEL TO THE PLANE FORMED BY THE ARM AND THE POLE.

IF MULTIPLE APPURTENANCES ARE ATTACHED AT THE SAME LOCATION, THE MINIMUM DESIGN VALUE SHALL BE NO LESS THAN THE SUM OF THE CORRESPONDING TRAFFIC APPURTENANCE PROPERTIES.

FOR TRAFFIC APPURTENANCES NOT SHOWN, THE PROPERTIES SHALL BE DETERMINED BY THE CONTRACTOR AND SUBMITTED FOR REVIEW WITH THE WORKING DRAWING SUBMITTAL.

MA-2: MAST ARM ASSEMBLY DETAILS – 2

Tighe&Bond
www.tighebond.com

DESIGNED BY: C. YANNES
DRAWN BY: C. YANNES
CHECKED BY: C. GRANATINI
DATE: 04/03/19

PHASE VI STREETSCAPE
MYRTLE STREET/EAST MAIN STREET
STATE PROJECT No. L088-0002
NEW BRITAIN, CONNECTICUT

REV.	DATE	DESCRIPTION	BY	APP'D

SCALE: AS NOTED
JOB NO. 6230

SHEET NO. 69

J:\W\W1096 New Britain\002-Phase 6 Streetscape\Drawings_Figures\Sheet\East Main\W1096002-MA-01.dwg

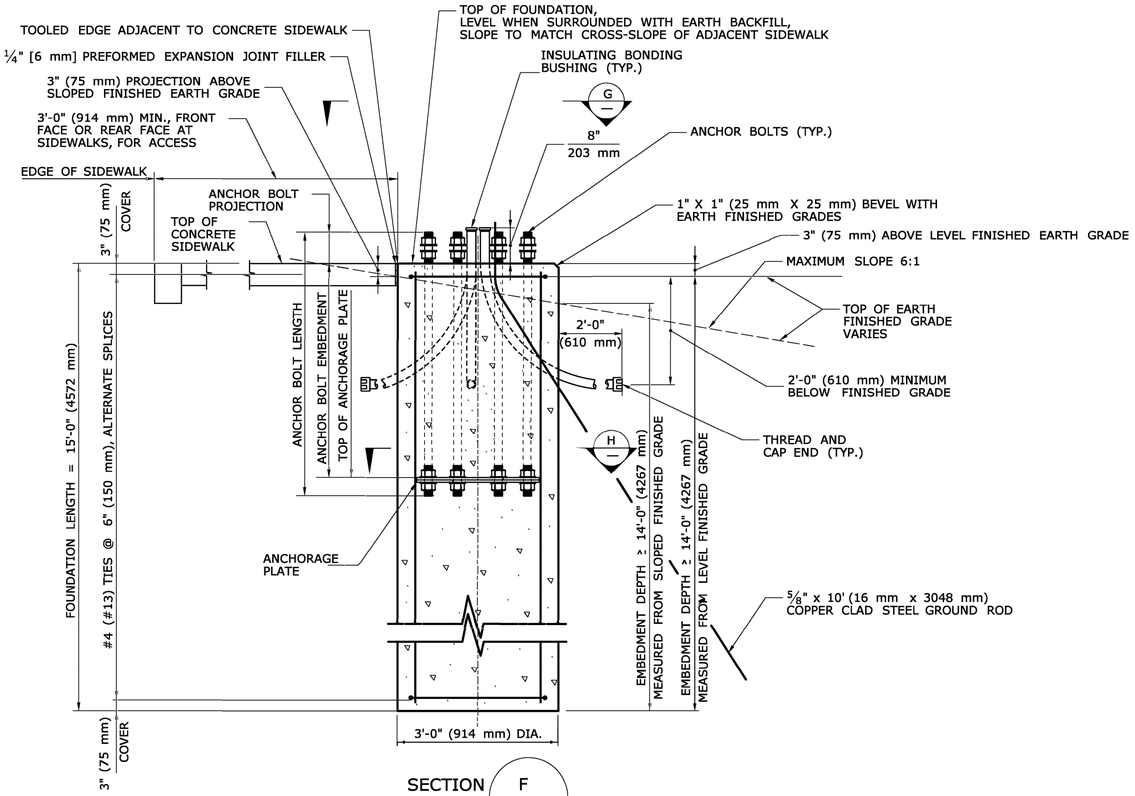

SECTION F / MA-1
SCALE: ¾"=1'-0"

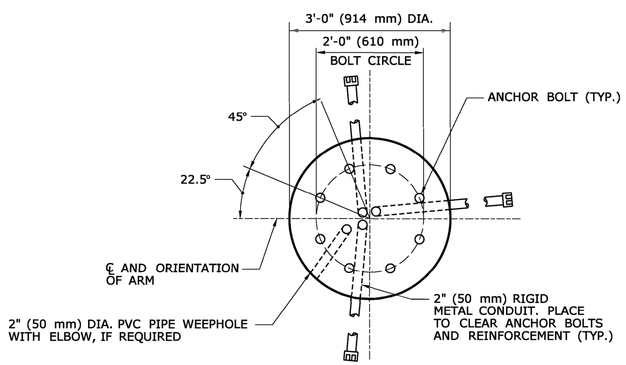

SECTION G
SCALE: ¾"=1'-0"

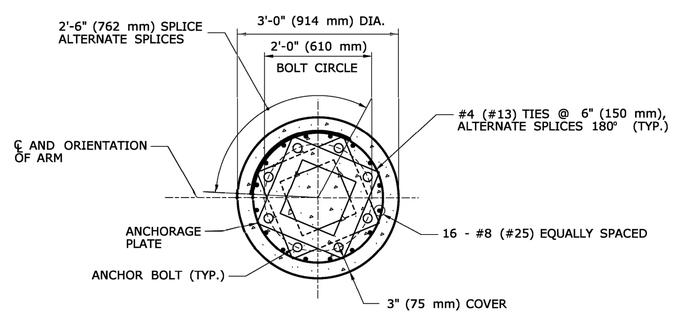

SECTION H
Scale: ¾"=1'-0"

FOUNDATION NOTES

THE MAST ARM FOUNDATION IS DESIGNED IN ACCORDANCE WITH THE LATEST EDITION OF THE AASHTO STANDARD SPECIFICATIONS FOR STRUCTURAL SUPPORTS FOR HIGHWAY SIGNS, LUMINAIRES AND TRAFFIC SIGNALS, WITH THE LATEST INTERIM SPECIFCATIONS.

THE FOUNDATION EMBEDMENT IS DESIGNED FOR MAXIMUM LOAD EFFECTS, APPLIED AT THE TOP OF THE FOUNDATION, NO GREATER THAN THE FOLLOWING:

AXIAL COMPRESSIVE FORCE:	5.00 K
RESULTANT SHEAR FORCE:	6.30 K
TORSION:	120 FT- K
RESULTANT BENDING MOMENT:	113 FT- K

THE USE OF THE FOUNDATION IS NOT PERMITTED IF THE COMPUTED REACTIONS FROM THE CONTRACTOR DESIGNED MAST ARM ASSEMBLY EXCEED THE ABOVE LOAD EFFECTS.

THE ENGINEER SHALL BE NOTIFIED IF THE SLOPE OF THE FINISHED GRADE AT THE FOUNDATION EXCEEDS THE MAXIMUM PERMITTED SLOPE.

THE CONCRETE FOR THE FOUNDATION SHALL CONFORM TO "CLASS "F" CONCRETE".

THE REINFORCEMENT SHALL BE UNCOATED AND CONFORM TO ASTM A615, GRADE 60 (ASTM A615M, GRADE 420). THE REINFORCEMENT SHALL BE ASSEMBLED WITH WIRE TIES. WELDING TO ASSEMBLE REINFORCEMENT IS NOT PERMITTED. ALL REINFORCEMENT SHALL HAVE 3" (75 mm) COVER, UNLESS OTHERWISE NOTED.

THE CONCRETE SHALL BE PLACED IN A AUGERED HOLE AGAINST UNDISTRURBED EARTH.

THE MAST ARM SHALL NOT BE ERECTED ON THE FOUNDATION UNTIL AFTER THE CONCRETE HAS ATTAINED A 28 DAY COMPRESSIVE STRENGTH, f'_c, GREATER THAN OR EQUAL TO 4400 PSI (30 MPa).

THE COST OF THE FOUNDATION, INCLUDING THE EXCAVATION, CONCRETE AND REINFORCEMENT, SHALL BE PAID FOR UNDER THE ITEM "TRAFFIC CONTROL FOUNDATION - MAST ARM".

Tighe&Bond
www.tighebond.com

DESIGNED BY: C. YANNES
DRAWN BY: C. YANNES
CHECKED BY: C. GRANATINI
DATE: 04/03/19

PHASE VI STREETSCAPE
MYRTLE STREET/EAST MAIN STREET
STATE PROJECT No. L088-0002
NEW BRITAIN, CONNECTICUT

REV.	DATE	DESCRIPTION	BY	APP'D

SCALE: AS NOTED
JOB NO. 6230

MA-3: MAST ARM ASSEMBLY DETAILS - 3

SHEET NO. 70

J:\N\N1096 New Britain\002-Phase 6 Streetscape\Drawings_Figures\Sheet\East Main\N1096002-MA-01.dwg

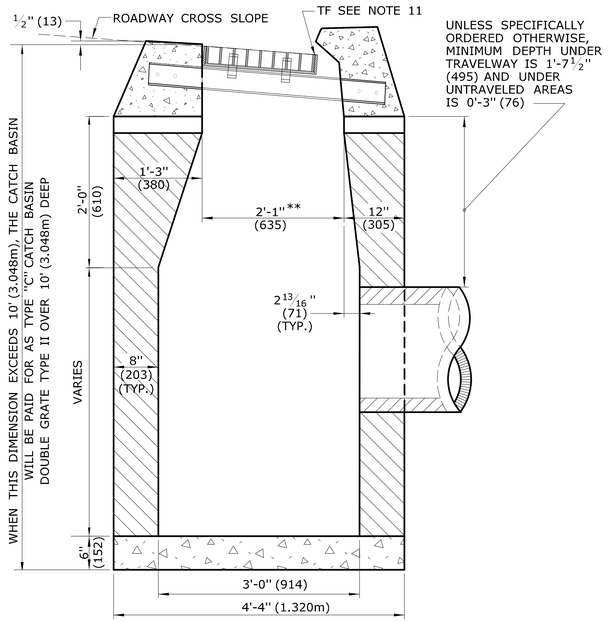

SECTION B

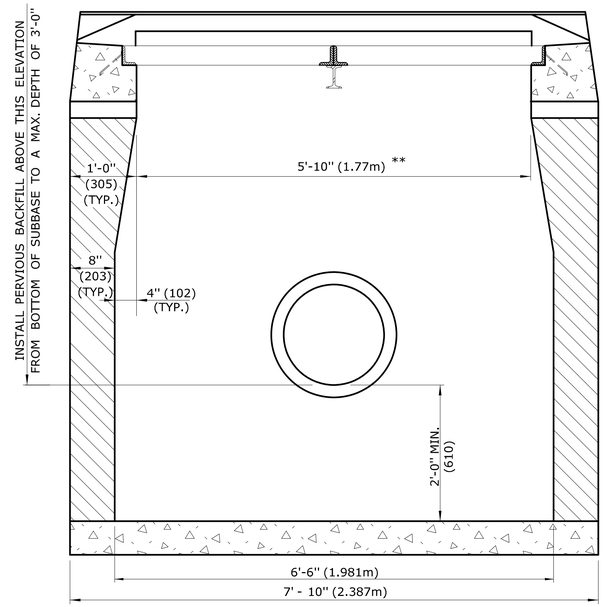

SECTION A

TYPE "C" CATCH BASIN DOUBLE GRATE - TYPE II

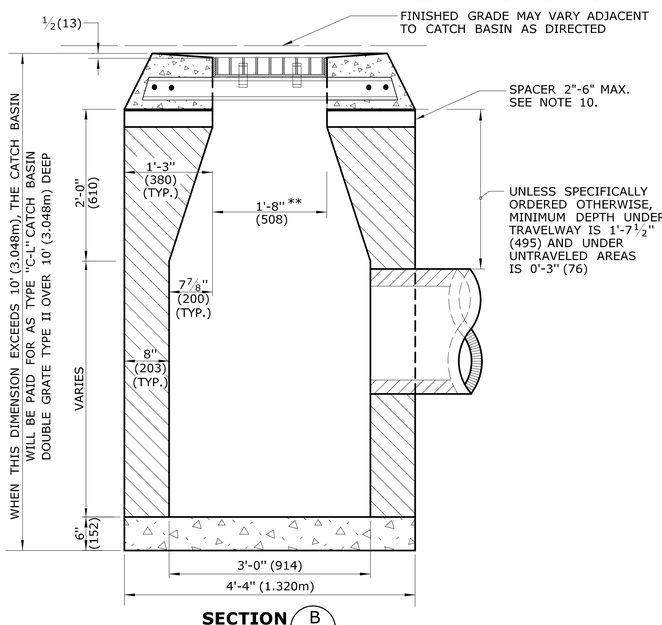

SECTION B

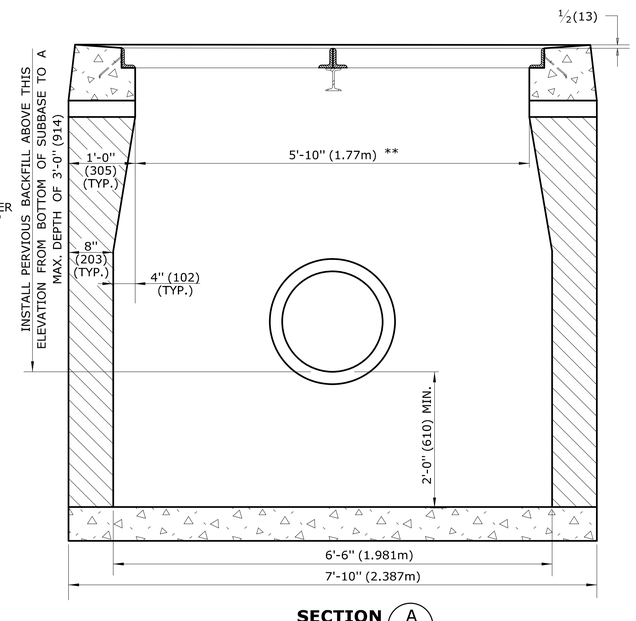

SECTION A

TYPE "C-L" CATCH BASIN DOUBLE GRATE - TYPE II

GENERAL NOTES:

1. FOR DETAILS OF FRAME AND GRATE SEE STANDARD SHEET HW-507_08.
2. USE APPROPRIATE CONCRETE TOP FOR CURBING SHOWN ON PLANS. IF CURBING IS NOT SPECIFIED ON THE PLANS, IT SHALL BE CONSTRUCTED AS DIRECTED BY THE ENGINEER.
3. ALL FACES OF STRUCTURES IN CONTACT WITH CONCRETE PAVEMENT SHALL BE COVERED WITH A LAYER OF TAR PAPER OR APPROVED EQUAL. THE COST FOR THE PAPER SHALL BE INCLUDED IN THE BID PRICE FOR THE TYPE OF CATCH BASIN INSTALLED.
4. USE 6'-0" (1.830m) ON UPGRADE SIDE OF CONTINUOUS GRADE AND 1'-0" (305) ON DOWNGRADE SIDE OF CONTINUOUS GRADE OR AS DIRECTED.
5. IF MASONRY UNITS ARE REQUIRED, THE BASIN SHALL BE CONSTRUCTED IN CONFORMANCE WITH THE OVER ALL DIMENSIONS SHOWN HERE AND SECTION 5.07 OF THE STATE OF CONNECTICUT'S STANDARD SPECIFICATIONS. CORBELLING SHALL BE PERMITTED TO A MAXIMUM OF 3" (75). NO PROJECTION SHALL EXTEND INSIDE THE LIMITS NOTED BY **.
6. WALL THICKNESS OF ALL CB'S OVER 10' (3.048m)DEEP SHALL BE INCREASED TO 12" (305) THICK. INSIDE DIMENSION SHALL REMAIN THE SAME. (12" (305) THICKNESS WILL START AFTER THE FIRST 10' (3.048m)).
7. TO CONVEY SUBSURFACE DRAINAGE, OPENINGS SHALL BE FORMED IN THE FOUR WALLS AT OR IMMEDIATELY ABOVE THE BOTTOM OF THE PERVIOUS BACKFILL.
8. MINIMUM CONCRETE COMPRESSIVE STRENGTH OF F'c = 4000 PSI (27,580 kPa) SHALL BE OBTAINED PRIOR TO SHIPPING.
9. LATEST STATE OF CONNECTICUT'S STANDARD SPECIFICATIONS AND SUPPLEMENTALS SHALL GOVERN.
10. SPACER MAY BE CMU OR PRECAST WITH REQUIRED REINFORCING (RECOMMENDED BY THE MANUFACTURER) AS NEEDED TO PROVIDE PROPER GRADE SHOWN ON PLANS.
11. TOP OF FRAME (TF) ELEVATION SHALL BE MEASURED IN BETWEEN BOTH GRATES @ THE GUTTER.

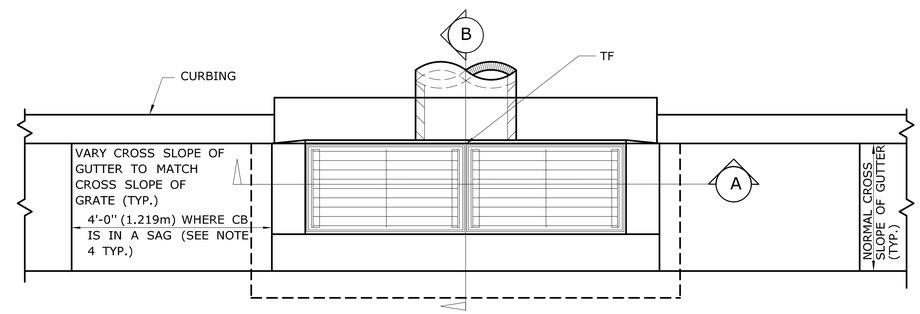

PLAN

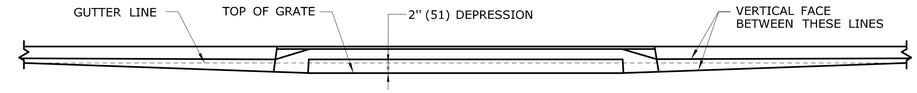

FOR CATCH BASINS IN A LINE OF 4"(102) CONCRETE PARK CURBING OR 4" (102) BITUMINOUS CONCRETE PARK CURBING

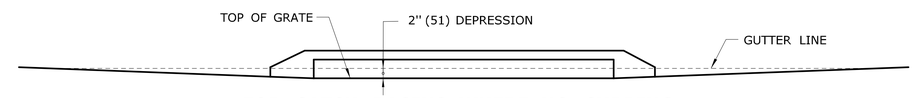

FOR CATCH BASINS WHERE NO CURBING OF ANY TYPE EXISTS OR IS PROPOSED

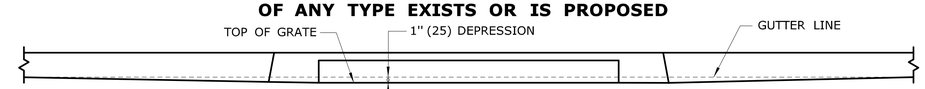

FOR CATCH BASINS IN A LINE OF 6" (152) CONCRETE CURBING OR 6" (152) STONE CURBING

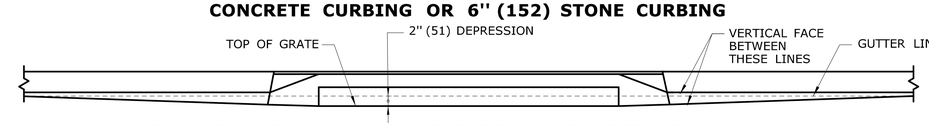

FOR CATCH BASINS IN A LINE OF 6" (152) BITUMINOUS CONCRETE LIP CURBING (MACHINE FORMED)

DETAILS OF DEPRESSED GUTTER STRIP FOR TYPE "C" CATCH BASIN DOUBLE GRATE TYPE II

ALL METRIC DIMENSIONS ARE IN MILLIMETERS (mm) UNLESS OTHERWISE NOTED

REV.	DATE	REVISION DESCRIPTION
-	-	-
-	-	-
4	7/13	ADD NOTE 11
3	10/3/11	ADD SPACERS AND NOTE 10.
2	9/15/11	MODIFIED DETAILS TO BE CONSISTANT WITH PRECAST
1	7/28/11	REMOVE MIN. DROP NOTE

THE INFORMATION, INCLUDING ESTIMATED QUANTITIES OF WORK, SHOWN ON THESE SHEETS IS BASED ON LIMITED INVESTIGATIONS BY THE STATE AND IS IN NO WAY WARRANTED TO INDICATE THE CONDITIONS OF ACTUAL QUANTITIES OF WORK WHICH WILL BE REQUIRED.

Plotted Date: 3/21/2013

NOT TO SCALE

STATE OF CONNECTICUT
DEPARTMENT OF TRANSPORTATION

Filename: June2013.dgn Model: HW-507_03

SUBMITTED BY: NAME/DATE/TIME: Digitally signed by Leo L. Fontaine Date: 2013.07.24 11:02:07-04'00'

APPROVED BY: NAME/DATE/TIME: James H. Norman 2013.07.24 14:42:32-04'00'

CTDOT STANDARD SHEET

OFFICE OF ENGINEERING

STANDARD SHEET TITLE:

TYPE "C" , "C-L" & DOUBLE GRATE TYPE - II

STANDARD SHEET NO.: **HW-507_03**

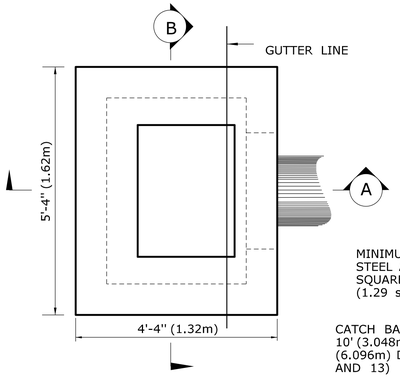

PLAN

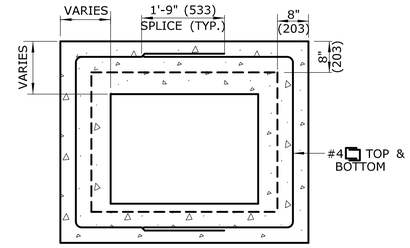

REDUCER SECTION (TYP.)

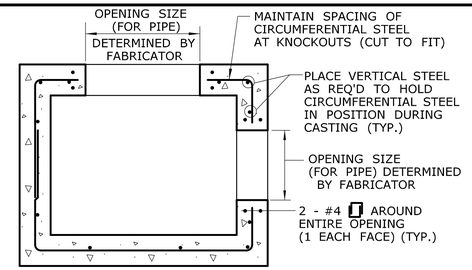

TYPICAL SECTION THRU RISER WITH OPENING

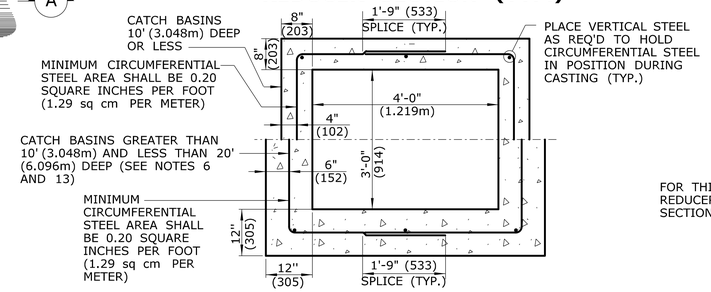

RISER SECTION (TYP.)

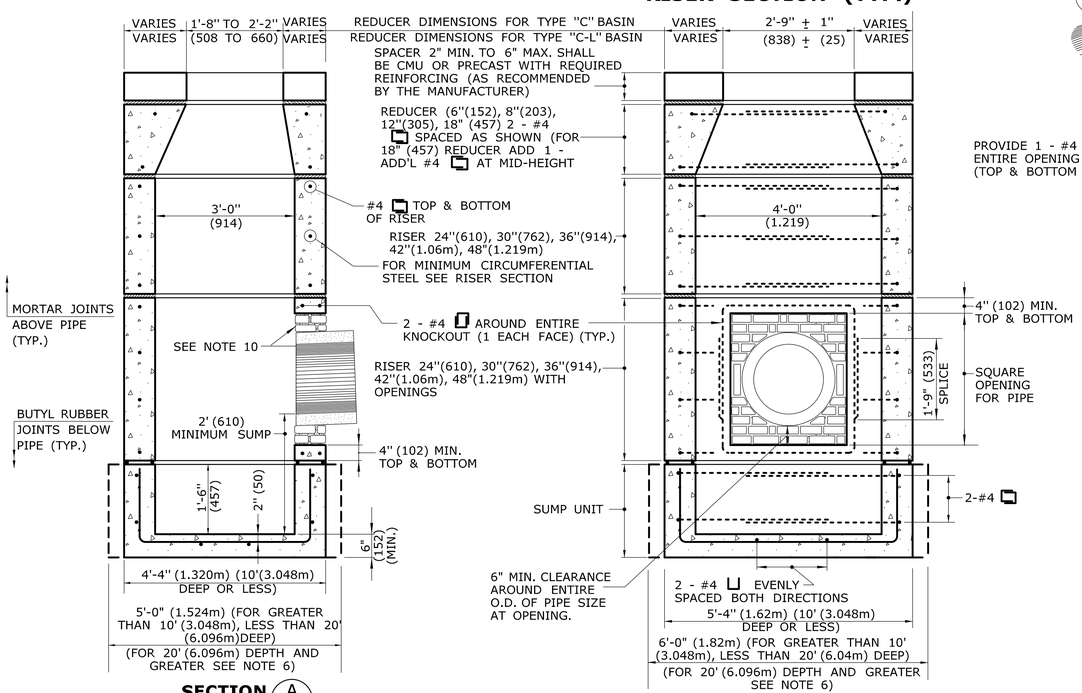

PRECAST CONCRETE TYPE "C" & "C-L" CATCH BASIN

(UNDER 10' (3.04m) DEEP SHOWN)

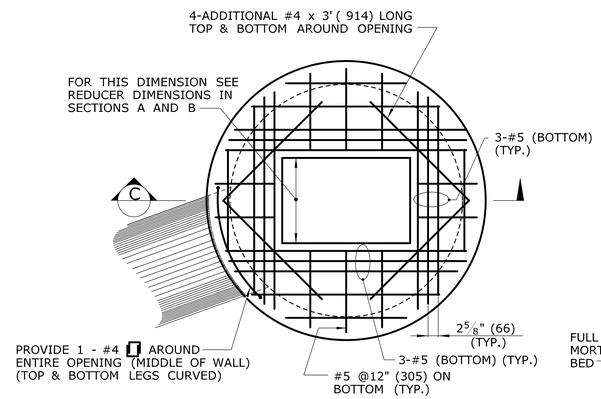

PLAN

(SEE NOTE 16)

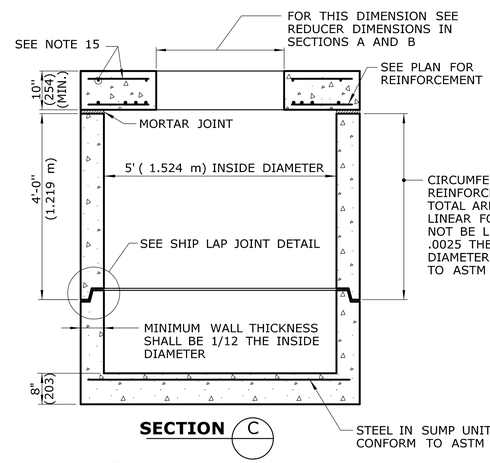

PRECAST CONCRETE TYPE "C" & "C-L" ROUND STRUCTURE

(SEE NOTE 9)

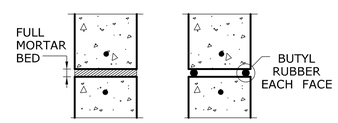

MORTAR JOINT DETAIL **BUTYL RUBBER JOINT DETAIL**

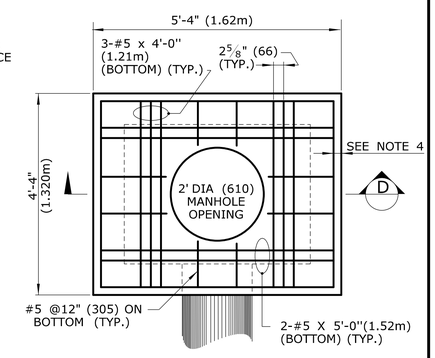

PLAN

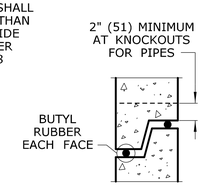

SHIP LAP JOINT DETAIL

(FOR USE WITH ROUND STRUCTURES ONLY)

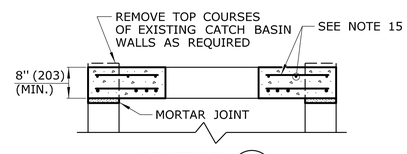

SECTION D

TOP SLAB TO CONVERT CATCH BASIN TO MANHOLE

GENERAL NOTES:

1. REINFORCEMENT SHALL CONFORM TO ASTM A615, GRADE 60.
2. DETAILS ON THIS SHEET SHOW STANDARD REINFORCEMENT. WELDED WIRE FABRIC WITH AN AREA EQUAL TO OR GREATER THAN THE REINFORCING SHOWN MAY BE SUBSTITUTED.
3. ALL LAP SPLICES, DEVELOPMENT LENGTHS, BENDS FOR REINFORCEMENT, AND WELDED WIRE FABRIC SHALL CONFORM TO AASHTO STANDARD SPECIFICATIONS FOR HIGHWAY BRIDGES.
4. ALL REINFORCEMENT SHALL HAVE A MINIMUM CLEAR COVER OF 2"(51) , EXCEPT FOR BENEATH BOTTOM REINFORCEMENT IN TOP SLABS, WHERE THE MINIMUM MAY BE $1\frac{1}{2}$"(38).
5. MINIMUM CONCRETE COMPRESSIVE STRENGTH Fc' = 4000 PSI (27,580 kPa SHALL BE OBTAINED PRIOR TO SHIPPING.
6. BASES AND RISERS AT A DEPTH OF 20' (6.096) AND GREATER SHALL BE DESIGNED BY THE CONTRACTOR AND WORKING DRAWINGS SHALL BE SUBMITTED TO THE ENGINEER FOR REVIEW.
7. SEE STANDARD SHEET HW-507_08 FOR CATCH BASIN FRAMES AND GRATES.
8. FOR DOT MAINTENANCE PERSONNEL, RISERS MAY BE PREFABRICATED WITH PIPE OPENINGS IN ALL FOUR WALLS. ADEQUATE REINFORCING AROUND PIPE OPENINGS CONFORMING TO THESE PLANS SHALL BE PROVIDED. ANY RISERS USED WHERE A PIPE OPENING IS TO REMAIN IN PLACE, MUST BE FORMED UP WITH BRICK AS DIRECTED BY THE ENGINEER.
9. RISERS SHALL NEVER HAVE CORNER PIPE ENTRIES. WHERE THE ALIGNMENT OF THE PIPE WITH RESPECT TO THE CORNER OF THE CATCH BASIN CANNOT BE CHANGED, A ROUND STRUCTURE CONFORMING TO ASTM C478 SHALL BE USED. REINFORCING FOR THE ROUND TOP SLAB WITH A RECTANGULAR OPENING SHALL CONFORM TO DETAILS SHOWN HERE.
10. ALL PIPE OPENINGS SHALL BE CLOSED USING MATERIALS WHICH CONFORM TO STATE OF CONNECTICUT STANDARD SPECIFICATIONS SECTION M.08.02. IF THE ENGINEER DETERMINES THAT THE CLOSURE OF ANY PIPE OPENING IS UNSATISFACTORY, THE CONTRACTOR SHALL RECLOSE SAID OPENING AT NO ADDITIONAL COST TO THE STATE. OPENING FOR PIPE SHALL NOT RESULT IN A REDUCED WALL THICKNESS.
11. THE LATEST STATE OF CONNECTICUT STANDARD SPECIFICATIONS AND SUPPLEMENTALS SHALL GOVERN.
12. FOR ADDITIONAL DETAILS, SEE OTHER CATCH BASIN SHEETS.
13. WALL THICKNESS OF ALL CB'S OVER 10' (3.048m) DEEP SHALL BE INCREASED TO 12" (305) THICK. INSIDE DIMENSION SHALL REMAIN THE SAME. (THE 12" (305) THICKNESS WILL START AFTER THE FIRST 10' (3.048m).)
14. BUTYL RUBBER JOINT SEAL SHALL CONFORM TO AASHTO M-198 AND MORTAR SHALL CONFORM TO THE LATEST STATE OF CONNECTICUT STANDARD SPECIFICATIONS MATERIAL SECTION M11.04.
15. SHRINKAGE AND TEMPERATURE REINFORCEMENT SHALL BE PROVIDED IN THE TOPS OF SLABS. THE TOTAL AREA OF REINFORCEMENT PROVIDED SHALL BE AT LEAST 0.125 SQUARE INCHES PER FOOT (0.8 sq cm PER METER) IN EACH DIRECTION. THE MAXIMUM SPACING OF THIS REINFORCEMENT SHALL NOT EXCEED 18 INCHES (457).
16. THE DETAILS SHOWN IN THE PLAN VIEW FOR PRECAST CONCRETE ROUND STRUCTURES SHALL ALSO BE USED FOR CONVERTING MANHOLES TO CATCH BASINS.

ALL METRIC DIMENSIONS ARE IN MILLIMETERS (mm) UNLESS OTHERWISE NOTED

REV.	DATE	REVISION DESCRIPTION
-	-	-
-	-	-
-	-	-
-	-	-
2	10/24/11	CHANGE WORD KNOCKOUT TO OPENING & ADD SPACER NOTE
1	6/01/10	CHANGE NOTE 7 TO REFERENCE HW-507_08

THE INFORMATION, INCLUDING ESTIMATED QUANTITIES OF WORK, SHOWN ON THESE SHEETS IS BASED ON LIMITED INVESTIGATIONS BY THE STATE AND IS IN NO WAY WARRANTED TO INDICATE THE CONDITIONS OF ACTUAL QUANTITIES OF WORK WHICH WILL BE REQUIRED.

Plotted Date: 10/22/2011

NOT TO SCALE

STATE OF CONNECTICUT
DEPARTMENT OF TRANSPORTATION

Filename: working_revisions.dgn Model: 9-HW-507_04

SUBMITTED BY: NAME/DATE/TIME: Leo Fontaine 2011.11.03 11:46:02 -04'00'

APPROVED BY: NAME/DATE/TIME: James H. Norman 2011.11.10 07:58:43 -05'00'

CTDOT STANDARD SHEET

OFFICE OF ENGINEERING

STANDARD SHEET TITLE:

TYPE "C", "C-L" & ROUND PRECAST CONCRETE CB

STANDARD SHEET NO.:

HW-507_04

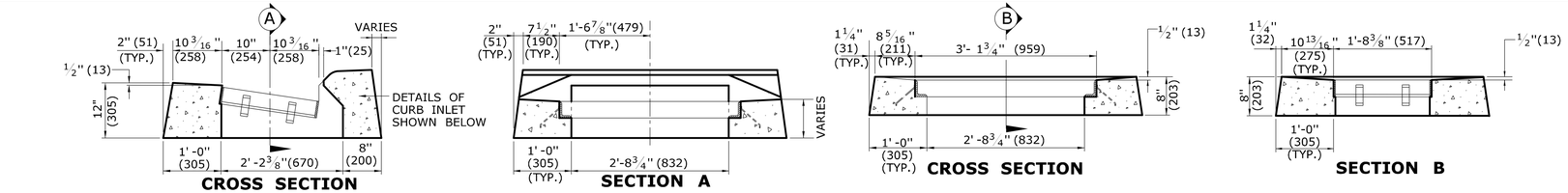

GENERAL NOTES:

1. FOR DETAILS OF FRAME AND GRATE SEE STANDARD SHEET HW-507_08.
2. ALL STEEL, EXCEPT REINFORCING BARS, SHALL BE GALVANIZED IN CONFORMANCE WITH SECTION M06.03 OF CONNECTICUT'S STANDARD SPECIFICATIONS.
3. ALL BARS SHALL HAVE A MINIMUM 2" (51) COVER.

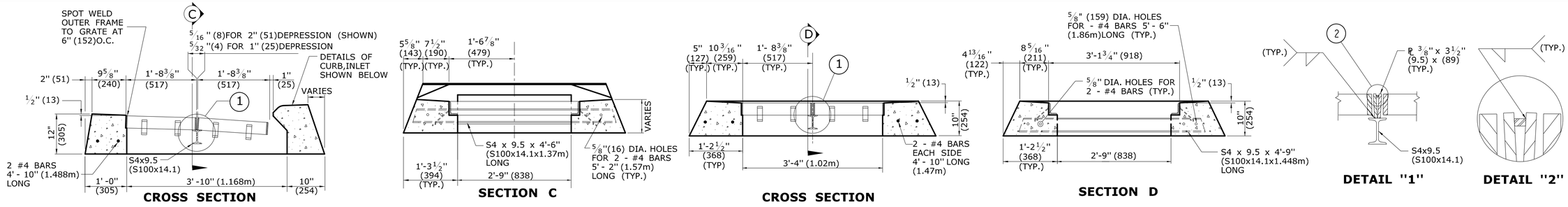

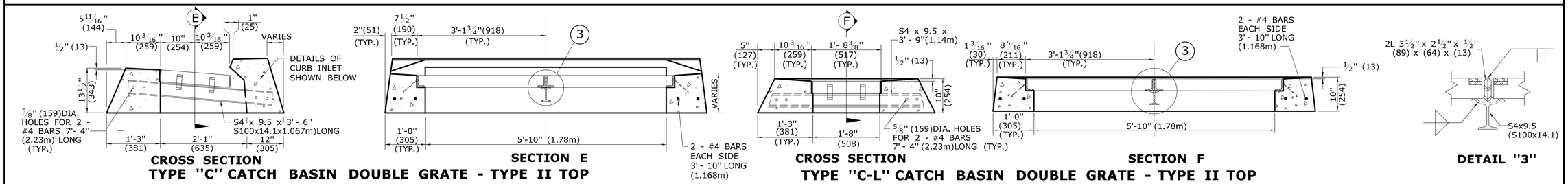

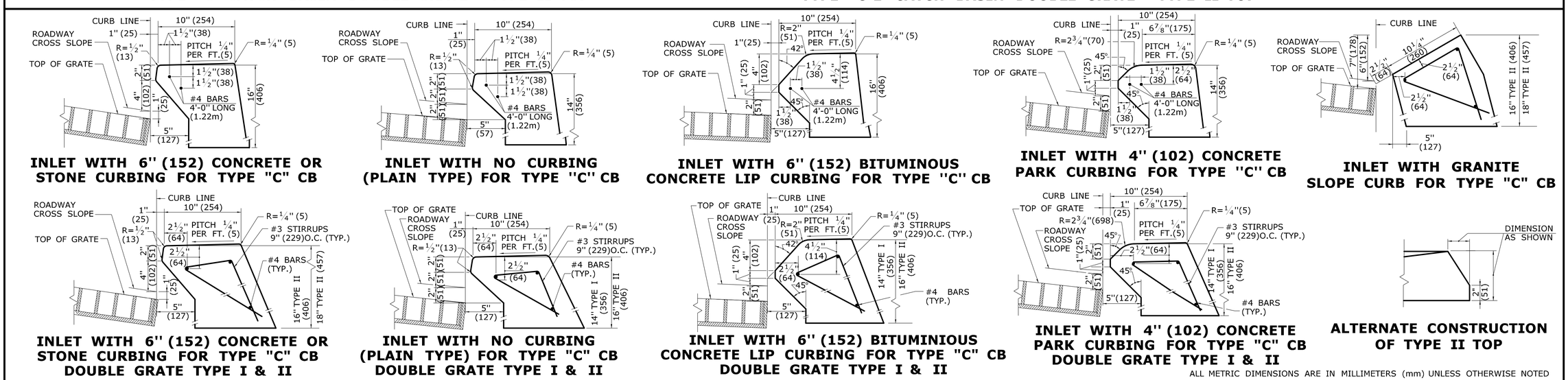

ALL METRIC DIMENSIONS ARE IN MILLIMETERS (mm) UNLESS OTHERWISE NOTED

REV.	DATE	REVISION DESCRIPTION
-	-	-
-	-	-
-	-	-
-	-	-
2	7/28/11	REMOVE MIN. DROP NOTE
1	6/01/10	REVISE CALL-OUT

THE INFORMATION, INCLUDING ESTIMATED QUANTITIES OF WORK, SHOWN ON THESE SHEETS IS BASED ON LIMITED INVESTIGATIONS BY THE STATE AND IS IN NO WAY WARRANTED TO INDICATE THE CONDITIONS OF ACTUAL QUANTITIES OF WORK WHICH WILL BE REQUIRED.

Plotted Date: 11/10/2011

NOT TO SCALE

STATE OF CONNECTICUT
DEPARTMENT OF TRANSPORTATION

Filename: CTDOT_HWY_STD_Nov2011.dgn Model: 12-HW-507_07

SUBMITTED BY: NAME/DATE/TIME: Leo Fontaine 2011.11.10 10:04:01 -05'00'

APPROVED BY: NAME/DATE/TIME: James H. Norman 2011.11.10 10:19:36 -05'00'

CTDOT STANDARD SHEET

OFFICE OF ENGINEERING

STANDARD SHEET TITLE:

TYPE "C" & "C-L" CATCH BASIN TOPS AND CURBS

STANDARD SHEET NO.: HW-507_07

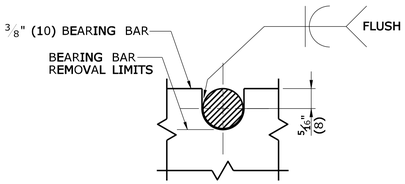

NOTE:
5/8" (16) DIA. ROUND BAR SHALL CONTACT BEARING BAR AT BOTTOM AND BE FLUSH AT TOP.

ROUND BAR ATTACHMENT
CATCH BASIN GRATE TYPE A

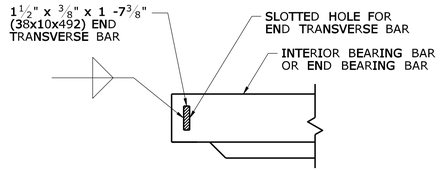

END TRANSVERSE BAR ATTACHMENT
CATCH BASIN GRATE TYPE A & B

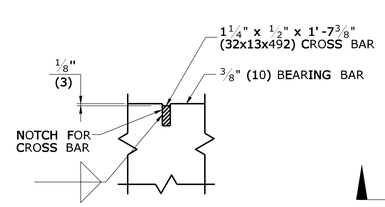

CROSS BAR ATTACHMENT
CATCH BASIN GRATE TYPE B

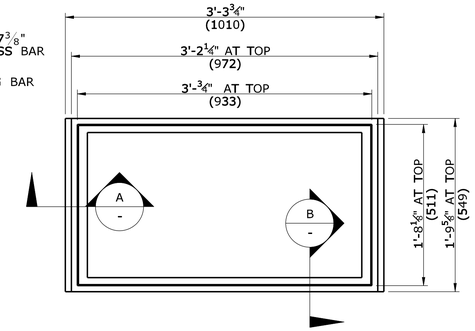

PLAN

GENERAL NOTES:

1. STEEL OR CAST IRON SHALL BE USED FOR FRAMES. STEEL SHALL BE USED FOR TYPE "A" & "B" GRATES.
2. TYPE "A" GRATES SHALL BE USED ON ALL ROADWAYS WHERE BICYCLE TRAFFIC IS ALLOWED OR AS DIRECTED BY THE ENGINEER.
3. TYPE "B" GRATES SHALL BE USED ON ALL LIMITED ACCESS HIGHWAYS, RAMPS AND WHERE BICYCLE TRAFFIC IS NOT ALLOWED OR AS DIRECTED BY THE ENGINEER.
4. STEEL FRAMES AND GRATES SHALL BE GALVANIZED IN ACCORDANCE WITH ARTICLE M.06.03.
5. DO NOT GALVANIZE CAST IRON FRAMES.
6. DIMENSIONAL TOLERANCES SHALL BE ±1/16".(1.6)
7. ALL STEEL BARS SHALL BE WELDED AT ALL INTERSECTIONS.
8. ALL WELDING SHALL CONFORM TO THE REQUIREMENTS OF AWS STRUCTURAL WELDING CODE, D1.1.

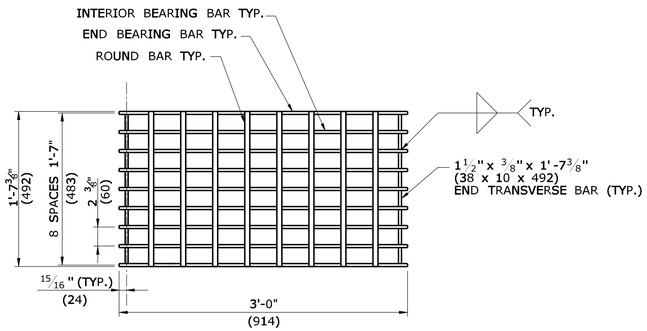

PLAN

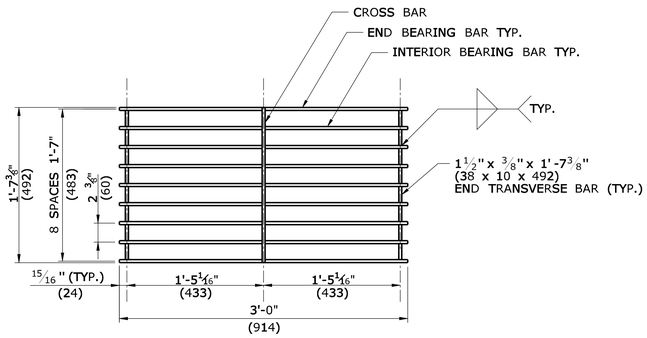

PLAN

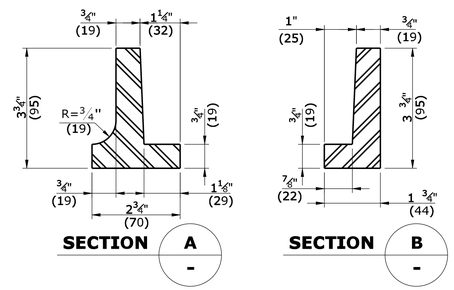

CAST IRON FRAME ALTERNATE

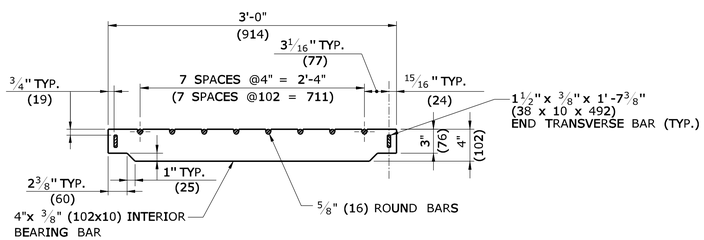

ELEVATION- INTERIOR BEARING BAR

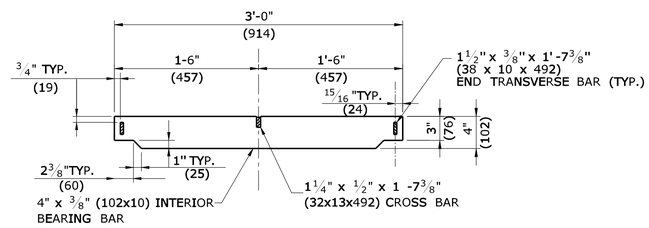

ELEVATION- INTERIOR BEARING BAR

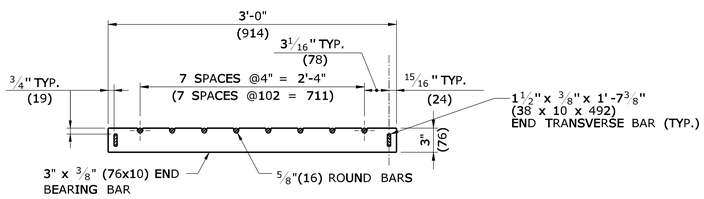

ELEVATION- END BEARING BAR
CATCH BASIN GRATE TYPE A

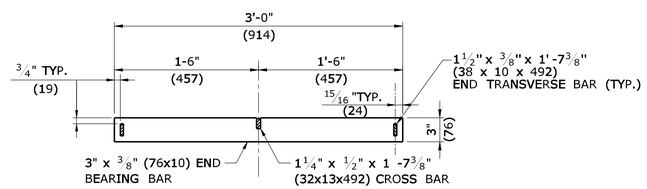

ELEVATION- END BEARING BAR
CATCH BASIN GRATE TYPE B

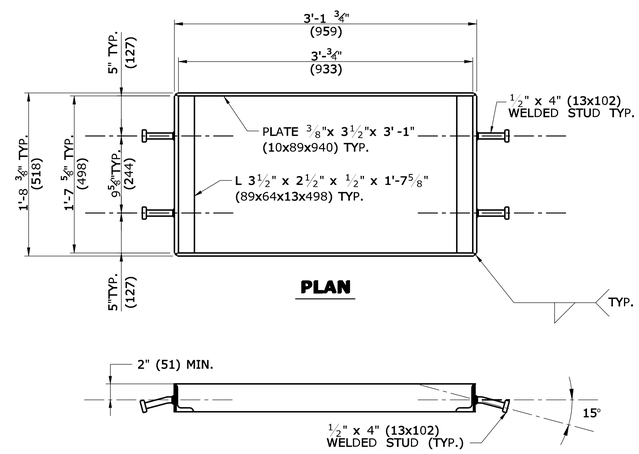

PLAN

WELDED STUD ANCHOR DETAILS
STEEL FRAME

ALL METRIC DIMENSIONS ARE IN MILLIMETERS (mm) UNLESS OTHERWISE NOTED

REV.	DATE	REVISION DESCRIPTION
-	-	-
-	-	-
-	-	-
-	-	-
-	-	-
-	-	-

THE INFORMATION, INCLUDING ESTIMATED QUANTITIES OF WORK, SHOWN ON THESE SHEETS IS BASED ON LIMITED INVESTIGATIONS BY THE STATE AND IS IN NO WAY WARRANTED TO INDICATE THE CONDITIONS OF ACTUAL QUANTITIES OF WORK WHICH WILL BE REQUIRED.

Plotted Date: 9/11/2009

NOT TO SCALE

STATE OF CONNECTICUT
DEPARTMENT OF TRANSPORTATION

Filename: CTDOT_HIGHWAY_STD.dgn Model: HW-507_08

SUBMITTED BY: NAME/DATE/TIME: Timothy M. Wilson 2009.09.16 11:16:32 -04'00'
APPROVED BY: NAME/DATE/TIME: James H. Norman 2009.09.18 14:22:33 -04'00'

CTDOT STANDARD SHEET

OFFICE OF ENGINEERING

STANDARD SHEET TITLE: CATCH BASIN FRAMES AND GRATES

STANDARD SHEET NO.: HW-507_08

GENERAL NOTES:

1. CHANNELS MAY BE SHAPED IN CONCRETE BASE OF MANHOLE OR FORMED USING BRICK OR MASONRY.
2. A FRAME DIAMETER OF 3'-3" (991) WITH 4" (102) FLANGE MUST BE USED WHEN THE TOP DIAMETER OF THE PRECAST CONE IS LESS THAN 3'-6" (1067). ALL OTHER FRAME DIMENSIONS SHALL REMAIN THE SAME.
3. COVER:

	CAST IRON	STEEL
MIN. COVER WEIGHT	134LB.(61kg)	134LB.(61kg)

4. ALL DIMENSIONS SUBJECT TO MANUFACTURING TOLERANCES.

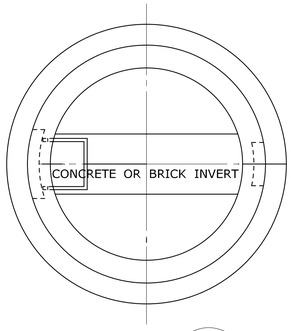

SECTION A -

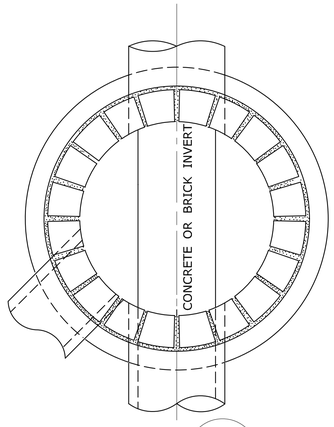

SECTION B -

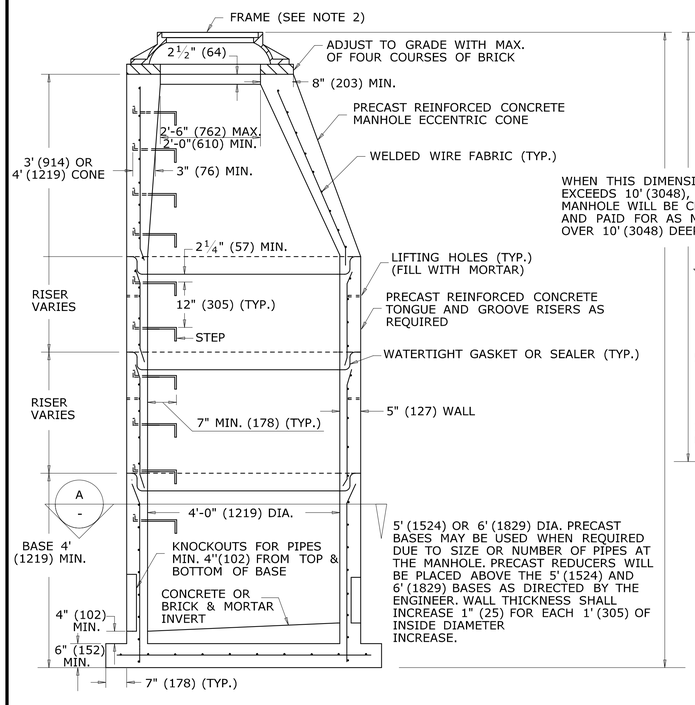

ELEVATION

MANHOLE

REINFORCED PRECAST CONCRETE UNIT

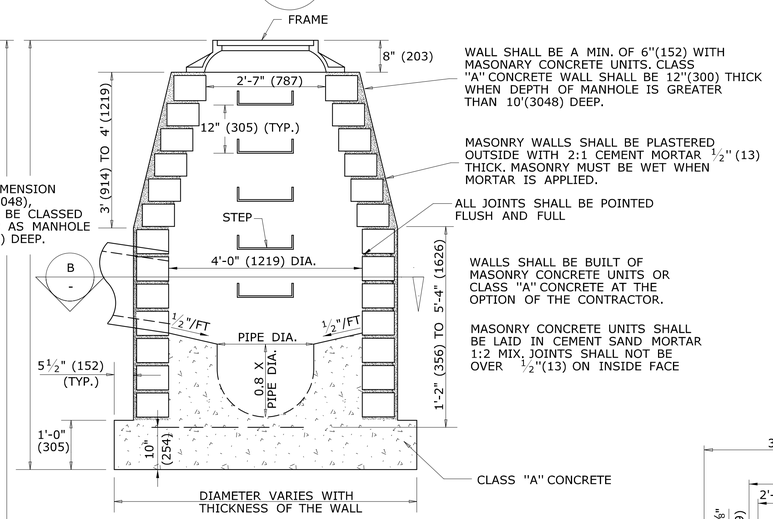

ELEVATION

MANHOLE

MASONARY CONCRETE UNIT OR CLASS "A" CONCRETE

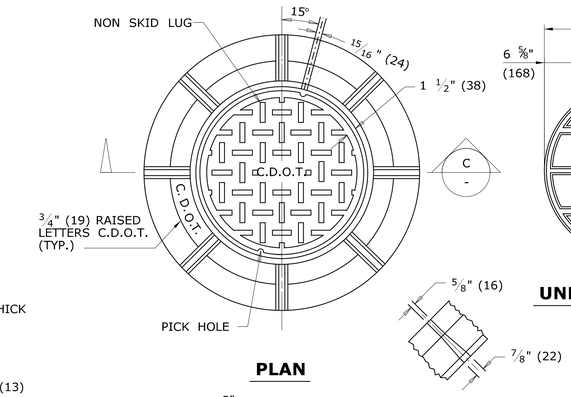

PLAN

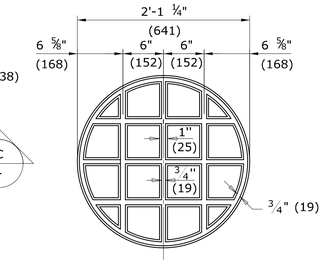

UNDERSIDE OF COVER DETAIL

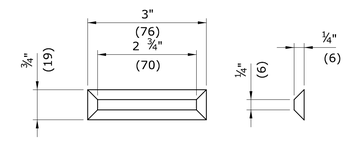

NON SKID LUG DETAIL

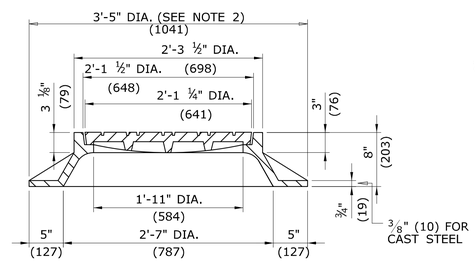

SECTION C -

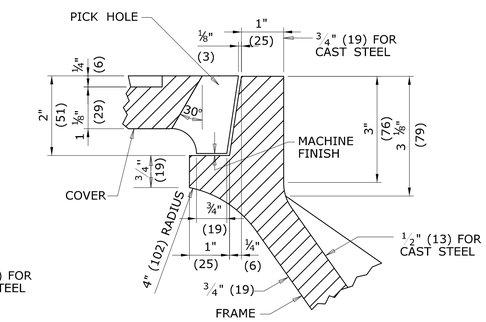

DETAIL OF SEAT

FRAME AND COVER DETAILS

ALL METRIC DIMENSIONS ARE IN MILLIMETERS (mm) UNLESS OTHERWISE NOTED

REV.	DATE	REVISION DESCRIPTION
1	6/11	REVISE STEP WIDTH PER OSHA
2	7/13	REVISE COVER FRAME WEIGHT
-	-	-
-	-	-
-	-	-
-	-	-

THE INFORMATION, INCLUDING ESTIMATED QUANTITIES OF WORK, SHOWN ON THESE SHEETS IS BASED ON LIMITED INVESTIGATIONS BY THE STATE AND IS IN NO WAY WARRANTED TO INDICATE THE CONDITIONS OF ACTUAL QUANTITIES OF WORK WHICH WILL BE REQUIRED.

Plotted Date: 6/13/2013

NOT TO SCALE

STATE OF CONNECTICUT
DEPARTMENT OF TRANSPORTATION

Filename: CTDOT_HIGHWAY_STD2013.dgn Model: 15-HW-507_10

SUBMITTED BY: NAME/DATE/TIME: Digitally signed by Leo L. Fontaine Date: 2013.07.24 11:01:54-04'00'

APPROVED BY: NAME/DATE/TIME: James H. Norman 2013.07.24 14:43:21-04'00'

CTDOT STANDARD SHEET

OFFICE OF ENGINEERING

STANDARD SHEET TITLE: MANHOLE - FRAME & COVER

STANDARD SHEET NO.: HW-507_10

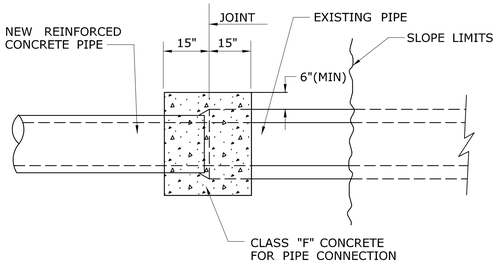

PLAN

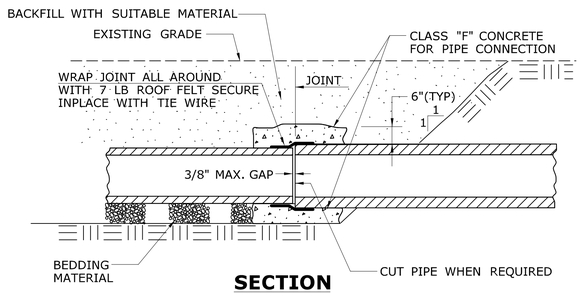

SECTION
CONCRETE PIPE CONNECTION

NOTES:

1. "CONCRETE PIPE CONNECTION" IS INTENDED FOR USE WHERE A REINFORCED CONCRETE PIPE REPAIR OR MODIFICATION IS NEEDED SOMEWHERE WITHIN A PIPE RUN WHERE A BELL/SPIGOT JOINT CANNOT BE ACHIEVED.
2. MAINTAIN INTERIOR ALIGNMENT OF PIPE AT JOINTS UNTIL CONCRETE IS PROPERLY CURED.
3. BACKFILL OF PIPE REPAIR WITH SUITABLE MATERIAL MAY NOT TAKE PLACE UNTIL CONCRETE IS PROPERLY CURED.
4. CONTRACTOR SHALL MAINTAIN LINE AND GRADE OF PIPE REPAIR OR MODIFICATION BY METHODS APPROVED BY THE ENGINEER.
5. HOLES OR GAPS AT JOINT LARGER THAN 3/8" SHALL BE FILLED OR WRAPED TO PREVENT CONCRETE FROM ENTERING PIPE.
6. TRENCH EXCAVATION SHALL BE TO THE MAXIMUM EXTENT NEEDED TO PERFORM WORK.

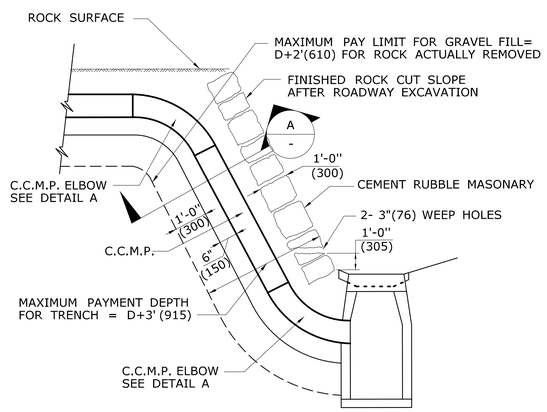

TYPICAL INSTALLATION OF C.C.M.P. IN ROCK SLOPE

GENERAL NOTES:

1. ROCK REMOVED BEYOND THE MAXIMUM PAY LIMIT SHOWN SHALL BE REPLACED WITH CEMENT RUBBLE MASONRY AND GRANULAR FILL.
2. FILL, AS REQUIRED TO CLOSE THE OPENING AS SHOWN ON THE PLANS, WILL BE AT THE CONTRACTORS EXPENSE. HOWEVER, THE PAY LIMIT LINES MAY BE MODIFIED TO COINCIDE WITH NATURAL FAULTS OR FISSURES OF ROCK AS THE ENGINEER MAY DETERMINE.
3. COATED CORRAGATED METAL PIPE (C.C.M.P.)

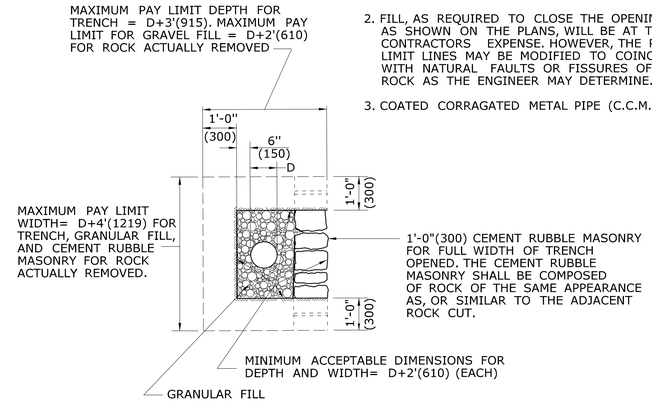

SECTION A -

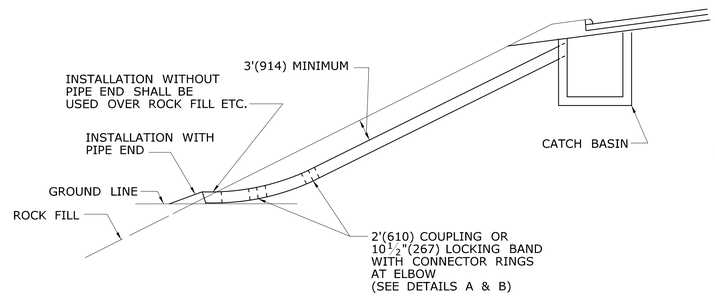

TYPICAL INSTALLATION OF C.C.M.P ELBOW IN FILL SLOPE

TABLE C
CONNECTOR RINGS

PIPE DIAMETER	LENGTH OF RING
12" (300)	52" (1321)
15" (381)	61" (1549)
18" (457)	71" (1803)
21" (533)	80" (2032)
24" (610)	90" (2286)
30" (762)	108" (2743)
36" (915)	128" (3251)
42" (1066)	147" (3734)
48" (1219)	166" (4216)

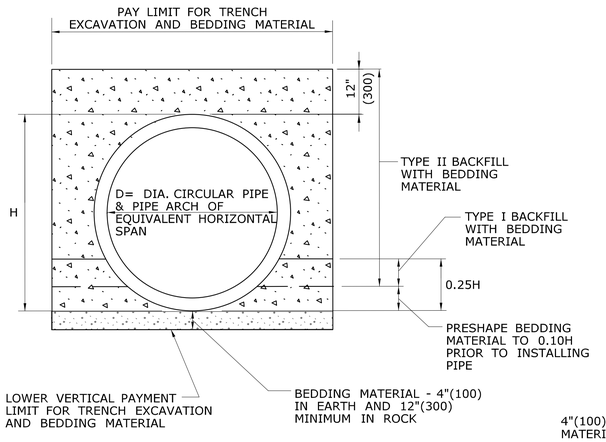

PIPE TRENCH DETAIL
WHERE GRANULAR FILL IS NOT USED

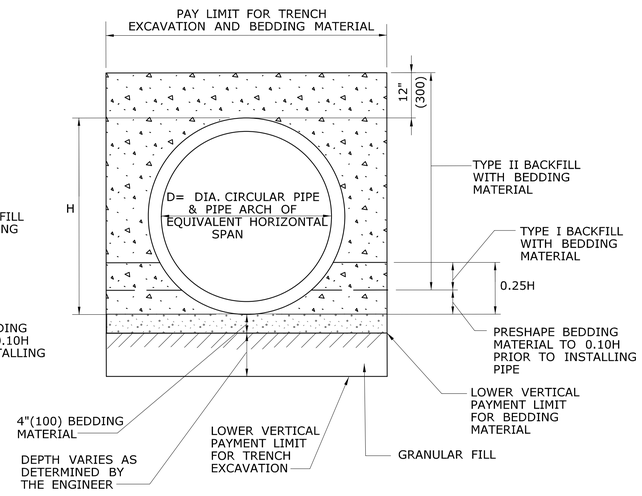

PIPE TRENCH DETAIL
WHERE GRANULAR FILL IS USED AS BEDDING

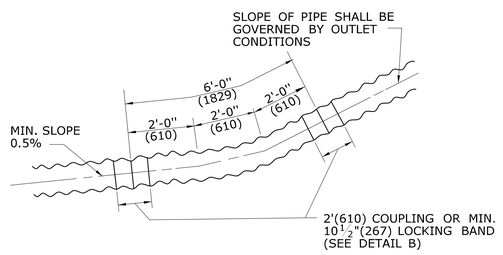

DETAIL A
C.C.M.P. ELBOW AND COUPLING

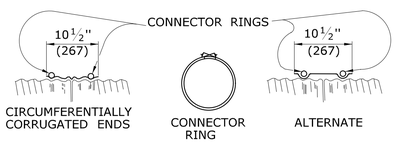

RODS: $\frac{7}{16}$"(11) DIAMETER ELECTRO-GALVANIZED WITH 6"(152) LENGTH OF ½"(13) ROLLED THREADS EACH END, FURNISHED CURVED, TO FIT PIPE. SEE TABLE C

LUGS: DOUBLE TAKE UP, CAST IRON, ELECTRO-GALVINIZED.

NOTE: THE COUPLER FASTENING DEVICE SHALL NOT INTERFERE WITH INSTALLATION OF CONNECTOR RINGS.

DETAIL B
ELBOW DIMENSIONS

ALL METRIC DIMENSIONS ARE IN MILLIMETERS (mm) UNLESS OTHERWISE NOTED

REV.	DATE	REVISION DESCRIPTION
-	-	-
-	-	-
-	-	-
3	7/13	ADD CONCRETE PIPE CONNECTION DETAIL
2	6/01/10	REVISE TITLE TO SAY TRENCH DETAIL
1	6/01/10	REMOVE GRAVEL, REPLACE W/ GRANULAR

THE INFORMATION, INCLUDING ESTIMATED QUANTITIES OF WORK, SHOWN ON THESE SHEETS IS BASED ON LIMITED INVESTIGATIONS BY THE STATE AND IS IN NO WAY WARRANTED TO INDICATE THE CONDITIONS OF ACTUAL QUANTITIES OF WORK WHICH WILL BE REQUIRED.

Plotted Date: 6/13/2013

NOT TO SCALE

STATE OF CONNECTICUT
DEPARTMENT OF TRANSPORTATION

Filename: CTDOT_HIGHWAY_STD2013.dgn Model: 17-HW-651_01

SUBMITTED BY: NAME/DATE/TIME: Digitally signed by Leo L. Fontaine Date: 2013.07.24 11:01:39-04'00'

APPROVED BY: NAME/DATE/TIME: James H. Norman 2013.07.24 14:44:01-04'00'

CTDOT STANDARD SHEET

OFFICE OF ENGINEERING

STANDARD SHEET TITLE: C.C.M.PIPE INSTALLATIONS IN FILL & ROCK SLOPES & PIPE TRENCH DETAIL

STANDARD SHEET NO.: HW-651_01

DOCUMENT ALL LOOP DETECTOR VALUES BOTH CALCULATED AND MEASURED.

DEFINITIONS:

LOOP: #14 AWG WIRE IN SAWCUT, TERMINATED IN HANDHOLE, IMSA SPEC 51-7.
LEAD-IN: 14/2 SHIELDED TWISTED PAIR CABLE FROM HANDHOLE TO CONTROLLER, IMSA SPEC 50-2.
LOOP CIRCUIT: LOOP SAWCUT WIRE SPLICED TO 14/2 LEAD-IN CABLE.
AMPLIFIER: ELECTRONIC DEVICE CONNECTED TO LOOP CIRCUIT. SENSES CHANGE IN RESONANT FREQUENCY AND CREATES AN OUTPUT TO THE CONTROLLER.
MEGOHMETER: INSTRUMENT SPECIFICALLY DESIGNED TO TEST THE INSULATION RESISTANCE OF A CIRCUIT. COMMON MANUFACTURERS: AMEC®, AMPROBE®, FLUKE®, MEGGER®.

1: RESISTANCE:

1a: INSULATION RESISTANCE: PERFORM A 600 VOLT (MINIMUM) MEGOHMETER TEST ON LOOP CIRCUIT. THE LOOP AMPLIFIER MUST BE DISCONNECTED FROM THE LOOP CIRCUIT OR THE LOOP AMPLIFIER WILL BE DAMAGED. THE RESISTANCE OF THE LOOP WIRE TO GROUND MUST BE GREATER THAN 100 MEG OHMS.

1b: WIRE RESISTANCE: MEASURE THE DC RESISTANCE OF THE LOOP CIRCUIT. THE LOOP CIRCUIT MUST BE DISCONNECTED FROM THE AMPLIFIER. USING AN OHMMETER CONNECTED ACROSS THE LOOP CIRCUIT, MEASURE THE DC RESISTANCE OF THE CONDUCTORS. THE RESISTANCE SHOULD BE LESS THAN 4 OHMS.

NOTE: ALL TESTS SHALL BE DONE AT THE CONTROLLER ASSEMBLY (CA), HOWEVER IT IS RECOMMENDED TO PERFORM A PRELIMINARY MEGOHMETER TEST AT THE HANDHOLE PRIOR TO SEALING THE SAWCUT AND SPLICING TO THE LEAD-IN. IF A DEFECTIVE LOOP WIRE IS FOUND, IT MAY BE EASILY REPLACED.

2: LOOP CIRCUIT INDUCTANCE:

2a: CALCULATE INDUCTANCE OF LOOP (L_{LOOP}) AND LEAD-IN CABLE ($L_{14/2}$).

LOOP INDUCTANCE (ENGLISH)

$L_{LOOP} = (P/4)(N^2 + N)$

LEAD-IN INDUCTANCE

$L_{14/2} = (0.24\,\mu h/FT)(D)$

LOOP INDUCTANCE (METRIC)

$L_{LOOP} = (3.28P/4)(N^2 + N)$

LEAD-IN INDUCTANCE

$L_{14/2} = (0.78\,\mu h/m)(D)$

WHERE:

L_{LOOP} = INDUCTANCE OF INDIVIDUAL LOOP SEGMENTS IN MICROHENRIES (μh).
$L_{14/2}$ = INDUCTANCE OF LEAD-IN CABLE.
P = PERIMETER OF INDIVIDUAL LOOP SEGMENT, IN FEET OR METERS.
N = NUMBER OF TURNS.
D = LENGTH OF LEAD-IN CABLE FROM SPLICE IN HANDHOLE TO CONTROLLER, IN FEET OR METERS.

$L_T = L_1 + L_2 + L_3$ etc.,
(TOTAL INDUCTANCE OF SEGMENTED LOOP SPLICED IN SERIES.)

$L_T = 1 / [(1 / L_1) + (1 / L_2) + (1 / L_3) + \text{etc.}]$,
(TOTAL INDUCTANCE OF SEGMENTED LOOP SPLICED IN PARALLEL.

WHERE:

L_T = TOTAL INDUCTANCE OF THE SEGMENTED ARRANGEMENT.
L_1, L_2, L_3 = INDUCTANCE OF INDIVIDUAL LOOP SEGMENTS.

EXAMPLE: (IN ENGLISH)

6' x 6', 4 TURNS, APPROXIMATELY 300' FROM THE CONTROLLER

$L_{LOOP} = (24/4)(4^2 + 4)$
$L_{LOOP} = (6)(20)$
$L_{LOOP} = 120\,\mu h$

$L_{14/2} = (0.24\,\mu h/FT)(300)$
$L_{14/2} = (0.24)(300)$
$L_{14/2} = 72\,\mu h$

2b: MEASURE INDUCTANCE OF LOOP AND LEAD-IN AT CONTROLLER. USE INSTRUMENT DESIGNED TO MEASURE LOOP CIRCUIT INDUCTANCE.

3: POWER INTERRUPTION:

AFTER THE AMPLIFIER HAS TUNED AND IS OPERATING, DISCONNECT POWER BY REMOVING FUSE OR HARNESS CONNECTOR. RETURN POWER TO THE AMPLIFIER AND CONFIRM IT RE-TUNES AUTOMATICALLY WITHOUT ANY MANUAL ADJUSTMENTS.

INDUCTIVE LOOP TEST PROCEDURE

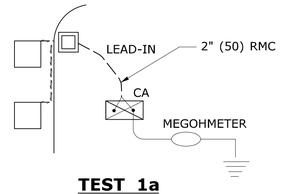

TEST 1a

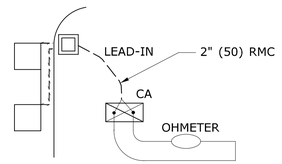

TEST 1b

PROJECT:
TOWN:
LOCATION:

LOOP NUMBER	RESISTANCE OHMS		INDUCTANCE MICROHENRIES (μh)		AMPLIFIER POWER INTERRUPTION
	TO GROUND (1a)	LOOP WIRE (1b)	CALCULATED (2a)	MEASURED (2b)	PASS/FAIL (3)
D1 FRONT					
D1 REAR					
D2A					
D2B					
D4A FRONT					
D4B REAR					
D5					
D6A					
D6B					

LOOP CIRCUIT TEST DATA (EXAMPLE)

PIN	COLOR	FUNCTION
A	WHITE	110 VAC Neutral
B	BROWN	Output Relay Common (moving contact)
C	BLACK	110 VAC (Fused)
D	RED	Loop
E	ORANGE	Loop
F	YELLOW	Output Relay Contact (Closes with moving contact when detecting vehicle)
G	BLUE	Output Relay Contact (Opens with moving contact when detecting vehicle)
H	GREEN	Chassis Ground
J	GREY	110 VAC Delay/Extend Override
Shell		Ground (shall be connected to pin H in the connector)

DETECTOR AMPLIFIER PIN DESIGNATION

TEST PROCEDURE:

- INSERT ELECTRODE (C) A DISTANCE (D) FROM THE FOUNDATION. RECOMMEND A MINIMUM 50'.
- CONNECT A VOLTAGE SOURCE AND AMMETER BETWEEN THE FOUNDATION GROUND ROD (X) AND C.
- MEASURE THE CURRENT FLOW (I) BETWEEN X AND C.
- INSERT POTENTIAL ELECTRODE (P) AT 5' (1500) INTERVALS IN A STRAIGHT LINE TO ELECTRODE C.
- MEASURE VOLTAGE (E) AT EACH LOCATION OF P.
- CALCULATE RESISTANCE (R) AT EACH LOCATION OF P USING THE FORMULA R=E/I.
- PLOT THE VALUES ON A RxD GROUND RESISTANCE CHART.
- THE ACTUAL GROUND RESISTANCE IS WHERE THE PLOTTED CURVE IS RELATIVELY FLAT, USUALLY AT 62%± OF D. SEE EXAMPLE CHART: CURVE FLATTENS OUT AT 10 OHMS, APPROXIMATELY 30' (9000) FROM FOUNDATION.
- IF GROUND RESISTANCE IS GREATER THAN 10 OHMS, PERFORM CORRECTIVE ACTION AND RE-TEST.

SUGGESTED CORRECTIVE ACTION:

A. INSTALL ADDITIONAL 10' (3000) GROUND ROD(S).
REFER TO NESC SECTION 09, RULE 94.B.2.
DRIVE ADDITIONAL GROUND RODS NO CLOSER TO FOUNDATION THAN 6' (1800). IF MORE THAN ONE IS NEEDED, SPACE MINIMUM 6' (1800) APART.
BONDS TO ADDITIONAL GROUND ROD(S) SHALL BE MADE BY A CLAMP DESIGN FOR DIRECT BURIAL OR BY EXOTHERMIC WELDING TECHNIQUE.
TOP OF ADDITIONAL GROUND ROD(S) SHALL BE 6" (150) BELOW GRADE.

B. IN AREAS OF SHALLOW BEDROCK, INSTALL A GROUND GRID OR ARRAY CONSISTING OF BURIED WIRE, RODS, STRIPS OR PLATES.
REFER TO NESC SECTION 09, RULE 94.B.3.
REFER TO NEC SECTION 250.
MINIMUM DEPTH OF 18" (450).
GRID CONNECTIONS AND BONDS ON GROUND GRID SHALL BE MADE BY CLAMPS DESIGNED FOR DIRECT BURIAL OR BY EXOTHERMIC WELDING TECHNIQUE.

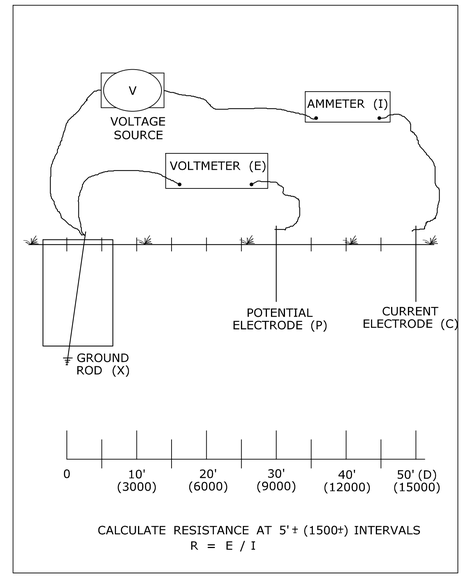

3 POINT GROUND RESISTANCE TEST CIRCUIT

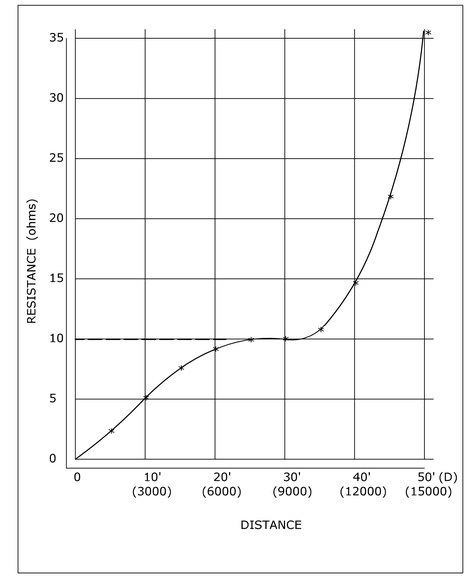

GROUND RESISTANCE CHART (EXAMPLE)

NOTES:

1. WHEN REQUESTED BY THE ENGINEER, MEASURE RESISTANCE-TO-GROUND OF GROUND ROD AT TRAFFIC CONTROL FOUNDATIONS. SEE FALL-OF-POTENTIAL METHOD. IF LESS THAN 10 ohms, INSTALL SUPPLEMENTAL ELECTRODES AS REQUIRED. NEC ARTICLE 250.
2. DURING THE TEST, THE GROUND ROD SHOULD NOT BE BONDED TO ANY RMC IN THE FOUNDATION.
3. THE VOLTAGE SOURCE, VOLTMETER, AMMETER, ELECTRODES P AND C, AND CONNECTING CABLES ARE AVAILABLE AS A SPECIALIZED TEST INSTRUMENT.
4. REFER TO NATIONAL ELECTRICAL SAFETY CODE (NESC) SECTION 09, GROUNDING METHODS FOR ELECTRIC SUPPLY AND COMMUNCATIONS FACILITIES.
5. REFER TO NATIONAL ELECTRICAL CODE (NEC) CHAPTER 2, ARTICLE 250, GROUNDING.

3 POINT FALL-OF-POTENTIAL GROUND RESISTANCE TEST

LEGEND AS SHOWN ON TRAFFIC CONTROL SIGNAL PLAN:
INDUCTIVE LOOP DETECTOR
SAW CUT
RIGID METAL CONDUIT
HANDHOLE

REV.	DATE	REVISION DESCRIPTION
2	1-2014	REVISED GROUND RESISTANCE NOTES.
1	4-2012	MINOR REVISIONS.

THE INFORMATION, INCLUDING ESTIMATED QUANTITIES OF WORK, SHOWN ON THESE SHEETS IS BASED ON LIMITED INVESTIGATIONS BY THE STATE AND IS IN NO WAY WARRANTED TO INDICATE THE CONDITIONS OF ACTUAL QUANTITIES OF WORK WHICH WILL BE REQUIRED.

Plotted Date: 1/7/2014

DIMENSIONS ARE IN ENGLISH ('.') & METRIC UNITS (mm).
METRIC DIMENSIONS ARE ROUNDED:
- OVER 1" TO NEAREST 5 mm
- UNDER 1" TO NEAREST 1 mm.

NOT TO SCALE

STATE OF CONNECTICUT
DEPARTMENT OF TRANSPORTATION

Filename: CTDOT_TRAFFIC_STD.DGN Model: TR-1000_01

SUBMITTED BY: NAME/DATE/TIME: Tracy L. Fogarty 2014.01.07 16:11:26-05'00'
APPROVED BY: NAME/DATE/TIME: Charles S. Harlow 2014.01.08 09:02:11-05'00'

CTDOT STANDARD SHEET
OFFICE OF ENGINEERING

STANDARD SHEET TITLE: GENERAL CLAUSES (TEST PROCEDURES)

STANDARD SHEET NO.: TR-1000_01

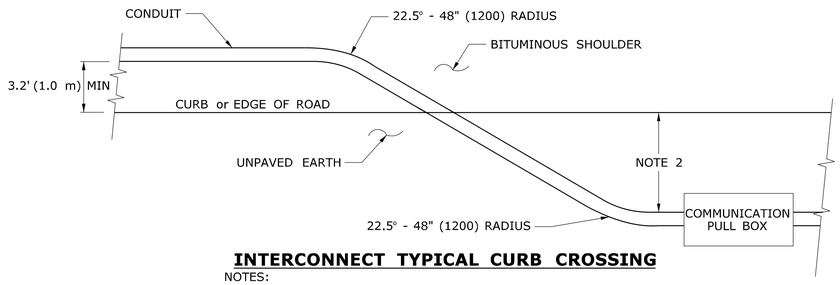

INTERCONNECT TYPICAL CURB CROSSING

NOTES:

1. RESTORE AREAS DISTURBED BY TRENCH TO ORIGINAL CONDITION.
2. INSTALL PULL BOX A MINIMUM OF 10' (3.0 m) FROM CURB UNLESS OTHERWISE SHOWN ON PLANS OR DIRECTED BY ENGINEER.

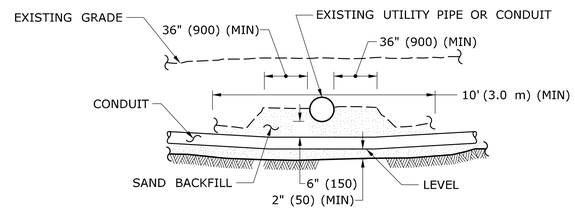

CROSSING UNDER EXISTING UTILITY

NOTES:

1. WHEN ENCOUNTERED AT APPROXIMATELY THE SAME DEPTH, CROSS BENEATH.
2. PROTECT & SUPPORT EXPOSED EXISTING UTILITY.

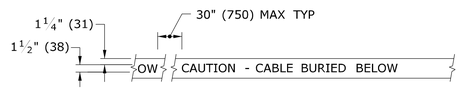

DETECTABLE WARNING TAPE

NOTE:

STANDARD SPECIFICATIONS, ARTICLE: 1.05.15

1. TAPE COLORS:
   COMMUNICATION - ORANGE BACKGROUND / BLACK LEGEND
   POWER - RED BACKGROUND / BLACK LEGEND

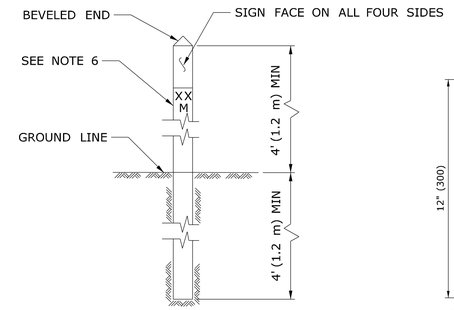

INTERCONNECT CONDUIT IDENTIFICATION POST

NOTES:

1. 4" x 4" (100 x 100) NOMINAL, PRESSURE TREATED WOOD POST.
2. ATTACH SIGN TO POST WITH 1/4" x 1 1/4" (6 x 31) STAINLESS STEEL LAG SCREW WITH NYLON WASHER ON FACE OF SIGN.
3. SIGN COLORS: BACKGROUND - ORANGE (RETROREFLECTIVE) LEGEND - BLACK (OPAQUE).
4. INSTALL POST APPROX 24" (600) FROM RMC IN VICINITY OF EACH PULL BOX.
5. INSTALL POSTS BETWEEN PULL BOXES, APPROX 10' (3.0 m) OFF CURB. SPACE POSTS 1500'± (460 m±) APART.
6. PERMANENTLY ATTACH STAINLESS STEEL NUMBERS INDICATING DISTANCE TO TRENCH IN FEET (METERS) CONTAINING COMMUNICATION CABLE. ATTACH NUMBERS TO SIDE OF POST FACING CONDUIT. INCLUDE "M" SUFFIX IF METERS.

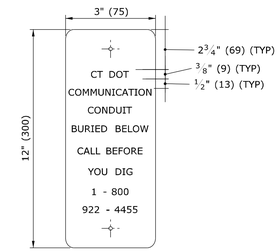

SIGN FACE DETAIL

SIGN # 41-4669

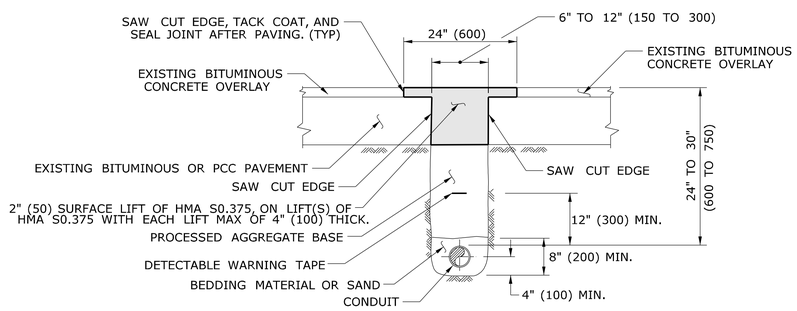

PAVEMENT - BITUMINOUS CONCRETE OR OVERLAYED PORTLAND CEMENT CONCRETE

NOTES:

STANDARD SPECIFICATIONS, ARTICLE: 3.04 & 4.06.03

1. TOTAL HOT MIX ASPHALT (HMA) THICKNESS TO MATCH EXISTING BITUMINOUS CONCRETE AND PORTLAND CEMENT CONCRETE (PCC) THICKNESS.
2. WHEN ALLOWED BY ENGINEER, USE CONTROLLED LOW STRENGTH MATERIAL (CLSM) AS BEDDING MATERIAL. TOP OF CLSM AT LEAST 20" (500) BELOW SURFACE.

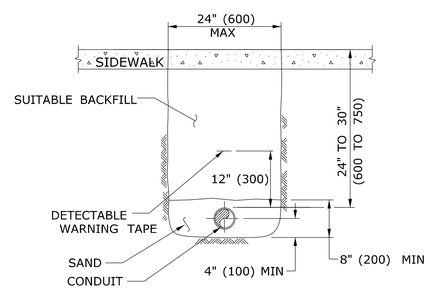

SIDEWALK

NOTES:

STANDARD SPECIFICATIONS, ARTICLE: 9.21 & 9.22

1. WHERE CONCRETE SIDEWALK DAMAGED OR CUT, REPLACE THE ENTIRE SECTION BETWEEN JOINTS. REPLACEMENT SIDEWALK IS PAID FOR AT THE CONTRACT UNIT PRICE FOR "CONCRETE SIDEWALK".

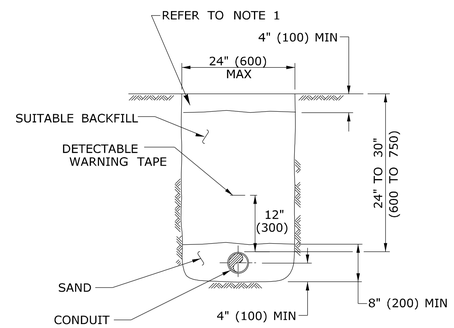

EARTH

NOTES:

STANDARD SPECIFICATIONS, ARTICLE: 9.50

1. IN MOWED AREAS: PLACE TOPSOIL, FERTILIZER, SEED, & MULCH.

GENERAL NOTES:

1. TOP OF CONDUIT NO LESS THAN 24" (600) DEEP.
2. COMPACT BACKFILL IN ≤ 6" (150) LIFTS. HAND COMPACTION NOT PERMITTED.

LEGEND AS SHOWN ON TRAFFIC CONTROL SIGNAL PLAN:

-- -- RMC (RIGID METAL CONDUIT)

REV.	DATE	REVISION DESCRIPTION
1	4-2012	REVISED BITUMINOUS CONRCETE TO HMA, & MINOR REVISIONS.

THE INFORMATION, INCLUDING ESTIMATED QUANTITIES OF WORK, SHOWN ON THESE SHEETS IS BASED ON LIMITED INVESTIGATIONS BY THE STATE AND IS IN NO WAY WARRANTED TO INDICATE THE CONDITIONS OF ACTUAL QUANTITIES OF WORK WHICH WILL BE REQUIRED.

Plotted Date: 4/14/2012

DIMENSIONS ARE IN ENGLISH ('.") & METRIC UNITS (mm). METRIC DIMENSIONS ARE ROUNDED:
- OVER 1" TO NEAREST 5 mm
- UNDER 1" TO NEAREST 1 mm.

NOT TO SCALE

STATE OF CONNECTICUT
DEPARTMENT OF TRANSPORTATION

Filename: CTDOT_TRAFFIC_STD.dgn Model: TR-1001_01

SUBMITTED BY: NAME/DATE/TIME: Tracy L. Fogarty 2012.05.01 12:54:42-04'00'

APPROVED BY: NAME/DATE/TIME: Timothy M. Wilson 2012.05.09 10:23:34-04'00'

CTDOT STANDARD SHEET

OFFICE OF ENGINEERING

STANDARD SHEET TITLE:

TRENCHING & BACKFILLING, ELECTRICAL CONDUIT

STANDARD SHEET NO.: TR-1001_01

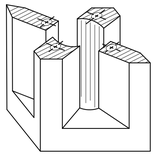

PICTORIAL
SECTION A-A

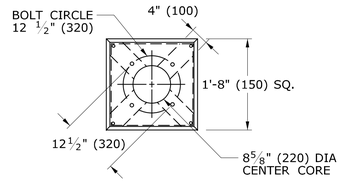

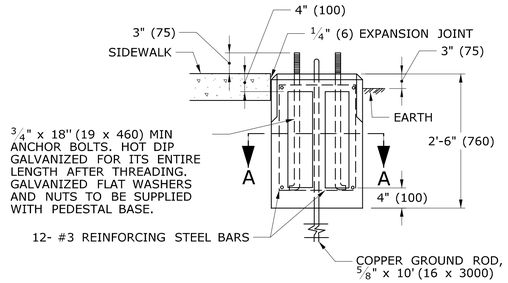

TRAFFIC CONTROL FOUNDATION
PEDESTAL - TYPE I - PRECAST

NOTES:

PLACE NO. 6 CRUSHED STONE IN CENTER OPENING AFTER CONDUITS AND GROUND ROD HAVE BEEN INSTALLED.

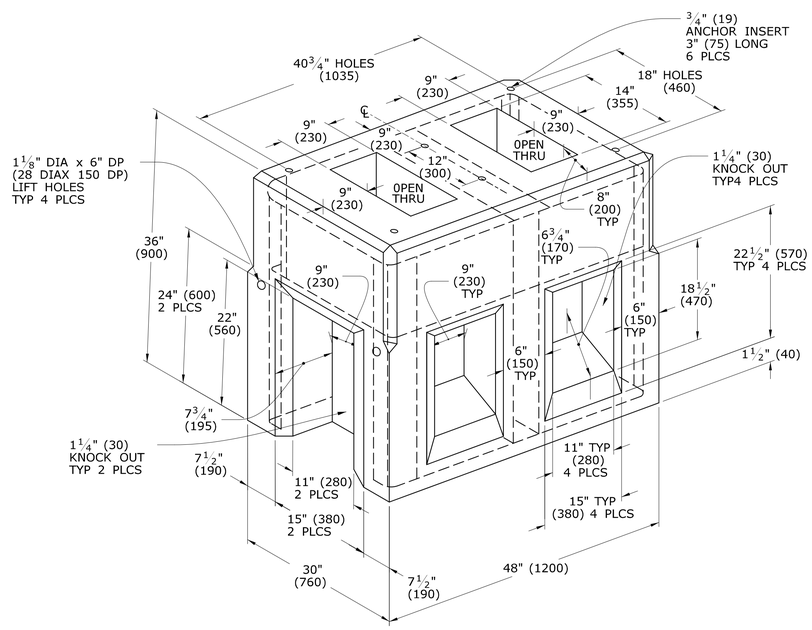

TRAFFIC CONTROL FOUNDATION
CONTROLLER - TYPE IV - PRECAST

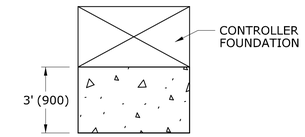

INSTALL PRECAST OR CAST IN PLACE CONCRETE SIDEWALK ON CABINET DOOR SIDE OF CONTROLLER FOUNDATION.

PITCH SIDEWALK 1/4" PER FOOT (20 PER METER) AWAY FROM THE CONTROLLER FOUNDATION.

REFER TO HIGHWAY STANDARD SHEET HW-921_01 FOR SIDEWALK CONSTRUCTION.

TYPICAL CONCRETE SIDEWALK
AT CONTROLLER FOUNDATION

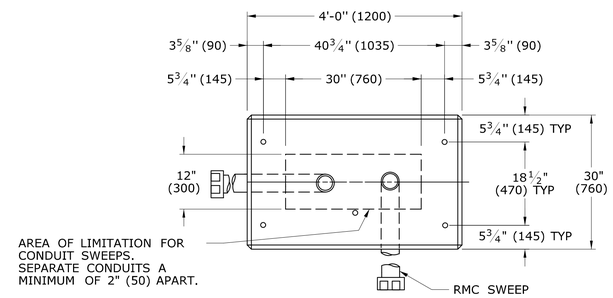

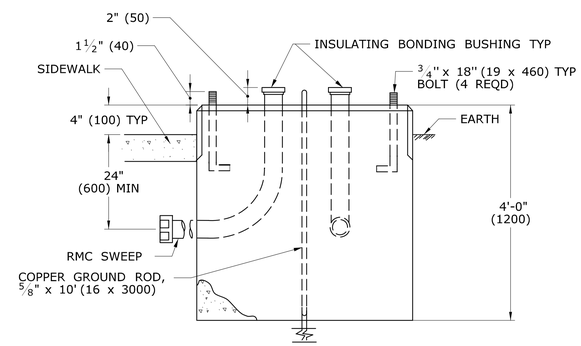

TRAFFIC CONTROL FOUNDATION
CONTROLLER - TYPE IV - CAST IN PLACE

NOTES:

INSTALL FOUNDATION ON 6" (150) OF COMPACTED GRAVEL IN ACCORDANCE WITH SECTION 2.14.
LEVEL FOUNDATION WITH A PROJECTION OF 4" (100) ABOVE FINISHED GRADE.
INSTALL COPPER GROUND ROD: 5/8" x 10 (16 x 3000).
PLACE NO. 6 CRUSHED STONE IN THE CENTER OPENINGS AFTER THE CONDUITS AND GROUND ROD HAVE BEEN INSTALLED. THE OPENINGS SHALL BE CAPPED WITH A 2" (50) GROUT LEVEL WITH THE TOP OF THE FOUNDATION AND NEATLY FINISHED. THE GROUT SHALL CONFORM WITH THE REQUIREMENTS OF ARTICLE M.3.01-12.
CONCRETE: CLASS "A" CONFORMING TO ARTICLE M.03.01.
#4 REBAR 2" (50) MIN COVER AROUND ALL OPENINGS, 3-#4 REBARS IN EACH CORNER.
CONDUITS SHALL NOT PROJECT MORE THAN 2" (50) ABOVE FOUNDATION.

LEGEND AS SHOWN ON TRAFFIC CONTROL SIGNAL PLAN:
- PROPOSED CONTROLLER
- EXISTING CONTROLLER
- PROPOSED STEEL SPAN POLE
- EXISTING STEEL SPAN POLE

REV.	DATE	REVISION DESCRIPTION
2	1-2014	REMOVED SPAN POLE FOUNDATION DETAILS, REVISED TYPICAL CONCRETE SIDEWALK AT CONTROLLER FOUNDATION.
1	4-2012	MINOR REVISIONS.

THE INFORMATION, INCLUDING ESTIMATED QUANTITIES OF WORK, SHOWN ON THESE SHEETS IS BASED ON LIMITED INVESTIGATIONS BY THE STATE AND IS IN NO WAY WARRANTED TO INDICATE THE CONDITIONS OF ACTUAL QUANTITIES OF WORK WHICH WILL BE REQUIRED.

Plotted Date: 1/7/2014

DIMENSIONS ARE IN ENGLISH ('.') & METRIC UNITS (mm).
METRIC DIMENSIONS ARE ROUNDED:
- OVER 1" TO NEAREST 5 mm
- UNDER 1" TO NEAREST 1 mm.

NOT TO SCALE

STATE OF CONNECTICUT
DEPARTMENT OF TRANSPORTATION

Filename: CTDOT_TRAFFIC_STD.DGN Model: TR-1002_01

SUBMITTED BY: NAME/DATE/TIME: Tracy L. Fogarty 2014.01.07 16:12:06-05'00'

APPROVED BY: NAME/DATE/TIME: Charles S. Harlow 2014.01.08 09:02:54-05'00'

CTDOT
STANDARD SHEET

OFFICE OF ENGINEERING

STANDARD SHEET TITLE:

TRAFFIC CONTROL FOUNDATIONS

STANDARD SHEET NO.:

TR-1002_01

COVER NOTES:

1. GROUNDING TAB WELDED TO BOTTOM CENTER OF COVER WITH 3/16" (5) WELD (3 SIDES).
2. ATTACH 6' (2 m) LENGTH OF NO. 8 GROUND WIRE TO GROUNDING TAB WITH CONDUCTOR CONNECTOR, 1/4" - 20 X 3/4" (M6 X 20) LG SST HEX HEAD BOLT, AND SST FLAT WASHER. ATTACH FREE END OF GROUND WIRE TO CONDUIT BONDING BUSHING IN HANDHOLE.
3. CONDUCTOR CONNECTOR: COPPER ALLOY BODY, BRASS SCREW, BRASS OR COPPER ALLOY PRESSURE PLATE.
4. COVER SCREW INSERT: 3/8"-16 (9-16), 1 1/2"L (37L), STAINLESS STEEL.
5. COVER SCREW: 3/8"-16 (9-16), 1"L (25L), FLAT HEAD, SLOTTED, STAINLESS STEEL.

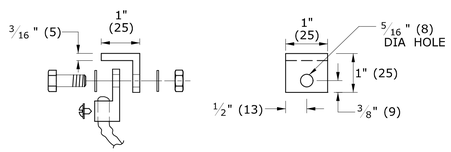

STEEL GROUNDING TAB w/ CONDUCTOR CONNECTOR

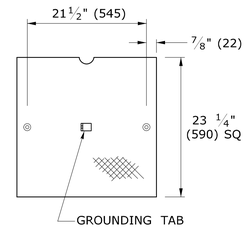

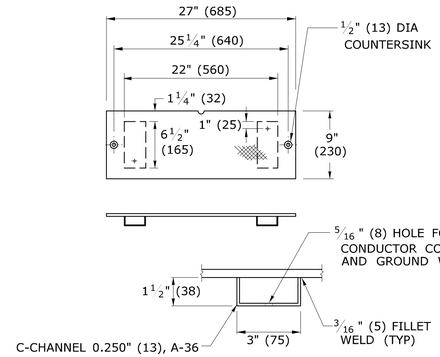

NON SKID FLOOR PLATE GALVANIZED STEEL, 3/8" (10)

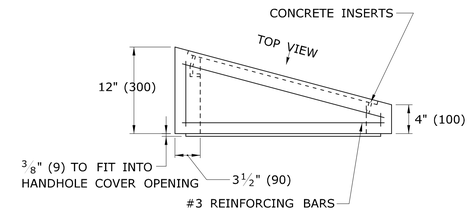

BANK ADAPTER

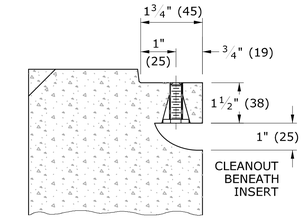

SECTION D-D

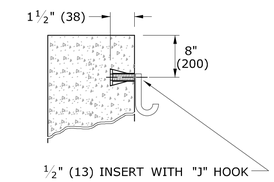

INSERT DETAIL

TYP IN TWO PLACES FOR ALL HANDHOLES

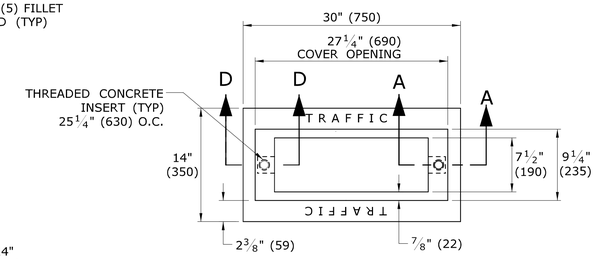

PLAN VIEW

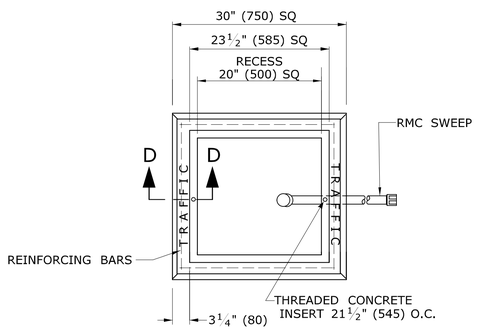

PLAN VIEW

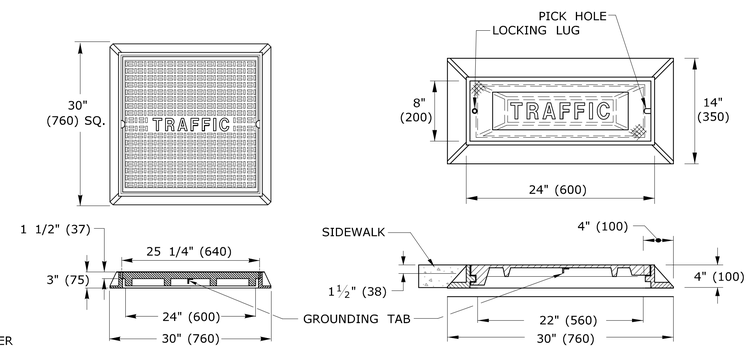

CAST IRON HANDHOLE COVERS

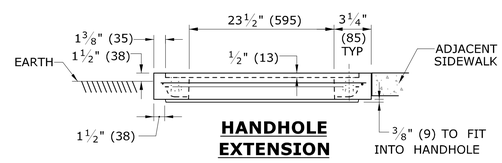

HANDHOLE EXTENSION

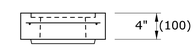

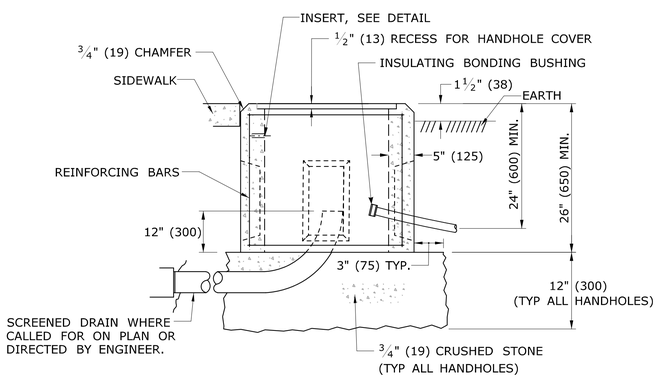

CONCRETE HANDHOLE TYPE I

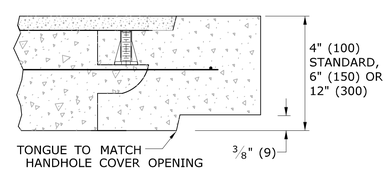

SECTION A-A
HANDHOLE EXTENSIONS

4 - #8 REINFORCING BARS REQ'D

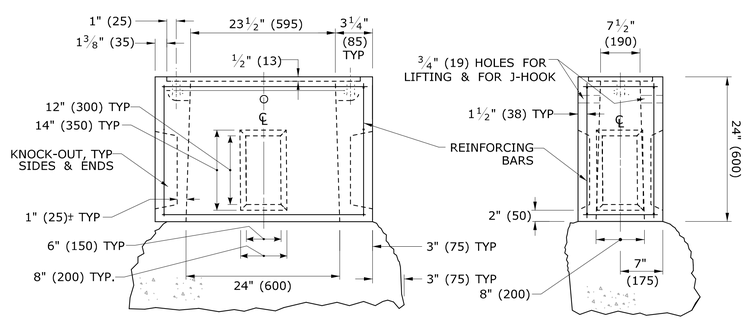

BASE SECTION
CONCRETE HANDHOLE TYPE II

HANDHOLE NOTES:

1. MINIMUM CLASS "C" CONCRETE.
2. COMPLETE TYPE II HANDHOLE:
   IN EARTH AREAS, CONSISTS OF A BASE SECTION WITH 4" (100) HANDHOLE EXTENSION,
   IN SIDEWALK AREAS, CONSISTS OF A BASE SECTION WITH 4" (100) CAST IRON COVER.
3. PLAN VIEW DIMENSIONS, SECTION VIEW, & DETAILS, SAME FOR BASE SECTION, EXTENSIONS & BANK ADAPTER.
4. GROUT AROUND ALL CONDUITS.
5. INSTALL 30" (750) SIDE PARALLEL TO ROAD UNLESS OTHERWISE NOTED.
6. INSTALL HANDHOLES APPROX. 12" (300) BEHIND CURB OR IF NO CURB, 24" (600) BEHIND EDGE OF ROAD UNLESS OTHERWISE SPECIFIED.
7. CAST THE WORD "TRAFFIC" INTO TOP EDGE OF HANDHOLE, 1 1/2" (38) LETTERS.
8. WHERE AN EXISTING CONCRETE SIDEWALK SLAB ABUTTING A HANDHOLE IS DAMAGED OR CUT DURING INSTALLATION, REPLACE THE ENTIRE SIDEWALK SECTION.
9. 12-#3 REINFORCING BARS REQUIRED FOR ALL HANDHOLES. (8 HORIZONTAL, 4 VERTICAL)

LEGEND AS SHOWN ON TRAFFIC CONTROL SIGNAL PLAN:

- PROPOSED HANDHOLE
- EXISTING HANDHOLE

REV.	DATE	REVISION DESCRIPTION
2	4-2014	REVISED HANDHOLES NOTES, ADDED NOTE #6. ADDED "J" HOOK TO INSERT DETAIL.
1	4-2012	CAST IRON COVER: CHANGED BOLT TO PICK HOLE. ADDED EXTENSIONS, C-CHANNEL, CONDUCTOR CONNECTOR & MINOR REVISIONS.

THE INFORMATION, INCLUDING ESTIMATED QUANTITIES OF WORK, SHOWN ON THESE SHEETS IS BASED ON LIMITED INVESTIGATIONS BY THE STATE AND IS IN NO WAY WARRANTED TO INDICATE THE CONDITIONS OF ACTUAL QUANTITIES OF WORK WHICH WILL BE REQUIRED.

Plotted Date: 4/11/2014

DIMENSIONS ARE IN ENGLISH ("") & METRIC UNITS (mm).
METRIC DIMENSIONS ARE ROUNDED:
- OVER 1" TO NEAREST 5 mm
- UNDER 1" TO NEAREST 1 mm.

NOT TO SCALE

STATE OF CONNECTICUT
DEPARTMENT OF TRANSPORTATION

Filename: CTDOT_TRAFFIC_STD.DGN Model: TR-1010_01

SUBMITTED BY: NAME/DATE/TIME: Tracy L. Fogarty, P.E. 2014.04.25 16:01:09-04'00'

APPROVED BY: NAME/DATE/TIME: Digitally signed by Charles S. Harlow, P.E. Date: 2014.04.29 14:26:25-04'00'

CTDOT STANDARD SHEET

OFFICE OF ENGINEERING

STANDARD SHEET TITLE: CONCRETE HANDHOLE

STANDARD SHEET NO.: TR-1010_01

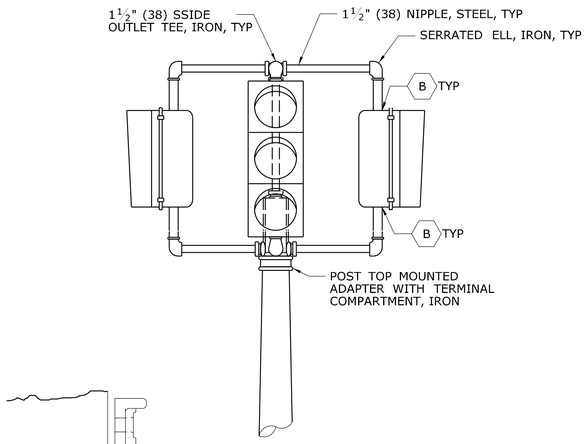

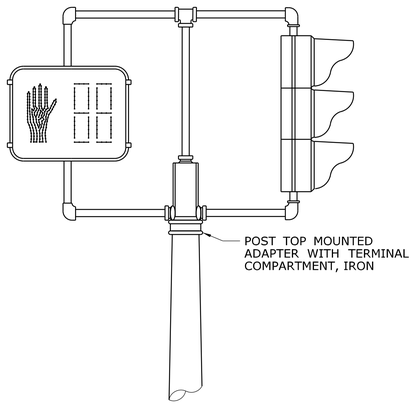

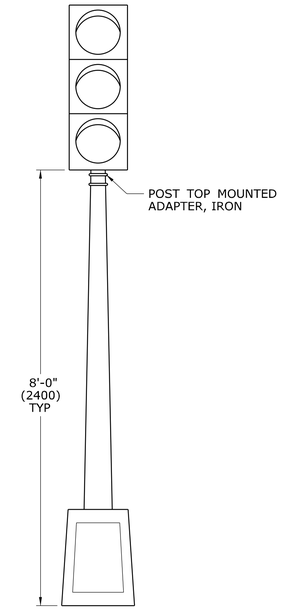

ONE WAY TRAFFIC SIGNAL PEDESTAL MOUNTED

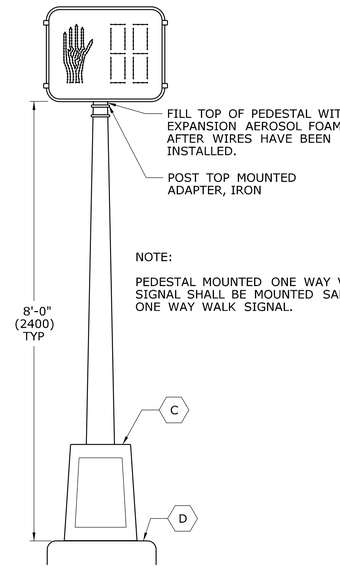

NOTE:

PEDESTAL MOUNTED ONE WAY VEHICLE SIGNAL SHALL BE MOUNTED SAME AS ONE WAY WALK SIGNAL.

ONE WAY WALK SIGNAL PEDESTAL MOUNTED

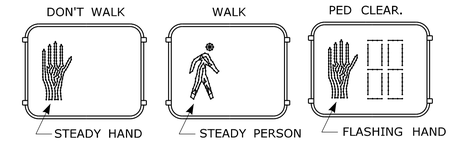

TYPICAL INDICATION WHEN LIT

NON-COUNTDOWN DISPLAY, ONLY WHEN SHOWN ON PLAN.

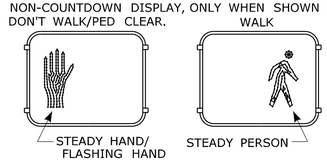

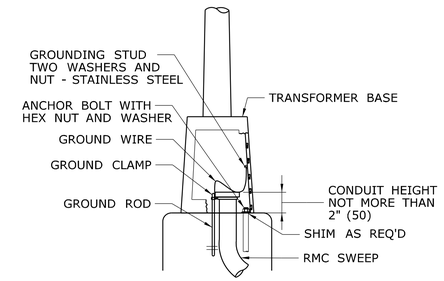

ALUMINUM PEDESTAL INSTALLATION DETAIL

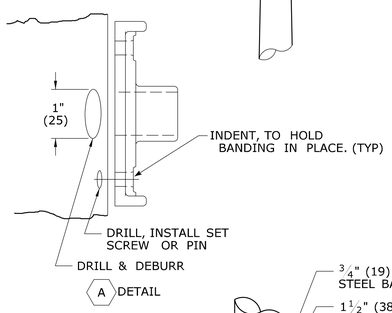

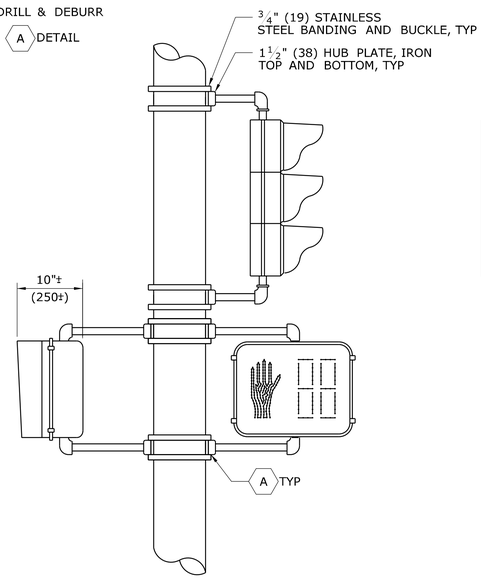

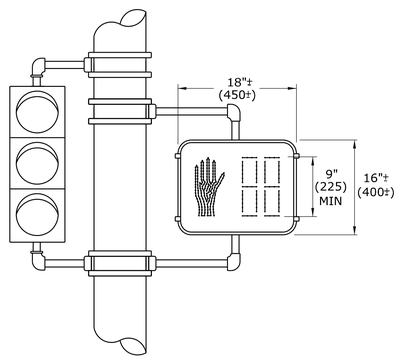

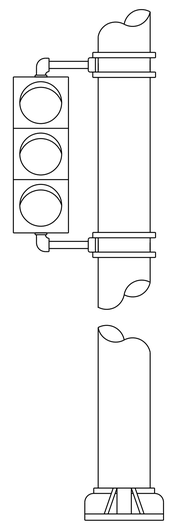

ONE WAY TRAFFIC SIGNAL POLE MOUNTED

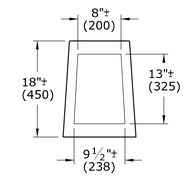

ALUMINUM PEDESTAL DOOR OPENING DETAIL

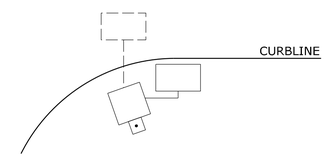

WHEN PEDESTALS OR SPAN POLES ARE INSTALLED CLOSE TO THE CURB, SIDE MOUNT PEDESTRIAN OR TRAFFIC SIGNALS TO AVOID VISOR DAMAGE FROM TURNING VEHICLES.

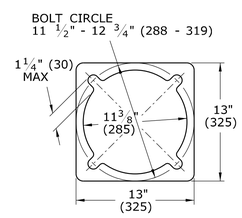

PEDESTAL BASE PLAN

NOTES:

- (A) SECURE LOWER HUB PLATE WITH STAINLESS STEEL SET SCREW OR PIN PRIOR TO BANDING TO PREVENT MOVEMENT. INSTALL CABLE THROUGH BOTTOM OF HUB PLATE.
- (B) REFER TO CTDOT TRAFFIC STANDARD SHEET, TR-1105_01, TRAFFIC SIGNALS & CABLE ASSIGNMENTS.
- (C) IF THREADED, MIN 1" (25) THREADED INTO BASE, SECURED WITH STAINLESS STEEL SET SCREWS.
- (D) BASE DESIGNED AS BREAK-AWAY.

INCANDESCENT WALK SIGNAL LAMPS ARE 67 WATTS, RATED AT 8000 HOURS LAMP LIFE. LED WALK SIGNAL LAMPS ARE MAXIMUM 15 WATTS, WARRANTEED AT 5 YEAR LIFE.

LEGEND AS SHOWN ON TRAFFIC CONTROL SIGNAL PLAN:
- STEEL SPAN POLE, MAST ARM ASSEMBLY SHAFT
- ALUMINM PEDESTAL
- TRAFFIC SIGNAL
- PEDESTRIAN SIGNAL
- PEDESTAL MOUNTED, TRAFFIC & PEDESTRIAN SIGNALS
- POLE MOUNTED, TRAFFIC & PEDESTRIAN SIGNALS

REV.	DATE	REVISION DESCRIPTION
2	4-2012	MINOR REVISIONS.
1	1-2010	INCLUDED COUNTDOWN PEDESTRIAN SIGNALS.

THE INFORMATION, INCLUDING ESTIMATED QUANTITIES OF WORK, SHOWN ON THESE SHEETS IS BASED ON LIMITED INVESTIGATIONS BY THE STATE AND IS IN NO WAY WARRANTED TO INDICATE THE CONDITIONS OF ACTUAL QUANTITIES OF WORK WHICH WILL BE REQUIRED.

Plotted Date: 4/14/2012

DIMENSIONS ARE IN ENGLISH ("-") & METRIC UNITS (mm). METRIC DIMENSIONS ARE ROUNDED:
- OVER 1" TO NEAREST 5 mm
- UNDER 1" TO NEAREST 1 mm.

NOT TO SCALE

STATE OF CONNECTICUT
DEPARTMENT OF TRANSPORTATION

Filename: CTDOT_TRAFFIC_STD.dgn Model: TR-1102_01

SUBMITTED BY: NAME/DATE/TIME: Tracy L. Fogarty 2012.05.01 12:55:27-04'00'

APPROVED BY: NAME/DATE/TIME: Timothy M. Wilson 2012.05.09 10:24:58-04'00'

CTDOT STANDARD SHEET

OFFICE OF ENGINEERING

STANDARD SHEET TITLE: **PEDESTALS, PEDESTRIAN SIGNALS**

STANDARD SHEET NO.: **TR-1102_01**

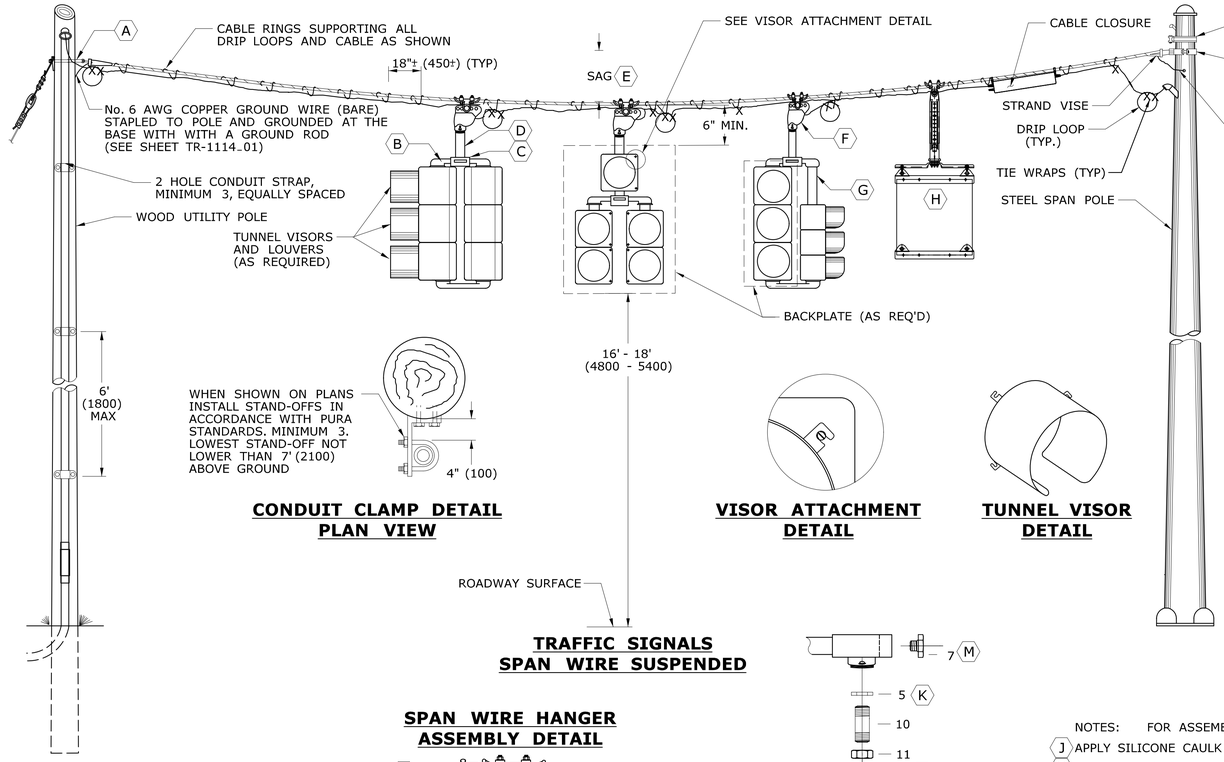

TRAFFIC SIGNALS SPAN WIRE SUSPENDED

CONDUIT CLAMP DETAIL PLAN VIEW

VISOR ATTACHMENT DETAIL

TUNNEL VISOR DETAIL

ITEM DESCRIPTION, FOR ASSEMBLY DETAILS
1 - SERRATED TABBED LOCKRING, ALUMINUM (TAB MUST BE FULL WIDTH OF RING)
2 - GASKET, NEOPRENE
3 - WASHER, STEEL
4 - HEX NUT, STEEL
5 - CONDUIT LOCKNUT, STEEL
6 - BUSHING PLASTIC (ONLY IN JUNCTION BOX OR NIPPLED DOWN TRAFFIC SIGNAL)
7 - OCTAGONAL CAP, ALUMINIUM
8 - SPAN WIRE CLAMP
9 - WIRE OUTLET BODY, IRON, FEMALE ONLY
10 - NIPPLE, STEEL
11 - HEX NUT, STEEL, NOTCHED W/SETSCREWS

TRAFFIC SIGNAL CABLE COLOR ASSIGNMENTS

SIGNAL ASSEMBLY & CABLE USED	SIGNAL FUNCTION	ARTERY 1	ARTERY 2	SIDE STREET 1	SIDE STREET 2
2 - WAY 9 CONDUCTOR	RED	RED		BLACK	
	YELLOW	ORANGE		WHITE \ BLACK	
	GREEN	GREEN		BLUE	
	SPARE	GREEN\BLACK		RED \ BLACK	
	NEUTRAL	WHITE			
3 - WAY 12 CONDUCTOR	RED	RED	RED \ BLACK	BLACK	
	YELLOW	ORANGE	ORANGE \ BLACK	WHITE \ BLACK	
	GREEN	GREEN	GREEN \ BLACK	BLUE	
	SPARE	BLUE\BLACK	BLACK \ WHITE		
	NEUTRAL	WHITE			
4 - WAY 15 CONDUCTOR	RED	RED	RED \ BLACK	BLACK	RED \ WHITE
	YELLOW	ORANGE	ORANGE \ BLACK	WHITE \ BLACK	BLACK \ WHITE
	GREEN	GREEN	GREEN \ BLACK	BLUE	GREEN \ WHITE
	SPARE	BLUE\BLACK		BLUE \ WHITE	
	NEUTRAL	WHITE			

PEDESTRIAN SIGNAL CABLE COLOR ASSIGNMENTS

SIGNAL ASSEMBLY & CABLE USED	SIGNAL FUNCTION	WIRE COLOR
WALK SIGNAL W/ PUSHBUTTON 7 CONDUCTOR	DON'T WALK	RED
	WALK	GREEN
	NEUTRAL FOR WALK SIGNAL	WHITE
	PEDESTRIAN PUSHBUTTON	BLACK
	NEUTRAL FOR PUSHBUTTON	ORANGE
	SPARE CONDUCTOR	WHITE \ BLACK
	SPARE CONDUCTOR *	BLUE \ BLACK
WALK SIGNAL W/ PUSHBUTTON 7 CONDUCTOR	RED	RED
	YELLOW	ORANGE
	GREEN	GREEN
	NEUTRAL FOR TRAFFIC SIGNAL	WHITE
	PEDESTRIAN PUSHBUTTON	BLACK
	NEUTRAL FOR PUSHBUTTON	WHITE \ BLACK
	SPARE CONDUCTOR *	BLUE \ BLACK

* IF 14/7 FEEDS MORE THAN ONE BUTTON, SPLIT THE BUTTONS AND USE BLUE WITH BLACK TRACER FOR THE ADDITIONAL BUTTON.

TABLE NOTES:
1. INSTALL SEPARATE CABLE BETWEEN CLOSURE AND EACH TRAFFIC SIGNAL ASSEMBLY. WIRE EACH TRAFFIC SIGNAL SECTION SEPARATELY BACK TO CABLE CLOSURE. JUMPERS BETWEEN TERMINALS ARE NOT ALLOWED EXCEPT ON NEUTRAL CONDUCTORS.
2. WIRE ALL SIGNALS, SAME DIRECTION FROM CONTROLLER, SEPARATELY WITH CONDUCTORS IN 21 CONDUCTOR CABLE, EVEN IF INDICATIONS ARE IDENTICAL.
3. CABLES THAT FEED PEDESTRIAN INDICATIONS, PUSH BUTTONS, AND DETECTORS BYPASS CABLE CLOSURE.
4. REFER TO STANDARD SHEET TR-1113_01 FOR CABLE CLOSURE - TYPE A.

SPAN WIRE HANGER ASSEMBLY DETAIL

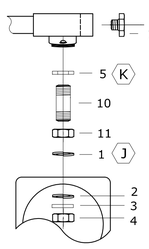

TWO WAY, THREE WAY & FOUR WAY NIPPLE DOWN ASSEMBLY DETAIL

NOTES: FOR ASSEMBLY DETAILS
J APPLY SILICONE CAULK BETWEEN OR AROUND SERRATED LOCKRING AND HOUSING.
K OPTIONAL USE IF NIPPLE THREADS TOO FAR INTO ELBOW.
L DRILL HOLE IN CENTER OF 2 WAY BOTTOM BRACKET - INSTALL 3 BOLT BRACKET (SEE DETAIL).
M DO NOT INSERT ORNAMENTAL CAP PAST DOTTED LINE.
N ALL THREAD.
P SETSCREW (SQUARE OR ALLEN) ON ALL FITTINGS.
R CHASE NIPPLE CAN BE SUBSTITUTED FOR THE COMBINATION OF ITEMS 6, 5 AND 10.
S INSTALL STAINLESS STEEL WASHER ON INSIDE OF COTTER PIN. COTTER PIN AND WASHER SHALL BE ON SIDE OF HANGER AWAY FROM SIGNAL CABLES.
T CHASE NIPPLE CAN BE SUBSTITUTED FOR COMBINATION 4, 5, 10 AND 11.
U CENTER HUB SAME AS C EXCEPT TOP OPENING MAY BE THREADED.
V DOOR HINGE ON OUTSIDE OF SIDE BY SIDE ASSEMBLY.

UPPER CENTER SUPPORT DETAIL

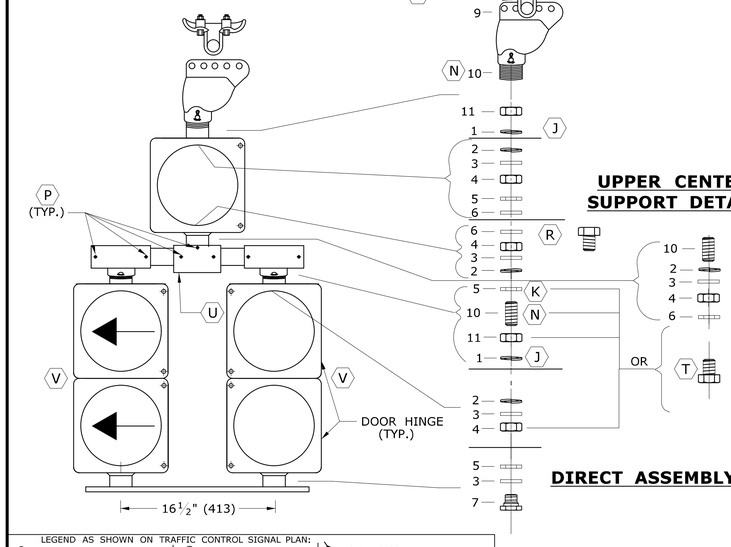

DIRECT ASSEMBLY DETAIL

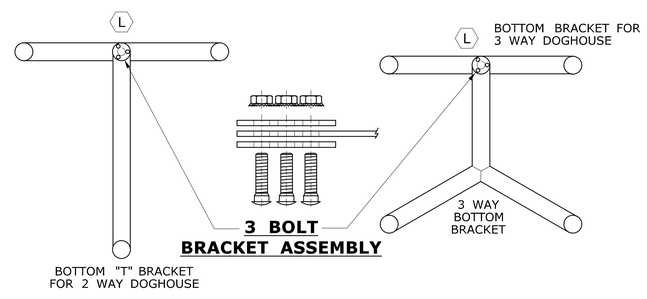

3 BOLT BRACKET ASSEMBLY

NOTES:
SERVICE CONDUCTORS: THW, THWN OR XHHW. INDIVIDUAL WIRES MAY BE USED IN LIEU OF MULTI-CONDUCTOR CABLE.
ALL WORK ON UTILITY POLES MUST COMPLY WITH CURRENT PURA REGULATIONS AND NESC RULES.
A ATTACH SPAN AT LEAST 12" (300) BELOW LOWEST POWER COMPANY ATTACHMENT, AND AT LEAST 40" (1000) ABOVE HIGHEST COMMUNICATIONS ATTACHMENT, UNLESS OTHERWISE DIRECTED ON PLANS.
B ELBOW OR "T" FITTING MUST HAVE NOTCH FOR SERRATED TABBED LOCKRING.
C TOP BRACKET CENTER HUB SHALL BE MIN 4" (100) ROUND AND 3" (75) DEEP OR EQUAL VOLUME. SERRATION CAST IN HUB OR TABBED OR SERRATED LOCKRING, TOP OPENING NOT THREADED.
D NIPPLE LENGTH DEPENDS ON SPAN HEIGHT.
E SAG OF SPAN TO BE 5%± LENGTH, UNLESS OTHERWISE ALLOWED BY ENGINEER.
F FACE ALL ENTRANCE FITTINGS TOWARD CABLE CLOSURE.
G INSTALL EXTENSION NIPPLE ON TOP OF SIGNAL HOUSING SO BOTTOM OF ALL SIGNALS ARE EVEN.
H REFER TO TR-GS_01 "SIGN FACE SHEET ALUMINUM, R-SERIES SIGNS TYPICAL DETAILS", AND TO TR-1114_01 FOR SIGN HANGER ASSEMBLY. MAXIMUM SIGN SIZE 36" X 36" (900 X 900). ALL STAINLESS STEEL HARDWARE.
SECURE LOUVERS TO TUNNEL VISORS WITH 3 STAINLESS STEEL SCREWS.

LEGEND AS SHOWN ON TRAFFIC CONTROL SIGNAL PLAN:
PROPOSED WOOD SPAN POLE
EXISTING WOOD SPAN POLE
PROPOSED STEEL SPAN POLE
EXISTING STEEL SPAN POLE
PROPOSED UTILITY POLE
EXISTING UTILITY POLE
POLE ANCHOR & GUY
CABLE CLOSURE
SPAN MOUNTED SIGN
SPAN MOUNTED TRAFFIC SIGNAL

REV.	DATE	REVISION DESCRIPTION
4	1-2018	REVISED GROUNDING NOTE FOR SPAN AND OTHER MINOR REVISIONS.
3	3-2015	REMOVED STRAIN INSULATOR.
2	5-2013	MINOR REVISIONS.
1	4-2012	MINOR REVISIONS.

THE INFORMATION, INCLUDING ESTIMATED QUANTITIES OF WORK, SHOWN ON THESE SHEETS IS BASED ON LIMITED INVESTIGATIONS BY THE STATE AND IS IN NO WAY WARRANTED TO INDICATE THE CONDITIONS OF ACTUAL QUANTITIES OF WORK WHICH WILL BE REQUIRED.

Plotted Date: 5/22/2018

DIMENSIONS ARE IN ENGLISH ('.") & METRIC UNITS (mm). METRIC DIMENSIONS ARE ROUNDED:
- OVER 1" TO NEAREST 5 mm
- UNDER 1" TO NEAREST 1 mm.

NOT TO SCALE

STATE OF CONNECTICUT
DEPARTMENT OF TRANSPORTATION

Filename: CTDOT_TRAFFIC_STD_2018-05-21.dgn Model: TR-1105_01

SUBMITTED BY: NAME/DATE/TIME: Tracy L. Fogarty, P.E. 2018.08.16 12:13:06-04'00'
APPROVED BY: NAME/DATE/TIME: Mark F. Carlino, P.E. 2018.08.21 07:46:03-04'00'

CTDOT STANDARD SHEET
OFFICE OF ENGINEERING

STANDARD SHEET TITLE:
TRAFFIC SIGNALS & CABLE ASSIGNMENTS

STANDARD SHEET NO.: TR-1105_01

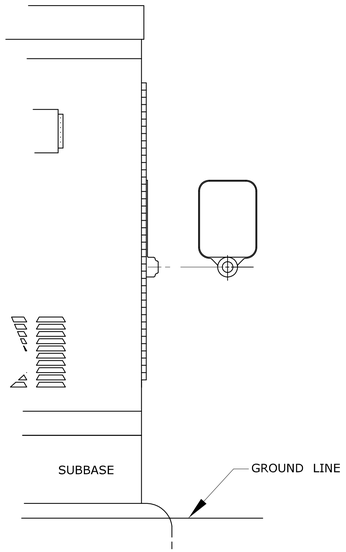

SURFACE MOUNTED

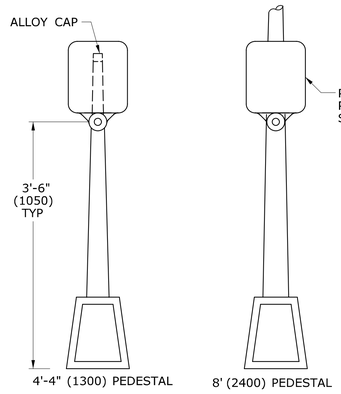

PEDESTAL MOUNTED

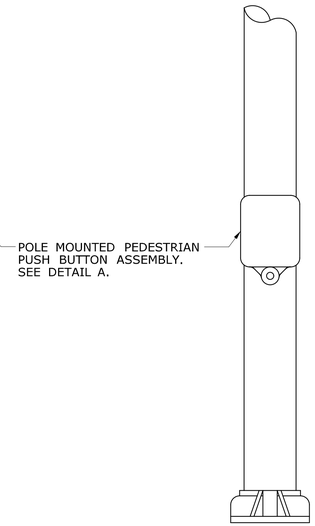

SPAN POLE/MAST ARM MOUNTED

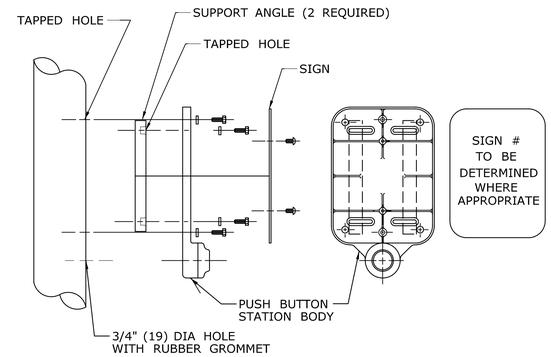

DETAIL A

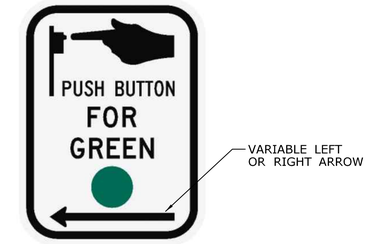

SIGN # 31-0833
USE APPROPRIATE LEFT OR RIGHT ARROW

SIGN # 31-0835

FOR CROSSING WITH SIDE STREET GREEN

GENERAL NOTES:

3'-6" (1050) FROM FINISHED GRADE SUCH AS SIDEWALK TO CENTER OF PUSH BUTTON.
PUSH BUTTON INSTALLATIONS SHALL CONFORM TO THE REQUIREMENTS OF THE AMERICANS WITH DISABILITIES ACT (ADA) STANDARDS FOR ACCESSIBLE DESIGN, CURRENT EDITION GOVERNS.
4'-4" (1300) PEDESTAL TO INCLUDE ALLOY CAP SECURED WITH STAINLESS STEEL SET SCREW.

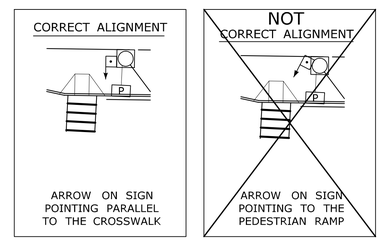

PEDESTRIAN PUSH BUTTON ALIGNMENT

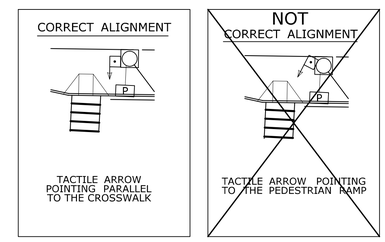

ACCESSIBLE PEDESTRIAN SIGNAL AND DETECTOR

EXAMPLE ALIGNMENTS FOR EXCLUSIVE PEDESTRIAN PHASE

*USE APPROPRIATE ARROW UNLESS OTHERWISE NOTED ON PLAN.

FOR NEW PUSHBUTTON HOUSING, USE 9" x 15" SIGN NO. 31-0856.

FOR EXISTING PUSHBUTTON HOUSING, WITH 9" x 12" SIZE, USE SIGN NO. 31-0845.

LEGEND AS SHOWN ON TRAFFIC CONTROL SIGNAL PLAN:
- PEDESTRIAN PUSH BUTTON
- PEDESTRIAN PUSH BUTTON, PEDESTAL MOUNTED
- PEDESTRIAN PUSH BUTTON, POLE MOUNTED

REV.	DATE	REVISION DESCRIPTION
3	8-2018	UPDATED PEDESTRIAN SIGN LEGENDS AND NOTES.
2	4-2014	ADDED PEDESTRIAN EXAMPLE ALIGNMENTS
1	4-2012	MINOR REVISIONS & UPDATED SIGN #31-0845.

THE INFORMATION, INCLUDING ESTIMATED QUANTITIES OF WORK, SHOWN ON THESE SHEETS IS BASED ON LIMITED INVESTIGATIONS BY THE STATE AND IS IN NO WAY WARRANTED TO INDICATE THE CONDITIONS OF ACTUAL QUANTITIES OF WORK WHICH WILL BE REQUIRED.

Plotted Date: 8/9/2018

DIMENSIONS ARE IN ENGLISH ('.") & METRIC UNITS (mm).
METRIC DIMENSIONS ARE ROUNDED:
- OVER 1" TO NEAREST 5 mm
- UNDER 1" TO NEAREST 1 mm.

NOT TO SCALE

STATE OF CONNECTICUT
DEPARTMENT OF TRANSPORTATION

Filename: CTDOT_TRAFFIC_STD_2018-01-25.dgn Model: TR-1107_01

SUBMITTED BY: NAME/DATE/TIME:
Tracy L. Fogarty, P.E.
2018.08.16 12:13:35-04'00'

APPROVED BY: NAME/DATE/TIME:
Mark F. Carlino, P.E.
2018.08.21 07:46:57-04'00'

CTDOT STANDARD SHEET

OFFICE OF ENGINEERING

STANDARD SHEET TITLE:

PEDESTRIAN PUSH BUTTONS

STANDARD SHEET NO.:

TR-1107_01

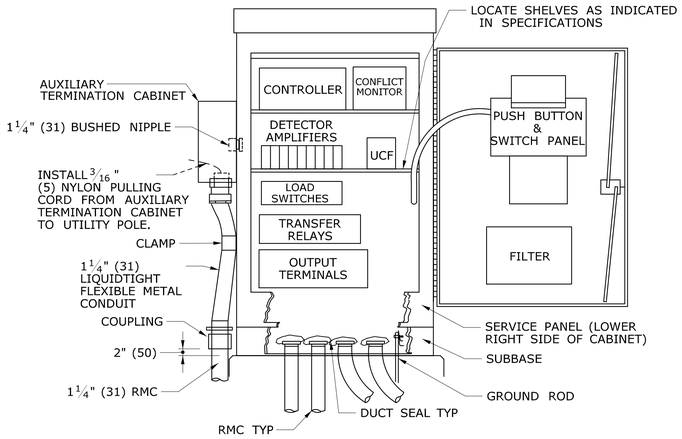

PROVIDE A MINIMUM CLEARANCE OF 6" (150) FROM THE CABINET BASE TO ALL COMPONENTS AND TERMINALS.

TYPICAL BASE MOUNTED CONTROLLER ON TYPE IV FOUNDATION

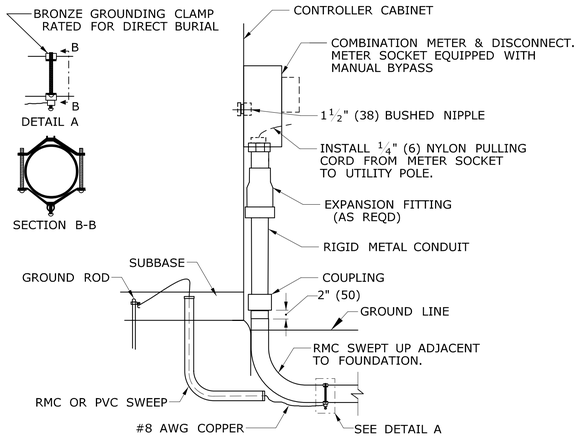

CONTROLLER CABINET WITH METERED SERVICE

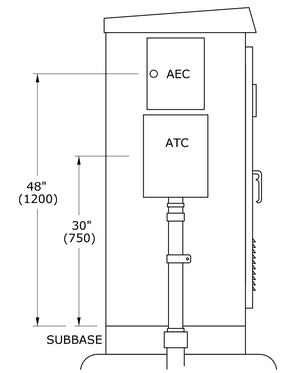

AUXILIARY EQUIPMENT CABINET (AEC)
AUXILIARY TERMINATION CABINET (ATC)

CABINET TYPE	HEIGHT	WIDTH	DEPTH
ATC	16"(400)	12"(300)	6"(150)
AEC	14"(350)	11"(275)	11"(275)

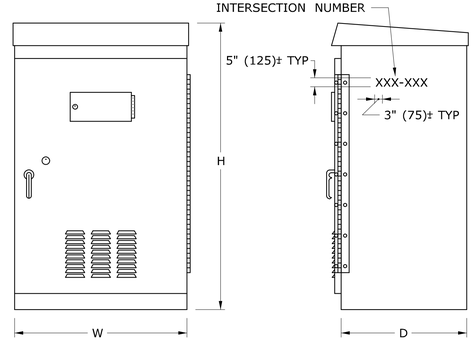

BASE MOUNTED TRAFFIC CONTROLLER (TYPE B, D & E)

CABINET TYPE	DEPTH		WIDTH		HEIGHT	
	MIN	MAX	MIN	MAX	MIN	MAX
B	17" (425)	19" (475)	30" (750)	34" (850)	52" (1300)	56" (1400)
D	25" (625)	27" (675)	42" (1050)	45" (1125)	54" (1350)	59" (1475)
E	17" (425)	19" (475)	30" (750)	32" (800)	49" (1225)	52" (1300)

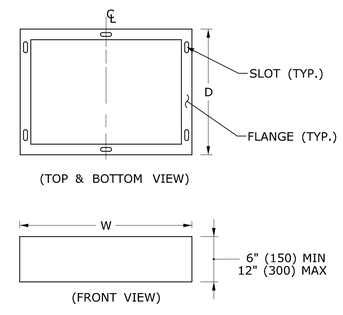

SUBBASE

SLOT AND FLANGE DIMENSIONS TO BE PER MANUFACTURER.

GENERAL NOTES:

GROUT ALL BASES AFTER MOUNTING ON FOUNDATIONS, WHERE NECESSARY.
3'-0" (900) FROM SIDEWALK TO BOTTOM OF CONTROLLER.
INSTALL PEDESTALS AND POLES SO THAT DOORS AND COVERS ARE ON THE SIDE AWAY FROM THE STREET, UNLESS OTHERWISE SPECIFIED.
INSTALL CABINET SO THAT DOOR OPENS FIELD SIDE UNLESS OTHERWISE NOTED ON PLANS.
CAULK SEAM BETWEEN SUBBASE AND FOUNDATION.
STENCIL SIX DIGIT INTERSECTION NUMBER, USING BLACK PAINT ON SIDE, FRONT OR BACK OF CABINET MOST VISIBLE FROM THE ROAD.

LEGEND AS SHOWN ON TRAFFIC CONTROL SIGNAL PLAN:
CONTROLLER ASSEMBLY
AUXILIARY EQUIPMENT CABINET
AUXILIARY TERMINTION CABINET

REV.	DATE	REVISION DESCRIPTION
2	5-2013	REVISED SUBBASE.
1	4-2012	REVISED CABINET TYPES & MINOR REVISIONS.

THE INFORMATION, INCLUDING ESTIMATED QUANTITIES OF WORK, SHOWN ON THESE SHEETS IS BASED ON LIMITED INVESTIGATIONS BY THE STATE AND IS IN NO WAY WARRANTED TO INDICATE THE CONDITIONS OF ACTUAL QUANTITIES OF WORK WHICH WILL BE REQUIRED.

Plotted Date: 5/15/2013

DIMENSIONS ARE IN ENGLISH ('.") & METRIC UNITS (mm). METRIC DIMENSIONS ARE ROUNDED:
- OVER 1" TO NEAREST 5 mm
- UNDER 1" TO NEAREST 1 mm.

NOT TO SCALE

STATE OF CONNECTICUT
DEPARTMENT OF TRANSPORTATION

Filename: CTDOT_TRAFFIC_STD.dgn Model: TR-1108_01

SUBMITTED BY: NAME/DATE/TIME: Tracy L. Fogarty 2013.07.29 14:04:24-04'00'
APPROVED BY: NAME/DATE/TIME: Charles S. Harlow 2013.07.29 14:59:45-04'00'

CTDOT STANDARD SHEET
OFFICE OF ENGINEERING

STANDARD SHEET TITLE: CONTROLLERS

STANDARD SHEET NO.: TR-1108_01

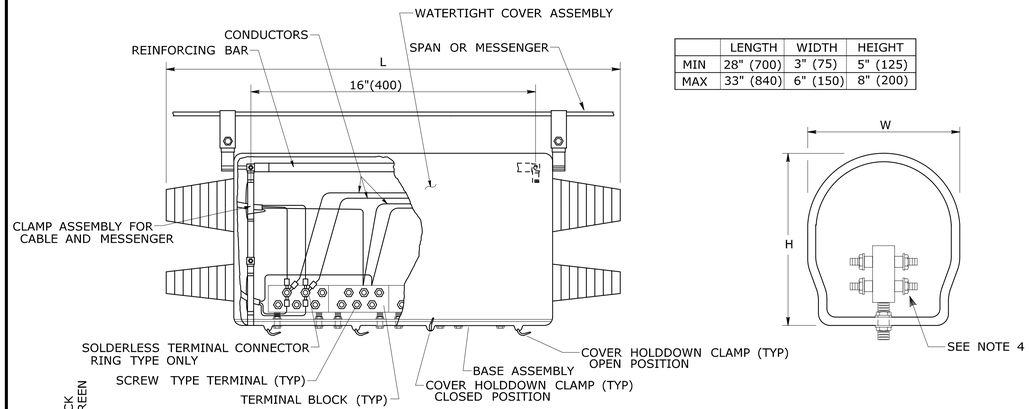

	LENGTH	WIDTH	HEIGHT
MIN	28" (700)	3" (75)	5" (125)
MAX	33" (840)	6" (150)	8" (200)

CABLE CLOSURE FOR TRAFFIC SIGNALS

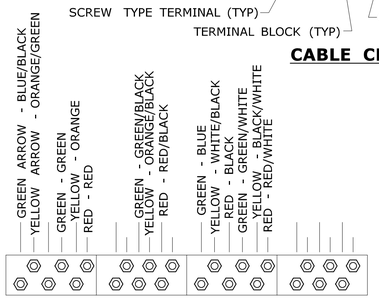

RECOMMENDED CONNECTION OF 21 CONDUCTOR CABLE IN CLOSURE

NOTES:

1. PROVIDE A MINIMUM OF FOUR TERMINAL BLOCKS WITH SEPARATE SCREW TYPE TERMINALS, SIX ON EACH SIDE.
2. INSTALL SEPARATE CABLE BETWEEN CLOSURE & EACH TRAFFIC SIGNAL ASSEMBLY. WIRE EACH TRAFFIC SIGNAL SECTION SEPARATELY BACK TO CABLE CLOSURE. JUMPERS BETWEEN TERMINALS ARE NOT ALLOWED EXCEPT ON NEUTRAL CONDUCTORS.
3. WIRE ALL SIGNALS, SAME DIRECTION FROM CONTROLLER, SEPARATELY WITH CONDUCTORS IN 21 OR 25 CONDUCTOR CABLE, EVEN IF INDICATIONS ARE IDENTICAL.
4. PREVENT CONNECTORS, TERMINAL POSTS AND CONDUCTORS FROM CONTACT WITH CLOSURE COVER AND SECURELY WRAP WITH ELECTRICAL TAPE OR RUBBER MASTIC TAPE.
5. CABLES THAT FEED PEDESTRIAN INDICATIONS, PUSH BUTTONS, AND DETECTORS BYPASS CABLE CLOSURE.
6. INSTALL TRAFFIC SIGNAL CABLE CLOSURE ON THE SPAN ±5' (±1.5 m) FROM CURBLINE.

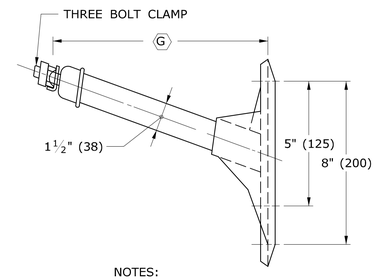

NOTES:

⅝" (16) THROUGH BOLT IN TOP HOLE.
½" (13) X 4" (100) LAG BOLT IN BOTTOM HOLE.
(G) LENGTH REQUIRED TO PROVIDE CLEARANCE IN ACCORDANCE WITH PURA CONSTRUCTION STANDARD SECTION 16.243.

COMMUNICATION CABLE EXTENSION BRACKET

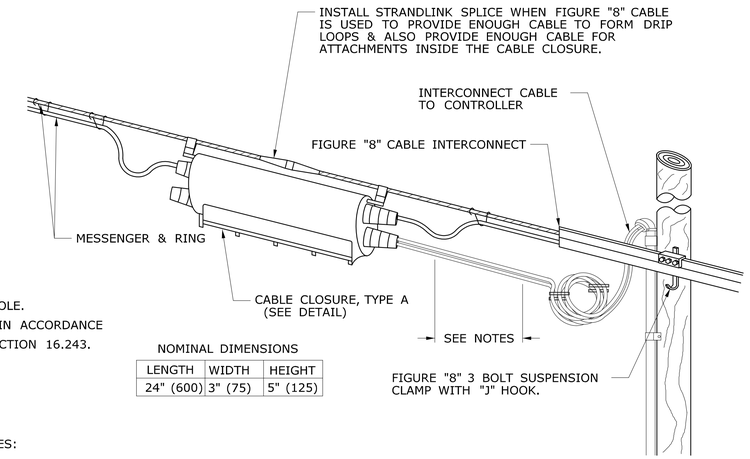

NOMINAL DIMENSIONS

LENGTH	WIDTH	HEIGHT
24" (600)	3" (75)	5" (125)

NOTES:

CABLE LENGTH IS SHOWN EXTENDED TO CLARIFY DRIP LOOP LEADING TO ENTRANCE FITTINGS.
WHEN CABLE IS TOO LARGE TO FORM DRIP LOOPS, INSTALL DIRECTLY INTO CLOSURE WITHOUT DRIP LOOPS.

OVERHEAD INTERCONNECT INSTALLATION

BONDING AND GROUNDING REQUIREMENTS FOR COMMUNICATION CABLES

1. PLACE BOND ON STRAND USING #6 AWG LEAVE COIL OF SUFFICIENT LENGTH TO REACH THE NEXT STRAND AT ALL OF THE FOLLOWING LOCATIONS:
   A. FIRST POLE
   B. LAST POLE
   C. JUNCTION POLE
   CONTACT THE UTILITY THAT OWNS THE NEXT STRAND TO COMPLETE THE BOND.
2. LEAVE COIL #6 AWG WIRE ATTACHED TO CABLE STRAND OF SUFFICIENT LENGTH TO REACH VERTICAL GROUNDING CONDUCTOR AT LEAST EVERY 10 POLES. NOTIFY ELECTRIC COMPANY TO MAKE ATTACHMENT TO GROUNDING CONDUCTOR.

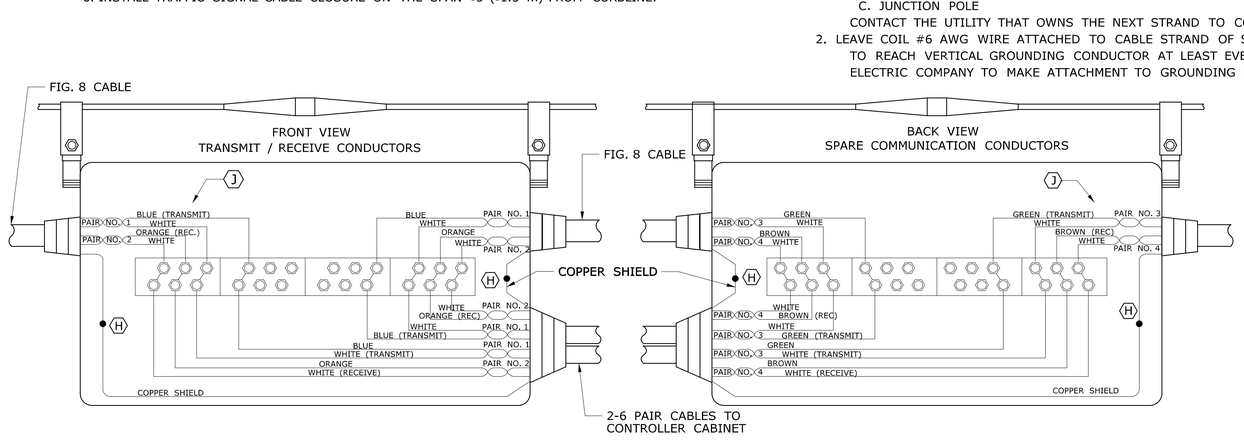

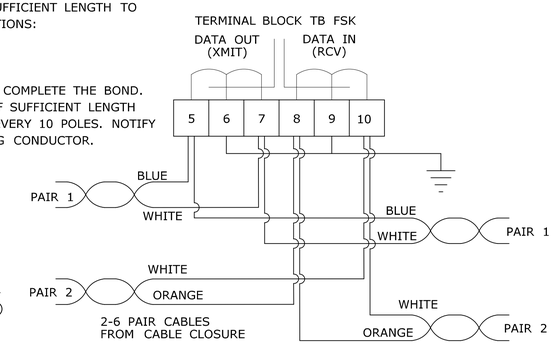

NOTES:

CONNECT SHIELDS TO GROUND ONLY AT EVERY OTHER CABINET, LEAVE SHIELD OPEN AT ALTERNATE CABINETS.
TAG 6 PAIR CABLES WITH INTERSECTION DESTINATION.
SPARE PAIRS TO BE FOLDED BACK AND NEATLY TIED ADJACENT TO TERMINAL BLOCK.

TYPICAL COMMUNICATION CABLE CONNECTION IN CONTROLLER CABINET

FIG. 8 CABLE			
PAIR #	DOT SPARE	PAIR #	MUNICIPAL SPARES
3	GREEN - WHITE	5	SLATE - WHITE
4	BROWN - WHITE	6	BLUE - RED

6 PAIR, CABLE	
PAIR #	DOT SPARE
5	SLATE - WHITE
6	BLUE - RED

NOTES:

SPARE PAIRS TO BE FOLDED BACK AND NEATLY TIED. GROUP MUNICIPAL SPARES TOGETHER, SEPARATE FROM THOSE RESERVED FOR D.O.T. MUNICIPAL SPARES ARE NOT TO BE CUT.
DO NOT BOND THE CABLE SHEATH TO THE SUPPORT STRAND.
(H) CONNECT ONLY TO SHIELD OF CORRESPONDING 6 PAIR CABLE.
(J) WHEN CONNECTING TO AN EXISTING SYSTEM, VERIFY COLOR CODE OF TRANSMIT AND RECEIVE CONDUCTORS.

TYPICAL COMMUNICATION CABLE CONNECTION IN CABLE CLOSURE, TYPE A

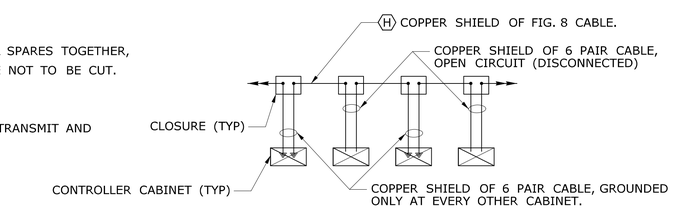

LEGEND AS SHOWN ON TRAFFIC CONTROL SIGNAL PLAN:
- PROPOSED UTILITY POLE
- EXISTING UTILITY POLE
- POLE ANCHOR & GUY
- CABLE CLOSURE

REV.	DATE	REVISION DESCRIPTION
2	4-2014	ADDED CABLE CLOSURE FOR TRAFFIC SIGNALS, NOTE #6.
1	4-2012	MINOR REVISIONS.

THE INFORMATION, INCLUDING ESTIMATED QUANTITIES OF WORK, SHOWN ON THESE SHEETS IS BASED ON LIMITED INVESTIGATIONS BY THE STATE AND IS IN NO WAY WARRANTED TO INDICATE THE CONDITIONS OF ACTUAL QUANTITIES OF WORK WHICH WILL BE REQUIRED.

Plotted Date: 4/12/2014

DIMENSIONS ARE IN ENGLISH ('.') & METRIC UNITS (mm).
METRIC DIMENSIONS ARE ROUNDED:
- OVER 1" TO NEAREST 5 mm
- UNDER 1" TO NEAREST 1 mm.

NOT TO SCALE

STATE OF CONNECTICUT
DEPARTMENT OF TRANSPORTATION

Filename: CTDOT_TRAFFIC_STD.DGN Model: TR-1113_01

SUBMITTED BY: NAME/DATE/TIME: Tracy L. Fogarty, P.E. 2014.25 16:02:38-04'00'
APPROVED BY: NAME/DATE/TIME: Digitally signed by Charles S. Harlow, P.E. Date: 2014.04.29 14:31:58-04'00'

CTDOT STANDARD SHEET
OFFICE OF ENGINEERING

STANDARD SHEET TITLE: CONTROL CABLE

STANDARD SHEET NO.: TR-1113_01

DELINEATORS DE-1, DE-2, DE-3

INSTALLATION ON DELINEATOR POSTS

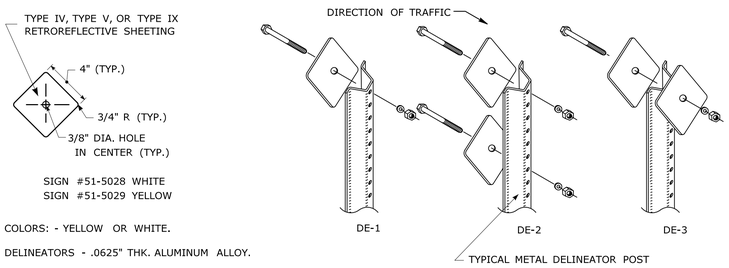

SIGN #51-5028 WHITE
SIGN #51-5029 YELLOW

COLORS: - YELLOW OR WHITE.

DELINEATORS - .0625" THK. ALUMINUM ALLOY.

FACE SHALL BE PRESSURE SENSITIVE, SELF ADHERING, TYPE IV, TYPE V, OR TYPE IX RETROREFLECTIVE SHEETING.

DELINEATORS SHALL BE FASTENED WITH 5/16" STAINLESS STEEL ASTM A-193 CLASS 1, GRADE B8 (TYPE 304) OR BETTER HEX HEAD BOLT (LENGTH AS REQUIRED), WASHER AND FIBER INSERT SELF LOCKING NUT, ON STANDARD METAL DELINEATOR POST.

INSTALLATION ON PERMANENT CONCRETE BARRIER, BRIDGE PARAPETS AND RETAINING WALLS

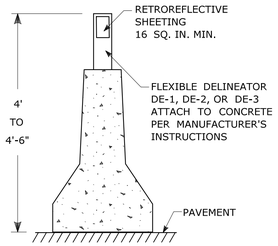

DELINEATORS DE-1, DE-2, DE-3 TO BE PAID FOR UNDER SECTION 12.05 DELINEATORS.

DELINEATORS DE-4, DE-4A, DE-5 FOR INSTALLATION ON METAL BRIDGE RAIL

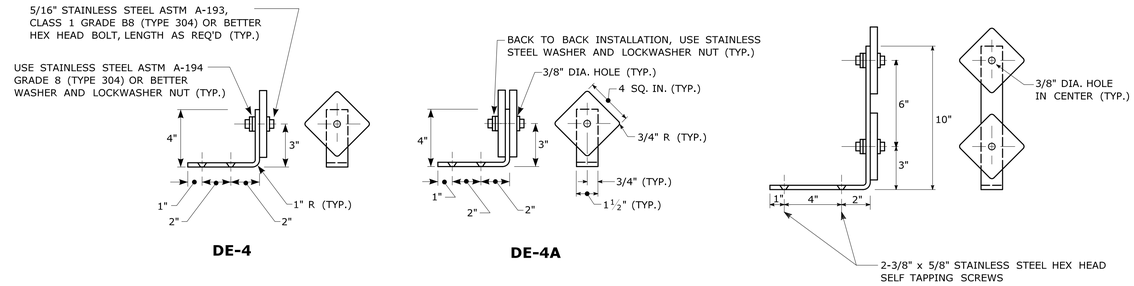

COLORS: - YELLOW OR WHITE.
DELINEATORS - .0625" THK. ALUMINUM ALLOY.
BRACKET - .125" THK. ALUMINUM ALLOY, AND SHALL CONFORM TO SPECIFICATION M.18.07-03 BRIDGE RAIL MOUNTING BRACKETS.
FACE SHALL BE PRESSURE SENSITIVE, SELF ADHERING, TYPE IV, TYPE V, OR TYPE IX RETROREFLECTIVE SHEETING.
USE STAINLESS STEEL WASHERS ON FACE OF DELINEATORS, 5/8" O.D. X 3/8" I.D. X .032" THK. (TYP.)

DELINEATORS TYPE DE-4, DE-4A, AND DE-5 TO BE PAID FOR UNDER SECTION 12.05 DELINEATORS.

TYPICAL MAINLINE & INTERCHANGE DELINEATION

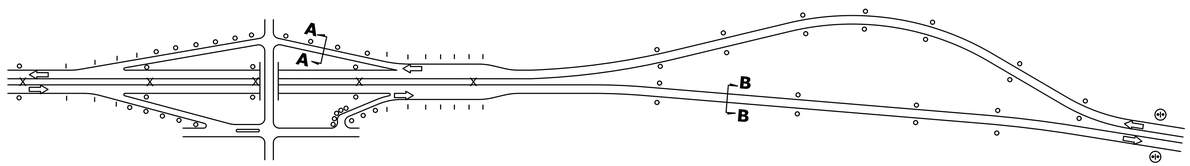

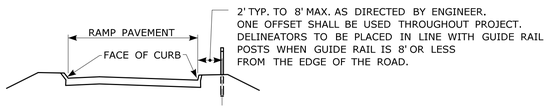

SECTION A-A

DELINEATOR PLACEMENT ON RAMPS
ON TANGENT SECTIONS - RIGHT SIDE OF RAMP
ON CURVED SECTIONS - BOTH SIDES OF CURVE

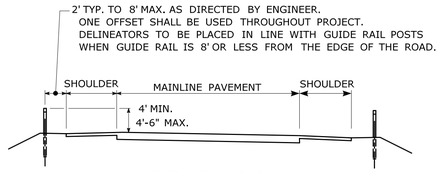

SECTION B-B

DELINEATOR PLACEMENT ON MAINLINE

DELINEATOR SPACING NOTES:

1) AT LOCATIONS WHERE THE MEDIAN WIDTH (BETWEEN SHOULDERS) IS 12' OR LESS, AND MEDIAN BEAM RAIL IS PRESENT, TYPE DE-3 DELINEATORS SHALL BE MOUNTED WITHIN THE MEDIAN BEAM RAIL.
2) SPACING ON MAINLINE EXPRESSWAY TANGENTS SHALL BE 400'.
3) SPACING ON MAINLINE EXPRESSWAY CURVES SHALL BE AS SPECIFIED IN TABLE 3F-1 OF THE MUTCD.
4) ON ACCELERATION AND DECELERATION LANES AND ON-RAMP TANGENT SECTIONS, DELINEATOR SPACING SHALL BE 100'.
5) ON CURVED PORTIONS OF RAMPS, DELINEATOR SPACING SHALL BE IN ACCORDANCE WITH TABLE 3F-1 OF THE MUTCD, BUT NOT TO EXCEED 100'.

LEGEND:

- ° DE-1 DELINEATORS OR DE-4 DELINEATOR ASSEMBLY
- ı DE-2 DELINEATORS OR DE-5 DELINEATOR ASSEMBLY
- X DE-3 DELINEATORS ASSEMBLY OR DE-4A DELINEATOR
- ⊕ D10-1, 2, 3, OR 4 ASSEMBLY TO BE INSTALLED WHERE SHOWN ON PLANS OR AS DIRECTED BY THE ENGINEER.

COLOR APPLICATION, FOR DE-1 THRU DE-5

LEFT SIDE OF ALL ROADWAYS AND RAMPS - YELLOW
RIGHT SIDE OF ALL ROADWAYS AND RAMPS - WHITE

MUTCD TABLE 3F-1 APPROXIMATE SPACING FOR DELINEATORS ON HORIZONTAL CURVES

RADIUS (R) OF CURVE (feet)	APPROXIMATE SPACING (S) ON CURVE (feet)
50	20
115	25
180	35
250	40
300	50
400	55
500	65
600	70
700	75
800	80
900	85
1,000	90

DISTANCE IN FEET WERE ROUNDED TO THE NEAREST 5 FEET. SPACING FOR SPECIFIC RADII MAY BE INTERPOLATED FROM TABLE. THE MINIMUM SPACING SHOULD BE 20 FEET. THE SPACING ON CURVES SHOULD NOT EXCEED 300 FEET. IN ADVANCE OF OR BEYOND A CURVE, AND PROCEEDING AWAY FROM THE END OF THE CURVE, THE SPACING OF THE FIRST DELINEATOR IS 2S, THE SECOND IS 3S, AND THE THIRD 6S BUT NOT TO EXCEED 300 FEET.

S REFERS TO THE DELINEATOR SPACING FOR SPECIFIC RADII COMPUTED FROM THE FORMULA: $S=3\sqrt{R-50}$.

DELINEATORS DE-7, DE-7A, DE-7B, DE-7D FOR INSTALLATION ON TEMPORARY PRECAST CONCRETE BARRIER CURB AND TEMPORARY PRECAST CONCRETE BARRIER CURB (STRUCTURE)

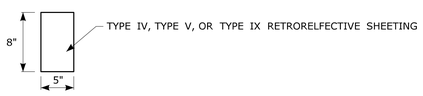

DE-7 ONE WAY WHITE
DE-7A ONE WAY YELLOW
DE-7B TWO WAY YELLOW
DE-7D TWO WAY WHITE
TEMPORARY PRECAST CONCRETE BARRIER DELINEATORS ARE TO BE FABRICATED OF ALUMINUM, STEEL, PLASTIC, OR OF A MATERIAL APPROVED BY THE ENGINEER AND MOUNTED IN THE CENTER OF EACH SECTION OF TEMPORARY BARRIER AS REQUIRED AND PER MANUFACTURER'S INSTRUCTIONS.

SPACING FOR TEMPORARY BARRIER CURB DELINEATORS:

ON THE LEADING TAPERED SECTION - EVERY 20',
ON THE FIRST 100' OF THE PARALLEL SECTION - EVERY 20',
ON THE REMAINING LENGTH - EVERY 100', MINIMUM OF 2 IF LESS THAN 100',
ALTERNATING ONE WAY TRAFFIC - EVERY 20',
ALL OTHER ROADWAYS SHALL BE DELINEATED IN ACCORDANCE WITH MUTCD.

DELINEATORS DE-7, DE-7A, DE-7B, AND DE-7D TO BE PAID FOR UNDER SECTION 12.05 DELINEATORS.

ATTENUATOR REFLECTORS SIGN #40-4266

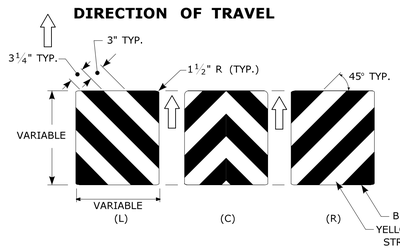

THIS SHEETING WITHOUT A SUBSTRATE TO BE INSTALLED ON THE NOSE OF THE IMPACT ATTENUATOR WITH ADHESIVE IN ACCORDANCE WITH THE MANUFACTURER'S RECOMMENDATIONS.
THE SHEETING SHALL COVER THE NOSE OF THE IMPACT ATTENUATOR.
ON A CURVED NOSE, THE WIDTH OF THE SHEETING SHALL EXTEND 1" BEYOND THE POINT OF CURVATURE ON EACH SIDE OF THE NOSE.
THE HEIGHT AND WIDTH OF THE SHEETING VARIES DEPENDING ON THE SIZE OF THE NOSE OF THE IMPACT ATTENUATOR.

ATTENUATOR REFLECTOR TO BE PAID FOR UNDER SECTION 18.0 IMPACT ATTENUATOR

TYPE 3 OBJECT MARKERS SIGN #41-4267

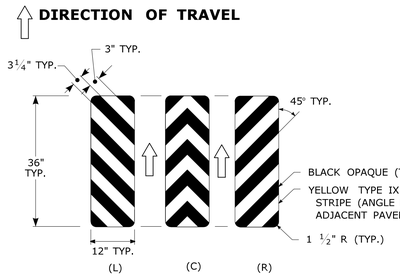

SIGN #41-4267 MARKER MOUNTED ON 4lb. METAL SIGN POST.
BOTTOM OF SIGN #41-4267 TO BE 4' ABOVE ADJACENT EDGE OF PAVEMENT.
FINAL LOCATIONS OF SIGN #41-4267 MARKERS WILL BE AS SHOWN ON THE PLAN OR AS DIRECTED BY THE ENGINEER.

TYPE 3 OBJECT MARKER TO BE PAID FOR UNDER SECTION 12.08 SIGN FACE SHEET ALUMINUM

REV.	DATE	REVISION DESCRIPTION
5	8-2018	INCLUDED DE-7D AND REMOVED DE-7C, DE-9, AND DE-10.
4	4-2017	REVISED ATTENUATOR REFLECTOR AND TYPE 3 OBJECT MARKERS.
3	8-2015	UPDATED PER MUTCD AND FORM 816 JAN 2015 REVISION.
2	2-2011	MINOR REVISIONS.
1	1-2010	INCLUDED DETAILS IN D10-1, D10-2, D10-3 DELINEATORS.

THE INFORMATION, INCLUDING ESTIMATED QUANTITIES OF WORK, SHOWN ON THESE SHEETS IS BASED ON LIMITED INVESTIGATIONS BY THE STATE AND IS IN NO WAY WARRANTED TO INDICATE THE CONDITIONS OF ACTUAL QUANTITIES OF WORK WHICH WILL BE REQUIRED.

Plotted Date: 8/10/2018

NOT TO SCALE

STATE OF CONNECTICUT
DEPARTMENT OF TRANSPORTATION

Filename: TR-1205_01_1_2018.dgn Model: TR-1205_01

SUBMITTED BY: NAME/DATE/TIME: Mark F. Makuch, P.E. 2018.08.17 09:04:28-04'00'
APPROVED BY: NAME/DATE/TIME: Mark F. Carlino, P.E. 2018.08.21 07:47:46-04'00'

CTDOT STANDARD SHEET
OFFICE OF ENGINEERING

STANDARD SHEET TITLE:
DELINEATION, DELINEATORS AND OBJECT MARKER DETAILS

STANDARD SHEET NO.:
TR-1205_01

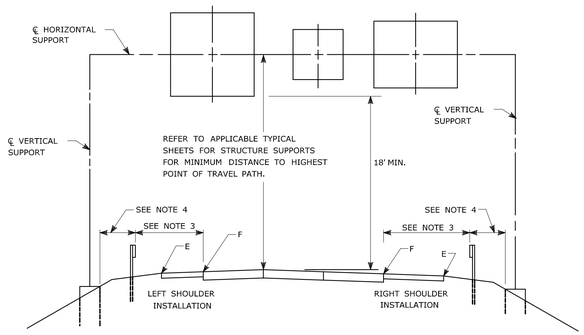

TYPICAL PLACEMENT OF OVERHEAD SIGNS ON SIGN SUPPORTS

NOTES:

1) FOR PLACEMENT OF CANTILEVER SIGN SUPPORT USE APPLICABLE PORTION OF ABOVE DETAIL.
2) BARRIER SYSTEMS MAY BE REQUIRED FOR BOTH SIDES OF SUPPORTS IN MEDIANS.
3) IMPACT PROTECTION SHALL BE PROVIDED FOR THE SIGN SUPPORTS LOCATED WITHIN CLEAR ZONE.
4) SIGN SUPPORT FOUNDATIONS SHALL BE LOCATED OUTSIDE OF BARRIER SYSTEMS DEFLECTION AREA.
5) ALL SIGNS ARE TO BE LEVEL, REGARDLESS OF CAMBER IN SUPPORT.

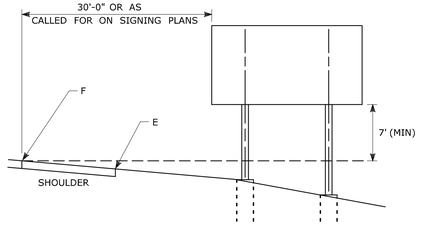

TYPICAL PLACEMENT OF SIDE MOUNTED SIGNS ON STRUCTURAL STEEL BREAKAWAY SIGN SUPPORTS

NOTES:

1) MIN. VERTICAL CLEARANCE ABOVE SIDEWALKS SHALL BE 7'.
2) WHERE GUIDE RAIL IS USED, THE OFFSET TO THE NEAR EDGE OF SIGN FACE SHALL BE AS SHOWN ELSEWHERE IN THE CONTRACT PLANS.
3) ON INTERSECTING ROADS AT RAMP TERMINI, THE OFFSET TO THE NEAR EDGE OF OF SIGN FACE SHALL BE 6' MIN. FROM POINT "E".
4) IF 30'-0" MIN. CANNOT BE MET, PLEASE CONTACT THE ENGINEER.

FOR MAXIMUM EFFECTIVENESS, POSITION SIDE MOUNTED SIGNS ON STRUCTURAL STEEL BREAKAWAY SIGN SUPPORTS AS FOLLOWS:

ON A TANGENT SECTION, POSITION THE SIGN SO THE VERTICAL AXIS IS PLUMB AND THE HORIZONTAL AXIS IS AT AN ANGLE OF 90° WITH THE TRAFFIC LANE WHICH THE SIGN SERVES. SIGNS LOCATED 30 FT OR MORE FROM THE EDGE OF THE ROAD SHALL BE TURNED APPROXIMATELY 3° TOWARD THE ROAD.

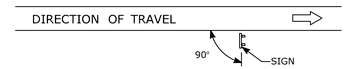

DIAGRAM "A"

ON A HORIZONTAL CURVE SECTION, POSITION THE SIGN SO THE VERTICAL AXIS IS PLUMB AND THE HORIZONTAL AXIS IS AT AN ANGLE OF 90° WITH A STRAIGHT LINE BETWEEN THE SIGN AND THE POINT AT WHICH THE SIGN SHALL BE READ.

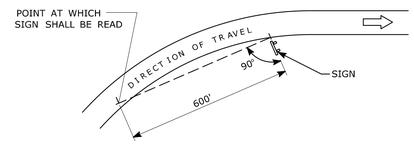

DIAGRAM "B"

SIGN ORIENTATION DETAILS FOR SIDE MOUNTED SIGNS ON STRUCTURAL STEEL BREAKAWAY SIGN SUPPORTS

RETROREFLECTIVE STRIPS 48" LONG OR LESS:

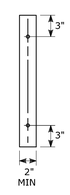

RETROREFLECTIVE STRIPS OVER 48" LONG:

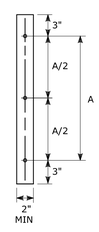

RETROREFLECTIVE STRIP DETAIL

NOTES:

RETROREFLECTIVE STRIPS WHICH ARE 48 IN LONG OR LESS SHALL BE ATTACHED USING 2 BOLTS AND RETROREFLECTIVE STRIPS OVER 48 IN LONG SHALL BE ATTACHED USING 3 BOLTS AS SHOWN ON THE DETAILS ABOVE.
REFER TO STANDARD SHEET No. TR-1208_02 "METAL SIGN POSTS AND SIGN MOUNTING DETAILS" FOR MOUNTING DETAILS.

RETROREFLECTIVE STRIP COLOR SHALL MATCH THE BACKGROUND COLOR OF THE SIGN, EXCEPT THAT THE COLOR OF THE STRIP FOR "YIELD" AND "DO NOT ENTER" SIGNS SHALL BE RED.

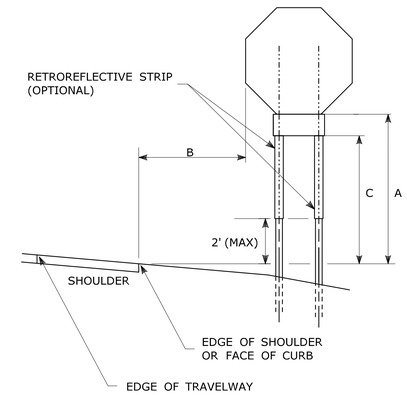

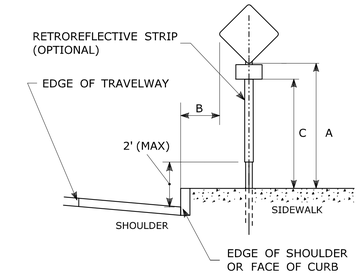

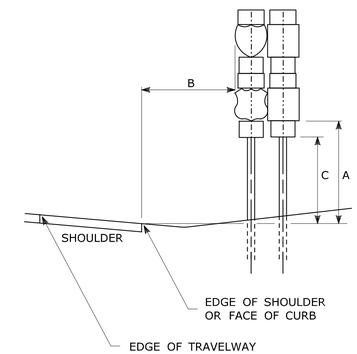

TYPICAL SIGN PLACEMENT DETAIL

NOTES:

ALL SIGNS AND SHIELDS ON DIRECTIONAL ASSEMBLIES SHALL ABUT VERTICALLY.

REFER TO STANDARD SHEET No. TR-1208_02 "METAL SIGN POSTS AND SIGN MOUNTING DETAILS" FOR SIGN POSTS AND SIGN MOUNTING.

IF A RETFOREFLECTIVE STRIP IS USED ON SIGN SUPPORT, IT SHALL BE PLACED FOR THE FULL LENGTH OF THE SUPPORT FROM THE BOTTOM OF THE SIGN TO WITHIN 2 FT ABOVE THE EDGE OF THE ROADWAY.

PARKING SIGNS TYPICALLY USE 45° MOUNTING BRACKET.

DIM."A" MIN SIGN HEIGHT	DIM."B" MIN LATERAL OFFSET (1)	DIM."C" MIN PLAQUE HEIGHT (1)	ASSEMBLY LOCATION
7' (2)	6' 12' (3)	5'	SIGNS ON FREEWAYS AND EXPRESSWAYS EXCEPT CHEVRON ALIGNMENT SIGNS, ONE-DIRECTION LARGE ARROW SIGNS, DO NOT ENTER SIGNS, AND WRONG WAY SIGNS
5'	2'	4'	• SIGNS IN RURAL AREAS • DO NOT ENTER AND WRONG WAY SIGNS ALONG EXIT RAMPS • DO NOT ENTER AND WRONG WAY SIGNS ON LIMITED ACCESS HIGHWAYS
5'	2'	N/A	• CHEVRON ALIGNMENT SIGNS LOCATED ON FREEWAYS, EXPRESSWAYS, RAMPS, AND IN RURAL AREAS • ONE-DIRECTION LARGE ARROW SIGNS LOCATED ON FREEWAYS, EXPRESSWAYS, RAMPS, AND IN RURAL AREAS
4'	6' 12' (3)	N/A	INCIDENT MANAGEMENT SIGNS AND MILE POST MARKER ASSEMBLIES LOCATED ON FREEWAYS AND EXPRESSWAYS
4'	2'	4'	CENTRAL ISLANDS OF ROUNDABOUTS
7'	2' (4)	6'	BUSINESS & RESIDENTIAL AREAS WHERE PARKING OR OTHER OBSTRUCTIONS LIMIT VISIBILITY
7'	2' (4)	7'	SIDEWALKS (5)

(1) OR AS DIRECTED BY THE ENGINEER

(2) 8 FT MINIMUM HEIGHT REQUIRED IF A SUPPLEMENTAL PLAQUE IS SUBMOUNTED BELOW THE MAJOR SIGN.

(3) 6 FT FROM EDGE OF SHOULDER, WHEN SHOULDER IS OVER 6 FT WIDE
12 FT FROM EDGE OF TRAVELWAY, WHEN SHOULDER IS LESS THAN 6 FT WIDE.

(4) A LATERAL OFFSET OF AT LEAST 1 FT FROM THE FACE OF THE CURB MAY BE USED WHERE SIDEWALK WIDTH IS LIMITED OR WHERE EXISTING UTILITY POLES ARE CLOSE TO THE CURB.

(5) A CLEAR PATH OF NOT LESS THAN 4 FT SHALL BE PROVIDED IN SIDEWALK AREAS.

REV.	DATE	REVISION DESCRIPTION
3	8-2018	INCLUDED INCIDENT MANAGEMENT AND MILE MARKER SIGNS.
2	4-2017	MINOR REVISIONS.
1	2-2011	MINOR REVISIONS.

THE INFORMATION, INCLUDING ESTIMATED QUANTITIES OF WORK, SHOWN ON THESE SHEETS IS BASED ON LIMITED INVESTIGATIONS BY THE STATE AND IS IN NO WAY WARRANTED TO INDICATE THE CONDITIONS OF ACTUAL QUANTITIES OF WORK WHICH WILL BE REQUIRED.

Plotted Date: 8/10/2018

NOT TO SCALE

STATE OF CONNECTICUT
DEPARTMENT OF TRANSPORTATION

Filename: TR_1208_01_1_2018.dgn Model: TR-1208_01

SUBMITTED BY: NAME/DATE/TIME: Mark F. Makuch, P.E. 2018.08.17 09:06:06-04'00'

APPROVED BY: NAME/DATE/TIME: Mark F. Carlino, P.E. 2018.08.21 07:48:06-04'00'

CTDOT STANDARD SHEET

OFFICE OF ENGINEERING

STANDARD SHEET TITLE:

SIGN PLACEMENT AND RETROREFLECTIVE STRIP DETAILS

STANDARD SHEET NO.: TR-1208_01

TYPICAL METAL SIGN POSTS

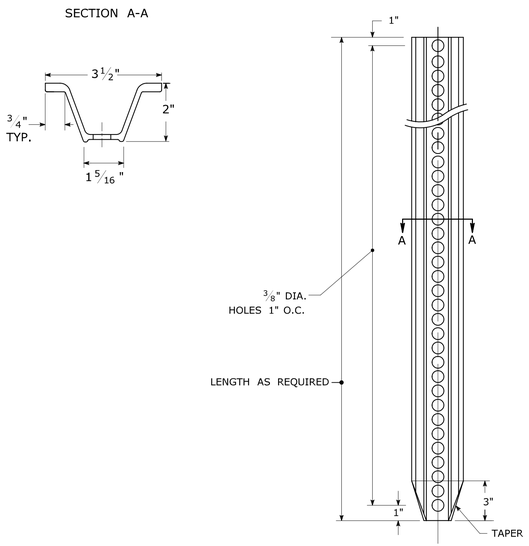

TYPICAL SIGN PANEL ATTACHMENT

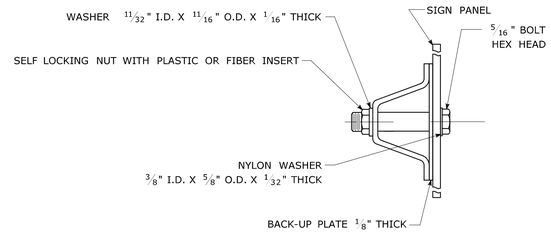

TYPICAL BACK TO BACK SIGN PANEL ATTACHMENT

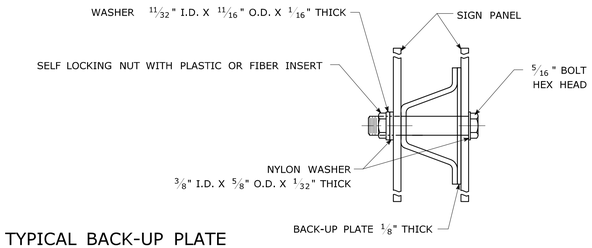

TYPICAL BACK-UP PLATE

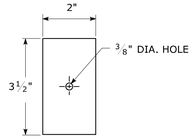

BOLTS - STAINLESS STEEL CONFORMING TO ASTM F593, ALLOY GROUP 1 OR 2 (ALLOY TYPES 304 OR 316).
SELF LOCKING NUTS - STAINLESS STEEL CONFORMING TO ASTM F594, ALLOY GROUP 1 OR 2 (ALLOY TYPES 304 OR 316).
WASHERS - STAINLESS STEEL CONFORMING TO ASTM A240, (ALLOY TYPES 304 OR 316).

METAL DELINEATOR POST

WT./FT. = 1.12 LBS./FT. MIN.

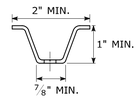

SECTION C-C

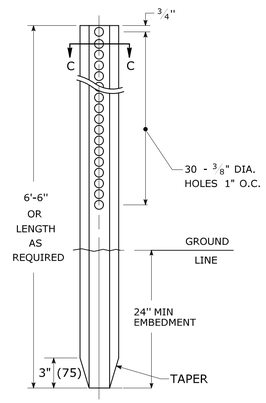

GENERAL NOTES:

1. STEEL FOR DELINEATOR POSTS SHALL BE ASTM A36 STEEL. STEEL FOR ALL OTHER POSTS SHALL CONFORM TO THE MECHANICAL REQUIREMENTS OF ASTM A 499 GRADE 80 AND TO THE CHEMICAL REQUIREMENTS OF ASTM A1 CARBON STEEL TEE RAIL HAVING NOMINAL WEIGHT (MASS) OF 91 LBS. OR GREATER PER LINEAR YARD.
2. AFTER FABRICATION, ALL STEEL POSTS, STRAPS AND PLATES SHALL BE GALVANIZED TO MEET THE REQUIREMENTS OF ASTM A123.
3. WASHERS FOR BREAKAWAY INSTALLATIONS SHALL MEET ASTM F436, TYPE 1.
4. SPACER BAR FOR BREAKAWAY INSTALLATION SHALL CONFORM TO THE MECHANICAL REQUIREMENTS OF ASTM A36.
5. ALL BOLTS, NUTS, AND WASHERS FOR BREAKAWAY INSTALLATIONS SHALL BE GALVANIZED TO MEET THE REQUIREMENTS OF ASTM A153.
6. ALL SIGN POSTS SHALL HAVE BREAKAWAY FEATURES THAT MEET AASHTO REQUIREMENTS CONTAINED IN THE CURRENT "STANDARD SPECIFICATIONS FOR STRUCTURAL SUPPORTS FOR HIGHWAY SIGNS, LUMINAIRES AND TRAFFIC SIGNALS." THE BREAKAWAY FEATURES SHALL BE STRUCTURALLY ADEQUATE TO CARRY THE SIGNS SHOWN IN THE PLANS AT 60 mph WIND LOADINGS. INSTALLATIONS SHALL BE IN ACCORDANCE WITH MANUFACTURERS RECOMMENDATIONS.
7. SIGN POSTS SHALL BE 4 LBS./FT.

BREAKAWAY INSTALLATION

FOR 4 LBS./FT. POSTS

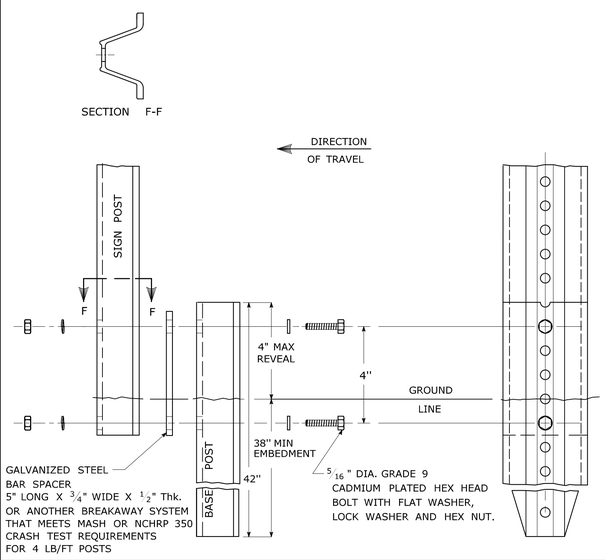

TYPICAL SIGN POST INSTALLATION IN LEDGE

LEDGE SHALL BE REMOVED TO DRIVE THE BASE POST TO A DEPTH OF 38".

HOLE SHALL BE FILLED WITH SUB-BASE MATERIAL AND COMPACTED WITH A TAMPING BAR, OR TECHNIQUE APPROVED BY THE ENGINEER, PRIOR TO BASE POST INSTALLATION.

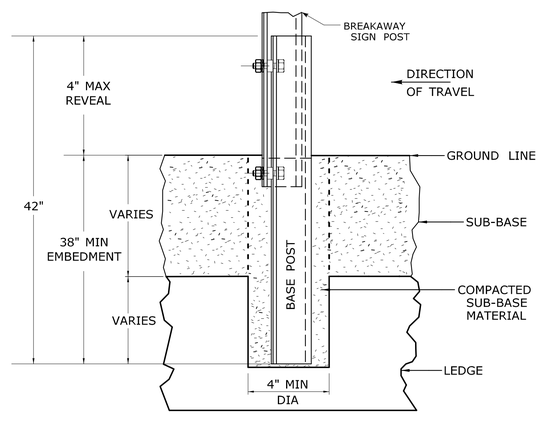

TYPICAL SLEEVE FOR PAVED AREAS

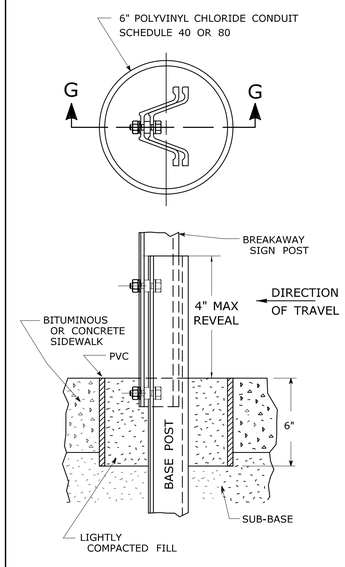

45° MOUNTING BRACKET FOR INSTALLATION OF PARKING SIGNS

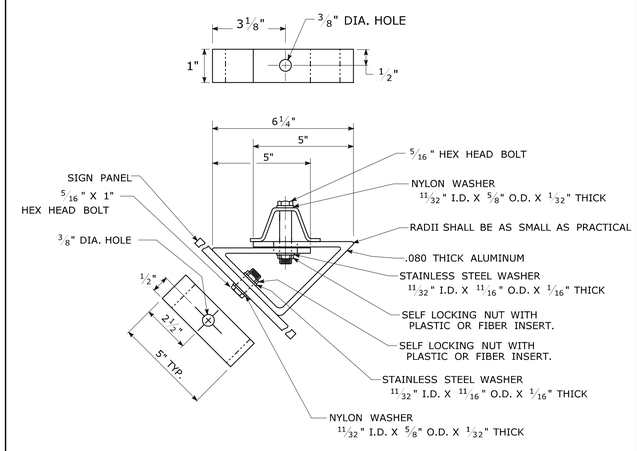

REV.	DATE	REVISION DESCRIPTION
2	6-2017	SIGN POST REVISIONS.
1	2-2011	MINOR REVISIONS.

THE INFORMATION, INCLUDING ESTIMATED QUANTITIES OF WORK, SHOWN ON THESE SHEETS IS BASED ON LIMITED INVESTIGATIONS BY THE STATE AND IS IN NO WAY WARRANTED TO INDICATE THE CONDITIONS OF ACTUAL QUANTITIES OF WORK WHICH WILL BE REQUIRED.

Plotted Date: 6/6/2017

NOT TO SCALE

STATE OF CONNECTICUT
DEPARTMENT OF TRANSPORTATION

Filename: TR-1208_02_May_2017_Revision.dgn Model: TR-1208_02

SUBMITTED BY:	NAME/DATE/TIME:
	Mark F. Makuch, P.E. 2017.06.07 07:30:30-04'00'
	Mary E. Baker, P.E. 2017.06.13 15:28:14-04'00'
APPROVED BY:	NAME/DATE/TIME:
	Gregory M. Dorosh, P.E. 2017.06.15 09:27:29-04'00'

CTDOT STANDARD SHEET

OFFICE OF ENGINEERING

STANDARD SHEET TITLE:

METAL SIGN POSTS AND SIGN MOUNTING DETAILS

GUIDE SHEET NO.: **TR-1208_02**

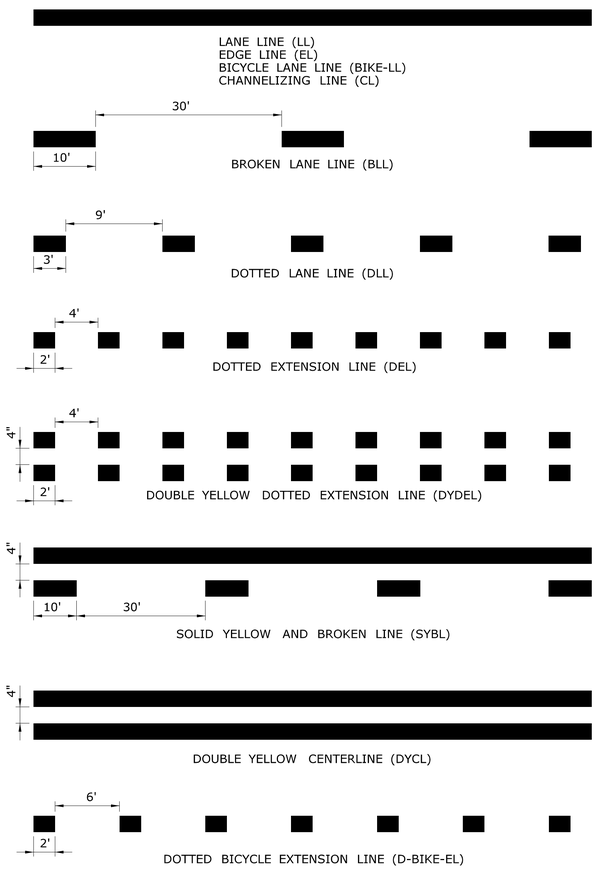

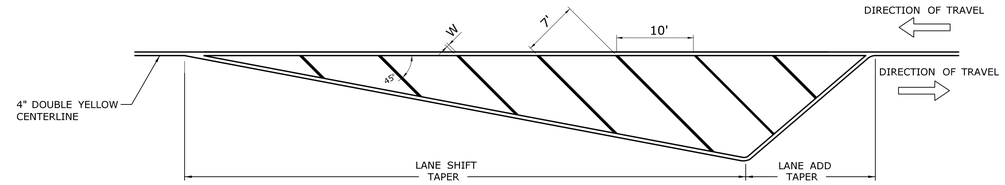

CROSS HATCHED ISLAND DETAIL
(YELLOW)

W IS TO BE 6" WHEN POSTED SPEED ≤ 45 MPH
W IS TO BE 12" WHEN POSTED SPEED > 45 MPH
CROSS HATCHED ISLANDS ARE TO BE INSTALLED WHERE CALLED FOR ON THE PLANS

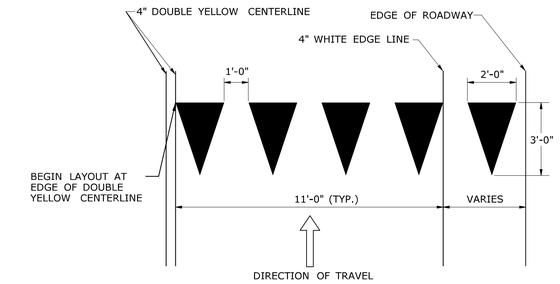

YIELD LINE DETAIL
(WHITE)

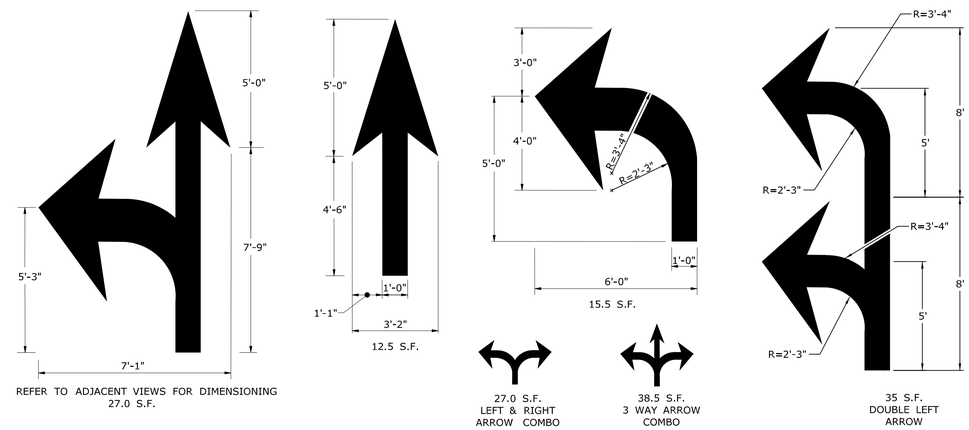

REFER TO ADJACENT VIEWS FOR DIMENSIONING
27.0 S.F.

PAVEMENT ARROW DETAILS
(WHITE)
ARROWS SHALL BE CENTERED IN TRAVEL LANE

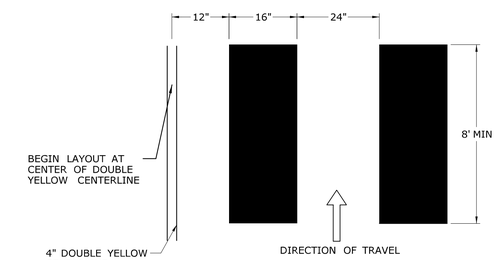

CROSSWALK DETAIL
(WHITE)

NOTES :

1. AREA OF PAVEMENT MARKINGS AS INDICATED IS APPROXIMATE.
2. RIGHT TURN PAVEMENT MARKING ARROWS ARE MIRROR IMAGE OF LEFT TURN PAVEMENT MARKING ARROWS.

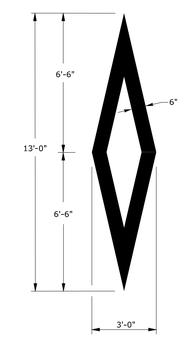

WHITE PREFERENTIAL LANE SYMBOL
13.0 S.F.

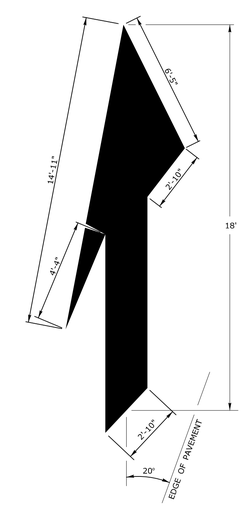

WHITE LANE REDUCTION ARROW
41.8 S.F.

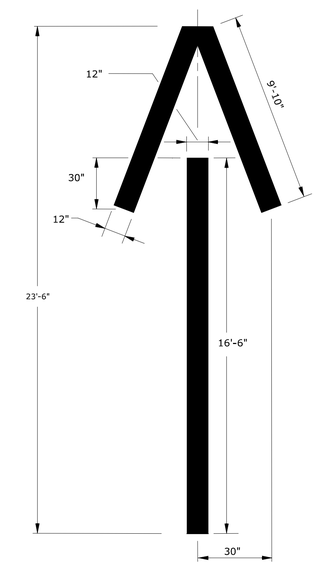

WHITE WRONG WAY PAVEMENT ARROW
36.2 S.F.

REV.	DATE	REVISION DESCRIPTION
1	8-2018	REMOVED ROUNDABOUT MARKINGS.

THE INFORMATION, INCLUDING ESTIMATED QUANTITIES OF WORK, SHOWN ON THESE SHEETS IS BASED ON LIMITED INVESTIGATIONS BY THE STATE AND IS IN NO WAY WARRANTED TO INDICATE THE CONDITIONS OF ACTUAL QUANTITIES OF WORK WHICH WILL BE REQUIRED.

Plotted Date: 8/10/2018

NOT TO SCALE

STATE OF CONNECTICUT
DEPARTMENT OF TRANSPORTATION

Filename: TR-1210_04.dgn Model: CT_Civil_2D_Sheet

SUBMITTED BY: NAME/DATE/TIME: Mark F. Makuch, P.E. 2018.08.17 09:07:44-04'00'

APPROVED BY: NAME/DATE/TIME: Mark F. Carlino, P.E. 2018.08.21 07:48:45-04'00'

CTDOT
STANDARD SHEET

OFFICE OF ENGINEERING

STANDARD SHEET TITLE:

PAVEMENT MARKING LINES AND SYMBOLS

STANDARD SHEET NO.:

TR-1210_04

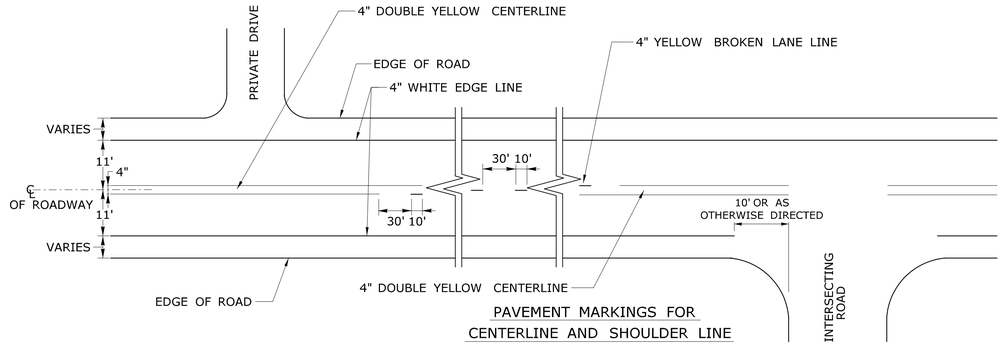

PAVEMENT MARKINGS FOR CENTERLINE AND SHOULDER LINE

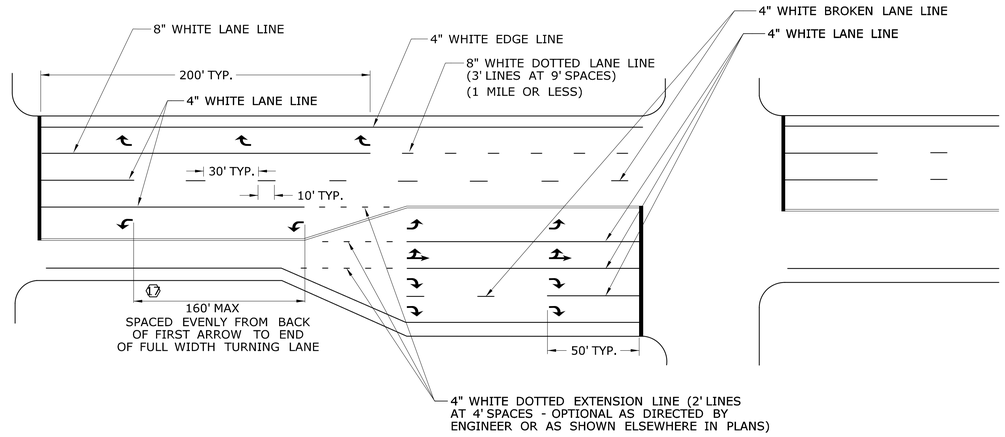

PAVEMENT MARKINGS FOR TURNING LANES AND ROAD LANE-DROP

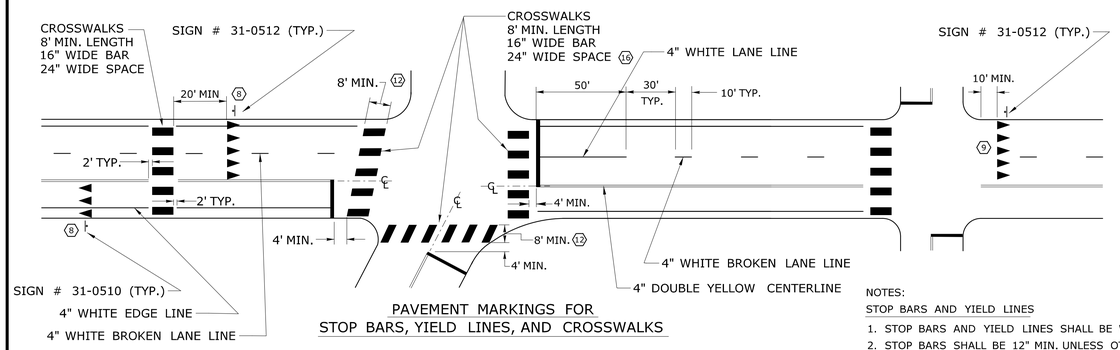

PAVEMENT MARKINGS FOR STOP BARS, YIELD LINES, AND CROSSWALKS

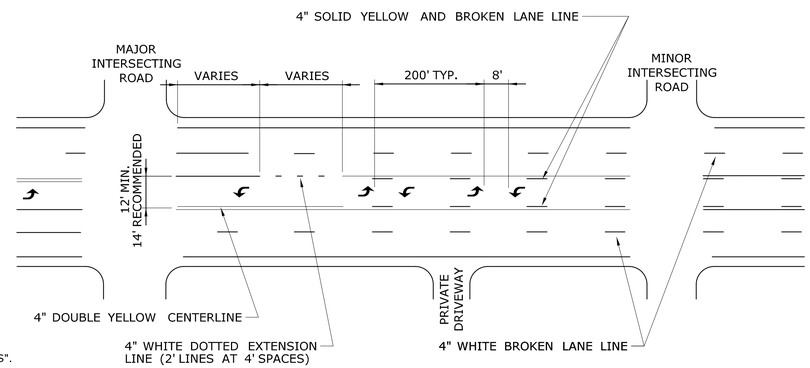

TWO-WAY LEFT-TURN MARKINGS APPLICATIONS

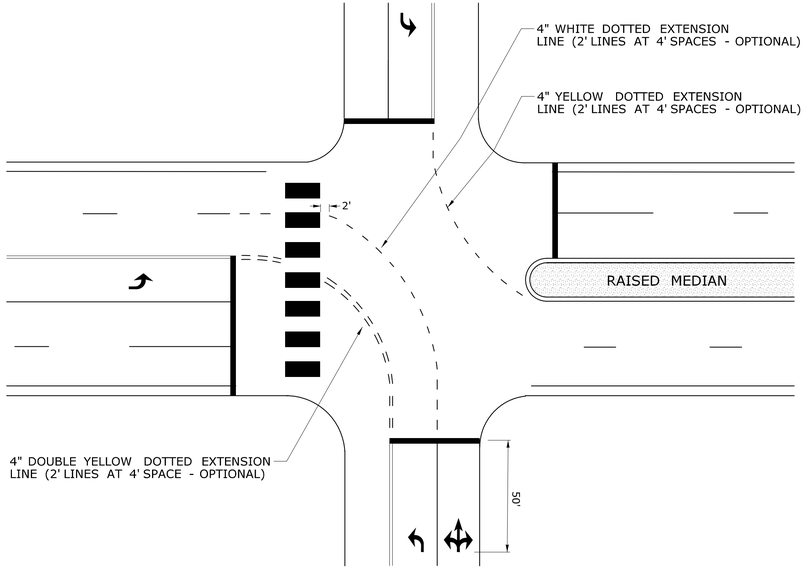

TURNING EXTENSIONS

NOTES:

STOP BARS AND YIELD LINES

1. STOP BARS AND YIELD LINES SHALL BE WHITE.
2. STOP BARS SHALL BE 12" MIN. UNLESS OTHERWISE NOTED ON PLANS.
3. STOP BARS TO BE PLACED A MINIMUM OF 4' IN ADVANCE OF THE NEAREST EDGE OF CROSSWALK AND SHOULD BE PLACED 90° TO THE CENTERLINE OF THE ROADWAY.
4. IN THE ABSENCE OF A MARKED CROSSWALK THE STOP BAR SHOULD BE PLACED 90° TO THE CENTERLINE OF THE ROADWAY, AT THE DESIRED STOPPING POINT AT LEAST 5' AND NO MORE THAN 30' FROM THE NEAREST EDGE OF THE INTERSECTING ROADWAY.
5. THE STOP SIGN SHOULD BE PLACED IN LINE WITH THE STOP BAR. HOWEVER, IF THE STOP SIGN CANNOT BE LOCATED EXACTLY WHERE VEHICLES ARE EXPECTED TO STOP, THE STOP BAR SHOULD BE PLACED AT THE STOPPING POINT.
6. FOR STOP BARS AT RAMPS SEE DETAILS "R", "S", "T", & "U" AND NOTES ON TRAFFIC STANDARD SHEET TR-1210 07 "PAVEMENT MARKINGS FOR DIVIDED HIGHWAYS EXIT RAMPS".
7. FOR YIELD LINE INSTALLATIONS, ONLY FULL TRIANGLES ARE TO BE INSTALLED.

(8) MID-BLOCK CROSSWALKS ARE CROSSWALKS LOCATED MORE THAN 50 FEET FROM A SIGNALIZED OR UNSIGNALIZED INTERSECTION. YIELD LINES ASSOCIATED WITH MIDBLOCK CROSSWALKS SHALL BE INSTALLED AND SHOULD BE LOCATED 20 TO 50 FEET IN ADVANCE OF THE NEAREST CROSSWALK LINE OR AS DIRECTED BY THE ENGINEER.
WHERE A YIELD LINE EXISTS ON AN APPROACH TO A CROSSWALK, THE APPROAPRIATE "YIELD TO PEDESTRIANS" SIGN IS REQUIRED.

(9) FOR CROSSWALKS AT UNSIGNALIZED INTERSECTIONS WITH MINOR STREET STOP CONTROL, YIELD LINES SHALL BE INSTALLED ON MULTI-LANE APPROACHES, BUT NOT SINGLE LANE APPROACHES.

10. THE YIELD SIGN SHOULD BE PLACED IN LINE WITH A YIELD LINE. HOWEVER, IF THE YIELD SIGN CANNOT BE LOCATED EXACTLY WHERE VEHICLES ARE EXPECTED TO YIELD, THE YIELD LINE SHOULD BE PLACED AT THE YIELDING POINT.

CROSSWALKS

11. CROSSWALK MARKINGS SHALL BE WHITE.

(12) AT LOCATIONS WHERE THE CROSSWALK IS SKEWED, BARS TO BE PARALLEL TO ℄ AND ENDS OF BARS TO BE PARALLEL. THE LENGTH OF THE BARS WILL VARY DEPENDING ON THE ANGLE OF SKEW.

13. BARS SHOULD BE NO CLOSER THAN 1' FROM EDGE OF ROAD.
14. ONLY FULL LENGTH BARS ARE TO BE INSTALLED.
15. DECORATIVE CROSSWALKS SHALL BE BANDED FROM CURB TO CURB WITH A MINIMUM 12" WIDE WHITE TRANSVERSE LINE ALONG EACH EDGE.

(16) 24" WIDE SPACE TO BE CENTERED ON YELLOW CENTERLINE.

PAVEMENT MARKINGS FOR TURNING LANES

(17) INSTALL AT LEAST TWO ARROWS PER LANE WHERE STORAGE LENGTH IS GREATER THAN 150 FEET.

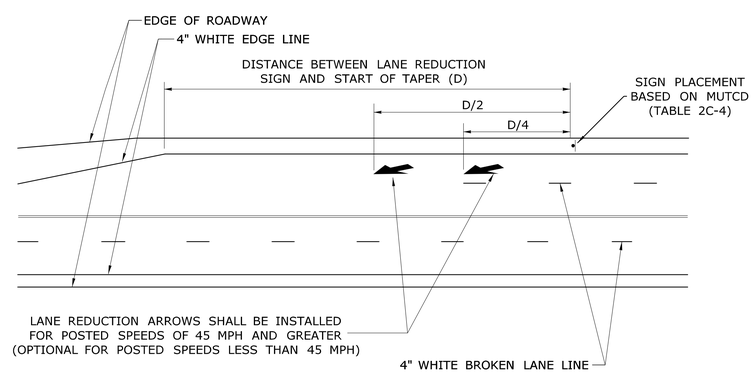

LANE REDUCTION TRANSITIONS

REV.	DATE	REVISION DESCRIPTION
1	8-2018	REVISED YIELD LINE SIGNAGE AND NOTES.

THE INFORMATION, INCLUDING ESTIMATED QUANTITIES OF WORK, SHOWN ON THESE SHEETS IS BASED ON LIMITED INVESTIGATIONS BY THE STATE AND IS IN NO WAY WARRANTED TO INDICATE THE CONDITIONS OF ACTUAL QUANTITIES OF WORK WHICH WILL BE REQUIRED.

Plotted Date: 8/10/2018

NOT TO SCALE

STATE OF CONNECTICUT
DEPARTMENT OF TRANSPORTATION

Filename: TR-1210_08.DGN Model: TR-1210_05

SUBMITTED BY:	NAME/DATE/TIME:
Mark Makuch	Mark F. Makuch, P.E. 2018.08.17 09:10:18-04'00'
APPROVED BY:	NAME/DATE/TIME:
	Mark F. Carlino, P.E. 2018.08.21 07:49:18-04'00'

CTDOT STANDARD SHEET

OFFICE OF ENGINEERING

STANDARD SHEET TITLE:

PAVEMENT MARKINGS FOR NON FREEWAYS

STANDARD SHEET NO.:

TR-1210_08

TYPICAL RAILROAD GRADE CROSSING DETAIL (LANE WIDTH ≥ 10')

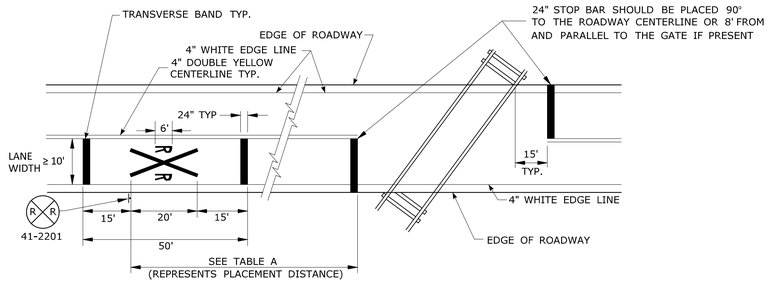

TYPICAL RAILROAD GRADE CROSSING DETAIL (LANE WIDTH < 10')

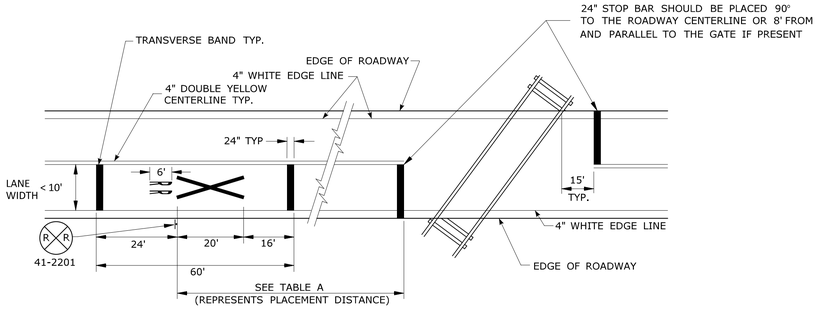

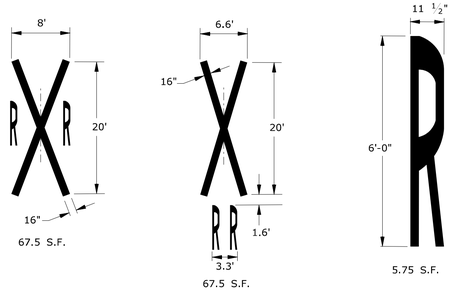

TABLE A	
POSTED OR 85 PERCENTILE SPEED M.P.H.	MINIMUM DISTANCE FT.
20	100
25	100
30	100
35	100
40	125
45	175
50	250
55	325
60	400
65	475

NOTES:

GENERAL:

1. AREA OF PAVEMENT MARKING SYMBOLS AS INDICATED IS APPROXIMATE.
2. REFER TO STANDARD SHEET TR-1210_04 FOR PAVEMENT MARKING LINE DETAILS.

RAILROAD GRADE CROSSINGS:

3. RAILROAD MARKINGS SHALL BE WHITE.
4. ON MULTI-LANE ROADS THE TRANSVERSE BANDS SHOULD EXTEND ACROSS THE APPROACH LANES AND INDIVIDUAL R X R SYMBOLS SHOULD BE USED IN EACH APPROACH LANE.

PARKING STALLS:

5. AUTOMOBILE ACCESSIBLE PARKING SPACES SHALL BE 15' WIDE INCLUDING 5' OF CROSSHATCH.
6. VAN ACCESSIBLE PARKING SPACES SHALL BE 16' WIDE INCLUDING 8' OF CROSSHATCH.
7. ACCESS AISLES FOR ANGLED VAN PARKING SPACES SHALL BE LOCATED ON THE PASSENGER SIDE OF THE PARKING SPACE.
8. CROSS HATCHED ACCESS AISLES SHALL NOT BE SHARED BETWEEN PARKING SPACES.

TYPICAL LONGITUDINAL SPACING

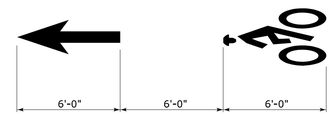

BICYCLE LANE SYMBOL MARKINGS

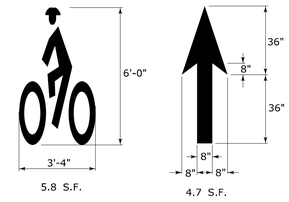

SHARED LANE SYMBOL MARKING

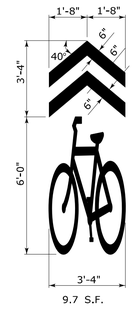

BICYCLE DETECTOR SYMBOL MARKING

TYPICAL PERPENDICULAR PARKING STALLS DETAIL

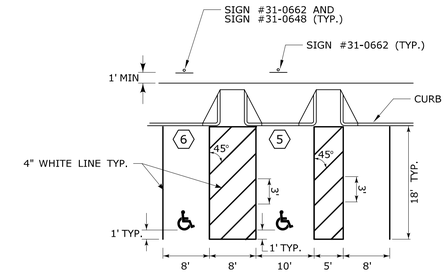

TYPICAL ANGLE PARKING STALLS DETAIL

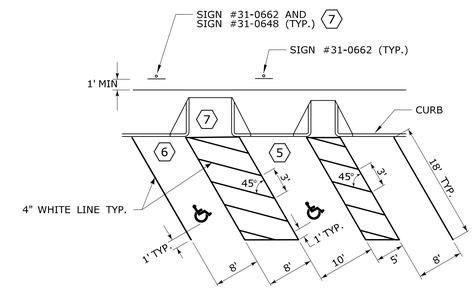

ACCESSIBLE PARKING SPACE SYMBOL

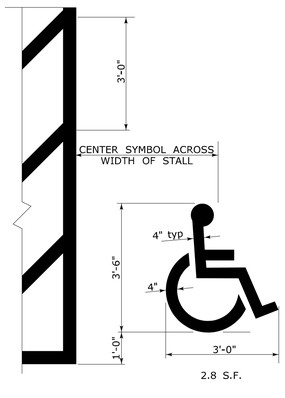

REV.	DATE	REVISION DESCRIPTION

THE INFORMATION, INCLUDING ESTIMATED QUANTITIES OF WORK, SHOWN ON THESE SHEETS IS BASED ON LIMITED INVESTIGATIONS BY THE STATE AND IS IN NO WAY WARRANTED TO INDICATE THE CONDITIONS OF ACTUAL QUANTITIES OF WORK WHICH WILL BE REQUIRED.

Plotted Date: 4/3/2017

NOT TO SCALE

STATE OF CONNECTICUT
DEPARTMENT OF TRANSPORTATION

Filename: TR-1210_09.dgn Model: CT_Civil_2D_Sheet

SUBMITTED BY: NAME/DATE/TIME: Mark F. Makuch, P.E. 2017.04.19 11:17:36-04'00'

APPROVED BY: NAME/DATE/TIME: Gregory M. Dorsch, P.E. 2017.04.20 13:26:20-04'00'

CTDOT STANDARD SHEET

OFFICE OF ENGINEERING

STANDARD SHEET TITLE:

PAVEMENT MARKINGS FOR BICYCLE LANES, PARKING STALLS, AND RAILROAD GRADE CROSSINGS

STANDARD SHEET NO.: TR-1210_09

E5 - SERIES

E5-1

COPY & BORDER - WHITE
BACKGROUND - GREEN

AREA (SQ. FT)	SIZE (INCHES)	CONN. D.O.T. #	POSTS
16.0	48	51-6147	2

16 - SERIES

	AREA (SQ. FT)	SIZE (INCHES)	CONN. D.O.T. #	POSTS
16-M	5.0	30X24	80-1613	1
16-H	17.5	60X42	80-1608	2
16-E	35.0	84X60	80-1605	2

	AREA (SQ. FT)	SIZE (INCHES)	CONN. D.O.T. #	POSTS
16-S	10.0	48X30	80-1619	2

G20 - SERIES

G20-2a

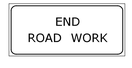

AREA (SQ. FT)	SIZE (INCHES)	CONN. D.O.T. #	POSTS
8.0	48X24	80-9612	2

VARIABLE MILEAGE

AREA (SQ. FT)	SIZE (INCHES)	CONN. D.O.T. #	POSTS
90.0	120X108	80-9728	

AREA (SQ. FT)	SIZE (INCHES)	CONN. D.O.T. #	POSTS
9.0	36	80-9711	1
16.0	48	80-9712	2

VARIABLE MILEAGE

AREA (SQ. FT)	SIZE (INCHES)	CONN. D.O.T. #	POSTS
7.0	72X14	80-9720	

VARIABLE ARROW
COPY & BORDER - WHITE
BACKGROUND - BLUE

AREA (SQ. FT)	SIZE (INCHES)	CONN. D.O.T. #	POSTS
9.0	36	50-5934	2

M4 - SERIES

M4-8

AREA (SQ. FT)	SIZE (INCHES)	CONN. D.O.T. #	POSTS
2.0	24X12	80-9707	1

M4-9b

VARIABLE ARROW

AREA (SQ. FT)	SIZE (INCHES)	CONN. D.O.T. #	POSTS
5.0	30X24	80-9703	1

M4-8a

AREA (SQ. FT)	SIZE (INCHES)	CONN. D.O.T. #	POSTS
3.0	24X18	80-9708	1

M4-9b

VARIABLE ARROW

AREA (SQ. FT)	SIZE (INCHES)	CONN. D.O.T. #	POSTS
6.25	30X30	80-9706	1

M4-10

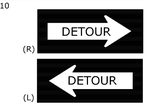

AREA (SQ. FT)	SIZE (INCHES)	CONN. D.O.T. #	POSTS
6.0	48X18	80-9701R	2
6.0	48X18	80-9702L	2

VARIABLE ARROW

AREA (SQ. FT)	SIZE (INCHES)	CONN. D.O.T. #	POSTS
5.0	30X24	80-9710	1

R1 - SERIES

R1-1

COPY & BORDER - WHITE
BACKGROUND - RED

AREA (SQ. FT)	SIZE (INCHES)	CONN. D.O.T. #	POSTS
5.19	30	31-0552	1
13.30	48	31-0557	2

R1-2

COPY & BORDER - RED
BACKGROUND - WHITE

AREA (SQ. FT)	SIZE (INCHES)	CONN. D.O.T. #	POSTS
3.90	36	31-0523	1
10.83	60	31-0528	2

R4 - SERIES

R4-7

COPY & BORDER - BLACK
BACKGROUND - WHITE

AREA (SQ. FT)	SIZE (INCHES)	CONN. D.O.T. #	POSTS
5.0	24X30	31-1526	1

R4-9

COPY & BORDER - BLACK
BACKGROUND - WHITE

AREA (SQ. FT)	SIZE (INCHES)	CONN. D.O.T. #	POSTS
5.0	24X30	31-1517	1
12.0	36X48	31-1518	1
20.0	48X60	31-1519	2

R9 & R11 - SERIES

R9-9

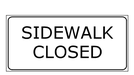

COPY & BORDER - BLACK
BACKGROUND - WHITE

AREA (SQ. FT)	SIZE (INCHES)	CONN. D.O.T. #	POSTS
3.75	30X18	80-9076	1

R11-3a

VARIABLE MILEAGE
COPY & BORDER - BLACK
BACKGROUND - WHITE

AREA (SQ. FT)	SIZE (INCHES)	CONN. D.O.T. #	POSTS
12.5	60X30	80-9077	2

R9-11

VARIABLE ARROW
COPY & BORDER - BLACK
BACKGROUND - WHITE

AREA (SQ. FT)	SIZE (INCHES)	CONN. D.O.T. #	POSTS
3.0	24X18	80-9074	1

R11-3b

VARIABLE MILEAGE
COPY & BORDER - BLACK
BACKGROUND - WHITE

AREA (SQ. FT)	SIZE (INCHES)	CONN. D.O.T. #	POSTS
12.5	60X30	80-9078	2

R9-11a

VARIABLE ARROW
COPY & BORDER - BLACK
BACKGROUND - WHITE

AREA (SQ. FT)	SIZE (INCHES)	CONN. D.O.T. #	POSTS
2.0	24X12	80-9075	1

R11-3b

COPY & BORDER - BLACK
BACKGROUND - WHITE

AREA (SQ. FT)	SIZE (INCHES)	CONN. D.O.T. #	POSTS
12.5	60X30	80-9081	2

R11-2

COPY & BORDER - BLACK
BACKGROUND - WHITE

AREA (SQ. FT)	SIZE (INCHES)	CONN. D.O.T. #	POSTS
10.0	48X30	80-9080	2

COPY & BORDER - BLACK
BACKGROUND - WHITE

AREA (SQ. FT)	SIZE (INCHES)	CONN. D.O.T. #	POSTS
14.0	48X42	31-1906	2
22.5	60X54	31-1907	2

W1 - SERIES

W1-4

AREA (SQ. FT)	SIZE (INCHES)	CONN. D.O.T. #	POSTS
9.0	36	80-9432L	1
9.0	36	80-9431R	1
16.0	48	80-9452L	2
16.0	48	80-9451R	2

W1-6

(L or R)

AREA (SQ. FT)	SIZE (INCHES)	CONN. D.O.T. #	POSTS
8.0	48X24	80-9424	2
12.5	60X30	80-9423	2

W1-8

AREA (SQ. FT)	SIZE (INCHES)	CONN. D.O.T. #	POSTS
3.0	18X24	80-9401	1
5.0	24X30	80-9403	1
7.5	30X36	80-9404	1

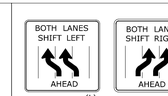

AREA (SQ. FT)	SIZE (INCHES)	CONN. D.O.T. #	POSTS
16.0	48	80-9433L	2
16.0	48	80-9435R	2

AREA (SQ. FT)	SIZE (INCHES)	CONN. D.O.T. #	POSTS
16.0	48	80-9434L	2
16.0	48	80-9436R	2

AREA (SQ. FT)	SIZE (INCHES)	CONN. D.O.T. #	POSTS
25.0	60	80-9443L	2
25.0	60	80-9445R	2

W1-4b

AREA (SQ. FT)	SIZE (INCHES)	CONN. D.O.T. #	POSTS
25.0	60	80-9444L	2
25.0	60	80-9446R	2

AREA (SQ. FT)	SIZE (INCHES)	CONN. D.O.T. #	POSTS
25.0	60	80-9483L	2
25.0	60	80-9485R	2

W1-4c

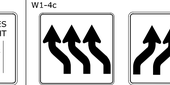

AREA (SQ. FT)	SIZE (INCHES)	CONN. D.O.T. #	POSTS
25.0	60	80-9484L	2
25.0	60	80-9486R	2

W3 - SERIES

W3-1

OCTAGON - RED W/ WHITE BORDER
ARROW & BORDER - BLACK
BACKGROUND - FLUORESCENT ORANGE

AREA (SQ. FT)	SIZE (INCHES)	CONN. D.O.T. #	POSTS
9.0	36	80-9050	1
16.0	48	80-9051	2

W3-2

TRIANGLE - RED W/ WHITE BORDER
ARROW & BORDER - BLACK
BACKGROUND - FLUORESCENT ORANGE

AREA (SQ. FT)	SIZE (INCHES)	CONN. D.O.T. #	POSTS
9.0	36	80-9054	1
16.0	48	80-9055	2

W3-3

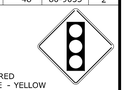

TOP CIRCLE - RED
MIDDLE CIRCLE - YELLOW
BOTTOM CIRCLE - GREEN
COPY & BORDER - BLACK
BACKGROUND - FLUORESCENT ORANGE

AREA (SQ. FT)	SIZE (INCHES)	CONN. D.O.T. #	POSTS
9.0	36	80-9052	1
16.0	48	80-9053	2

W4-W6 - SERIES

W4-2

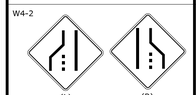

AREA (SQ. FT)	SIZE (INCHES)	CONN. D.O.T. #	POSTS
16.0	48	80-9918L	2
16.0	48	80-9917R	2

W6-3

AREA (SQ. FT)	SIZE (INCHES)	CONN. D.O.T. #	POSTS
16.0	48	80-9945	2

W8-W9 - SERIES

W8-1

AREA (SQ. FT)	SIZE (INCHES)	CONN. D.O.T. #	POSTS
9.0	36	80-9901	1
16.0	48	80-9902	2

AREA (SQ. FT)	SIZE (INCHES)	CONN. D.O.T. #	POSTS
9.0	36	80-9801	1
16.0	48	80-9802	2

W9-2

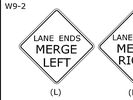

AREA (SQ. FT)	SIZE (INCHES)	CONN. D.O.T. #	POSTS
16.0	48	80-9910L	2
16.0	48	80-9911R	2

W13 - SERIES

W13-1

SUBPLATE
VARIABLE SPEED

AREA (SQ. FT)	SIZE (INCHES)	CONN. D.O.T. #	POSTS
4.0	24	80-9569	1
6.25	30	80-9567	1

VARIABLE SPEED

AREA (SQ. FT)	SIZE (INCHES)	CONN. D.O.T. #	POSTS
9.0	36	80-9506	1
16.0	48	80-9508	2

W3-5

VARIABLE SPEED

AREA (SQ. FT)	SIZE (INCHES)	CONN. D.O.T. #	POSTS
9.0	36	80-9520	1
16.0	48	80-9521	2

W-16 - SERIES

W16-15P

COPY & BORDER - BLACK
BACKGROUND - ORANGE

AREA (SQ. FT)	SIZE (INCHES)	CONN. D.O.T. #	POSTS
2.0	24X12	80-9049	

W20 - SERIES

W20-1

AREA (SQ. FT)	SIZE (INCHES)	CONN. D.O.T. #	POSTS
6.25	30	80-9602	1
9.0	36	80-9603	1
16.0	48	80-9604	2

	AREA (SQ. FT)	SIZE (INCHES)	CONN. D.O.T. #	POSTS
(L)	16.0	48	80-9836	2
(R)	16.0	48	80-9839	2

W20-7a

AREA (SQ. FT)	SIZE (INCHES)	CONN. D.O.T. #	POSTS
9.0	36	80-9803	1
16.0	48	80-9804	2

W20-1

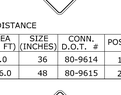

VARIABLE DISTANCE

AREA (SQ. FT)	SIZE (INCHES)	CONN. D.O.T. #	POSTS
9.0	36	80-9614	1
16.0	48	80-9615	2

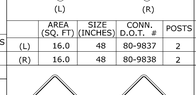

	AREA (SQ. FT)	SIZE (INCHES)	CONN. D.O.T. #	POSTS
(L)	16.0	48	80-9837	2
(R)	16.0	48	80-9838	2

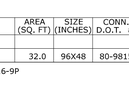

AREA (SQ. FT)	SIZE (INCHES)	CONN. D.O.T. #	POSTS
32.0	96X48	80-9815	2

W20-2

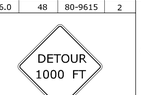

AREA (SQ. FT)	SIZE (INCHES)	CONN. D.O.T. #	POSTS
9.0	36	80-9805	1
16.0	48	80-9806	2

	AREA (SQ. FT)	SIZE (INCHES)	CONN. D.O.T. #	POSTS
(L)	16.0	48	80-9847	2
(R)	16.0	48	80-9848	2

W16-9P

AREA (SQ. FT)	SIZE (INCHES)	CONN. D.O.T. #	POSTS
2.0	24X12	80-9870	
3.75	30X18	80-9871	

AREA (SQ. FT)	SIZE (INCHES)	CONN. D.O.T. #	POSTS
9.0	36	80-9834	1
16.0	48	80-9835	2

	AREA (SQ. FT)	SIZE (INCHES)	CONN. D.O.T. #	POSTS
(L)	16.0	48	80-9846	2
(R)	16.0	48	80-9849	2

W16-3aP

VARIABLE MILEAGE

AREA (SQ. FT)	SIZE (INCHES)	CONN. D.O.T. #	POSTS
2.5	30X12	80-9872	
4.5	36X18	80-9873	

W21 - SERIES

W21-6

AREA (SQ. FT)	SIZE (INCHES)	CONN. D.O.T. #	POSTS
9.0	36	80-9607	1

W22 - SERIES

W22-1

AREA (SQ. FT)	SIZE (INCHES)	CONN. D.O.T. #	POSTS
9.0	36	80-9620	1
16.0	48	80-9625	2

W22-2

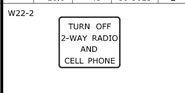

AREA (SQ. FT)	SIZE (INCHES)	CONN. D.O.T. #	POSTS
10.5	42X36	80-9623	2

W22-3

AREA (SQ. FT)	SIZE (INCHES)	CONN. D.O.T. #	POSTS
10.5	42X36	80-9621	2

AREA (SQ. FT)	SIZE (INCHES)	CONN. D.O.T. #	POSTS
4.17	60X10	80-9913	2
12.0	96X18	80-9914	2
3.33	48X10	80-9916	2

BLANK OR
VARIABLE LEGEND

AREA (SQ. FT)	SIZE (INCHES)	CONN. D.O.T. #	POSTS
9.0	36	80-9933	1
16.0	48	80-9934	2

AREA (SQ. FT)	SIZE (INCHES)	CONN. D.O.T. #	POSTS
16.0	48	80-9956	2

AREA (SQ. FT)	SIZE (INCHES)	CONN. D.O.T. #	POSTS
12.5	60X30	80-9928	2
24.0	72X48	80-9929	2

	AREA (SQ. FT)	SIZE (INCHES)	CONN. D.O.T. #	POSTS
(1)	16.0	48	80-9957	2
(2)	9.0	36	80-9958	1
(2)	16.0	48	80-9959	2

STOP-SLOW PADDLE

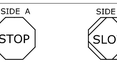

SIDE A
BACKGROUND - RED
COPY & BORDER - WHITE
SIDE B
BACKGROUND - ORANGE
COPY & BORDER - BLACK PLAIN

AREA (SQ. FT)	SIZE (INCHES)	CONN. D.O.T. #	POSTS
2.25	18	80-9950	PADDLE

NOTES:
1. R1-SERIES SIGN THE LEGEND "O.S.T.A." SHALL APPEAR.
2. POSTS - SEE STANDARD SHEET TR-1208_02 - "METAL SIGN POSTS AND SIGN MOUNTING DETAILS".
3. POSTS SHALL BE 4 LBS./FT.
4. ALL POSTS NOTED ARE FOR LONG TERM INSTALLATION. SEE STANDARD SHEET TR-1208_02.
5. FOR TEMPORARY SUPPORTS SEE STANDARD SHEET TR-1220_02 - "CONSTRUCTION SIGN SUPPORTS AND CHANNELIZING DEVICES".
6. FOR SPECIFIC SIGN DESIGN, CONTACT CONN. D.O.T., DIVISION OF TRAFFIC ENGINEERING. FOR BOLT HOLE PATTERN REFER TO FHWA PUBLICATION "STANDARD HIGHWAY SIGNS". SIGNS OF DIFFERENT DIMENSIONS TO BE ERECTED ON THE SAME POSTS, OR SPAN/MAST ARM MOUNTED, MAY REQUIRE SPECIAL BOLT HOLE PATTERNS.
7. ALL CONSTRUCTION SIGNS TO BE PAID FOR UNDER THE CONSTRUCTION SIGNS ITEM IN THE CONTRACT.
8. MATERIALS & COLORS SHALL CONFORM TO STATE SPECIFICATIONS.

MATERIALS:
SIGNS AND THEIR PORTABLE SUPPORTS SHALL CONFORM TO THE REQUIREMENTS OF NCHRP REPORT 350 (TL-3) OR THE AASHTO MASH FOR CATEGORY 2 DEVICES. ALUMINUM THICKNESS FOR POST MOUNTED SIGNS SHALL BE .100" EXCEPT SIGN #s. 80-1605, 80-9914, 80-9815, 80-9728, 80-9519, & 51-6147 (L OR R) WHICH SHALL BE .125", PLYWOOD THICKNESS FOR POST MOUNTED SIGNS SHALL BE 1/2" EXTERIOR GRADE A-C OR BETTER. SIGN BLANKS SHALL HAVE ONE COAT OF PRIMER PAINT PRIOR TO APPLICATION OF RETROREFLECTIVE SHEETING & COPY.

COLORS:
BACKGROUND - FLUORESCENT ORANGE - EXCEPT AS NOTED.
LEGEND - BLACK - EXCEPT AS NOTED.
ALL SIGNS WITH FLUORESCENT ORANGE BACKGROUND TO USE TYPE VIII RETROREFLECTIVE SHEETING.
ALL OTHER SIGNS TO USE TYPE IX RETROREFLECTIVE SHEETING.

REV.	DATE	REVISION DESCRIPTION
6	8-2018	REVISED POST REQUIREMENTS AND SHEETING TYPE.
5	8-2015	UPDATED PER MUTCD AND FORM 816 JAN 2015 REVISION.
4	6-2012	REVISED NOTE #1 TO REFERENCE "O.S.T.A."
3	4-2012	REVISED NEW SIGNAL SIGN(S) TO CONFORM TO 2009 MUTCD.
2	2-2011	MINOR REVISIONS.
1	3-2010	REMOVED OBSOLETE SIGNS (50-5925, 50-5935).

THE INFORMATION, INCLUDING ESTIMATED QUANTITIES OF WORK, SHOWN ON THESE SHEETS IS BASED ON LIMITED INVESTIGATIONS BY THE STATE AND IS IN NO WAY WARRANTED TO INDICATE THE CONDITIONS OF ACTUAL QUANTITIES OF WORK WHICH WILL BE REQUIRED.

Plotted Date: 8/10/2018

NOT TO SCALE

STATE OF CONNECTICUT
DEPARTMENT OF TRANSPORTATION

Filename: TR-1220_01_1_2018.dgn Model: TR-1220_01

SUBMITTED BY: NAME/DATE/TIME: Mark F. Makuch, P.E. 2018.08.17 09:11:08-04'00'
APPROVED BY: NAME/DATE/TIME: Mark F. Carlino, P.E. 2018.08.21 07:49:34-04'00'

CTDOT
STANDARD SHEET

OFFICE OF ENGINEERING

STANDARD SHEET TITLE:
SIGNS FOR CONSTRUCTION AND PERMIT OPERATIONS

STANDARD SHEET NO.:
TR-1220_01

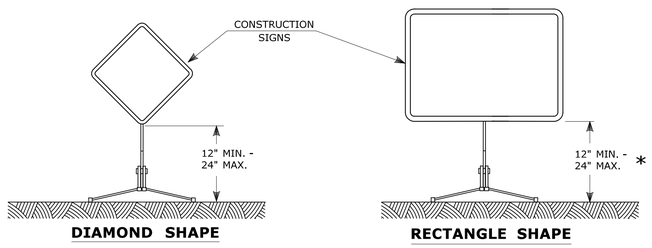

PORTABLE CONSTRUCTION SIGNS

NOTES FOR PORTABLE SIGN SUPPORTS:

1. SIGNS AND THEIR PORTABLE SUPPORTS SHALL CONFORM TO THE REQUIREMENTS OF NCHRP REPORT 350 (TL-3) OR THE AASHTO MASH FOR CATEGORY 2 DEVICES AND THE LATEST EDITION OF THE MUTCD.
2. MOUNTING HEIGHT OF SIGNS SHALL BE A MINIMUM OF 12" AND A MAXIMUM OF 24". SIGNS SHALL BE MOUNTED HIGHER AS NEEDED TO MEET FIELD CONDITIONS OR AS DIRECTED BY THE ENGINEER.
3. THE ENGINEER RESERVES THE RIGHT TO REJECT ANY SUPPORT DEEMED UNSUITABLE FOR THE PURPOSE INTENDED.
4. PORTABLE SIGN SUPPORTS SHALL BE STABILIZED IN A MANNER THAT WILL NOT AFFECT THEIR COMPLIANCE WITH NCHRP REPORT 350 (TL-3) OR THE AASHTO MASH FOR CATEGORY 2 DEVICES.
5. PORTABLE CONSTRUCTION SIGN SUPPORTS SHOULD NOT BE USED FOR DURATION OF MORE THAN 3 DAYS EXCEPT FOR R9-8 THROUGH R9-11a SERIES, R11 SERIES, W1-6 THROUGH W1-8 SERIES, M4-10, AND E5-1. SEE STANDARD SHEET TR-1220_01 - "SIGNS FOR CONSTRUCTION AND PERMIT OPERATIONS" FOR SIGN DETAILS.

* FOR E5-1 (EXIT SIGNS) USE MIN 48".

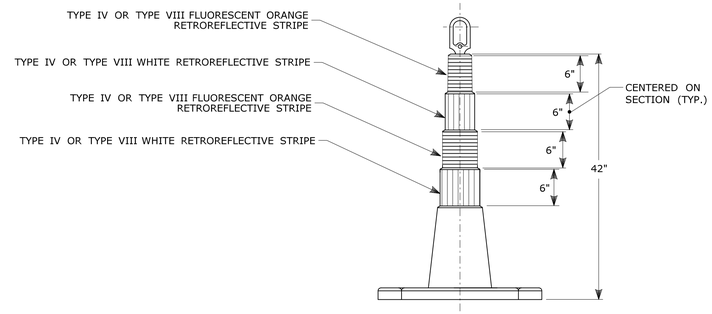

42" TRAFFIC CONE

NOTES:

1. TRAFFIC CONES SHALL CONFORM TO THE REQUIREMENTS OF NCHRP REPORT 350 (TL-3) OR THE AASHTO MASH FOR CATEGORY 1 DEVICES AND THE LATEST EDITION OF THE MUTCD.
2. IF RUBBER CONES ARE USED, THEY SHALL HAVE INTERIOR RIBS FOR RIGIDITY.
3. IF PLASTIC CONES ARE USED, THEY SHALL BE COLOR IMPREGNATED.
4. THE ENGINEER RESERVES THE RIGHT TO REJECT ANY CONE DEEMED UNSUITABLE FOR THE PURPOSE INTENDED.
5. THE ENTIRE AREA OF FLUORESCENT ORANGE AND WHITE STRIPES SHALL BE RETROREFLECTIVE SHEETING AS REQUIRED IN THE SPECIFICATIONS.
6. THE SECTIONS OF CONES NOT COVERED WITH RETROREFLECTIVE STRIPES SHALL BE ORANGE.

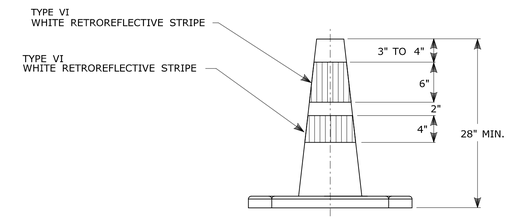

TRAFFIC CONE

NOTES:

1. TRAFFIC CONES SHALL CONFORM TO THE REQUIREMENTS OF NCHRP REPORT 350 (TL-3) OR THE AASHTO MASH FOR CATEGORY 1 DEVICES AND THE LATEST EDITION OF THE MUTCD.
2. IF RUBBER CONES ARE USED, THEY SHALL HAVE INTERIOR RIBS FOR RIGIDITY.
3. IF PLASTIC CONES ARE USED, THEY SHALL BE COLOR IMPREGNATED.
4. THE ENGINEER RESERVES THE RIGHT TO REJECT ANY CONE DEEMED UNSUITABLE FOR THE PURPOSE INTENDED.
5. THE ENTIRE AREA OF WHITE STRIPES SHALL BE RETROREFLECTIVE SHEETING AS REQUIRED IN THE SPECIFICATIONS.
6. TRAFFIC CONES NOT USED AT NIGHT MAY UTILIZE TYPE III SHEETING.
7. THE SECTIONS OF CONES NOT COVERED WITH RETROREFLECTIVE STRIPES SHALL BE ORANGE.

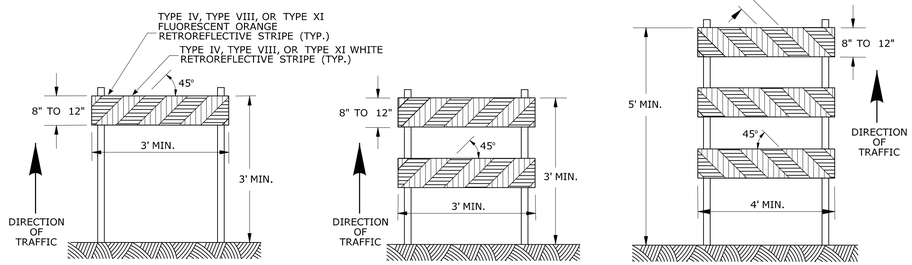

CONSTRUCTION BARRICADES

NOTES:

1. CONSTRUCTION BARRICADES SHALL CONFORM TO THE REQUIREMENTS OF NCHRP REPORT 350 (TL-3) OR THE AASHTO MASH AND THE LATEST EDITION OF THE MUTCD.
2. MARKINGS FOR BARRICADE RAILS SHALL BE ALTERNATE FLUORESCENT ORANGE AND WHITE STRIPES SLOPING DOWNWARD IN THE DIRECTION TRAFFIC IS TO PASS. 6" WIDE STRIPES SHALL BE USED.
3. THE ENTIRE AREA OF FLUORESCENT ORANGE AND WHITE STRIPES SHALL BE RETROREFLECTIVE SHEETING AS REQUIRED IN THE SPECIFICATIONS. THE SIDES OF BARRICADES FACING TRAFFIC SHALL HAVE RETROREFLECTIVE RAIL FACES.
4. THE ENGINEER RESERVES THE RIGHT TO REJECT ANY BARRICADE DEEMED UNSUITABLE FOR THE PURPOSE INTENDED.
5. CORNERS OF BARRICADE RAILS SHALL BE ROUNDED.
6. SIGNS MAY ONLY BE INSTALLED ON TYPE III BARRICADES AND SHALL BE PLACED SO AS TO COVER NO MORE THAN ONE BARRICADE RAIL.

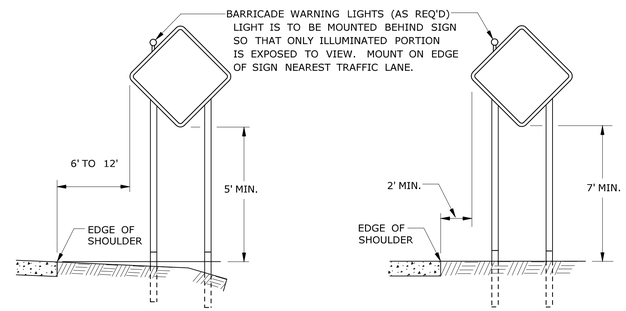

PLACEMENT OF CONSTRUCTION SIGNS
TYPICAL LONG TERM INSTALLATION

NOTES:

SUPPORTS SHALL BE METAL SIGN POSTS AND HAVE BREAK-AWAY FEATURES.

REFER TO STANDARD SHEETS:
TR-1208_01 - "SIGN PLACEMENT AND RETROREFLECTIVE STRIP DETAILS."
TR-1208_02 - "METAL SIGN POSTS AND SIGN MOUNTING DETAILS."

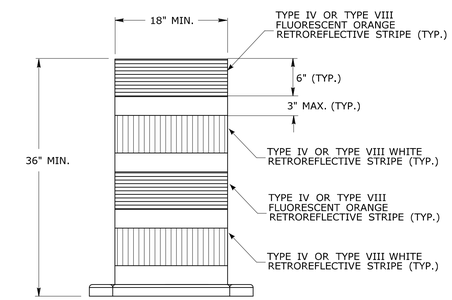

TRAFFIC DRUM
FRONT VIEW

NOTES:

1. TRAFFIC DRUM SHALL CONFORM TO THE REQUIREMENTS OF NCHRP REPORT 350 (TL-3) OR THE AASHTO MASH FOR CATEGORY 1 DEVICES AND THE LATEST EDITION OF THE MUTCD.
2. THE ENGINEER RESERVES THE RIGHT TO REJECT ANY DRUM DEEMED UNSUITABLE FOR THE PURPOSE INTENDED.
3. THE ENTIRE AREA OF FLUORESCENT ORANGE AND WHITE STRIPES SHALL BE RETROREFLECTIVE SHEETING AS REQUIRED IN THE SPECIFICATIONS.
4. THE SECTIONS OF DRUMS NOT COVERED WITH RETROREFLECTIVE STRIPES SHALL BE ORANGE.

REV.	DATE	REVISION DESCRIPTION
3	8-2018	UPDATED SHEETING TYPE AND COLOR.
2	8-2015	UPDATED PER MUTCD AND FORM 816 JAN 2015 REVISION.
1	2-2011	MINOR REVISIONS.

THE INFORMATION, INCLUDING ESTIMATED QUANTITIES OF WORK, SHOWN ON THESE SHEETS IS BASED ON LIMITED INVESTIGATIONS BY THE STATE AND IS IN NO WAY WARRANTED TO INDICATE THE CONDITIONS OF ACTUAL QUANTITIES OF WORK WHICH WILL BE REQUIRED.

Plotted Date: 8/10/2018

NOT TO SCALE

STATE OF CONNECTICUT
DEPARTMENT OF TRANSPORTATION

Filename: TR-1220_02_3_2018.dgn Model: TR-1220_02

SUBMITTED BY: NAME/DATE/TIME: Mark F. Makuch, P.E. 2018.08.17 09:12:43-04'00'
APPROVED BY: NAME/DATE/TIME: Mark F. Carlino, P.E. 2018.08.21 07:49:51-04'00'

CTDOT STANDARD SHEET
OFFICE OF ENGINEERING

STANDARD SHEET TITLE:
CONSTRUCTION SIGN SUPPORTS AND CHANNELIZING DEVICES

STANDARD SHEET NO.:
TR-1220_02