BSD MONTCLAIR ELEMENTARY SCHOOL: 2021 RE-ROOF

CITY OF BEAVERTON, OR (AHJ)

BEAVERTON SCHOOL DISTRICT — OWNER

16550 SW MERLO ROAD
BEAVERTON, OR 97003
(T): (503) 356-4318
CONTACT: MEGAN FINCH

TO BE DETERMINED — CONTRACTOR

--

CCB #:-----

CIDA, INC. — ARCHITECT/ STRUCTURAL ENGINEER

15895 SW 72ND AVE, SUITE 200
PORTLAND, OREGON 97224
(T): (503) 226-1285
(F): (503) 226-1670
CONTACT: DUSTIN JOHNSON

RDH BUILDING SCIENCE — ROOFING CONSULTANT

5331 S. MACADAM AVE, #314
PORTLAND, OREGON 97239
(T): (503) 867-8519
CONTACT: SHINJI CORAM

R&W ENGINEERING — MECHANICAL ENGINEER/COST CONSULTANT

9715 SW ALLEN BLVD, #117
BEAVERTON, OREGON 97005
(T): (503) 292-6000
CONTACT: ED CARLISLE

SITE INFORMATION

TAX LOT:	08900
TAX MAP:	1S124AB
ZONE:	R7
SITE AREA:	7.26 ACRES (316245.6 SF)

BUILDING CODE INFORMATION

DESIGN CODE:	2019 OREGON STRUCTURAL SPECIALTY CODE (OSSC) 2016 ASHRAE STANDARD 90.1
OCCUPANCY:	E (EDUCATION)
CONSTRUCTION TYPE:	V-B (SPRINKLERED) 1
BUILDING AREA:	38,631 SF

PROJECT DESCRIPTION

45,971 SF RE-ROOF TO INCLUDE FULL TEAR-OFF OF EXISTING BUILT-UP ROOFING AND REPLACEMENT WITH NEW SINGLE-PLY MECHANICALLY FASTENED TPO ROOFING SYSTEM. THE NEW ROOFING SYSTEM WILL INCLUDE R-30 RIGID INSULATION TO MEET CURRENT ENERGY CODE REQUIREMENTS. SOME ROOFTOP MECHANICAL EQUIPMENT IS PROPOSED TO BE REPLACED, OTHERS TEMPORARILY RELOCATED TO ACCOMMODATE RE-ROOF SCOPE. NEW MECHANICAL UNITS ARE PROPOSED AS A DEFERRED SUBMITTAL. 2

DEFERRED SUBMITTALS

MECHANICAL (VALUATION $75,000) 1

RELEASES

1 SD SET 08.05.2020	2 DD SET 09.16.2020	3 80% CONST. DOCS 10.07.2020	4 BID SET RELEASE 10.28.2020	5 RESPONSE TO PLAN CHECK COMMENTS 02.18.2021	6 OWNER CHECKLIST 09.27.21	7 BID SET RELEASE 10.04.21	
							COVER SHEET
			●	●	●	●	CS1 COVER SHEET
							ARCHITECTURAL
			●	●	●	●	AD0.1 EXISTING CONDITIONS ROOF PLAN
			●	●	●	●	AD1.1 DEMO ROOF PLAN
			●	●	●	●	A1.1 ROOF PLAN
			●	●	●	●	A2.1 FALL PROTECTION PLAN
			●	●	●	●	A3.1 DETAILS
			●	●	●		A3.2 DETAILS
							STRUCTURAL
			●	●	●	●	S1.1 ROOF FRAMING PLAN
			●	●	●		S1.2 DETAILS
							MECHANICAL
			●	●	●	●	M1.1 ROOF PLAN-MECHANICAL
			●	●	●	●	M2.1 MECHANICAL SPECIFICATIONS
			●	●	●	●	M2.2 MECHANICAL SPECIFICATIONS

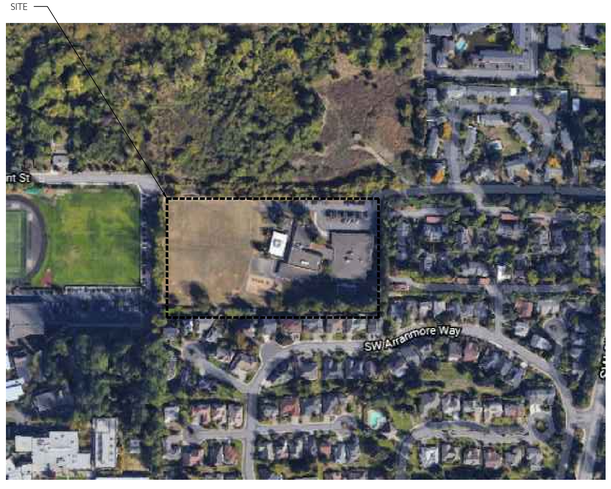

NORTH 1 CS1 **VICINITY MAP**
NO SCALE

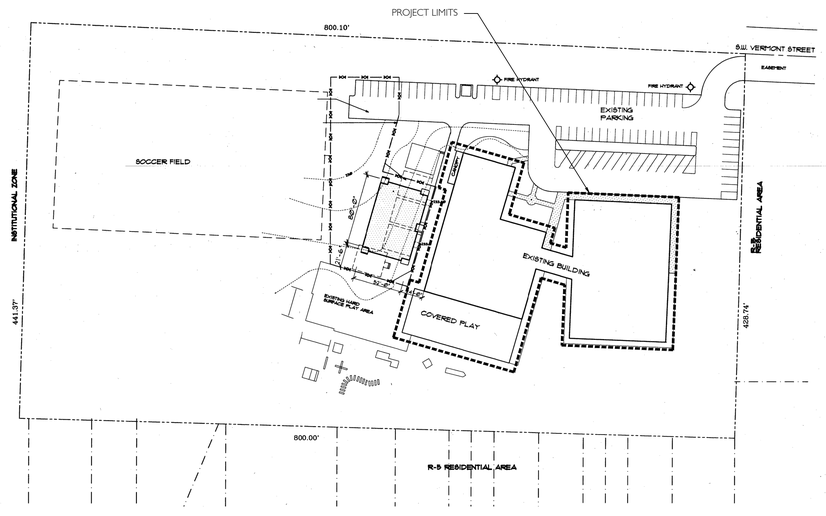

NORTH 2 CS1 **SITE PLAN - FOR REFERENCE ONLY**
1"=80'

REGISTERED ARCHITECT — DUSTIN JOHNSON — SAINT HELENS, OR — 5865 — STATE OF OREGON

ISSUED DATE	
1	SD SET 08.05.2020
2	DD SET 09.16.2020
3	80% CONST. DOCS 10.07.2020
4	BID SET RELEASE 10.28.2020
5	RESPONSE TO PLAN CHECK COMMENTS 02.18.2021
6	OWNER CHECKLIST 09.27.21
7	BID SET RELEASE 10.04.21

CIDA
ARCHITECTURE ENGINEERING PLANNING INTERIORS
15895 SW 72ND AVE SUITE 200
PORTLAND, OREGON 97224
TEL: 503.226.1285
FAX: 503.226.1670
WWW.CIDAINC.COM

ROOF REPLACEMENT FOR:
BSD MONTCLAIR ELEM. SCHOOL
7250 SW VERMONT ST.
PORTLAND, OR 97223

COVER SHEET
CS1
JOB NO. 20Y082.02

© 2020 CIDA, P.C./CIDA ALL RIGHTS RESERVED

Enclosed:K:\20Y082\01 BID 2021 Roofing Projects\Y082.01 BID 2021 Roof Montclair\Current\CAD\000-CS1.dwg Oct 01, 2021 - 3:40pm

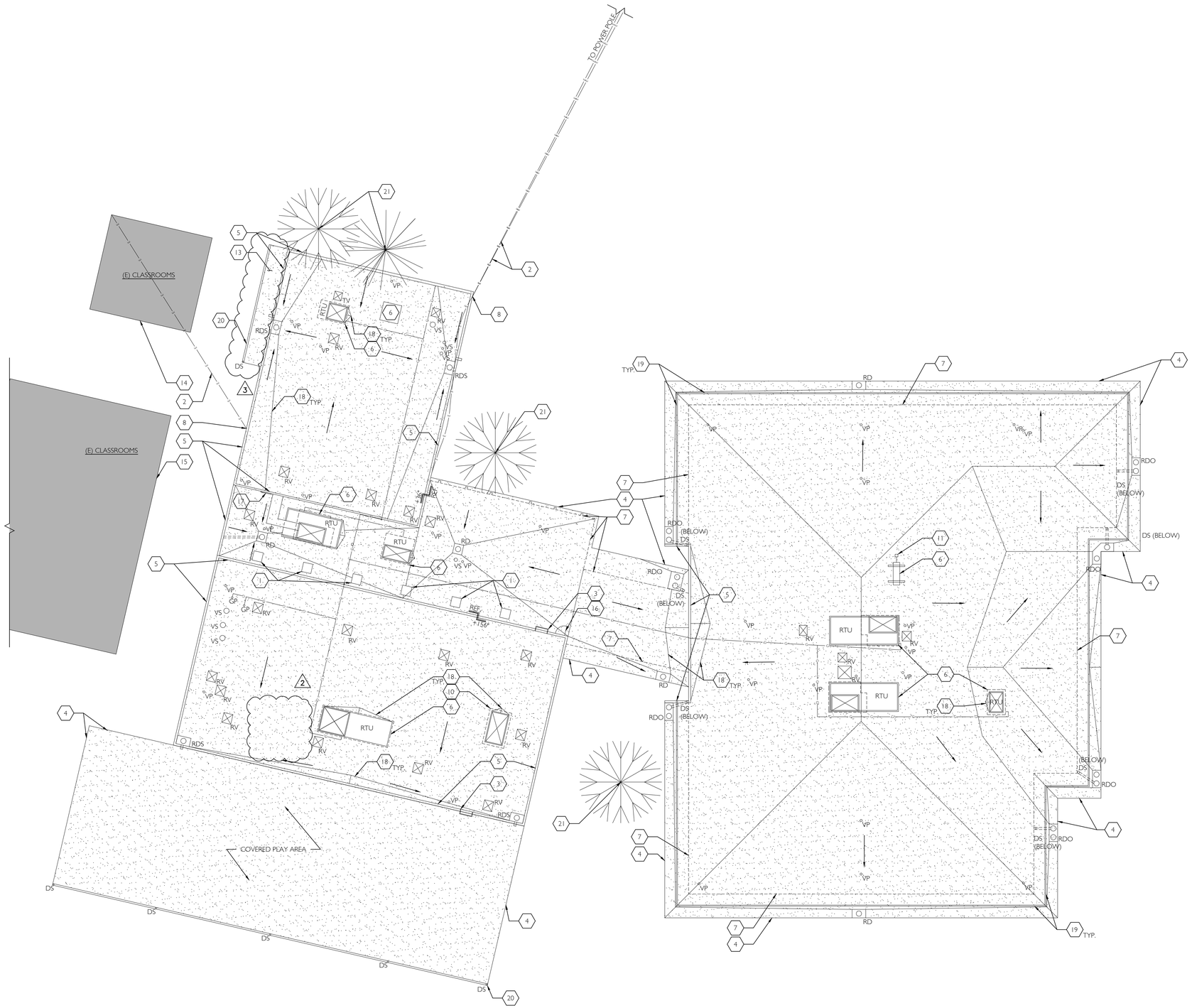

NORTH

1 AD0.1 **EXISTING COND. ROOF PLAN**

1/16" = 1'-0"

EXST. CONDITIONS ROOF PLAN GENERAL NOTES

1. CONTRACTOR SHALL VERIFY AND CONFIRM EXISTING CONDITIONS SHOWN OR IMPLIED ON DRAWINGS PRIOR TO START OF CONSTRUCTION. NOTIFY A/E OF ANY DISCREPANCIES.
2. SEE ROOF INSPECTION REPORT BY A-TECH/NW INC. DATED 03/16/2020 (LOCATED IN PROJECT MANUAL) FOR ADDITIONAL INFORMATION REGARDING EXISTING CONDITIONS WHICH MAY NOT BE REFLECTED ON THIS PLAN.
3. EXISTING ROOF PENETRATIONS AND CURBS INDICATED BENEATH MECH. EQUIPMENT ARE DIAGRAMMATIC ONLY -- CONTRACTOR TO FIELD VERIFY PLACEMENT BENEATH UNIT.
4. EXISTING EQUIPMENT CURBS, CRICKETS AND ROOF PENETRATIONS AT SMALL EQUIPMENT ARE NOT SHOWN FOR DRAWING CLARITY. REFER TO LEGEND AND KEYNOTES FOR INDICATION OF CURBED VERSUS NON-CURBED CONDITION.

EXST. CONDITIONS ROOF PLAN LEGEND

- RV - (E) CURB MOUNTED ROOF VENT
- VP - (E) VENT PIPE PENETRATION
- DS - (E) DOWNSPOUT
- RD - (E) ROOF DRAIN W/ NO OVERFLOW
- RDO - (E) ROOF DRAIN WITH OVERFLOW
- RDS - (E) ROOF DRAIN WITH SCUPPER OVERFLOW
- VS - (E) VENT STACK
- GP - (E) GAS PIPE PENETRATION
- REF / +32" - REFERENCE PLANE VERTICAL EDGE; ELEVATION RELATIVE TO REFERENCE PLANE

VERTICAL ELEVATION CHANGE

- (E) WALL BELOW
- (E) NATURAL GAS LINE
- (E) ELECTRICAL LINE
- AREA OUTSIDE SCOPE OF WORK
- (E) PEA GRAVEL BUILT-UP ROOF
- DIRECTION OF DRAINAGE

ABBREVIATIONS

(E)	-EXISTING
(N)	-NEW
TYP.	-TYPICAL
RTU	-ROOFTOP UNIT
VP	-VENT PIPE
DS	-DOWNSPOUT
S	-SCUPPER
VS	-VENT STACK
RV	-ROOF VENT
RD	-ROOF DRAIN
RDO	-ROOF DRAIN OVERFLOW
RDS	-ROOF DRAIN SCUPPER
GP	-GAS PIPE

EXST. CONDITIONS ROOF PLAN KEYNOTES

1. (E) CURBED SKYLIGHT
2. (E) OVERHEAD ELECTRICAL LINE
3. (E) FIXED LADDER
4. (E) DRIP EDGE
5. (E) PARAPET
6. (E) CURB MOUNTED MECHANICAL EQUIPMENT
7. LINE OF (E) EXTERIOR WALL BELOW, TYP.
8. PARAPET-MOUNTED GUY ANCHOR
9. NOT USED
10. (E) CURB WITH SHEET METAL COVER
11. (E) PITCH POCKET WITH SHEET METAL HOOD
12. NOT USED.
13. (E) CANOPY BELOW 2
14. (E) PORTABLE CLASSROOOMS
15. (E) MODULAR CLASSROOMS
16. (E) SIDEWALL ROOF ACCESS
17. (E) ABANDONED SIDEWALL DUCT PENETRATION WITH SHEET METAL COVER
18. (E) CRICKET
19. (E) CANTED EDGE OF (E) INSULATION (BELOW MEMBRANE)
20. (E) GUTTER
21. (E) TREE

REGISTERED ARCHITECT
DUSTIN JOHNSON
SAINT HELENS, OR
5865
STATE OF OREGON

ISSUED DATE

1	SD SET	08.05.2020
2	DD SET	09.16.2020
3	80% CONST. DOCS	10.07.2020
4	BID SET RELEASE	10.28.2020
5	RESPONSE TO PLAN CHECK COMMENTS	02.18.2021
6	OWNER CHECKLIST	09.27.21
7	BID SET RELEASE	10.04.21

CIDA
ARCHITECTURE
ENGINEERING
PLANNING
INTERIORS
15895 SW 72ND AVE SUITE 200
PORTLAND, OREGON 97224
TEL: 503.226.1285
FAX: 503.226.1670
WWW.CIDAINC.COM

ROOF REPLACEMENT FOR:

BSD MONTCLAIR ELEM. SCHOOL

7250 SW VERMONT ST.
PORTLAND, OR 97223

EXISTING CONDITIONS ROOF PLAN

AD0.1

JOB NO. 20Y082.02

© 2020 CIDA, P.C./CIDA ALL RIGHTS RESERVED

E:\Acad\20Y082\01 BSD 2021 Roofing Projects\082.05 BSD 2021 Roof\Montclair\Current\CAD\D0-AD01.dwg Oct 01, 2021 - 3:17pm

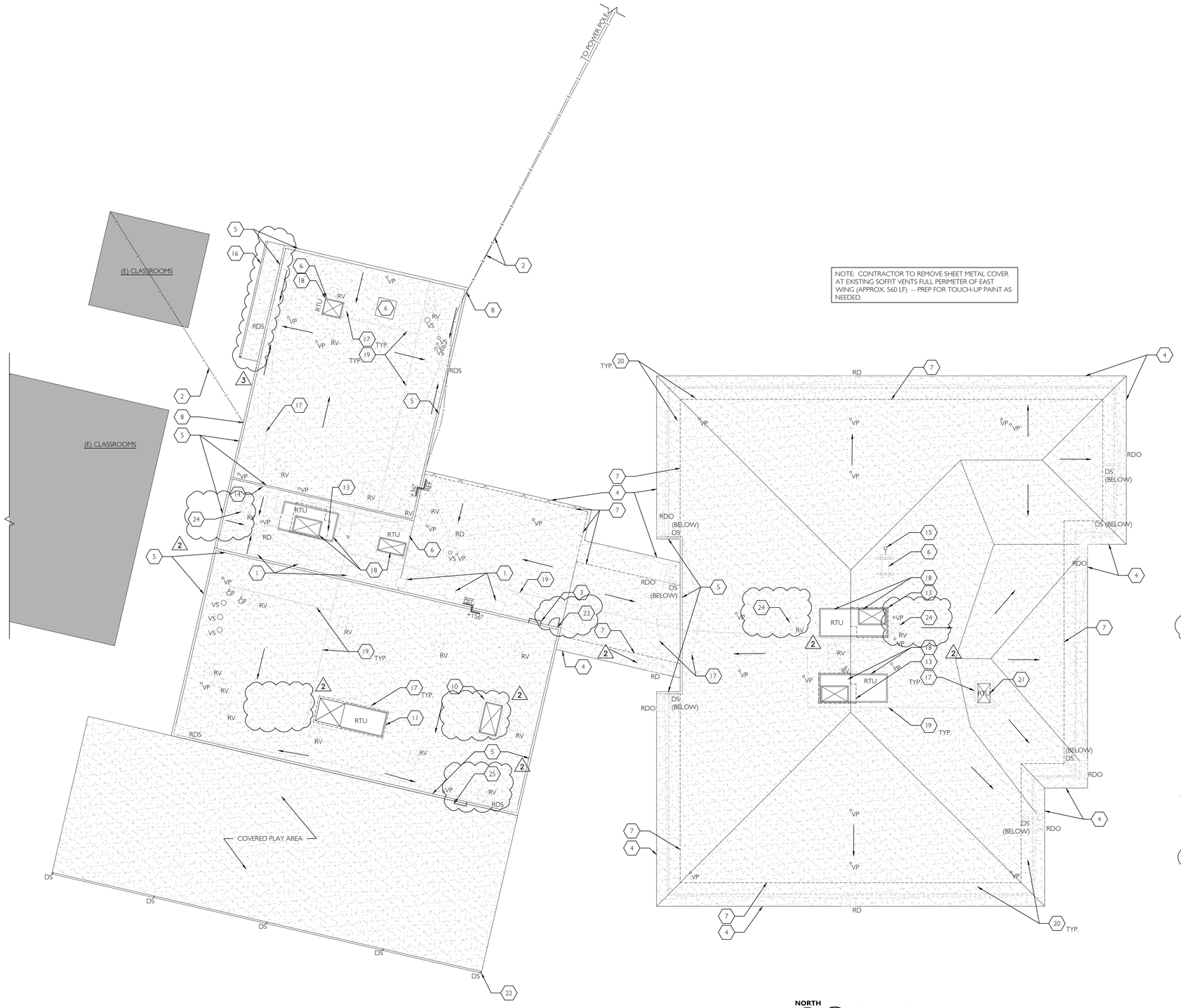

NORTH

1 DEMO ROOF PLAN
AD1.1 1/16" = 1'-0"

DEMO ROOF PLAN GENERAL NOTES

1. CONTRACTOR SHALL VERIFY AND CONFIRM EXISTING CONDITIONS SHOWN OR IMPLIED ON DRAWINGS PRIOR TO START OF CONSTRUCTION. NOTIFY A/E OF ANY DISCREPANCIES.
2. SEE ROOF INSPECTION REPORT BY A-TECH/NW INC. DATED 03/16/2020 (LOCATED IN PROJECT MANUAL) FOR ADDITIONAL INFORMATION REGARDING EXISTING CONDITIONS WHICH MAY NOT BE REFLECTED ON THIS PLAN.
3. APPLICABLE CODES: ALL WORK SHALL BE IN CONFORMANCE WITH ALL FEDERAL, STATE, AND LOCAL CODES. ALL CODE REFERENCES IN THE DRAWINGS AND SPECIFICATIONS SHALL MEAN, AND ARE INTENDED TO BE, THE LATEST EDITION, AMENDMENT OR REVISION OF SUCH REFERENCED STANDARD IN EFFECT AS OF THE DATE OF THE CONTRACT DOCUMENTS.
4. SEE MECHANICAL DRAWINGS FOR ALL MECHANICAL EQUIPMENT TO BE REMOVED AND FOR SIZES OF NEW OR REVISED CEILING PENETRATIONS.
5. FOR EXISTING EQUIPMENT INDICATED TO BE TEMPORARILY REMOVED, CONTRACTOR TO STORE ON-SITE IN A WEATHER TIGHT LOCATION APPROVED BY THE DISTRICT. SEE SPEC SECTION -- FOR ADDITIONAL STORAGE REQUIREMENTS.
6. EXISTING ROOF PENETRATIONS AND CURBS INDICATED BENEATH MECH. EQUIPMENT ARE DIAGRAMMATIC ONLY -- CONTRACTOR TO FIELD VERIFY ACTUAL PLACEMENT BENEATH UNIT.
7. EXISTING EQUIPMENT CURBS, CRICKETS AND ROOF PENETRATIONS AT SMALL EQUIPMENT ARE NOT SHOWN FOR DRAWING CLARITY. REFER TO LEGEND AND KEYNOTES FOR INDICATION OF CURBED VERSUS NON-CURBED CONDITION.
8. SEE ROOFING SPECIFICATION IN PROJECT MANUAL FOR ALL EXISTING ROOFING COMPONENTS AND ACCESSORIES TO BE REMOVED AND FOR OTHER PROCEDURES REQUIRED IN PREPARATION OF INSTALLING NEW ROOFING SYSTEM.
9. CONTRACTOR TO REMOVE AND REPLACE EXISTING STRUCTURAL ROOF DECKING WHERE OBSERVED TO BE COMPROMISED -- SEE 'SCHEDULE OF UNIT PRICES' IN SPECIFICATION SECTION 012200 'UNIT PRICES' FOR ADDITIONAL INFORMATION.
10. UNLESS OTHERWISE NOTED, ROOF CURBS AT EQUIPMENT INDICATED TO BE TEMPORARILY REMOVED SHALL REMAIN IN PLACE.
11. CONTRACTOR TO SCHEDULE ON-SITE OBSERVATION WITH A/E AND DISTRICT UPON REMOVAL OF EXISITING ROOFING SYSTEM AND EXPOSURE OF EXISTING STRUCTURAL DECK.
12. ALL SHEET METAL GUTTERS AND DOWNSPOUTS SHALL BE TEMPORARILY REMOVED AND STORED FOR REINSTALLATION UNLESS DEEMED UNFIT FOR CONTINUED USE.

DEMO ROOF PLAN LEGEND

- RV - (E) CURB MOUNTED ROOF VENT TO BE TEMPORARILY REMOVED
- VP - (E) VENT PIPE PENETRATION TO REMAIN
- DS - (E) DOWNSPOUT TO BE TEMPORARILY REMOVED AND STORED FOR REINSTALLATION
- VS - (E) VENT STACK TO REMAIN
- GP - (E) GAS PIPE PENETRATION TO REMAIN
- RD - (E) ROOF DRAIN-- REMOVE ROOF DRAIN ASSEMBLY (DRAIN BOWL TO REMAIN UNLESS DAMAGED) -- REFER TO 'SCHEDULE OF UNIT PRICES' IN SECTION 012200 OF SPEC.
- RDO - (E) ROOF DRAIN AND PIPED OVERFLOW-- REMOVE ROOF DRAIN ASSEMBLY (DRAIN BOWL TO REMAIN UNLESS DAMAGED) -- REFER TO 'SCHEDULE OF UNIT PRICES' IN SECTION 012200 OF SPEC.
- RDS -(E) ROOF DRAIN WITH SCUPPER OVERFLOW -- REMOVE SCUPPER AND ROOF DRAIN ASSEMBLY (DRAIN BOWL TO REMAIN UNLESS DAMAGED) -- REFER TO 'SCHEDULE OF UNIT PRICES' IN SECTION 012200 OF SPEC.
- (E) AREA OUTSIDE SCOPE OF WORK
- AREA OF (E) PEA GRAVEL BUILT-UP ROOFING SYSTEM TO BE REMOVED -- PREP SHEATHING PER SPEC FOR INSTALLATION OF NEW ROOFING SYSTEM, INCLUDING REPLACEMENT OF COMPROMISED SHEATHING
- DIRECTION OF DRAINAGE

ABBREVIATIONS

(E)	-EXISTING
(N)	-NEW
TYP.	-TYPICAL
RTU	-ROOFTOP UNIT
VP	-VENT PIPE
DS	-DOWNSPOUT
S	-SCUPPER
VS	-VENT STACK
RV	-ROOF VENT
RD	-ROOF DRAIN
RDO	-ROOF DRAIN OVERFLOW
RDS	-ROOF DRAIN SCUPPER
GP	-GAS PIPE

- (E) WALL BELOW
- (E) NATURAL GAS LINE
- (E) ELECTRICAL LINE

REF. REFERENCE PLANE
VERTICAL EDGE
+325" ELEVATION RELATIVE TO REFERENCE PLANE

VERTICAL ELEVATION CHANGE

DEMO ROOF PLAN KEYNOTES

1. (E) CURBED SKYLIGHT TO BE REMOVED--PATCH AND REPAIR TO MATCH ADJACENT ROOF CONDITION-- SEE STRUCTURAL FOR INFILL
2. (E) OVERHEAD ELECTRICAL LINE -- PROVIDE TEMPORARY SUPPORT TO ACCOMMODATE CONTINUITY OF SERVICE DURING WORK. COORDINATE WITH UTILITY.
3. (E) FIXED LADDER TO REMAIN -- REMOVE LADDER SIDERAILS (AND BOTTOM RUNG) TO A POINT 1" MINIMUM ABOVE NEW ROOFING SYSTEM SURFACE -- FINISH CUT ENDS WITH (2) COATS ZINC PAINT
4. (E) DRIP EDGE-- REMOVE SHEET METAL GRAVEL STOP AND DRIP EDGE FLASHING
5. (E) PARAPET-- REMOVE SHEET METAL COPING CAP, COUNTER FLASHING AND BASE FLASHING, TYP..
6. (E) CURB-MOUNTED MECH. EQUIPMENT-- TEMPORARILY REMOVE AND STORE FOR NEW ROOFING INSTALLATION
7. LINE OF (E) EXTERIOR WALL BELOW, TYP.
8. PARAPET-MOUNTED GUY ANCHOR TO REMAIN TO BE REMOVED AND REPLACED
9. NOT USED
10. (E) SMOKE HATCH ASSEMBLY AND INTEGRATED ROOF CURB TO BE TEMPORARILY REMOVED -- PREP AREA TO RECEIVE NEW CURB EXTENSION -- SEE A1.1 FOR MORE INFO.
11. (E) ROOF TOP UNIT, PLATFORM AND CURB/CRICKET TO BE REMOVED-- INFILL EXISTING ROOF PENETRATION AS REQUIRED TO ACCOMMODATE NEW UNIT -- SEE MECHANICAL DRAWINGS FOR EQUIPMENT INFO.
12. NOT USED.
13. (E) ROOFTOP MECH. UNIT TO REMAIN IN PLACE DURING RE-ROOF
14. (E) SHEET METAL CAP AT ABANDONED SIDEWALL PENETRATION TO BE REMOVED-- PREP OPENING FOR INFILL
15. (E) PITCH POCKET TO BE REMOVED AND REPLACED.
16. (E) CANOPY BELOW
17. (E) CRICKET TO BE REMOVED
18. (E) CURB TO REMAIN
19. (E) ABOVE-ROOF GAS LINE TO BE REMOVED AND STUBBED FOR POST-RE-ROOF TIE-IN
20. REMOVE (E) PLYWOOD CRICKET AND 4X BLOCKING
21. (E) TRANE RTU-- TEMPORARILY REMOVE AND STORE FOR REINSTALLATION -- LIFT UNIT AS NECESSARY FOR ROOFING TO BE COMPLETED. USE ONLY MANUFACTURER SUPPLIED LIFTING LUGS FOR LIFTING. ONCE THE UNIT IS RESET AND BEFORE STARTING THE UNIT PROVIDE THE SERVICES OF TRANE FACTORY AUTHORIZED SERVICE TECHNICIAN O REVIEW THE UNIT, ESPECIALLY THE HEATING BURNER, TO ASSURE ALL ARE IN PROPER WORKING ORDER AND SAFE TO OPERATE
22. (E) SHEET METAL GUTTER AND EDGE FLASHING TO BE REMOVED
23. EXISTING DOOR ASSEMBLY TO BE REMOVED. DOOR OPENING TO BE ENLARGED BY REMOVAL OF 2 BRICK COURSES DIRECTLY ABOVE EXISTING OPENING. SEE STRUCTURAL FOR REINFORCING REQUIREMENTS.
24. REMOVE EXISTING ELECTRICAL BOX CONNECTED TO EQUIPMENT CURB -- SEE A1.1 FOR MORE INFO.
25. (E) FIXED LADDER TO REMAIN

REGISTERED ARCHITECT
DUSTIN JOHNSON
SALEM, OR
5865
STATE OF OREGON

ISSUED DATE
1 SD SET 08.05.2020
2 DD SET 09.16.2020
3 80% CONST. DOCS 10.07.2020
4 BID SET RELEASE 10.28.2020
5 RESPONSE TO PLAN CHECK COMMENTS 02.18.2021
6 OWNER CHECKLIST 09.27.21
7 BID SET RELEASE 10.04.21

CIDA
ARCHITECTURE
ENGINEERING
PLANNING
INTERIORS
15895 SW 72ND AVE SUITE 200
PORTLAND, OREGON 97224
TEL: 503.226.1285
FAX: 503.226.1670
WWW.CIDAINC.COM

ROOF REPLACEMENT FOR:
BSD MONTCLAIR ELEM. SCHOOL
7250 SW VERMONT ST.
PORTLAND, OR 97223

DEMO ROOF PLAN
AD1.1
JOB NO. 20Y082.02

© 2020 CIDA, P.C./CIDA ALL RIGHTS RESERVED

E:\acad\20Y082\01 BSD 2021 Roofing Program\082.05 BSD 2021 Roof\Montclair\Current\CAD\20-AD-1.dwg Oct 01, 2021 - 3:19pm

ROOF PLAN GENERAL NOTES

1. CONTRACTOR TO VERIFY (E) CONDITIONS SHOWN OR IMPLIED AND NOTIFY ARCHITECT AND ENGINEER OF ANY DISCREPANCIES.
2. SEE ROOF INSPECTION REPORT BY A-TECH/NW INC. DATED 03/16/2020 (LOCATED IN PROJECT MANUAL) FOR ADDITIONAL INFORMATION REGARDING EXISTING CONDITIONS WHICH MAY NOT BE REFLECTED ON THIS PLAN.
3. ALL ROOFING REPAIR WORK TO BE PERFORMED BY ROOFING CONTRACTOR CERTIFIED BY ROOFING MANUFACTURER AND AS REQUIRED TO MEET INSTALLATION REQUIREMENTS OF SPECIFIED ROOFING SYSTEM WARRANTY.
4. ALL ROOFING REPAIR WORK IS SUBJECT TO INSPECTION AND APPROVAL BY ROOFING MANUFACTURER FIELD REPRESENTATIVE. CONTRACTOR TO SCHEDULE ROOFING INSPECTION AT INTERVALS DETERMINED BY MANUFACTURER FOR ROOFING SYSTEM WARRANTY.
5. CONTRACTOR IS RESPONSIBLE FOR COORDINATING LOCATION OF NEW ROOF PENETRATIONS TO AVOID CONFLICT WITH EXISTING STRUCTURE AND BUILDING SYSTEMS.
6. CONTRACTOR TO CONFIRM ROOF PENETRATION SIZES AND EQUIPMENT CURB DIMENSIONS WITH MECHANICAL DRAWINGS.
7. WHERE PATCH AND REPAIR WORK IS INDICATED, CONTRACTOR SHALL PATCH AFFECTED AREAS TO MATCH ADJACENT FINISHES AND CONDITIONS FOR 'LIKE NEW' APPEARANCE UNLESS OTHERWISE NOTED. SEE SPECIFICATION SECTION 017329 'CUTTING AND PATCHING' FOR ADDITIONAL INFORMATION.
8. ~~SEE STRUCTURAL DRAWINGS FOR ROOFING REQUIREMENTS AT NEW CONTOUR MECHANICAL EQUIPMENT.~~
9. CONTRACTOR TO MAINTAIN EXISTING SURFACE DRAINAGE PATTERNS OF ROOF WITH SLOPE OF NOT LESS THAN 2 PERCENT UNLESS LIMITED BY EXISTING BUILT CONDITIONS. IF LIMITED, SLOPE SHALL NOT BE REDUCED FROM EXISTING SLOPE.
10. ~~CONTRACTOR IS RESPONSIBLE FOR INSTALLING AT NEW EQUIPMENT CURBS, PARAPETS, ROOF DRAINS, AND OTHER~~ LOCATIONS AS REQUIRED TO MAINTAIN POSITIVE SLOPE TO POINT OF ROOF DRAINAGE.
11. CONTRACTOR TO CONNECT ALL NEW AND USED EQUIPMENT TO SUPPORTING UTILITIES (NATURAL GAS, ELECTRICAL, LOW VOLTAGE, ECT...).
12. TAPERED INSULATION SHOWN IS DIAGRAMMATIC ONLY AND IS CONSIDERED A DELEGATED DESIGN SYSTEM -- CONTRACTOR IS RESPONSIBLE FOR SUBMITTING TAPERED INSULATION SHOP DRAWINGS PREPARED BY QUALIFIED TAPERED INSULATION DESIGNER FOR A/E REVIEW, PER SPEC.
13. CONTRACTOR TO SUBMIT WEATHER PROTECTION PLAN FOR A/E & DISTRICT APPROVAL, PER SPEC DIVISION 7.
14. ALL SHEET METAL GUTTERS AND DOWNSPOUTS SHALL BE TEMPORARILY REMOVED AND STORED FOR REINSTALLATION UNLESS DEEMED UNFIT FOR CONTINUED USE.

ROOF PLAN LEGEND

- RV - REINSTALL CURB MOUNTED ROOF VENT -- SEE DETAIL 2/A3.1
- VP - (E) VENT PIPE PENETRATION EXTEND PIPE AS NEEDED TO FLASH -- SEE DETAIL 11/A3.1
- DS - REINSTALLED DOWNSPOUT
- VS - (E) VENT STACK -- SEE DETAIL 10/A3.1
- GP - (E) GAS PIPE PENETRATION -- SEE DETAIL 11/A3.1
- RD - ROOF DRAIN-- NEW ROOF DRAIN ASSEMBLY (DRAIN BOWL TO REMAIN UNLESS DAMAGED) -- REFER TO 'SCHEDULE OF UNIT PRICES' IN SECTION 012200 OF SPEC.
- RDO - ROOF DRAIN AND PIPED OVERFLOW-- NEW ROOF DRAIN ASSEMBLY (DRAIN BOWL TO REMAIN UNLESS DAMAGED) -- REFER TO 'SCHEDULE OF UNIT PRICES' IN SECTION 012200 OF SPEC.
- RDS - ROOF DRAIN WITH SCUPPER OVERFLOW -- NEW SCUPPER AND ROOF DRAIN ASSEMBLY (DRAIN BOWL TO REMAIN UNLESS DAMAGED) -- REFER TO 'SCHEDULE OF UNIT PRICES' IN SECTION 012200 OF SPEC.
- AREA OUTSIDE SCOPE OF WORK
- APPROXIMATE AREA OF TAPERED INSULATION-- SEE GENERAL NOTES THIS SHEET FOR TAPERED INSULATION DESIGN REQUIREMENTS
- AREA OF (N) TPO MEMBRANE (RHINO BOND) OVER 1/2" COVERBOARD OVER R-30 INSULATION BOARD OVER VAPOR BARRIER MEMBRANE (39,510 SF)-- ROOF 'A' PER SPEC
- AREA OF (N) FULLY ADHERED TPO ROOFING SYSTEM OVER 1/2" COVERBOARD (7,164 SF)-- ROOF 'B' PER SPEC
- DIRECTION OF DRAINAGE

ABBREVIATIONS

(E)	-EXISTING
(N)	-NEW
TYP.	-TYPICAL
RTU	-ROOFTOP UNIT
VP	-VENT PIPE
DS	-DOWNSPOUT
S	-SCUPPER
VS	-VENT STACK
RV	-ROOF VENT
RD	-ROOF DRAIN
RDO	-ROOF DRAIN OVERFLOW
RDS	-ROOF DRAIN SCUPPER
GP	-GAS PIPE

- (E) WALL BELOW
- (N) NATURAL GAS LINE--ROUTE SAME AS EXISTING-- INSTALL ON PIPE SUPPORTS -- SEE DETAIL 3/A3.2
- (E) ELECTRICAL LINE -- RE-ATTACH TO PARAPET ANCHORS AND REMOVE TEMPORARY SUPPORT
- REFERENCE PLANE VERTICAL EDGE
- ELEVATION RELATIVE TO REFERENCE PLANE

VERTICAL ELEVATION CHANGE

- (N) WALK PADS

ROOF PLAN KEYNOTES

1. INSTALL NEW NATURAL GAS LINE ON SUPPORTS PER DETAIL 3/A3.2
2. (E) OVERHEAD ELECTRICAL LINE -- ATTACH TO PARAPET-MOUNTED GUY ANCHOR.
3. (E) FIXED LADDER
4. DRIP EDGE WITH GRAVEL STOP
5. (E) PARAPET-- INSTALL NEW SHEET METAL COPING CAP AND COUNTER FLASHING PER SPEC-- SEE DETAIL 7/A3.1
6. (E) CURB-MOUNTED EQUIPMENT -- REINSTALL AT SAME LOCATION
7. LINE OF (E) EXTERIOR WALL BELOW, TYP.
8. (N) PARAPET-MOUNTED GUY ANCHOR.
9. (N) ROOF TOP UNIT PER MECHANICAL DRAWINGS.
10. (N) CRICKET.
11. NOT USED.
12. NOT USED.
13. NOT USED.
14. (E) MECHANICAL UNITS.
15. RE-INSTALL (E) SMOKE VENT -- SEE DETAIL 5/A3.2
16. NOT USED
17. (E) ABANDONED SIDEWALL DUCT PENETRATION -- INFILL WITH 2X6 STUD FRAMING AND FINISH TO MATCH ADJACENT CONDITION
18. ROUTE NEW OVERFLOW THROUGH SOFFIT -- TERMINATE 1" BELOW FINISHED SOFFIT TO MATCH EXISTING
19. ROUTE NEW OVERFLOW TIGHT TO EXTERIOR WALL -- TERMINATE THROUGH WALL WITH BRASS COW TONGUE 18" ABOVE FINISHED GRADE -- COORDINATE ROUTE WITH EXISTING STRUCTURE AND OPENINGS -- FINAL ROUTE SUBJECT TO DISTRICT ARCHITECT APPROVAL, SEE DETAIL 4/A3.2
20. EQUIPMENT CURB TO BE RAISED OR REPLACED IN ORDER TO ACCOMMODATE NEW ROOFING ASSEMBLY UPON INSTALLATION
21. (N) STEEL PIPE LADDER -- CONTRACTOR TO FIELD VERIFY HEIGHT, TYP. -- SEE DETAIL 3/A2.1
22. (N) UTILITY PENETRATION PER DETAIL 7/A3.2
23. CANTED EDGE OF (N) ABOVE-DECK ROOF INSULATION

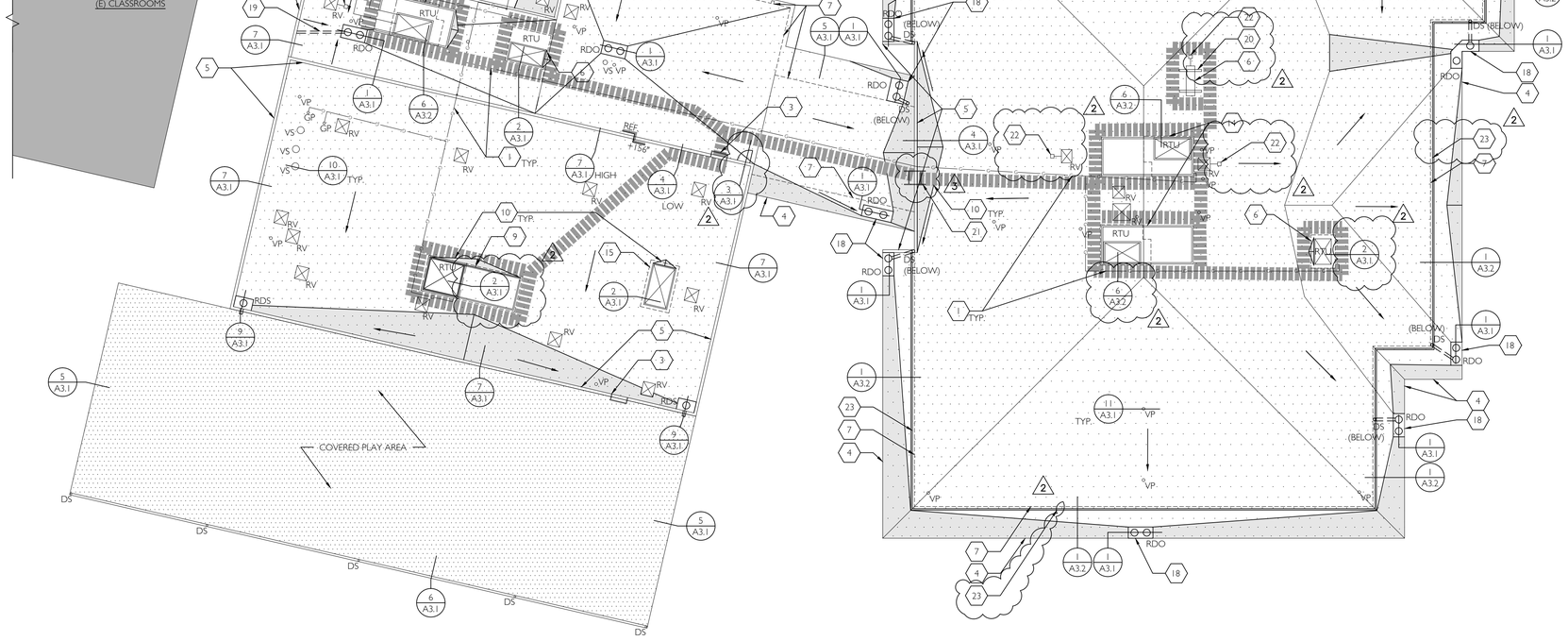

1 A1.1 ROOF PLAN
1/16" = 1'-0"

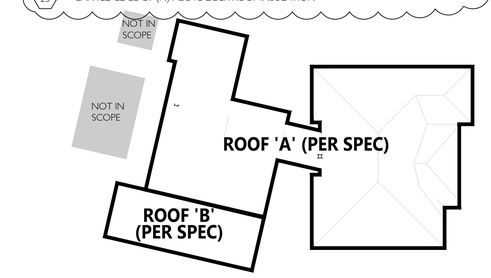

2 A1.1 KEY PLAN
N.T.S

REGISTERED ARCHITECT
DUSTIN JOHNSON
SAINT HELENS, OR
5865
STATE OF OREGON

ISSUED DATE	
1	SD SET 08.05.2020
2	DD SET 09.16.2020
3	80% CONST. DOCS 10.07.2020
4	BID SET RELEASE 10.28.2020
5	RESPONSE TO PLAN CHECK COMMENTS 02.18.2021
6	OWNER CHECKLIST 09.27.21
7	BID SET RELEASE 10.04.21

CIDA
ARCHITECTURE
ENGINEERING
PLANNING
INTERIORS
15895 SW 72ND AVE SUITE 200
PORTLAND, OREGON 97224
TEL: 503.226.1285
FAX: 503.226.1670
WWW.CIDAINC.COM

ROOF REPLACEMENT FOR:
BSD MONTCLAIR ELEM. SCHOOL
7250 SW VERMONT ST.
PORTLAND, OR 97223

ROOF PLAN
A1.1
JOB NO. 20Y082.02

©2020 CIDA, P.C./CIDA ALL RIGHTS RESERVED

E:\acad\20Y082\01 BSD 2021 Roofing Project\082.05 BSD 2021 Roof Plans\Current\CAD\A1.1.dwg Oct 01, 2021 - 4:13pm

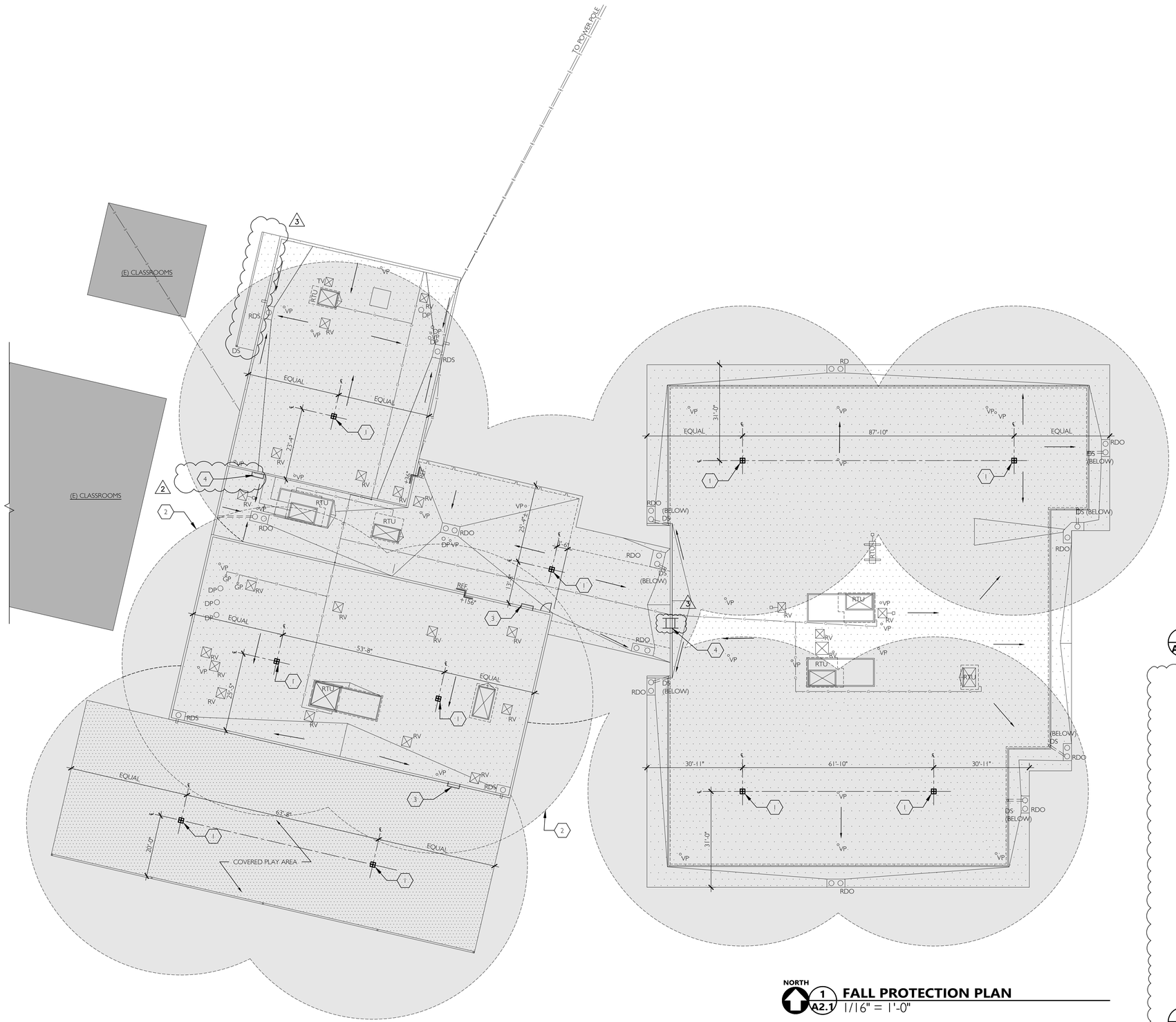

NORTH

1 A2.1 **FALL PROTECTION PLAN**
1/16" = 1'-0"

FALL PROTECTION PLAN GENERAL NOTES

1. FALL PROTECTION INDICATED IS BASED ON 'FALL RESTRAINT' SAFETY METHOD.

FALL PROTECTION PLAN LEGEND

(N) GUARDIAN CB-12 FALL PROTECTION ANCHOR -- SEE 2/A2.1 FOR ANCHORAGE TO ROOF

AREA WITHIN ROOF COVERAGE (BASED ON 50' LANYARD)

AREA OUTSIDE SCOPE OF WORK

REF — REFERENCE PLANE
VERTICAL EDGE — VERTICAL EDGE
+32" — ELEVATION RELATIVE TO REFERENCE PLANE

VERTICAL ELEVATION CHANGE

FALL PROTECTION PLAN KEYNOTES

1. (N) GUARDIAN CB-12 FALL PROTECTION ANCHOR -- SEE 2/A2.1 FOR BLOCKING AND ANCHORAGE REQUIREMENTS -- INSTALL BLOCKING FROM INTERIOR SIDE AND PATCH/REPAIR CEILING TO MATCH EXISTING CONDITION AND FINISH, AND PER SPECIFICATION.
2. ROOF COVERAGE -- BASED ON 50' LANYARD.
3. (E) STEEL LADDER TO REMAIN.
4. (N) STEEL PIPE LADDER -- CONTRACTOR TO FIELD VERIFY HEIGHT, TYP. -- SEE DETAIL 3/A2.1

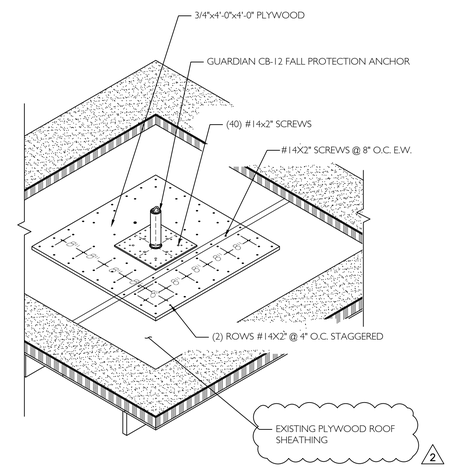

2 A2.1 **FALL PROTECTION ANCHOR AT PLYWOOD SHEATHING**
1 1/2" = 1'-0"

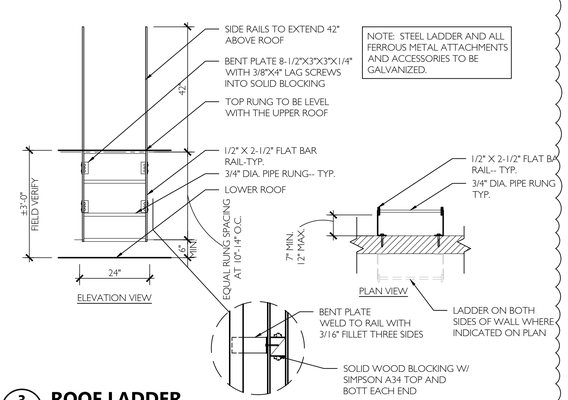

NOTE: STEEL LADDER AND ALL FERROUS METAL ATTACHMENTS AND ACCESSORIES TO BE GALVANIZED.

3 A2.1 **ROOF LADDER**
1/2" = 1'-0"

REGISTERED ARCHITECT
DUSTIN JOHNSON
SAINT HELENS, OR
5865
STATE OF OREGON

ISSUED DATE	
1	SD SET 08.05.2020
2	DD SET 09.16.2020
3	80% CONST. DOCS 10.07.2020
4	BID SET RELEASE 10.28.2020
5	RESPONSE TO PLAN CHECK COMMENTS 02.18.2021
6	OWNER CHECKLIST 09.27.21
7	BID SET RELEASE 10.04.21

CIDA
ARCHITECTURE
ENGINEERING
PLANNING
INTERIORS
15895 SW 72ND AVE SUITE 200
PORTLAND, OREGON 97224
TEL: 503.226.1285
FAX: 503.226.1670
WWW.CIDAINC.COM

ROOF REPLACEMENT FOR:
BSD MONTCLAIR ELEM. SCHOOL
7250 SW VERMONT ST.
PORTLAND, OR 97223

FALL PROTECTION PLAN

A2.1

JOB NO. 20Y082.02

©2020 CIDA, P.C./CIDA ALL RIGHTS RESERVED

E:\cidaab\20Y082.01 BSD 2021 Roofing Projects\Y082.05 BSD 2021 - Roof Materials\Current\CAD\A2.1.dwg Oct 04, 2021 - 11:34am

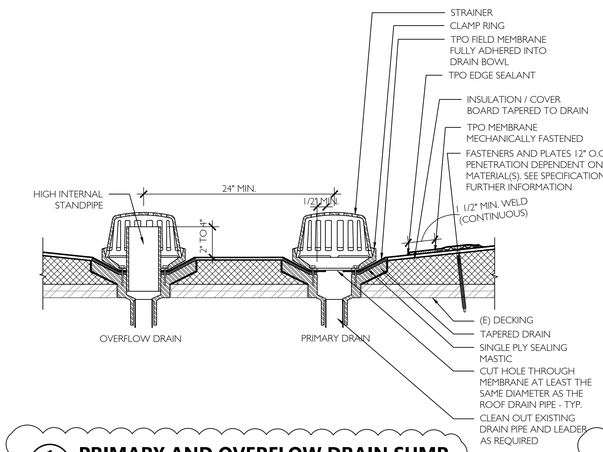

1 A3.1 PRIMARY AND OVERFLOW DRAIN SUMP
3" = 1'-0"

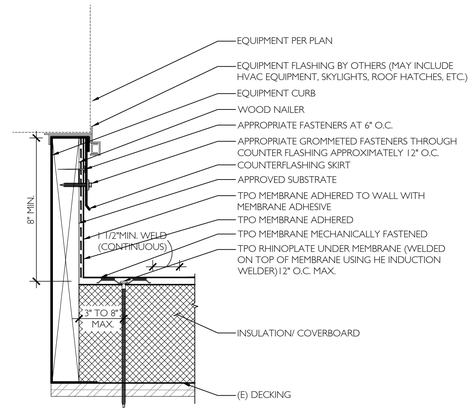

NOTE: INSTALL MANUFACTURER'S PRE-MOLDED TPO CORNER FLASHING AT ALL OUTSIDE CURB CORNERS

2 A3.1 EQUIPMENT CURB
3" = 1'-0"

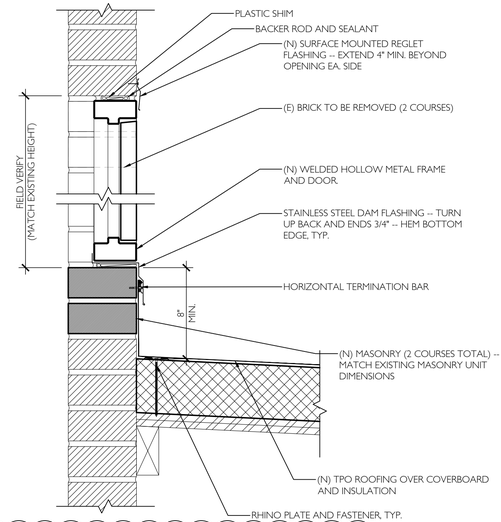

3 A3.1 SECTION AT NEW ROOF ACCESS DOOR
1 1/2" = 1'-0"

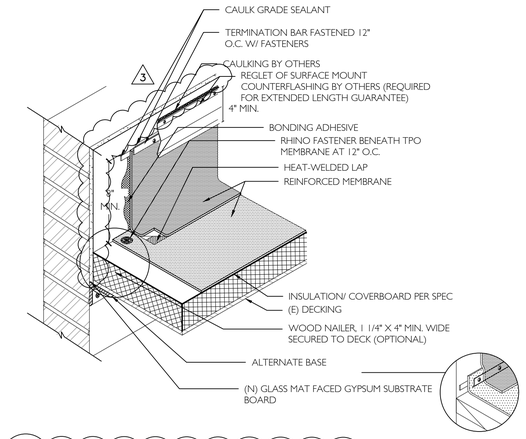

4 A3.1 PARAPET WALL FLASHING DETAIL
NTS

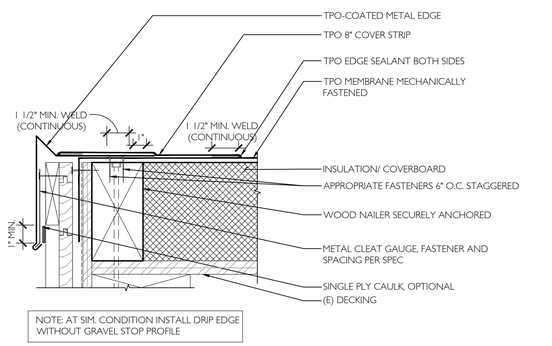

NOTE: AT SIM. CONDITION INSTALL DRIP EDGE WITHOUT GRAVEL STOP PROFILE

5 A3.1 DRIP EDGE WITH GRAVEL STOP
3" = 1'-0"

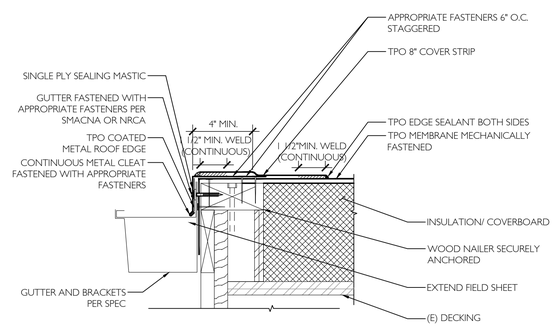

6 A3.1 GUTTER EDGE
3" = 1'-0"

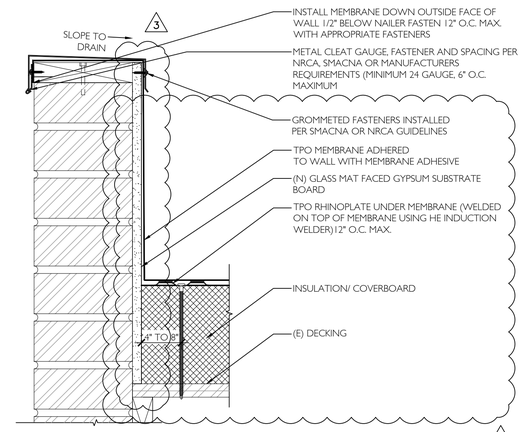

7 A3.1 PARAPET
3" = 1'-0"

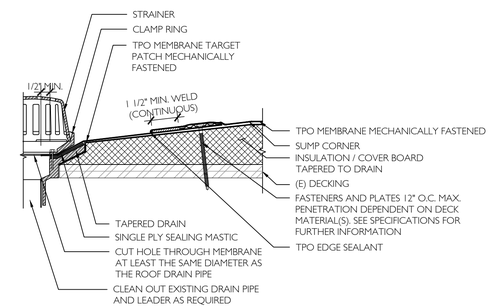

8 A3.1 PRIMARY DRAIN SUMP
3" = 1'-0"

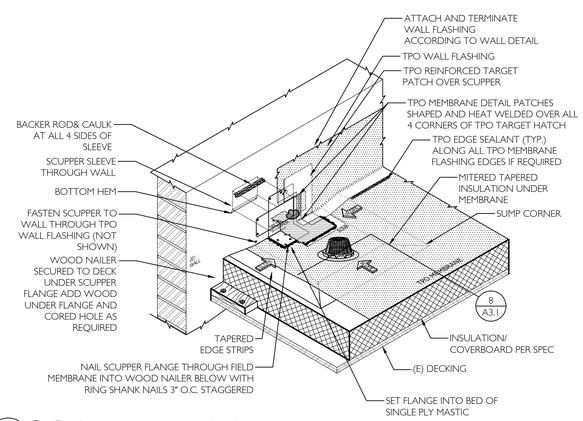

9 A3.1 DRAIN AND OVERFLOW SCUPPER
NTS

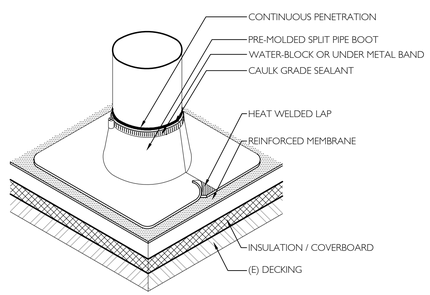

10 A3.1 SPLIT-PIPE BOOT DETAIL
N.T.S.

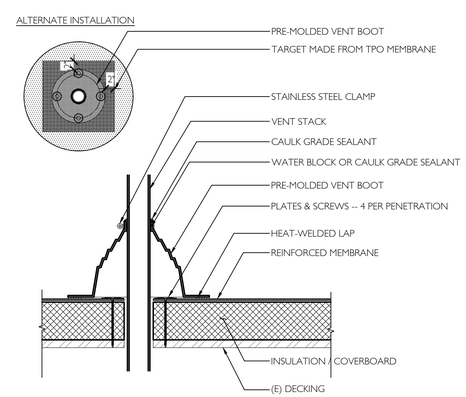

NOTE: WHERE CONDITIONS DO NOT PERMIT USE OF PRE-MOLDED PIPE BOOT. USE SPLIT-PIPE BOOT DETAIL 10/A3.1 AS ACCEPTABLE ALTERNATE

11 A3.1 PIPE BOOT FLASHING
N.T.S.

12 A3.1 SIDEWALL DUCT PENETRATIONS
3" = 1'-0"

E:\data\ab\20Y082.02\ BSD 2021 Roofing Projects\Y082.02 BSD 2021 Roof-Montclair\Current\CAD\A3.1.dwg Oct 01, 2021 - 4:15pm

REGISTERED ARCHITECT DUSTIN JOHNSON SAINT HELENS, OR 5865 STATE OF OREGON

ISSUED DATE	
1 SD SET	08.05.2020
2 DD SET	09.16.2020
3 80% CONST. DOCS	10.07.2020
4 BID SET RELEASE	10.28.2020
5 RESPONSE TO PLAN CHECK COMMENTS	02.18.2021
6 OWNER CHECKLIST	09.27.21
7 BID SET RELEASE	10.04.21

CIDA
ARCHITECTURE
ENGINEERING
PLANNING
INTERIORS
15895 SW 72ND AVE SUITE 200
PORTLAND, OREGON 97224
TEL: 503.226.1285
FAX: 503.226.1670
WWW.CIDAINC.COM

ROOF REPLACEMENT FOR:
BSD MONTCLAIR ELEM. SCHOOL
7250 SW VERMONT ST.
PORTLAND, OR 97223

DETAILS
A3.1

JOB NO. 20Y082.02

©2020 CIDA, P.C./CIDA ALL RIGHTS RESERVED

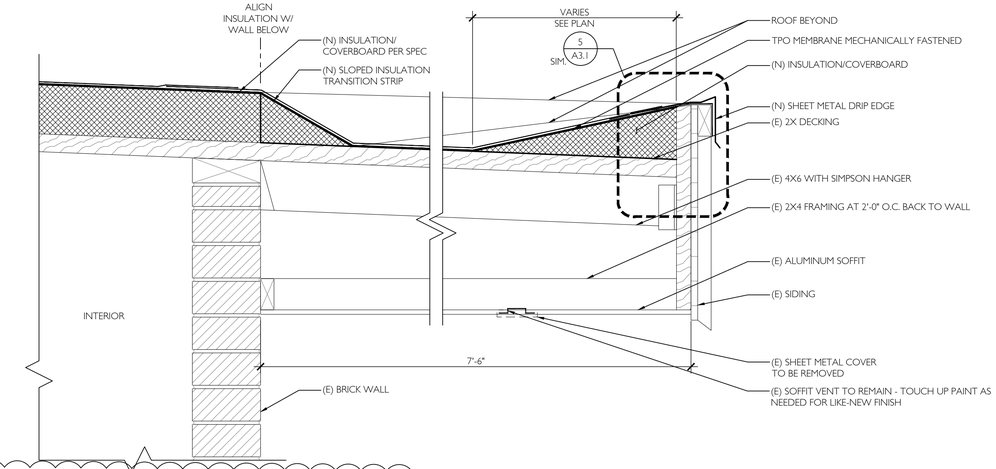

1 A3.2 PERIMETER TROUGH AT EAST WING

1 1/2" = 1'-0"

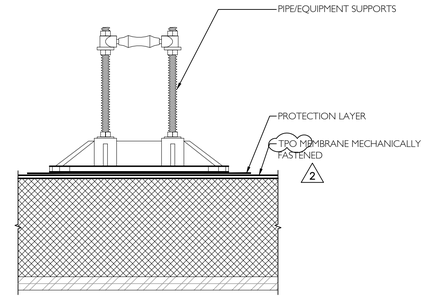

3 A3.2 GAS LINE SUPPORTS

3" = 1'-0"

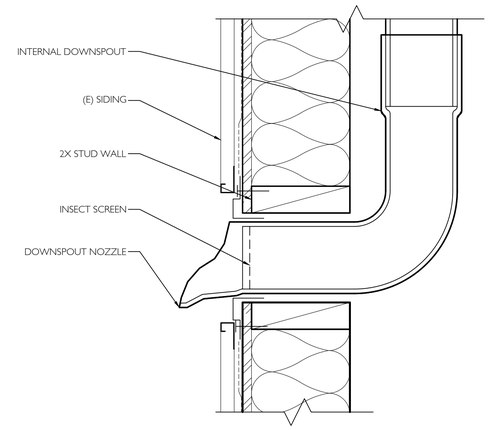

4 A3.2 ROOF DRAIN AT GROUND CONDITION

3" = 1'-0"

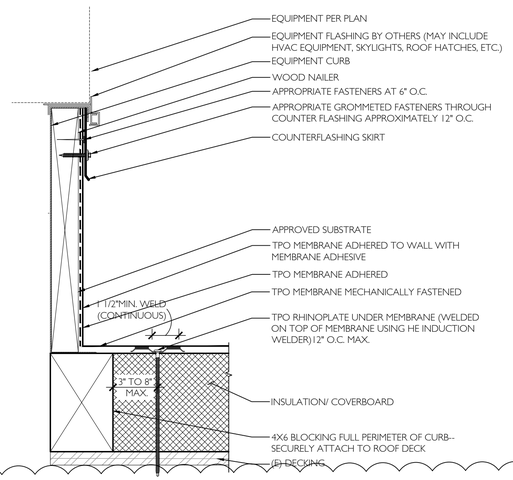

5 A3.2 ROOF CURB EXTENSION AT EXISTING SMOKE VENT

3" = 1'-0"

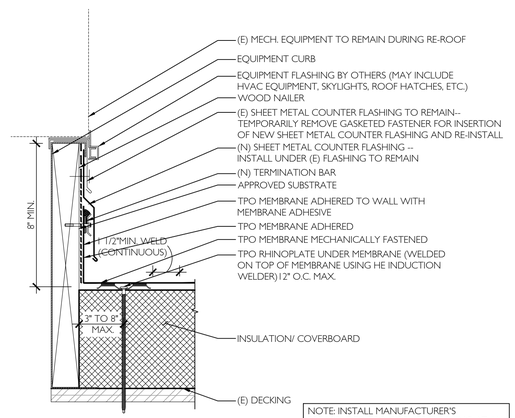

NOTE: INSTALL MANUFACTURER'S PRE-MOLDED TPO CORNER FLASHING AT ALL OUTSIDE CURB CORNERS

6 A3.2 EQUIPMENT CURB @ EQUIPMENT TO REMAIN

3" = 1'-0"

NOTES:
DETAILS TO BE USED IN CONJUNCTION WITH GUIDE SPECIFICATIONS CONTAINING REQUIREMENTS FOR NAILERS, INSULATION, ETC.

ON RE-ROOF OR RECOVER PROJECTS, VENT PIPES MUST BE CLEANED OR LARGE DEPOSITS OF ASPHALT. ALUMINUM TAPE IS WRAPPED AROUND THE PIPE AS SEPARATION LAYER. NEW AS SEPARATION LAYER. NEW ASPHALT-COATED CAST IRON PIPES MUST BE WRAPPED WITH ALUMINUM TAPE.

TPO EDGE SEALANT IS REQUIRED ON ALL CUT OR NON ENCAPSULATED EDGES OR REINFORCED MEMBRANE THIS INCLUDES FACTORY CUT MEMBRANE.

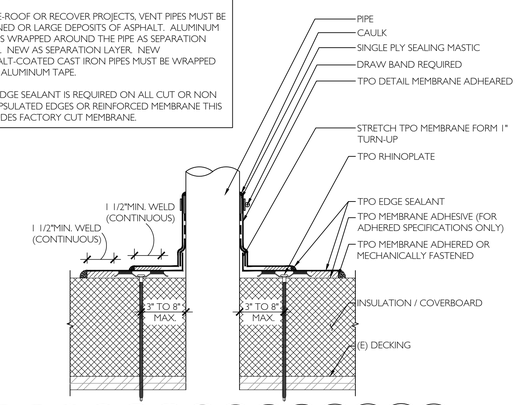

7 A3.2 FIELD FABRICATED PIPE PENETRATION

3" = 1'-0"

REGISTERED ARCHITECT
DUSTIN JOHNSON
SAINT HELENS, OR
5865
STATE OF OREGON

ISSUED DATE
1 SD SET 08.05.2020
2 DD SET 09.16.2020
3 80% CONST. DOCS 10.07.2020
4 BID SET RELEASE 10.28.2020
5 RESPONSE TO PLAN CHECK COMMENTS 02.18.2021
6 OWNER CHECKLIST 09.27.21
7 BID SET RELEASE 10.04.21

CIDA
ARCHITECTURE
ENGINEERING
PLANNING
INTERIORS
15895 SW 72ND AVE SUITE 200
PORTLAND, OREGON 97224
TEL: 503.226.1285
FAX: 503.226.1670
WWW.CIDAINC.COM

ROOF REPLACEMENT FOR:
BSD MONTCLAIR ELEM. SCHOOL
7250 SW VERMONT ST.
PORTLAND, OR 97223

DETAILS
A3.2
JOB NO. 20Y082.02

©2020 CIDA, P.C./CIDA ALL RIGHTS RESERVED

E:\acad\20Y082.01 BSD 2021 Roofing Projects\Y082.05 BSD 2021 Roof\Portlan\Current\CAD\A3.1.dwg Oct 21, 2021 - 3:22pm

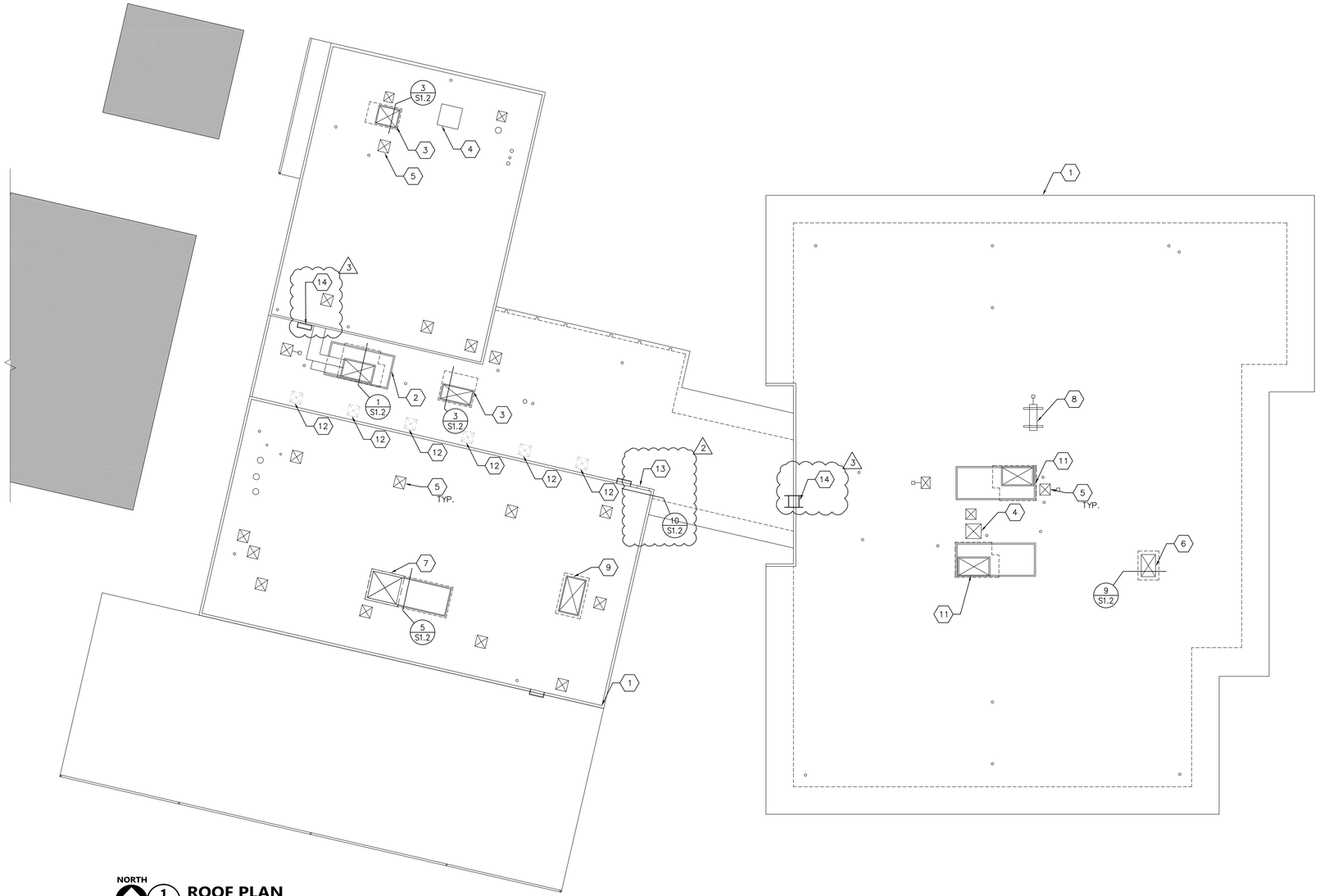

CODE

2019 OREGON STRUCTURAL SPECIALTY CODE (2019 OSSC)

DESIGN CRITERIA

WIND LOADS:
BASIC WIND SPEED (3 SECOND GUST) = 105 MPH (LRFD)
EXPOSURE CATEGORY = B
F = 31.9 PSF (LRFD)
F(UPLIFT) = 25.2 PSF (LRFD)

EARTHQUAKE:
SEISMIC PARAMETERS:
OCCUPANCY CAT. III
IMPORTANCE FACTOR = 1.0
MAPPED: Ss = 0.885 SITE CLASS: D
DESIGN: Sds = 0.708 SEISMIC DESIGN CATEGORY = D
FORCE RESISTING SYSTEMS:
MECHANICAL EQUIPMENT: Fp=0.353*WT FOR NON-SPRING ISOLATED AIR SIDE HVAC EQUIPMENT
Fp=1.06*WT FOR SPRING ISOLATED AIR SIDE HVAC EQUIPMENT

GENERAL

1. THE CONTRACT STRUCTURAL DRAWINGS AND SPECIFICATIONS REPRESENT THE FINISHED STRUCTURE. THEY DO NOT INDICATE THE METHOD OF CONSTRUCTION. THE CONTRACTOR SHALL PROVIDE ALL MEASURES NECESSARY TO PROTECT THE STRUCTURE DURING CONSTRUCTION. SUCH MEASURES SHALL INCLUDE, BUT NOT BE LIMITED TO, BRACING, SHORING OF LOADS DUE TO CONSTRUCTION EQUIPMENT, ETC. OBSERVATION VISITS TO THE SITE BY THE A/E SHALL NOT INCLUDE INSPECTION OF THE ABOVE ITEMS.
2. CONTRACTOR SHALL BE RESPONSIBLE FOR VERIFICATION OF ALL DIMENSIONS WITH DRAWINGS PRIOR TO START OF CONSTRUCTION. RESOLVE ANY DISCREPANCY WITH A/E.
3. CONSTRUCTION MATERIAL SHALL BE SPREAD OUT IF PLACED ON FRAMED FLOORS OR ROOF. LOAD SHALL NOT EXCEED THE DESIGN LIVE LOAD PER SQUARE FOOT.
4. WHERE REFERENCE IS MADE TO VARIOUS TEST STANDARDS FOR MATERIALS, SUCH STANDARDS SHALL BE THE LATEST EDITION AND/OR ADDENDUM.
5. ESTABLISH AND VERIFY ALL OPENINGS AND INSERTS FOR ARCHITECTURAL, MECHANICAL, ELECTRICAL AND PLUMBING WITH APPROPRIATE TRADES, DRAWINGS AND SUBCONTRACTORS PRIOR TO CONSTRUCTION.
6. OPTIONS ARE FOR CONTRACTOR'S CONVENIENCE. HE SHALL BE RESPONSIBLE FOR ALL CHANGES NECESSARY IF HE CHOOSES AN OPTION AND HE SHALL COORDINATE ALL DETAILS.
7. WHERE ANY DISCREPANCIES OCCUR BETWEEN PLANS, DETAILS, GENERAL STRUCTURAL NOTES AND SPECIFICATIONS, THE GREATER REQUIREMENTS SHALL GOVERN.
8. ANY ENGINEERING DESIGN PROVIDED BY OTHERS AND SUBMITTED FOR REVIEW SHALL BEAR THE SEAL OF A CIVIL OR STRUCTURAL ENGINEER REGISTERED IN THE STATE OF OREGON
9. ALL DETAIL CUTS SHOULD BE CONSIDERED TYPICAL @ LIKE CONDITIONS

ROOF PLAN KEYNOTES

1. (E) BUILDING PERIMETER
2. (E) --AAON UNIT AND CURB TO BE RE-INSTALLED ON ROOF PER 1/S1.2
3. (E) --AAON UNIT AND CURB TO BE RE-INSTALLED ON ROOF PER 3/S1.2
4. (E) --ROOF VENT AND CURB TO BE RE-INSTALLED ON ROOF PER 7/S1.2
5. (E) --VENT FAN UNIT AND CURB TO BE RE-INSTALLED ON ROOF PER 6/S1.2
6. (E) --TRANE UNIT ON CURB TO BE REMOVED AND RE-INSTALLED PER 9/S1.2
7. (E) --LENNOX UNIT AND CURB TO BE REPLACED WITH NEW 3,900LB UNIT ON NEW 1,000LB CURB PER 5/S1.2
8. (E) --CONDENSER UNIT ON SLEEPERS TO BE REPLACE SLEEPERS WITH WOOD PLATFORM AND RE-INSTALLED ON ROOF PER 8/S1.2
9. (E) CAPPED ROOF OPENING --REINSTALL CAP AFTER NEW FLASHING/ROOFING IS COMPLETE
10. NOT USED (1)
11. (E) --AAON UNIT AND CURB TO REMAIN IN PLACE DURING RE-ROOF
12. (E) SKYLIGHT TO BE REMOVED. INFILL OPENING WITH 5/8" PLYWOOD SHEATHING, ADD 2x6 BLOCKING AT EDGES OF EXISTING OPENING TO SUPPORT NEW PLYWOOD INFILL NAIL SHEATHING WITH 8d AT 6" O.C. EACH EDGE
13. (E) ROOF ACCESS DOOR IN GYM WALL--REVISE TOP OF OPENING HEIGHT PER 10/S1.2 (2)
14. (N) STEEL PIPE LADDER -- CONTRACTOR TO FIELD VERIFY HEIGHT, TYP. -- SEE DETAIL 3/A2.1 (3)

REGISTERED PROFESSIONAL ENGINEER
STRUCTURAL
CURTIS D. GAGNER
OREGON
EXPIRES: 6/30/23

ISSUED	DATE
1 SD SET	08.05.2020
2 DD SET	09.16.2020
3 80% CONST. DOCS	10.07.2020
4 BID SET RELEASE	10.28.2020
5 RESPONSE TO PLAN CHECK COMMENTS	02.18.2021
6 OWNER CHECKLIST	09.27.21
7 BID SET RELEASE	10.04.21

CIDA
ARCHITECTURE
ENGINEERING
PLANNING
INTERIORS
15895 SW 72ND AVE SUITE 200
PORTLAND, OREGON 97224
TEL: 503.226.1285
FAX: 503.226.1670
WWW.CIDAINC.COM

ROOF REPLACEMENT FOR:
BSD MONTCLAIR ELEM. SCHOOL
7250 SW VERMONT ST.
PORTLAND, OR 97223

ROOF PLAN
S1.1
JOB NO. 20Y082.02

© 2020 CIDA, P.C./CIDA ALL RIGHTS RESERVED

E:\autocad\20\Y082.01 BSD 2021 Roofing Projects\Y082.05 BSD 2021 Roof-Montclair\Current\CAD\S1.1-S1.2.dwg Oct 04, 2021 - 11:30am

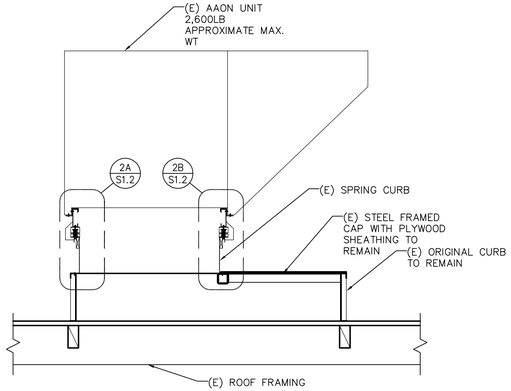

1 / S1.2 SECTION AT AC UNIT
1/2" = 1'-0"

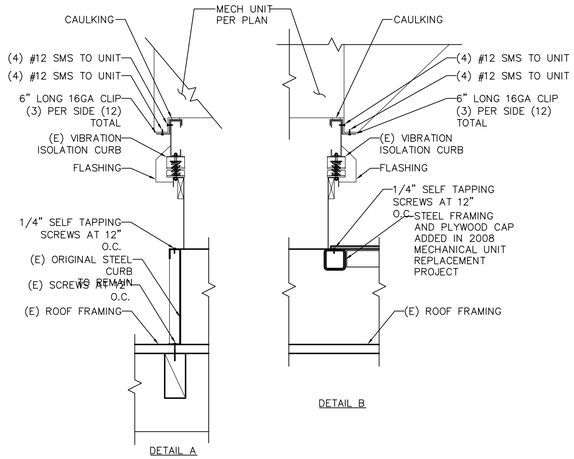

2 / S1.2 ISOLATION CURB DETAIL
1" = 1'-0"

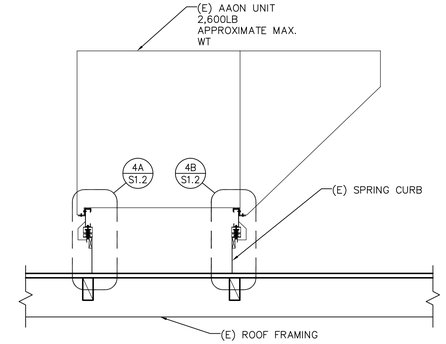

3 / S1.2 SECTION AT AC-3 UNIT
1/2" = 1'-0"

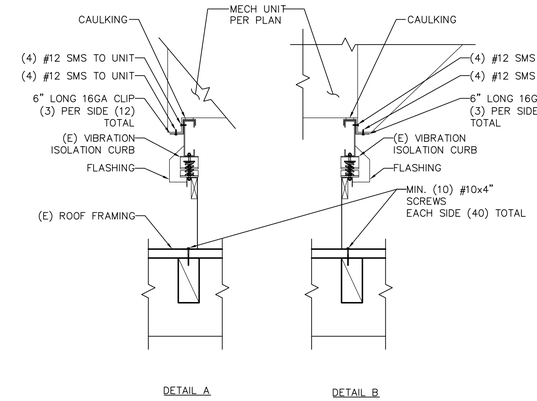

4 / S1.2 ISOLATION CURB DETAIL
1" = 1'-0"

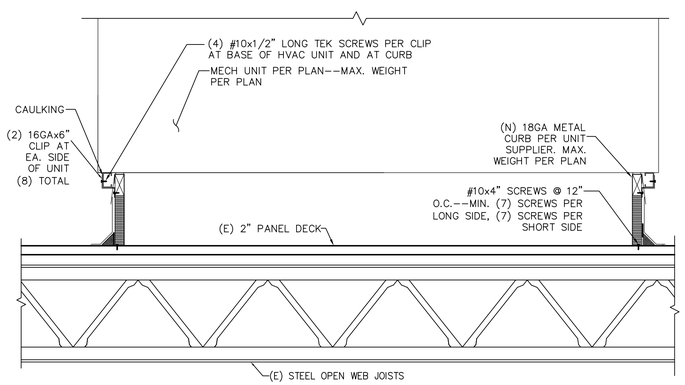

5 / S1.2 UNIT ATTACHMENT TO ROOF AC-5
1" = 1'-0"

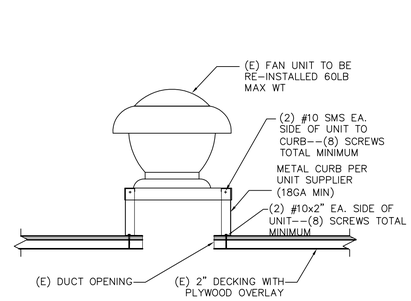

6 / S1.2 FAN UNIT ATTACHMENT
1" = 1'-0"

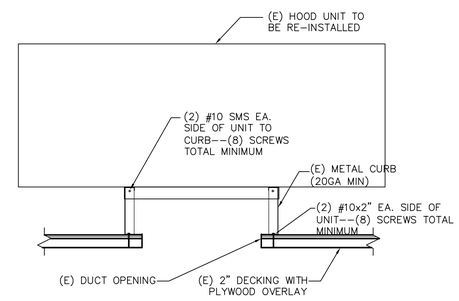

7 / S1.2 FAN UNIT ATTACHMENT
1" = 1'-0"

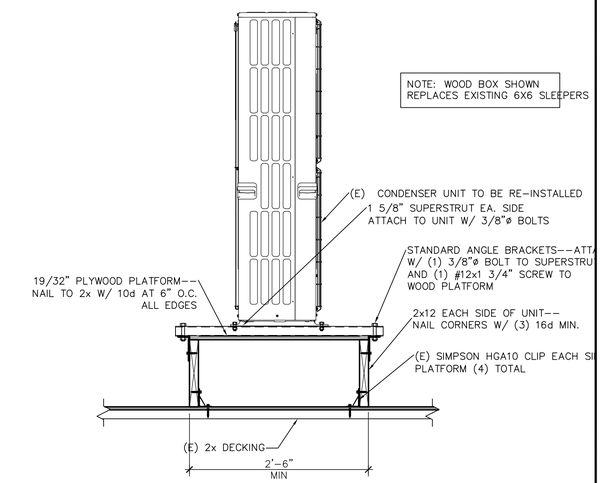

8 / S1.2 CONDENSER UNIT ATTACHMENT TO ROOF
1" = 1'-0"

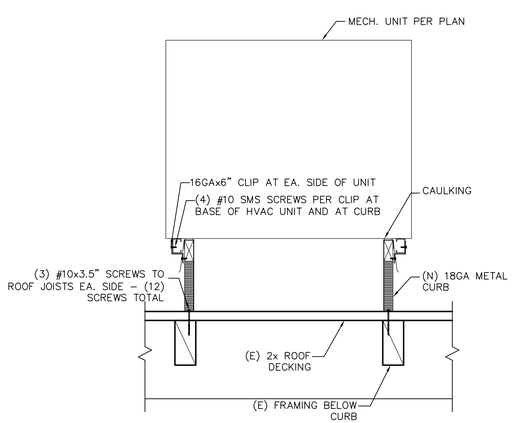

9 / S1.1 RTU ATTACHMENT AT ROOF
1" = 1'-0"

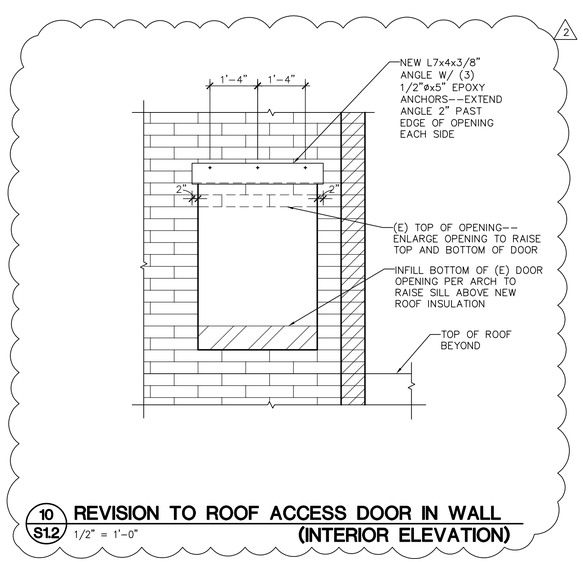

10 / S1.2 REVISION TO ROOF ACCESS DOOR IN WALL (INTERIOR ELEVATION)
1/2" = 1'-0"

E:\yafiles\20\Y082.01 BSD 2021 Roofing Projects\Y082.05 BSD 2021 Roof-Montclair\Current\CAD\S1.1-S1.2.dwg Oct 04, 2021 - 9:56am

REGISTERED PROFESSIONAL ENGINEER
STRUCTURAL
6334PE
OREGON
Dec 13, 2018
CURTIS D. GAGNER
EXPIRES: 6/30/23

ISSUED	DATE
1 SD SET	08.05.2020
2 DD SET	09.16.2020
3 80% CONST. DOCS	10.07.2020
4 BID SET RELEASE	10.28.2020
5 RESPONSE TO PLAN CHECK COMMENTS	02.18.2021
6 OWNER CHECKLIST	09.27.21
7 BID SET RELEASE	10.04.21

CIDA
ARCHITECTURE
ENGINEERING
PLANNING
INTERIORS
15895 SW 72ND AVE SUITE 200
PORTLAND, OREGON 97224
TEL: 503.226.1285
FAX: 503.226.1670
WWW.CIDAINC.COM

ROOF REPLACEMENT FOR:
BSD MONTCLAIR ELEM. SCHOOL
7250 SW VERMONT ST.
PORTLAND, OR 97223

DETAILS
S1.2
JOB NO. 20Y082.02

© 2020 CIDA, P.C./CIDA ALL RIGHTS RESERVED

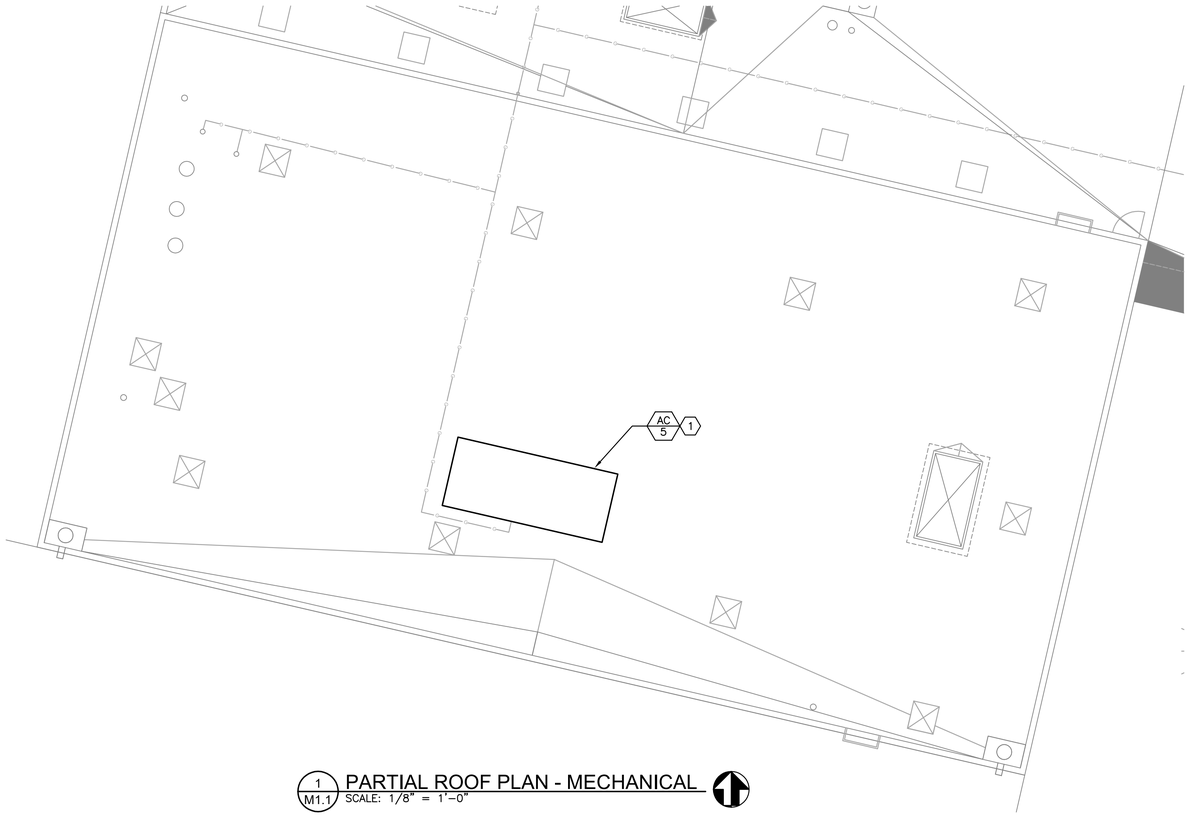

1 M1.1 PARTIAL ROOF PLAN - MECHANICAL
SCALE: 1/8" = 1'-0"

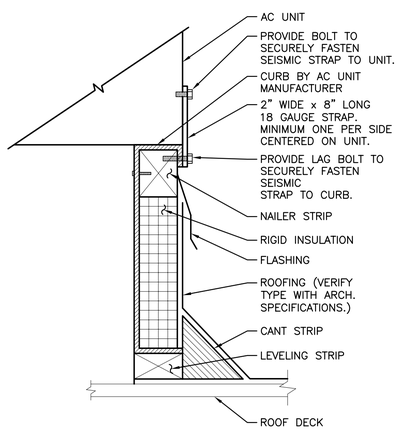

2 M1.1 ROOF CURB DETAIL
NOT TO SCALE

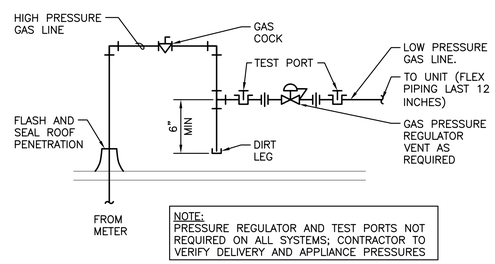

3 M1.1 GAS CONNECTION DETAIL (THROUGH ROOF)
NOT TO SCALE

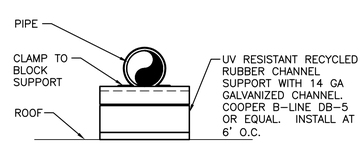

4 M1.1 PIPE SUPPORT DETAIL
NOT TO SCALE

MECHANICAL LEGEND

DUCTWORK FITTINGS (DOUBLE/SINGLE LINE) AND CONTROLS

DOUBLE LINE DUCTWORK | SINGLE LINE DUCTWORK

- SUPPLY AIR ELBOW UP
- RETURN/EXHAUST AIR ELBOW UP
- OUTSIDE AIR ELBOW UP
- SUPPLY AIR ELBOW DOWN
- RETURN/EXHAUST AIR ELBOW DOWN
- OUTSIDE AIR ELBOW DOWN
- FLEXIBLE DUCT
- TURNING VANE — SQUARE ELBOW
- D, R=1.5D — RADIUS ELBOW
- ACOUSTICALLY LINED DUCT (SIZES SHOWN ARE NET INSIDE)
- SUPPLY AIR DIFFUSER WITH THROW DIRECTION
- SUPPLY AIR SIDEWALL REGISTER
- RETURN/EXHAUST AIR CEILING REGISTER
- RETURN/EXHAUST AIR SIDEWALL REGISTER
- MVD — MANUAL VOLUME DAMPER
- M — MD — MOTORIZED DAMPER
- FSD — FIRE SMOKE DAMPER
- T/S, VAV-1 — THERMOSTAT/SENSOR MOUNTED @ 48" AFF WITH UNIT SERVED NOTED

ABBREVIATIONS

AFF	ABOVE FINISHED FLOOR
BDD	BACKDRAFT DAMPER
BTU	BRITISH THERMAL UNIT
CFM	CUBIC FEET PER MINUTE
(E)	EXISTING
ESP	EXTERNAL STATIC PRESSURE
EXH	EXHAUST AIR
GPM	GALLONS PER MINUTE
HP	HORSEPOWER
MA	MAKE-UP AIR
MBH	1000 BTU PER HOUR
MFR	MANUFACTURER
(N)	NEW
OSA	OUTSIDE AIR
PSI	POUNDS PER SQUARE INCH
RA	RETURN AIR
SA	SUPPLY AIR

REFERENCE

- CONNECT TO EXISTING AT THIS POINT. VERIFY LOCATION, SIZE, AND CONDITION.
- 1 — SHEET NOTE
- VAV 1 — EQUIPMENT MARK NUMBER SEE SCHEDULES
- 1 — REVISION
- 20x10 A / 500 OBD — DIFFUSER/REGISTER MARK NUMBER (NECK SIZE; SCHEDULED TYPE; CFM; OPPOSED BLADE DAMPER)

NOTE: NOT ALL SYMBOLS OR ABBREVIATIONS CONTAINED IN THIS LEGEND WILL APPEAR ON DRAWINGS.

GENERAL NOTES

A. CONDITIONS SHOWN ON THE PLANS RELATIVE TO THE WORK BEING PERFORMED ARE BASED ON THE BEST INFORMATION AVAILABLE BUT ARE SUBJECT TO VERIFICATION. VERIFY LOCATIONS AND ELEVATIONS OF DUCTS, PIPING AND OTHER COMPONENTS TO BE CROSSED OR CONNECTED PRIOR TO BEGINNING NEW INSTALLATIONS. CORRECT DEFICIENCIES CAUSED BY FAILURE TO PERFORM SUCH VERIFICATIONS AT NO COST TO OWNER, IMMEDIATELY NOTIFY OWNER OF CONDITIONS IN CONFLICT WITH DETAILS/PLANS.

B. MODIFICATIONS TO THE CONTROL SYSTEM MUST BE PERFORMED BY A BEAVERTON SCHOOL DISTRICT APPROVED CONTROLS CONTRACTOR.

C. TESTING AND BALANCING SHALL BE COMPLETED BY AN INDEPENDENT AGENCY.

D. PRETEST AIRFLOWS PRIOR TO DEMOLITION. SET AIRFLOWS TO PRE-DEMOLITION SETTINGS AFTER INSTALLATION.

E. EQUIPMENT START-UP SHALL BE PERFORMED BY A FACTORY AUTHORIZED CONTRACTOR. FACTORY START-UP DOCUMENTS SHALL BE DELIVERED TO THE SCHOOL DISTRICT AFTER COMPLETION.

NOTES THIS SHEET

1 DISCONNECT GAS PIPING, CONTROL WIRING AND DUCTWORK AND REMOVE ROOFTOP UNIT, ROOF CURB AND ALL RELATED COMPONENTS IN PREPARATION FOR NEW INSTALLATION. PROVIDE NEW ROOF CURB AND MOUNT NEW UNIT ON CURB. MODIFY, EXTEND AND CONNECT EXISTING DUCTWORK, GAS PIPING AND CONTROL WIRING TO NEW UNIT. MAINTAIN ALL CODE REQUIRED AND MANUFACTURER RECOMMENDED CLEARANCES. SEE DETAILS 2/M1.1, 3/M1.1, AND 4/M1.1.

ROOFTOP UNIT SCHEDULE

MARK NUMBER	AC 5
SYSTEM	GYM
TYPE	HTG ONLY MULTI-ZONE
AIRFLOW (CFM)	9000
MIN OSA (CFM)	1540
E.S.P. ("H20)	1
FAN MOTOR (HP)	
HEATING	
TYPE	INDIRECT
FUEL	NAT GAS
INPUT MBH	500
OUTPUT MBH	400
MIN. EFF. (AFUE %)	80
DESIGN WEIGHT (LBS)	4900
INTERLOCK WITH	EF-1/EF-2
ELECTRICAL (V-PH)	208-3
NOTES	1.
MANUFACTURER/ MODEL	SSM/ CUSTOM

NOTES:
1. PROVIDE WITH MOTORIZED INLET DAMPERS AND 14" HIGH SEISMIC RATED ROOF CURB. MATCH CURRENT UNIT CONFIGURATION.

DRAWING LIST

M1.1 ROOF PLAN - MECHANICAL
M2.1 MECHANICAL SPECIFICATIONS
M2.2 MECHANICAL SPECIFICATIONS

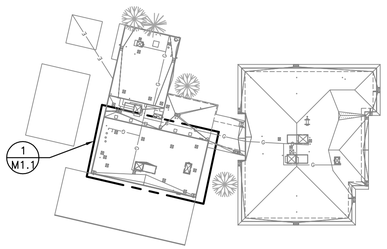

KEY PLAN
NOT TO SCALE

REGISTERED PROFESSIONAL ENGINEER 19698 OREGON MAY 5, 1998 EDWARD A. CARLISLE
PRELIMINARY
EXPIRES 12/31/21

ISSUED	DATE	
1	DD SET 09.16.2020	
2	80% CONST. DOCS.	10/07/2020

R&W ENGINEERING, INC.
9615 S.W. Allen Blvd., Suite 107
Beaverton, Oregon 97005
Phone: (503) 726-3319
Office: (503) 292-6000
E-mail: rweng@rweng.com
Project No.: 382.120.001
Contact: Kristin Trone

CIDA
ARCHITECTURE ENGINEERING PLANNING INTERIORS
15895 SW 72ND AVE SUITE 200
PORTLAND, OREGON 97224
TEL: 503.226.1285
FAX: 503.226.1670
WWW.CIDAINC.COM

ROOF REPLACEMENT FOR:
BSD MONTCLAIR ELEM. SCHOOL
7250 S VERMONT ST.
PORTLAND, OR 97223

ROOF PLAN - MECHANICAL
M1.1
JOB NO. 20Y082.02

W:\WP\382_CDA\120_BSD 2021 Roof Upgrades\001_Const Est\DWG\MONTCLAIR ELEM\M1.1.dwg Oct 05, 2020 - 1:09pm

SECTION 23 0500 – BASIC MATERIALS AND METHODS

1 GENERAL

1.1 WORK INCLUDED:
A. Provide all equipment, material and labor to install complete and operable mechanical systems.
B. Drawings are diagrammatic. They do not show every offset, bend, tee, or elbow which may be required to install work in the space provided. Do not scale drawings for roughing–in measurements, nor use as shop drawings. Make field measurements and prepare shop drawings as required. Coordinate work with shop drawings of other trades. Provide any bends, offsets and elbows where required by local conditions from measurements taken at the Building (subject to approval) and without additional cost to the Project. The right is reserved to make any reasonable changes in outlet location prior to roughing–in.
C. Obtain and pay for all permits, licenses, fees and taxes applicable to this project as required by law and governing authorities.

1.2 QUALITY ASSURANCE
A. Regulatory Requirements:
   1. All work, installations, materials and equipment shall comply with the provision of the following codes, standards and regulations, except where more stringent requirements are shown or specified:
      a. Current Edition of State of Oregon Plumbing Specialty Code (OPSC).
      b. Current Edition of State of Oregon International Mechanical Code (IMC).
      c. Current Edition of State of Oregon Structural Specialty Code (IBC).
      d. National Electrical Code (NEC).
      e. National Fire Protection Agency (NFPA).
      f. All City, County, State and Federal applicable laws and regulations.
      g. Regulations and standards set forth by ASME, ASHRAE, SMACNA, AGA and ARI.
   2. Where two or more codes or regulations apply, the more stringent of the two shall be exercised.
   3. Electrical products shall bear the U.L. label.
B. Work shall be of good quality, free of faults and defects and in conformance with the Contract Documents.
C. Workmanship: All materials shall be installed in a neat and workmanlike manner.

1.3 SUBMITTALS
A. Shop Drawings and Product Data: Submit all equipment drawings and product data for Work of Division 23 in accordance with Beaverton School District requirements and together in a single group, with each item field under a tab, and labeled with its respective specification section number, article and paragraph, and mark if applicable.

1.4 OPERATIONS AND MAINTENANCE DATA:
A. Prior to final inspection, provide one (1) electronic copy of manufacturer's maintenance manuals for each piece of equipment or items requiring service. Manual shall include manufacturer's operation and maintenance instruction manuals and parts list for each piece of equipment or item requiring servicing. Include in the manual manufacturer's service data, wiring diagrams and parts lists for all major items of equipment, valve charts, balancing data, final control diagrams showing final set points and any additional equipment added by contract modification. Comply with provisions of Section 01700 where applicable.
B. Prepare project cover with printed title "OPERATION AND MAINTENANCE INSTRUCTIONS", title of project, and subject matter of file when multiple files are required.
C. Internally subdivide the file contents with section dividers, logically organized with electronic bookmarks.
D. Provide one (1) final copy of manual in electronic pdf format through owner's eBuilder Closeout Process system after approval of contents.

1.5 PROJECT RECORD (AS–INSTALLED) DRAWINGS:
A. Keep Drawings clean, undamaged and up to date.
B. Make Drawings available when requested by Architect for his review.

1.6 PROJECT CONDITIONS:
A. Existing Conditions: Prior to bidding, verify and become familiar with all existing conditions by visiting the site and include all factors which may affect the execution of this work. Include all related costs in the initial bid proposal.
B. Coordinate exact requirements governed by actual job conditions. Check all information and report any discrepancies before fabricating work. Report changes in time to avoid unnecessary work. Make changes as directed by Owner.

1.7 WARRANTY:
A. Provide a written guaranty covering the work of this Division for a period of one calendar year from the date of acceptance of the entire project as required by the General Provisions.

2 PRODUCTS

2.1 QUALITY ASSURANCE
A. Provide products which are compatible with other portions of the work and provide products with the proper and correct power and fuel burner characteristics and similar adaptations for the project.

2.2 PIPE SLEEVES:
A. Interior Wall Sleeves: 12 gage galvanized steel, flush with wall on both sides.
B. Interior Floor Sleeves: 12 gage galvanized steel and extend 2–inches above finished floor.
C. Exterior Wall Sleeves: Cast iron, flush with wall on both sides.
D. On Grade Floor Sleeves: Same as exterior wall sleeves.

2.3 FLOOR, WALL AND CEILING ESCUTCHEONS
A. Furnish stamped split type plates as follows: Floor, wall and ceiling : Cast brass, chromium plated.

2.4 STARTERS AND SWITCHES
A. General: Provide each motor with starter or switch as approved and recommended by manufacturer of motor or equipment of which motor is a part.
B. Magnetic Starters: Provide for 1/2 horsepower and larger motors, and for smaller motors on automatic control or with interlock switch. Include pilot lights, reset, trip–free relay on each phase, Hand–Off–Auto switch in cover, and devices for coordination with control system (including transformer for control circuit, verify holding coil voltage requirements with control system design). Provide automatic ambient temperature compensation for starter heaters.
C. Manual Switches: Provide on motors 1/3 horsepower and smaller except where automatic control or interlock is indicated. Include pilot light. Provide overload protection where not protected by panelboard circuit breaker or fused disconnect switch.
D. Manufacturers: General Electric, ITE, Allen Bradley, Arrow–Hart, Cutler–Hammer, Square D or accepted substitute.

2.5 IDENTIFICATION MARKERS
A. Pipe Markers:
   1. Adhesive pipe markers of width, letter size and background color conforming to ANSI A13.1 and UPC 601.2.1 and 602.2.2.
   2. Acceptable Manufacturers: Brady B350 with banding tape or similar Seaton, Zeston, Porter, Tnemel.
B. Nameplates:
   1. Engraved nameplates, 1/16 inches thick, laminated 3–ply plastic, center ply white, outer ply black, letters formed by exposing center ply.
   2. Size: 3 inches by 5 inches nameplates with 1/4 inch high letters.
   3. Acceptable Manufacturers: Lamicoid.

3 EXECUTION

3.1 MECHANICAL EQUIPMENT WIRING
A. Provide all mechanical equipment motors, automatic temperature, limit, float and similar control devices required, with wiring complete from power source indicated on Electrical Drawings.
B. Equipment and systems shown on the Drawings and/or specified, are based upon requirements of specific manufacturers which are intended as somewhat typical of several makes which may be approved. Provide all field wiring and/or devices necessary for a complete and operable system including controls for the actual selected equipment/system.
C. Provide all starters for mechanical motors. Review Electrical Specifications and Drawings to determine which mechanical motor starters will be provided under the Electrical Specification Sections and provide all others.

3.2 MECHANICAL SYSTEM IDENTIFICATION
A. Piping System: Indicate each pipe system by its generic name (abbreviated) as shown; except vent and drainage piping. Comply with ANSI A13.1 for marker locations, letter sizes, and colors. Include arrows to show direction of flow and "Electric Traced" signs to identify heat cable wrapped piping.
B. Each new piece of equipment shall bear a permanently attached identification plate, listing the manufacturer's name, capacities, sizes and characteristics. In addition to the manufacturer's identification plate, provide nameplates of black phenolic resin laminate and identify new equipment by name and number 1/2" high letters.

3.3 CLEANING
A. General: Clean mechanical and plumbing equipment, fixtures, piping and ductwork of stampings and markings (except those required by codes), iron cuttings, and other refuse.

3.4 LAYOUT AND COORDINATION
A. Site Examination: Before starting work, carefully examine site and all contract Drawings so as to become thoroughly familiar with conditions governing work on this project. Verify all indicated elevations, building measurements, roughing–in dimensions and equipment locations before proceeding with any of the work.
B. The existence of any wires, conduits, pipes, ducts or other service facilities are shown in a general way only. It will be the duty of the Contractor to visit the site and make exact determination of the existence of any such facilities prior to submitting a bid. It is understood that the Contractor will be responsible for making the exact determination of the location and condition of these facilities.
C. Sleeves, Insets, Cast–in–Place Work: provide sleeves, inserts, anchoring devices, cast–in–place work, etc. which must be set in concrete sequenced at the proper time for the project schedule.
D. Discrepancies: Report immediately any error, conflict or discrepancy in Plans, Specifications and/or existing conditions.

3.5 MECHANICAL WORK CLOSEOUT
A. Record Drawings: Submit record set of drawings and Submittals as previously specified in this Section.
B. Closeout Equipment/Systems Operations: Operate each item of equipment and each system in a test run of appropriate duration with the Architect present, and with the Owner's operating personnel present, to demonstrate sustained, satisfactory performance. Adjust and correct operations as required for proper performance. Clean and lubricate each system, and replace dirty filters, excessively worn parts and similar expendable items of the work.
C. Operation and Instruction: Provide eight (8) hours of on–site training to Owner's personnel on all mechanical systems and equipment. Training shall include maintenance, lubrication, troubleshooting and repair. Contractor shall provide necessary written manuals and training aides explaining operational diagrams, emergency and alarm provisions, sequencing requirements, seasonal provisions, security, safety and similar features of the installed system.

SECTION 23 0600 – PIPE AND PIPE FITTINGS

1 GENERAL

1.1 WORK INCLUDED
A. Provide all pipe, piping fittings and all related components required for complete piping system.

2 PRODUCTS

2.1 NATURAL GAS PIPING, ABOVE GRADE

A. Steel Pipe: ASTM A53 or A120, schedule 40 black. Fittings: ANSI/ASME B16.3, malleable iron, or ASTM A234, forged steel welding type. Joints: Screwed for pipe two inches and under; ANSI/AWS D1.1, welded for pipe over two inches.

2.2 EQUIPMENT AND COOLING COIL DRAINS AND OVERFLOWS

A. Copper Tubing: ASTM B88, Type L, hard drawn. Fittings: ANSI/ASTM B16.22, cast brass, or ANSI/ASME B16.29 solder wrought copper. Joints: ASTM B32, solder, Grade 95TA or ANSI/AWS A5.8, BCuP silver braze.

3 EXECUTION

3.1 PREPARATION
A. Ream pipe and tube ends. Remove burrs or bevel plain end ferrous pipe.
B. Remove scale and dirt, on inside and outside, before assembly.
C. Prepare piping connections to equipment with flanges or unions.

3.2 INSTALLATION
A. Provide non–conducting dielectric connections wherever jointing dissimilar metals.
B. Route piping in orderly manner, maintain gradient and conceal all piping unless otherwise indicated.
C. Provide clearance for installation of insulation and access to valves and fittings.
D. Slope water piping and arrange to drain at low points and provide drain valve.
E. Establish invert elevations, slopes for drainage to 1/4 inch per foot minimum. Maintain gradients.
F. Pitch vent piping at 1/4 inch per 10 feet minimum.
G. Escutcheons: Install on all exposed pipes passing through wall or floors and on fixture stops and waste connections to wall.

3.3 CLEANING
A. Gas piping: Blow clear of debris with nitrogen or oil free air. Clean all low point strainers and pockets.

3.4 TEST
A. Natural gas piping: One half hour minimum air at 60 psig for 2 psig gas, and 15 minutes at 10 psig for 7 inch water gauge natural gas or as approved and certified by serving utility.

SECTION 23 0650 – VALVES

1 GENERAL

1.1 WORK INCLUDED
A. The requirements of this Section apply to the valving for the systems specified elsewhere in Division 23.

2 PRODUCTS

2.1 BALL VALVES
A. Natural Gas:
   1. 5 psig or less, 2 inches and smaller ball valves, Watts 6000UL. Threaded, 250 psi, 2 piece, bronze..
   2. 5 psig or less, 2–1/2 inches and larger, 125 psi, all bronze or cast iron body/bronze trim. AGA approved.

2.2 GAS PRESSURE REGULATORS
A. Size and capacity as required for connected load. Style and model as approved by gas supplier.
B. Manufacturers: Maxitrol, Rockwell, Fisher, Reliance, or accepted substitute.

3 EXECUTION

3.1 INSTALLATION
A. Provide clearance for installation of insulation and access to valves and fittings.
B. Provide access where valves and fittings are not exposed. Coordinate size and location of access door with Section 23 0500.
C. Install valves with stems upright or horizontal, not inverted.

SECTION 230900 – SUPPORTS AND ANCHORS

1 GENERAL

1.1 WORK INCLUDED
A. Provide pipe and equipment hanger, support, anchors and all related items for complete systems.

1.2 QUALITY ASSURANCE
A. Supports for sprinkler piping and standpipes: In conformance with NFPA 13 and 14.
B. Provide pre–manufactured horizontal piping and ductwork hangers, clamps, hanger rod, shields, supports, etc.
C. Seismic Requirements: Provide seismic restraints in accord with the following Seismic Hazard Levels (SHL) as recommended in the "Seismic Restraint Manual: Guidelines for Mechanical Systems," latest edition, SMACNA.
   1. SHL "B": All seismic zone "3" (UBC Chapter 16) and all occupancy categories "I" and "II" (UBC Chapter 16) in seismic zone "2B".
   2. SHL "C": All occupancy categories "III" and "IV" in seismic zone "2B".

3 EXECUTION

3.1 INSTALLATION OF HANGERS AND SUPPORTS
A. General: Proceed with the installation of hangers, supports and anchors only after the required building structural work has been completed in areas where the work is to be installed. Correct inadequacies including (but not limited to) the proper placement of inserts, anchors and other building structural attachments.
   1. Prevent electrolysis in the support of copper tubing by the use of hangers and supports which are copper plated, or by other recognized industry methods.
   2. Support fire sprinkler piping independently of other piping and in accordance with NFPA Pamphlet 13.
   3. Install hangers and supports to provide the indicated pipe slopes, and so that maximum pipe deflections allowed by ANSI B31 are not exceeded. Comply with the following installation requirements:
      a. Insulated Pipe Supports: Insulated pipe supports shall be supplied and installed on all insulated pipe and tubing.
      b. Load Rating: All insulated pipe supports shall be load rated by the manufacturer based upon testing and analysis in conformance with ASME B31.1, MSS SP–58, MSS SP–69 and MSS SP–89.
      c. Support Type: Manufacturer's recommendations, hanger style and load shall determine support type.
      d. Insulated Piping Supports: Where insulated piping with continuous vapor barrier or where exposed to view in finished areas is specified, install hard maple wood insulation shields (Elcen Fig. 216) or steel pipe covering protection shields (MSS type 39) at each hanger.

FLEXIBLE DUCT CONNECTION (FDC)
C. Neoprene loaded vinyl material or neoprene loaded canvas with vapor barrier. Flame spread rating of 25 or less and a smoke spread rating of 50 or less, per ASTM E84. Not affected by temperatures as low as minus 10F or as high as 200F.
D. Flexible Connections: Ventglass manufactured by Ventfabrics, Amatex or accepted substitute.

SECTION 23 0700 – MECHANICAL INSULATION

1 GENERAL

1.1 WORK INCLUDED
A. Provide piping, ductwork and equipment insulation including jacketing, adhesive and all related accessories for complete insulated system.

2 PRODUCTS

2.1 ACCEPTABLE MANUFACTURERS
A. Insulating Manufacturers: JohnsManville, Knauf, Armstrong, Owens–Corning, Pabco, IMCOA or Certain Teed.
B. Adhesive Manufacturers: Benjamin Foster, 3M, Borden, Kingco or Armstrong.
C. JohnsManville products are listed unless indicated otherwise.

2.2 PIPING INSULATION, JACKETING AND ACCESSORIES
A. Insulation:
   1. Pipe system to minus 10 to 55 deg. F: Flexible, preformed, pre–slit, self–sealing elastomeric, thermal conductivity of 0.27 Btu/hr. sq. ft./in. at 75 deg. F and vapor transmission rating of 0.2 perms/inch. Apply in thickness necessary to prevent condensation on the surface. JohnsManville "AEROTUBEII".
   2. Piping Systems 55 to 600 deg. F: Glass fiber preformed pipe insulation with a minimum K–value of 0.23 at 75 deg. F, a minimum density of 3.5 pounds per cubic foot. JohnsManville "Micro–Lok."
B. Jackets:
   1. Interior Applications:
      a. Vapor Barrier Jackets: Kraft reinforced foil or vinyl vapor barrier with self–sealing adhesive joints or pressure sensitive seal. JohnsManville "Micro–Lok."
      b. PVC Jackets: One piece, premolded type. JohnsManville "Zeston 1200."
   2. Exterior Applications:
      a. Aluminum Jackets: ASTM B209; 0.016 inch thick; smooth finish. JohnsManville weatherproof "Micro–Lok."

2.3 DUCT INSULATION AND JACKETS
A. Insulation: 2 inch flexible glass fiber; ANSI/ASTM C612; commercial grade; 'k' value of 0.3 at 75 degrees F, JohnsManville "Microlite".
B. Jacketing:
   1. Indoor Jacket: Foil–Skrim–Kraft.
   2. Outdoor Jacket: Coated glass fiber sheet, 30 lb/sq yd.
   3. Lagging Adhesive: Fire resistive to ASTM E84, NFPA 255, and UL 723.
   4. Impale Anchors: Galvanized steel, 12 gauge, self–adhesive pad.
   5. Joint Tape: Glass fiber cloth, open mesh.
   6. Tie Wire: Annealed steel, 16 gauge (1.5 mm).
C. Fire Wrap: Listed and labeled duct wrap compliant with ASTM E 2336 and installed per manufacturer's recommendations. Thickness as required to maintain required fire rating. Thermal Ceramics FireMaster Duct Wrap or approved.

3 EXECUTION

3.1 PREPARATION
A. Install materials after piping, ductwork and equipment has been tested and approved.

3.2 PIPING INSULATION INSTALLATION
A. Install materials in accordance with manufacturer's instructions.
B. Continue insulation with vapor barrier through penetrations.
C. In exposed piping, locate insulation and cover seams in least visible locations.
D. Provide an insert, not less than 6 inches long, of same thickness and contour as adjoining insulation, between support shield and piping, but under the finish jacket, on piping 2 inches diameter or larger, to prevent insulation from sagging at support points. Inserts shall be cork or other heavy density insulating material suitable for the planned temperature range. Factory fabricated inserts may be used.
E. Piping Insulation Schedule:

PIPING	PIPE SIZE (IN.)	INSULATION THICKNESS (IN.)
Domestic Cold	All	1/2
Domestic Hot/Tempered and Recirculating/Heating	2" and Smaller	1–1/2

F. Handicapped Lavatory Insulation Kit: ASTM: P–traps, hot water and cold water insulating guards. Molded closed cell vinyl with nylon fasteners, paintable. Thermal conductivity: K=1.17 (BTU/in)/(hr/sq.ft./deg. F) at 75F mean temperature. Provide accessories as required for complete installation. Color white. Truebro Inc. Model 102. McGuire, ProWrap, Brocar Trap Wrap or accepted substitute.

3.3 DUCTWORK INSULATION INSTALLATION
A. Install materials in accordance with manufacturer's instructions.
B. Exterior Insulation Application:
   1. Secure insulation with vapor barrier with wires and seal jacket joints with vapor barrier adhesive or tape to match jacket.
   2. Install without sag on underside of ductwork. Use adhesive or mechanical fasteners where necessary to prevent sagging. Seal vapor barrier penetrations by mechanical fasteners with vapor barrier adhesive. Stop and point insulation around access doors and damper operators to allow operation without disturbing wrapping.
C. Continue insulation with vapor barrier through penetrations.
D. Internally Lined Ductwork: Where internally lined ductwork is indicated on the Drawings or specified, no exterior insulation is required. Carefully lap the ends of the exterior insulation a minimum of 6 inches past the interior insulation unless otherwise shown. Seal the end of vapor barrier jacket to the duct with mastic where the vapor barrier is required.
E. Duct Insulation Schedule

Supply and Return Duct	All	1–1/2" Thick	Flexible Fiberglass Insulation

REGISTERED PROFESSIONAL ENGINEER
19698
PRELIMINARY
OREGON
MAY 5, 1998
EDWARD A. CARLISLE
EXPIRES 12/31/21

ISSUED DATE
1 DD SET 09.16.2020
2 80% CONST. DOCS. 10/07/2020

R&W ENGINEERING, INC.
9615 S.W. Allen Blvd., Suite 107
Beaverton, Oregon 97005
Phone: (503) 726-3319
Office: (503) 292-6000
E-mail: rweng@rweng.com
Project No.: 382.120.001
Contact: Kristin Trone

CIDA
ARCHITECTURE
ENGINEERING
PLANNING
INTERIORS
15895 SW 72ND AVE SUITE 200
PORTLAND, OREGON 97224
TEL: 503.226.1285
FAX: 503.226.1670
WWW.CIDAINC.COM

ROOF REPLACEMENT FOR:
BSD MONTCLAIR ELEM. SCHOOL
7250 S VERMONT ST.
PORTLAND, OR 97223

MECHANICAL SPECIFICATIONS
M2.1
JOB NO. 20Y082.02

W:\WF\382_CIDA\120_BSD 2021 Roof Upgrades\001_Cost Est\DWG\MONTCLAIR ELEM\M2.1.dwg Oct 05, 2020 – 1:10pm

SECTION 23 7000 – HEATING, COOLING AND VENTILATING EQUIPMENT

1 GENERAL

1.1 DESCRIPTION

A. The requirements of this section apply to the Heating, Cooling and Ventilating Equipment.

2 PRODUCTS

2.1 PACKAGED ROOFTOP AIR CONDITIONING UNITS (3–20 TONS)

A. Manufacturers: Trane, Carrier, Daikin, Luxaire, Lennox, Scott Springfield Mfg., Inc. (SSM) or approved substitution.

B. Performance: Unit shall be selected within +/–5% of cooling and heating capacity scheduled. Unit shall be provide EER, IPLV, fan BHP efficiencies at or better than scheduled values.

C. Unit: Single piece packaged rooftop combination heating and cooling unit. Unit factory assembled, piped, charged with refrigerant, wired and tested. Factory run tested to include the operation of all fans, compressors, heat exchangers, and control sequences. Factory adhere labels, decals, and/or tags to aid in the service of the unit and indicate caution areas.

D. Cabinet: Zinc coated galvanized steel to be finished with weather–resistant enamel finish. Unit surface shall withstand 600 hours in a salt spray test in compliance with ASTM B117. Unit to have downflow supply and return with duct connections made fully inside roof curb. The unit base shall have provisions for crane lifting lugs. Unit to include outside air intake hood. Roof panels shall be sloped to provide positive drainage of rain water / melting snow away from the cabinet.

E. Service Access: Access panels shall be hinged or quick lift out with no more than two screws, and provide a water and air tight seal.

F. Supply Fan: Forward curved, double width, double inlet, centrifugal type supply fan with self–aligning, grease lubricated ball or sleeve bearings with permanent lubrication fittings. Provide thermal overload protection on motor.

G. Exhaust Fan: Units 6 tons and larger shall be provided with exhaust fan to assist in controlling building static pressure. Exhaust fan is for duct installation on horizontal discharge units. Exhaust fan shall be mounted and integrally wired on downflow units. Exhaust fan shall be on whenever outside air damper is greater that 25 percent. Barometric Relief: Units below 6 tons, which have economizers, shall have barometric relief hood.

H. Gas Heating Section: Completely assembled and wired gas fired heating system with stainless steel heat exchanger, electronic ignition, centrifugal combustion blower, continuous flame safety, automatic gas valve and manual gas shut–off valve. Designed and tested for use constant airflow with entering air down to 45 degrees. Two–stage natural gas heating when heating output is greater than 140 MBH.

I. Electrical: Units shall be UL listed and label as a complete assembly. Provide single control panel with weatherproof control panel, single point electrical connection, suitable overload protection for each branch circuit, contactors for each motor & compressor, fused control power transformer. Provide wiring diagrams, affixed to access door.

J. Controls: Factory mounted controls to include devices and wiring necessary for unit operation on a standalone basis for service checkout and operation before control installation is complete. This system shall consist of contactors, transformers, two minute supply fan anticycle timer, compressor min ON and OFF anticycle timers, condenser fan anticycle timers, heat anticycle timers, and refrigeration safeties factory wired and tested. Controls shall provide fully integrated, dry bulb initiated, economizer control that allows compressor operation to supplement free cooling. Unit control shall interface with thermostat or controller specified under division 23 0933.

K. Unit Options:

1. Roof Curb: 14 inch high galvanized steel curb with gaskets and nailer strip, manufactured in accordance with the National Roofing Contractors Association guidelines for rooftop equipment support.
2. Filters: Filter rack with MERV 8 filters minimum. MERV 13 filters optional, see schedule.

3 EXECUTION

3.1 EQUIPMENT INSTALLATION

A. Install in accordance with manufacturer's instructions and applicable code.

B. Lubricate all moving and rotating parts in accordance with manufacturer's recommendation prior to start–up.

C. All roof mounted mechanical equipment shall be supported and seismically anchored on leveled, flashed and counterflashed curbs anchored to resist seismic forces and suitable for the roof construction. Minimum curb height shall be 12 inches above the roof unless otherwise noted.

D. Make all electrical and duct penetrations for each equipment within the curb unless shown otherwise on the Drawings. Piping and electrical conduit routed above and across the roof shall be supported on flashed and counterflashed curbs with pipe guides anchored to the curbs in "pitch pockets." Submit shop drawings on other arrangements for approval.

E. Secure fans with lag bolts on each side. Seal with mastic mount on level curb.

SECTION 23 8900 – AIR DISTRIBUTION

1 GENERAL

1.1 WORK INCLUDED

A. Provide air distribution equipment as specified herein and shown.

B. Equipment capacity and size shall be as shown.

2 PRODUCTS

2.1 DUCTWORK

A. Galvanized steel sheet metal: Metal gauges, joints and reinforcement in accordance with mechanical Code, ASHRAE and SMACNA tables and recommendations.

B. Spiral Seam Duct: Round and flat oval spiral seam duct shall be manufacture of galvanized steel sheet metal with spiral lock seam. Matching fittings shall be manufactured of galvanized steel with spot welded seams. United Sheet Metal, Semco, Rolock, Metco or accepted substitute.

2.3 DUCT SEALING

A. Aluminum bonded to aluminized mylar reinforced with fiberglass mesh backing an elastomeric pressure sensitive adhesive specifically formulated for adhesion to galvanized metal. Hardcast "AFG–1402" with "HD–181" degreaser or accepted substitute.

B. Two–part sealing system with woven fiber, mineral gypsum impregnated tape and non–flammable adhesive. Hardcast "DT–5300 tape and "RTA–50" adhesive or United "Uni–Cast" system or accepted substitute.

C. Duct Joints for Sheet Metal Ducts: "Ductmate System" by Ductmate Industries, Inc., for making transverse rectangular and round duct joints. Ward Duct Connectors, Inc., Lockformer TDC or accepted substitutes.

2.4 ACCESSORIES

A. Manual Volume Dampers: Construct of material two gauges heavier than duct in which installed; single plate up to 12 inches wide; multiple over 12 inches wide. Hem both edges 1/2 inch and flange sides 1/2 inch. Provide regulator extension through sheet rock ceiling with concealed adjustable cover. Use Young, DuroDyne or accepted substitue damper accessories.

3 EXECUTION

3.1 INSTALLATION

A. Locate ducts with sufficient space around equipment to allow normal operating and maintenance activities.

B. Provide manual volume dampers at points on low pressure supply, return, and exhaust systems where branches are taken from larger ducts for air balancing. Use splitter dampers only where shown. Location of all volume dampers are not necessarily shown on the drawings.

C. Provide flexible connections immediately adjacent to equipment in ducts associated with fans and motorized equipment.

D. Provide backdraft dampers on exhaust fans or exhaust ducts nearest to outside and where shown.

E. Provide duct access doors for inspection and cleaning before and after filters, coils, fans, automatic dampers, at fire dampers, and elsewhere as indicated. Provide minimum 12 inches x 12 inches size for hand access, 18 inches x 24 inches size for shoulder access and as indicated. Install necessary access openings and covers for cleaning, wiring or servicing motors, fire dampers, filters, fans, both entering and leaving air sides of coils, and to other equipment located within or blocked by ductwork.

F. Support: Install ductwork with 1 inch wide 16 gauge cradle hangers not more than 8 feet c/c or as required by code. Support terminal units independent of adjacent ductwork. Attach to available building construction as per good practices for materials involved. Exposed ductwork shall be supported by closed cradle strap suspended from 3/8 inch threaded rod.

G. Connection Fittings: Round connections to rectangular ducts manufactured sheet metal "spin–in" fittings. Genflex, Wiremold, Thermaflex, Glassflex, Clevepak, Manville, or accepted substitute.

H. Elbows and Fittings: Construct elbows with throat radius equal to duct width in plane or turn or make them square and provide double wall, air foil turning vanes.

I. Sleeves: Provide galvanized sheet metal plaster ring around ductwork penetrating exposed finished walls. Sleeve and flash all duct penetrations through exterior walls in an air tight and weatherproof manner.

J. Plenums: Construct sheet metal plenums and partitions of not lighter than 18 gauge galvanized steel and reinforce with 1–1/2 inch by 1/2 inch by 1/8 inch angles as required to prevent drumming or breathing.

K. Acoustical Duct Lining: Acoustically line all outside air ducts and plenums, all fan unit intake and discharge plenums, all ductwork indicated as lined on the Drawings.

L. During construction provide temporary closures of metal or taped polyethylene on open ductwork to prevent construction dust from entering ductwork system.

3.2 ADJUSTING AND CLEANING

A. Clean duct system and force air at high velocity through duct to remove accumulated dust. To obtain sufficient air, clean half the system at a time. Protect equipment which may be harmed by excessive dirt with temporary filters, or bypass during cleaning.

SECTION 23 8000 – TESTING, ADJUSTING, AND BALANCING

1 GENERAL

1.1 WORK INCLUDED

A. After completion of the work of installation, test and regulate all components of the ventilating systems to verify air flow rates shown.

B. Measurement of final operating condition of mechanical systems.

C. Provide written report documenting testing, adjusting and balancing results.

2 PRODUCTS

2.1 EQUIPMENT

A. Provide all necessary personnel, equipment and services.

3 EXECUTION

3.1 EXAMINATION

A. Before commencing work, verify that systems are complete and operable. Ensure the following: Equipment is operable and in a safe and normal condition. Temperature control systems are installed complete and operable. Proper thermal overload protection is in place for electrical equipment. Final filters are clean and in place. If required, install temporary media in addition to final filters. Duct systems are clean of debris. Correct fan rotation. Fire and volume dampers are in place and open. Coil fins have been cleaned and combed. Access doors are closed and duct end caps are in place. Air outlets are installed and connected. Duct system leakage has been minimized.

B. Report any defects or deficiencies noted during performance of services to Architect.

C. Beginning of work means acceptance of existing conditions.

3.2 PREPARATION

A. Provide instruments required for testing, adjusting, and balancing operations. Make instruments available to Architect to facilitate spot checks during testing.

3.3 INSTALLATION TOLERANCES

A. Adjust air handling systems to plus or minus 10 percent for supply, return and exhaust systems from figures indicated.

B. Permanently mark settings of valves, dampers, and other adjustment devices allowing settings to be restored. Set and lock memory stops.

C. At final inspection, recheck random selections of data recorded in report. Recheck points or areas as selected and witnessed by the Owner.

3.4 ADJUSTING

A. After adjustment, take measurements to verify balance has not been disrupted or that such disruption has been rectified.

B. Leave systems in proper working order, replacing belt guards, closing access doors, closing doors to electrical switch boxes, and restoring thermostats to specified settings.

3.5 AIR SYSTEM PROCEDURE

A. Make air quantity measurements in ducts by Pitot tube traverse of entire cross sectional area of duct.

B. Measure air quantities at air inlets and outlets.

C. Adjust distribution system to obtain uniform space temperatures free from objectionable drafts and noise.

D. Vary total system air quantities by adjustment of fan speeds. Provide drive changes required. Vary branch air quantities by damper regulation.

E. Measure static air pressure conditions on air supply units, including filter and coil pressure drops, and total pressure across the fan.

F. Adjust outside air automatic dampers, outside air, return air, and exhaust dampers for design conditions.

G. Measure temperature conditions across outside air, return air, and exhaust dampers to check leakage.

H. Where modulating dampers are provided, take measurements and balance at extreme conditions.

I. Measure building static pressure and adjust supply, return, and exhaust air systems to provide required relationship between each to maintain approximately 0.05 inches positive static pressure near the building entries.

3.6 VERIFICATION OF CONTRACTOR'S PERFORMANCE

A. Balancing data may be spot checked with instruments similar to that used by the balancing firm.

B. If, in the judgment of the Architect, the discrepancies warrant additional adjustment, readjust and rebalance the systems at no ad

SECTION 23 9330 – CONTROLS

1 GENERAL

1.1 SYSTEM DESCRIPTION

A. Provide a system of low voltage electrical controls that is compatible with and can fully integrate with existing direct digital control building management system. Work must be performed by a Beaverton School District approved controls contractor.

B. Wiring: Shall be as required for a complete operating control system, per state and National Electric Code. Provide necessary relays, transformers, fusing, switches and pilot lights. Interlocks and control power from nearest panel.

2 PRODUCTS

2.1 ROOM THERMOSTATS AND SENSORS

A. Match existing controls.

2.2 SMOKE DETECTORS

A. Dual chamber ionization type with duct sampling tubes. UL approved with adjustable sensitivity. Arrange to stop associated fan on presence of smoke. Provide in return duct upstream of outside air connection and filters for all fan systems above 2000 CFM.

2.3 TRANSFORMERS

A. Transformers selected and sized for appropriate VA capacity and installed and fused according to applicable codes. Provide wiring to nearest suitable power source as required.

3 EXECUTION

3.1 SEQUENCE OF OPERATION

A. Rooftop Units:

1. Operate during occupied hours set by owner's schedule.
2. Modulate heating, cooling and economizer to maintain set point. Coordinate initial setpoints with BSD staff.
3. Ventilation: Demand control ventilation based on CO2 in space.
4. Night set back and morning warm up. Close outside air dampers and operate heating or cooling as required to reach set point.
5. Alarms: At a minimum provide alarms for high space temperature, low space temperature, and all unit generated alarms.
6. Intergrate smoke detectors with existing fire alarm system.

REGISTERED PROFESSIONAL ENGINEER
19698
OREGON
MAY 5, 1998
EDWARD A. CARLISLE
PRELIMINARY
EXPIRES 12/31/21

ISSUED	DATE	
1	DD SET 09.16.2020	
2	80% CONST. DOCS.	10/07/2020

R&W ENGINEERING, INC.
9615 S.W. Allen Blvd., Suite 107
Beaverton, Oregon 97005
Phone: (503) 726-3319
Office: (503) 292-6000
E-mail: rweng@rweng.com
Project No.: 382.120.001
Contact: Kristin Trone

CIDA
ARCHITECTURE
ENGINEERING
PLANNING
INTERIORS
15895 SW 72ND AVE SUITE 200
PORTLAND, OREGON 97224
TEL: 503.226.1285
FAX: 503.226.1670
WWW.CIDAINC.COM

ROOF REPLACEMENT FOR:
BSD MONTCLAIR ELEM. SCHOOL
7250 S VERMONT ST.
PORTLAND, OR 97223

MECHANICAL SPECIFICATIONS
M2.2
JOB NO. 20Y082.02

w:\WP\382_CIDA\120_BSD 2021 Roof Upgrades\001_Cost Est\DWG\MONTCLAIR ELEM\M2.2.dwg Oct 05, 2020 - 1:10pm