GREENWICH PUBLIC SCHOOLS

GREENWICH HS CARDINAL STADIUM PHASE 1A

10 HILLSIDE ROAD
GREENWICH CT 06830

PHASE 1A - BUILDING PERMIT
DECEMBER 2, 2020

GREENWICH HS CARDINAL STADIUM PHASE 1A

KG&D Project No.
2018-1035

DESIGN TEAM

ARCHITECT
KG+D ARCHITECTS
285 MAIN STREET
MT. KISCO, N. Y. 10549
phone: 914.666.5900

MECHANICAL ENGINEER
OLA CONSULTING ENGINEERS
50 BROADWAY
HAWTHORNE, N. Y. 10532
phone: 914. 747.2800

STRUCTURAL ENGINEER
DiSALVO ENGINEERING GROUP
83 WOOSTER HEIGHTS ROAD
DANBURY, CT. 06810
phone: 203.490.4140

CIVIL ENGINEER
FUSS & O'NEILL, INC.
56 QUARRY ROAD
TRUMBULL, CT 06611
phone: 203.374.3748

LANDSCAPE ARCHITECT
WESLEY STOUT ASSOCIATES
96 MAIN STREET
NEW CANAAN, CT 06840
phone: 203.966.3100

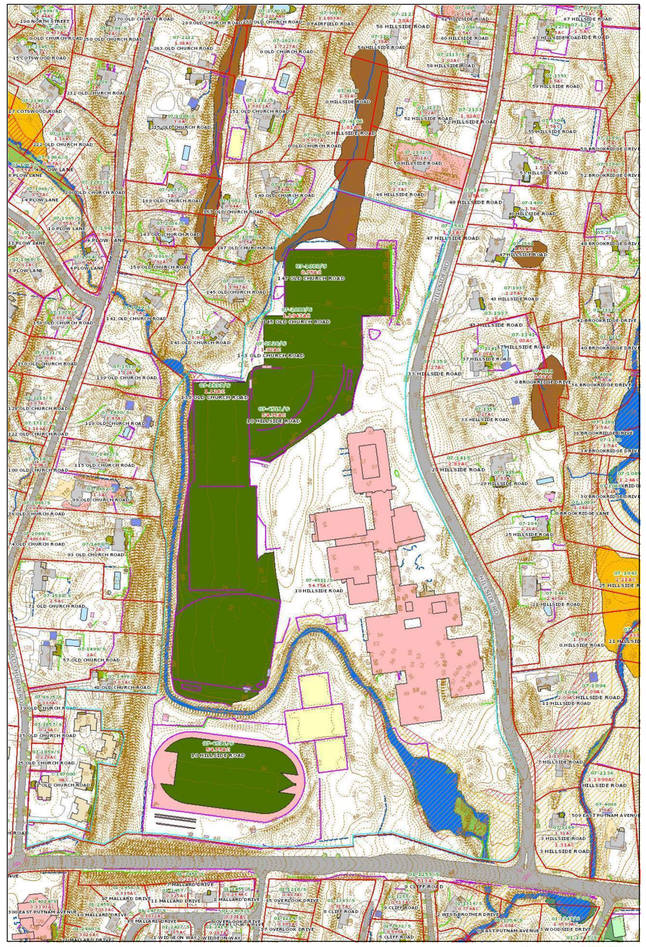

This map was produced from the Town of Greenwich GIS. The Town expressly disclaims any liability that may result from the use of this map. Basemap: 4/2/08. Parcels: 10/1/12. Copyright 2005 Town of Greenwich

3/31/2020 11:55:12 AM

N
1:2700
1"=225'

LIST OF DRAWINGS

01 GENERAL
G001 GENERAL INFORMATION & CODE COMPLIANCE
G002 ACCESSIBILITY DIAGRAMS

02 CIVIL
GI-001 GENERAL NOTES & LEGEND
EC-001 EXISTING CONDITIONS PLAN
CS-101 SITE LAYOUT PLAN
CP-101 SITE DEMOLITION / SITE PREPARATION PLAN
CE-101 EROSION & SEDIMENTATION CONTROL PLAN
CG-101 SITE GRADING PLAN
CG-102 SITE DRAINAGE PLAN
CU-101 SITE UTILITY PLAN
CE-501 EROSION & SEDIMENT CONTROL DETAILS
CD-501 CONSTRUCTION DETAILS
CD-502 CONSTRUCTION DETAILS
CD-503 CONSTRUCTION DETAILS
CD-504 CONSTRUCTION DETAILS (AQUARION DETAILS)
CD-505 CONSTRUCTION DETAILS (AQUARION DETAILS)

03 LANDSCAPE
L-1.0 PHASE 1A OVERALL LANDSCAPE LAYOUT & TREE REMOVAL PLAN
L-1.1 PHASE 1A PLANTING PLAN ENLARGEMENT
L-1.2 PHASE 1A PLAZA PAVING ENLARGEMENT
L-2.0 PHASE 1A SITE DETAILS
L-2.1 PHASE 1A SITE DETAILS

04 STRUCTURAL
S100 GENERAL NOTES & MATERIAL SPECIFICATIONS
S101 FIRST FLOOR SLAB-ON-GRADE AND FOUNDATION PLANS
S102 PRESS BOX AND ROOF FRAMING PLANS
S103 KIOSK FDN & S.O.G PLAN AND FRAMING PLANS
S201 FOUNDATION SCHEDULES AND TYP DETAILS
S202 FOUNDATION TYPICAL DETAILS AND SECTIONS
S210 FOUNDATION AND FRAMING SECTIONS
S211 FRAMING SECTIONS
S212 KIOSK FNDN AND FRAMING SECTIONS
S401 MASONRY SCHEDULE AND TYPICAL DETAILS

05 ARCHITECTURAL (CONT)
A201 NEW CONSTRUCTION PLANS
A202 KIOSK DRAWINGS
A301 BUILDING ELEVATIONS
A302 BUILDING SECTIONS
A401 ENLARGED PLANS & INTERIOR ELEVATIONS
A402 ENLARGED PLANS & INTERIOR ELEVATIONS
A501 SIGNAGE AND FINISH SCHEDULE
A601 REFLECTED CEILING PLANS
A701 ENLARGED ELEVATOR DRAWINGS
A702 UTILITY YARD
A801 WALL SECTIONS
A802 WALL SECTIONS & DETAILS
A900 ROOF DETAILS
A901 WINDOW DOOR & WALL SCHEDULES & DETAILS

06 PLUMBING
P001 PLUMBING SYMBOLS, ABBREVIATIONS & NOTES
P201 PLUMBING NEW WORK PLAN
P501 PLUMBING RISER DIAGRAM
P701 PLUMBING DETAILS

07 MECHANICAL
M001 MECHANICAL SYMBOLS ABBREV & NOTES
M201 MECHANICAL NEW WORK PLAN
M601 MECHANICAL EQUIP NOTES AND SCHEDULES
M701 MECHANICAL MECHANICAL DETAILS

08 ELECTRICAL
E001 ELECTRICAL SYMBOLS, ABBREV & NOTES
E100 ELECTRICAL DEMOLITION SITE PLAN
E200 ELECTRICAL SITE LIGHTING PLAN
E201 ELECTRICAL 1ST FLOOR & PRESSBOX LIGHTING PLANS
E300 ELECTRICAL SITE PLAN
E301 ELECTRICAL 1ST FLOOR & PRESSBOX POWER PLANS
E302 ELECTRICAL KIOSK POWER & LIGHTING PLANS
E401 ELECTRICAL FIRE ALARM PLAN 1ST FLOOR AND PRESSBOX
E501 ELECTRICAL ONE-LINE DIAGRAMS
E502 ELECTRICAL WIRING DIAGRAMS
E503 ELECTRICAL FIRE ALARM ONE-LINE DIAGRAM
E601 ELECTRICAL SCHEDULES
E701 ELECTRICAL DETAILS
E702 ELECTRICAL DETAILS
E703 ELECTRICAL DETAILS

09 BLEACHER SHOP DRAWINGS (FOR REFERENCE)
B1 COVER PAGE
B2 FOOTING LAYOUT
B3 UNDERSTRUCTURE LAYOUT
B4 ELEVATION VIEWS
B5 SECTION VIEW
B6 SECTION VIEW @ PRESS BOX
B7 SECTION VIEW @ PORTAL STAIR
B8 SIGHT LINES
B9 SEATING LAYOUT
B10 EXITS
B10.1 RAMP SECTIONS
B11 PRESS BOX LAYOUT
B12 PRESS BOX ELEVATION VIEWS
B13 PRESS BOX FRAMING PLAN
B14 PRESS BOX DETAILS
B15 PRESS BOX DETAILS
B16 DETAILS
B17 DETAILS

10 PRESS BOX SHOP DRAWINGS (FOR REFERENCE)
PB1 ELEC PLANS / SECTION VIEW
PB2 ELEVATION VIEWS
PB3 FRAMING PLANS
PB4 DETAIL SHEET - 1
PB5 DETAIL SHEET - 2
PB6 APPENDIX A - MATERIAL SPECS

COVER

T1

SHEET IDENTIFICATION LEGEND

A101

DISCIPLINE DESIGNATOR
SHEET TYPE DESIGNATOR
SEQUENCE NUMBER

DISCIPLINE DESIGNATORS	
G	GENERAL
CC	CODE COMPLIANCE
PH	PHASING
C	CIVIL
L	LANDSCAPE
S	STRUCTURAL
A	ARCHITECTURAL
FP	FIRE PROTECTION
P	PLUMBING
M	MECHANICAL
E	ELECTRICAL

SHEET TYPE DESIGNATOR	
G	GENERAL
1	DEMOLITION
2	PLANS
3	EXTERIOR ELEVATIONS & BUILDING SECTIONS
4	ENLARGED PLANS & INTERIOR ELEVATIONS
5	FINISHES
6	REFLECTED CEILING PLANS
7	VERTICAL CIRCULATION
8	WALL SECTIONS & ENLARGED DETAILS
9	TYPICAL DETAILS

SYMBOLS LEGEND

ROOM NAME 101 150 SF	ROOM TAG (NAME, NUMBER, & AREA)
	WALL TYPE & FIRE RATING TAG
1A	WINDOW TYPE TAG
101	DOOR DESIGNATION TAG
1	COLUMN LINE
1 A101	EXTERIOR ELEVATION
1 A101 1 1 1	INTERIOR ELEVATION
SIM 1 A101	WALL OR BUILDING SECTION
C J	CONTROL JOINT
	DENOTES EXISTING AREA OF THE BUILDING TO REMAIN (NO MAJOR GENERAL CONSTRUCTION).
	DENOTES EXISTING WALL TO REMAIN
	DENOTES EXISTING WALL TO BE DEMOLISHED
	DENOTES 1hr OR NON-RATED WALL
	DENOTES 2hr RATED WALL
M4 2HR	DENOTES WALL TYPE & FIRE RATING
	DENOTES HOLLOW METAL FRAME w/ SIDELITE OR TRANSOM
101	DENOTES NEW DOOR AND OR FRAME. SEE DOOR SCHEDULE

MATERIAL LEGEND

CMU WALL	CAULK w/ BACKER ROD
CMU WALL	WATERPROOFING MEMBRANE, OR ROOFING MEMBRANE OR FLASHING
GWB WALL	RIGID INSULATION
MASONRY VENEER	BATT INSULATION
GWB - "TYPE X" UNO (SEE SPECS)	POROUS FILL
EXPOSED TO WEATHER OR MOISTURE)	SUITABLE COMPACTED BACKFILL (SEE SPEC)
WOOD BLOCKING (PRESSURE TREATED ALL AREAS EXPOSED TO WEATHER OR MOISTURE)	UNDISTURBED SOIL
	CAST-IN-PLACE CONCRETE OR CAST STONE
	GLASS SURFACE

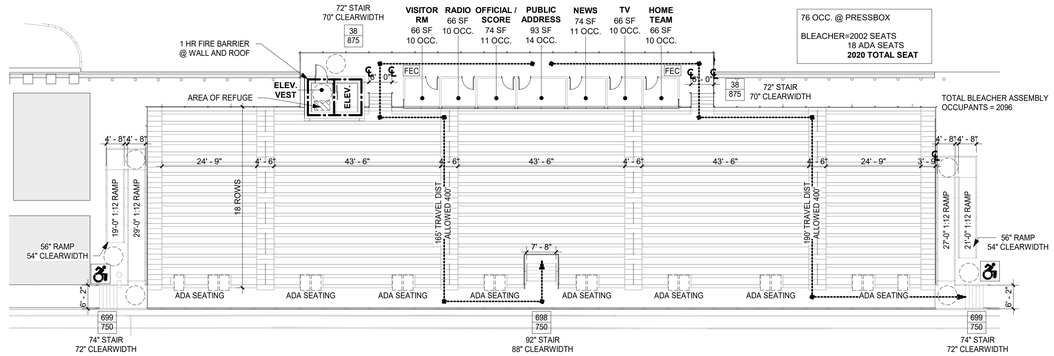

2 CODE COMPLIANCE PLAN - 2ND FLOOR
1/16" = 1'-0"

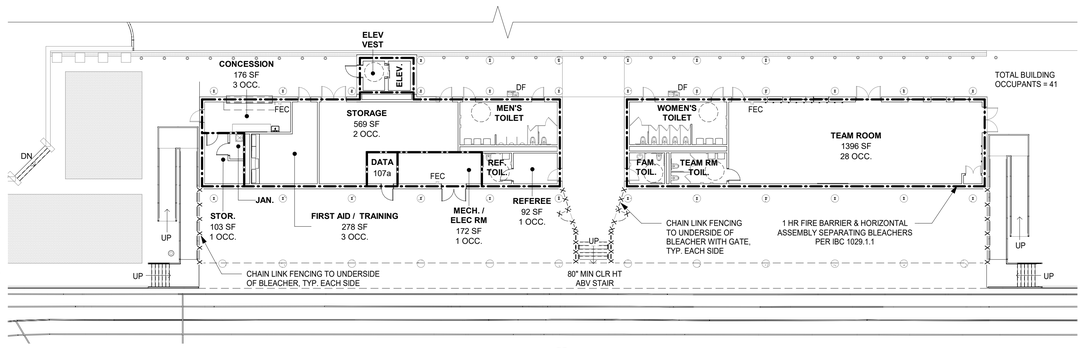

1 CODE COMPLIANCE PLAN - 1ST FLOOR
1/16" = 1'-0"

N

LIFE SAFETY LEGEND	
1 HR FIRE BARRIER	ADA ACCESSIBLE EXIT
MEANS OF EGRESS PATHWAY	DF DRINKING FOUNTAIN
FEC FIRE EXTINGUISHER CABINET	
X/Y ACTUAL EGRESS OCCUPANCY LOAD / MAXIMUM ALLOWABLE EGRESS OCCUPANCY LOAD	

1 - PROJECT INFORMATION

DISTRICT NAME:	GREENWICH PUBLIC SCHOOLS 290 GREENWICH AVENUE GREENWICH, CT 06830 TELEPHONE: 203.625.7400
BUILDING NAME:	GREENWICH HIGH SCHOOL : CARDINAL STADIUM
PROJECT LOCATION:	10 HILLSIDE ROAD, GREENWICH, CT 06830
TYPE OF PROJECT:	NEW CONSTRUCTION
PROJECT COMMENCEMENT:	JANUARY 2021
PROJECT SUBSTANTIAL COMPLETION:	AUGUST 2021
APPLICABLE CODES:	2018 CONNECTICUT STATE BUILDING CODE 2017 ICC 300 STANDARD ON BLEACHERS, FOLDING AND TELESCOPING SEATING, AND GRANDSTANDS

2 - USE, CLASSIFICATION, & BUILDING HEIGHTS & AREAS

BLEACHER -NON-SPRINKLERED

USE & OCCUPANCY CLASSIFICATION: ASSEMBLY (A-5)

CONSTRUCTION TYPE: TYPE IIB (NON-COMBUSTIBLE, NON-PROTECTED)

BUILDING HEIGHT & AREA:	PERMITTED	ACTUAL
HEIGHT	55'-0"	42'-0" +/-
STORIES	UL	2
FLOOR AREA	UL	13,200 GROSS SF

TEAM BUILDING - NON-SPRINKLERED

USE & OCCUPANCY CLASSIFICATION: ASSEMBLY (A-5)

CONSTRUCTION TYPE: TYPE IIB (NON-COMBUSTIBLE, NON-PROTECTED)

BUILDING HEIGHT & AREA:	PERMITTED	ACTUAL
HEIGHT	55'-0"	47' +/-
STORIES	UL	2
FLOOR AREA	UL	4,715 GROSS SF

ADD ALTERNATE 2 : KIOSK BUILDING - NON-SPRINKLERED

USE & OCCUPANCY CLASSIFICATION: UTILITY & MISCELLANEOUS GROUP (U)

CONSTRUCTION TYPE: TYPE VB (NON-COMBUSTIBLE, NON-PROTECTED)

BUILDING HEIGHT & AREA:	PERMITTED	ACTUAL
HEIGHT	40'-0"	17' +/-
STORIES	2	1
FLOOR AREA	16,500 SF	158 GROSS SF

3 - FIRE-RESISTANCE-RATED CONSTRUCTION

IBC TABLES 508.4 / 509 / 601 / 706.4 / 707.3.10 / 1020.1

CONSTRUCTION TYPE IIA FIRE RATINGS:

REFER TO CC PLANS FOR LOCATIONS OF FIRE-RESISTANCE-RATED CONSTRUCTION

PRIMARY STRUCTURAL FRAME	1 HR
BEARING WALLS	1 HR
NON-BEARING WALLS	0 HR
FLOORS & SECONDARY MEMBERS	1 HR
ROOFS & SECONDARY MEMBERS	1 HR

ASSEMBLY	FIRE-RESISTANCE	RATING LOCATION
FIRE BARRIER	1 HOUR	SPACES UNDER BLEACHERS
ROOF	1 HOUR	ELEVATOR SHAFT & LOBBIES ELEVATOR MACHINE ROOM STORAGE ROOMS >100SF
HORIZONTAL ASSEMBLY	1 HOUR	SPACES UNDER BLEACHERS

4 - ACCESSIBILITY

ACCESSIBILITY INFORMATION:	DWG SHOWN
ACCESSIBLE ROUTE	G001, SITE PLAN
ACCESSIBLE EXITS / ENTRANCES	G001
TOILET FACILITIES	G001, FLOOR PLANS
SIGNAGE	A501, SPECIFICATIONS
VERTICAL ACCESS / ELEVATOR	G001
DOOR APPROACH CLEARANCES	G002
DOOR HARDWARE	SPECIFICATIONS

5 - ENERGY CODE COMPLIANCE (IECC 2015)

COUNTY:	FAIRFIELD
CLIMATE ZONE:	5A
GLAZED AREAS (≤ 40" OF ABOVE GRADE ENVELOPE)	4% (425 SF / 10220 SF)

OPAQUE THERMAL ENVELOPE REQUIREMENTS	TABLE C402.1.3
ROOF: INSULATION ENTIRELY ABOVE DECK	R-30ci MIN
WALLS - ABOVE GRADE: MASS	R-11.4ci MIN
WALLS - ABOVE GRADE: METAL FRAMED	R-13 + R-7.5ci MIN
WALLS - ABOVE GRADE: WOOD FRAMED	R-13+ R-3.8ci MIN OR R-20
WALLS - BELOW GRADE: MASS	R-7.5ci MIN
FLOORS: MASS	R-10ci MIN
SLAB ON GRADE FLOORS	R-10 MIN FOR 24"
OPAQUE DOORS: SWINGING	U-0.37 MAX

VERTICAL FENESTRATION	TABLE C402.4
FIXED FENESTRATION	U-0.38 MAX
OPERABLE FENETRATION	U-0.45 MAX
ENTRANCE DOORS	U-0.77 MAX
SHGC	U-0.40 MAX

6 - EMERGENCY GENERATOR

ITEM	
BACKUP ENTIRE FACILITY	NO
BACKUP ELEVATOR	YES
BACKUP FIRE ALARM	YES
BACKUP EMERGENCY LIGHTING	YES

ABBREVIATIONS

ABV	ABOVE
AFF	ABOVE FINISH FLOOR
ACM	ASBESTOS CONTAINING MATERIAL
ACPL	ACOUSTIC PANEL
ACT	ACOUSTIC CEILING TILE
ADJ	ADJUSTABLE
AC	AIR CONDITIONING
AESS	ARCHITECTURAL EXPOSED STRUCTURAL STEEL
AHAP	AS HIGH AS POSSIBLE
ALUM	ALUMINUM
AMP	ACRYLIC MODIFIED POLYESTER
APPROX	APPROXIMATE
BEPO	BROADCAST EPOXY
BTW	BETWEEN
BLKG	BLOCKING
BOT	BOTTOM
BLDG	BUILDING
BL	BUILDING LINE
CAB	CABINET
CB	CEMENT BOARD
CC	CODE COMPLIANCE
CI	CAST IRON
CLG/CLNG	CEILING
CL	CENTER LINE
CMU	CONCRETE MASONRY UNIT
COL	COLUMN
CONC	CONCRETE
CONF	CONFERENCE
CONST	CONSTRUCTION
CONTR	CONTRACTOR
CONT	CONTINUOUS
CPT	CARPET
CT	CERAMIC TILE
CTB	CERAMIC TILE BASE
DA	DEVICE ARRANGEMENT
DET	DETAIL
DF	DRINKING FOUNTAIN
DIM	DIMENSION
DR	DOOR
DN	DOWN
DWG	DRAWING
EE	EACH END
EIFS	EXTERIOR INSULATION FINISH SYSTEM
EJ	EXPANSION JOINT
ELEC	ELECTRIC/ELECTRICAL
EL/ELEV	ELEVATION
ELEV	ELEVATOR
ENCL	ENCLOSURE
EOD	EDGE OF DECK
EOS	EDGE OF SLAB
EPO	EPOXY
EPS	EDGE OF POUR STOP
EQ	EQUAL
ES	EACH SIDE
EXST	EXISTING
ETR	EXISTING TO REMAIN
ETRE	EXISTING TO BE RELOCATED
EXP JT	EXPANSION JOINT
EXT	EXTERIOR
EW	EACH WAY
FAB	FABRIC
FTF	FACE TO FACE
FIN	FINISHED
FA	FIRE ALARM
FD	FLOOR DRAIN
FDMPR	FIRE DAMPER
FE	FIRE EXTINGUISHER
FEC	FIRE EXTINGUISHER CABINET
FF	FACTORY FINISH
FHC	FIRE HOSE CABINET
FHVC	FIRE HOSE VALVE CABINET
FR	FIRE RATED
FRD	FRENCH DRAIN
FFSC	FIRE RATED ASSEMBLY (DOORS)
FRTD	FIRE RETARDANT
FIX	FIXTURE
FL/FLR	FLOOR

FLUOR	FLUORESCENT
FL MTD	FLUSH MOUNTED
FT	FOOT/FEET
FDN	FOUNDATION
GALV	GALVANIZED
GFB	GROUND FACE BLOCK
GFRG	GLASS FIBER REINFORCED GYPSUM
GL	GLASS
GWB	GYPSUM WALLBOARD
H	HEIGHT AFF
HDW	HARDWARE
HDWD	HARDWOOD
HD	HEAD
HDR	HEADER
HVAC	HEATING, VENTILATING, AIR CONDITIONING
HR	HOUR
HT	HEIGHT
HM	HOLLOW METAL
HMFR	HOLLOW METAL FRAME
HORIZ	HORIZONTAL
HC	HANDICAP
IF	INSIDE FACE
IN	INCH/INCHES
INCL	INCLUDE/INCLUSIVE
INFO	INFORMATION
INSUL	INSULATION
INT	INTERIOR
JAN	JANITOR'S CLOSET
JT	JOINT
KPL	KICK PLATE
LAM	LAMINATED
LAMGL	LAMINATED GLASS
LT	LIGHT
LTG	LIGHTING
LWC	LIGHT WEIGHT CONCRETE
LIN	LINOLEUM
MAINT	MAINTAIN/MAINTENANCE
MAX	MAXIMUM
MFG	MANUFACTURER
MSNRY	MASONRY
MO	MASONRY OPENING
MATL	MATERIAL
MECH	MECHANICAL
MTL	METAL
MCP	METAL COMPOSITE PANEL
MS	METAL STUD
MLWK	MILL WORK
MIN	MINIMUM
MISC	MISCELLANEOUS
MLDG	MOLDING
MTG	MOUNTING
NIC	NOT IN CONTRACT
NTS	NOT TO SCALE
NO	NUMBER
OC	ON CENTER
OPNG	OPENING
OPP	OPPOSITE
OTS	OPEN TO STRUCTURE
OUT	OUTLET
OD	OUTSIDE DIAMETER
OF	OUTSIDE FACE
P/PTD	PAINTED
PT	PORCELAIN TILE
PTB	PORCELAIN TILE BASE
PR	PAIR
PNL	PANEL
PTN	PARTITION
PL	PROPERTY LINE
PLAM	PLASTIC LAMINATE
PLMB	PLUMBING
PLYWD	PLYWOOD
PTWD	PRESERVATIVE TREATED WOOD

QT	QUARRY TILE
QTB	QUARRY TILE BASE
QTY	QUANTITY
RCP	REFLECTED CEILING PLAN
REFL	REFLECTED
REQD	REQUIRED
RB	RUBBER BASE
RTN	RETURN
RA	RETURN AIR
REV	REVISED/REVISION
RFI	REQUEST FOR INFORMATION
RO	ROUGH OPENING
RT	RUBBER TREATD/TILE
RTB	RUBBER TREAD BASE
RTT	RESILIENT TERRAZZO TILE
RW	RESCUE WINDOW
SCHED	SCHEDULE/SCHEDULED
SECT	SECTION
SF	SQUARE FEET
SFB	SPLIT FACE BLOCK
SH	SHELVING/SHELF/SHELVES
SIM	SIMILAR
SL	SLATE
STC	SOUND TRANSMISSION CLASS
SPEC	SPECIFICATION
SQFT	SQUARE FOOT
ST	SAND, STAIN & SEAL
ST/STOR	STORAGE
STSTL	STAINLESS STEEL
STL	STEEL
STR	STRUCTURAL/STRUCTURE
SUSP	SUSPENDED/SUSPENSION
T	TOP
TB	TACKBOARD
TBD	TO BE DETERMINED
TEMP	TEMPORARY
TERR	TERRAZZO
TFF	TOP FINISHED FLOOR
TMP GL	TEMPERED GLASS
THERMO	THERMOSTAT
T&B	TOP AND BOTTOM
TO	TOP OF
TOS	TOP OF STEEL
TOSS	TOP OF STRUCTURAL SLAB
TYP	TYPICAL
UNFIN	UNFINISHED
UNO	UNLESS NOTED OTHERWISE
UR	UNRINAL
UTIL	UTILITY
VCT	VINYL COMPOSITE TILE
VEN	VENEER
VERT	VERTICAL
VET	VINYL ENHANCED TILE
VIF	VERIFY IN FIELD
VT	VINYL TILE
WB	WHITEBOARD
WC	WATER CLOSET
WF	WATER FOUNTAIN
WGL	WIRE GLASS
W/	WITH
W/C	WHEEL CHAIR
W/O	WITHOUT
WOM	WALK OFF MAT
WD	WOOD
WD BLKG	WOOD BLOCKING
WD DR	WOOD DOOR
WP	WATERPROOFING
WR	WARDROBE
WW	WINDOW WALL
YD	YARD
YCO	YARD CLEANOUT
ZCC	ZINC COATED COPPER

10 - ROOF CODE REQUIREMENTS

1. INSTALL NEW ROOFING TO MEET THE FOLLOWING MINIMUM REQUIREMENTS:
   A. 2018 CONNECTICUT STATE BUILDING CODE AND 2015 ICC ENERGY CODE
   B. UNDERWRITERS LABORATORIES INC. CLASS A EXTERNAL FIRE RATING FOR ROOFING ASSEMBLIES TESTED IN ACCORDANCE WITH ASTM E 108 OR UL 790
   C. UNDERWRITERS LABORATORIES INC. STANDARD 1256 FOR ROOF ASSEMBLIES WITH FOAM INSULATION.
2. INSTALL ROOFING TO COMPLY WITH THE WIND UPLIFT REQUIREMENTS OF THE CONNECTICUT STATE BUILDING CODE:
   - RISK CATEGORY III
   - BASIC WIND SPEED 130 MPH
   - EXPOSURE CATEGORY B
3. INSTALL ROOFING AS INDICATED TO RESIST THE FOLLOWING UPLIFTS, CALCULATED IN ACCORDANCE WITH ASCE 7 USING SAFETY FACTOR OF 2:
   - FIELD ZONE 60PSF
   - PERIMETER ZONE 100 PSF
   - CORNER ZONE 150 PSF
4. FABRICATE AND INSTALL ROOF PERIMETER FLASHING THAT COMPLY WITH THE 2018 CONNECTICUT STATE BUILDING CODE ANSI/SPRI ES-1 "WIND STANDARD FOR EDGE SYSTEMS USED WITH LOW SLOPE ROOFING SYSTEMS".

11 - INTERIOR FINISHES

IBC TABLE 803.11

USE & OCCUPANCY CLASSIFICATION: ASSEMBLY (A-5)

CONSTRUCTION TYPE: TYPE IIB

SPRINKLER SYSTEM: NONSPRINKLERED

INTERIOR EXIT STAIRWAYS, RAMPS, & EXIT PASSAGEWAYS	=	CLASS A
CORRIDORS&ENCLOSURE FOR EXIT ACCESS STAIRWAYS&RAMPS	=	CLASS A
ROOMS AND ENCLOSED SPACES	=	CLASS C

USE & OCCUPANCY CLASSIFICATION: UTILITY & MISCELLANEOUS GROUP (U)

CONSTRUCTION TYPE: TYPE VB

SPRINKLER SYSTEM: NONSPRINKLERED

INTERIOR EXIT STAIRWAYS, RAMPS, & EXIT PASSAGEWAYS	=	NO RESTRICTIONS
CORRIDORS&ENCLOSURE FOR EXIT ACCESS STAIRWAYS&RAMPS	=	NO RESTRICTIONS
ROOMS AND ENCLOSED SPACES	=	NO RESTRICTIONS

7 - PLUMBING FIXTURES

TYPE	REQ. FIXTURES		PROVIDED		
	MALE	FEMALE	MALE	FEMALE	UNISEX
TOILET	15	27	2	5	4
URINAL	-	-	3	-	-
LAVATORY	6	8	3	3	4
FOUNTAIN	3		4		
SERVICE SINK	1		1		

2902.1 OCCUPANCY = 2096 HOME BLEACHERS + 41 BUILDING OCC. = 2137 (ASSUME 1069 MEN, 1069 WOMEN)

1 WATER CLOSET PER 75 MALE / 40 FEMALE
1 LAVATORY PER 200 MALE / 150 FEMALE
1 DRINKING FOUNTAIN PER 1000 OCCUPANTS

NO EXISTING PLUMBING FIXTURES - PROPOSED DESIGN IMPROVES ON EXISTING NON-CONFORMING CONDITION

8 - MEANS OF EGRESS

EXIT TRAVEL DIST:	ICC 300	IBC 2015
	400'	200'

OCCUPANCY LOADS (SF/PERSON):	IBC TABLE 1004.1.2
MERCANTILE	30 GROSS
LOCKER ROOMS	50 GROSS
BUSINESS / OFFICE AREAS	100 GROSS
ACCESSORY STORAGE & MECHANICAL	300 GROSS
PRESSBOX ROOMS (ASSEMBLY CONCENTRATED)	7 NET

EGRESS WIDTH:	ICC 300	IBC 2015
STAIR	.08/OCC.	.03/OCC.
RAMP	.06/OCC.	.02/OCC.

ASSEMBLY SPACE EXIT WIDTH CALCULATIONS (RAMPS NOT INCLUDED):

SPACE	OCC. LOAD	REQ'D # EXITS	REQ'D EXIT WIDTH	PROVIDED # EXITS	PROVIDED EXIT WIDTH
HOME BLEACHERS	2096	3	168" (2096 * .08)	3	180"

9 - FIRE PROTECTION SYSTEMS

FIRE PROTECTION SYSTEMS	REQUIRED	PROVIDED
AUTOMATIC SPRINKLER	NO	NO
ALTERNATE AUTO-FIRE EXTINGUISHING	NO	NO
STANDPIPE	NO	NO
FIRE ALARM & DETECTION	YES	YES
SMOKE CONTROL	NO	NO
SMOKE AND HEAT VENTS	NO	NO
EMERGENCY VOICE/ALARM	YES	YES
PUBLIC ADDRESS	YES	YES

GREENWICH HS CARDINAL STADIUM PHASE 1

GREENWICH PUBLIC SCHOOLS
10 HILLSIDE ROAD
GREENWICH CT 06830

KG+D listen imagine build
KG+D . ARCHITECTS PC
285 MAIN STREET MOUNT KISCO . NEW YORK . 10549
P:914.666.5900 KGDARCHITECTS.COM

CONSTRUCTION DOCUMENTS

NOTE: ALL IDEAS, DESIGNS, ARRANGEMENTS AND PLANS INDICATED OR REPRESENTED BY THIS DRAWING ARE OWNED BY AND ARE THE PROPERTY OF KAEYER, GARMENT, & DAVIDSON ARCHITECTS, PC (KG&D), AND WERE CREATED FOR USE ON THIS PROJECT. NONE OF SUCH IDEAS, DESIGNS, ARRANGEMENTS OR PLANS SHALL BE USED BY OR DISCLOSED TO ANY PURPOSE WHATSOEVER WITHOUT THE WRITTEN PERMISSION OF (KG&D).

WRITTEN DIMENSIONS ON THIS DRAWING SHALL HAVE PRECEDENCE OVER SCALED DIMENSIONS. CONTRACTOR SHALL VERIFY ALL ACTUAL DIMENSIONS AND CONDITIONS ON THE JOB AND THE ARCHITECT MUST BE NOTIFIED OF ANY VARIATIONS FROM DIMENSIONS AND CONDITIONS SHOWN. SHOP DETAILS MUST BE SUBMITTED TO THIS OFFICE FOR APPROVAL BEFORE PROCEEDING WITH FABRICATION.

ALTERATIONS BY ANY PERSON, IN ANY WAY, OF ANY ITEM CONTAINED ON THIS DOCUMENT, UNLESS ACTING UNDER THE DIRECTION OF THE LICENSED ARCHITECT WHOSE PROFESSIONAL SEAL IS AFFIXED HERETO, IS A VIOLATION OF TITLE VII, SECT. 65.5 (2) OF NEW YORK STATE LAW.
COPYRIGHT KAEYER, GARMENT + DAVIDSON ARCHITECTS & ENGINEERS, PC
ALL RIGHTS RESERVED.

Professional Seal

No.	Date	Issue
5	12/2/20	PHASE 1A - BUILDING PERMIT
4	11/10/20	PHASE 1 CON. DOCS.
2	08/12/20	ISSUE FOR PERMIT
1	08/29/19	DESIGN DEVELOPMENT

Sheet Title
GENERAL INFORMATION & CODE COMPLIANCE

Job No.	Date
2018-1035	07/08/19
Scale: AS NOTED	Drawn / Checked: -

Sheet Number
G001

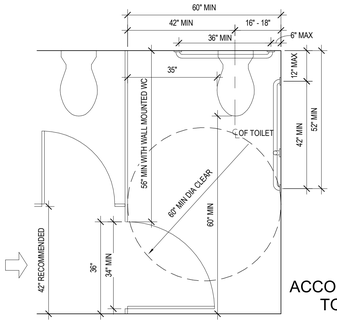

MULTI ACCOMMODATION TOILET RM

REF:
ADA: 604.8
ANSI: 604.5.1

G100-1010H

11 ACCESSIBLE TOILET STALL
1/2" = 1'-0"

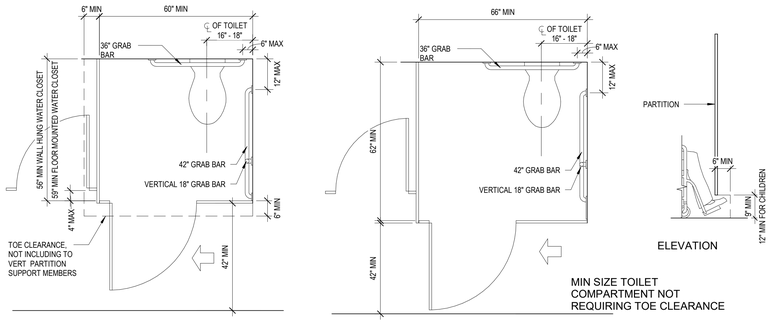

MULTI ACCOMMODATION TOILET RM TOE CLEARANCE

REF:
ADA:
604.8.1.4
ANSI: 604.5.1

G100-1011D

10 STANDARD ACCESSIBLE TOILET STALL
1/2" = 1'-0"

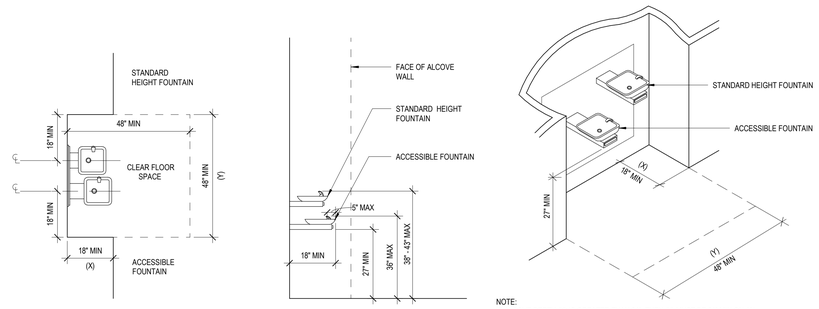

A. PLAN

B. SIDE ELEVATION

NOTE:
IF ALCOVE DEPTH (X) IS GREATER THAN 24", THEN (Y) MUST BE 54" MIN ON AN ACCESSIBLE FOUNTAIN WITH A ROUND OR OVAL BOWL, THE SPOUT MUST BE POSITIONED SO THE FLOW OF WATER IS WITHIN 3" OF THE FRONT EDGE OF THE FOUNTAIN

REF:
ADA: 602.7

G113-1601

9 DRINKING FOUNTAIN HI-LOW
1/2" = 1'-0"

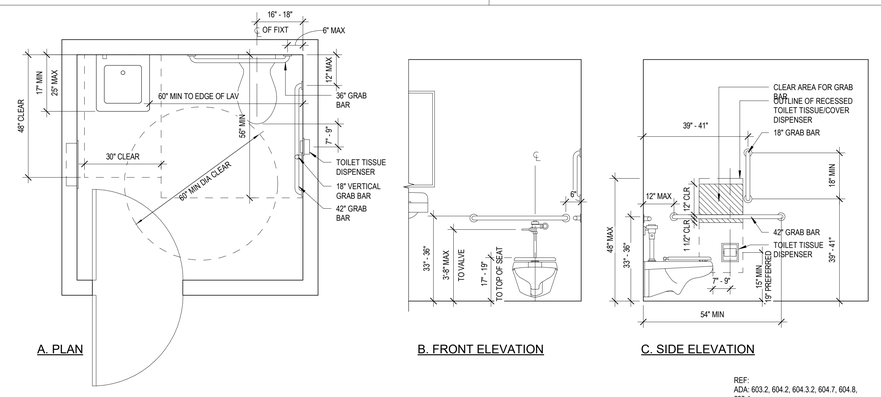

A. PLAN

B. FRONT ELEVATION

C. SIDE ELEVATION

REF:
ADA: 603.2, 604.2, 604.3.2, 604.7, 604.8, 609.1
ANSI: 604.4

G100-1010F

8 ACCESSIBLE TOILET STALL
1/2" = 1'-0"

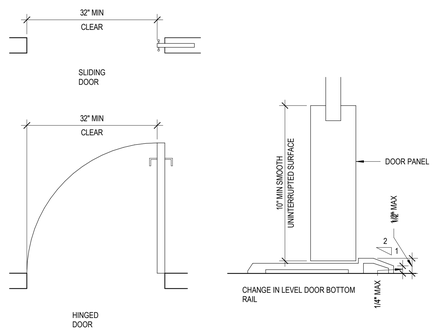

REF:
ADA: 404.2, 303.3
ANSI: 404.2.2, 404.2.9

G100-1007D

7 DOOR OPENING
6" = 1'-0"

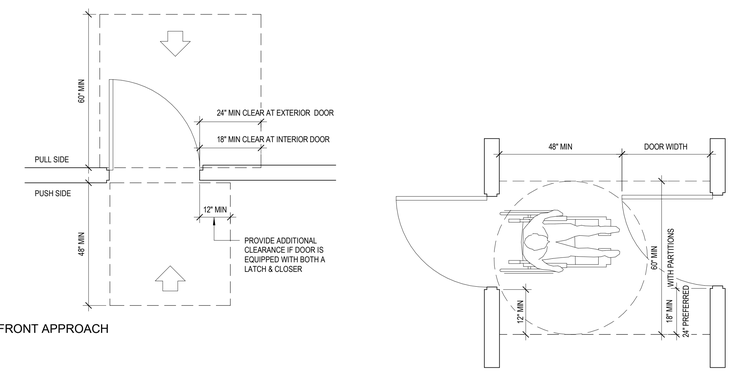

A. FRONT APPROACH

A

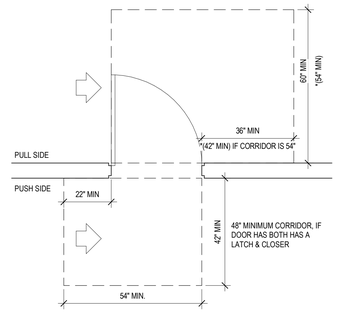

B. HINGE APPROACH

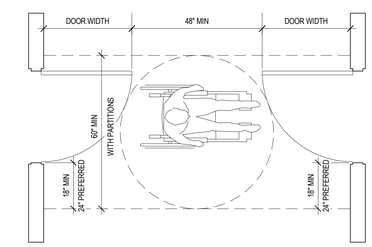

B

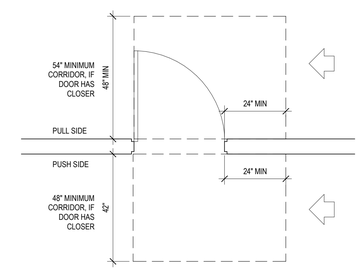

C. LATCH SIDE APPROACH

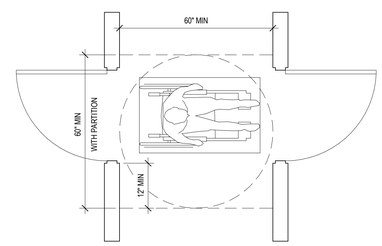

C

REF:
ADA: 404.2.4
IANSI: 404.2.3.1

G100-1007A

2 WINGING DOOR APPROACH
1/2" = 1'-0"

REF:
ADA: 404.2.6
ANSI: 404.2.5

G100-1007C

1 TWO HINGED DOORS IN SERIES
1/2" = 1'-0"

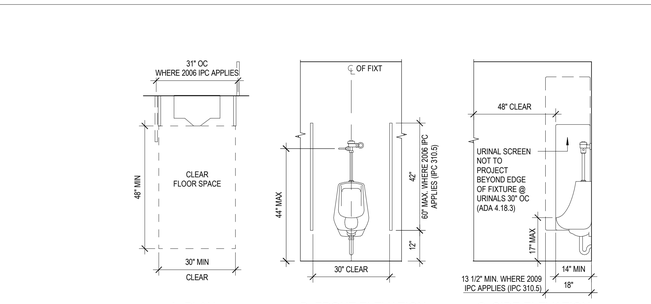

A. PLAN

B. FRONT ELEVATION

C. SIDE ELEVATION

REF:
ADA: 605.1
IPC: 310.5
ANSI: 605.1

G100-1010D

6 ACCESSIBLE URINAL
1/2" = 1'-0"

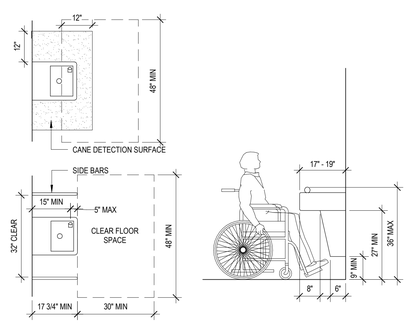

A. PLAN

B. SIDE ELEVATION

REF:
ADA: 306.2, 306.3, 602
ANSI: 602.1

G100-1009C

5 DRINKING FOUNTAIN-NON ALCOVE
1/2" = 1'-0"

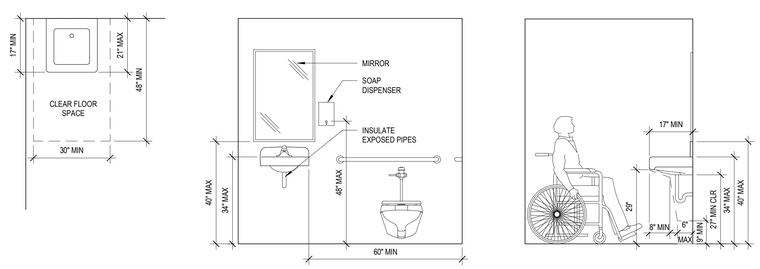

A. PLAN

B. FRONT ELEVATION

C. SIDE ELEVATION

REF:
ADA: 603.3, 604.3.2, 606.1, 606.5
ANSI: 606.1

G100-1010E

4 ACCESSIBLE LAVATORY
1/2" = 1'-0"

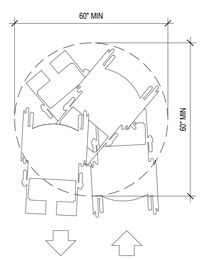

SPACE NEEDED TO TURN A WHEELCHAIR

REF:
ADA: 304.3
IANSI: 304.3

G100-1006E

3 WHEELCHAIR TURNING RADIUS
1/2" = 1'-0"

GREENWICH HS CARDINAL STADIUM PHASE 1

GREENWICH PUBLIC SCHOOLS
10 HILLSIDE ROAD
GREENWICH CT 06830

KG+D listen imagine build
KG+D . ARCHITECTS PC
285 MAIN STREET MOUNT KISCO . NEW YORK . 10549
P:914.666.5900 KGDARCHITECTS.COM

CONSTRUCTION DOCUMENTS

NOTE: ALL IDEAS, DESIGNS, ARRANGEMENTS AND PLANS INDICATED OR REPRESENTED BY THIS DRAWING ARE OWNED BY AND ARE THE PROPERTY OF KAEYER, GARBERT, & DAVIDSON ARCHITECTS, PC (KG&D), AND WERE CREATED FOR USE ON THIS PROJECT. NONE OF SUCH IDEAS, DESIGNS, ARRANGEMENTS OR PLANS SHALL BE USED BY OR DISCLOSED TO ANY PURPOSE WHATSOEVER WITHOUT THE WRITTEN PERMISSION OF (KG&D).

WRITTEN DIMENSIONS ON THIS DRAWING SHALL HAVE PRECEDENCE OVER SCALED DIMENSIONS. CONTRACTOR SHALL VERIFY ALL ACTUAL DIMENSIONS AND CONDITIONS ON THE JOB AND THE ARCHITECT MUST BE NOTIFIED OF ANY VARIATIONS FROM DIMENSIONS AND CONDITIONS SHOWN. SHOP DETAILS MUST BE SUBMITTED TO THIS OFFICE FOR APPROVAL BEFORE PROCEEDING WITH FABRICATION.

ALTERATIONS BY ANY PERSON, IN ANY WAY, OF ANY ITEM CONTAINED ON THIS DOCUMENT, UNLESS ACTING UNDER THE DIRECTION OF THE LICENCED ARCHITECT WHOSE PROFESSIONAL SEAL IS AFFIXED HERETO, IS A VIOLATION OF TITLE VII, SECT. 69.3 (b) OF NEW YORK STATE LAW.
COPYRIGHT KAEYER, GARBERT + DAVIDSON ARCHITECTS & ENGINEERS, PC
ALL RIGHTS RESERVED.

Professional Seal

No.	Date	Issue
5	12/2/20	PHASE 1A - BUILDING PERMIT
4	11/10/20	PHASE 1 CON. DOCS.
2	08/12/20	ISSUE FOR PERMIT

Sheet Title

ACCESIBILITY DIAGRAMS

Job No.	Date
2018-1035	02/12/20
Scale: AS NOTED	Drawn / Checked: -

Sheet Number

G002

LEGEND

- PROPOSED CONTOURS
- PROPOSED SPOT ELEVATION
- PROPOSED CLEARING LIMIT (APPROX.)
- PROPERTY LINE
- PROPOSED ROOF DRAIN
- PROPOSED CABLE LINE
- PROPOSED SANITARY SEWER LINE
- PROPOSED STORM DRAINAGE LINE
- PROPOSED TELEPHONE LINE
- PROPOSED WATER MAIN
- PROPOSED GAS MAIN
- PROPOSED ELECTRICAL SERVICE
- PROPOSED GUIDE RAIL
- PROPOSED HYDRANT AND GATE VALVE
- PROPOSED REINFORCED CONCRETE CULVERT END
- PROPOSED YARD DRAIN
- PROPOSED TYPE "C-L" CATCH BASIN
- PROPOSED TYPE "C" CATCH BASIN
- PROPOSED STORM MANHOLE
- PROPOSED STORM DRAIN
- PROPOSED SANITARY MANHOLE
- PROPOSED SIGN
- PROPOSED LIGHT POLE
- PROPOSED CURB
- PROPOSED RETAINING WALL
- TOWN WETLANDS LINE
- PROPOSED EROSION CONTROL MAT
- PROPOSED CONCRETE WALK
- PROPOSED CHAIN LINK FENCE
- PROPOSED GUARD RAIL
- PROPOSED SILT FENCE
- PROPOSED HAY BALES
- PROPOSED HAYBALE CHECK DAM
- EXISTING CONTOURS
- EXISTING TREE LINE
- EXISTING DECIDUOUS TREE
- EXISTING EVERGREEN TREE
- EXISTING UTILITY POLE
- EXISTING WATER GATE VALVE
- EXISTING TELEPHONE MANHOLE
- EXISTING HYDRANT
- EXISTING CATCH BASIN
- EXISTING SANITARY MANHOLE
- EXISTING STORM MANHOLE
- EXISTING SANITARY SEWER LINE
- EXISTING TELEPHONE LINE
- EXISTING WATER MAIN
- EXISTING GAS MAIN
- EXISTING ELECTRICAL SERVICE

CIVIL GENERAL NOTES

GENERAL

1. SYMBOLS AND LEGENDS OF PROJECT FEATURES ARE GRAPHIC REPRESENTATIONS AND ARE NOT NECESSARILY SHOWN ON THE DRAWINGS TO SCALE OR TO THEIR ACTUAL DIMENSION OR LOCATION. COORDINATE DETAIL SHEET DIMENSIONS, MANUFACTURERS' LITERATURE, SHOP DRAWINGS AND FIELD MEASUREMENTS OF SUPPLIED PRODUCTS FOR LAYOUT OF THE PROJECT FEATURES.
2. DO NOT RELY SOLELY ON ELECTRONIC VERSIONS OF DRAWINGS, SPECIFICATIONS, AND DATA FILES THAT ARE PROVIDED BY THE ENGINEER. FIELD VERIFY LOCATION OF PROJECT FEATURES.
3. PERFORM NECESSARY CONSTRUCTION NOTIFICATIONS, APPLY FOR AND OBTAIN NECESSARY PERMITS, PAY FEES, AND POST BONDS ASSOCIATED WITH THE WORK AS REQUIRED BY THE CONTRACT DOCUMENTS.
4. SEE ARCHITECTURAL DRAWINGS FOR DIMENSIONS OF BUILDINGS AND ADJACENT SITE ELEMENTS INCLUDING SIDEWALKS, RAMPS, BUILDING ENTRANCES, STAIRWAYS, UTILITY PENETRATIONS, CONCRETE DOOR PADS, COMPACTOR PAD, LOADING DOCKS, BOLLARDS, ETC.
5. BASE PLAN: THE EXISTING PROPERTY LINES, TOPOGRAPHY, AND PHYSICAL FEATURES SHOWN WERE DETERMINED BY AN ACTUAL FIELD SURVEY PROVIDED TO FUSS & O'NEILL, AND FROM PLANS OF RECORD.
6. TOPOGRAPHIC ELEVATIONS ARE BASED ON NAVD88 DATUM.

WORK RESTRICTIONS

1. DO NOT CLOSE OR OBSTRUCT ROADWAYS, SIDEWALKS, FIRE HYDRANTS, AND UTILITIES WITHOUT APPROPRIATE PERMITS.
2. WORK IS RESTRICTED TO THE TOWN OF GREENWICH STANDARD HOURS OF OPERATION.

REGULATORY REQUIREMENTS

1. WITHIN LOCAL RIGHTS-OF-WAY, PERFORM THE WORK IN ACCORDANCE WITH LOCAL MUNICIPAL STANDARDS.
2. WITHIN STATE RIGHTS-OF-WAY, PERFORM THE WORK IN ACCORDANCE WITH THE LATEST EDITION OF THE DEPARTMENT OF TRANSPORTATION'S STANDARD SPECIFICATIONS AND ISSUED REVISIONS/SUPPLEMENTS.
3. PROVIDE TRAFFIC SIGNAGE AND PAVEMENT MARKINGS IN CONFORMANCE WITH THE LATEST EDITION OF THE MANUAL OF UNIFORM TRAFFIC CONTROL DEVICES.
4. BE RESPONSIBLE FOR SITE SECURITY AND JOB SAFETY. PERFORM CONSTRUCTION ACTIVITIES IN ACCORDANCE WITH OSHA STANDARDS AND LOCAL REQUIREMENTS.
5. DISPOSE OF DEMOLITION DEBRIS IN ACCORDANCE WITH APPLICABLE FEDERAL, STATE AND LOCAL REGULATIONS, ORDINANCES AND STATUTES.
6. THIS PROJECT (PHASE 1 AND PHASE 2) FALLS WITHIN THE CONNECTICUT DEEP STORMWATER AND DEWATERING WASTEWATER FROM CONSTRUCTION ACTIVITIES GENERAL PERMIT PROCESS. GREENWICH PUBLIC SCHOOLS WILL BE REQUIRED TO SUBMIT INFORMATION TO THE DEEP TO SATISFY THIS GENERAL PERMIT. THE CONTRACTOR MUST HAVE A COPY OF THIS GENERAL PERMIT ON SITE AT ALL TIMES.

EROSION AND SEDIMENT CONTROL

1. INSTALL EROSION CONTROL MEASURES PRIOR TO STARTING ANY WORK ON THE SITE. REFER TO THE EROSION AND SEDIMENT CONTROL DRAWINGS.
2. IMPLEMENT ALL NECESSARY MEASURES REQUIRED TO CONTROL STORMWATER RUNOFF, DUST, SEDIMENT, AND DEBRIS FROM EXITING THE SITE. PERFORM CORRECTIVE ACTION AS NEEDED FOR EROSION CLEANUP AND REPAIRS TO OFF SITE AREAS, IF ANY, AT NO COST TO OWNER.
3. INSPECT AND MAINTAIN EROSION CONTROL MEASURES PER THE SCHEDULE IN THE EROSION AND SEDIMENT CONTROL DRAWINGS. DISPOSE OF SEDIMENT IN AN UPLAND AREA. DO NOT ENCUMBER OTHER DRAINAGE STRUCTURES AND PROTECTED AREAS.
4. PERFORM CONSTRUCTION SEQUENCING IN SUCH A MANNER TO CONTROL EROSION AND TO MINIMIZE THE TIME THAT EARTH MATERIALS ARE EXPOSED BEFORE THEY ARE COVERED, SEEDED, OR OTHERWISE STABILIZED.
5. UPON COMPLETION OF CONSTRUCTION AND ESTABLISHMENT OF PERMANENT GROUND COVER, REMOVE AND DISPOSE OF TEMPORARY EROSION CONTROL MEASURES. CLEAN SEDIMENT AND DEBRIS FROM TEMPORARY MEASURES AND FROM PERMANENT STORM DRAIN AND SANITARY SEWER SYSTEMS.

DEMOLITION

1. REMOVE AND DISPOSE OF EXISTING SITE FEATURES AND UTILITIES AS REQUIRED TO ACCOMMODATE PROPOSED SITE FEATURES.
2. LIMIT DEMOLITION ACTIVITIES TO THE LIMITS OF WORK IDENTIFIED ON THE DRAWINGS. ANY DAMAGE THAT OCCURS TO EXISTING SITE FEATURES OUTSIDE OF THE INDICATED WORK LIMITS SHALL BE REPAIRED BY THE CONTRACTOR AT NO ADDITIONAL COST TO THE OWNER.

CALL before you DIG
Call Toll Free In Conn.
1-800-922-4455

CALL-BEFORE-YOU-DIG: THE CONTRACTOR SHALL BE RESPONSIBLE FOR NOTIFYING "CALL BEFORE YOU DIG" AT 1-800-922-4455 TO ARRANGE FOR MARKING OUT EXISTING UNDERGROUND UTILITIES AT LEAST TWO WORKING DAYS PRIOR TO EXCAVATION.

SURVEY MAP REFERENCE

TOPOGRAPHIC SURVEY OF GREENWICH HIGH SCHOOL, 10 HILLSIDE ROAD, GREENWICH, CONNECTICUT, PREPARED FOR THE TOWN OF GREENWICH BOARD OF EDUCATION, PREPARED BY D'ANDREA SURVEYING & ENGINEERING, P.C., DATED 12/18/18, REVISED THROUGH 8/29/2019, SHEETS 1-10, SCALE: 1"=20'.

CONSTRUCTION LAYOUT

1. PROVIDE PROPER TRANSITIONS BETWEEN EXISTING AND PROPOSED SITE IMPROVEMENTS. FIELD VERIFY EXISTING PAVEMENT AND GROUND ELEVATIONS AT THE INTERFACE WITH PROPOSED PAVEMENTS AND DRAINAGE STRUCTURES BEFORE START OF CONSTRUCTION.
2. PRIOR TO ORDERING MATERIALS AND BEGINNING CONSTRUCTION, FIELD VERIFY PROPOSED UTILITY ROUTES AND IDENTIFY ANY INTERFERENCES OR OBSTRUCTIONS WITH EXISTING UTILITIES OR PUBLIC RIGHTS-OF-WAY.
3. IMMEDIATELY INFORM THE ENGINEER IN WRITING IF EXISTING UTILITY CONDITIONS CONFLICT OR DIFFER FROM THAT INDICATED AND IF THE WORK CANNOT BE COMPLETED AS INDICATED.
4. DIMENSIONS ARE FROM FACE OF CURB, FACE OF BUILDING, FACE OF WALL, AND CENTER LINE OF PAVEMENT MARKINGS, UNLESS NOTED OTHERWISE.
5. BOUNDS OR MONUMENTATION DISTURBED DURING CONSTRUCTION SHALL BE SET OR RESET BY A PROFESSIONAL LICENSED SURVEYOR.

EARTHWORK

1. NOTIFY UTILITY LOCATOR SERVICE AT LEAST 72 HOURS BEFORE STARTING EXCAVATION. "CALL BEFORE YOU DIG" AT 1-800-922-4455.
2. STOP WORK IN THE VICINITY OF SUSPECTED CONTAMINATED SOIL, GROUNDWATER OR OTHER MEDIA. IMMEDIATELY NOTIFY THE OWNER SO THAT APPROPRIATE TESTING AND SUBSEQUENT ACTION CAN BE TAKEN. RESUME WORK IN THE IMMEDIATE VICINITY ONLY UPON DIRECTION BY THE OWNER.

UTILITIES

1. TERMINATE EXISTING UTILITIES IN CONFORMANCE WITH LOCAL, STATE AND INDIVIDUAL UTILITY COMPANY STANDARD SPECIFICATIONS AND DETAILS. COORDINATE UTILITY SERVICE DISCONNECTS WITH UTILITY REPRESENTATIVES.
2. THE TYPE, SIZE AND LOCATION OF DEPICTED UNDERGROUND UTILITIES ARE APPROXIMATE REPRESENTATIONS OF INFORMATION OBTAINED FROM FIELD LOCATIONS OF VISIBLE FEATURES, EXISTING MAPS AND PLANS OF RECORD, UTILITY MAPPING, AND OTHER SOURCES OF INFORMATION OBTAINED BY THE ENGINEER. ASSUME NO GUARANTEE AS TO THE COMPLETENESS, SERVICEABILITY, EXISTENCE, OR ACCURACY OF UNDERGROUND FACILITIES. FIELD VERIFY THE EXACT LOCATIONS, SIZES, AND ELEVATIONS OF THE POINTS OF CONNECTIONS TO EXISTING UTILITIES.
3. PAY ALL FEES AND COSTS ASSOCIATED WITH UTILITY MODIFICATIONS AND CONNECTIONS, REGARDLESS OF THE ENTITY THAT PERFORMS THE WORK.
4. COORDINATE THE WORK AND WORK SCHEDULE WITH UTILITY COMPANIES. PROVIDE ADEQUATE NOTICE TO UTILITIES TO PREVENT DELAYS IN CONSTRUCTION.
5. INTERIOR DIAMETERS OF STORM DRAIN AND SANITARY SEWER STRUCTURES SHALL BE DETERMINED BY THE PRECAST MANUFACTURER, BASED ON THE INDICATED PIPE SYSTEM LAYOUT AND LOCAL MUNICIPAL STANDARDS.

   MINIMUM INTERIOR DIAMETERS:
   0 TO 20 FEET DEEP; 4 FEET.
   20 FEET OR GREATER; 5 FEET.
6. RIM ELEVATIONS FOR MANHOLES, VALVE COVERS, GATE AND PULL BOXES, AND OTHER STRUCTURES ARE APPROXIMATE. SET OR RESET RIM ELEVATIONS AS FOLLOWS:

   IN PAVEMENTS AND CONCRETE SURFACES: FLUSH
   IN SURFACES ALONG ACCESSIBLE ROUTES: FLUSH
   IN LANDSCAPE, SEEDED, AND OTHER EARTH SURFACE AREAS:
   1 INCH ABOVE SURROUNDING AREA; TAPER EARTH TO RIM ELEVATION.
7. INSTALL PROPOSED PRIVATE UTILITY SERVICES ACCORDING TO THE REQUIREMENTS PROVIDED BY, AND APPROVED BY THE AUTHORITY HAVING JURISDICTION (WATER, SEWER, GAS, TELEPHONE, ELECTRIC, FIRE ALARM, ETC.). COORDINATE FINAL DESIGN LOADS AND LOCATIONS WITH OWNER AND ARCHITECT.

PAVEMENT

1. AT A MINIMUM, CONSTRUCT ACCESSIBLE ROUTES, PARKING SPACES, RAMPS, SIDEWALKS AND WALKWAYS IN CONFORMANCE WITH THE FEDERAL AMERICANS WITH DISABILITIES ACT AND WITH STATE AND LOCAL LAWS AND REGULATIONS (WHICHEVER ARE MORE STRINGENT).

SITE RESTORATION

1. PROVIDE 6 INCHES OF TOPSOIL (OUTSIDE OF CAP) AND SEED TO AREAS DISTURBED DURING CONSTRUCTION AND NOT DESIGNATED TO BE RESTORED WITH IMPERVIOUS SURFACES (BUILDINGS, PAVEMENTS, WALKS, ETC.) UNLESS OTHERWISE NOTED.
2. REPAIR DAMAGES RESULTING FROM CONSTRUCTION LOADS, AT NO ADDITIONAL COST TO OWNER.
3. RESTORE AREAS DISTURBED BY CONSTRUCTION OPERATIONS TO THEIR ORIGINAL CONDITION OR BETTER, AT NO ADDITIONAL COST TO OWNER.

OPERATIONS AND MAINTENANCE PLAN

1. CATCH BASIN SUMPS MUST BE INSPECTED AT REGULAR INTERVALS AND CLEANED WHEN NECESSARY. AT A MINIMUM, INSPECTIONS SHOULD BE CONDUCTED TWICE PER YEAR, ONCE IN THE SPRING AND AGAIN IN THE FALL. MORE INSPECTIONS MAY BE REQUIRED DURING WINTER MONTHS WHERE HEAVY SANDING OPERATIONS MAY LEAD TO RAPID SEDIMENT ACCUMULATION WITHIN THE STRUCTURES. CLEANING OPERATIONS ARE TYPICALLY DONE USING A VACUUM TRUCK.

2. LANDSCAPED AREAS, GRAVEL PARKING AREAS, AND PARKING LOTS ARE TO BE PROPERLY MAINTAINED AND KEPT FREE OF LITTER. LITTER ON THE SITE IS TO BE PICKED UP AND PROPERLY DISPOSED OF.

3. PAVED SURFACES WILL BE SWEPT A MINIMUM OF TWO TIMES PER YEAR.

4. ALL STORMWATER FACILITIES/ DRAINAGE SWALES/ OUTFALLS ARE TO BE INSPECTED FOLLOWING HEAVY RAINS. ANY EROSION IS TO BE STABILIZED AS SOON AS POSSIBLE, AND ANY CLOGGED STRUCTURES ARE TO BE UNCLOGGED.

5. DRAINAGE SWALES, AND RIPRAP ENERGY DISSIPATERS ASSOCIATED WITH THE OUTFALLS ARE TO BE INSPECTED AND CLEANED TWICE A YEAR. EXCESS ACCUMULATED SEDIMENT AND DEBRIS SHALL BE REMOVED BY HAND AND DISPOSED OF EITHER ON SITE IN NON-WETLAND AREAS, OR OFF-SITE.

No.	DATE	DESCRIPTION	DESIGNER	REVIEWER

SEAL

SCALE:
HORZ.: N.T.S.
VERT.:
DATUM:
HORZ.:
VERT.:
0
GRAPHIC SCALE

FUSS & O'NEILL
56 QUARRY ROAD
TRUMBULL, CONNECTICUT 06611
203.374.3748
www.fando.com

GREENWICH PUBLIC SCHOOLS

GENERAL NOTES & LEGEND

GHS CARDINAL STADIUM - PHASE 1A
BUILDING PERMIT ISSUE

GREENWICH CONNECTICUT

PROJ. No.: 20110944.S10
DATE: 12/2/2020

GI-001

File Path: J:\DWG\P2011\0944\S10\Civil\Plan\20110944S10_DET-01 -PHASE 1A.dwg Layout: GI-001 Plotted: Tue, August 11, 2020 - 12:07 PM User: tgriffing
MS VIEW: LAYER STATE: Plotter: AUTOCAD PDF (GENERAL DOCUMENTATION).PC3 CTB File: FO.STB

File Path: J:\DWG\P2011\0944\S10\Civil\Plan\20110944S10_STP01-PHASE 1A.dwg Layout: EC-001 Plotted: Tue, August 11, 2020 - 11:07 AM User: tgriffing
Plotter: AUTOCAD PDF (GENERAL DOCUMENTATION).PC3 CTB File: FO.STB

MS VIEW:
LAYER STATE:

No.	DATE	DESCRIPTION	DESIGNER	REVIEWER

SEAL

STATE OF CONNECTICUT JOSEPH E. LENAHAN III No. 24034 LICENSED PROFESSIONAL ENGINEER

SCALE:
HORZ.: 1" = 30'
VERT.:
DATUM:
HORZ.:
VERT.:
30 15 0 30
GRAPHIC SCALE

FUSS & O'NEILL
56 QUARRY ROAD
TRUMBULL, CONNECTICUT 06611
203.374.3748
www.fando.com

GREENWICH PUBLIC SCHOOLS

EXISTING CONDITIONS PLAN

GHS CARDINAL STADIUM - PHASE 1A
BUILDING PERMIT ISSUE

GREENWICH CONNECTICUT

PROJ. No.: 20110944.S10
DATE: 12/2/2020

EC-001

SURVEY MAP REFERENCE

TOPOGRAPHIC SURVEY OF GREENWICH HIGH SCHOOL, 10 HILLSIDE ROAD, GREENWICH, CONNECTICUT, PREPARED FOR THE TOWN OF GREENWICH BOARD OF EDUCATION, PREPARED BY D'ANDREA SURVEYING & ENGINEERING, P.C., DATED 12/18/18, REVISED THROUGH 8/29/2019, SHEETS 1-10, SCALE: 1"=20'.

LEGEND

200	PROPOSED CONTOURS
+ 201.0	PROPOSED SPOT ELEVATION
	PROPOSED CLEARING LIMIT (APPROX.)
	PROPERTY LINE
FM	PROPOSED FORCEMAIN
R	PROPOSED ROOF DRAIN
C	PROPOSED CABLE LINE
S	PROPOSED SANITARY SEWER LINE
	PROPOSED STORM DRAINAGE LINE
T	PROPOSED TELEPHONE LINE
W	PROPOSED WATER MAIN
G	PROPOSED GAS MAIN
E	PROPOSED ELECTRICAL SERVICE
	PROPOSED GUIDE RAIL
	PROPOSED HYDRANT AND GATE VALVE
	PROPOSED REINFORCED CONCRETE CULVERT END
	PROPOSED YARD DRAIN
	PROPOSED TYPE "C-L" CATCH BASIN
	PROPOSED TYPE "C" CATCH BASIN
	PROPOSED STORM MANHOLE
	PROPOSED STORM DRAIN
	PROPOSED SANITARY MANHOLE
	PROPOSED SIGN
	PROPOSED LIGHT POLE
	PROPOSED CURB
	PROPOSED RETAINING WALL
	TOWN WETLANDS LINE
	PROPOSED EROSION CONTROL MAT
	PROPOSED CONCRETE WALK
	PROPOSED CHAIN LINK FENCE
	PROPOSED GUARD RAIL
	PROPOSED SILT FENCE
HB	PROPOSED HAY BALES
	PROPOSED HAYBALE CHECK DAM

SITE SURFACING LEGEND:

- BITUMINOUS CONCRETE PAVEMENT
- BITUMINOUS CONCRETE SIDEWALK
- CONCRETE SIDEWALK
- BRICK PAVERS
- CRUSHED STONE

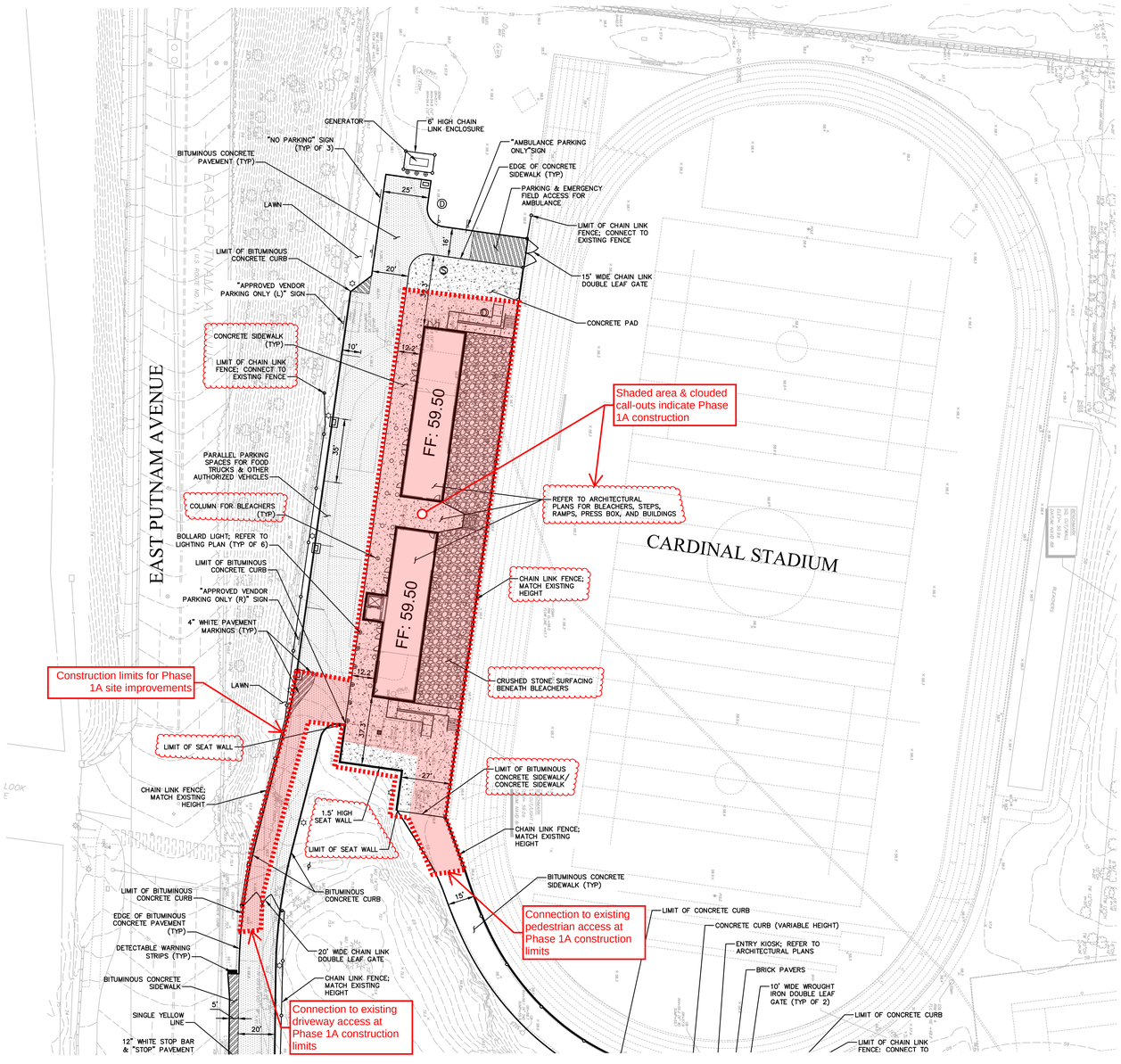

No.	DATE	DESCRIPTION	DESIGNER	REVIEWER

SEAL

STATE OF CONNECTICUT · JEFFREY S. TERSKI · No. 24024 · LICENSED PROFESSIONAL ENGINEER

SCALE:
HORZ.: 1" = 30'
VERT.:
DATUM:
HORZ.:
VERT.:
30 15 0 30
GRAPHIC SCALE

FUSS & O'NEILL
56 QUARRY ROAD
TRUMBULL, CONNECTICUT 06611
203.374.3748
www.fando.com

GREENWICH PUBLIC SCHOOLS

SITE LAYOUT PLAN

GHS CARDINAL STADIUM - PHASE 1A
BUILDING PERMIT ISSUE

GREENWICH CONNECTICUT

PROJ. No.: 20110944.S10
DATE: 12/2/2020

CS-101

File Path: J:\DWG\P20110944S10\Civil\Plan\20110944S10_STP01-PHASE 1A.dwg Layout: CS-101 Plotted: Tue, August 11, 2020 - 11:07 AM User: tgriffing
Plotter: AUTOCAD PDF (GENERAL DOCUMENTATION).PC3 CTB File: FO.STB
MS VIEW:
LAYER STATE:

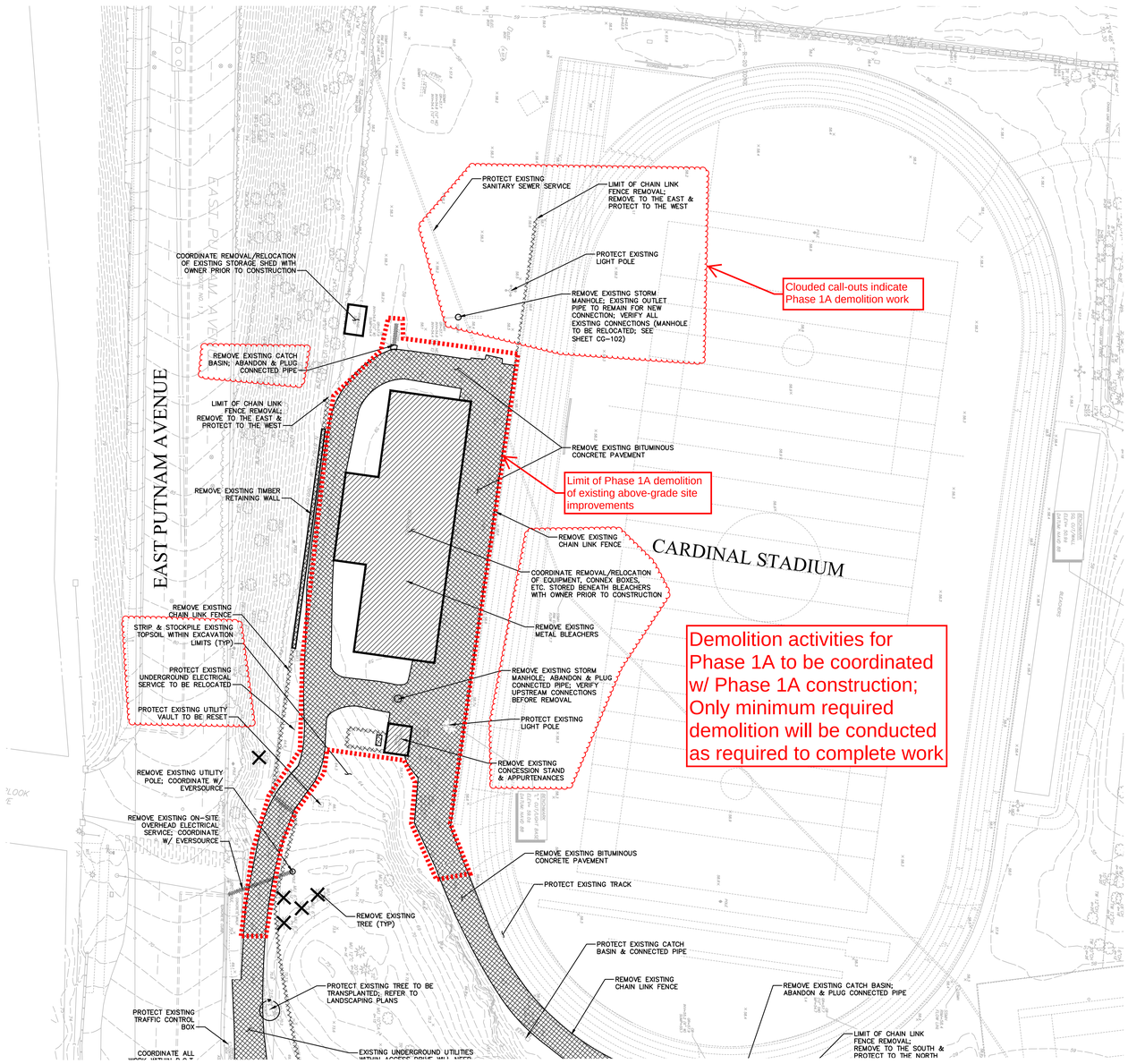

SURVEY MAP REFERENCE

TOPOGRAPHIC SURVEY OF GREENWICH HIGH SCHOOL, 10 HILLSIDE ROAD, GREENWICH, CONNECTICUT, PREPARED FOR THE TOWN OF GREENWICH BOARD OF EDUCATION, PREPARED BY D'ANDREA SURVEYING & ENGINEERING, P.C., DATED 12/18/18, REVISED THROUGH 8/29/2019, SHEETS 1-10, SCALE: 1"=20'.

TRAFFIC CONTROL NOTE

MAINTENANCE & PROTECTION OF TRAFFIC TO BE COORDINATED WITH DOT DISTRICT OFFICE AND POLICE DEPARTMENT WHEN CONDUCTING CONSTRUCTION ACTIVITIES WITHIN OR OTHERWISE OBSTRUCTING EAST PUTNAM AVENUE. CONTRACTOR TO PROVIDE APPROPRIATE CONSTRUCTION SIGNAGE AND TRAFFIC CONTROL DEVICES AS REQUIRED.

UTILITY NOTE

THE UNDERGROUND UTILITIES DEPICTED HEREON ARE BASED ON FIELD LOCATION OF VISIBLE FEATURES, MAPS AND PLANS OF RECORD, UTILITY MAPPING OR OTHER SOURCES OF INFORMATION. THE ENGINEER MAKES NO GUARANTEE THAT THE UNDERGROUND UTILITIES SHOWN COMPRISE ALL SUCH UTILITIES IN THE AREA, EITHER IN SERVICE OR ABANDONED. THE ENGINEER FURTHER DOES NOT WARRANT THAT THE UNDERGROUND UTILITIES SHOWN ARE IN THE EXACT LOCATION INDICATED ALTHOUGH THE ENGINEER DOES DECLARE THAT THEY ARE DEPICTED AS ACCURATELY AS POSSIBLE FROM INFORMATION AVAILABLE. THE ENGINEER HAS NOT PHYSICALLY LOCATED THE UNDERGROUND UTILITIES.

CALL before you DIG
Call Toll Free In Conn.
1-800-922-4455

CALL-BEFORE-YOU-DIG: THE CONTRACTOR SHALL BE RESPONSIBLE FOR NOTIFYING "CALL BEFORE YOU DIG" AT 1-800-922-4455 TO ARRANGE FOR MARKING OUT EXISTING UNDERGROUND UTILITIES AT LEAST TWO WORKING DAYS PRIOR TO EXCAVATION.

No.	DATE	DESCRIPTION	DESIGNER	REVIEWER

SEAL

STATE OF CONNECTICUT · JOSEPH C. LEVESQUE · No. 24054 · LICENSED PROFESSIONAL ENGINEER

SCALE:
HORZ.: 1" = 30'
VERT.:
DATUM:
HORZ.:
VERT.:
30 15 0 30
GRAPHIC SCALE

FUSS & O'NEILL
56 QUARRY ROAD
TRUMBULL, CONNECTICUT 06611
203.374.3748
www.fando.com

GREENWICH PUBLIC SCHOOLS

SITE DEMOLITION / SITE PREPARATION PLAN

GHS CARDINAL STADIUM - PHASE 1A
BUILDING PERMIT ISSUE

GREENWICH CONNECTICUT

PROJ. No.: 20110944.S10
DATE: 12/2/2020

CP-101

File Path: J:\DWG\P2011\0944\S10\Civil\Plan\20110944S10_STP01-PHASE 1A.dwg Layout: CP-101 Plotted: Tue, August 11, 2020 - 11:07 AM User: tgriffing
Plotter: AUTOCAD PDF (GENERAL DOCUMENTATION).PC3 CTB File: FO.STB
MS VIEW:
LAYER STATE:

SURVEY MAP REFERENCE

TOPOGRAPHIC SURVEY OF GREENWICH HIGH SCHOOL, 10 HILLSIDE ROAD, GREENWICH, CONNECTICUT, PREPARED FOR THE TOWN OF GREENWICH BOARD OF EDUCATION, PREPARED BY D'ANDREA SURVEYING & ENGINEERING, P.C., DATED 12/18/18, REVISED THROUGH 8/29/2019, SHEETS 1–10, SCALE: 1"=20'.

CT DEEP PERMITTING NOTE

THIS PROJECT IS TO BE REGISTERED UNDER THE CTDEEP GENERAL PERMIT FOR THE DISCHARGE OF STORMWATER AND DEWATERING WASTEWATERS FROM CONSTRUCTION ACTIVITIES. E&S CONTROLS ARE TO BE IMPLEMENTED AND MAINTAINED AS INDICATED ON THE DRAWINGS, DETAILS, AND STORMWATER POLLUTION CONTROL PLAN (SPCP) DEVELOPED FOR THIS PROJECT. REGULAR SITE INSPECTIONS AND TURBIDITY MONITORING WILL BE REQUIRED IN ACCORDANCE WITH THE GENERAL PERMIT. A COPY OF THE PERMIT AND SPCP IS TO BE AVAILABLE ON–SITE AT ALL TIMES.

E&S CONTROLS NOTE

REFER TO SHEETS GI–001, CE–501, AND CE–502 FOR EROSION & SEDIMENT CONTROL NOTES AND DETAILS.

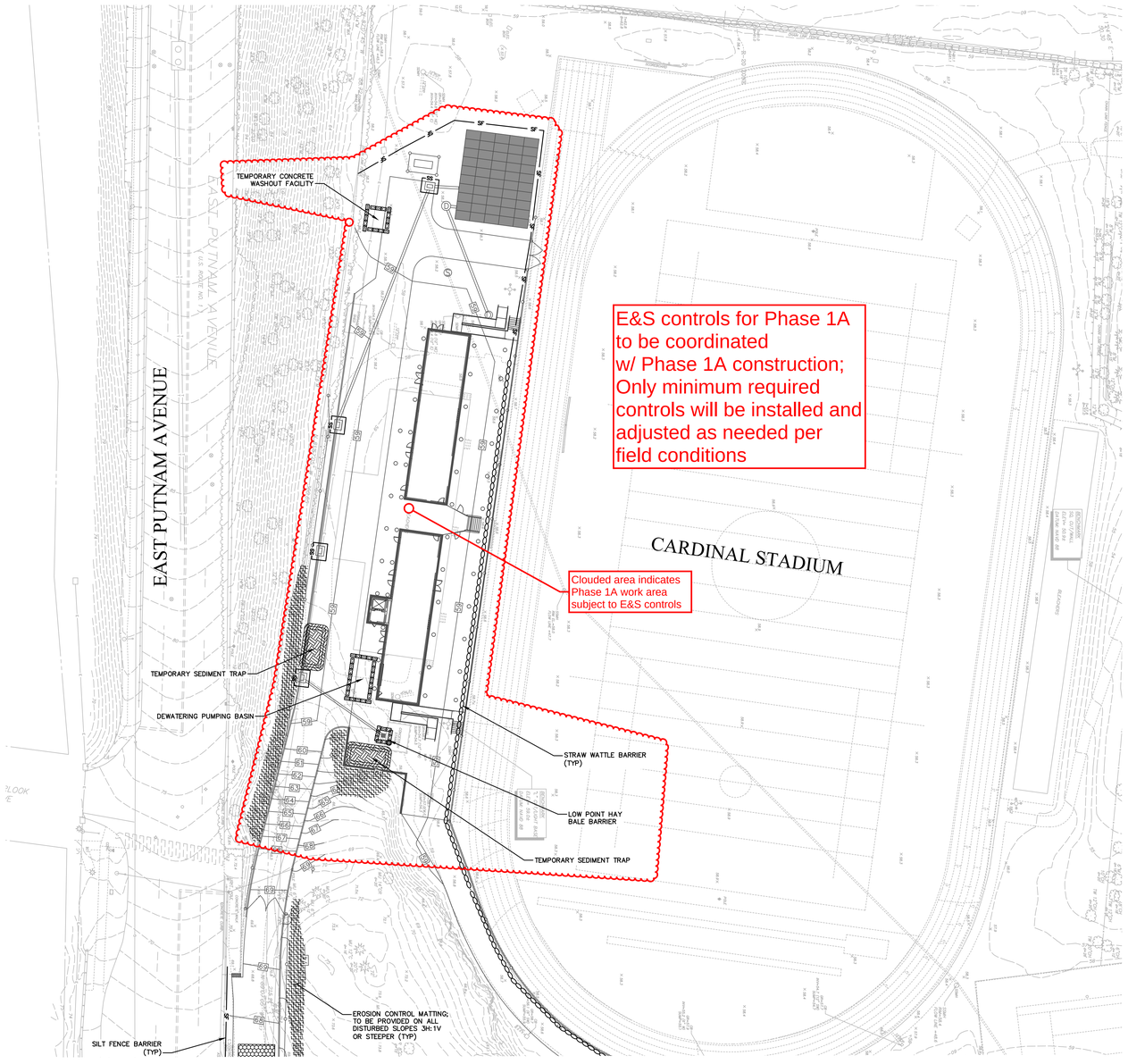

No.	DATE	DESCRIPTION	DESIGNER	REVIEWER

SEAL

SCALE:
HORZ.: 1" = 30'
VERT.:
DATUM:
HORZ.:
VERT.:
30 15 0 30
GRAPHIC SCALE

FUSS & O'NEILL
56 QUARRY ROAD
TRUMBULL, CONNECTICUT 06611
203.374.3748
www.fando.com

GREENWICH PUBLIC SCHOOLS

EROSION & SEDIMENTATION CONTROL PLAN

GHS CARDINAL STADIUM - PHASE 1A
BUILDING PERMIT ISSUE

GREENWICH CONNECTICUT

PROJ. No.: 20110944.S10
DATE: 12/2/2020

CE-101

File Path: J:\DWG\P2011\10944S10\Civil\Plan\20110944S10_STP01-PHASE 1A.dwg Layout: CE-101 Plotted: Tue, August 11, 2020 - 11:08 AM User: tgriffing
Plotter: AUTOCAD PDF (GENERAL DOCUMENTATION).PC3 CTB File: FO.STB
MS VIEW:
LAYER STATE:

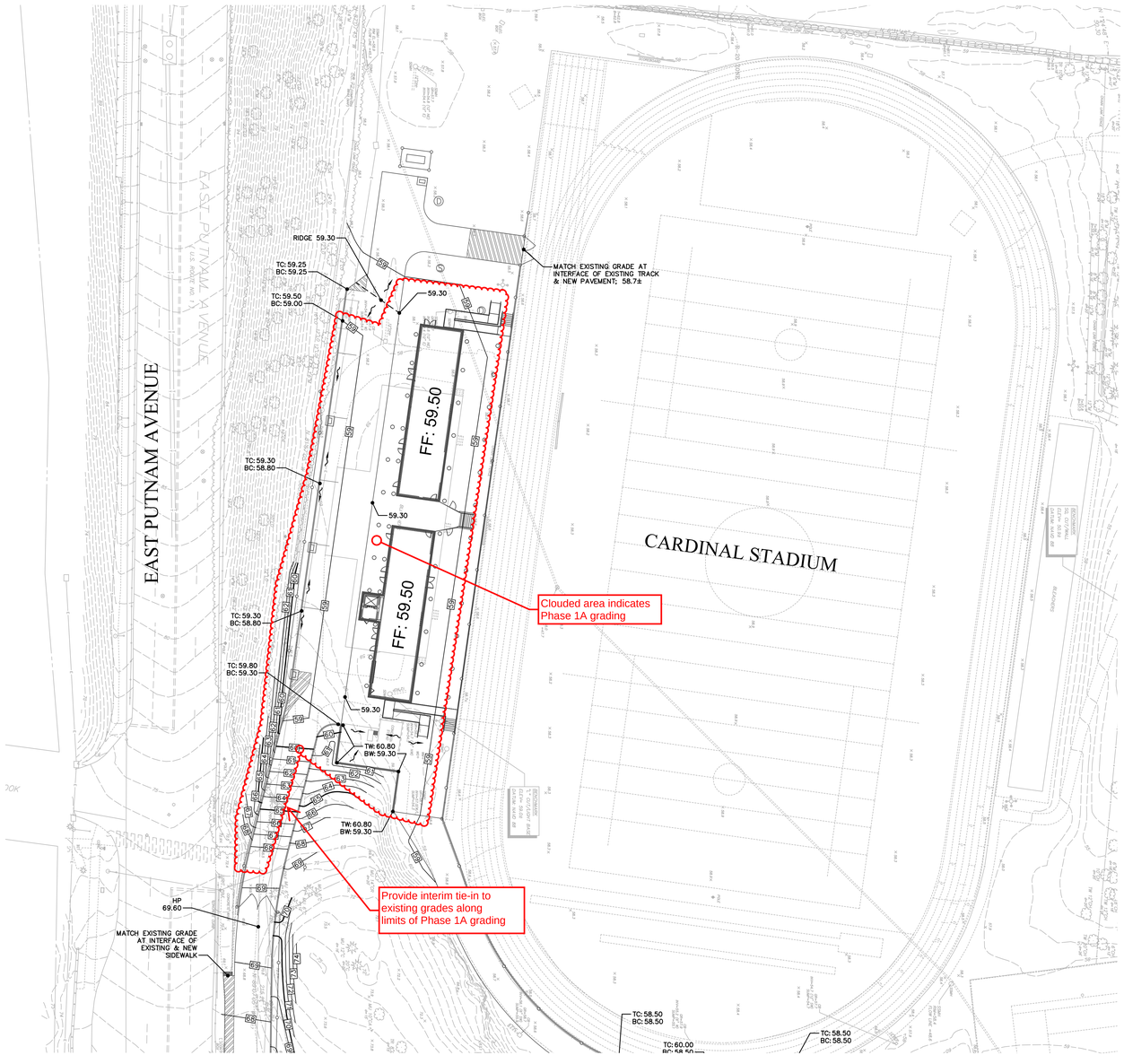

SURVEY MAP REFERENCE

TOPOGRAPHIC SURVEY OF GREENWICH HIGH SCHOOL, 10 HILLSIDE ROAD, GREENWICH, CONNECTICUT, PREPARED FOR THE TOWN OF GREENWICH BOARD OF EDUCATION, PREPARED BY D'ANDREA SURVEYING & ENGINEERING, P.C., DATED 12/18/18, REVISED THROUGH 8/29/2019, SHEETS 1–10, SCALE: 1"=20'.

GRADING NOTES

1. SITE SHALL BE GRADED SMOOTHLY AND EVENLY IN ACCORDANCE WITH THE PROPOSED TOP OF FRAMES AND SPOT GRADE ELEVATIONS DEPICTED HEREON. CONTRACTOR SHALL BE RESPONSIBLE FOR ENSURING POSITIVE DRAINAGE FLOW TO ALL CATCH BASINS WITHOUT CREATING ANY FLAT SPOTS THAT WILL RESULT IN STANDING WATER.
2. ALL RESERVED PARKING STALLS SHALL BE GRADED WITH A MAXIMUM PITCH OF 2% IN ANY DIRECTION.
3. ALL SIDEWALKS SHALL BE GRADED WITH A MAXIMUM CROSS–PITCH OF 2% AND A MAXIMUM SLOPE OF 5%.
4. ALL ACCESSIBLE RAMPS SHALL BE GRADED WITH A MAXIMUM SLOPE OF 8.3%.
5. ALL EARTHEN SLOPES TO BE STABILIZED WITH LAWN SHALL BE GRADED WITH A MAXIMUM SLOPE OF 2H:1V.

No.	DATE	DESCRIPTION	DESIGNER	REVIEWER

SEAL

STATE OF CONNECTICUT · JOSEPH C. LEVESQUE · NO. 24054 · LICENSED PROFESSIONAL ENGINEER

SCALE:
HORZ.: 1" = 30'
VERT.:
DATUM:
HORZ.:
VERT.:
30 15 0 30
GRAPHIC SCALE

FUSS & O'NEILL
56 QUARRY ROAD
TRUMBULL, CONNECTICUT 06611
203.374.3748
www.fando.com

GREENWICH PUBLIC SCHOOLS

SITE GRADING PLAN

GHS CARDINAL STADIUM - PHASE 1A
BUILDING PERMIT ISSUE

GREENWICH CONNECTICUT

PROJ. No.: 20110944.S10
DATE: 12/2/2020

CG-101

File Path: J:\DWG\P2011\0944S10\Civil\Plan\20110944S10_STP01-PHASE 1A.dwg Layout: CG-101 Plotted: Tue, August 11, 2020 - 11:08 AM User: tgriffing
MS VIEW: LAYER STATE: Plotter: AUTOCAD PDF (GENERAL DOCUMENTATION).PC3 CTB File: FO.STB

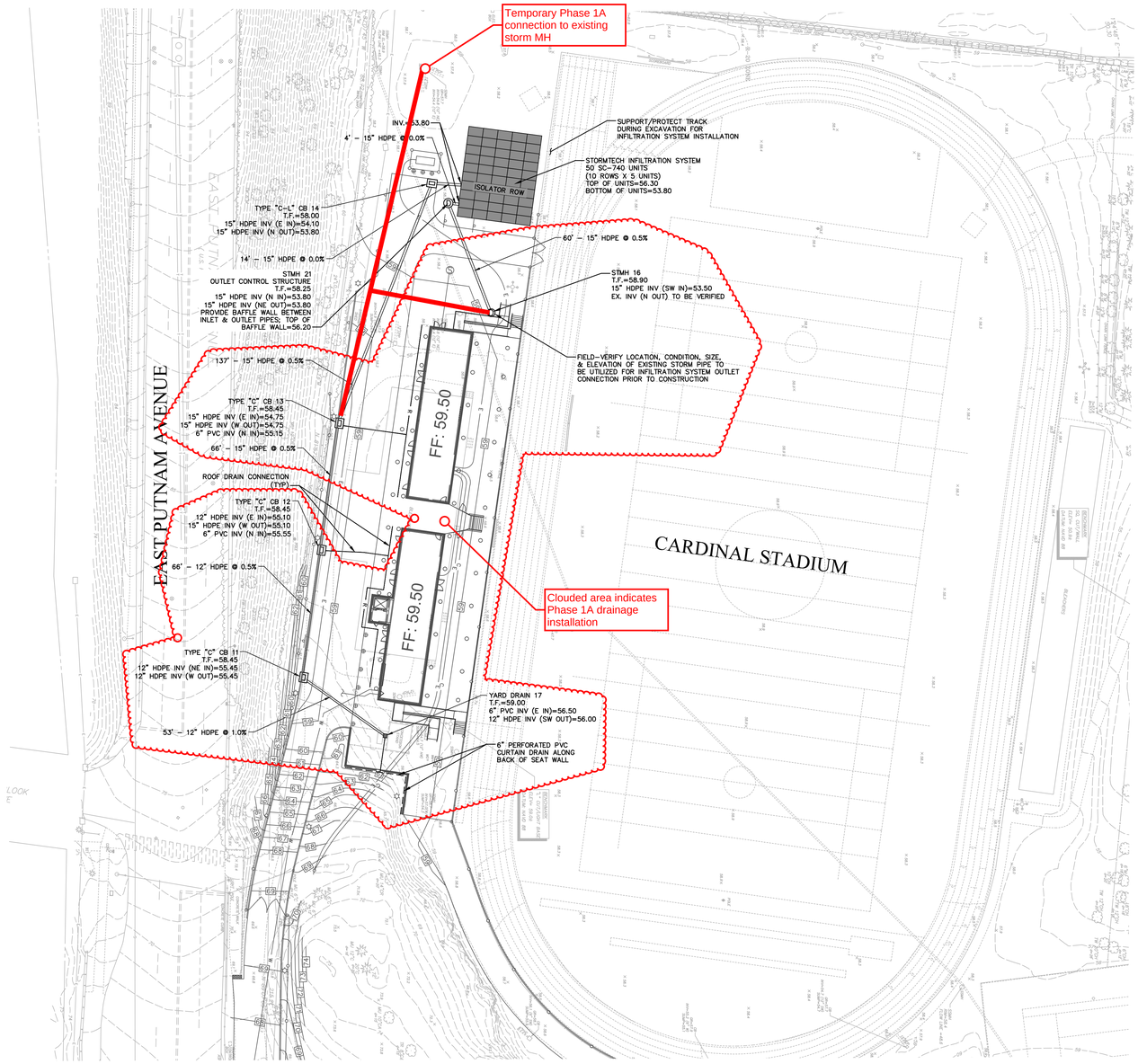

SURVEY MAP REFERENCE

TOPOGRAPHIC SURVEY OF GREENWICH HIGH SCHOOL, 10 HILLSIDE ROAD, GREENWICH, CONNECTICUT, PREPARED FOR THE TOWN OF GREENWICH BOARD OF EDUCATION, PREPARED BY D'ANDREA SURVEYING & ENGINEERING, P.C., DATED 12/18/18, REVISED THROUGH 8/29/2019, SHEETS 1–10, SCALE: 1"=20'.

NOTE: EXISTING GROUNDWATER ELEVATION SHALL BE DETERMINED AND PERCOLATION TESTS SHALL BE CONDUCTED PRIOR TO CONSTRUCTION TO VERIFY THAT THE PROPOSED SUBSURFACE INFILTRATION SYSTEM WILL EMPTY BETWEEN 48 AND 72 HOURS FOLLOWING A STORM EVENT.

UTILITY NOTE

THE UNDERGROUND UTILITIES DEPICTED HEREON ARE BASED ON FIELD LOCATION OF VISIBLE FEATURES, MAPS AND PLANS OF RECORD, UTILITY MAPPING OR OTHER SOURCES OF INFORMATION. THE ENGINEER MAKES NO GUARANTEE THAT THE UNDERGROUND UTILITIES SHOWN COMPRISE ALL SUCH UTILITIES IN THE AREA, EITHER IN SERVICE OR ABANDONED. THE ENGINEER FURTHER DOES NOT WARRANT THAT THE UNDERGROUND UTILITIES SHOWN ARE IN THE EXACT LOCATION INDICATED ALTHOUGH THE ENGINEER DOES DECLARE THAT THEY ARE DEPICTED AS ACCURATELY AS POSSIBLE FROM INFORMATION AVAILABLE. THE ENGINEER HAS NOT PHYSICALLY LOCATED THE UNDERGROUND UTILITIES.

CALL before you DIG
Call Toll Free In Conn.
1–800–922–4455

CALL–BEFORE–YOU–DIG: THE CONTRACTOR SHALL BE RESPONSIBLE FOR NOTIFYING "CALL BEFORE YOU DIG" AT 1–800–922–4455 TO ARRANGE FOR MARKING OUT EXISTING UNDERGROUND UTILITIES AT LEAST TWO WORKING DAYS PRIOR TO EXCAVATION.

File Path: J:\DWG\P2011\0944\S10\Civil\Plan\20110944S10_STP01-PHASE 1A.dwg Layout: CG-102 Plotted: Tue, August 11, 2020 - 11:08 AM User: tgriffing
MS VIEW: LAYER STATE: Plotter: AUTOCAD PDF (GENERAL DOCUMENTATION).PC3 CTB File: FO.STB

No.	DATE	DESCRIPTION	DESIGNER	REVIEWER

SEAL

STATE OF CONNECTICUT · STEPHEN P. WRIGHT · No. 24624 · LICENSED PROFESSIONAL ENGINEER

SCALE:
HORZ.: 1" = 30'
VERT.:
DATUM:
HORZ.:
VERT.:
30 15 0 30
GRAPHIC SCALE

FUSS & O'NEILL
56 QUARRY ROAD
TRUMBULL, CONNECTICUT 06611
203.374.3748
www.fando.com

GREENWICH PUBLIC SCHOOLS

SITE DRAINAGE PLAN

GHS CARDINAL STADIUM - PHASE 1A
BUILDING PERMIT ISSUE

GREENWICH CONNECTICUT

PROJ. No.: 20110944.S10
DATE: 12/2/2020

CG-102

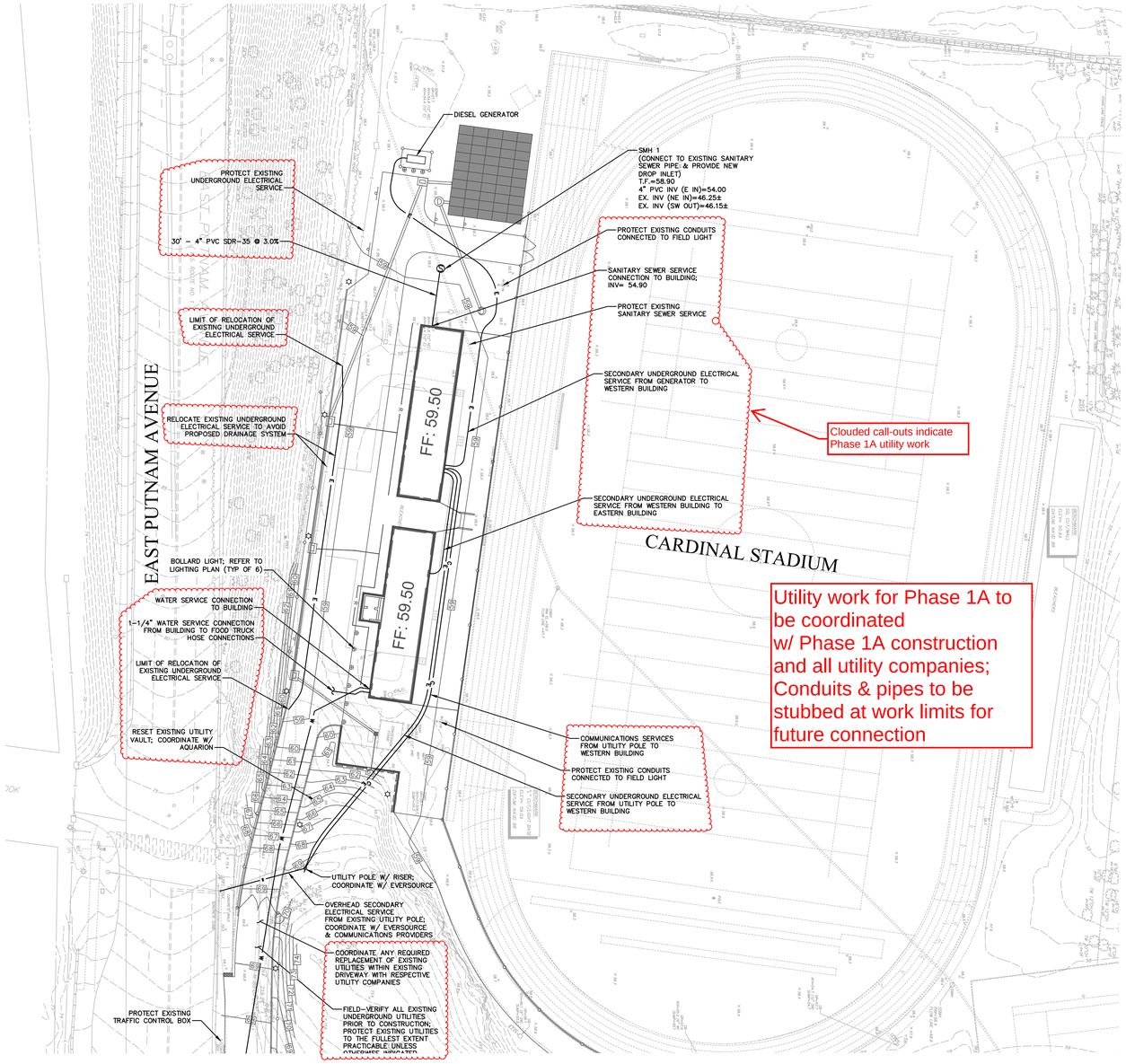

SURVEY MAP REFERENCE

TOPOGRAPHIC SURVEY OF GREENWICH HIGH SCHOOL, 10 HILLSIDE ROAD, GREENWICH, CONNECTICUT, PREPARED FOR THE TOWN OF GREENWICH BOARD OF EDUCATION, PREPARED BY D'ANDREA SURVEYING & ENGINEERING, P.C., DATED 12/18/18, REVISED THROUGH 8/29/2019, SHEETS 1–10, SCALE: 1"=20'.

UTILITY NOTE

THE UNDERGROUND UTILITIES DEPICTED HEREON ARE BASED ON FIELD LOCATION OF VISIBLE FEATURES, MAPS AND PLANS OF RECORD, UTILITY MAPPING OR OTHER SOURCES OF INFORMATION. THE ENGINEER MAKES NO GUARANTEE THAT THE UNDERGROUND UTILITIES SHOWN COMPRISE ALL SUCH UTILITIES IN THE AREA, EITHER IN SERVICE OR ABANDONED. THE ENGINEER FURTHER DOES NOT WARRANT THAT THE UNDERGROUND UTILITIES SHOWN ARE IN THE EXACT LOCATION INDICATED ALTHOUGH THE ENGINEER DOES DECLARE THAT THEY ARE DEPICTED AS ACCURATELY AS POSSIBLE FROM INFORMATION AVAILABLE. THE ENGINEER HAS NOT PHYSICALLY LOCATED THE UNDERGROUND UTILITIES.

CALL before you DIG
Call Toll Free In Conn.
1–800–922–4455

CALL–BEFORE–YOU–DIG: THE CONTRACTOR SHALL BE RESPONSIBLE FOR NOTIFYING "CALL BEFORE YOU DIG" AT 1–800–922–4455 TO ARRANGE FOR MARKING OUT EXISTING UNDERGROUND UTILITIES AT LEAST TWO WORKING DAYS PRIOR TO EXCAVATION.

GENERAL NOTES

1. THE SITE CONTRACTOR SHALL COORDINATE THE INSTALLATION OF ALL UTILITIES TO END 5' OUTSIDE THE FOUNDATION WALL WITH BUILDING CONTRACTOR. VERIFY ALL LOCATIONS TO AVOID CONFLICTS WITH OTHER UTILITIES.

2. PROPOSED ELECTRICAL AND COMMUNICATIONS UTILITIES TO BE PARTIALLY UNDERGROUND AND COORDINATED WITH RESPECTIVE UTILITY COMPANIES.

3. COORDINATE THE WORK AND WORK SCHEDULE WITH UTILITY COMPANIES. PROVIDE ADEQUATE NOTICE TO UTILITIES TO PREVENT DELAYS IN CONSTRUCTION.

4. INSTALL PROPOSED UTILITY SERVICES ACCORDING TO THE REQUIREMENTS PROVIDED BY, AND APPROVED BY THE AUTHORITY HAVING JURISDICTION (WATER, SEWER, GAS, TELEPHONE, ELECTRIC, FIRE ALARM, ETC.). COORDINATE FINAL DESIGN LOADS AND LOCATIONS WITH OWNER AND ARCHITECT.

5. ALL UTILITY CONNECTIONS TO BE CONFIRMED WITH MEP CONSULTANT AND UTILITY CO.'S..

6. UNLESS OTHERWISE INDICATED ON THESE PLANS, ALL PROPOSED UNDERGROUND UTILITIES ARE TO BE CONSTRUCTED TO LINE AND GRADE AS DIRECTED BY THE GOVERNING UTILITY.

7. FULL CONDUIT NUMBERS AND SIZES NOT SHOWN, COORDINATE CONNECTIONS WITH MEP AND UTILITY COMPANIES PRIOR TO CONSTRUCTION.

8. REFER TO MEP PLANS FOR UNDERGROUND ELECTRICAL AND COMMUNICATIONS CONDUITS FOR SITE LIGHTING, SCORE BOARDS, PRESS BOX, AND ENTRY KIOSK.

No.	DATE	DESCRIPTION	DESIGNER	REVIEWER

SEAL

STATE OF CONNECTICUT · CITY OF LEXINGTON · MA · No. 24604 · LICENSED PROFESSIONAL ENGINEER

SCALE: HORZ.: 1" = 30' VERT.:
DATUM: HORZ.: VERT.:
30 15 0 30
GRAPHIC SCALE

FUSS & O'NEILL
56 QUARRY ROAD
TRUMBULL, CONNECTICUT 06611
203.374.3748
www.fando.com

GREENWICH PUBLIC SCHOOLS

SITE UTILITY PLAN

GHS CARDINAL STADIUM - PHASE 1A
BUILDING PERMIT ISSUE

GREENWICH CONNECTICUT

PROJ. No.: 20110944.S10
DATE: 12/2/2020

CU-101

File Path: J:\DWG\P2011\0944\S10\Civil\Plan\20110944S10_STP01-PHASE 1A.dwg Layout: CU-101 Plotted: Tue, August 11, 2020 - 11:08 AM User: tgriffing
MS VIEW: LAYER STATE: Plotter: AUTOCAD PDF (GENERAL DOCUMENTATION).PC3 CTB File: FO.STB

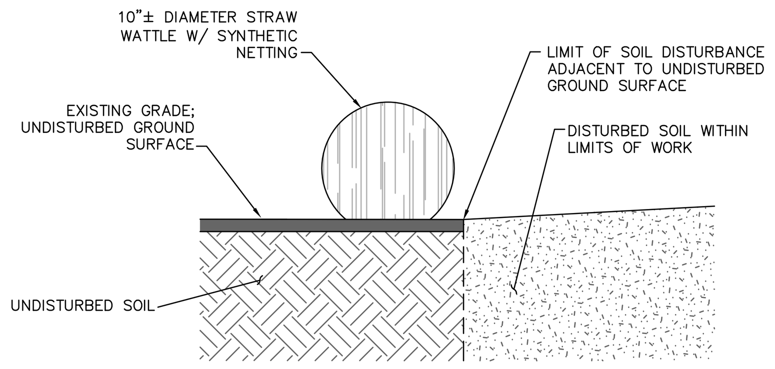

NOTE: WATTLES TO BE WEIGHED DOWN WITH SANDBAGS (WITHIN PAVED SURFACES) OR STAKED (WITHIN NON-PAVED SURFACES) AS NECESSARY AT AREAS WITH STEEP SLOPES AND/OR SIGNIFICANT SEDIMENT TRANSPORT POTENTIAL.

STRAW WATTLE BARRIER
NOT TO SCALE

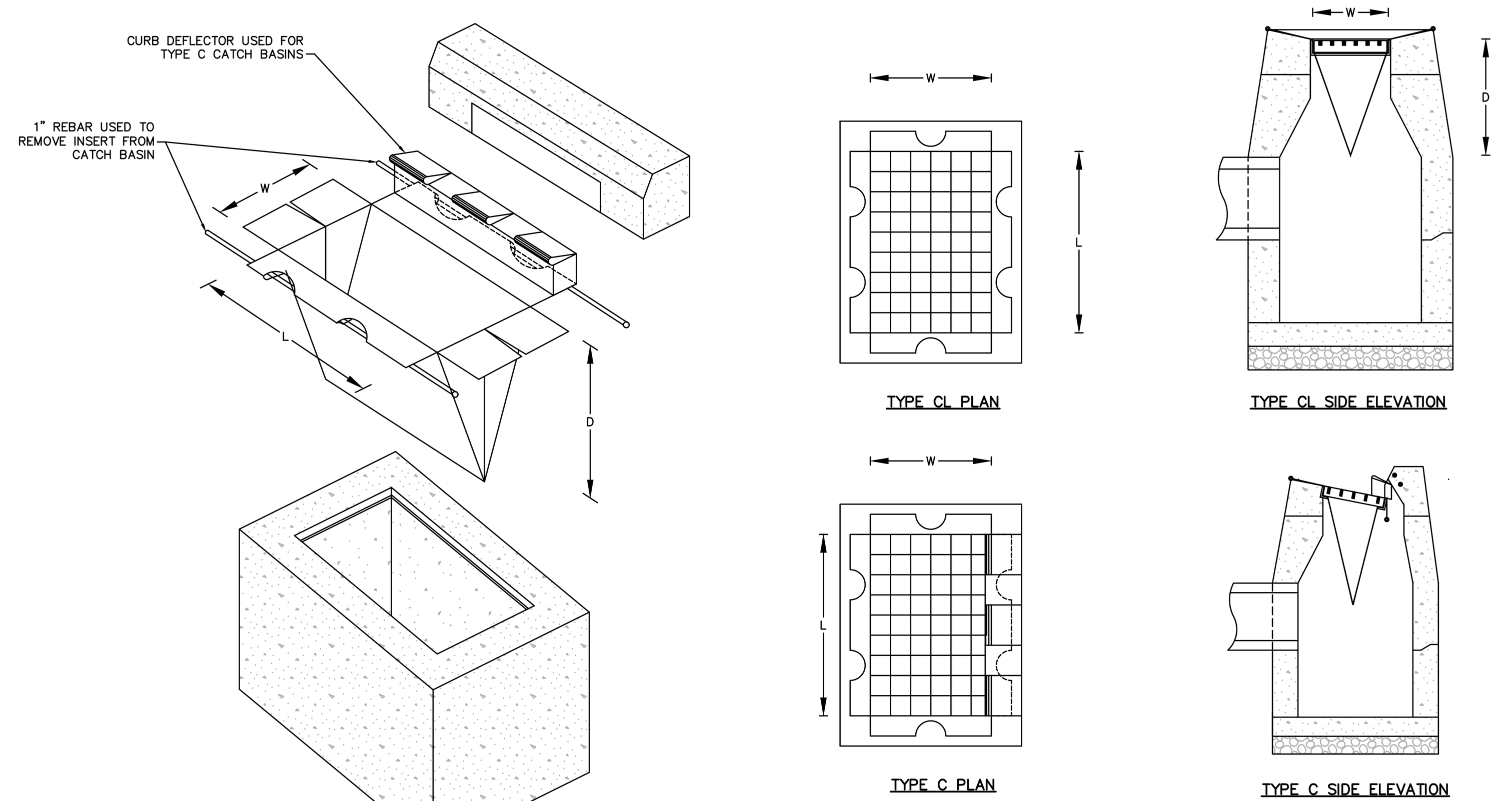

SILT SACK CATCH BASIN INSERT
NOT TO SCALE

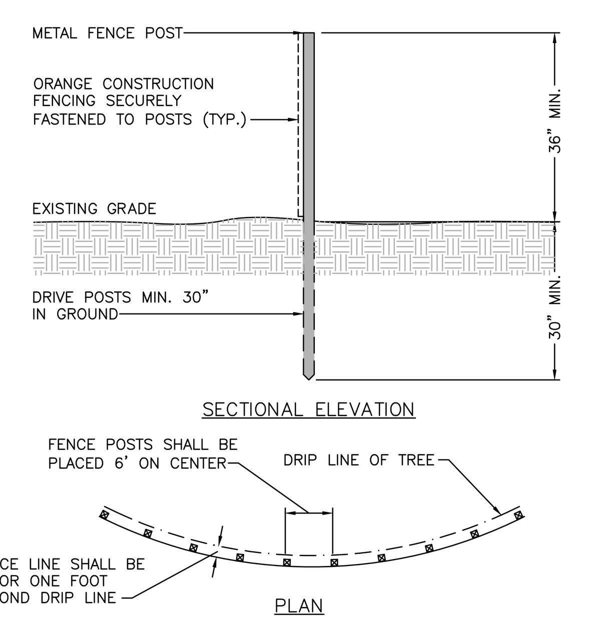

NOTES:
SEE LANDSCAPING PLAN FOR ADDITIONAL TREE PROTECTION NOTES.

TREE PROTECTION FENCING
NOT TO SCALE

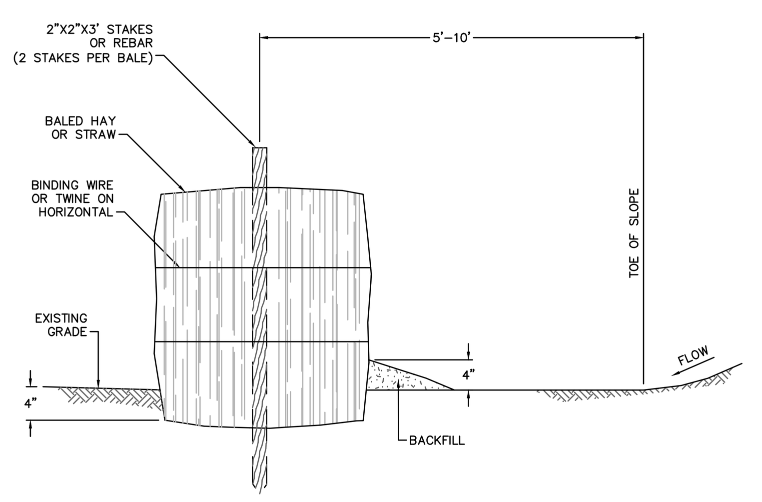

TOE OF SLOPE HAY BALE BARRIER
NOT TO SCALE

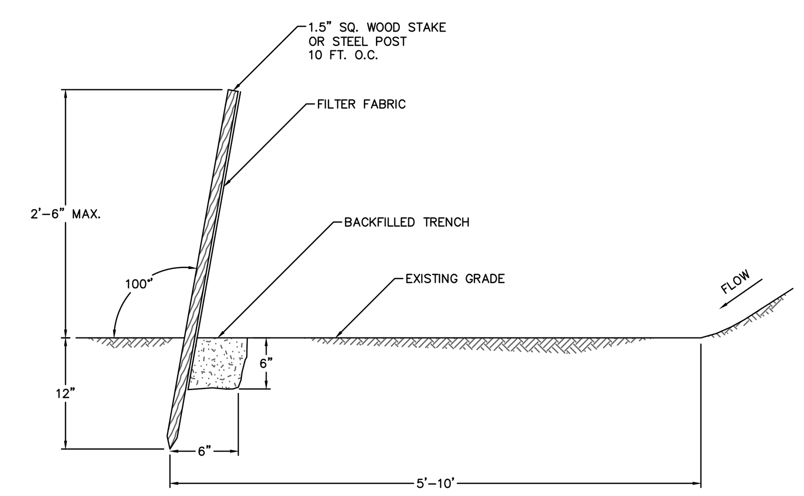

SILT FENCE
NOT TO SCALE

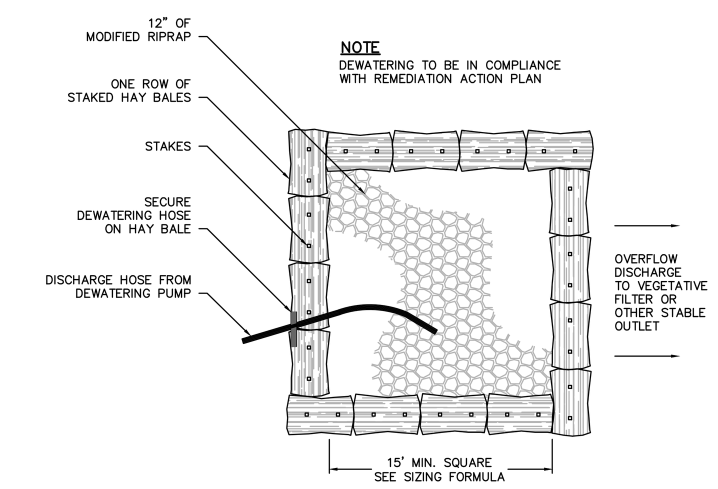

SIZING FORMULA:
CUBIC FT. OF REQUIRED STORAGE = PUMP DISCHARGE RATE (GPM) x 16

PLAN

PUMPING SETTLING BASIN TYPE I
NOT TO SCALE

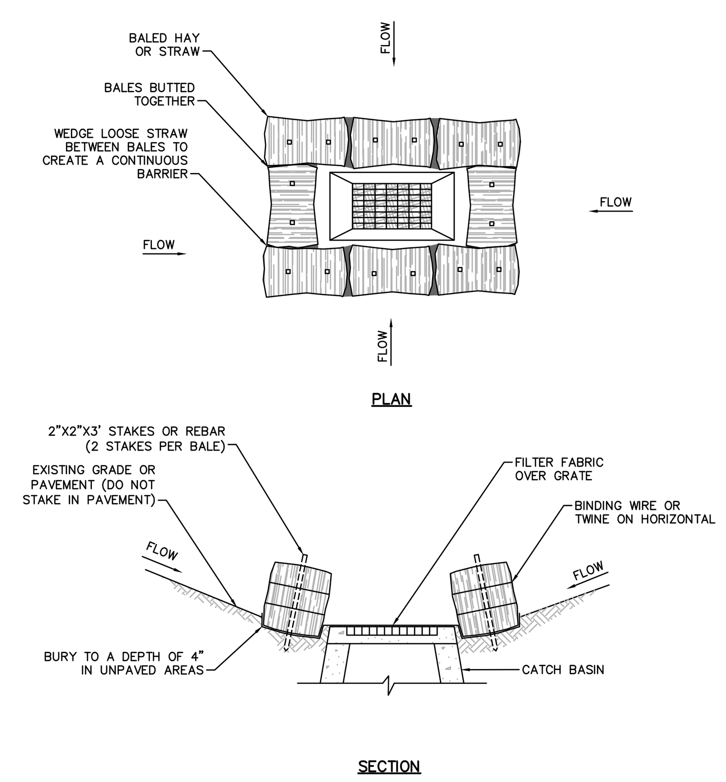

LOW POINT HAY BALE BARRIER
NOT TO SCALE

EROSION & SEDIMENT CONTROL NOTES

1. CONSTRUCTION STANDARDS – CONSTRUCT ALL EROSION AND SEDIMENT CONTROL MEASURES IN ACCORDANCE WITH THE STANDARDS AND SPECIFICATIONS OF THE MOST RECENT EDITION OF THE "CONNECTICUT GUIDELINES FOR SOIL EROSION AND SEDIMENT CONTROL" (CT DEP BULLETIN 34). ALL MEASURES SHALL BE MAINTAINED AND UPGRADED TO ACHIEVE PROPER SEDIMENT CONTROL DURING CONSTRUCTION.

2. PLAN IMPLEMENTATION – IMPLEMENT THIS EROSION AND SEDIMENT CONTROL PLAN. THIS IMPLEMENTATION INCLUDES THE INSTALLATION AND MAINTENANCE OF CONTROL MEASURES UNTIL PERMANENT STABILIZATION IS ACHIEVED, INFORMING ALL SUBCONTRACTORS OF THE REQUIREMENTS AND OBJECTIVES OF THE PLAN, AND NOTIFYING THE PROPER MUNICIPAL AGENCY OF ANY TRANSFER OF THIS RESPONSIBILITY. THE OWNER SHALL BE RESPONSIBLE FOR CONVEYING A COPY OF THE EROSION AND SEDIMENT CONTROL PLAN TO THE NEW OWNER IF THE TITLE OF THE LAND IS TRANSFERRED PRIOR TO ACHIEVING PERMANENT STABILIZATION.

3. INSTALLATION SCHEDULE – INSTALL THE CONSTRUCTION ENTRANCE BEFORE CONSTRUCTION TRAFFIC INTO AND OUT OF THE PROJECT AREA BEGINS. INSTALL EROSION AND SEDIMENT CONTROL MEASURES PRIOR TO STUMP REMOVAL AND CONSTRUCTION. INSTALL ADDITIONAL CONTROL MEASURES DURING THE CONSTRUCTION PERIOD, IF DEEMED NECESSARY BY THE OWNER, HIS AGENTS OR AGENTS OF THE MUNICIPALITY.

4. FUGITIVE DUST – CONTROL FUGITIVE DUST USING WATER SPRAYS OR CALCIUM CHLORIDE ON SOIL SURFACES, SWEEPING PAVED AREAS, TEMPORARY WINDBREAKS OR NON-ASPHALTIC SOIL TACKIFIERS.

5. HAY BALE LIFE SPAN – INSTALL HAY BALES WHERE PROTECTION AND EFFECTIVENESS IS REQUIRED FOR LESS THAN 90 DAYS. OTHERWISE, INSTALL SILT FENCE.

6. CATCH BASINS – PROTECT CATCH BASINS WITH PROPER CONTROLS THROUGHOUT THE CONSTRUCTION PERIOD UNTIL ALL DISTURBED AREAS ARE PERMANENTLY STABILIZED.

7. STOCKPILES – ENCIRCLE STOCKPILES OF ERODIBLE SOIL WITH A HAY BALE OR SILT FENCE BARRIER. THE SIDE SLOPES OF ERODIBLE STOCKPILED MATERIAL SHALL BE NO STEEPER THAN 2:1. STOCKPILES THAT ARE NOT TO BE USED WITHIN 30 DAYS SHALL BE SEEDED AND MULCHED IMMEDIATELY AFTER THEY ARE FORMED.

8. TOE OF SLOPE – ESTABLISH AN EROSION CONTROL BARRIER (SILT FENCE OR HAY BALE BARRIER) APPROXIMATELY 5 TO 10 FEET FROM THE PROPOSED TOE OF THE CUT OR FILL AREA PRIOR TO BEGINNING EARTHWORK.

9. SEDIMENT REMOVAL – SEDIMENT REACHING ½ THE HEIGHT OF THE EROSION CONTROL BARRIER SHALL BE REMOVED. REMOVE AND DISPOSE OF SEDIMENT IN A MANNER CONSISTENT WITH THE INTENT OF THE PLAN.

10. SOIL STABILIZATION SCHEDULE – APPLY PERMANENT SOIL STABILIZATION MEASURES TO ALL GRADED AREAS WITHIN 7 DAYS OF ESTABLISHING FINAL GRADE. APPLY TEMPORARY SOIL STABILIZATION MEASURES IF FINAL GRADING IS TO BE DELAYED MORE THAN 30 DAYS.

11. TEMPORARY SEEDING – TEMPORARILY SEED ERODIBLE SOILS THAT WILL BE EXPOSED GREATER THAN 1 BUT LESS THAN 12 MONTHS WITHIN THE FIRST 7 DAYS OF SUSPENDING GRADING OPERATIONS. APPLY LIME AT A RATE OF 90 LBS/1000 SQ. FT. APPLY 10–10–10 FERTILIZER AT A RATE OF 7 ½ LBS/1000 SQ. FT. APPLY PERENNIAL RYE GRASS AT A RATE OF 2 LBS/1000 SQ. FT. TO A DEPTH OF ½ INCH. OPTIMUM SEEDING DATES ARE MARCH 15 TO JULY 1 AND AUGUST 1 TO OCTOBER 15. MULCH FOR SEED APPLIED WITHIN THE OPTIMUM SEEDING DATES SHALL BE APPLIED EVENLY SUCH THAT IT PROVIDES 80%–95% SOIL COVERAGE. MULCH FOR SEED APPLIED OUTSIDE OF THE OPTIMUM SEEDING DATES SHALL BE APPLIED EVENLY SUCH THAT IT PROVIDES 95%–100% COVERAGE.

12. PERMANENT SEEDING – SEED PERMANENT LAWN AREAS IN ACCORDANCE WITH THE SPECIFICATIONS.

13. INSPECTION – THE OWNER SHALL SECURE THE SERVICES OF A SOIL SCIENTIST OR PROFESSIONAL ENGINEER TO VERIFY IN THE FIELD THAT THE CONTROLS REQUIRED BY THIS PLAN ARE PROPERLY INSTALLED AND MAINTAINED. THESE INSPECTIONS SHALL BE NOT LESS FREQUENTLY THAN WEEKLY AND WITHIN 24 HOURS OF THE END OF A STORM HAVING A RAINFALL AMOUNT OF 0.1 INCH OR GREATER. FOLLOWING THESE INSPECTIONS, A WRITTEN REPORT SHALL BE PREPARED, INFORMING THE OWNER OR HIS AGENT NOT LESS FREQUENTLY THAN WEEKLY AND THE MUNICIPALITY NOT LESS FREQUENTLY THAN MONTHLY OF OBSERVATIONS, MAINTENANCE, AND CORRECTIVE ACTIVITIES UNDERTAKEN.

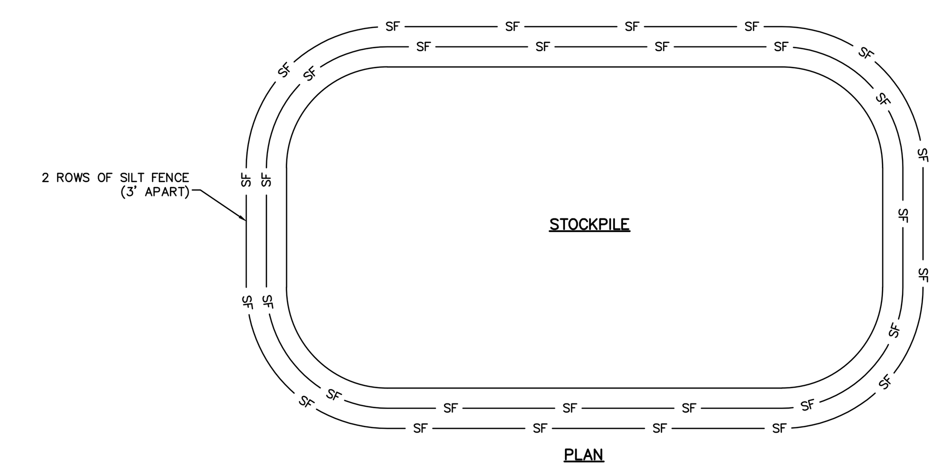

STOCKPILE CONTAINMENT
NOT TO SCALE

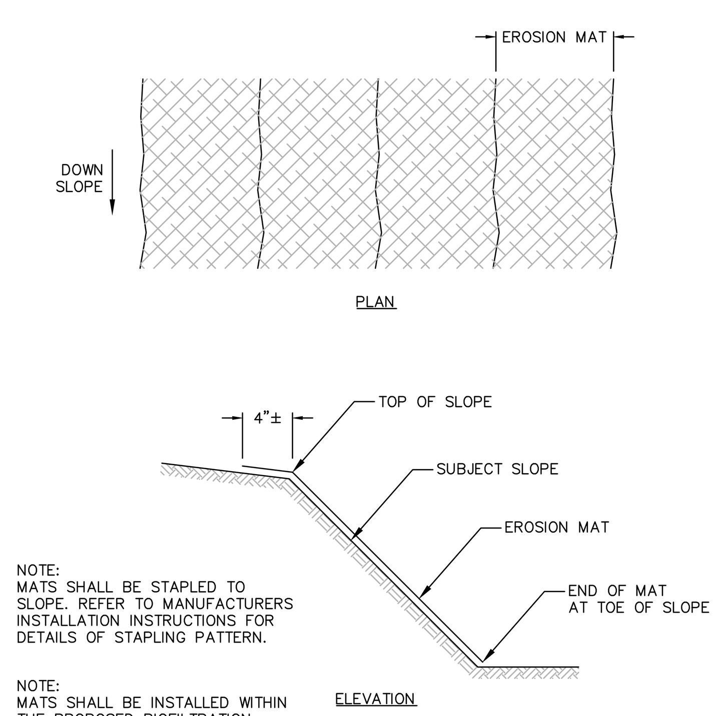

NOTE:
MATS SHALL BE STAPLED TO SLOPE. REFER TO MANUFACTURERS INSTALLATION INSTRUCTIONS FOR DETAILS OF STAPLING PATTERN.

NOTE:
MATS SHALL BE INSTALLED WITHIN THE PROPOSED BIOFILTRATION BASINS UPON THE COMPLETION OF CONSTRUCTION/RESTORATION ACTIVITIES AS INDICATED IN THE PLANS.

EROSION CONTROL MATTING
NOT TO SCALE

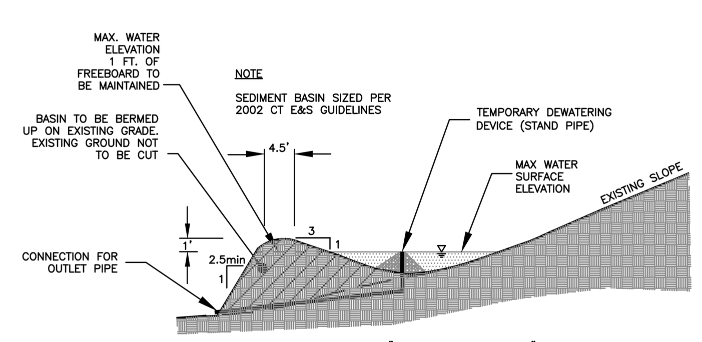

1. LINE BASIN AND SLOPES WITH "NORTH AMERICAN GREEN" SC150 EROSION CONTROL BLANKET AND WITH TEMPORARY SEED MIXTURE.
2. COMPACTION REQUIREMENT FOR BERM CONSTRUCTION
   - AREA TO BE SCARIFIED PRIOR TO PLACEMENT OF FILL
   - ENSURE AT LEAST 90–95% STANDARD PROCTOR COMPACTION
   - FILL MATERIAL PLACED 9–INCH CONTINUOUS LIFT OVER ENTIRE LENGTH OF FILL
   - COMPACTION SHALL BE OBTAINED BY ROUTING THE HAULING EQUIPMENT OVER THE FILL SO THAT THE ENTIRE SURFACE OF THE HILL IS TRAVERSED BY AT LEAST ONE WHEEL OR TREAD TRACK OF THE EQUIPMENT, OR BY USING A COMPACTOR.

TEMPORARY SEDIMENT TRAP TYPICAL CROSS SECTION
NOT TO SCALE

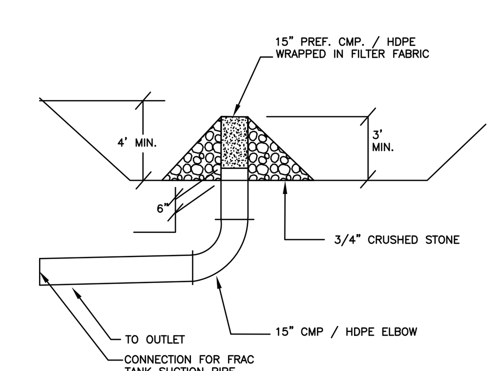

TEMPORARY SEDIMENT TRAP OUTLET DEVICE

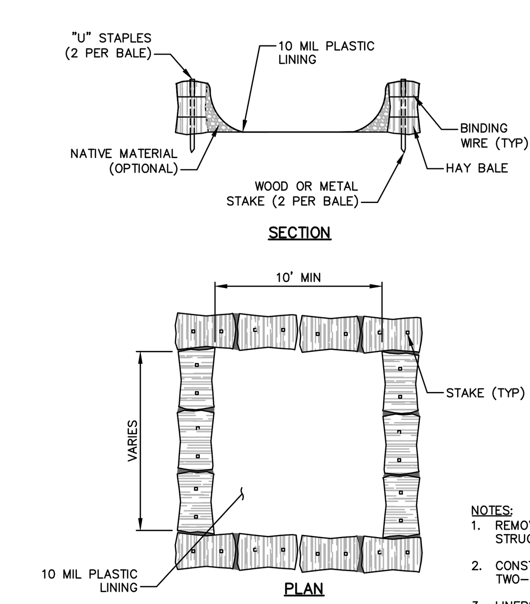

NOTES:
1. REMOVE HARDEN CONCRETE WHEN WITHIN 4" FROM TOP OF STRUCTURE.
2. CONSTRUCT NEW FACILITIES ONCE CURRENT FACILITIES ARE TWO-THIRDS FULL.
3. LINERS, HAYBALES, ETC. SHALL BE INSPECTED FOR DAMAGE ANY DAMAGE SHALL BE REPAIR PROMPTLY.

ABOVE GROUND TEMPORARY CONCRETE WASHOUT FACILITY
NOT TO SCALE

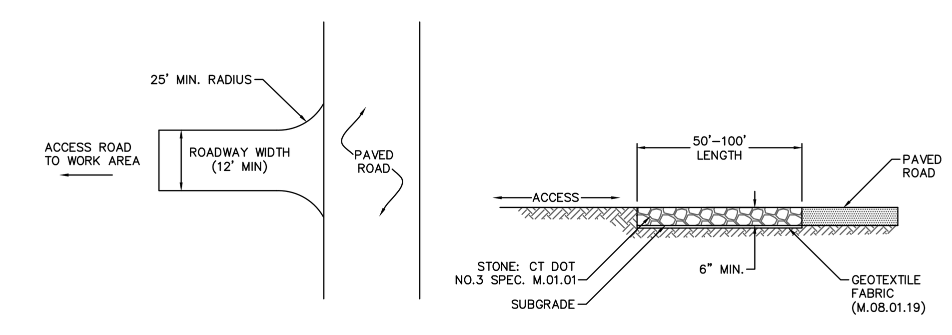

CONSTRUCTION ENTRANCE
NOT TO SCALE

File Path: J:\DWG\P2011\0944\S10\Civil\Plan\20110944S10_DET-01 -PHASE 1A.dwg Layout: CE-501 Plotted: Tue, August 11, 2020 - 12:07 PM User: tgriffing
Plotter: AUTOCAD PDF (GENERAL DOCUMENTATION).PC3 CTB File: FO.STB
LAYER STATE:
MS VIEW:

No.	DATE	DESCRIPTION	DESIGNER	REVIEWER

SEAL

SCALE:	
HORZ.:	N.T.S.
VERT.:	
DATUM:	
HORZ.:	
VERT.:	

0
GRAPHIC SCALE

FUSS & O'NEILL
56 QUARRY ROAD
TRUMBULL, CONNECTICUT 06611
203.374.3748
www.fando.com

GREENWICH PUBLIC SCHOOLS
EROSION & SEDIMENT CONTROL DETAILS
GHS CARDINAL STADIUM - PHASE 1A
BUILDING PERMIT ISSUE
GREENWICH CONNECTICUT

PROJ. No.: 20110944.S10
DATE: 12/2/2020
CE-501

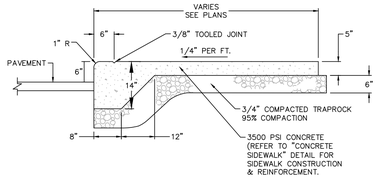

NOTE: DETAIL HAS BEEN MODIFIED TO MATCH THE TOWN OF GREENWICH STANDARD SIDEWALK SECTION.

MONOLITHIC CONCRETE CURB AND WALK

NOT TO SCALE

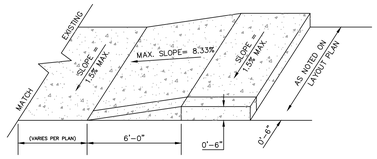

ACCESSIBLE RAMP SLOPE

NOT TO SCALE

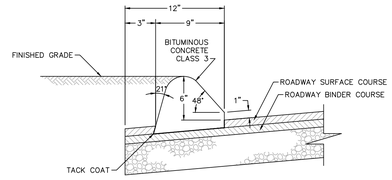

BITUMINOUS CONCRETE CURB

NOT TO SCALE

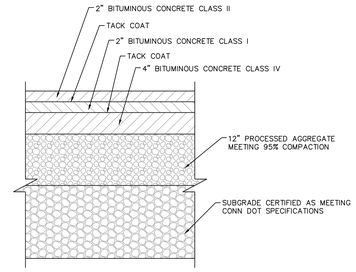

NOTE: DETAIL HAS BEEN MODIFIED TO MATCH THE TOWN OF GREENWCH STANDARD PARKING LOT SECTION.

BITUMINOUS CONCRETE PAVEMENT

NOT TO SCALE

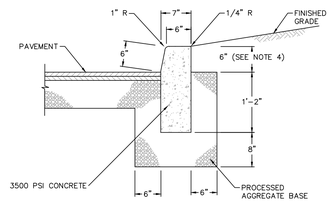

NOTES

1. 1 INCH DEEP BEVELED JOINT AT TOP AND FACE OF CURB EVERY 10 FEET.
2. 1/2 INCH EXPANSION JOINT AND FILLER EVERY 30 FEET.
3. 1/2 INCH EXPANSION JOINT AND FILLER WHEN CURB IS ADJACENT TO CONCRETE SIDEWALK.
4. CURB REVEAL VARIES. SEE PLANS.

CONCRETE CURB

NOT TO SCALE

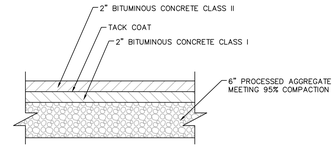

NOTE: DETAIL HAS BEEN MODIFIED TO MATCH THE TOWN OF GREENWCH STANDARD SIDEWALK SECTION.

BITUMINOUS CONCRETE SIDEWALK

NOT TO SCALE

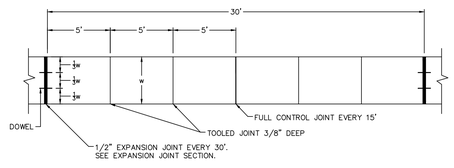

PLAN

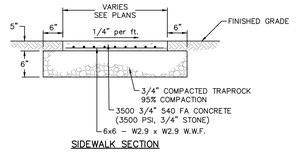

SIDEWALK SECTION

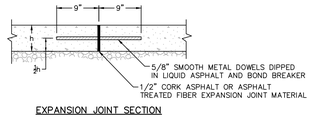

EXPANSION JOINT SECTION

NOTE: DETAIL HAS BEEN MODIFIED TO MATCH THE TOWN OF GREENWICH STANDARD SIDEWALK SECTION.

CONCRETE SIDEWALK

NOT TO SCALE

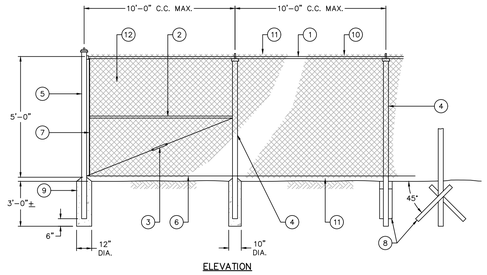

ELEVATION

NOTES

1. FOOTING DESIGN TO BE CHECKED BY AN ENGINEER FOR WIND LOADS IF SLATS ARE USED OR IF POOR SOIL CONDITIONS EXIST.
2. STRAIGHT RUNS BETWEEN BRACED POSTS SHALL NOT EXCEED 500 FT.
3. FENCE DETAILS ARE INTENDED AS A GUIDE ONLY. ALL FENCE MATERIALS AND CONSTRUCTION METHODS SHALL BE APPROVED BY THE ENGINEER AND FENCE MANUFACTURER.

CHAIN LINK FENCE LEGEND

1. 1 5/8" O.D. TOP RAIL ATTACH FABRIC WITH 9 GUAGE WIRE CLIP EVERY 24"
2. 1 5/8" O.D. BRACE FOR RAIL FENCES OVER 6 FEET HIGH AND ALL FENCES WITHOUT TOP RAIL
3. 5/16" TRUSS ROD AND TURNBUCKLE
4. INTERMEDIATE POST

FENCE HEIGHT	SQUARE POST	ROUND POST
6 FEET AND LESS	1 7/8"	2"
OVER 6 FEET	2 1/4"	2 1/2"

ATTACH TO C.L. FABRIC WITH CLIPS EVERY 15"

5. END OR CORNER POST

FENCE HEIGHT	SQUARE POST	ROUND POST
6 FEET AND LESS	2"	2 1/2"
OVER 6 FEET	2 1/2"	3"

6. 6 GAUGE BOTTOM TENSION WIRE ATTACH TO FABRIC WITH HOG RING AT 24" C.C.
7. TENSION ROD ATTACHED TO END OR CORNER POST
8. 2 30" MIN. LENGTH DRIVE ANCHORS DRIVEN THROUGH FITTINGS AT 90° TO FENCE LINE INTO EARTH AT 45° (TO BE USED IN PLACE OF CONCRETE FOOTING. SEE FOOTING DESIGN NOTE NO. 1)
9. CONCRETE FOOTING 36" DEEP WITH 12" DIA. AT END POST AND 10" DIA. AT INTERMEDIATE POST. HOLE CORE IN UNDISTURBED OR COMPACTED SOIL. (SEE NOTE NO. 1)
10. 6 GAUGE TENSION WIRE WHEN TOP RAIL IS NOT USED.
11. FABRIC SELVAGE:
    UNDER 6 FEET SHALL BE KNUCKLED TOP AND BOTTOM
    6 FEET AND OVER SHALL BE KNUCKLED BOTTOM AND TWISTED ON THE TOP
    RECREATIONAL FENCING, REGARDLESS OF HEIGHT, SHALL BE KNUCKLED TOP AND BOTTOM
12. 9 GAUGE 2" WIRE MESH FABRIC (COMMERCIAL) BLACK VINYL COATED.

CHAIN LINK FENCE

SCALE: N.T.S.

No.	DATE	DESCRIPTION	DESIGNER	REVIEWER

SEAL

STATE OF CONNECTICUT · JOSEPH E. LEROY · No. 24034 · LICENSED PROFESSIONAL ENGINEER

SCALE:
HORZ.: N.T.S.
VERT.:
DATUM:
HORZ.:
VERT.:
0
GRAPHIC SCALE

FUSS & O'NEILL
56 QUARRY ROAD
TRUMBULL, CONNECTICUT 06611
203.374.3748
www.fando.com

GREENWICH PUBLIC SCHOOLS

CONSTRUCTION DETAILS

GHS CARDINAL STADIUM - PHASE 1A
BUILDING PERMIT ISSUE

GREENWICH CONNECTICUT

PROJ. No.: 20110944.S10
DATE: 12/2/2020

CD-501

File Path: J:\DWG\P20110944\S10\Civil\Plan\20110944S10_DET-01-PHASE 1A.dwg Layout: CD-501 Plotted: Tue, August 11, 2020 - 12:07 PM User: tgriffing
Plotter: AUTOCAD PDF (GENERAL DOCUMENTATION).PC3 CTB File: FO.STB
MS VIEW:
LAYER STATE:

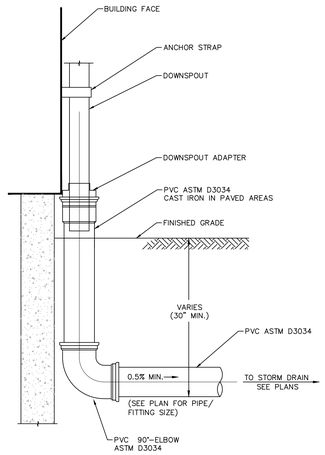

ROOF LEADER DRAIN CONNECTION

NOT TO SCALE

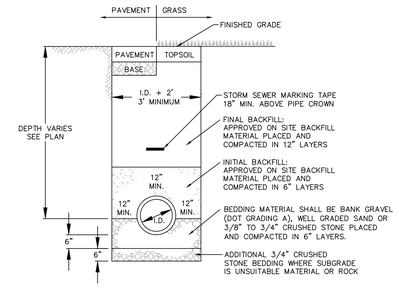

STORM SEWER TRENCH

NOT TO SCALE

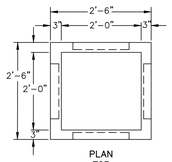

PLAN
TOP

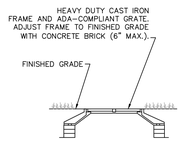

ELEVATION
FRAME AND COVER

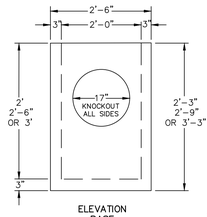

ELEVATION
BASE

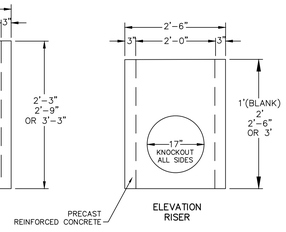

ELEVATION
RISER

YARD DRAIN (HEAVY DUTY)

NOT TO SCALE

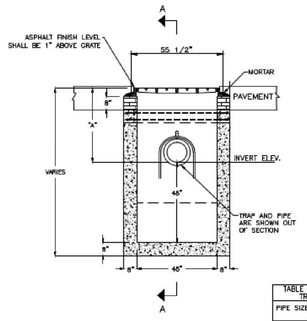

SECTIONAL ELEVATION B–B

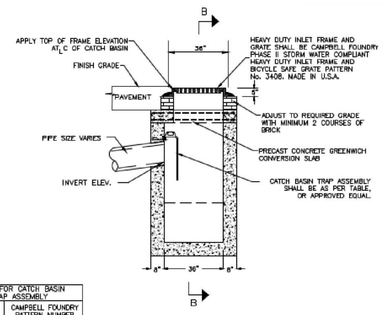

SECTIONAL ELEVATION A–A

TABLE FOR CATCH BASIN TRAP ASSEMBLY	
PIPE SIZE	CAMPBELL FOUNDRY PATTERN NUMBER
10"	2563
12"	2563
15"	2564
18"	2565

NOTES:

1. DIMENSION "A" SHALL BE CONSISTENT WITH THE INVERT ELEVATION SHOWN ON CONTRACT DRAWINGS. WHEN NO INVERT ELEVATION IS SPECIFIED, DIMENSION "A" SHALL BE ADEQUATE TO PROVIDE A MINIMUM OF 2'–0" OF COVER OVER PIPE.

TYPE "C–1" CURBLESS PRECAST CATCH BASIN (TOWN DETAIL)

NOT TO SCALE

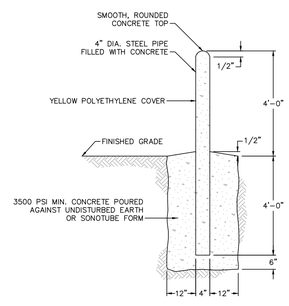

BOLLARD

NOT TO SCALE

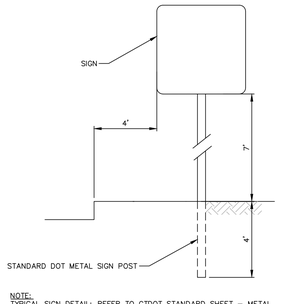

NOTE:
TYPICAL SIGN DETAIL; REFER TO CTDOT STANDARD SHEET – METAL SIGN POST AND SIGN MOUNTING DETAILS TR–1208_02

SIGN

NOT TO SCALE

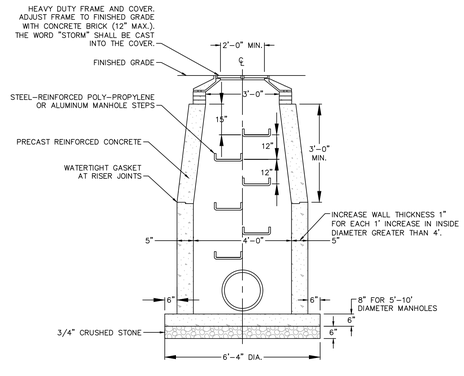

STORM MANHOLE

NOT TO SCALE

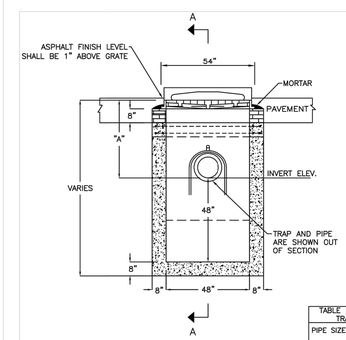

SECTIONAL ELEVATION B–B

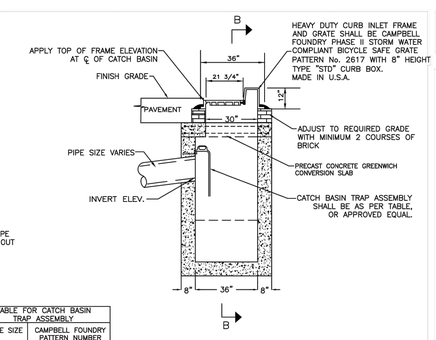

SECTIONAL ELEVATION A–A

TABLE FOR CATCH BASIN TRAP ASSEMBLY	
PIPE SIZE	CAMPBELL FOUNDRY PATTERN NUMBER
10"	2563
12"	2563
15"	2564
18"	2565

NOTES:

1. DIMENSION "A" SHALL BE CONSISTENT WITH THE INVERT ELEVATION SHOWN ON CONTRACT DRAWINGS. WHEN NO INVERT ELEVATION IS SPECIFIED, DIMENSION "A" SHALL BE ADEQUATE TO PROVIDE A MINIMUM OF 2'–0" OF COVER OVER PIPE.

TYPE "C–1" PRECAST CATCH BASIN (TOWN DETAIL)

NOT TO SCALE

No.	DATE	DESCRIPTION	DESIGNER	REVIEWER

SEAL

STATE OF CONNECTICUT · SCOTT J. TYSZKA · No. 24604 · LICENSED PROFESSIONAL ENGINEER

SCALE:
HORZ.: N.T.S.
VERT.:
DATUM:
HORZ.:
VERT.:
0
GRAPHIC SCALE

FUSS & O'NEILL
56 QUARRY ROAD
TRUMBULL, CONNECTICUT 06611
203.374.3748
www.fando.com

GREENWICH PUBLIC SCHOOLS

CONSTRUCTION DETAILS

GHS CARDINAL STADIUM - PHASE 1A
BUILDING PERMIT ISSUE

GREENWICH CONNECTICUT

PROJ. No.: 20110944.S10
DATE: 12/2/2020

CD-502

MS VIEW:
LAYER STATE:
File Path: J:\DWG\P2011\0944\S10\Civil\Plan\20110944S10_DET-01 -PHASE 1A.dwg Layout: CD-502 Plotted: Tue, August 11, 2020 - 12:07 PM User: tgriffing
Plotter: AUTOCAD PDF (GENERAL DOCUMENTATION).PC3 CTB File: FO.STB

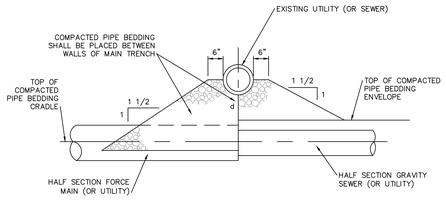

TYPE A (d > 12")

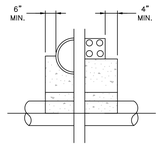

HALF SECTION

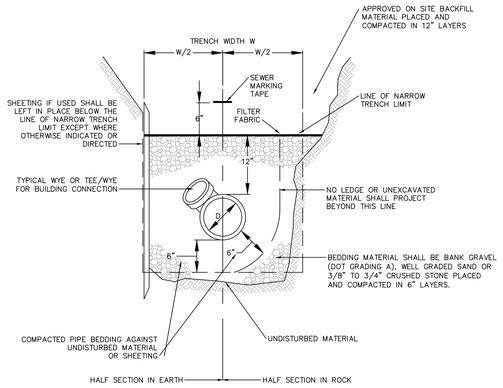

TYPICAL SEWER TRENCH

NOT TO SCALE

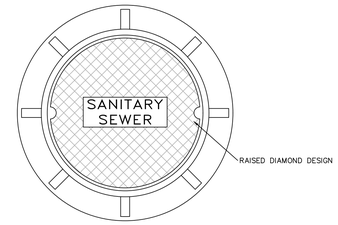

PLAN

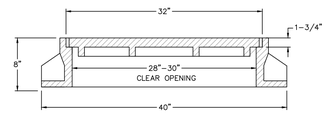

SECTION

STANDARD SANITARY MANHOLE FRAME & COVER

SCALE: N.T.S.

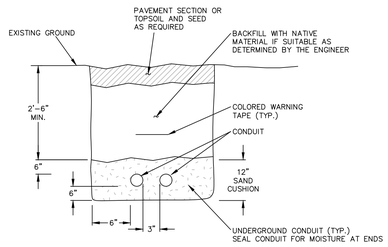

UNDERGROUND CONDUIT TRENCH NOTES

1. INSTALL COLORED MARKING TAPE ABOVE CONDUITS AND BURIED WIRING. RED TAPE IS TO BE USED ABOVE ELECTRICAL CONDUITS AND ORANGE TAPE IS TO BE USED ABOVE COMMUNICATION CONDUITS.

2. CONDUIT SIZE AND MATERIAL TO BE DETERMINED BASED ON REQUIREMENTS SET FORTH BY THE RELEVANT UTILITY COMPANIES.

UNDERGROUND CONDUIT TRENCH DETAIL

NOT TO SCALE

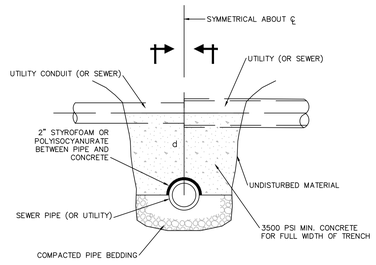

TYPE B (d < 12")

UTILITY SUPPORT NOTES

1. d=DISTANCE FROM TOP OF SEWER PIPE TO THE BOTTOM OF THE UTILITY PIPE
2. SUPPORTS TO BE LOCATED AS SHOWN ON THE DRAWINGS OR AS DIRECTED BY THE ENGINEER

TYPICAL SUPPORT FOR UTILITIES

NOT TO SCALE

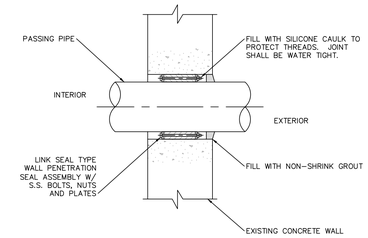

CORE DRILL & LINK SEAL DETAIL

NOT TO SCALE

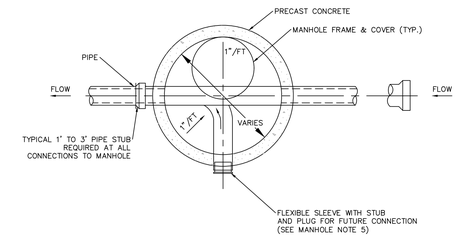

MANHOLE PLAN VIEW

NOT TO SCALE

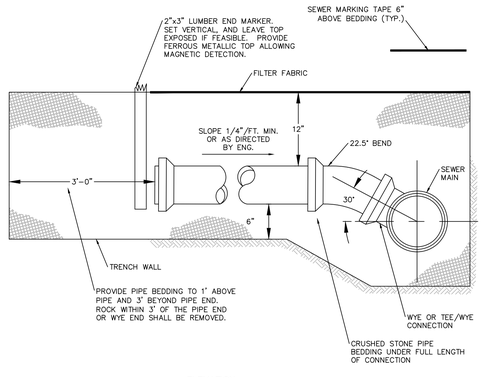

ELEVATION

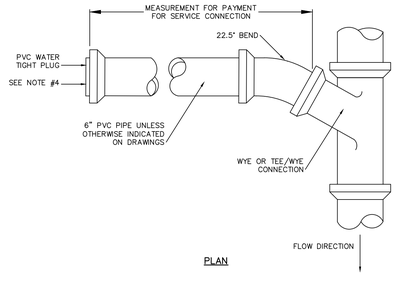

PLAN

SERVICE CONNECTION NOTES

1. NO LEDGE OR UNEXCAVATED MATERIAL SHALL PROJECT WITHIN 6" OF THE PIPE IN ANY DIRECTION
2. EXACT LOCATION AND ELEVATION OF SERVICE CONNECTIONS TO BE DETERMINED AND SET IN THE FIELD DURING CONSTRUCTION
3. EXACT LOCATION OF WYES/TEES, WHERE DIRECTED TO BE INSTALLED, SHALL BE SET IN THE FIELD DURING CONSTRUCTION
4. PROVIDE DI TO PVC TRANSITION COUPLING AT END OF DI SERVICE CONNECTION

SERVICE CONNECTIONS

NOT TO SCALE

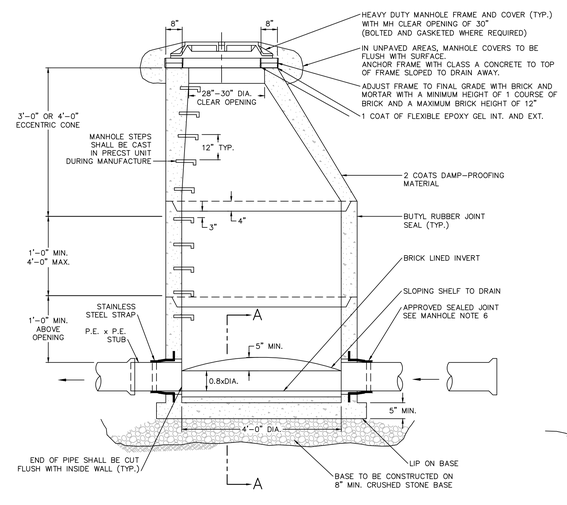

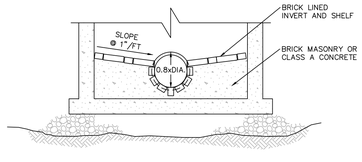

SECTION A-A

SANITARY SEWER MANHOLE

NOT TO SCALE

File Path: J:\DWG\P2011\09944\S10\Civil\Plan\20110944S10_DET-01 -PHASE 1A.dwg Layout: CD-503 Plotted: Tue, August 11, 2020 - 12:07 PM User: tgriffing
Plotter: AUTOCAD PDF (GENERAL DOCUMENTATION).PC3 CTB File: FO.STB
LAYER STATE:
MS VIEW:

No.	DATE	DESCRIPTION	DESIGNER	REVIEWER

SEAL

STATE OF CONNECTICUT · STEPHEN E. LEFAIVRE · LICENSED PROFESSIONAL ENGINEER · No. 24634

SCALE:
HORZ.: N.T.S.
VERT.:
DATUM:
HORZ.:
VERT.:
0
GRAPHIC SCALE

FUSS & O'NEILL
56 QUARRY ROAD
TRUMBULL, CONNECTICUT 06611
203.374.3748
www.fando.com

GREENWICH PUBLIC SCHOOLS

CONSTRUCTION DETAILS

GHS CARDINAL STADIUM - PHASE 1A
BUILDING PERMIT ISSUE

GREENWICH CONNECTICUT

PROJ. No.: 20110944.S10
DATE: 12/2/2020

CD-503

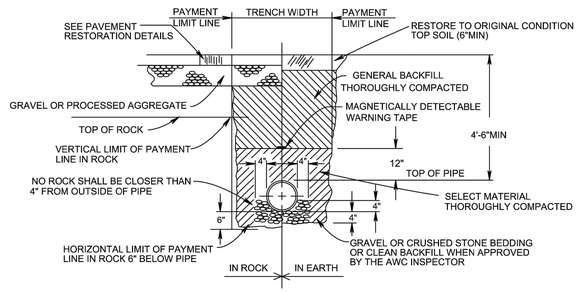

NOTE: TRENCH NOT TO EXCEED A WIDTH EQUAL TO THE OUTSIDE PIPE DIA. + 3'-4"

TYPICAL TRENCH DETAIL

NOT TO SCALE

REFER TO PAVEMENT RESTORATION PLANS FOR TEMPORARY AND PERMANENT PAVEMENT REPAIR DETAILS

TEMPORARY PAVEMENT REPAIR LIMITS	
PIPE SIZE	TRENCH WIDTH*
6"	4'-0"
8"	4'-0"
12"	4'-0"
16"	4'-0"
20"	5'-0"
24"	5'-0"
30"	6'-0"
36"	6'-0"

* IF TRENCH BOXES ARE USED ADD 2' TO ALL TRENCH WIDTHS

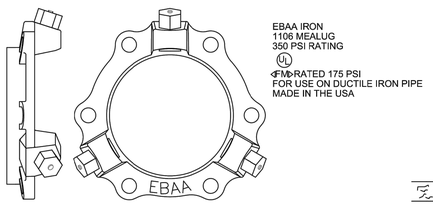

6" DIP RESTRAINT

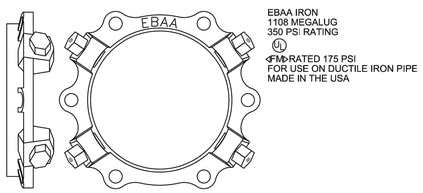

8" DIP RESTRAINT

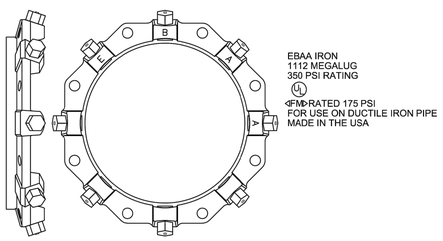

12" DIP RESTRAINT

"MEGALUG" D.I. PIPE RESTRAINTS

NOT TO SCALE

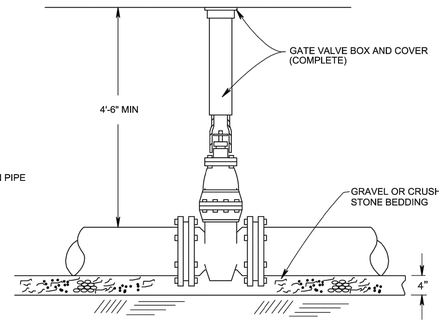

TYPICAL MJ GATE VALVE INSTALLATION

NOT TO SCALE

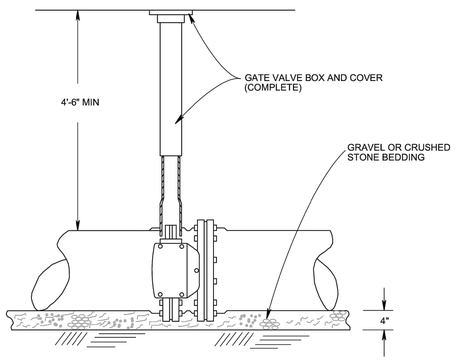

NOTE: ONLY INSTALLED ON MAINS 12" AND LARGER

TYPICAL MJ BUTTERFLY VALVE INSTALLATION

NOT TO SCALE

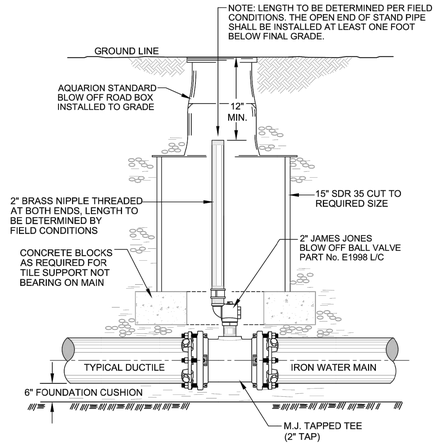

TYPICAL BLOW-OFF & AIR VENT INSTALLATION DETAIL

NOT TO SCALE

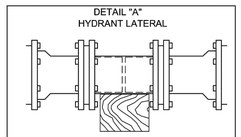

RESTRAINED MECHANICAL JOINT, SOLID SLEEVE OR FLEXIBLE BOLTED RESTRAINING COUPLER FOR REPLACEMENT OR EXTENSIONS TO EXISTING LATERALS
NOTE: USE ONLY WHERE PIPE DIAMETER PERMITS

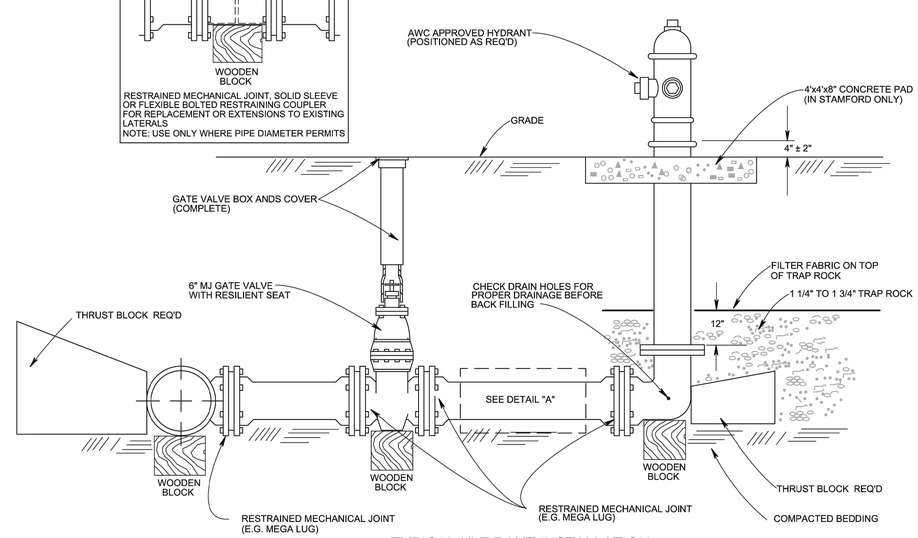

TYPICAL HYDRANT INSTALLATION

NOT TO SCALE

No.	DATE	DESCRIPTION	DESIGNER	REVIEWER

SEAL

STATE OF CONNECTICUT · JOSEPH P. LEPRETTI · No. 24024 · LICENSED PROFESSIONAL ENGINEER

SCALE: HORZ.: N.T.S. VERT.:
DATUM: HORZ.: VERT.:
0
GRAPHIC SCALE

FUSS & O'NEILL
56 QUARRY ROAD
TRUMBULL, CONNECTICUT 06611
203.374.3748
www.fando.com

GREENWICH PUBLIC SCHOOLS
CONSTRUCTION DETAILS
(AQUARION DETAILS)
GHS CARDINAL STADIUM - PHASE 1A
BUILDING PERMIT ISSUE

GREENWICH CONNECTICUT

PROJ. No.: 20110944.S10
DATE: 12/2/2020

CD-504

File Path: J:\DWG\P2011\0944\S10\Civil\Plan\20110944S10_DET-01 -PHASE 1A.dwg Layout: CD-504 (AQUARION) Plotted: Tue, August 11, 2020 - 12:07 PM User: tgriffing
MS VIEW: LAYER STATE: Plotter: AUTOCAD PDF (GENERAL DOCUMENTATION).PC3 CTB File: FO.STB

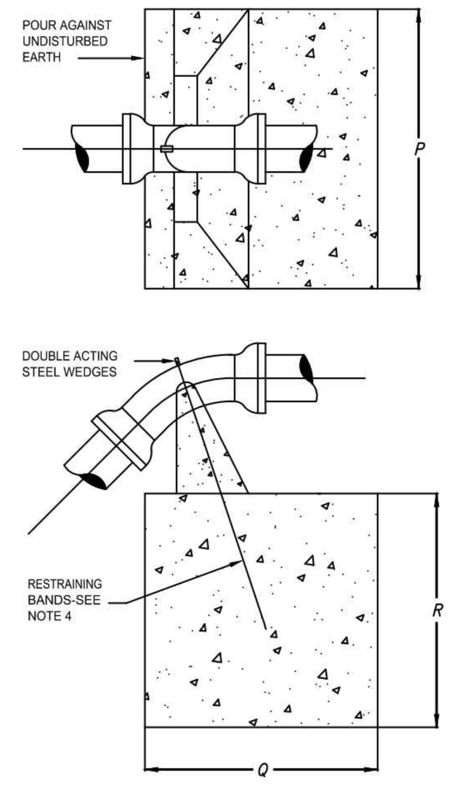

PIPE DIAM. IN	BEND	BLOCK DIMENSIONS P IN.	Q IN.	R IN.	CONCRETE VOLUME CU. YD.
16	45	72	60	56	52
	22 1/2	60	48	44	27
	11 1/4	60	36	36	14
12	45	60	48	48	3.0
	22 1/2	42	42	40	15
	11 1/4	34	34	34	0.84
10	45	54	42	42	2.0
	22 1/2	36	36	36	1.0
	11 1/4	30	30	30	0.58
8	45	48	36	36	1.3
	22 1/2	32	32	32	0.71
	11 1/4	26	26	26	0.38
6	45	42	30	28	0.76
	22 1/2	26	26	26	0.38
	11 1/4	24	24	24	0.30

NOTES:
1. 2500 psi CONCRETE TO BE USED
2. BLOCK DIMENSIONS ARE BASED UPON SOIL BEARING PRESSURE OF 2000 psi AND WATER PRESSURE OF 150 psi. WHERE SOIL BEARING IS LESS OR WATER PRESSURE IS GREATER, A SPECIAL DESIGN WILL BE REQUIRED.
3. WHERE 90^ CREST VERTICAL BEND IS REQUIRED APPROVAL MUST FIRST BE OBTAINED FROM THE ENGINEER. A SPECIAL DESIGN WILL BE REQUIRED.
4. 2-#6 REINFORCING RODS REQUIRED FOR 16" 45^ BEND; 1#6 REINFORCING ROD REQUIRED FOR ALL OTHER BENDS. EXPOSED BARS TO BE PROVIDED WITH PROTECTIVE COATING.

ELEVATION

NOTE:
IN ADDITION TO THE CONCRETE THRUST BLOCKS, ALL FITTINGS TO BE TIED TOGETHER WITH 3/4" GALVANIZED THREADED RODS, AND ANY OTHER SPECIALS AS DIRECTED BY THE WATER COMPANY.

CREST VERTICAL BENDS

NOT TO SCALE

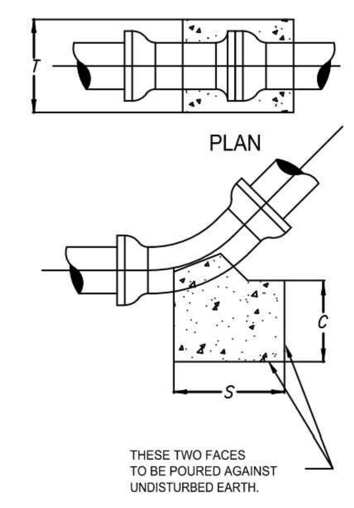

PIPE DIAM. IN	BEND	BLOCK DIMENSIONS S IN.	T IN.	U IN.	CONCRETE VOLUME CU. FT.
16	90	48	48	48	640
	45	48	34	20	189
	22 1/2	42	20	18	88
	11 1/4				(3)
12	90	36	36	36	270
	45	36	24	18	90
	22 1/2	28	18	12	35
	11 1/4				(3)
10	90	30	30	30	156
	45	30	20	18	63
	22 1/2	22	16	12	24
	11 1/4				(3)
8	90	24	24	24	80
	45	24	16	12	27
	22 1/2	18	12	12	15
	11 1/4				(3)
6	90	18	18	18	34
	45	18	12	12	15
	22 1/2	12	12	12	10
	11 1/4				(3)

NOTES:
1. 2500 psi CONCRETE TO BE USED
2. BLOCK DIMENSIONS ARE BASED UPON SOIL BEARING PRESSURE OF 2000 psi AND WATER PRESSURE OF 150 psi. WHERE SOIL BEARING IS LESS OR WATER PRESSURE IS GREATER, A SPECIAL DESIGN WILL BE REQUIRED.
3. BEND TO BE SET AGAINST UNDISTURBED EARTH, BACKFILL TO BE FIRMLY TAMPED, OR BLOCK TO BE FURNISHED AS DIRECTED BY THE ENGINEER.

SAG VERTICAL BENDS

NOT TO SCALE

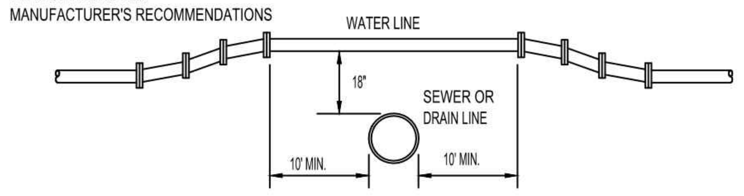

NOTE :
FOR ANY CONDITIONS OTHER THAN SHOWN ABOVE THE FOLLOWING REQUIREMENTS SHALL BE MET. THE JOINTS OF THE SANITARY SEWER OR STORM DRAIN SHALL BE A MINIMUM OF 10' FROM THE POINT OF CROSSING AND THE SANITARY SEWER SHALL BE CLASS 100 PRESSURE PIPE & THE STORM DRAIN SHALL BE DUCTILE IRON.

CROSSING OF WATER LINE OVER SANITARY SEWER OR STORM DRAIN

NOT TO SCALE

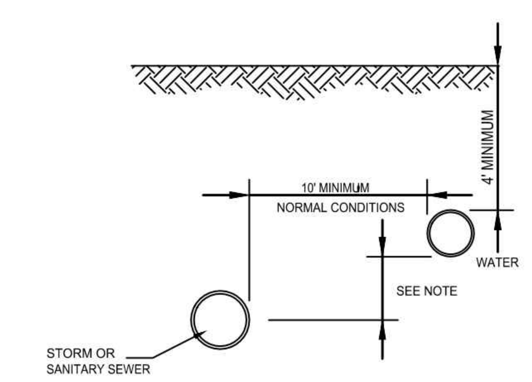

NOTE:
WHERE A 10' HORIZONTAL SEPARATION CANNOT BE OBTAINED DUE TO FIELD CONDITIONS, THE VERTICAL CLEAR DISTANCE SHALL BE A MINIMUM OF 18" HOWEVER, AN EXCEPTION TO THE 10' MINIMUM HORIZONTAL SEPARATION REQUIRES SEPARATE APPROVAL OF THE APPROPRIATE COUNTY HEALTH DEPT.

SEPARATION OF WATER MAINS AND SEWERS - PARALLEL INSTALLATION

NOT TO SCALE

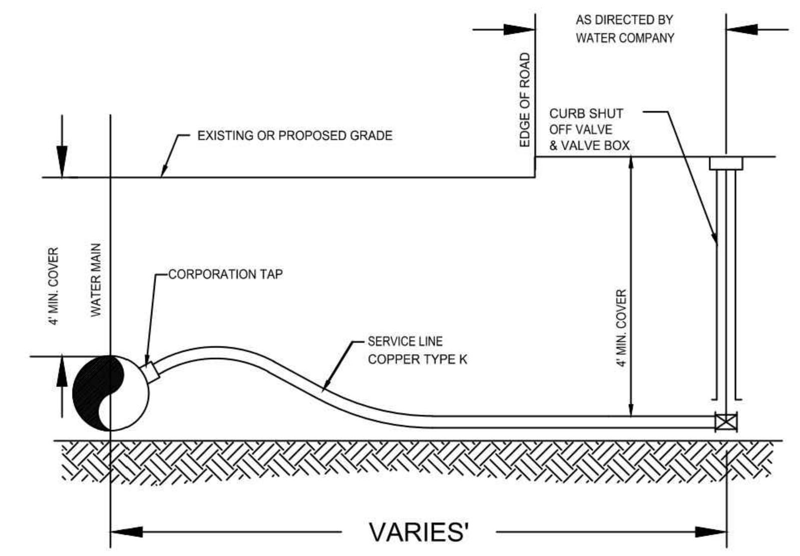

NOTES:
1. CONTRACTOR TO FURNISH AND INSTALL CORPORATION TAP, SERVICE LINE, AND CURB SHUT OFF VALVE AND VALVE BOX.
2. CONTRACTOR TO EXCAVATE, MAINTAIN, BACKFILL, AND RESTORE TRENCH FOR THE TAP, SERVICE LINE, AND CURB SHUT OFF VALVE.
3. CONTRACTOR TO TAKE OUT PERMIT, PAY FEE, AND TO FOLLOW ALL RULES AND REGULATIONS OF THE LOCAL UTILITY AGENCY.

WATER SERVICE LINE LATERAL

NOT TO SCALE

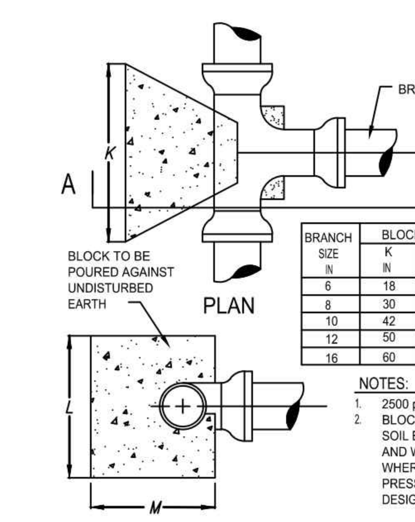

BRANCH SIZE IN	BLOCK DIMENSIONS K IN	L IN	M IN	CONCRETE VOLUME CU. FT.
6	18	16	12	24
8	30	18	12	40
10	42	20	12	63
12	50	24	16	113
16	60	36	24	300

NOTES:
1. 2500 psi CONCRETE TO BE USED
2. BLOCK DIMENSIONS ARE BASED UPON SOIL BEARING PRESSURE OF 2000 psi AND WATER PRESSURE OF 150 psi. WHERE SOIL BEARING IS LESS OR WATER PRESSURE IS GREATER, A SPECIAL DESIGN WILL BE REQUIRED.

TEES

NOT TO SCALE

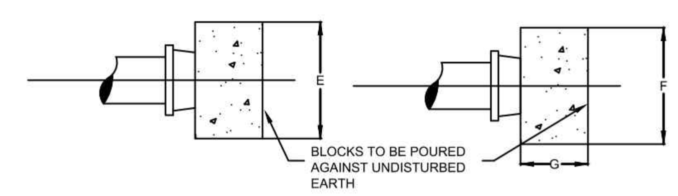

NOTES:
1. 2500 psi CONCRETE TO BE USED
2. BLOCK DIMENSIONS ARE BASED UPON SOIL BEARING PRESSURE OF 2000 psi AND WATER PRESSURE OF 150 psi. WHERE SOIL BEARING IS LESS OR WATER PRESSURE IS GREATER, A SPECIAL DESIGN WILL BE REQUIRED.
3. FOR USE ON ABANDONED LINES AND DEAD ENDS WHERE NO EXTENSION IS CONTEMPLATED.

PIPE DIAM. IN	BLOCK DIMENSIONS E IN	F IN	G IN	CONCRETE VOLUME FT.
6	20	16	12	22
8	28	20	12	39
10	30	24	12	50
12	42	30	14	102
16	52	42	18	227

CAPS, PLUGS AND VALVES

NOT TO SCALE

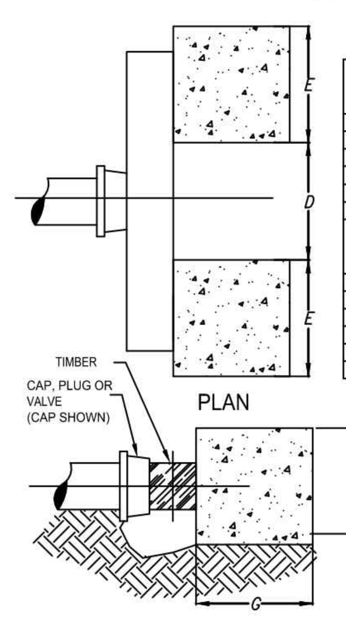

PIPE DIAM. IN	BLOCK DIMENSIONS E IN	F IN	G IN	CONCRETE VOLUME FT.
4	NONE REQUIRED			
6	12	12	12	20
8	16	16	16	46
10	20	20	20	93
12	24	24	24	160
16	32	32	32	380

PIPE DIAM. IN	TIMBER NO. BEAMS	NOM. SIZE	LENGTH IN	CLEARANCE D IN.
4	NONE REQUIRED			
6	1	6"x6"	34	18
8	1	8"x8"	42	20
10	1	10"x10"	48	22
12	1	12"x12"	56	24
16	2	10"x10"	72	30

NOTES:
1. 2500 psi CONCRETE TO BE USED
2. BLOCK DIMENSIONS ARE BASED UPON SOIL BEARING PRESSURE OF 2000 psi AND WATER PRESSURE OF 150 psi. WHERE SOIL BEARING IS LESS OR WATER PRESSURE IS GREATER, A SPECIAL DESIGN WILL BE REQUIRED.
3. TIMBER TO BE DOUGLAS FIR CONSTRUCTION GRADE OR BETTER HORIZONTAL SHEAR 120 psi.
4. PROVIDE TAMPED BACKFILL AND/OR BLOCKING TO SUPPORT TIMBER.

DEAD ENDS

NOT TO SCALE

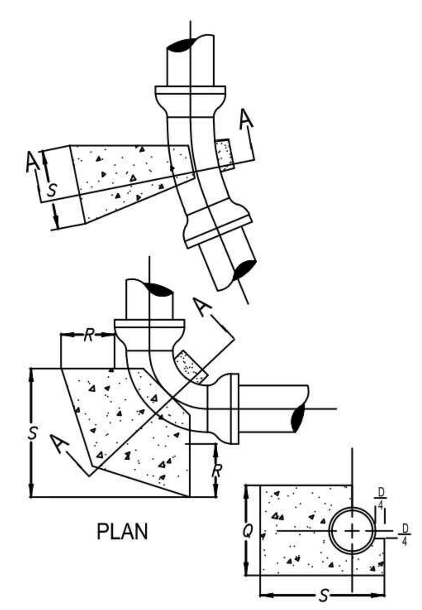

PIPE DIAM. IN	BEND	BLOCK DIMENSIONS S IN.	Q IN.	R IN.	CONCRETE VOLUME CU. FT.
16	90	48	48	48	640
	45	48	34	20	189
	22 1/2	42	20	18	88
	11 1/4				(3)
12	90	36	36	36	270
	45	36	24	18	90
	22 1/2	28	18	12	35
	11 1/4				(3)
10	90	30	30	30	156
	45	30	20	18	63
	22 1/2	22	16	12	24
	11 1/4				(3)
8	90	24	24	24	80
	45	24	16	12	27
	22 1/2	18	12	12	15
	11 1/4				(3)
6	90	18	18	18	34
	45	18	12	12	15
	22 1/2	12	12	12	10
	11 1/4				(3)

NOTES:
1. 2500 psi CONCRETE TO BE USED
2. BLOCK DIMENSIONS ARE BASED UPON SOIL BEARING PRESSURE OF 2000 psi AND WATER PRESSURE OF 150 psi. WHERE SOIL BEARING IS LESS OR WATER PRESSURE IS GREATER, A SPECIAL DESIGN WILL BE REQUIRED.

HORIZONTAL BENDS

NOT TO SCALE

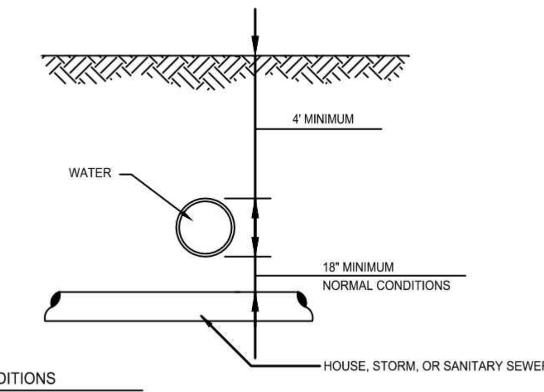

UNUSUAL CONDITIONS
WATER MAINS PASSING UNDER SEWERS SHALL HAVE A VERTICAL CLEARANCE OF 18" MIN. BETWEEN THE SEWER AND WATER MAIN AND THE SEWER SHALL BE SUPPORTED AS DIRECTED BY THE ENGINEER. TO THE EXTENT FEASIBLE, JOINTS IN THE WATER MAIN SHALL BE KEPT AS FAR AS POSSIBLE FROM THE SEWER. WHERE AN 18" SEPARATION CANNOT BE OBTAINED DUE TO FIELD CONDITIONS, SEPARATE APPROVAL OF THE HEALTH DEPARTMENT SHALL BE REQUIRED.

SEPARATION OF WATER MAINS AND SEWER CROSSINGS

NOT TO SCALE

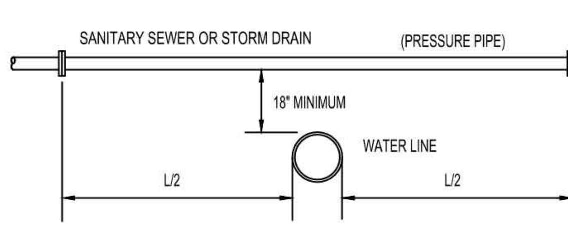

NOTE :
WHERE WATER LINE PASSES BENEATH SEWER LINE OR STORM DRAIN, THE JOINTS OF THE PIPE SHALL BE A MIN. OF 10' FROM THE POINT OF CROSSING AND THE SANITARY SEWER SHALL BE CLASS 100 PRESSURE PIPE & THE STORM DRAIN SHALL BE DUCTILE IRON PIPE.

CROSSING OF WATER LINE UNDER SANITARY SEWER OR STORM DRAIN

NOT TO SCALE

(DETAIL EDITED PER MARK-UPS BY AQUARION ON JANUARY 30, 2015)

SEWER AND WATER CROSSING NOTES

1. SEWER JOINTS SHALL BE EQUIDISTANT FROM AND LOCATED AS FAR AS POSSIBLE AWAY FROM THE WATER LINE

2. IF THE VERTICAL SEPARATION BETWEEN THE BOTTOM OF THE WATER MAIN AND THE TOP OF THE SEWER IS LESS THAN 18 INCHES (WATER MAIN IS ABOVE SEWER), USE ONE OF THE FOLLOWING PROCEDURES: A) THE WATER MAIN SHALL BE RECONSTRUCTED FOR A DISTANCE OF 10 FEET ON EACH SIDE OF SEWER WITH RUBBER-GASKETED MECHANICAL JOINT PIPE ONE FULL LENGTH WATER MAIN SHOULD BE CENTERED OVER SEWER, B) CONSTRUCT BOTH THE WATER & SEWER PIPE OF RUBBER-GASKETED, CEMENT-LINED DUCTILE IRON PIPE OR EQUIVALENT AND PRESSURE TEST BOTH PIPES, OR C) ENCASE THE SEWER PIPE IN CONCRETE FOR A DISTANCE OF 10 FEET ON EACH SIDE OF THE WATER LINE CROSSING.

File Path: J:\DWG\P20110944\S10\Civil\Plan\20110944S10_DET-01 -PHASE 1A.dwg Layout: CD-505 (AQUARION) Plotted: Tue, August 11, 2020 - 12:07 PM User: tgriffing
MS VIEW: LAYER STATE: Plotter: AUTOCAD PDF (GENERAL DOCUMENTATION).PC3 CTB File: FO.STB

No.	DATE	DESCRIPTION	DESIGNER	REVIEWER

SEAL

SCALE:
HORZ.: N.T.S.
VERT.:
DATUM:
HORZ.:
VERT.:
0
GRAPHIC SCALE

FUSS & O'NEILL
56 QUARRY ROAD
TRUMBULL, CONNECTICUT 06611
203.374.3748
www.fando.com

GREENWICH PUBLIC SCHOOLS
CONSTRUCTION DETAILS
(AQUARION DETAILS)
GHS CARDINAL STADIUM - PHASE 1A
BUILDING PERMIT ISSUE
GREENWICH CONNECTICUT

PROJ. No.: 20110944.S10
DATE: 12/2/2020

CD-505

GREENWICH CARDINAL STADIUM

PHASE 1

10 HILLSIDE ROAD
GREENWICH, CT 06830

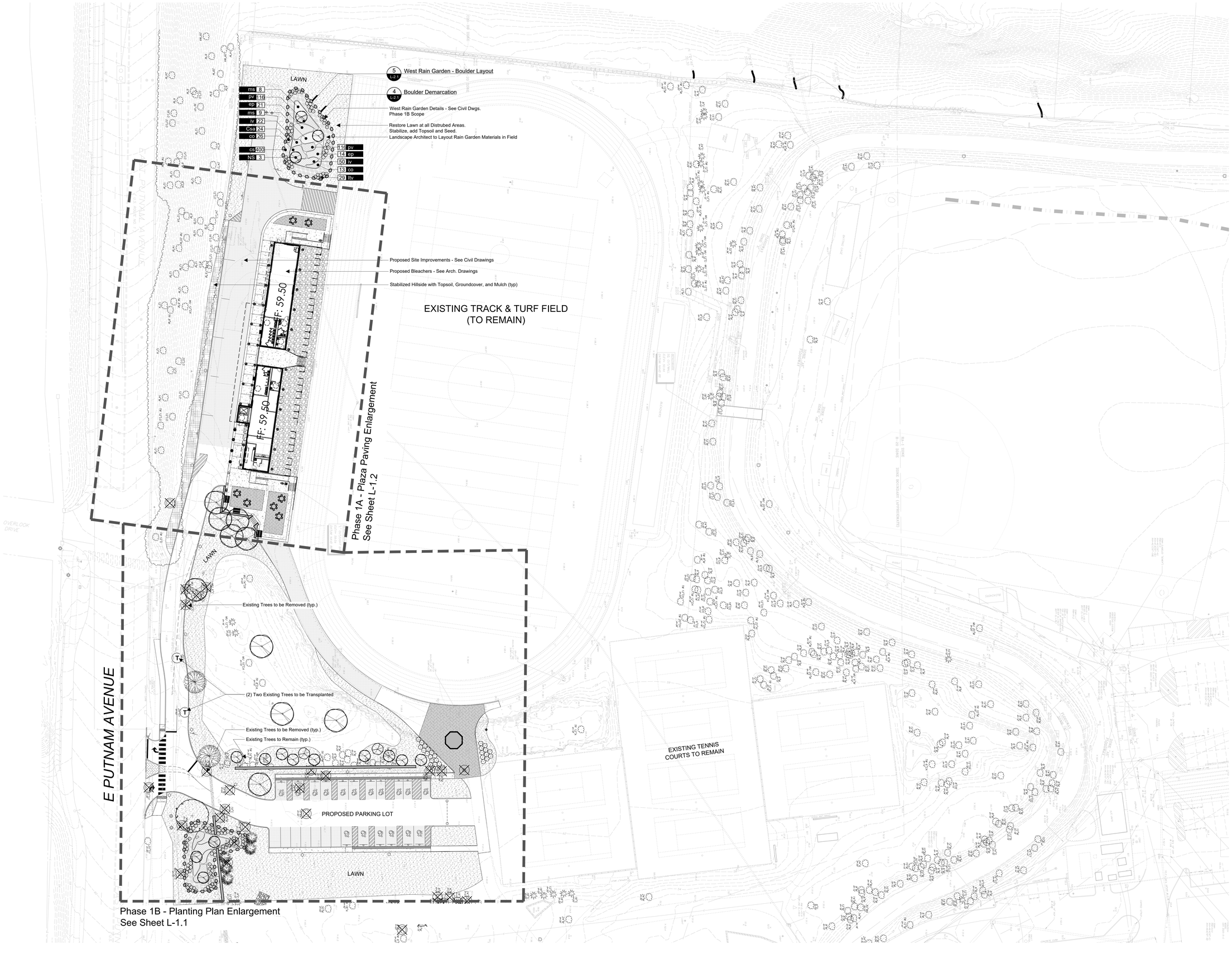

Symbol Legend

- Note Call-off
- Building
- Proposed Deciduous Trees
- Proposed Evergreen Trees
- Proposed Transplanted Trees
- Restored Lawn Areas
- Stabilized Hillside
- Existing Trees to Remain
- Existing Trees to be Removed
- Existing Trees to be Transplanted
- Boulder Demarcation

ADD ALTERNATE #1

1. Remaining Driveways, Walkways, ADA parkinglot
2. Storm Water Management Systems, Retention Pond, etc.
3. Additional Fencing and Retaining Walls
4. Curb Cut at Road
5. Site Lighting
6. Utilities to the Area of the Kiosk. Kiosk Area as Just Asphalt.

ADD ALTERNATE #2

1. Kiosk Building and Addititonal (nicer) Pavers Around Area of Kiosk.

PHASE 1 NOTE

See Civil Drawings for Grading & Construction Limits of Phase 1A and 1B Site Improvements.

Professional Seal:

No:	Revision:	Date:
1	Issue for Permit	8/12/2020
2	Zoning Permit Sign-Off	10/8/2020
3	Phase 1B Site Plan Application	10/30/2020
4	Construction Documents	11/10/2020
5	Building Permit Issue	12/2/2020

0 15 30 60

WESLEY STOUT ASSOCIATES
98 Main Street, New Canaan, CT 06840
203 966-3100 / FAX 203 966-3131
www.wesleystout.com

PHASE 1: OVERALL LANDSCAPE LAYOUT & TREE REMOVAL PLAN

Date: 08/12/2020
Scale: 1" = 30'
Sheet:

L-1.0

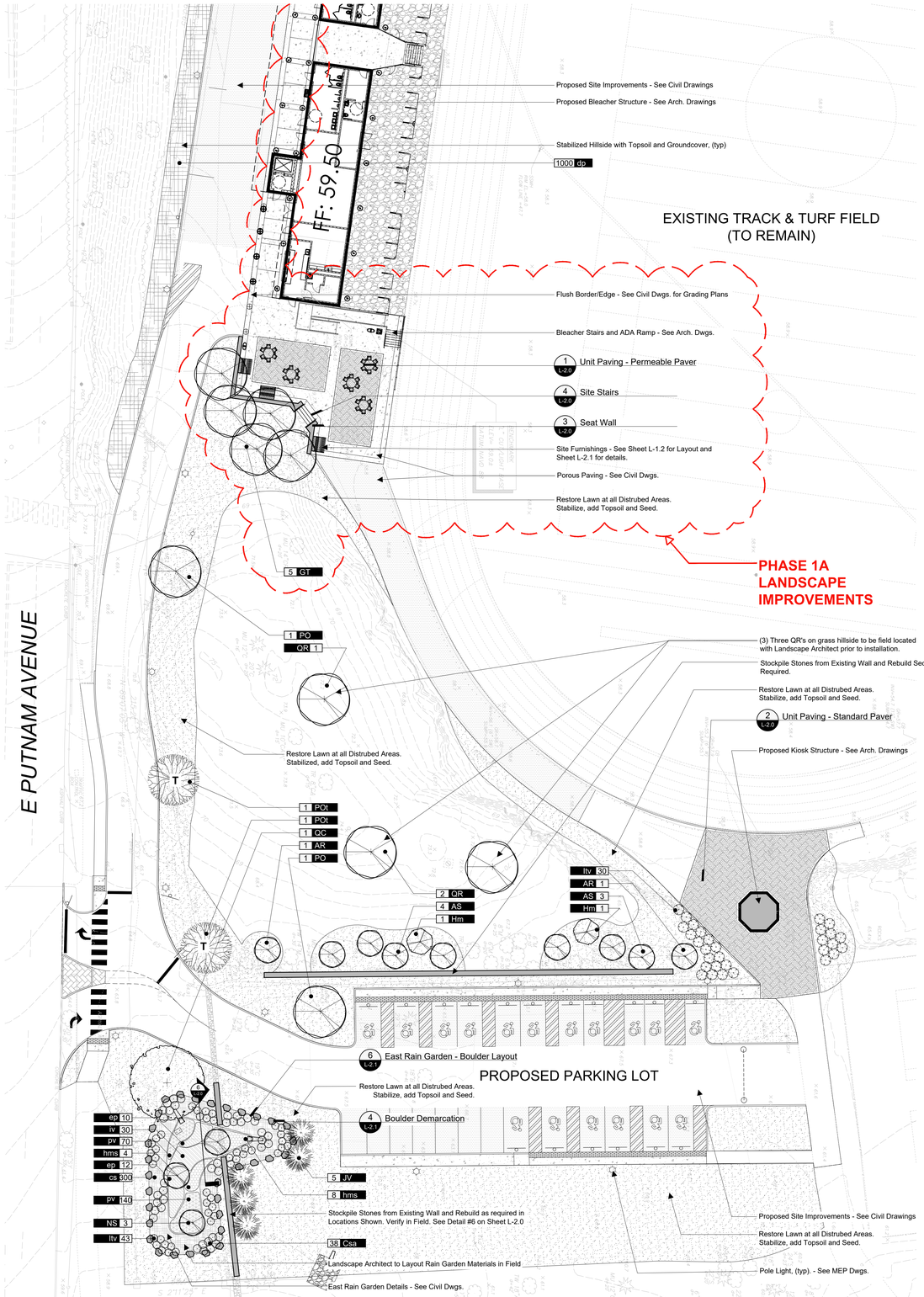

1 L-1.1 Planting Plan Enlargement
Phase 1B

Scale: As noted

Proposed Planting Schedule

Trees

Qty.	Symbol	Botanical Name	Common Name	Size	Cond	Remarks
2	AR	*Acer rubrum*	Red Maple	3"-3.5" CAL.	B&B	Full, nicely shaped, matching specimen
7	AS	*Acer saccharum*	Sugar Maple	2.5"-3" CAL.	B&B	Full, nicely shaped, natural character
5	GT	*Gleditsia triacanthos* 'Christie'	Halka Honey Locust	3" - 3.5" CAL.	B&B	Full, nicely shaped, matching specimen
5	JV	*Juniperus virginiana*	Eastern Red Cedar	8'-10' HT.	B&B	Full, nicely shaped, natural character (not sheared)
6	NS	*Nyssa slyvatica*	Sour Gum	2.5"-3" CAL.	B&B	Full, nicely shaped, matching specimen
2	PO	*Platanus occidentalis*	Sycamore	4"-4.5" CAL.	B&B	Full, nicely shaped, matching specimen
2	POt	*Platanus occidentalis*	Transplanted Sycamore	N/A	TRANS.	On-site transplant with truck mounted 90" tree spade, see additional transplant notes below
1	QC	*Quercus coccinea*	Scarlet Oak	5"-6" CAL.	B&B	Full, nicely shaped, specimen
3	QR	*Quercus rubra*	Red Oak	3"-3.5" CAL.	B&B	Full, nicely shaped, matching specimen

Shrubs

Qty.	Symbol	Botanical Name	Common Name	Size	Cond	Remarks
62	Csa	*Cornus alba*	Redtwig Dogwood	5 Gal.	CONT.	Full, heavy foliage, nicely shaped
2	Hm	*Hamamelis virginiana*	Witchazel	5'-6' HT.	B&B	Full, nicely shaped, natural character
102	ltv	*Itea virginica*	Virginia Sweetspire	5 Gal.	CONT.	Full, heavy flowers, nicely shaped

Rain Garden Planting

Qty.	Symbol	Botanical Name	Common Name	Size	Cond	Remarks
700	cs	*Carex stricta*	Tussock Sedge	2 QT.	CONT.	Full, well-rooted, planted 12" o.c.
39	co	*Chelone obliqua*	Red Turtlehead	1 Gal.	CONT.	Full, well-rooted, planted 18" o.c.
57	ep	*Eutrochium purpreum*	Joe-Pye Weed	1 Gal.	CONT.	Full, well-rooted, planted 24" o.c.
12	hms	*Hibiscus moscheutos*	Swamp Mallow	2 Gal.	CONT.	Full, well-rooted, planted 48" o.c.
102	iv	*Iris versicolor*	Northern Blueflag Iris	1 Gal.	CONT.	Full, well-rooted, planted 24" o.c.
17	ns	*Matteuccia struthiopteris*	Ostrich Fern	1 Gal.	CONT.	Full, well-rooted, planted 56" o.c.
442	pv	*Panicum virgatum*	Switchgrass	2 Gal.	CONT.	Full, well-rooted, planted 24" o.c.

Ground Cover

Qty.	Symbol	Botanical Name	Common Name	Size	Cond	Remarks
1,000	dp	*Dennstaedtia punctilobua*	Hay-scented Fern	4" Pots	CONT.	Full, well rooted, nicely shaped, planted @ 20" O.C.

Soil Chart

Post construction soil condition	Type of preparation
Good soil	Loosen existing soil
Compacted soil	Loosen existing soil, add composted organic matter to bring organic content to 5% dry weight
Clay content 5-35%	Loosen existing soil, add composted organic matter to bring organic content to 5% dry weight
Poor quality, heavy clay soil	Remove existing soil, add loam topsoil

Tree Planting Note

All proposed tree locations on this plan are approximate and may require the contractor to adjust in the field due to existing conditions.

Transplanting Note

Design intent is to transplant two existing Sycamore trees. If timing of construction is not suitable for transplanting, contractor shall remove existing trees and replace with two new Sycamore trees that match the proposed planting schedule.

Contact Gossett Brothers Nursery @ 203-943-9945 or other approved large tree transplanting contractor.

Planting Notes

1. Be aware of all underground utilities prior to any planting operations. Contact "CALL BEFORE YOU DIG" prior to excavation.
2. All plantings are to be installed by a qualified landscape contractor.
3. The contractor shall be required to carry workmen's compensation insurance and comprehensive general liability insurance. Certificates will be required prior to signing contracts.
4. Notify owner or landscape architect 72 hours minimum in advance of starting planting operations. Receive approval for layout of all bed lines and material locations prior to installation.
5. The landscape architect reserves the right to reject inferior plant materials and substitutions. The landscape architect is willing to make two trips to suppliers to review and approve materials. Previously unapproved materials may be rejected at the site. Minimally, all materials will conform to the "American Standard for Nursery Stock" (ANSI Z60.1 - 2004) of the american association of nurserymen.
6. When there is a discrepancy between plant quantities shown on the plant list & the plan, use the quantities from the plant list.
7. Test soil for ph and nutrients, adjust as required and receive approval prior to planting.
8. Pit to be 2 times wider than root ball or widest spread of container or bare roots.
9. Set crown of root ball 2" above finished grade.
10. Do not add fertilizer to planting soil for fall plantings.
11. All plant material shall be guaranteed by the contractor to be in good, healthy and flourishing condition for a period of one year from the date of acceptance. The contractor shall replace, as soon as weather and seasonal conditions permit, all dead plants and all plants not in a vigorous, thriving condition, as determined by the landscape architect during, and at the end of the guarantee period. Warranty replacement will be provided at no cost to the owner and include materials and labor. Contractor is responsible for repair of any damage incurred during replacement of warranty materials. Warranty period to begin at the final approval of plantings by Landscape Architect and client. Contractor is responsible for maintaining the plant material until final approval is given. This will include watering the plants.

GREENWICH
CARDINAL STADIUM
PHASE 1
10 HILLSIDE ROAD
GREENWICH, CT 06830

Symbol Legend

- Note Call-off
- Building
- Proposed Deciduous Trees
- Proposed Evergreen Trees
- Proposed Transplanted Trees
- Restored Lawn Areas
- Stabilized Hillside
- Existing Trees to Remain
- Existing Trees to be Removed
- Existing Trees to be Transplanted
- Boulder Demarcation

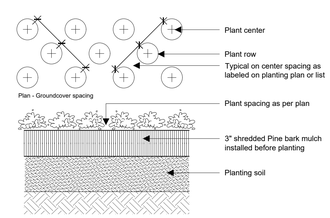

2 L-1.1 Groundcover Planting

Not to Scale

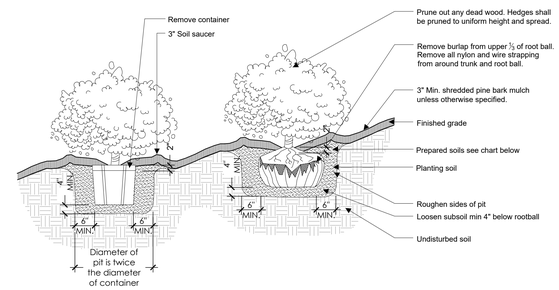

3 L-1.1 Shrub Planting

Not to Scale

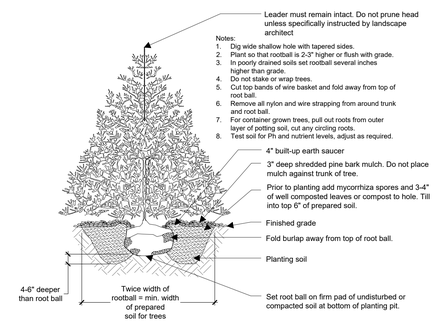

4 L-1.1 Evergreen Tree Planting

Not to Scale

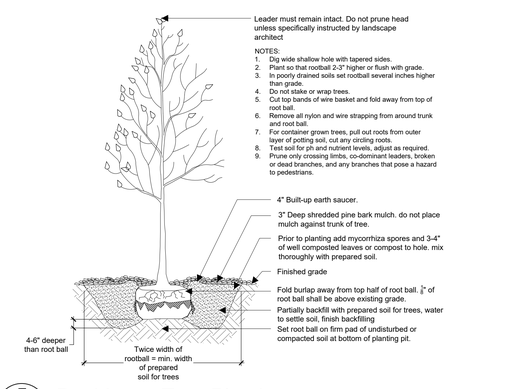

5 L-1.1 Deciduous Tree Planting

Not to Scale

ADD ALTERNATE #1

1. Remaining Driveways, Walkways, ADA parkinglot
2. Storm Water Management Systems, Retention Pond, etc.
3. Additional Fencing and Retaining Walls
4. Curb Cut at Road
5. Site Lighting
6. Utilities to the Area of the Kiosk. Kiosk Area as Just Asphalt.

ADD ALTERNATE #2

1. Kiosk. Building and Additional (nicer) Pavers Around Area of Kiosk.

PHASE 1 NOTE

See Civil Drawings for Grading & Construction Limits of Phase 1A and 1B Site Improvements.

Professional Seal:

No:	Revision:	Date:
1	Issue for Permit	8/12/2020
2	Zoning Permit Sign-Off	10/8/2020
3	Phase 1B Site Plan Application	10/30/2020
4	Construction Documents	11/10/2020
5	Building Permit Issue	12/2/2020

0 10 20 40

WESLEY STOUT ASSOCIATES
86 Main Street, New Canaan, CT 06840
203 966-3100 FAX 203 966-3131
www.wesleystout.com

PHASE 1B: PLANTING PLAN ENLARGEMENT

Date: 08/12/2020
Scale: 1" = 20'
Sheet:

L-1.1

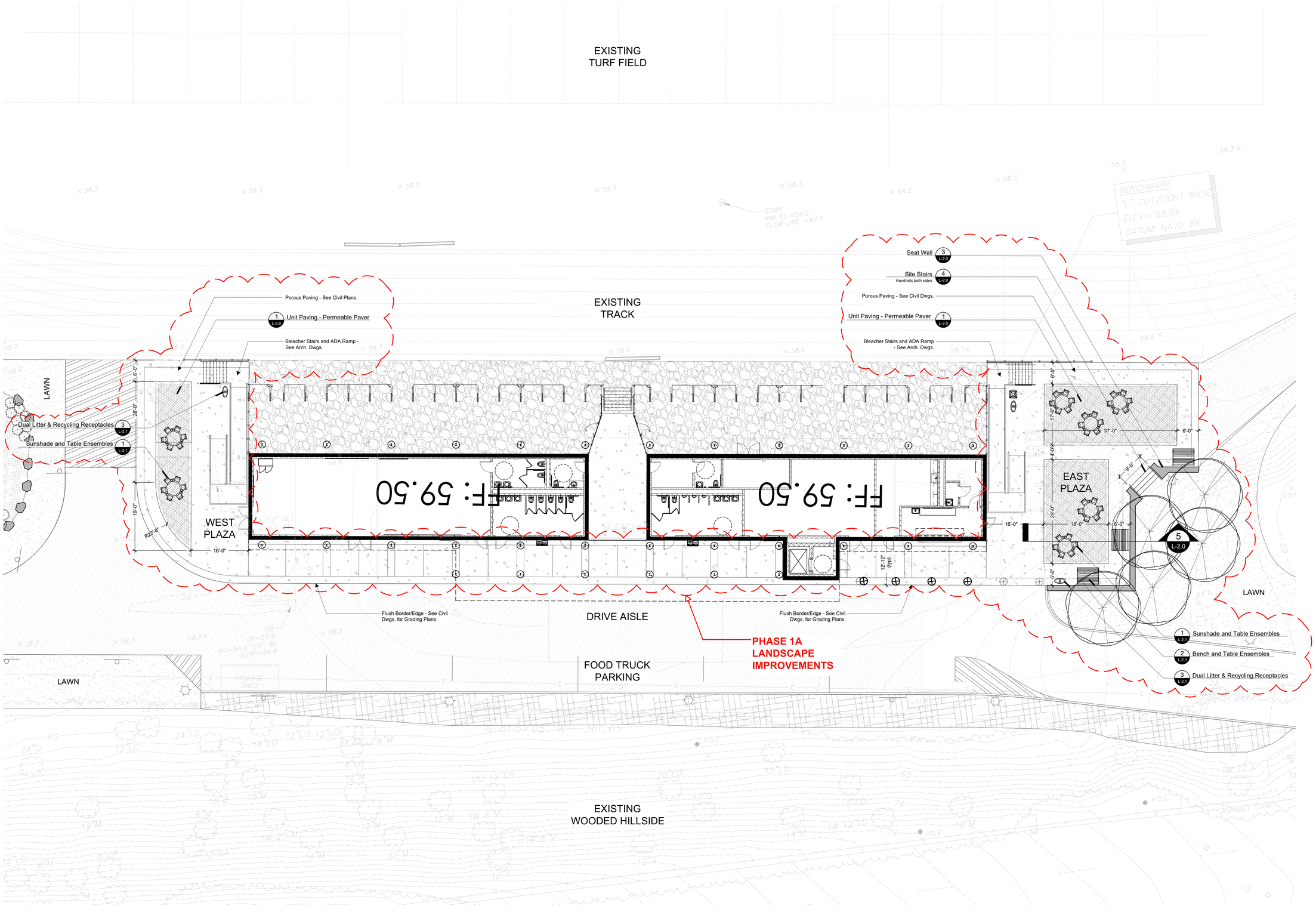

1 L-1.2 Plaza Paving Enlargement
Phase 1A

Scale: As noted

GREENWICH CARDINAL STADIUM

PHASE 1

10 HILLSIDE ROAD
GREENWICH, CT 06830

Symbol Legend

- Note Call-off
- Building
- Proposed Deciduous Trees
- Proposed Evergreen Trees
- Proposed Transplanted Trees
- Restored Lawn Areas
- Stabilized Hillside
- Existing Trees to Remain
- Existing Trees to be Removed
- Existing Trees to be Transplanted
- Boulder Demarcation

ADD ALTERNATE #1

1. Remaining Driveways, Walkways, ADA parkinglot
2. Storm Water Management Systems, Retention Pond, etc.
3. Additional Fencing and Retaining Walls
4. Curb Cut at Road
5. Site Lighting
6. Utilities to the Area of the Kiosk. Kiosk Area as Just Asphalt.

ADD ALTERNATE #2

1. Kiosk Building and Additional (nicer) Pavers Around Area of Kiosk.

PHASE 1 NOTE

See Civil Drawings for Grading & Construction Limits of Phase 1A and 1B Site Improvements.

Professional Seal:

No:	Revision:	Date:
1	Issue for Permit	8/12/2020
2	Zoning Permit Sign-Off	10/8/2020
3	Phase 1B Site Plan Application	10/30/2020
4	Construction Documents	11/10/2020
5	Building Permit Issue	12/2/2020

0 5 10 20

WESLEY STOUT ASSOCIATES
96 Main Street, New Canaan, CT 06840
203 966-3100 FAX 203 966-3131
www.wesleystout.com

PHASE 1A: PLAZA PAVING ENLARGEMENT

Date: 08/12/2020
Scale: 1" = 10'
Sheet:

L-1.2

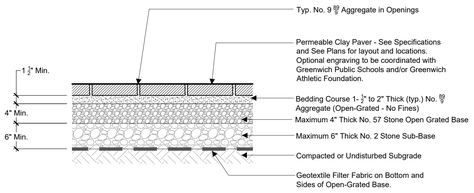

1 L-2.0 Unit Paving -Permeable Paver

Not to Scale

CLAY PAVERS - CHARACTER IMAGE

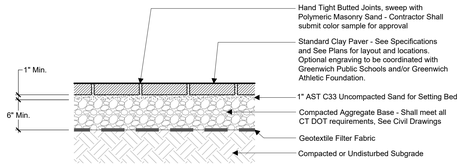

2 L-2.0 Unit Paving - Standard Paver

Not to Scale

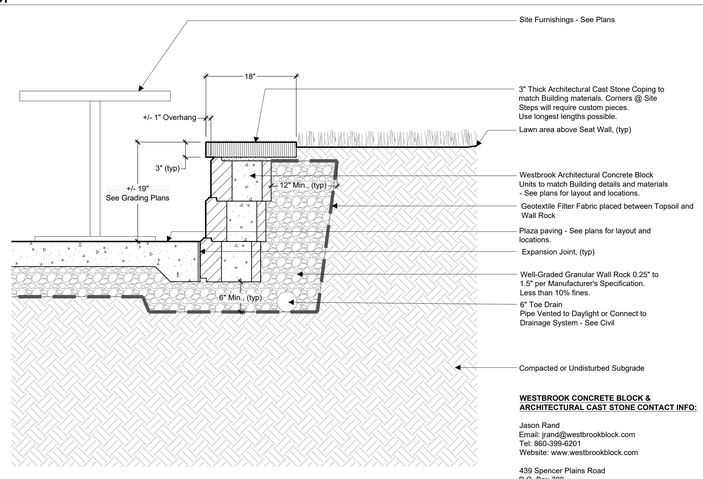

WESTBROOK CONCRETE BLOCK & ARCHITECTURAL CAST STONE CONTACT INFO:

Jason Rand
Email: jrand@westbrookblock.com
Tel: 860-399-6201
Website: www.westbrookblock.com

439 Spencer Plains Road
P.O. Box 700
Westbrook, CT 06498

3 L-2.0 Seat Wall

Scale: 1" = 1'

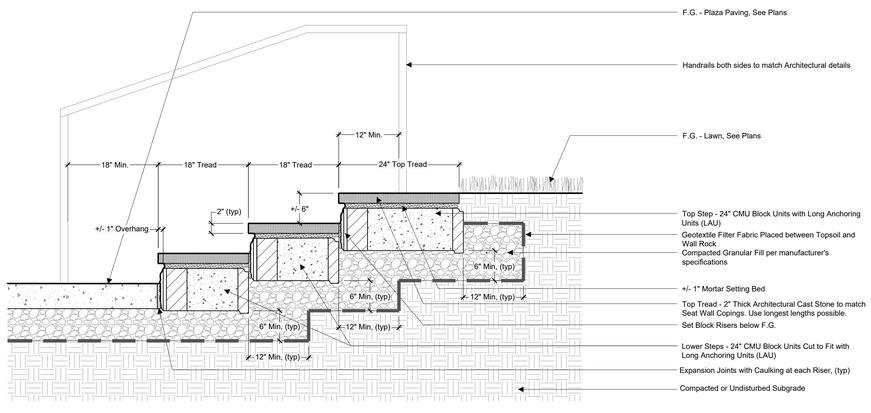

WESTBROOK CONCRETE BLOCK & ARCHITECTURAL CAST STONE CONTACT INFO:

Jason Rand
Email: jrand@westbrookblock.com
Tel: 860-399-6201
Website: www.westbrookblock.com

439 Spencer Plains Road
P.O. Box 700
Westbrook, CT 06498

4 L-2.0 Site Stairs

Not to Scale

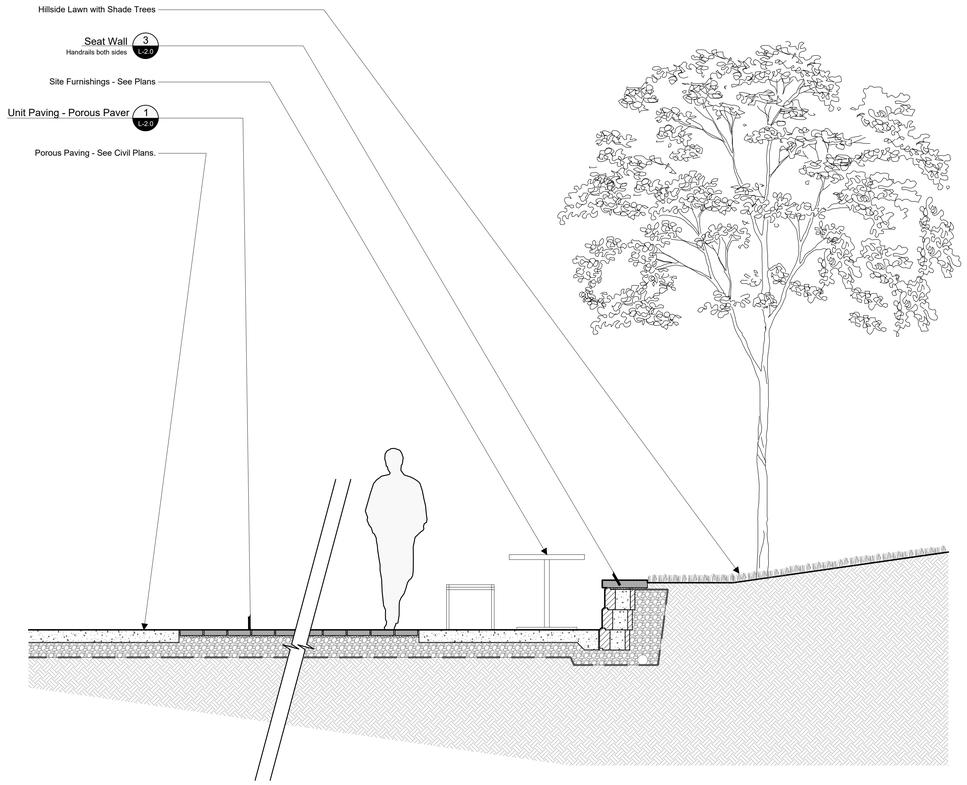

5 L-2.0 Plaza + Seat Wall Section

Not to Scale

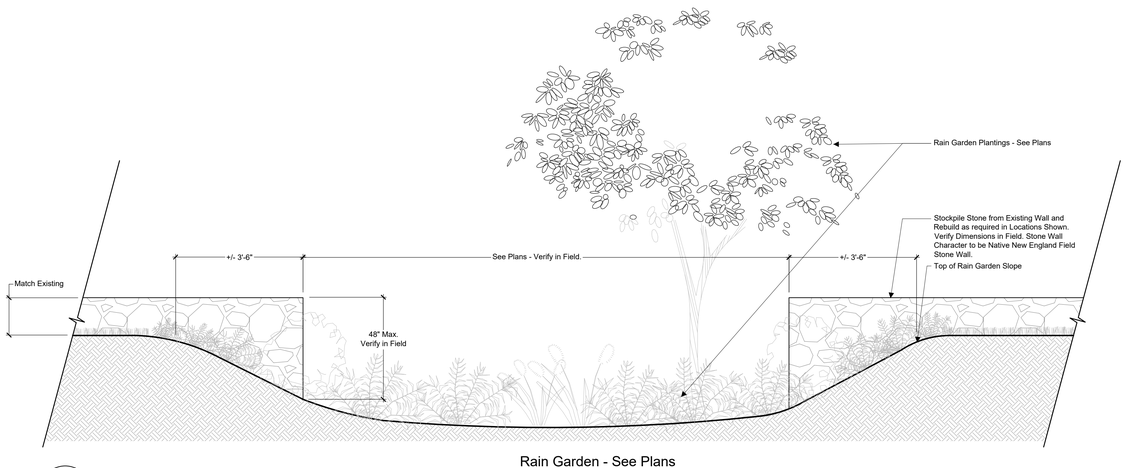

Rain Garden - See Plans

6 L-2.0 Stone Walls @ Rain Garden

Not to Scale

GREENWICH CARDINAL STADIUM
PHASE 1
10 HILLSIDE ROAD
GREENWICH, CT 06830

ADD ALTERNATE #1

1. Remaining Driveways, Walkways, ADA parkinglot
2. Storm Water Management Systems, Retention Pond, etc
3. Additional Fencing and Retaining Walls
4. Curb Cut at Road
5. Site Lighting
6. Utilities to the Area of the Kiosk. Kiosk Area as Just Asphalt.

ADD ALTERNATE #2

1. Kiosk Building and Addititonal (nicer) Pavers Around Area of Kiosk.

PHASE 1 NOTE

See Civil Drawings for Grading & Construction Limits of Phase 1A and 1B Site Improvements.

Professional Seal:

No:	Revision:	Date:
1	Issue for Permit	8/12/2020
2	Zoning Permit Sign-Off	10/8/2020
3	Phase 1B Site Plan Application	10/30/2020
4	Construction Documents	11/10/2020
5	Building Permit Issue	12/2/2020

0 1/2 1 2

WESLEY STOUT ASSOCIATES
96 Main Street, New Canaan, CT 06840
203 966-3100 FAX 203 966-3131
www.wesleystout.com

PHASE 1: SITE DETAILS

Date: 08/12/2020
Scale: As noted
Sheet:

L-2.0

'Soleris' Sunshade with 'Tangent' Table Ensembles as manufactured and supplied by Forms + Surfaces. Contractor shall include 'Soleris' sunshades with 'Slat' perforation details, shade panels and frame color & finishes to be selected by L.A. Contractor shall include 6-seat backless 'Tangent' Table ensembles with aluminum slats, one table shall be ADA compliant and permit unhindered wheelchair access, tables shall include a center hole to receive sunshade, table top, frame and slat color & finishes to be selected by L.A., sunshade and table ensemble shall be freestanding and surface mounted to the concrete or pavers per manufacturer's installation guide. Contractor shall submit product cut sheets and manufactured shop drawings for approval by L.A. See plans for locations and layouts.

Quantity - 6 Standard Sunshade and Table Ensembles / 1 Sunshade and ADA Table Ensembles

Model Numbers / Description:
SUSOL-APT / Soleris Sunshade, for use with Forms + Surfaces ensembles, perforation detail
SETAN-6LA / Tangent Table ensemble, 6 backless seats, aluminum slats, umbrella hole and sleeve, one ADA compliant

1 L-2.1 Sunshade and Table Ensembles

NOT TO SCALE

'Knight' Table Ensembles as manufactured and supplied by Forms + Surfaces. Contractor shall include 'Knight' backless Benches and Table ensembles with aluminum slats, frame and slat color & finishes to be selected by L.A., table and bench ensemble shall be freestanding and surface mounted to the concrete or pavers per manufacturer's installation guide, table and bench ensembles shall be field located with L.A. so East Plaza Seat Wall acts as an additional seating option. Contractor shall submit product cut sheets and manufactured shop drawings for approval by L.A. See plans for locations and layouts.

Quantity - 3 Tables / 3 Standard Benches

Model Numbers / Description:
STKNI-72NA / Knight table ensemble with Backless benches, aluminum slats

2 L-2.1 Bench and Table Ensembles

NOT TO SCALE

'Axis' Dual Litter & Recycling Receptacles with 32 gallon liners as manufactured and supplied by Forms + Surfaces. Contractor shall include dual configuration receptacles with lid & base for both litter & recycling uses, Standard lid to be dark grey and recycling lid to be blue, include litter & recycling instructional graphics and text for each use, receptacles to be freestanding and surface mounted to concrete or pavers per manufacturer's installation guide, body color and finish to be selected by L.A. Contractor shall submit product cut sheets and manufactured shop drawings for approval by L.A. See plans for locations and layouts.

Quantity - 3 Litter Receptacles / 3 Recycling Receptacles

Model Numbers / Description:
SLAXIS-132 / Axis Receptacle, stainless steel, 32-gallon liner

3 L-2.1 Dual Litter & Recycling Receptacles

NOT TO SCALE

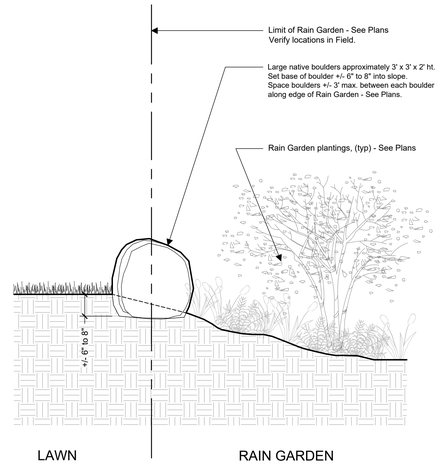

4 L-2.1 Boulder Demarcation

NOT TO SCALE

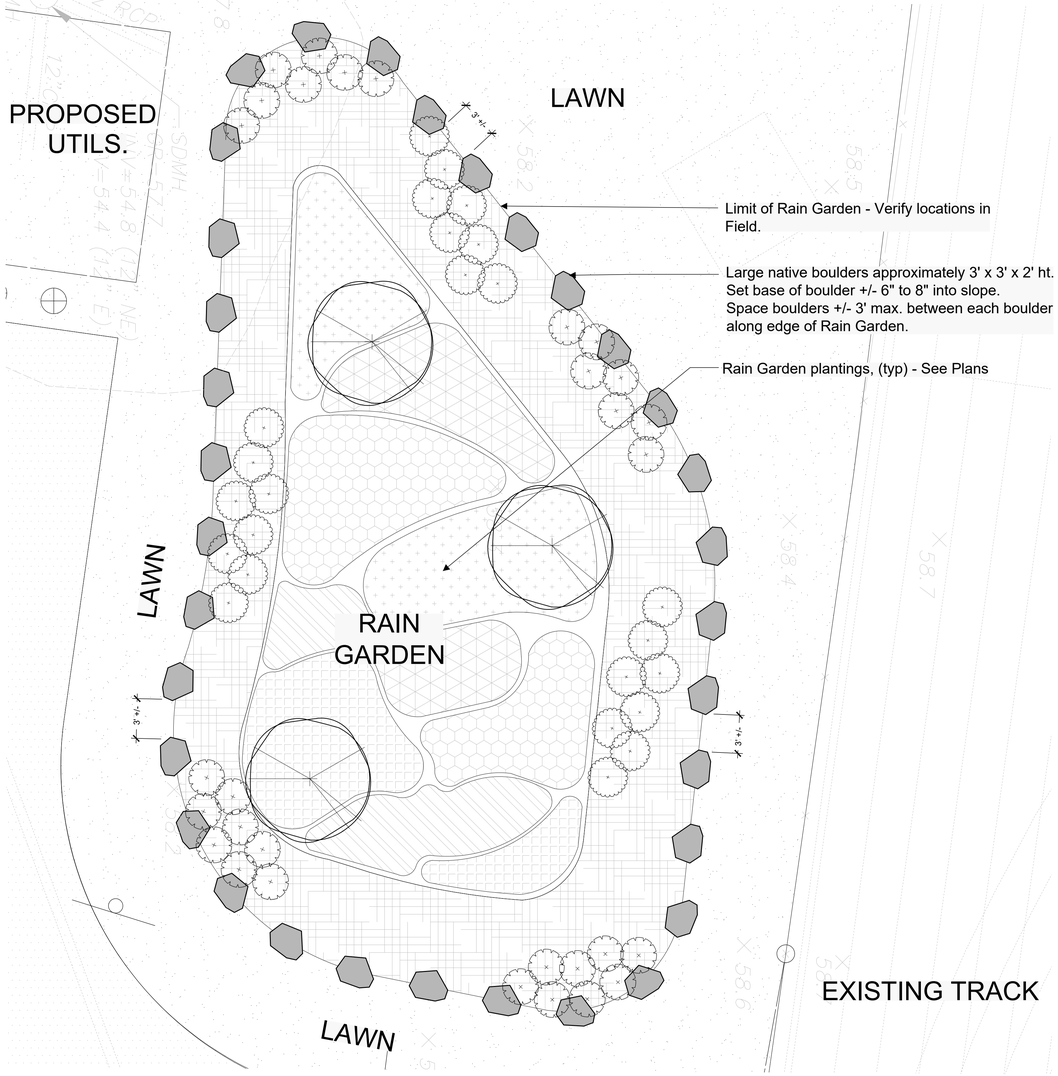

5 L-2.1 West Rain Garden - Boulder Layout

SCALE: 1" = 5'

6 L-2.1 East Rain Garden - Boulder Layout

SCALE: 1" = 5'

GREENWICH
CARDINAL STADIUM
PHASE 1
10 HILLSIDE ROAD
GREENWICH, CT 06830

ADD ALTERNATE #1

1. Remaining Driveways, Walkways, ADA parkinglot
2. Storm Water Management Systems, Retention Pond, etc.
3. Additional Fencing and Retaining Walls
4. Curb Cut at Road
5. Site Lighting
6. Utilities to the Area of the Kiosk. Kiosk Area as Just Asphalt.

ADD ALTERNATE #2

1. Kiosk Building and Additional (nicer) Pavers Around Area of Kiosk.

PHASE 1 NOTE

See Civil Drawings for Grading & Construction Limits of Phase 1A and 1B Site Improvements.

Professional Seal:

No:	Revision:	Date:
1	Issue for Permit	8/12/2020
2	Zoning Permit Sign-Off	10/8/2020
3	Phase 1B Site Plan Application	10/30/2020
4	Construction Documents	11/10/2020
5	Building Permit Issue	12/2/2020

0 1/2 1 2

WESLEY STOUT ASSOCIATES
96 Main Street, New Canaan, CT 06840
203 966-3100 FAX 203 966-3131
www.wesleystout.com

PHASE 1: SITE DETAILS

Date: 08/12/2020
Scale: As noted
Sheet:

L-2.1

General Notes:

1 The purpose of these drawings is to show the structural work associated with the Greenwich High School Stadium (Phase 1) project, in Greenwich, Connecticut.
2 The work shown on these drawings has been designed in accordance with the structural requirements of the 2018 Connecticut State Building Code which is the 2015 International Building Code as amended, altered or deleted by the provisions of the 2018 Connecticut amendments.
3 The structural components have been designed for the following loads:

A. Uniform live load:

Assembly areas	
Other assembly areas	100 psf
Recreational uses	
Reviewing stands, grandstands and bleachers	100 psf
Stairs and exits	
All other	100 psf

Live load has been reduced on girders, columns and footings in accordance with the building code

B. Roof loads:

Snow:

Ground snow load, p_g	30 psf
Flat roof snow load, p_f	30 psf*
Exposure factor, C_e	1.0
Importance factor, I_s	1.1
Thermal factor, C_t	1.0
Drift surcharge load, p_d	See plan
Width of snow drift, W	See plan
Rain loads: in accordance with Section 1611	
Roof live load:	20 psf min

*Note: the flat roof snow load shall be no less than 30 psf.

C. Wind design data:

Wind loads have been determined based on
Section 1609.1.1 in accordance with ASCE 7-10, Chapters 26, 27, 29 and 30, Directional Procedure

Risk category	III
Basic wind speed (3-second gust):	
Ultimate design wind speed, Vult	130 mph
Nominal design wind speed, Vasd	101 mph
Exposure	C
Internal pressure coefficient	0.18
"a" dimension for use with components and cladding	3.0 ft

Design wind pressure (Nominal design wind pressures) for components and cladding on building walls (use Zone 4 generally; use Zone 5 within "a" of building wall corners):

	Surface pressure (psf)			
Area	10 sq. ft	20 sq. ft	50 sq. ft	100 sq. ft
Negative Zone 4	-21.9	-21.0	-19.8	-18.9
Negative Zone 5	-27.0	-25.2	-22.8	-21.0
Positive Zones 4 & 5	20.2	19.3	18.1	17.3

Design wind pressure (Nominal design wind pressures) for components and cladding on building roofs (for locations of zones 1, 2 and 3, refer to building code):

	Surface pressure (psf)			
Area	10 sq. ft	20 sq. ft	50 sq. ft	100 sq. ft
Negative Zone 1	-24.0	-24.0	-24.0	-24.0
Negative Zone 2	-27.7	-27.2	-26.4	-25.8
Negative Zone 3	-37.1	-33.7	-29.2	-25.8
Positive all zones	10.0	10.0	10.0	10.0
Negative Zone 2	-33.3	-32.8	-32.0	-31.5
Negative Zone 3	-52.1	-46.4	-39.0	-33.3

Earthquake design data:

Risk category	III
Seismic importance factor, I_e:	1.25
Mapped short period spectral response accelerations, S_s:	0.259g
Mapped 1 second period spectral response accelerations, S_1:	0.070g
Site class:	D
Design short period spectral response accelerations, S_{DS}:	0.275g
Design 1 second period spectral response accelerations, S_{D1}:	0.112g
Seismic design category:	B
Seismic force resisting system: intermediate reinforced masonry shear walls	
Design base shear:	30 KIPS
Seismic response coefficient, C_s:	0.098
Response modification factor, R:	3.50
Deflection amplification factor, C_d:	2.25
Analysis procedure: Equivalent Lateral Force	

Other loads:

Concentrated loads:

All floors except as noted (on 2-1/2 feet square)	0 lbs
Stair treads and catwalks (on 4 inches square)	300 lb
Elevator machine room grating (on 4 inches square)	300 lbs
Roof surfaces subject to maintenance workers	300 lbs
All other roof members	300 lbs]

Impact loads

Loads increased as follows:

Elevator machinery	100%
Hangers for floors or balconies	33%
Vehicle and wheel loads	30%

4 This structure has been designed to be self-supporting and stable after the work shown on these drawings has been completed. The stability of the structure prior to completion is solely the responsibility of the contractor. This responsibility extends to all related aspects of the construction activity including, but not limited to, erection methods, erection sequence, temporary bracing, forms, shoring, use of equipment, and similar construction procedures. Review of the construction by the engineer is for conformance with design aspects only, not to review the contractor's construction procedures. Lack of comment on the part of the engineer with regard to construction procedures is not to be interpreted as approval of those procedures.
5 This structure utilizes masonry shear walls to provide lateral stability. Therefore, temporary bracing, guys, etc., must be maintained until all masonry shear walls have been erected and attached to the steel framing and bracing has been erected.
6 Jobsite safety and construction procedures are solely the responsibility of the contractor. Review of the construction by the engineer is for conformance with design aspects only, not to review the contractor's provisions for job site safety. Lack of comment by the engineer is not to be interpreted as approval of those aspects of work.
7 PDF digital files of all erection and detail shop drawings for steel reinforcing bars (concrete and concrete -masonry construction), structural steel, steel joists, and steel deck, indicating the fabricator, manufacturer, finish, layout, and all accessories, must be submitted to and be checked by the contractor and subcontractor and bear the checker's initials before submission to the architect for review prior to fabrication. Fabrication and/or delivery to the site of components prior to receiving approved shop drawings shall be at the fabricator's own risk.
8 Testing and inspection of concrete, steel reinforcing bars (concrete and concrete masonry construction), concrete masonry, structural steel, steel joists, steel deck, wood framing, wood sheathing, and other work are described in the project "Statement of Special Inspections". The contractor shall review the "Statement of Special Inspections" and coordinate the scheduling of inspections with the special inspector. Uninspected work that required inspections may be rejected solely on that basis.
9 If faulty construction procedures, or material, result in defective work that requires additional engineering time to devise corrective measures, professional fees may be charged to the contractor at the standard hourly rate of additional services. Such fees may be withheld from the general contractor's payment.
10 Loads, openings and structure in any way related to requirements of other (non-structural) disciplines are shown for bidding purposes only. However, these plans do not show the full scope of openings, in roofs, floors and walls. For size and location of all openings, see architectural and mechanical drawings. Do not scale openings. The contractor shall obtain from the heating and ventilating, electrical, plumbing and other trades the final approved size and location of all openings, equipment and work to be provided for their trade for roofs, floors and walls, whether shown or not shown on structural drawings. Excess cost related to variation in requirements or equipment are not to be borne by the owner.
11 For any mechanical equipment weights used in design of supporting elements that are indicated on the drawings. Contractor shall notify the architect prior to installation of equipment if actual weight exceeds weight shown on drawings.
12 The contractor shall verify all dimensions, elevations and angles with architectural drawings and existing conditions before proceeding with any work.
13 The contractor shall field verify existing conditions before proceeding with any work. The contractor shall field verify all dimensions noted "±" that are indicated on the drawings.
14 The contractor and subcontractors shall obtain the latest copies of approved plans and surveys and they shall familiarize themselves thoroughly with these plans before commencing any work.
15 These drawings are supplemented by a detailed technical specification. The notes shown under certain categories of work are intended to summarize basic requirements.
16 Work shown as "Typical Details" apply throughout the project as required. Work shown as "Sections" shall be considered to apply for the same and similar conditions in the building.
17 Some details of the work are shown on the architectural drawings. A careful review and study of these details are necessary before the full scope of the work can be comprehended.
18 Do not scale drawings.

Codes and Standards References

1 Concrete:
Concrete work shall conform to all the requirements of:
ACI 301-10, "Specifications for Structural Concrete in Buildings" and
ACI 318-14, "Building Code Requirements for Structural Concrete".
2 Concrete masonry:
Concrete masonry work shall conform to the requirements of "Building Code Requirements for Masonry Structures (ACI 530-13/ ASCE 5-13/ TMS 402-13)" and "Specifications for Masonry Structures (ACI 530.1-13/ ASCE 6-13/ TMS 602-13)".
3 Structural steel:
Design, fabrication and erection of structural steel shall conform to the "Specification for Structural Steel for Buildings" as adopted on June 22, 2010, by the American Institute of Steel Construction (AISC) and the 14th Edition of the AISC Steel Construction Manual.
4 Wood:
Wood construction shall conform to the ANSI/AWC NDS-2015, "National Design Specification for Wood Construction" with the 2015 supplement.

Foundation notes:

1 Recommendations for the site preparation and earthwork within the perimeter of the proposed new structure, preparation of soil bearing surfaces, material specification and placement of structural backfill for support of foundations and slabs-on-grade, and drainage are stated in the geotechnical engineering report prepared for this project by Skylands Engineering, LLC, and dated March 25, 2020. The geotechnical report is a reference document, not a contract document, and the design team is not responsible or liable for the accuracy of the information contained in the report.
2 The foundations have been designed to rest on inorganic, undisturbed soil or compacted granular fill having a bearing value of 4000 psf as recommended in the geotechnical engineering report referenced above. Such bearing strata are anticipated at the bottom of footing elevations noted on the foundation plan. All bearing strata shall be reviewed by the geotechnical engineer prior to placing concrete in order to verify the bearing value.
3 The slab-on-grade sub-base shall be a crusher run stone free from soft disintegrated pieces, mud, dirt, or other injurious material. The material shall have no stone greater than 2 inches in any one dimension and with less than 10 percent by weight passing a No. 100 sieve.
4 The bottom of exterior footings not on solid rock shall be at least 3' - 6" below finished grade.
5 All soil surrounding and under footings shall be protected from freezing and frost action during the course of construction.
6 Step footings where elevations change at a maximum slope of one vertical on two horizontal and place lower footings first.
7 Foundation walls shall be backfilled by placing fill on both sides simultaneously and to the same level.
8 Keep foundation excavations free of water at all times.
9 Use lean concrete (f'c=1500 psi) or controlled compacted fill for over-excavation of footings.
10 Existing utilities: locate existing underground utilities in areas of excavation work. Provide adequate means of support and protection during earthwork operations.
11 Where footings are in close proximity of sub-surface piping, bottom of footings shall be at least 8" below elevation of piping, unless otherwise shown on the drawings.
12 Filter fabrics/geotextile fabrics: where indicated on the drawings, provide a filtration type geotextile between crushed stone and the surrounding soil. Fabric shall be TenCate Mirafi 140N or Propex Geotex 401.
13 Submittals to the engineer are required for structural fill, and slab sub-base.

Concrete Notes:

1 All concrete work shall conform to all the requirements of ACI 301, "Specifications for Structural Concrete in Buildings" and ACI 318 "Building Code Requirements for Structural Concrete", as specified in the code reference section of these general notes.
2 Concrete shall be the specified weight and develop a minimum strength in 28 days as follows:
<For non-residential structures>

Location	Minimum Weight	Strength	Maximum Water/Cementitious Ratio (or slump where indicated)
Footings	Normal	3,000 psi	Slump: 4" +/- 1"
Walls and piers:			
Interior	Normal	3,000 psi	0.50
Exterior wall with no exposed faces	Normal	3,000 psi	0.48
Exterior walls with exposed faces	Normal	5,000 psi	0.40
Slabs-on-grade -interior	Normal	4,000 psi	0.45
Slabs-on-metal-deck	Normal	3,500 psi	Slump: 4" +/- 1"

3 All detailing fabrication, and erection of reinforcing bars, unless otherwise noted, must follow the latest ACI code and the latest ACI "Manual of Standard Practice for Detailing Reinforced Concrete Structures".
4 Concrete design mix will be submitted to the engineer for review, together with laboratory reports attesting that the mixes can attain the minimum strength required in accordance with ACI 301 indicated above.
5 Portland cement shall be Type I or Type II and conform to ASTM C 150.
6 Other cementitious material such as flyash or ground granulated blast- furnace slag may be blended with cement for use in the concrete mix. Flyash shall conform to ASTM C 618 and may replace cement if the following ranges for the 2 classes of flyash; Class C, 20 to 35%; Class F, 15 to 25%. Ground granulated blast- furnace slag shall conform to ASTM C 989 and may not exceed 50% of total weight of cementitious materials.
7 For normal weight concrete: coarse aggregate shall be 3/4" and conform to ASTM C 33. Fine aggregate shall be manufactured or natural sand from the same source for the entire project and shall conform to ASTM C 33.
8 No admixtures are permitted without the engineer's written permission other than entrained air. Concrete exposed to the weather, such as that used in foundation walls, shall contain 5% +/- 1 1/2% entrained air. Concrete exposed to the weather and exposed to de-icing compounds shall contain 6% +/- 1 1/2% entrained air. Do not use air entrainment admixture for interior normal weight concrete slabs.
9 Limit water-soluble, chloride-ion content in hardened concrete to 0.30 percent by weight of cement.
10 Reinforcing steel shall conform to ASTM A 615, Grade 60.
11 Welded wire fabric shall conform to ASTM A 1064 with a minimum yield strength of 65 ksi. Lap one mesh size at sides and ends, and wire together.
12 Vapor retarder shall be Stego Wrap (15 mil) vapor retarder by Stego Industries LLC and shall have a water vapor permerance after conditioning (ASTM E 1745, Paragraphs 7.1.2 – 7.1.5) that is less than 0.01 perms and meets the requirements of Class A. Place as per ASTM E 1643 and manufacturer's written instructions.
13 The following concrete cover shall be provided for reinforcement:

Location	Cover (inches)
Concrete cast against and Permanently exposed to earth	3
Concrete exposed to earth or weather:	
#6 through #18 bars	2
#5 bar and smaller	1 1/2
Concrete not exposed to weather or in contact with ground:	
Slabs, walls, joists:	
#14 and #18 bars	1 1/2
#11 bar and smaller	3/4
Beams, columns	
Primary reinforcement, ties, stirrups, spirals	1 1/2

14 The conveyance, placement and protection of the concrete shall conform to the requirements of ACI 318, indicated above, and ACI 304R, "Guide for Measuring, Mixing, Transporting and Placing Concrete". Mechanical vibrators are to be used to consolidate the freshly cast concrete around the reinforcing and against form surfaces and to prevent the formation of air or stone pockets, honeycombing, pitting or planes of weakness. However, care must be used to avoid over vibration that can lead to aggregate segregation.
15 No welding of reinforcing will be permitted.
16 All lap splices shall be Class B, in accordance with ACI 318 indicated above.
17 Concrete piers: Place concrete piers and walls together. Set pier reinforcing and set wall reinforcing through pier vertical bars. Provide dowels with standard hook from footing at all piers. Size and quantity of dowels to match vertical pier reinforcing (Class "B" splice).
18 The contractor shall be responsible for limiting pours to minimize shrinkage cracking. In general, walls shall not be poured in continuous lengths exceeding 30 feet without providing construction joints or control joints. The location and configuration of joints exposed to view shall be coordinated with the architect.
19 Finish elevated floor slabs flat and level within a tolerance of +/- 1/4 inches to the elevation indicated on the drawings. Provide additional concrete required due to formwork and floor framing deflection to achieve this finished top of slab elevation. The anticipated deflection for both beams and girders is 1 1/4". Design of floor framing members includes the additional concrete for this anticipated deflection.
20 The installation of slabs shall conform to the requirements of ACI 302.1R, "Guide to Concrete Floor and Slab Construction". Interior finish slab surfaces are to have a steel trowel finish. Surfaces of slabs forming the substrate for mud jobs are to have a clean textured (scratched) surface. Exterior slab surfaces are to have a broom finish unless specified on the architectural drawings.
21 Expansion and isolation-joints:
Filler strips: ASTM D 1751, asphalt-saturated cellulosic fiber or ASTM D 1752, cork or self-expanding cork
sealant at top of joint: Sika's Sikaflex 2c SL poly urethane elastomeric sealant. Provide cap to separate sealant from filler.
22 Waterstops: Flexible polyvinyl chloride (PVC) waterstop conforming to Corp of Engineers Specification CRD-C 572, with flat dumbbell and center bulb.
23 The curing and protection of concrete shall conform to the requirements of ACI 318 and ACI 308R, "Guide to Curing Concrete". Concrete slabs shall be protected from loss of surface moisture for not less than 7 days using a curing compound conforming to ASTM C 309 or constantly wetted burlap. Curing compounds shall be compatible with any intended flooring overlay. Do not install finish flooring until slab has adequately dried per the flooring manufacturer's specifications.
24 Concrete sidewalks shall be treated with a clear water repellant penetrating sealer such as MasterProtect H 400 (formerly Hydrozo Enviroseal 40) after the concrete has been allowed to cure for a minimum of 28 days but before the first winter season and/or the application of de-icing chemicals, whichever comes first.
25 Cold weather concrete placement: If cold weather concreting conditions exist as defined by a period of more than three days when the average outdoor temperature, (high + low)/2, is less than 40 deg. F, the procedures outlined in ACI 306.1, "Standard Specification for Cold Weather Concreting" and ACI 306R, "Guide to Cold Weather Concreting" shall be utilized.
26 Hot weather concrete placement: Maintain concrete temperature below 90 deg. F. at time of placement and comply with ACI 301 and ACI 305R, "Guide to Hot Weather Concreting".
27 Accurately position, support, and secure reinforcement against displacement. Locate and support reinforcement with bar supports to maintain minimum concrete cover. Do not tack weld crossing reinforcing bars. Provide bar supports as follows:
A. Bolsters, chairs, spacers, and other devices for spacing, supporting, and fastening reinforcing bars and welded wire reinforcement in place. Manufacture bar supports from steel wire, plastic, or precast concrete according to CRSI's "Manual of Standard Practice," of greater compressive strength than concrete.
28 Sizes and locations of all required embedded items, such as anchor bolts, piping sleeves, etc., for all trades shall be coordinated by the general contractor with other trades.
29 Submittals to the engineer are required for concrete mix designs, cement, reinforcing bars, admixtures, and aggregates.

Concrete Masonry Notes:

1 All concrete masonry work shall conform to the requirements of the "Building Code Requirements for Masonry Structures (ACI 530/ ASCE 5/ TMS 402)" and the "Specifications for Masonry Structures (ACI 530.1/ASCE 6/ TMS 602, as specified in the code reference section of these general notes.
2 The compressive masonry strength, f'm, shall be 1900 psi minimum. System components have been selected based on the unit strength method.
3 Concrete block shall be lightweight hollow load bearing masonry units conforming to ASTM C 90, with a minimum ultimate compressive strength of 1,900 psi on the net area of the units. Units shall be protected from moisture absorption.
4 Portland cement used in the mortar and grout shall conform to ASTM C 150. Masonry cement or mortar cement shall not be used.
5 Mortar shall be Type S conforming to the volumetric proportions set forth in ASTM C 270. Use 1 part Portland cement, 0.25 to 0.5 parts hydrated lime or lime putty, and aggregate proportioned to 2.25 to 3 times the sum of the separate volumes of cementitious materials (i.e. Portland cement plus lime). Provide aggregate in loose, damp condition. Add water to produce a workable mix.
6 Coarse grout used in pilasters and walls shall conform to the volumetric proportions set forth in ASTM C 476. Use one part Portland cement, 2.25 to 3 parts damp, loose sand, 1 to 2 parts 3/8" pea gravel. Add water to produce a flowable mix with an 8 to 11 inch slump.
Alternatively, fine grout may be used that conforms to the volumetric proportions set forth in ASTM C 476 using one part Portland cement, 2.25 to 3 parts damp loose sand and adding water to produce a flowable mix with an 8 to 11 inch slump.
7 Steel reinforcing bars shall conform to ASTM A 615, Grade 60. Reinforcing bars to be lapped 48 bar diameters at splices. Reinforcement to be secured against displacement at spacing not exceeding 200 bar diameters.
8 Joint (horizontal) reinforcement shall be hot-dipped galvanized W1.7 (9 gage) steel wire, ASTM A 951 with ASTM A 153 Class B-2 coating. Ladder type, by Hohmann & Barnard, Inc., or an approved equal. Place joint reinforcing in every second course (16"o.c.). Joint reinforcement shall be lapped 6 inches at splices.
9 Place units while mortar is soft and plastic. Remove and relay in fresh mortar any unit disturbed to the extent that initial bond is broken after initial positioning.
10 Fully bed units in all shearwalls including cross webs.
11 All cells with reinforcing bars or bolts shall be grouted solid.
12 Vertical cells to be grouted solid shall have a minimum clear opening of 3"x2-1/2". The entire perimeter of the cell shall be fully bedded with mortar.
13 Consolidate grout pours exceeding 12 inches in height by mechanical vibration and reconsolidate by mechanical vibration after initial water absorption and settlement has occurred. Grout pours exceeding 5.33 feet are high lift pours and shall require cleanouts. High lift grouting shall not be used unless high lift grout procedures are submitted to the engineer for review and approved by the engineer.
14 Cover the tops of all masonry construction to protect against precipitation.
15 Masonry shall not be constructed in temperatures below 40 F. Provide a heat source and protection as required to maintain temperature above 40 F in accordance with ACI 530.1.
16 Hot weather construction techniques shall be in accordance with ACI 530.1 and shall be implemented when the ambient air temperature exceeds 100 F, or 90 F if the wind speed exceeds 8 mph.
17 Unless otherwise shown on architectural or structural drawings provide vertical control joints through concrete masonry unit walls for full wall height as follows:
A Distance between joints should not exceed the lesser of length to height ratio of 1.5, or 25 feet
B At changes in wall height
C At changes in wall thickness – including pipe and duct chases and pilasters
D At and above expansion joints in foundations and floors
E At and below expansion joints in roofs and floors that bear on the wall
F For openings, do not locate control joints within 32 inches of openings
G Adjacent to corners of walls or at wall intersections within a distance equal to half the control joint spacing.
18 Submittals to the engineer are required for certificates of compliance for block grade and strength, grout, mortar, and reinforcing bars prior to delivery to the site.

Connections to Existing Masonry or Hardened Concrete:

1 All proprietary anchoring systems (expansion, adhesive anchoring systems, etc.) to be installed into hardened concrete and masonry elements are to be installed in strict accordance with the manufacturer's instructions for drilling and preparation of holes, for spacing and edge distance requirements, and for the utilization of supplemental components for the anchoring systems such as screen tubes, doweling adhesives, etc.
2 Connections to hardened concrete shall be made with anchors conforming to ACI 318, as specified in the code reference section of these general notes, for cracked concrete, and Chapter 19 of the state building code indicated at the beginning of these general notes.
A. Mechanical anchors shall be either:
i. Hilti "Kwik Bolt TZ" expansion anchor.
ii. Hilti "Kwik HUS-EZ" screw anchor (use only in permanently dry, interior non-corrosive environments)
iii. Simpson "Strong Bolt 2" expansion anchor
iv. Simpson "Titen HD" screw anchor, zinc-plated or galvanized (use only in permanently dry, interior non-corrosive environments)
v. Dewalt "Power-Stud + SD2" expansion anchor.
vi. Dewalt "Power-Stud + SD4/SD6", Type 304/316 SS expansion anchor
vii. Dewalt "Screw-Bolt+" screw anchor, zinc-plated or galvanized (use only in permanently dry, interior non-corrosive environments)

Size, embedment, spacing and edge distance of anchors shall be as indicated on the drawings.

B. Adhesive anchor rods or reinforcing bars shall be installed in rotary hammered drilled holes with carbide drill bits using one of the following adhesive anchoring systems:
i. Hilti "HIT-HY 200 adhesive anchoring system with Hilti "HAS" ASTM F 1554, Grade 36 anchor rods.
ii. Simpson "AT-XP" adhesive anchoring system for base material temperatures between 14 degrees and 80 degrees or Simpson "Set-3G" adhesive anchoring system for temperatures above 40 degrees, with Simpson "RFB" ASTM F 1554 Grade 36 anchor rods.
iii. Dewalt "AC200+" two part adhesive, cold temperature cure with ASTM F 1554 Grade 36 anchor rods.
iv. Reinforcing bars shall conform to the requirements of the Concrete General Notes.

Adhesive for reinforcing bars and anchors shall have been tested in accordance with ACI 355.4 "Qualification of Post-Installed Adhesive Anchors in Concrete" and ICC-ES (ICC Evaluation Service) "Acceptance Criteria for Post-Installed Adhesive Anchors in Concrete Elements" (AC308) for cracked concrete and seismic applications.

Adhesive bond design strength is based upon concrete that has cured at least 21 days with a minimum compressive strength of 2,500 psi and an in-service temperature in accordance with ACI 355.4 Temperature Category B.

Installation method shall be in accordance with the Manufacturer's Printed Installation Instructions (MPII)
Installation of adhesive anchors horizontally or upwardly inclined to support sustained tension loads shall be performed by personnel certified by the ACI/CRSI Adhesive Anchor Installer Certification program or equal.

Unless otherwise noted on the drawings, embed anchor rods and reinforcing bars into drilled holes a minimum of 9 anchor diameters, with a minimum edge distance of 4 inches, measured from the edge of the concrete to the centerline of the anchor/reinforcing bar. Increased embedment depths or edge distances may be required at certain locations, see plans and details.

3 Connections to grout filled concrete masonry shall be made with either 1) Hilti standard "HAS-E" ISO 898 Class 5.8 anchor rods (minimum yield strength = 58 ksi and minimum ultimate strength = 72.5 ksi) using Hilti "HIT HY270" masonry adhesive anchoring systems or 2) Simpson "RFB" ASTM F 1554 Grade 36 anchor rods using Simpson "Set-XP" masonry adhesive anchoring system or 3) ASTM F1554 Grade 36 or ASTM A 193 Grade B7 high strength anchor rods using Dewalt AC100+ Gold masonry adhesive anchoring system.
A. Unless otherwise noted on the drawings, embed anchor rods into drilled holes a minimum of 9 anchor diameters, with a minimum edge distance of 4 inches, measured from the edge of the masonry to the centerline of the anchor. Increased embedment depths or edge distances may be required at certain locations, see plans and details.
4 Connections to hollow concrete or clay brick masonry shall be made with either 1) Hilti standard "HAS-E" ISO 898 Class 5.8 anchor rods (minimum yield strength = 58 ksi and minimum ultimate strength = 72.5 ksi) using Hilti "HIT HY270" masonry adhesive anchoring system with "HIT-SC" composite screen tubes or 2) Simpson "RFB" ASTM F 1554 Grade 36 anchor rods using Simpson "SET-XP" masonry adhesive anchoring system with Simpson "Opti-mesh" plastic screen tubes or 3) ASTM F1554 Grade 36 or ASTM A 193 Grade B7 high strength anchor rods using Dewalt AC100+ Gold masonry adhesive anchoring system with composite screen tubes.
A. For anchors in hollow concrete masonry, embed anchor rods into drilled holes a minimum of 2 inches, with a minimum edge distance of 4 inches, unless otherwise noted, measured from the edge of the masonry to the centerline of the anchor. Increased embedment depths or edge distances may be required at certain locations, see plans and details.
B. For anchors in hollow clay brick masonry, embed anchor rods into drilled holes a minimum of 3 1/2 inches, with a minimum edge distance of 4 inches, unless otherwise noted, measured from the edge of the masonry to the centerline of the anchor. Increased embedment depths or edge distances may be required at certain locations, see plans and details.

Structural Steel Notes:

1 Design fabrication and erection of structural steel shall conform to the American Institute of Steel Construction's "Specification for Structural Steel for Buildings", as specified in the code reference section of these general notes.
2 Materials:

Wide flange shapes:	ASTM A 992 Grade 50
American standard shapes, angles, Plates and bars:	ASTM A 36
Structural steel tubing, Round:	ASTM A500, Grade C (Fy=46 ksi)
Bolts	ASTM F3125, Grade A 325
Anchor rods	ASTM F 1554, Grade 36
Welding electrode	ASTM E 70xx, low hydrogen

3 All welding shall conform to American Welding Society's AWS D1.1 "Structural Welding Code-Steel" code for arc and gas welding and be performed by a certified welder in accordance with A.W.S. standards.
4 High strength bolts: install high-strength bolts according to Research Council on Structural Connections' (RCSC's) "Specification for Structural Joints Using High-Strength Bolts" for type of bolt and type of joint specified.
Joint type: Snug tightened unless otherwise noted.
5 Beam shear reactions are indicated on the plans, refer to the typical beam legend for reaction designations. Beams with reactions not shown, shall be designed for a 12 kip reaction (service loads for allowable stress design).
6 The fabricator is responsible for designing shear connections for the reactions shown on these plans and submitting these design calculations, signed and sealed by a qualified professional engineer registered in the state of jurisdiction who is responsible for their preparation, for review by the structural engineer of record through the architect. The reactions shown are "service" loads for "Allowable Stress Design" (ASD). Connections may be designed for these values using the conventional "Allowable Stress Design" method, as specified in the AISC Steel Construction Manual indicated in the code reference section of these general notes.
7 Where slotted hole connections are shown, nuts shall be fastened snug tight, then untightened by one-half turn. Peen threads to prevent further loosening of the nut.
8 All bolted connections that will be exposed to view shall have bolts for the full depth of the connected member, whether required to support the reactions shown or not.
9 Grout shall be non-metallic, shrinkage-resistant grout conforming to ASTM C 1107, Grade B or C, factory-packaged, non-metallic aggregate grout, non-corrosive, non-staining, mixed with water to consistency suitable for application and a 30-minute working time.
10 Structural steel shall be cleaned in accordance with the Steel Structures Painting Council Specification SP 3 for Power Tool Cleaning (except for steel exposed to weather) and painted to a minimum dry film thickness of 2 mils with a shop coat of Tnemec #10-99 alkyd rust inhibitive primer as manufactured by Tnemec Company, Inc. of Kansas City, MO, or an approved equal, and painted with the specified primer.
11 All steel members and bolting exposed to weather shall be cleaned in accordance with the Steel Structures Painting Council Specification SP 6 for Commercial Blast Cleaned and hot-dipped galvanized in accordance with ASTM A 123 and ASTM A 153. Minimum acceptable zinc coating weight shall be 2 oz./sq. Ft. See architectural specifications for finished paint if required. Clean areas where galvanizing is damaged or missing and repair galvanizing to comply with ASTM A 780.
12 Provide bituminastic protection coating for all structural steel below grade.
13 Continuous members, where indicated on the drawings, shall require either 1) the member to be furnished as one piece, or 2) if individual pieces are to be provided, then they shall be connected by either welding or bolting to develop the full strength of the continuous member.
14 Split cantilevers for steel beams shall be designed for the full moment capacity of the beam unless otherwise noted.
15 For miscellaneous steel, see architectural drawings.
16 Submittals to the engineer are required for certificates of compliance for structural steel, bolts, nuts, washers, and weld filler material prior to the fabrication of any steel
17 At the completion of fabrication, the fabricator shall submit a certificate of compliance stating that the work was performed in accordance with the approved contract documents, as required by Section 1704.2 of the building code indicated at the beginning of these General Notes.

Steel Joist Notes:

1 Open web steel joists shall be designed, fabricated, and erected in accordance with the current specification of the Steel Joist Institute.
2 Joists shall be supplied with all attachment devices, bridging, and similar accessories required for strict conformance with the Steel Joist Institute's specifications. Joist erection shall be in strict conformance with the Occupational Safety and Health Administration (OSHA) requirements. All of the above information shall be shown on the shop drawings.
3 Joists shall be field welded to their supporting members by a certified welder as defined by the American Welding Society.
4 Extend joists 1 inch past centerline of supporting member where possible. On masonry walls 12 inches or more in thickness, the minimum bearing length shall be 6 inches, unless otherwise noted.
5 Design of joists and joist bridging shall account for a net uplift load (combined wind and dead loads – service loads for allowable stress design of 20 psf within 6'-0" of roof edge and 12 psf for the remainder of the roof.
6 Joists shall be cleaned in accordance with the Steel Structures Painting Council Specification SP 2 or SP 3 and painted as per SSPC Paint No. 15 or manufacturer's standard shop primer complying with the performance requirements in SSPC Paint No. 15.
7 Bridging shall be as shown and not less than called for by the SJI specification, as noted in Note 1.
8 Mechanical, electrical and plumbing systems shall be coordinated with joist bridging by the contractor. Any modifications required to bridging shall be the responsibility of the joist manufacturer.
9 Adjacent joists of the same depth shall have web members in line to permit passage of mechanical ducts.
10 Joist manufacturer shall design special joists, designated "SP", for load and deflection criteria shown on the drawings, joist manufacturer shall coordinate and verify weight, size and location of mechanical equipment and any other attached equipment/appurtenance with the general and mechanical contractors.
11 "K" series joists:
A Weld all joists to supporting steel with 1 1/2" of 3/16" fillet weld each side of bearing, unless otherwise shown.

Steel Deck Notes:

1 Steel deck shall be designed, fabricated, and erected in accordance with the current specification of the Steel Deck Institute.
2 Composite formed steel floor deck to be 2" deep, 20 gage (uncoated steel thickness = 0.0358"), galvanized (G60 coating), United Steel Deck Type Lok-Floor, composite floor deck as manufactured by Canam Steel Corporation, or an approved equal.
3 Formed steel roof deck to be 1-1/2" deep, 20 gage (uncoated steel thickness = 0.0358"), galvanized (G60 coating), wide rib, United Steel Deck "B" Deck profile, as manufactured by Canam Steel Deck, Incorporated or an approved equal.
4 The steel deck shall be supplied in minimum lengths as required to provide a "3-span" condition. End closures, roof sumps, closures at penetrations, and all other accessories necessary for a complete installation are required.
5 Composite formed steel floor deck shall be welded to supporting steel with 5/8" diameter puddle welds at 12" on center. Intermediate side connections shall be made with #10 self-tapping screws at a maximum spacing of 3'-0" on center.

In lieu of puddle welds, powder actuated fasteners having the same capacity as the specified puddle welds, may be used. Fasteners shall be manufactured by Hilti, Inc. or an approved equal. Shop drawings shall be submitted for approval to the engineer indicating fastener data including size vs. steel substrate material, spacings, capacities, including diaphragm shear capacities, method of installation and program for quality assurance of installation.

6 Formed steel roof deck shall be welded to supporting steel with 5/8" diameter puddle welds at all edge ribs plus a sufficient number of interior ribs to limit the spacing between adjacent points of attachment to 6" on center. Intermediate side connections shall be made with No. 10 self-tapping screws at mid-span or 3'-0" on center, whichever is smaller. End laps of sheets shall be a minimum of 2" and shall occur over supports.

In lieu of puddle welds, pneumatically applied fasteners having the same capacity as the specified puddle welds, may be used. Fasteners shall be manufactured by Pneutek, Inc. or an approved equal. Shop drawings shall be submitted for approval to the engineer indicating fastener data including size vs. steel substrate material, spacings, capacities, including diaphragm shear capacities, method of installation and program for quality assurance of installation.

7 Steel deck must be protected before and after erection and all debris cleaned from its surface where concrete will be poured or roofing is to be placed.

Lintel Notes:

1 All lintels shall be steel lintels unless otherwise noted.
2 Unless otherwise noted, for lintels over doors, windows, ducts, and miscellaneous openings in non-bearing 4", 8" and 12" cmu and for brick walls, use for each 4" of masonry:

Angle size	Max. M.O.	Bearing each end
3 1/2" x 3/8" flat plate	2'-0"	6"
3 1/2" x 4" x 5/16" (LLV)	3'-6"	6"
3 1/2" x 5" x 5/16" (LLV)	6'-0"	6"
3 1/2" x 6" x 5/16" (LLV)	6'-0"	8"
3 1/2" x 6" x 3/8" (LLV)	8'-0"	8"

3 Openings in non-bearing walls (block or block and brick) where no specific lintels or lintel sizes are indicated shall have 8" bearing at each end and shall have the following sizes:

Max. M.O.	Wall thickness	Lintel size
9'-0"	8"	W8x24
9'-0"	9"-13"	W8x31 + 5/16" plate
12'-0"	8"	W8x28
12'-0"	9"-13"	W8x35 + 5/16" plate

Plates indicated in above lintels shall have a width 1" less than the wall thickness.
4 For 6" partitions use WT 7x13 for spans up to 7'-0" with 6" bearing each end.
5 For 10" partitions use WT 7x21.5 for spans up to 7'-0" with 8" bearing each end
6 Fill the first two courses directly under bearing with grout for 16" length.
7 See architectural and mechanical drawings for size and location of openings.
8 When openings occur in bearing walls or the height of masonry above the lintel is less than the opening width or when a control joint is located directly above or within 16" of the jamb opening and drawings do not otherwise indicate a specific lintel design, consult with the architect to confirm lintel requirements.
9 Lintels over adjacent openings with piers between less than 2'-8" wide shall be continuous over piers. Masonry units of such piers shall be filled with grout for full story height
10 Connect lintel to structural steel columns when there is less than 16" of masonry between the masonry opening and the outermost face of column.
11 See architectural drawings for any precast concrete lintels that are required.
12 Lintels supporting exterior masonry shall be hot-dipped galvanized. See structural steel notes.
13 Lintels for openings in walls: These plans do not show the full scope of steel lintels required for new wall openings for doors, windows, ducts, louvers, etc. For masonry opening size and location of all new wall openings, see architectural and mechanical drawings. Do not scale openings. For steel lintel size for corresponding masonry opening, see notes above, unless otherwise noted on plans.
14 Shop drawing submittals for precast concrete lintels shall be designed and certified by a professional engineer licensed in the jurisdiction of the project. The lintels shall be designed to carry the code required gravity and lateral loads.

General Wood Notes:

1 Wood design is based on the AF&PA NDS, "National Design Specification for Wood Construction with Supplement", as specified in the code reference section of these general notes.
2 Stud bearing walls, shear walls, and roof and floor decks shall be framed with the member sizes and/or types at the spacings shown on plan. The contractor shall coordinate locations of all plumbing piping, HVAC ducting and recessed lighting fixtures, etc prior to layout to minimize interference that may require the altering or str

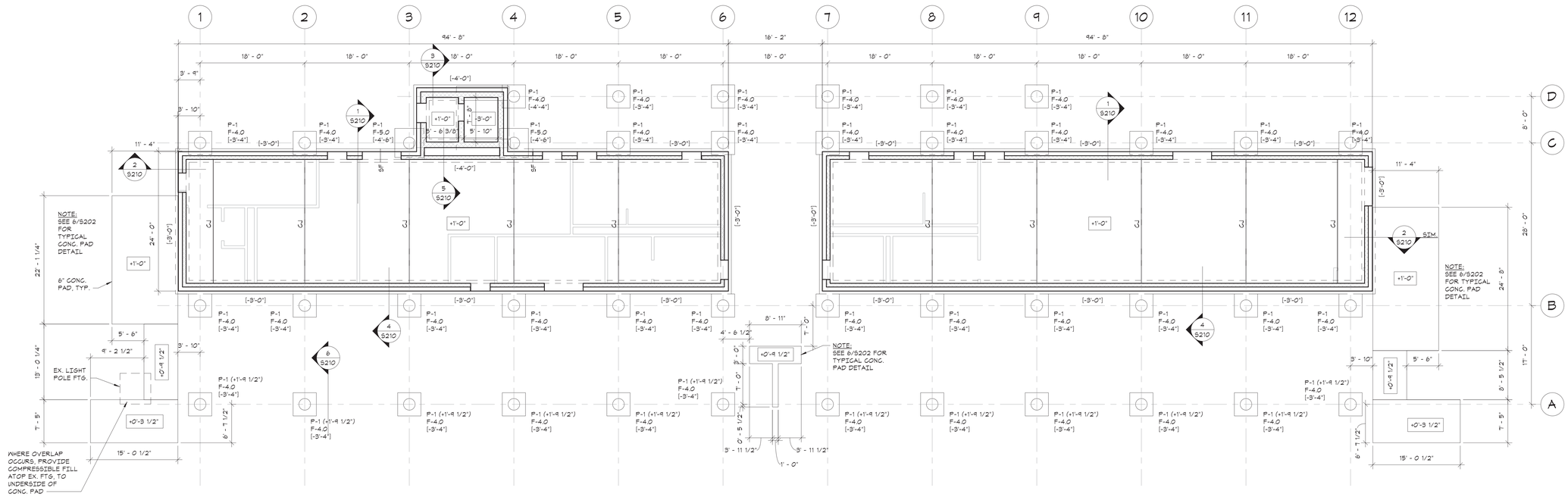

FOUNDATION AND FIRST FLOOR SLAB-ON-GRADE PLAN

1/8"=1'-0"

NORTH:

- TOP OF GRADE ELEVATION = 58'-6" = DATUM ELEVATION 0'-0".
- FLOOR CONSTRUCTION: 5" CONCRETE SLAB ON GRADE, REINFORCED WITH 6x6 - W1.4xW1.4 WELDED WIRE FABRIC, UNLESS OTHERWISE NOTED. FOR DETAILS, SEE "TYPICAL SLAB ON GRADE DETAILS".
- FOR FOUNDATION CONDITION AT EXTERIOR DOORS, SEE "TYPICAL DETAIL AT EXTERIOR DOORS".
- COORDINATE ALL PITS, TRENCHES, POCKETS, BRICK SHELVES, SLEEVES, PENETRATIONS AND INSERTS IN CONCRETE WALLS AND SLABS WITH ARCHITECTURAL AND MECHANICAL DRAWINGS.
- FOR MASONRY SHEAR WALL FOUNDATION INFORMATION, INCLUDING DOWELS BETWEEN FOUNDATIONS AND MASONRY WALLS, SEE "TYPICAL CONCRETE MASONRY WALL REINFORCEMENT DETAIL". PROVIDE DOWELS BETWEEN FOUNDATIONS AND MASONRY WALLS EQUAL TO SIZE AND SPACING OF MASONRY WALL VERTICAL REINFORCEMENT.
- CONTRACTOR SHALL FIELD VERIFY EXISTING CONDITIONS BEFORE PROCEEDING WITH ANY WORK.
- SEE GENERAL NOTES, FOR ADDITIONAL INFORMATION.

LEGEND:

- [+/- ....] INDICATES BOTTOM OF FOOTING ELEVATION FROM DATUM ELEVATION.
- (+/-...) INDICATES TOP OF PIER ELEVATION FROM DATUM ELEVATION.
- |+/-....| INDICATES TOP OF CONCRETE SLAB ELEVATION FROM DATUM ELEVATION. MAINTAIN FULL SLAB THICKNESS AT SLOPED AND DEPRESSED AREAS. SEE ARCHITECTURAL DRAWINGS FOR LOCATION AND EXTENT.
- "SF" INDICATES APPROXIMATE LOCATION OF STEPS IN FOOTINGS ON PLAN. COORDINATE LOCATION AND ELEVATION WITH SITE GRADING AND MECHANICAL, ELECTRICAL AND PLUMBING DRAWINGS. FOR DETAILS, SEE "TYPICAL STEPPED FOOTING DETAIL".
- "CJ" INDICATES APPROXIMATE LOCATION OF CONTROL/CONSTRUCTION JOINTS IN SLABS ON GRADE. FOR DETAILS, SEE "TYPICAL SLAB ON GRADE DETAILS".
- F-## INDICATES FOOTING TYPE. SEE "FOOTING SCHEDULE AND FOOTING DETAIL".
- P-# INDICATES PIER TYPE. SEE "PIER SCHEDULE AND PIER DETAILS". TOP OF PIER TO BE AT ELEVATION +1'-0" FROM DATUM, UNLESS OTHERWISE NOTED.

GREENWICH HS CARDINAL STADIUM PHASE 1

GREENWICH PUBLIC SCHOOLS
10 HILLSIDE ROAD
GREENWICH CT 06830

KG+D . ARCHITECTS PC
285 MAIN STREET MOUNT KISCO . NEW YORK . 10549
P:914.666.5900 KGDARCHITECTS.COM

The DiSalvo Engineering Group
Structural Engineers
83 Wooster Heights Road | Suite 200
Lee Farm Corporate Park | Danbury, CT 06810
(203) 490-4140 | www.tdeg.com

BUILDING PERMIT ISSUE

GENERAL NOTE :
ALL KIOSK RELATED CONSTRUCTION IS CONSIDERED ADD ALTERNATE #2

OWNERSHIP, USE AND ALTERATION OF DOCUMENTS:
The Client acknowledges that the documents, drawings, specifications including electronic media files are instruments of The DiSalvo Engineering Group's services and shall remain the property of The DiSalvo Engineering Group. The Client or any person or entity that acquires or obtains the drawings and specifications from or through The Client shall not use them on any other project, shall not modify, alter or change the drawings and specifications without written authorization from The DiSalvo Engineering Group. Furthermore, The Client agrees to the fullest extent permitted by law to indemnify and hold harmless The DiSalvo Engineering Group, its officers, directors and employees from any and all claims, suits, liability, demands or costs, including attorney fees arising out of or resulting therefrom.

Professional Seal

No.	Date	Issue
4	12/02/20	BUILDING PERMIT ISSUE
3	11/10/20	PHASE 1 CONSTRUCTION DOCUMENTS
2	08/12/20	ISSUE FOR PERMIT
1	08/29/19	DESIGN DEVELOPMENT

Sheet Title
FIRST FLOOR SLAB-ON-GRADE AND FOUNDATION PLAN

Job No.	Date
18144.00	11-01-2018
Scale: AS NOTED	Drawn / Checked: JM EM

Sheet Number
S101

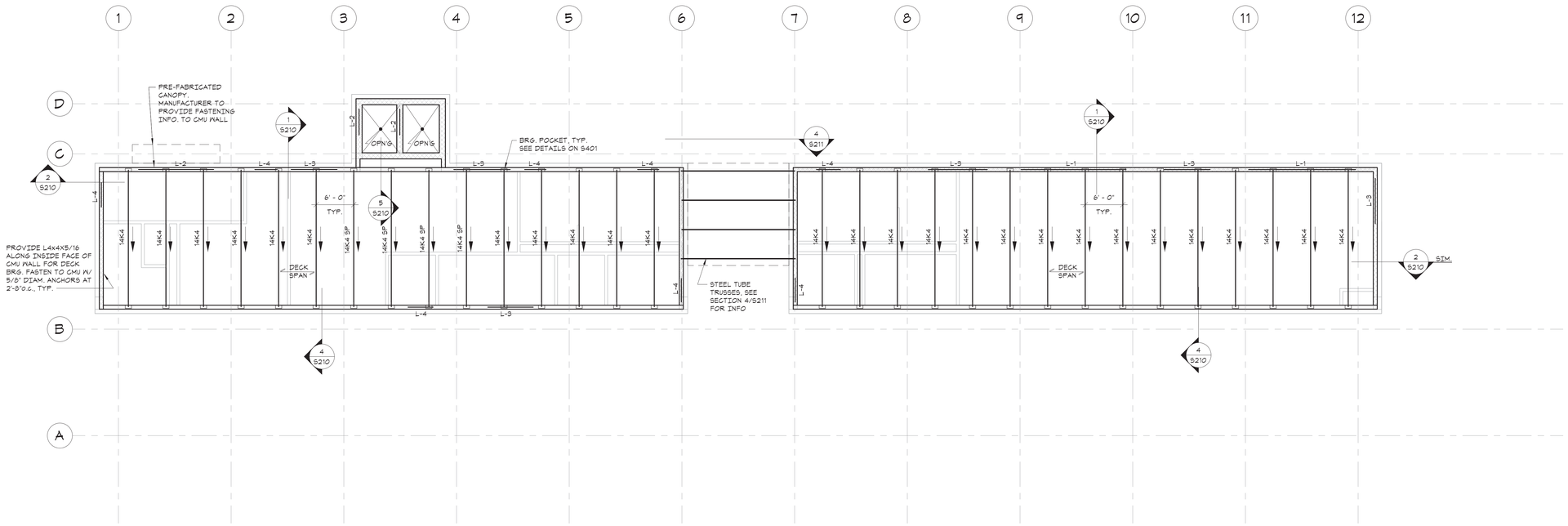

ROOF FRAMING PLAN

1/8"=1'-0"

NORTH:

- ROOF DECK CONSTRUCTION: SEE GENERAL NOTES, DRAWING S100.
- STEEL JOIST ROOF FRAMING SLOPES, SEE ARCHITECTURAL DRAWINGS FOR ELEVATIONS.
- ALL FRAMING SHALL BE EQUALLY SPACED BETWEEN COLUMN LINES, UNLESS OTHERWISE INDICATED.
- COORDINATE SIZE AND LOCATION OF ALL ROOF PENETRATIONS WITH ARCHITECTURAL, MECHANICAL, AND ELECTRICAL DRAWINGS. ALL ROOF PENETRATIONS SHALL BE REVIEWED BY THE ENGINEER PRIOR TO FABRICATION AND INSTALLATION OF PENETRATION FRAMING ELEMENTS.
- REINFORCE STEEL JOISTS AT SUPPORT OF PIPES/CONDUITS AND ANY CONCENTRATED LOADS AT TOP OR BOTTOM CHORDS, AS PER "TYPICAL JOIST REINFORCING DETAIL".
- JOISTS DESIGNATED "SP" ARE TO BE DESIGNED FOR THE STANDARD SJI LOADING, PLUS SNOW DRIFT LOADING AS INDICATED ON THE ROOF SNOW DRIFT PLAN.
- "L-1" INDICATES W14X38 STEEL LINTEL WITH 5/16" STEEL PLATE.
- "L-2" INDICATES W8X24 STEEL LINTEL WITH 5/16" STEEL PLATE.
- "L-3" INDICATES 2L6X3 1/2X3/8 STEEL LINTEL.
- "L-4" INDICATES 2L4X3 1/2X5/16 STEEL LINTEL.
- FOR MASONRY SHEARWALL INFORMATION, SEE "TYPICAL CONCRETE MASONRY DETAILS" DRAWING.
- SEE GENERAL NOTES FOR ADDITIONAL INFORMATION.

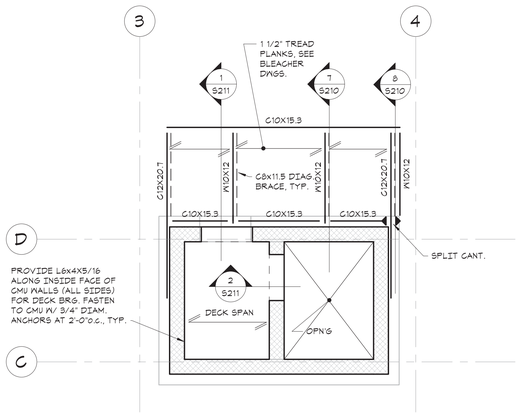

PRESS BOX FLOOR FRAMING PLAN

1/4"=1'-0"

NORTH:

- TOP OF PRESS BOX FLOOR ELEVATION = 30'-3 3/4".
- TOP OF STEEL ELEVATION (UNDERSIDE OF PLANK) = 30'-2 1/4" UNLESS OTHERWISE NOTED THUS (+/-X'-XX") FROM ELEVATION 30'-3 3/4".
- TYPICAL FLOOR CONSTRUCTION: 4 1/2" COMPOSITE CONCRETE SLAB = 2 1/2" NORMAL WEIGHT CONCRETE ON 2" COMPOSITE DECK REINFORCED WITH 6x6-W2.0xW2.0 WWF AS PER "TYPICAL COMPOSITE BEAM FLOOR CONSTRUCTION DETAIL" AND GENERAL NOTES.
- FOR MASONRY SHEARWALL INFORMATION, SEE "TYPICAL CONCRETE MASONRY DETAILS" DRAWING.
- SEE GENERAL NOTES FOR ADDITIONAL INFORMATION.

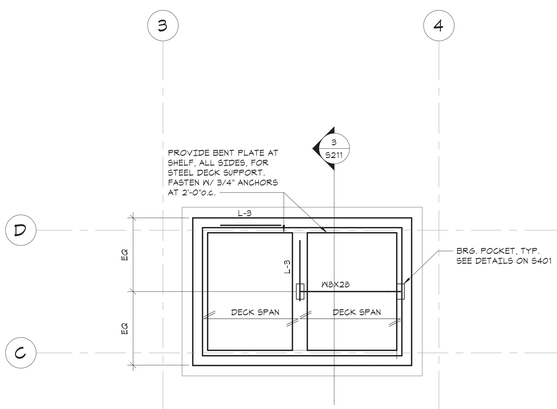

ELEVATOR SHAFT ROOF FRAMING PLAN

1/4"=1'-0"

NORTH:

- ROOF DECK CONSTRUCTION: SEE GENERAL NOTES, DRAWING S100.
- FOR MASONRY SHEARWALL INFORMATION, SEE "TYPICAL CONCRETE MASONRY DETAILS" DRAWING.
- "L-3" INDICATES 2L6X3 1/2X3/8 STEEL LINTEL.
- SEE GENERAL NOTES FOR ADDITIONAL INFORMATION.

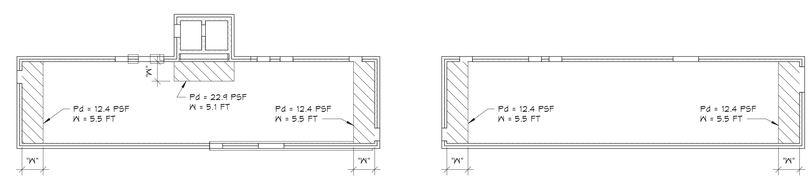

ROOF SNOW DRIFT PLAN

1/16"=1'-0"

NORTH:

- THE VALUES SHOWN ON LOADING PLAN INDICATE Pd, THE SNOW DRIFT SURCHARGE LOAD AND "W". THE DRIFT WIDTH. THE TOTAL SNOW LOAD IS THE COMBINATION OF Pf (FLAT ROOF SNOW LOAD) + Pd. REFER TO THE BUILDING CODE AND DRIFT DIAGRAM BELOW FOR FURTHER INFORMATION.

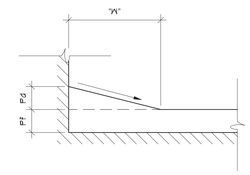

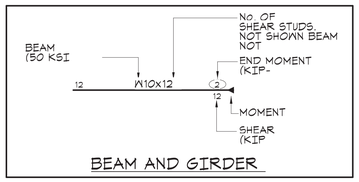

BEAM AND GIRDER

GREENWICH HS CARDINAL STADIUM PHASE 1

GREENWICH PUBLIC SCHOOLS
10 HILLSIDE ROAD
GREENWICH CT 06830

KG+D listen imagine build
KG+D . ARCHITECTS PC
285 MAIN STREET MOUNT KISCO . NEW YORK . 10549
P:914.666.5900 KGDARCHITECTS.COM

The DiSalvo Engineering Group
Structural Engineers
83 Wooster Heights Road | Suite 200
Lee Farm Corporate Park | Danbury, CT 06810
(203) 490-4140 | www.tdeg.com

BUILDING PERMIT ISSUE

GENERAL NOTE :
ALL KIOSK RELATED CONSTRUCTION IS CONSIDERED ADD ALTERNATE #2

OWNERSHIP, USE AND ALTERATION OF DOCUMENTS:
The Client acknowledges that the documents, drawings, specifications including electronic media files are instruments of The DiSalvo Engineering Group's services and shall remain the property of The DiSalvo Engineering Group. The Client or any person or entity that acquires or obtains the drawings and specifications from or through The Client shall not use them on any other project, shall not modify, alter or change the drawings and specifications without written authorization from The DiSalvo Engineering Group. Furthermore, The Client agrees to the fullest extent permitted by law to indemnify and hold harmless The DiSalvo Engineering Group, its officers, directors and employees from any and all claims, suits, liability, demands or costs, including attorney fees arising out of or resulting therefrom.

Professional Seal
STATE OF CONNECTICUT
ISSUE 8
LICENSED PROFESSIONAL ENGINEER

No.	Date	Issue
4	12/02/20	BUILDING PERMIT ISSUE
3	11/10/20	PHASE 1 CONSTRUCTION DOCUMENTS
2	08/12/20	ISSUE FOR PERMIT
1	08/29/19	DESIGN DEVELOPMENT

Sheet Title

PRESS BOX AND ROOF FRAMING PLANS

Job No.	Date
18144.00	11-01-2018
Scale	Drawn / Checked
AS NOTED	JM EM

Sheet Number

S102

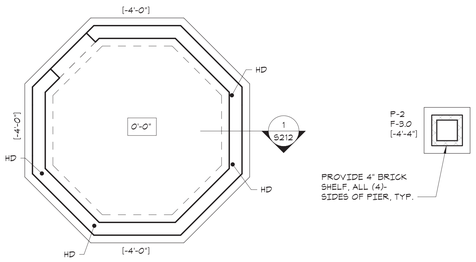

KIOSK FOUNDATION AND FIRST FLOOR SLAB-ON-GRADE PLAN

1/4"=1'-0"

NORTH:

- TOP OF KIOSK FIRST FLOOR SLAB ELEVATION = DATUM ELEVATION 0'-0".
- FLOOR CONSTRUCTION: 5" CONCRETE SLAB ON GRADE, REINFORCED WITH 6x6 - W1.4xW1.4 WELDED WIRE FABRIC, UNLESS OTHERWISE NOTED. FOR DETAILS, SEE "TYPICAL SLAB ON GRADE DETAILS".
- FOR FOUNDATION CONDITION AT EXTERIOR DOORS, SEE "TYPICAL DETAIL AT EXTERIOR DOORS".
- COORDINATE ALL PITS, TRENCHES, POCKETS, BRICK SHELVES, SLEEVES, PENETRATIONS AND INSERTS IN CONCRETE WALLS AND SLABS WITH ARCHITECTURAL AND MECHANICAL DRAWINGS.
- SEE GENERAL NOTES, FOR ADDITIONAL INFORMATION.

LEGEND:

- (+/- ...) INDICATES BOTTOM OF FOOTING ELEVATION FROM DATUM ELEVATION.
- +/-... INDICATES TOP OF CONCRETE SLAB ELEVATION FROM DATUM ELEVATION. MAINTAIN FULL SLAB THICKNESS AT SLOPED AND DEPRESSED AREAS. SEE ARCHITECTURAL DRAWINGS FOR LOCATION AND EXTENT.
- F-## INDICATES FOOTING TYPE. SEE "FOOTING SCHEDULE AND FOOTING DETAIL".
- P-# INDICATES PIER TYPE. SEE "PIER SCHEDULE AND PIER DETAILS".
- "HD" INDICATES APPROXIMATE LOCATION OF SIMPSON HDU4-SDS2.5 HOLDOWN. PROVIDE (2)-STUD AT EACH HOLDOWN LOCATION.

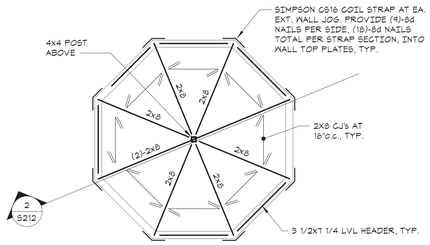

KIOSK CEILING FRAMING PLAN

1/4"=1'-0"

NORTH:

- ROOF CONSTRUCTION: SEE GENERAL NOTES, DRAWING S100.
- ALL EXTERIOR WALLS TO BE FRAMED AS LOAD BEARING SHEARWALLS. WOOD SHEATHING PANELS SHALL BE 1/2" THICK, WITH EDGE NAILING TO BE 8d COMMON NAILS AT 4"o.c. PROVIDE BLOCKING AT SHEARWALL PANEL EDGES.
- SEE GENERAL NOTES FOR ADDITIONAL INFORMATION.

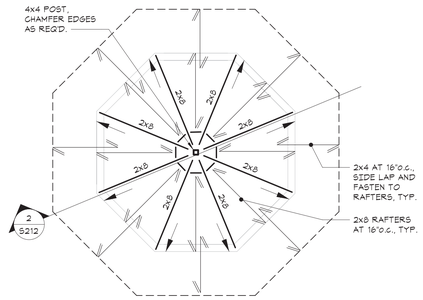

KIOSK ROOF FRAMING PLAN

1/4"=1'-0"

NORTH:

- ROOF IS SLOPED, SEE ARCHITECTURAL DRAWINGS FOR ELEVATIONS AND PITCH.
- ROOF SHEATHING SHALL BE 5/8" THICK WOOD SHEATHING PANELS. SEE GENERAL NOTES.
- SEE GENERAL NOTES FOR ADDITIONAL INFORMATION.

GREENWICH HS CARDINAL STADIUM PHASE 1

GREENWICH PUBLIC SCHOOLS
10 HILLSIDE ROAD
GREENWICH CT 06830

KG+D listen imagine build
KG+D . ARCHITECTS PC
285 MAIN STREET MOUNT KISCO . NEW YORK . 10549
P:914.666.5900 KGDARCHITECTS.COM

The Di Salvo Engineering Group
Structural Engineers
83 Wooster Heights Road | Suite 200
Lee Farm Corporate Park | Danbury, CT 06810
(203) 490-4140 | www.tdeg.com

BUILDING PERMIT ISSUE

GENERAL NOTE :
ALL KIOSK RELATED CONSTRUCTION IS CONSIDERED ADD ALTERNATE #2

OWNERSHIP, USE AND ALTERATION OF DOCUMENTS:
The Client acknowledges that the documents, drawings, specifications including electronic media files are instruments of The DiSalvo Engineering Group's services and shall remain the property of The DiSalvo Engineering Group. The Client or any person or entity that acquires or obtains the drawings and specifications from or through The Client shall not use them on any other project, shall not modify, alter or change the drawings and specifications without written authorization from The DiSalvo Engineering Group. Furthermore, The Client agrees to the fullest extent permitted by law to indemnify and hold harmless The DiSalvo Engineering Group, its officers, directors and employees from any and all claims, suits, liability, demands or costs, including attorney fees arising out of or resulting therefrom.

Professional Seal
STATE OF CONNECTICUT
TREVOR B. DI SALVO
CT LICENSE
PROFESSIONAL ENGINEER

No.	Date	Issue
2	12/02/20	BUILDING PERMIT ISSUE
1	11/10/20	PHASE 1 CONSTRUCTION DOCUMENTS

Sheet Title

KIOSK FDN & S.O.G. PLAN AND FRAMING PLANS

Job No.	Date
18144.00	11-01-2018
Scale: AS NOTED	Drawn / Checked: CGB / EM

Sheet Number

S103

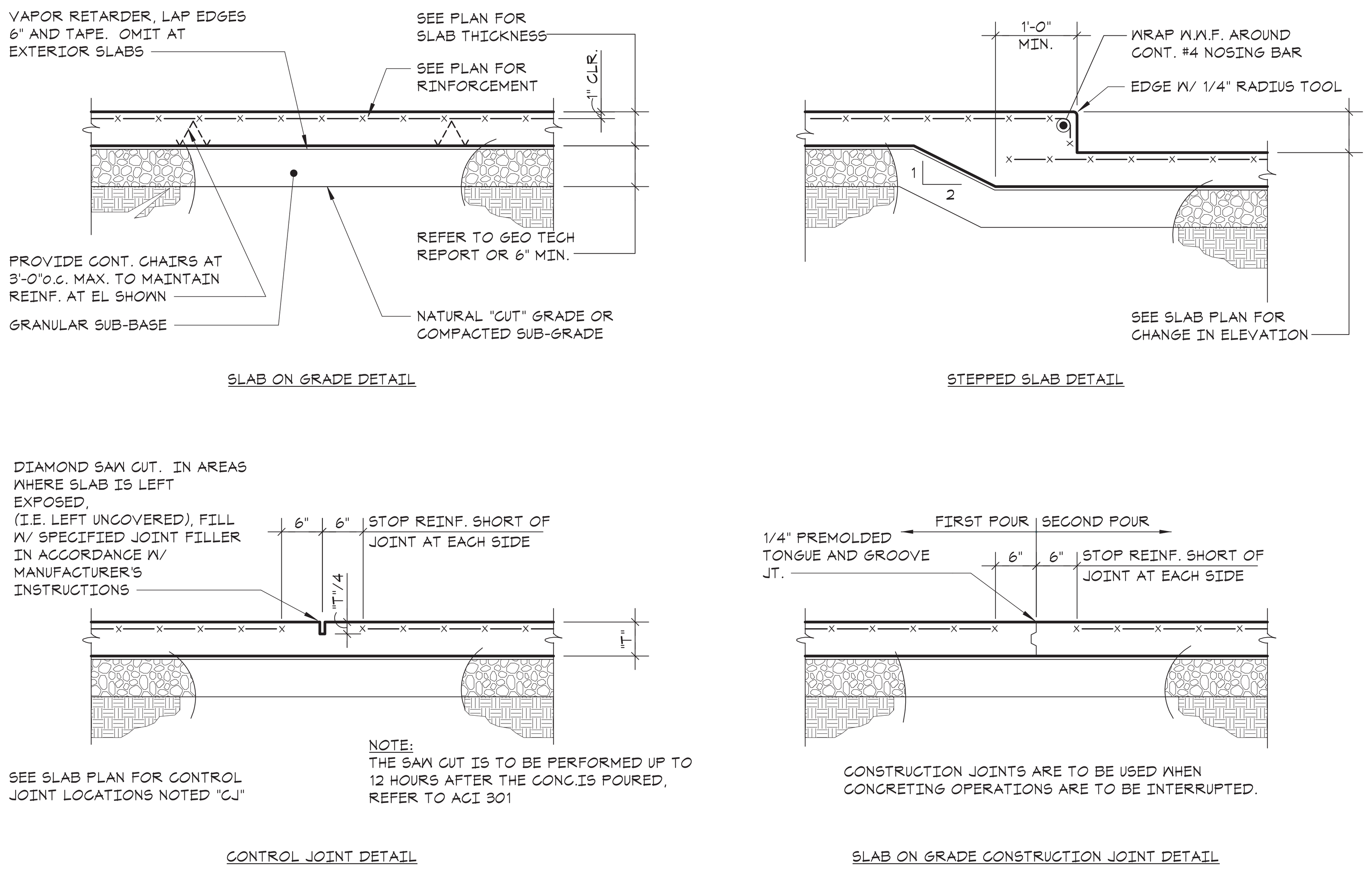

1 TYPICAL SLAB ON GRADE DETAIL
NO SCALE

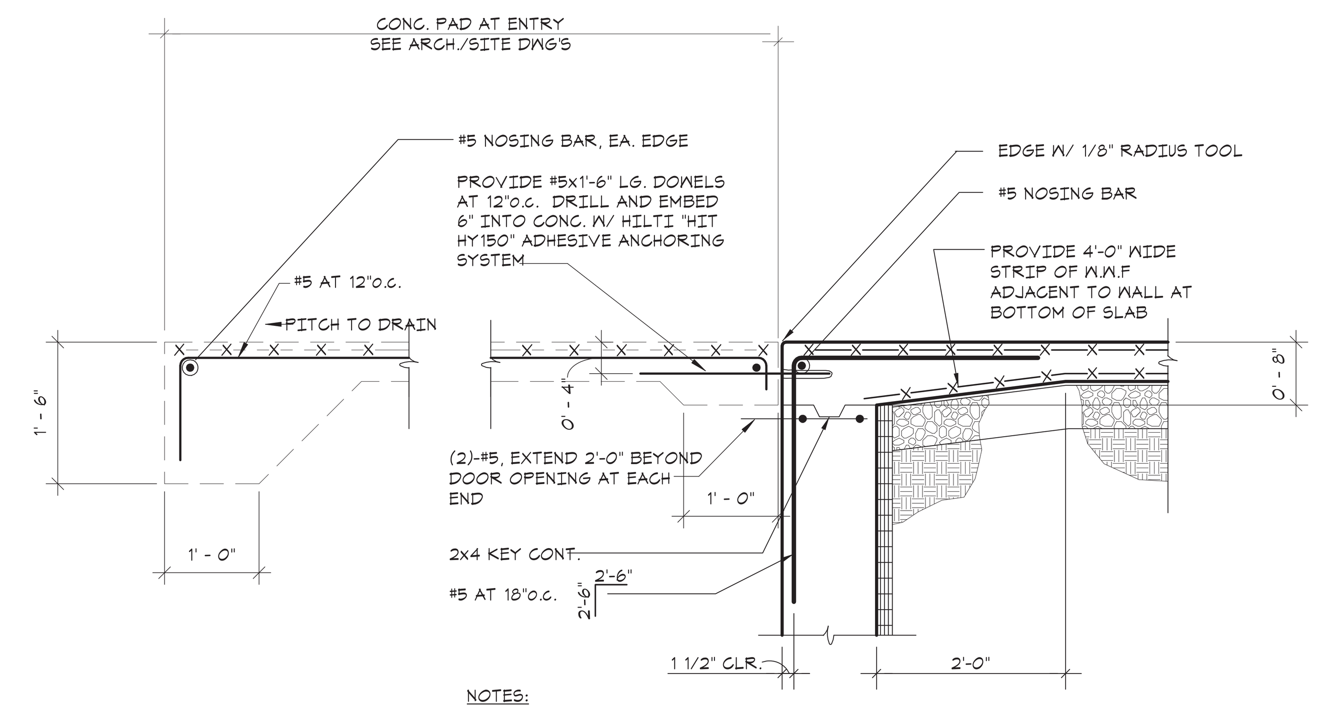

NOTES:

- SEE APPROPRIATE SECTION FOR REMAINDER OF FOUNDATION INFORMATION NOT REPEATED HERE.
- SEE ARCHITECTURAL DRAWINGS FOR LOCATION AND EXTENT OF EXTERIOR DOORS.

2 TYPICAL FOUNDATION WALL DETAIL AT EXTERIOR DOORS
NO SCALE

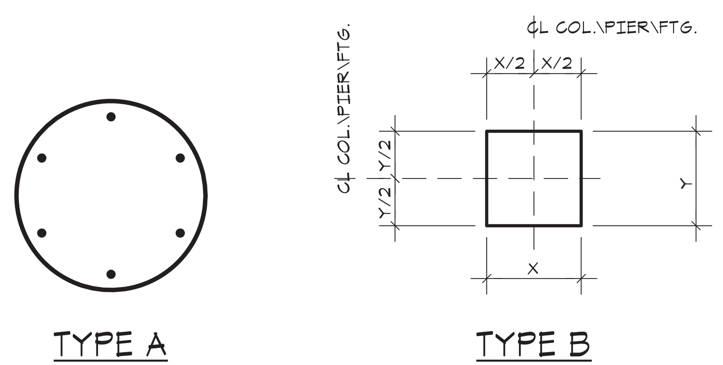

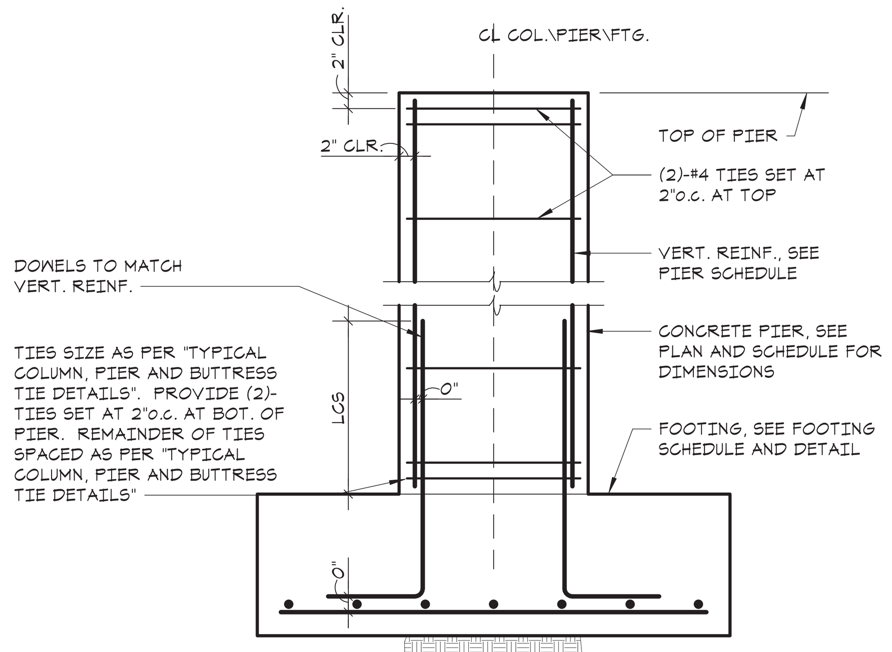

PIER SCHEDULE

MARK	TYPE	"X" E-W DIR.	"Y" N-S DIR.	VERTICAL REINF.	REMARKS
P-1	A	24"	2'-0"	(6)-#6	24" DIAMETER, ROUND PIER
P-2	B	24"	2'-0"	(8)-#6	PROVIDE 4" SHELF, (4)-SIDES. SEE ARCH DWG'S FOR SHELF AND STEM ELEVATIONS

3 TYPICAL PIER SCHEDULE AND PIER DETAILS
NO SCALE

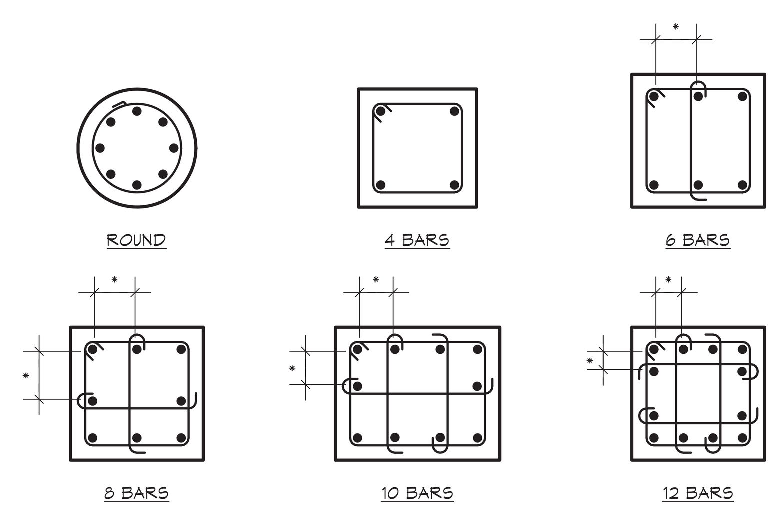

TYPICAL TIE ARRANGEMENT

"*" INDICATES WHEN 6" OR LESS OMIT INTERIOR TIE.

MAXIMUM SPACING OF TIES

VERTICAL BAR SIZE	SIZE AND SPACING OF TIES		
	#3	#4	#5
#5	10"	-	-
#6	12"	-	-
#7	14"	-	-
#8	16"	16"	-
#9	18"	18"	-
#10	18"	20"	-
#11	†	22"	22"
#14	†	24"	27"
#18	†	24"	30"

"*" INDICATES MAX. SPACING NOT TO EXCEED LEAST DIMENSION OF COMPRESSION MEMBER.

† INDICATES #3 TIES NOT PERMITTED.

NOTES:
1. THE VERTICAL BARS SHALL BE SPACED AROUND THE PERIMETER SO AS TO ACHIEVE APPROXIMATELY EQUAL SPACING.
2. SEE ARCHITECTURAL DRAWINGS FOR LOCATION AND EXTENT OF EXTERIOR DOORS.
3. TIES SHALL BE ARRANGED SUCH THAT EVERY CORNER AND ALTERNATE VERTICAL BAR SHALL HAVE LATERAL SUPPORT PROVIDED BY THE CORNER OF A TIE WITH AN INCLUDED ANGLE OF NOT MORE THAN 135 DEGREES AND NO BAR SHALL BE FURTHER THAN 6" CLEAR ON EACH SIDE ALONG THE TIE FROM SUCH A LATERALLY SUPPORTED BAR.
4. TIES SHALL BE LOCATED VERTICALLY NOT MORE THAN ONE-HALF A TIE SPACING ABOVE THE TOP OF FOOTING OR SLAB IN ANY STORY, AND SHALL BE SPACED AS PROVIDED HEREIN TO NOT MORE THAN ONE-HALF A TIE SPACING BELOW THE LOWEST HORIZONTAL REINFORCEMENT IN SLAB OR DROP PANEL ABOVE.
5. WHERE BEAMS OR BRACKETS FRAME FROM FOUR DIRECTIONS INTO A COLUMN, PIER OR BUTRESS, TERMINATION OF TIES NOT MORE THAN 3" BELOW REINFORCEMENT IN SHALLOWEST OF SUCH BEAMS OR BRACKETS SHALL NOT BE PERMITTED.
6. SEE THE GENERAL NOTES ON DRAWING S1 FOR THE MINIMUM CONCRETE COVER REQUIREMENTS FOR REINFORCEMENT.
7. WHERE PIERS ARE ADJACENT TO FOUNDATION WALLS, PIERS ARE TO BE POURED MONOLITHICALLY WITH WALLS, PIER REINFORCING SHALL EXTEND WITHIN 2" OF OPPOSITE FACE WALL.

4 TYPICAL COLUMN, PIER AND BUTTRESS TIE DETAILS
NO SCALE

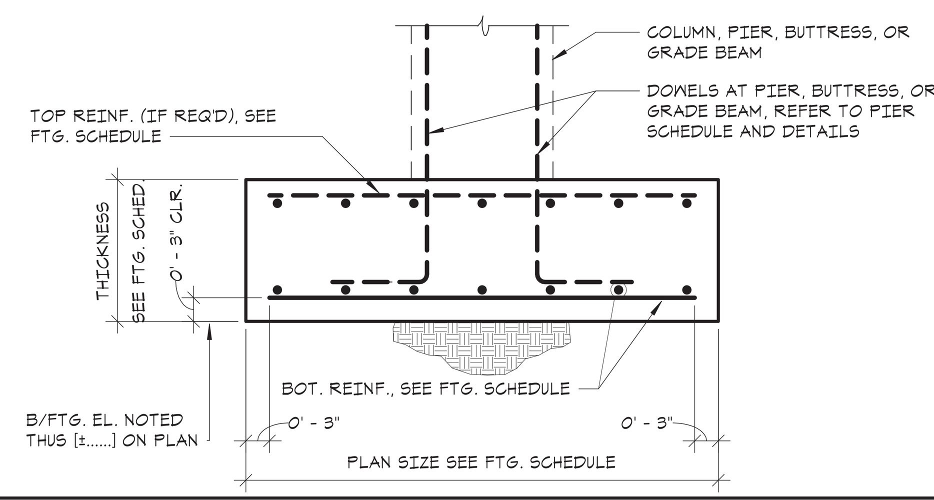

FOOTING SCHEDULE
(ALLOWABLE BEARING PRESSURE: 4000 PSF)

MARK	PLAN SIZE		THICKNESS	BOTTOM REINF.		REMARKS
	N-S	E-W		N-S	E-W	
F-3.0	3'-0"	3'-0"	1'-4"	(4)-#5	(4)-#5	
F-4.0	4'-0"	4'-0"	1'-4"	(5)-#5	(5)-#5	
F-5.0	5'-0"	5'-0"	1'-6"	(7)-#5	(7)-#5	

NOTES:
1. REFER TO FOOTING DETAILS AND FOUNDATION NOTES IN USING THIS SCHEDULE.
2. "*" PROVIDE TOP REINFORCING IN ADDITION TO BOTTOM REINFORCING. TOP REINFORCING SHALL BE PLACED 2" CLEAR FROM TOP OF FOOTING AND SHALL BE EQUAL TO SIZE AND SPACING OF BOTTOM REINFORCING.
3. CENTERLINE OF SHEAR WALL FOOTINGS SHALL BE LOCATED ON CENTERLINE OF SHEAR WALL AND 1'-0" IN FROM END OF SHEAR WALL. PROVIDE DOWELS FROM FOOTINGS INTO SHEAR WALL CMU OR CONCRETE FOUNDATION WALLS AS PER NOTE "A" ON DETAIL 12/S202.
4. WHERE SHEAR WALL FOOTINGS OVERLAP WITH COLUMN FOOTINGS, COMBINE THE TWO FOOTINGS INCLUDING THE FULL AMOUNT OF REINFORCEMENT. ALIGN TOPS OF FOTTINGS.

7 4000 PSF FOOTING SCHEDULE AND DETAIL
NO SCALE

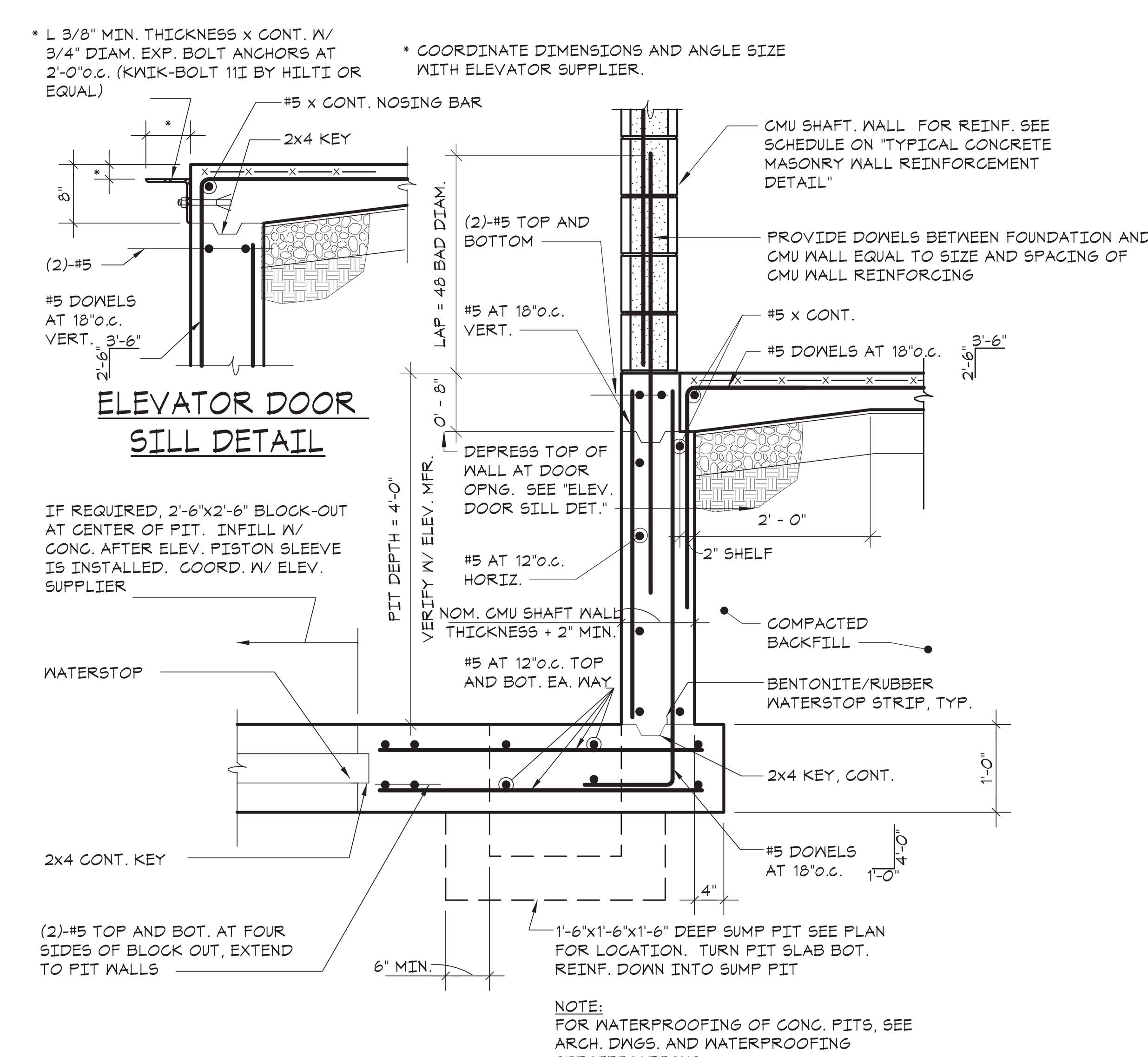

NOTE:
FOR WATERPROOFING OF CONC. PITS, SEE ARCH. DWGS. AND WATERPROOFING SPECIFICATIONS.

6 TYPICAL ELEVATOR PIT DETAIL
NO SCALE

GREENWICH HS CARDINAL STADIUM PHASE 1

GREENWICH PUBLIC SCHOOLS
10 HILLSIDE ROAD
GREENWICH CT 06830

KG+D listen imagine build
KG+D . ARCHITECTS PC
285 MAIN STREET MOUNT KISCO . NEW YORK . 10549
P:914.666.5900 KGDARCHITECTS.COM

The Di Salvo Engineering Group
Structural Engineers
83 Wooster Heights Road | Suite 200
Lee Farm Corporate Park | Danbury, CT 06810
(203) 490-4140 | www.tdeg.com

BUILDING PERMIT ISSUE

GENERAL NOTE :
ALL KIOSK RELATED CONSTRUCTION IS CONSIDERED ADD ALTERNATE #2

OWNERSHIP, USE AND ALTERATION OF DOCUMENTS:
The Client acknowledges that the documents, drawings, specifications including electronic media files are instruments of The DiSalvo Engineering Group's services and shall remain the property of The DiSalvo Engineering Group. The Client or any person or entity that acquires or obtains the drawings and specifications from or through The Client shall not use them on any other project, shall not modify, alter or change the drawings and specifications without written authorization from The DiSalvo Engineering Group. Furthermore, The Client agrees to the fullest extent permitted by law to indemnify and hold harmless The DiSalvo Engineering Group, its officers, directors and employees from any and all claims, suits, liability, demands or costs, including attorney fees arising out of or resulting therefrom.

Professional Seal

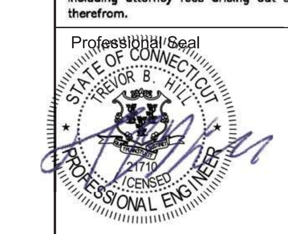

No.	Date	Issue
4	12/02/20	BUILDING PERMIT ISSUE
3	11/10/20	PHASE 1 CONSTRUCTION DOCUMENTS
2	08/12/20	ISSUE FOR PERMIT
1	08/29/19	DESIGN DEVELOPMENT

Sheet Title
FOUNDATION SCHEDULES AND TYPICAL DETAILS

Job No.	Date
18144.00	11-01-2018
Scale: AS NOTED	Drawn / Checked: CGB TBH

Sheet Number
S201

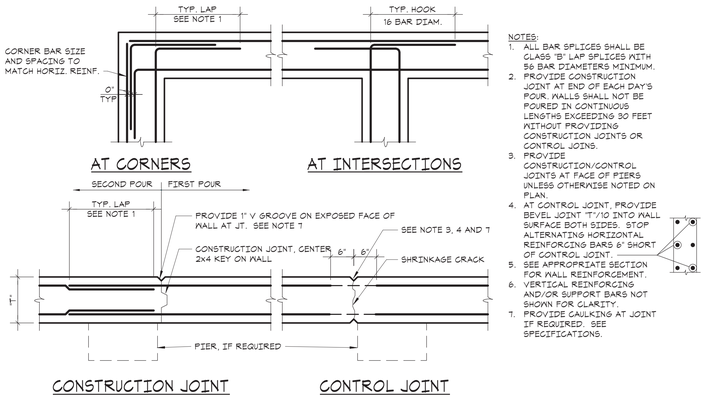

NOTES:

1. ALL BAR SPLICES SHALL BE CLASS "B" LAP SPLICES WITH 56 BAR DIAMETERS MINIMUM.
2. PROVIDE CONSTRUCTION JOINT AT END OF EACH DAY'S POUR. WALLS SHALL NOT BE POURED IN CONTINUOUS LENGTHS EXCEEDING 30 FEET WITHOUT PROVIDING CONSTRUCTION JOINTS OR CONTROL JOINS.
3. PROVIDE CONSTRUCTION/CONTROL JOINTS AT FACE OF PIERS UNLESS OTHERWISE NOTED ON PLAN.
4. AT CONTROL JOINT, PROVIDE BEVEL JOINT "T"/10 INTO WALL SURFACE BOTH SIDES. STOP ALTERNATING HORIZONTAL REINFORCING BARS 6" SHORT OF CONTROL JOINT.
5. SEE APPROPRIATE SECTION FOR WALL REINFORCEMENT.
6. VERTICAL REINFORCING AND/OR SUPPORT BARS NOT SHOWN FOR CLARITY.
7. PROVIDE CAULKING AT JOINT IF REQUIRED. SEE SPECIFICATIONS.

1 TYPICAL CONCRETE WALL CONSTRUCTION DETAIL
NO SCALE

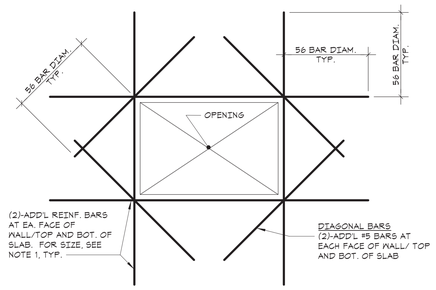

NOTES:

1. AT WALLS, ADDITIONAL REINFORCING SIZE SHALL MATCH HORIZONTAL AND VERTICAL REINFORCING. AT SLABS USE #5 BARS.
2. THIS DETAIL APPLIES AT ALL OPENINGS 12"x12" AND LARGER. DETAIL IS SIMILAR AT ALL CIRCULAR OPENINGS 12" AND LARGER.
3. COORDINATE ALL OPENING SIZES AND LOCATIONS WITH ARCHITECTURAL AND MECHANICAL DRAWINGS.

2 TYPICAL SLAB/WALL PENETRATION REINFORCING DETAIL
NO SCALE

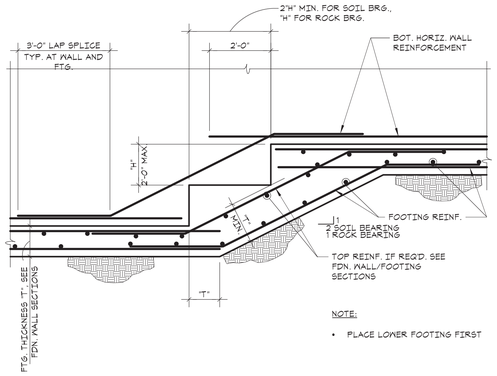

NOTE:

- PLACE LOWER FOOTING FIRST

3 TYPICAL STEPPED FOOTING DETAIL
NO SCALE

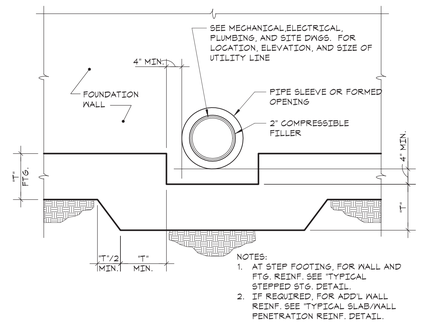

NOTES:

1. AT STEP FOOTING, FOR WALL AND FTG. REINF. SEE "TYPICAL STEPPED STG. DETAIL.
2. IF REQUIRED, FOR ADD'L WALL REINF. SEE "TYPICAL SLAB/WALL PENETRATION REINF. DETAIL.

4 TYPICAL STEP FOOTING DETAIL AT WALL PIPE PENETRATION
NO SCALE

SCHEDULE OF EMBEDMENT AND SPLICE LENGTH

BAR SIZE	COMPRESSION		TENSION (f'c = 3000 psi)								TENSION (f'c = 4000 psi)							
	EMBED. LENGTH	LAP SPLICE LENGTH	EMBEDMENT LENGTH				LAP SPLICE LENGTH				EMBEDMENT LENGTH				LAP SPLICE LENGTH			
			TOP BARS		OTHER BARS		TOP BARS		OTHER BARS		TOP BARS		OTHER BARS		TOP BARS		OTHER BARS	
			CATEGORY SEE NOTE 1		CATEGORY SEE NOTE 1		CATEGORY SEE NOTE 1		CATEGORY SEE NOTE 1		CATEGORY SEE NOTE 1		CATEGORY SEE NOTE 1		CATEGORY SEE NOTE 1		CATEGORY SEE NOTE 1	
			I	II	I	II	I	II	I	II	I	II	I	II	I	II	I	II
#3	9"	12"	22"	33"	17"	25"	24"	43"	23"	33"	19"	28"	15"	22"	25"	37"	20"	29"
#4	11"	15"	29"	43"	22"	33"	38"	56"	29"	43"	25"	37"	19"	29"	33"	49"	25"	38"
#5	14"	19"	36"	54"	28"	42"	47"	71"	37"	55"	31"	47"	24"	36"	41"	62"	32"	47"
#6	17"	23"	43"	65"	33"	50"	56"	85"	43"	65"	37"	56"	29"	43"	49"	73"	38"	56"
#7	20"	27"	63"	94"	48"	72"	82"	123"	63"	94"	54"	81"	42"	63"	71"	106"	55"	82"
#8	22"	30"	72"	107"	55"	83"	94"	140"	72"	108"	62"	93"	48"	72"	81"	121"	63"	94"
#9	25"	34"	81"	121"	62"	93"	106"	158"	81"	121"	70"	105"	54"	81"	91"	137"	71"	106"
#10	28"	38"	91"	136"	70"	105"	119"	177"	91"	137"	79"	118"	61"	91"	103"	154"	80"	119"
#11	31"	43"	101"	151"	78"	116"	132"	197"	102"	151"	87"	131"	67"	101"	114"	171"	88"	132"
#14	38"	NP	121"	181"	93"	140"	NP	NP	NP	NP	105"	157"	81"	121"	NP	NP	NP	NP
#18	50"	NP	161"	242"	124"	186"	NP	NP	NP	NP	140"	209"	108"	161"	NP	NP	NP	NP
SEE NOTE 2	LCE	LCS	LTE				LTS				LTE				LTS			

NOTES:

1. THIS SCHEDULE INCLUDES EMBEDMENT AND SPLICE LENGTHS AS PER ACI 318-02 AND SATISFY THE PROJECT REQUIREMENTS AND THE FOLLOWING CRITERIA. SPECIFIED YIELD STRENGTH OF REINFORCEMENT, f_y = 60,000 psi NORMAL WEIGHT CONCRETE, w = 150 pcf, TENSION EMBEDMENT AND LAP SPLICE LENGTHS ARE DIVIDED INTO TWO CATEGORIES WHICH SHALL BE APPLIED AS FOLLOWS: CATEGORY 1: CLEAR SPACING OF BARS BEING DEVELOPED OR SPLICED NOT LESS THAN THE BAR DIAMETER, CLEAR COVER NOT LESS THAN THE BAR DIAMETER, AND STIRRUPS OR TIES THROUGHOUT THE DEVELOPMENT NOT LESS THAN THE CODE MINIMUM; OR, CLEAR SPACING OF BARS BEING DEVELOPED OR SPLICED, NOT LESS THAN 2x THE BAR DIAMETER AND CLEAR COVER NOT LESS THAN THE BAR DIAMETER. CATEGORY 2: ALL OTHER CASES.
2. NOTATION USED IN SECTION AND DETAILS FOR VARIOUS EMBEDMENT AND SPLICE LENGTH REREQUIREMENTS.
3. USE COMPRESSION LAP SPLICE LENGTH (LCS) AT ALL COMPRESSION MEMBER SPLICE LOCATIONS NOT SPECIFICALLY DETAILED AND UNLESS INDICATED OTHERWISE ON PLANS OR DETAILS. USE TENSION SPLICE FOR ALL OTHER SPLICES (UNLESS OTHERWISE NOTED ON DWGS).
4. THE STANDARD COMPRESSION LAP SPLICE IS (0.0005 x REINFORCED YIELD STRENGTH x THE BAR DIAMETER). THE STANDARD TENSION LAP SPLICE CLASS B IS 1.3 x THE DEVELOPMENT LENGTH. THE CONTRACTOR MAY SUBMIT LESSER SPLICE LENGTHS FOR REVIEW AND APPROVAL AT THE SAME TIME PROVIDING THE FOLLOWING INFORMATION.
   - A DETAILS PREPARED AND SUBMITTED BY THE CONTRACTOR INDICATING LOCATION AND PROPOSED LAYOUT OF REBARS AND LENGTH OF SPLICES.
   - B WHERE THE SIZE AND NUMBER OF TIES OR SPIRALS PERMITS THE REDUCTION OF LAP LENGTH, THOSE BARS SHALL BE INDICATED ON THE DETAILS.
   - C WHERE COMPUTED STRESS VALUES PERMIT THE REDUCTION OF LAP LENGTH, COMPUTATIONS SHALL BE SUBMITTED FOR REVIEW
   - D THE APPLICABLE SECTION OF THE ACI 318-95 CODE PERMITTING THE LESSER SPLICE LENGTH SHALL BE INDICATED ON THE SUBMITTED MATERIAL.
5. TOP BARS ARE HORIZONTAL BARS PLACED SO THAT MORE THAN 12" OF CONCRETE IS CAST ON THE MEMBER BELOW THE BAR.
6. WHERE BARS OF DIFFERENT SIZE ARE TO BE SPLICED, THE SPLICE LENGTH FOR ALL BARS SHALL BE THAT REQUIRED FOR THE LARGEST.
7. "NP" INDICATES NOT PERMITTED. BARS LARGER THAN NO. 11 SHALL NOT BE SPLICED EXCEPT AS FOLLOWS: TO #11 BARS IN COMPRESSION. USE LARGER OF THE DEVELOPMENT LENGTH OF THE LARGER BAR OR THE SPLICE LENGTH OF THE SMALLER BAR (51" FOR #14 AND 68" FOR #18).

5 SCHEDULE OF EMBEDMENT AND SPLICE LENGTH
NO SCALE

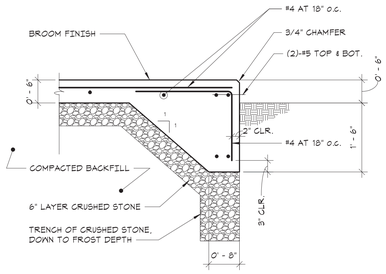

6 TYPICAL CONCRET PAD DETAIL
NO SCALE

GREENWICH HS
CARDINAL
STADIUM
PHASE 1

GREENWICH PUBLIC SCHOOLS
10 HILLSIDE ROAD
GREENWICH CT 06830

KG+D listen imagine build
KG+D . ARCHITECTS PC
285 MAIN STREET MOUNT KISCO . NEW YORK . 10549
P:914.666.5900 KGDARCHITECTS.COM

The DiSalvo Engineering Group
Structural Engineers
83 Wooster Heights Road | Suite 200
Lee Farm Corporate Park | Danbury, CT 06810
(203) 490-4140 | www.tdeg.com

BUILDING PERMIT ISSUE

GENERAL NOTE :
ALL KIOSK RELATED
CONSTRUCTION IS CONSIDERED
ADD ALTERNATE #2

OWNERSHIP, USE AND ALTERATION OF DOCUMENTS:
The Client acknowledges that the documents, drawings, specifications including electronic media files are instruments of The DiSalvo Engineering Group's services and shall remain the property of The DiSalvo Engineering Group. The Client or any person or entity that acquires or obtains the drawings and specifications from or through The Client shall not use them on any other project, shall not modify, alter or change the drawings and specifications without written authorization from The DiSalvo Engineering Group. Furthermore, The Client agrees to the fullest extent permitted by law to indemnify and hold harmless The DiSalvo Engineering Group, its officers, directors and employees from any and all claims, suits, liability, demands or costs, including attorney fees arising out of or resulting therefrom.

Professional Seal
STATE OF CONNECTICUT
PETER B. HILLIER
No. 29857
PROFESSIONAL ENGINEER

No.	Date	Issue
4	12/02/20	BUILDING PERMIT ISSUE
3	11/10/20	PHASE 1 CONSTRUCTION DOCUMENTS
2	08/12/20	ISSUE FOR PERMIT
1	08/29/19	DESIGN DEVELOPMENT

Sheet Title

FOUNDATION
TYPICAL DETAILS
AND SECTIONS

Job No. 18144.00	Date 08/29/19
Scale AS NOTED	Drawn / Checked Author Checker

Sheet Number

S202

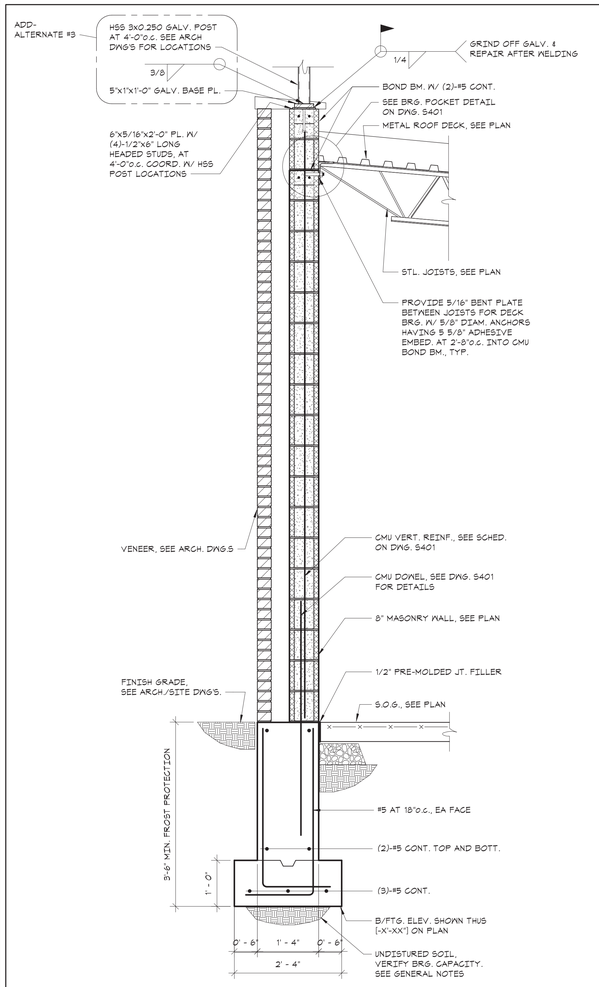

1 SECTION
3/4" = 1'-0"

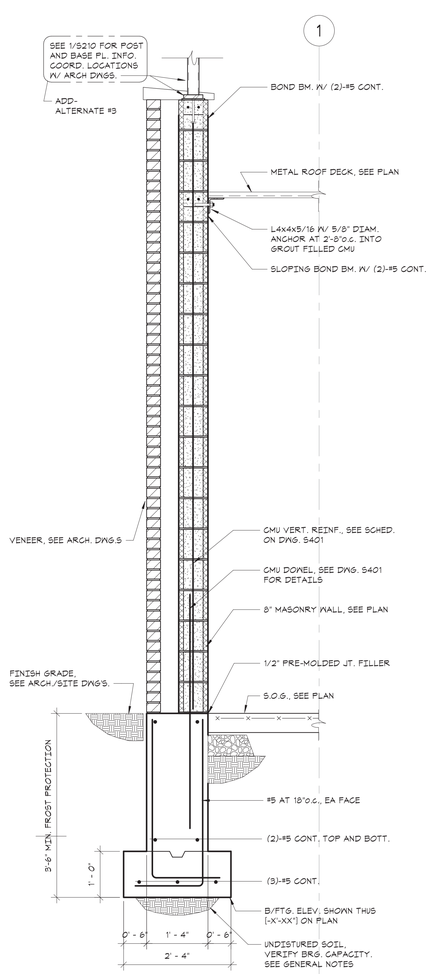

2 SECTION
3/4" = 1'-0"

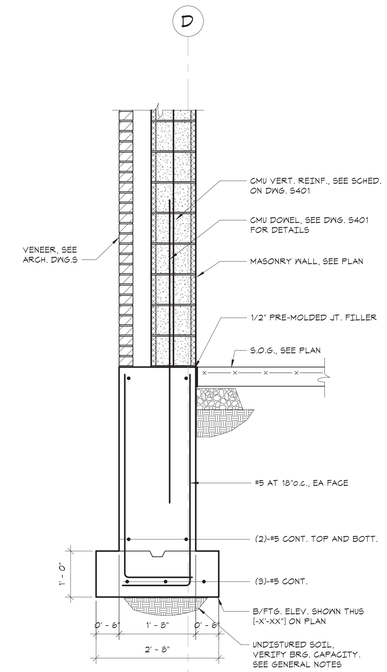

3 SECTION
3/4" = 1'-0"

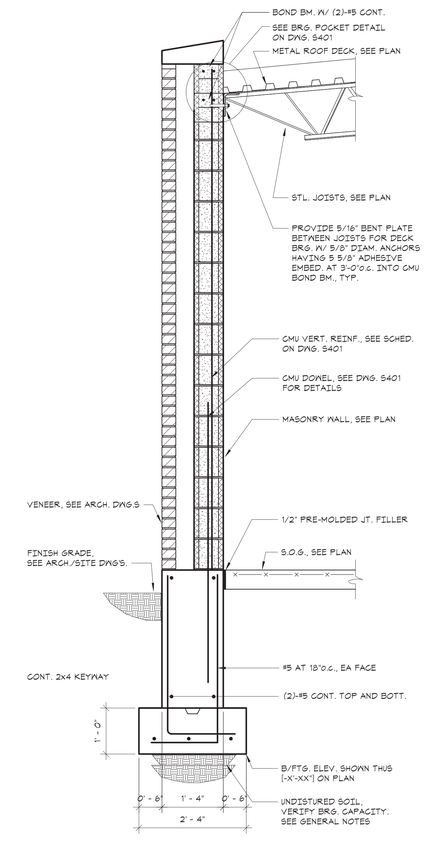

4 SECTION
3/4" = 1'-0"

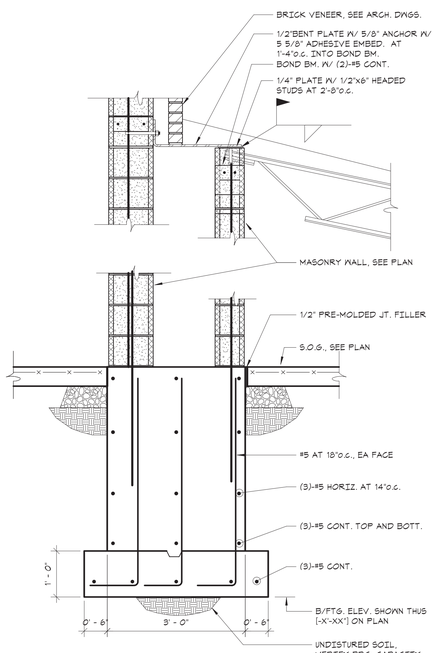

5 SECTION
3/4" = 1'-0"

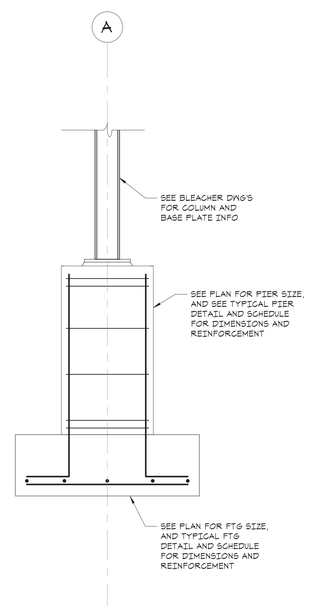

6 SECTION
3/4" = 1'-0"

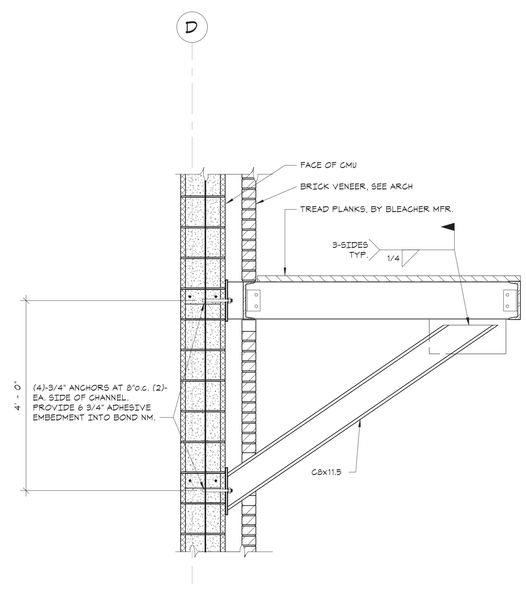

7 SECTION
3/4" = 1'-0"

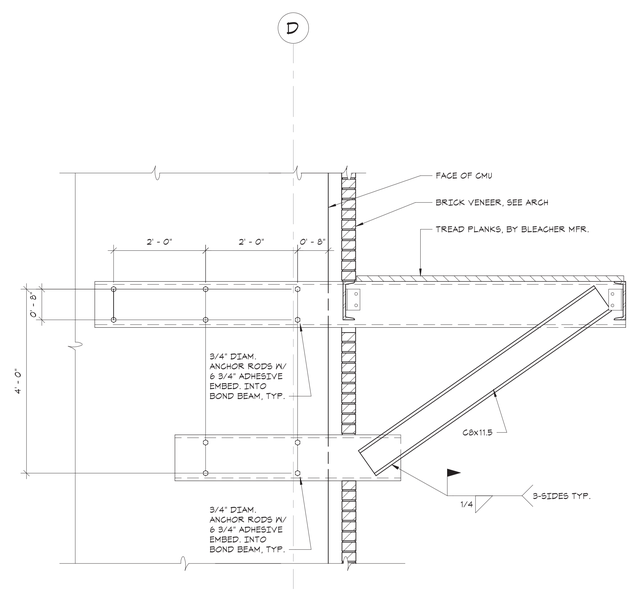

8 SECTION
3/4" = 1'-0"

GREENWICH HS CARDINAL STADIUM PHASE 1

GREENWICH PUBLIC SCHOOLS
10 HILLSIDE ROAD
GREENWICH CT 06830

KG+D . ARCHITECTS PC
285 MAIN STREET MOUNT KISCO . NEW YORK . 10549
P:914.666.5900 KGDARCHITECTS.COM

The Di Salvo Engineering Group
Structural Engineers
83 Wooster Heights Road | Suite 200
Lee Farm Corporate Park | Danbury, CT 06810
(203) 490-4140 | www.tdeg.com

BUILDING PERMIT ISSUE

GENERAL NOTE :
ALL KIOSK RELATED CONSTRUCTION IS CONSIDERED ADD ALTERNATE #2

OWNERSHIP, USE AND ALTERATION OF DOCUMENTS:
The Client acknowledges that the documents, drawings, specifications including electronic media files are instruments of The DiSalvo Engineering Group's services and shall remain the property of The DiSalvo Engineering Group. The Client or any person or entity that acquires or obtains the drawings and specifications from or through The Client shall not use them on any other project, shall not modify, alter or change the drawings and specifications without written authorization from The DiSalvo Engineering Group. Furthermore, The Client agrees to the fullest extent permitted by law to indemnify and hold harmless The DiSalvo Engineering Group, its officers, directors and employees from any and all claims, suits, liability, demands or costs, including attorney fees arising out of or resulting therefrom.

Professional Seal
STATE OF CONNECTICUT
TREVOR B. TILLOTT
PROFESSIONAL ENGINEER

No.	Date	Issue
4	12/02/20	BUILDING PERMIT ISSUE
3	11/10/20	PHASE 1 CONSTRUCTION DOCUMENTS
2	08/12/20	ISSUE FOR PERMIT
1	08/29/19	DESIGN DEVELOPMENT

Sheet Title
FOUNDATION AND FRAMING SECTIONS

Job No. 18144.00	Date 08/28/19
Scale AS NOTED	Drawn / Checked CGB / TBH

Sheet Number
S210

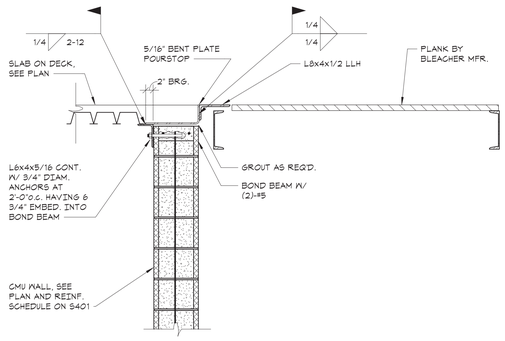

1 SECTION
3/4" = 1'-0"

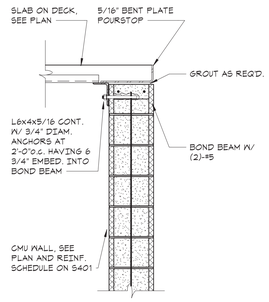

2 SECTION
3/4" = 1'-0"

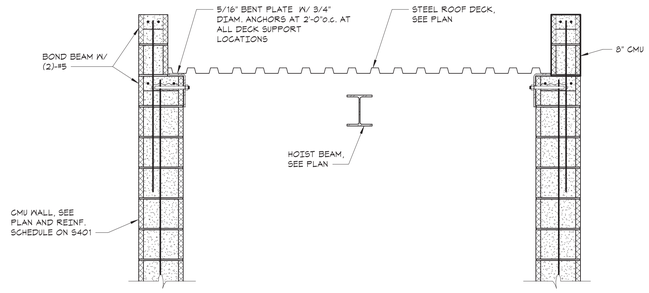

3 SECTION
3/4" = 1'-0"

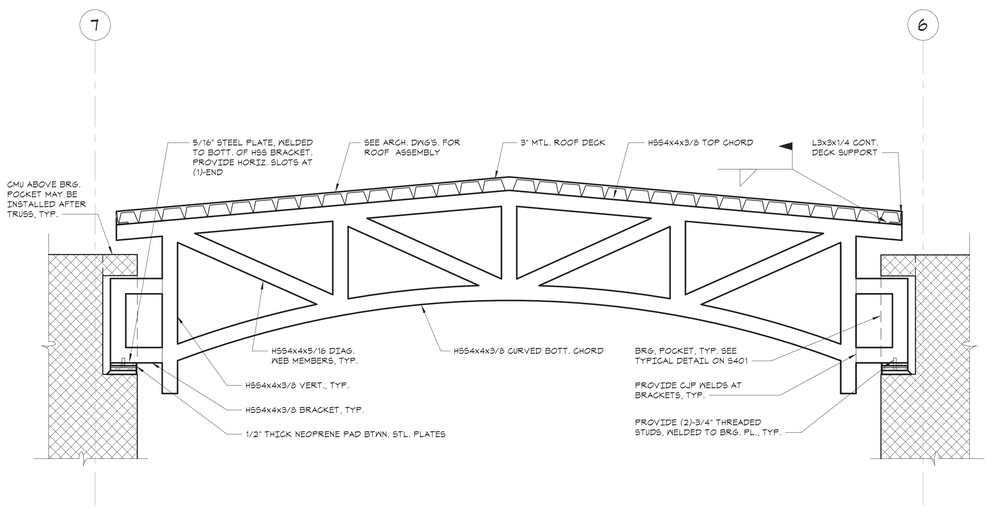

4 SECTION
3/4" = 1'-0"

GREENWICH HS CARDINAL STADIUM PHASE 1

GREENWICH PUBLIC SCHOOLS
10 HILLSIDE ROAD
GREENWICH CT 06830

KG+D listen imagine build
KG+D . ARCHITECTS PC
285 MAIN STREET MOUNT KISCO . NEW YORK . 10549
P:914.666.5900 KGDARCHITECTS.COM

The DiSalvo Engineering Group
Structural Engineers
83 Wooster Heights Road | Suite 200
Lee Farm Corporate Park | Danbury, CT 06810
(203) 490-4140 | www.tdeg.com

BUILDING PERMIT ISSUE

GENERAL NOTE :
ALL KIOSK RELATED CONSTRUCTION IS CONSIDERED ADD ALTERNATE #2

OWNERSHIP, USE AND ALTERATION OF DOCUMENTS:
The Client acknowledges that the documents, drawings, specifications including electronic media files are instruments of The DiSalvo Engineering Group's services and shall remain the property of The DiSalvo Engineering Group. The Client or any person or entity that acquires or obtains the drawings and specifications from or through The Client shall not use them on any other project, shall not modify, alter or change the drawings and specifications without written authorization from The DiSalvo Engineering Group. Furthermore, The Client agrees to the fullest extent permitted by law to indemnify and hold harmless The DiSalvo Engineering Group, its officers, directors and employees from any and all claims, suits, liability, demands or costs, including attorney fees arising out of or resulting therefrom.

Professional Seal

No.	Date	Issue
4	12/02/20	BUILDING PERMIT ISSUE
3	11/10/20	PHASE 1 CONSTRUCTION DOCUMENTS
2	08/12/20	ISSUE FOR PERMIT

Sheet Title

FRAMING SECTIONS

Job No.	Date
18144.00	08/10/20
Scale	Drawn / Checked
AS NOTED	CGB / TBH

Sheet Number

S211

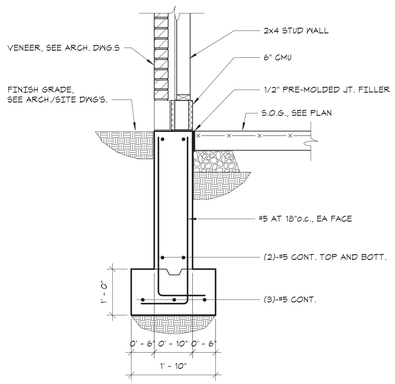

1 SECTION
3/4" = 1'-0"

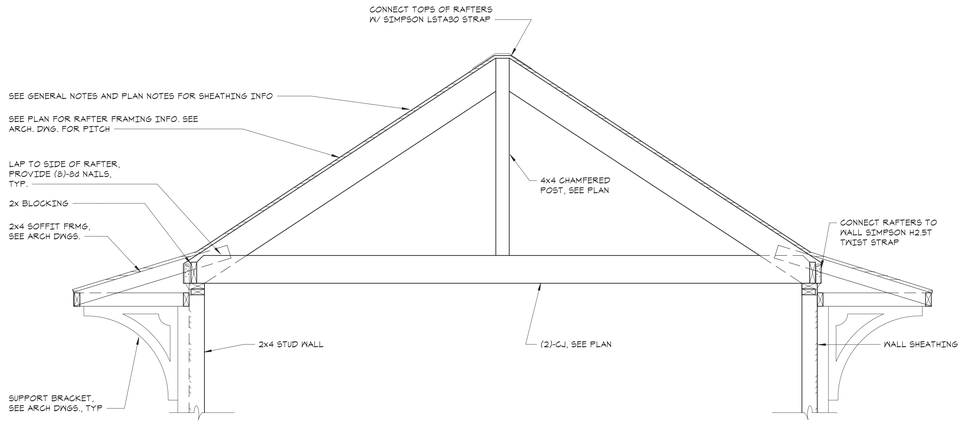

2 SECTION
3/4" = 1'-0"

GREENWICH HS
CARDINAL
STADIUM
PHASE 1

GREENWICH PUBLIC SCHOOLS
10 HILLSIDE ROAD
GREENWICH CT 06830

KG+D listen imagine build
KG+D . ARCHITECTS PC
285 MAIN STREET MOUNT KISCO . NEW YORK . 10549
P:914.666.5900 KGDARCHITECTS.COM

The Di Salvo Engineering Group
Structural Engineers
83 Wooster Heights Road | Suite 200
Lee Farm Corporate Park | Danbury, CT 06810
(203) 490-4140 | www.tdeg.com

BUILDING PERMIT ISSUE

GENERAL NOTE :
ALL KIOSK RELATED
CONSTRUCTION IS CONSIDERED
ADD ALTERNATE #2

OWNERSHIP, USE AND ALTERATION OF DOCUMENTS:
The Client acknowledges that the documents, drawings, specifications including electronic media files are instruments of The DiSalvo Engineering Group's services and shall remain the property of The DiSalvo Engineering Group. The Client or any person or entity that acquires or obtains the drawings and specifications from or through The Client shall not use them on any other project, shall not modify, alter or change the drawings and specifications without written authorization from The DiSalvo Engineering Group. Furthermore, The Client agrees to the fullest extent permitted by law to indemnify and hold harmless The DiSalvo Engineering Group, its officers, directors and employees from any and all claims, suits, liability, demands or costs, including attorney fees arising out of or resulting therefrom.

Professional Seal
STATE OF CONNECTICUT
CHRISTOPHER B. GUERRERA
CERTIFIED
PROFESSIONAL ENGINEER

No.	Date	Issue
2	12/02/20	BUILDING PERMIT ISSUE
1	11/10/20	PHASE 1 CONSTRUCTION DOCUMENTS

Sheet Title
KIOSK
FOUNDATION AND
FRAMING
SECTIONS

Job No.	Date
18144.00	11-04-2020
Scale	Drawn / Checked
AS NOTED	CGB / EM

Sheet Number
S212

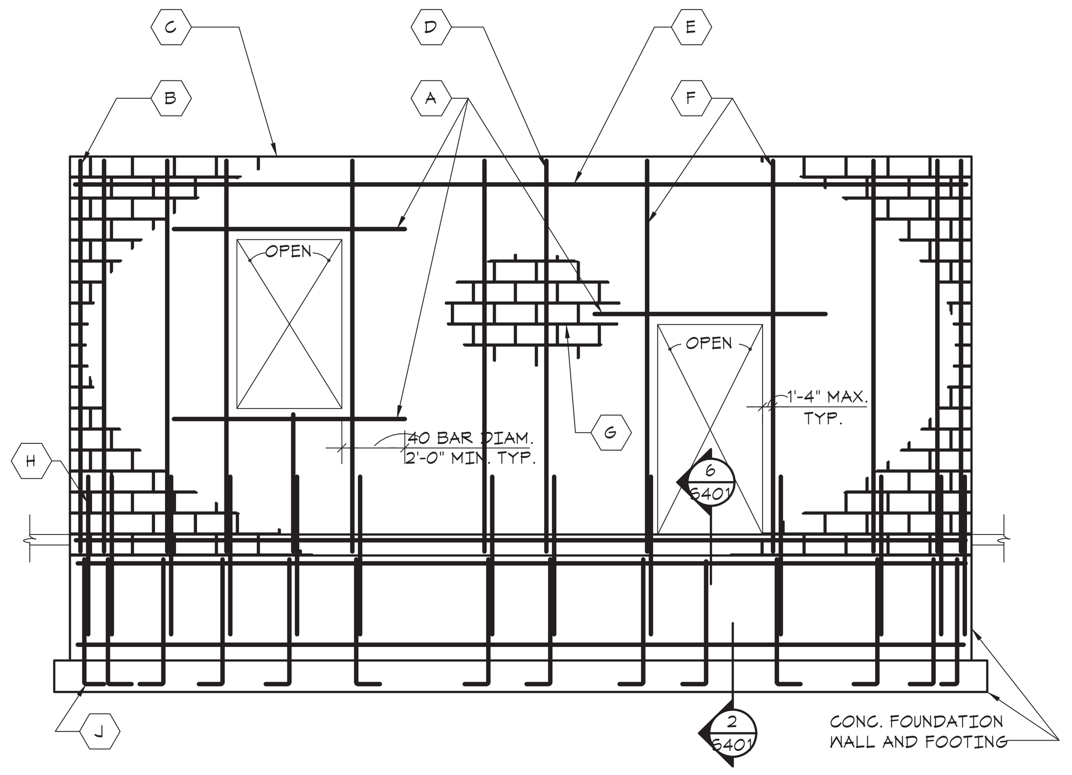

ELEVATION AT SHEAR WALLS AND EXTERIOR WALLS (A)

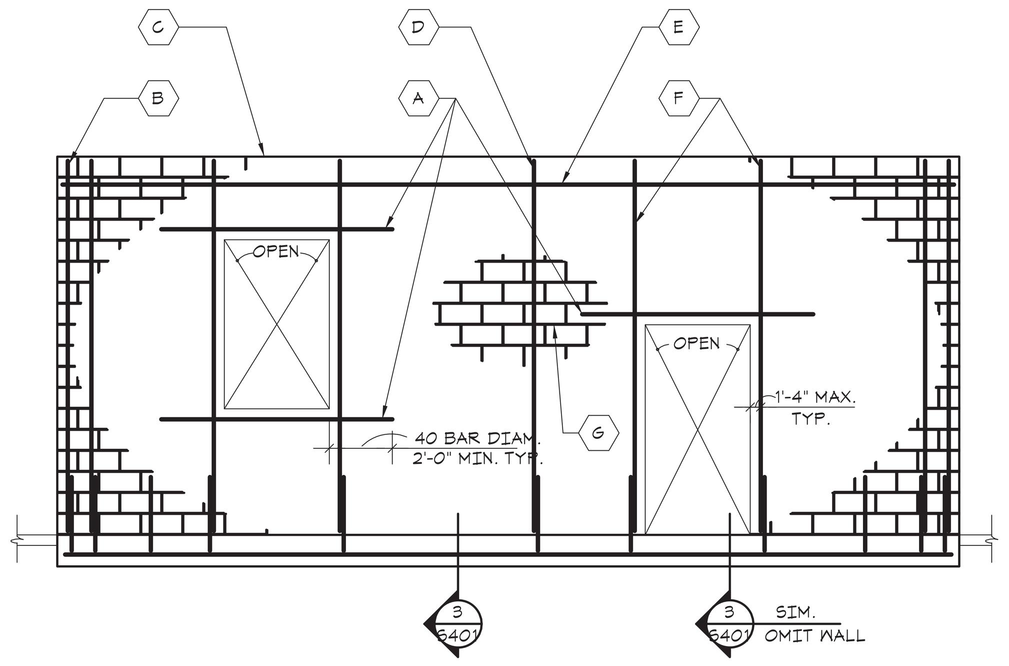

ELEVATION AT PARTITION WALLS (B)

- PARTITIONS ARE WALLS OTHER THAN SHEAR WALLS, EXTERIOR WALLS, AND BEARING WALLS

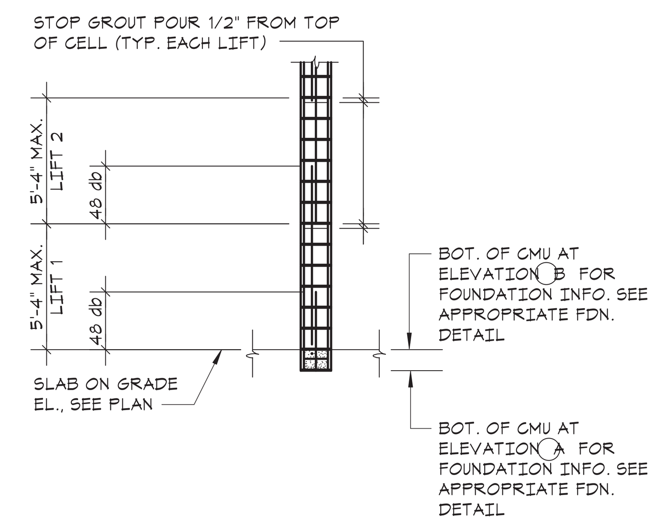

SECTION - LOW LIFT WALL GROUTING DETAIL (C)

- FOR ADDITIONAL GROUTING REQUIREMENTS, SEE NOTE 4 AND GENERAL NOTES.

KEYNOTES

A	(2)-#5 HORIZ. REINF. GROUTED SOLID IN BOND BEAMCOURSE TYP. ABOVE AND BELOW ALL OPENINGS. FOR HORIZONTAL REINFORCING IN MASONRY LINTELS SEE "TYPICAL MASONRY LINTEL IN NON-LOAD BEARING WALL DETAIL"
B	VERT. FULL HEIGHT REINF. IN SOLID GROUT, TYP. AT WALL ENDS, CORNERS, AND EACH SIDE OF CJ'S,SEE REINFORCEMENT SCHEDULE
C	CMU WALL. FOR SIZE, SEE PLANS AND REINFORCEMENT SCHEDULE.
D	TYP. VERTICAL REINF., SEE REINFORCEMENT SCHEDULE (U.O.N. BY SECTION). FILL CELLS CONTAINING REINF. SOLID W/ GROUT .
E	(2)-#5 HORIZ. REINF. AT TOP OF WALL GROUTED SOLID IN BOND BEAM COURSE. PLACE REINF. ONE COURSE LOWER WHERE WALL ABUTS FLOOR ABOVE.
F	VERT. FULL HEIGHT REINF. IN SOLID GROUT, TYP. AT BOTH SIDES OF ALL WALL OPENINGS, SEE REINFORCEMENT SCHEDULE.
G	HORIZ. JOINT REINFORCING, SEE GENERAL NOTES.
H	PROVIDE REINFORCING DOWELS BETWEEN FDN. AND MASONRY WALL EQUAL TO SIZE AND SPACING OF MASONRY VERT. WALL REINFORCING (MAX. SPACING = 4'-0"o.c.). REINFORCING DOWELS SHALL EXTEND INTO MASONRY WALLS AND SHALL BE LAPPED 48 BAR DIAM.
J	PROVIDE REINFORCING DOWELS BETWEEN FTG. AND FDN. WALL EQUAL TO SIZE AND SPACING OF MASONRY VERT. WALL REINFORCING (MAX. SPACING = 4'-0"o.c.). REINFORCING DOWELS SHALL EXTEND INTO MASONRY WALLS AND SHALL BE LAPPED 48 BAR DIAM.

REINFORCEMENT SCHEDULE

WALL DESCRIPTION	WALL ELEVATION TYPE	VERTICAL REINFORCEMENT
8" CMU SHEARWALLS, BRG. WALLS, AND EXTERIOR WALLS	A	D #5 AT 48"o.c. B (3)-#5's F (1)-#5
12" CMU ELEVATOR SHAFT WALLS	A	D #5 AT 48" o.c. E (2) - #5's F (1)-#5
6", 8" CMU PARTITIONS	B	D #4 AT 48"o.c. B (1)-#4 F (1)-#4 NOTE: ALL CMU PARTITIONS MUST BE BRACED AT EACH FLOOR LEVEL.

- SEE WALL ELEVATIONS (A) AND (B) FOR PLACEMENT OF REINFORCEMENT AND ADDITIONAL REQUIREMENTS.
- ALL WALLS SHALL HAVE HORIZ. JOINT REINFORCEMENT AS PER GENERAL NOTES. AT SHEAR WALLS PROVIDE ADDITIONAL HORIZ. JOINT REINFORCEMENT AS PER "TYP. REINF. ARRANGEMENTS AT CMU SHEAR WALL ENDS, CORNERS, AND INTERSECTIONS."

NOTES:
1. FOR SHEAR WALL LOCATIONS AND EXTENT, SEE FRAMING AND FDN. PLANS.
2. FOR CMU WALL LOCATIONS AND EXTENT, SEE ARCH. DWGS.
3. SEE ARCH. DWGS. FOR LOCATIONS OF CONTROL JOINTS. DO NOT LOCATE CONTROL JOINTS WITHIN 32" OF MASONRY OPENINGS.
4. ALL CMU CELLS CONTAINING VERTICAL REINFORCEMENT SHALL BE GROUTED SOLID.
5. ALL GROUTED CELLS SHALL BE MECHANICALLY VIBRATED IN ACCORDANCE WITH ACI 530. IN ADDITION, AFTER 10 MINUTES, MECHANICALLY VIBRATE GROUTED CELLS A SECOND TIME.
6. BOND BEAM AT SLOPING STEEL BEAMS/ROOFS/CEILINGS: ELEVATION OF CONTINUOUS BOND BEAM MUST VARY W/ SLOPING STL. BM./ROOF/CEILING. WHERE CHANGES COURSE, RUN BOND BEAM IN BOTH COURSES FOR A MINIMUM OF 6'-0"

1 TYPICAL CONCRETE MASONRY WALL REINFORCEMENT DETAIL
NO SCALE

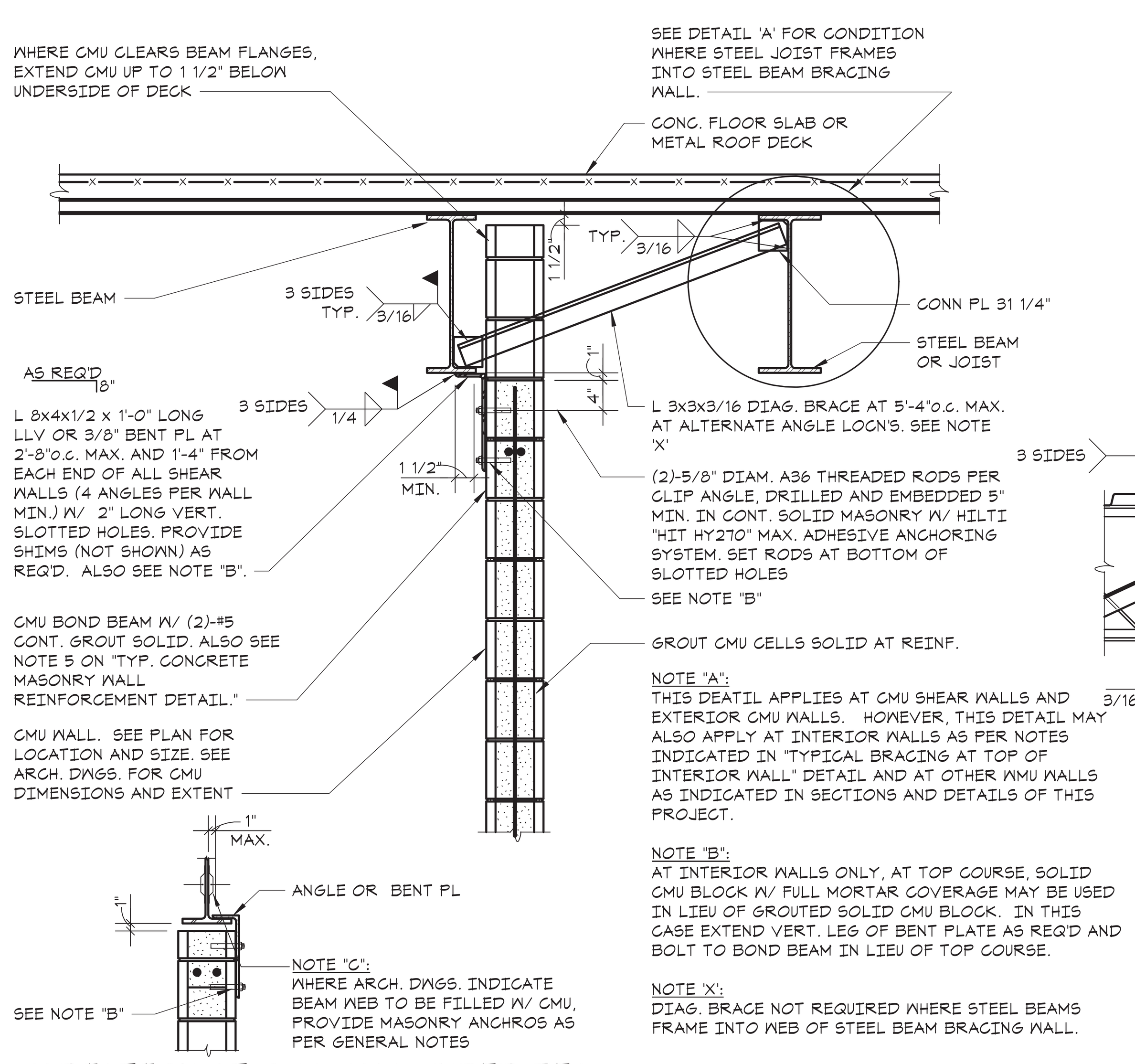

NOTE "A":
THIS DEATIL APPLIES AT CMU SHEAR WALLS AND EXTERIOR CMU WALLS. HOWEVER, THIS DETAIL MAY ALSO APPLY AT INTERIOR WALLS AS PER NOTES INDICATED IN "TYPICAL BRACING AT TOP OF INTERIOR WALL" DETAIL AND AT OTHER WMU WALLS AS INDICATED IN SECTIONS AND DETAILS OF THIS PROJECT.

NOTE "B":
AT INTERIOR WALLS ONLY, AT TOP COURSE, SOLID CMU BLOCK W/ FULL MORTAR COVERAGE MAY BE USED IN LIEU OF GROUTED SOLID CMU BLOCK. IN THIS CASE EXTEND VERT. LEG OF BENT PLATE AS REQ'D AND BOLT TO BOND BEAM IN LIEU OF TOP COURSE.

NOTE 'X':
DIAG. BRACE NOT REQUIRED WHERE STEEL BEAMS FRAME INTO WEB OF STEEL BEAM BRACING WALL.

VARIATION AT CMU WALL UNDER BEAM

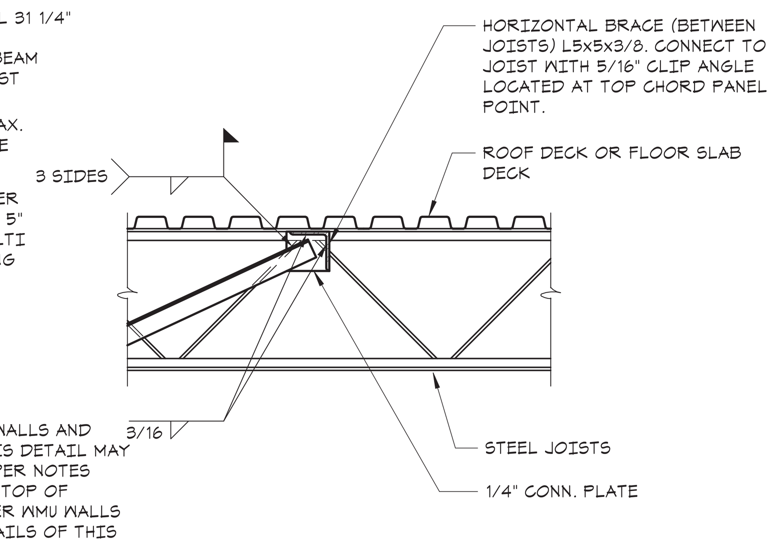

DETAIL 'A'

2 TYPICAL CONNECTION DETAIL AT TOP OF SHEAR/EXTERIOR WALLS
NO SCALE

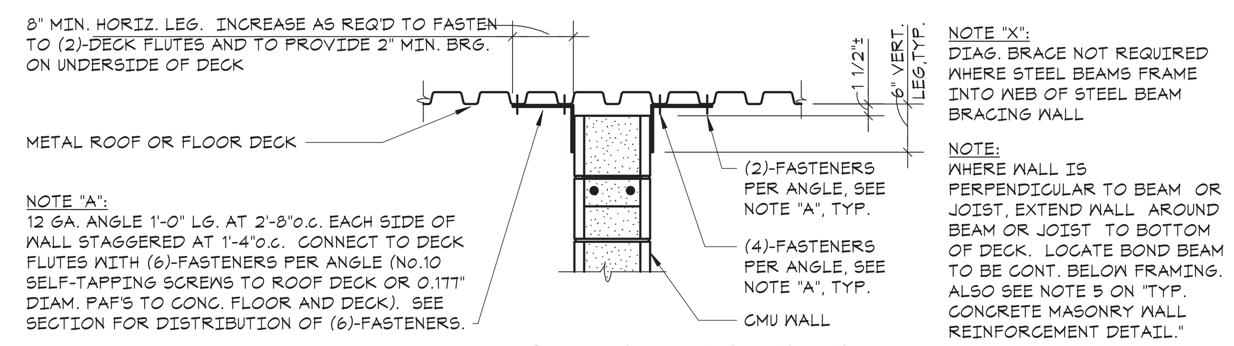

NOTE "X":
DIAG. BRACE NOT REQUIRED WHERE STEEL BEAMS FRAME INTO WEB OF STEEL BEAM BRACING WALL

NOTE:
WHERE WALL IS PERPENDICULAR TO BEAM OR JOIST, EXTEND WALL AROUND BEAM OR JOIST TO BOTTOM OF DECK. LOCATE BOND BEAM TO BE CONT. BELOW FRAMING. ALSO SEE NOTE 5 ON "TYP. CONCRETE MASONRY WALL REINFORCEMENT DETAIL."

CMU WALL AT UNDERSIDE OF DECK

- SEE NOTES BELOW

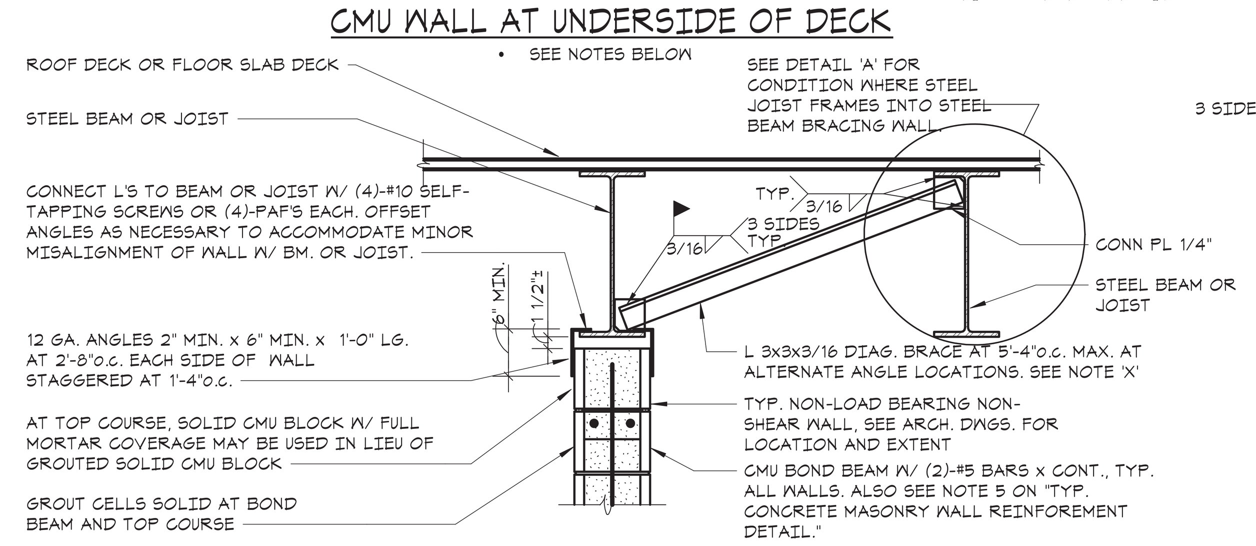

CMU WALL AT STEEL BEAM OR JOIST

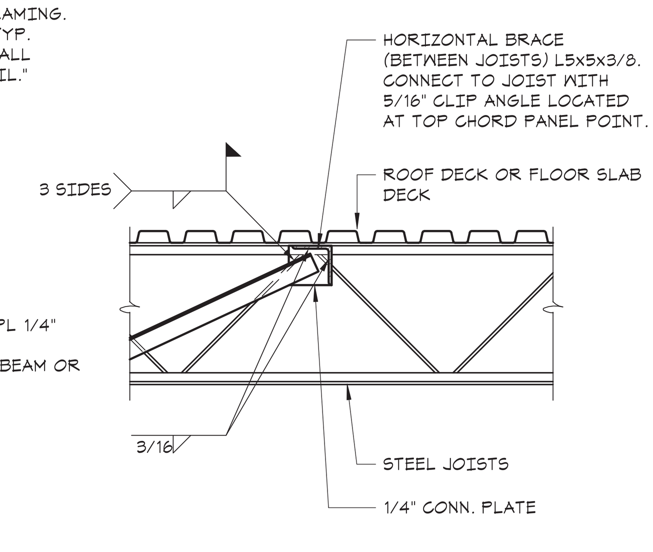

DETAIL 'A'

NOTES:
1. THESE DETAILS APPLY AT INTERIOR CMU WALLS WHICH ARE NOT SHEAR WALLS AND ARE NON-LOAD BEARING. SEE ARCHITECTURAL DRAWINGS FOR SIZE, LENGTH, AND LOCATION OF INTERIOR CMU WALLS.
2. BRACING AT TOP OF WALL IS NOT REQURIED BETWEEN INTERSECTING CMU WALLS SPACED LESS THAN 10 FEET FOR 4" WALLS, 14 FEET FOR 6" WALLS, 17 FEET FOR 8" WALLS, AND 21 FEET FOR 12" WALLS.
3. WHERE LOCATION OF CMU WALL FACE IS OFF BEAM/JOIST CENTERLINE SUCH THAT ABOVE GAGE ANGLES AT STEEL BEAM OR STEEL DECK CAN NOT SANDWICH CMU WALL FROM BOTH SIDES, BRACE CMU WALL WITH STEEL ANGLES/BENT PLATES AND THREADED RODS SIMILAR TO SECTION "TYPICAL CONNECTION DETAIL AT TOP OF SHEAR/EXTERIOR WALLS", EXCEPT IN LIEU OF WELDING ANGLE/BENT PLATE TO BOTTOM FLAGE OF BEAM, BOLT TO BOTTOM FLANGE OF BEAM WITH (2) 3/4" DIAM. A325 BOLTS IN 1 7/8" LONG HORIZONTAL SLOTTED HOLES (SLOTS PARALLEL TO SPAN OF BEAM).

3 TYPICAL BRACING DETAIL AT TOP OF PARTITION WALL
NO SCALE

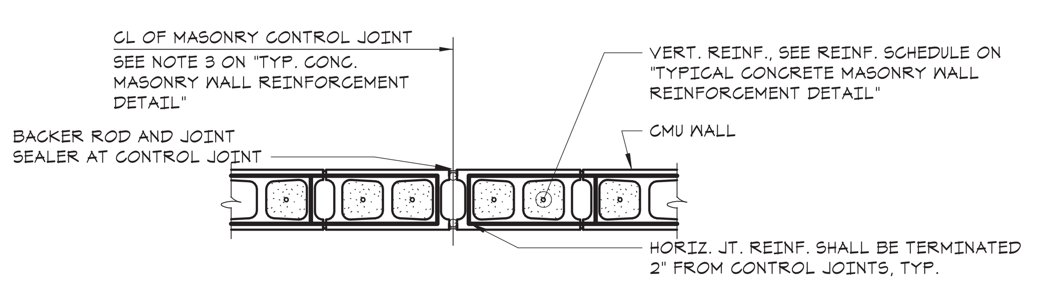

PLAN DETAIL AT WALL ENDS AND CONTROL JOINTS

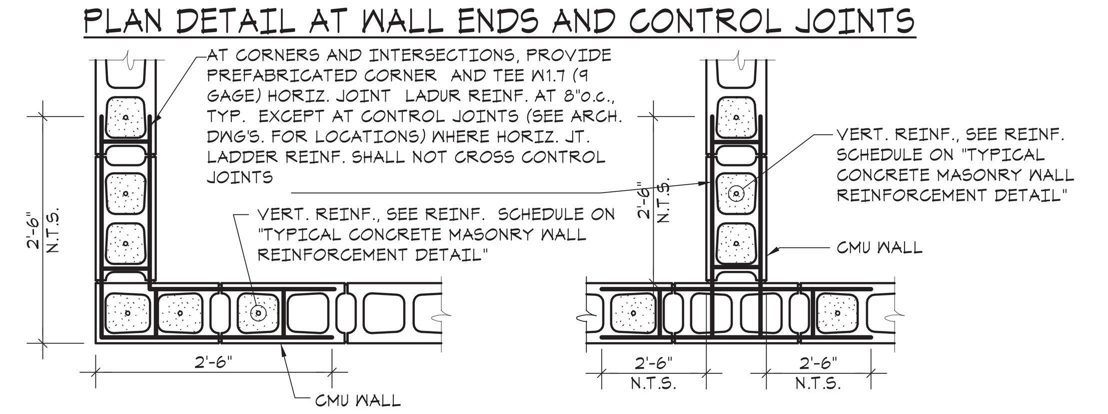

PLAN DETAIL AT CORNERS AND INTERSECTIONS

- TYPICAL HORIZONTAL JOINT REINFORCING (NOT SHOWN FOR CLARITY).

4 TYPICAL MASONRY WALL PLAN DETAILS
NO SCALE

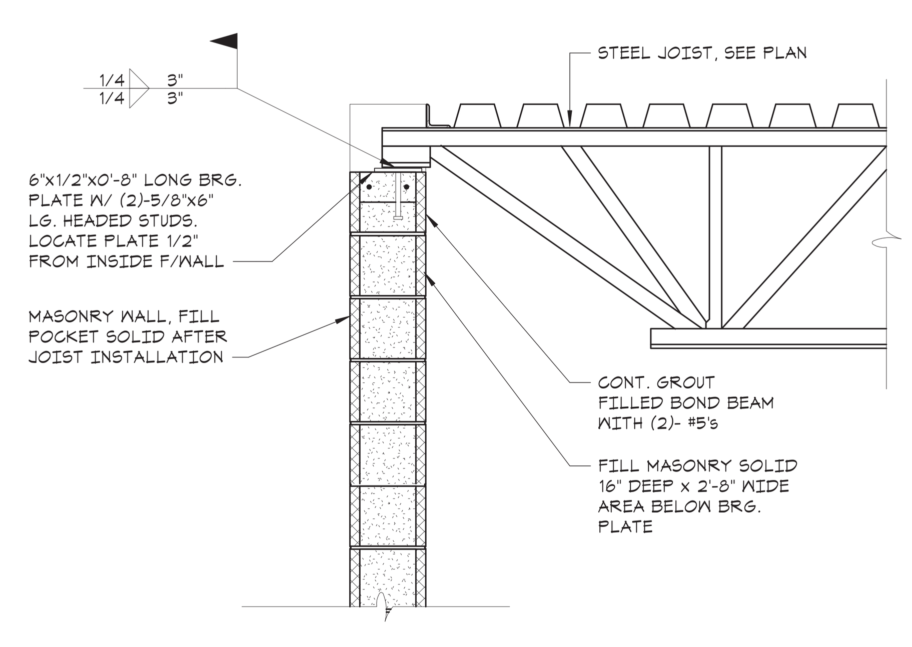

5 TYPICAL STL. JOIST BRG POCKET DETAIL
NO SCALE

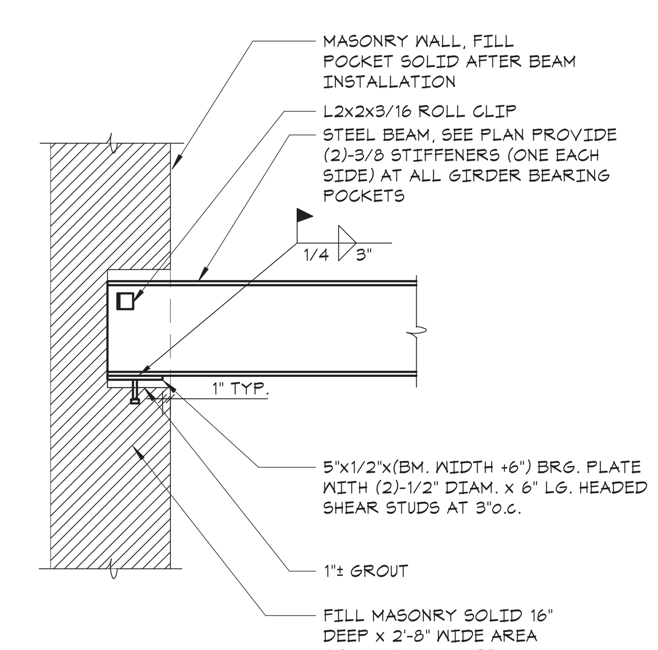

6 TYPICAL BEAM BRG. POCKET DETAIL
NO SCALE

GREENWICH HS CARDINAL STADIUM PHASE 1

GREENWICH PUBLIC SCHOOLS
10 HILLSIDE ROAD
GREENWICH CT 06830

KG+D . ARCHITECTS PC
285 MAIN STREET MOUNT KISCO . NEW YORK . 10549
P:914.666.5900 KGDARCHITECTS.COM

The Di Salvo Engineering Group
Structural Engineers
83 Wooster Heights Road | Suite 200
Lee Farm Corporate Park | Danbury, CT 06810
(203) 490-4140 | www.tdeg.com

BUILDING PERMIT ISSUE

GENERAL NOTE :
ALL KIOSK RELATED CONSTRUCTION IS CONSIDERED ADD ALTERNATE #2

OWNERSHIP, USE AND ALTERATION OF DOCUMENTS:
The Client acknowledges that the documents, drawings, specifications including electronic media files are instruments of The DiSalvo Engineering Group's services and shall remain the property of The DiSalvo Engineering Group. The Client or any person or entity that acquires or obtains the drawings and specifications from or through The Client shall not use them on any other project, shall not modify, alter or change the drawings and specifications without written authorization from The DiSalvo Engineering Group. Furthermore, The Client agrees to the fullest extent permitted by law to indemnify and hold harmless The DiSalvo Engineering Group, its officers, directors and employees from any and all claims, suits, liability, demands or costs, including attorney fees arising out of or resulting therefrom.

Professional Seal
STATE OF CONNECTICUT TREVOR B. HILL 21710 LICENSED PROFESSIONAL ENGINEER

No.	Date	Issue
4	12/02/20	BUILDING PERMIT ISSUE
3	11/10/20	PHASE 1 CONSTRUCTION DOCUMENTS
2	08/12/20	ISSUE FOR PERMIT
1	08/29/19	DESIGN DEVELOPMENT

Sheet Title
MASONRY SCHEDULE AND TYPICAL DETAILS

Job No. 18144.00	Date 11-01-2018
Scale AS NOTED	Drawn / Checked JM EM

Sheet Number
S401

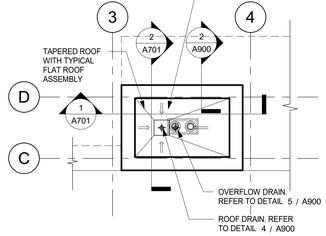

4 ELEVATOR ROOF PLAN
1/8" = 1'-0"

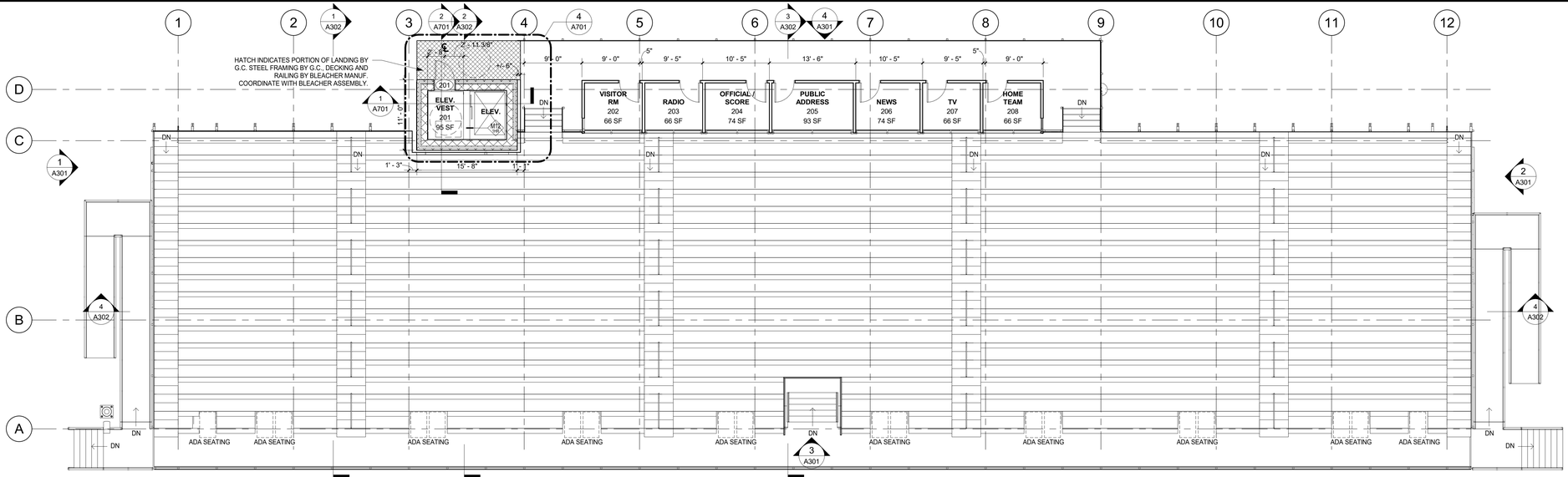

3 PRESSBOX FLOOR PLAN
1/8" = 1'-0"

ROOF NOTES

1. DIMENSIONS AND CONDITIONS ON THE ROOF PLAN AND DETAILS ARE APPROXIMATE AND SHALL BE CONFIRMED BY THE CONTRACTOR. ONLY CERTAIN FASTENERS ARE SHOWN ON THE DWGS.. REFER TO THE SPECIFICATIONS FOR ADDITIONAL FASTNERE REQUIREMENTS.
2. PERFORM WHATEVER WORK IS REQUIRED SO THE DRAIN LINES ARE CLEAN, CLEAR AND FREE FLOWING CONDITION AT THE COMPLETION OF THE PROJECT.
3. SET CONDUIT AND PIPES ON 1x1 FOOT x 2 INCH THICK CONCRETE PAVERS SET ON WALKWAY PADS SPACES 5 FEET ON CENTER. SECURE CONDUITS AND PIPES TO THE PAVERS WITH GALVANIZED CLIPS AND STAINLESS STEEL NAIL-INS.
4. SEE MECHANICAL DRAWINGS FOR ADDITIONAL INFORMATION.
5. R-VALUE REQUIRED TO MEET 2018 STATE BUILDING CODE ICC ENERGY CONSERVATION CODE TABLE C402.2, CLIMATE ZONE 5A CONTINUOUS INSULATION ENTIRELY ABOVE DECK, R=30.
6. TAPERED POLYISO INSULATION SHALL SLOPE 1/4" PER FOOT ON NEW ROOFS, MINIMUM STARTING THICKNESS SHALL BE 5" UNLESS OTHERWWISE SHOWN.
7. INSTALL 1/4" THICK COVER BOARD OVER ALL POLYISO INSULATION.

ROOF PROTECTION NOTES

1. DO NOT STORE MATERIAL OR EQUIPMENT, AND DO NOT PILE DEBRIS ON ROOF AREAS.
2. INSTALL 1 INCH THICK EXTRUDED POLYSTYRENE INSULATION OVER 6 MIL FIRE RETARDANT POLYETHLENE, COVERED WITH 2X10 WOOD PLANKS TO PROTECT ROOFING WHERE CONSTRUCTION WORK AND TRAFFIC WILL OCCUR.
3. NEATLY CUT AND POSITION ROOF PROTECTION COMPONENTS TO FIT WITHIN 1/2 INCH OF ROOF PENETRATIONS, EAVES AND CHANGE IN ELEVATIONS.
4. DO NOT COVER THE ROOF DRAINS. MAINTAIN THE ROOF STRAINERS VISIBLE AND CLEAR AT ALL TIMES.

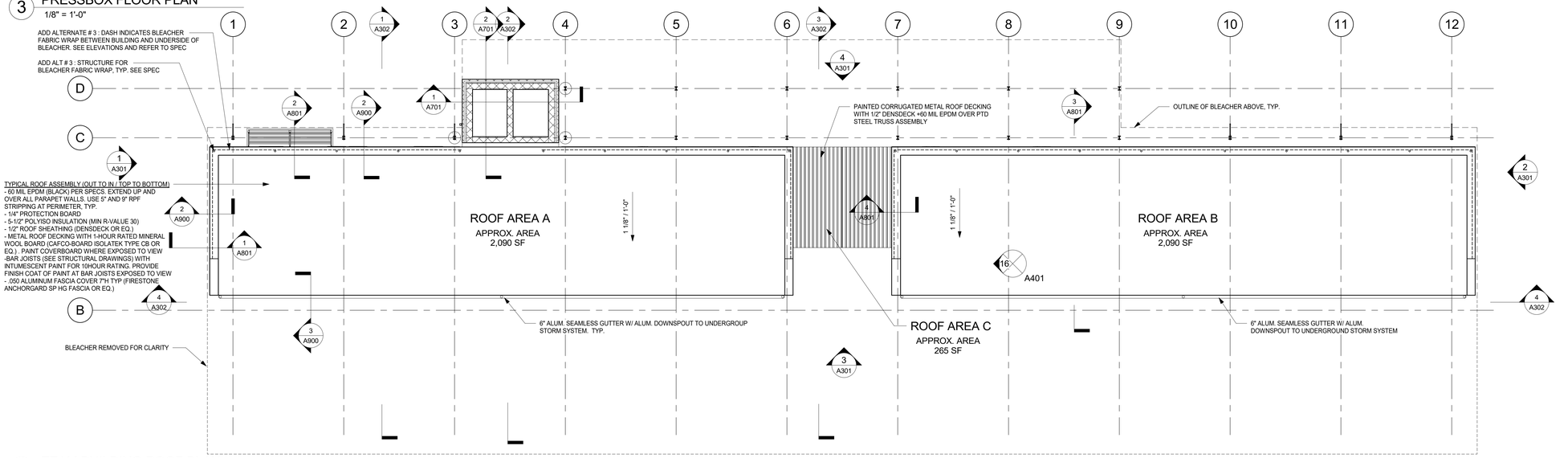

2 TEAM BUILDING ROOF PLAN
1/8" = 1'-0"

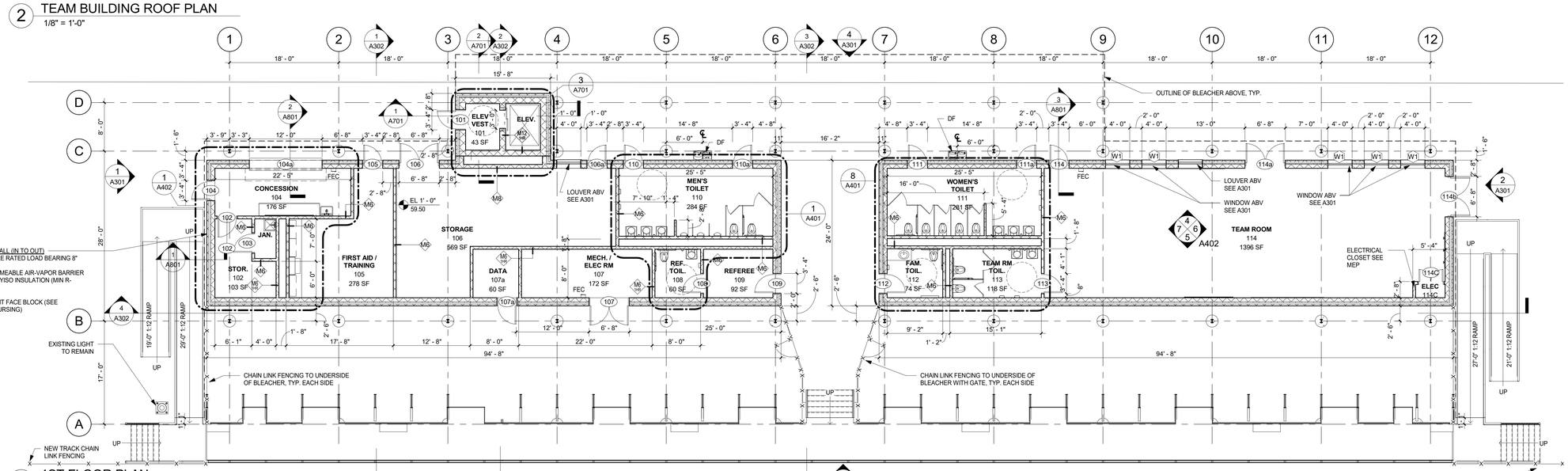

1 1ST FLOOR PLAN
1/8" = 1'-0"

GREENWICH HS CARDINAL STADIUM PHASE 1

GREENWICH PUBLIC SCHOOLS
10 HILLSIDE ROAD
GREENWICH CT 06830

KG+D listen imagine build
KG+D . ARCHITECTS PC
285 MAIN STREET MOUNT KISCO . NEW YORK . 10549
P:914.666.5900 KGDARCHITECTS.COM

CONSTRUCTION DOCUMENTS

TRUE NORTH PROJECT NORTH

NOTE: ALL IDEAS, DESIGNS, ARRANGEMENTS AND PLANS INDICATED OR REPRESENTED BY THIS DRAWING ARE OWNED BY AND ARE THE PROPERTY OF KAEYER, GARMENT, & DAVIDSON ARCHITECTS, PC (KG&D), AND WERE CREATED FOR USE ON THIS PROJECT. NONE OF SUCH IDEAS, DESIGNS, ARRANGEMENTS OR PLANS SHALL BE USED BY OR DISCLOSED TO ANY PURPOSE WHATSOEVER WITHOUT THE WRITTEN PERMISSION OF KG&D.

WRITTEN DIMENSIONS ON THIS DRAWING SHALL HAVE PRECEDENCE OVER SCALED DIMENSIONS. CONTRACTOR SHALL VERIFY ALL ACTUAL DIMENSIONS AND CONDITIONS ON THE JOB AND THE ARCHITECT MUST BE NOTIFIED OF ANY VARIATIONS FROM DIMENSIONS AND CONDITIONS SHOWN. SHOP DETAILS MUST BE SUBMITTED TO THIS OFFICE FOR APPROVAL BEFORE PROCEEDING WITH FABRICATION.

ALTERATIONS BY ANY PERSON, IN ANY WAY, OF ANY ITEM CONTAINED ON THIS DOCUMENT, UNLESS ACTING UNDER THE DIRECTION OF THE LICENCED ARCHITECT WHOSE PROFESSIONAL SEAL IS AFFIXED HERETO, IS A VIOLATION OF TITLE VII, SECT. 69.0 (L) OF NEW YORK STATE LAW.
COPYRIGHT KAEYER, GARMENT + DAVIDSON ARCHITECTS & ENGINEERS, PC
ALL RIGHTS RESERVED.

Professional Seal

No.	Date	Issue
5	12/2/20	PHASE 1A - BUILDING PERMIT
4	11/10/20	PHASE 1 CON. DOCS.
3	10/30/20	PHASE 1B SITE PLAN APP.
2	08/12/20	ISSUE FOR PERMIT
1	08/29/19	DESIGN DEVELOPMENT

Sheet Title

NEW CONSTRUCTION PLANS

Job No.	Date
2018-1035	07/08/19
Scale: AS NOTED	Drawn / Checked: -

Sheet Number

A201

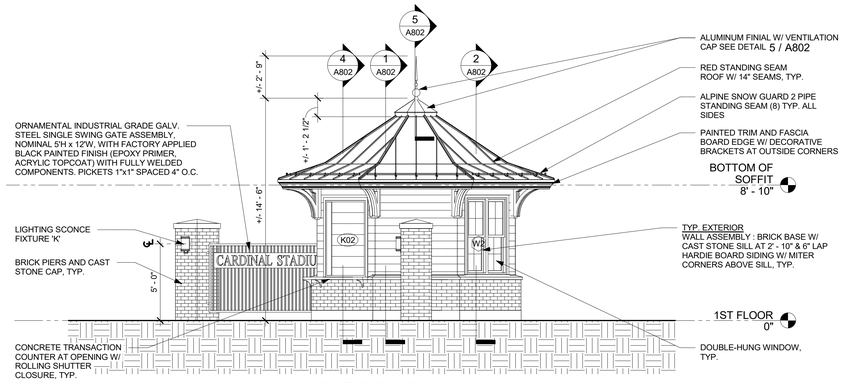

11 KIOSK WEST ELEVATION
1/4" = 1'-0"

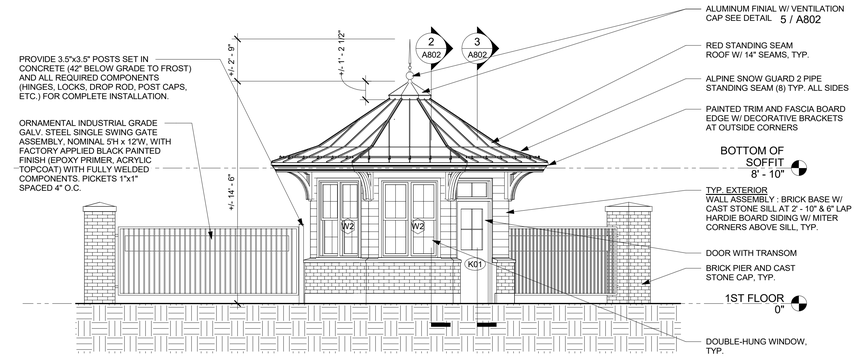

10 KIOSK SOUTH ELEVATION
1/4" = 1'-0"

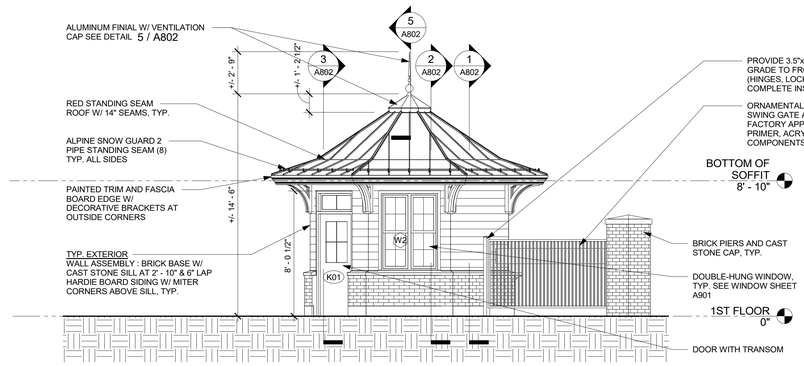

9 KIOSK EAST ELEVATION
1/4" = 1'-0"

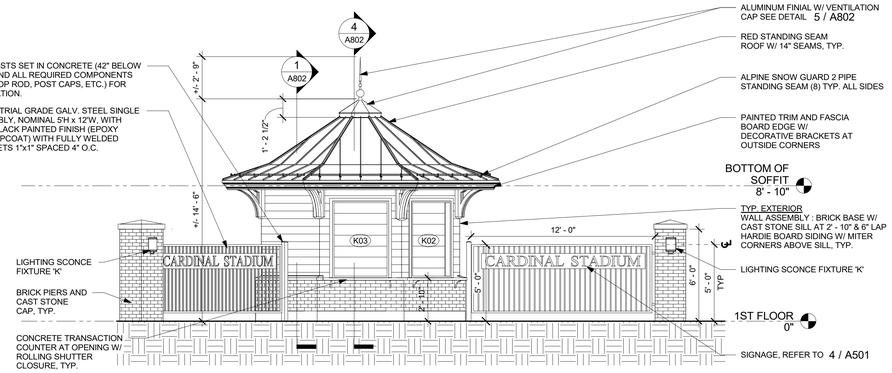

8 KIOSK NORTH ELEVATION
1/4" = 1'-0"

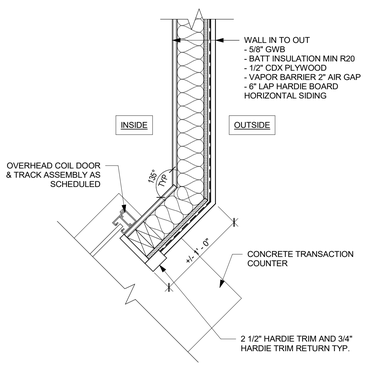

7 WOOD STUD WALL DETAIL @ COIL DOOR
1 1/2" = 1'-0"

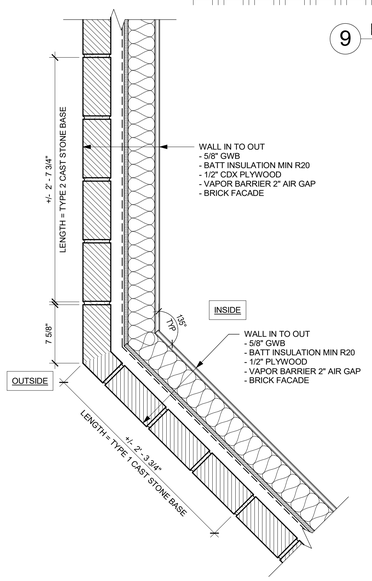

6 WOOD STUD WALL DETAIL @ CORNER
1 1/2" = 1'-0"

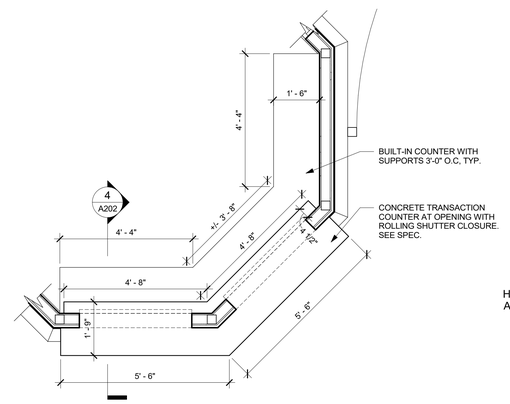

3 KIOSK COUNTER ENLARGED PLAN
1/2" = 1'-0"

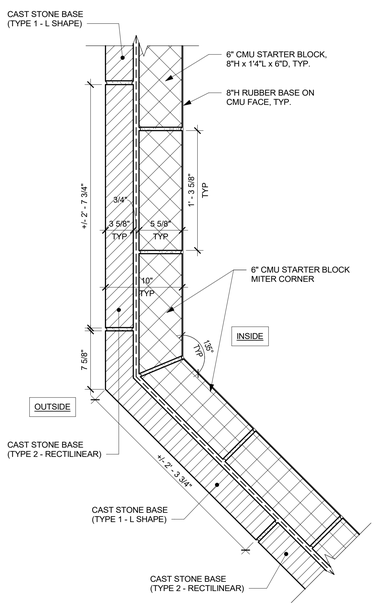

5 CMU BASE COURSE DETAIL @ CORNER
1 1/2" = 1'-0"

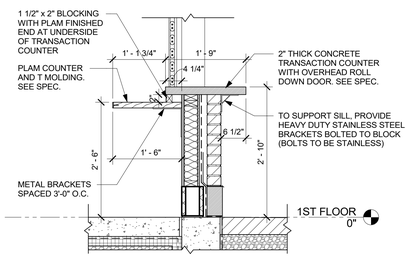

4 TRANSACTION DESK DETAIL
3/4" = 1'-0"

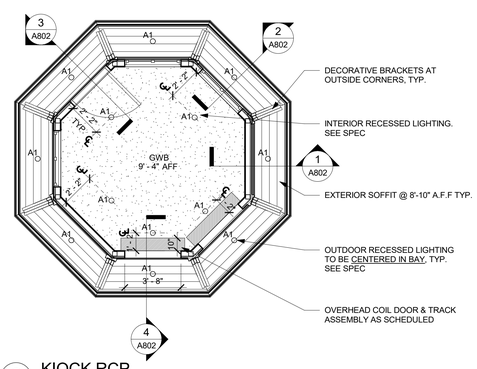

2 KIOCK RCP
1/4" = 1'-0"

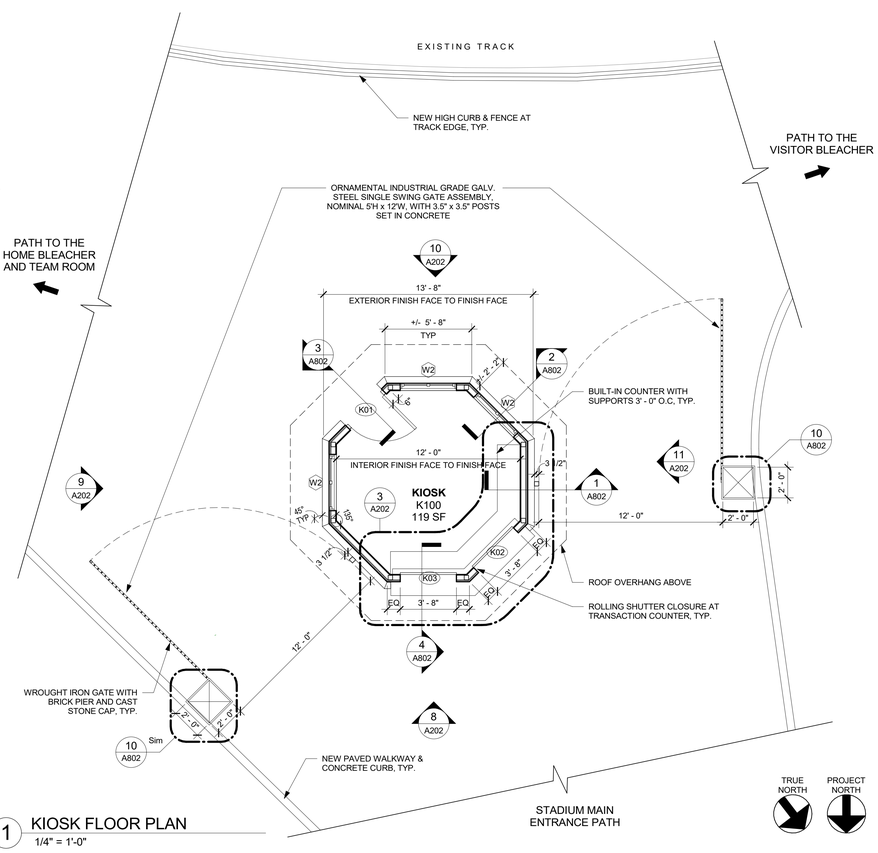

1 KIOSK FLOOR PLAN
1/4" = 1'-0"

GREENWICH HS CARDINAL STADIUM PHASE 1

GREENWICH PUBLIC SCHOOLS
10 HILLSIDE ROAD
GREENWICH, CT 06830

KG+D listen imagine build
KG+D . ARCHITECTS PC
285 MAIN STREET MOUNT KISCO . NEW YORK . 10549
P:914.666.5900 KGDARCHITECTS.COM

CONSTRUCTION DOCUMENTS

GENERAL NOTE :
ALL KIOSK RELATED CONSTRUCTION IS CONSIDERED ADD ALTERNATE #2

NOTE: ALL IDEAS, DESIGNS, ARRANGEMENTS AND PLANS INDICATED OR REPRESENTED BY THIS DRAWING ARE OWNED BY AND ARE THE PROPERTY OF KAEYER, GARMENT, & DAVIDSON ARCHITECTS, PC (KG&D), AND WERE CREATED FOR USE ON THIS PROJECT. NONE OF SUCH IDEAS, DESIGNS, ARRANGEMENTS OR PLANS SHALL BE USED BY OR DISCLOSED TO ANY PURPOSE WHATSOEVER WITHOUT THE WRITTEN PERMISSION OF (KG&D).

WRITTEN DIMENSIONS ON THIS DRAWING SHALL HAVE PRECEDENCE OVER SCALED DIMENSIONS. CONTRACTOR SHALL VERIFY ALL ACTUAL DIMENSIONS AND CONDITIONS ON THE JOB AND THE ARCHITECT MUST BE NOTIFIED OF ANY VARIATIONS FROM DIMENSIONS AND CONDITIONS SHOWN. SHOP DETAILS MUST BE SUBMITTED TO THIS OFFICE FOR APPROVAL BEFORE PROCEEDING WITH FABRICATION.

ALTERATIONS BY ANY PERSON, IN ANY WAY, OF ANY ITEM CONTAINED ON THIS DOCUMENT, UNLESS ACTING UNDER THE DIRECTION OF THE LICENSED ARCHITECT WHOSE PROFESSIONAL SEAL IS AFFIXED HERETO, IS A VIOLATION OF TITLE VII, SECT. 65.5.3b OF NEW YORK STATE LAW.
COPYRIGHT KAEYER, GARMENT + DAVIDSON ARCHITECTS & ENGINEERS, PC
ALL RIGHTS RESERVED.

Professional Seal

No.	Date	Issue
5	12/2/20	PHASE 1A - BUILDING PERMIT
4	11/10/20	PHASE 1 CON. DOCS.
3	10/30/20	PHASE 1B SITE PLAN APP.
2	04/02/20	SITE PLAN SUBMISSION

Sheet Title

KIOSK DRAWINGS (ADD ALT 2)

Job No. Project Number	Date 03/31/20
Scale AS NOTED	Drawn / Checked -

Sheet Number

A202

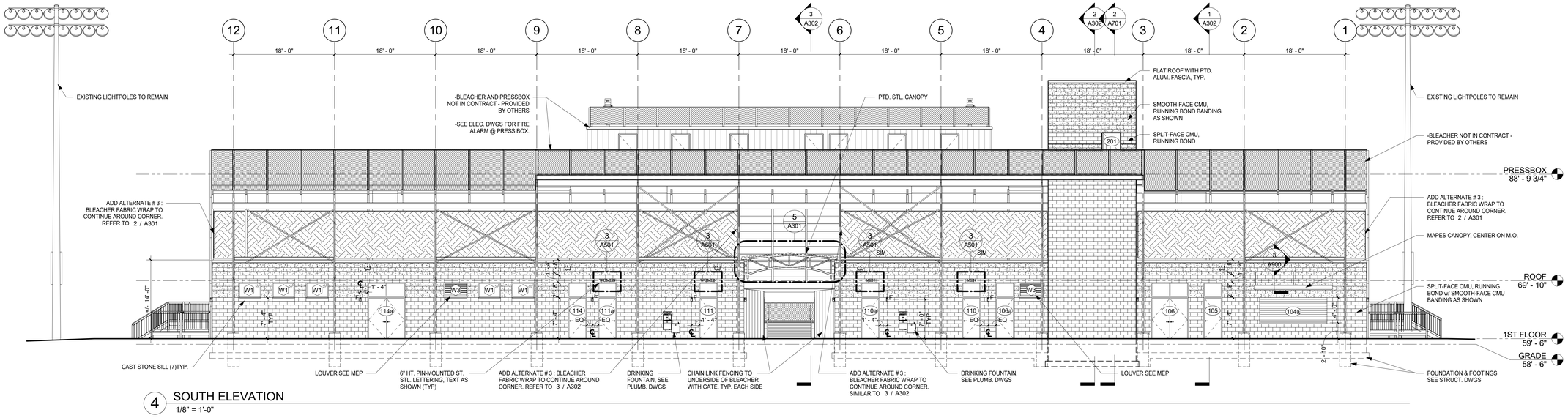

4 SOUTH ELEVATION
1/8" = 1'-0"

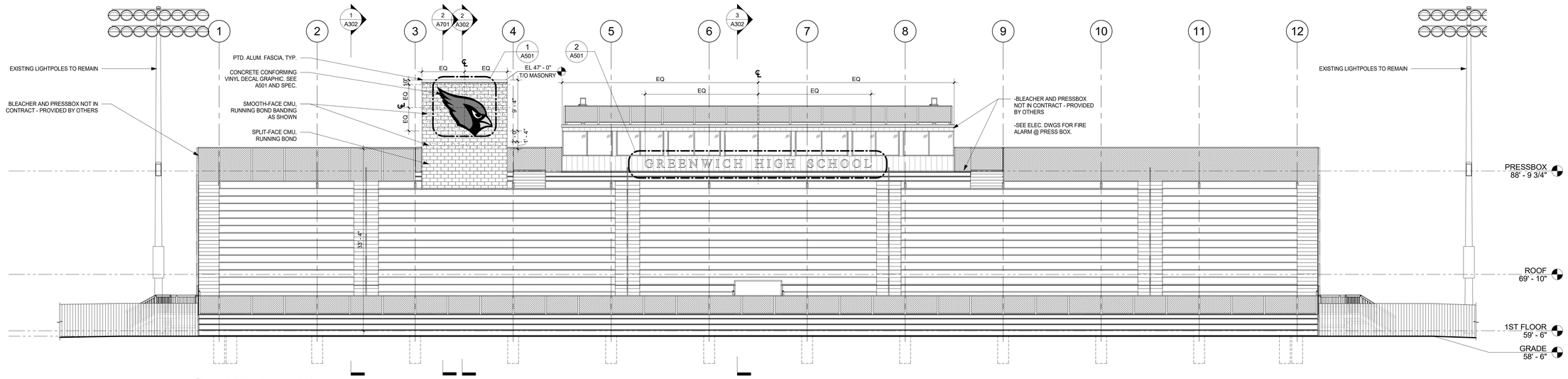

3 NORTH ELEVATION
1/8" = 1'-0"

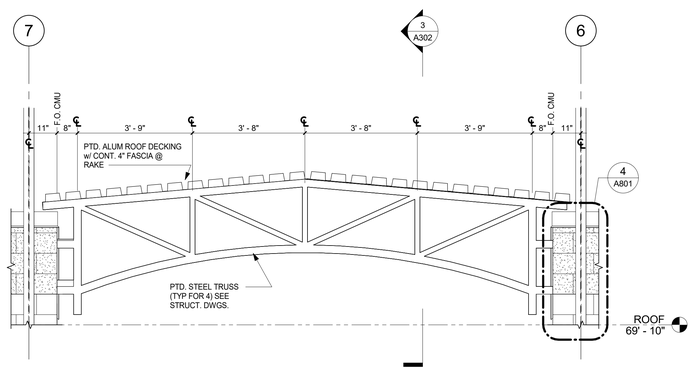

5 SOUTH ELEVATION - CANOPY
1/2" = 1'-0"

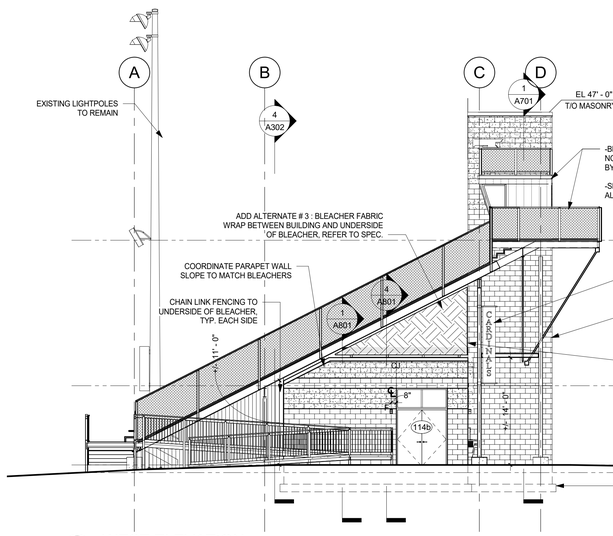

2 WEST ELEVATION
1/8" = 1'-0"

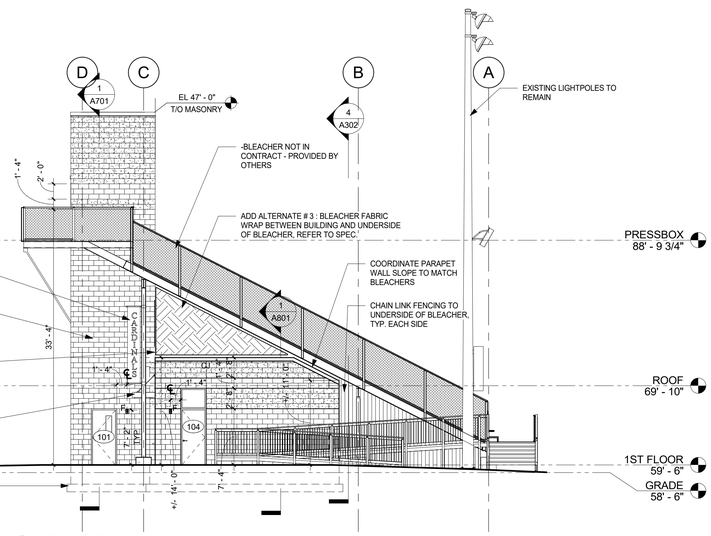

1 EAST ELEVATION
1/8" = 1'-0"

GREENWICH HS CARDINAL STADIUM PHASE 1

GREENWICH PUBLIC SCHOOLS
10 HILLSIDE ROAD
GREENWICH CT 06830

KG+D listen imagine build
KG+D . ARCHITECTS PC
285 MAIN STREET MOUNT KISCO . NEW YORK . 10549
P:914.666.5900 KGDARCHITECTS.COM

CONSTRUCTION DOCUMENTS

NOTE: ALL IDEAS, DESIGNS, ARRANGEMENTS AND PLANS INDICATED OR REPRESENTED BY THIS DRAWING ARE OWNED BY AND ARE THE PROPERTY OF KAEYER, GARBINT, & DAVIDSON ARCHITECTS, PC (KG&D), AND WERE CREATED FOR USE ON THIS PROJECT. NONE OF SUCH IDEAS, DESIGNS, ARRANGEMENTS OR PLANS SHALL BE USED BY OR DISCLOSED TO ANY PURPOSE WHATSOEVER WITHOUT THE WRITTEN PERMISSION OF (KG&D).

WRITTEN DIMENSIONS ON THIS DRAWING SHALL HAVE PRECEDENCE OVER SCALED DIMENSIONS. CONTRACTOR SHALL VERIFY ALL ACTUAL DIMENSIONS AND CONDITIONS ON THE JOB AND THE ARCHITECT MUST BE NOTIFIED OF ANY VARIATIONS FROM DIMENSIONS AND CONDITIONS SHOWN. SHOP DETAILS MUST BE SUBMITTED TO THIS OFFICE FOR APPROVAL BEFORE PROCEEDING WITH FABRICATION.

ALTERATIONS BY ANY PERSON, IN ANY WAY, OF ANY ITEM CONTAINED ON THIS DOCUMENT, UNLESS ACTING UNDER THE DIRECTION OF THE LICENSED ARCHITECT WHOSE PROFESSIONAL SEAL IS AFFIXED HERETO, IS A VIOLATION OF TITLE VII, SECT. 69-5 (b) OF NEW YORK STATE LAW.
COPYRIGHT KAEYER, GARBINT • DAVIDSON ARCHITECTS & ENGINEERS, PC
ALL RIGHTS RESERVED

Professional Seal

No.	Date	Issue
5	12/2/20	PHASE 1A - BUILDING PERMIT
4	11/10/20	PHASE 1 CON. DOCS.
3	10/30/20	PHASE 1B SITE PLAN APP.
2	08/12/20	ISSUE FOR PERMIT
1	08/29/19	DESIGN DEVELOPMENT

Sheet Title

EXTERIOR ELEVATIONS

Job No.	Date
2018-1035	07/08/19
Scale: AS NOTED	Drawn / Checked: -

Sheet Number

A301

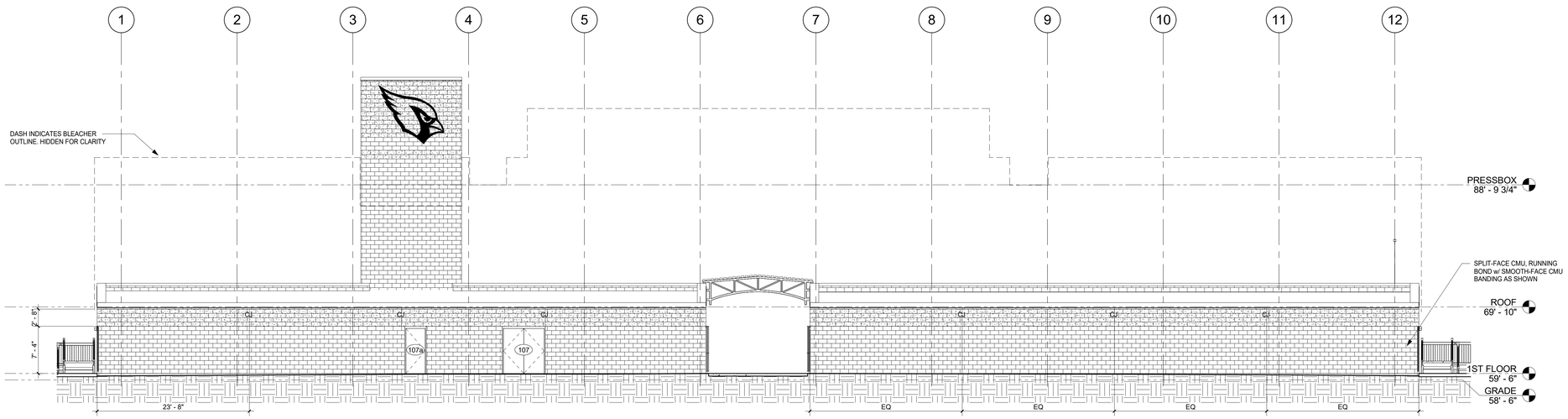

4 SECTION @ NORTH WALL
1/8" = 1'-0"

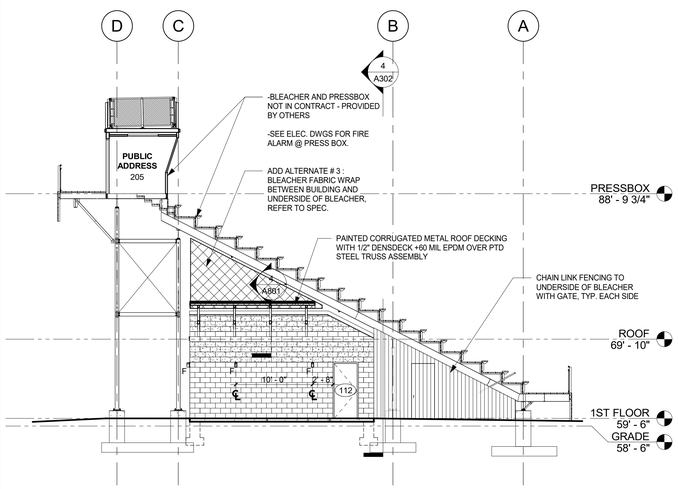

3 BUILDING AND BLEACHER SECTION 3
1/8" = 1'-0"

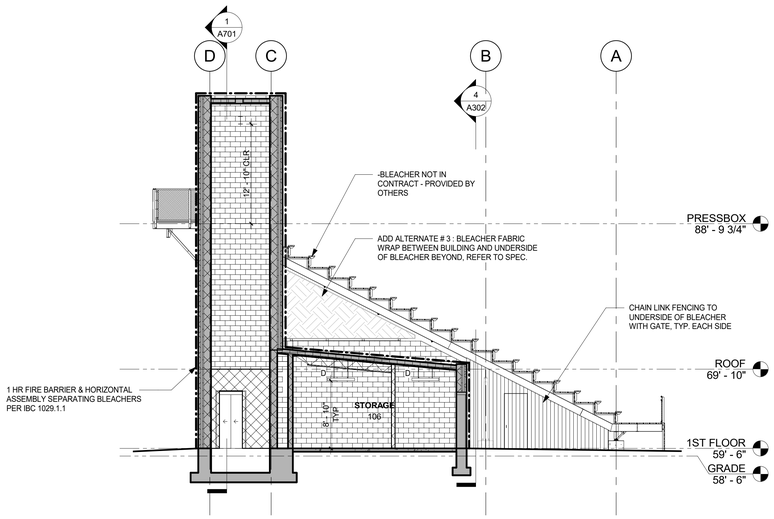

2 BUILDING AND BLEACHER SECTION 2
1/8" = 1'-0"

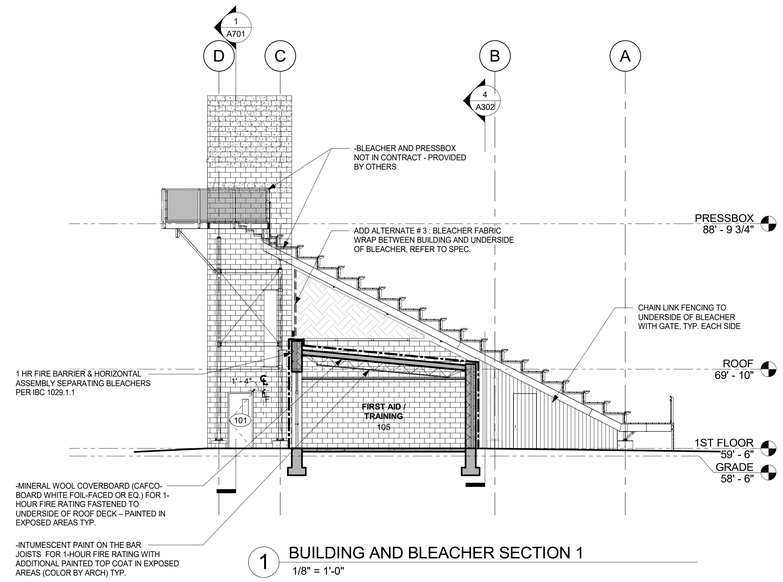

1 BUILDING AND BLEACHER SECTION 1
1/8" = 1'-0"

GREENWICH HS CARDINAL STADIUM PHASE 1

GREENWICH PUBLIC SCHOOLS
10 HILLSIDE ROAD
GREENWICH CT 06830

KG+D listen imagine build
KG+D . ARCHITECTS PC
285 MAIN STREET MOUNT KISCO . NEW YORK . 10549
P:914.666.5900 KGDARCHITECTS.COM

CONSTRUCTION DOCUMENTS

NOTE: ALL IDEAS, DESIGNS, ARRANGEMENTS AND PLANS INDICATED OR REPRESENTED BY THIS DRAWING ARE OWNED BY AND ARE THE PROPERTY OF HAEYEL GARMENT & DAVIDSON ARCHITECTS, PC (KG&D), AND WERE CREATED FOR USE ON THIS PROJECT. NONE OF SUCH IDEAS, DESIGNS, ARRANGEMENTS OR PLANS SHALL BE USED BY OR DISCLOSED TO ANY PURPOSE WHATSOEVER WITHOUT THE WRITTEN PERMISSION OF (KG&D).

WRITTEN DIMENSIONS ON THIS DRAWING SHALL HAVE PRECEDENCE OVER SCALED DIMENSIONS. CONTRACTOR SHALL VERIFY ALL ACTUAL DIMENSIONS AND CONDITIONS ON THE JOB AND THE ARCHITECT MUST BE NOTIFIED OF ANY VARIATIONS FROM DIMENSIONS AND CONDITIONS SHOWN. SHOP DETAILS MUST BE SUBMITTED TO THIS OFFICE FOR APPROVAL BEFORE PROCEEDING WITH FABRICATION.

ALTERATIONS BY ANY PERSON, IN ANY WAY, OF ANY ITEM CONTAINED ON THIS DOCUMENT, UNLESS ACTING UNDER THE DIRECTION OF THE LICENSED ARCHITECT WHOSE PROFESSIONAL SEAL IS AFFIXED HERETO, IS A VIOLATION OF TITLE VII, SECT. 7209 (b) OF NEW YORK STATE LAW.
COPYRIGHT HAEYEL GARMENT + DAVIDSON ARCHITECTS & ENGINEERS, PC
ALL RIGHTS RESERVED

Professional Seal

No.	Date	Issue
5	12/2/20	PHASE 1A - BUILDING PERMIT
4	11/10/20	PHASE 1 CON. DOCS.
3	10/30/20	PHASE 1B SITE PLAN APP.
2	08/12/20	ISSUE FOR PERMIT

Sheet Title

BUILDING SECTIONS

Job No.	Date
2018-1035	09/10/19
Scale: AS NOTED	Drawn / Checked: -

Sheet Number

A302

A	ADA WALL- HUNG TOILET
B	STANDARD WALL-HUNG TOILET
C	STANDARD WALL-HUNG URINAL
D	ADA WALL-HUNG URINAL
E	URINAL SCREEN
F	WALL MIRROR w/ FRAME
G	LAVATORY
H	REAR TOILET GRAB BAR
J	SIDE TOILET GRAB BAR
K	SIDE TOILET VERTICAL GRAB BAR
L	TOILET PAPER ROLL DISPENSER
M	SANITARY DISPOSAL
N	LIQUID SOAP DISPENSER
P	ELECTRIC HAND DRYER
R	FLOOR MOUNTED OVERHEAD BRACED TOILET PARTITION
S	COAT HOOK
T	WALL-HUNG DRINKING FOUNTAIN
V	BABY CHANGING STATION

NOTE:
ACCESSORIES L, M, N ARE SUPPLIED BY OWNER, INSTALLED BY GC.

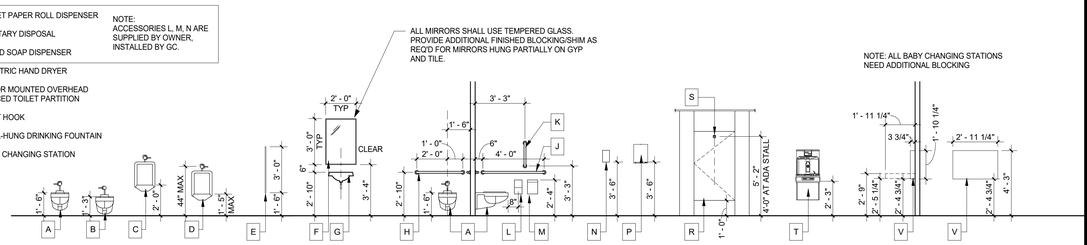

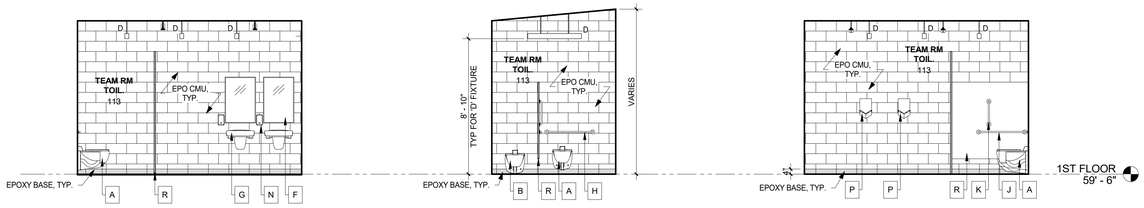

17 TEAM TOILET ELEVATION - SOUTH
1/4" = 1'-0"

16 TEAM TOILET ELEVATION - EAST
1/4" = 1'-0"

15 TEAM TOILET ELEVATION - NORTH
1/4" = 1'-0"

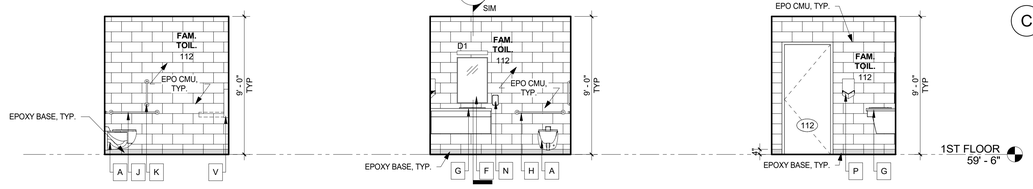

14 FAM. TOILET ELEVATION - WEST
1/4" = 1'-0"

13 FAM. TOILET ELEVATION - SOUTH
1/4" = 1'-0"

12 FAM. TOILET ELEVATION - EAST
1/4" = 1'-0"

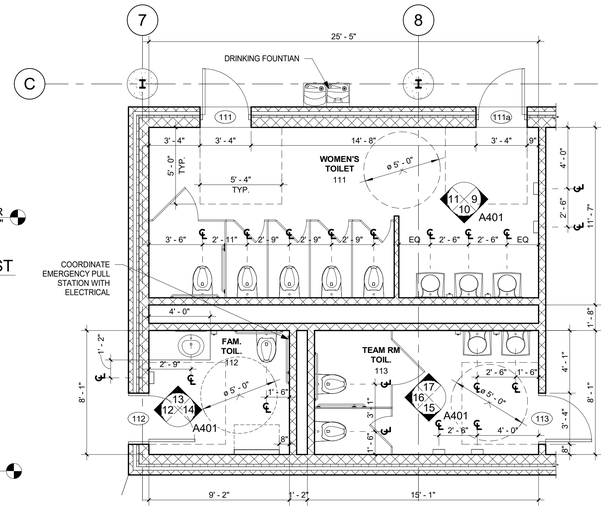

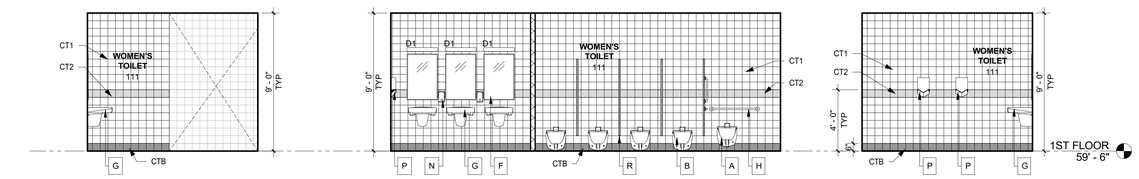

11 WOMENS TOILET ELEVATION - EAST
1/4" = 1'-0"

10 WOMENS TOILET ELEVATION - NORTH
1/4" = 1'-0"

9 WOMENS TOILET ELEVATION - WEST
1/4" = 1'-0"

8 WOMENS TOILET ROOM / FAM. TOIL / TEAM RM TOIL
1/4" = 1'-0"

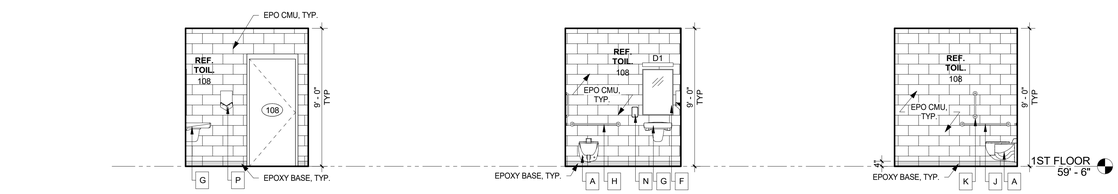

7 REF TOILET ELEVATION - WEST
1/4" = 1'-0"

6 REF TOILET ELEVATION - SOUTH
1/4" = 1'-0"

5 REF TOILET ELEVATION - EAST
1/4" = 1'-0"

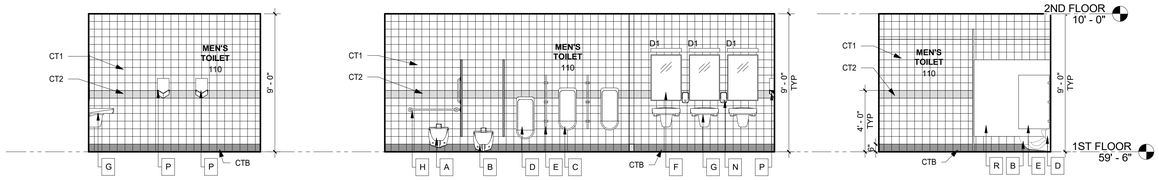

4 MENS TOILET ELEVATION- EAST
1/4" = 1'-0"

3 MENS TOILET ELEVATION- NORTH
1/4" = 1'-0"

2 MENS TOILET ELEVATION- WEST
1/4" = 1'-0"

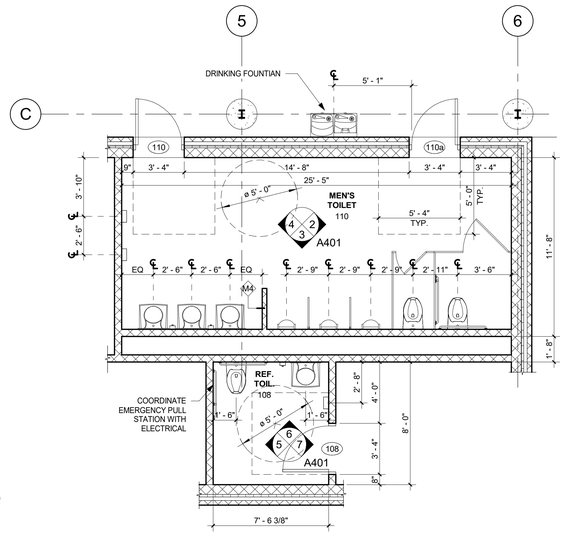

1 MEN TOILET ROOM & REF TOILET
1/4" = 1'-0"

GREENWICH HS CARDINAL STADIUM PHASE 1

GREENWICH PUBLIC SCHOOLS
10 HILLSIDE ROAD
GREENWICH CT 06830

KG+D listen imagine build
KG+D . ARCHITECTS PC
285 MAIN STREET MOUNT KISCO . NEW YORK . 10549
P:914.666.5900 KGDARCHITECTS.COM

CONSTRUCTION DOCUMENTS

NOTE: ALL IDEAS, DESIGNS, ARRANGEMENTS AND PLANS INDICATED OR REPRESENTED BY THIS DRAWING ARE OWNED BY AND ARE THE PROPERTY OF KAEYER, GARMENT, & DAVIDSON ARCHITECTS, PC (KG&D), AND WERE CREATED FOR USE ON THIS PROJECT. NONE OF SUCH IDEAS, DESIGNS, ARRANGEMENTS OR PLANS SHALL BE USED BY OR DISCLOSED TO ANY PURPOSE WHATSOEVER WITHOUT THE WRITTEN PERMISSION OF (KG&D).

WRITTEN DIMENSIONS ON THIS DRAWING SHALL HAVE PRECEDENCE OVER SCALED DIMENSIONS. CONTRACTOR SHALL VERIFY ALL ACTUAL DIMENSIONS AND CONDITIONS ON THE JOB AND THE ARCHITECT MUST BE NOTIFIED OF ANY VARIATIONS FROM DIMENSIONS AND CONDITIONS SHOWN. SHOP DETAILS MUST BE SUBMITTED TO THIS OFFICE FOR APPROVAL BEFORE PROCEEDING WITH FABRICATION.

ALTERATIONS BY ANY PERSON, IN ANY WAY, OF ANY ITEM CONTAINED ON THIS DOCUMENT, UNLESS ACTING UNDER THE DIRECTION OF THE LICENSED ARCHITECT WHOSE PROFESSIONAL SEAL IS AFFIXED HERETO, IS A VIOLATION OF TITLE VII, SECT. 7209 § 2 OF NEW YORK STATE LAW.
COPYRIGHT KAEYER, GARMENT + DAVIDSON ARCHITECTS & ENGINEERS, PC
ALL RIGHTS RESERVED.

Professional Seal

No.	Date	Issue
5	12/2/20	PHASE 1A - BUILDING PERMIT
4	11/10/20	PHASE 1 CON. DOCS.
2	08/12/20	ISSUE FOR PERMIT
1	08/29/19	DESIGN DEVELOPMENT

Sheet Title
ENLARGED PLANS & INTERIOR ELEVATIONS

Job No.	Date
2018-1035	07/08/19
Scale: AS NOTED	Drawn / Checked: -

Sheet Number
A401

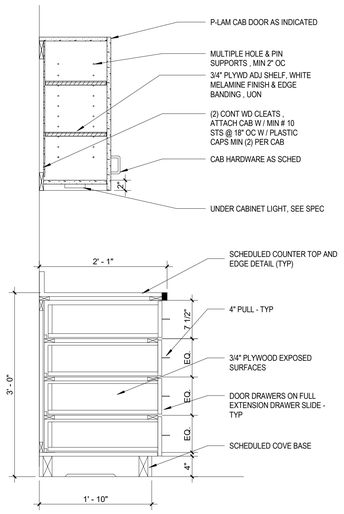

13 SECTION @ CABINET W/ DRAWERS & TOP CABINET
1" = 1'-0"

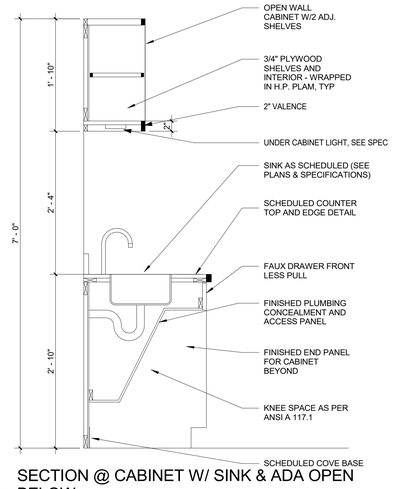

11 SECTION @ CABINET W/ SINK & ADA OPEN BELOW
1" = 1'-0"

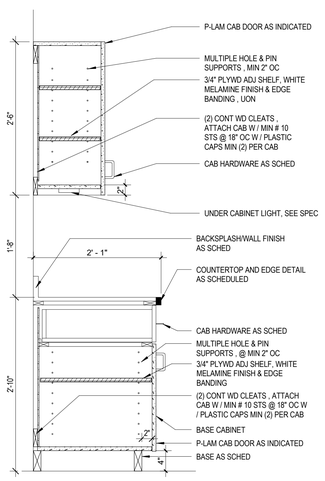

12 BASE CAB DOOR 34 WITH UPPER
1" = 1'-0"

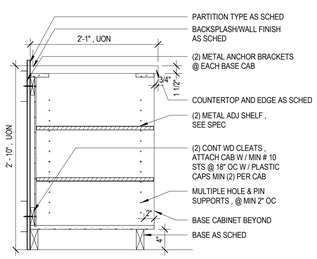

10 BASE CAB OPEN
1" = 1'-0"

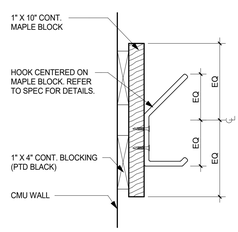

9 HOOK MOUNT DETAIL
3" = 1'-0"

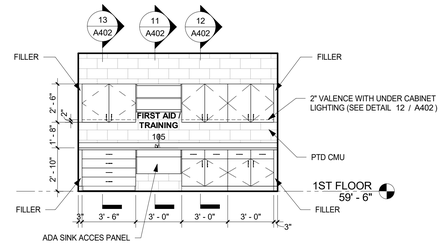

8 EAST ELEVATION @ FIRST AID/ TRAINING
1/4" = 1'-0"

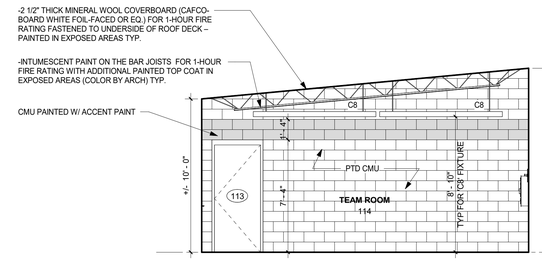

7 TEAM ROOM ELEVATIONS - EAST
1/4" = 1'-0"

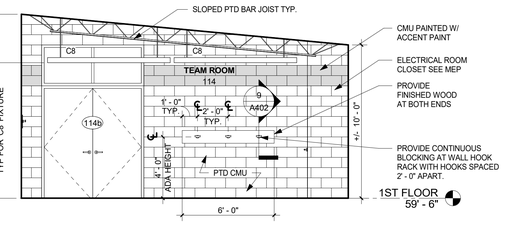

6 TEAM ROOM ELEVATIONS - WEST
1/4" = 1'-0"

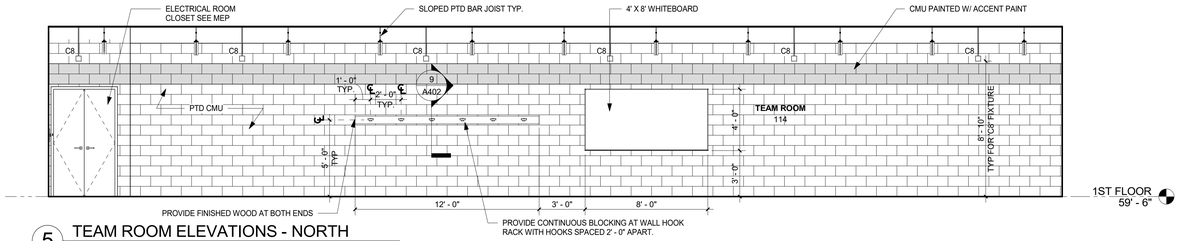

5 TEAM ROOM ELEVATIONS - NORTH
1/4" = 1'-0"

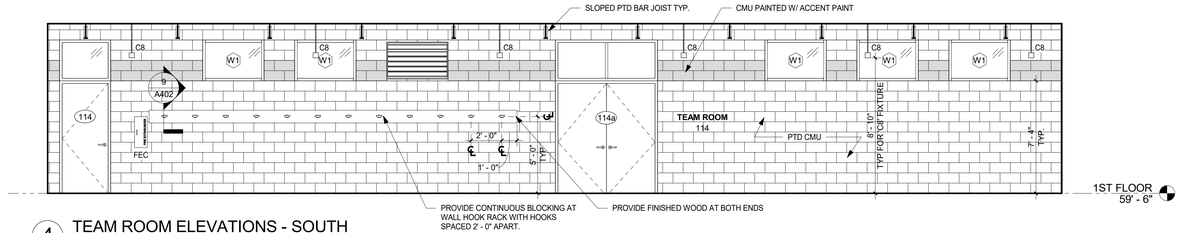

4 TEAM ROOM ELEVATIONS - SOUTH
1/4" = 1'-0"

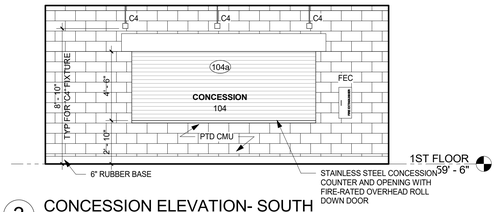

3 CONCESSION ELEVATION- SOUTH
1/4" = 1'-0"

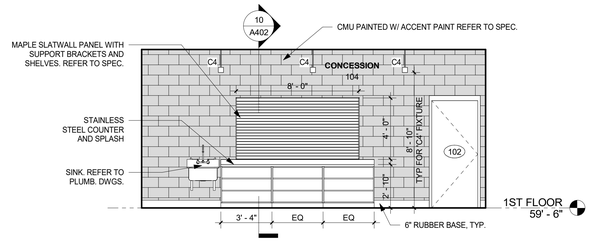

2 CONCESSION ELEVATION- NORTH
1/4" = 1'-0"

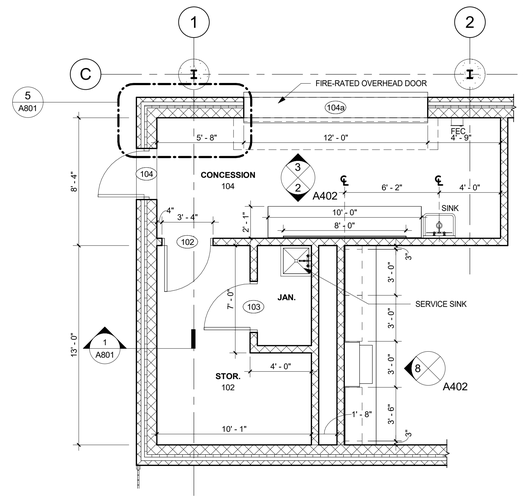

1 CONCESSION & STORAGE
1/4" = 1'-0"

GREENWICH HS CARDINAL STADIUM PHASE 1

GREENWICH PUBLIC SCHOOLS
10 HILLSIDE ROAD
GREENWICH CT 06830

KG+D listen imagine build
KG+D . ARCHITECTS PC
285 MAIN STREET MOUNT KISCO . NEW YORK . 10549
P:914.666.5900 KGDARCHITECTS.COM

CONSTRUCTION DOCUMENTS

NOTE: ALL IDEAS, DESIGNS, ARRANGEMENTS AND PLANS INDICATED OR REPRESENTED BY THIS DRAWING ARE OWNED BY AND ARE THE PROPERTY OF KAEYER, GARMENT, & DAVIDSON ARCHITECTS, PC (KG&D), AND WERE CREATED FOR USE ON THIS PROJECT. NONE OF SUCH IDEAS, DESIGNS, ARRANGEMENTS OR PLANS SHALL BE USED BY OR DISCLOSED TO ANY PURPOSE WHATSOEVER WITHOUT THE WRITTEN PERMISSION OF (KG&D).

WRITTEN DIMENSIONS ON THIS DRAWING SHALL HAVE PRECEDENCE OVER SCALED DIMENSIONS. CONTRACTOR SHALL VERIFY ALL ACTUAL DIMENSIONS AND CONDITIONS ON THE JOB AND THE ARCHITECT MUST BE NOTIFIED OF ANY VARIATIONS FROM DIMENSIONS AND CONDITIONS SHOWN. SHOP DETAILS MUST BE SUBMITTED TO THIS OFFICE FOR APPROVAL BEFORE PROCEEDING WITH FABRICATION.

ALTERATIONS BY ANY PERSON, IN ANY WAY, OF ANY ITEM CONTAINED ON THIS DOCUMENT, UNLESS ACTING UNDER THE DIRECTION OF THE LICENCED ARCHITECT WHOSE PROFESSIONAL SEAL IS AFFIXED HERETO, IS A VIOLATION OF TITLE VII, SECT. 7209 OF NEW YORK STATE LAW.
COPYRIGHT KAEYER, GARMENT + DAVIDSON ARCHITECTS & ENGINEERS, PC
ALL RIGHTS RESERVED.

Professional Seal

No.	Date	Issue
5	12/2/20	PHASE 1A - BUILDING PERMIT
4	11/10/20	PHASE 1 CON. DOCS.
2	08/12/20	ISSUE FOR PERMIT
1	08/29/19	DESIGN DEVELOPMENT

Sheet Title
ENLARGED PLANS & INTERIOR ELEVATIONS

Job No.	Date
2018-1035	07/08/19
Scale	Drawn / Checked
AS NOTED	-

Sheet Number
A402

GENERAL NOTE:
PROVIE MECHANICAL SIGNAGE MOUNTING. MOUNTING LOCATION TO COMPLY WITH 2010 ADA STANDARDS FOR ACCESSIBLE DESIGN SECTION 703.4 .

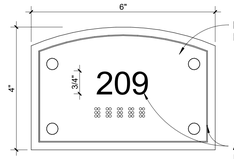

TYPE A - TYPICAL ROOM IDENTIFICATION

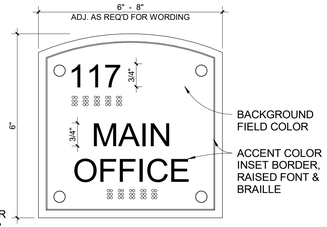

TYPE B - ROOM IDENTIFICATION SIGN

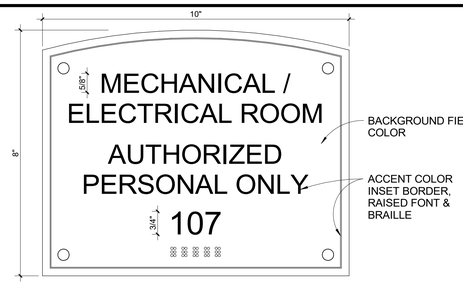

TYPE C - ROOM IDENTIFICATION SIGN

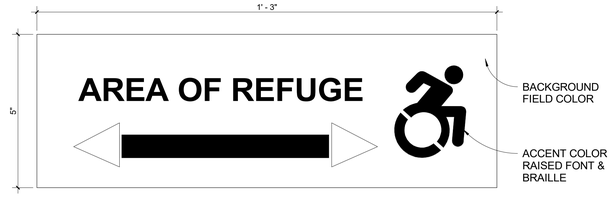

TYPE V - LEFT OR RIGHT DIRECTIONAL SIGNAGE

MOUNTED 60" A.F.F. TO CENTERLINE OF SIGN - LOCATED ALONG THE PATH OF EGREES - COORD W/ ARCHITECT FOR FINAL LOCATIONS

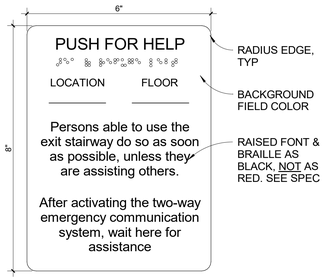

TYPE T - "DIRECTIONS FOR CALL BOXES" WALL SIGN WITH BRAILLE

MOUNTED 48" A.F.F. TO CENTERLINE OF SIGN - LOCATED IMMEDIATELY ADJACENT TO TWO-WAY COMMUNICATION SYSTEM IN AREA OF EGRESS

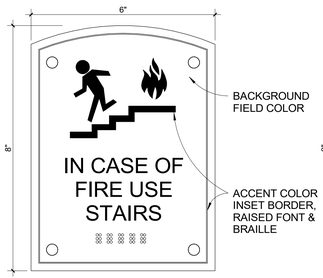

TYPE D - ELEVATOR SIGN

TYPE E - TOILET IDENTIFICATION SIGN

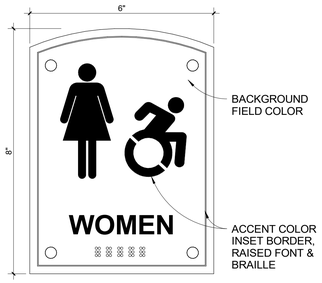

TYPE F - TOILET IDENTIFICATION SIGN

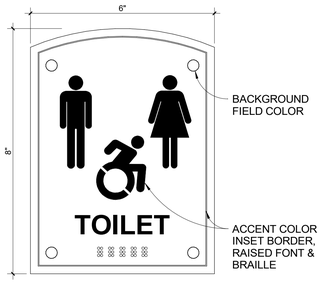

TYPE G - TOILET IDENTIFICATION SIGN

TYPE H - TOILET IDENTIFICATION SIGN

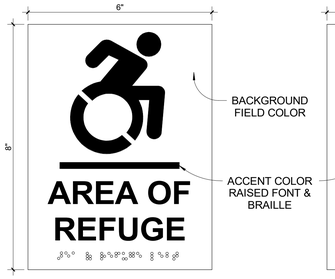

TYPE R - DOOR/ENTRY WAY SIGN WITH BRAILLE

MOUNTED 60" A.F.F. TO CENTER OF SIGN - LOCATED @ EACH DOOR PROVIDING ACCESS TO AREA OF REFUGE - SEE ARCHITECT FOR FINAL LOCATIONS

TYPE U - PHOTOLUMINESCENT WALL SIGN WITH BRAILLE

MOUNTED 60"-80" A.F.F. TO TOP OF SIGN - LOCATED AT DOOR ADJACENT TO AREA OF REFUGE - SEE ARCHITECT FOR FINAL LOCATION

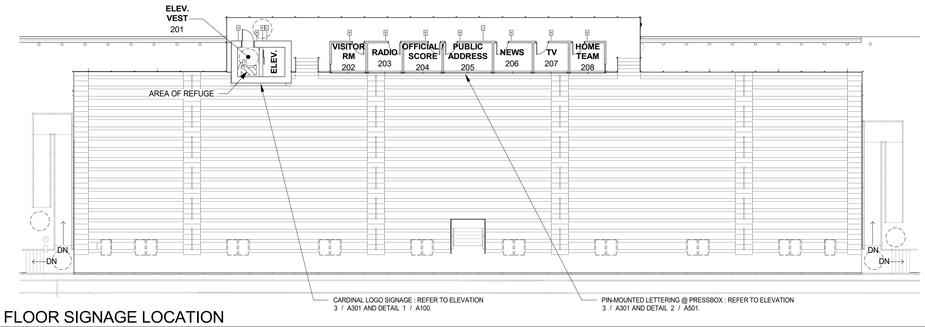

6 2ND FLOOR SIGNAGE LOCATION
1/16" = 1'-0"

INTERIOR DEDICATION SIGN

N.T.S CAST BRONZE PLAQUE - PROVIDE ONE SIGN, LOCATION TO BE DETERMINED. SEE SPECIFICATION FOR DETAILS

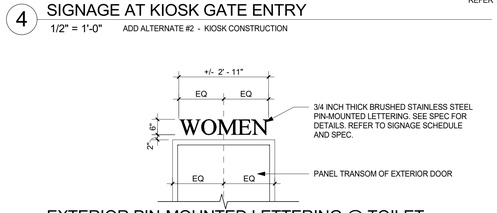

3 EXTERIOR PIN-MOUNTED LETTERING @ TOILET ROOMS
1/2" = 1'-0"

4 SIGNAGE AT KIOSK GATE ENTRY
1/2" = 1'-0" ADD ALTERNATE #2 - KIOSK CONSTRUCTION

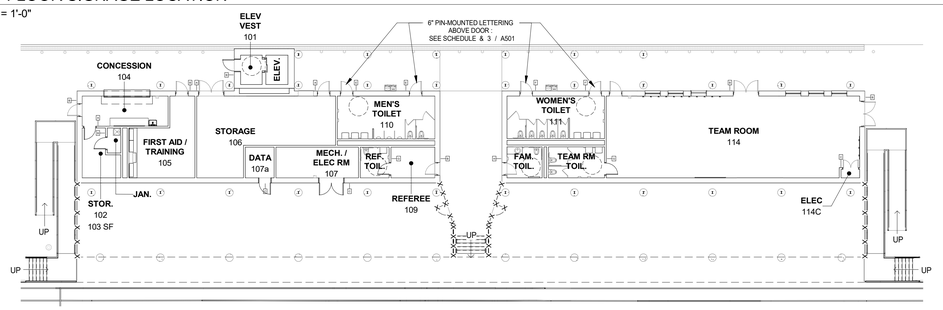

5 1ST FLOOR SIGNAGE LOCATION
1/16" = 1'-0"

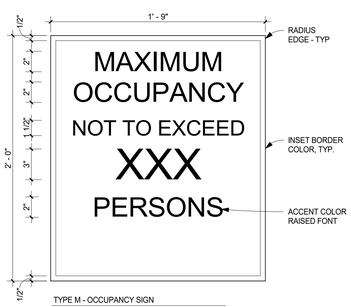

TYPE M - OCCUPANCY SIGN

N.T.S SEE SPECIFICATIONS FOR DETAILS

2 EXTERIOR PIN-MOUNTED LETTERING @ PRESSBOX
1/4" = 1'-0"

ADD ALTERNATE #2 - KIOSK CONSTRUCTION

Kiosk Finish Schedule

ROOM #	ROOM NAME	FLOOR FIN	FLOOR BASE	NORTH WALL MAT	NORTH WALL FIN	EAST WALL MAT	EAST WALL FIN	SOUTH WALL MAT	SOUTH WALL FIN	WEST WALL MAT	WEST WALL FIN	CEILING MAT	CEILING FIN	CEILING HT	Comments
K100	KIOSK	POL. CONC.	RB8	GWB	PTD	GWB	PTD	GWB	PTD	GWB	PTD	GWB	PTD	9' - 4"	ALL WALLS W/ PAINT & 8" RUBBER BASE

BASE BID

Finish Schedule

ROOM #	ROOM NAME	FLOOR FIN	FLOOR BASE	NORTH WALL MAT	NORTH WALL FIN	EAST WALL MAT	EAST WALL FIN	SOUTH WALL MAT	SOUTH WALL FIN	WEST WALL MAT	WEST WALL FIN	CEILING MAT	CEILING FIN	CEILING HT	Comments
100	ELEV.	PT	-	N/A	N/A	N/A	N/A	N/A	N/A	N/A	N/A	N/A	N/A	N/A	WALLS AND CEILING BY MANUF.
101	ELEV VEST	PT	PTB	CMU	PTD	CMU	PTD	CMU	PTD	CMU	PTD	GWB	PTD	9' - 0"	
102	STOR.	CONC	RB	CMU	PTD	CMU	PTD	CMU	PTD	CMU	PTD	OTS	PTD	MIN 9' - 2"	
103	JAN.	EPO	EPO	CMU	PTD	CMU	PTD	CMU	PTD	CMU	PTD	OTS	PTD	MIN 9' - 2"	
104	CONCESSION	POL CONC	RB	CMU	PTD2	CMU	PTD	CMU	PTD	CMU	PTD	OTS	PTD	MIN 9' - 2"	
105	FIRST AID / TRAINING	POL CONC	RB	CMU	PTD	CMU	PTD	CMU	PTD	CMU	PTD	GWB	PTD	9' - 0"	
106	STORAGE	CONC	RB	CMU	PTD	CMU	PTD	CMU	PTD	CMU	PTD	OTS	PTD	MIN 9' - 2"	
107	MECH. / ELEC RM	CONC	RB	CMU	PTD	CMU	PTD	CMU	PTD	CMU	PTD	OTS	PTD	MIN 9' - 2"	
107a	DATA	CONC	RB	CMU	PTD	CMU	PTD	CMU	PTD	CMU	PTD	OTS	PTD	MIN 9' - 2"	
108	REF. TOIL.	EPO	EPO	CMU	EPO	CMU	EPO	CMU	EPO	CMU	EPO	GWB	EPO	9' - 0"	
109	REFEREE	POL CONC	RB	CMU	PTD	CMU	PTD	CMU	PTD	CMU	PTD	OTS	PTD	MIN 9' - 2"	
110	MEN'S TOILET	EPO	CTB	CMU	CT1, CT2	CMU	CT1, CT2	CMU	CT1, CT2	CMU	CT1, CT2	GWB	EPO	9' - 0"	
111	WOMEN'S TOILET	EPO	CTB	CMU	CT1, CT2	CMU	CT1, CT2	CMU	CT1, CT2	CMU	CT1, CT2	GWB	EPO	9' - 0"	
112	FAM. TOIL.	EPO	EPO	CMU	EPO	CMU	EPO	CMU	EPO	CMU	EPO	GWB	EPO	9' - 0"	
113	TEAM RM TOIL.	EPO	EPO	CMU	EPO	CMU	EPO	CMU	EPO	CMU	EPO	OTS	EPO	MIN 9' - 2"	
114	TEAM ROOM	POL CONC	RB	CMU	PTD/PTD2	CMU	PTD/PTD2	CMU	PTD/PTD2	CMU	PTD/PTD2	OTS	PTD	MIN 9' - 2"	
114C	ELEC.	POL CONC	RB	CMU	PTD	CMU	PTD	CMU	PTD	CMU	PTD	OTS	PTD	MIN 9' - 2"	
201	ELEV. VEST	PT	RB	CMU	PTD	CMU	PTD	CMU	PTD	CMU	PTD	GWB	PTD	9' - 0"	

ROOMS IN THE PRESS BOX (202, 203, 204, 205, 206, 207, AND 208) ARE BY BLEACHER MANUFACTURER.

ABBREVIATIONS:

CMU	CONCRETE MASONRY UNIT
CT	CERAMIC TILE
CTB	CERAMIC TILE BASE
CONC	CONCRETE
EPO	EPOXY
GWB	GYPBOARD
OTS	OPEN TO STRUCTURE,
POLCONC	POLISHED CONCRETE
PTD	PAINTED
RB	RUBBER BASE

Signage Schedule

ROOM #	LOCATION	SIGN TYPE	SIGN TEXT (TEXT TO BE CONFIRMED WITH OWNER)	QTY	COMMENTS
101	ELEV VEST (LOWER)	B	101 ELEVATOR	1	
102	STOR.	A	102	1	
103	JAN.	B	103 JANITOR	1	
104	CONCESSION	B	104 CONCESSION	1	
105	FIRST AID / TRAINING	B	105 FIRST AID / TRAINING	1	
106	STORAGE	A	106	2	
107	MECH. / ELEC RM	C	107 MECHANICAL / ELECTRICAL AUTHORIZED PERSONAL ONLY	1	
107a	DATA	C	107A DATA CLOSET AUTHORIZED PERSONAL ONLY	1	
108	REF. TOIL.	G	TOILET	1	
109	REFEREE	B	109 REFEREE	1	
110	MEN'S TOILET	E	MEN	2	...
		PIN-MOUNTED	MEN	2	6" LETTERING (MOUNTED ABOVE ENTRY DOORS)
111	WOMEN'S TOILET	F	WOMEN	2	...
		PIN-MOUNTED	WOMEN	2	6" LETTERING (MOUNTED ABOVE ENTRY DOORS)
112	FAM. TOIL.	H	FAMILY RESTROOM	1	
113	TEAM RM TOIL.	G	TOILET	1	
114	TEAM ROOM	B	114 TEAM ROOM	2	SIGNAGE PLACED AT DOUBLE DOORS ONLY
114C	ELEC.	C	114C ELECTRICAL CLOSET AUTHORIZED PERSONAL ONLY	1	
201	ELEV. VEST (UPPER)	B	201 ELEVATOR	1	
		D	IN CASE OF FIRE USE STAIRS	1	
202	VISITOR RM	B	202 VISITOR ROOM	1	
203	RADIO	B	203 RADIO	1	
204	OFFICIAL / SCORE	B	204 OFFICIAL / SCORE	1	
205	PUBLIC ADDRESS	B	205 PUBLIC ADDRESS	1	
206	NEWS	B	206 NEWS	1	
207	TV	B	207 TV	1	
208	HOME TEAM	B	208 HOME TEAM	1	

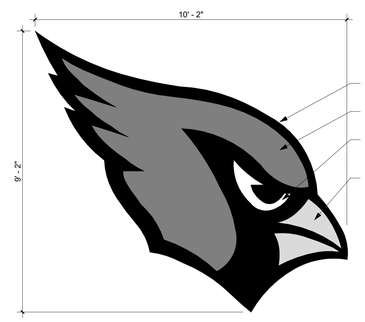

1 EXTERIOR CARDINALS LOGO
1/2" = 1'-0" REFER TO SPEC FOR COLORS

GREENWICH HS CARDINAL STADIUM PHASE 1

GREENWICH PUBLIC SCHOOLS
10 HILLSIDE ROAD
GREENWICH CT 06830

KG+D . ARCHITECTS PC
285 MAIN STREET MOUNT KISCO . NEW YORK . 10549
P:914.666.5900 KGDARCHITECTS.COM

CONSTRUCTION DOCUMENTS

SIGNAGE COLOR DETAILS :

COLORS ARE THE FOLLOWING, UNLESS OTHER WISE NOTED IN DETAILS ON A501 OR IN SPEC...

BACKGROUND FIELD COLOR :
BRUSHED ALUMINIUM
RAISED FONT & BRAILLE COLOR :
RED
INSET BORDER COLOR :
BLACK

EXACT COLORS TO BE SELECTED BY ARCHITECT.

NOTE: ALL IDEAS, DESIGNS, ARRANGEMENTS AND PLANS INDICATED OR REPRESENTED BY THIS DRAWING ARE OWNED BY AND ARE THE PROPERTY OF KAEYER, GARMENT, & DAVIDSON ARCHITECTS, PC (KG&D), AND WERE CREATED FOR USE ON THIS PROJECT. NONE OF SUCH IDEAS, DESIGNS, ARRANGEMENTS OR PLANS SHALL BE USED BY OR DISCLOSED TO ANY PURPOSE WHATSOEVER WITHOUT THE WRITTEN PERMISSION OF (KG&D).

WRITTEN DIMENSIONS ON THIS DRAWING SHALL HAVE PRECEDENCE OVER SCALED DIMENSIONS. CONTRACTOR SHALL VERIFY ALL ACTUAL DIMENSIONS AND CONDITIONS ON THE JOB AND THE ARCHITECT MUST BE NOTIFIED OF ANY VARIATIONS FROM DIMENSIONS AND CONDITIONS SHOWN. SHOP DETAILS MUST BE SUBMITTED TO THIS OFFICE FOR APPROVAL BEFORE PROCEEDING WITH FABRICATION.

ALTERATIONS BY ANY PERSON, IN ANY WAY, OF ANY ITEM CONTAINED ON THIS DOCUMENT, UNLESS ACTING UNDER THE DIRECTION OF THE LICENSED ARCHITECT WHOSE PROFESSIONAL SEAL IS AFFIXED HERETO, IS A VIOLATION OF TITLE VII, SECT. 7209 OF NEW YORK STATE LAW.
COPYRIGHT KAEYER, GARMENT + DAVIDSON ARCHITECTS & ENGINEERS, PC
ALL RIGHTS RESERVED.

Professional Seal

No.	Date	Issue
5	12/2/20	PHASE 1A - BUILDING PERMIT
4	11/10/20	PHASE 1 CON. DOCS.
3	10/30/20	PHASE 1B SITE PLAN APP.
2	08/12/20	ISSUE FOR PERMIT

Sheet Title

SIGNAGE AND FINISH SCHEDULE

Job No.	Date
2018-1035	02/12/20
Scale: AS NOTED	Drawn / Checked: -

Sheet Number

A501

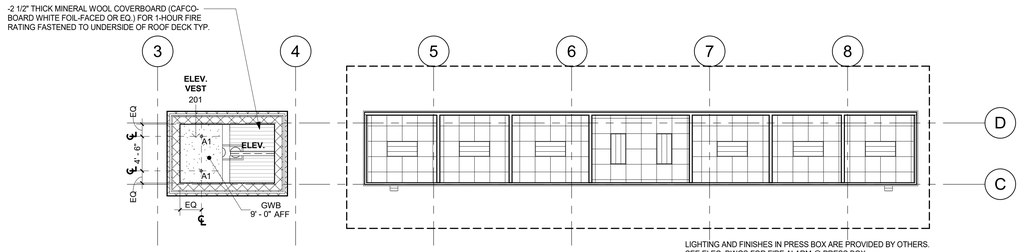

2 PRESSBOX RCP
1/8" = 1'-0"

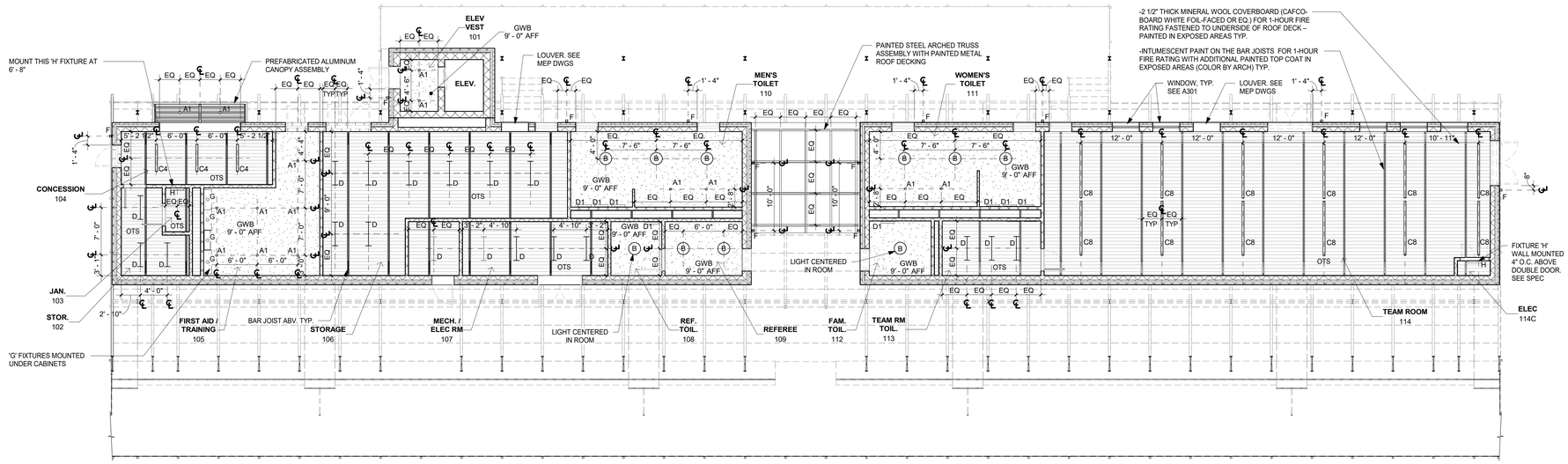

LIGHTING FIXTURE HEIGHTS

NOTE : FOR SUSPENDED FIXTURES HEIGHTS ARE A.F.F AND TO BOTTOM OF FIXTURE. FOR WALL MOUNTED FIXTURES HEIGHTS ARE A.F.F AND TO CENTER OF FIXTURE

FIXTURE	HEIGHT
C4	8' - 10" (SUSPENDED FROM CEILING)
C8	8' - 10" (SUSPENDED FROM CEILING)
D	8' - 10" (SUSPENDED FROM CEILING)
F	7' - 0" (WALL MOUNTED)
D1	6' - 8" (WALL MOUNTED)
H	7' - 8" @ ELEC CLOSET (WALL MOUNTED)
	6' - 8" @ JAN CLOSET (WALL MOUNTED)

KIOSK FIXTURES (ADD ALTERNATE 2)
K 5' - 0"

1 TEAM BUILDING RCP
1/8" = 1'-0"

GREENWICH HS CARDINAL STADIUM PHASE 1

GREENWICH PUBLIC SCHOOLS
10 HILLSIDE ROAD
GREENWICH CT 06830

KG+D . ARCHITECTS PC
285 MAIN STREET MOUNT KISCO . NEW YORK . 10549
P:914.666.5900 KGDARCHITECTS.COM

CONSTRUCTION DOCUMENTS

TRUE NORTH PROJECT NORTH

NOTE: ALL IDEAS, DESIGNS, ARRANGEMENTS AND PLANS INDICATED OR REPRESENTED BY THIS DRAWING ARE OWNED BY AND ARE THE PROPERTY OF KAEYER, GARMENT, & DAVIDSON ARCHITECTS, PC (KG&D), AND WERE CREATED FOR USE ON THIS PROJECT. NONE OF SUCH IDEAS, DESIGNS, ARRANGEMENTS OR PLANS SHALL BE USED BY OR DISCLOSED TO ANY PURPOSE WHATSOEVER WITHOUT THE WRITTEN PERMISSION OF (KG&D).

WRITTEN DIMENSIONS ON THIS DRAWING SHALL HAVE PRECEDENCE OVER SCALED DIMENSIONS. CONTRACTOR SHALL VERIFY ALL ACTUAL DIMENSIONS AND CONDITIONS ON THE JOB AND THE ARCHITECT MUST BE NOTIFIED OF ANY VARIATIONS FROM DIMENSIONS AND CONDITIONS SHOWN. SHOP DETAILS MUST BE SUBMITTED TO THIS OFFICE FOR APPROVAL BEFORE PROCEEDING WITH FABRICATION.

ALTERATIONS BY ANY PERSON, IN ANY WAY, OF ANY ITEM CONTAINED ON THIS DOCUMENT, UNLESS ACTING UNDER THE DIRECTION OF THE LICENSED ARCHITECT WHOSE PROFESSIONAL SEAL IS AFFIXED HERETO, IS A VIOLATION OF TITLE VII, SECT. 89.5 (b) OF NEW YORK STATE LAW.
COPYRIGHT KAEYER, GARMENT + DAVIDSON ARCHITECTS & ENGINEERS, PC
ALL RIGHTS RESERVED

Professional Seal

No.	Date	Issue
5	12/2/20	PHASE 1A - BUILDING PERMIT
4	11/10/20	PHASE 1 CON. DOCS.
2	08/12/20	ISSUE FOR PERMIT

Sheet Title

REFLECTED CEILING PLANS

Job No.	Date
2018-1035	02/12/20
Scale: AS NOTED	Drawn / Checked: -

Sheet Number

A601

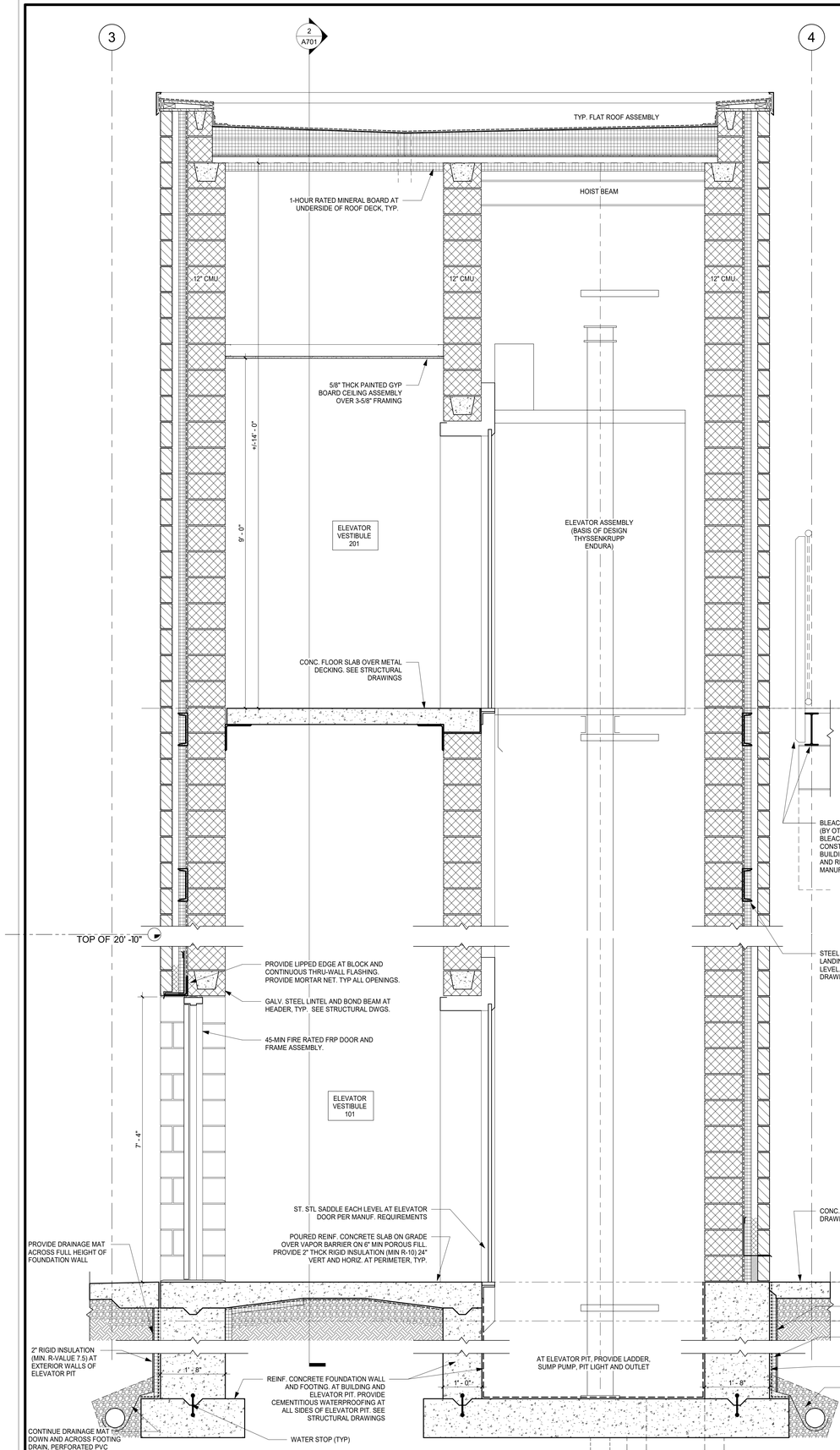

1 WALL SECTION @ ELEVATOR E-W
3/4" = 1'-0"

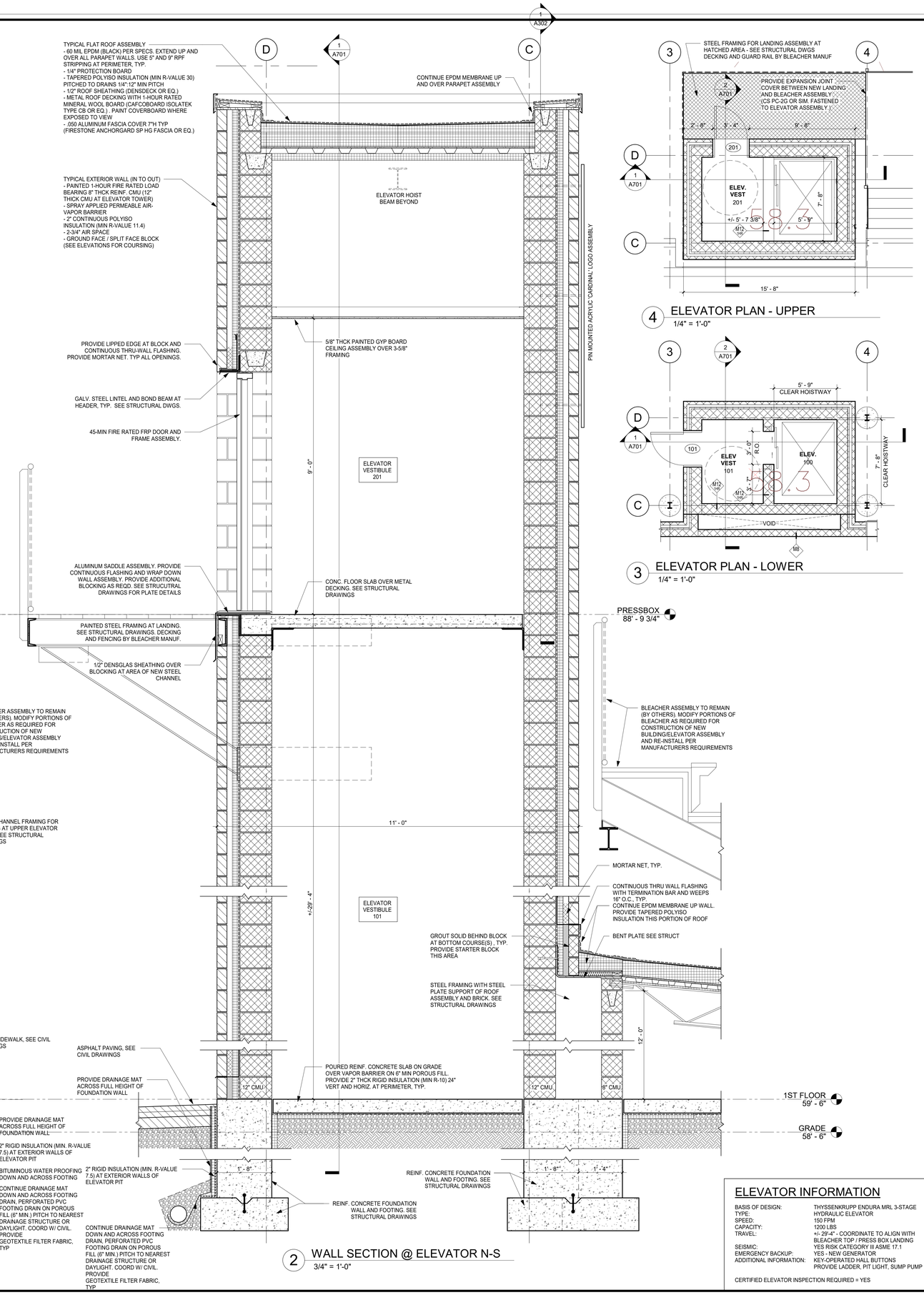

2 WALL SECTION @ ELEVATOR N-S
3/4" = 1'-0"

4 ELEVATOR PLAN - UPPER
1/4" = 1'-0"

3 ELEVATOR PLAN - LOWER
1/4" = 1'-0"

ELEVATOR INFORMATION

BASIS OF DESIGN:	THYSSENKRUPP ENDURA MRL 3-STAGE
TYPE:	HYDRAULIC ELEVATOR
SPEED:	150 FPM
CAPACITY:	1200 LBS
TRAVEL:	+/- 29'-4" - COORDINATE TO ALIGN WITH BLEACHER TOP / PRESS BOX LANDING
SEISMIC:	YES RISK CATEGORY III ASME 17.1
EMERGENCY BACKUP:	YES - NEW GENERATOR
ADDITIONAL INFORMATION:	KEY-OPERATED HALL BUTTONS PROVIDE LADDER, PIT LIGHT, SUMP PUMP

CERTIFIED ELEVATOR INSPECTION REQUIRED = YES

GREENWICH HS CARDINAL STADIUM PHASE 1

GREENWICH PUBLIC SCHOOLS
10 HILLSIDE ROAD
GREENWICH CT 06830

KG+D listen imagine build
KG+D . ARCHITECTS PC
285 MAIN STREET MOUNT KISCO . NEW YORK . 10549
P:914.666.5900 KGDARCHITECTS.COM

CONSTRUCTION DOCUMENTS

NOTE: ALL IDEAS, DESIGNS, ARRANGEMENTS AND PLANS INDICATED OR REPRESENTED BY THIS DRAWING ARE OWNED BY AND ARE THE PROPERTY OF KAEYER, GARMENT, & DAVIDSON ARCHITECTS, PC (KG&D), AND WERE CREATED FOR USE ON THIS PROJECT. NONE OF SUCH IDEAS, DESIGNS, ARRANGEMENTS OR PLANS SHALL BE USED BY OR DISCLOSED TO ANY PURPOSE WHATSOEVER WITHOUT THE WRITTEN PERMISSION OF (KG&D).

WRITTEN DIMENSIONS ON THIS DRAWING SHALL HAVE PRECEDENCE OVER SCALED DIMENSIONS. CONTRACTOR SHALL VERIFY ALL ACTUAL DIMENSIONS AND CONDITIONS ON THE JOB AND THE ARCHITECT MUST BE NOTIFIED OF ANY VARIATIONS FROM DIMENSIONS AND CONDITIONS SHOWN. SHOP DETAILS MUST BE SUBMITTED TO THIS OFFICE FOR APPROVAL BEFORE PROCEEDING WITH FABRICATION.

ALTERATIONS BY ANY PERSON, IN ANY WAY, OF ANY ITEM CONTAINED ON THIS DOCUMENT, UNLESS ACTING UNDER THE DIRECTION OF THE LICENCED ARCHITECT WHOSE PROFESSIONAL SEAL IS AFFIXED HERETO, IS A VIOLATION OF TITLE VII, SECT. 65.5 (b) OF NEW YORK STATE LAW.
COPYRIGHT KAEYER, GARMENT + DAVIDSON ARCHITECTS & ENGINEERS, PC
ALL RIGHTS RESERVED

Professional Seal

No.	Date	Issue
5	12/2/20	PHASE 1A - BUILDING PERMIT
4	11/10/20	PHASE 1 CON. DOCS.
3	10/30/20	PHASE 1B SITE PLAN APP.
2	08/12/20	ISSUE FOR PERMIT

Sheet Title

ENLARGED ELEVATOR DRAWINGS

Job No. 2018-1035	Date 05/19/20
Scale AS NOTED	Drawn / Checked -

Sheet Number

A701

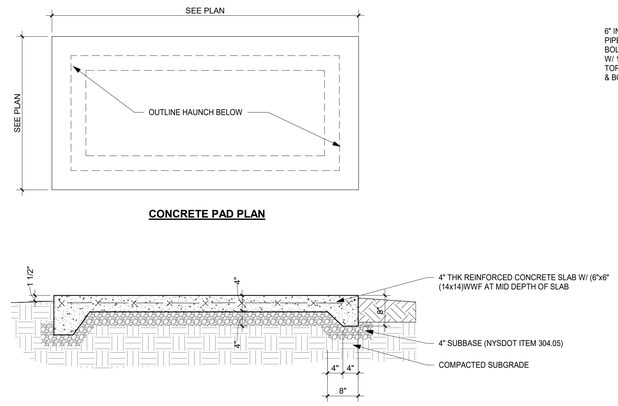

5 CONCRETE PAD DETAILS
3/4" = 1'-0"

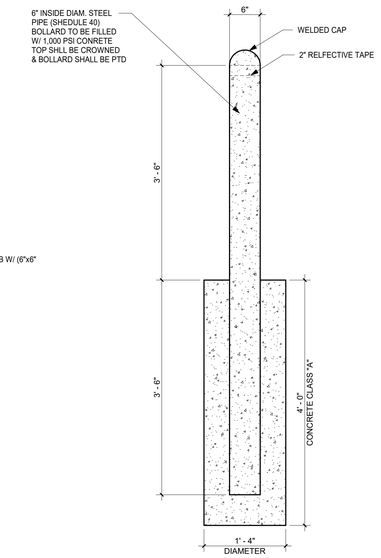

4 BOLLARD
1" = 1'-0"

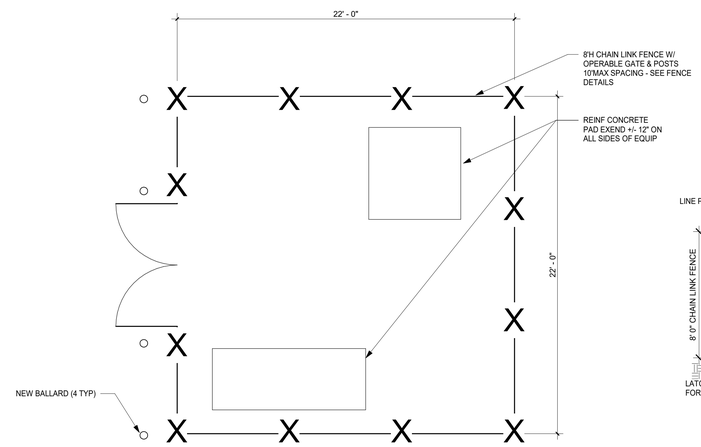

3 UTILITY YARD -PLAN
1/4" = 1'-0"

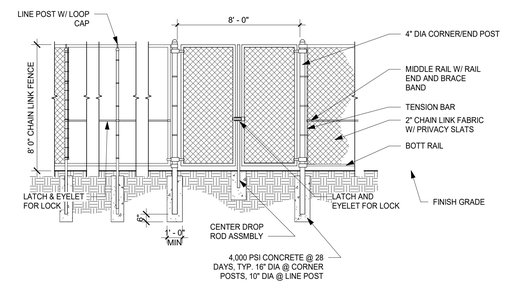

2 UTILITY FENCE / GATE
1/4" = 1'-0"

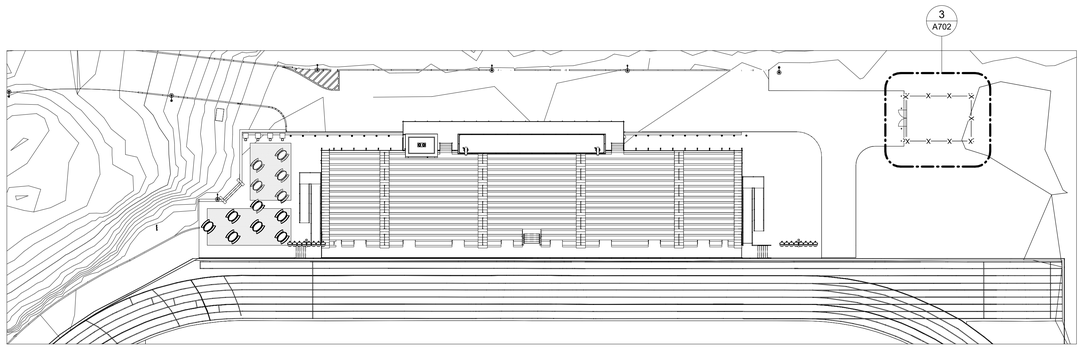

1 SITE PLAN KEY
1" = 30'-0"

GREENWICH HS
CARDINAL
STADIUM
PHASE 1

GREENWICH PUBLIC SCHOOLS
10 HILLSIDE ROAD
GREENWICH CT 06830

KG+D listen imagine build
KG+D . ARCHITECTS PC
285 MAIN STREET MOUNT KISCO . NEW YORK . 10549
P:914.666.5900 KGDARCHITECTS.COM

CONSTRUCTION DOCUMENTS

NOTE: ALL IDEAS, DESIGNS, ARRANGEMENTS AND PLANS INDICATED OR REPRESENTED BY THIS DRAWING ARE OWNED BY AND ARE THE PROPERTY OF KAEYER, GARMENT, & DAVIDSON ARCHITECTS, PC (KG&D), AND WERE CREATED FOR USE ON THIS PROJECT. NONE OF SUCH IDEAS, DESIGNS, ARRANGEMENTS OR PLANS SHALL BE USED BY OR DISCLOSED TO ANY PURPOSE WHATSOEVER WITHOUT THE WRITTEN PERMISSION OF (KG&D).

WRITTEN DIMENSIONS ON THIS DRAWING SHALL HAVE PRECEDENCE OVER SCALED DIMENSIONS. CONTRACTOR SHALL VERIFY ALL ACTUAL DIMENSIONS AND CONDITIONS ON THE JOB AND THE ARCHITECT MUST BE NOTIFIED OF ANY VARIATIONS FROM DIMENSIONS AND CONDITIONS SHOWN. SHOP DETAILS MUST BE SUBMITTED TO THIS OFFICE FOR APPROVAL BEFORE PROCEEDING WITH FABRICATION.

ALTERATIONS BY ANY PERSON, IN ANY WAY, OF ANY ITEM CONTAINED ON THIS DOCUMENT, UNLESS ACTING UNDER THE DIRECTION OF THE LICENCED ARCHITECT WHOSE PROFESSIONAL SEAL IS AFFIXED HERETO, IS A VIOLATION OF TITLE VII, SECT. 69.5 (b) OF NEW YORK STATE LAW.
COPYRIGHT KAEYER, GARMENT • DAVIDSON ARCHITECTS & ENGINEERS, PC
ALL RIGHTS RESERVED

Professional Seal

No.	Date	Issue
5	12/2/20	PHASE 1A - BUILDING PERMIT
4	11/10/20	PHASE 1 CON. DOCS.

Sheet Title

UTILITY YARD

Job No.	Date
2018-1035	11/06/20
Scale: AS NOTED	Drawn / Checked: Author Checker

Sheet Number

A702

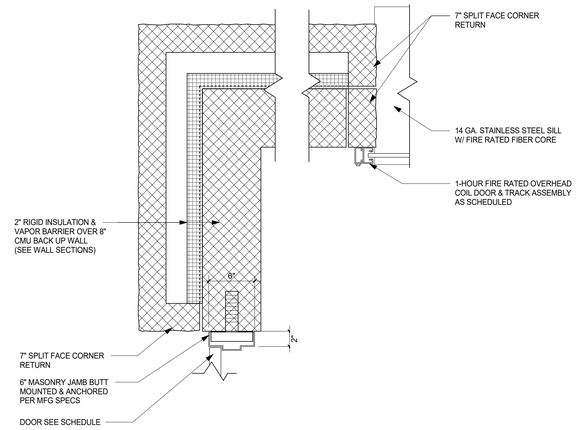

5 PLAN DETAIL @ CORNER
1 1/2" = 1'-0"

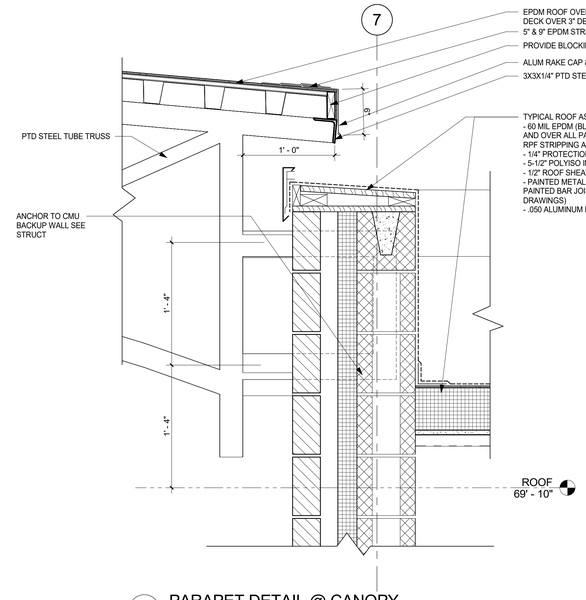

4 PARAPET DETAIL @ CANOPY
1 1/2" = 1'-0"

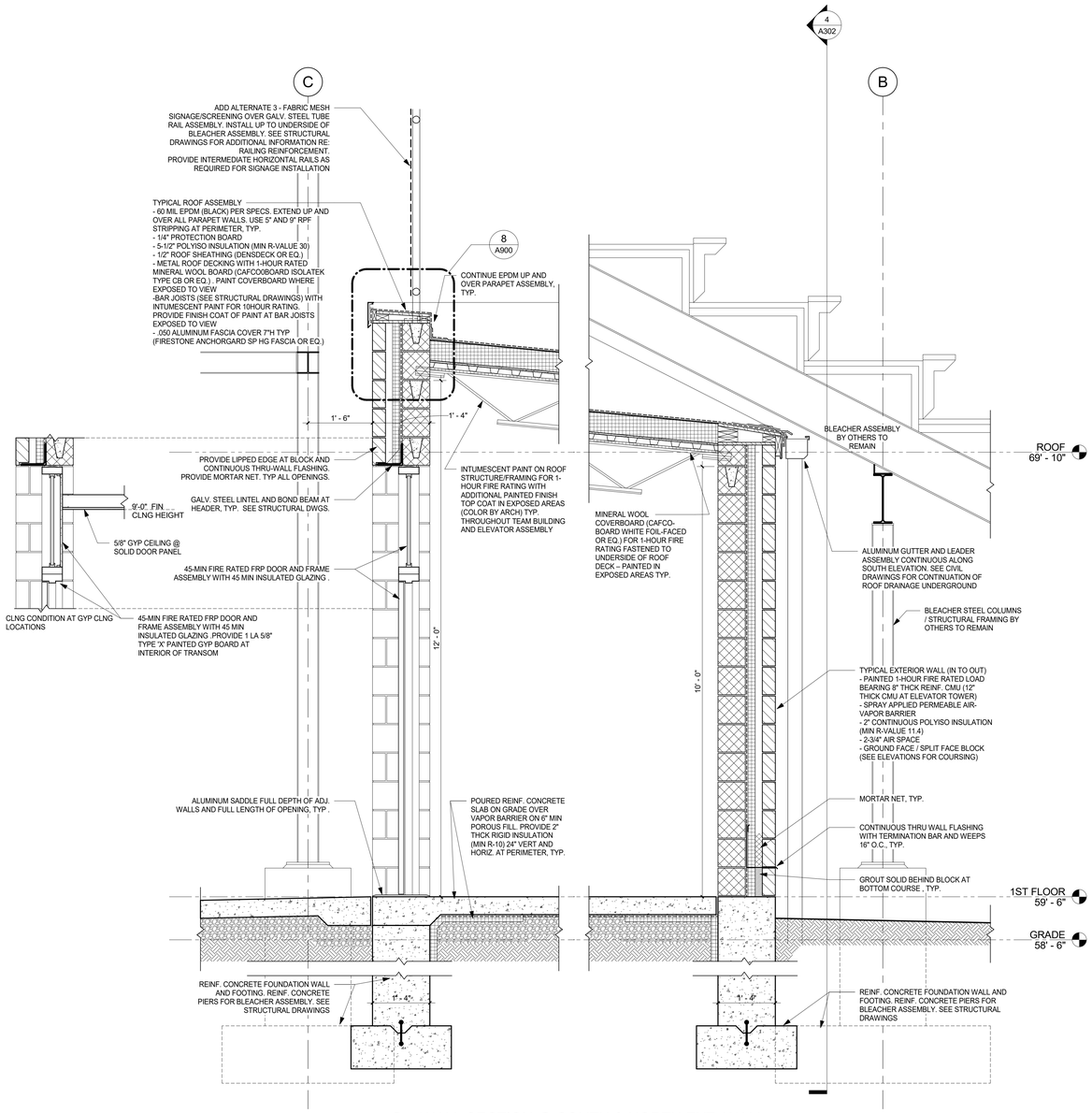

3 WALL SECTION @ SOUTH & NORTH EXT. WALL
3/4" = 1'-0"

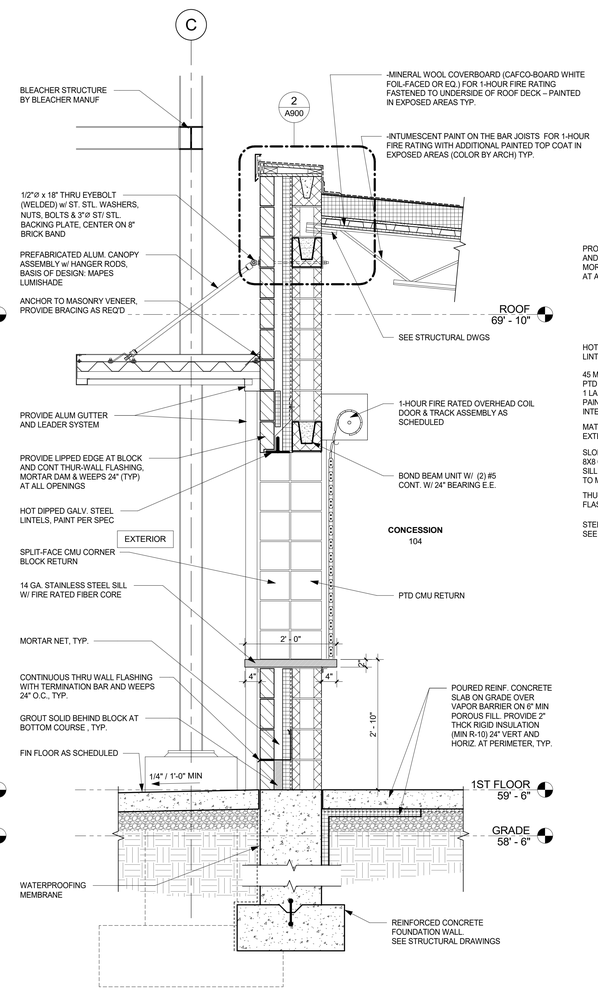

2 WALL SECTION @ OVERHEAD DOOR
3/4" = 1'-0"

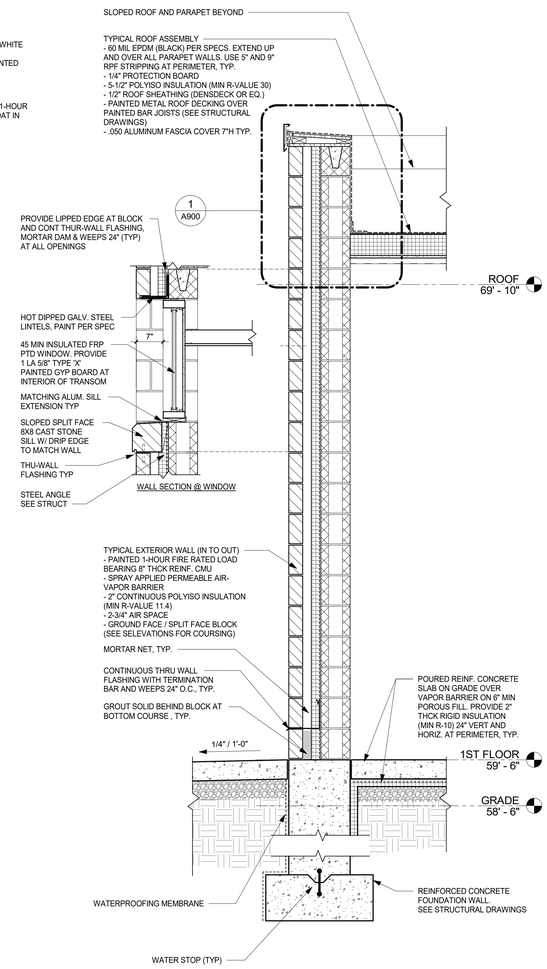

1 TYPICAL WALL SECTION
3/4" = 1'-0"

GREENWICH HS CARDINAL STADIUM PHASE 1

GREENWICH PUBLIC SCHOOLS
10 HILLSIDE ROAD
GREENWICH CT 06830

KG+D listen imagine build
KG+D . ARCHITECTS PC
285 MAIN STREET MOUNT KISCO . NEW YORK . 10549
P:914.666.5900 KGDARCHITECTS.COM

CONSTRUCTION DOCUMENTS

NOTE: ALL IDEAS, DESIGNS, ARRANGEMENTS AND PLANS INDICATED OR REPRESENTED BY THIS DRAWING ARE OWNED BY AND ARE THE PROPERTY OF KAEYER, GARMENT, & DAVIDSON ARCHITECTS, PC (KG&D), AND WERE CREATED FOR USE ON THIS PROJECT. NONE OF SUCH IDEAS, DESIGNS, ARRANGEMENTS OR PLANS SHALL BE USED BY OR DISCLOSED TO ANY PURPOSE WHATSOEVER WITHOUT THE WRITTEN PERMISSION OF (KG&D).

WRITTEN DIMENSIONS ON THIS DRAWING SHALL HAVE PRECEDENCE OVER SCALED DIMENSIONS. CONTRACTOR SHALL VERIFY ALL ACTUAL DIMENSIONS AND CONDITIONS ON THE JOB AND THE ARCHITECT MUST BE NOTIFIED OF ANY VARIATIONS FROM DIMENSIONS AND CONDITIONS SHOWN. SHOP DETAILS MUST BE SUBMITTED TO THIS OFFICE FOR APPROVAL BEFORE PROCEEDING WITH FABRICATION.

ALTERATIONS BY ANY PERSON, IN ANY WAY, OF ANY ITEM CONTAINED ON THIS DOCUMENT, UNLESS ACTING UNDER THE DIRECTION OF THE LICENCED ARCHITECT WHOSE PROFESSIONAL SEAL IS AFFIXED HERETO, IS A VIOLATION OF TITLE VII, SECT. 7209 OF NEW YORK STATE LAW.
COPYRIGHT KAEYER, GARMENT + DAVIDSON ARCHITECTS & ENGINEERS, PC
ALL RIGHTS RESERVED

Professional Seal

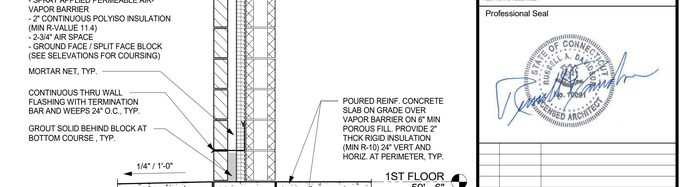

No.	Date	Issue
5	12/2/20	PHASE 1A - BUILDING PERMIT
4	11/10/20	PHASE 1 CON. DOCS.
3	10/30/20	PHASE 1B SITE PLAN APP.
2	08/12/20	ISSUE FOR PERMIT

Sheet Title

WALL SECTIONS

Job No.	Date
2018-1035	07/08/19
Scale	Drawn / Checked
AS NOTED	-

Sheet Number

A801

9 3D VIEW OF CORBEL

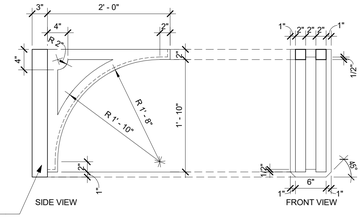

8 ROOF CORBEL
1" = 1'-0"

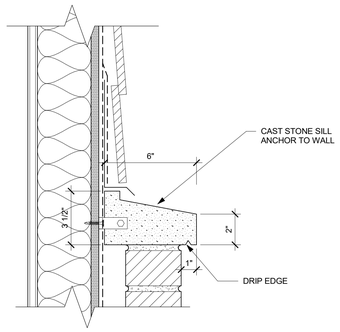

7 CAST STONE DETAIL
3" = 1'-0"

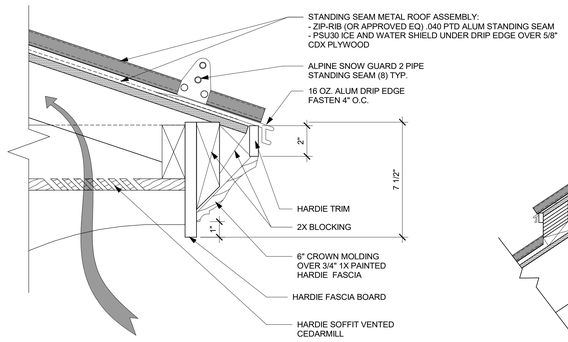

6 VENTED SOFFIT DETAIL
3" = 1'-0"

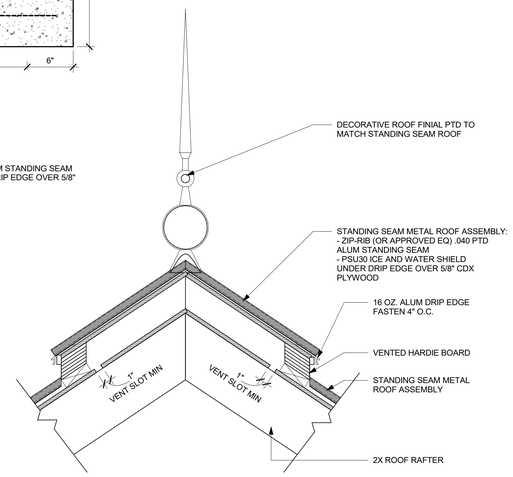

5 ROOF RIDGE VENT DETAIL
1 1/2" = 1'-0"

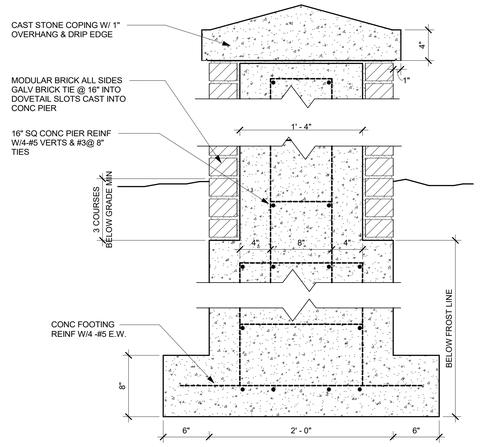

11 BRICK PIER SECTION
1 1/2" = 1'-0"

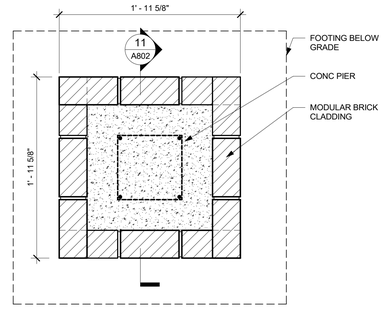

10 BRICK PIER PLAN DETAIL
1 1/2" = 1'-0"

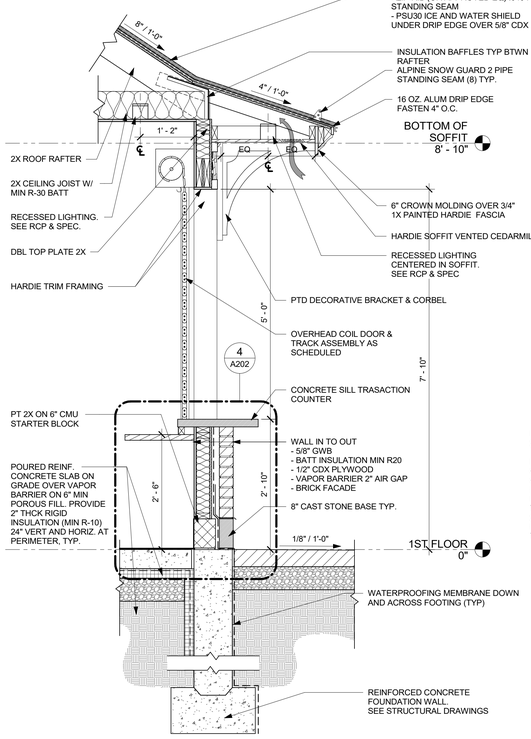

4 WALL SECTION @ ROLL-UP WINDOW
3/4" = 1'-0"

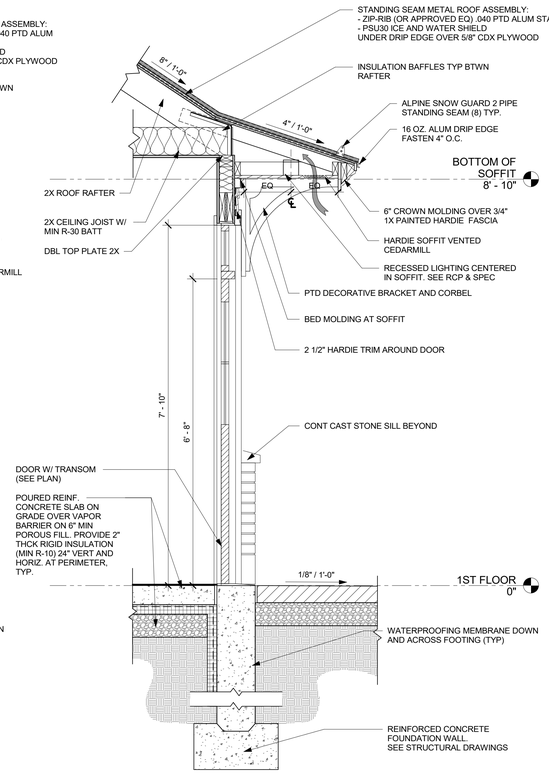

3 WALL SECTION @ DOOR
3/4" = 1'-0"

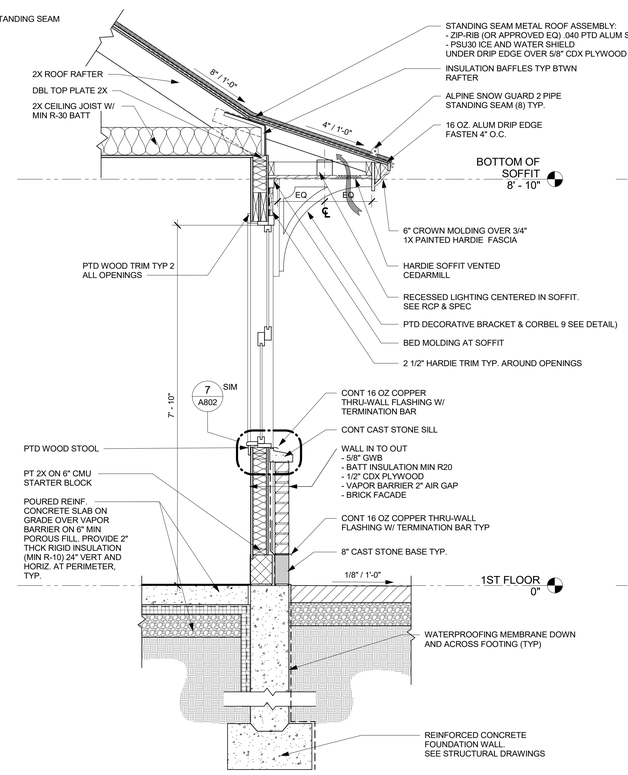

2 WALL SECTION @ WINDOW
3/4" = 1'-0"

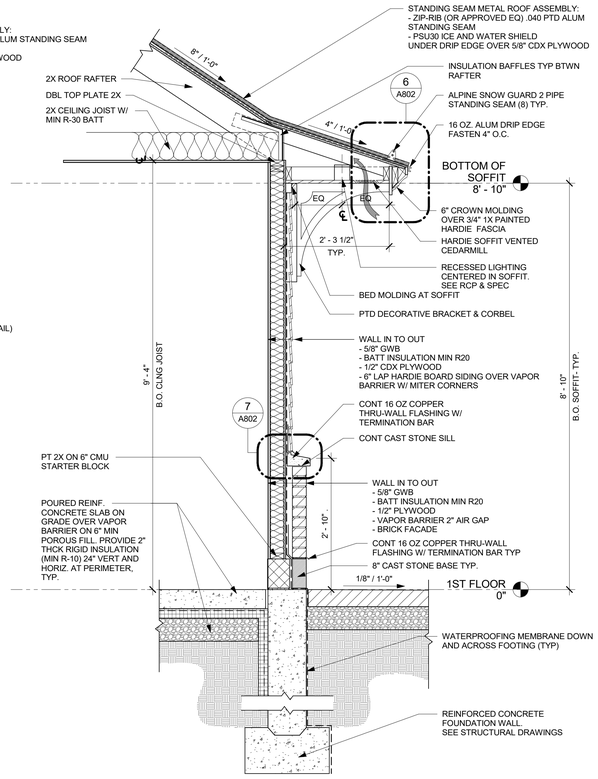

1 WALL SECTION- TYP.
3/4" = 1'-0"

GREENWICH HS CARDINAL STADIUM PHASE 1

GREENWICH PUBLIC SCHOOLS
10 HILLSIDE ROAD
GREENWICH, CT 06830

KG+D listen imagine build
KG+D . ARCHITECTS PC
285 MAIN STREET MOUNT KISCO . NEW YORK . 10549
P:914.666.5900 KGDARCHITECTS.COM

CONSTRUCTION DOCUMENTS

GENERAL NOTE :
ALL KIOSK RELATED CONSTRUCTION IS CONSIDERED ADD ALTERNATE #2

NOTE: ALL IDEAS, DESIGNS, ARRANGEMENTS AND PLANS INDICATED OR REPRESENTED BY THIS DRAWING ARE OWNED BY, AND ARE THE PROPERTY OF KAEYER, GARBENT, & DAVIDSON ARCHITECTS, PC (KG&D), AND WERE CREATED FOR USE ON THIS PROJECT. NONE OF SUCH IDEAS, DESIGNS, ARRANGEMENTS OR PLANS SHALL BE USED BY OR DISCLOSED TO ANY PURPOSE WHATSOEVER WITHOUT THE WRITTEN PERMISSION OF (KG&D).

WRITTEN DIMENSIONS ON THIS DRAWING SHALL HAVE PRECEDENCE OVER SCALED DIMENSIONS. CONTRACTOR SHALL VERIFY ALL ACTUAL DIMENSIONS AND CONDITIONS ON THE JOB AND THE ARCHITECT MUST BE NOTIFIED OF ANY VARIATIONS FROM DIMENSIONS AND CONDITIONS SHOWN. SHOP DETAILS MUST BE SUBMITTED TO THIS OFFICE FOR APPROVAL BEFORE PROCEEDING WITH FABRICATION.

ALTERATIONS BY ANY PERSON, IN ANY WAY, OF ANY ITEM CONTAINED ON THIS DOCUMENT, UNLESS ACTING UNDER THE DIRECTION OF THE LICENCED ARCHITECT WHOSE PROFESSIONAL SEAL IS AFFIXED HERETO, IS A VIOLATION OF TITLE VII, SECT. 69.8 (b) OF NEW YORK STATE LAW.
COPYRIGHT KAEYER, GARBENT + DAVIDSON ARCHITECTS & ENGINEERS, PC
ALL RIGHTS RESERVED.

Professional Seal

No.	Date	Issue
5	12/2/20	PHASE 1A - BUILDING PERMIT
4	11/10/20	PHASE 1 CON. DOCS.
3	10/30/20	PHASE 1B SITE PLAN APP.

Sheet Title

WALL SECTIONS AND DETAILS (ADD ALT 2)

Job No. Project Number	Date 06/15/20
Scale AS NOTED	Drawn / Checked - -

Sheet Number

A802

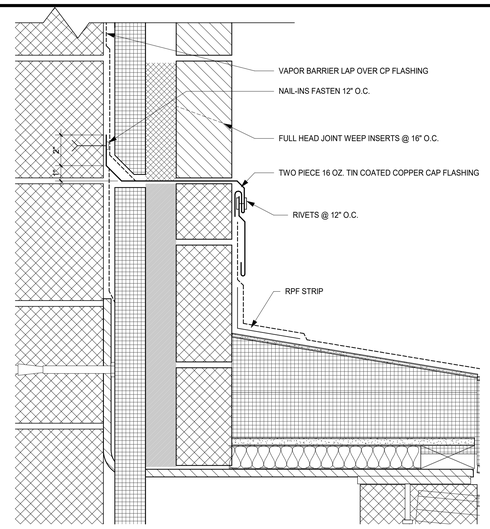

9 BASE @ WALL DETAIL
3" = 1'-0"

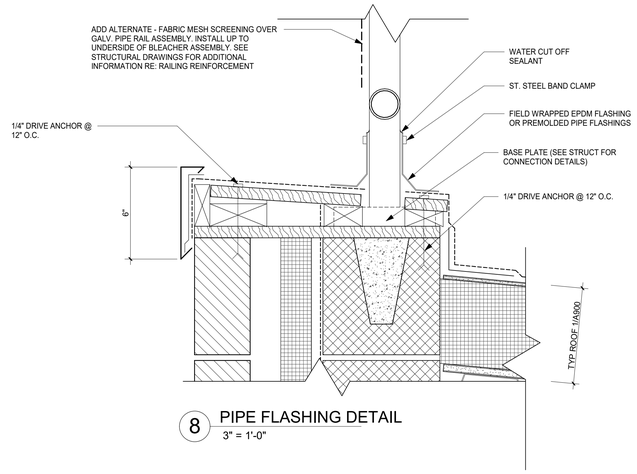

8 PIPE FLASHING DETAIL
3" = 1'-0"

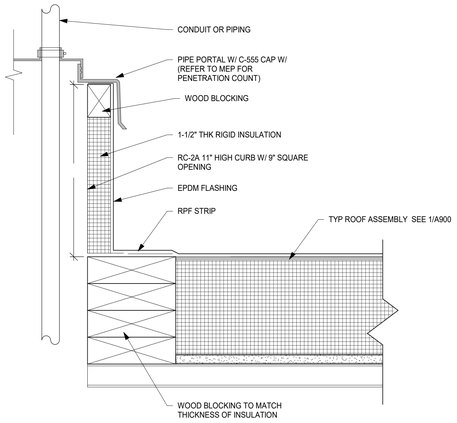

7 TYP. PIPE PORTAL PLUS CURB
3" = 1'-0"

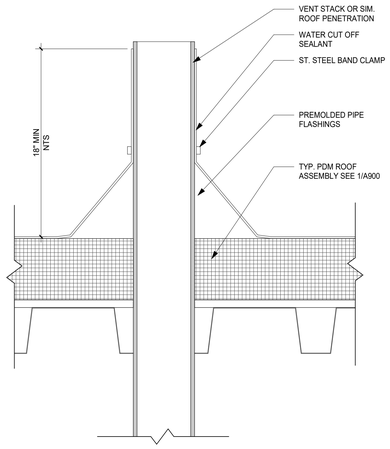

6 TYP. VENT PIPE
3" = 1'-0"

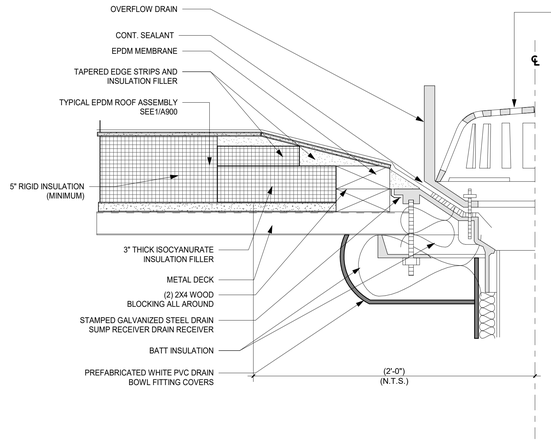

5 TYP. OVERFLOW DRAIN
3" = 1'-0"

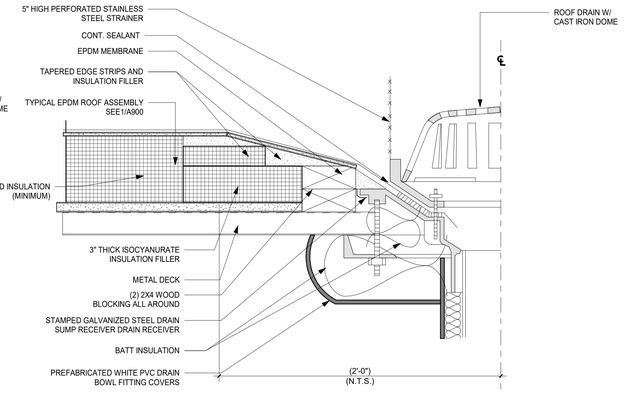

4 TYP. ROOF DRAIN
3" = 1'-0"

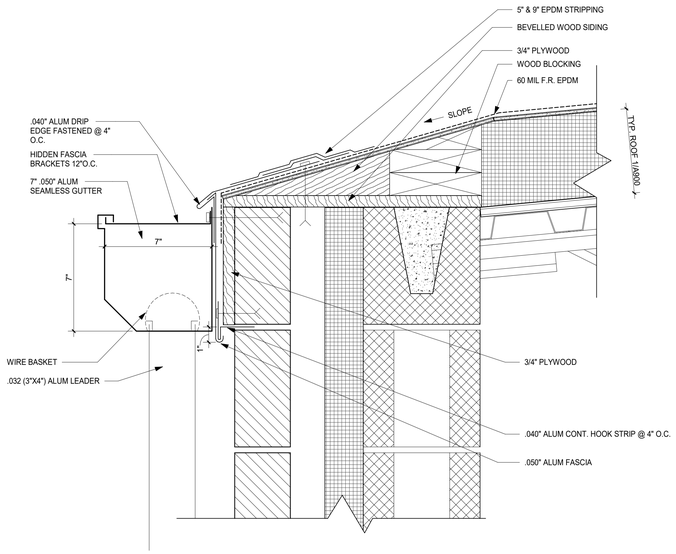

3 GUTTER WITH MASONRY WALL
3" = 1'-0"

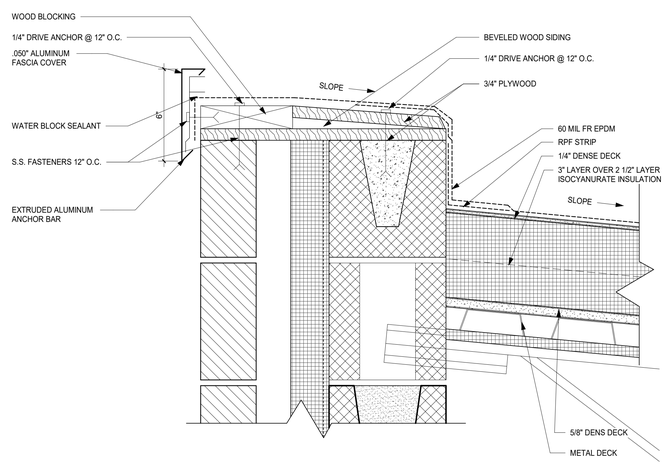

2 HIGH EAVE WITH MASONRY WALL
3" = 1'-0"

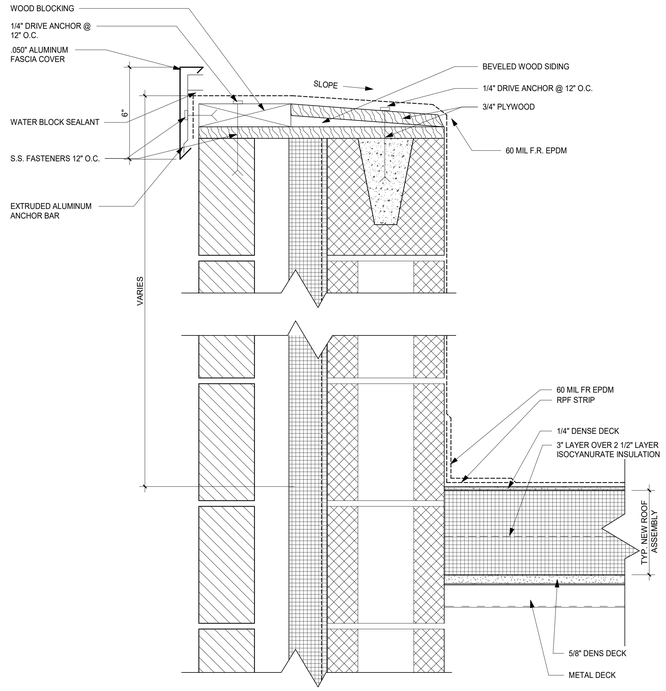

1 LOW EAVE WITH MASONRY WALL
3" = 1'-0"

GREENWICH HS CARDINAL STADIUM PHASE 1

GREENWICH PUBLIC SCHOOLS
10 HILLSIDE ROAD
GREENWICH CT 06830

KG+D listen imagine build
KG+D . ARCHITECTS PC
285 MAIN STREET MOUNT KISCO . NEW YORK . 10549
P:914.666.5900 KGDARCHITECTS.COM

CONSTRUCTION DOCUMENTS

NOTE: ALL IDEAS, DESIGNS, ARRANGEMENTS AND PLANS INDICATED OR REPRESENTED BY THIS DRAWING ARE OWNED BY AND ARE THE PROPERTY OF KAEYER, GARMENT, & DAVIDSON ARCHITECTS, PC (KG&D), AND WERE CREATED FOR USE ON THIS PROJECT. NONE OF SUCH IDEAS, DESIGNS, ARRANGEMENTS OR PLANS SHALL BE USED BY OR DISCLOSED TO ANY PURPOSE WHATSOEVER WITHOUT THE WRITTEN PERMISSION OF (KG&D).

WRITTEN DIMENSIONS ON THIS DRAWING SHALL HAVE PRECEDENCE OVER SCALED DIMENSIONS. CONTRACTOR SHALL VERIFY ALL ACTUAL DIMENSIONS AND CONDITIONS ON THE JOB AND THE ARCHITECT MUST BE NOTIFIED OF ANY VARIATIONS FROM DIMENSIONS AND CONDITIONS SHOWN. SHOP DETAILS MUST BE SUBMITTED TO THIS OFFICE FOR APPROVAL BEFORE PROCEEDING WITH FABRICATION.

ALTERATIONS BY ANY PERSON, IN ANY WAY, OF ANY ITEM CONTAINED ON THIS DOCUMENT, UNLESS ACTING UNDER THE DIRECTION OF THE LICENCED ARCHITECT WHOSE PROFESSIONAL SEAL IS AFFIXED HERETO, IS A VIOLATION OF TITLE VI, SECT. 7209 OF NEW YORK STATE LAW.
COPYRIGHT KAEYER, GARMENT + DAVIDSON ARCHITECTS & ENGINEERS, PC
ALL RIGHTS RESERVED.

Professional Seal

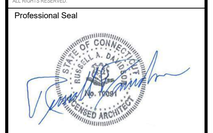

No.	Date	Issue
5	12/2/20	PHASE 1A - BUILDING PERMIT
4	11/10/20	PHASE 1 CON. DOCS.

Sheet Title

ROOF DETAILS

Job No.	Date
2018-1035	10/23/20
Scale: AS NOTED	Drawn / Checked: Author Checker

Sheet Number

A900

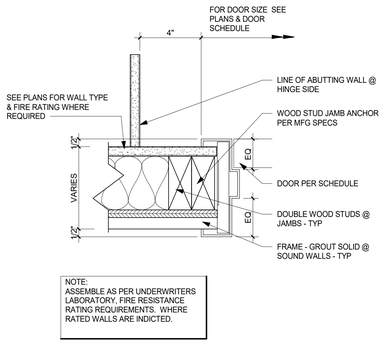

B DOOR JAMB AT GYP BD WALL

SCALE 3"= 1'-0"

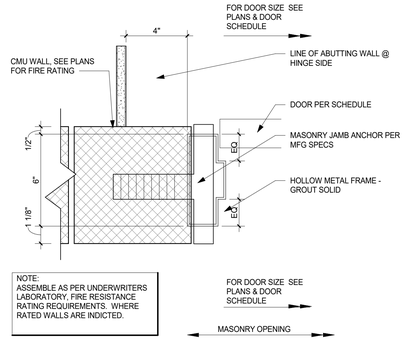

A DOOR JAMB AT CMU WALL

SCALE 3"= 1'-0"

DOOR FINISH SCHEDULE ABBREV.

AL	ALUMINUM
ALCW	ALUMINUM CLAD WOOD
CL	CLASSROOM
CS	CORRIDOR, SMOKE, & FIRE DOORS (RATED)
EA	EXTERIOR, ALUMINUM
F	FLUSH FLOOR
FF	FACTORY FINISH
FG1	FLUSH DOOR GLASS
FLNG	FLUSH LONG NARROW
GL	GLASS
FNG	FLUSH NARROW GLASS
HM	HOLLOW METAL
MBL	MARBLE
OF	OUTSIDE FACE
PTD	PAINTED
SA	SECURE ACCESS
SE	SECURE (STORAGE/JANITOR/MECH./ETC.)
SS	STAINLESS STEEL
ST	STAIN & SEAL
SW	STAIRWAY DOOR
TM	TOLIET, MULTIUSER
TS	TOLIET, SINGLE USER
WD	WOOD
WSI	WIDE STILE

ADD ALTERNATE #2 - KIOSK CONSTRUCTION

KIOSK DOOR SCHEDULE

Mark	Leaf #	Wl	HT	Elev	Door Mat	Door Fin	Frame Type	Frame Mat	Frame Fin	Fire Label	Saddle	Comments
K01	1	3' - 0"	6' - 8"	FG1	ALCW	FF	1T	AL	FF		AL	EXTERIOR : HARDWARE SET EF
K02	-	3' - 8"	5' - 0"	CD	GLVST	FF	-	HM	PTD		-	EXTERIOR : FACTORY APPLIED PAINT, COLOR BY ARCH
K03	-	3' - 8"	5' - 0"	CD	GLVST	FF	-	HM	PTD		-	EXTERIOR : FACTORY APPLIED PAINT, COLOR BY ARCH

BASE BID

Door Schedule

Mark	LEAF #	Wl	HT	Elev	Door Mat	Door Fin	Frame Type	Frame Mat	Frame Fin	Fire Label	Saddle	Comments
101	1	3' - 0"	7' - 2"	FNG	FRP	FF	3	FRP	FF	45	AL	EXTERIOR
102	1	3' - 0"	7' - 0"	F	HM	PTD	1	HM	PTD	45	SLATE	
103	1	3' - 0"	7' - 0"	F	HM	PTD	1	HM	P		SLATE	
104	1	3' - 0"	7' - 2"	F	FRP	FF	1P	FRP	FF	45	AL	EXTERIOR
104a	-	12' - 0"	4' - 8"	CD	GLVST	FF	-	HM	PTD	45	-	EXTERIOR : FACTORY APPLIED PAINT, COLOR BY ARCH : DOOR TIED TO FIRE ALARM SYSTEM
105	1	3' - 0"	7' - 2"	F	FRP	FF	1P	FRP	FF	45	AL	EXTERIOR
106	2	3' - 2"	7' - 2"	F	FRP	FF	2P	FRP	FF	45	AL	EXTERIOR
106a	1	3' - 0"	7' - 2"	F	FRP	FF	1P	FRP	FF	45	AL	EXTERIOR
107	2	6' - 4"	7' - 0"	F	FRP	FF	2	FRP	FF	45	AL	EXTERIOR
107a	1	3' - 0"	7' - 0"	F	FRP	FF	1	FRP	FF	45	AL	EXTERIOR
108	1	3' - 0"	7' - 0"	F	HM	PTD	1	HM	PTD		SLATE	
109	1	3' - 0"	7' - 2"	F	FRP	FF	3	FRP	FF	45	AL	EXTERIOR
110	1	3' - 0"	7' - 2"	F	FRP	FF	1P	FRP	FF	45	AL	EXTERIOR
110a	1	3' - 0"	7' - 2"	F	FRP	FF	1P	FRP	FF	45	AL	EXTERIOR
111	1	3' - 0"	7' - 2"	F	FRP	FF	1P	FRP	FF	45	AL	EXTERIOR
111a	1	3' - 0"	7' - 2"	F	FRP	FF	1P	FRP	FF	45	AL	EXTERIOR
112	1	3' - 0"	7' - 2"	F	FRP	FF	3	FRP	FF	45	AL	EXTERIOR
113	1	3' - 0"	7' - 0"	F	HM	PTD	1	HM	PTD		SLATE	
114	1	3' - 0"	7' - 2"	F	FRP	FF	1P	FRP	FF	45	AL	EXTERIOR
114a	2	3' - 2"	7' - 2"	F	FRP	FF	2P	FRP	FF	45	AL	EXTERIOR
114b	2	3' - 2"	7' - 2"	F	FRP	FF	2P	FRP	FF	45	AL	EXTERIOR
114C		2' - 0"	7' - 0"	F	HM	PTD	1	HM	PTD	45	SLATE	
201	1	3' - 0"	7' - 2"	FNG	FRP	FF	3	FRP	FF	45	AL	EXTERIOR

DOOR GLAZING= D-H-45 FIRE RATED IGU.

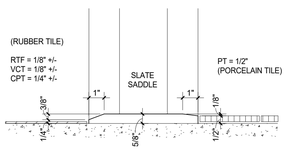

2B SADDLE DETAIL

SCALE 3"= 1'-0"

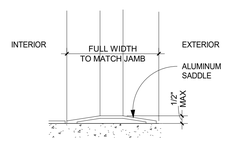

2A TYPICAL EXTERIOR SADDLE

SCALE 3"= 1'-0"

SADDLE NOTES:

1. COORDINATE DOOR UNDERCUT WITH SADDLE & OTHER UNDERCUTTING REQ. SEE DOOR SCHEDULE & SADDLE DETAILS ON THIS SHEET.

2. SADDLES ARE TO BE FULL WIDTH OF DOOR FRAME

3. SADDLES MAY BE OMITTED WHERE MATERIALS OF SIMILAR THICKNESS MEET WITH THE WRITTEN APPROVAL OF THE ARCHITECT. DOOR UNDERCUTS MUST BE COORDINATED.

4. SLATE SADDLES, WHEN USED OR CALLED FOR SHALL BE SELECTED FROM FULL COLOR RANGE TO MATCH ADJACENT FLOORING.

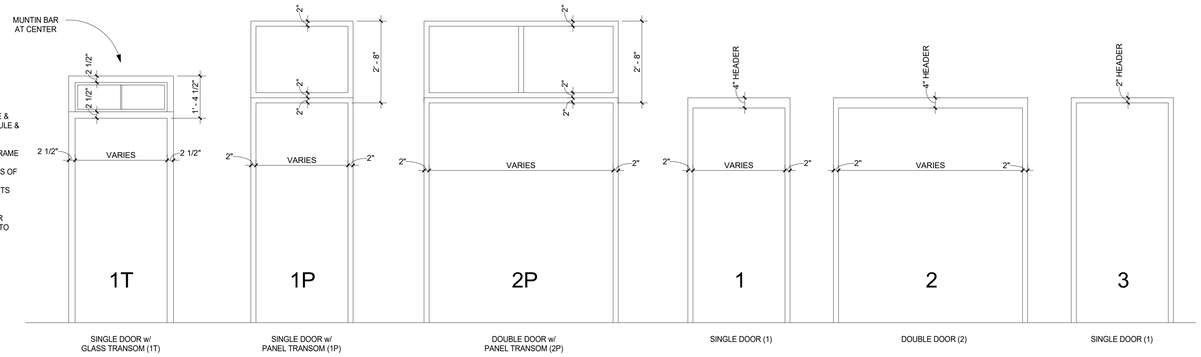

ADD ALTERNATE #2 - KIOSK CONSTRUCTION

W2

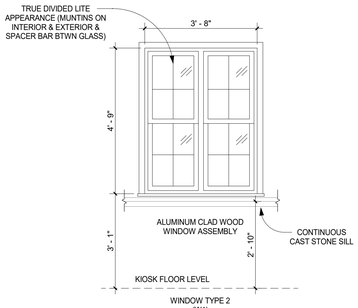

WINDOW TYPE 2 (W1)

ADD ALTERNATE #2 - KIOSK CONSTRUCTION

W3

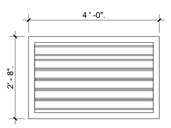

PTD FIRE RATED FRP WINDOW FRAME WITH FIRE RATED INSULATED GLASS ASSEMBLY O-H-45 MINUTE FIRE RATING.

W1

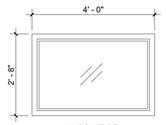

WINDOW TYPE 1 (W1)

FG1

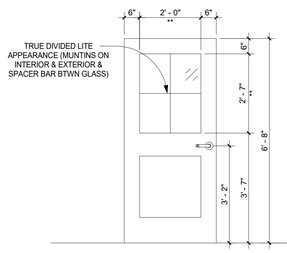

FLUSH GLASS 1 (FG1)

** DIMENSION INCREASES AT DOORS > 7'-0" H AT DOORS > 3'-0" W

ADD ALTERNATE #2 - KIOSK CONSTRUCTION

FNG

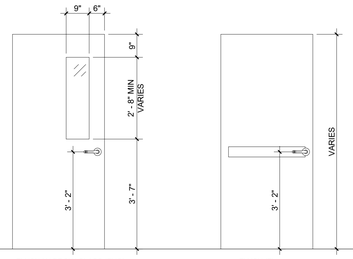

FLUSH NARROW GLASS (FNG)

MAXIMUM GLAZING 288 SQ. IN

F

FLUSH (F)

CD

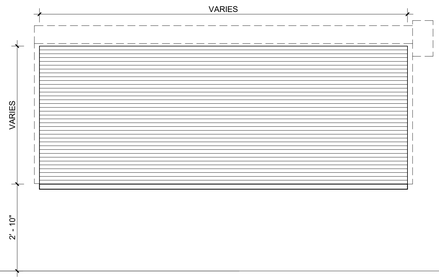

COILING COUNTER DOOR (CD)

FINISHED OPENING : WIDTH & HEIGHT VARIES
INSULATED 60 MIN FIRE-RATED
ALL STAINLESS STEEL CONSTRUCTION
FINAL UNIT WIDTH & HEIGHT BY MFG

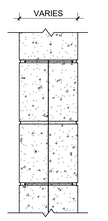

REINFORCE ALL MASONRY WALLS W/ #4 REBAR @ 16" VERTS W/ MATCHING DOWELS TO MATCH EXTENDED 18" REBAR FROM SLAB OR WALL. FULLY GROUT REINFORCED CELLS. SEE SPECS & STRUCTURAL DWGS FOR OTHER REQUIREMENTS

- M4 DENOTES 4" CMU
- M6 DENOTES 6" CMU
- M8 DENOTES 8" CMU
- M10 DENOTES 10" CMU
- M12 DENOTES 12" CMU

REFER TO DETAILS MT & MB FOR REQUIREMENTS WHERE MASONRY WALLS CONNECT TO FLOORS AND DECKS

M4 CONCRETE MASONRY UNIT WALL

M6 M8 M10 M12

MASONRY UNITS MUST ACHIEVE INTENDED FIRE RATING SHOWN IN PLANS & PER UL U906 (2hr RATING) - SEE SPECS FOR MORE INFO

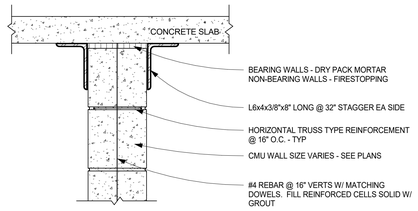

MT TYPICAL CONCRETE MASONRY UNIT WALL / SLAB ATTACHMENT

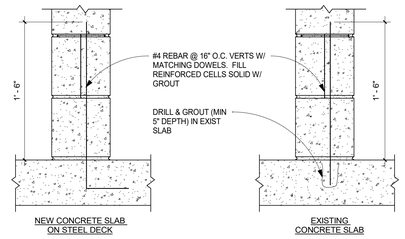

MB TYPICAL CONCRETE MASONRY UNIT WALL & SLAB ATTACHMENT

GREENWICH HS CARDINAL STADIUM PHASE 1

GREENWICH PUBLIC SCHOOLS
10 HILLSIDE ROAD
GREENWICH CT 06830

KG+D . ARCHITECTS PC
285 MAIN STREET MOUNT KISCO . NEW YORK . 10549
P:914.666.5900 KGDARCHITECTS.COM

CONSTRUCTION DOCUMENTS

NOTE: ALL IDEAS, DESIGNS, ARRANGEMENTS AND PLANS INDICATED OR REPRESENTED BY THIS DRAWING ARE OWNED BY AND ARE THE PROPERTY OF KAEYER, GARMENT, & DAVIDSON ARCHITECTS, PC (KG&D), AND WERE CREATED FOR USE ON THIS PROJECT. NONE OF SUCH IDEAS, DESIGNS, ARRANGEMENTS OR PLANS SHALL BE USED BY OR DISCLOSED TO ANY PURPOSE WHATSOEVER WITHOUT THE WRITTEN PERMISSION OF (KG&D).

WRITTEN DIMENSIONS ON THIS DRAWING SHALL HAVE PRECEDENCE OVER SCALED DIMENSIONS. CONTRACTOR SHALL VERIFY ALL ACTUAL DIMENSIONS AND CONDITIONS ON THE JOB AND THE ARCHITECT MUST BE NOTIFIED OF ANY VARIATIONS FROM DIMENSIONS AND CONDITIONS SHOWN. SHOP DETAILS MUST BE SUBMITTED TO THIS OFFICE FOR APPROVAL BEFORE PROCEEDING WITH FABRICATION.

ALTERATIONS BY ANY PERSON, IN ANY WAY, OF ANY ITEM CONTAINED ON THIS DOCUMENT, UNLESS ACTING UNDER THE DIRECTION OF THE LICENSED ARCHITECT WHOSE PROFESSIONAL SEAL IS AFFIXED HERETO, IS A VIOLATION OF TITLE VII, SECT 69.5 (b) OF NEW YORK STATE LAW.
COPYRIGHT KAEYER, GARMENT • DAVIDSON ARCHITECTS & ENGINEERS, PC
ALL RIGHTS RESERVED

Professional Seal

No.	Date	Issue
5	12/2/20	PHASE 1A - BUILDING PERMIT
4	11/10/20	PHASE 1 CON. DOCS.
3	10/30/20	PHASE 1B SITE PLAN APP.
2	08/12/20	ISSUE FOR PERMIT
1	08/29/19	DESIGN DEVELOPMENT

Sheet Title

WINDOW, DOOR & WALL SCHEDULES & DETAILS

Job No.	Date
2018-1035	07/08/19
Scale	Drawn / Checked
AS NOTED	-

Sheet Number

A901

PLUMBING FIXTURE SCHEDULE

TAG	SYMBOLS - PLAN	SYMBOLS - ELEVATION	FIXTURES	WASTE	VENT	COLD WATER	HOT WATER	
P-1			STANDARD WATER CLOSET WALL-MOUNT	4"	2"	1¼"	–	TOILET: AMERICAN STANDARD #2257.511 AFWALL MILLENIUM FLOWISE, WALL MOUNTED, HIGH EFFICIENCY 1.1 GPF, ELONGATED BOWL, VITREOUS CHINA WITH EVERCLEAN, CONDENSATION CHANNEL, ADA COMPLIANT, PROVIDE CARRIERS. FLUSHOMETER: AMERICAN STANDARD SELECTRONIC FLUSH VALVE MODEL 6065.111, BATTERY POWERED, ADA COMPLIANT HANDS FREE OPERATION.
P-2A			LAVATORY WALL HUNG (BATHROOMS)	1½"	1½"	½"	½"	SINK: KOHLER MODEL K-2084 SOHO WALL-MOUNT BATHROOM SINK, ADA COMPLIANT. COLOR/FINISH: WHITE, VITREOUS CHINA, WITH OVERFLOW, SINGLE CENTER HOLE, CONCEALED ARM SUPPORT, KOHLER K-8998 P-TRAP. PROVIDE TRUE BRO LAV GUARDS EZ SERIES PIPING COVERS, ADA COMPLIANT. FAUCET: DELTA MODEL 559LF-1.0-PP CONTEMPORARY ROUND SINGLE HANDLE DECK MOUNT. POLISHED CHROME, SOLID BRASS BODY, CERAMIC DISC CARTRIDGE WITH TEMPERATURE LIMITER CONTROL MECHANISM, RED/BLUE INDICATOR MARKINGS, MAXIMUM 1.0 GPM @ 60 PSI, 3/8" COMPRESSION FITTINGS WITH FLEXIBLE SUPPLY HOSES, 50/50 POP UP TYPE FITTING WITH PLATED FLANGE AND STOPPER. ADA COMPLIANT, EPA WATERSENSE.
P-2B			LAVATORY (FAMILY TOILET)	1½"	1½"	½"	½"	SINK: BRADLEY OMNI MODEL LD-3010-HS-TR1 RECTANGULAR MULTIPURPOSE BASIN BATHROOM SINK, ADA COMPLIANT. COLOR/FINISH: TERREON COLOR, CHARCOAL GRAY, SINGLE CENTER HOLE. FAUCET: VERGE FAUCET CRESTT SERIES MODEL S53-3100. FINISH TO BE COORDINATED WITH ARCHITECT. CERAMIC DISC CARTRIDGE WITH TEMPERATURE LIMITER CONTROL MECHANISM, RED/BLUE INDICATOR MARKINGS, MAXIMUM 1.0 GPM @ 60 PSI, 3/8" COMPRESSION FITTINGS WITH FLEXIBLE SUPPLY HOSES, 50/50 POP UP TYPE FITTING WITH PLATED FLANGE AND STOPPER. ADA COMPLIANT, EPA WATERSENSE.
P-3			SINK (CONCESSION)	1½"	1½"	½"	½"	SINK: ELKAY MODEL ECTSRAD25226TBG CROSSTOWN STAINLESS STEEL 25"x22-"x6" SINGLE BOWL, DUAL MOUNT, ADA COMPLIANT. CENTER 3-1/2" DRAIN OPENING. PROVIDE ALL REQUIRED MOUNTING HARDWARE FOR UNDERMOUNT INSTALLATION. FAUCET: ELKAY FAUCET MODEL LKD2439C, ARC SPOUT * 2-5/8" LEVER HANDLES, ADA COMPLIANT, 1.5 GPM MAX FLOW RATE, CERAMIC DISC VALVES. COLOR/FINISH TO BE COORDINATED WITH ARCHITECT.
P-4			URINAL	2"	2"	1"	–	URINAL; MAKE: KOHLER MODEL: K-4991-ETSS VITREOUS CHINA, ANTIMICROBIAL FINISH, 14" EXTENDED RIM, 0.125 GPF TO 1.0 GPF FLUSHOMETER; MAKE: KOHLER MODEL: K-7537, BATTERY OPERATED BRASS CONSTRUCTION, POLISHED CHROME FINISH, ELECTRONIC INFRARED SENSOR, 80 PSI MAX, 25 PSI MIN, 10GPM MIN
P-5			DRINKING FOUNTAIN	1¼"	1¼"	⅜"	–	ELKAY EZH20 BOTTLE FILLING STATION WITH SINGLE LZ COOLER, STAINLESS STEEL BASIN WITH INTEGRAL DRAIN, FLEXI-GUARD SAFETY BUBBLER, 8 GPH FLOW RATE. MODEL VRCGRN8WSK, 115V/1ø/60HZ, 8.0 GPH CHILLING CAPACITY BASED ON 80 DEG F INLET WATER & 90 DEG F AMBIENT AIR TEMP FOR 50 DEG F CHILLED DRINKING WATER, 5.5 FLA, 260 WATTS, ADA COMPLIANT
P-6			JANITOR MOP BASIN	2"	2"	3/4"	3/4"	SINK: FIAT MODEL TSBC3000 WITH 12" DEEP SINK WITH 6" DROP FACE FAUCET: SPEAKMAN COMMANDER SC-5811 WITH HOSE, PAIL HOOK & WALL BRACE, NO EYEWASH. PROVIDE JAY R. SMITH ADJUSTABLE, CAST-IRON TRAP, MODEL 9110, 2"OUTLET, WITH CHROME PLATED STRAINER AND CLEANOUT PLUG.

PLUMBING DRAINAGE SPECIALTIES SCHEDULE

TAG	SYMBOLS - PLAN	SYMBOLS - ELEVATION	FIXTURES	DESCRIPTION
CO			CLEANOUT	WALL CLEANOUT WITH CLEANOUT TEE AND CHROME PLATED BRONZE SQUARE ACCESS COVER AND FRAME. WADE #W-8480 OR APPROVED EQUAL
WCO			WALL CLEANOUT	WALL CLEANOUT WITH CLEANOUT TEE AND CHROME PLATED BRONZE SQUARE ACCESS COVER AND FRAME. WADE #W-8480 OR APPROVED EQUAL
CODP			CLEANOUT DECKPLATE	FLOOR CLEANOUT WITH ADJUSTABLE HEAD, ANCHOR FLANGE, CUT-OFF SECTIONS AND ROUND SCORIATED NICKEL-BRONZE TOP: WADE #W-6000 OR APPROVED EQUAL. PROVIDE HEAVY DUTY CAST IRON TOP FOR MECHANICAL ROOMS.
FD			FLOOR DRAIN	FOR TOILET ROOMS AND GENERAL USE AREAS: WADE #W-1100-STD6-1-6-27 WITH 6" ROUND NICKEL-BRASS STAINER, SEDIMENT BUCKET, CAST IRON BODY, CAST IRON DRAINAGE FLANGE, FLASHING CLAMP, TRAP PRIMER TAP OR APPROVED EQUAL.

PLUMBING WATER SPECIALTIES SCHEDULE

TAG	SYMBOLS - PLAN	SYMBOLS - ELEVATION	FIXTURES	DESCRIPTION
WHA		–	WATER HAMMER ARRESTOR	TYPE SA: WADE "SHOCKSTOP" BELLOWS TYPE, WITH ALL STAINLESS STEEL CONSTRUCTION, CHARGED WITH NITROGEN. PROVIDE ON ALL CW LINES TO ALL HORIZONTAL BRANCH LINES. RE: RISER.
HB-1			HOSE BIB	WATTS DRAINAGE PRODUCTS HY-330 CONCEALED MODERATE CLIMATE KEY OPERATED WALL HYDRANT WITH NICKEL BRONZE (STANDARD) BOX AND DOOR, CHROME PLATED HYDRANT FACE, INTEGRAL VACUUM BREAKER, 3/4"(19) HOSE CONNECTION, ALL BRONZE HEAD, SEAT CASTING AND INTERNAL WORKING PARTS, GALVANIZED WALL CASING, AND HYDRANT KEY.
NFWH-1			NON-FREEZE WALL HYDRANT	CAST BRASS, THREADED, NON_FREEZE, HEAVY-DUTY HYDRANT WITH NIKALOY BOX AND LOCKING COVER, BRASS OPERATING PARTS, 3/4"HPT HOSE OUTLET, 3/4" IPS OUTSIDE, ELBOW ADAPTER, "T" HANDLE KEY, AND INTEGRAL VACUUM BREAKER/BACKFLOW PREVENTER: WADE #8600. PIPING SERVING WH-1 TO BE ROUTED DN IN INTERIOR WALLS.

SYMBOLS AND ABBREVIATIONS

SYMBOL	ABBREVIATION	DESCRIPTION
–	AFF	ABOVE FINISHED FLOOR
–	AHC	ABOVE HUNG CEILING
–	BFP	BACK FLOW PREVENTOR
	–	BALL VALVE
	–	BASKET STRAINER
	–	BUTTERFLY VALVE
	–	CHECK VALVE
	–	CIRCUIT SETTER
	CODP	CLEAN OUT DECK PLATE
–	CW	COLD WATER
	–	CONCENTRIC REDUCER
–	DCV	DOUBLE CHECK VALVE – BFP
	–	ECCENTRIC REDUCER
	–	ELBOW DOWN
	–	ELBOW UP
–	EX.	EXISTING TO REMAIN
	–	FLEXIBLE CONNECTION
–	FCO	FLOOR CLEAN OUT
–	FS	FLOOR SINK
	–	FLOW ARROW
–	FAI	FRESH AIR INTAKE
—— G ——	G	GAS
	–	GATE VALVE
	–	GLOBE VALVE
HT	–	HEAT TRACE PIPING TAG
HTC	–	HEAT TRACE CONTROLLER TAG
	HW	HOT WATER
	HWC	HOT WATER RECIRCULATION
	CW	COLD WATER
	–	MANUAL AIR VENT
–	NEW	NEW WORK
	–	OS&Y GATE VALVE
	OD	OVERFLOW STORM DRAIN
P 1		PLUMBING RISER TAG
	–	PLUG VALVE
	–	PIPE CAP
	–	PRESSURE GAGE
	–	PRESSURE REDUCING VALVE
	–	PUMP
–	PD	PUMP DISCHARGE
–	RPZ	REDUCED PRESSURE ZONE – BFP
–	REL.	REMOVE AND RELOCATE
–	S	SANITARY
—— ——	S	SANITARY UNDER SLAB
	–	SOLENOID VALVE
	–	STRAINER
–	SD	STORM DRAINAGE
——	SD	STORM DRAINAGE UNDER SLAB
	–	TEE DOWN
	–	TEE UP
	–	THERMOMETER
–	TYP.	TYPICAL
	–	T&P RELIEF VALVE
	–	UNION
— — —	V	VENT
–	VTR	VENT THROUGH ROOF
–	W	WASTE LINE
	–	2-WAY VALVE
	–	3-WAY VALVE

GENERAL NOTES

1. THE CONTRACT DRAWINGS INDICATE THE EXTENT AND GENERAL ARRANGEMENTS OF THE PLUMBING SYSTEMS. IF ANY DEPARTURES FROM THE DRAWINGS ARE DEEMED NECESSARY BY THE PLUMBING CONTRACTOR, DETAILS OF SUCH DEPARTURES AND THE REASONS THEREFORE SHALL BE SUBMITTED TO THE OWNER AND ENGINEER FOR APPROVAL. NO SUCH DEPARTURES SHALL BE MADE WITHOUT PRIOR WRITTEN APPROVAL OF THE OWNER AND ENGINEER. EQUIPMENT AND PIPING ARRANGEMENTS SHALL PROVIDE ADEQUATE AND ACCEPTABLE CLEARANCES FOR ENTRY, SERVICING, AND MAINTENANCE. ANY CHANGES TO PIPING AND EQUIPMENT LOCATIONS NECESSARY TO AVOID INTERFERENCE WITH OTHER TRADES SHALL BE MADE AT NO EXTRA COST.
2. THE PLUMBING WORK SHALL BE PERFORMED IN STRICT ACCORDANCE WITH THE LATEST EDITION OF THE PREVAILING CONNECTICUT PLUMBING AND BUILDING CODES. IN CASE OF CONFLICT BETWEEN THE CONTRACT DOCUMENTS AND A GOVERNING CODE OR ORDINANCE, THE MORE STRINGENT STANDARD SHALL APPLY.
3. THE PLUMBING CONTRACTOR SHALL BE RESPONSIBLE FOR OBTAINING ALL NECESSARY PERMITS AND FOR PAYING RELATED FEES.
4. CONNECTIONS TO UTILITIES AND SERVICES ARE SHOWN ACCORDING TO THE BEST INFORMATION AVAILABLE. THE CONTRACTOR SHALL VERIFY THE EXACT LOCATIONS, INVERT ELEVATIONS, AND SIZES OF EXISTING PLUMBING SERVICES IN FIELD, AND SHALL CONNECT NEW PLUMBING SERVICES AS INDICATED ON DRAWINGS.
5. PRIOR TO FABRICATION, THIS CONTRACTOR SHALL VERIFY ALL MEASUREMENTS AND CONDITIONS ON JOB SITE, AND COORDINATE THIS WORK WITH THE WORK OF ALL OTHER TRADES.
6. ALL ACCESS PANELS SHALL BE BY GENERAL CONTRACTOR. THE PLUMBING CONTRACTOR SHALL BE RESPONSIBLE FOR COORDINATING THEIR LOCATION.
7. PROVIDE ALL PLUMBING FIXTURES, PIPING, VALVES AND ACCESSORY ITEMS AS SPECIFIED AND AS REQUIRED FOR A COMPLETE INSTALLATION. ROUGHING DIMENSIONS OF FIXTURES MUST BE COORDINATED WITH THE GENERAL CONTRACTOR.
8. PITCH ALL WASTE, SANITARY, AND STORM DRAIN PIPING AT MAXIMUM SLOPE POSSIBLE, BUT NOT LESS THAN 1/8" PER FOOT FOR PIPING ≥3" AND 1/4" PER FOOT FOR PIPING ≤ 2½".
9. NO PIPING SHALL RUN EXPOSED IN FINISHED AREAS.
10. PROVIDE DIELECTRIC FITTINGS OR COUPLINGS WHEREVER DISSIMILAR METALS ARE JOINED.
11. PROVIDE SHUTOFF VALVES AT ALL FIXTURES AND EQUIPMENT ON COLD WATER, HOT WATER, AND GAS PIPES.
12. ALL WORK SHALL BE PROPERLY TESTED, BALANCED, AND CLEANED AND DISINFECTED. PROVIDE A ONE YEAR WARRANTY FROM DATE OF FINAL INSPECTION ON ALL PARTS AND LABOR.
13. PROVIDE ALL PIPE OPENINGS THROUGH PARTITIONS WITH PIPE SLEEVES. FOR PIPES PENETRATING FIRE RATED PARTITIONS, THE SPACE BETWEEN THE PIPE AND THE SLEEVE SHALL BE SEALED WITH FIRE STOPPING MATERIAL. PENETRATIONS FOR PIPING SHALL BE MADE BY CORE DRILLING WHENEVER POSSIBLE.
14. PROVIDE TRAP SEAL PRIMERS FOR FLOOR DRAINS WHERE INDICATED. INSTALL THE PRIMER VALVE IN THE COLD WATER SERVICE, WITH THE TRAP CONNECTION PIPED TO THE FLOOR DRAIN TRAP. LOCATE THE VALVE IN AN ACCESSIBLE LOCATION.
15. THE PLUMBING CONTRACTOR SHALL PROVIDE ALL CUTTING, PATCHING, CORE DRILLING, PAINTING, ACCESS PANELS, AND FINAL RESTORATION REQUIRED TO FACILITATE THE INSTALLATION OF PLUMBING PIPING, INCLUDING ABOVE CEILINGS AND IN SHAFTS.
16. ALL MOTOR STARTERS AND DISCONNECT SWITCHES FOR PLUMBING EQUIPMENT SHALL BE FURNISHED BY THE PLUMBING CONTRACTOR AND INSTALLED BY THE ELECTRICAL CONTRACTOR, UNLESS OTHERWISE NOTED. DISCONNECT SWITCHES FURNISHED BY THE PLUMBING CONTRACTOR FOR PLUMBING EQUIPMENT SHALL BE HEAVY DUTY TYPE.
17. THE CONTRACTOR SHALL BE RESPONSIBLE FOR PROVIDING TEMPORARY VENTILATION AND EXHAUST AIR WHEN WELDING OR SOLDERING OPERATIONS ARE PERFORMED, AS REQUIRED BY OSHA.
18. THE OWNER'S PERMANENT EQUIPMENT SHALL NOT BE USED FOR VENTILATION DURING CONSTRUCTION.

EQUIPMENT NOTES

1. ELECTRIC HOT WATER HEATER, EWH-1 SHALL BE RHEEM MODEL EGSP6, 6 KW, 6-GALLON STORAGE CAPACITY. 208V/1ø/60. PROVIDE FACTORY INSTALLED ASME T&P RELIEF VALVE.
2. ELEVATOR SUMP PUMP: TO BE BASED ON STANCOR MODEL SE40 PUMP, 0.5 HP, 115V-1 PHASE-60 HERTZ, 5 FLA, 64 GPM @ 22 FEET HEAD AND 3600 RPM. PROVIDE STANCOR CHECK VALVE WITH EACH PUMP. PROVIDE OIL MINDER CONTROL SYSTEM FOR EACH PUMP WITH BUILT IN AUDIBLE AND VISUAL ALARM WHEN PUMP DOES NOT RUN DUE TO OIL IN PIT OR HIGH LIQUID ALARM. PROVIDE SILENCING BUTTON FOR AUDIBLE ALARM BUILT INTO PANEL. PANEL SHALL HAVE ADDITIONAL CONTACT FOR A REMOTE ALARM LOCATION. PROVIDE JUNCTION BOX WITH MULTI PIN CONNECTOR AND CORD LENGTHS AS REQUIRED. PANEL TO HAVE INDICATOR LIGHTS FOR OIL SPILL, HIGH LIQUID LEVEL, OVERLOAD AND PUMP RUN. CONTROL PANEL ENCLOSURE TO BE NEMA4X WATERTIGHT CORROSION RESISTANT FIBERGLASS. PROVIDE DISCONNECT SWITCH.
3. HEAT TRACING: SHALL BE BASED ON RAYCHEM 5XL-1-CR TRACE SYSTEM, STANDARD JACKET AMC-1B LINE SENSING TYPE. RATED AT 120v/1ø/60Hz, 5.0 WATTS/LF, 15 AMP PER CIRCUIT. LOCATE SENSING BULBS ON AN EXTERIOR SECTION OF PIPING.

A.) PROVIDE HEAT TRACING ON ALL CW MAKE-UP AND DRAIN LINES LOCATED OUTDOORS.

B.) HEAT TRACING SHALL EXTEND 5' INTO THE BUILDING AND ALONG THE ENTIRE LENGTH OF OUTDOOR PIPE. THE HEAT TRACING SHALL TERMINATE IN A JUNCTION BOX ABOVE GRADE AT THE END OF THE PIPING RUN INSIDE THE BUILDING. THE CONTRACTOR SHALL PROVIDE THE NUMBER OF CIRCUITS REQUIRED FOR EACH RUN OF PIPE AS REQUIRED TO PROPERLY TRACE EACH SEGMENT OF PIPE. LIMIT LENGTH TO 165'.

C.) PROVIDE THE FOLLOWING SPECIALTIES FOR A SYSTEM:
- ADJUSTABLE OUTSIDE AIR TEMPERATURE SENSOR, ARRANGED TO ENERGIZE HEAT TRACING @ 40°F.
- GROUND FAULT PROTECTION EQUIPMENT
- POWER AND END SEAL KIT(S) AS REQUIRED.
- SPLICE AND "TEE" KIT(S) AS REQUIRED.
- "ELECTRONIC TRACED" LABEL INSTALLED EVERY 15' O.C.
- GLASS CLOTH ADHESIVE – FOR METAL PIPE.
- ALUMINUM TAPE – FOR PLASTIC PIPE.
- ALL MOUNTING BRACKETS AND HARDWARE.
- SYSTEM CONTROLER – CONTROLLED THROUGH REMOTE THERMOSTAT WITH VARIABLE SET POINT.
- CONTROL PANEL.

D.) THE SYSTEM SHALL BE UL LISTED AND FM APPROVED.

GREENWICH HS CARDINAL STADIUM PHASE 1A

GREENWICH PUBLIC SCHOOLS
10 HILLSIDE ROAD
GREENWICH CT 06830

KG+D listen imagine build
KG+D . ARCHITECTS PC
285 MAIN STREET MOUNT KISCO . NEW YORK . 10549
P:914.666.5900 KGDARCHITECTS.COM

OLA Consulting Engineers
50 Broadway, Hawthorne, NY 10532 914.747.2800
8 West 38th Street, Suite 501 New York, NY 10018 646.849.4110
olace.com

BUILDING PERMIT ISSUE

NOTE: ALL IDEAS, DESIGNS, ARRANGEMENTS AND PLANS INDICATED OR REPRESENTED BY THIS DRAWING ARE OWNED BY AND ARE THE PROPERTY OF KAEYER, GARMENT, & DAVIDSON ARCHITECTS, PC (KG&D), AND WERE CREATED FOR USE ON THIS PROJECT. NONE OF SUCH IDEAS, DESIGNS, ARRANGEMENTS OR PLANS SHALL BE USED BY OR DISCLOSED TO ANY PURPOSE WHATSOEVER WITHOUT THE WRITTEN PERMISSION OF (KG&D).

WRITTEN DIMENSIONS ON THIS DRAWING SHALL HAVE PRECEDENCE OVER SCALED DIMENSIONS. CONTRACTOR SHALL VERIFY ALL ACTUAL DIMENSIONS AND CONDITIONS ON THE JOB AND THE ARCHITECT MUST BE NOTIFIED OF ANY VARIATIONS FROM DIMENSIONS AND CONDITIONS SHOWN. SHOP DETAILS MUST BE SUBMITTED TO THIS OFFICE FOR APPROVAL BEFORE PROCEEDING WITH FABRICATION.

ALTERATIONS BY ANY PERSON, IN ANY WAY, OF ANY ITEM CONTAINED ON THIS DOCUMENT, UNLESS ACTING UNDER THE DIRECTION OF THE LICENCED ARCHITECT WHOSE PROFESSIONAL SEAL IS AFFIXED HERETO, IS A VIOLATION OF TITLE VII, SECT. 69.5 (b) OF NEW YORK STATE LAW.
COPYRIGHT KAEYER, GARMENT + DAVIDSON ARCHITECTS & ENGINEERS, PC ALL RIGHTS RESERVED.

Professional Seal

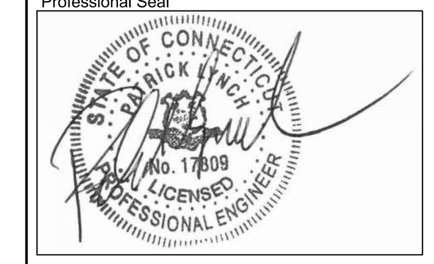

No.	Date	Issue
1	12/02/20	BUILDING PERMIT ISSUE

Sheet Title

PLUMBING SYMBOLS, ABBREVIATIONS, & NOTES

Job No. NKGD0185.02	Date 8/23/2019
Scale AS NOTED	Drawn / Checked TV RG

Sheet Number

P001

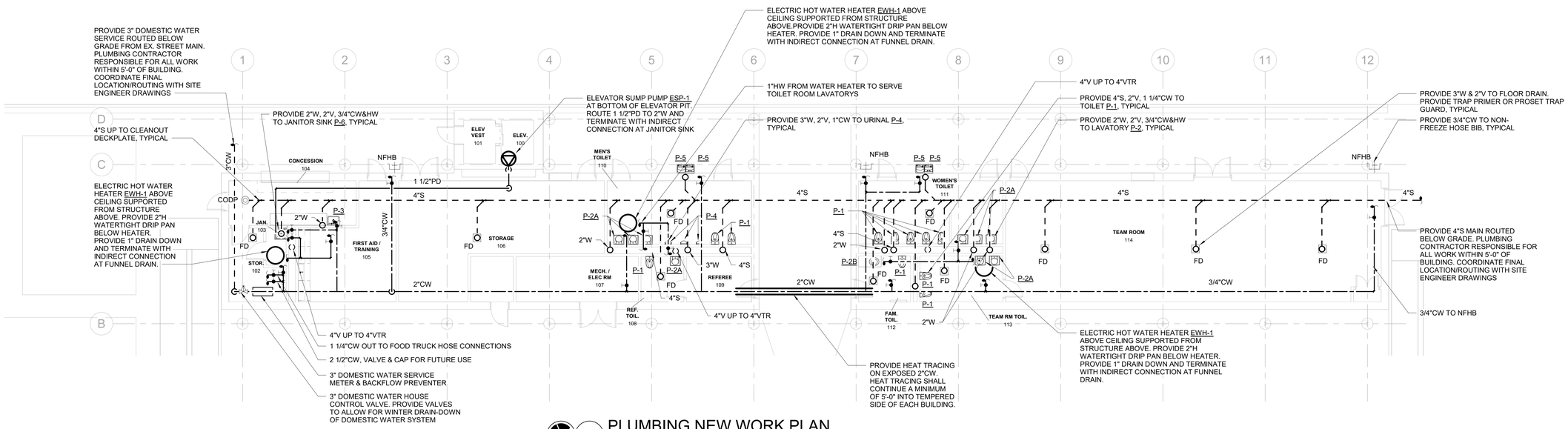

1 PLUMBING NEW WORK PLAN

SCALE: 1/8" = 1'-0"

NORTH

GHS CARDINAL STADIUM PHASE 1 BLEACHERS

Greenwich Public Schools
10 Hillside Road
Greenwich, CT 06830

KG+D listen imagine build
KG+D . ARCHITECTS PC
285 MAIN STREET MOUNT KISCO . NEW YORK . 10549
P:914.666.5900 KGDARCHITECTS.COM

OLA Consulting Engineers
50 Broadway,
Hawthorne, NY 10532
914.747.2800
8 West 38th Street,
Suite 501
New York, NY 10018
646.849.4110
olace.com

BUILDING PERMIT ISSUE

NOTE: ALL IDEAS, DESIGNS, ARRANGEMENTS AND PLANS INDICATED OR REPRESENTED BY THIS DRAWING ARE OWNED BY AND ARE THE PROPERTY OF KAEYER, GARMENT, & DAVIDSON ARCHITECTS, PC (KG&D), AND WERE CREATED FOR USE ON THIS PROJECT. NONE OF SUCH IDEAS, DESIGNS, ARRANGEMENTS OR PLANS SHALL BE USED BY OR DISCLOSED TO ANY PURPOSE WHATSOEVER WITHOUT THE WRITTEN PERMISSION OF (KG&D).

WRITTEN DIMENSIONS ON THIS DRAWING SHALL HAVE PRECEDENCE OVER SCALED DIMENSIONS. CONTRACTOR SHALL VERIFY ALL ACTUAL DIMENSIONS AND CONDITIONS ON THE JOB AND THE ARCHITECT MUST BE NOTIFIED OF ANY VARIATIONS FROM DIMENSIONS AND CONDITIONS SHOWN. SHOP DETAILS MUST BE SUBMITTED TO THIS OFFICE FOR APPROVAL BEFORE PROCEEDING WITH FABRICATION.

ALTERATIONS BY ANY PERSON, IN ANY WAY, OF ANY ITEM CONTAINED ON THIS DOCUMENT, UNLESS ACTING UNDER THE DIRECTION OF THE LICENCED ARCHITECT WHOSE PROFESSIONAL SEAL IS AFFIXED HERETO, IS A VIOLATION OF TITLE VII, SECT. 69.5 (b) OF NEW YORK STATE LAW.
COPYRIGHT KAEYER, GARMENT • DAVIDSON ARCHITECTS & ENGINEERS, PC
ALL RIGHTS RESERVED.

Professional Seal

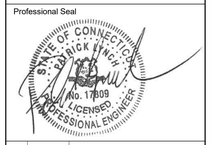

No.	Date	Issue
1	12/02/20	BUILDING PERMIT ISSUE

Sheet Title

PLUMBING NEW WORK PLAN

Job No.	Date
NKGD0185.02	08/30/19
Scale	Drawn / Checked
AS NOTED	Author Checker

Sheet Number

P201

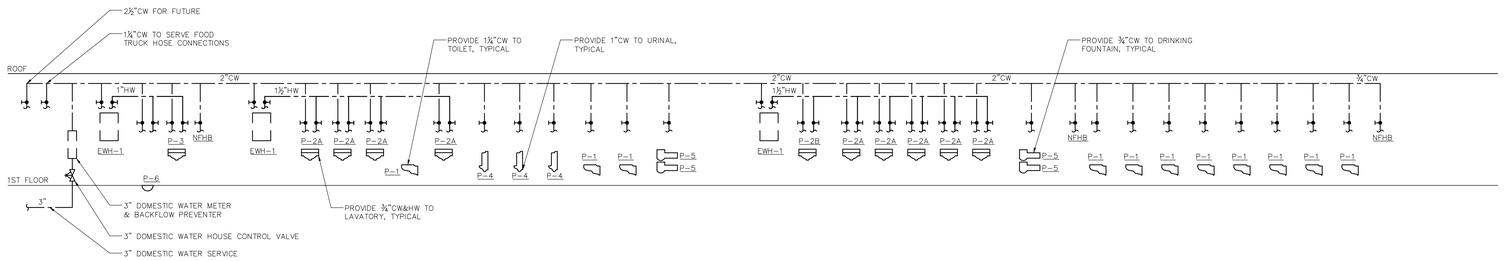

2 PLUMBING DOMESTIC WATER RISER DIAGRAM
SCALE: NOT TO SCALE

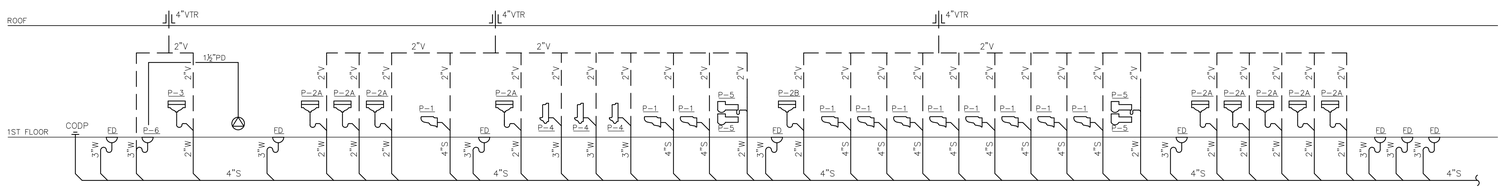

1 PLUMBING SANITARY RISER DIAGRAM
SCALE: NOT TO SCALE

GREENWICH HS CARDINAL STADIUM PHASE 1A

GREENWICH PUBLIC SCHOOLS
10 HILLSIDE ROAD
GREENWICH CT 06830

KG+D . ARCHITECTS PC
285 MAIN STREET MOUNT KISCO . NEW YORK . 10549
P:914.666.5900 KGDARCHITECTS.COM

OLA Consulting Engineers
50 Broadway,
Hawthorne, NY 10532
914.747.2800
8 West 38th Street,
Suite 501
New York, NY 10018
646.849.4110
olace.com

BUILDING PERMIT ISSUE

NOTE: ALL IDEAS, DESIGNS, ARRANGEMENTS AND PLANS INDICATED OR REPRESENTED BY THIS DRAWING ARE OWNED BY AND ARE THE PROPERTY OF KAEYER, GARMENT, & DAVIDSON ARCHITECTS, PC (KG&D), AND WERE CREATED FOR USE ON THIS PROJECT. NONE OF SUCH IDEAS, DESIGNS, ARRANGEMENTS OR PLANS SHALL BE USED BY OR DISCLOSED TO ANY PURPOSE WHATSOEVER WITHOUT THE WRITTEN PERMISSION OF (KG&D).

WRITTEN DIMENSIONS ON THIS DRAWING SHALL HAVE PRECEDENCE OVER SCALED DIMENSIONS. CONTRACTOR SHALL VERIFY ALL ACTUAL DIMENSIONS AND CONDITIONS ON THE JOB AND THE ARCHITECT MUST BE NOTIFIED OF ANY VARIATIONS FROM DIMENSIONS AND CONDITIONS SHOWN. SHOP DETAILS MUST BE SUBMITTED TO THIS OFFICE FOR APPROVAL BEFORE PROCEEDING WITH FABRICATION.

ALTERATIONS BY ANY PERSON, IN ANY WAY, OF ANY ITEM CONTAINED ON THIS DOCUMENT, UNLESS ACTING UNDER THE DIRECTION OF THE LICENSED ARCHITECT WHOSE PROFESSIONAL SEAL IS AFFIXED HERETO, IS A VIOLATION OF TITLE VII, SECT. 7209 (2) OF NEW YORK STATE LAW.
COPYRIGHT KAEYER, GARMENT + DAVIDSON ARCHITECTS & ENGINEERS, PC
ALL RIGHTS RESERVED.

Professional Seal

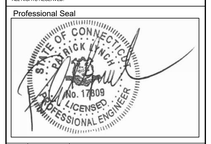

No.	Date	Issue
1	12/02/20	BUILDING PERMIT ISSUE

Sheet Title

PLUMBING RISER DIAGRAMS

Job No.	Date
NKGD0185.02	8/23/2019
Scale	Drawn / Checked
AS NOTED	TV RG

Sheet Number

P501

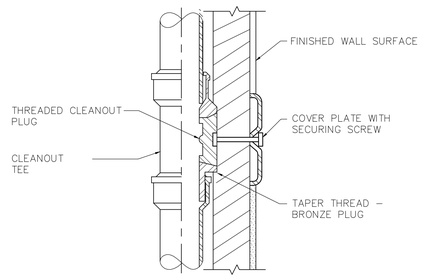

6 CLEANOUT CONCEALED BEHIND WALL DETAIL
SCALE: NONE

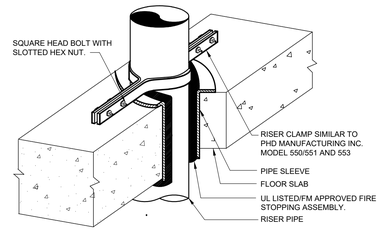

3 VERTICAL PIPE SUPPORT DETAIL
SCALE: NONE

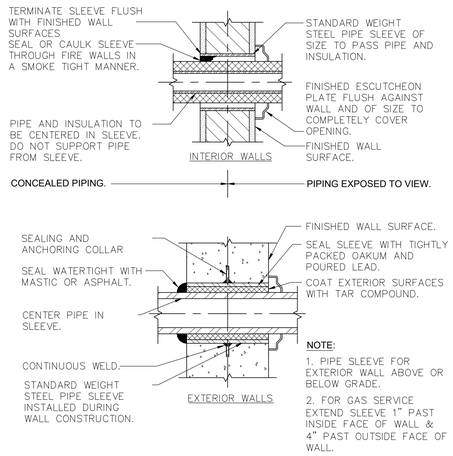

NOTE:
1. PIPE SLEEVE FOR EXTERIOR WALL ABOVE OR BELOW GRADE.
2. FOR GAS SERVICE EXTEND SLEEVE 1" PAST INSIDE FACE OF WALL & 4" PAST OUTSIDE FACE OF WALL.

8 PIPE WALL SLEEVE DETAIL FOR INTERIOR WALLS
SCALE: NONE

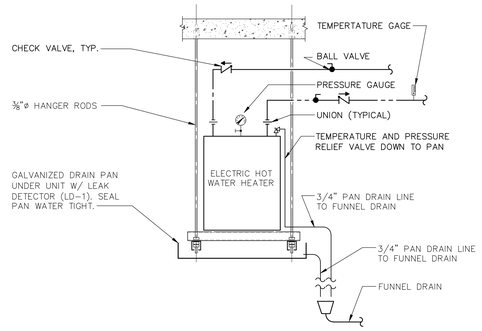

5 ELECTRIC HOT WATER HEATER DETAIL
SCALE: NONE

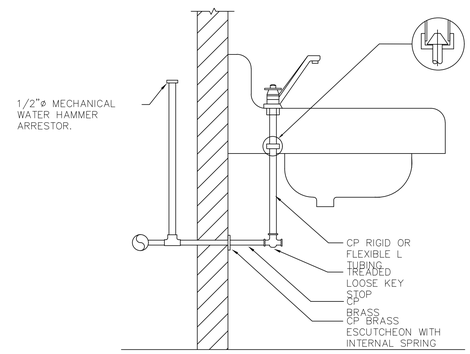

NOTE:
SIMILAR SUPPLY ARRANGEMENT TO OTHER FIXTURES

2 TYPICAL LAVATORY SUPPLY CONNECTION
SCALE: NONE

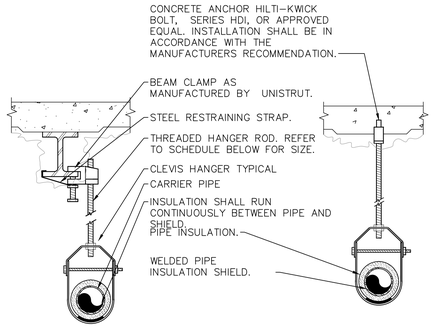

HANGER ROD SCHEDULE

PIPING MATERIAL	PIPE SIZE (IN.)	HANGER ROD DIAMETER (IN.)
STEEL (SCHEDULE 40 & SCHEDULE 80)	½"–1"	⅜"
	1¼"–3"	½"
	4"–5"	⅝"
	6"–8"	¾"
	10"–12"	⅞"
	14"–18"	1"
COPPER	¼"–2"	⅜"
	2½"–4"	⅝"
	5"–8"	¾"

NOTES:
a.) THE MAXIMUM HORIZONTAL SPACING OF CAST-IRON PIPE HANGERS SHALL BE INCREASED TO 10 FT. WHERE 10 FOOT LENGTHS OF PIPE ARE INSTALLED.
b.) FOR SIZES 2 IN. AND SMALLER, A GUIDE SHALL BE INSTALLED MIDWAY BETWEEN REQUIRED VERTICAL SUPPORTS. SUCH GUIDES SHALL PREVENT PIPE MOVEMENT IN A DIRECTION PERPENDICULAR TO THE AXIS OF THE PIPE.
C.) CLEVIS HANGERS WITH WELDED INSULATION SHIELDS ON ALL PIPES LARGER THAN 1".
D.) FOR PIPES 1" OR SMALLER, A BAND HANGER WITH INSULATION SHIELD MAY BE USED.
E.) FOR NON-INSULATED PIPE, INSULATION SHIELDS MAY BE OMITTED.
F.) ALL PIPE HANGERS SHALL BE GALVANIZED STEEL OR FACTORY PAINTED BLACK WITH ENAMEL.
G.) FOR NON FERROUS PIPING WITHOUT INSULATION, ALL HANGERS SHALL BE COPPER PLATED, OR FURNISHED WITH A DI-ELECTRIC BETWEEN PIPE AND HANGERS.
H.) WHERE EXISTING BUILDING STRUCTURAL COMPONENTS HAVE FIREPROOF MATERIAL, ANY AREA THAT IS DISTURBED OR DAMAGED AS A RESULT OF HANGER INSTALLATION SHALL BE PATCHED WITH UL AND FM APPROVED FIREPROOFING TO MATCH EXISTING.

9 PIPE HANGER DETAIL
SCALE: NONE

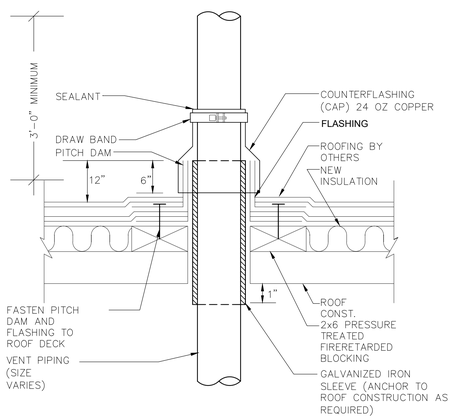

NOTES:
1. ALL PLUMBING ROOF PENETRATIONS SHALL BE COORDINATED WITH THE ARCHITECT.

7 VENT THRU ROOF
SCALE: NONE

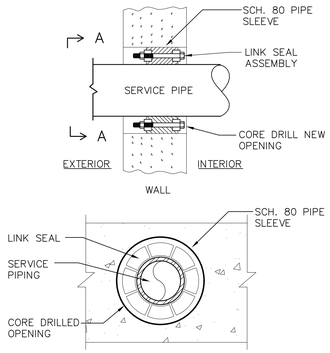

SECTION A–A
N.T.S.

NOTES:
1. SEAL ASSEMBLY BASED ON THUNDERLINE MODEL "C" LINK-SEAL MODULAR SEAL, WITH EPDM SEAL ELEMENT, COMPOSITE PRESSURE PLATES, STEEL WITH 2-PART ZINC DICHROMATE & ORGANIC COATING NUTS AND BOLTS AND WITH A OPERATING TEMPERATURE RANGE OF -40°F TO +250°F.

4 PIPE LINK SEAL DETAIL FOR EXTERIOR WALLS
SCALE: NONE

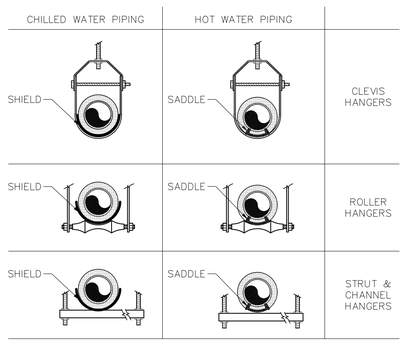

NOTES:
1. INSULATION ON ALL COLD SURFACES SHALL BE APPLIED WITH A CONTINUOUS, UNBROKEN VAPOR SEAL. HANGERS, SUPPORTS, ANCHORS, ETC., THAT ARE SECURED DIRECTLY TO COLD SURFACES SHALL BE ADEQUATELY INSULATED AND VAPOR SEALED TO PREVENT CONDENSATION.
2. GALVANIZED METAL SHIELDS SHALL BE APPLIED BETWEEN HANGERS OR SUPPORTS AND THE PIPE INSULATION AS SHOWN ABOVE. SHIELDS SHALL BE FORMED TO FIT THE INSULATION AND SHALL EXTEND UP TO THE CENTERLINE OF THE PIPE.
3. RIGID INSULATION INSERTS SHALL BE INSTALLED ON PIPE SIZES 1½" (38 MM) OR LARGER AS SHOWN ABOVE. INSERTS SHALL BE OF EQUAL THICKNESS TO THE ADJOINING INSULATION AND SHALL BE PROVIDED WITH VAPOR RETARDER SEALS.

1 PIPE INSULATION SADDLE/SHIELD SCHEDULE
SCALE: NONE

GREENWICH HS CARDINAL STADIUM PHASE 1A

GREENWICH PUBLIC SCHOOLS
10 HILLSIDE ROAD
GREENWICH CT 06830

KG+D listen imagine build
KG+D . ARCHITECTS PC
285 MAIN STREET MOUNT KISCO . NEW YORK . 10549
P:914.666.5900 KGDARCHITECTS.COM

OLA Consulting Engineers
50 Broadway,
Hawthorne, NY 10532
914.747.2800
8 West 38th Street,
Suite 501
New York, NY 10018
646.849.4110
olace.com

BUILDING PERMIT ISSUE

NOTE: ALL IDEAS, DESIGNS, ARRANGEMENTS AND PLANS INDICATED OR REPRESENTED BY THIS DRAWING ARE OWNED BY AND ARE THE PROPERTY OF KAEYER, GARMENT, & DAVIDSON ARCHITECTS, PC (KG&D), AND WERE CREATED FOR USE ON THIS PROJECT. NONE OF SUCH IDEAS, DESIGNS, ARRANGEMENTS OR PLANS SHALL BE USED BY OR DISCLOSED TO ANY PURPOSE WHATSOEVER WITHOUT THE WRITTEN PERMISSION OF (KG&D).

WRITTEN DIMENSIONS ON THIS DRAWING SHALL HAVE PRECEDENCE OVER SCALED DIMENSIONS. CONTRACTOR SHALL VERIFY ALL ACTUAL DIMENSIONS AND CONDITIONS ON THE JOB AND THE ARCHITECT MUST BE NOTIFIED OF ANY VARIATIONS FROM DIMENSIONS AND CONDITIONS SHOWN. SHOP DETAILS MUST BE SUBMITTED TO THIS OFFICE FOR APPROVAL BEFORE PROCEEDING WITH FABRICATION.

ALTERATIONS BY ANY PERSON, IN ANY WAY, OF ANY ITEM CONTAINED ON THIS DOCUMENT, UNLESS ACTING UNDER THE DIRECTION OF THE LICENSED ARCHITECT WHOSE PROFESSIONAL SEAL IS AFFIXED HERETO, IS A VIOLATION OF TITLE VI, SECT. 65 5 (b) OF NEW YORK STATE LAW.
COPYRIGHT KAEYER, GARMENT • DAVIDSON ARCHITECTS & ENGINEERS, PC
ALL RIGHTS RESERVED

Professional Seal

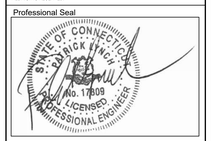

No.	Date	Issue
1	12/02/20	BUILDING PERMIT ISSUE

Sheet Title

PLUMBING DETAILS

Job No.	Date
NKGD0185.02	8/23/2019
Scale: AS NOTED	Drawn / Checked: TV RG

Sheet Number

P701

SYMBOLS AND ABBREVIATIONS

SYMBOL	ABBREVIATION	DESCRIPTION
–	AC–	AIR CONDITIONING UNIT
–	AD	ACCESS DOOR
–	AFF	ABOVE FINISHED FLOOR
–	AHC	ABOVE HUNG CEILING
–	AP	ACCESS PANEL
–	BHP	BRAKE HORSEPOWER
–	BTU	BRITISH THERMAL UNIT
–	CFM	CUBIC FEET PER MINUTE
–	COD	CABLE OPERATED DAMPER
–	DB	DRY BULB TEMPERATURE
–	DIA. OR ø	DIAMETER
–	DX	DIRECT EXPANSION
–	EA	EXHAUST AIR
–	EAT	ENTERING AIR TEMPERATURE
–	ER	EXHAUST REGISTER
–	ESP	EXTERNAL STATIC PRESSURE
–	EWT	ENTERING WATER TEMPERATURE
–	FCU	FAN COIL UNIT
–	FPM	FEET PER MINUTE
–	FPS	FEET PER SECOND
–	GPM	GALLONS PER MINUTE
–	HP	HORSE POWER
–	LAT	LEAVING AIR TEMPERATURE
–	LF	LINEAR FEET
–	LWT	LEAVING WATER TEMPERATURE
–	MBH	1000 BRITISH THERMAL UNITS PER HOUR
–	MER	MECHANICAL EQUIPMENT ROOM
–	NIC	NOT IN CONTRACT
–	OAI	OUTSIDE AIR INTAKE
–	PSI	POUNDS PER SQUARE INCH
–	RA	RETURN AIR
–	RF–	RETURN FAN
–	RPM	REVOLUTIONS PER MINUTE
–	SA	SUPPLY AIR
–	SP	STATIC PRESSURE
–	TD	TRANSFER DUCT
–	TF–	TRANSFER FAN
–	TSP	TOTAL STATIC PRESSURE
–	TYP.	TYPICAL
–	U.O.N.	UNLESS OTHERWISE NOTED
–	WB	WET BULB TEMPERATURE
–	WG	INCHES OF WATER GAUGE
	EX.	EXISTING TO REMAIN
– – – – –	REL.	REMOVE AND RELOCATE
	NEW	NEW WORK
– – – – –	DEM.	EXISTING TO BE REMOVED
Ⓣ	–	THERMOSTAT
	–	AIR INTO REGISTER
	–	POINT OF CONNECTION DISCONNECTION
	SR	SUPPLY REGISTER
	CD	1–WAY
CD		2–WAY
CD		2–WAY
CD		3–WAY
CD		4–WAY
RR/RG/ER		RETURN REGISTER/GRILLE/EXHAUST REGISTER
	–	SUPPLY DUCT UP
	–	SUPPLY DUCT DOWN
	–	RETURN DUCT UP
	–	RETURN DUCT DOWN
	–	TRANSITION FROM SQUARE TO ROUND DUCT
	–	TRANSITION
D	–	DUCT DROP
R	–	DUCT RISE
	–	SQUARE VANED ELBOW
	–	DUCT RISE
	–	DUCT DROP
	–	DUCT TRANSITION
	–	ALUMINUM DUCT
– – – – – –	AL	ACOUSTIC LINING
	FD/AD	FIRE DAMPER W/ ACCESS DOOR
	SD/AD	SMOKE DAMPER W/ ACCESS DOOR
	CFSD	COMBINATION FIRE/SMOKE DAMPER W/ ACCESS DOOR
	VD	VOLUME DAMPER

SYMBOLS AND ABBREVIATIONS

SYMBOL	ABBREVIATION	DESCRIPTION
	AL	ACOUSTIC LINING
6x8	–	DUCT SIZE – 1ST FIGURE IS SIDE SHOWN
	FC	FLEXIBLE CONNECTION
	–	ALUMINUM DUCT
ER CFM	–	EXHAUST REGISTER
CD–A CFM	–	NEW CEILING DIFFUSER

GENERAL NOTES

1. DUCT DIMENSIONS SHOWN ON MECHANICAL DRAWINGS REFER TO INSIDE CLEAR DUCT DIMENSIONS. WHERE DUCTWORK IS LINED THE CONTRACTOR SHALL INCREASE THE SIZE OF DUCT TO COMPENSATE FOR LINING.
2. THE CONTRACTOR SHALL INSTALL FIRE DAMPERS WITH ACCESS DOORS IN ALL DUCTS PENETRATING FIRE RATED WALLS WHETHER SPECIFICALLY SHOWN ON THE DRAWING OR NOT.
3. PROVIDE ALL PIPE OPENINGS THROUGH PARTITIONS WITH PIPE SLEEVES. FOR PIPES PENETRATING FIRE RATED PARTITIONS, THE SPACE BETWEEN THE PIPE AND THE SLEEVE SHALL BE SEALED WITH FIRE STOPPING MATERIAL.
4. THIS CONTRACTOR SHALL SUBMIT FOR REVIEW A COMPOSITE SHOP DRAWING, FULLY COORDINATED WITH ALL OTHER TRADES, INDICATING DUCTWORK, PLUMBING PIPING, SMOKE DETECTORS, LIGHTS, CONDUITS, DIFFUSERS, GRILLES, ETC.
5. CONTRACT DRAWINGS AS FAR AS THEY RELATE TO THE GENERAL ARRANGEMENT AND LOCATION OF EQUIPMENT, PIPING AND SHEETMETAL, SHALL BE UNDERSTOOD AS DIAGRAMMATIC. ANY CHANGES TO SHEETMETAL AND EQUIPMENT LOCATIONS NECESSARY TO AVOID INTERFERENCE WITH OTHER TRADES SHALL BE MADE AT NO EXTRA COST.
6. PROVIDE CABLE OPERATED DAMPERS ON DUCTWORK ABOVE DRYWALL CEILINGS.
7. THE MECHANICAL CONTRACTOR SHALL FURNISH AND INSTALL VOLUME DAMPERS IN DUCTWORK AS REQUIRED TO BALANCE THE AIRFLOW AT ALL REGISTERS AND DIFFUSERS TO THE CFM'S INDICATED ON PLAN, WHETHER SPECIFICALLY SHOWN ON THE DRAWINGS OR NOT.
8. PROVIDE ALL PIPE OPENINGS THROUGH PARTITIONS WITH PIPE SLEEVES. FOR PIPES PENETRATING FIRE RATED PARTITIONS, THE SPACE BETWEEN THE PIPE AND THE SLEEVE SHALL BE SEALED WITH FIRE STOPPING MATERIAL. PENETRATIONS FOR PIPING SHALL BE MADE BY CORE DRILLING WHENEVER POSSIBLE.
9. ALL MOTOR STARTERS AND DISCONNECT SWITCHES FOR HVAC EQUIPMENT SHALL BE FURNISHED BY THE MECHANICAL CONTRACTOR AND INSTALLED BY THE ELECTRICAL CONTRACTOR, UNLESS OTHERWISE NOTED. DISCONNECT SWITCHES FURNISHED BY THE MECHANICAL CONTRACTOR FOR HVAC EQUIPMENT SHALL BE HEAVY DUTY TYPE.
10. LOCATE THERMOSTATS AND TEMPERATURE SENSORS 5'–6" ABOVE FINISHED FLOOR UNLESS OTHERWISE NOTED. COORDINATE LOCATION WITH FURNITURE, CABINETS, ETC.
11. THE MECHANICAL CONTRACTOR SHALL NOTE THAT, IN ADDITION TO THE SPECIFICATIONS AND DETAILS GIVEN IN THESE PLANS FOR PIPE HANGERS AND SUPPORTS, ALL HANGERS AND SUPPORTS SHALL BE DESIGNED AND INSTALLED IN COMPLIANCE WITH APPLICABLE SEISMIC CODES.
12. ALL HVAC EQUIPMENT SHALL HAVE 3" HIGH BLACK LAMACOID NAME PLATES WITH WHITE ENGRAVED LETTERS PERMANENTLY FASTENED TO EQUIPMENT.
13. ALL WORK SHALL COMPLY WITH INTERNATIONAL AND CT BUILDING CODES, LOCAL BUILDING CODE, AND ENERGY CODE REQUIREMENTS. IN CASE OF CONFLICT BETWEEN THE CONTRACT DOCUMENTS AND A GOVERNING CODE OR ORDINANCE, THE MORE STRINGENT STANDARD SHALL APPLY.
14. DURING CONSTRUCTION, ALL OPEN OR INCOMPLETE DUCTWORK SHALL BE CAPPED AIRTIGHT WITH WITH HEAVY POLYETHYLENE PLASTIC. AFTER THE INSTALLATION OF DUCTWORK, REGISTERS, GRILLES, AND DIFFUSERS, THE CONTRACTOR SHALL BLANK OFF ALL REGISTERS, GRILLES, AND DIFFUSERS WITH HEAVY POLYETHYLENE PLASTIC AND TAPE AIR TIGHT, IN AREAS THAT ARE UNDER CONSTRUCTION, UNTIL WORK IS COMPLETE IN THOSE AREAS. FLOOR REGISTERS AND GRILLES SHALL ALSO BE COVERED WITH 1/8" MASONITE.
15. WHEN GENERAL CONSTRUCTION IS COMPLETE, VACUUM CLEAN ALL DIFFUSERS, REGISTERS, GRILLES, AND HVAC EQUIPMENT IN THE PROJECT AREA OR SERVING THE PROJECT AREA. REMOVE ANY CONSTRUCTION DEBRIS. REPLACE ALL AIR FILTERS WITH NEW.
16. THE OWNER'S PERMANENT HVAC EQUIPMENT SHALL NOT BE USED BY ANY CONTRACTOR DURING CONSTRUCTION FOR TEMPORARY HEATING, COOLING, OR VENTILATION. IF TEMPORARY HEATING, COOLING, OR VENTILATION IS REQUIRED AT ANY POINT DURING CONSTRUCTION, THE CONTRACTOR SHALL PROVIDE TEMPORARY HEATING, COOLING, OR VENTILATION EQUIPMENT, DUCTWORK, CONTROLS, AND POWER AT HIS OWN EXPENSE.
17. THE CONTRACTOR SHALL BE RESPONSIBLE FOR PROVIDING TEMPORARY VENTILATION AND EXHAUST AIR WHEN WELDING OR SOLDERING OPERATIONS ARE PERFORMED, AS REQUIRED BY OSHA.
18. THE MECHANICAL CONTRACTOR SHALL BE RESPONSIBLE FOR OBTAINING ALL NECESSARY PERMITS AND FOR PAYING RELATED FEES.
19. THE MECHANICAL CONTRACTOR SHALL PROVIDE ALL CUTTING, PATCHING, CORE DRILLING, ACCESS PANELS, PAINTING, AND FINAL RESTORATION REQUIRED TO FACILITATE THE INSTALLATION OF HVAC DUCTWORK, CONTROL CONDUITS, AND PIPING, INCLUDING ABOVE CEILINGS AND IN SHAFTS THAT WILL NOT BE REPLACED OR OPENED UNDER ANY OTHER SCOPE OF WORK RELATED TO THIS PROJECT. CONTRACTOR TO REMOVE AND REPLACE CEILINGS, AND OPEN AND PATCH SHAFTS AND WALLS, AS REQUIRED TO EXECUTE THE MECHANICAL WORK.
20. PROVIDE 1" ACOUSTIC LINING ON ALL DUCTWORK FROM THE INLET AND OUTLET OF ALL FANS.

AUTOMATIC TEMPERATURE CONTROLS

AUTOMATIC TEMPERATURE CONTROLS

A.) PROVIDE ALL LABOR, MATERIALS, EQUIPMENT AND SERVICES, AND PERFORM ALL OPERATIONS REQUIRED FOR THE AUTOMATIC TEMPERATURE CONTROL SYSTEM.

B.) THE CONTROL SYSTEM SHALL BE COMPLETE WITH ALL NECESSARY CONTROL DEVICES, THERMOSTATS, VALVES, SWITCHES, PANELS AND CONTROL WIRING TO PROVIDE THE DESCRIBED FUNCTIONS. PROVIDE INFORMATION TO THE ELECTRICAL CONTRACTOR REQUIRED TO PERMIT INSTALLATION OF POWER WIRING TO ANY CONTROL COMPONENTS.

C.) THE CONTROLS MANUFACTURER SHALL FURNISH FACTORY WIRED CONTROL PANELS WHICH SHALL HOUSE ALL RELAYS, DEVICES, SWITCHES, TRANSFORMERS, TERMINAL STRIPS, ETC., AS REQUIRED FOR THE COMPLETE TEMPERATURE CONTROL OF THE SYSTEM.

D.) ALL CONTROLS SHALL BE THE PRODUCT OF ONE MANUFACTURER AND ALL COMPONENTS SHALL BE U.L. APPROVED WHERE APPLICABLE. SYSTEM SHALL BE THE LATEST TOP QUALITY EQUIPMENT AND SHALL BE INSTALLED COMPLETE IN ALL RESPECTS BY COMPETENT MECHANICS, REGULARLY EMPLOYED BY THE MANUFACTURER OF THE CONTROL SYSTEM. ALL AUTOMATIC CONTROL VALVES AND DAMPERS SHALL BE MANUFACTURED BY THE CONTROL MANUFACTURER.

E.) AFTER COMPLETION OF THE CONTROL SYSTEM WORK, THE CONTROL MANUFACTURER SHALL REGULATE AND ADJUST ALL THERMOSTATS, CONTROL VALVES, ETC., AND PLACE THEM IN COMPLETE OPERATING CONDITION SUBJECT TO THE REVIEW OF THE ENGINEERS. COMPLETE INSTRUCTIONS SHALL BE GIVEN TO THE OPERATING PERSONNEL.

F.) THE CONTROL SYSTEM HEREIN SPECIFIED SHALL BE FREE FROM DEFECTS IN WORKMANSHIP AND MATERIAL UNDER NORMAL USE AND SERVICE. IF, WITHIN ONE YEAR FROM DATE OF ACCEPTANCE BY THE OWNER, ANY EQUIPMENT HEREIN DESCRIBED IS PROVED TO BE DEFECTIVE IN WORKMANSHIP OR MATERIAL, IT SHALL BE ADJUSTED, REPAIRED OR REPLACED FREE OF CHARGE.

G.) DELIVER TO THE OWNER TWO COPIES OF THE AS–INSTALLED CONTROL SYSTEM, LAMINATED IN CLEAR PLASTIC. PROVIDE IDENTIFYING TAGS ON ALL CONTROLS TO CONFORM TO THE DESIGNATIONS ON THE CONTROL DIAGRAMS.

I.) ALL CONTROL WIRING SHALL BE RUN IN EMT OR GALVANIZED CONDUIT. CONTROL CONDUIT AND/OR PIPING SHALL BE CONCEALED IN ALL SPACES EXCEPT IN MECHANICAL EQUIPMENT ROOMS AND UNFINISHED SPACES, AND SHALL BE INSTALLED IN PARALLEL BANKS WITH ALL CHANGES IN DIRECTIONS MADE AT 90 DEGREE ANGLES. CONTROL AND INSTRUMENT WIRING SHALL NOT BE INSTALLED ON DUCTWORK. WIRING AND PIPING SHALL BE SECURED TO THE BUILDING STRUCTURE, SUCH AS WALLS, COLUMNS, UNDERSIDE OF SLABS, ETC..

J.) ALL CONTROLLERS SHALL BE OF THE FULLY PROPORTIONING TYPE AND SHALL BE PROVIDED WITH AN ADJUSTABLE THROTTLING RANGE, MINIMUM RANGE SHALL BE 1°F. ALL ROOM THERMOSTATS SHALL BE LOCATED AS SHOWN ON THE PLANS. ALL THERMOSTATS AND OTHER CONTROLLERS SHALL HAVE ADJUSTABLE SET POINTS.

K.) PROVIDE A MINIMUM OF 5 FEET EXCESS CONTROL WIRING TO EACH THERMOSTAT FOR FUTURE RELOCATION OF THERMOSTATS.

SEQUENCE OF OPERATIONS

1.) THIS CONTRACTOR SHALL PROVIDE A STAND ALONE CONTROL SYSTEM COMPLETE WITH ALL NECESSARY WIRING, VALVES, INTERLOCKS, PANELS, ETC. FOR SYSTEM TO OPERATE AS SPECIFIED IN THE SEQUENCE OF OPERATION.

2.) SUBMITTALS FOR REVIEW

A. SHOP DRAWINGS: INDICATE ALL MECHANICAL CONTROLLED COMPONENTS AND CONTROL SYSTEM COMPONENTS. LABELED WITH SETTINGS, AND ADJUSTABLE RANGE OF CONTROLS AND LIMITS. INCLUDE WRITTEN DESCRIPTION OF CONTROL SEQUENCE.

B. INCLUDE FLOW DIAGRAMS FOR EACH CONTROL SYSTEM, GRAPHICALLY DEPICTING CONTROL LOGIC. INCLUDE DRAFT COPIES OF GRAPHIC DISPLAYS INDICATING MECHANICAL SYSTEM COMPONENTS, CONTROL SYSTEM COMPONENTS, AND CONTROLLED FUNCTION STATUS AND VALUE.

3.) H&V UNITS: AHU–# AND AHU–#

PROVIDE A NEW TEMPERATURE CONTROL PANEL WITH 7–DAY PROGRAMMABLE THERMOSTAT FOR EACH UNIT IN THE MER WITH AUTO CHANGEOVER AND HEAT–OFF AND ON–OFF–AUTO FAN SWITCH AND REMOTE HARD WIRED SPACE TEMPERATURE SENSORS.

UNITS OFF: THE OUTSIDE AIR INTAKE DAMPER SHALL BE CLOSED AND THE RETURN AIR DAMPER SHALL BE FULL OPEN. THE FAN SHALL BE OFF AND THE ELECTRIC HEATER SHALL BE DE–ENERGIZED.

SUMMER OPERATION: UPON START UP, THE CONTROL CIRCUITS SHALL BE ENERGIZED. THE SUPPLY FAN SHALL RUN CONTINUOUSLY. THE OUTSIDE AIR INTAKE DAMPER SHALL OPEN TO MAXIMUM POSITION AND THE RETURN DAMPER SHALL OPEN TO THE MINIMUM POSITION.

WINTER OPERATION: UPON START UP, THE CONTROL CIRCUITS SHALL BE ENERGIZED. THE SUPPLY FAN SHALL RUN CONTINUOUSLY. THE OUTSIDE AIR INTAKE DAMPER SHALL OPEN TO MINIMUM POSITION AND THE RETURN DAMPER SHALL OPEN TO THE MAXIMUM POSITION. THE ELECTRIC HEATING COIL SHALL ENERGIZE AND MODULATE TO MAINTAIN A SPACE TEMPERATURE SET–POINT OF 68°F(ADJUSTABLE). A SPACE TEMPERATURE SENSOR SHALL BE ARRANGED TO MODULATE THE HEATING CAPACITY TO MAINTAIN THE SPACE TEMPERATURE. SET THE ELECTRIC HEATER DISCHARGE TEMPERATURE MAXIMUM AT 110°F (ADJUSTABLE).

UNOCCUPIED OPERATION: UNIT SUPPLY FAN AND ELECTRIC HEATING COIL SHALL CYCLE ON AND ENERGIZE UPON A CALL FOR HEATING. DURING UNOCCUPIED OPERATION, THE UNIT SHALL OPERATE WITH 100% RE–CIRCULATED AIR. UNIT CONTROLS SHALL ALLOW COMPLETE SHUTDOWN IF DESIRED. SET POINT SHALL BE 68°F (ADJUSTABLE) IN THE HEATING SEASON.

LIMIT CONTROLS: PROVIDE A HIGH/LOW LIMIT CONTROL(S) IN THE SUPPLY FAN DISCHARGE ARRANGED TO OVERRIDE TEMPERATURE CONTROLS AND PREVENT DISCHARGE TEMPERATURE FROM DROPPING BELOW 50°F (ADJUSTABLE). PROVIDE LIMIT CONTROL ON FAN SPEED TO LIMIT SPEED REDUCTION TO 75% OF AIR FLOW.

4.) TX FANS

PROVIDE TIME CLOCK FOR EACH TOILET EXHAUST FAN. TOILET EXHAUST FANS SHALL RUN & ASSOCIATED MOTORIZED DAMPER SHALL OPEN DURING THE OCCUPIED PERIODS AS PROGRAMMED THROUGH TIME CLOCK. TOILET FAN SHALL NOT ENERGIZE UNTIL ASSOCIATED EXHAUST AIR MOTORIZED DAMPER IS PROVEN OPEN.

5.) ELECTRIC SPACE UNIT HEATERS:

PROVIDE NEW 7 DAY PROGRAMMABLE THERMOSTAT WITH ON–AUTO–OFF SWITCH, LOCATED AS SHOWN ON PLAN, TO MAINTAIN ROOM TEMPERATURE SET–POINT OF 55°F (ADJUSTABLE).

6.) ELECTRIC FIN TUBE RADIATORS:

PROVIDE LOCATL DIGITAL THERMOSTAT AS SHOWN ON PLAN. SPACE TEMPERATURE SET–POINT SHALL BE SET TO 55°F (ADJUSTABLE). INTENT OF ELECTRIC FIN TUBE RADIATOR IS FOR FREEZE PROTECTION DURING WINTER MONTHS WHEN H&V UNITS ARE NOT OPERATIONAL.

7.) DUCTLESS SPLIT SYSTEM (ELEVATOR MACHINE ROOM):

SHALL BE STARTED AND STOPPED THROUGH A SPACE MOUNTED ELECTRONIC MICROCOMPUTER–BASED ROOM THERMOSTAT, BY THE EQUIPMENT MANUFACTURE. THE ROOM THERMOSTAT SHALL BE CAPABLE OF PROVIDING SET–POINT ADJUSTMENTS AND ALL PROGRAMMING CONTROL SEQUENCES. EACH EVAPORATOR SHALL HAVE A SEPARATE THERMOSTAT. EACH EVAPORATOR'S FAN AND COMPRESSORS SHALL CYCLE TO MAINTAIN ROOM TEMPERATURE SET POINT 75°(ADJUSTABLE) WHEN INDEXED TO THE AUTO MODE. ALL CONDENSER, AND COMPRESSOR OPERATIONS SHALL BE CONTROLLED BY THE AC UNIT'S BUILT IN UNITARY CONTROLLER. PROVIDE A SEPARATE ROOM TEMPERATURE SENSOR FOR EACH EVAPORATOR.

GREENWICH HS CARDINAL STADIUM PHASE 1A

GREENWICH PUBLIC SCHOOLS
10 HILLSIDE ROAD
GREENWICH CT 06830

KG+D listen imagine build
KG+D . ARCHITECTS PC
285 MAIN STREET MOUNT KISCO . NEW YORK . 10549
P:914.666.5900 KGDARCHITECTS.COM

OLA Consulting Engineers
50 Broadway,
Hawthorne, NY 10532
914.747.2800
8 West 38th Street,
Suite 501
New York, NY 10018
646.849.4110
olace.com

BUILDING PERMIT ISSUE

NOTE: ALL IDEAS, DESIGNS, ARRANGEMENTS AND PLANS INDICATED OR REPRESENTED BY THIS DRAWING ARE OWNED BY AND ARE THE PROPERTY OF KAEYER, GARMENT, & DAVIDSON ARCHITECTS, PC (KG&D), AND WERE CREATED FOR USE ON THIS PROJECT. NONE OF SUCH IDEAS, DESIGNS, ARRANGEMENTS OR PLANS SHALL BE USED BY OR DISCLOSED TO ANY PURPOSE WHATSOEVER WITHOUT THE WRITTEN PERMISSION OF (KG&D).

WRITTEN DIMENSIONS ON THIS DRAWING SHALL HAVE PRECEDENCE OVER SCALED DIMENSIONS. CONTRACTOR SHALL VERIFY ALL ACTUAL DIMENSIONS AND CONDITIONS ON THE JOB AND THE ARCHITECT MUST BE NOTIFIED OF ANY VARIATIONS FROM DIMENSIONS AND CONDITIONS SHOWN. SHOP DETAILS MUST BE SUBMITTED TO THIS OFFICE FOR APPROVAL BEFORE PROCEEDING WITH FABRICATION.

ALTERATIONS BY ANY PERSON, IN ANY WAY, OF ANY ITEM CONTAINED ON THIS DOCUMENT, UNLESS ACTING UNDER THE DIRECTION OF THE LICENCED ARCHITECT WHOSE PROFESSIONAL SEAL IS AFFIXED HERETO, IS A VIOLATION OF TITLE VII, SECT. 69.5 (b) OF NEW YORK STATE LAW.
COPYRIGHT KAEYER, GARMENT + DAVIDSON ARCHITECTS & ENGINEERS, PC
ALL RIGHTS RESERVED.

Professional Seal

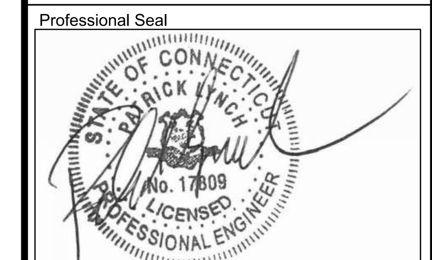

No.	Date	Issue
1	12/02/20	BUILDING PERMIT ISSUE

Sheet Title

MECHANICAL SYMBOLS, ABBREVIATIONS, AND NOTES

Job No. NKGD0185.02	Date 8/23/2019
Scale AS NOTED	Drawn / Checked TV RG

Sheet Number

M001

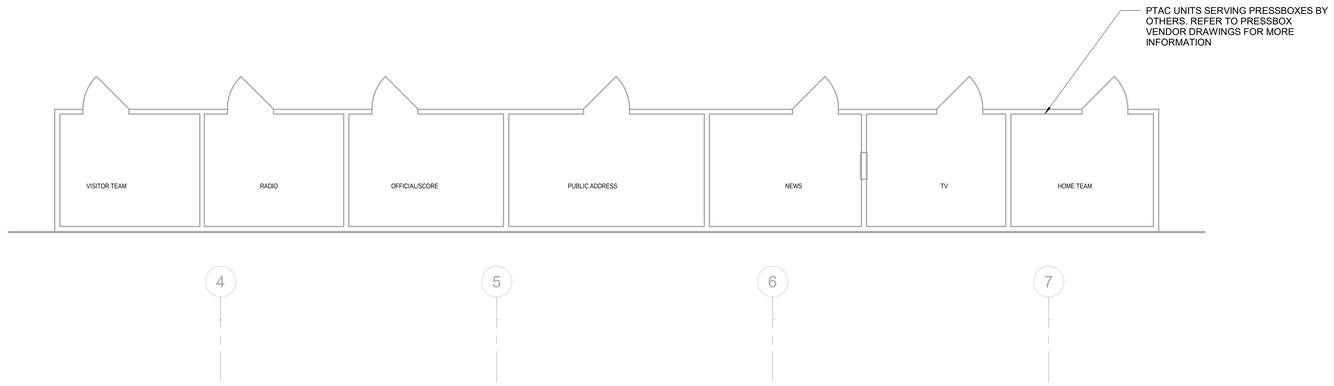

NORTH

2 MECHANICAL PRESSBOX PLAN

SCALE: 1/4" = 1'-0"

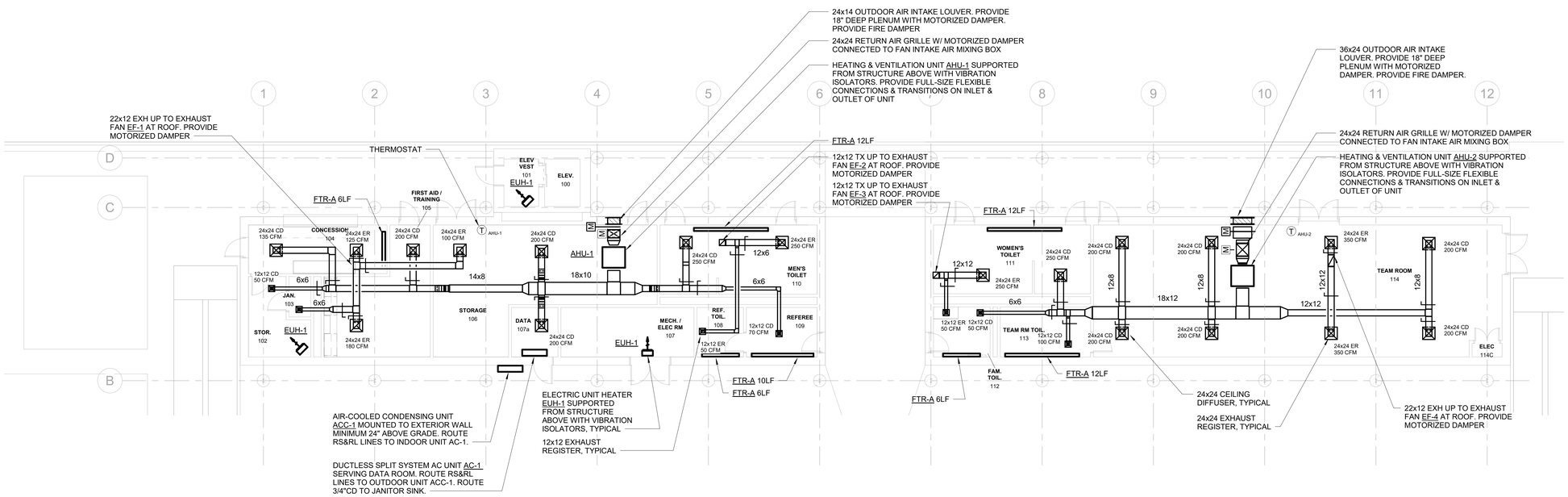

NORTH

1 MECHANICAL NEW WORK PLAN

SCALE: 1/8" = 1'-0"

NOTES:
1. REFER TO PRESSBOX VENDOR DRAWINGS FOR HVAC WORK RELATED TO THE PRESSBOXES.
2. ROOFTOP EXHAUST FANS SHALL BE MOUNTED ON 24"HIGH ROOF CURBS.
3. PROVIDE 1" ACOUSTICAL LINING ON DUCTWORK A MINIMUM OF 25' UPSTREAM & DOWNSTREAM OF FANS

GHS CARDINAL STADIUM PHASE 1 BLEACHERS

Greenwich Public Schools
10 Hillside Road
Greenwich, CT 06830

KG+D listen imagine build
KG+D . ARCHITECTS PC
285 MAIN STREET MOUNT KISCO . NEW YORK . 10549
P:914.666.5900 KGDARCHITECTS.COM

OLA Consulting Engineers
50 Broadway,
Hawthorne, NY 10532
914.747.2800
8 West 38th Street,
Suite 501
New York, NY 10018
646.849.4110
olace.com

BUILDING PERMIT ISSUE

NOTE: ALL IDEAS, DESIGNS, ARRANGEMENTS AND PLANS INDICATED OR REPRESENTED BY THIS DRAWING ARE OWNED BY AND ARE THE PROPERTY OF KAEYER, GARMENT, & DAVIDSON ARCHITECTS, PC (KG&D), AND WERE CREATED FOR USE ON THIS PROJECT. NONE OF SUCH IDEAS, DESIGNS, ARRANGEMENTS OR PLANS SHALL BE USED BY OR DISCLOSED TO ANY PURPOSE WHATSOEVER WITHOUT THE WRITTEN PERMISSION OF (KG&D).

WRITTEN DIMENSIONS ON THIS DRAWING SHALL HAVE PRECEDENCE OVER SCALED DIMENSIONS. CONTRACTOR SHALL VERIFY ALL ACTUAL DIMENSIONS AND CONDITIONS ON THE JOB AND THE ARCHITECT MUST BE NOTIFIED OF ANY VARIATIONS FROM DIMENSIONS AND CONDITIONS SHOWN. SHOP DETAILS MUST BE SUBMITTED TO THIS OFFICE FOR APPROVAL BEFORE PROCEEDING WITH FABRICATION.

ALTERATIONS BY ANY PERSON, IN ANY WAY, OF ANY ITEM CONTAINED ON THIS DOCUMENT, UNLESS ACTING UNDER THE DIRECTION OF THE LICENSED ARCHITECT WHOSE PROFESSIONAL SEAL IS AFFIXED HERETO, IS A VIOLATION OF TITLE VII, SECT. 7B-5 (b) OF NEW YORK STATE LAW.
COPYRIGHT KAEYER, GARMENT • DAVIDSON ARCHITECTS & ENGINEERS, PC
ALL RIGHTS RESERVED.

Professional Seal

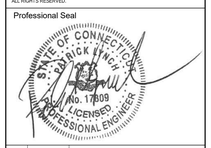

No.	Date	Issue
1	12/02/20	BUILDING PERMIT ISSUE

Sheet Title

MECHANICAL NEW WORK PLAN

Job No.	Date
NKGD0185.02	08/11/20
Scale	Drawn / Checked
AS NOTED	Author Checker

Sheet Number

M201

HEATING & VENTILATING UNIT SCHEDULE

DESIGNATION	AHU-1	AHU-2
LOCATION	STORAGE 106	TEAM ROOM 114
MANUFACTURER	ENVIRO-TEC	ENVIRO-TEC
MODEL	MODEL H 12	MODEL H 16
WEIGHT (LBS)	253	284
CONFIGURATION	BLOW-THRU	BLOW-THRU
DESIGN DATA:		
WINTER OA TEMP (°F)	0	0
WINTER RA TEMP (°F)	50	50
SUPPLY FAN:		
CFM	1200	1600
MIN OA CFM	555	1105
BHP/HP	0.68 /	0.7 /
RPM	1378	1203
ESP/TSP (IN H_2O)	0.5 / 1.5	0.5 / 1.5
STARTER LOCATION	MER	MER
ELECTRIC HEATING COIL:		
FACE AREA (SQ. FT.)	2.7	3.5
TOTAL FLA	44.5	44.5
MCA / MOCP	60.14 / 70	60.14 / 70
COIL CAPACITY (KW)	16	16
VOLTS/ø/Hz	208/3/60	208/3/60
FILTERS:		
QUANTITY/SIZE	2 / 16x20x2	1 / 16x25x2
TYPE	THROWAWAY	THROWAWAY

NOTES:
1. PROVIDE THE FOLLOWING MODULES FOR EACH UNIT (BACK TO FRONT):
•COMBINATION ANGLE FILTER & MIXING BOX MODULE, WITH MODULATING OAI & RA DAMPERS.
•COMBINATION SUPPLY FAN & ELECTRIC HEATING COIL MODULE.
2. PROVIDE THE FOLLOWING OPTIONAL EQUIPMENT FOR EACH UNIT:
•FURNISH A FREEZE STAT ARRANGED TO OVERRIDE THE HW CONTROL VALVE & SHUT DOWN UNIT, AS PER THE SEQUENCE OF OPERATIONS.
•FURNISH EXTRA DRIVE BELT AND EXTRA FILTER SET FOR EACH UNIT.
•COORDINATE LEFT/RIGHT COIL CONNECTION AND FAN DRIVE IN FIELD.
3. PROVIDE THE FOLLOWING MOTOR CONTROL OPTIONS FOR EACH UNIT:
•UNITARY CONTROLLER BY AUTOMATIC TEMPERATURE CONTROLS MANUFACTURER, COMPATIBLE WITH THE BUILDING AUTOMATION SYSTEM.
•COMBINATION MOTOR STARTER & DISCONNECT SWITCH FOR SUPPLY FAN MOTOR SHALL BE FURNISHED BY THE MECHANICAL CONTRACTOR & INSTALLED BY THE ELECTRICAL CONTRACTOR.
•ALL MOTORS SHALL BE PREMIUM EFFICIENCY.

DUCTLESS SPLIT-SYSTEM AC UNIT SCHEDULE

INDOOR/OUTDOOR UNIT DESIGNATION	AC-1/ACC-1
MANUFACTURER	DAIKIN
MODEL	FTXB12AXVJU
NOMINAL COOLING CAPACITY (TONS)	1
COOLING CAPACITY (BTU/HR)	11,000
HEATING CAPACITY (BTU/HR)	11,300
CFM (H/M/L)	360/282/232
SEER	17
RS PIPE SIZE (IN)	⅜
RL PIPE SIZE (IN)	¼
CONDENSATE DRAIN PIPE SIZE (IN)	¾
ELECTRICAL DATA:	
MCA / MOCP	7.95 / 15
COMPRESSOR RLA	7.75
VOLTS/ø/Hz	208/1/60
INDOOR EVAPORATOR UNIT DATA	
LOCATION	DATA 107A
MODEL	FTXB12AXVJU
HEIGHT x WIDTH x DEPTH (IN)	11.8x35x8.2
WEIGHT (LBS)	20
OUTDOOR CONDENSING UNIT DATA:	
LOCATION	OUTDOORS
MODEL	RXB12AXVJU
HEIGHT x WIDTH x DEPTH (IN)	21.6x25.9x10.8
WEIGHT (LBS)	57
REFRIGERANT TYPE	R-410A

NOTES:
1. PROVIDE THE FOLLOWING OPTIONS FOR EACH UNIT:
•0° LOW AMBIENT CONTROLS.
•7-DAY PROGRAMMABLE SYSTEM CONTROLLER.
2. FIELD SUPPLIED LOCAL DISCONNECT SWITCH AT EACH INDOOR UNIT SHALL BE FURNISHED BY THE MECHANICAL CONTRACTOR & INSTALLED BY THE ELECTRICAL CONTRACTOR.
3. FIELD SUPPLIED WEATHERPROOF LOCAL DISCONNECT SWITCH AT EACH OUTDOOR UNIT SHALL BE FURNISHED BY THE MECHANICAL CONTRACTOR & INSTALLED BY THE ELECTRICAL CONTRACTOR.
4. SINGLE POINT EXTERNAL POWER CONNECTION FOR EACH INDOOR/OUTDOOR SET OF UNITS SHALL BE AT THE OUTDOOR UNIT. THE ELECTRICAL CONTRACTOR SHALL PROVIDE POWER WIRING FROM THE OUTDOOR UNIT TO THE INDOOR UNIT.
5. THE AUTOMATIC TEMPERATURE CONTROLS CONTRACTOR SHALL PROVIDE CONTROL WIRING BETWEEN THE OUTDOOR UNIT AND INDOOR UNIT.

FAN SCHEDULE

DESIGNATION	EF-1	EF-2	EF-3	EF-4
LOCATION	ROOF	ROOF	ROOF	ROOF
AREA SERVED	SEE PLAN	SEE PLAN	SEE PLAN	SEE PLAN
MODEL	G-080 (VARIO-GREEN)	G-080 (VARIO-GREEN)	G-080 (VARIO-GREEN)	G-090 (VARIO-GREEN)
CFM	255	300	400	705
BHP	0.06	0.06	0.07	0.14
HP	¼	¼	¼	¼
FAN RPM	1550	1550	1725	1550
SP (IN H_2O)	0.375	0.375	0.375	0.375
VOLTS/ø/Hz	208/1/60	208/1/60	208/1/60	208/1/60
STARTER LOCATION	MER	MER	MER	MER
DISCONNECT SWITCH AT FAN	YES	YES	YES	YES
INTERLOCK	TIMECLOCK	TIMECLOCK	TIMECLOCK	TIMECLOCK

NOTES:
1. FANS BASED ON GREENHECK.
2. FURNISH MOTOR STARTERS AND DISCONNECT SWITCHES FOR EACH FAN.
3. FURNISH RUBBER IN SHEAR OR SPRING VIBRATION ISOLATORS. SEE PLAN FOR INLET AND DISCHARGE ORIENTATION.
4. FURNISH WALL MOUNTED SPEED CONTROLLER OR THERMOSTAT AS INDICATED ON PLAN.
5. FURNISH MOTOR AND BELT GUARDS FOR ALL EXTERNAL MOTOR DRIVES.
6. MOTOR STARTER & DISCONNECT SWITCH FOR EACH FAN SHALL BE FURNISHED BY THE MECHANICAL CONTRACTOR & INSTALLED BY THE ELECTRICAL CONTRACTOR. EACH ROOFTOP FAN SHALL BE FURNISHED WITH WEATHERPROOF UNIT-MOUNTED LOCAL DISCONNECT SWITCH.
7. FURNISH MOTORIZED BACK-DRAFT DAMPER IN ROOF CURB FOR ALL ROOFTOP FANS.
8. ALL MOTORS 1 HP OR GREATER SHALL BE PREMIUM EFFICIENCY. ALL MOTORS FURNISHED WITH VARIABLE FREQUENCY DRIVES SHALL BE INVERTER DUTY RATER & APPROVED FOR VARIABLE SPEED AND TORQUE APPLICATIONS.
9. STARTER TYPE FOR EACH FAN SHALL BE CONST. SPEED STARTER W/ H-O-A.

CEILING DIFFUSER SCHEDULE

DESIGNATION	CD		-		-	
MODEL	OMNI					
MAX CORE VEL (FT/MIN)	550					
MAX NC	25					
CONSTRUCTION	STEEL					
FRAME	LAY-IN					
DEFLECTION	4 WAY					
FACE SIZE	24x24					
	CFM RANGE	NECK SIZE ø	CFM RANGE	NECK SIZE ø	CFM RANGE	NECK SIZE ø
	0-100	6"				
	101-200	8"				
	201-350	10"				
	351-450	12"				
	451-600	14"				
	601-700	15"				

NOTES:
1. CEILING SUPPLY DIFFUSERS ARE BASED ON TITUS.
2. ALL DIFFUSERS SHALL BE EQUIPPED WITH AN OPPOSED BLADE VOLUME DAMPER.
3. COORDINATE COLOR SELECTION WITH ARCH PLANS.
4. SUPPLY DIFFUSERS SHALL HAVE FRAMES AND BORDERS SUITABLE FOR THE CONSTRUCTION IN WHICH THEY WILL BE INSTALLED, CONTRACTOR TO COORDINATE.
5. ALL LAY-IN DIFFUSERS SHALL HAVE A MODULE SIZE OF 24x24. FACE SIZES SHOWN IN SCHEDULE ARE FOR SURFACE MOUNT DIFFUSERS. NECK SIZES VARY ACCORDING TO THE SCHEDULE.
6. DIFFUSER BLOW PATTERN IS AS SHOWN ON DRAWINGS.

RETURN / EXHAUST REGISTER SCHEDULE

DESIGNATION	RR / ER		-	
MODEL	3 FL			
MAX NK VEL (FT/MIN)	500			
MAX NC	25			
CONSTRUCTION	ALUMINUM			
BORDER/FRAME	SURFACE MOUNTED			
DEFLECTION	45° FIXED			
SPACING	¾"			
	CFM RANGE	NOMINAL NECK SIZE	CFM RANGE	NOMINAL NECK SIZE
	0-150	8x8		
	151-250	10x10		
	251-350	12x12		
	351-725	18x18		
	726-950	22x22		
	951-1100	24x24		
	1101-1400	24x30		
	1401-1700	24x36		

NOTES:
1. RETURN REGISTERS ARE BASED ON TITUS.
2. THE ABOVE SCHEDULE INDICATES NOMINAL REGISTER NECK SIZES. THE CONTRACTOR SHALL COORDINATE THE REGISTER SIZE IN THE FIELD ACCORDING TO THE ACTUAL DUCT DIMENSIONS AND MAINTAIN AN EQUIVALENT CORE AREA.
3. ALL REGISTERS SHALL BE EQUIPPED WITH AN OPPOSED BLADE VOLUME DAMPER.
4. SUBMIT COLOR CHART FOR REVIEW AND APPROVAL BY ARCHITECT.
5. RETURN REGISTERS SHALL HAVE FRAMES AND BORDERS SUITABLE FOR THE CONSTRUCTION IN WHICH THEY WILL BE INSTALLED. CONTRACTOR TO COORDINATE.

EQUIPMENT NOTES

1.) PIPE INSULATION JACKETING: SHALL BE WHITE ZESTON 2000 PVC COVERS FOR PIPING AND FITTINGS. JACKET ALL PIPING AND FITTING THAT ARE EXPOSED IN ANY ROOM AND OUTDOORS.

2.) PIPE LABELS: SHALL BE SETON ULTRA-MARK WEATHER RESISTANT FOR OUTDOOR APPLICATION AND OPTI-CODE FOR INDOOR APPLICATION. LETTERS AND ARROWS SHALL BE 2 1/2" HIGH AND SHALL BE WHITE ON A GREEN BACKGROUND AND SHALL CONFORM TO ANSI AND OSHA STANDARDS. APPLY OVER INSULATION ONLY.

3.) ALL HVAC EQUIPMENT SHALL HAVE 3" HIGH BLACK LAMACOID NAME PLATES WITH WHITE ENGRAVED LETTERS PERMANENTLY FASTENED TO EQUIPMENT. TYPICAL FOR All FANS, UNIT HEATERS, AC UNITS AND CONDENSERS.

4.) REFRIGERANT PIPE INSULATION: SHALL BE AP ARMAFLEX PIPE INSULATION. 1" THICK UNSLIT, TO BE INSTALLED BEFORE FINAL CONNECTION. FIELD FABRICATE FITTING INSULATION WITH MITER-CUTS. ALL BUTT JOINTS AND SEAMS ARE TO BE SEALED WITH ARMSTRONG 520 ADHESIVE. ALL INSULATION INSTALLED OUTDOORS SHALL BE COATED WITH ARMSTRONG ARMAFLEX FINISH, AS PER THE MANUFACTURERS RECOMMENDATIONS.

5.) FIRE DAMPERS: SHALL BE RUSKIN MODEL DIBD-2, 1-1/2 HOUR UL555 RATED, SUITABLE FOR INSTALLATION IN WALL AND FLOOR PARTITIONS WITH FIRE RATINGS OF LESS THAN 3 HOURS. DAMPER SHALL BE A COMPLETE FACTORY PACKAGE INCLUDING U.L. APPROVED ANGLES, WALL SLEEVE, AND BREAKAWAY CONNECTIONS. DAMPER SHALL BE RATED FOR DYNAMIC AIRFLOW CONDITIONS OF 2,000 FPM AND 4.0" SP.

6.) MOTORIZED DAMPERS: SHALL BE RUSKIN MODEL CD40, 4" DEEP EXTRUDED ALUMINUM AIRFOIL DAMPER. DAMPER SHALL HAVE OPPOSED BLADES, MOTOR AND LINKAGE. DAMPERS SHALL BE 120V/1ϕ/60Hz, 3 AMPS MAX. FURNISH DISCONNECT SWITCH. DAMPER SHALL BE LOW-LEAKAGE RATED TYPE.
6.1 OUTSIDE AIR INTAKE & EXHAUST DAMPERS SHALL BE CLASS I MOTORIZED DAMPERS WITH MAXIMUM LEAKAGE RATE OF 4 CFM/FT² @ 1.0" W.G.; TESTED IN ACCORDANCE WITH AMCA 500D & IN COMPLIANCE WITH SECTION C403.2.4.3 OF THE 2015 IECC. DAMPERS SHALL BE CONFIGURED TO CLOSE AUTOMATICALLY WHEN THE SYSTEMS OF SPACE SERVED ARE NOT IN USE.

7.) BACK-DRAFT DAMPERS: SHALL BE RUSKIN MODEL BD6, HEAVY DUTY BACK-DRAFT DAMPER, EXTRUDED ALUMINUM FRAME & DAMPER. DAMPER SHALL HAVE PARALLEL BLADES. SIZE AS INDICATED ON PLAN. PROVIDE SPC STATIC PRESSURE CONTROL.

8.) VOLUME CONTROL DAMPERS: FOR ALL ROUND & RECTANGULAR VOLUME CONTROL DAMPERS THAT ARE LOCATED ABOVE INACCESSIBLE CEILINGS, PROVIDE CABLE OPERATED DAMPERS. ROUND DAMPERS SHALL BE YOUNG BOWDEN MODEL 5020-CC. RECTANGULAR DAMPERS SHALL BE MODEL 830-CC2. CABLE CONTROLS SHALL BE MODEL 270-275 FOR CONCEALED LOCATIONS & MODEL 270-896C FOR LOCATIONS WHERE CABLES TERMINATE IN FINISHED SPACES. COORDINATE LOCATIONS IN THE FIELD.

9.) ELECTRIC UNIT HEATER (EUH-1): SHALL BE INDEECO COMMERCIAL UNIT HEATER, RATED AT 300 CFM, 1.5 kW, 208V/1ϕ/60Hz, 7.6 AMPS. PROVIDE THE FOLLOWING OPTIONS: FAN GUARD, AIR DEFLECTION LOUVER, SUMMER FAN SWITCH, HEAT PURGE FAN DELAY SWITCH, DISCONNECT SWITCH, & WALL THERMOSTAT.

10.) ELECTRIC FIN-TUBE RADIATOR (FTR-A): SHALL BE VULCAN MODEL LBT-PD, 250 WATTS/LF, ELEMENT LENGTH AS SPECIFIED ON PLAN, 5" DEEP x 7" HIGH ENCLOSURE WITH ¼" PENCIL PROOF TOP DISCHARGE. PROVIDE ¾" EMT BUILT-IN RACEWAY WITH FACTORY WIRING, ¾" KNOCK-OUTS ON ENDS/BOTTOM OF ENCLOSURE, MOUNTING BRACKETS & HANGERS, BACK-PLATES, SLIP-JOINTS, END CAPS, WALL SLEEVE, CORNERS, ACCESS DOORS AS REQUIRED. CUSTOM ENCLOSURE SHALL BE STAINLESS STEEL AND PROVIDED BY OTHERS; REFER TO ARCHITECTURAL PLANS. COORDINATE DIMENSIONS & ENCLOSURE WITH HEATING ELEMENT. PROVIDE WALL MOUNTED THERMOSTAT.

11.) THERMOSTAT GUARDS: SHALL BE SHAW-PERKINS PROTECTION SERIES 16 STEEL THERMOSTAT GUARD. CONSTRUCTED OF HEAVY GAUGE DIE-FORMED 16 GAUGE PERFORATED STEEL, ⅛" PERFORATIONS ON 3⁄16" CENTERS. SIDE AND MOUNTING FRAME CONSTRUCTED OF 14-GAUGE SOLID STEEL. COORDINATE FINAL COLOR AND FINISH WITH OWNER.

GREENWICH HS
CARDINAL
STADIUM
PHASE 1A

GREENWICH PUBLIC SCHOOLS
10 HILLSIDE ROAD
GREENWICH CT 06830

KG+D listen imagine build
KG+D . ARCHITECTS PC
285 MAIN STREET MOUNT KISCO . NEW YORK . 10549
P:914.666.5900 KGDARCHITECTS.COM

OLA Consulting Engineers
50 Broadway,
Hawthorne, NY 10532
914.747.2800
8 West 38th Street,
Suite 501
New York, NY 10018
646.849.4110
olace.com

BUILDING PERMIT ISSUE

NOTE: ALL IDEAS, DESIGNS, ARRANGEMENTS AND PLANS INDICATED OR REPRESENTED BY THIS DRAWING ARE OWNED BY AND ARE THE PROPERTY OF KAEYER, GARMENT, & DAVIDSON ARCHITECTS, PC (KG&D), AND WERE CREATED FOR USE ON THIS PROJECT. NONE OF SUCH IDEAS, DESIGNS, ARRANGEMENTS OR PLANS SHALL BE USED BY OR DISCLOSED TO ANY PURPOSE WHATSOEVER WITHOUT THE WRITTEN PERMISSION OF (KG&D).

WRITTEN DIMENSIONS ON THIS DRAWING SHALL HAVE PRECEDENCE OVER SCALED DIMENSIONS. CONTRACTOR SHALL VERIFY ALL ACTUAL DIMENSIONS AND CONDITIONS ON THE JOB AND THE ARCHITECT MUST BE NOTIFIED OF ANY VARIATIONS FROM DIMENSIONS AND CONDITIONS SHOWN. SHOP DETAILS MUST BE SUBMITTED TO THIS OFFICE FOR APPROVAL BEFORE PROCEEDING WITH FABRICATION.

ALTERATIONS BY ANY PERSON, IN ANY WAY, OF ANY ITEM CONTAINED ON THIS DOCUMENT, UNLESS ACTING UNDER THE DIRECTION OF THE LICENCED ARCHITECT WHOSE PROFESSIONAL SEAL IS AFFIXED HERETO, IS A VIOLATION OF TITLE VI, SECT. 65.5 (b) OF NEW YORK STATE LAW.
COPYRIGHT KAEYER, GARMENT • DAVIDSON ARCHITECTS & ENGINEERS, PC
ALL RIGHTS RESERVED.

Professional Seal

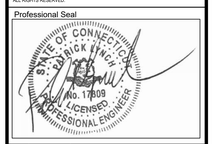

No.	Date	Issue
1	12/02/20	BUILDING PERMIT ISSUE

Sheet Title

MECHANICAL EQUIPMENT NOTES & SCHEDULES

Job No.	Date
NKGD0185.02	8/23/2019
Scale	Drawn / Checked
AS NOTED	TV RG

Sheet Number

M601

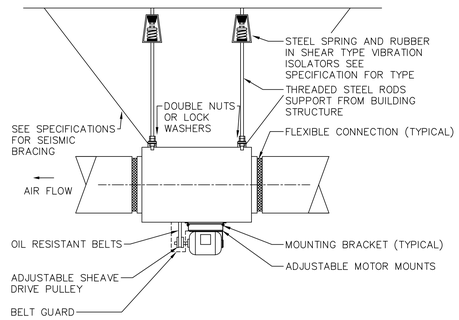

6 IN–LINE FAN DETAIL
SCALE: NONE

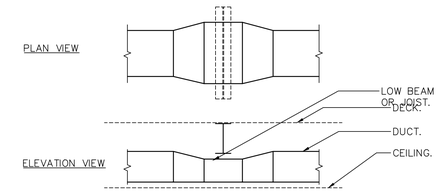

NOTES:
1.) WHERE INDICATED ON THE PLANS, OR REQUIRED DUE TO FIELD CONDITIONS, THE CONTRACTOR SHALL ROUTE DUCTWORK UNDER LOW BEAMS OR JOISTS IN THE MANNER INDICATED ABOVE.
2.) REDUCE DUCT HEIGHT AT THE CROSSING IN ORDER TO FIT UNDER THE BEAM OR JOIST.
3.) INCREASE DUCT WIDTH AT THE CROSSING IN ORDER TO MAINTAIN THE SAME CROSS SECTIONAL AREA.
4.) USE SMACNA APPROVED TRANSITIONS.

3 DUCT UNDER LOW BEAM DETAIL
SCALE: NONE

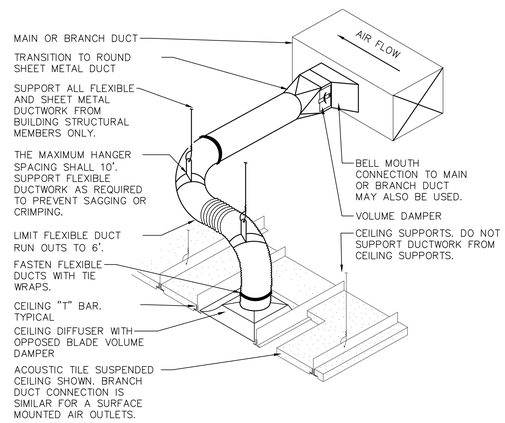

NOTES:
1.) THIS BRANCH DUCT ARRANGEMENT IS SIMILAR FOR PLENUM SLOT DIFFUSERS.

8 FLEXIBLE DUCT CONNECTION DETAIL
SCALE: NONE

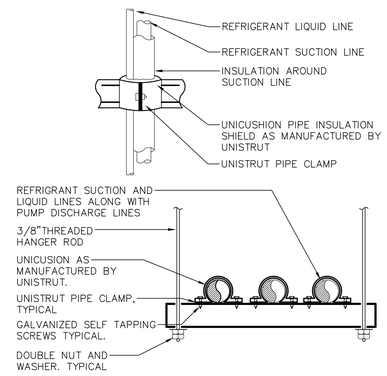

NOTES:
1.) LIQUID AND SUCTION LINES MAY BE ROUTED TOGETHER FOR CONVENIENCE, BUT MUST BE COMPLETELY INSULATED FROM EACH OTHER. DO NOT SOLDER LIQUID AND SUCTION LINES TOGETHER. DO NOT ALLOW METAL TO METAL CONTACT.
2.) LINES SHOULD BE INSTALLED WITH AS FEW BENDS AS POSSIBLE, ALLOWING SERVICE ACCESS TO THE INDOOR COIL.
3.) USE LONG RADIUS ELBOWS WHEREVER POSSIBLE, EXCEPT IN OIL RETURN TRAPS, WHERE SHORT RADIUS ELBOWS SHOULD BE USED.
4.) SLOPE HORIZONTAL SUCTION LINES 1 INCH EVERY 20 FEET TOWARD THE OUTDOOR UNIT.

5 REFRIGERANT PIPE SUPPORT DETAIL
SCALE: NONE

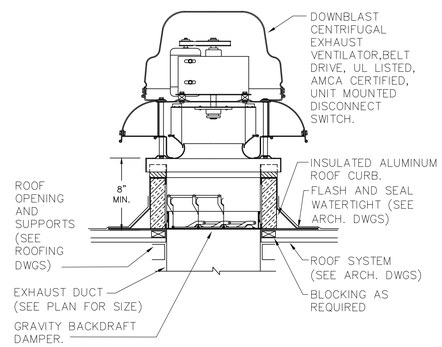

2 TYPICAL EXHAUST FAN DETAIL
SCALE: NONE

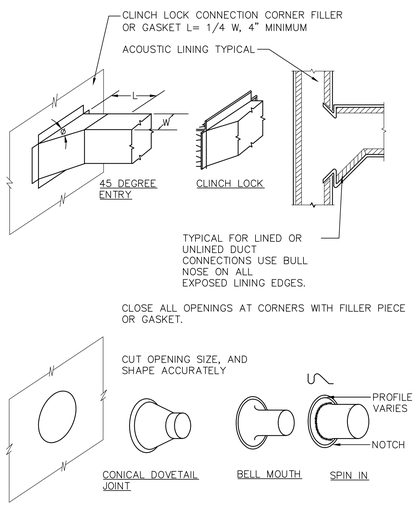

7 DUCT BRANCH CONNECTION DETAIL
SCALE: NONE

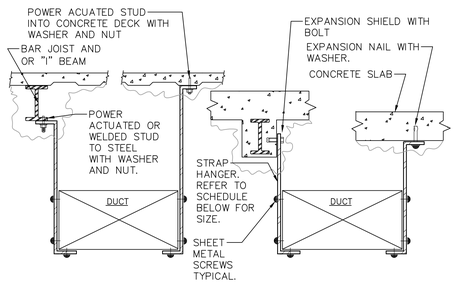

NOTES:
1.) FOR DUCTS OVER 49" WIDE, THE STRAP HANGER SHALL BE TURNED UNDER THE BOTTOM OF THE DUCT.
2.) WHERE EXISTING BUILDING STRUCTURAL COMPONENTS HAVE FIREPROOF MATERIAL, ANY AREA THAT IS DISTURBED OR DAMAGED AS A RESULT OF HANGER INSTALLATION SHALL BE PATCHED WITH UL AND FM APPROVED FIREPROOFING TO MATCH EXISTING.

HANGER STRAP SCHEDULE

DUCT SIZE	HANGER SIZE	MAXIMUM SPACING
UP TO 2 SQ.FT.	1" X 1/16"	8'–0"
2 SQ.FT. TO 4 SQ.FT.	1" X 1/8"	8'–0"
4 SQ.FT. TO 10 SQ.FT.	1" X 1/8"	6'–0"
OVER 10 SQ.FT.	1" X 1/8"	4'–0"

4 DUCT HANGER DETAIL
SCALE: NONE

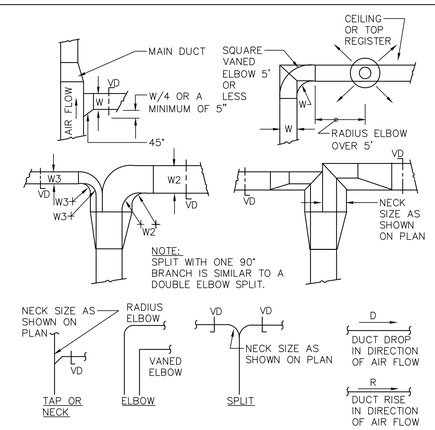

NOTES:
1.) SINGLE LINE REPRESENTATIONS REFER TO DOUBLE LINE DETAILS.
2.) USE RADIUS OR SQUARE VANED BENDS FOR BOTH ELBOWS AND SPLITS AS DETERMINED BY SPACE LIMITATIONS, AND THE DISTANCE FROM AIR OUTLETS.
3.) ALL SQUARE ELBOWS SHALL HAVE FACTORY TURNING VANES, AND MAINTAIN A CONSTANT WIDTH.
4.) WHERE DUCTS SPLIT, THE SOLID LINE REPRESENTATION IS PREFERRED, UNLESS PRECLUDED BY SPACE, OR OTHERWISE INDICATED.
5.) USE ELBOW SPLIT FOR BRANCH CONNECTIONS ONLY WHERE NECK SIZE IS GIVEN.

1 DUCT BRANCH TAKE–OFF DETAIL
SCALE: NONE

GREENWICH HS CARDINAL STADIUM PHASE 1A

GREENWICH PUBLIC SCHOOLS
10 HILLSIDE ROAD
GREENWICH CT 06830

KG+D listen imagine build
KG+D . ARCHITECTS PC
285 MAIN STREET MOUNT KISCO . NEW YORK . 10549
P:914.666.5900 KGDARCHITECTS.COM

OLA Consulting Engineers
50 Broadway,
Hawthorne, NY 10532
914.747.2800
8 West 38th Street,
Suite 501
New York, NY 10018
646.849.4110
olace.com

BUILDING PERMIT ISSUE

NOTE: ALL IDEAS, DESIGNS, ARRANGEMENTS AND PLANS INDICATED OR REPRESENTED BY THIS DRAWING ARE OWNED BY AND ARE THE PROPERTY OF KAETHER, GARMENT, & DIVISION ARCHITECTS, PC (KG&D), AND WERE CREATED FOR USE ON THIS PROJECT. NONE OF SUCH IDEAS, DESIGNS, ARRANGEMENTS OR PLANS SHALL BE USED BY OR DISCLOSED TO ANY PURPOSE WHATSOEVER WITHOUT THE WRITTEN PERMISSION OF (KG&D).

WRITTEN DIMENSIONS ON THIS DRAWING SHALL HAVE PRECEDENCE OVER SCALED DIMENSIONS. CONTRACTOR SHALL VERIFY ALL ACTUAL DIMENSIONS AND CONDITIONS ON THE JOB AND THE ARCHITECT MUST BE NOTIFIED OF ANY VARIATIONS FROM DIMENSIONS AND CONDITIONS SHOWN. SHOP DETAILS MUST BE SUBMITTED TO THIS OFFICE FOR APPROVAL BEFORE PROCEEDING WITH FABRICATION.

ALTERATIONS BY ANY PERSON, IN ANY WAY, OF ANY ITEM CONTAINED ON THIS DOCUMENT, UNLESS ACTING UNDER THE DIRECTION OF THE LICENSED ARCHITECT WHOSE PROFESSIONAL SEAL IS AFFIXED HERETO, IS A VIOLATION OF TITLE VII, SECT. 7B 5 (b) OF NEW YORK STATE LAW.
COPYRIGHT KAETHER, GARMENT + DIVISION ARCHITECTS & ENGINEERS, PC
ALL RIGHTS RESERVED.

Professional Seal

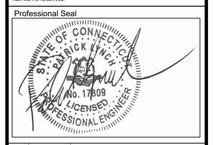

No.	Date	Issue
1	12/02/20	BUILDING PERMIT ISSUE

Sheet Title
MECHANICAL DETAILS

Job No. NKGD0185.02	Date 8/23/2019
Scale AS NOTED	Drawn / Checked TV RG

Sheet Number
M701

SYMBOLS AND ABBREVIATIONS

SYMBOL	ABBREVIATION	DESCRIPTION
	–	CONDUIT AND WIRING
	–	CONDUIT & WIRING TO BE REMOVED UON
—UG—	–	BURIED CONDUIT
—OH—	–	OVERHEAD CONDUCTORS
	–	HOMERUN TO PANEL, ARROWS INDICATE # 1P
	–	MULTI-POLE HOMERUN
	–	ELECTRICAL EQUIPMENT AS INDICATED
	–	ELECTRICAL EQUIPMENT TO BE REMOVED UON
M	–	ELECTRIC METER
J	–	JUNCTION BOX
	–	FUSED DISCONNECT SWITCH
	–	UNFUSED DISCONNECT SWITCH
	–	COMBINATION MOTOR STARTER/FUSED DISC.
	–	MOTOR STARTER
	–	MOTOR
	–	BATTERY PACK EMERGENCY LIGHT FIXTURE
	–	EXIT LIGHT, FACES-SHADED, CHEVRON-ARROW
S_x	–	SINGLE POLE SWITCH (x – INDICATES FIXTURE BEING CONTROLLED)
S^3_x	–	THREE WAY SWITCH (x – INDICATES FIXTURE BEING CONTROLLED)
S_M	–	MOTOR RATED TOGGLE SWITCH
S_K	–	KEY OPERATED SINGLE POLE SWITCH
	–	WALL MOUNTED OCCUPANCY SENSOR
OC	–	CEILING MOUNTED OCCUPANCY SENSOR
	–	DUPLEX RECEPTACLE('CT' INDICATES ABOVE COUNTERTOP)
	–	DOUBLE DUPLEX RECEPTACLE
	–	SPECIAL RECEPTACLE
	–	TELEPHONE OUTLET
x	–	DATA OUTLET (x – INDICATES # OF JACKS, 1 JACK UON)
	–	COMBINATION TELEPHONE/DATA OUTLET
F	–	FIRE ALARM MANUAL PULL STATION
F V	–	FIRE ALARM COMBINATION AUDIO/VISUAL DEVICE (15/75 CD – STROBE) ('V' DENOTES VOICE COMMUNICATION DEVICE)
F V 110	–	FIRE ALARM COMBINATION AUDIO/VISUAL DEVICE (110 CD – STROBE) ('V' DENOTES VOICE COMMUNICATION DEVICE)
F	–	FIRE ALARM STROBE 15/75 CD
S	–	SMOKE DETECTOR
S	–	DUCT MOUNTED SMOKE DETECTOR
H	–	HEAT DETECTOR
ANN	–	FIRE ALARM ANNUNCIATOR PANEL
CM	CM	FIRE ALARM CONTROL MODULE
MM	MM	FIRE ALARM MONITORING MODULE
FACP	FACP	FIRE ALARM CONTROL PANEL
BPS	BPS	BOOSTER POWER SUPPLY
R	–	FIRE ALARM RELAY
	EOL	END OF LINE RESISTOR
	–	WALL MOUNTED PUBLIC ADDRESS SPEAKER
	–	PUBLIC ADDRESS TELEPHONE
C	–	CLOCK
TC	–	TIME CLOCK
CR	–	CARD READER
PTZ	–	SECURITY CAMERA PTZ – PAN, TILT, ZOOM
CFA	–	CALL FOR AID PULL STATION
CFA	–	CALL FOR AID A/V DEVICE
HD	–	ELECTRIC HAND DRYER
RASP	RASP	RESCUE ASSIST. SYSTEM MASTER STATION
RA	–	REMOTE RESCUE STATION
	CB	CIRCUIT BREAKER
	–	ENCLOSED CIRCUIT BREAKER
200AS 150AF	–	FUSED SWITCH
G	GEN	GENERATOR
OR	GND	GROUND AS PER LOCAL CODE
	–	GROUND BAR
OR	–	GROUND ROD
	–	TRANSFER SWITCH
	CT	CURRENT TRANSFORMER
	–	UTILITY POLE
WM	WM	WATER MAIN
M	MD	MOTORIZED DAMPER
UH	UH	UNIT HEATER
	A	AMPERE(S)
	AC	AIR CONDITIONER
	ACC	AIR CONDITIONER CONDENSER

SYMBOL	ABBREVIATION	DESCRIPTION
	AF	AMPERAGE OF FUSE
	AGL	ABOVE GRADE LEVEL
	AHU	AIR HANDLING UNIT
	ARC	ARC FAULT INTERRUPTER
	AS	AMPERAGE OF SWITCH
	ATS	AUTOMATIC TRANSFER SWITCH
	AWG	AMERICAN WIRE GAUGE
	BCW	BARE COPPER WIRE
	C	CONDUIT
	CD	CANDELA
	CKT	CIRCUIT
	CLG	CEILING
	COL	COLUMN
	CU	COPPER
	CUH	CABINET UNIT HEATER
	DEM.	DEMOLISH AND REMOVE
	DISC	DISCONNECT
	DIM	DIMMER
	DWG	DRAWING
	ELEV	ELEVATOR
	EMT	ELECTRICAL METALLIC TUBING
	EM	EMERGENCY
	EX.	EXISTING TO REMAIN
	F	FLOOR
	FBO	FURNISHED BY OTHERS
	FC	FAN COIL UNIT
	GEN	GENERATOR
	GFI	GROUND FAULT INTERRUPTER
	HP	HORSEPOWER
	HVAC	HEATING VENTILATION AIR CONDITIONING
	IG	ISOLATED GROUND
	KVA	KILO-VOLT-AMPERE
	KW	KILO-WATT
	MAX	MAXIMUM
	MCB	MAIN CIRCUIT BREAKER
	MCC	MOTOR CONTROL CENTER
	MIN	MINIMUM
	MLO	MAIN LUG ONLY
	MTS	MANUAL TRANSFER SWITCH
	NIC	NOT IN CONTRACT
	NL	NIGHT LIGHT
	NTS	NOT TO SCALE
	OH	OVERHEAD
	P	POLE
	PBO	PROVIDED BY OTHERS
	PNL	PANEL
	PT	PRESSURE TREATED
	PVC	POLY VINYL CHLORIDE
	REL.	REMOVE AND RELOCATE
	RGS	RIGID GALVANIZED STEEL
	RTU	ROOF TOP UNIT
	SCH	SCHEDULE
	SPD	SURGE PROTECTION DEVICE
	SW	SWITCH(ES)
	TELCO	TELEPHONE COMPANY
	TYP	TYPICAL
	UG	UNDERGROUND
	UON	UNLESS OTHERWISE NOTED
	UV	UNIT VENTILATOR
	VIF	VERIFY IN FIELD
	V	VOLT(S)
	WH	WATER HEATER
	WP	WEATHERPROOF

NOTES:
1.) ALL SYMBOLS AND ABBREVIATIONS MAY NOT BE APPLICABLE FOR THIS PROJECT.
2.) SEE LIGHTING FIXTURE SCHEDULE FOR LIGHT FIXTURE SYMBOLS.

TRENCHING NOTES

1. CONTRACTOR SHALL LOCATE ALL EXISTING UNDERGROUND UTILITIES THAT ARE NOT PART OF N.Y. STATE "CODE 753" PRIOR TO DIGGING.
2. ALL EXCAVATING IN THE AREA OF THE EXISTING UNDERGROUND EQUIPMENT, PIPES AND CONDUITS SHALL BE PERFORMED BY HAND.
3. ANY AREA/PLANTS OR LANDSCAPING OR PAVEMENTS DISTURBED DURING THE EXCAVATION SHALL BE RESTORED OR REPLACED TO MATCH EXISTING CONDITIONS BY THE CONTRACTOR AT NO COST TO THE OWNER.
4. ANY EXISTING BURIED CONDUITS, DRAINAGE, SPRINKLER PIPING, ETC. THAT IS DISTURBED AND/OR DAMAGED DURING CONSTRUCTION SHALL BE REPAIRED BY THE CONTRACTOR AT NO COST TO THE OWNER.
5. THE PLANS SHOW SOME KNOWN SUBSURFACE STRUCTURES, ABOVE GROUND STRUCTURES AND/OR UTILITIES BELIEVED TO EXIST IN THE WORKING AREA. EXACT LOCATION OF WHICH MAY VARY FROM THE LOCATIONS INDICATED. IN PARTICULAR, THE CONTRACTOR IS WARNED THAT THE EXACT OR EVEN APPROXIMATE LOCATION OF SUCH PIPELINES, SUBSURFACE STRUCTURES AND/OR UTILITIES IN THE AREA MAY OR MAY NOT BE SHOWN; AND IT SHALL BE HIS RESPONSIBILITY TO PROCEED WITH GREAT CARE IN EXECUTING ANY WORK. 48 HOURS BEFORE YOU DIG, DRILL OR BLAST, CALL 1-800-922-4455 (CONNECTICUT).

DEMOLITION NOTES

1. ALL EQUIPMENT SHALL BE DISCONNECTED AND REMOVED BACK TO POWER SOURCE ORIGINATION UNLESS OTHERWISE NOTED (UON) EXISTING TO REMAIN (EX.).
2. CONTRACTOR SHALL VERIFY EXTENT OF DEMOLITION WORK IN THE FIELD PRIOR TO BID AND SHALL INCLUDE ALL LABOR AND MATERIALS IN BASE BID INCLUDING ALL TEMPORARY CONNECTIONS, CONDUIT AND WIRE IN ORDER TO ACCOMMODATE CONSTRUCTION AND PROVIDE CONTINUOUS SERVICE TO DEVICES AND SYSTEMS TO REMAIN, TEMPORARY AND PERMANENTLY. WORK REQUIRING THE SHUT-DOWN OF THE BUILDING POWER SHALL BE PERFORMED DURING OVERTIME AND SHALL BE INCLUDED IN BASE BID.
3. CIRCUIT BREAKER, CONDUIT AND CONDUCTOR SIZES INDICATED SHALL BE FIELD VERIFIED PRIOR TO BID.
4. ALL EXISTING ELECTRICAL EQUIPMENT NO LONGER IN USE, SUCH AS DISCONNECT SWITCHES, MOTOR CONTROLLERS, MOTOR STARTER PANELS, ETC. SHALL BE REMOVED UON.
5. ALL DISCONNECTED & REMOVED EXISTING ELECTRICAL ITEMS THAT ARE NOT BEING REUSED SHALL BE RETURNED TO THE OWNER OR DISPOSED OF AS DIRECTED.
6. THE CONTRACTOR SHALL INCLUDE IN THE BASE BID FOR ALL MATERIAL & LABOR REQUIRED FOR THE EXTENSIONS, REROUTING & RELOCATION OF EXISTING SYSTEM COMPONENTS, EQUIPMENT, WIRING, CONDUITS & CABLING SO AS TO MAINTAIN OPERATION OF ALL SYSTEMS THROUGHOUT THE BUILDING DURING DEMOLITION & CONSTRUCTION PHASES.

ADDITIONAL CONDUITS

1.) ELECTRICAL CONTRACTOR SHALL PROVIDE THE FOLLOWING CONDUIT RUNS FROM DATA RM. 107A TO THE PRESSBOX FOR THE FOLLOWING SYSTEMS:
WIRELESS ACCESS POINTS – (8) 2" CONDUITS 150' EACH WITH DRAGLINES.
COORDINATE EXACT LOCATIONS WITH SCHOOL DISTRICT'S VENDOR. CONTRACTOR SHALL PROVIDE BACK-BOXES AT EACH LOCATION. WIRING BY OTHERS.

2.) ELECTRICAL CONTRACTOR SHALL PROVIDE THE FOLLOWING CONDUIT RUNS FROM DATA RM 107A TO THE HOME BLEACHER FOR THE FOLLOWING SYSTEMS:
WIRELESS ACCESS POINTS – (10) 2" CONDUITS 200' EACH WITH DRAGLINES.
COORDINATE EXACT LOCATIONS WITH SCHOOL DISTRICT'S VENDOR. CONTRACTOR SHALL PROVIDE BACK-BOXES AT EACH LOCATION. WIRING BY OTHERS.

3.) ELECTRICAL CONTRACTOR SHALL PROVIDE THE FOLLOWING CONDUIT RUNS FROM DATA RM 107A TO THE BUILDING UNDER THE HOME BLEACHER FOR THE FOLLOWING SYSTEMS:
WIRELESS ACCESS POINTS – (5) 1" CONDUITS 100' EACH WITH DRAGLINES.
COORDINATE EXACT LOCATIONS WITH SCHOOL DISTRICT'S VENDOR. CONTRACTOR SHALL PROVIDE BACK-BOXES AT EACH LOCATION. WIRING BY OTHERS.

4.) ELECTRICAL CONTRACTOR SHALL PROVIDE THE FOLLOWING SPARE CONDUIT RUNS FROM MECH/ELEC RM. 107 TO THE PRESSBOX:
(4) 2" CONDUITS 150' EACH WITH DRAGLINES.

5.) ELECTRICAL CONTRACTOR SHALL PROVIDE THE FOLLOWING SPARE CONDUIT RUNS FROM MECH/ELEC RM. 107 TO THE ROOF OF THE PRESSBOX:
(2) 2" CONDUITS 150' EACH WITH DRAGLINES.

ALLOWANCE FOR EVERSOURCE FEES

1.) ELECTRICAL CONTRACTOR SHALL CARRY AN ALLOWANCE OF $14,000 FOR EVERSOURCE FEES.

TYPICAL BRANCH CIRCUIT WIRING LEGEND

2–#12 & 1–#12 GND (1–1P–20A OR 1–1P–15A CB)
3–#12 & 1–#12 GND (3P–20A OR 3P–15A CB)
2–#12 & 1–#12 GND (2P–20A OR 2P–15A CB)

13 — CIRCUIT # / RECEPTACLE
15 — LIGHT FIXTURE TYPE / SWITCH CONTROL / LIGHT FIXTURE / CIRCUIT #

NOTES:
1.) EACH 120V AND 277V CIRCUIT SHALL HAVE A DEDICATED NEUTRAL CONDUCTOR. SHARED NEUTRAL HOMERUNS ARE NOT PERMITTED.
2.) CONDUCTORS SHALL BE INCREASED FOR VOLTAGE DROP AND DERATING AS PER APPLICABLE ELECTRICAL CODE. FOR CIRCUITS THAT ARE BETWEEN 100' AND 150' IN LENGTH, PHASE AND NEUTRAL CONDUCTORS SHALL BE #10 AWG. FOR CIRCUITS THAT ARE BETWEEN 150' AND 225' IN LENGTH, PHASE AND NEUTRAL CONDUCTORS SHALL BE #8 AWG. FOR LENGTHS GREATER THAN 225' IN LENGTH, VERIFY CONDUCTOR SIZES WITH ENGINEER.

GENERAL NOTES

1.) ALL WORK SHOWN IS NEW UNLESS OTHERWISE NOTED (UON) EXISTING TO REMAIN (EX.).

2.) THE DRAWINGS ARE TO BE CONSIDERED SCHEMATIC ONLY AND DO NOT NECESSARILY SHOW THE EXACT LOCATIONS AND DETAILS OF THE WORK TO BE INSTALLED.

3.) THE ELECTRICAL CONTRACTOR SHALL BE RESPONSIBLE FOR OBTAINING ALL NECESSARY PERMITS AND PAYING ALL FEES ASSOCIATED WITH THIS WORK INCLUDING FILING WITH THE UTILITY COMPANY (AS REQUIRED), AND WITH LOCAL AUTHORITY HAVING JURISDICTION.

4.) ALL WORK INVOLVING THE ELECTRIC SERVICE SHALL BE COORDINATED AND APPROVED BY THE UTILITY COMPANY.

5.) ALL CONDUCTORS SHALL BE COPPER UON "ON DRAWINGS".

6.) ELECTRONIC FILES OF THE MECHANICAL, ELECTRICAL, PLUMBING AND FIRE PROTECTION DRAWINGS ARE AVAILABLE TO THE CONTRACTOR. THE ENGINEER MAY GRANT THE CONTRACTOR A LIMITED LICENSE TO MAKE A DERIVATIVE WORK OF THE DATABASE FOR THE PURPOSE OF SHOP DRAWINGS, SUBMITTALS AND AS-BUILT DRAWINGS. UPON REQUEST, THE ENGINEER SHALL PROVIDE A RELEASE FORM THAT MUST BE SIGNED AND RETURNED BY THE CONTRACTOR PRIOR TO RELEASE OF THE ELECTRONIC FILES.

7.) CIRCUIT NUMBERS ARE FOR INFORMATION PURPOSES ONLY. ACTUAL CIRCUIT NUMBERS SHALL BE DETERMINED IN THE FIELD.

8.) CORE DRILLING OR TRENCHING THROUGH AN EXISTING FLOOR SLAB, WHEN REQUIRED, SHALL BE COORDINATED WITH THE OWNER. FLOOR SLABS SHALL BE RADAR SCANNED PRIOR TO CORE DRILLING OR TRENCHING. ALL WORK, INCLUDING CORE DRILLING, RADAR SCAN, INSTALLATION OF FIRE STOPPING, & CONDUIT/CABLE INSTALLATION SHALL BE PERFORMED DURING NON-BUSINESS HOURS AND INCLUDED IN BASE BID. USE EXTREME CAUTION DURING ANY CUTTING OPERATION TO AVOID DAMAGE TO EXISTING EQUIPMENT/SYSTEMS. ANY ITEMS DAMAGED AS A RESULT OF CORE DRILLING SHALL BE REPAIRED AT NO COST TO THE CLIENT. ALL CORES SHALL BE FIRE SEALED.

9.) FOR EACH WALL MOUNTED COMMUNICATIONS OUTLET, PROVIDE A 1900 JUNCTION BOX WITH AN EXTENDER COLLAR AND 1 INCH CONDUIT WITH DRAGLINE 6 INCHES ABOVE ACCESSIBLE CEILING FOR INSTALLATION OF CABLE BY OTHERS.

10.) COMMUNICATION WIRING BY ELECTRICAL CONTRACTOR. COORDINATE COMMUNICATION OUTLET DEVICES WITH CLIENT'S VENDOR.

11.) WHERE GFI RECEPTACLES ARE CIRCUITED WITH GENERAL CONVENIENCE RECEPTACLES, THE GFI RECEPTACLE SHALL BE THE LAST DEVICE ON THE CIRCUIT.

12.) INSTALL CONDUIT EXPANSION FITTINGS AT ALL LOCATIONS WHERE CONDUITS CROSS BUILDING OR STRUCTURE EXPANSION JOINTS.

13.) CEILING MOUNTED RECEPTACLES SHALL BE MOUNTED FLUSH TO CEILING.

14.) UNLESS OTHERWISE NOTED, DISCONNECT SWITCHES, STARTERS, HOAS AND MOTOR RATED TOGGLE SWITCHES FOR MECHANICAL PUMPS, CABINET AND UNIT HEATERS, RETURN FANS, ROOF FANS, VAV BOXES, COMPRESSORS, FAN COIL UNITS, AIR HANDLERS AND CONDENSERS SHALL BE FURNISHED BY THE MECHANICAL CONTRACTOR AND INSTALLED BY THE ELECTRICAL CONTRACTOR. COORDINATE ALL WORK WITH THE MECHANICAL CONTRACTOR.

15.) DISCONNECT SWITCHES FOR MOTORIZED DAMPERS, CFSD/SD AND VAV BOXES SUPPLIED BY MECHANICAL CONTRACTOR AND INSTALLED AND WIRED BY ELECTRICAL CONTRACTOR. SWITCHES NOT SHOWN ON PLANS.

16.) THE ELECTRICAL CONTRACTOR SHALL PROVIDE ALL CUTTING, PATCHING, PAINTING, AND FINAL RESTORATION REQUIRED TO FACILITATE THE DEMOLITION AND INSTALLATION OF ALL ELECTRICAL EQUIPMENT, INCLUDING BUT NOT LIMITED TO PANELBOARDS, CONDUITS, WIRING, DEVICES, FIXTURES, ETC. INCLUDING ABOVE CEILINGS. CONTRACTOR TO REMOVE AND REPLACE CEILINGS, AND OPEN AND PATCH WALLS, AS REQUIRED TO EXECUTE THE ELECTRICAL WORK.

DEFINITION OF TERMS

1.) WHEREVER IN THE CONTRACT DOCUMENTS THE WORD "CLIENT" IS USED, IT MUST BE UNDERSTOOD THAT "GREENWICH PUBLIC SCHOOLS" IS INTENDED.

2.) WHEREVER IN THE CONTRACT DOCUMENTS THE WORD "ARCHITECT" IS USED, IT MUST BE UNDERSTOOD THAT "KG&D ARCHITECTS, PC" IS INTENDED.

3.) WHEREVER IN THE CONTRACT DOCUMENTS THE WORD "ENGINEER" IS USED, IT MUST BE UNDERSTOOD THAT "OLA CONSULTING ENGINEERS" IS INTENDED.

4.) WHEREVER IN THE CONTRACT DOCUMENTS THE WORDS "ELECTRICAL UTILITY" OR "POWER COMPANY" ARE USED, IT MUST BE UNDERSTOOD THAT "EVERSOURCE ENERGY" IS INTENDED.

5.) WHEREVER IN THE CONTRACT DOCUMENTS THE WORDS "TELEPHONE UTILITY" OR "TELCO" ARE USED, IT MUST BE UNDERSTOOD THAT "TOTAL COMMUNICATIONS" IS INTENDED.

6.) WHEREVER IN THE CONTRACT DOCUMENTS THE WORDS "FIRE ALARM SYSTEM" OR "FIRE ALARM VENDOR" ARE USED, IT MUST BE UNDERSTOOD THAT "INTEGRATED TECHNICAL SYSTEMS" IS INTENDED.

7.) "WORK" MUST BE DEEMED TO CONSIST OF ALL LABOR AND OPERATIONS, TRANSPORTATION, HOISTING, MATERIALS, TOOLS, EQUIPMENT, SERVICES, INSPECTIONS, INVESTIGATIONS, COORDINATION AND SUPERVISION REQUIRED AND / OR REASONABLY NECESSARY TO PRODUCE THE CONSTRUCTION REQUIRED BY THE CONTRACT DOCUMENTS.

8.) "FURNISH" MEANS THE DESIGN, FABRICATION, PURCHASE AND DELIVERY TO THE JOB SITE.

9.) "INSTALL OR INSTALLATION" MEANS THE ACT OF PHYSICALLY PLACING, APPLYING, SETTING, ERECTING, ANCHORING, SECURING, ETC., CONSTRUCTION MATERIALS, EQUIPMENT, FURNISHINGS, APPLIANCES, AND SIMILAR ITEMS SPECIFIED AND FURNISHED AT THE JOB SITE. INSTALLATION OF SPECIFIED ITEMS MUST BE COMPLETE IN ALL RESPECTS.

10.) "PROVIDE" MEANS TO FURNISH AND INSTALL CONSTRUCTION MATERIAL, EQUIPMENT, ETC. AS DEFINED ABOVE.

11.) THE FOLLOWING ARE DEFINITIONS OF SHOP DRAWING STAMP ACTIONS:

A.) "NO EXCEPTIONS TAKEN" MEANS THAT THE SHOP DRAWING IS CORRECT AS TO PERFORMANCE, CAPACITY, ETC. AND SUBSTANTIAL CONFORMANCE TO THE CONTRACT DRAWINGS AND SPECIFICATIONS. FABRICATION AND/OR PURCHASE MAY COMMENCE.

B.) "MAKE CORRECTIONS NOTED" MEANS THAT THE SHOP DRAWING IS CORRECT AS TO PERFORMANCE, CAPACITY, ETC. AND SUBSTANTIAL CONFORMANCE TO THE CONTRACT DRAWINGS AND/OR SPECIFICATIONS, SUBJECT TO AND IN COMPLIANCE WITH THE ANNOTATIONS AND/OR CORRECTIONS INDICATED ON THE SHOP DRAWING. FABRICATION AND/OR PURCHASE MAY COMMENCE.

C.) "AMEND AND RESUBMIT" MEANS THAT THE COMMENTS AND/OR CORRECTION ARE SO EXTENSIVE AND IMPORTANT THAT THE REVIEWER WANTS TO SEE HOW THE COMMENTS AND/OR CORRECTIONS ARE RESOLVED PRIOR TO RELEASE FOR FABRICATION AND/OR PURCHASE. FABRICATIONS AND/OR PURCHASE MAY NOT COMMENCE.

D.) "REJECTED" MEANS THAT THE SHOP DRAWING DOES NOT COMPLY OR CONFORM TO THE CONTRACT DRAWINGS AND/OR SPECIFICATIONS. FABRICATION AND/OR PURCHASE MAY NOT COMMENCE.

GREENWICH HS CARDINAL STADIUM PHASE 1A

GREENWICH PUBLIC SCHOOLS
10 HILLSIDE ROAD
GREENWICH CT 06830

KG+D listen imagine build
KG+D . ARCHITECTS PC
285 MAIN STREET MOUNT KISCO . NEW YORK . 10549
P:914.666.5900 KGDARCHITECTS.COM

OLA Consulting Engineers
50 Broadway,
Hawthorne, NY 10532
914.747.2800
8 West 38th Street,
Suite 501
New York, NY 10018
646.849.4110
olace.com

BUILDING PERMIT ISSUE

NOTE: ALL IDEAS, DESIGNS, ARRANGEMENTS AND PLANS INDICATED OR REPRESENTED BY THIS DRAWING ARE OWNED BY AND ARE THE PROPERTY OF KAEYER, GARMENT, & DAVIDSON ARCHITECTS, PC (KG&D), AND WERE CREATED FOR USE ON THIS PROJECT. NONE OF SUCH IDEAS, DESIGNS, ARRANGEMENTS OR PLANS SHALL BE USED BY OR DISCLOSED TO ANY PURPOSE WHATSOEVER WITHOUT THE WRITTEN PERMISSION OF (KG&D).

WRITTEN DIMENSIONS ON THIS DRAWING SHALL HAVE PRECEDENCE OVER SCALED DIMENSIONS. CONTRACTOR SHALL VERIFY ALL ACTUAL DIMENSIONS AND CONDITIONS ON THE JOB AND THE ARCHITECT MUST BE NOTIFIED OF ANY VARIATIONS FROM DIMENSIONS AND CONDITIONS SHOWN. SHOP DETAILS MUST BE SUBMITTED TO THIS OFFICE FOR APPROVAL BEFORE PROCEEDING WITH FABRICATION.

ALTERATIONS BY ANY PERSON, IN ANY WAY, OF ANY ITEM CONTAINED ON THIS DOCUMENT, UNLESS ACTING UNDER THE DIRECTION OF THE LICENCED ARCHITECT WHOSE PROFESSIONAL SEAL IS AFFIXED HERETO, IS A VIOLATION OF TITLE VII, SECT. 69.5 (e) OF NEW YORK STATE LAW.
COPYRIGHT KAEYER, GARMENT • DAVIDSON ARCHITECTS & ENGINEERS, PC
ALL RIGHTS RESERVED.

Professional Seal

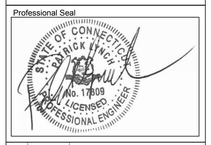

No.	Date	Issue
1	12/02/20	BUILDING PERMIT ISSUE

Sheet Title

ELECTRICAL NOTES, SYMBOLS & ABBREVIATIONS

Job No. NKGD0185.02	Date 08/23/2019
Scale AS NOTED	Drawn / Checked NL/KS

Sheet Number

E001

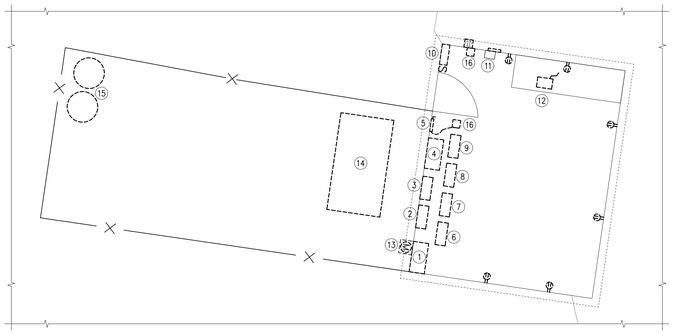

NORTH

2 CONCESSION STAND DEMOLITION PART PLAN

SCALE: 1/4" = 1'-0"

EQUIPMENT LEGEND:

1. DEM. 400A, 208Y/120V, 3PH, 4W, 42 POLE WITH 400A MCB PANELBOARD.
2. DEM. LIGHTING CONTACTOR.
3. DEM. LIGHTING CONTACTOR.
4. DEM. MANUAL TRANSFER SWITCH.
5. DEM. DISCONNECT SWITCH.
6. DISCONNECT AND REMOVE 100A GE 300 LINE CONTROL (CR360L4130ANAD) 60A FOR EX. FIELD LIGHTING POLE #1. RETURN TO OWNER.
7. DISCONNECT AND REMOVE 100A GE 300 LINE CONTROL (CR360L4130ANAD) 60A FOR EX. FIELD LIGHTING POLE #2. RETURN TO OWNER.
8. DISCONNECT AND REMOVE 100A GE 300 LINE CONTROL (CR360L4130ANAD) 60A FOR EX. FIELD LIGHTING POLE #3. RETURN TO OWNER.
9. DISCONNECT AND REMOVE 100A GE 300 LINE CONTROL (CR360L4130ANAD) 60A FOR EX. FIELD LIGHTING POLE #4. RETURN TO OWNER.
10. DEM. 125A, 120/240V, 3W, 1PH PANELBOARD.
11. DISCONNECT AND RELOCATE IRRIGATION CONTROLLER.
12. REMOVE NOVASTAR VX4S W/ LED DISPLAY VIDEO CONTROLLER. TURN OVER TO OWNER.
13. DISCONNECT AND REMOVE UTILITY METER. TURN OVER METER TO UTILITY COMPANY.
14. DISCONNECT AND REMOVE GENERAC 20KW PROPANE GENERATOR. TURN OVER TO OWNER.
15. DISCONNECT AND REMOVE PROPANE GAS TANKS. TURN OVER TO OWNER.
16. DISCONNECT AND REMOVE EXTERIOR RECEPTACLE AND CORD. TURN OVER TO OWNER.

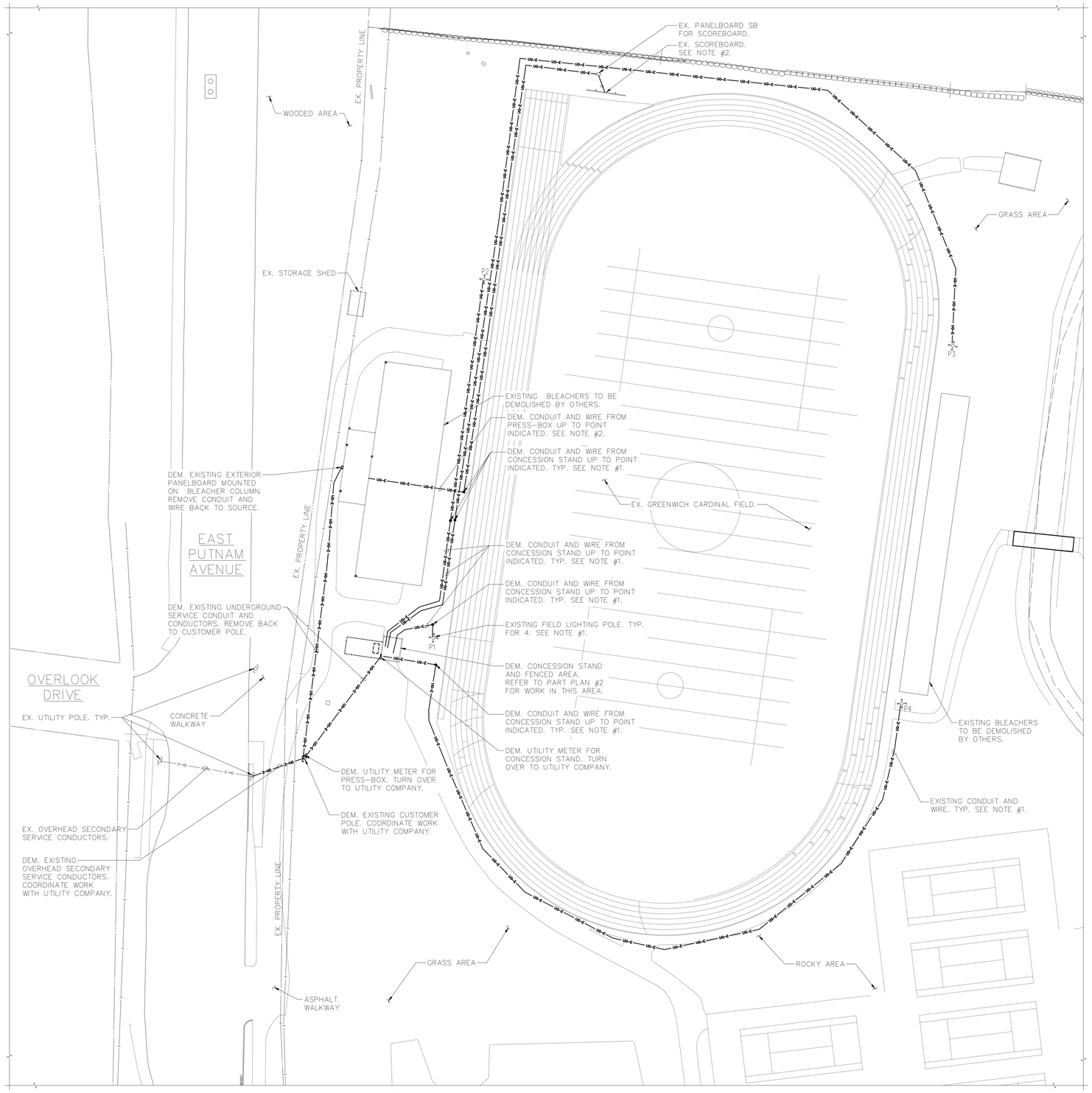

NORTH

1 ELECTRICAL DEMOLITION SITE PLAN

SCALE: 1" = 30'-0"

NOTES:

1.) EXISTING FIELD LIGHTING POLES. DEM. EXISTING LIGHTING FIXTURES & CAROLINA HIGH MAST LOWERING DEVICE. EXISTING CONDUIT AND WIRING SHALL BE CUT BACK TO CONCESSION STAND WHERE INDICATED AND INTERCEPTED, SPLICED AND RE-DIRECTED TO NEW DISTRIBUTION EQUIPMENT IN MECH/ELEC 107. REFER TO DWGS. E200, E300, E301 AND E501 FOR MORE INFORMATION. ELECTRICAL CONTRACTOR SHALL TRACE EXISTING CONDUITS AND WIRES AND PROVIDE HAND HOLES AS NECESSARY TO INTERCEPT, SPLICE AND RE-DIRECT CONDUIT AND WIRES INTO MECH/ELEC 107.

2.) CONTROLS FOR EXISTING SCOREBOARD SHALL BE INTERCEPTED, SPLICED, AND RE-DIRECTED TO THE NEW PRESS-BOX. REFER TO DWG. E300 FOR MORE INFORMATION.

GREENWICH HS CARDINAL STADIUM PHASE 1A

GREENWICH PUBLIC SCHOOLS
10 HILLSIDE ROAD
GREENWICH CT 06830

KG+D listen imagine build

KG+D . ARCHITECTS PC
285 MAIN STREET MOUNT KISCO . NEW YORK . 10549
P:914.666.5900 KGDARCHITECTS.COM

OLA Consulting Engineers
50 Broadway,
Hawthorne, NY 10532
914.747.2800

8 West 38th Street,
Suite 501
New York, NY 10018
646.849.4110

olace.com

BUILDING PERMIT ISSUE

NOTE: ALL IDEAS, DESIGNS, ARRANGEMENTS AND PLANS INDICATED OR REPRESENTED BY THIS DRAWING ARE OWNED BY AND ARE THE PROPERTY OF KAEYER, GARMENT, & DAVIDSON ARCHITECTS, PC (KG&D), AND WERE CREATED FOR USE ON THIS PROJECT. NONE OF SUCH IDEAS, DESIGNS, ARRANGEMENTS OR PLANS SHALL BE USED BY OR DISCLOSED TO ANY PURPOSE WHATSOEVER WITHOUT THE WRITTEN PERMISSION OF (KG&D).

WRITTEN DIMENSIONS ON THIS DRAWING SHALL HAVE PRECEDENCE OVER SCALED DIMENSIONS. CONTRACTOR SHALL VERIFY ALL ACTUAL DIMENSIONS AND CONDITIONS ON THE JOB AND THE ARCHITECT MUST BE NOTIFIED OF ANY VARIATIONS FROM DIMENSIONS AND CONDITIONS SHOWN. SHOP DETAILS MUST BE SUBMITTED TO THIS OFFICE FOR APPROVAL BEFORE PROCEEDING WITH FABRICATION.

ALTERATIONS BY ANY PERSON, IN ANY WAY, OF ANY ITEM CONTAINED ON THIS DOCUMENT, UNLESS ACTING UNDER THE DIRECTION OF THE LICENCED ARCHITECT WHOSE PROFESSIONAL SEAL IS AFFIXED HERETO, IS A VIOLATION OF TITLE VII, SECT. 69.5 (e) OF NEW YORK STATE LAW.
COPYRIGHT KAEYER, GARMENT • DAVIDSON ARCHITECTS & ENGINEERS, PC
ALL RIGHTS RESERVED.

Professional Seal

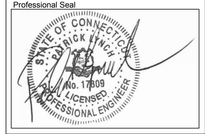

No.	Date	Issue
1	12/02/20	BUILDING PERMIT ISSUE

Sheet Title

ELECTRICAL DEMOLITION SITE PLAN

Job No.	Date
NKGD0185.02	08/23/2019
Scale	**Drawn / Checked**
AS NOTED	NL/KS

Sheet Number

E100

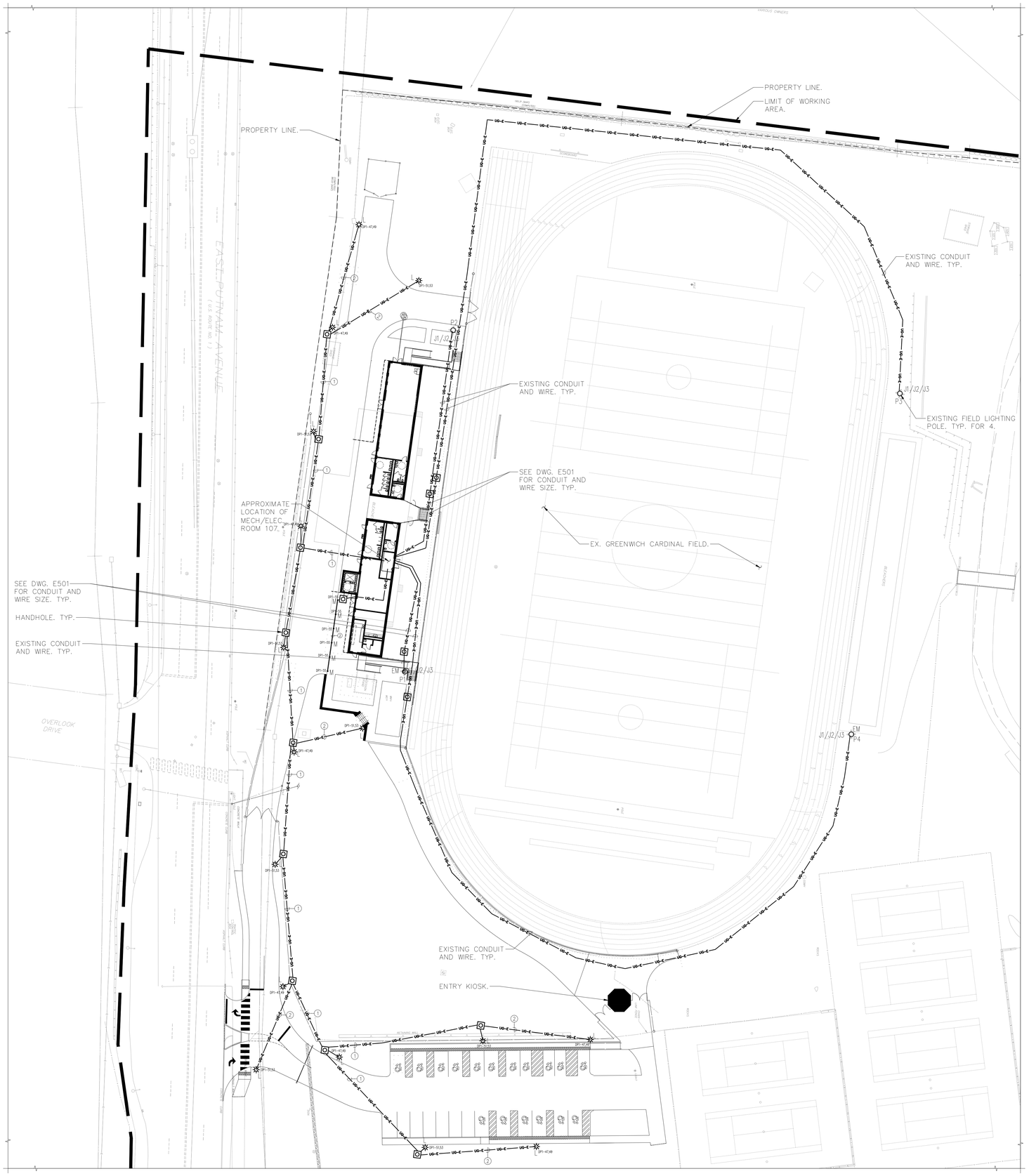

1 ELECTRICAL SITE LIGHTING PLAN
SCALE: 1"=30'-0"

NORTH

DESIGN INTENT – LIGHTING CONTROL SYSTEM

1.) LIGHTING CONTROL SYSTEM IS BASED ON N-LIGHT BY SENSOR SWITCH (KAREN BLACKMAN (212) 462-0088 x5237) OR APPROVED EQUAL. (OTHER ACCEPTABLE MANUFACTURERS ARE LUTRON & COOPER LIGHTING.)

2.) LIGHTING CONTROL COMPONENTS SHOWN ARE FOR GENERAL DESIGN INTENT. ALL COMPONENTS AND WIRING ARE NOT SHOWN. CONTRACTOR SHALL BE RESPONSIBLE FOR ALL NECESSARY COMPONENTS, WIRING (LINE AND LOW VOLTAGE) AND PROGRAMMING FOR A FULLY OPERATIONAL SYSTEM. CONTRACTOR IS RESPONSIBLE FOR FULL DELEGATED DESIGN OF SYSTEM BASED ON THE DESIGN INTENT INCLUDED ON THESE DRAWINGS.

3.) THE CONTRACTOR SHALL BE RESPONSIBLE TO COORDINATE LIGHTING CONTROLS WITH LIGHT FIXTURES.

4.) ALL LIGHT FIXTURE AND LIGHTING CONTROL SUBMITTALS SHALL BE SUBMITTED AT THE SAME TIME FOR APPROVAL.

5.) EXTERIOR MOUNTED LIGHT FIXTURES ARE TO BE CONTROLLED VIA PHOTOCELL AND TIME CLOCK WITH MANUAL OVERRIDE SWITCH. PROVIDE SEPARATE CONTROL CIRCUITS FOR THE FOLLOWING:

- BUILDING MOUNTED LIGHTS (UON).
- SITE POLE LIGHTS.

6.) ALL LIGHT FIXTURES TAGGED AS "EM" SHALL BE FED FROM EMERGENCY POWER PANELS, U.O.N. THESE FIXTURES SHALL BE SWITCHED AS INDICATED ALONG WITH LIGHTING FIXTURES FED FROM NORMAL POWER SOURCES. UPON LOSS OF NORMAL POWER, EMERGENCY LIGHT FIXTURES SHALL BE AUTOMATICALLY SHUNTED FULL BRIGHT REGARDLESS OF STATE OF CONTROLLING SWITCH. SEE DETAIL FOR ADDITIONAL INFORMATION.

NOTES:

1.) PANELBOARD DP1 LOCATED IN MECH/ELEC 107. SEE DWG. E301 FOR LOCATION.

2.) ELECTRICAL CONTRACTOR SHALL PROVIDE A COMPLETE CAROLINA HIGH MAST LOWERING DEVICE SYSTEM FOR EACH EXISTING LIGHTING POLE COMPRISING AT A MINIMUM OF:

- WINCHES,
- CABLING,
- CONTROLLERS,
- LIGHT FIXTURES,
- LIGHT FIXTURE SUPPORTS
- TOP LATCHING SPORTS EXTERNAL DRIVE,
- SYSTEM SHALL BE SIMILAR TO CAROLINA HIGH MAST MODEL C522,
- REFER TO DRAWINGS E502 AND E503 FOR CAROLINA HIGH MAST BASIS OF DESIGN INTENT,
- VENDOR CONTACT JOHN GINSBURG AT 610-457-7899.

FIELD WIRING/CONDUIT LEGEND

1. 4-#10 & 1-#10 GND IN 1-1/2"C.
2. 2-#10 & 1-#10 GND IN 1"C.

GREENWICH HS CARDINAL STADIUM PHASE 1A

GREENWICH PUBLIC SCHOOLS
10 HILLSIDE ROAD
GREENWICH CT 06830

KG+D listen imagine build
KG+D . ARCHITECTS PC
285 MAIN STREET MOUNT KISCO . NEW YORK . 10549
P:914.666.5900 KGDARCHITECTS.COM

OLA Consulting Engineers
50 Broadway,
Hawthorne, NY 10532
914.747.2800
8 West 38th Street,
Suite 501
New York, NY 10018
646.849.4110
olace.com

BUILDING PERMIT ISSUE

NOTE: ALL IDEAS, DESIGNS, ARRANGEMENTS AND PLANS INDICATED OR REPRESENTED BY THIS DRAWING ARE OWNED BY AND ARE THE PROPERTY OF KAEYER, GARMENT, & DAVIDSON ARCHITECTS, PC (KG&D), AND WERE CREATED FOR USE ON THIS PROJECT. NONE OF SUCH IDEAS, DESIGNS, ARRANGEMENTS OR PLANS SHALL BE USED BY OR DISCLOSED TO ANY PURPOSE WHATSOEVER WITHOUT THE WRITTEN PERMISSION OF (KG&D).

WRITTEN DIMENSIONS ON THIS DRAWING SHALL HAVE PRECEDENCE OVER SCALED DIMENSIONS. CONTRACTOR SHALL VERIFY ALL ACTUAL DIMENSIONS AND CONDITIONS ON THE JOB AND THE ARCHITECT MUST BE NOTIFIED OF ANY VARIATIONS FROM DIMENSIONS AND CONDITIONS SHOWN. SHOP DETAILS MUST BE SUBMITTED TO THIS OFFICE FOR APPROVAL BEFORE PROCEEDING WITH FABRICATION.

ALTERATIONS BY ANY PERSON, IN ANY WAY, OF ANY ITEM CONTAINED ON THIS DOCUMENT, UNLESS ACTING UNDER THE DIRECTION OF THE LICENCED ARCHITECT WHOSE PROFESSIONAL SEAL IS AFFIXED HERETO, IS A VIOLATION OF TITLE 16, SECT. 8B § 6(.) OF NEW YORK STATE LAW.
COPYRIGHT KAEYER, GARMENT • DAVIDSON ARCHITECTS & ENGINEERS, PC
ALL RIGHTS RESERVED.

Professional Seal

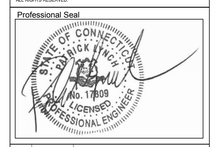

No.	Date	Issue
1	12/02/20	BUILDING PERMIT ISSUE

Sheet Title

ELECTRICAL SITE LIGHTING PLAN

Job No.	Date
NKGD0185.02	03/25/2020
Scale	Drawn / Checked
AS NOTED	NL/KS

Sheet Number

E200

LIGHTING CONTROLS LEGEND

1 - LINE VOLTAGE WALL MOUNTED DUAL TECHNOLOGY OCCUPANCY SENSOR.

2 - LOW VOLTAGE WALL MOUNTED KEY SWITCH WITH CEILING MOUNTED DUAL TECHNOLOGY OCCUPANCY SENSOR.

3 - EXTERIOR LIGHTING CONTROLS. SEE DESIGN INTENT, NOTE #5.

4 - LOW VOLTAGE MANUAL ON WALL SWITCH WITH CEILING MOUNTED DUAL TECHNOLOGY VACANCY SENSOR.

5 - LINE VOLTAGE WALL MOUNTED DUAL TECHNOLOGY VACANCY SENSOR.

6 - LINE VOLTAGE WALL SWITCH.

DESIGN INTENT - LIGHTING CONTROL SYSTEM

1.) LIGHTING CONTROL SYSTEM IS BASED ON N-LIGHT BY SENSOR SWITCH (KAREN BLACKMAN (212) 462-0088 x5237) OR APPROVED EQUAL. (OTHER ACCEPTABLE MANUFACTURERS ARE LUTRON & COPPER LIGHTING.)

2.) LIGHTING CONTROL COMPONENTS SHOWN ARE FOR GENERAL DESIGN INTENT. ALL COMPONENTS AND WIRING ARE NOT SHOWN. CONTRACTOR SHALL BE RESPONSIBLE FOR ALL NECESSARY COMPONENTS, WIRING (LINE AND LOW VOLTAGE) AND PROGRAMMING FOR A FULLY OPERATIONAL SYSTEM. CONTRACTOR IS RESPONSIBLE FOR FULL DELEGATED DESIGN OF SYSTEM BASED ON THE DESIGN INTENT INCLUDED ON THESE DRAWINGS.

3.) THE CONTRACTOR SHALL BE RESPONSIBLE TO COORDINATE LIGHTING CONTROLS WITH LIGHT FIXTURES.

4.) ALL LIGHT FIXTURE AND LIGHTING CONTROL SUBMITTALS SHALL BE SUBMITTED AT THE SAME TIME FOR APPROVAL.

5.) EXTERIOR MOUNTED LIGHT FIXTURES ARE TO BE CONTROLLED VIA PHOTOCELL AND TIME CLOCK WITH MANUAL OVERRIDE SWITCH.
- BUILDING MOUNTED LIGHTS (UON).

6.) ALL LIGHT FIXTURES TAGGED AS "EM" SHALL BE FED FROM EMERGENCY POWER PANELS. THESE FIXTURES SHALL BE SWITCHED AS INDICATED ALONG WITH LIGHTING FIXTURES FED FROM NORMAL POWER SOURCES. UPON LOSS OF NORMAL POWER, EMERGENCY LIGHT FIXTURES SHALL BE AUTOMATICALLY SHUNTED TO FULL BRIGHT REGARDLESS OF STATE OF CONTROLLING SWITCH. SEE DETAIL FOR ADDITIONAL INFORMATION.

7.) ALL EXIT SIGNS SHALL BE FED FROM EMERGENCY GENERATOR POWERED PANELS.

8.) FOR EACH EXIT SIGN LOCATION SHOWN, (2) EXIT SIGNS SHALL BE INSTALLED, ONE AT 80" AFF AND ONE AT 18" AFF. SEE DETAIL #5 ON DWG. E701.

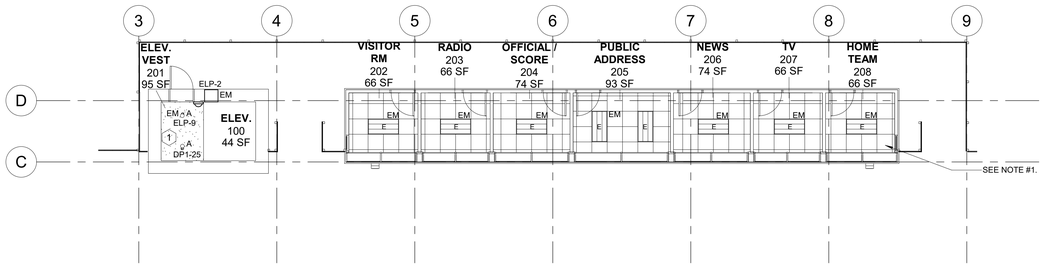

NORTH

2 ELECTRICAL PRESSBOX LIGHTING PLAN

SCALE: 1/8" = 1'-0"

NOTES:

1.) PLAN FOR INFORMATIONAL PURPOSES ONLY. THE PRESSBOX SHALL BE MANUFACTURED AND PROVIDED WITH ALL FIXTURES, DEVICES, PANELBOARDS, EQUIPMENT, WIRING, CONTROLS, ETC. BY PRESSBOX MANUFACTURER. CONTRACTOR TO PROVIDE FEEDER TO PRESSBOX PANELBOARDS. FIRE ALARM DEVICES AND WIRING TO FIRE ALARM DEVICES. SEE DWG. E501 FOR FEEDER AND FIRE ALARM SCOPE.

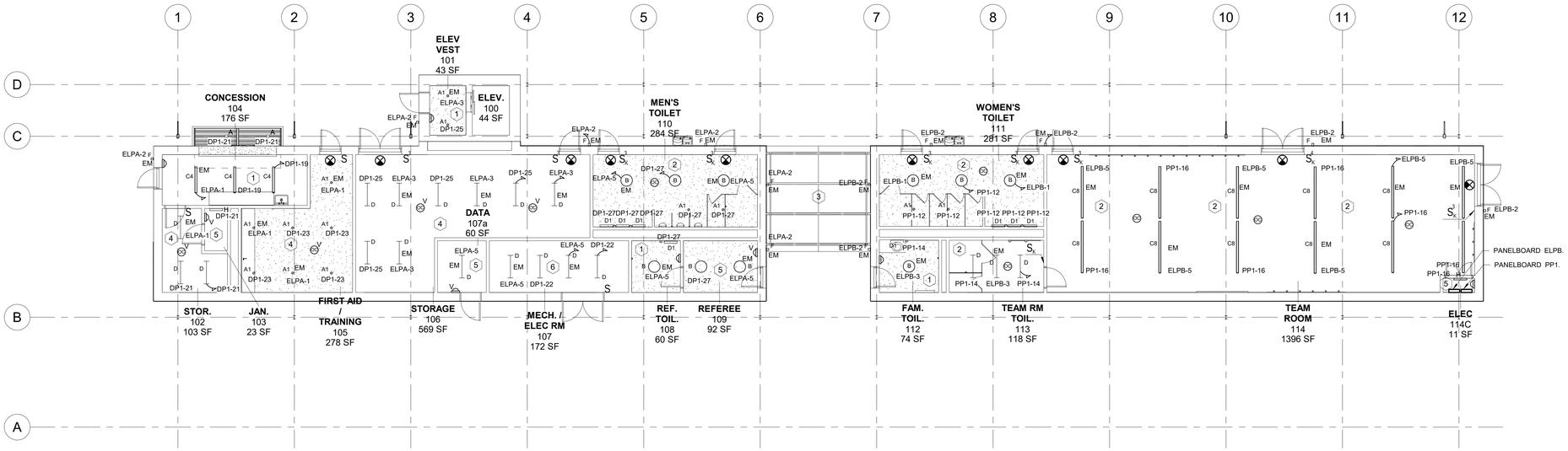

NORTH

1 ELECTRICAL 1ST FLOOR LIGHTING PLAN

SCALE: 1/8" = 1'-0"

NOTES:

1.) PANELBOARDS DP1 AND ELPA LOCATED IN MECH/ELEC. 107.

GREENWICH HS CARDINAL STADIUM PHASE 1A

Greenwich Public Schools
10 Hillside Road
Greenwich, CT 06830

KG+D listen imagine build
KG+D . ARCHITECTS PC
285 MAIN STREET MOUNT KISCO . NEW YORK . 10549
P:914.666.5900 KGDARCHITECTS.COM

OLA Consulting Engineers
50 Broadway,
Hawthorne, NY 10532
914.747.2800
8 West 38th Street,
Suite 501
New York, NY 10018
646.849.4110
olace.com

CONSTRUCTION DOCUMENTS

NOTE: ALL IDEAS, DESIGNS, ARRANGEMENTS AND PLANS INDICATED OR REPRESENTED BY THIS DRAWING ARE OWNED BY AND ARE THE PROPERTY OF KAEYER, GARMENT, & DAVIDSON ARCHITECTS, PC (KG&D), AND WERE CREATED FOR USE ON THIS PROJECT. NONE OF SUCH IDEAS, DESIGNS, ARRANGEMENTS OR PLANS SHALL BE USED BY OR DISCLOSED TO ANY PURPOSE WHATSOEVER WITHOUT THE WRITTEN PERMISSION OF (KG&D).

WRITTEN DIMENSIONS ON THIS DRAWING SHALL HAVE PRECEDENCE OVER SCALED DIMENSIONS. CONTRACTOR SHALL VERIFY ALL ACTUAL DIMENSIONS AND CONDITIONS ON THE JOB AND THE ARCHITECT MUST BE NOTIFIED OF ANY VARIATIONS FROM DIMENSIONS AND CONDITIONS SHOWN. SHOP DETAILS MUST BE SUBMITTED TO THIS OFFICE FOR APPROVAL BEFORE PROCEEDING WITH FABRICATION.

ALTERATIONS BY ANY PERSON, IN ANY WAY, OF ANY ITEM CONTAINED ON THIS DOCUMENT, UNLESS ACTING UNDER THE DIRECTION OF THE LICENCED ARCHITECT WHOSE PROFESSIONAL SEAL IS AFFIXED HERETO, IS A VIOLATION OF TITLE VII, SECT. 69.5 (B) OF NEW YORK STATE LAW.
COPYRIGHT KAEYER, GARMENT • DAVIDSON ARCHITECTS & ENGINEERS, PC
ALL RIGHTS RESERVED.

Professional Seal

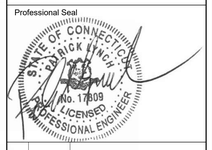

No.	Date	Issue
1	12/02/20	BUILDING PERMIT ISSUE

Sheet Title
ELECTRICAL 1ST FLOOR AND PRESSBOX LIGHTING PLAN

Job No.	Date
NKGD0185.02	08/21/19
Scale: AS NOTED	Drawn / Checked: NL / KS

Sheet Number
E201

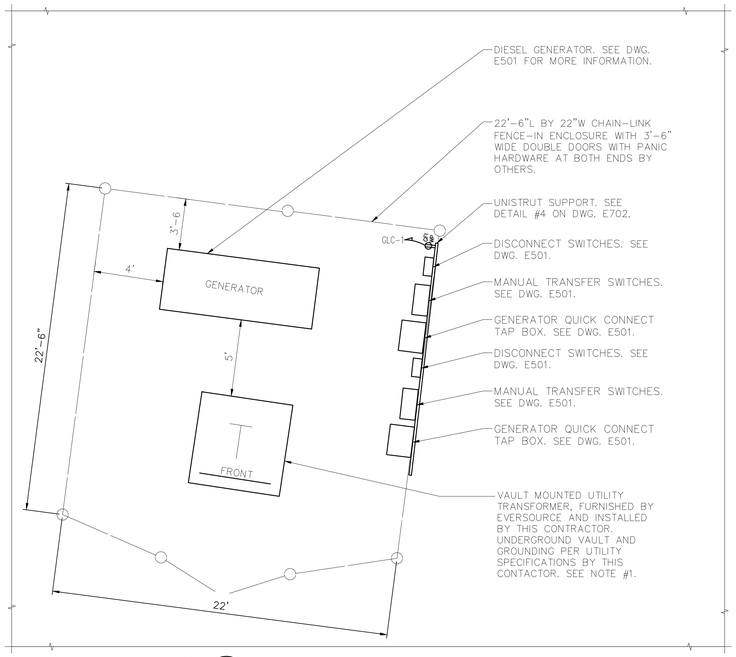

NORTH

2 EQUIPMENT POWER PART PLAN

SCALE: 1/4" = 1'

NOTES:

1.) ELECTRICAL CONTRACTOR SHALL CARRY AN ALLOWANCE OF $14,000 FOR EVERSOURCE FEES.

NOTES:

1.) PROVIDE RGS SWEEP AND RISER CONDUITS FOR PRIMARY AND TELCO, CABLE TV 20' UP CUSTOMER POLE. PROVIDE CROSSARMS, INSULATORS AND FUSE CUTOUTS AS REQUIRED PER UTILITY COMPANY STANDARDS. FINAL PRIMARY CONNECTOR BY POWER UTILITY COMPANY. PROVIDE (1) SPARE CONDUIT STUBBED UP AT THE BASE OF THE POLE AND CAPPED.

2.) ELECTRICAL CONTRACTOR SHALL SPLICE AND EXTEND EXISTING CONTROL WIRING FROM EXISTING SCOREBOARD TO NEW PRESSBOX.

3.) PROVIDE 6-#10 & 1-#10 GND IN 2"C FOR FOOD TRUCK RECEPTACLES. PROVIDE (3) WATERPROOF, GFI TYPE QUAD RECEPTACLES. CIRCUIT TO PANELBOARD DP1-41, DP1-43 AND DP1-45. COORDINATE LOCATION OF RECEPTACLES IN FIELD WITH LOCATION OF FOOD TRUCK. PROVIDE A UNISTRUT SUPPORT FOR THE QUAD RECEPTACLES AS REQUIRED.

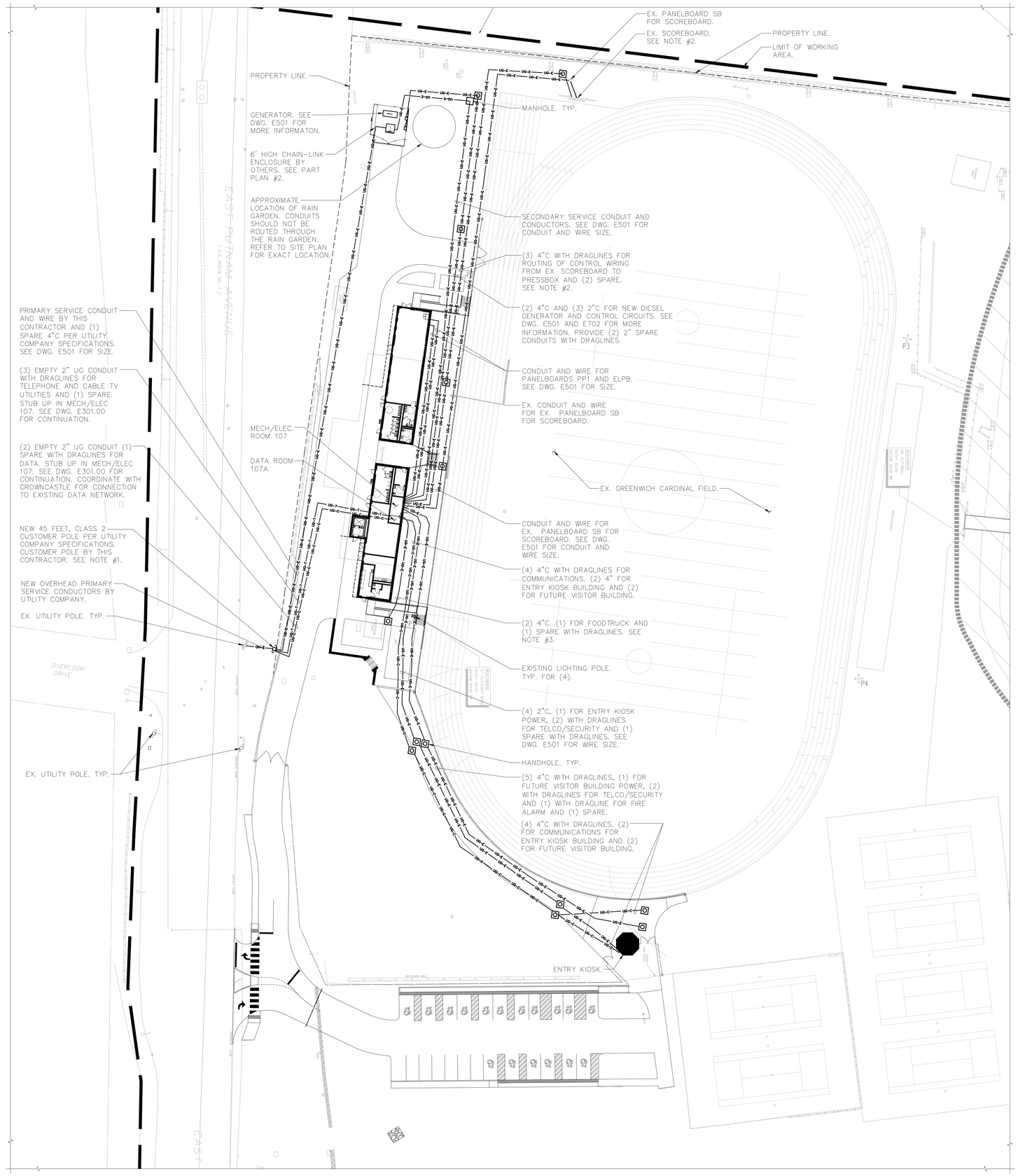

NORTH

1 ELECTRICAL SITE PLAN

SCALE: 1" = 30'-0"

GREENWICH HS CARDINAL STADIUM PHASE 1A

GREENWICH PUBLIC SCHOOLS
10 HILLSIDE ROAD
GREENWICH CT 06830

KG+D listen imagine build
KG+D . ARCHITECTS PC
285 MAIN STREET MOUNT KISCO . NEW YORK . 10549
P:914.666.5900 KGDARCHITECTS.COM

OLA Consulting Engineers
50 Broadway,
Hawthorne, NY 10532
914.747.2800
8 West 38th Street,
Suite 501
New York, NY 10018
646.849.4110
olace.com

BUILDING PERMIT ISSUE

NOTE: ALL IDEAS, DESIGNS, ARRANGEMENTS AND PLANS INDICATED OR REPRESENTED BY THIS DRAWING ARE OWNED BY AND ARE THE PROPERTY OF KAEYER, GARMENT, & DAVIDSON ARCHITECTS, PC (KG&D), AND WERE CREATED FOR USE ON THIS PROJECT. NONE OF SUCH IDEAS, DESIGNS, ARRANGEMENTS OR PLANS SHALL BE USED BY OR DISCLOSED TO ANY PURPOSE WHATSOEVER WITHOUT THE WRITTEN PERMISSION OF (KG&D).

WRITTEN DIMENSIONS ON THIS DRAWING SHALL HAVE PRECEDENCE OVER SCALED DIMENSIONS. CONTRACTOR SHALL VERIFY ALL ACTUAL DIMENSIONS AND CONDITIONS ON THE JOB AND THE ARCHITECT MUST BE NOTIFIED OF ANY VARIATIONS FROM DIMENSIONS AND CONDITIONS SHOWN. SHOP DETAILS MUST BE SUBMITTED TO THIS OFFICE FOR APPROVAL BEFORE PROCEEDING WITH FABRICATION.

ALTERATIONS BY ANY PERSON, IN ANY WAY, OF ANY ITEM CONTAINED ON THIS DOCUMENT, UNLESS ACTING UNDER THE DIRECTION OF THE LICENCED ARCHITECT WHOSE PROFESSIONAL SEAL IS AFFIXED HERETO, IS A VIOLATION OF TITLE VI, SECT. 8B § 9L1 OF NEW YORK STATE LAW.
COPYRIGHT KAEYER, GARMENT + DAVIDSON ARCHITECTS & ENGINEERS, PC
ALL RIGHTS RESERVED.

Professional Seal

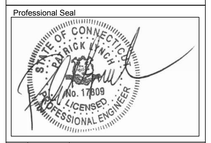

No.	Date	Issue
1	12/02/20	BUILDING PERMIT ISSUE

Sheet Title

ELECTRICAL SITE PLAN

Job No.	Date
NKGD0185.02	05/18/2020
Scale	Drawn / Checked
AS NOTED	NL/KS

Sheet Number

E300

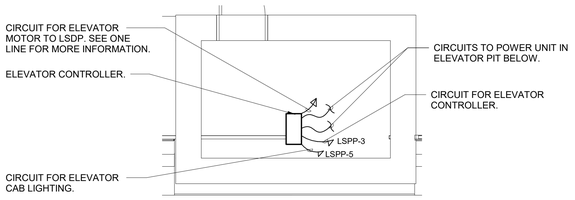

6 ELEVATOR 201 PART PLAN

NORTH

SCALE: 1/4" = 1'-0"

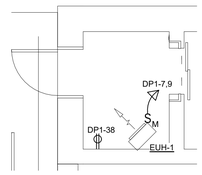

5 ELEVATOR VESTIBULE 101 PART PLAN

NORTH

SCALE: 1/4" = 1'-0"

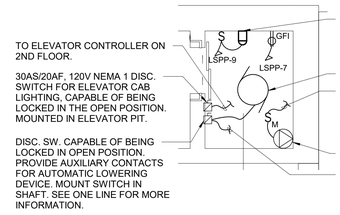

4 ELEVATOR PIT PART PLAN

NORTH

SCALE: 1/4" = 1'-0"

NOTES:

1.) WALL MOUNTED ELEVATOR LIGHT, VAPORPROOF, 13W LED, DIE-CAST GUARD AND FROSTED GLOBE, AS MANUFACTURED BY RAB LIGHTING MODEL VXBRLED13DG OR APPROVED EQUAL.

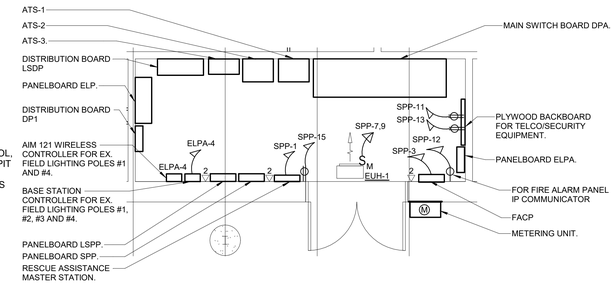

3 MECH/ELEC RM 107 PART PLAN

NORTH

SCALE: 1/4" = 1'-0"

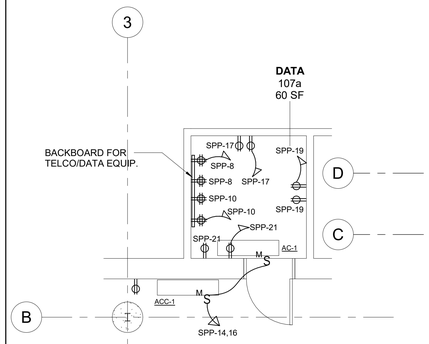

7 DATA ROOM 107A

NORTH

SCALE: 1/4" = 1'-0"

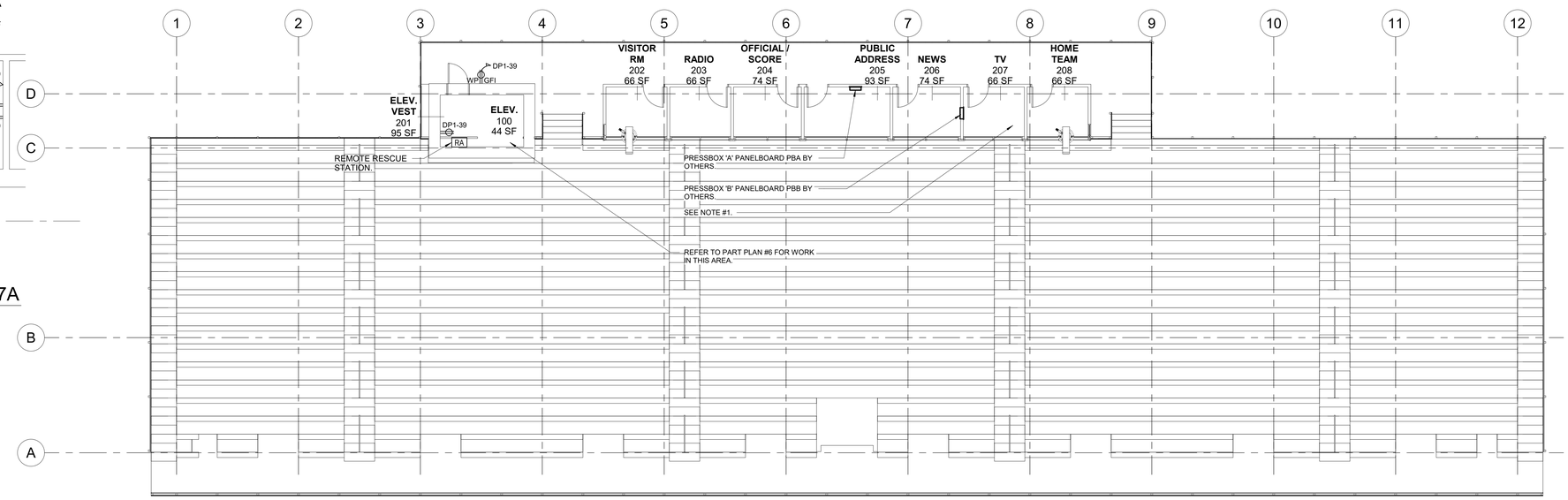

NOTES:

1.) PLAN FOR INFORMATIONAL PURPOSES ONLY. THE PRESSBOX SHALL BE MANUFACTURED AND PROVIDED WITH ALL FIXTURES, DEVICES, PANELBOARDS, EQUIPMENT, WIRING, CONTROLS, ETC. BY PRESSBOX MANUFACTURER. CONTRACTOR TO PROVIDE FEEDER TO PRESSBOX PANELBOARDS, FIRE ALARM DEVICES AND WIRING TO FIRE ALARM DEVICES. SEE DWG. E501 FOR FEEDER AND FIRE ALARM SCOPE.

2 ELECTRICAL HOME BLEACHER & PRESSBOX POWER PLAN

NORTH

SCALE: 1/8" = 1'-0"

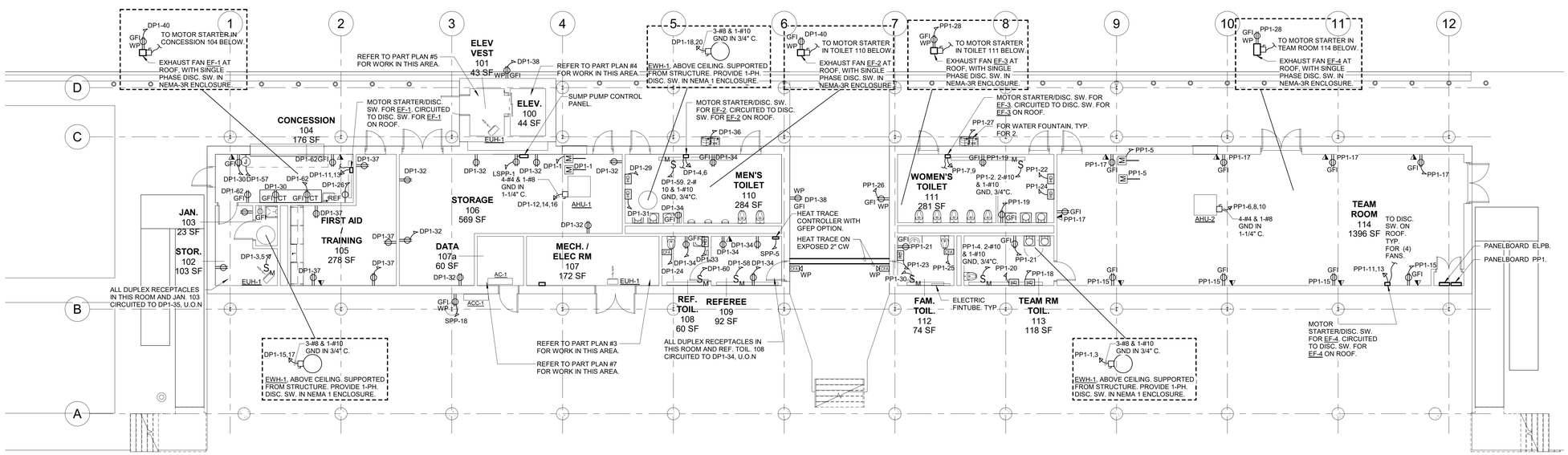

1 ELECTRICAL 1ST FLOOR POWER PLAN

NORTH

SCALE: 1/8" = 1'-0"

NOTES:

1.) PROVIDE (2) SETS OF 2-#10 & 1-#12 GND IN 3/4"C FOR GFI, WEATHERPROOF RECEPTACLE ON ROOF FOR CAMERA. FEED RECEPTACLE FROM PANELBOARD DP1-54 AND DP1-56.

GREENWICH HS CARDINAL STADIUM PHASE 1A

Greenwich Public Schools
10 Hillside Road
Greenwich, CT 06830

KG+D listen imagine build

KG+D . ARCHITECTS PC
285 MAIN STREET MOUNT KISCO . NEW YORK . 10549
P:914.666.5900 KGDARCHITECTS.COM

OLA Consulting Engineers
50 Broadway,
Hawthorne, NY 10532
914.747.2800

8 West 38th Street,
Suite 501
New York, NY 10018
646.849.4110

olace.com

CONSTRUCTION DOCUMENTS

NOTE: ALL IDEAS, DESIGNS, ARRANGEMENTS AND PLANS INDICATED OR REPRESENTED BY THIS DRAWING ARE OWNED BY AND ARE THE PROPERTY OF KAEYER, GARMENT, & DAVIDSON ARCHITECTS, PC (KG&D), AND WERE CREATED FOR USE ON THIS PROJECT. NONE OF SUCH IDEAS, DESIGNS, ARRANGEMENTS OR PLANS SHALL BE USED BY OR DISCLOSED TO ANY PURPOSE WHATSOEVER WITHOUT THE WRITTEN PERMISSION OF (KG&D).

WRITTEN DIMENSIONS ON THIS DRAWING SHALL HAVE PRECEDENCE OVER SCALED DIMENSIONS. CONTRACTOR SHALL VERIFY ALL ACTUAL DIMENSIONS AND CONDITIONS ON THE JOB AND THE ARCHITECT MUST BE NOTIFIED OF ANY VARIATIONS FROM DIMENSIONS AND CONDITIONS SHOWN. SHOP DETAILS MUST BE SUBMITTED TO THIS OFFICE FOR APPROVAL BEFORE PROCEEDING WITH FABRICATION.

ALTERATIONS BY ANY PERSON, IN ANY WAY, OF ANY ITEM CONTAINED ON THIS DOCUMENT, UNLESS ACTING UNDER THE DIRECTION OF THE LICENSED ARCHITECT WHOSE PROFESSIONAL SEAL IS AFFIXED HERETO, IS A VIOLATION OF TITLE 16, SECT. 7209 OF NEW YORK STATE LAW.
COPYRIGHT KAEYER, GARMENT + DAVIDSON ARCHITECTS & ENGINEERS, PC
ALL RIGHTS RESERVED

Professional Seal

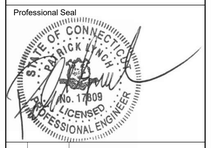

No.	Date	Issue
1	12/02/20	BUILDING PERMIT ISSUE

Sheet Title

ELECTRICAL 1ST FLOOR AND PRESBOX POWER PLAN

Job No.	Date
NKGD0185.02	08/21/19
Scale: AS NOTED	Drawn / Checked: NL / KS

Sheet Number

E301

LIGHTING CONTROLS LEGEND

1 - LINE VOLTAGE WALL MOUNTED DUAL TECHNOLOGY OCCUPANCY SENSOR.

2 - EXTERIOR LIGHTING CONTROLS. SEE DESIGN INTENT, NOTE #5.

DESIGN INTENT - LIGHTING CONTROL SYSTEM

1.) LIGHTING CONTROL SYSTEM IS BASED ON N-LIGHT BY SENSOR SWITCH (KAREN BLACKMAN (212) 462-0088 x5237) OR APPROVED EQUAL. (OTHER ACCEPTABLE MANUFACTURERS ARE LUTRON & COPPER LIGHTING.)

2.) LIGHTING CONTROL COMPONENTS SHOWN ARE FOR GENERAL DESIGN INTENT. ALL COMPONENTS AND WIRING ARE NOT SHOWN. CONTRACTOR SHALL BE RESPONSIBLE FOR ALL NECESSARY COMPONENTS, WIRING (LINE AND LOW VOLTAGE) AND PROGRAMMING FOR A FULLY OPERATIONAL SYSTEM. CONTRACTOR IS RESPONSIBLE FOR FULL DELEGATED DESIGN OF SYSTEM BASED ON THE DESIGN INTENT INCLUDED ON THESE DRAWINGS.

3.) THE CONTRACTOR SHALL BE RESPONSIBLE TO COORDINATE LIGHTING CONTROLS WITH LIGHT FIXTURES.

4.) ALL LIGHT FIXTURE AND LIGHTING CONTROL SUBMITTALS SHALL BE SUBMITTED AT THE SAME TIME FOR APPROVAL.

5.) EXTERIOR MOUNTED LIGHT FIXTURES ARE TO BE CONTROLLED VIA PHOTOCELL AND TIME CLOCK WITH MANUAL OVERRIDE SWITCH.
- KIOSK BUILDING MOUNTED LIGHTS (UON).

6.) ALL EXIT AND EMERGENCY FIXTURES SHALL BE FED FROM UNSWITCHED LEG OF ASSOCIATED LOCAL LIGHTING CIRCUITS.

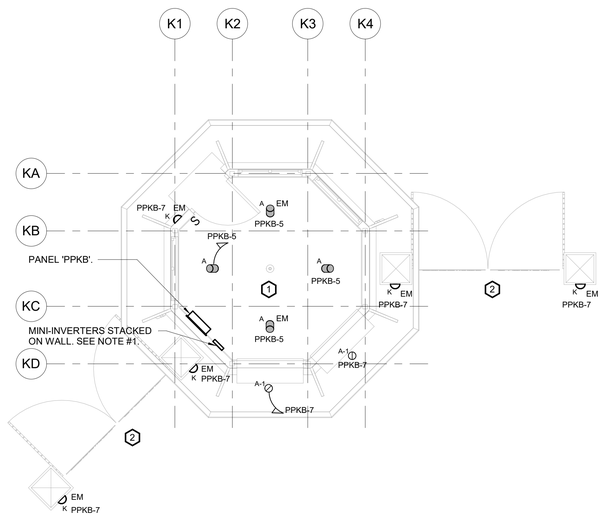

2 ELECTRICAL KIOSK LIGHTING PLAN

NORTH

SCALE: 1/4" = 1'-0"

NOTES:

1.) PROVIDE (2) MINI LIGHT INVERTER SIMILAR TO IOTA IIS-125-I FOR LIGHT FIXTURES IN ENTRY KIOSK BUILDING AND AT EXTERIOR GATES OF ENTRY KIOSK BUILDING TAGGED AS "EM". INVERTER SHALL BE INSTALLED HIGH ON WALL BY PANELBOARD. PROVIDE TEST SWITCH BELOW MINI-INVERTER.

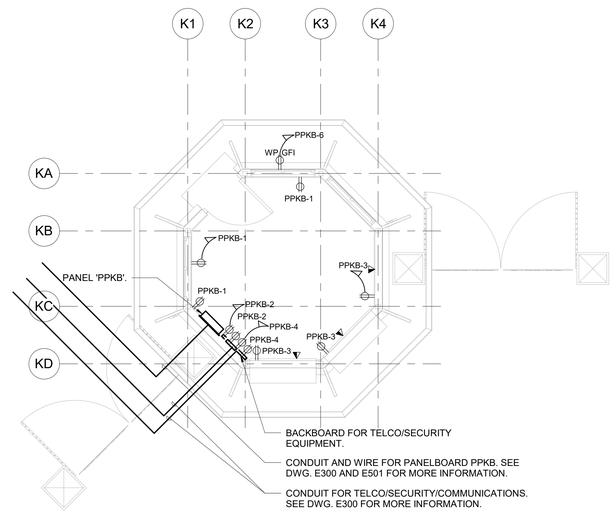

1 ELECTRICAL KIOSK POWER & FIRE ALARM PLAN

NORTH

SCALE: 1/4" = 1'-0"

NOTES:

1.) REFER TO DRAWINGS E300 AND E501 FOR PANELBOARD FEEDER AND CONDUIT SIZES.

GREENWICH HIGH SCHOOL CARDINAL STADIUM PHASE 1

10 Hillside Road
Greenwich, CT 06830

KG+D . ARCHITECTS PC
285 MAIN STREET MOUNT KISCO . NEW YORK . 10549
P:914.666.5900 KGDARCHITECTS.COM

OLA Consulting Engineers
50 Broadway,
Hawthorne, NY 10532
914.747.2800

8 West 38th Street,
Suite 501
New York, NY 10018
646.849.4110

olace.com

CONSTRUCTION DOCUMENTS

NOTE: ALL IDEAS, DESIGNS, ARRANGEMENTS AND PLANS INDICATED OR REPRESENTED BY THIS DRAWING ARE OWNED BY AND ARE THE PROPERTY OF KAEYER, GARMENT, & DAVIDSON ARCHITECTS, PC (KG&D), AND WERE CREATED FOR USE ON THIS PROJECT. NONE OF SUCH IDEAS, DESIGNS, ARRANGEMENTS OR PLANS SHALL BE USED BY OR DISCLOSED TO ANY PURPOSE WHATSOEVER WITHOUT THE WRITTEN PERMISSION OF (KG&D).

WRITTEN DIMENSIONS ON THIS DRAWING SHALL HAVE PRECEDENCE OVER SCALED DIMENSIONS. CONTRACTOR SHALL VERIFY ALL ACTUAL DIMENSIONS AND CONDITIONS ON THE JOB AND THE ARCHITECT MUST BE NOTIFIED OF ANY VARIATIONS FROM DIMENSIONS AND CONDITIONS SHOWN. SHOP DETAILS MUST BE SUBMITTED TO THIS OFFICE FOR APPROVAL BEFORE PROCEEDING WITH FABRICATION.

ALTERATIONS BY ANY PERSON, IN ANY WAY, OF ANY ITEM CONTAINED ON THIS DOCUMENT, UNLESS ACTING UNDER THE DIRECTION OF THE LICENSED ARCHITECT WHOSE PROFESSIONAL SEAL IS AFFIXED HERETO, IS A VIOLATION OF TITLE VII, SECT. 7209 OF NEW YORK STATE LAW.
COPYRIGHT KAEYER, GARMENT + DAVIDSON ARCHITECTS & ENGINEERS, PC
ALL RIGHTS RESERVED.

Professional Seal

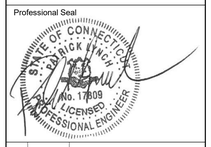

No.	Date	Issue
1	12/02/20	BUILDING PERMIT ISSUE

Sheet Title

ELECTRICAL KIOSK POWER & LIGHTING PLANS

Job No.	Date
NKGD0185.02	5/28/20
Scale	Drawn / Checked
AS NOTED	NL / KS

Sheet Number

E302

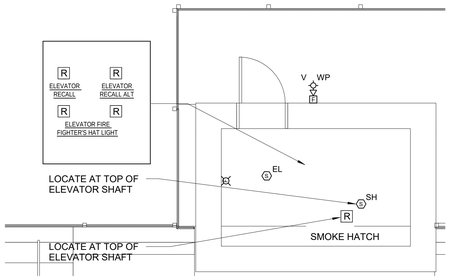

NORTH

3 FIRE ALARM ELEVATOR VESTIBULE 201 PART PLAN

SCALE: 1/4" = 1'-0"

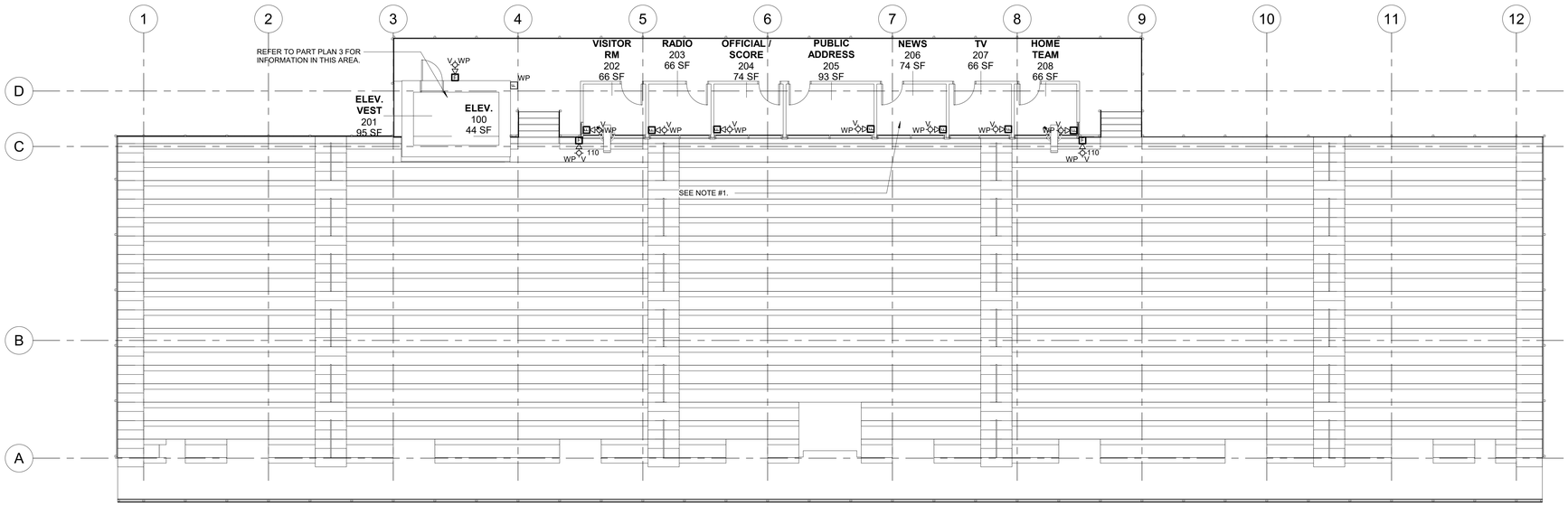

NORTH

2 FIRE ALARM HOME BLEACHER & PRESSBOX PLAN

SCALE: 1/8" = 1'-0"

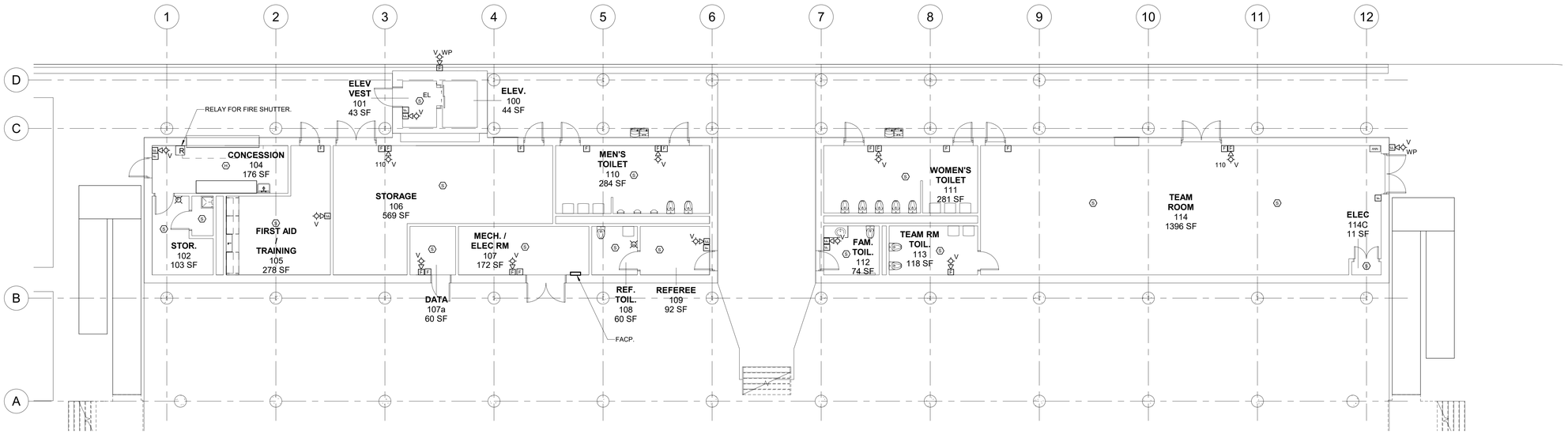

NORTH

1 FIRE ALARM 1ST FLOOR PLAN

SCALE: 1/8" = 1'-0"

NOTES:

1.) PLAN FOR INFORMATIONAL PURPOSES ONLY. THE PRESSBOX SHALL BE MANUFACTURED AND PROVIDED WITH ALL FIXTURES, DEVICES, PANELBOARDS, EQUIPMENT, WIRING, CONTROLS, ETC. BY PRESSBOX MANUFACTURER. CONTRACTOR TO PROVIDE FEEDER TO PRESSBOX PANELBOARDS, FIRE ALARM DEVICES AND WIRING TO FIRE ALARM DEVICES. SEE DWG. E501 FOR FEEDER AND FIRE ALARM SCOPE.

GREENWICH HS CARDINAL STADIUM PHASE 1A

Greenwich Public Schools
10 Hillside Road
Greenwich, CT 06830

KG+D listen imagine build
KG+D . ARCHITECTS PC
285 MAIN STREET MOUNT KISCO . NEW YORK . 10549
P:914.666.5900 KGDARCHITECTS.COM

OLA Consulting Engineers
50 Broadway,
Hawthorne, NY 10532
914.747.2800
8 West 38th Street,
Suite 501
New York, NY 10018
646.849.4110
olace.com

CONSTRUCTION DOCUMENTS

NOTE: ALL IDEAS, DESIGNS, ARRANGEMENTS AND PLANS INDICATED OR REPRESENTED BY THIS DRAWING ARE OWNED BY AND ARE THE PROPERTY OF KAEYER, GARMENT, & DAVIDSON ARCHITECTS, PC (KG&D), AND WERE CREATED FOR USE ON THIS PROJECT. NONE OF SUCH IDEAS, DESIGNS, ARRANGEMENTS OR PLANS SHALL BE USED BY OR DISCLOSED TO ANY PURPOSE WHATSOEVER WITHOUT THE WRITTEN PERMISSION OF (KG&D).

WRITTEN DIMENSIONS ON THIS DRAWING SHALL HAVE PRECEDENCE OVER SCALED DIMENSIONS. CONTRACTOR SHALL VERIFY ALL ACTUAL DIMENSIONS AND CONDITIONS ON THE JOB AND THE ARCHITECT MUST BE NOTIFIED OF ANY VARIATIONS FROM DIMENSIONS AND CONDITIONS SHOWN. SHOP DETAILS MUST BE SUBMITTED TO THIS OFFICE FOR APPROVAL BEFORE PROCEEDING WITH FABRICATION.

ALTERATIONS BY ANY PERSON, IN ANY WAY, OF ANY ITEM CONTAINED ON THIS DOCUMENT, UNLESS ACTING UNDER THE DIRECTION OF THE LICENSED ARCHITECT WHOSE PROFESSIONAL SEAL IS AFFIXED HERETO, IS A VIOLATION OF TITLE VII, SECT. 7209 OF NEW YORK STATE LAW.
COPYRIGHT KAEYER, GARMENT + DAVIDSON ARCHITECTS & ENGINEERS, PC
ALL RIGHTS RESERVED.

Professional Seal

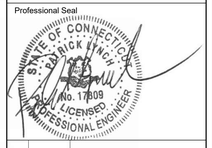

No.	Date	Issue
1	12/02/20	BUILDING PERMIT ISSUE

Sheet Title

FIRE ALARM 1ST FLOOR AND PRESSBOX PLAN

Job No.	Date
NKGD0185.02	08/23/19
Scale	Drawn / Checked
AS NOTED	NL / KS

Sheet Number

E401

ELECTRICAL NOTES:

1.) PROVIDE ASCO 5101 MODULES TO MONITOR THE INTEGRITY OF THE GENERATOR CONTROL WIRING. LOSS OF INTEGRITY OF THE REMOTE START CIRCUIT(S) SHALL INITIATE VISUAL AND AUDIBLE ANNUNCIATION OF GENERATOR MALFUNCTION AT THE GENERATOR LOCAL AND REMOTE ANNUNCIATOR(S) AND START THE GENERATOR.

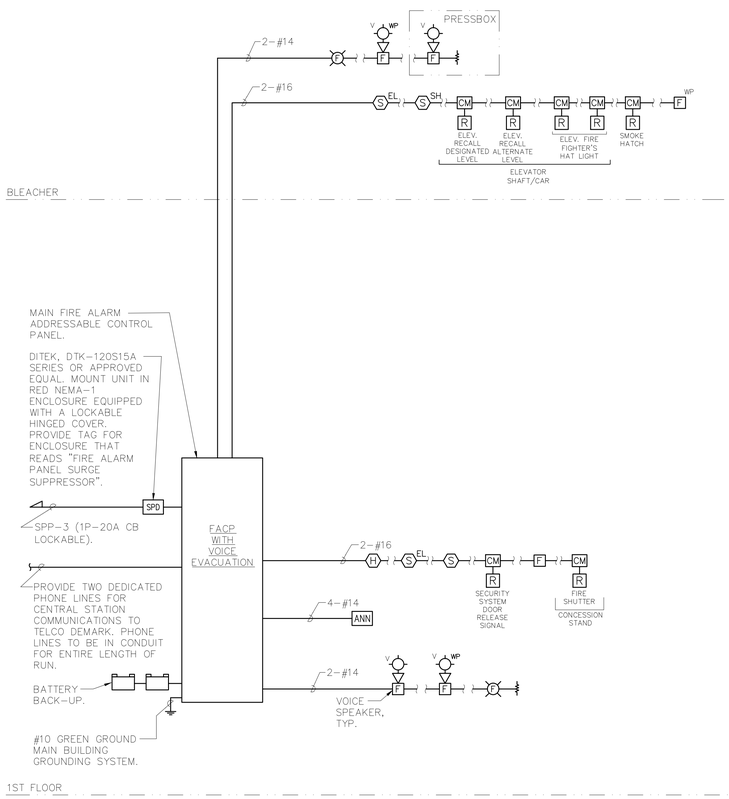

3 FIRE ALARM RISER DIAGRAM
SCALE: NONE

RISER NOTES:

1.) THIS IS NOT A POINT-TO-POINT WIRING DIAGRAM. PRIOR TO STARTING ANY WORK, A WORKING POINT-TO-POINT WIRING DIAGRAM SHALL BE OBTAINED FROM FIRE ALARM SYSTEM VENDOR AND PERFORM ALL WORK IN ACCORDANCE WITH THAT DIAGRAM.

2.) ELECTRICAL CONTRACTOR SHALL INCLUDE IN THE BASE BID ALL 120V CIRCUITS THAT ARE REQUIRED TO SUPPORT THE OPERATION OF THE FIRE ALARM SYSTEM. COORDINATE REQUIREMENTS WITH THE FIRE ALARM VENDOR.

3.) QUANTITY OF STROBE BOOSTER POWER SUPPLY PANELS AND ASSOCIATED 120V CIRCUITS SHALL BE COORDINATED WITH SELECTED FIRE ALARM SYSTEM MANUFACTURER AND/OR FIRE ALARM VENDOR.

4.) PROVIDE ALL NECESSARY HARDWARE AND PROGRAMMING TO PROVIDE THE CLIENT WITH 20% SPARE CAPACITY ON ALL INITIATING AND INDICATING CIRCUITS.

5.) PROVIDE AS PART OF THE BASE CONTRACT ALL LABOR AND MATERIALS TO INSTALL TWENTY (20) ADDITIONAL FIRE ALARM DEVICES DURING CONSTRUCTION. THE TWENTY (20) FIRE ALARM DEVICES CAN BE BUT NOT LIMITED TO SMOKE DETECTOR, HEAT DETECTOR, DOOR HOLDER, DUCT DETECTOR, FAN SHUTDOWN, TAMPER SWITCHES, FLOW SWITCHES, ETC. INCLUDE ALL LABOR AND MATERIALS INCLUDING WIRE, BOXES, CONDUIT, TERMINATIONS, HARDWARE, SOFTWARE, PROGRAMMING AND TESTING.

6.) ALL VISUAL ALARM DEVICES SHALL BE ADA COMPLIANT.

7.) CONTRACTOR TO PROVIDE SMOKE DETECTOR(S) IN ALL LOCATIONS CONTAINING FIRE ALARM CONTROL PANELS, DATA GATHERING PANELS, BOOSTER POWER SUPPLIES, OR ANY OTHER FIRE ALARM SYSTEM PANEL, WHETHER SHOWN ON PLANS OR NOT.

8.) SYSTEM SHALL BE A EMERGENCY VOICE/ALARM COMMUNICATION SYSTEM.

9.) CONTROL MODULES USED TO INITIATE EMERGENCY CONTROL FUNCTIONS THAT DO NOT FAIL IN A SAFE POSITION SHALL BE LOCATED WITHIN 3 FEET OF THE COMPONENT CONTROLLING THE EMERGENCY CONTROL FUNCTION PER NFPA 72. THIS INCLUDES, BUT IS NOT LIMITED TO, CONTROL MODULES CONNECTED TO FAN MOTOR CONTROLLERS, ELEVATOR CONTROLLERS, ETC.

10.) BATTERY BACKUP FOR FACP SHALL PROVIDE A MINIMUM OF 24 HOURS OF STAND BY POWER FOLLOWED BY 45 MINUTES OF ALARM.

11.) ALL FIRE ALARM PANELS, JUNCTION BOX COVERS, ETC SHALL BE PAINTED "FIRE DEPARTMENT RED".

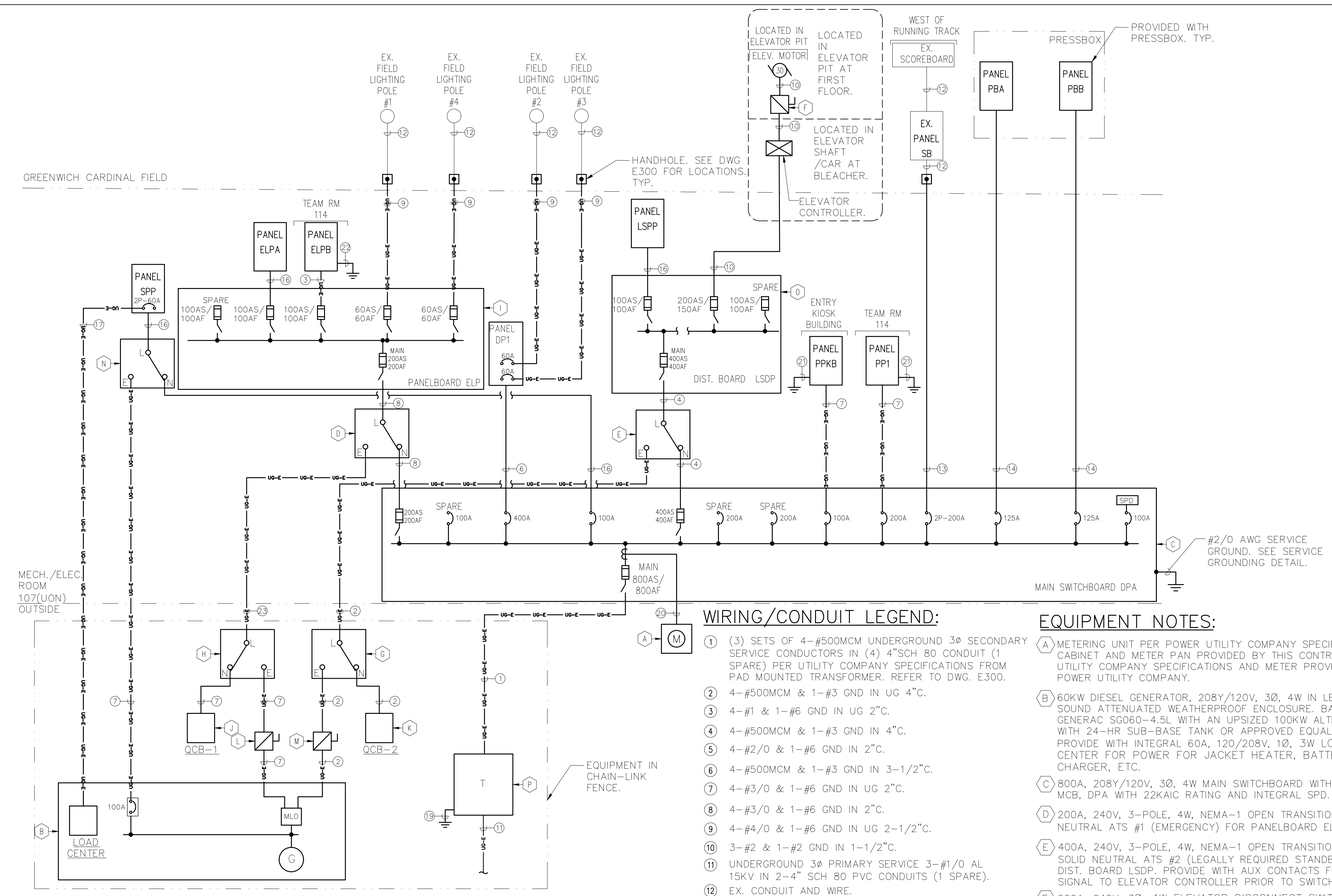

2 ELECTRICAL NEW WORK ONE-LINE DAIGRAM
SCALE: NONE

WIRING/CONDUIT LEGEND:

1. (3) SETS OF 4-#500MCM UNDERGROUND 3ø SECONDARY SERVICE CONDUCTORS IN (4) 4"SCH 80 CONDUIT (1 SPARE) PER UTILITY COMPANY SPECIFICATIONS FROM PAD MOUNTED TRANSFORMER. REFER TO DWG. E300.
2. 4-#500MCM & 1-#3 GND IN UG 4"C.
3. 4-#1 & 1-#6 GND IN UG 2"C.
4. 4-#500MCM & 1-#3 GND IN 4"C.
5. 4-#2/0 & 1-#6 GND IN 2"C.
6. 4-#500MCM & 1-#3 GND IN 3-1/2"C.
7. 4-#3/0 & 1-#6 GND IN UG 2"C.
8. 4-#3/0 & 1-#6 GND IN 2"C.
9. 4-#4/0 & 1-#6 GND IN UG 2-1/2"C.
10. 3-#2 & 1-#2 GND IN 1-1/2"C.
11. UNDERGROUND 3ø PRIMARY SERVICE 3-#1/0 AL 15KV IN 2-4" SCH 80 PVC CONDUITS (1 SPARE).
12. EX. CONDUIT AND WIRE.
13. 3-#4/0 & 1-#6 GND IN UG 2-1/2"C.
14. 4-#1 & 1-#6 GND IN 1-1/2"C.
15. 4-#4 & 1-#10 GND IN 1-1/4"C.
16. 4-#2 & 1-#8 GND IN 1-1/4"C.
17. 3-#2/0 & 1-#6 GND IN UG 2"C FOR 120/208V, 1ø, 3W LOAD CENTER PROVIDED IN GENERATOR. SEE GENERATOR CONTROL WIRING RISER DIAGRAM FOR ADDITIONAL INFORMATION.
18. 3-#2 & 1-#8 GND IN 2-1/2"C.
19. GROUND PER UTILITY COMPANY SPECIFICATIONS.
20. WIRING PER MANUFACTURER.
21. #4 AWG GROUNDING ELECTRODE CONDUCTOR. NEUTRAL TO GROUND BONDS ARE NOT TO BE INSTALLED. REFER TO DETAIL #1 AND #2 ON DWG. E703.
22. #8 AWG GROUNDING ELECTRODE CONDUCTOR. NEUTRAL TO GROUND BONDS ARE NOT TO BE INSTALLED. REFER TO DETAIL #2 ON DWG. E703.
23. 4-#350MCM & 1-#3 GND IN 3-1/2"C.

EQUIPMENT NOTES:

A. METERING UNIT PER POWER UTILITY COMPANY SPECIFICATIONS. CABINET AND METER PAN PROVIDED BY THIS CONTRACTOR PER UTILITY COMPANY SPECIFICATIONS AND METER PROVIDED BY POWER UTILITY COMPANY.

B. 60KW DIESEL GENERATOR, 208Y/120V, 3Ø, 4W IN LEVEL II SOUND ATTENUATED WEATHERPROOF ENCLOSURE. BASED ON GENERAC SG060-4.5L WITH AN UPSIZED 100KW ALTERNATOR WITH 24-HR SUB-BASE TANK OR APPROVED EQUAL. PROVIDE WITH INTEGRAL 60A, 120/208V, 1Ø, 3W LOAD CENTER FOR POWER FOR JACKET HEATER, BATTERY CHARGER, ETC.

C. 800A, 208Y/120V, 3Ø, 4W MAIN SWITCHBOARD WITH 800A MCB, DPA WITH 22KAIC RATING AND INTEGRAL SPD.

D. 200A, 240V, 3-POLE, 4W, NEMA-1 OPEN TRANSITION WITH SOLID NEUTRAL ATS #1 (EMERGENCY) FOR PANELBOARD ELP.

E. 400A, 240V, 3-POLE, 4W, NEMA-1 OPEN TRANSITION WITH SOLID NEUTRAL ATS #2 (LEGALLY REQUIRED STANDBY) FOR DIST. BOARD LSDP. PROVIDE WITH AUX CONTACTS FOR SIGNAL TO ELEVATOR CONTROLLER PRIOR TO SWITCHING.

F. 200A, 240V, 3Ø, 4W ELEVATOR DISCONNECT SWITCH WITH (3) 150A FUSES.

G. 400A, 208Y/120V, 3-POLE, 4W MANUAL TRANSFER SWITCH, MTS-1 SOLID NEUTRAL. NEMA-3R ENCLOSURE FOR DIST. BOARD LSDP.

H. 200A, 208Y/120V, 3-POLE, 4W MANUAL TRANSFER SWITCH, MTS-2 SOLID NEUTRAL. NEMA-3R ENCLOSURE FOR PANELBOARD ELP.

I. 200A, 208Y/120V, 3Ø, 4W DISTRIBUTION BOARD, ELP WITH 22KAIC RATING.

J. 200A, 208Y/120V, 3Ø, 4W GENERATOR QUICK CONNECT TAP BOX. NEMA-3R ENCLOSURE. CAM-LOCK POWER CONNECTORS. POWERTRON 200 SERIES OR EQUAL FOR PANELBOARD ELP.

K. 400A, 208Y/120V, 3Ø, 4W GENERATOR QUICK CONNECT TAP BOX. NEMA-3R ENCLOSURE. CAM-LOCK POWER CONNECTORS. POWERTRON 400 SERIES OR EQUAL FOR DIST. BOARD LSDP.

L. 200A, 240V, 3-POLE, 4W, NEMA-3R DISCONNECT SWITCH. PROVIDE WITH (3) 200A FUSES FOR PANELBOARD ELP.

M. 400A, 240V, 3-POLE, 4W, NEMA-3R DISCONNECT SWITCH. PROVIDE WITH (3) 400A FUSES FOR DIST. BOARD. LSDP.

N. 100A, 240V, 3-POLE, 4W, NEMA-1 OPEN TRANSITION WITH SOLID NEUTRAL ATS #3 (STANDBY) FOR PANELBOARD SPP.

O. 400A, 208Y/120V, 3Ø, 4W DISTRIBUTION BOARD, LSDP WITH 22KAIC RATING.

P. 150KVA PAD MOUNTED UTILITY TRANSFORMER FURNISHED BY THE UTILITY COMPANY AND INSTALLED BY THIS CONTRACTOR. UNDERGROUND VAULT AND GROUNDING PER UTILITY COMPANY SPECIFICATIONS BY THIS CONTRACTOR.

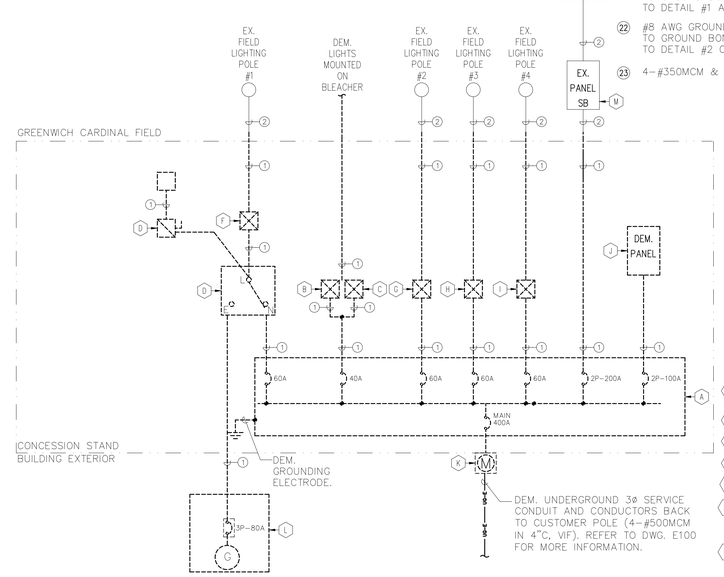

1 ELECTRICAL DEMOLITION ONE-LINE DAIGRAM
SCALE: NONE

WIRING/CONDUIT LEGEND:

1. REMOVE CONDUIT AND WIRE BACK TO SOURCE.
2. EXISTING CONDUIT AND WIRE TO REMAIN.

EQUIPMENT LEGEND:

A. DEM. 400A, 208Y/120V, 3PH. 4W, 42 POLE WITH 400A MCB PANELBOARD.
B. DEM. LIGHTING CONTACTOR.
C. DEM. LIGHTING CONTACTOR.
D. DEM. MANUAL TRANSFER SWITCH.
E. DEM. DISCONNECT SWITCH.
F. DISCONNECT AND REMOVE 100A GE 300 LINE CONTROL (CR360L4130ANAD) 60A FOR EX. FIELD LIGHTING POLE #1. RETURN TO OWNER.
G. DISCONNECT AND RELOCATE 100A GE 300 LINE CONTROL (CR360L4130ANAD) 60A FOR EX. FIELD LIGHTING POLE #2. RETURN TO OWNER.
H. DISCONNECT AND RELOCATE 100A GE 300 LINE CONTROL (CR360L4130ANAD) 60A FOR EX. FIELD LIGHTING POLE #3. RETURN TO OWNER.
I. DISCONNECT AND REMOVE 100A GE 300 LINE CONTROL (CR360L4130ANAD) 60A FOR EX. FIELD LIGHTING POLE #4. RETURN TO OWNER.
J. DEM. 125A, 120/240V, 3W, 1PH PANELBOARD.
K. DISCONNECT AND REMOVE UTILITY METER. TURN OVER METER TO UTILITY COMPANY.
L. DISCONNECT AND REMOVE EXTERIOR MOUNTED GENERAC 20KW PROPANE GENERATOR. TURN OVER TO CLIENT.
M. EX. 200A, 120/240V, 3W, 1PH SCOREBOARD PANELBOARD SB.

GREENWICH HS CARDINAL STADIUM PHASE 1A

GREENWICH PUBLIC SCHOOLS
10 HILLSIDE ROAD
GREENWICH CT 06830

KG+D . ARCHITECTS PC
285 MAIN STREET MOUNT KISCO . NEW YORK . 10549
P:914.666.5900 KGDARCHITECTS.COM

OLA Consulting Engineers
50 Broadway,
Hawthorne, NY 10532
914.747.2800
8 West 38th Street,
Suite 501
New York, NY 10018
646.849.4110
olace.com

BUILDING PERMIT ISSUE

NOTE: ALL IDEAS, DESIGNS, ARRANGEMENTS AND PLANS INDICATED OR REPRESENTED BY THIS DRAWING ARE OWNED BY AND ARE THE PROPERTY OF KAEYER, GARMENT & DAVIDSON ARCHITECTS, PC (KG&D), AND WERE CREATED FOR USE ON THIS PROJECT. NONE OF SUCH IDEAS, DESIGNS, ARRANGEMENTS OR PLANS SHALL BE USED BY OR DISCLOSED TO ANY PURPOSE WHATSOEVER WITHOUT THE WRITTEN PERMISSION OF (KG&D).

WRITTEN DIMENSIONS ON THIS DRAWING SHALL HAVE PRECEDENCE OVER SCALED DIMENSIONS. CONTRACTOR SHALL VERIFY ALL ACTUAL DIMENSIONS AND CONDITIONS ON THE JOB AND THE ARCHITECT MUST BE NOTIFIED OF ANY VARIATIONS FROM DIMENSIONS AND CONDITIONS SHOWN. SHOP DETAILS MUST BE SUBMITTED TO THIS OFFICE FOR APPROVAL BEFORE PROCEEDING WITH FABRICATION.

ALTERATIONS BY ANY PERSON, IN ANY WAY, OF ANY ITEM CONTAINED ON THIS DOCUMENT, UNLESS ACTING UNDER THE DIRECTION OF THE LICENSED ARCHITECT WHOSE PROFESSIONAL SEAL IS AFFIXED HERETO, IS A VIOLATION OF TITLE VII, SECT. 7209 (b) OF NEW YORK STATE LAW.
COPYRIGHT KAEYER, GARMENT • DAVIDSON ARCHITECTS & ENGINEERS, PC
ALL RIGHTS RESERVED.

Professional Seal

No.	Date	Issue
1	12/02/20	BUILDING PERMIT ISSUE

Sheet Title
ELECTRICAL ONE-LINE DIAGRAMS

Job No. NKGD0185.02	Date 08/23/2019
Scale AS NOTED	Drawn / Checked NL/KS

Sheet Number
E501

POLE ASSEMBLY

POLE QTY.	MOUNT HEIGHT	SHAFT A						SPLICE LENGTH	SHAFT B						SPLICE LENGTH	SHAFT C						SPLICE LENGTH	BASE PLATE				ANCHOR BOLT		
		PART#	LENGTH	B.O.D	T.O.D	THK.	LBS.	A	PART#	LENGTH	B.O.D	T.O.D	THK.	LBS.	B	PART#	LENGTH	B.O.D	T.O.D	THK.	LBS.	C	PART#	THK.	B.P.	B.C.	DIA	LENGTH	HOOK
–	–	NA																					NA	–	–	–	–	–	–
–	–	NA																					NA	–	–	–	–	–	–

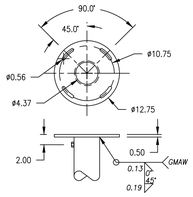

TOP PLATE

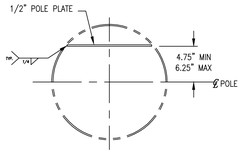

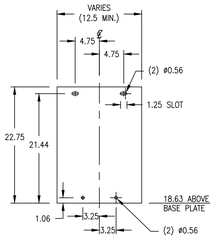

POLE PLATE

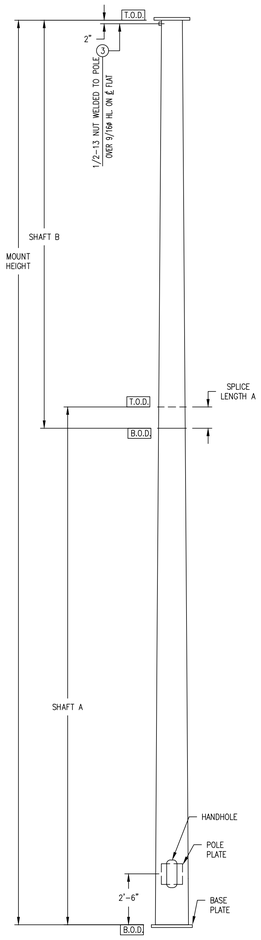

POLE ASSEMBLY

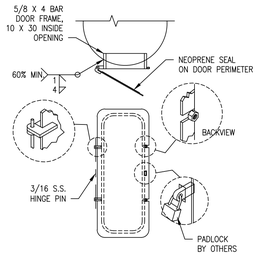

HAND HOLE

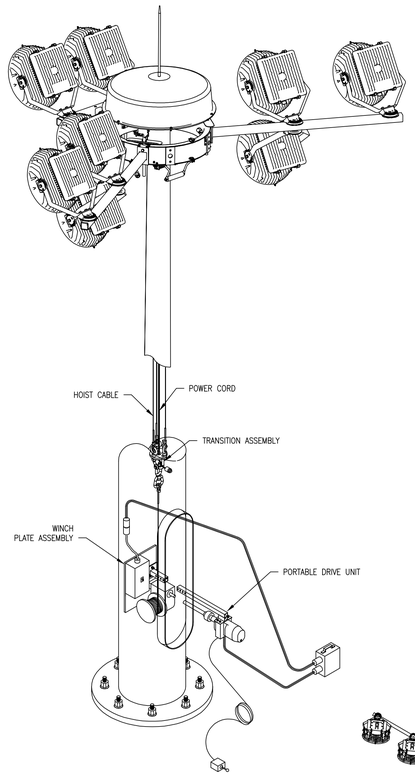

LOWERING DEVICE SYSTEM ASSEMBLY

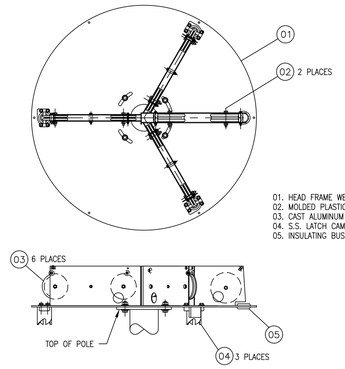

01. HEAD FRAME WELDMENT, A36 STEEL
02. MOLDED PLASTIC POWER CORD SHEAVE
03. CAST ALUMINUM HOIST CABLE SHEAVE
04. S.S. LATCH CAM
05. INSULATING BUSHING

HEAD FRAME ASSEMBLY

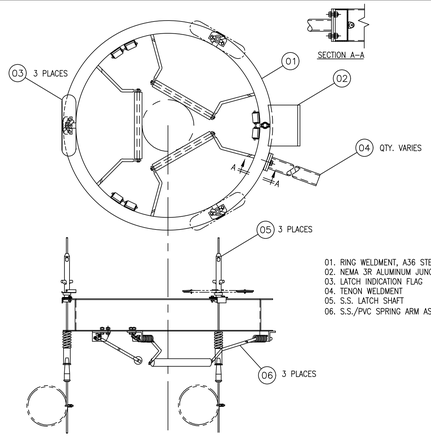

01. RING WELDMENT, A36 STEEL.
02. NEMA 3R ALUMINUM JUNCTION BOX.
03. LATCH INDICATION FLAG
04. TENON WELDMENT
05. S.S. LATCH SHAFT
06. S.S./PVC SPRING ARM ASSEMBLY

RING ASSEMBLY

PRELIMINARY DESIGN
NOT FOR PRODUCTION

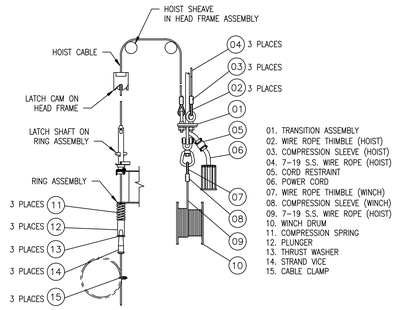

01. TRANSITION ASSEMBLY
02. WIRE ROPE THIMBLE (HOIST)
03. COMPRESSION SLEEVE (HOIST)
04. 7–19 S.S. WIRE ROPE (HOIST)
05. CORD RESTRAINT
06. POWER CORD
07. WIRE ROPE THIMBLE (WINCH)
08. COMPRESSION SLEEVE (WINCH)
09. 7–19 S.S. WIRE ROPE (HOIST)
10. WINCH DRUM
11. COMPRESSION SPRING
12. PLUNGER
13. THRUST WASHER
14. STRAND VICE
15. CABLE CLAMP

TRANSITION ASSEMBLY

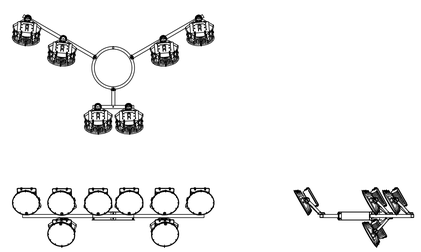

FIXTURE ARRAY
(8 MOUNT POSITIONS – SPORTSTAR)

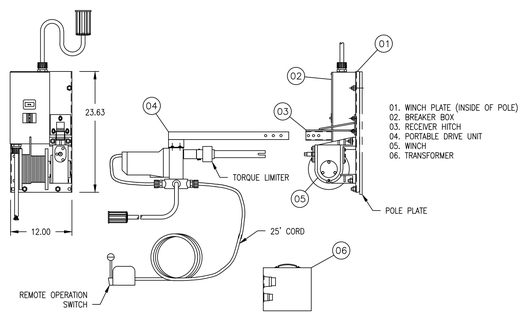

01. WINCH PLATE (INSIDE OF POLE)
02. BREAKER BOX
03. RECEIVER HITCH
04. PORTABLE DRIVE UNIT
05. WINCH
06. TRANSFORMER

WINCH PLATE ASSEMBLY

CHM INDUSTRIES
700 E McLEROY SUITE. A
SAGINAW, TEXAS 76179
682.286.0046 PH
682.286.0086 FAX
WWW.CHMINDUSTRIES.COM

CAROLINA HIGH MAST
A DIVISION OF CHM INDUSTRIES

THIS DOCUMENT IN DESIGN AND DETAIL IS PROPRIETARY PROPERTY OF CHM INDUSTRIES

TOLERANCES
UNITS ARE INCHES
UNLESS OTHERWISE NOTED
FRACTIONAL: ±1/16
DECIMAL: .X ±0.1
.XX ±0.03
.XXX ±0.005
ANGULAR: ±1/2°

DATE	BY
11/12/2020	DRAWN DPA
–	CHECKED –
–	REVISED –

GREENWICH CARDINAL STADIUM
TOP LATCH, EXTERNAL DRIVE, SPORTSTAR ARRAY
LOWERING DEVICE SYSTEM

SCALE: (D SIZE)	JOB NO.	DWG. NO.	SHT:	REV.
NONE	TBD	512–7–08	1 of 1	—

1 CAROLINA HIGH MAST TOP LATCH, EXTERNAL DRIVELOWERING DEVICE SYSTEM – FOR INFORMATIONAL PURPOSES ONLY
SCALE: NONE

GREENWICH HS
CARDINAL
STADIUM
PHASE 1A

GREENWICH PUBLIC SCHOOLS
10 HILLSIDE ROAD
GREENWICH CT 06830

KG+D listen imagine build
KG+D . ARCHITECTS PC
285 MAIN STREET MOUNT KISCO . NEW YORK . 10549
P:914.666.5900 KGDARCHITECTS.COM

OLA Consulting Engineers
50 Broadway,
Hawthorne, NY 10532
914.747.2800
8 West 38th Street,
Suite 501
New York, NY 10018
646.849.4110
olace.com

BUILDING PERMIT ISSUE

NOTE: ALL IDEAS, DESIGNS, ARRANGEMENTS AND PLANS INDICATED OR REPRESENTED BY THIS DRAWING ARE OWNED BY AND ARE THE PROPERTY OF KAEYER, GARMENT, & DAVIDSON ARCHITECTS, PC (KG&D), AND WERE CREATED FOR USE ON THIS PROJECT. NONE OF SUCH IDEAS, DESIGNS, ARRANGEMENTS OR PLANS SHALL BE USED BY OR DISCLOSED TO ANY PURPOSE WHATSOEVER WITHOUT THE WRITTEN PERMISSION OF (KG&D).

WRITTEN DIMENSIONS ON THIS DRAWING SHALL HAVE PRECEDENCE OVER SCALED DIMENSIONS. CONTRACTOR SHALL VERIFY ALL ACTUAL DIMENSIONS AND CONDITIONS ON THE JOB AND THE ARCHITECT MUST BE NOTIFIED OF ANY VARIATIONS FROM DIMENSIONS AND CONDITIONS SHOWN. SHOP DETAILS MUST BE SUBMITTED TO THIS OFFICE FOR APPROVAL BEFORE PROCEEDING WITH FABRICATION.

ALTERATIONS BY ANY PERSON, IN ANY WAY, OF ANY ITEM CONTAINED ON THIS DOCUMENT, UNLESS ACTING UNDER THE DIRECTION OF THE LICENCED ARCHITECT WHOSE PROFESSIONAL SEAL IS AFFIXED HERETO, IS A VIOLATION OF TITLE VI, SECT. 65 S.(L) OF NEW YORK STATE LAW.
COPYRIGHT KAEYER, GARMENT • DAVIDSON ARCHITECTS & ENGINEERS, PC
ALL RIGHTS RESERVED.

Professional Seal

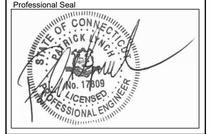

No.	Date	Issue
1	12/02/20	BUILDING PERMIT ISSUE

Sheet Title

WIRING DIAGRAMS

Job No.	Date
NKGD0185.02	8/23/2019
Scale	Drawn / Checked
AS NOTED	NL KS

Sheet Number

E502

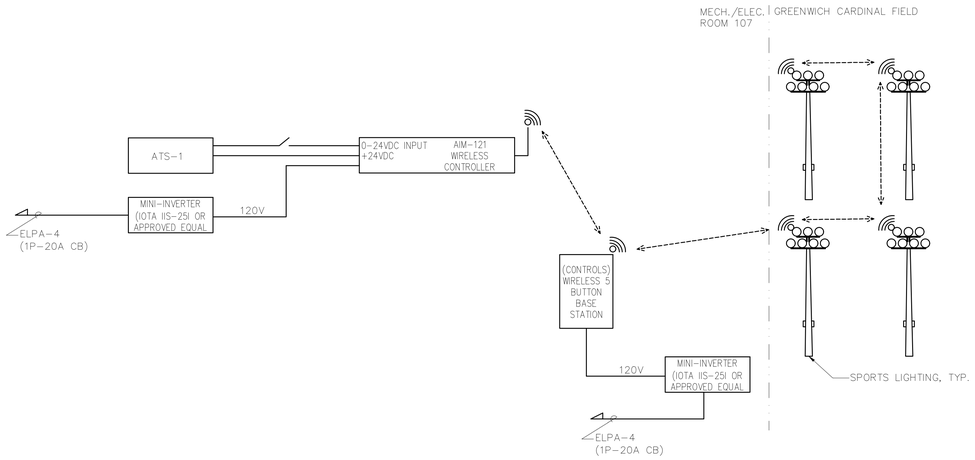

2 CAROLINA HIGH MAST LOWERING DEVICE SYSTEM CONTROL WIRING DIAGRAM
SCALE: NONE

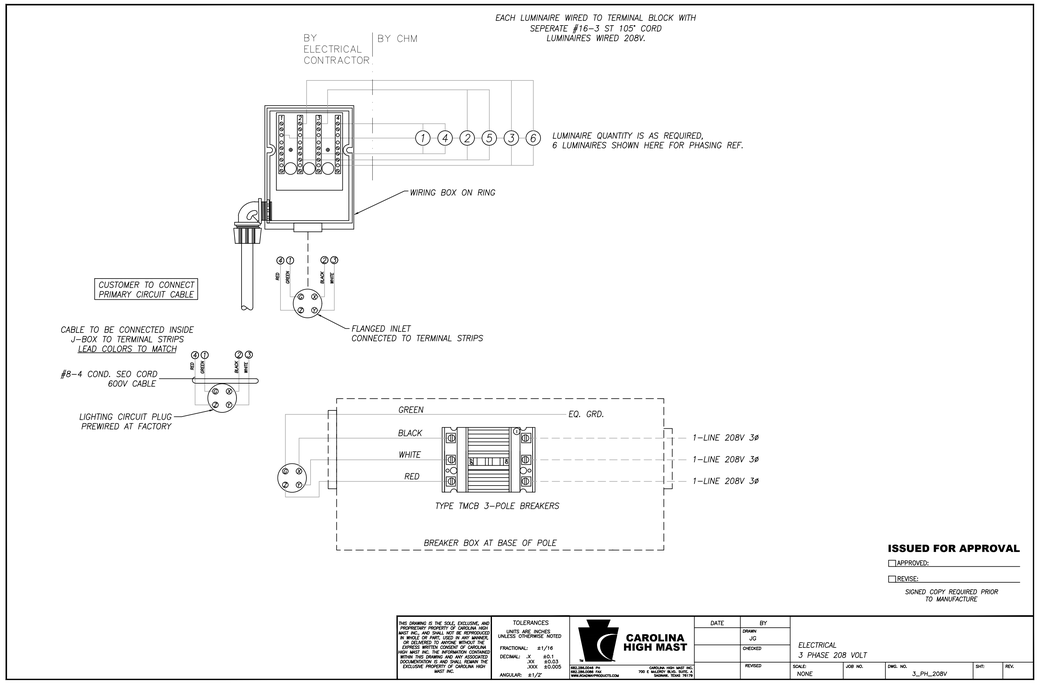

1 CAROLINA HIGH MAST LOWERING DEVICE SYSTEM FEEDER WIRING DIAGRAM
SCALE: NONE

GREENWICH HS
CARDINAL
STADIUM
PHASE 1A

GREENWICH PUBLIC SCHOOLS
10 HILLSIDE ROAD
GREENWICH CT 06830

KG+D listen imagine build
KG+D . ARCHITECTS PC
285 MAIN STREET MOUNT KISCO . NEW YORK . 10549
P:914.666.5900 KGDARCHITECTS.COM

OLA Consulting Engineers
50 Broadway,
Hawthorne, NY 10532
914.747.2800
8 West 38th Street,
Suite 501
New York, NY 10018
646.849.4110
olace.com

BUILDING PERMIT ISSUE

NOTE: ALL IDEAS, DESIGNS, ARRANGEMENTS AND PLANS INDICATED OR REPRESENTED BY THIS DRAWING ARE OWNED BY AND ARE THE PROPERTY OF KAEYER, GARMENT, & DAVIDSON ARCHITECTS, PC (KG&D), AND WERE CREATED FOR USE ON THIS PROJECT. NONE OF SUCH IDEAS, DESIGNS, ARRANGEMENTS OR PLANS SHALL BE USED BY OR DISCLOSED TO ANY PURPOSE WHATSOEVER WITHOUT THE WRITTEN PERMISSION OF (KG&D).

WRITTEN DIMENSIONS ON THIS DRAWING SHALL HAVE PRECEDENCE OVER SCALED DIMENSIONS. CONTRACTOR SHALL VERIFY ALL ACTUAL DIMENSIONS AND CONDITIONS ON THE JOB AND THE ARCHITECT MUST BE NOTIFIED OF ANY VARIATIONS FROM DIMENSIONS AND CONDITIONS SHOWN. SHOP DETAILS MUST BE SUBMITTED TO THIS OFFICE FOR APPROVAL BEFORE PROCEEDING WITH FABRICATION.

ALTERATIONS BY ANY PERSON, IN ANY WAY, OF ANY ITEM CONTAINED ON THIS DOCUMENT, UNLESS ACTING UNDER THE DIRECTION OF THE LICENCED ARCHITECT WHOSE PROFESSIONAL SEAL IS AFFIXED HERETO, IS A VIOLATION OF TITLE VII, SECT. 893 (b) OF NEW YORK STATE LAW.
COPYRIGHT KAEYER, GARMENT • DAVIDSON ARCHITECTS & ENGINEERS, PC
ALL RIGHTS RESERVED.

Professional Seal

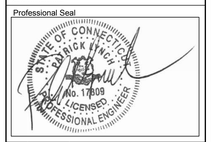

No.	Date	Issue
1	12/02/20	BUILDING PERMIT ISSUE

Sheet Title

WIRING
DIAGRAMS

Job No. NKGD0185.02	Date 8/23/2019
Scale AS NOTED	Drawn / Checked NL KS

Sheet Number

E503

PANEL ELPA SCHEDULE

MAIN RATING: 100A MAIN F.S.: MLO KAIC RATING: 10KAIC

VOLTAGE: 208Y/120V PHASE: 3 WIRE: 4 MOUNTING: SURFACE

CIRC. NO.	LOAD DESCRIPTION	FUSE AMPS	NO. OF POLES	NO. OF POLES	FUSE AMPS	LOAD DESCRIPTION	CIRC. NO.
1	LTG – RM 104/RM 102/RM 105	20	1	1	20	LTG – EXTERIOR BLDG.	2
3	LTG – STORAGE 106/VEST 101	20	1	1	20	BASE STATION CONTROLLER	4
5	LTG – MECH/ELEC RM 107	20	1	1	–	SPARE	6
7	SPARE	–	1	1	–	SPARE	8
9	SPARE	–	1	1	–	SPARE	10
11	SPARE	–	1	–	–	–	12
13	SPARE	–	1	–	–	–	14
15	–	–	–	–	–	–	16
17	–	–	–	–	–	–	18
19	–	–	–	–	–	–	20
21	–	–	–	–	–	–	22
23	–	–	–	–	–	–	24

LK – PROVIDE LOCKING TABS ON SWITCH HANDLES.

NOTES:
1.) PANELBOARD SHALL BE A FUSED COORDINATION PANEL AS MANUFACTURED BY LITTELFUSE, SERIES LCP OR APPROVED EQUAL.
2.) BRANCH FUSES SHALL BE 20A, FAST ACTING CLASS CC FUSES AS MANUFACTURED BY LITTELFUSE, KLKR SERIES OR APPROVED EQUAL. PROVIDE FUSES FOR ALL BRANCH SWITCHES.
3.) ENCLOSURE SHALL BE NEMA-1.
4.) ALL EMERGENCY PANELBOARDS SHALL BE FUSED COORDINATION PANELS. IF THE CONTRACTOR CHOOSES TO SUBSTITUTE FUSED COORDINATION PANELS WITH CIRCUIT BREAKER PANELBOARDS OR ANY OF THE FUSED SWITCHES FOR CIRCUIT BREAKERS, THE CONTRACTOR SHALL BE RESPONSIBLE TO PROVIDE A SHORT CIRCUIT STUDY AND COORDINATION STUDY PROVING THAT ALL OF THE OVERCURRENT PROTECTIVE DEVICES IN THE EMERGENCY SYSTEM ARE SELECTIVELY COORDINATED. THIS STUDY SHALL BE SUBMITTED TO THE ENGINEER FOR REVIEW AND APPROVAL AS A SHOP DRAWING PRIOR TO PURCHASING EQUIPMENT.
5.) PROVIDE PANEL BOARD WITH INTEGRAL SPD.

PANEL ELPB SCHEDULE

MAIN RATING: 100A MAIN F.S.: 100A KAIC RATING: 10KAIC

VOLTAGE: 208Y/120V PHASE: 3 WIRE: 4 MOUNTING: SURFACE

CIRC. NO.	LOAD DESCRIPTION	FUSE AMPS	NO. OF POLES	NO. OF POLES	FUSE AMPS	LOAD DESCRIPTION	CIRC. NO.
1	LTG – WOMEN TOIL 111	20	1	1	20	LTG – EXTERIOR BLDG.	2
3	LTG – TOIL 112/TEAM TOIL 113	20	1	1	–	SPARE	4
5	LTG – TEAM ROOM 114	20	1	1	–	SPARE	6
7	SPARE	–	1	1	–	SPARE	8
9	SPARE	–	1	1	–	SPARE	10
11	SPARE	–	1	–	–	–	12
13	SPARE	–	1	–	–	–	14
15	–	–	–	–	–	–	16
17	–	–	–	–	–	–	18
19	–	–	–	–	–	–	20
21	–	–	–	–	–	–	22
23	–	–	–	–	–	–	24

LK – PROVIDE LOCKING TABS ON SWITCH HANDLES.

NOTES:
1.) PANELBOARD SHALL BE A FUSED COORDINATION PANEL AS MANUFACTURED BY LITTELFUSE, SERIES LCP OR APPROVED EQUAL.
2.) BRANCH FUSES SHALL BE 20A, FAST ACTING CLASS CC FUSES AS MANUFACTURED BY LITTELFUSE, KLKR SERIES OR APPROVED EQUAL. PROVIDE FUSES FOR ALL BRANCH SWITCHES.
3.) ENCLOSURE SHALL BE NEMA-1.
4.) ALL EMERGENCY PANELBOARDS SHALL BE FUSED COORDINATION PANELS. IF THE CONTRACTOR CHOOSES TO SUBSTITUTE FUSED COORDINATION PANELS WITH CIRCUIT BREAKER PANELBOARDS OR ANY OF THE FUSED SWITCHES FOR CIRCUIT BREAKERS, THE CONTRACTOR SHALL BE RESPONSIBLE TO PROVIDE A SHORT CIRCUIT STUDY AND COORDINATION STUDY PROVING THAT ALL OF THE OVERCURRENT PROTECTIVE DEVICES IN THE EMERGENCY SYSTEM ARE SELECTIVELY COORDINATED. THIS STUDY SHALL BE SUBMITTED TO THE ENGINEER FOR REVIEW AND APPROVAL AS A SHOP DRAWING PRIOR TO PURCHASING EQUIPMENT.
5.) PROVIDE PANEL BOARD WITH INTEGRAL SPD.

PANEL DP1 SCHEDULE

MAIN RATING: 400A MAIN C.B.: MLO KAIC RATING: 22KAIC

VOLTAGE: 208Y/120V PHASE: 3 WIRE: 4 MOUNTING: SURFACE

CIRC. NO.	LOAD DESCRIPTION	BKR. AMPS	NO. OF POLES	NO. OF POLES	BKR. AMPS	LOAD DESCRIPTION	CIRC. NO.
1	MOTORIZED DAMPERS	20	1	1	20	SPARE	2
3	EUH-1 – STORAGE 102	15	2	2	15	EF-2	4
5							6
7	EUH-1 – ELEV VEST 101	15	2	1	20	SPARE	8
9				1	20	SPARE	10
11	EF-1	15	2	3	70	AHU-1	12
13							14
15	EWH-1 – JAN 103	40	2				16
17				2	40	EWH-1 – MENS TOILET 110	18
19	LTG – CONCESSION 104	20	1				20
21	LTG – STORAGE 102/JAN 103	20	1	1	20	LTG – MECH/ELEC RM 107	22
23	LTG – FIRST AID/TRAINING 105	20	1	1	20	CALL FOR AID	24
25	LTG – STORAGE 106/VEST 101	20	1	1	20	REC – CONCESSION 104 REF	26
27	LTG – MENS TLT 110/REF 109	20	1	1	20	SPARE	28
29	HAND DRYER – TOILET 110	20	1	1	20	REC – CONCESSION 104	30
31	HAND DRYER – TOILET 110	20	1	1	20	REC – STORAGE 106	32
33	HAND DRYER – REF TOILET 108	20	1	1	20	REC – TOILET 110/TOILET 108	34
35	REC – STORAGE 102/JAN 103	20	1	1	20	JBOX – WATER FOUNTAIN	36
37	REC – FIRST AID/TRAINING 105	20	1	1	20	REC – EXTERIOR GFI/VEST 101	38
39	REC – ELEV. VEST 201	20	1	1	20	REC – ROOFTOP EQUIPMENT	40
41	REC. – FOOD TRUCK	20	1	3	60	EX. FIELD LIGHTING POLE #2	42
43	REC. – FOOD TRUCK	20	1				44
45	REC. – FOOD TRUCK	20	1				46
47	SITE LIGHTING	20	2	3	60	EX. FIELD LIGHTING POLE #3	48
49							50
51	SITE LIGHTING	20	2				52
53				1	20	REC. – ROOF FOR CAMERA.	54
55	SITE LIGHTING	20	1	1	20	REC. – ROOF FOR CAMERA.	56
57	CONCESSION STAND FIRE SHUTTER.	20	1	1	25	FINTUBE ELEC. HEAT – REF 109	58
59	FINTUBE ELEC. HEAT – TOIL 110	30	1	1	20	FINTUBE ELEC. HEAT – TOIL 108	60
61	SPARE	20	1	1	20	REC – CONCESSION 104	62
63	SPARE	20	1	1	20	SPARE	64
65	SPARE	20	1	1	20	SPARE	66

LK – PROVIDE LOCKING TABS ON C.B.; GF – GFI TYPE C.B.; GP – GFP TYPE C.B.;
AF – ARC FAULT TYPE C.B.; ST – SHUNT TRIP C.B.

LIGHTING FIXTURE SCHEDULE

FIXTURE DESIGNATION	MANUFACTURER	CATALOG NUMBER	LAMPS	VOLTS	MOUNTING	LUMENS	REMARKS
A	RAB LIGHTING	ND6R20D/ E2+NDLED6RD-80-YN-W-W	(1) 20W LED	120V	RECESSED	1485	RAB LIGHTING 6" RECESSED LED DOWNLIGHT. PROVIDE WITH INTEGRAL BATTERY BACKUP WHERE DESIGNATED BY 'EM' IN ENTRY KIOSK BUILDING.
A-1	RAB LIGHTING	RDLED-4R-20-D-80-YN-W-W	(1) 20W LED	120V	RECESSED	1320	RAB LIGHTING 6" RECESSED LED DOWNLIGHT. PROVIDE WITH INTEGRAL BATTERY BACKUP WHERE DESIGNATED BY 'EM' IN ENTRY KIOSK BUILDING.
B	RAB LIGHTING	SK21XL25RDYN	(1) 25W LED	120V	SURFACE	2325	RAB LIGHTING 21" SURFACE MOUNTED LED FIXTURE.
C	RAB LIGHTING	BOA-XXFT-P-XXD10-40-YN-S/E2	10W/FT LED	120V	PENDANT	4' = 2744 8' = 5487	RAB LIGHTING PENDANT MOUNTED LED FIXTURE. LENGTH SPECIFIED ON PLANS.
D	RAB LIGHTING	STRP440-835U/E2	5W/FT LED	120V	SUSPENDED	5427	RAB LIGHTING PENDANT MOUNTED LED FIXTURE 4' LENGTH WITH STRP SHOOK ACCESSORY.
D1	WAC LIGHTING	WS-40720-3000K-9015W	15W LED	120V	SURFACE	1387	VISTA BATHROOM SCONCE LED FIXTURE.
F	RAB LIGHTING	SLIM26-N-W	26W LED	120V	WALL	3524	WAC LIGHTING. VISTA WALL MOUNTED LED SCONCE.
G	RAB LIGHTING	KNOOKFA-32-35K-W	(1) 17W LED	120V	SURFACE	1398	UNDERCABINET LIGHT.
H	ALCON LIGHTING	11122-2-X	(1) 27W LED	120V	SURFACE	2400	LED LINEAR FIXTURE. COORDINATE FINISH WITH ARCHITECT.
J1	CHM SPORTS LIGHTING	USR2-800-G-40-70-N4-1-GC-I	(1) 800W LED	120V	POLE	N4 = 89,399 N3 = 91,892 N2 = 92,533	(1) TYPE J1, (1) TYPE J2 AND (6) TYPE J3 NEW FIXTURES TO BE MOUNTED ON EXISTING POLE. TYPICAL FOR EACH LOCATION.
J2		USR2-800-G-40-70-N3-1-GC-I					
J3		USR2-800-G-40-70-N2-1-GC-I					
K	HUBBARTON FORGE	305993-10-GG-LED	XXW LED	120V	WALL	3524	WAC LIGHTING. VISTA WALL MOUNTED LED SCONCE.
L	CYCLONE LIGHTING	CY55P1B-FGC-3M-40W-3K	(1) 45W LED	208V	POLE	4108	EXTERIOR POLE MOUNTED LIGHT FIXTURE WITH 16FT POLE.
M	LITHONIA LIGHTING	RADB LED P4 27K SYM DBLXD	(1) 18.59W LED	120V	SURFACE	1268	EXTERIOR BOLLARD WALKWAY LIGHT FIXTURE.
HC; HCL	SIGNTEX INC. LIGHTING	HC: HANDICAPPED EXIT SIGN – MASTER HCL: FLOOR PROXIMITY HANDICAPPED EXIT SIGN – REMOTE CAEFP-BB-1/2-R-C-W-W	LED	120V	SURFACE		HANDICAPPED EXIT SIGN WITH MASTER OVER DOOR AND FLOOR PROXIMITY SYSTEM. PROVIDE A WIRE GUARD ON ALL EXIT SIGNS TAGGED "HCL". REFER TO DETAIL ON DRAWING E701.

NOTES:

1.) VERIFY ALL FIXTURE CATALOG NUMBERS FOR INTENDED APPLICATIONS WITH REQUIRED ACCESSORIES.
2.) ALL BALLASTS AND DRIVERS IN FIXTURES LOCATED OUTDOORS SHALL BE ZERO DEGREE RATED STARTING TEMPERATURE. REFER TO DRAWINGS FOR LOCATION OF FIXTURES.
3.) ALL EXIT AND EMERGENCY FIXTURES SHALL BE FED FROM EMERGENCY POWERED PANELS.
4.) ALL LIGHT FIXTURES TAGGED AS "EM" SHALL BE FED FROM EMERGENCY POWER PANELS. THESE FIXTURES SHALL BE SWITCHED AS INDICATED ALONG WITH LIGHTING FIXTURES FED FROM NORMAL POWER SOURCES. UPON LOSS OF NORMAL POWER, EMERGENCY LIGHT FIXTURES SHALL BE AUTOMATICALLY SHUNTED TO FULL BRIGHT REGARDLESS OF STATE OF CONTROLLING SWITCH. SEE DETAIL FOR ADDITIONAL INFORMATION.
5.) IN THE EVENT THE CONTRACTOR CHOOSES TO SUBSTITUTE LIGHT FIXTURES FOR THOSE THAT ARE SPECIFIED ON THE LIGHT FIXTURE SCHEDULE, THE CONTRACTOR SHALL SUBMIT POINT-TO-POINT PHOTOMETRIC CALCULATIONS FOR ALL AREAS WHERE THE SUBSTITUTED FIXTURES ARE INDICATED TO BE INSTALLED ON THE DRAWINGS. THESE CALCULATIONS SHALL BE SUBMITTED ALONG WITH THE LIGHT FIXTURE SHOP DRAWINGS.

PANEL PP1 SCHEDULE

MAIN RATING: 200A MAIN C.B.: 200A KAIC RATING: 22KAIC

VOLTAGE: 208Y/120V PHASE: 3 WIRE: 4 MOUNTING: SURFACE

CIRC. NO.	LOAD DESCRIPTION	BKR. AMPS	NO. OF POLES	NO. OF POLES	BKR. AMPS	LOAD DESCRIPTION	CIRC. NO.
1	EWH-1 – TEAM RM TOIL. 113	40	2	1	30	FINTUBE ELEC. HEAT – TOIL 111	2
3				1	30	FINTUBE ELEC. HEAT – TOIL 113	4
5	MOTORIZED DAMPERS	20	1	3	70	AHU-2	6
7	EF-3	15	2				8
9							10
11	EF-4	15	2	1	20	LTG – WOMENS TOILET 111	12
13				1	20	LTG – TEAM RM TOIL 113	14
15	REC – TEAM ROOM 114	20	1	1	20	LTG – TEAM ROOM 114	16
17	REC – TEAM ROOM 114	20	1	1	20	HAND DRYER – TOIL 113	18
19	REC – WOMENS TOILET 111	20	1	1	20	HAND DRYER – TOIL 113	20
21	REC – TOIL. 112/TOIL. 113	20	1	1	20	HAND DRYER – TOIL 111	22
23	HAND DRYER – TOIL. 112	20	1	1	20	HAND DRYER – TOIL 111	24
25	CALL FOR AID	20	1	1	20	REC – EXTERIOR GFI	26
27	JBOX – WATER FOUNTAIN	20	1	1	20	REC – ROOFTOP EQUIPMENT	28
29	SPARE	20	1	1	20	FINTUBE ELEC. HEAT – TOIL 112	30
31	SPARE	20	1	1	20	SPARE	32
33	SPARE	20	1	1	20	SPARE	34
35	SPARE	20	1	1	20	SPARE	36
37	SPARE	20	1	1	20	SPARE	38
39	SPARE	20	1	1	20	SPARE	40
41	SPARE	20	1	1	20	SPARE	42

LK – PROVIDE LOCKING TABS ON C.B.; GF – GFI TYPE C.B.; GP – GFP TYPE C.B.;
AF – ARC FAULT TYPE C.B.; ST – SHUNT TRIP C.B.

PANEL LSPP SCHEDULE

MAIN RATING: 100A MAIN F.S.: 100A KAIC RATING: 10KAIC

VOLTAGE: 208Y/120V PHASE: 3 WIRE: 4 MOUNTING: SURFACE

CIRC. NO.	LOAD DESCRIPTION	FUSE AMPS	NO. OF POLES	NO. OF POLES	FUSE AMPS	LOAD DESCRIPTION	CIRC. NO.
1	ESP-1	25	1	1	–	SPARE	2
3	ELEVATOR CONTROLLER	20	1	1	–	SPARE	4
5	ELEVATOR CAB LIGHTING	20	1	1	–	SPARE	6
7	ELEVATOR PIT RECEPTACLE	20	1	1	–	SPARE	8
9	ELEVATOR PIT LIGHT	20	1	–	–	–	10
11	SPARE	–	1	–	–	–	12
13	SPARE	–	1	–	–	–	14
15	–	–	–	–	–	–	16
17	–	–	–	–	–	–	18

LK – PROVIDE LOCKING TABS ON SWITCH HANDLES.

1.) PANELBOARD SHALL BE A FUSED COORDINATION PANEL AS MANUFACTURED BY LITTELFUSE, SERIES LCP OR APPROVED EQUAL.
2.) BRANCH FUSES SHALL BE 20A, FAST ACTING CLASS CC FUSES AS MANUFACTURED BY LITTELFUSE, KLKR SERIES OR APPROVED EQUAL. PROVIDE FUSES FOR ALL BRANCH SWITCHES.
3.) ENCLOSURE SHALL BE NEMA-1.
4.) ALL EMERGENCY PANELBOARDS SHALL BE FUSED COORDINATION PANELS. IF THE CONTRACTOR CHOOSES TO SUBSTITUTE FUSED COORDINATION PANELS WITH CIRCUIT BREAKER PANELBOARDS OR ANY OF THE FUSED SWITCHES FOR CIRCUIT BREAKERS, THE CONTRACTOR SHALL BE RESPONSIBLE TO PROVIDE A SHORT CIRCUIT STUDY AND COORDINATION STUDY PROVING THAT ALL OF THE OVERCURRENT PROTECTIVE DEVICES IN THE EMERGENCY SYSTEM ARE SELECTIVELY COORDINATED. THIS STUDY SHALL BE SUBMITTED TO THE ENGINEER FOR REVIEW AND APPROVAL AS A SHOP DRAWING PRIOR TO PURCHASING EQUIPMENT.
5.) PROVIDE PANEL BOARD WITH INTEGRAL SPD.

LIGHTING SYSTEM FUNCTIONAL TESTING/COMMISSIONING

I. FUNCTIONAL TESTING

PRIOR TO PASSING FINAL INSPECTION, THE CONTRACTOR SHALL PROVIDE EVIDENCE TO THE BUILDING OWNER AND THE ENGINEER THAT THE LIGHTING CONTROL SYSTEMS HAVE BEEN TESTED TO ENSURE THAT CONTROL HARDWARE AND SOFTWARE ARE CALIBRATED, ADJUSTED, PROGRAMMED AND IN PROPER WORKING CONDITION IN ACCORDANCE WITH THE CONSTRUCTION DOCUMENTS AND MANUFACTURER'S DOCUMENTS. FUNCTIONAL TESTING, FOR THE APPLICABLE CONTROL TYPE, SHALL BE IN ACCORDANCE WITH THE FOLLOWING:

1. OCCUPANT SENSOR CONTROLS

WHERE OCCUPANT SENSOR CONTROLS ARE PROVIDED, THE FOLLOWING PROCEDURES SHALL BE PERFORMED:

A. CERTIFY THAT THE OCCUPANT SENSOR HAS BEEN LOCATED AND AIMED IN ACCORDANCE WITH MANUFACTURER RECOMMENDATIONS.
B. FOR PROJECTS WITH SEVEN OF FEWER OCCUPANT SENSORS, EACH SENSOR SHALL BE TESTED.
C. FOR PROJECTS WITH MORE THAN SEVEN OCCUPANT SENSORS, TESTING SHALL BE DONE FOR EACH UNIQUE COMBINATION OF SENSOR TYPE AND SPACE GEOMETRY. WHERE MULTIPLES OF EACH UNIQUE COMBINATION OF SENSOR TYPE AND SPACE GEOMETRY ARE PROVIDED, NOT LESS THAN 10 PERCENT, BUT IN NO CASE LESS THAN ONE, OF EACH COMBINATION SHALL BE TESTED UNLESS THE BUILDING OFFICIAL OR DESIGN PROFESSIONAL REQUIRES A HIGHER PERCENTAGE TO BE TESTED. WHERE 30 PERCENT OR MORE OF THE TESTED CONTROLS FAIL, ALL REMAINING IDENTICAL COMBINATIONS SHALL BE TESTED.

FOR OCCUPANT SENSOR CONTROLS TO BE TESTED, VERIFY THE FOLLOWING:
i. WHERE OCCUPANT SENSOR CONTROLS INCLUDE STATUS INDICATORS, VERIFY CORRECT OPERATION.
ii. THE CONTROLLED LIGHTS TURN OFF OR DOWN TO THE PERMITTED LEVEL WITHIN THE REQUIRED TIME.
iii. FOR AUTO-ON OCCUPANT SENSOR CONTROLS, THE LIGHTS TURN ON TO THE PERMITTED LEVEL WHEN AN OCCUPANT ENTERS THE SPACE.
iv. FOR MANUAL-ON OCCUPANT SENSOR CONTROLS, THE LIGHTS TURN ON ONLY WHEN MANUALLY ACTIVATED.
v. THE LIGHTS ARE NOT INCORRECTLY TURNED ON BY MOVEMENT IN ADJACENT AREAS OR BY HVAC OPERATION.

2. TIME-SWITCH CONTROLS

WHERE TIME-SWITCH CONTROLS ARE PROVIDED, THE FOLLOWING PROCEDURES SHALL BE PERFORMED:

A. CONFIRM THAT THE TIME-SWITCH CONTROL IS PROGRAMMED WITH ACCURATE WEEKDAY, WEEKEND AND HOLIDAY SCHEDULES.
B. PROVIDE DOCUMENTATION TO THE OWNER OF TIME-SWITCH CONTROLS PROGRAMMING INCLUDING WEEKDAY, WEEKEND, HOLIDAY SCHEDULES, AND SET-UP AND PREFERENCE PROGRAM SETTINGS.
C. VERIFY THE CORRECT TIME AND DATE IN THE TIME SWITCH.
D. VERIFY THAT ANY BATTERY BACK-UP IS INSTALLED AND ENERGIZED.
E. VERIFY THAT THE OVERRIDE TIME LIMIT IS SET TO NOT MORE THAN 2 HOURS.
F. SIMULATE OCCUPIED CONDITION. VERIFY AND DOCUMENT THE FOLLOWING:
i. ALL LIGHTS CAN BE TURNED ON AND OFF BY THEIR RESPECTIVE AREA CONTROL SWITCH.
ii. THE SWITCH ONLY OPERATES LIGHTING IN THE ENCLOSED SPACE IN WHICH THE SWITCH IS LOCATED.
G. SIMULATE UNOCCUPIED CONDITION. VERIFY AND DOCUMENT THE FOLLOWING:
i. NONEXEMPT LIGHTING TURNS OFF.
ii. MANUAL OVERRIDE SWITCH ALLOWS ONLY THE LIGHTS IN THE ENCLOSED SPACE WHERE THE OVERRIDE SWITCH IS LOCATED TO TURN ON OR REMAIN ON UNTIL THE NEXT SCHEDULED SHUTOFF OCCURS.

II. DOCUMENTATION REQUIREMENTS

THE DOCUMENTS DESCRIBED IN THIS SECTION SHALL BE PROVIDED TO THE BUILDING OWNER OR OWNER'S AUTHORIZED AGENT WITHIN 60 DAYS OF THE DATE OF RECEIPT OF THE CERTIFICATE OF OCCUPANCY.

A. DRAWINGS:
i. AS-BUILT CONSTRUCTION DOCUMENTS, SHOWING THE LOCATION AND CATALOG NUMBER OF EACH PIECE OF EQUIPMENT.
B. MANUALS: AN OPERATING AND MAINTENANCE MANUAL SHALL BE PROVIDED AND INCLUDE THE FOLLOWING:
i. NAME AND ADDRESS OF NOT LESS THAN ONE SERVICE AGENCY FOR INSTALLED EQUIPMENT.
ii. A NARRATIVE OF HOW EACH SYSTEM IS INTENDED TO OPERATE, INCLUDING RECOMMENDED SET POINTS.
iii. SUBMITTAL DATA INDICATING ALL SELECTED OPTIONS FOR EACH PIECE OF LIGHTING EQUIPMENT AND LIGHTING CONTROLS.
iii. OPERATION AND MAINTENANCE MANUALS FOR EACH PIECE OF LIGHTING EQUIPMENT. REQUIRED ROUTINE MAINTENANCE ACTIONS, CLEANING AND RECOMMENDED RELAMPING SHALL BE CLEARLY IDENTIFIED.
iv. A SCHEDULE FOR INSPECTING AND RECALIBRATING ALL LIGHTING CONTROLS.
C. REPORT: A REPORT OF TEST RESULTS SHALL BE PROVIDED AND INCLUDE THE FOLLOWING.
i. RESULTS OF FUNCTIONAL PERFORMANCE TESTS.
ii. DISPOSITION OF DEFICIENCIES FOUND DURING TESTING, INCLUDING DETAILS OF CORRECTIVE MEASURES USED OR PROPOSED.

PANEL PPKB SCHEDULE

MAIN RATING: 100A MAIN C.B.: 100A KAIC RATING: 10KAIC

VOLTAGE: 208Y/120V PHASE: 3 WIRE: 4 MOUNTING: SURFACE

CIRC. NO.	LOAD DESCRIPTION	BKR. AMPS	NO. OF POLES	NO. OF POLES	BKR. AMPS	LOAD DESCRIPTION	CIRC. NO.
1	REC. – KIOSK BLDG.			1	20	REC. –TELCO/SECURITY.	2
3	REC. – KIOSK BLDG.	20	1	1	20	REC. –TELCO/SECURITY.	4
5	LTG. – KIOSK BLDG.	20	1	1	20	REC. – EXTERIOR.	6
7	LTG. – EXTERIOR KIOSK BLDG.	20	1	1	20	SPARE	8
9	SPARE	20	1	1	20	SPARE	10
11	SPARE	20	1	1	20	SPARE	12
13	SPARE	20	1	1	20	SPARE	14
15	SPARE	20	1	1	20	SPARE	16
17	SPARE	20	1	1	20	SPARE	18

LK – PROVIDE LOCKING TABS ON C.B.; GF – GFI TYPE C.B.; GP – GFP TYPE C.B.;
AF – ARC FAULT TYPE C.B.; ST – SHUNT TRIP C.B.

PANEL SPP SCHEDULE

MAIN RATING: 100A MAIN C.B.: MLO KAIC RATING: 10KAIC

VOLTAGE: 208Y/120V PHASE: 3 WIRE: 4 MOUNTING: SURFACE

CIRC. NO.	LOAD DESCRIPTION	BKR. AMPS	NO. OF POLES	NO. OF POLES	BKR. AMPS	LOAD DESCRIPTION	CIRC. NO.
1	RASP PANEL.	20	1	2	60	GENERATOR LOAD CENTER, GLC.	2
3	FIRE ALARM CONTROL PANEL.	20	1				4
5	HEAT TRACE SYSTEM	20	1	1	20	CALL FOR AID.	6
7	EUH-1 – MECH/ELEC 107	15	2	1	20	REC. – DATA RM 107A.	8
9				1	20	REC. – DATA RM. 107A.	10
11	TEL. CO/SECURITY REC	20	1	1	20	REC. – FIRE ALARM IP COMMUNICATOR	12
13	TEL. CO/SECURITY REC	20	1	2	15	AC-1/ACC-1 – DATA RM. 107A	14
15	REC. – MECH/ELEC. 107.	20	1				16
17	REC. – DATA RM 107A	20	1	1	20	GFI/WP RECEP.	18
19	REC. – DATA RM 107A	20	1	1	20	SPARE	20
21	REC. – DATA RM 107A	20	1	1	20	SPARE	22
24	SPARE	20	1	1	20	SPARE	24

LK – PROVIDE LOCKING TABS ON C.B.; GF – GFI TYPE C.B.; GP – GFP TYPE C.B.;
AF – ARC FAULT TYPE C.B.; ST – SHUNT TRIP C.B.

GREENWICH HS CARDINAL STADIUM PHASE 1A

GREENWICH PUBLIC SCHOOLS
10 HILLSIDE ROAD
GREENWICH CT 06830

KG+D listen imagine build
KG+D . ARCHITECTS PC
285 MAIN STREET MOUNT KISCO . NEW YORK . 10549
P:914.666.5900 KGDARCHITECTS.COM

OLA Consulting Engineers
50 Broadway, Hawthorne, NY 10532
914.747.2800
8 West 38th Street, Suite 501
New York, NY 10018
646.849.4110
olace.com
CONSULTING ENGINEERS

BUILDING PERMIT ISSUE

NOTE: ALL IDEAS, DESIGNS, ARRANGEMENTS AND PLANS INDICATED OR REPRESENTED BY THIS DRAWING ARE OWNED BY AND ARE THE PROPERTY OF KAEYER, GARMENT, & DAVIDSON ARCHITECTS, PC (KG&D), AND WERE CREATED FOR USE ON THIS PROJECT. NONE OF SUCH IDEAS, DESIGNS, ARRANGEMENTS OR PLANS SHALL BE USED BY OR DISCLOSED TO ANY PURPOSE WHATSOEVER WITHOUT THE WRITTEN PERMISSION OF (KG&D).

WRITTEN DIMENSIONS ON THIS DRAWING SHALL HAVE PRECEDENCE OVER SCALED DIMENSIONS. CONTRACTOR SHALL VERIFY ALL ACTUAL DIMENSIONS AND CONDITIONS ON THE JOB AND THE ARCHITECT MUST BE NOTIFIED OF ANY VARIATIONS FROM DIMENSIONS AND CONDITIONS SHOWN. SHOP DETAILS MUST BE SUBMITTED TO THIS OFFICE FOR APPROVAL BEFORE PROCEEDING WITH FABRICATION.

ALTERATIONS BY ANY PERSON, IN ANY WAY, OF ANY ITEM CONTAINED ON THIS DOCUMENT, UNLESS ACTING UNDER THE DIRECTION OF THE LICENCED ARCHITECT WHOSE PROFESSIONAL SEAL IS AFFIXED HERETO, IS A VIOLATION OF TITLE VII, SECT. 69.5 (b) OF NEW YORK STATE LAW.
COPYRIGHT KAEYER, GARMENT + DAVIDSON ARCHITECTS & ENGINEERS, PC
ALL RIGHTS RESERVED.

Professional Seal

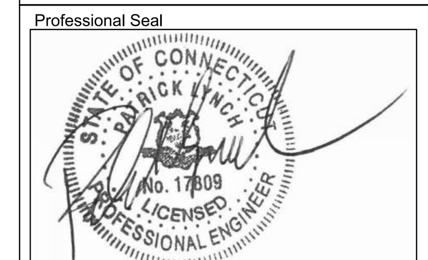

No.	Date	Issue
1	12/02/20	BUILDING PERMIT ISSUE

Sheet Title

ELECTRICAL SCHEDULES

Job No.	Date
NKGD0185.02	08/23/2019
Scale: AS NOTED	Drawn / Checked: NL/KS

Sheet Number

E601

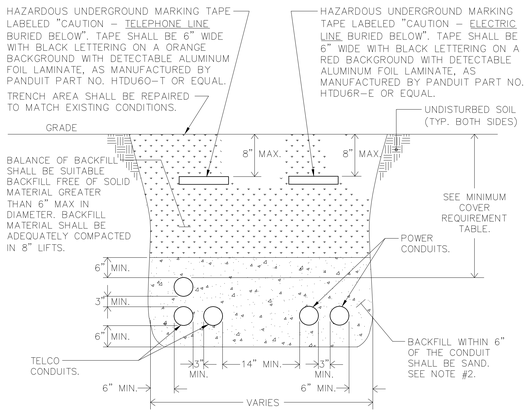

MINIMUM COVER REQUIREMENT TABLE	
LOCATION	NONMETALLIC RACEWAYS LISTED FOR DIRECT BURIAL WITHOUT CONCRETE ENCASEMENT OR OTHER APPROVED RACEWAYS
ALL LOCATION NOT SPECIFIED BELOW.	18"
IN TRENCH BELOW 2-IN. THICK CONCRETE OR EQUIVALENT.	12"
UNDER MINIMUM OF 4-IN. THICK CONCRETE EXTERIOR SLAB WITH NO VEHICULAR TRAFFIC AND THE SLAB EXTENDING NOT LESS THAN 6 IN. BEYOND THE UNDERGROUND INSTALLATION.	4" SEE NOTE #2.
UNDER STREETS, HIGHWAYS, ROADS, ALLEYS, DRIVEWAYS, AND PARKING LOTS.	24"

NOTES:

1.) DETAIL SHOWN FOR INFORMATION PURPOSES. SAME CONCEPT SHALL ALSO APPLY FOR SINGLE CONDUITS.

2.) SAND MAY BE OMITTED FOR INSTALLATIONS WHERE COVER REQUIREMENTS ARE 6" OR LESS.

9 TRENCHING DETAIL FOR CONDUIT
SCALE: NONE

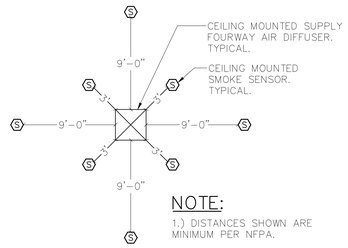

NOTE:

1.) DISTANCES SHOWN ARE MINIMUM PER NFPA.

6 CEILING MOUNTED SMOKE DETECTOR LOCATION WITH RESPECT TO AIR DIFFUSER
SCALE: NONE

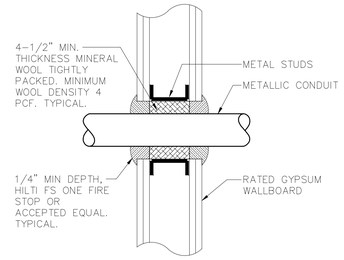

3 TYPICAL CONDUIT GYPSUM WALL PENETRATION DETAIL
SCALE: NONE

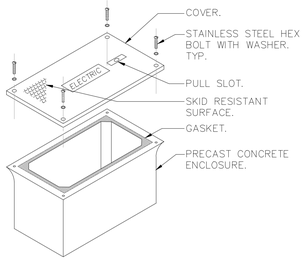

NOTES:

1.) HAND HOLE SHALL BE 18"L x 11"W x 12"H WITH OPEN BOTTOM AND RATED FOR VEHICULAR TRAFFIC AS MANUFACTURED BY QUAZITE, OR EQUAL. BOX SHALL BE INSTALLED IN ACCORDANCE WITH MANUFACTURER'S INSTRUCTIONS.

2.) PROVIDE 6" OF GRAVEL BELOW BOX.

3.) COVER SHALL BE IMPRINTED WITH THE APPROPRIATE DESCRIPTION OF BOX CONTENTS (I.E. ELECTRIC, TELEPHONE, DATA, CABLE TV, ETC.).

11 HAND HOLE DETAIL
SCALE: NONE

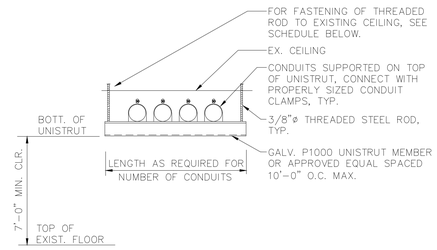

CEILING CONSTRUCTION	ANCHOR TYPE	EMBEDMENT
NORMAL WT. CONC	HILTI HDI DROP-IN ANCHOR	1" MIN.
CINDER CONCRETE	HILTI KWIK BOLT II	3" MIN.
HOLLOW CONSTRUCTION	TOGGLE BOLTS	NA

8 TRAPEZE SUPPORT DETAIL
SCALE: NONE

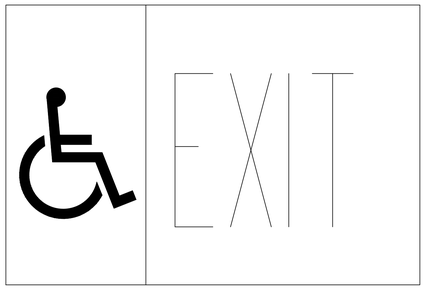

NOTES:

1.) LETTERS SHALL NOT BE LESS THAN 6" HIGH WITH PRACTICAL STROKES OF LETTERS NOT LESS THAN 3/4" WIDE. THE WORD "EXIT" SHALL BE IN LETTERS OF A WIDTH NOT LESS THAN 2" AND THE MINIMUM SPACING BETWEEN LETTERS SHALL BE NOT LESS THAN 3/8".

5 HANDICAPPED EXIT SIGN
SCALE: NONE

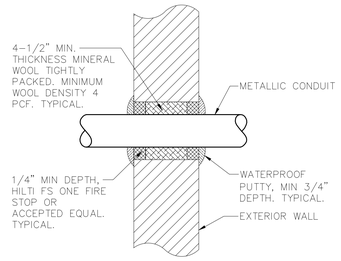

TYPICAL ABOVE GRADE CONDUIT EXTERIOR MASONRY WALL PENETRATION DETAIL
2 SCALE: NONE

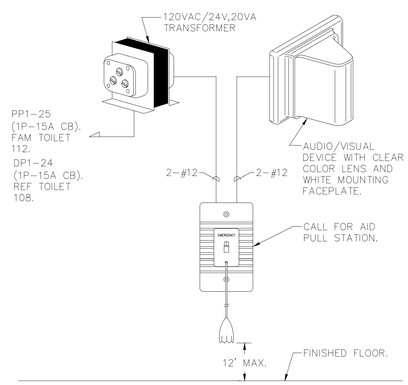

NOTE:

1.) SYSTEM KIT SHOWN BASED ON EDWARDS SIGNALING, MODEL #6538-G5 OR APPROVED EQUAL.

10 CALL FOR AID WIRING DIAGRAM
SCALE: NONE

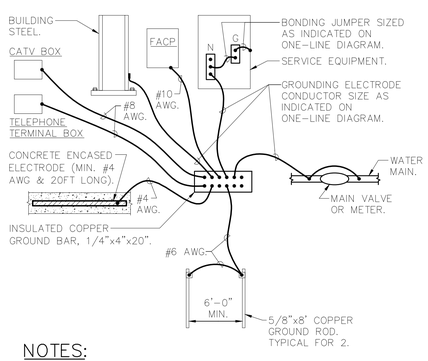

NOTES:

1.) CONNECTION TO WATER MAIN AND FIRE PROTECTION MAIN SHALL BE A MAXIMUM OF 5'-0" FROM WHERE THE PIPE ENTERS THE BUILDING AND BE PRIOR TO ANY METER, VALVE JOINT, ETC.

2.) ALL CONNECTIONS TO THE GROUND BAR SHALL BE MADE USING COMPRESSION LUGS SIZED TO ACCOMODATE THE CONDUCTORS.

7 SERVICE GROUNDING DETAIL – MECH/ELEC 107
SCALE: NONE

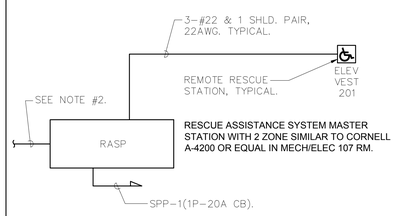

NOTES:

1.) PROVIDE ALL NECESSARY WIRING, MODULES, COMPONENTS, EXTENDER CABINET, AND PROGRAMMING REQUIRED.

2.) PROVIDE A PHONE LINE PLUS A DIALER FOR RESCUE ASSISTANCE SYSTEM MASTER STATION MONITORING.

4 RESCUE ASSISTANCE SYSTEM RISER DIAGRAM
SCALE: NONE

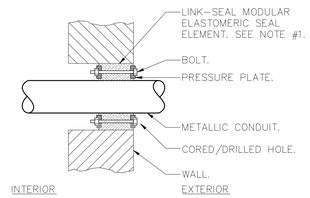

NOTES:

1.) SEAL ASSEMBLY BASED ON THUNDERLINE MODEL "C" LINK-SEAL MODULAR SEAL, WITH EPDM SEAL ELEMENT, COMPOSITE PRESSURE PLATES, STEEL WITH 2-PART ZINC DICHROMATE & ORGANIC COATING NUTS AND BOLTS AND WITH A OPERATING TEMPERATURE RANGE OF -40°F TO +250°F.
2.) PROVIDE AND INSTALL TWO SEALS WHEN PENETRATED WALL THICKNESS IS GREATER THAN 12".
3.) PROVIDE SCHEDULE 80 WALL SLEEVE FOR NEW WALL CONSTRUCTION PER MANUFACTURER'S REQUIREMENTS.

TYPICAL BELOW GRADE CONDUIT EXTERIOR MASONRY WALL PENETRATION DETAIL
1 SCALE: NONE

GREENWICH HS CARDINAL STADIUM PHASE 1A

GREENWICH PUBLIC SCHOOLS
10 HILLSIDE ROAD
GREENWICH CT 06830

KG+D listen imagine build
KG+D . ARCHITECTS PC
285 MAIN STREET MOUNT KISCO . NEW YORK . 10549
P:914.666.5900 KGDARCHITECTS.COM

OLA Consulting Engineers
50 Broadway,
Hawthorne, NY 10532
914.747.2800
8 West 38th Street,
Suite 501
New York, NY 10018
646.849.4110
olace.com

BUILDING PERMIT ISSUE

NOTE: ALL IDEAS, DESIGNS, ARRANGEMENTS AND PLANS INDICATED OR REPRESENTED BY THIS DRAWING ARE OWNED BY AND ARE THE PROPERTY OF KAEYER, GARMENT, & DAVIDSON ARCHITECTS, PC (KG&D), AND WERE CREATED FOR USE ON THIS PROJECT. NONE OF SUCH IDEAS, DESIGNS, ARRANGEMENTS OR PLANS SHALL BE USED BY OR DISCLOSED TO ANY PURPOSE WHATSOEVER WITHOUT THE WRITTEN PERMISSION OF (KG&D).

WRITTEN DIMENSIONS ON THIS DRAWING SHALL HAVE PRECEDENCE OVER SCALED DIMENSIONS. CONTRACTOR SHALL VERIFY ALL ACTUAL DIMENSIONS AND CONDITIONS ON THE JOB AND THE ARCHITECT MUST BE NOTIFIED OF ANY VARIATIONS FROM DIMENSIONS AND CONDITIONS SHOWN. SHOP DETAILS MUST BE SUBMITTED TO THIS OFFICE FOR APPROVAL BEFORE PROCEEDING WITH FABRICATION.

ALTERATIONS BY ANY PERSON, IN ANY WAY, OF ANY ITEM CONTAINED ON THIS DOCUMENT, UNLESS ACTING UNDER THE DIRECTION OF THE LICENCED ARCHITECT WHOSE PROFESSIONAL SEAL IS AFFIXED HERETO, IS A VIOLATION OF TITLE VI, SECT. 6B § 7209 OF NEW YORK STATE LAW.
COPYRIGHT KAEYER, GARMENT • DAVIDSON ARCHITECTS & ENGINEERS, PC
ALL RIGHTS RESERVED.

Professional Seal

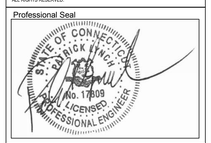

No.	Date	Issue
1	12/02/20	BUILDING PERMIT ISSUE

Sheet Title
ELECTRICAL DETAILS

Job No.	Date
NKGD0185.02	08/23/2019
Scale	Drawn / Checked
AS NOTED	NL/KS

Sheet Number
E701

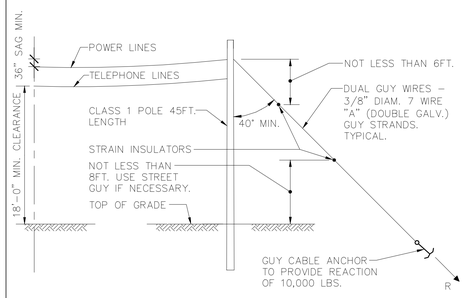

7 TYPICAL CABLE SAG AND POLE DETAIL
SCALE: NONE

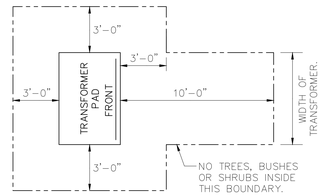

TRANSFORMER CLEARANCE NOTES:

1.) AREA IN FRONT OF DOOR TO BE CLEAR OF ALL ROCKS, STUMPS AND OTHER OBSTRUCTIONS SO THAT THE OPERATOR HAS A SAFE WORKING AREA.
2.) UTILITY COMPANY SHALL HAVE THE RIGHT TO CUT BACK GROWING BUSHES TO WITHIN STATED CLEARANCES.

4 CLEARANCE FOR PLANTING AROUND TRANSFORMER PAD
SCALE: NONE

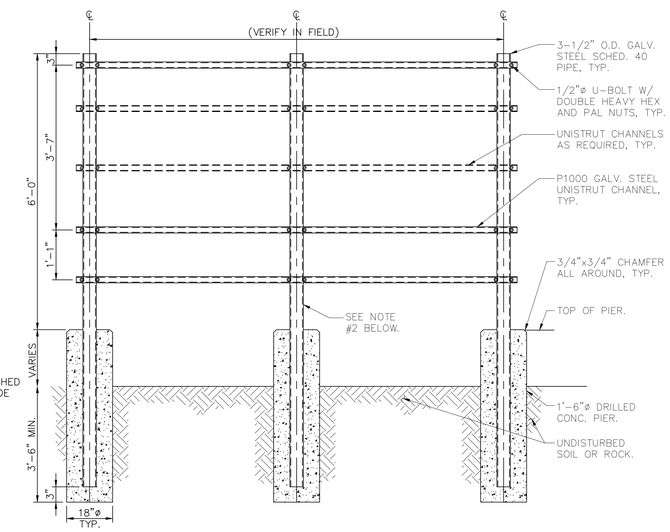

NOTES:
1.) DESIGN TYPICAL FOR MOUNTING ALL WALL MOUNTED POWER EQUIPMENT.
2.) CENTER PIER/SUPPORT CAN BE ELIMINATED IF WIDTH OF FRAME IS LESS THAN 9'-0".

2 EQUIPMENT SUPPORT FRAME DETAIL
SCALE: NONE

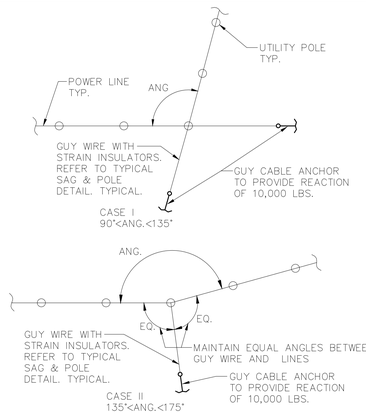

6 TYPICAL GUY WIRE ORIENTATION DETAIL
SCALE: NONE

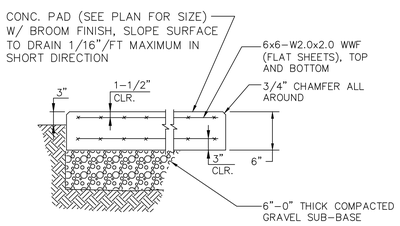

3 CONCRETE PAD DETAIL
N.T.S.

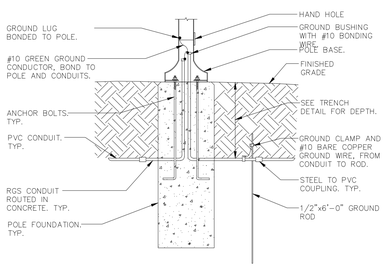

NOTE:
1.) SEE STRUCTURAL DRAWINGS FOR FOUNDATION DETAIL.

5 LIGHT POST ELECTRICAL INSTALLATION DETAIL
SCALE: NONE

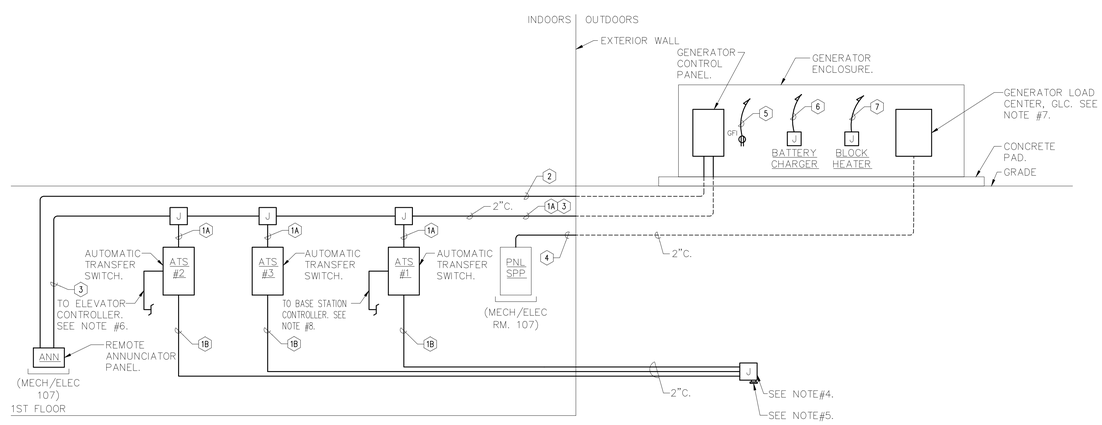

1 GENERATOR CONTROL WIRING RISER DIAGRAM
SCALE: NONE

LEGEND:

1A 4-#12 AWG. START CIRCUIT FROM AUTOMATIC TRANSFER SWITCH TO GENERATOR CONTROL PANEL.

1B 4-#12 AWG. START CIRCUIT FROM AUTOMATIC TRANSFER SWITCH TO JUNCTION BOX FOR TEMPORARY GENERATOR STARTING CIRCUIT CONNECTION.

2 TWISTED SHIELDED PAIR – BELDEN #9841. COMMUNICATIONS CIRCUIT FROM GENERATOR CONTROL PANEL TO REMOTE ANNUNCIATOR.

3 2-#8 AWG. POWER FROM GENERATOR SET BATTERY TO REMOTE ANNUNCIATOR.

4 FEEDER FOR GENERATOR LOAD CENTER. SEE ONE-LINE ON E501 FOR CIRCUIT INFORMATION.

5 GLC-2.

6 GLC-4

7 GLC-6,8

NOTES:

1.) WIRING ON THIS DETAIL SHOWN FOR INFORMATIONAL PURPOSES ONLY. COORDINATE EXACT SIZE, QUANTITY AND TYPE OF WIRING WITH MANUFACTURER'S SUGGESTION FOR EQUIPMENT PURCHASED.

2.) CONDUITS SHALL BE 1" U.O.N.

3.) SEE ONE-LINE DIAGRAM FOR POWER OUTPUT FEEDERS INFORMATION.

4.) NEMA-3R JUNCTION BOX WITH TERMINAL BLOCK FOR TEMPORARY ROLL UP GENERATOR STARTING CIRCUIT CONNECTION.

5.) 1" CONDUIT STUB WITH THREADED CAP ON BOTTOM OF BOX FOR TEMP WIRING.

6.) PROVIDE TRANSFER SIGNALS TO THE ELEVATOR CONTROLLER VIA FORM C CONTACTS IN ATS#2 TO IDENTIFY THAT TRANSFER TO GENERATOR POWER HAS OCCURED AND ANOTHER SIGNAL PRIOR TO TRANSFER BACK TO NORMAL POWER.

7.) GENERATOR TO BE PROVIDED WITH INTEGRAL 60A, 120/208V, 1ø, 3W LOAD CENTER FOR POWER FOR BLOCK HEATER, BATTERY CHARGER, ETC.

8.) PROVIDE TRANSFER SIGNALS TO THE BASE STATION CONTROLLER VIA FORM C CONTACTS IN ATS#1 TO IDENTIFY THAT TRANSFER TO GENERATOR POWER HAS OCCURED AND ANOTHER SIGNAL PRIOR TO TRANSFER BACK TO NORMAL POWER.

GREENWICH HS CARDINAL STADIUM PHASE 1A

GREENWICH PUBLIC SCHOOLS
10 HILLSIDE ROAD
GREENWICH CT 06830

KG+D listen imagine build
KG+D . ARCHITECTS PC
285 MAIN STREET MOUNT KISCO . NEW YORK . 10549
P:914.666.5900 KGDARCHITECTS.COM

OLA Consulting Engineers
50 Broadway,
Hawthorne, NY 10532
914.747.2800
8 West 38th Street,
Suite 501
New York, NY 10018
646.849.4110
olace.com

BUILDING PERMIT ISSUE

NOTE: ALL IDEAS, DESIGNS, ARRANGEMENTS AND PLANS INDICATED OR REPRESENTED BY THIS DRAWING ARE OWNED BY AND ARE THE PROPERTY OF KAEYER, GARMENT, & DAVIDSON ARCHITECTS, PC (KG&D), AND WERE CREATED FOR USE ON THIS PROJECT. NONE OF SUCH IDEAS, DESIGNS, ARRANGEMENTS OR PLANS SHALL BE USED BY OR DISCLOSED TO ANY PURPOSE WHATSOEVER WITHOUT THE WRITTEN PERMISSION OF (KG&D).

WRITTEN DIMENSIONS ON THIS DRAWING SHALL HAVE PRECEDENCE OVER SCALED DIMENSIONS. CONTRACTOR SHALL VERIFY ALL ACTUAL DIMENSIONS AND CONDITIONS ON THE JOB AND THE ARCHITECT MUST BE NOTIFIED OF ANY VARIATIONS FROM DIMENSIONS AND CONDITIONS SHOWN. SHOP DETAILS MUST BE SUBMITTED TO THIS OFFICE FOR APPROVAL BEFORE PROCEEDING WITH FABRICATION.

ALTERATIONS BY ANY PERSON, IN ANY WAY, OF ANY ITEM CONTAINED ON THIS DOCUMENT, UNLESS ACTING UNDER THE DIRECTION OF THE LICENCED ARCHITECT WHOSE PROFESSIONAL SEAL IS AFFIXED HERETO, IS A VIOLATION OF TITLE VII, SECT. 69.5 (e) OF NEW YORK STATE LAW.
COPYRIGHT KAEYER, GARMENT + DAVIDSON ARCHITECTS & ENGINEERS, PC
ALL RIGHTS RESERVED.

Professional Seal

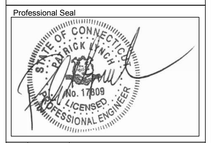

No.	Date	Issue
1	12/02/20	BUILDING PERMIT ISSUE

Sheet Title
ELECTRICAL DETAILS

Job No. NKGD0185.02	Date 08/23/2019
Scale AS NOTED	Drawn / Checked NL/KS

Sheet Number
E702

NOTES:

1.) MINI INVERTER SHALL HAVE 90 MINUTES OF BATTERY BACKUP TIME WITH 91% LUMEN OUTPUT FROM FIXTURES MINIMUM. UNIT INPUT/OUTPUT VOLTAGE SHALL BE 120/277V FIELD SELECTABLE. MINI INVERTER TO BE MANUFACTURED BY HIGHLITES, PCF SERIES OR APPROVED EQUAL.

2.) "SWITCH" REPRESENTS A SINGLE POLE SWITCH, A SET OF CONTACTS, A COMBINATION OF 3 WAY AND 4 WAY SWITCHES, ETC. SEE DRAWINGS FOR ACTUAL SWITCH CONFIGURATION.

3.) SEE LIGHTING PLANS FOR ACTUAL NUMBER OF LIGHT FIXTURES ON CIRCUIT.

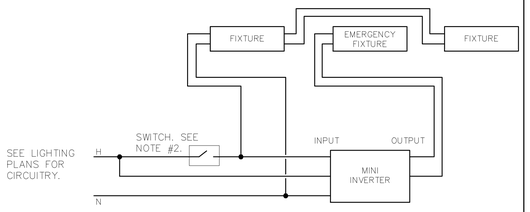

3 EMERGENCY FIXTURE MINI INVERTER SYSTEM WIRING DIAGRAM
SCALE: NONE

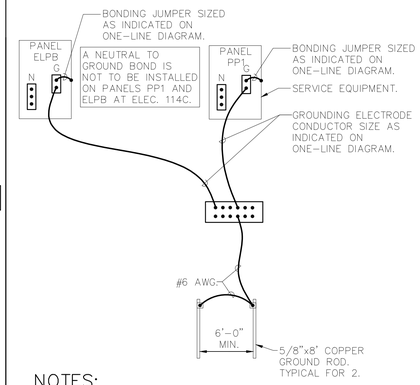

NOTES:

1.) CONNECTION TO WATER MAIN SHALL BE A MAXIMUM OF 5'-0" FROM WHERE THE PIPE ENTERS THE BUILDING AND BE PRIOR TO ANY METER, VALVE JOINT, ETC.

2.) ALL CONNECTIONS TO THE GROUND BAR SHALL BE MADE USING COMPRESSION LUGS SIZED TO ACCOMODATE THE CONDUCTORS.

2 GROUNDING DETAIL AT ELEC 114C
SCALE: NONE

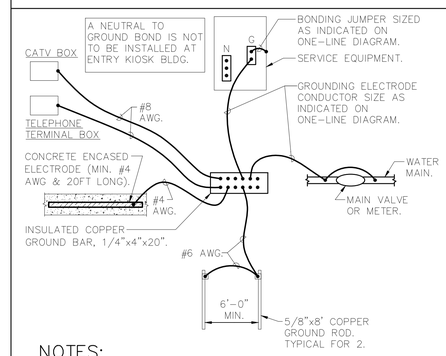

NOTES:

1.) CONNECTION TO WATER MAIN SHALL BE A MAXIMUM OF 5'-0" FROM WHERE THE PIPE ENTERS THE BUILDING AND BE PRIOR TO ANY METER, VALVE JOINT, ETC.

2.) ALL CONNECTIONS TO THE GROUND BAR SHALL BE MADE USING COMPRESSION LUGS SIZED TO ACCOMODATE THE CONDUCTORS.

1 GROUNDING DETAIL AT ENTRY KIOSK
SCALE: NONE

15 KV CABLE TESTING:

1. REFERENCES: ANSI/IEEE C2 – NATIONAL ELECTRICAL SAFETY CODE, ANSI/NFPA 70 – NATIONAL ELECTRICAL CODE, IEEE 48 – TEST PROCEDURES AND REQUIREMENTS FOR HIGH-VOLTAGE ALTERNATING-CURRENT CABLE TERMINATIONS.

2. SUBMITTALS: PROVIDE FOR CABLE, TERMINATIONS, ACCESSORIES & TEST REPORTS. MANUFACTURER'S INSTRUCTIONS: INDICATE APPLICATION CONDITIONS AND LIMITATIONS OF USE STIPULATED BY PRODUCT TESTING AGENCY SPECIFIED UNDER REGULATORY REQUIREMENTS.

3. PROJECT RECORD DOCUMENTS: ACCURATELY RECORD ACTUAL SIZES AND LOCATIONS OF CABLES.

4. OPERATION AND MAINTENANCE DATA: INCLUDE INSTRUCTIONS FOR TESTING AND CLEANING CABLE AND ACCESSORIES.

5. QUALIFICATIONS: MANUFACTURER, COMPANY SPECIALIZING IN MANUFACTURING PRODUCTS SPECIFIED IN THIS SECTION WITH MINIMUM THREE YEARS DOCUMENTED EXPERIENCE. INSTALLER, COMPANY SPECIALIZING IN INSTALLING PRODUCTS SPECIFIED IN THIS SECTION WITH MINIMUM THREE YEARS DOCUMENTED EXPERIENCE.

6. MANUFACTURERS: 1) OKONITE COMPANY, 2) KING WIRE INC. 3) KERITE.

7. FIELD QUALITY CONTROL: INSPECT EXPOSED CABLE SECTIONS FOR PHYSICAL DAMAGE, PROPER CONNECTIONS AS SHOWN ON DRAWINGS AND AS REQUIRED, GROUNDING, CABLE SUPPORTS, AND TERMINATIONS FOR PROPER INSTALLATION. PERFORM DC HIGH POTENTIAL TEST OF EACH CONDUCTOR IN ACCORDANCE WITH NEMA WC 8 AND THE FOLLOWING REQUIRED TESTS.

8. THE 15KV CABLE SHALL BE DC PROOF TESTED BY AN INDEPENDENT TESTING FIRM. THE ATTACHED DC PROOF TESTING FORM SHALL BE COMPLETED BY THE TESTING FIRM AND SUBMITTED FOR REVIEW.

9. TEST LEVELS: A DIRECT-CURRENT VOLTAGE TEST SHALL BE MADE FOR SOLID DIELECTRIC CABLE IN ACCORDANCE WITH THE FOLLOWING TABLE:

RATED CIRCUIT VOLTAGE PHASE TO PHASE KV	DC TEST VOLTAGE KV
15	40

   A. THE VOLTAGE SHALL BE APPLIED BETWEEN THE CONDUCTOR AND THE METALLIC SHEATH, SHIELD OR CONCENTRIC NEUTRAL WIRES.

   B. THE MAXIMUM APPLIED DIRECT-CURRENT VOLTAGE SHALL NOT BE GREATER THAN THREE (3) TIMES THE ALTERNATING CURRENT VOLTAGE RATING OF THE CABLE OR CABLE ACCESSORY.

   C. THE RATE OF INCREASE FROM THE INITIALLY APPLIED VOLTAGE TO THE SPECIFIED TEST VOLTAGE SHALL BE APPROXIMATELY UNIFORM AND SHALL NOT BE OVER 100 PERCENT IN 10 SECONDS OR LESS THAN 100 PERCENT IN 60 SECONDS.

   D. THE DURATION OF THE TEST SHALL BE 15 MINUTES AT FULL VOLTAGE AND THE LEAKAGE CURRENT SHALL NOT BE RECORDED UNTIL AT FULL VOLTAGE. THE CABLE MUST MAINTAIN THE SPECIFIED TEST VOLTAGE FOR THE DURATION OF THE TEST TO BE CONSIDERED ACCEPTABLE.

10. PREPARATION FOR TESTING: THE INDEPENDENT TESTING COMPANY PERSONNEL SHALL COMPLY WITH THE FOLLOWING MINIMUM REQUIREMENTS:

   A. SAFETY – (TO PRECLUDE ACCIDENTAL CONTACT WITH THE CABLE(S) BEING TESTED)

      1. THE TEST AREA AND THE CABLE (S) UNDER TEST SHALL BE ROPED OFF.

      2. "DANGER-HIGH VOLTAGE" SIGNS SHALL BE DISPLAYED AROUND ALL ROPED OFF AREAS.

      3. TEST PERSONNEL SHALL BE STATIONED AT ALL EXPOSED CABLE TERMINATIONS.

   B. CLEARANCES – THE CABLE UNDER TEST MUST BE COMPLETELY ISOLATED FROM ALL EQUIPMENT.

      1. TO REDUCE LEAKAGE CURRENT DURING TESTING, CLEAN THE TERMINATIONS AND COVER ANY EXPOSED METALLIC SURFACES WITH PLASTIC WRAP OR DUCT SEAL TO REDUCE CORONA EFFECTS.

      2. MAINTAIN A CLEARANCE OF AT LEAST TWO FEET BETWEEN TEST POINT OR EXPOSED CABLE ENDS UNDER TEST AND ANY UNENERGIZED SURFACE AND AT LEAST THREE FEET BETWEEN TEST POINT OR EXPOSED CABLE ENDS AND ANY ENERGIZED SURFACE (BUS IN SWITCHGEAR, OTHER CIRCUITS OR CABLES, ETC.)

11. GROUNDING:

   A. THE METALLIC SHIELDS (CONCENTRIC NEUTRALS, COPPER OR ZINC TAPES, DRAIN WIRES) OR METALLIC SHEATHS OF SHIELDED CABLE MUST BE GROUNDED DURING THE TEST.

   B. CABLES NOT UNDER TEST MUST BE GROUNDED ON BOTH CONDUCTORS AND METALLIC SHEATHS.

   C. AFTER EACH CABLE TEST THE CABLE SHALL BE ALLOWED TO DISCHARGE TO 10KV OR BELOW BEFORE APPLYING A GROUND. AN APPROPRIATE GROUNDING STICK OR RUBBER GLOVE SHALL BE USED AND/OR WORN WHEN APPLYING THE GROUND. GROUND MUST REMAIN ON FOR AT LEAST 15 MINUTES TO DRAIN CHARGE FROM TESTING.

12. CONNECTIONS

   A. ALL BOLTED TERMINATIONS SWITCHES SHALL BE UNBOLTED AND PULLED INTO CLEARANCES AS NOTED ABOVE.

   B. ALL LEADS EXTENDING FROM THE TOP OF ANY TERMINATION TO OVERHEAD LINES MUST BE REMOVED AND THE TERMINATION LOWERED TO OBTAIN ADEQUATE CLEARANCE.

13. SAMPLE: REPORTING FORM – DC PROOF TESTING

REPORTING FORM – DC PROOF TESTING

TESTING COMPANY NAME_____

CUSTOMER_____

LOCATION_____

DATE OF TEST_____ TESTER'S NAME_____

HUMIDITY_____% TEMPERATURE_____

WEATHER: CLOUDY____ RAIN____ SNOW____

FOG____ SUNNY____

PHASE IDENTIFICATION			
KV TEST VOLTAGE			
MICROAMPERES	µ	µ	µ
TEST SET LEAKAGE			
15 SECONDS			
30 SECONDS			
45 SECONDS			
1 MINUTE			
2 MINUTES			
3 MINUTES			
4 MINUTES			
5 MINUTES			
6 MINUTES			
7 MINUTES			
8 MINUTES			
9 MINUTES			
10 MINUTES			
11 MINUTES			
12 MINUTES			
13 MINUTES			
14 MINUTES			
15 MINUTES			

CABLE MANUFACTURER:_____

CABLE RELATED VOLTAGE:_____

OPERATING VOLTAGE:_____

CONDUCTOR SIZE: _____

TYPE OF INSULATION:_____

NUMBER OF CONDUCTORS:_____

LENGTH: _____

AGE: _____

TYPE OF JACKET: _____

SEPARATE NEUTRAL:_____

OR

CONCENTRIC NEUTRAL WIRES: _____

TYPE OF TERMINATIONS AT TEST END: _____

TYPE OF TERMINATIONS AT OPPOSITE END: _____

REMARKS: _____

14. PROTECTION:

   A. PROTECT INSTALLED CABLES FROM ENTRANCE OF MOISTURE.

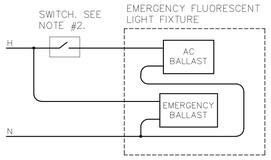

NOTES:

1.) THE CONNECTION TO THE LAMPS IS NOT SHOWN – FOLLOW MANUFACTURER WIRING DIAGRAMS.

2.) "SWITCH" REPRESENTS A SINGLE POLE SWITCH, A SET OF CONTACTS, A COMBINATION OF 3 WAY AND 4 WAY SWITCHES, ETC. SEE DRAWINGS FOR ACTUAL SWITCH CONFIGURATION.

4 SWITCHED EMERGENCY FIXTURE WIRING DIAGRAM
SCALE: NONE

GREENWICH HS CARDINAL STADIUM PHASE 1A

GREENWICH PUBLIC SCHOOLS
10 HILLSIDE ROAD
GREENWICH CT 06830

KG+D . ARCHITECTS PC
285 MAIN STREET MOUNT KISCO . NEW YORK . 10549
P:914.666.5900 KGDARCHITECTS.COM

OLA Consulting Engineers
50 Broadway, Hawthorne, NY 10532
914.747.2800
8 West 38th Street, Suite 501 New York, NY 10018
646.849.4110
olace.com

BUILDING PERMIT ISSUE

NOTE: ALL IDEAS, DESIGNS, ARRANGEMENTS AND PLANS INDICATED OR REPRESENTED BY THIS DRAWING ARE OWNED BY AND ARE THE PROPERTY OF KAEYER, GARMENT, & DAVIDSON ARCHITECTS, PC (KG&D), AND WERE CREATED FOR USE ON THIS PROJECT. NONE OF SUCH IDEAS, DESIGNS, ARRANGEMENTS OR PLANS SHALL BE USED BY OR DISCLOSED TO ANY PURPOSE WHATSOEVER WITHOUT THE WRITTEN PERMISSION OF (KG&D).

WRITTEN DIMENSIONS ON THIS DRAWING SHALL HAVE PRECEDENCE OVER SCALED DIMENSIONS. CONTRACTOR SHALL VERIFY ALL ACTUAL DIMENSIONS AND CONDITIONS ON THE JOB AND THE ARCHITECT MUST BE NOTIFIED OF ANY VARIATIONS FROM DIMENSIONS AND CONDITIONS SHOWN. SHOP DETAILS MUST BE SUBMITTED TO THIS OFFICE FOR APPROVAL BEFORE PROCEEDING WITH FABRICATION.

ALTERATIONS BY ANY PERSON, IN ANY WAY, OF ANY ITEM CONTAINED ON THIS DOCUMENT, UNLESS ACTING UNDER THE DIRECTION OF THE LICENCED ARCHITECT WHOSE PROFESSIONAL SEAL IS AFFIXED HERETO, IS A VIOLATION OF TITLE VII, SECT. 7209 (b) OF NEW YORK STATE LAW.
COPYRIGHT KAEYER, GARMENT • DAVIDSON ARCHITECTS & ENGINEERS, PC
ALL RIGHTS RESERVED.

Professional Seal

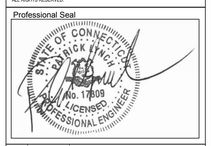

No.	Date	Issue
1	12/02/20	BUILDING PERMIT ISSUE

Sheet Title

ELECTRICAL DETAILS

Job No.	Date
NKGD0185.02	08/23/2019
Scale	Drawn / Checked
AS NOTED	NL/KS

Sheet Number

E703

GREENWICH HIGH SCHOOL
CARDINAL STADIUM - HOME GRANDSTAND
GREENWICH, CONNECTICUT

SHEET TITLE	SHEET NUMBER
COVER PAGE	B1
FOOTING LAYOUT	B2
UNDERSTRUCTURE LAYOUT	B3
ELEVATION VIEWS	B4
SECTION VIEW	B5
SECTION VIEW @ PRESS BOX	B6
SECTION VIEW @ PORTAL STAIR	B7
SIGHT LINES	B8
SEATING LAYOUT	B9
EXITS	B10
RAMP SECTIONS	B10.1
PRESS BOX LAYOUT	B11
PRESS BOX ELEVATION VIEWS	B12
PRESS BOX FRAMING PLAN	B13
PRESS BOX DETAILS	B14
PRESS BOX DETAILS	B15
DETAILS	B16
DETAILS	B17

12/01/20

STATE OF CONNECTICUT · THOMAS R. SADLER · NO. 20424 · LICENSED PROFESSIONAL ENGINEER

Thomas R. Sadler

REVISION #6: 12/01/20
REVISION #5: 10/21/20
REVISION #4: 10/14/20
REVISION #3: 10/01/20
REVISION #2: 05/29/20
REVISION #1: 05/27/20
HOME

GENERAL INFORMATION	
RISE:	16.25" w/ .25" SLOPE
TREAD:	32"
ROWS:	18
LENGTH:	205'- 6"
SEAT COUNT:	2020

DATE: 05/05/20
JOB #20101
GREENWICH HIGH SCHOOL
CARDINAL STADIUM - HOME GRANDSTAND
GREENWICH, CONNECTICUT

#20101- GREENWICH, CONNECTICUT

AWS CWF CERTIFIED WELDING FABRICATOR®

AISC CERTIFIED FABRICATOR

GENERAL NOTES & SITE CONDITIONS

1. ALL DIMENSION PERTAINING TO GRANDSTAND AND SITE CONDITIONS/OBJECTS TO BE FIELD VERIFIED OR LOCATED PRIOR TO FABRICATION.

2. AS SPECIFIED AND ILLUSTRATED, ALL ALUMINUM FOOTBOARDS AND WALKING SURFACES ARE MILL FINISH. MILL FINISH ALUMINUM, WHEN EXPOSED TO THE ATMOSPHERE, FORMS A TRANSPARENT, PROTECTIVE OXIDE COATING. MILL FINISH ALUMINUM WILL STAIN WHEN MOISTURE IS TRAPPED AGAINST IT. THIS MOISTURE ENTRAPMENT CAN OCCUR AT SEVERAL STAGES OF MATERIAL DELIVERY, INCLUDING PACKAGING, SHIPPING AND STORAGE. THESE STAINS CAN BE ERRATIC AND VARY IN COLOR FROM LIGHT BRONZE TO BLACK TO CHALKY WHITE. MOISTURE STAINS HAVE NO EFFECT ON THE STRENGTH OF THE MATERIAL. THESE STAINS BECOME LESS NOTICEABLE DURING NORMAL USAGE AND EXPOSURE TO THE SUN'S RADIATION.

DESIGN LOADING
TREAD & SEAT AREA 100psf UNIFORM LIVE LOAD.
SEAT (VERTICAL) 120 lbs/lf.
SEAT (HORIZONTAL SWAY) 24lbs/lf PARALLEL AND 10lbs/lf PERPENDICULAR TO SEAT.
TREAD - STAIR AND AISLE TREADS - MINIMUM CONCENTRATED LOAD OF 300LBS ON AN AREA OF 4 SQUARE INCHES
HANDRAIL & GUARDRAIL 50 lbs/lf IN ANY DIRECTION AT THE TOP.
HANDRAIL & GUARDRAIL 200 lbs CONCENTRATED IN ANY DIRECTION.
GUARDS, INFILL COMPONENTS - 50LBS PER SQFT IN HORIZON DIRECTION

Southern® BLEACHER COMPANY
GRANDSTANDS ▪ BLEACHERS ▪ STADIUMS

PO Box One, Graham, Texas 76450
801 Fifth Street.
Phone: 940/549-0733 Fax: 940/549-1365

Established 1946

NOTES

1. STRUCTURAL SHAPES MEET ONE OF THE FOLLOWING ASTM SPECIFICATIONS: A36, A36/A572 GRADE 50, A572 GRADE 50, A529-50, OR A500 GRADE B.
2. WELDS ARE ALL AROUND WITH TYPE ER70S-6 WIRE MIG.
3. ALL STEEL TO BE HOT DIPPED GALVANIZED TO A.S.T.M. A-123-89 ae1.
4. STRUCTURAL BOLTS ARE HOT DIPPED GALV. AND ARE EQUAL TO OR GREATER THAN A-307.
5. NO CONNECTIONS UTILIZING HIGH STRENGTH BOLTS ARE CLASSED AS SLIP CRITICAL.
6. ANODIZED ALUMINUM RAIL IS 1 1/4" NOMINAL PIPE SIZE. (1 5/8" O.D.)
7. SOUTHERN BLEACHER COMPANY AS A MANUFACTURER AND INSTALLER OF GRANDSTAND SEATING IS NOT AUTHORIZED TO CERTIFY PLANS AS ADA COMPLIANT. HOWEVER, TO THE BEST OF OUR KNOWLEDGE THESE PLANS MEET OR EXCEED ADA REQUIREMENTS FOR QUANTITY OF ADA SEATING, ACCESS/EGRESS TO ADA SEATING, & DISPERSAL OF ADA SEATING.

OWNER/REPRESENTATIVE/ARCHITECTURAL REVIEW

PLEASE REVIEW THE DRAWINGS FOR COMPLIANCE WITH YOUR ORDER. PLEASE INDICATE ANY CHANGES OR COMMENTS ON THE DRAWINGS.

☐ APPROVED
☐ APPROVED AS NOTED
☐ REVISE AND RE-SUBMIT

SIGNATURE
TITLE
DATE

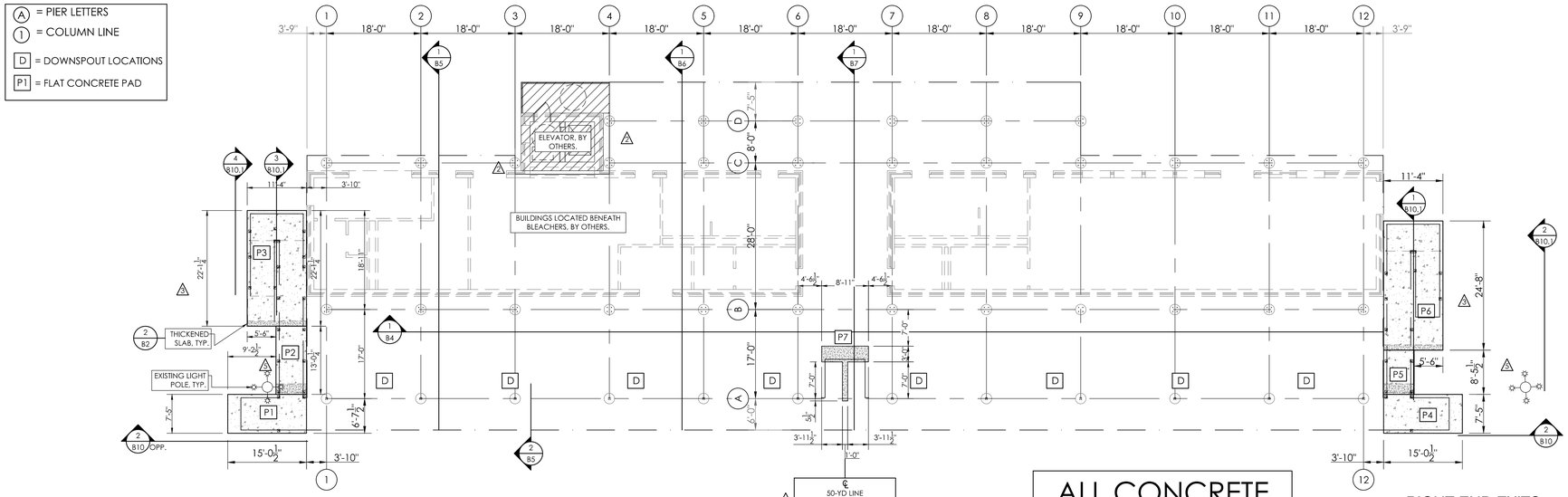

LEFT END EXITS

RIGHT END EXITS

1 B2 FOOTING LAYOUT
SCALE: 3/32"=1'-0"

ALL CONCRETE FOUNDATIONS BY OTHERS.

FOUNDATION NOTES

1. OWNER/OWNERS REP SHALL VERIFY ALL DIMENSIONS PRIOR TO START OF CONSTRUCTION.
2. MAXIMUM HORIZONTAL TOLERANCE OF ANCHOR BOLT PLACEMENT SHALL BE ±3/8".
3. ALL ANCHOR BOLTS SHALL HAVE A 3 1/2" PROJECTION (±3/8") ABOVE THE TOP OF PIER ELEVATION, UNLESS SPECIFICALLY NOTED OTHERWISE.
4. THE CONCRETE FOUNDATION CONTRACTOR IS RESPONSIBLE FOR NON SHRINK GROUTING.
5. THE ELEVATION AT THE TOP OF THE CONCRETE PIER IS DESIGNED TO BE 1" BELOW THE BOTTOM OF STEEL ELEVATION. THE TOLERANCE FOR THE BOTTOM OF STEEL ELEVATION IS ±3/8". THE TOP OF CONCRETE ELEVATION MAY BE RAISED TO MATCH THE BOTTOM OF STEEL ELEVATION, AT THE CONCRETE CONTRACTORS DISCRETION. THE CONTRACTOR OF THE CONCRETE FOUNDATIONS IS RESPONSIBLE FOR ANY ADJUSTMENTS REQUIRED.
6. A307 3/4"Ø X 21" X 3" RIGHT ANGLE BEND BOLT MAY BE USED IN PLACE OF 3/4"Ø X 18" HEADED BOLT.

LOADS DESCRIPTION

NOTE: DESIGN LOADS @ EACH COLUMN LOCATION		
D =	(DEAD LOAD)	(VERTICAL LOAD - DOWN)
L =	(LIVE LOAD)	(VERTICAL LOAD - DOWN)
H =	(HORIZONTAL WIND LOAD)	(HORIZONTAL WIND LOAD PERPENDICULAR TO BLEACHER - HORIZONTAL)
S =	(HORIZONTAL SWAY)	(HORIZONTAL SWAY LOAD PERPENDICULAR TO BLEACHER - HORIZONTAL)
S_H=	(LONGITUDINAL SWAY)	(HORIZONTAL SWAY LOAD PARALLEL TO BLEACHER - HORIZONTAL)
S_V=	(LONGITUDINAL SWAY)	(VERTICAL LOAD - UP OR DOWN DUE TO SWAY PARALLEL TO BLEACHER)
M_Z =	MOMENT	MOMENT DUE TO SWAY LOAD PARALLEL TO BLEACHER

GRID LINE 4-9

	ROW "A"	ROW "B"	ROW "C"	ROW "D"
D	4.2 k	6.5 k	11 k	12 k
L	27 k	41 k	38 k	34 k
H	25.2 k	N/A	N/A	N/A
S	3.3 k	N/A	N/A	N/A
S_H	1.6 k	7.4 k	5.2 k	3.4 k
S_V	N/A	3.9 k	6.8 k	6.0 k
M_Z	N/A	N/A	25.3 ft.k	4.2 ft.k

GRID LINE 1-3 & 10-12

	ROW "A"	ROW "B"	ROW "C"
D	4.2 k	6.5 k	5.6 k
L	27 k	41 k	28 k
H	17.8 k	N/A	N/A
S	3.3 k	N/A	N/A
S_H	1.6 k	7.4 k	5.2 k
S_V	N/A	3.9 k	6.8 k
M_Z	N/A	N/A	20.2 ft.k

FLAT WORK ELEVATIONS

ALL EXIT PADS TO BE POURED LEVEL

CONCRETE PAD #	TOP OF CONCRETE ELEV.
P1	58.800'
P2	59.300'
P3	59.500'
P4	58.800'
P5	59.300'
P6	59.500'
P7	59.292'

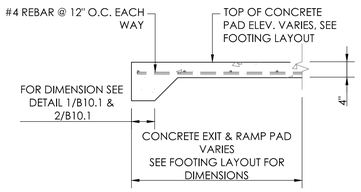

2 B2 MINIMUM EXIT PAD DETAIL
NOT TO SCALE

FOOTING SCHEDULE

T.O.P. = TOP OF PIER

B.O.S. = BOTTOM OF STEEL

FOOTING # (R = RAMP PIER)	T.O.P. ELEV.	B.O.S. ELEV.
A ROW	60.293'	60.377'
B ROW	60.166'	60.250'
C ROW	60.166'	60.250'
D ROW	60.166'	60.250'

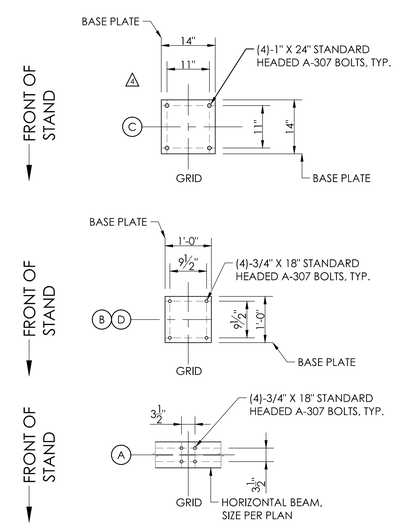

3 B2 PIER TOP DETAIL
NOT TO SCALE

THE SADLER GROUP
STRUCTURAL ENGINEERS - LICENSED IN 44 STATES
500 MAIN STREET, SUITE 700 • FORT WORTH, TEXAS 76102

Southern BLEACHER COMPANY
GRANDSTANDS • BLEACHERS • STADIUMS
PO Box One, Graham, Texas 76450
801 Fifth Street.
Phone: 940/549-0733 Fax: 940/549-1365

Ph: (817) 332-0174
Fax: (817) 332-0175
Toll: (800) 900-2373
Email: sadler@sadlerlaw

Established 1946

THIS DRAWING AND ALL INFORMATION THEREIN IS THE PROPERTY OF THE SADLER GROUP AND SOUTHERN BLEACHER COMPANY. IT MAY NOT BE COPIED OR REPRODUCED IN WHOLE OR IN PART WITHOUT THE CONSENT OF THE SADLER GROUP AND SOUTHERN BLEACHER COMPANY. THE DRAWING IS LOANED AND MUST BE RETURNED UPON REQUEST. THE DRAWING IS PROTECTED UNDER U.S. AND INTERNATIONAL COPYRIGHT LAW.

12/01/20

STATE OF CONNECTICUT
THOMAS R. SADLER
NO. 20424
LICENSED
PROFESSIONAL ENGINEER

Thomas R. Sadler

REV	BY	DATE	DESCRIPTION
	ES	12/01/20	F&B REVISION
	ES	10/21/20	C-LINE @ 50 YD LINE
	ES	10/14/20	"C" ROW BASE PLATE
	ES	10/01/20	RAMP LAYOUTS
	ES	05/29/20	SHIFTED PIERS @ ELEVATOR
	ES	05/12/20	LEFT END RAMP ELEVATIONS

DATE 05/05/20 | DRAWN ES | CHECKED EM/RR

JOB NUMBER 20101

SHEET B2 OF B17

TITLE: FOOTING LAYOUT
32" TREAD X 18 ROWS / 205'-6"

GREENWICH HIGH SCHOOL
CARDINAL STADIUM
GREENWICH, CONNECTICUT

22" X 34" (1"x17" = 1/2 indicated scale)

No

(A) = PIER LETTERS
(44) = STRINGER NUMBERS
(A6) = BEAM NUMBERS
(G) = GUTTER STRINGER

NOTE: SEATING LAYOUT SHOWN FOR REFERENCE ONLY. SEE SHEET B9 FOR SEATING LAYOUT

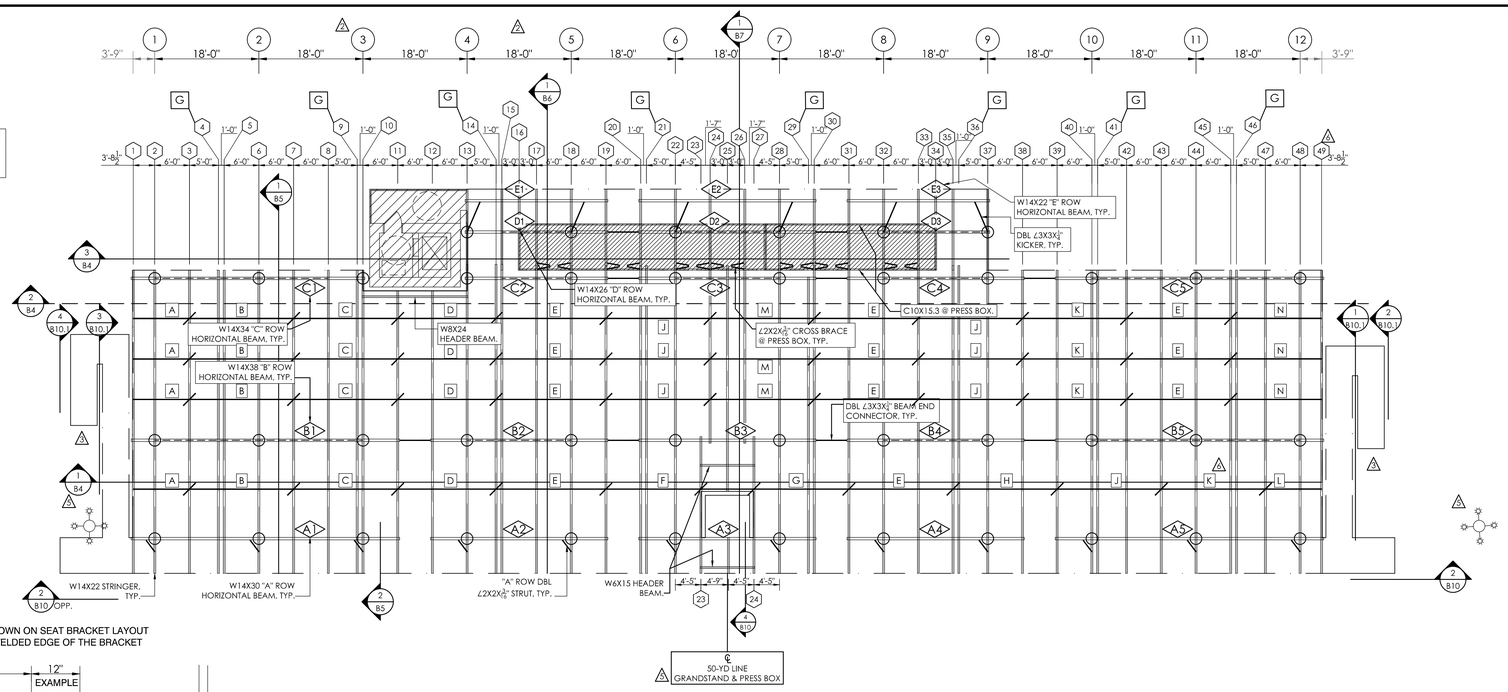

NOTE:
ALL DIMENSIONS SHOWN ON SEAT BRACKET LAYOUT ARE TO/FROM THE WELDED EDGE OF THE BRACKET

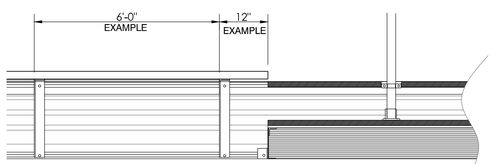

1/B3 UNDERSTRUCTURE LAYOUT
SCALE: 3/32"=1'-0"

3/B3 BRACKET SPACE
NOT TO SCALE

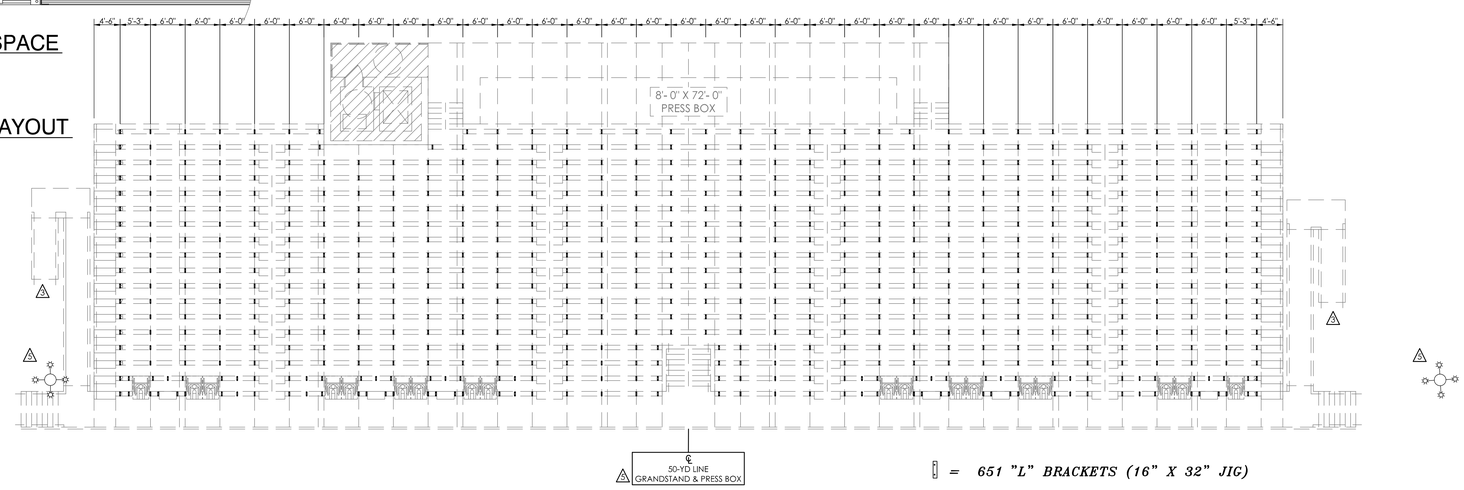

2/B3 SEAT BRACKET LAYOUT
SCALE: 3/32"=1'-0"

= 651 "L" BRACKETS (16" X 32" JIG)

THE ADLER GROUP
STRUCTURAL ENGINEERS • LICENSED IN 44 STATES
500 MAIN STREET, SUITE 700 • FORT WORTH, TEXAS 76102
Ph: (817) 332-0174
Fax: (817) 332-0175
Toll: (800) 900-2373
Email: tadler@tadlerl.net

Southern BLEACHER COMPANY®
PO Box One, Graham, Texas 76450
801 Fifth Street.
Phone: 940/549-0733 Fax: 940/549-1365
Established 1946
GRANDSTANDS •BLEACHERS •STADIUMS

THIS DRAWING AND ALL INFORMATION THEREIN IS THE EXCLUSIVE PROPERTY OF SOUTHERN BLEACHER COMPANY. IT MAY NOT BE COPIED OR REPRODUCED WITHOUT THE WRITTEN CONSENT OF SOUTHERN BLEACHER COMPANY. THE DRAWING IS LOANED AND MUST BE RETURNED UPON REQUEST. THIS DRAWING IS PROTECTED UNDER U.S. AND INTERNATIONAL COPYRIGHT LAW.

12/01/20

Thomas R. Sadler

REV	BY	DATE	DESCRIPTION
		12/01/20	FAB REVISION
		10/21/20	C-LINE @ 50 YD LINE
		10/14/20	UPDATED LIGHT POLE LOCATION
		10/01/20	RAMP LAYOUTS
		10/20/20	SHIFTED PERS @ ELEVATOR
		10/05/20	SHIFTED PERS @ ELEVATOR

TITLE: UNDERSTRUCTURE LAYOUT
32" TREAD X 18 ROWS / 205'- 6"

PROJECT: GREENWICH HIGH SCHOOL
CARDINAL STADIUM
GREENWICH, CONNECTICUT

DATE: 05/05/20 | DRAWN: ES | CHECKED: EM/RR

JOB NUMBER: 20101

SHEET: B3 OF B17

22" X 34" (11x17 = 1/2 indicated scale)

No

A = PIER LETTERS
44 = STRINGER NUMBERS
A4 = BEAM NUMBERS
G = GUTTER STRINGER
BB1 = BAND BEAM NUMBERS

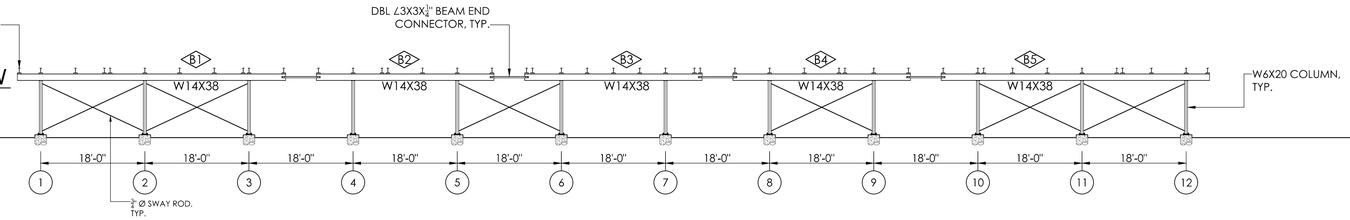

1 / B4 "B" ROW ELEVATION VIEW
SCALE: 3/32"=1'-0"

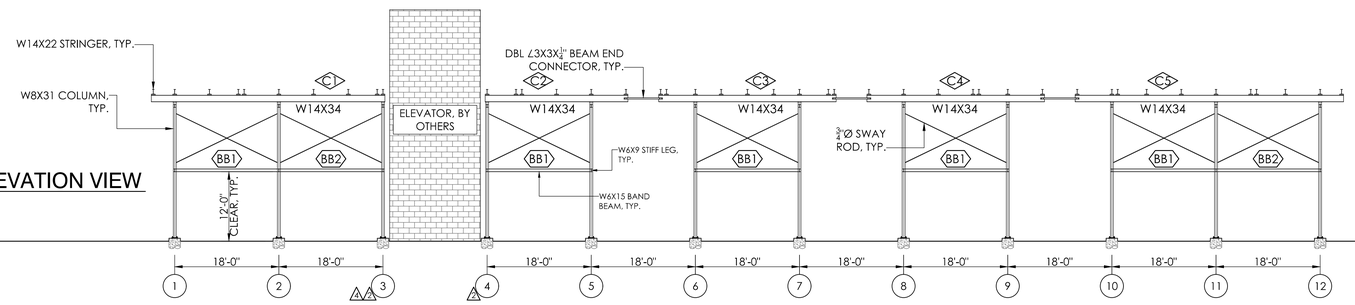

2 / B4 "C" ROW ELEVATION VIEW
SCALE: 3/32"=1'-0"

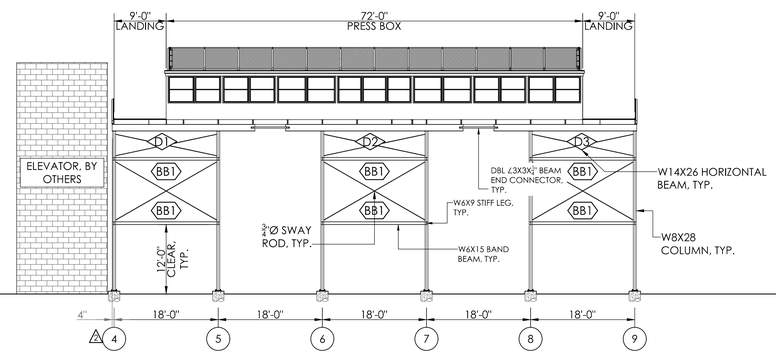

3 / B4 "D" ROW ELEVATION VIEW
SCALE: 3/32"=1'-0"

THE ADLER GROUP
STRUCTURAL ENGINEERS - LICENSED IN 44 STATES
500 MAIN STREET, SUITE 700 • FORT WORTH, TEXAS 76102
Ph: (817) 332-0194
Fax: (817) 332-0195
Toll: (800) 900-7373
Email: tadler@tadlerLaw.com

Southern® BLEACHER COMPANY
GRANDSTANDS • BLEACHERS • STADIUMS
PO Box One, Graham, Texas 76450
801 Fifth Street.
Phone: 940/549-0733 Fax: 940/549-1365
Established 1946

THIS DRAWING AND ALL INFORMATION THEREIN IS THE EXCLUSIVE PROPERTY OF SOUTHERN BLEACHER COMPANY. IT MAY NOT BE COPIED OR REPRODUCED WITHOUT THE WRITTEN CONSENT OF SOUTHERN BLEACHER COMPANY. THE DRAWING IS LOANED AND MUST BE RETURNED UPON REQUEST. THIS DRAWING IS PROTECTED UNDER U.S. AND INTERNATIONAL COPYRIGHT LAW.

12/01/20
STATE OF CONNECTICUT
THOMAS R. ADLER
NO. 20425
PROFESSIONAL ENGINEER
Thomas R. Adler

TITLE: ELEVATION VIEWS

GREENWICH HIGH SCHOOL
CARDINAL STADIUM
GREENWICH, CONNECTICUT

REV.	BY	DATE	DESCRIPTION
	ES	12/01/20	FAB REVISION
	ES	11/01/20	NONE THIS SHEET
	ES	10/14/20	MOVED COL C3 NEXT TO ELEVATOR
	ES	10/01/20	NONE THIS SHEET
	ES	05/20/20	SHIFTED PIERS & ELEVATOR
	ES	05/05/20	SHIFTED PIERS & ELEVATOR

DATE 05/05/20 | DRAWN ES | CHECKED EM/RR

JOB NUMBER 20101

SHEET B4 OF B17

22" X 34" (11x17 = 1/2 indicated scale)

No

ITEM DESCRIPTION

1. W 14 X 38 (50 ksi) "B" ROW H-BEAM
2. W 14 X 34 (50 ksi) "C" ROW H-BEAM
3. W 14 X 30 (50 ksi) "A" ROW H-BEAM
4. W 14 X 26 (50 ksi) "D" ROW H-BEAM
5. W 14 X 22 (50 ksi) GRANDSTAND STINGER "E" ROW H-BEAM
6. W 10 X 12 (50 ksi) PRESS BOX BASE & BOOT
7. W 8 X 31 (50 ksi) "C" ROW COLUMN
8. W 8 X 28 (50 ksi) "D" ROW COLUMN
9. W 6 X 20 (50 ksi) "B" ROW COLUMN
10. W 6 X 15 (50 ksi) BANDS
11. W 6 X 9 (50 ksi) STIFF LEGS
12. L 3 X 3 X 1/4 (50 ksi)
13. L 2 X 2 X 3/16 (50 ksi)
14. L 2 X 1 1/2 X 3/16 (50 ksi)
15. L 1 1/2 X 1 1/2 X 3/16 (50 ksi)
16. 14" X14" X 1" PLATE
17. 12 X 12 X 5/8 PLATE
18. 6 X 8 X 3/8 PLATE
19. 3/4 X REQ'D LENGTH SWAY ROD (50 ksi)
20. 1" Ø X 24" A307 HEADED BOLTS
21. 3/4 X 18 ANCHOR BOLT W/2 HEX HEAD NUTS & FLAT WASHER
22. BLACK VINYL COATED CHAINLINK FENCE
23. ANODIZED ALUMINUM RAIL
24. 5 X 3/8 GUSSET PLATE (A36)
25. 3 X 3/8 GUSSET PLATE (A36)
26. 2 X 1/4 GUSSET PLATE (A36)

DESIGN LOADING
TREAD & SEAT AREA 100psf UNIFORM LIVE LOAD.
SEAT (VERTICAL) 120 lbs/ft.
SEAT (HORIZONTAL SWAY) 24lbs/ft PARALLEL AND 10lbs/ft PERPENDICULAR TO SEAT.
TREAD - STAIR AND AISLE TREADS - MINIMUM CONCENTRATED LOAD OF 300LBS ON AN AREA OF 4 SQUARE INCHES
HANDRAIL & GUARDRAIL 50 lbs/ft IN ANY DIRECTION AT THE TOP.
HANDRAIL & GUARDRAIL 200 lbs CONCENTRATED IN ANY DIRECTION.
GUARDS, INFILL COMPONENTS - 50LBS PER SQ.FT. IN HORIZONTAL DIRECTION

DESIGN CRITERIA

SNOW LOAD: 30 P.S.F.
WIND SPEED: 126 M.P.H. (3 SEC. GUST) EXPOSURE - C
SEISMIC DESIGN CATEGORY: B
SPECTRAL RESPONSE COEFFICIENT ; S_{DS} = 0.274
SPECTRAL RESPONSE COEFFICIENT ; S_{D1} = 0.112
SITE CLASS: D

NOTES

1. ALL STRUCTURAL AND MISCELLANEOUS STEEL SHALL CONFORM TO THE FOLLOWING A.I.S.C. STANDARDS
   PLATE UP TO 1/2" THICK = A36 Gr. 36 Fy = 36 ksi Min.
   PLATE 5/8 and greater = 572 Gr 50, Fy = 50 ksi Min.
   ANGLE = A36/A36M GRADE 50
   WIDE FLANGE = A992 Fy=50 ksi
   CHANNEL = A36/A36M GRADE 50
   ROD = A36/A529 GRADE 50
   TUBE = A500 GRADE "B" 46 ksi
2. WELDS ARE ALL AROUND WITH TYPE ER70S-6 WIRE MIG.
3. ALL STEEL TO BE HOT DIPPED GALVANIZED TO A.S.T.M. A-123-89 ae1.
4. STRUCTURAL BOLTS ARE HOT DIPPED GALV. AND ARE EQUAL TO OR GREATER THAN A-307.
5. NO CONNECTIONS UTILIZING HIGH STRENGTH BOLTS ARE CLASSED AS SLIP CRITICAL.
6. ANODIZED ALUMINUM RAIL IS 1 1/4" NOMINAL PIPE SIZE. (1 5/8" O.D.)
7. SOUTHERN BLEACHER COMPANY AS A MANUFACTURER AND INSTALLER OF GRANDSTAND SEATING IS NOT AUTHORIZED TO CERTIFY PLANS AS ADA COMPLIANT. HOWEVER, TO THE BEST OF OUR KNOWLEDGE THESE PLANS MEET OR EXCEED ADA REQUIREMENTS FOR QUANTITY OF ADA SEATING, ACCESS/EGRESS TO ADA SEATING, & DISPERSAL OF ADA SEATING.
8. ALL FIELD CONNECTIONS ARE NON-SLIP CRITICAL U.N.O. ALL CONNECTIONS ARE DESIGNED TO UTILIZE A307 BOLTS. IT IS ACCEPTABLE TO USE A325N BOLTS IN LIEU OF THE A307 BOLTS. THE INSTALLATION OF THESE BOLTS ARE TO BE TIGHTENED A SNUG TIGHT CONDITION AS SPECIFIED BY AISC.

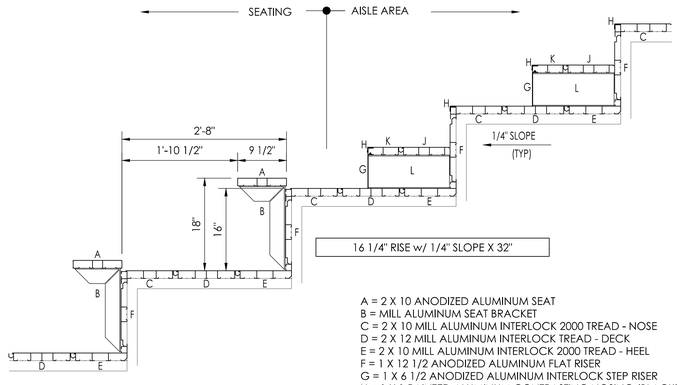

NOTE: ALL WALKING SURFACES TO BE TRACTION COATED (ASH GRAY) WITH THE EXCEPTION OF THE "STARTER RAMP"

A = 2 X 10 ANODIZED ALUMINUM SEAT
B = MILL ALUMINUM SEAT BRACKET
C = 2 X 10 MILL ALUMINUM INTERLOCK 2000 TREAD - NOSE
D = 2 X 12 MILL ALUMINUM INTERLOCK TREAD - DECK
E = 2 X 10 MILL ALUMINUM INTERLOCK 2000 TREAD - HEEL
F = 1 X 12 1/2 ANODIZED ALUMINUM FLAT RISER
G = 1 X 6 1/2 ANODIZED ALUMINUM INTERLOCK STEP RISER
H = 1 X 1 PAINTED ALUMINUM CONTRASTING NOSING (BLACK)
J = 2 X 9 MILL ALUM. INTERLOCK HALFSTEP - DECK
K = 2 X 7 MILL ALUM. INTERLOCK HALFSTEP - NOSE
L = 6 1/2" MILL ALUMINUM HALFSTEP BRACKET

3 / B5 PLANK ARRANGEMENT
SCALE: 1" = 1'- 0" 16" X 32"

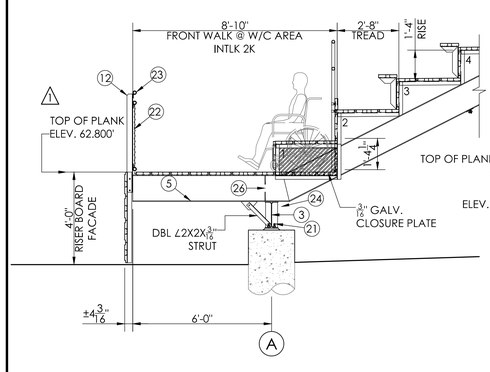

2 / B5 SECTION VIEW @ W/C AREA
SCALE: 3/8"=1'-0"

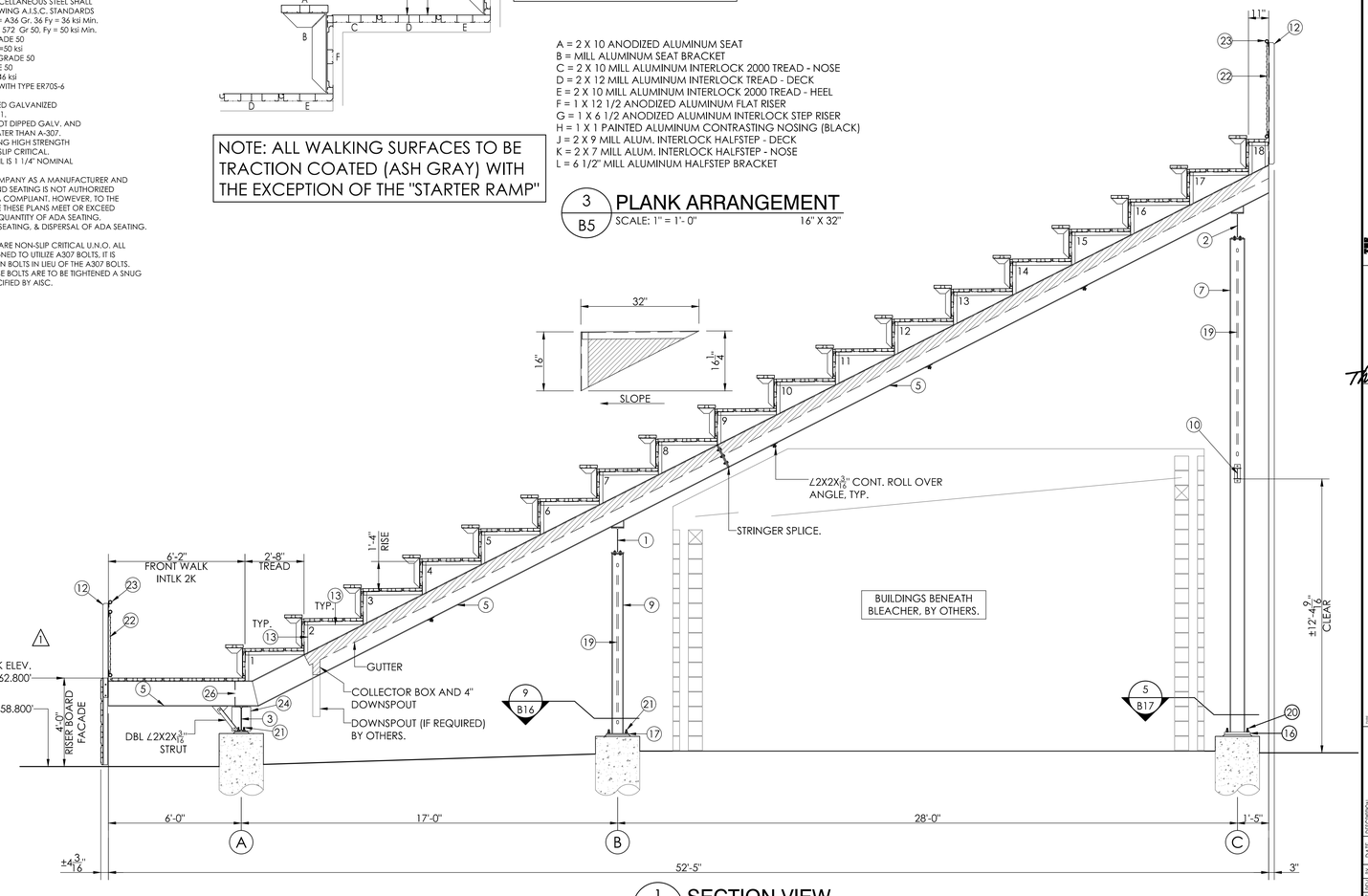

1 / B5 SECTION VIEW
SCALE: 3/8"=1'-0"

THE ADLER GROUP
STRUCTURAL ENGINEERS • LICENSED IN 44 STATES
500 MAIN STREET, SUITE 700 • FORT WORTH, TEXAS 76102
Ph: (817) 332-0194
Fax: (817) 332-0195
Toll: (800) 900-7373
Email: tadler@theAdlerGroup

Southern BLEACHER COMPANY®
GRANDSTANDS • BLEACHERS • STADIUMS
PO Box One, Graham, Texas 76450
Phone: 940/549-0733 Fax: 940/549-1365
801 Fifth Street.
Established 1946

THIS DRAWING AND ALL INFORMATION THEREIN IS THE EXCLUSIVE PROPERTY OF SOUTHERN BLEACHER COMPANY. IT MAY NOT BE REPRODUCED OR DISTRIBUTED WITHOUT THE CONSENT OF SOUTHERN BLEACHER COMPANY. THE DRAWING IS LOANED AND MUST BE RETURNED UPON REQUEST. THE DRAWING IS PROTECTED UNDER U.S. AND INTERNATIONAL COPYRIGHT LAW.

12/01/20

THOMAS R. ADLER
STATE OF CONNECTICUT
NO. 20425
PROFESSIONAL ENGINEER

Thomas R. Adler

REV. BY	DATE	DESCRIPTION
ES	12/01/20	FAB REVISION
ES	10/01/20	NONE THIS SHEET
ES	10/14/20	NONE THIS SHEET
ES	10/00/20	NONE THIS SHEET
ES	10/29/20	NONE THIS SHEET
ES	10/30/20	TOP OF PLANK ELEVATIONS

SECTION VIEW
16.25" RISE w/ .25" SLOPE X 32" TREAD X 18 ROWS

GREENWICH HIGH SCHOOL
CARDINAL STADIUM
GREENWICH, CONNECTICUT

DATE	DRAWN BY	CHECKED BY
05/05/20	ES	EM/RR

JOB NUMBER 20101

SHEET B5 OF B17

22" X 34" (11X17 = 1/2 indicated scale)

No

ITEM DESCRIPTION

1. W 14 X 38 (50 ksi) "B" ROW H-BEAM
2. W 14 X 34 (50 ksi) "C" ROW H-BEAM
3. W 14 X 30 (50 ksi) "A" ROW H-BEAM
4. W 14 X 26 (50 ksi) "D" ROW H-BEAM
5. W 14 X 22 (50 ksi) GRANDSTAND STINGER "E" ROW H-BEAM
6. W 10 X 12 (50 ksi) PRESS BOX BASE & BOOT
7. W 8 X 31 (50 ksi) "C" ROW COLUMN
8. W 8 X 28 (50 ksi) "D" ROW COLUMN
9. W 6 X 20 (50 ksi) "B" ROW COLUMN
10. W 6 X 15 (50 ksi) BANDS
11. W 6 X 9 (50 ksi) STIFF LEGS
12. L 3 X 3 X 1/4 (50 ksi)
13. L 2 X 2 X 3/16 (50 ksi)
14. L 2 X 1 1/2 X 3/16 (50 ksi)
15. L 1 1/2 X 1 1/2 X 3/16 (50 ksi)
16. 14" X14" X 1" PLATE
17. 12 X 12 X 5/8 PLATE
18. 6 X 8 X 3/8 PLATE
19. 3/4 X REQ'D LENGTH SWAY ROD (50 ksi)
20. 1" Ø X 24" A307 HEADED BOLTS
21. 3/4 X 18 ANCHOR BOLT W/2 HEX HEAD NUTS & FLAT WASHER
22. BLACK VINYL COATED CHAINLINK FENCE
23. ANODIZED ALUMINUM RAIL
24. 5 X 3/8 GUSSET PLATE (A36)
25. 3 X 3/8 GUSSET PLATE (A36)
26. 2 X 1/4 GUSSET PLATE (A36)

DESIGN LOADING
TREAD & SEAT AREA 100psf UNIFORM LIVE LOAD.
SEAT (VERTICAL) 120 lbs/ft.
SEAT (HORIZONTAL SWAY) 24lbs/ft PARALLEL AND 10lbs/ft PERPENDICULAR TO SEAT.
TREAD - STAIR AND AISLE TREADS - MINIMUM CONCENTRATED LOAD OF 300LBS ON AN AREA OF 4 SQUARE INCHES
HANDRAIL & GUARDRAIL 50 lbs/ft IN ANY DIRECTION AT THE TOP.
HANDRAIL & GUARDRAIL 200 lbs CONCENTRATED IN ANY DIRECTION.
GUARDS, INFILL COMPONENTS - 50LBS PER SQ.FT. IN HORIZONTAL DIRECTION

DESIGN CRITERIA

SNOW LOAD: 30 P.S.F.
WIND SPEED: 126 M.P.H. (3 SEC. GUST) EXPOSURE - C
SEISMIC DESIGN CATEGORY: B
SPECTRAL RESPONSE COEFFICIENT ; S_{DS} = 0.274
SPECTRAL RESPONSE COEFFICIENT ; S_{D1} = 0.112
SITE CLASS: D

NOTES

1. ALL STRUCTURAL AND MISCELLANEOUS STEEL SHALL CONFORM TO THE FOLLOWING A.I.S.C. STANDARDS
   PLATE UP TO 1/2" THICK = A36 Gr. 36 Fy = 36 ksi Min.
   PLATE 5/8 and greater = 572 Gr 50, Fy = 50 ksi Min.
   ANGLE = A36/A36M GRADE 50
   WIDE FLANGE = A992 Fy=50 ksi
   CHANNEL = A36/A36M GRADE 50
   ROD = A36/A529 GRADE 50
   TUBE = A500 GRADE "B" 46 ksi
2. WELDS ARE ALL AROUND WITH TYPE ER70S-6 WIRE MIG.
3. ALL STEEL TO BE HOT DIPPED GALVANIZED TO A.S.T.M. A-123-89 ae1.
4. STRUCTURAL BOLTS ARE HOT DIPPED GALV. AND ARE EQUAL TO OR GREATER THAN A-307.
5. NO CONNECTIONS UTILIZING HIGH STRENGTH BOLTS ARE CLASSED AS SLIP CRITICAL.
6. ANODIZED ALUMINUM RAIL IS 1 1/4" NOMINAL PIPE SIZE. (1 5/8" O.D.)
7. SOUTHERN BLEACHER COMPANY AS A MANUFACTURER AND INSTALLER OF GRANDSTAND SEATING IS NOT AUTHORIZED TO CERTIFY PLANS AS ADA COMPLIANT. HOWEVER, TO THE BEST OF OUR KNOWLEDGE THESE PLANS MEET OR EXCEED ADA REQUIREMENTS FOR QUANTITY OF ADA SEATING, ACCESS/EGRESS TO ADA SEATING, & DISPERSAL OF ADA SEATING.
8. ALL FIELD CONNECTIONS ARE NON-SLIP CRITICAL U.N.O. ALL CONNECTIONS ARE DESIGNED TO UTILIZE A307 BOLTS. IT IS ACCEPTABLE TO USE A325N BOLTS IN LIEU OF THE A307 BOLTS. THE INSTALLATION OF THESE BOLTS ARE TO BE TIGHTENED A SNUG TIGHT CONDITION AS SPECIFIED BY AISC.

2 / B6 SIDE RAILING @ END AISLE
NOT TO SCALE

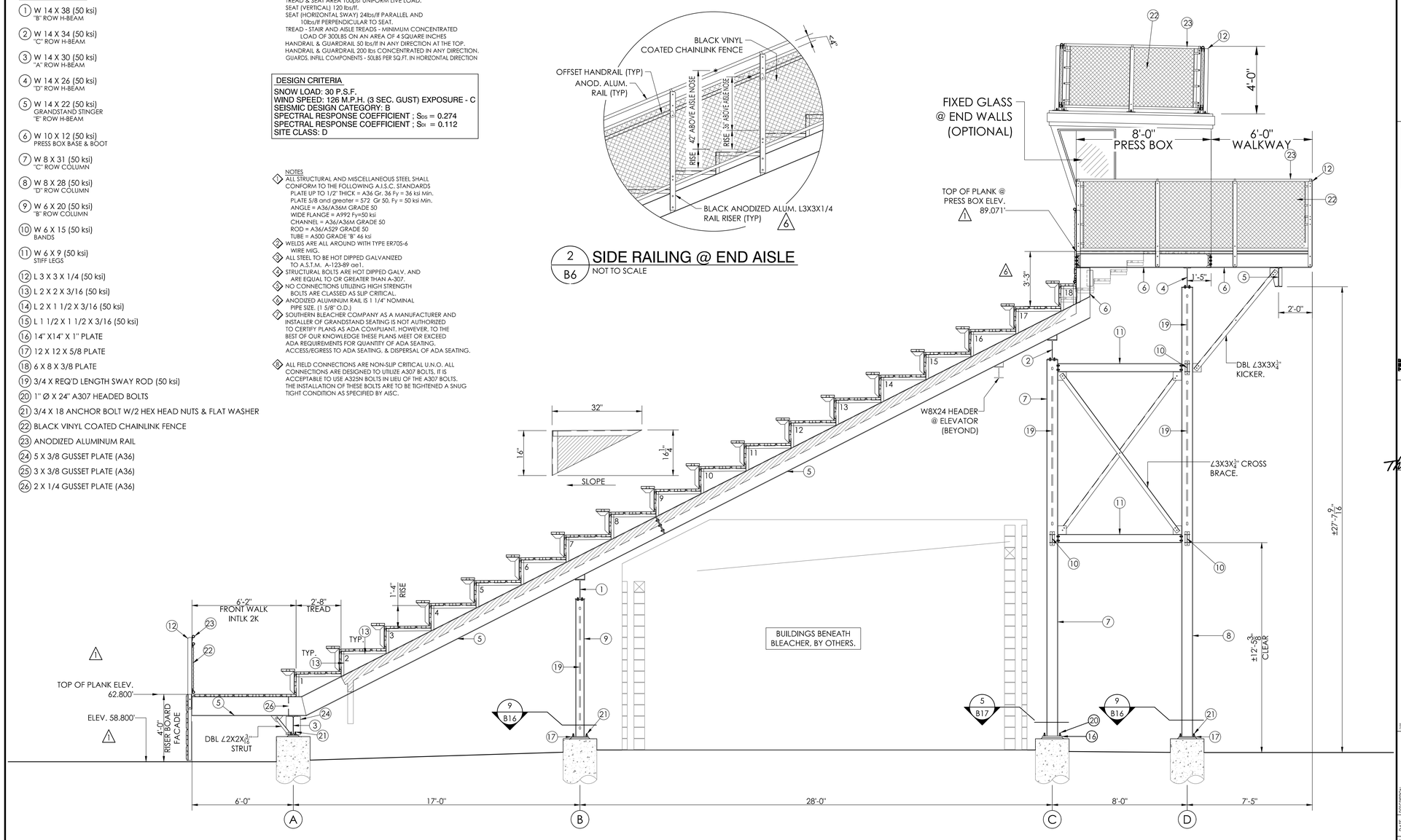

1 / B6 SECTION VIEW @ PRESS BOX
SCALE: 3/8"=1'-0"

THE ADLER GROUP
STRUCTURAL ENGINEERS • LICENSED IN 44 STATES
50 MAIN STREET, SUITE 700 • FORT WORTH, TEXAS 76102
Ph: (817) 332-0194
Fax: (817) 332-0195
Toll: (800) 900-7373
Email: tadler@tadlerLLC.net

Southern BLEACHER COMPANY®
GRANDSTANDS • BLEACHERS • STADIUMS
PO Box One, Graham, Texas 76450
Phone: 940/549-0733 Fax: 940/549-1365
801 Fifth Street.
Established 1946

THIS DRAWING AND ALL INFORMATION THEREIN IS THE PROPERTY OF SOUTHERN BLEACHER COMPANY. IT MAY NOT BE COPIED OR REPRODUCED WITHOUT THE CONSENT OF SOUTHERN BLEACHER COMPANY. THE DRAWING IS LOANED TO THE OWNER FOR REVIEW AND USE. THE DRAWING IS PROTECTED UNDER U.S. AND INTERNATIONAL COPYRIGHT LAW.

12/01/20

STATE OF CONNECTICUT · THOMAS R. ADLER · NO. 20425 · PROFESSIONAL ENGINEER

Thomas R. Adler

REV. BY	DATE	DESCRIPTION
ES	12/01/20	FAB REVISION
ES	10/01/20	NONE THIS SHEET
ES	10/14/20	NONE THIS SHEET
ES	10/00/20	NONE THIS SHEET
ES	10/29/20	NONE THIS SHEET
ES	10/01/20	TOP OF PLANK ELEVATIONS

TITLE: SECTION VIEW @ PRESS BOX
16.25" RISE w/ .25" SLOPE X 32" TREAD X 18 ROWS

SITE: GREENWICH HIGH SCHOOL
CARDINAL STADIUM
GREENWICH, CONNECTICUT

DATE: 05/05/20
DRAWN BY: ES
CHECKED BY: EM/RR
JOB NUMBER: 20101
SHEET: B6 OF B17

22" X 34" (11X17 = 1/2 indicated scale)

No

ITEM DESCRIPTION

1. W 14 X 38 (50 ksi) "B" ROW H-BEAM
2. W 14 X 34 (50 ksi) "C" ROW H-BEAM
3. W 14 X 30 (50 ksi) "A" ROW H-BEAM
4. W 14 X 26 (50 ksi) "D" ROW H-BEAM
5. W 14 X 22 (50 ksi) GRANDSTAND STINGER "E" ROW H-BEAM
6. W 10 X 12 (50 ksi) PRESS BOX BASE & BOOT
7. W 8 X 31 (50 ksi) "C" ROW COLUMN
8. W 8 X 28 (50 ksi) "D" ROW COLUMN
9. W 6 X 20 (50 ksi) "B" ROW COLUMN
10. W 6 X 15 (50 ksi) BANDS
11. W 6 X 9 (50 ksi) STIFF LEGS
12. L 3 X 3 X 1/4 (50 ksi)
13. L 2 X 2 X 3/16 (50 ksi)
14. L 2 X 1 1/2 X 3/16 (50 ksi)
15. L 1 1/2 X 1 1/2 X 3/16 (50 ksi)
16. 14" X14" X 1" PLATE
17. 12 X 12 X 5/8 PLATE
18. 6 X 8 X 3/8 PLATE
19. 3/4 X REQ'D LENGTH SWAY ROD (50 ksi)
20. 1" Ø X 24" A307 HEADED BOLTS
21. 3/4 X 18 ANCHOR BOLT W/2 HEX HEAD NUTS & FLAT WASHER
22. BLACK VINYL COATED CHAINLINK FENCE
23. ANODIZED ALUMINUM RAIL
24. 5 X 3/8 GUSSET PLATE (A36)
25. 3 X 3/8 GUSSET PLATE (A36)
26. 2 X 1/4 GUSSET PLATE (A36)

DESIGN LOADING
TREAD & SEAT AREA 100psf UNIFORM LIVE LOAD.
SEAT (VERTICAL) 120 lbs/ft.
SEAT (HORIZONTAL SWAY) 24lbs/ft PARALLEL AND 10lbs/ft PERPENDICULAR TO SEAT.
TREAD - STAIR AND AISLE TREADS - MINIMUM CONCENTRATED LOAD OF 300LBS ON AN AREA OF 4 SQUARE INCHES
HANDRAIL & GUARDRAIL 50 lbs/ft IN ANY DIRECTION AT THE TOP.
HANDRAIL & GUARDRAIL 200 lbs CONCENTRATED IN ANY DIRECTION.
GUARDS, INFILL COMPONENTS - 50LBS PER SQ.FT. IN HORIZONTAL DIRECTION

DESIGN CRITERIA
SNOW LOAD: 30 P.S.F.
WIND SPEED: 126 M.P.H. (3 SEC. GUST) EXPOSURE - C
SEISMIC DESIGN CATEGORY: B
SPECTRAL RESPONSE COEFFICIENT ; S_{DS} = 0.274
SPECTRAL RESPONSE COEFFICIENT ; S_{D1} = 0.112
SITE CLASS: D

NOTES
1. ALL STRUCTURAL AND MISCELLANEOUS STEEL SHALL CONFORM TO THE FOLLOWING A.I.S.C. STANDARDS
   PLATE UP TO 1/2" THICK = A36 Gr. 36 Fy = 36 ksi Min.
   PLATE 5/8 and greater = 572 Gr 50, Fy = 50 ksi Min.
   ANGLE = A36/A36M GRADE 50
   WIDE FLANGE = A992 Fy=50 ksi
   CHANNEL = A36/A36M GRADE 50
   ROD = A36/A529 GRADE 50
   TUBE = A500 GRADE "B" 46 ksi
2. WELDS ARE ALL AROUND WITH TYPE ER70S-6 WIRE MIG.
3. ALL STEEL TO BE HOT DIPPED GALVANIZED TO A.S.T.M. A-123-89 ae1.
4. STRUCTURAL BOLTS ARE HOT DIPPED GALV. AND ARE EQUAL TO OR GREATER THAN A-307.
5. NO CONNECTIONS UTILIZING HIGH STRENGTH BOLTS ARE CLASSED AS SLIP CRITICAL.
6. ANODIZED ALUMINUM RAIL IS 1 1/4" NOMINAL PIPE SIZE. (1 5/8" O.D.)
7. SOUTHERN BLEACHER COMPANY AS A MANUFACTURER AND INSTALLER OF GRANDSTAND SEATING IS NOT AUTHORIZED TO CERTIFY PLANS AS ADA COMPLIANT. HOWEVER, TO THE BEST OF OUR KNOWLEDGE THESE PLANS MEET OR EXCEED ADA REQUIREMENTS FOR QUANTITY OF ADA SEATING, ACCESS/EGRESS TO ADA SEATING, & DISPERSAL OF ADA SEATING.
8. ALL FIELD CONNECTIONS ARE NON-SLIP CRITICAL U.N.O. ALL CONNECTIONS ARE DESIGNED TO UTILIZE A307 BOLTS. IT IS ACCEPTABLE TO USE A325N BOLTS IN LIEU OF THE A307 BOLTS. THE INSTALLATION OF THESE BOLTS ARE TO BE TIGHTENED A SNUG TIGHT CONDITION AS SPECIFIED BY AISC.

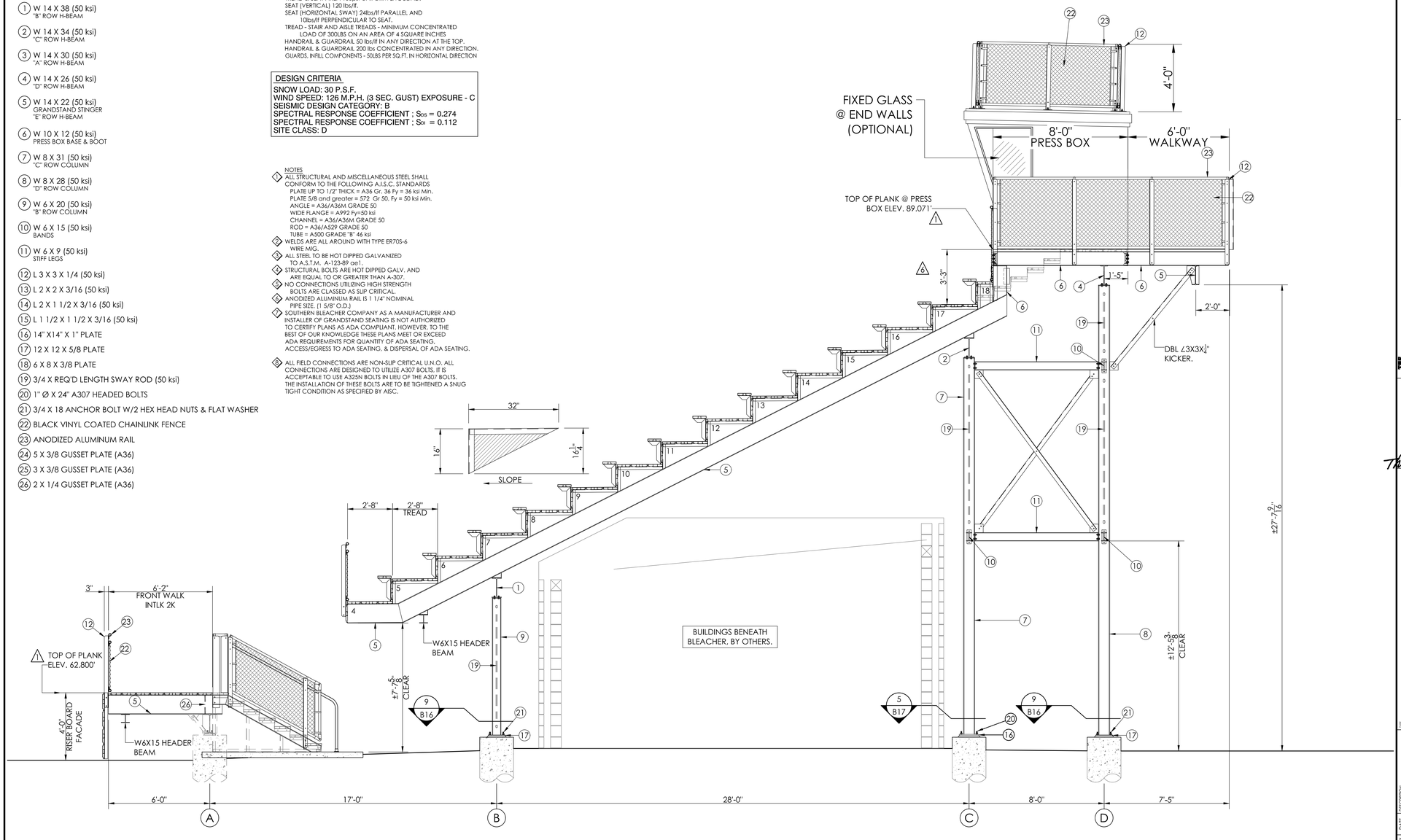

1 / B7 SECTION VIEW @ PORTAL STAIR
SCALE: 3/8"=1'-0"

THE ADLER GROUP
STRUCTURAL ENGINEERS • LICENSED IN 44 STATES
500 MAIN STREET, SUITE 700 • FORT WORTH, TEXAS 76102
Ph: (817) 332-0174
Fax: (817) 332-0175
Toll: (800) 900-7373
Email: info@theadlergroup.com

Southern BLEACHER COMPANY®
GRANDSTANDS • BLEACHERS • STADIUMS
PO Box One, Graham, Texas 76450
Phone: 940/549-0733 Fax: 940/549-1365
801 Fifth Street.
Established 1946

THIS DRAWING AND ALL INFORMATION THEREIN IS THE PROPERTY OF SOUTHERN BLEACHER COMPANY. IT MAY NOT BE REPRODUCED OR USED FOR ANY PURPOSE WITHOUT THE CONSENT OF SOUTHERN BLEACHER COMPANY. THE DRAWING IS LOANED AND MUST BE RETURNED UPON REQUEST. THIS DRAWING IS PROTECTED UNDER U.S. AND INTERNATIONAL COPYRIGHT LAW.

12/01/20
STATE OF CONNECTICUT
THOMAS R. SADLER
NO. 20425
PROFESSIONAL ENGINEER
Thomas R. Sadler

TITLE: SECTION VIEW @ PORTAL STAIR
16.25" RISE w/ .25" SLOPE X 32" TREAD X 18 ROWS

GREENWICH HIGH SCHOOL
CARDINAL STADIUM
GREENWICH, CONNECTICUT

REV.	BY	DATE	DESCRIPTION
	ES	1/20/20	FAB REVISION
	ES	1/05/20	NONE THIS SHEET
	ES	10/14/20	NONE THIS SHEET
	ES	10/01/20	NONE THIS SHEET
	ES	10/20/20	NONE THIS SHEET
	ES	10/05/20	TOP OF PLANK ELEVATIONS

DATE 05/05/20 | DRAWN ES | CHECKED EM/RR
JOB NUMBER 20101
SHEET B7 OF B17

22" X 34" (11x17 = 1/2 indicated scale)

No

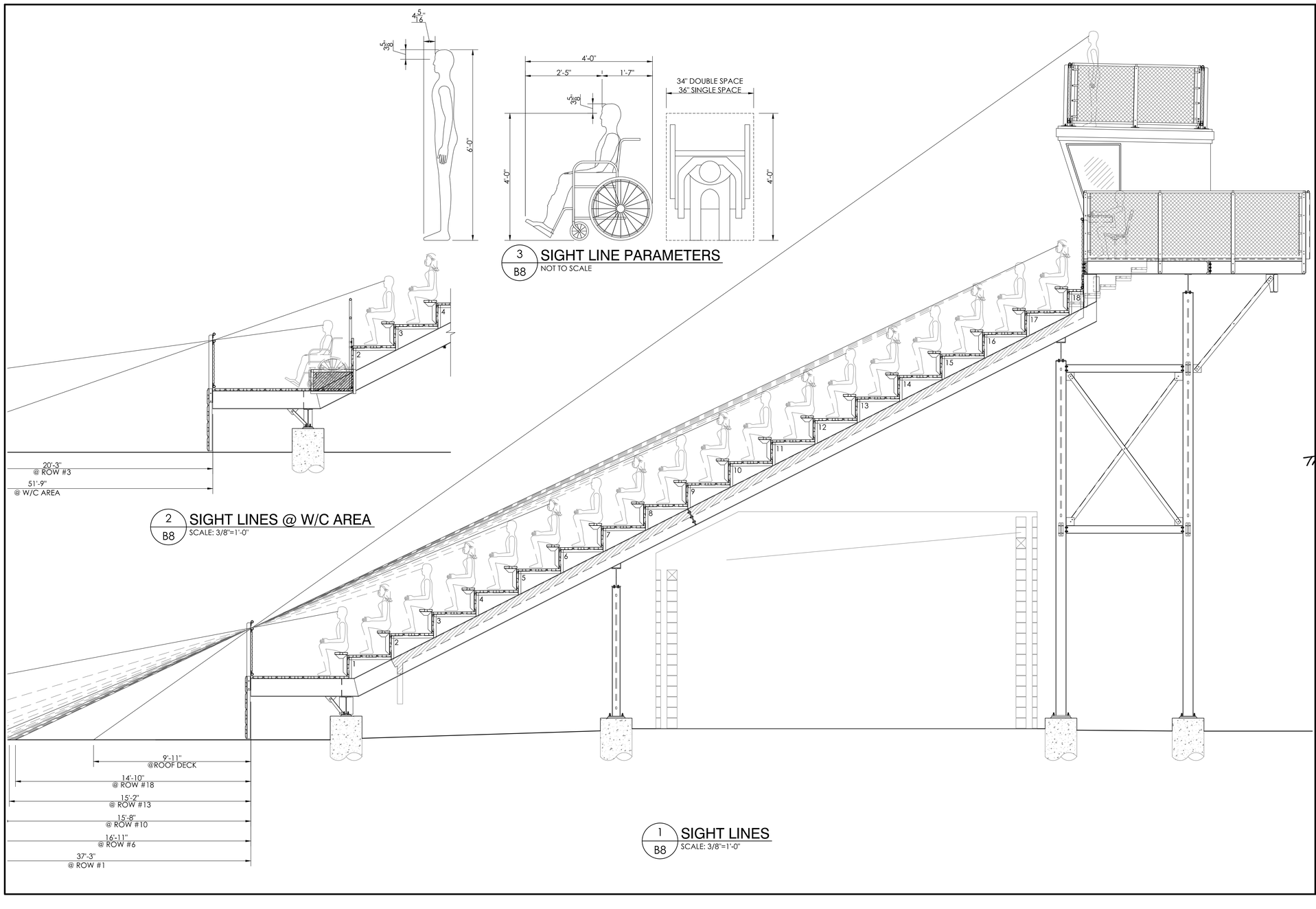

3 / B8 SIGHT LINE PARAMETERS
NOT TO SCALE

2 / B8 SIGHT LINES @ W/C AREA
SCALE: 3/8"=1'-0"

1 / B8 SIGHT LINES
SCALE: 3/8"=1'-0"

THE SADLER GROUP
STRUCTURAL ENGINEERS LICENSED IN 45 STATES
500 MAIN STREET, SUITE 700 • FORT WORTH, TEXAS 76102

Southern® BLEACHER COMPANY
GRANDSTANDS • BLEACHERS • STADIUMS

PO Box One, Graham, Texas 76450
801 Fifth Street.
Phone: 940/549-0733 Fax: 940/549-1365
Established 1946

Ph: (817) 332-1074
Fax: (817) 336-0355
Toll: (800) 900-7373
Email: tsadler@wbell.net

12/01/20

STATE OF CONNECTICUT
THOMAS R. SADLER
NO. 20424
LICENSED
PROFESSIONAL ENGINEER

Thomas R. Sadler

THIS DRAWING AND ALL INFORMATION THEREIN IS THE PROPERTY OF SADLER GROUP AND SOUTHERN BLEACHER COMPANY. IT MAY NOT BE COPIED OR REPRODUCED WITHOUT PRIOR WRITTEN CONSENT OF BOTH SADLER GROUP AND SOUTHERN BLEACHER COMPANY. THE DRAWING IS LOANED AND SUBJECT TO RETURN UPON DEMAND. DRAWING IS PROTECTED UNDER U.S. AND INTERNATIONAL COPYRIGHT LAW.

TITLE: SIGHT LINES
16.25" RISE w/ .25" SLOPE X 32" TREAD X 18 ROWS

TITLE: GREENWICH HIGH SCHOOL
CARDINAL STADIUM
GREENWICH, CONNECTICUT

REV	BY	DATE	DESCRIPTION
6	ES	12/01/20	FAB REVISION
5	ES	10/21/20	NONE THIS SHEET
4	ES	10/14/20	NONE THIS SHEET
3	ES	10/07/20	NONE THIS SHEET
2	ES	05/29/20	NONE THIS SHEET
1	ES	05/07/20	NONE THIS PAGE

DATE: 05/05/20
DRAWN: ES
CHECKED: EM/RR
JOB NUMBER: 20101
SHEET: B8
OF: B17

22" X 34" (11x17 = 1/2 indicated scale)

No

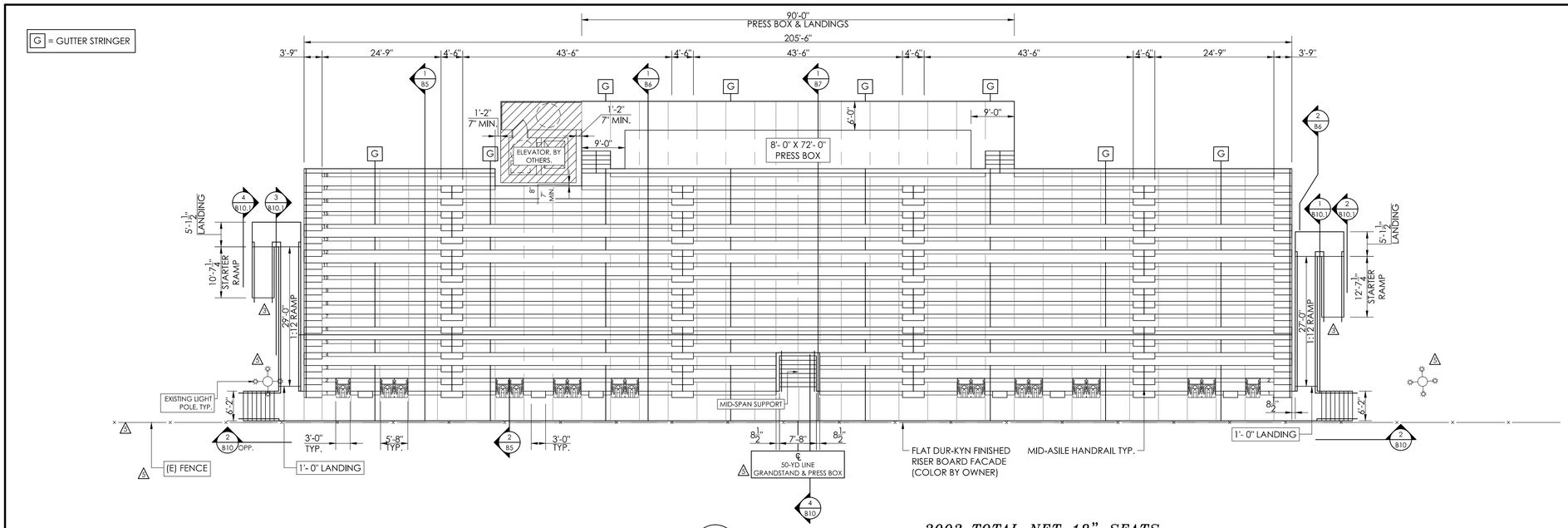

1 / B9 SEATING LAYOUT
SCALE: 3/32"=1'-0"

2002 TOTAL NET 18" SEATS
18 TOTAL NET WHEELCHAIR SPACES
2020 TOTAL SEATING CAPACITY

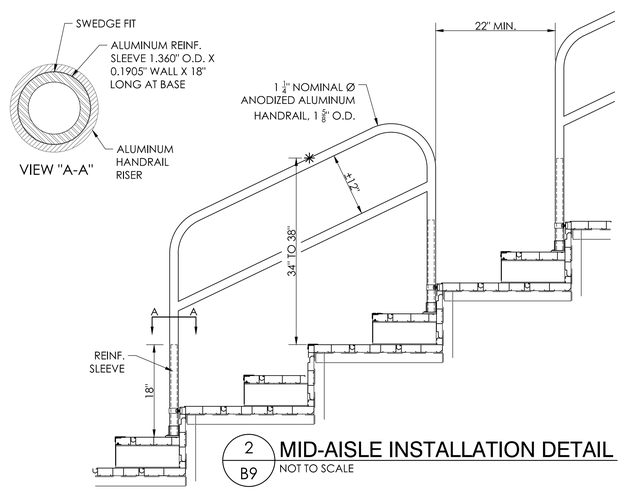

2 / B9 MID-AISLE INSTALLATION DETAIL
NOT TO SCALE

THE ADLER GROUP
STRUCTURAL ENGINEERS • LICENSED IN 44 STATES
500 MAIN STREET, SUITE 700 • FORT WORTH, TEXAS 76102

Southern BLEACHER COMPANY®
GRANDSTANDS • BLEACHERS • STADIUMS
PO Box One, Graham, Texas 76450
801 Fifth Street.
Phone: 940/549-0733 Fax: 940/549-1365

Ph: (817) 332-0174
Fax: (817) 332-0175
Toll: (800) 900-7373
Email: hadler@tadlerl.net

Established 1946

THIS DRAWING AND ALL INFORMATION THEREIN IS THE EXCLUSIVE PROPERTY OF SOUTHERN BLEACHER COMPANY. IT MAY NOT BE COPIED OR REPRODUCED WITHOUT THE WRITTEN CONSENT OF BOYD SAGER GROUP AND SOUTHERN BLEACHER COMPANY. THE DRAWING IS LOANED AND MUST BE RETURNED UPON REQUEST. THIS DRAWING IS PROTECTED UNDER U.S. AND INTERNATIONAL COPYRIGHT LAW.

12/01/20

STATE OF CONNECTICUT
THOMAS R. SADLER
NO. 20428
LICENSED
PROFESSIONAL ENGINEER

Thomas R. Sadler

TITLE: SEATING LAYOUT
32" TREAD X 18 ROWS / 205' - 6"

PROJECT: GREENWICH HIGH SCHOOL
CARDINAL STADIUM
GREENWICH, CONNECTICUT

REV	BY	DATE	DESCRIPTION
	ES	12/01/20	FAB REVISION
	ES	12/01/20	NONE THIS SHEET
	ES	10/14/20	UPDATED LIGHT POLE LOCATION
	ES	10/01/20	RAMP LAYOUTS
	ES	10/01/20	NONE THIS SHEET
	ES	05/20/20	NONE THIS SHEET
	ES	05/01/20	TOP OF FRAME ELEVATIONS

DATE: 05/05/20
DRAWN: ES
CHECKED: EM/RR

JOB NUMBER: 20101

SHEET B9 OF B17

22" X 34" (11x17 = 1/2 indicated scale)

No

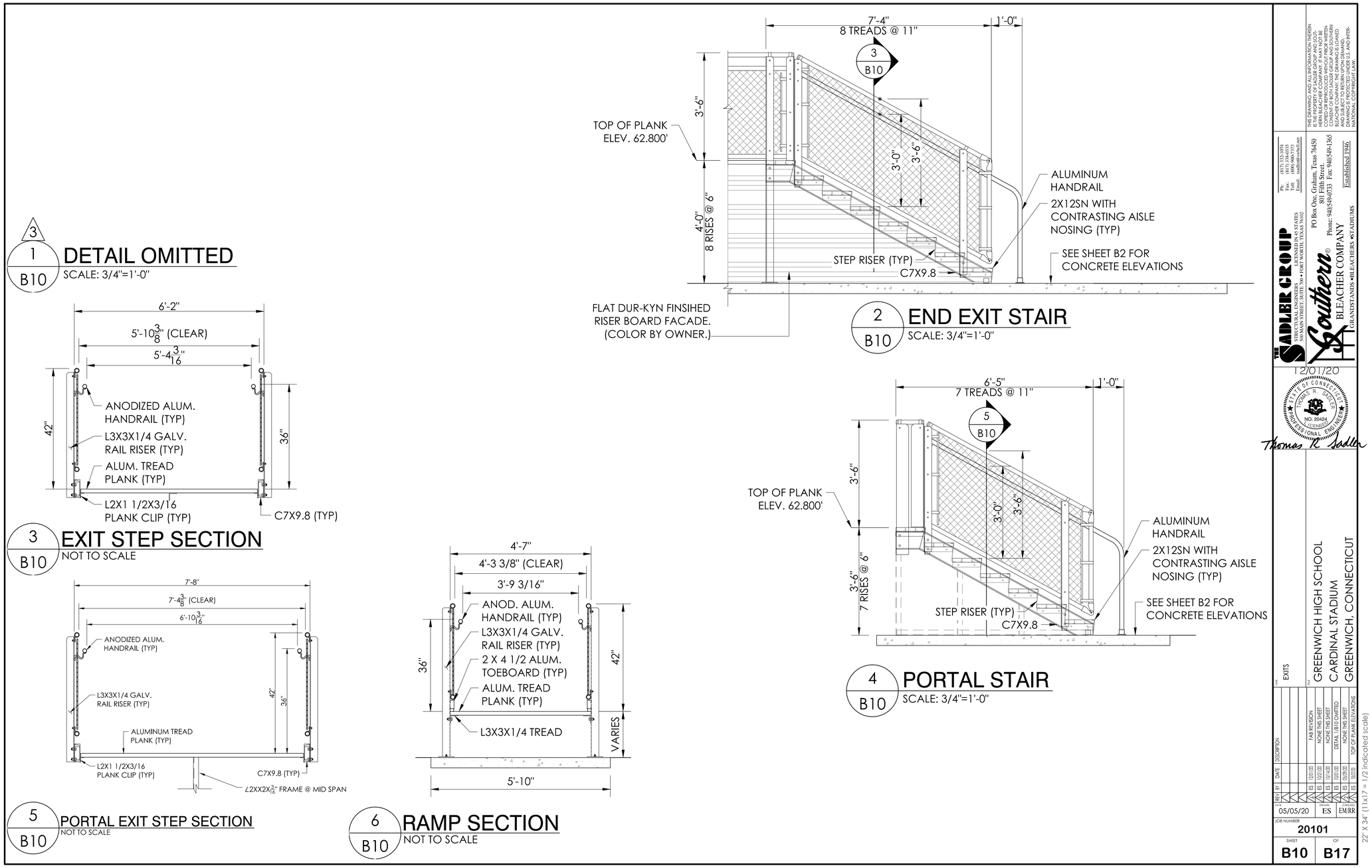

THE SADLER GROUP
STRUCTURAL ENGINEERS LICENSED IN 45 STATES
500 MAIN STREET, SUITE 700 • FORT WORTH, TEXAS 76102

Southern BLEACHER COMPANY
GRANDSTANDS • BLEACHERS • STADIUMS
PO Box One, Graham, Texas 76450
801 Fifth Street.
Phone: 940/549-0733 Fax: 940/549-1365
Established 1946

Ph: (817) 332-1074
Fax: (817) 336-0335
Toll: (800) 900-7373
Email: sadler@swbell.net

THIS DRAWING AND ALL INFORMATION THEREIN IS THE PROPERTY OF SADLER GROUP AND SOUTHERN BLEACHER COMPANY. IT MAY NOT BE COPIED OR REPRODUCED WITHOUT PRIOR WRITTEN CONSENT OF BOTH SADLER GROUP AND SOUTHERN BLEACHER COMPANY. THE DRAWING IS LOANED AND SUBJECT TO RETURN UPON DEMAND. DRAWING IS PROTECTED UNDER U.S. AND INTERNATIONAL COPYRIGHT LAW.

12/01/20

STATE OF CONNECTICUT
THOMAS R. SADLER
NO. 20424
LICENSED
PROFESSIONAL ENGINEER

Thomas R. Sadler

TITLE: EXITS

GREENWICH HIGH SCHOOL
CARDINAL STADIUM
GREENWICH, CONNECTICUT

REV	BY	DATE	DESCRIPTION
1	ES	12/01/20	FAB REVISION
2	ES	10/21/20	NONE THIS SHEET
3	ES	10/14/20	NONE THIS SHEET
4	ES	10/01/20	DETAIL 1/B10 OMITTED
5	ES	05/29/20	NONE THIS SHEET
6	ES	05/01/20	TOP OF PLANK ELEVATIONS

DATE: 05/05/20 DRAWN: ES CHECKED: EM/RR

JOB NUMBER: 20101

SHEET: B10 OF: B17

22" X 34" (11x17 = 1/2 indicated scale)

No

FOR TOP OF CONCRETE ELEVATIONS, SEE SHEET B2

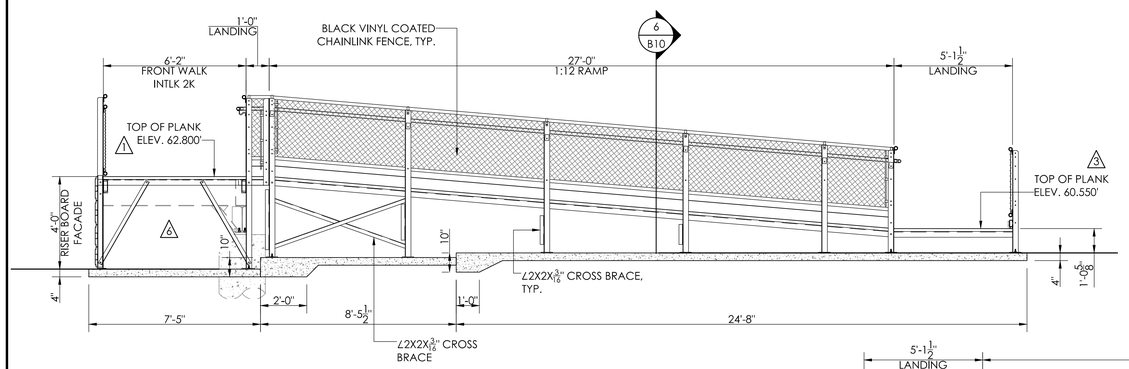

2 1 B10.1 RIGHT END 1:12 RAMP SECTION
SCALE: 3/8"=1'-0"

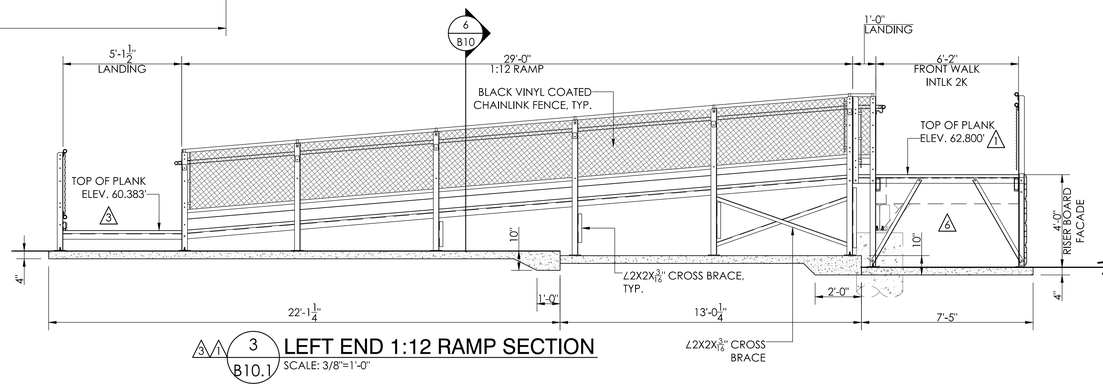

3 1 B10.1 LEFT END 1:12 RAMP SECTION
SCALE: 3/8"=1'-0"

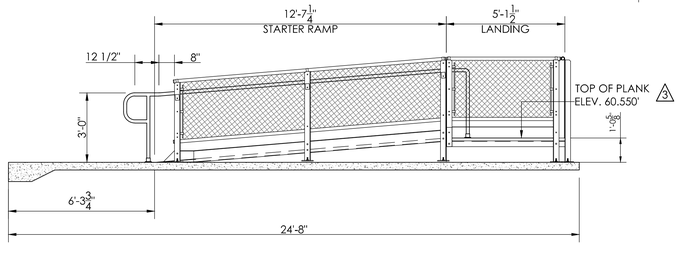

2 2 B10.1 RIGHT END 1:12 RAMP SECTION
SCALE: 3/8"=1'-0"

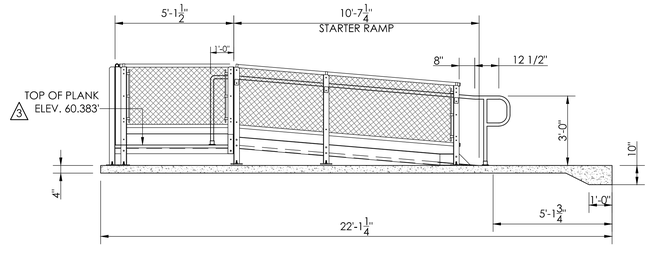

2 1 4 B10.1 LEFT END 1:12 RAMP SECTION
SCALE: 3/8"=1'-0"

THE SADLER GROUP
STRUCTURAL ENGINEERS • LICENSED IN 45 STATES
50 MAIN STREET, SUITE 700 • FORT WORTH, TEXAS 76102
Ph: (817) 332-0174
Fax: (817) 336-0135
Toll: (800) 900-7373
Email: tsadler@wbsfirm.com

Southern BLEACHER COMPANY
GRANDSTANDS • BLEACHERS • STADIUMS
PO Box One, Graham, Texas 76450
801 Fifth Street.
Phone: 940/549-0733 Fax: 940/549-1365
Established 1946

THIS DRAWING AND ALL INFORMATION THEREIN IS THE PROPERTY OF SADLER GROUP AND SOUTHERN BLEACHER COMPANY. IT MAY NOT BE COPIED OR REPRODUCED WITHOUT PRIOR WRITTEN CONSENT OF SADLER GROUP AND SOUTHERN BLEACHER COMPANY. THE DRAWING IS LOANED UNDER THE LIMITED RIGHT TO REVIEW AND USE. DRAWING IS PROTECTED UNDER U.S. AND INTERNATIONAL COPYRIGHT LAW.

12/01/20

STATE OF CONNECTICUT
THOMAS R. SADLER
NO. 20424
LICENSED
PROFESSIONAL ENGINEER

Thomas R. Sadler

TITLE: RAMP SECTIONS

PROJECT: GREENWICH HIGH SCHOOL
CARDINAL STADIUM
GREENWICH, CONNECTICUT

REV	BY	DATE	DESCRIPTION
	ES	12/01/20	FAB REVISION
	ES	10/21/20	NONE THIS SHEET
	ES	10/14/20	NONE THIS SHEET
	ES	10/01/20	RAMP LENGTHS
	ES	10/01/20	NONE THIS SHEET
	ES	05/20/20	TOP OF PLANK ELEV. / LEFT END RAMP

DATE 05/05/20 | DRAWN ES | DESIGNED EM/RR

JOB NUMBER 20101

SHEET B10.1 OF B17

22" X 34" (11x17 = 1/2 indicated scale)

No

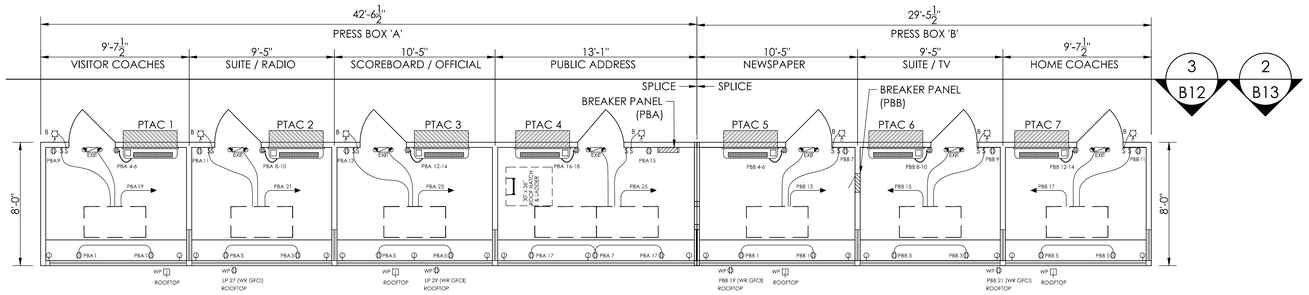

1 B11 PRESS BOX "A" ELECTRICAL PANEL
SCALE:1/4"=1'-0"

2 B11 PRESSBOX "B" ELECTRICAL PLAN
SCALE:1/4"=1'-0"

PRESS BOX LEGEND

- 250V, SINGLE POWER RECPT. (20A.) NEMA 6-20R
- 20A. 125V. DUPLEX RECPT. (GFCI WHERE NOTED)
- $ 20A. 125V. SINGLE POLE DECORATOR STYLE SWITCH
  OS - WITH MANUAL ON/OFF OCCUPANCY SENSOR
- J 4X4X2 1/8" JUNCTION BOX W/ 3/4" C STUBOUT UNDER FLOOR WP ON ROOF STUBBED INTO CEILING SPACE FOR USE BY OTHERS
- 4'X2' EDGELIT LED PANEL LIGHT RAB LIGHTING EZPANFA2X4/D10 0.26A @ 120V INPUT WATTS: 29.6W
- EXIT BATTERY BACK UP EMERGENCY/EXIT LIGHT CONNECT TO LIGHT CIRCUIT AHEAD OF SWITCH. NEC 700.12 (F)
- 1 12,000 BTU COOL/12,000 BTU EHEAT 5.6 A. COOL/15.4 A. HEAT - 208/230V. AMANA # PTC123E35AXXX OR EQUAL FIELD INSTALLED
- NOTE: 120V. DUPLEX RECPT. ARE LOCATED IN ONE END OF BASEBOARD HEATERS USING ACCESSORY COVER BKORA1. THERMOSTAT IN THE OTHER END - COVER BKOTA1A W/ THERMOSTAT TA2A. WALL RECPT. ARE NOT ABOVE BB HEATERS.
- B 12W, LED EXTERIOR LIGHT W/PHOTOCELL

PRESS BOX 'A' 1

LOAD CENTER SCHEDULE — G.E. TLM30412C OR EQUAL

PANEL PBA — 125A - 30 CIRCUIT W/ EQUIPMENT GROUND — 240/120 VOLTS 3 PH. 4 W

MOUNTING: ☐ FLUSH ☒ SURFACE — 125 AMP MAIN BREAKER

	BREAKER SIZE	BREAKER POLE	CIR. #	BUS A	BUS B	BUS C	CIR. #	BREAKER SIZE	BREAKER POLE	
(2) DUPLEX RECPT. FRONT WALL	20	1	1				2	20	1	SPARE
(2) DUPLEX RECPT. FRONT WALL	20	1	3				4	20		PTAC UNIT #1
(2) DUPLEX RECPT. FRONT WALL	20	1	5				6		2	PTAC UNIT #1
(2) DUPLEX RECPT. FRONT WALL	20	1	7				8	20		PTAC UNIT #2
DUPLEX RECPT. BACK WALL	20	1	9				10		2	PTAC UNIT #2
DUPLEX RECPT. BACK WALL	20	1	11				12	20		PTAC UNIT #3
DUPLEX RECPT. BACK WALL	20	1	13				14		2	PTAC UNIT #3
DUPLEX RECPT. BACK WALL	20	1	15				16	20		PTAC UNIT #4
(2) DUPLEX RECPT. FRONT WALL	20	1	17				18		2	PTAC UNIT #4
LIGHTS	20	1	19				20	20	1	SPARE
LIGHTS	20	1	21				22			SPACE
LIGHTS	20	1	23				24			SPACE
LIGHTS	20	1	25				26			SPACE
WP DUPLEX RECPT GFCI ROOFTOP	20	1	27				28			SPACE
WP DUPLEX RECPT GFCI ROOFTOP	20	1	29				30			SPACE

PRESS BOX 'B' 1

LOAD CENTER SCHEDULE — G.E. TLM30412C OR EQUAL

PANEL PBB — 125A - 30 CIRCUIT W/ EQUIPMENT GROUND — 240/120 VOLTS 3 PH. 4 W

MOUNTING: ☒ FLUSH ☐ SURFACE — 125 AMP MAIN BREAKER

	BREAKER SIZE	BREAKER POLE	CIR. #	BUS A	BUS B	BUS C	CIR. #	BREAKER SIZE	BREAKER POLE	
(2) DUPLEX RECPT. FRONT WALL	20	1	1				2	20	1	SPARE
(2) DUPLEX RECPT. FRONT WALL	20	1	3				4	20		PTAC UNIT #5
(2) DUPLEX RECPT. FRONT WALL	20	1	5				6		2	PTAC UNIT #5
DUPLEX RECPT. BACK WALL	20	1	7				8	20		PTAC UNIT #6
DUPLEX RECPT. BACK WALL	20	1	9				10		2	PTAC UNIT #6
DUPLEX RECPT. BACK WALL	20	1	11				12	20		PTAC UNIT #7
LIGHTS	20	1	13				14		2	PTAC UNIT #7
LIGHTS	20	1	15				16	20	1	SPARE
LIGHTS	20	1	17				18			SPACE
WP DUPLEX RECPT GFCI ROOFTOP	20	1	19				20			SPACE
WP DUPLEX RECPT GFCI ROOFTOP	20	1	21				22			SPACE
SPACE			23				24			SPACE
SPACE			25				26			SPACE
SPACE			27				28			SPACE
SPACE			29				30			SPACE

CONDUIT WILL BE 1/2" EMT, 1/2" STEELFLEX, OR SURFACE RACEWAY UNLESS OTHERWISE NOTED

WIRING ON 20A BREAKERS WILL BE #12 = THWN - THHN

EQUIPMENT GROUND RUN IN ALL CONDUITS OR NON-METALLIC SURFACE RACEWAYS

PANEL FEEDER, NEUTRAL, BONDING, AND GROUNDING TO BE ACCORDING TO APPLICABLE CODES ADOPTED BY THE LOCAL AHJ ON SITE BY ELECTRICAL CONTRACTOR.

PANEL BONDED TO METAL BUILDING FRAME BY PRESS BOX MANUF.

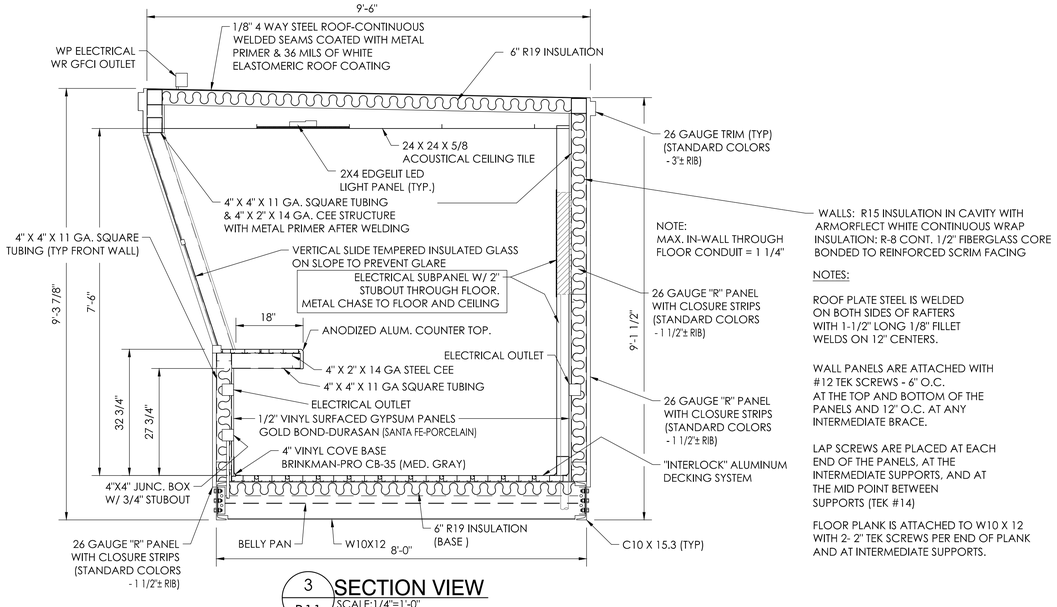

NOTE:
MAX. IN-WALL THROUGH FLOOR CONDUIT = 1 1/4"

WALLS: R15 INSULATION IN CAVITY WITH ARMORFLECT WHITE CONTINUOUS WRAP INSULATION; R-8 CONT. 1/2" FIBERGLASS CORE BONDED TO REINFORCED SCRIM FACING

NOTES:

ROOF PLATE STEEL IS WELDED ON BOTH SIDES OF RAFTERS WITH 1-1/2" LONG 1/8" FILLET WELDS ON 12" CENTERS.

WALL PANELS ARE ATTACHED WITH #12 TEK SCREWS - 6" O.C. AT THE TOP AND BOTTOM OF THE PANELS AND 12" O.C. AT ANY INTERMEDIATE BRACE.

LAP SCREWS ARE PLACED AT EACH END OF THE PANELS, AT THE INTERMEDIATE SUPPORTS, AND AT THE MID POINT BETWEEN SUPPORTS (TEK #14)

FLOOR PLANK IS ATTACHED TO W10 X 12 WITH 2- 2" TEK SCREWS PER END OF PLANK AND AT INTERMEDIATE SUPPORTS.

3 B11 SECTION VIEW
SCALE:1/4"=1'-0"

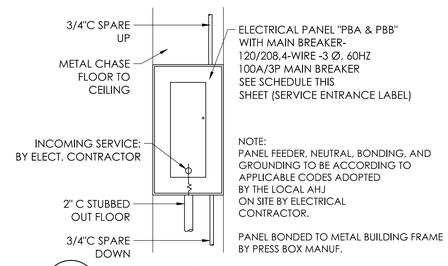

4 B11 ELECTRICAL PANEL ELEVATION
NOT TO SCALE

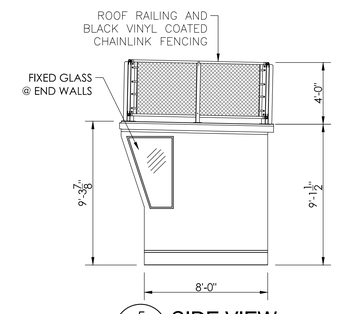

5 B11 SIDE VIEW
SCALE:1/4"=1'-0"

THE SADLER GROUP
STRUCTURAL ENGINEERS LICENSED IN 44 STATES
500 MAIN STREET, SUITE 700 • FORT WORTH, TEXAS 76102
Ph: (817) 332-0194
Fax: (817) 332-0195
Toll: (800) 900-7373
Email: info@thesadlergroup.com

Southern BLEACHER COMPANY
PO Box One, Graham, Texas 76450
Phone: 940/549-0733 Fax: 940/549-1365
801 Fifth Street.
CORPORATE OFFICE FOR SOUTHERN BLEACHER COMPANY, THE DRAWING IS LOANED FOR USE ONLY TO THE PROJECT NAMED. DRAWING IS PROTECTED UNDER U.S. AND INTERNATIONAL COPYRIGHT LAW.

Established 1946

12/01/20

STATE OF CONNECTICUT — THOMAS R. SADLER — NO. 20424 — LICENSED PROFESSIONAL ENGINEER

Thomas R. Sadler

REV	BY	DATE	DESCRIPTION
			FAB REVISION
	ES	12/01/20	NONE THIS SHEET
	ES	12/01/20	NONE THIS SHEET
	ES	12/14/20	NONE THIS SHEET
	ES	12/01/20	NONE THIS SHEET
	ES	12/02/20	NONE THIS SHEET
	ES	12/02/20	PTAC UNITS
	ES	4/01/21	4/01/21

TITLE: PRESS BOX LAYOUT 8'- 0" X 72'- 0" / SLOPED FRONT

JOB: GREENWICH HIGH SCHOOL CARDINAL STADIUM GREENWICH, CONNECTICUT

DATE 05/05/20 — DRAWN ES — CHECKED EM/RR

JOB NUMBER 20101

SHEET B11 OF B17

22" X 34" (11X17 = 1/2 indicated scale)

No

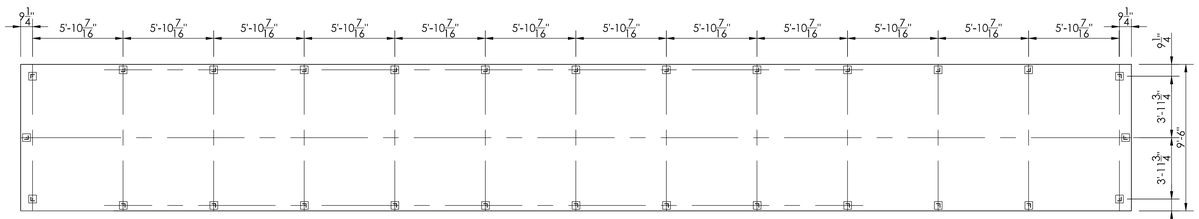

1 / B12 ROOF RAIL LAYOUT
SCALE:1/4"=1'-0"

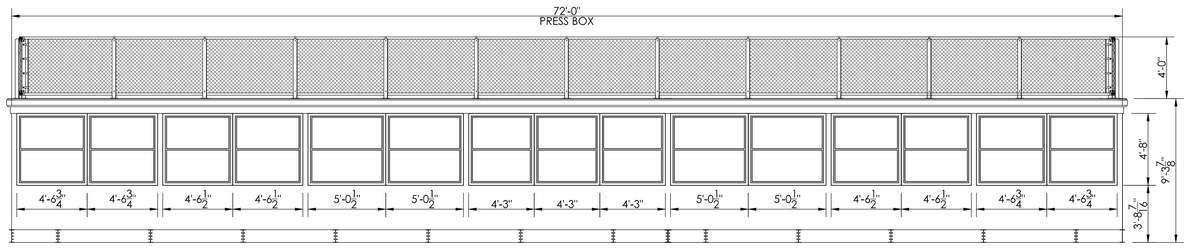

2 / B12 FRONT ELEVATION
SCALE:1/4"=1'-0"

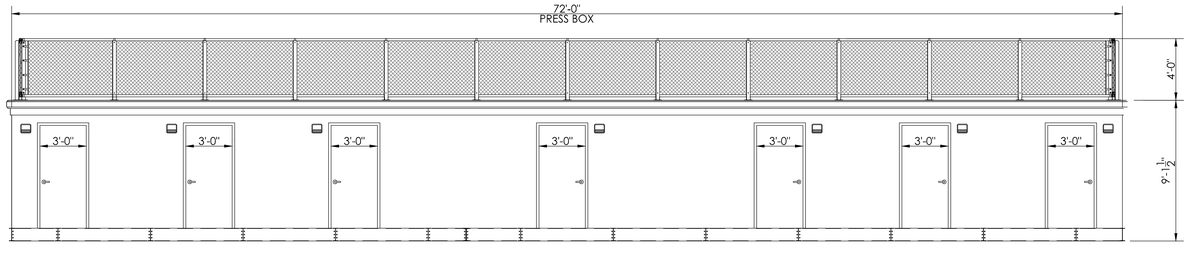

3 / B12 REAR ELEVATION
SCALE:1/4"=1'-0"

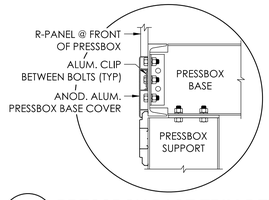

5 / B12 PRESSBOX BASE TRIM DETAIL
NOT TO SCALE

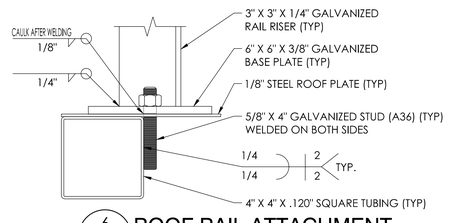

6 / B12 ROOF RAIL ATTACHMENT
NOT TO SCALE

THE SADLER GROUP
STRUCTURAL ENGINEERS • LICENSED IN 44 STATES
50 MAIN STREET, SUITE 700 • FORT WORTH, TEXAS 76102
Ph: (817) 332-0194
Fax: (817) 332-0195
Toll: (800) 900-7373
Email: tsadler@sadlerLaw

Southern BLEACHER COMPANY
GRANDSTANDS • BLEACHERS • STADIUMS
PO Box One, Graham, Texas 76450
801 Fifth Street,
Phone: 940/549-0733 Fax: 940/549-1365
Established 1946

THIS DRAWING AND ALL INFORMATION THEREIN IS THE PROPERTY OF SADLER GROUP AND SOUTHERN BLEACHER COMPANY. IT MAY NOT BE COPIED OR REPRODUCED WITHOUT THE WRITTEN CONSENT OF SADLER GROUP AND SOUTHERN BLEACHER COMPANY. THE DRAWING IS LOANED AND MUST BE RETURNED UPON REQUEST. THIS DRAWING IS PROTECTED UNDER U.S. AND INTERNATIONAL COPYRIGHT LAW.

12/01/20

STATE OF CONNECTICUT
THOMAS R. SADLER
NO. 20424
PROFESSIONAL ENGINEER

Thomas R. Sadler

REV	BY	DATE	DESCRIPTION
A			
A			
A			
A	ES	12/01/20	FAB REVISION
A	ES	11/21/20	NONE THIS SHEET
A	ES	10/14/20	NONE THIS SHEET
A	ES	10/07/20	NONE THIS SHEET
A	ES	10/29/20	NONE THIS SHEET
A	ES	10/20/20	NONE THIS PAGE

TITLE: PRESS BOX ELEVATION VIEWS
8'- 0" X 72'- 0" / SLOPED FRONT

PROJECT: GREENWICH HIGH SCHOOL
CARDINAL STADIUM
GREENWICH, CONNECTICUT

DATE: 05/05/20
DRAWN: ES
CHECKED: EM/RR
JOB NUMBER: 20101
SHEET: B12 OF B17

22" X 34" (1:1x1"= 1/2 indicated scale)

No

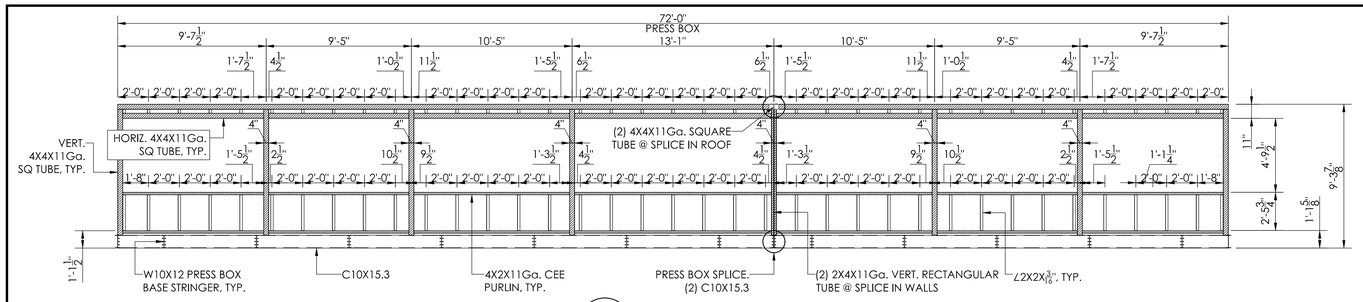

1 / B13 FRONT WALL FRAMING PLAN
SCALE:1/4"=1'-0"

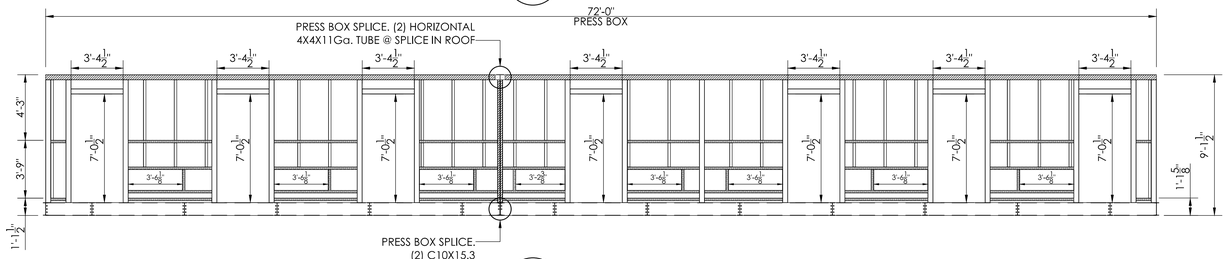

2 / B13 REAR WALL FRAMING PLAN
SCALE:1/4"=1'-0"

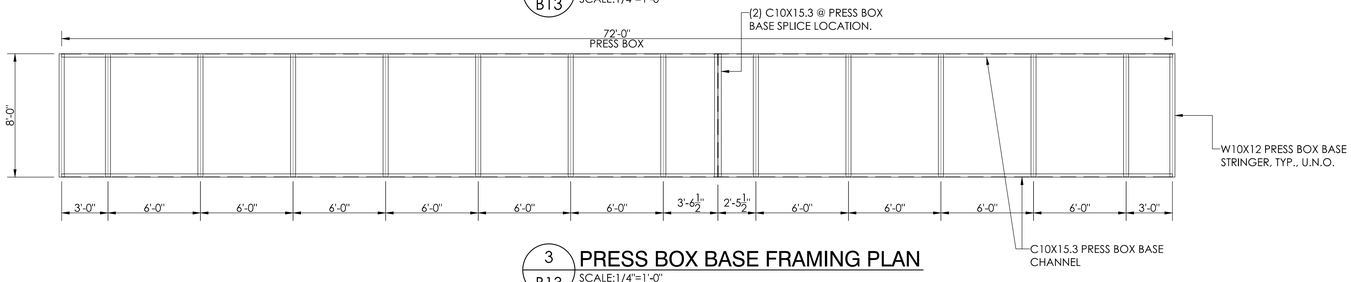

3 / B13 PRESS BOX BASE FRAMING PLAN
SCALE:1/4"=1'-0"

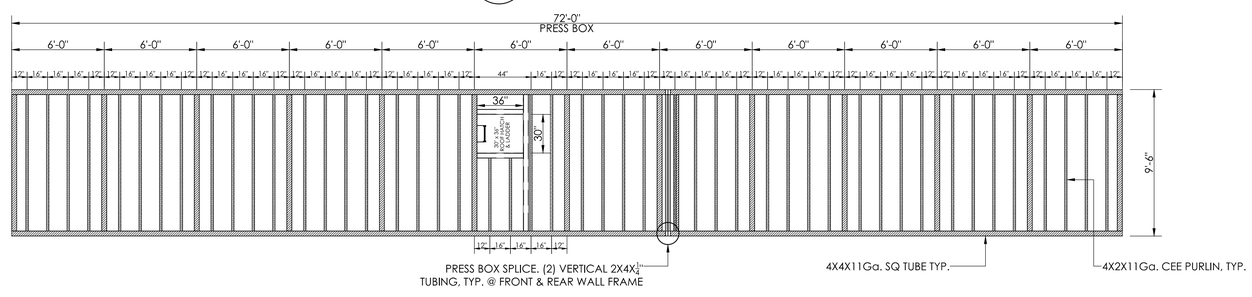

4 / B13 PRESS BOX ROOF FRAMING PLAN
SCALE:1/4"=1'-0"

THE SADLER GROUP
STRUCTURAL ENGINEERS
LICENSED IN 45 STATES
50 MAIN STREET, SUITE 700 • FORT WORTH, TEXAS 76102
Ph: (817) 332-1074
Fax: (817) 332-0135
Toll: (800) 900-7373
Email: tsadler@wbsl.net
Southern BLEACHER COMPANY
GRANDSTANDS • BLEACHERS • STADIUMS
PO Box One, Graham, Texas 76450
801 Fifth Street,
Phone: 940/549-0733 Fax: 940/549-1365
Established 1946

THIS DRAWING AND ALL INFORMATION THEREIN IS THE PROPERTY OF SADLER GROUP AND SOUTHERN BLEACHER COMPANY. IT MAY NOT BE COPIED OR REPRODUCED WITHOUT PRIOR WRITTEN CONSENT OF BOTH SADLER GROUP AND SOUTHERN BLEACHER COMPANY. THE DRAWING IS LOANED AND SUBJECT TO RETURN UPON DEMAND. DRAWING IS PROTECTED UNDER U.S. AND INTERNATIONAL COPYRIGHT LAW.

12/01/20

STATE OF CONNECTICUT
THOMAS R. SADLER
NO. 20424
LICENSED
PROFESSIONAL ENGINEER

Thomas R. Sadler

TITLE: PRESS BOX FRAMING PLAN
8'- 0" X 72'- 0" / SLOPED FRONT

TITLE: GREENWICH HIGH SCHOOL
CARDINAL STADIUM
GREENWICH, CONNECTICUT

REV	BY	DATE	DESCRIPTION
6	ES	12/01/20	FAB REVISION
5	ES	10/21/20	NONE THIS SHEET
4	ES	10/14/20	NONE THIS SHEET
3	ES	10/01/20	NONE THIS SHEET
2	ES	05/29/20	NONE THIS SHEET
1	ES	05/01/20	REAR WALL FRAMING FOR PTACS

DATE: 05/05/20 | DRAWN: ES | CHECKED: EM/RR

JOB NUMBER: 20101

SHEET: B13 OF: B17

22" X 34" (11x17 = 1/2 indicated scale)

No

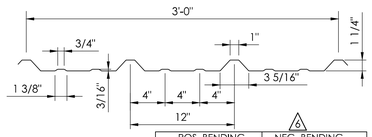

PANEL GAUGE	Fy KSI	THK. IN.	Fu KSI	wt PSF	POS. BENDING Ix IN⁴/FT.	POS. BENDING Sx IN³/FT.	POS. BENDING Ma (KIP-IN.)	NEG. BENDING Ix IN⁴/FT.	NEG. BENDING Sx IN³/FT.	NEG. BENDING Ma (KIP-IN.)
26	60	.0181	61.5	0.94	0.0382	0.0381	1.6759	0.0309	0.0449	1.8019

ALLOWABLE UNIFORM LOADS IN POUND PER SQUARE FOOT

26 GAUGE SPAN TYPE	LOAD TYPE	SPAN IN FEET 3'	4'	5'	6'	7'	8'	9'
1-SPAN	NEGATIVE WIND LOAD	134	75	48	33	25	19	15
	LIVE LOAD/DEFLECTION	119	70	45	31	23	18	14
2-SPAN	NEGATIVE WIND LOAD	115	67	43	30	22	17	14
	LIVE LOAD/DEFLECTION	106	71	46	33	24	19	15

1 B14 "R" PANEL DET.
NOT TO SCALE

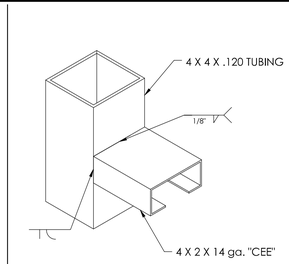

2 B14 WELD DETAIL
NOT TO SCALE

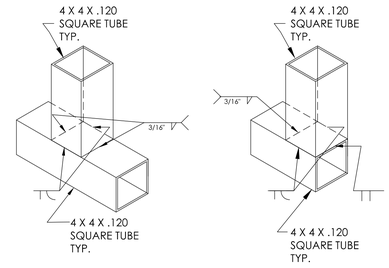

3 B14 WELD DETAIL
NOT TO SCALE

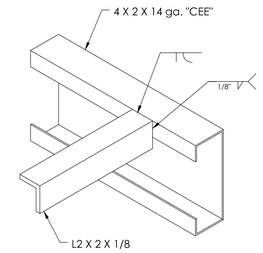

4 B14 WELD DETAIL
NOT TO SCALE

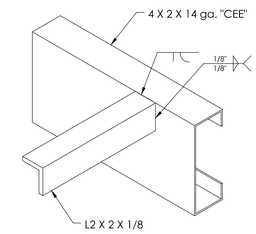

5 B14 WELD DETAIL
NOT TO SCALE

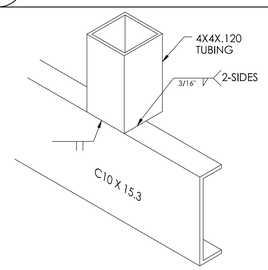

6 B14 WELD DETAIL
NOT TO SCALE

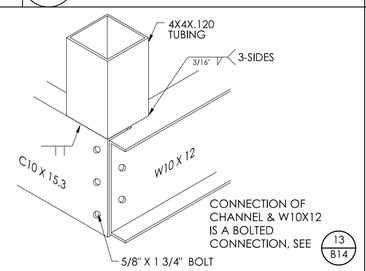

7 B14 WELD DETAIL
NOT TO SCALE

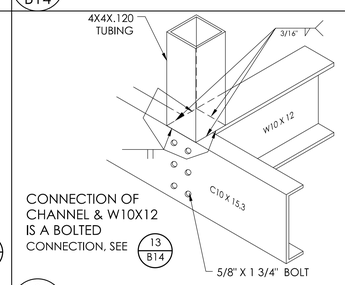

8 B14 WELD DETAIL
NOT TO SCALE

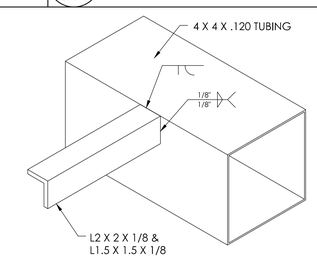

9 B14 WELD DETAIL
NOT TO SCALE

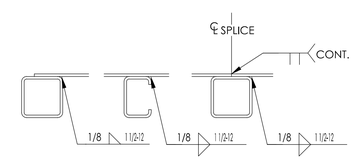

10 B14 STEEL ROOF TO TUBING
NOT TO SCALE

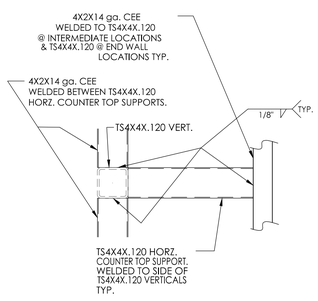

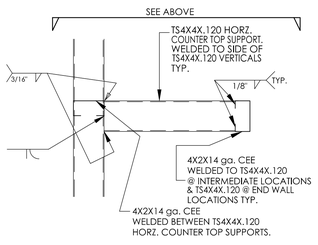

11 B14 COUNTER TOP DETAIL
NOT TO SCALE

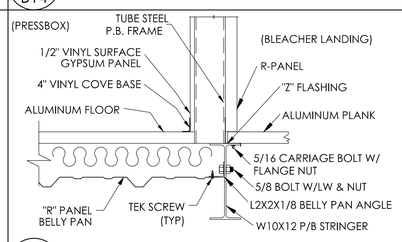

12 B14 LANDING TRANSITION DETAIL
NOT TO SCALE

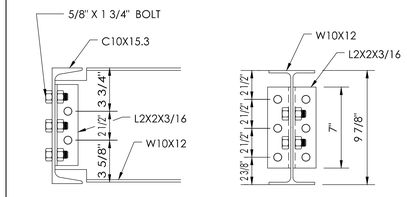

13 B14 CHANNEL CONN. DETAIL
NOT TO SCALE

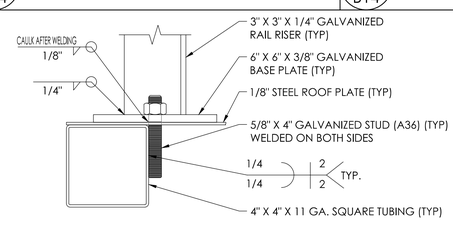

14 B14 ROOF RAIL ATTACHMENT
NOT TO SCALE

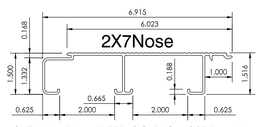

2X7 ALUMINUM INTERLOCKING NOSE PLANK
.078 WALL , 1.330#/FT.
1. Ix =.331 IN. e-4
2. MATERIAL - 6063 T-6
3. MIN. MAT. PROP. - 25000 PSI
4. E = 10,000,000 PSI
5. C = 1.03 IN.

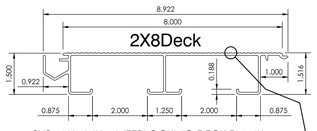

2X8 ALUMINUM INTERLOCKING DECK PLANK
.078 WALL , 1.746#/FT.
1. Ix = .461 IN. e-4
2. MATERIAL - 6063 T-6
3. MIN. MAT. PROP. - 25000 PSI
4. E = 10,000,000 PSI
5. C = 1.00 IN.

SEE 4 B15

15 B14 INTERLOCKING PLANK DETAIL
NOT TO SCALE

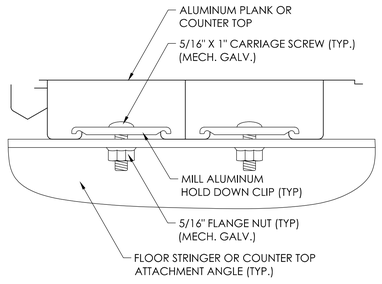

NOTE:
FRONT (LAST) FLOOR PLANK IS ATTACHED TO W10X12 W/ (2)-2" COUNTERSUNK TEK SCREWS PER END OF PLANK AND AT INTERMEDIATE SUPPORTS.

16 B14 ALUMINUM PLANK / COUNTER TOP ATTACHMENT DETAIL
NOT TO SCALE

manufactured exclusively for Southern Bleacher Company

HUB Machine and Tool Inc.
PO Box 1508 Graham, Texas 76450
900 Hwy. 380 Bypass
Phone: 940/549-0155 Fax: 940/549-8557

Established 1954

THE ADLER GROUP
STRUCTURAL ENGINEERS • LICENSED IN 44 STATES
500 MAIN STREET, SUITE 700 • FORT WORTH, TEXAS 76102
Ph: (817) 332-0174
Fax: (817) 332-0175
Toll: (800) 500-2373
Email: hub@tagnet.net

Southern® BLEACHER COMPANY
GRANDSTANDS • BLEACHERS • STADIUMS
PO Box One, Graham, Texas 76450
801 Fifth Street.
Phone: 940/549-0733 Fax: 940/549-1365
Established 1946

THIS DRAWING AND ALL INFORMATION THEREIN IS PROPRIETARY TO SOUTHERN BLEACHER COMPANY. IT MAY NOT BE COPIED OR REPRODUCED WITHOUT WRITTEN CONSENT OF SOUTHERN BLEACHER COMPANY. THE DRAWING IS LOANED TO THE OWNER FOR USE ON THIS PROJECT. THE DRAWING IS PROTECTED UNDER U.S. AND INTERNATIONAL COPYRIGHT LAW.

12/01/20

STATE OF CONNECTICUT
THOMAS R. SADLER
NO. 20424
LICENSED
PROFESSIONAL ENGINEER

Thomas R. Sadler

TITLE: PRESS BOX DETAILS
SIZE: 8'- 0" X 72'- 0" / SLOPED FRONT

GREENWICH HIGH SCHOOL
CARDINAL STADIUM
GREENWICH, CONNECTICUT

REV#	BY	DATE	DESCRIPTION
	ES	12/01/20	FAB REVISION
	ES	10/21/20	NONE THIS SHEET
	ES	10/14/20	NONE THIS SHEET
	ES	10/07/20	NONE THIS SHEET
	ES	10/20/20	NONE THIS SHEET
	ES	10/02/20	NONE THIS PAGE

DATE 05/05/20 | DRAWN ES | CHECKED EM/RR

JOB NUMBER 20101

SHEET B14 OF B17

22" X 34" (11x17 = 1/2 indicated scale)

No

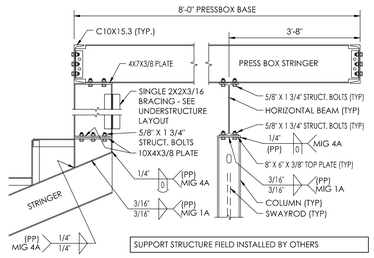

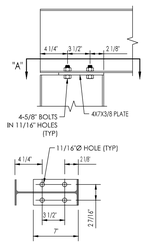

SECTION "A-A"

1 / B15 PRESSBOX BASE DETAIL
NOT TO SCALE

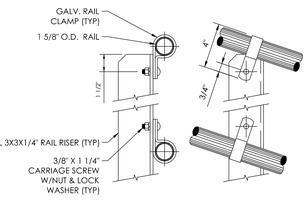

2 / B15 RAIL RISER ATTACHMENT DETAIL
NOT TO SCALE — OPTIONAL ROOFTOP FILM DECK

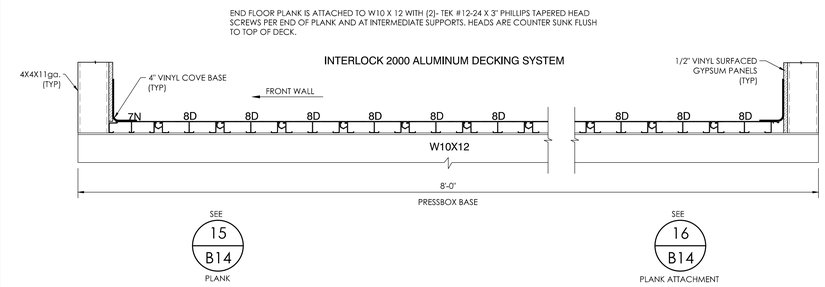

3 / B15 PRESSBOX FLOOR DETAIL
NOT TO SCALE

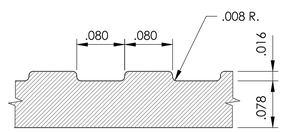

NOTE: TYPICAL FOR ALL PLANKS.

4 / B15 FLUTED SURFACE DETAIL
NOT TO SCALE

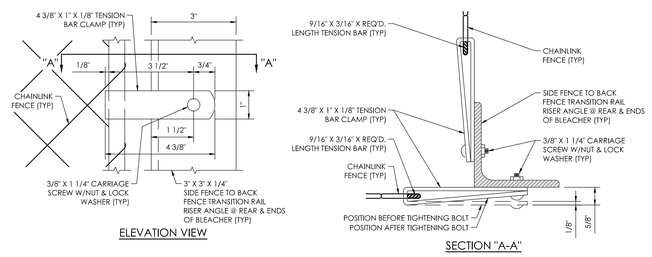

5 / B15 TENSION BAR CLAMP DETAIL
NOT TO SCALE — OPTIONAL ROOFTOP FILM DECK

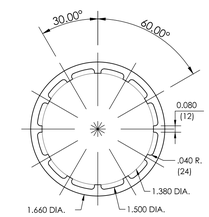

6 / B15 1 5/8" O.D. ALUMINUM RAIL DETAIL
NOT TO SCALE — OPTIONAL ROOFTOP FILM DECK

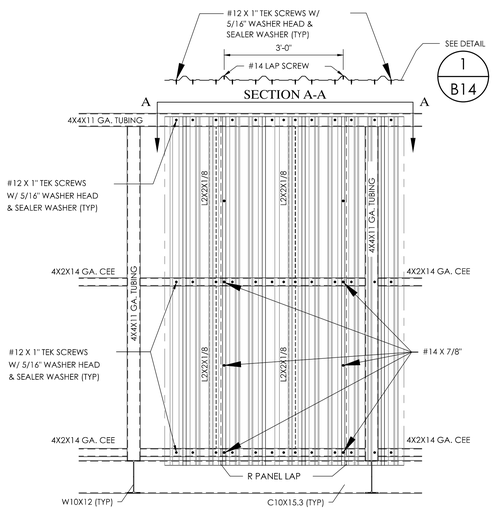

7 / B15 "R" PANEL ATTACHMENT DETAIL
NOT TO SCALE

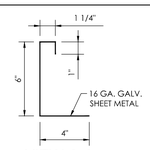

VIEW A-A

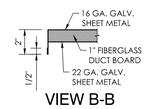

VIEW B-B

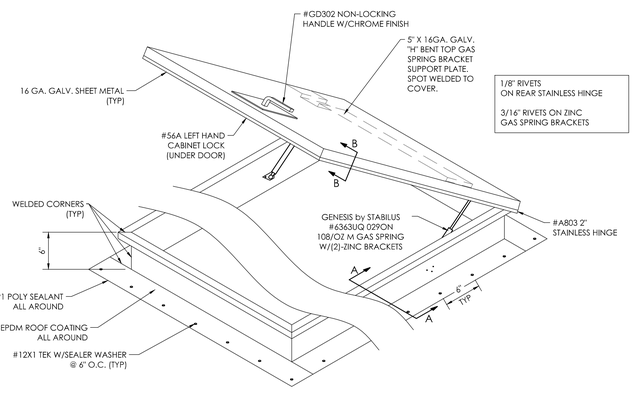

8 / B15 HUB ROOF HATCH DETAIL
NOT TO SCALE — OPTIONAL ROOFTOP FILM DECK

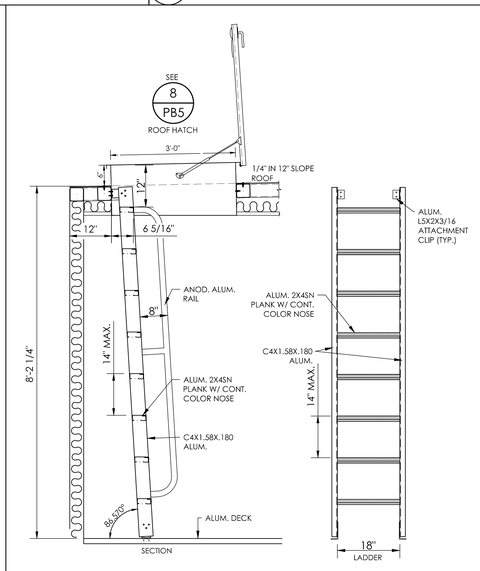

9 / B15 HUB LADDER DETAIL
NOT TO SCALE — OPTIONAL ROOFTOP FILM DECK

manufactured exclusively for Southern Bleacher Company

HUB Machine and Tool Inc.
PO Box 1508 Graham, Texas 76450
900 Hwy. 380 Bypass
Phone: 940/549-0155 Fax: 940/549-8557

Established 1954

THE ADLER GROUP
STRUCTURAL ENGINEERS - LICENSED IN 44 STATES
500 MAIN STREET, SUITE 700 • FORT WORTH, TEXAS 76102
Ph: (817) 332-0174
Fax: (817) 332-0175
Toll: (800) 900-2373
Email: info@theadlergroup.com

Southern BLEACHER COMPANY®
PO Box One, Graham, Texas 76450
Phone: 940/549-0733 Fax: 940/549-1365
801 Fifth Street
Established 1946
GRANDSTANDS • BLEACHERS • STADIUMS

THIS DRAWING AND ALL INFORMATION THEREIN IS THE PROPERTY OF THE ADLER GROUP AND SOUTHERN BLEACHER COMPANY. IT MAY NOT BE COPIED OR REPRODUCED WITHOUT THE CONSENT OF THE ADLER GROUP AND SOUTHERN BLEACHER COMPANY. THE DRAWING IS LOANED AND MUST BE RETURNED UPON REQUEST. THE DRAWING IS PROTECTED UNDER U.S. AND INTERNATIONAL COPYRIGHT LAW.

12/01/20

STATE OF CONNECTICUT — THOMAS R. SADLER — NO. 20424 — LICENSED PROFESSIONAL ENGINEER

Thomas R. Sadler

REV	BY	DATE	DESCRIPTION
A	ES	12/01/20	FAB REVISION
A	ES	10/21/20	NONE THIS SHEET
A	ES	10/14/20	NONE THIS SHEET
A	ES	10/01/20	NONE THIS SHEET
A	ES	5/27/20	NONE THIS SHEET
A	ES	5/22/20	NONE THIS PAGE

TITLE: PRESS BOX DETAILS 8' - 0" X 72' - 0" / SLOPED FRONT

TO: GREENWICH HIGH SCHOOL, CARDINAL STADIUM, GREENWICH, CONNECTICUT

LAYOUT DATE: 05/05/20 — DRAWN BY: ES — CHECKED BY: EMRR

JOB NUMBER: 20101

SHEET: B15 OF B17

22" X 34" (1:1 x 1/2 = 1/2 indicated scale)

No

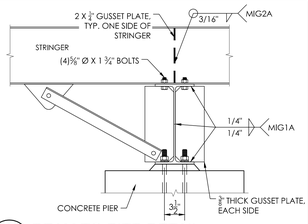

1 B16 BEAM TO PIER DETAIL
NOT TO SCALE

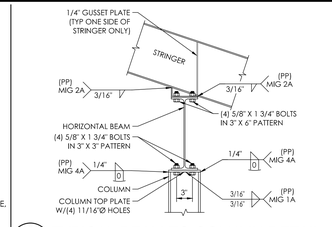

2 B16 TYPICAL BEAM TO COLUMN DETAIL
NOT TO SCALE

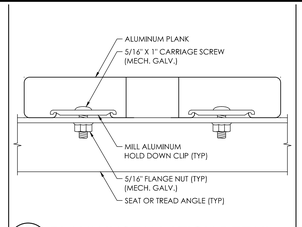

3 B16 PLANK INSTALLATION DETAIL
NOT TO SCALE

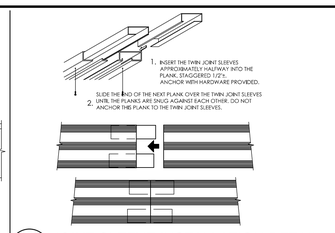

4 B16 JOINT SLEEVE INSTALLATION DETAIL
NOT TO SCALE

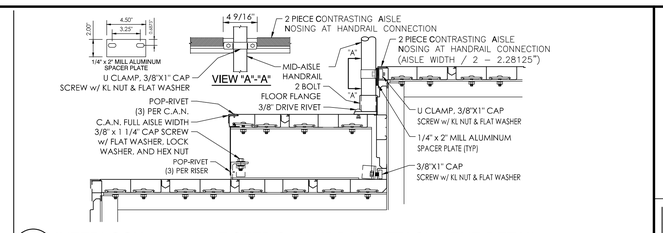

4 B16 INTERLOCK 2000 HALF STEP & HANDRAIL ATTACHMENT DETAIL
NOT TO SCALE

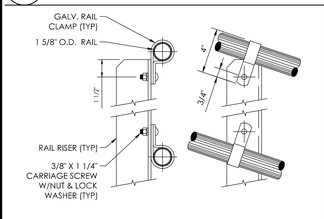

6 B16 RAIL RISER ATTACHMENT DETAIL
NOT TO SCALE

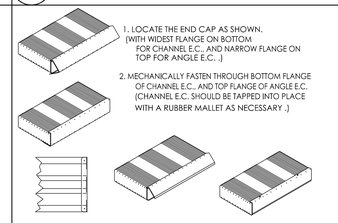

7 B16 END CAP INSTALLATION DETAIL
NOT TO SCALE

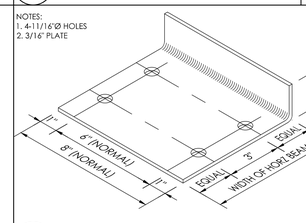

8 B16 STRINGER CLIP DETAIL
NOT TO SCALE

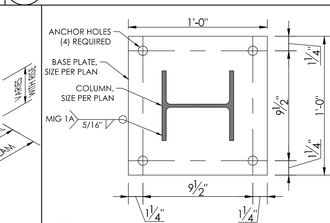

9 B16 BASE PLATE ATTACHMENT DETAIL
NOT TO SCALE

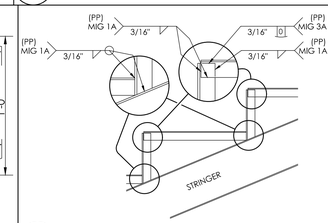

10 B16 ANGLE FAB DETAIL
NOT TO SCALE

11 B16 DETAIL NOT USED
NOT TO SCALE

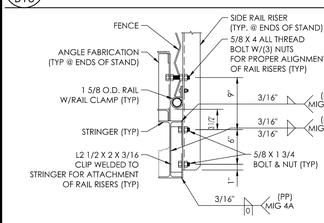

12 B16 SIDE RAIL RISER ATTACHMENT DETAIL
NOT TO SCALE

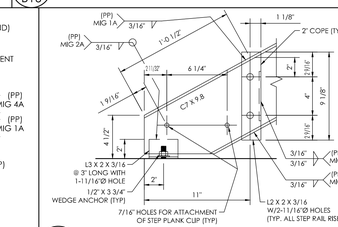

13 B16 LOWER PART/STEP FRAME DETAIL
(6" RISE X 11" TREAD SHOWN - 7" X 11" SIMILAR)

14 B16 DETAIL NOT USED
NOT TO SCALE

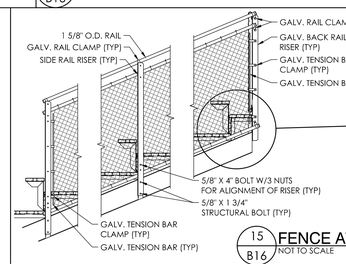

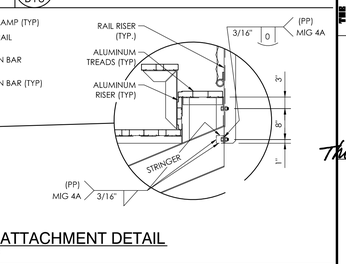

15 B16 FENCE ATTACHMENT DETAIL
NOT TO SCALE

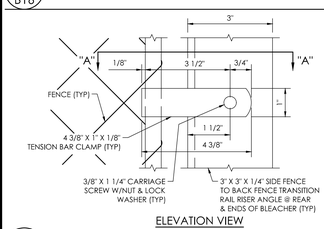

ELEVATION VIEW

16 B16 TENSION BAR CLAMP DETAIL
NOT TO SCALE

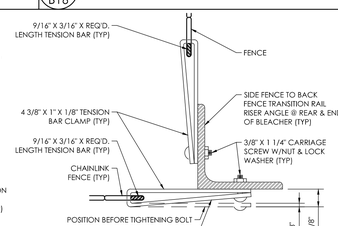

SECTION "A-A"

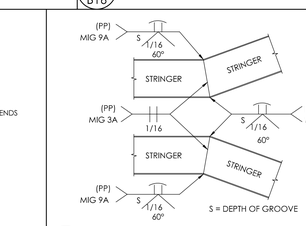

17 B16 STRINGER SNOOTER JOINT CONNECTION
NOT TO SCALE

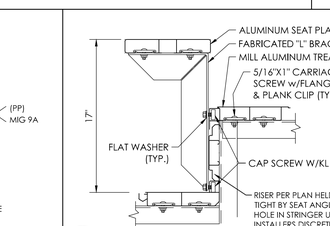

18 B16 "L" BRACKET DETAIL
NOT TO SCALE

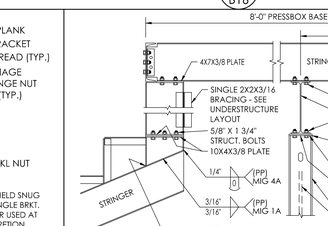

19 B16 PRESSBOX BASE DETAIL
NOT TO SCALE

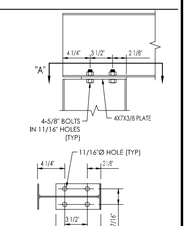

SECTION "A-A"

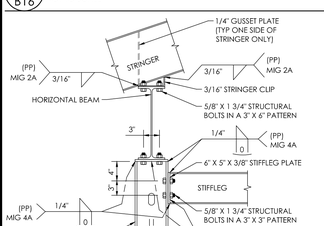

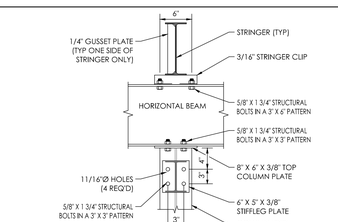

20 B16 STIFFLEG ATTACHMENT DETAIL
NOT TO SCALE

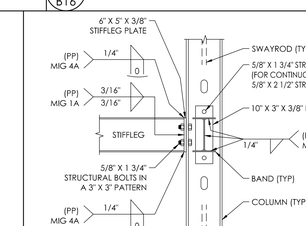

21 B16 STIFFLEG ATTACHMENT DETAIL
NOT TO SCALE

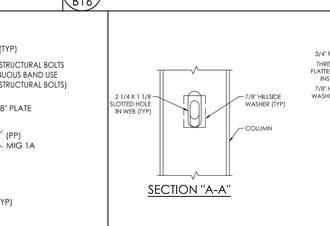

SECTION "A-A"

22 B16 SWAYROD ATTACHMENT
NOT TO SCALE

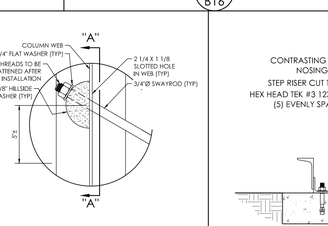

23 B16 STEP RISERS @ BOTTOM OF EXIT STEPS
NOT TO SCALE

THE SADLER GROUP
STRUCTURAL ENGINEERS • LICENSED IN 44 STATES
500 MAIN STREET, SUITE 700 • FORT WORTH, TEXAS 76102
Ph: (817) 332-0194
Fax: (817) 332-0195
Toll: (800) 900-7373
Email: info@thesadlergroup.com

Southern BLEACHER COMPANY
GRANDSTANDS • BLEACHERS • STADIUMS
PO Box One, Graham, Texas 76450
Phone: 940/549-0733 Fax: 940/549-1365
801 Fifth Street.
Established 1946

THIS DRAWING AND ALL INFORMATION THEREIN IS PROPRIETARY TO THE SADLER GROUP AND SOUTHERN BLEACHER COMPANY. IT MAY NOT BE COPIED OR REPRODUCED WITHOUT THE CONSENT OF THE SADLER GROUP AND SOUTHERN BLEACHER COMPANY. THE DRAWING IS LOANED AND MUST BE RETURNED UPON REQUEST. THE DRAWING IS PROTECTED UNDER U.S. AND INTERNATIONAL COPYRIGHT LAW.

12/01/20

STATE OF CONNECTICUT
THOMAS R. SADLER
NO. 20425
LICENSED PROFESSIONAL ENGINEER

Thomas R. Sadler

TITLE: DETAILS

GREENWICH HIGH SCHOOL
CARDINAL STADIUM
GREENWICH, CONNECTICUT

REV.	BY	DATE	DESCRIPTION
A	ES	12/01/20	FAB REVISION
A	ES	10/01/20	NONE THIS SHEET
A	ES	10/14/20	NONE THIS SHEET
A	ES	10/01/20	NONE THIS SHEET
A	ES	10/20/20	NONE THIS PAGE
A	ES	10/01/20	NONE THIS SHEET

DATE	DRAWN BY	CHECKED BY
05/05/20	ES	EM/RR

JOB NUMBER 20101

SHEET B16 OF B17

22" X 34" (11X17 = 1/2 indicated scale)

No

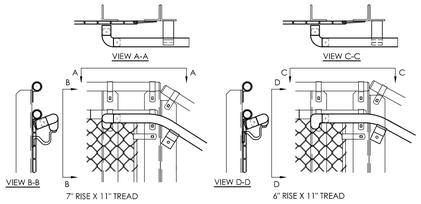

1 B17 EXIT STEP HANDRAIL TERMINATION DETAIL
NOT TO SCALE

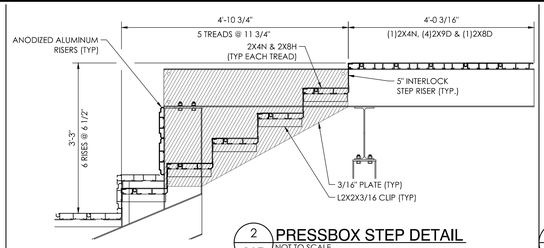

2 B17 PRESSBOX STEP DETAIL
NOT TO SCALE

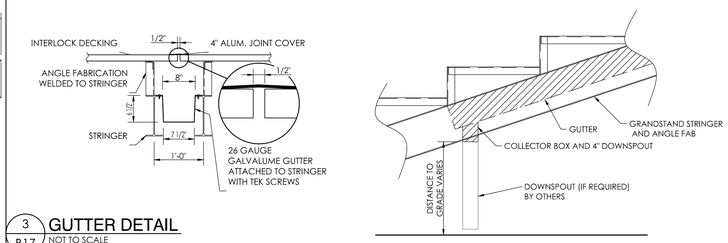

3 B17 GUTTER DETAIL
NOT TO SCALE

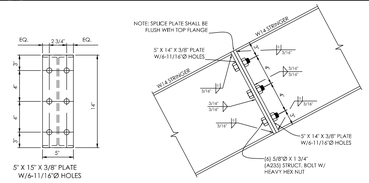

STRINGER SPLICE PLATE DETAIL

STRINGER SPLICE CONNECTION DETAIL

4 B17 CONNECTION DETAIL
NOT TO SCALE

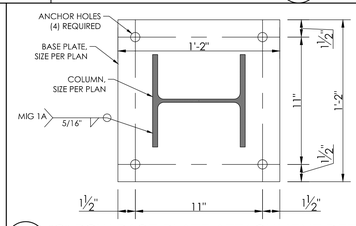

5 B17 "C" ROW BASE PLATE ATTACHMENT DETAIL
NOT TO SCALE

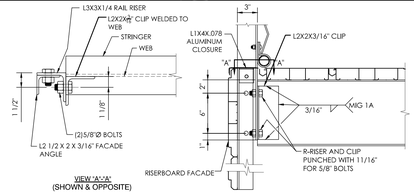

6 B17 FRONT RAIL RISER ATTACHMENT DETAIL
NOT TO SCALE

THE ADLER GROUP
STRUCTURAL ENGINEERS • LICENSED IN 44 STATES
50 MAIN STREET, SUITE 700 • FORT WORTH, TEXAS 76102

Ph: (817) 332-0194
Fax: (817) 332-0195
Toll: (800) 900-7373
Email: hadler@adlerLLC.net

Southern BLEACHER COMPANY®
GRANDSTANDS • BLEACHERS • STADIUMS
PO Box One, Graham, Texas 76450
Phone: 940/549-0733 Fax: 940/549-1365
801 Fifth Street.
Established 1946

THIS DRAWING AND ALL INFORMATION THEREIN IS THE PROPERTY OF THE SOUTHERN BLEACHER COMPANY. IT MAY NOT BE COPIED OR REPRODUCED WITHOUT THE CONSENT OF SOUTHERN BLEACHER COMPANY. THE DRAWING IS LOANED AND MUST BE RETURNED UPON REQUEST. THE DRAWING IS PROTECTED UNDER U.S. AND INTERNATIONAL COPYRIGHT LAW.

12/01/20

STATE OF CONNECTICUT
THOMAS R. ADLER
NO. 20425
PROFESSIONAL ENGINEER

Thomas R. Adler

TITLE: DETAILS

GREENWICH HIGH SCHOOL
CARDINAL STADIUM
GREENWICH, CONNECTICUT

REV.	BY	DATE	DESCRIPTION
A	ES	12/01/20	FAB REVISION
A	ES	10/01/20	NONE THIS SHEET
A	ES	10/14/20	NONE THIS SHEET
A	ES	10/00/20	NONE THIS SHEET
A	ES	10/20/20	NONE THIS SHEET
A	ES	10/0/20	NONE THIS PAGE

DATE	DRAWN BY	CHECKED BY
05/05/20	ES	EM/RR

JOB NUMBER 20101

SHEET B17 OF B17

22" X 34" (11x17 = 1/2 indicated scale)

No

GREENWICH HIGH SCHOOL
CARDINAL STADIUM - PRESS BOX
GREENWICH, CONNECTICUT

SHEET TITLE	SHEET NUMBER
ELECTRICAL PLANS / SECTION VIEW	PB1
ELEVATION VIEWS	PB2
FRAMING PLANS	PB3
DETAIL SHEET -1	PB4
DETAIL SHEET -2	PB5
APPENDIX "A" - MATERIAL SPECS	PB6

12/01/20

STATE OF CONNECTICUT · THOMAS R. SADLER · NO. 20424 · LICENSED PROFESSIONAL ENGINEER

Thomas R. Sadler

REVISION #3 - 12/01/20

REVISION #2 - 11/04/20

REVISION #1 - 10.22.20

#20101P - GREENWICH, CONNECTICUT

NOTES

1. STRUCTURAL SHAPES MEET ONE OF THE FOLLOWING ASTM SPECIFICATIONS: A36, A36/A572 GRADE 50, A572 GRADE 50, A529-50, OR A500 GRADE B.
2. WELDS ARE ALL AROUND WITH TYPE ER70S-6 WIRE MIG.
3. GALVANIZED STEEL TO BE HOT DIPPED TO A.S.T.M. A-123-89 ae1.
4. STRUCTURAL BOLTS ARE HOT DIPPED GALV. AND ARE EQUAL TO OR GREATER THAN A-307.
5. NO CONNECTIONS UTILIZING HIGH STRENGTH BOLTS ARE CLASSED AS SLIP CRITICAL.
6. ANODIZED ALUMINUM RAIL IS 1 1/4" NOMINAL PIPE SIZE. (1 5/8" O.D.)

CODE DESCRIPTION
2018 CONNECTICUT STATE BUILDING CODE
2015 INTERNATIONAL ENERGY CONSERVATION CODE w/CT AMENDMENTS
2017 NATIONAL ELECTRICAL CODE w/CT AMENDMENTS
2015 INTERNATIONAL FIRE CODE w/CT AMENDMENTS
2015 NFPA 101 - LIFE SAFETY CODES w/CT AMENDMENTS
ICC/ANSI A117.1 - ACCESSIBLE AND USABLE BUILDINGS & FACILITIES

OCCUPANT LOAD

MAXIMUM 38 PEOPLE
576 SQ.FT. / 15 SQ.FT.
PER PERSON = 38.4
38 MAXIMUM PEOPLE

OCCUPANCY GROUP	CONSTRUCTION TYPE
ASSEMBLY A-5	TYPE II B

THIS BUILDING DOES NOT CONTAIN PLUMBING FACILITIES. PLUMBING FACILITIES SHALL BE PROVIDED ON SITE SUBJECT TO THE LOCAL AUTHORITY HAVING JURISDICTION.

BUILDING SITE INSTALLATION REQUIREMENTS:

1. ELECTRICAL SERVICE TO PRESSBOX BY OTHERS.
2. ROOF RAILING AND 9 GA. CHAINLINK FENCE
3. LANDING DECK, RAILING, AND 9 GA. CHAINLINK FENCE.

DESIGN CRITERIA

DEAD LOAD (FLOOR): 15 P.S.F.
DEAD LOAD (GALLERY): 15 P.S.F.
LIVE LOAD (FLOOR): 100 P.S.F.
LIVE LOAD (GALLERY): 50 P.S.F.
SNOW LOAD: 30 P.S.F. 2
WIND SPEED: 130 M.P.H. (3 SEC. GUST) EXPOSURE - C
SEISMIC DESIGN CATEGORY: B
SPECTRAL RESPONSE COEFFICIENT ; S_{DS} = 0.274
SPECTRAL RESPONSE COEFFICIENT ; S_{D1} = 0.112
SITE CLASS: D

HUB Machine and Tool Inc.

PO Box 1508 Graham, Texas 76450
900 Hwy. 380 Bypass
Phone: 940/549-0155 Fax: 940/549-8557

Established 1954

04/29/20
#20101P - GREENWICH, CONNECTICUT
(8'-0" X 72'-0" STANDARD PRESS BOX 576 SQ. FT.)
FOR USE IN THE STATE OF CONNECTICUT
manufactured exclusively for Southern Bleacher Company

Southern® BLEACHER COMPANY
GRANDSTANDS ▪ BLEACHERS ▪ STADIUMS

PO Box One, Graham, Texas 76450
801 Fifth Street.
Phone: 940/549-0733 Fax: 940/549-1365

Established 1946

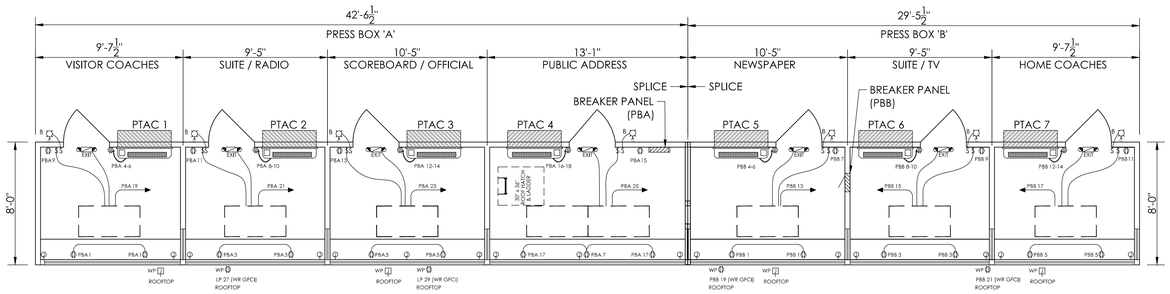

1 PB1 PRESS BOX "A" ELECTRICAL PANEL

SCALE:1/4"=1'-0"

2 PB1 PRESSBOX "B" ELECTRICAL PLAN

SCALE:1/4"=1'-0"

PRESS BOX 'A' 1

LOAD CENTER SCHEDULE — G.E. TLM30412C OR EQUAL

PANEL PBA — 125A - 30 CIRCUIT W/ EQUIPMENT GROUND — 240/120 VOLTS 3 PH. 4 W

MOUNTING: ☐ FLUSH ☒ SURFACE — 125 AMP MAIN BREAKER

	BREAKER SIZE	BREAKER POLE	CIR. #	BUS A	BUS B	BUS C	CIR. #	BREAKER SIZE	BREAKER POLE	
(2) DUPLEX RECPT. FRONT WALL	20	1	1	●			2	20	1	SPARE
(2) DUPLEX RECPT. FRONT WALL	20	1	3		●		4	20		PTAC UNIT #1
(2) DUPLEX RECPT. FRONT WALL	20	1	5			●	6		2	PTAC UNIT #1
(2) DUPLEX RECPT. FRONT WALL	20	1	7	●			8	20		PTAC UNIT #2
DUPLEX RECPT. BACK WALL	20	1	9		●		10		2	PTAC UNIT #2
DUPLEX RECPT. BACK WALL	20	1	11			●	12	20		PTAC UNIT #3
DUPLEX RECPT. BACK WALL	20	1	13	●			14		2	PTAC UNIT #3
DUPLEX RECPT. BACK WALL	20	1	15		●		16	20		PTAC UNIT #4
(2) DUPLEX RECPT. FRONT WALL	20	1	17			●	18		2	PTAC UNIT #4
LIGHTS	20	1	19	●			20	20	1	SPARE
LIGHTS	20	1	21		●		22			SPACE
LIGHTS	20	1	23			●	24			SPACE
LIGHTS	20	1	25	●			26			SPACE
WP DUPLEX RECPT GFCI ROOFTOP	20	1	27		●		28			SPACE
WP DUPLEX RECPT GFCI ROOFTOP	20	1	29			●	30			SPACE

PRESS BOX 'B' 1

LOAD CENTER SCHEDULE — G.E. TLM30412C OR EQUAL

PANEL PBB — 125A - 30 CIRCUIT W/ EQUIPMENT GROUND — 240/120 VOLTS 3 PH. 4 W

MOUNTING: ☒ FLUSH ☐ SURFACE — 125 AMP MAIN BREAKER

	BREAKER SIZE	BREAKER POLE	CIR. #	BUS A	BUS B	BUS C	CIR. #	BREAKER SIZE	BREAKER POLE	
(2) DUPLEX RECPT. FRONT WALL	20	1	1	●			2	20	1	SPARE
(2) DUPLEX RECPT. FRONT WALL	20	1	3		●		4	20		PTAC UNIT #5
(2) DUPLEX RECPT. FRONT WALL	20	1	5			●	6		2	PTAC UNIT #5
DUPLEX RECPT. BACK WALL	20	1	7	●			8	20		PTAC UNIT #6
DUPLEX RECPT. BACK WALL	20	1	9		●		10		2	PTAC UNIT #6
DUPLEX RECPT. BACK WALL	20	1	11			●	12	20		PTAC UNIT #7
LIGHTS	20	1	13	●			14		2	PTAC UNIT #7
LIGHTS	20	1	15		●		16	20	1	SPARE
LIGHTS	20	1	17			●	18			SPACE
WP DUPLEX RECPT GFCI ROOFTOP	20	1	19	●			20			SPACE
WP DUPLEX RECPT GFCI ROOFTOP	20	1	21		●		22			SPACE
SPACE			23			●	24			SPACE
SPACE			25	●			26			SPACE
SPACE			27		●		28			SPACE
SPACE			29			●	30			SPACE

CONDUIT WILL BE 1/2" EMT, 1/2" STEELFLEX, OR SURFACE RACEWAY UNLESS OTHERWISE NOTED

WIRING ON 20A BREAKERS WILL BE #12 = THWN - THHN

EQUIPMENT GROUND RUN IN ALL CONDUITS OR NON-METALLIC SURFACE RACEWAYS

PANEL FEEDER, NEUTRAL, BONDING, AND GROUNDING TO BE ACCORDING TO APPLICABLE CODES ADOPTED BY THE LOCAL AHJ ON SITE BY ELECTRICAL CONTRACTOR.

PANEL BONDED TO METAL BUILDING FRAME BY PRESS BOX MANUF.

PRESS BOX LEGEND

- 250V. SINGLE POWER RECPT. (20A.) NEMA 6-20R
- 20A. 125V. DUPLEX RECPT. (GFCI WHERE NOTED)
- $ os - 20A. 125V. SINGLE POLE DECORATOR STYLE SWITCH - WITH MANUAL ON/OFF OCCUPANCY SENSOR
- J 4X4X2 1/8" JUNCTION BOX W/ 3/4" C STUBOUT UNDER FLOOR WP ON ROOF STUBBED INTO CEILING SPACE FOR USE BY OTHERS
- 4'X2' EDGELIT LED PANEL LIGHT RAB LIGHTING EZPANFA2X4/D10 0.26A @ 120V INPUT WATTS: 29.6W
- EXIT BATTERY BACK UP EMERGENCY/EXIT LIGHT CONNECT TO LIGHT CIRCUIT AHEAD OF SWITCH. NEC 700.12 (F)
- 1 12,000 BTU COOL/12,000 BTU EHEAT 5.6 A. COOL/15.4 A. HEAT - 208/230V. AMANA # PTC123E35AXXX OR EQUAL FIELD INSTALLED
- B 12W. LED EXTERIOR LIGHT W/PHOTOCELL

NOTE:
120V. DUPLEX RECPT. ARE LOCATED IN ONE END OF BASEBOARD HEATERS USING ACCESSORY COVER BKORA1. THERMOSTAT IN THE OTHER END - COVER BKOTA1A W/ THERMOSTAT TA2A. WALL RECPT. ARE NOT ABOVE BB HEATERS.

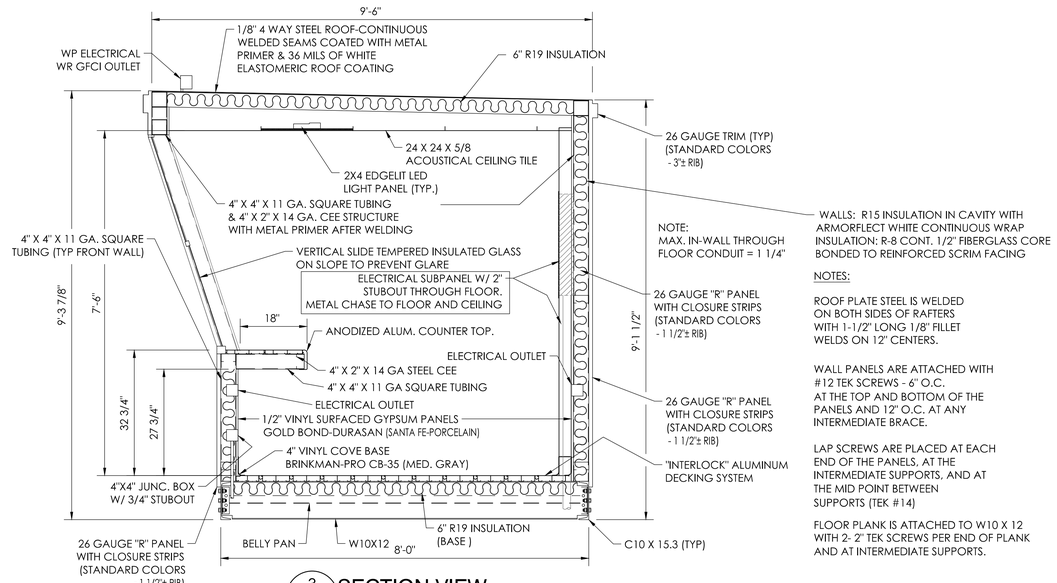

NOTE:
MAX. IN-WALL THROUGH FLOOR CONDUIT = 1 1/4"

WALLS: R15 INSULATION IN CAVITY WITH ARMORFLECT WHITE CONTINUOUS WRAP INSULATION; R-8 CONT. 1/2" FIBERGLASS CORE BONDED TO REINFORCED SCRIM FACING

NOTES:

ROOF PLATE STEEL IS WELDED ON BOTH SIDES OF RAFTERS WITH 1-1/2" LONG 1/8" FILLET WELDS ON 12" CENTERS.

WALL PANELS ARE ATTACHED WITH #12 TEK SCREWS - 6" O.C. AT THE TOP AND BOTTOM OF THE PANELS AND 12" O.C. AT ANY INTERMEDIATE BRACE.

LAP SCREWS ARE PLACED AT EACH END OF THE PANELS, AT THE INTERMEDIATE SUPPORTS, AND AT THE MID POINT BETWEEN SUPPORTS (TEK #14)

FLOOR PLANK IS ATTACHED TO W10 X 12 WITH 2- 2" TEK SCREWS PER END OF PLANK AND AT INTERMEDIATE SUPPORTS.

3 PB1 SECTION VIEW

SCALE:1/4"=1'-0"

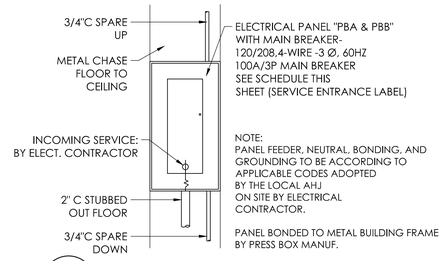

4 PB1 ELECTRICAL PANEL ELEVATION

NOT TO SCALE

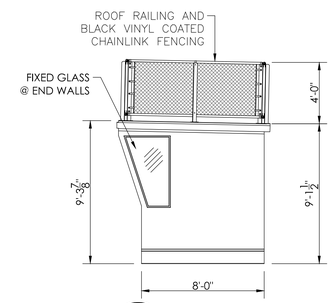

5 PB1 SIDE VIEW

SCALE:1/4"=1'-0"

THE ADLER GROUP
STRUCTURAL ENGINEERS
STAMFORD, NEW HAVEN, WESTPORT, NEW CANAAN, FAIRFIELD, NEW YORK, FORT WORTH, TEXAS & MAUI
Southern BLEACHER COMPANY
GRANDSTANDS • BLEACHERS • STADIUMS
PO Box One, Cochran, Texas 76450
Phone: 940/549-0733 Fax: 940/549-1365
800 Fifth Street
Established 1946
(917) 152-1014
(917) 334-0155
Email: tadler@sbcglobal.net

DETAIL NUMBER / SHEET SHOWN ON / SHEET CUT FROM

THE DRAWING AND ALL INFORMATION THEREIN IS THE PROPERTY OF THE ADLER GROUP AND SOUTHERN BLEACHER COMPANY. THE DRAWING IS LOANED FOR USE ONLY ON THIS PROJECT AND MAY NOT BE COPIED OR REPRODUCED WITHOUT PRIOR WRITTEN CONSENT. THE DRAWING MAY NOT BE USED FOR OTHER PROJECTS. THE DRAWING IS PROTECTED UNDER U.S. AND INTERNATIONAL COPYRIGHT LAW.

12/01/20

STATE OF CONNECTICUT — THOMAS R. ADLER — NO. 20424 — LICENSED PROFESSIONAL ENGINEER

Thomas R. Adler

TITLE: ELECTRICAL PLANS / SECTION VIEW 8'-0" X 72" SLOPED FRONT PRESS BOX

PROJECT: GREENWICH HIGH SCHOOL PRESS BOX GREENWICH, CONNECTICUT

REV	BY	DATE	DESCRIPTION
A			
B			
C			
D			
E	ES	11.04.20	NONE THIS SHEET
F	ES	11.23.20	CHANGED TO PTAC

DATE 04/29/20 — DRAWN ES — CHECKED RR/EM

JOB NUMBER 20101P

SHEET PB1 OF PB6

22" X 34" (11x17 = 1/2 indicated scale)

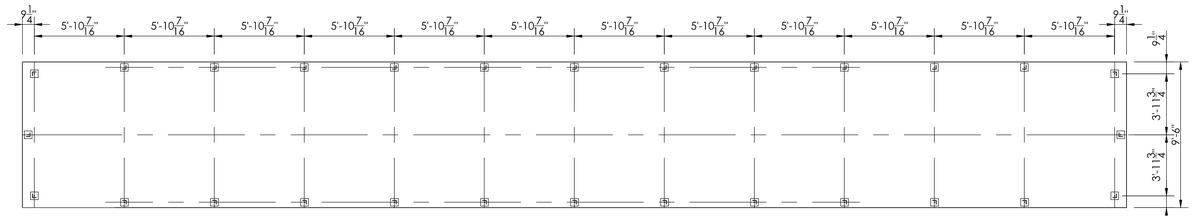

1 / PB2 ROOF RAIL LAYOUT
SCALE:1/4"=1'-0"

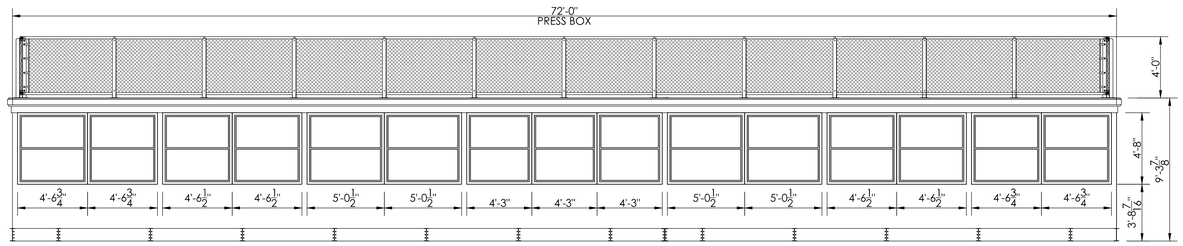

2 / PB2 FRONT ELEVATION
SCALE:1/4"=1'-0"

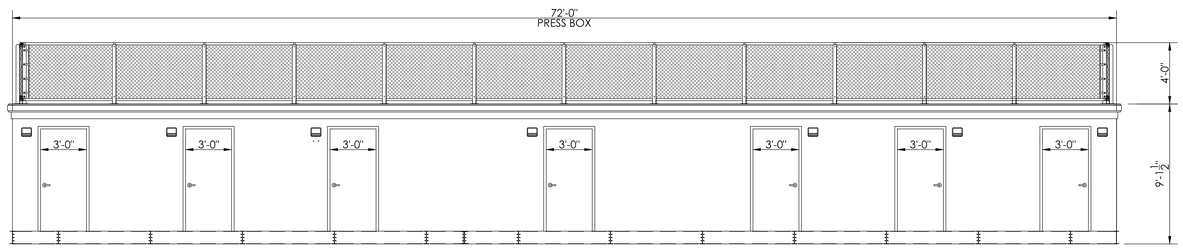

3 / PB2 REAR ELEVATION
SCALE:1/4"=1'-0"

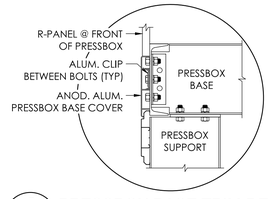

5 / PB2 PRESSBOX BASE TRIM DETAIL
NOT TO SCALE

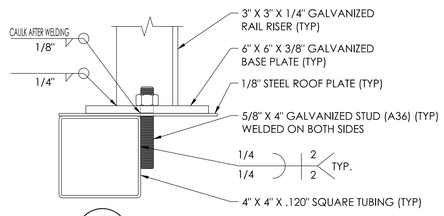

6 / PB2 ROOF RAIL ATTACHMENT
NOT TO SCALE

DETAIL NUMBER
SHEET SHOWN ON
SHEET CUT FROM

THIS DRAWING AND ALL INFORMATION THEREIN IS THE PROPERTY OF THE ADLER GROUP, SOUTHERN BLEACHER COMPANY, INC. AND MAY NOT BE COPIED OR REPRODUCED WITHOUT PRIOR WRITTEN CONSENT. ALL DESIGNS, DRAWINGS AND SPECIFICATIONS REMAIN THE PROPERTY OF THE ADLER GROUP, SOUTHERN BLEACHER COMPANY. THE DRAWING IS LOANED AND MUST BE RETURNED UPON REQUEST. THIS PLAN AND DRAWING IS PROTECTED UNDER U.S. AND INTERNATIONAL COPYRIGHT LAW.

THE ADLER GROUP
STADIUM SEAT DESIGNERS
SOUTHERN BLEACHER COMPANY
BLEACHER MANUFACTURERS
GRANDSTANDS • BLEACHERS • STADIUMS
PO Box One, Cuyahoga Falls, Ohio 44223
Phone: 940/549-0733 Fax: 940/549-1365
801 Fifth Street
Ph: (817) 332-0104
Fax: (817) 336-0155
Toll Free: (800) 433-3177
Email: sales@southernbleacher.com
Established 1946

12/01/20

STATE OF CONNECTICUT
THOMAS R. ADLER
NO. 20424
PROFESSIONAL ENGINEER

Thomas R. Adler

REV	DATE	DESCRIPTION
1		
2		
3		
4		
5		
6		
7	11/04/20	ES
8	10/21/20	ES

TITLE	ELEVATION VIEWS 8' - 0" X 72" SLOPED FRONT PRESS BOX
	GREENWICH HIGH SCHOOL PRESS BOX GREENWICH, CONNECTICUT
DATE	04/29/20
DRAWN BY	ES
REVIEWED BY	RR/EM
JOB NUMBER	20101P
SHEET	PB2
OF	PB6

NONE THIS SHEET
NONE THIS PAGE

22" X 34" (11x17 = 1/2 indicated scale)

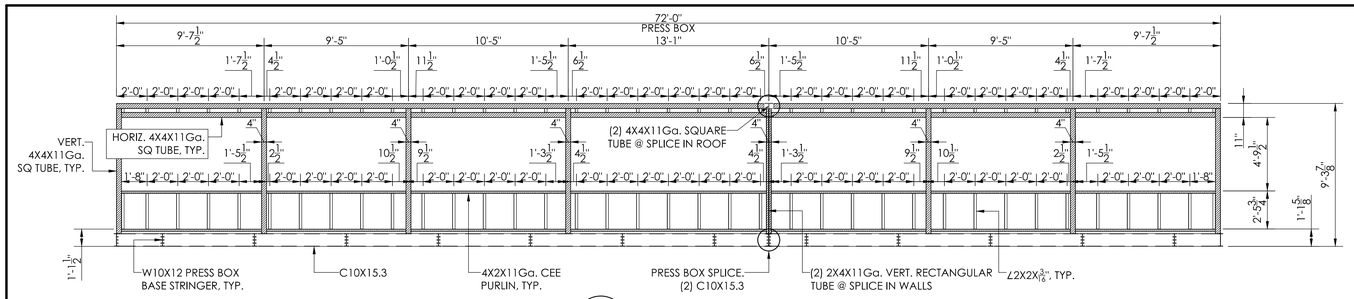

1 / PB3 **FRONT WALL FRAMING PLAN**
SCALE:1/4"=1'-0"

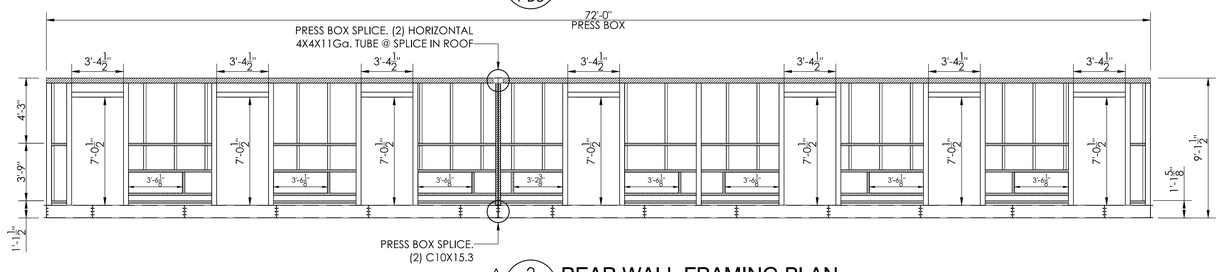

2 / PB3 **REAR WALL FRAMING PLAN**
SCALE:1/4"=1'-0"

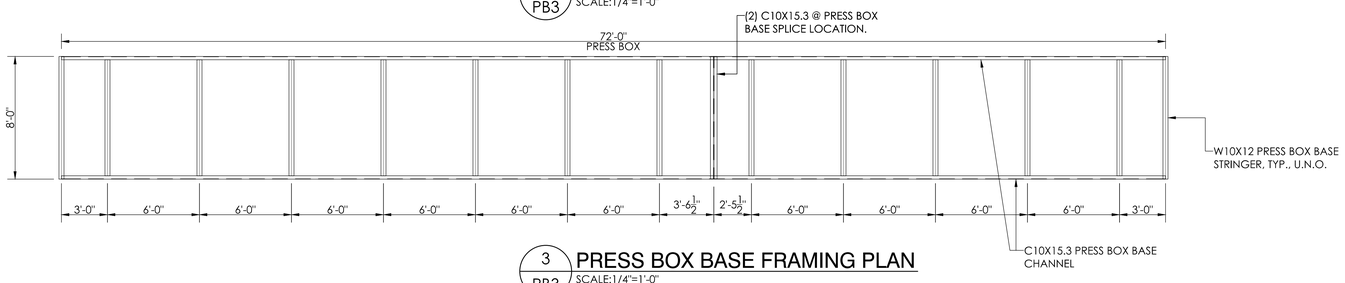

3 / PB3 **PRESS BOX BASE FRAMING PLAN**
SCALE:1/4"=1'-0"

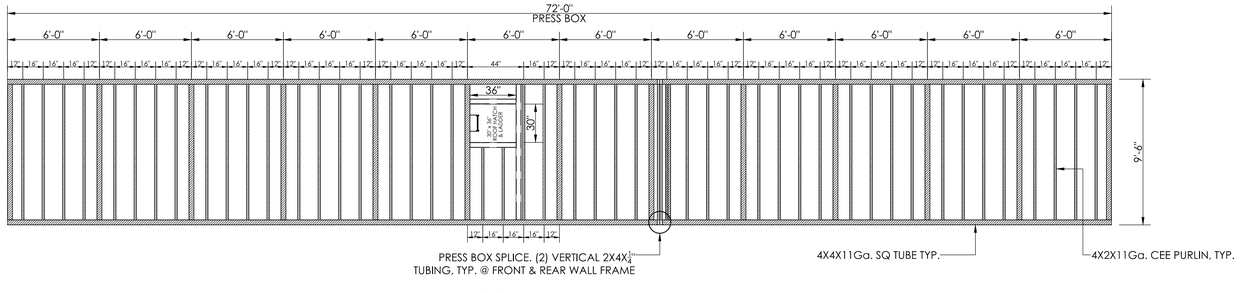

4 / PB3 **PRESS BOX ROOF FRAMING PLAN**
SCALE:1/4"=1'-0"

DETAIL NUMBER / SHEET SHOWN ON / SHEET CUT FROM

THIS DRAWING AND ALL INFORMATION THEREIN IS THE PROPERTY OF THE ADLER GROUP, SOUTHERN BLEACHER COMPANY. THE DRAWING MAY NOT BE COPIED OR REPRODUCED WITHOUT PRIOR WRITTEN CONSENT OF THE ADLER GROUP, SOUTHERN BLEACHER COMPANY. THE DRAWING IS LOANED FOR EXCLUSIVE USE IN CONNECTION WITH THIS DRAWING IS PROTECTED UNDER U.S. AND INTERNATIONAL COPYRIGHT LAW.

THE ADLER GROUP
STADIUM SPECIALISTS
SOUTHERN BLEACHER COMPANY
PO Box One, Cochran, Texas 76450
Phone: 940/549-0733 Fax: 940/549-1365
Ph: (817) 332-0104
Fx: (817) 336-0155
Toll: (800) 433-2377
Email: tadler@swbell.net
801 Fifth Street
FORT WORTH, TEXAS 76102
Established 1946
GRANDSTANDS • BLEACHERS • STADIUMS

12/01/20

Thomas R. Adler

REV	DATE	DESCRIPTION
ES	11.04.20	NONE THIS SHEET
ES	10.21.20	REAR WALL FRAMING FOR PTAC

DATE 04/29/20 | DRAWN ES | CHECKED RR/EM

JOB NUMBER **20101P**

SHEET **PB3** OF **PB6**

TITLE: FRAMING PLANS
8'-0" X 72' SLOPED FRONT PRESS BOX

TITLE: GREENWICH HIGH SCHOOL
PRESS BOX
GREENWICH, CONNECTICUT

22" X 34" (11x17 = 1/2 indicated scale)

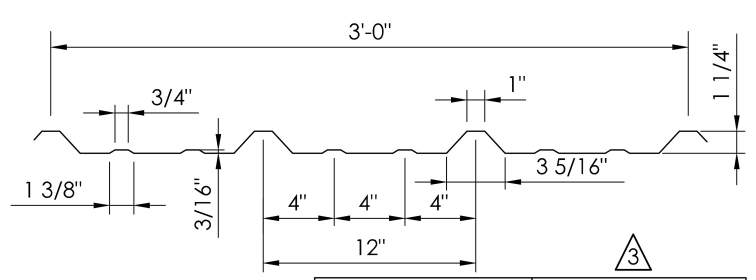

PANEL GAUGE	Fy KSI	THK. IN.	Fu KSI	wt PSF	POS. BENDING Ix IN⁴/FT.	Sx IN³/FT.	Ma (KIP-IN.)	NEG. BENDING Ix IN⁴/FT.	Sx IN³/FT.	Ma (KIP-IN.)
26	60	.0181	61.5	0.94	0.0382	0.0381	1.6759	0.0309	0.0449	1.8019

ALLOWABLE UNIFORM LOADS IN POUND PER SQUARE FOOT

26 GAUGE SPAN TYPE	LOAD TYPE	SPAN IN FEET 3'	4'	5'	6'	7'	8'	9'
1-SPAN	NEGATIVE WIND LOAD	134	75	48	33	25	19	15
	LIVE LOAD/DEFLECTION	119	70	45	31	23	18	14
2-SPAN	NEGATIVE WIND LOAD	115	67	43	30	22	17	14
	LIVE LOAD/DEFLECTION	106	71	46	33	24	19	15

1 PB4 "R" PANEL DET.
NOT TO SCALE

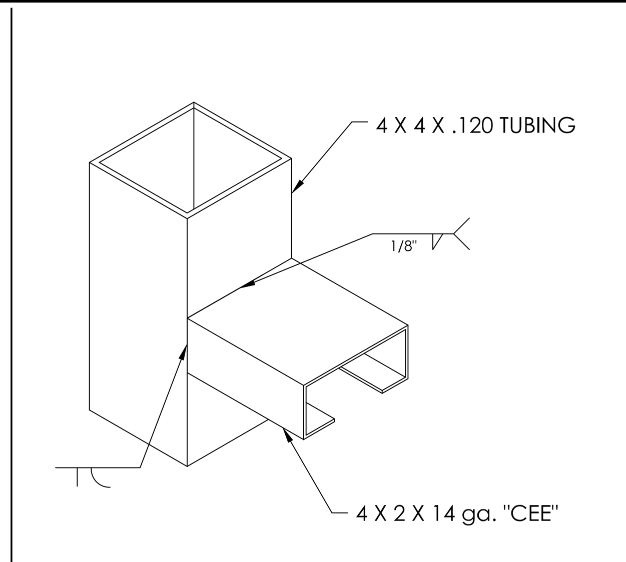

2 PB4 WELD DETAIL
NOT TO SCALE

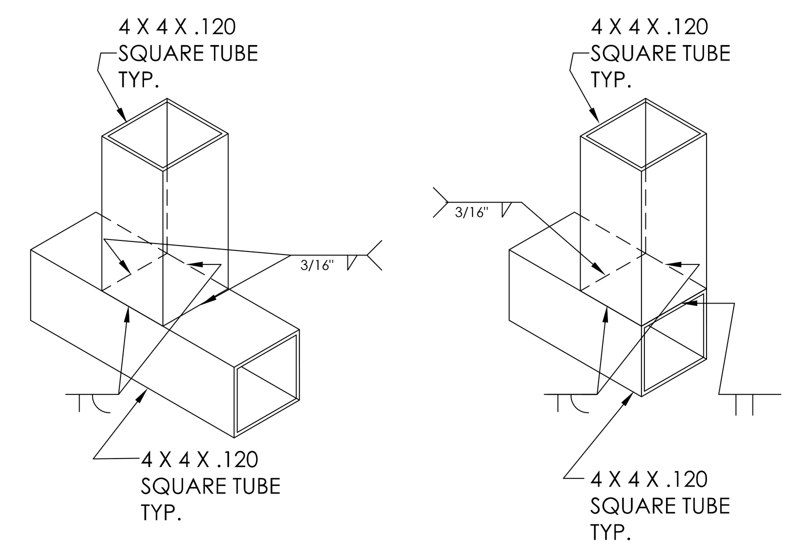

3 PB4 WELD DETAIL
NOT TO SCALE

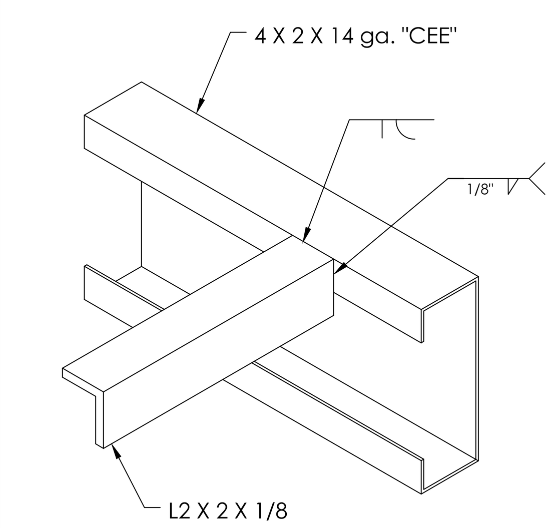

4 PB4 WELD DETAIL
NOT TO SCALE

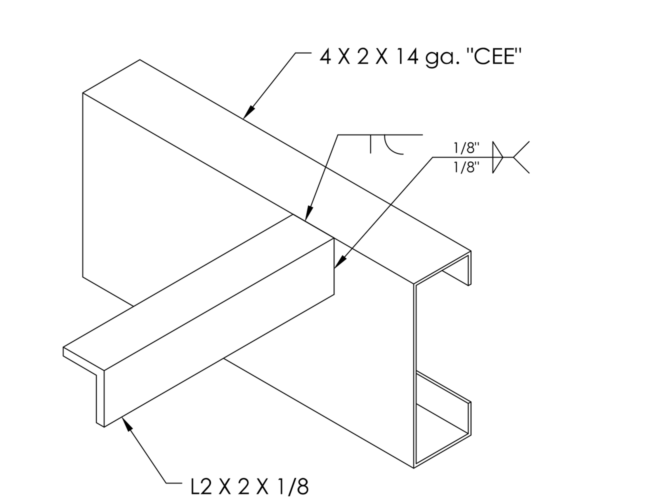

5 PB4 WELD DETAIL
NOT TO SCALE

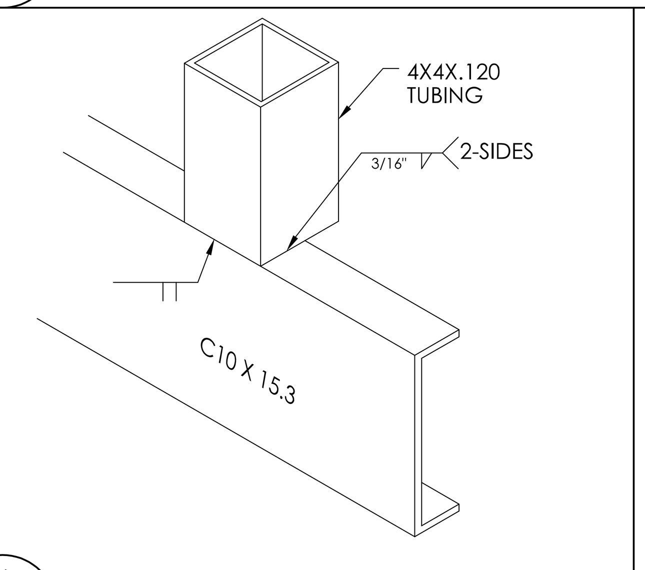

6 PB4 WELD DETAIL
NOT TO SCALE

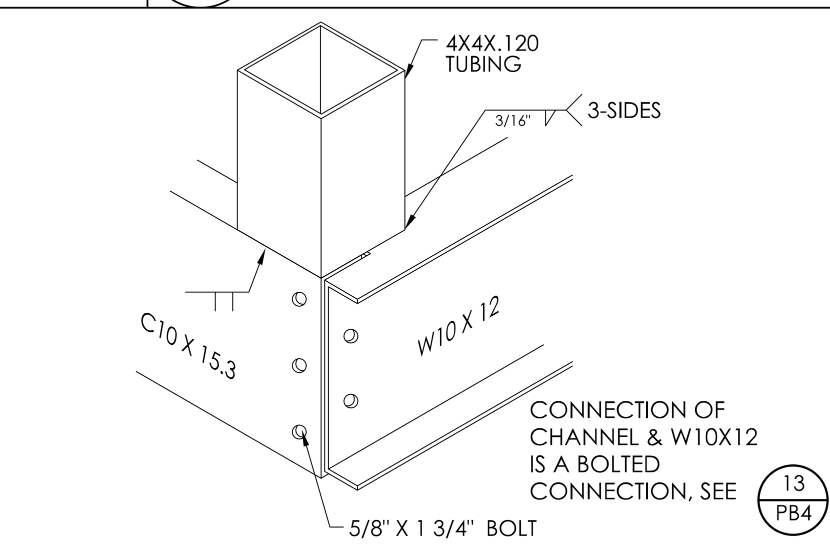

7 PB4 WELD DETAIL
NOT TO SCALE

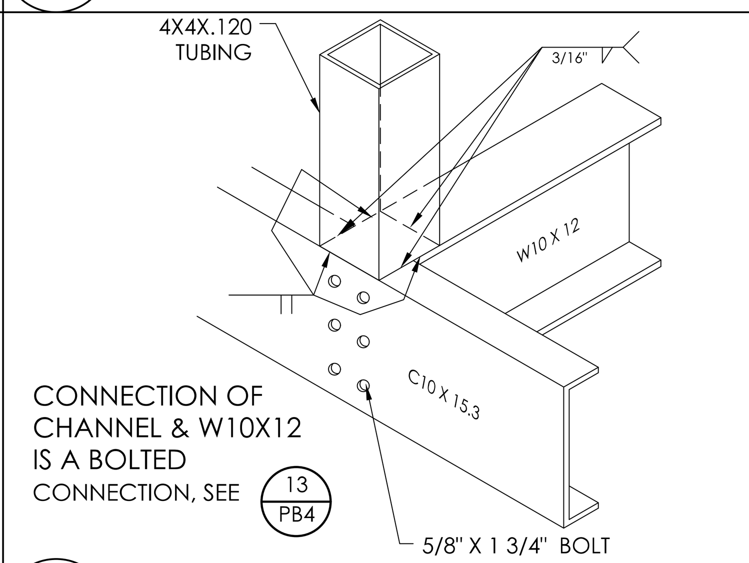

8 PB4 WELD DETAIL
NOT TO SCALE

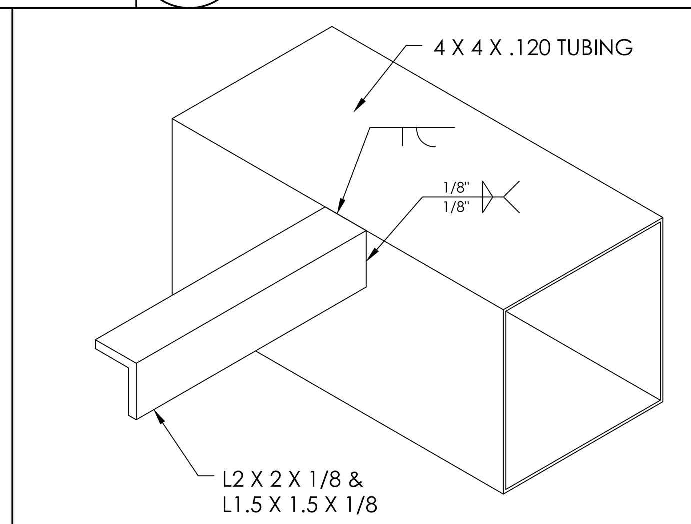

9 PB4 WELD DETAIL
NOT TO SCALE

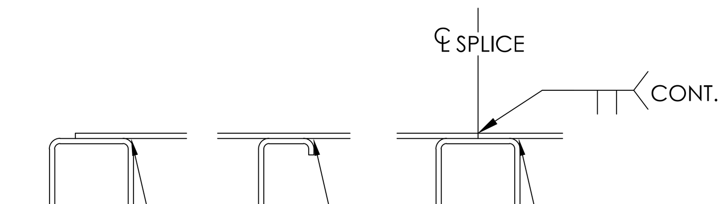

10 PB4 STEEL ROOF TO TUBING
NOT TO SCALE

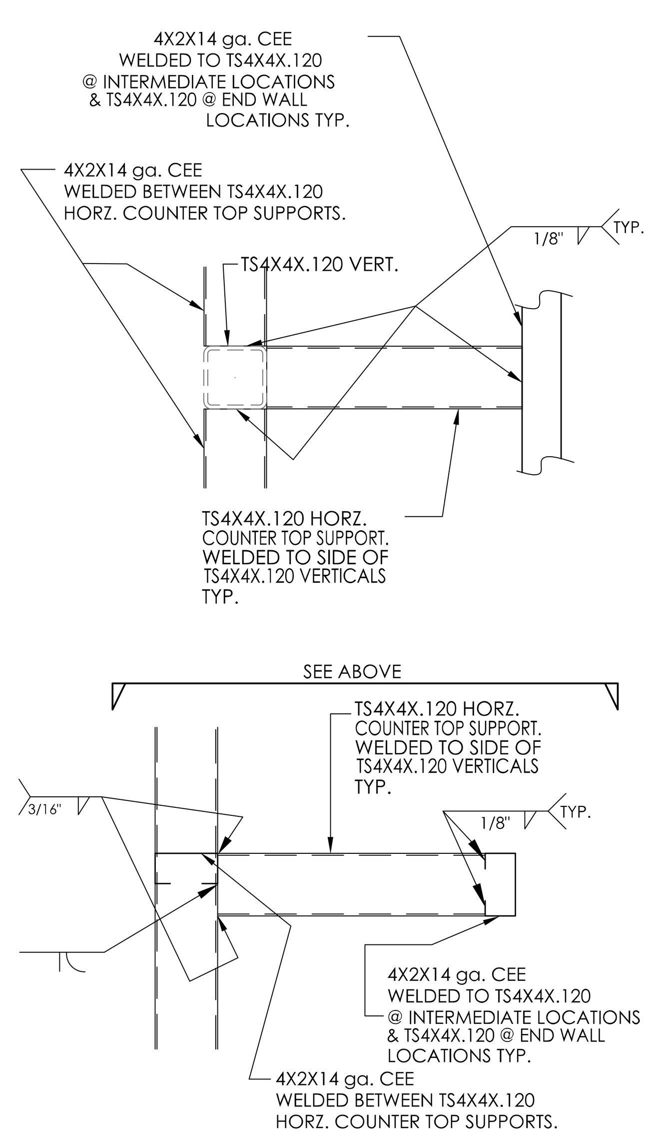

11 PB4 COUNTER TOP DETAIL
NOT TO SCALE

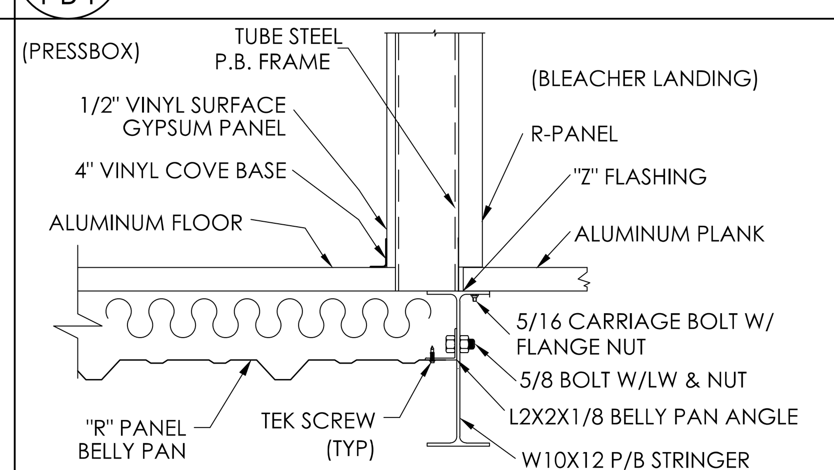

12 PB4 LANDING TRANSITION DETAIL
NOT TO SCALE

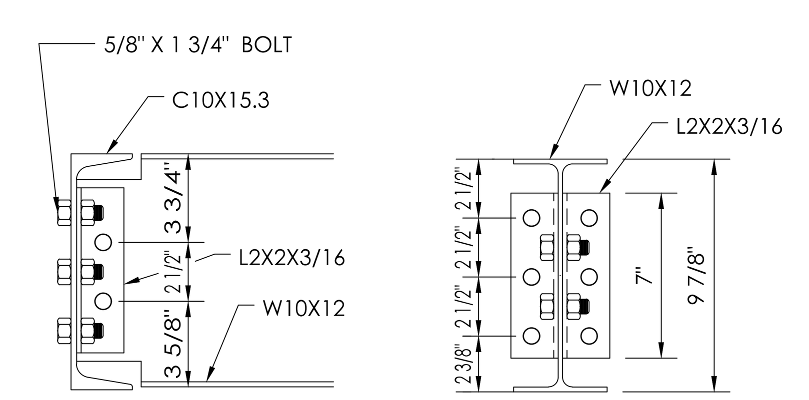

13 PB4 CHANNEL CONN. DETAIL
NOT TO SCALE

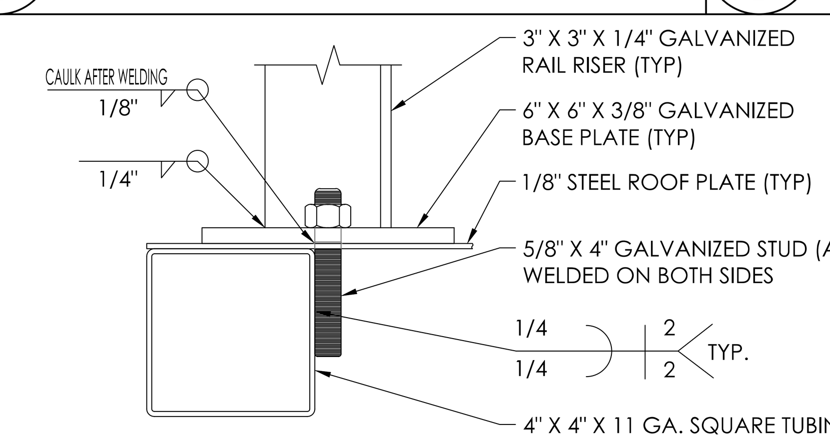

14 PB4 ROOF RAIL ATTACHMENT
NOT TO SCALE

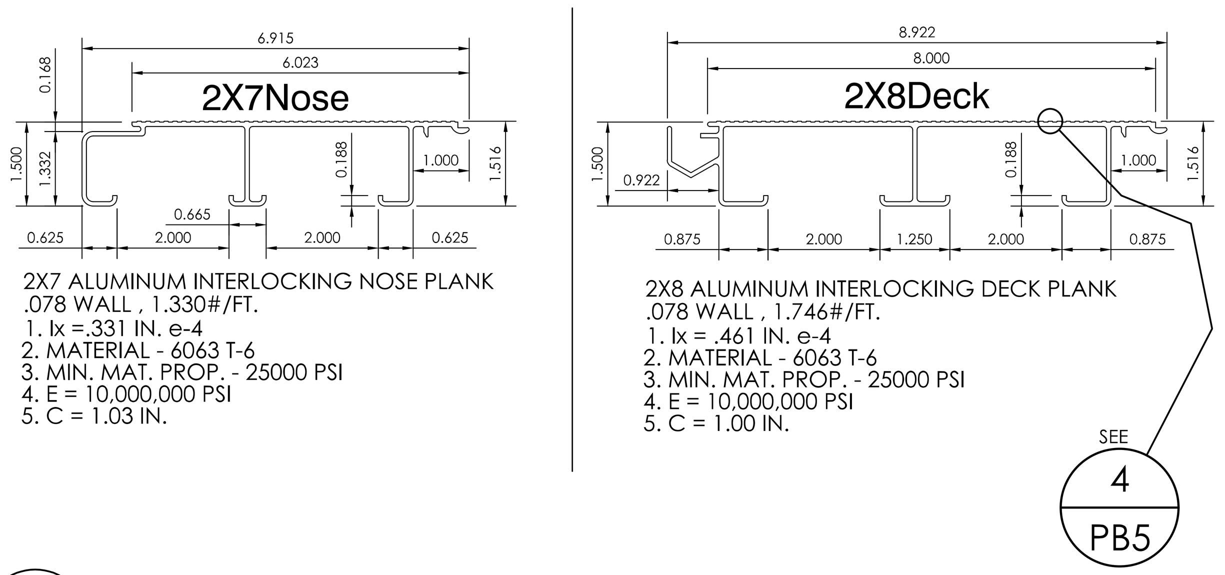

2X7 ALUMINUM INTERLOCKING NOSE PLANK
.078 WALL , 1.330#/FT.
1. Ix =.331 IN. e-4
2. MATERIAL - 6063 T-6
3. MIN. MAT. PROP. - 25000 PSI
4. E = 10,000,000 PSI
5. C = 1.03 IN.

2X8 ALUMINUM INTERLOCKING DECK PLANK
.078 WALL , 1.746#/FT.
1. Ix = .461 IN. e-4
2. MATERIAL - 6063 T-6
3. MIN. MAT. PROP. - 25000 PSI
4. E = 10,000,000 PSI
5. C = 1.00 IN.

15 PB4 INTERLOCKING PLANK DETAIL
NOT TO SCALE

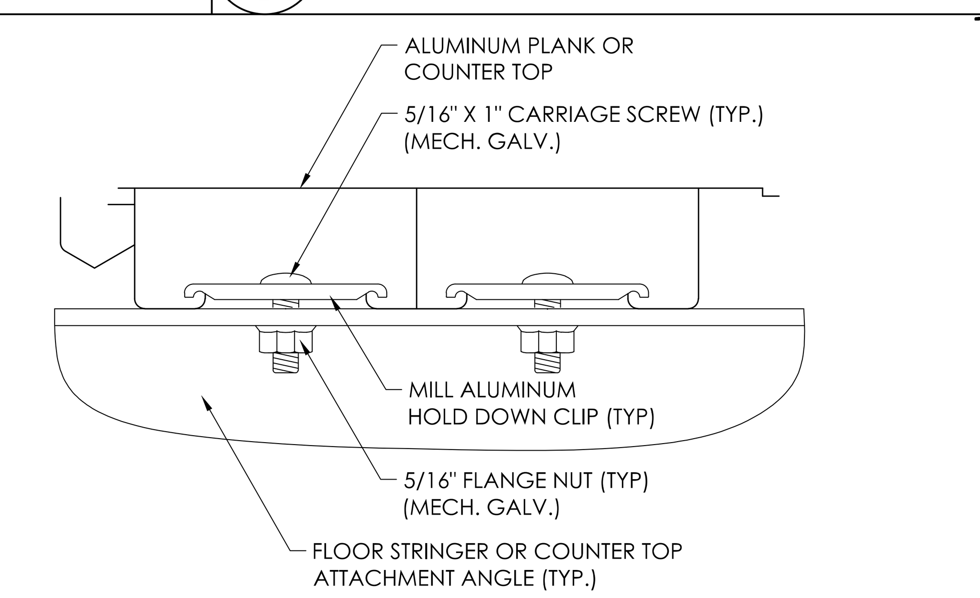

NOTE:
FRONT (LAST) FLOOR PLANK IS ATTACHED TO W10X12
W/ (2)-2" COUNTERSUNK TEK SCREWS PER END OF
PLANK AND AT INTERMEDIATE SUPPORTS.

16 PB4 ALUMINUM PLANK / COUNTER TOP ATTACHMENT DETAIL
NOT TO SCALE

manufactured exclusively for Southern Bleacher Company

HUB Machine and Tool Inc.

PO Box 1508 Graham, Texas 76450
900 Hwy. 380 Bypass
Phone: 940/549-0155 Fax: 940/549-8557

Established 1954

DETAIL NUMBER
SHEET SHOWN ON
SHEET CUT FROM

THIS DRAWING AND ALL INFORMATION THEREIN IS THE PROPERTY OF SADLER GROUP AND SOUTHERN BLEACHER COMPANY. IT MAY NOT BE COPIED OR REPRODUCED WITHOUT PRIOR WRITTEN CONSENT OF BOTH SADLER GROUP AND SOUTHERN BLEACHER COMPANY. THE DRAWING IS LOANED AND SUBJECT TO RETURN UPON DEMAND. DRAWING IS PROTECTED UNDER U.S. AND INTERNATIONAL COPYRIGHT LAW.

THE SADLER GROUP
STRUCTURAL ENGINEERS LICENSED IN 45 STATES
500 MAIN STREET, SUITE 700 • FORT WORTH, TEXAS 76102
Ph: (817) 332-1074
Fax: (817) 338-0335
Toll: (800) 900-7373
Email: tsadler@swbell.net

Southern® BLEACHER COMPANY
GRANDSTANDS ▪BLEACHERS ▪STADIUMS
PO Box One, Graham, Texas 76450
801 Fifth Street.
Phone: 940/549-0733 Fax: 940/549-1365
Established 1946

12/01/20

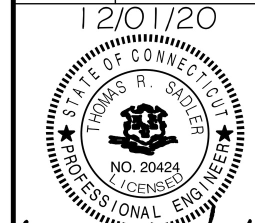

Thomas R. Sadler

TYPE: DETAIL SHEET - 1
8'- 0" X 72" SLOPED FRONT PRESS BOX

TITLE: GREENWICH HIGH SCHOOL
PRESS BOX
GREENWICH, CONNECTICUT

REV	BY	DATE	DESCRIPTION
2	ES	11.04.20	NONE THIS SHEET
1	ES	10.21.20	NONE THIS PAGE

DATE 04/29/20 DRAWN ES CHECKED RR/EM

JOB NUMBER 20101P

SHEET PB4 OF PB6

22" X 34" (11x17 = 1/2 indicated scale)

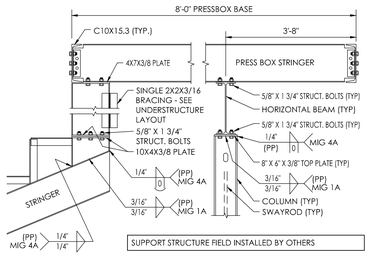

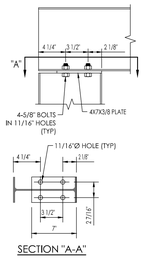

SECTION "A-A"

1 PB5 PRESSBOX BASE DETAIL
NOT TO SCALE

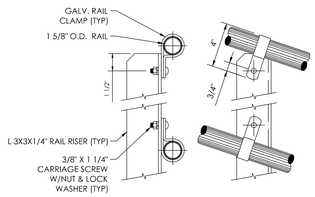

2 PB5 RAIL RISER ATTACHMENT DETAIL
NOT TO SCALE — OPTIONAL ROOFTOP FILM DECK

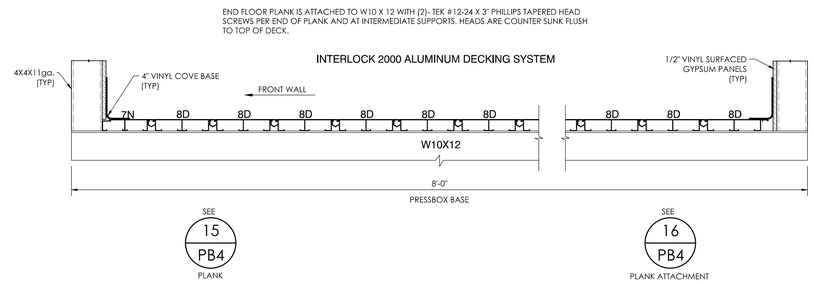

3 PB5 PRESSBOX FLOOR DETAIL
NOT TO SCALE

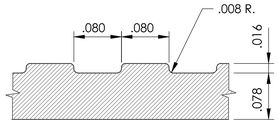

NOTE: TYPICAL FOR ALL PLANKS.

4 PB5 FLUTED SURFACE DETAIL
NOT TO SCALE

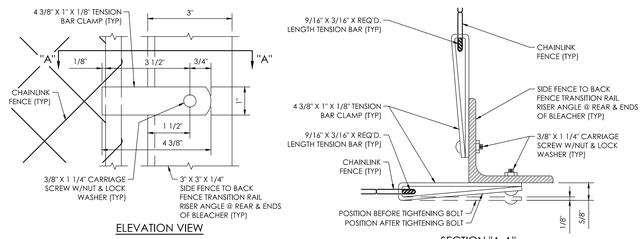

ELEVATION VIEW

SECTION "A-A"

5 PB5 TENSION BAR CLAMP DETAIL
NOT TO SCALE — OPTIONAL ROOFTOP FILM DECK

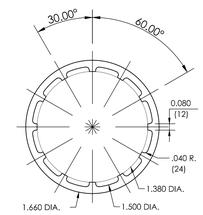

6 PB5 1 5/8" O.D. ALUMINUM RAIL DETAIL
NOT TO SCALE — OPTIONAL ROOFTOP FILM DECK

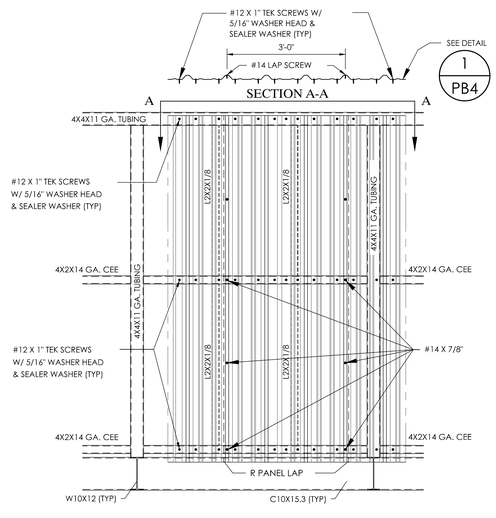

7 PB5 "R" PANEL ATTACHMENT DETAIL
NOT TO SCALE

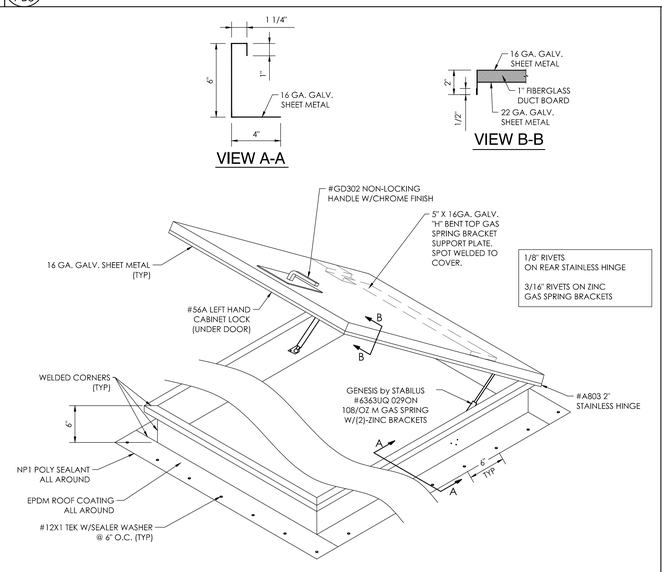

8 PB5 HUB ROOF HATCH DETAIL
NOT TO SCALE — OPTIONAL ROOFTOP FILM DECK

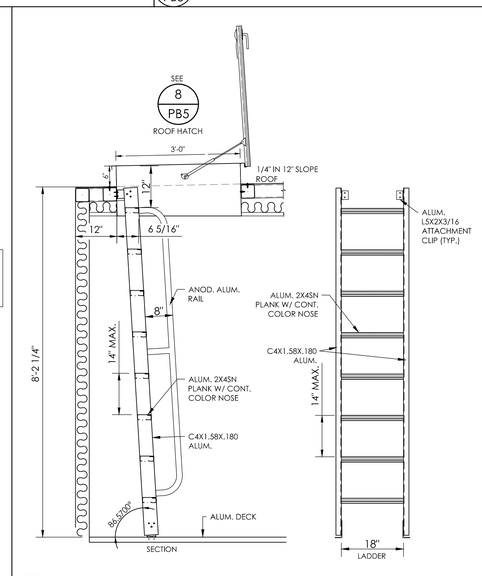

9 PB5 HUB LADDER DETAIL
NOT TO SCALE — OPTIONAL ROOFTOP FILM DECK

manufactured exclusively for Southern Bleacher Company
HUB Machine and Tool Inc.
PO Box 1508 Graham, Texas 76450
900 Hwy. 380 Bypass
Phone: 940/549-0155 Fax: 940/549-8557
Established 1954

DETAIL NUMBER
3 10
SHEET SHOWN ON
SHEET CUT FROM

THIS DRAWING AND ALL INFORMATION THEREIN IS THE PROPERTY OF SOUTHERN BLEACHER COMPANY. THE DESIGN, MATERIAL & LOGIC CONTAINED THEREIN MAY NOT BE REPRODUCED OR COPIED OR REPRODUCED WITHOUT PRIOR WRITTEN CONSENT OF SOUTHERN BLEACHER COMPANY. SOUTHERN BLEACHER COMPANY, THE DRAWING IS LOANED TO THE OWNER FOR THEIR USE. THE DESIGN OF THE DRAWING IS PROTECTED UNDER U.S. AND INTERNATIONAL COPYRIGHT LAW.

THE ADLER GROUP
STRUCTURAL ENGINEERS
LAWRENCE, KANSAS • FORT WORTH, TEXAS • NAPLES
Ph: (817) 332-0104
Fax: (817) 334-0315
Cell: (817) 584-0315
Email: tadler@swbell.net
PO Box One, Cochran, Texas 76450
801 Fifth Street
Phone: 940/549-0733 Fax: 940/549-1365
Southern® BLEACHER COMPANY
GRANDSTANDS • BLEACHERS • STADIUMS
Established 1946

12/01/20

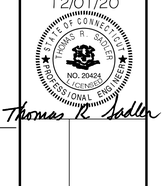

Thomas R. Adler

REV	DATE	DESCRIPTION
1	11.04.20	NONE HIS SHEET
2	10.21.20	NONE HIS PAGE

DATE 04/29/20 DRAWN ES CHECKED RR/EM

JOB NUMBER 20101P

SHEET PB5 OF PB6

DETAIL SHEET - 2
8' - 0" X 72" SLOPED FRONT PRESS BOX

GREENWICH HIGH SCHOOL
PRESS BOX
GREENWICH, CONNECTICUT

22" X 34" (1:1x17 = 1/2 indicated scale)

A.1 STEEL STRUCTURAL SYSTEM

	ENGINEERED PER:
4" X 4" X 1/8" (11 GA.) SQUARE TUBING	ASTM A500 GRADE 'B' 46ksi
2" X 2" X 1/8" ANGLE	ASTM A36/A36M GRADE 50
WIDE FLANGE BEAM	ASTM A992 Fy=50ksi
CHANNEL	ASTM A36/A36M GRADE 50
1/8" CHECKERED FLOOR PLATE	ASTM A786 A1011 Fy=27ksi
4" X 2" 14-GAUGE CEE	ASTM A1011 Fy=19.8ksi
PLATE UP TO 1/2" THICK	ASTM A36
3-5/8" PUNCHED CEE STUD 4" PUNCHED CEE STUD 3-5/8" UN-PUNCHED DEEP LEG TRACK 4" UN-PUNCHED DEEP LEG TRACK	25 GA. - ASTM C645-04 20 GA. CW - ASTM C645-04 20 GA. STRUCT. - ASTM C955-03 18 GA. STRUCT. - ASTM C955-03 25 GA. - ASTM C645-04 20 GA. CW - ASTM C645-04 20 GA. STRUCT. - ASTM C955-04 18 GA. STRUCT. - ASTM C955-04

A.2 SIDING/ACCESSORIES

	(MFG. COLOR DESIGNATION)
26-GA. PANEL	ASTM A792-03, A924-04, AZ50, AZ55 NON-COMBUSTIBLE, CLASS A
#14 X 7/8" LAP SCREWS	
SCREWS-METAL TO METAL #12 - 1" W/ 5/16" WASHER HEAD & WASHER	
PANEL CLOSURES STRIPS	(MFG. COLOR DESIGNATION)
26-GA. FLAT	ASTM A792-03, A924-04, AZ50, AZ55 NON-COMBUSTIBLE, CLASS A
SEALANT, DEGUSSA, SONOLASTIC NP1, ONE-COMPONENT ELASTOMERIC, GUN-GRADE POLYURETHANE SEALANT	UL = TYPE II / CLASS I

A.3 WINDOWS

WINDOW, SINGLE SERIES 8200 SINGLE HUNG - U FACTOR .420 THERMALLY BROKEN ALUMINUM BY DON YOUNG COMPANY TEMPERED GLASS BY CARDINAL IG, UNLIMITED IN SIZE	AAMA / NWWDA 101 / I.S.2. RATED H-C30 54X90 SGCC #2328, LAB ID #550

A.4 ELECTRICAL SPECIAL NOTE: ALL ELECTRICAL COMPONENTS SHALL BE APPROVED PER NEC

A.4.1 BREAKER PANEL

_LUG_AMP PANEL W/ MAIN DISCONNECT	UL LISTED EQUAL TO HOMELINE, GE, WESTINGHOUSE LOAD CENTERS BEARING A UL LABEL SIZED PER DRAWINGS
FLUSH MOUNT BREAKER COVER	UL LISTED EQUAL TO HOMELINE, GE, WESTINGHOUSE LOAD CENTERS BEARING A UL LABEL SIZED PER DRAWINGS
20 AMP SINGLE POLE BREAKERS	UL LISTED EQUAL TO HOMELINE, GE, WESTINGHOUSE LOAD CENTERS BEARING A UL LABEL SIZED PER DRAWINGS
DOUBLE POLE BREAKERS	UL LISTED EQUAL TO HOMELINE, GE, WESTINGHOUSE LOAD CENTERS BEARING A UL LABEL SIZED PER DRAWINGS

A.4.2 J-BOXES

4" X 4" X 2-1/8" - 1/2 & 3/4 KO-RACO #235 OR #4SDVB-SPL-PL W/FLANGE	UL LISTED, EQUAL TO RACO, BOWERS, STEEL CITY
4" X 4" X 1-1/2" - 1/2 & 3/4 KO-RACO #196 OR #4SDVB-SPL-PL W/FLANGE	UL LISTED, EQUAL TO RACO, BOWERS, STEEL CITY
4" X 4" X 1-1/2" METAL BOXES W/ 1/2", 3/4" KO, RACO #192 OR #4S-SPL-DR	UL LISTED, EQUAL TO RACO, BOWERS, STEEL CITY
4" X 4" X 2-1/8" METAL BOXES RACO #232 OR #4SD-SPL	UL LISTED, EQUAL TO RACO, BOWERS, STEEL CITY
PLASTER RINGS, 1 GANG, RACO #768 OR #8468C	UL LISTED, EQUAL TO RACO, BOWERS, STEEL CITY
PLASTER RINGS, 2 GANG, RACO #769 OR #8470A	UL LISTED, EQUAL TO RACO, BOWERS, STEEL CITY
WEATHER TIGHT, 1 GANG BOX #21H4-2	UL LISTED, EQUAL TO RACO, BOWERS, STEEL CITY
EXTENSION RINGS, RACO #187 OR #4SSBESPL	UL LISTED, EQUAL TO RACO, BOWERS, STEEL CITY

A.4.3 CONDUIT

EMT CONDUIT	UL LISTED, EQUAL TO RACO, ALLIED, BOWERS APPROVED PER NEC
FLEXIBLE METAL CONDUIT (FMC)	UL LISTED, EQUAL TO RACO, ALLIED, BOWERS APPROVED PER NEC

A.4.4 CONNECTORS

S.S. EMT CONNECTOR	UL LISTED, EQUAL TO RACO, BOWERS, STEEL CITY, NEER, APPROVED PER NEC
3/4" S.S. EMT CONNECTOR TC-502	UL LISTED, EQUAL TO RACO, BOWERS, STEEL CITY, NEER, APPROVED PER NEC
1/2" S.S. EMT CONNECTOR TC-501	UL LISTED, EQUAL TO RACO, BOWERS, STEEL CITY, NEER, APPROVED PER NEC
1/2" FLEX CONNECTOR SC50	UL LISTED, EQUAL TO RACO, BOWERS, STEEL CITY, NEER, APPROVED PER NEC
3/4" FLEX CONNECTOR SC75	UL LISTED, EQUAL TO RACO, BOWERS, STEEL CITY, NEER, APPROVED PER NEC
1/2" FLEX COUPLING, RACO #2272	UL LISTED, EQUAL TO RACO, BOWERS, STEEL CITY, NEER, APPROVED PER NEC
1/2" FLEX COUPLING, RACO #2273	UL LISTED, EQUAL TO RACO, BOWERS, STEEL CITY, NEER, APPROVED PER NEC
1/2" FLEX TO ½" EMT COUPLING NEE EFC-75	UL LISTED, EQUAL TO RACO, BOWERS, STEEL CITY, NEER, APPROVED PER NEC
1/2" EMT COUPLINGS	UL LISTED, EQUAL TO RACO, BOWERS, STEEL CITY, NEER, APPROVED PER NEC
1/2" EMT OFF-SET CONNECTORS, NEE #TN-50	UL LISTED, EQUAL TO RACO, BOWERS, STEEL CITY, NEER, APPROVED PER NEC

A.4.5 RECEPTACLES - SWITCHES

DUPLEX RCPT-LIGHT ALMOND 20A, 120V P&S 26352-LA 20A 5-20R	UL LISTED, APPROVED PER NEC
DUPLEX RCPT-LIGHT ALMOND-WR-GFCI, 20A, 120V P&S 2097TRWRLA GFCI	UL LISTED, APPROVED PER NEC
SINGLE POLE DECORATOR SWITCH LIGHT ALMOND P&S #TM870LA, 15A, 120V OR EQUAL	UL LISTED, APPROVED PER NEC
3-WAY DECORATOR SWITCH LIGHT ALMOND P&S #TM873LA, 15A, 120V OR EQUAL	UL LISTED, APPROVED PER NEC
OCCUPANCY SENSOR DECORATOR SWITCH - 15A, 120V, W/ MANUAL ON/OFF SINGLE POLE LIGHT ALMOND - P&S RWU600BICC4 3-WAY LIGHT ALMOND - P&S RW3U600I OR EQUAL	UL LISTED, APPROVED PER NEC

A.4.6 COVER PLATES

SWITCH COVER-LIGHT ALMOND #2132V	UL LISTED, EQUAL TO LEVITON, HUBBELL, P&S
PLUG COVER-LIGHT ALMOND #2134V	UL LISTED, EQUAL TO LEVITON, HUBBELL, P&S
BLANK METAL COVER-1 GANG.-LEV #84014	UL LISTED, EQUAL TO LEVITON, HUBBELL, P&S
PLUG COVER-SURFACE, RACO #902 OR #8365N	UL LISTED, EQUAL TO RACO, BOWERS, STEEL CITY
FLAT COVER PLATE-SURFACE, RACO #752 OR #8465	UL LISTED, EQUAL TO RACO, BOWERS, STEEL CITY APPROVED PER NEC
WEATHER TIGHT COVER-PLUGS-1GANG #2CCD	UL LISTED, EQUAL TO RED DOT

A.4.7 LIGHTS

2'X4' EDGELIT LED PANEL (WHITE) RAB LIGHTING EZPANFA2X4/D10 OR EQUAL DRIVER INFO: CONSTANT CURRENT, CLASS 2, 4 CHANNEL W/ 0-10V DIMMING. 120-277VAC 0.26A @ 120V. INPUT WATTS: 29.6W	UL LISTED & LABELED PER MANUFACTURER IESNA LM-79 AND LM-80 TESTED D.O.E. "LIGHTING FACTS" LABEL DESIGN LIGHTS CONSORTIUM (DLC) LISTED. DLC PRODUCT CODE: P76QGDBU
LED INFO: 30W-4000K-81CRI-3451 LUMENS-3745 L-70 LIFESPAN: 75,000 HR	IES LM-80 AND TM-21
ASTRALITE EEU-3-RW 7 WATT LED COMBO EXIT/EMERGENCY LIGHT 120/277V. (2) FULLY ADJUSTABLE LIGHTING HEADS 90 MIN. BATTERY BACK-UP	DAMP LOCATION LISTED U.L. 924 ETL LISTED
PROFESSIONAL GRADE VINYL ELECTRICAL TAPE SCOTCH 3M	UL LISTED 539H INSULATING TAPE FLAME RETARDANT

A.4.8 WIRE

12 AWG-600V-THHN-THWN-COPPER/SOLID	UL LISTED, EQUAL TO GENERAL CABLE CORP.
REDUCING WASHERS	UL LISTED, EQUAL TO RACO, BOWERS, STEEL CITY
3/4" STRAPS FOR EMT-RACO #2083 OR #MED45	UL LISTED, EQUAL TO RACO, BOWERS, STEEL CITY
STRAPS FOR FLEX	UL LISTED, EQUAL TO RACO, BOWERS, STEEL CITY
CONDUIT BUSHINGS	
J-BOX PLUGS SNAP IN SEALS	UL LISTED EQUAL TO GB ELECTRICAL
IDS CADDY FASTENERS W/ BOLTS & NUTS	UL LISTED EQUAL TO ERICO, IDS
BAR HANGER SUPPORTS	UL LISTED EQUAL TO ERICO

A.4.9 WIREMOLD

#2300BC-BASE-COVER-8' LENGTH	UL LISTED RACEWAY, E90378, RJTX,UL5 UL94V-0, E90377, RJYT, NEC 352B
#2300WC-WIRE CLIP	UL LISTED RACEWAY, E90378, RJTX,UL5 UL94V-0, E90377, RJYT, NEC 352B
#2306-COVER CLIP	UL LISTED RACEWAY, E90378, RJTX,UL5 UL94V-0, E90377, RJYT, NEC 352B
#2310A-ENTRANCE END FITTING	UL LISTED RACEWAY, E90378, RJTX,UL5 UL94V-0, E90377, RJYT, NEC 352B
#2310B-BLANK END FITTING	UL LISTED RACEWAY, E90378, RJTX,UL5 UL94V-0, E90377, RJYT, NEC 352B
#2311-90* FLAT ELBOW	UL LISTED RACEWAY, E90378, RJTX,UL5 UL94V-0, E90377, RJYT, NEC 352B
#2315-TEE	UL LISTED RACEWAY, E90378, RJTX,UL5 UL94V-0, E90377, RJYT, NEC 352B
#2317-INTERNAL ELBOW	UL LISTED RACEWAY, E90378, RJTX,UL5 UL94V-0, E90377, RJYT, NEC 352B
#2318-EXTERNAL ELBOW	UL LISTED RACEWAY, E90378, RJTX,UL5 UL94V-0, E90377, RJYT, NEC 352B
#2347-DEVICE BOX-1 GANG	UL LISTED RACEWAY, E90378, RJTX,UL5 UL94V-0, E90377, RJYT, NEC 352B
32347-2-DEVICE BOX-2 GANG	UL LISTED RACEWAY, E90378, RJTX,UL5 UL94V-0, E90377, RJYT, NEC 352B

A.4.10 MISCELLANEOUS

3/4" X 4" GALVANIZED NIPPLE	
GALVANIZED FLOOR FLANGE 3/4"	ASTM C665, CLASS I UL FHC 25/50
POLY ENCAPSULATED INSULATION JOHNS MANVILLE	TYPE II, CATEGORY 1 ASTM E 84
ARMORFLECT WHITE CONTINUOUS WRAP INSULATION: R-8 CONT. 1/2" FIBERGLASS CORE BONDED TO REINFORCED SCRIM FACING	

A.5 INTERIOR FINISHES

A.5.1 CEILING

CERTAINTEED HHF-154 BIOSHIELD 2'X2'X5/8" CEILING TILE	UL LISTED CLASS I FLAME 15/SMOKE 5
WALL ANGLE - GALV. WA15-15 12'	FIREGUARD, CLASS I
MAIN TEE - CS12-12-15 MR X 12'	FIREGUARD, CLASS I
CROSS TEE - CS2-12-12 CT X 2'	FIREGUARD, CLASS I
RIVETS	
12-GA. WIRE (GALVANIZED)	
14-GA. HANGER CLIPS	UL LISTED EQUAL TO RAMSET 1202 CF

A.5.2 VINYL INTERIOR

WALLBOARDS - DURASAN VINYL GYPSUM SHEETROCK, TYPE X SANTA FE-PORCELAIN 5/8" THICK, 4' X 8'	VINYL - UL LISTED CLASS I, ASTM E84-04, C960-04, C1396-02, FLAME 25 / SMOKE 50 OR LESS
OUTSIDE CORNER - 10' OUTSIDE CORNER, DURASAN, 2-PART SNAP ON, INTERIOR- GALVANIZED STEEL, VINYL EXTERIOR, SANTA FE-PORCELAIN	CLASS A ASTM E84-04, FLAME 25 / SMOKE 50 OR LESS
INSIDE CORNER - 10' INSIDE CORNER, DURASAN, 1 PIECE, INTERIOR- GALVANIZED STEEL, VINYL EXTERIOR, SANTA FE-PORCELAIN	CLASS A ASTM E84-04, FLAME 25 / SMOKE 50 OR LESS
8' BATT STRIPS-DURASAN, 2-PART SNAP ON, INTERIOR-GALVANIZED STEEL, VINYL EXTERIOR, SANTA FE-PORCELAIN	CLASS I FLAME 25 / SMOKE 50 OR LESS
ADHESIVE, DAP - DRYWALL	ASTM C557

A.5.3 FLOORING & BASE

VINYL BASE-COLOR: PRO CB-35 MED. GRAY

VINYL BASE ADHESIVE, DURABOND D-731

A.5.4 INTERIOR DOORS

3' X 6'-8" BIRCH DOOR UNIT INTERIOR W/ 5-1/2" JAMBS W/ TRIM - HOLLOW CORE	
LATEX CAULK, EQUAL TO ACE ACRYLINK LATEX CAULK, GENERAL PURPOSE	ASTM-C-834-95
GALS EXT OIL BASE / RUST NOT METAL PAINT	NFPA CLASS II
PAINT INT. LATEX / WATER BASE	NON FLAMMABLE
PASSAGE HARDWARE / COMMERCIAL / GRADE, LIGHT DUTY SCHLAGE, ELAN COMMERCIAL PASSAGE F10 ELA 626	ADA APPROVED ANSI GRADE 2

A.5.5 COUNTER TOP

TOWER ANODIZED ALUMINUM 2 -PIECE INTERLOCKING 1" THICK COUNTERTOP	EXTRUDED ALUMINUM

A.6 HARDWARE

A.6.1 EXTERIOR DOORS

DOOR FRAME CECO, SERIES SU STEEL FRAMES, 5'-3/4" X 3' X 6'-8" WITH WOOD STUD ANCHORS, 16 GA., HEAVY DUTY, PRIMER PAINT COAT	UL LISTED 10B, EQUAL TO CECO, STEEL DOOR FRAME ANSI A250.8 -1998, ASTM A366, A620, A568 PRIMER PAINT COAT ANSI A250.10
DOOR CECO - HMD CP 18 A60 3068 F BW 1 3/4" (C1; LC1) POLYSTYRENE INSULATION PRIMER PAINT COAT R-11.1 AS CALCULATED	UL LISTED 10B, EQUAL TO CECO, STEEL DOOR ANSI A250.4 PERFORMANCE TEST, 18 AND 16 GAGE: LEVEL A (1,000,000 CYCLES) PRIMER PAINT COAT ANSI A250.10
ANCHORS WOOD & METAL STUD ANCHORS/ TYPE WS PER DOOR MANUFACTURER	UL LISTED, EQUAL TO CECO
HINGES PBB INC., FULL MORTISE TEMPLATE HINGES 4-1/2"X4" GA. 0.134 +\- .005 PB81	UL LISTED EQUAL TO PBB ANSI TEMPLATE ANSI A8133
THRESHOLD PEMKO-171 A36, MILL FINISH ALUMINUM 5"X1/2"	UL LISTED EQUAL TO HAGER ADA APPROVED
DOOR SWEEP-WEATHERSTRIP NATIONAL GUARD 101VA	
DOOR CLOSURE NORTON CLP-8501	ANSI/BHMA A1564.4 GRADE 1
1/4" FOAM WEATHER STRIPPING	
EXIT DEVICE, YALE 2100	ANSI/BHMA A156.3 GRADE 1
YALE TRIM, YALE 546F 626	ANSI/BHMA A156.3 GRADE 1

A.7 ROOFING

ADHESIVE MULE-HIDE, ACRYLIC WATER BASE BONDING	NON-FLAMMABLE, NON-TOXIC UL LISTED AS EXTERNAL FIRE EXPOSURE ONLY
ADHESIVE MULE-HIDE, BLACK SEAM ADHESIVE	AS EXTERNAL FIRE EXPOSURE ONLY
ROOF HATCH (OPTIONAL) 16 GA. GALV. 30" X 36", NON-COMBUSTIBLE	EQUAL TO MILCOR
ROOF COATING ACRYLINK G ACRYLIC ROOF COATING BY ISOPRIME ACRYLIC ROOF COATINGS, INC. ACRYCAULK	UL 790, CLASS A, ASTM E108 ASTM D 6083 UL 790, CLASS A

NOTES:

STANDARDS LISTED ARE REFERENCE TO THE MANUFACTURERS PRODUCT REFERENCE STANDARD OR IBC REFERENCE STANDARD NUMBER.

1 / PB6 APPENDIX "A" - MATERIAL SPECS
NOT TO SCALE

manufactured exclusively for Southern Bleacher Company

HUB Machine and Tool Inc.
PO Box 1508 Graham, Texas 76450
900 Hwy. 380 Bypass
Phone: 940/549-0155 Fax: 940/549-8557
Established 1954

THE SADLER GROUP
STRUCTURAL ENGINEERS LICENSED IN 45 STATES
500 MAIN STREET, SUITE 700 • FORT WORTH, TEXAS 76102
Ph: (817) 332-1074
Fax: (817) 338-0335
Toll: (800) 900-7373
Email: tsadler@swbell.net

Southern® BLEACHER COMPANY
GRANDSTANDS • BLEACHERS • STADIUMS
PO Box One, Graham, Texas 76450
801 Fifth Street.
Phone: 940/549-0733 Fax: 940/549-1365
Established 1946

DETAIL NUMBER
SHEET SHOWN ON
SHEET CUT FROM

THIS DRAWING AND ALL INFORMATION THEREIN IS THE PROPERTY OF SADLER GROUP AND SOUTHERN BLEACHER COMPANY. IT MAY NOT BE COPIED OR REPRODUCED WITHOUT PRIOR WRITTEN CONSENT OF BOTH SADLER GROUP AND SOUTHERN BLEACHER COMPANY. THE DRAWING IS LOANED AND SUBJECT TO RETURN UPON DEMAND. DRAWING IS PROTECTED UNDER U.S. AND INTERNATIONAL COPYRIGHT LAW.

12/01/20
STATE OF CONNECTICUT ★ THOMAS R. SADLER ★ NO. 20424 LICENSED PROFESSIONAL ENGINEER
Thomas R. Sadler

TYPE: APPENDIX "A" - MATERIAL SPECS
8'- 0" X 72" SLOPED FRONT PRESS BOX

TITLE: GREENWICH HIGH SCHOOL
PRESS BOX
GREENWICH, CONNECTICUT

REV	BY	DATE	DESCRIPTION
2	ES	11.04.20	NONE THIS SHEET
1	ES	10.21.20	NONE THIS PAGE

DATE	DRAWN	CHECKED
04/29/20	ES	RR/EM

JOB NUMBER 20101P

SHEET PB6 OF PB6

22" X 34" (11x17 = 1/2 indicated scale)