CULINARY CLASSROOM

WESTVIEW HIGH SCHOOL - BEAVERTON SCHOOL DISTRICT

4200 NW 185th AVE,
PORTLAND, OREGON 97229

BID & PERMIT SET
FEBRUARY 18, 2021

VICINITY MAP

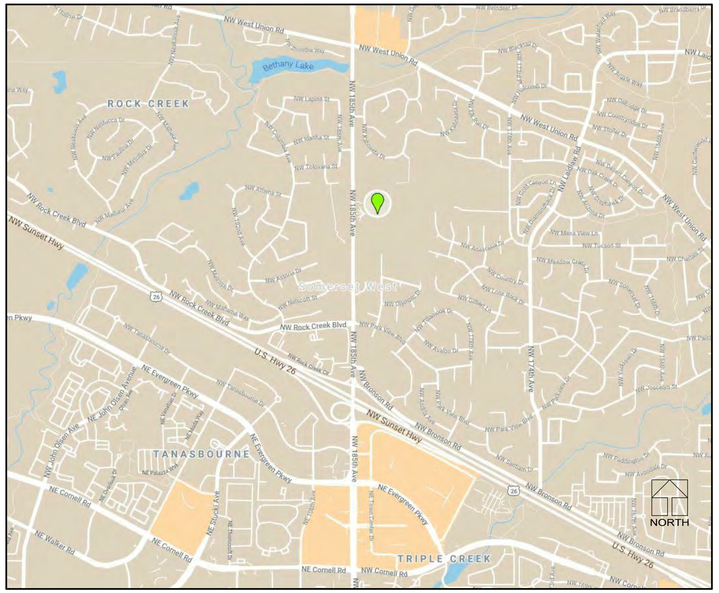

OVERALL PLAN

NOTE: NO EXTERIOR WORK EXCEPT NEW ROOFTOP UNIT AND EXHAUST FANS

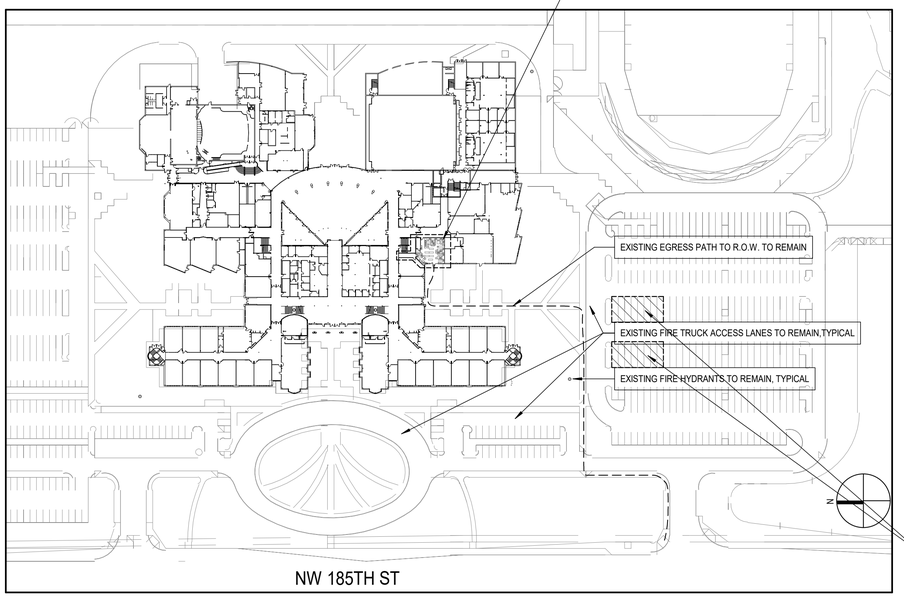

AVAILABLE AREA FOR CONTRACTOR STAGING: TWO SECTIONS OF 16 PARKING SPOTS. DRIVE AISLE BETWEEN WILL NEED TO REMAIN FUNCTIONAL, AS WELL AS ANY FIRE LANES. ADD-01

SUMMARY OF WORK

INTERIOR RENOVATION OF EXISTING CULINARY CLASSROOM.
DEMOLISH EXISTING RESIDENTIAL RANGES AND THEIR ASSOCIATED HOODS, DUCTWORK & FANS. REPLACE WITH NEW COMMERCIAL KITCHEN EQUIPMENT AND TYPE 1 HOODS. PROVIDE MAKEUP AIR UNIT AND NEW ROOFTOP EXHAUST HOODS. DEMOLISH EXISTING SINKS, COUNTERS AND UNDERCOUNTER CASEWORK AND PROVIDE NEW SINKS/LAVS WITH GREASE INTERCEPTORS. DEMOLISH CEILING, LIGHT FIXTURES, AND FLOORING FINISHES AND REPLACE WITH NEW. ADD CAMERA AT (DEMONSTRATION) STATION #7 TO BE USED WITH NEW CEILING MOUNTED PROJECTOR AND SCREEN.

DEFERRED SUBMITTALS

ADD-01

- FIRE SUPPRESSION SYSTEM
- SEISMIC BRACING FOR PERMANENTLY INSTALLED MECHANICAL, ELECTRICAL AND PLUMBING EQUIPMENT

- HVAC SYSTEM (MECHANICAL PERMIT)
- PLUMBING SYSTEM (PLUMBING PERMIT)
- FIRE SPRINKER (SEE NFPA 13 SPRINKLER SYSTEM AFFADAVIT FORM FOR ALTERATION OR TI WORK INVOLVING 10 OR LESS HEADS)

SITE INFORMATION

SITE ADDRESS: 4200 NW 185TH AVE. PORTLAND OR, 97229
TAX LOT NUMBER: 1N1190002300
SITE AREA SIZE: LOT SIZE: 44.96 ACRES
ZONING DESIGNATION: R-5
SANITATION DISTRICT: CLEAN WATER SERVICES (CWS)
WATER DISTRICT: TUALATIN VALLEY WATER (TVW)
FIRE DISTRICT: TUALATIN VALLEY FIRE & RESCUE (TVFR)

OWNER FURNISHED ITEMS

OFCI OWNER FURNISHED CONTRACTOR INSTALLED ITEMS INCLUDE:
- SOAP DISPENSERS
- PAPER TOWEL DISPENSERS
- UNDER-COUNTER DISHWASHER (EXISTING TO BE RELOCATED)
- STAINLESS STEEL TABLES (EXISTING TO BE REUSED / CASTERS ADDED)

RELEVANT FF&E ITEMS INCLUDE:
- TEACHER PODIUM (FURNITURE)
- POTS & PANS, KITCHEN UTENSILS, ETC.
- STOOLS (FURNITURE)

PROJECT TEAM

OWNER:
BEAVERTON SCHOOL DISTRICT
FACILITIES DEVELOPMENT
16550 SW MERLO ROAD
BEAVERTON, OR 97003
KURT MEEUWSEN 503-356-4552
PATRICK O'HARROW 503-356-4584

ARCHITECTURE & INTERIORS
DLR GROUP
110 SW YAMHILL ST
PORTLAND, OR 97204
JANE GOODING 503-200-3966

STRUCTURAL
DLR GROUP
51 UNIVERSITY ST, SUITE 600
SEATTLE, WA 98101
WILLIAM RAGLAND 360-603-9939

MECHANICAL / PLUMBING / FIRE PROTECTION
DLR GROUP
51 UNIVERSITY ST, SUITE 600
SEATTLE, WA 98101
STEVE REIGH 206-461-6006
GUIDE RUNGAMORNCHAI 206-461-6057

ELECTRICAL & AV
DLR GROUP
110 SW YAMHILL ST
PORTLAND, OR 97204
VITALY SHEVYAKOV 503-575-3458
SEAN AVERY 206-461-6046

FOOD SERVICE
HALLIDAY ASSOCIATES, INC
656 NW NORWOOD ST
CAMAS, WA 98607
LAURA BOURLAND 360-834-6657

CONTRACTOR
TBD

INDEX OF DRAWINGS

GENERAL
G0.0 COVER SHEET
G0.2 SYMBOLS & ABBREVIATIONS
CS1.1 CODE SUMMARY

ARCHITECTURE
AD1.1 DEMO PLANS (FLOOR AND RCP)
A1.1 FLOOR PLANS
A3.1 REFLECTED CEILING PLAN AND ROOF PLAN
A7.1 INTERIOR ELEVATIONS & SECTIONS
A10.1 DETAILS

STRUCTURAL
S0.1 STRUCTURAL NOTES
S1.1 PARTIAL FOUNDATION AND FRAMING PLAN
S3.1 STRUCTURAL DETAILS

FIRE PROTECTION
FP1.1 OVERALL FIRE PROTECTION PLAN

MECHANICAL
M0.1A MECHANICAL SYMBOLS & ABBREVIATIONS
M1.1 HVAC PLANS (DEMO AND NEW)
M5.1 MECHANICAL DETAILS & SCHEDULES
M5.2 MECHANICAL EQUIPMENT & SCHEDULES
M5.3 MECHANICAL EQUIPMENT & SCHEDULES
M5.4 MECHANICAL EQUIPMENT & SCHEDULES
M5.5 MECHANICAL EQUIPMENT & SCHEDULES ADD-01

PLUMBING
P1.1 PLUMBING PLANS (DEMO AND NEW)
P4.1 WASTE & VENT RISER DIAGRAMS

ELECTRICAL & AV
E0.1 ELECTRICAL SYMBOLS, ABBREVIATIONS & NOTES
ED1.1 POWER DEMO PLAN
ED1.2 LIGHTING DEMO PLAN
E1.1 REFLECTED CEILING PLAN
E2.1 POWER PLAN
E2.2 SECOND LEVEL POWER PLAN (ROOF)
E5.1 ONE-LINE DIAGRAM
E6.1 ELECTRICAL DETAILS
E7.1 PANEL SCHEDULES
E7.2 PANEL SCHEDULES

FOOD SERVICE
FS1.1 FOOD SERVICE EQUIPMENT PLAN
FS1.2 FOOD SERVICE PLUMBING PLAN
FS1.3 FOOD SERVICE MECHANICAL PLAN
FS1.4 FOOD SERVICE ELECTRICAL PLAN
FS2.1 FOOD SERVICE CANOPY HOOD DETAILS
FS2.2 FOOD SERVICE CANOPY HOOD DETAILS
FS2.3 FOOD SERVICE CANOPY HOOD DETAILS
FS2.4 FOOD SERVICE CANOPY HOOD DETAILS
FS2.5 FOOD SERVICE CANOPY HOOD DETAILS
FS2.6 FOOD SERVICE CANOPY HOOD DETAILS
FS3.1 FOOD SERVICE FABRICATION DETAILS
FS3.2 FOOD SERVICE FABRICATION DETAILS
FS3.3 FOOD SERVICE FABRICATION DETAILS
FS3.4 FOOD SERVICE FABRICATION DETAILS
FS3.5 FOOD SERVICE FABRICATION DETAILS
FS3.6 FOOD SERVICE FABRICATION DETAILS

SITE PLAN
AS1.1 SITE PLAN

DLR Group
© DLR Group

REGISTERED ARCHITECT
JANE E. GOODING
PORTLAND, OR
6821
STATE OF OREGON

CULINARY CLASSROOM
Westview High School - Beaverton School District
4200 NW 185th Ave, Portland, OR 97229

BID & PERMIT SET
02.18.21
REVISIONS
ADD-01 3/17/21

74-211106-00

COVER SHEET

G0.1

BIM 360://74-211106-00 Westview HS Culinary/74-211106-00_WHSC_AR_2020.rvt
3/22/2021 1:37:41 AM

GENERAL ABBREVIATIONS

#	NUMBER
&	AND
@	AT
ADA	AMERICANS WITH DISABILITY ACT
ADDN	ADDITION OR ADDITIONAL
AFF	ABOVE FINISHED FLOOR
AFG	ABOVE FINISHED GRADE
AHJ	AUTHORITY HAVING JURISDICTION
ALT	ALTERNATE
ANSI	AMERICAN NATIONAL STANDARDS INSTITUTE
APPROX	APPROXIMATE
ARCH	ARCHITECTURAL
BLDG	BUILDING
BSMT	BASEMENT
CL	CENTER LINE
CLG	CEILING
CM	CENTIMETER
CONC	CONCRETE
CONN(S)	CONNECTION(S)
CONST	CONSTRUCTION
CONT	CONTINUOUS
CONTR	CONTRACT(OR)
CTR	CENTER
D	DEPTH
DEG	DEGREE
DEMO	DEMOLISH OR DEMOLITION
DIA	DIAMETER
DIM	DIMENSION
DIV	SPECIFICATION DIVISION
DN	DOWN
DTL	DETAIL
DWG(S)	DRAWING(S)
E	EAST
EA	EACH
EC	ELECTRICAL CONTRACTOR
EL	ELEVATION
ELEC	ELECTRICAL
ENG	ENGINEER
EQ	EQUAL
EQUIP	EQUIPMENT
EQUIV	EQUIVALENT
EXST	EXISTING
EXT	EXTERIOR
FIN	FINISHED
FL	FLOOR
FT	FEET
FUT	FUTURE
GC	GENERAL CONTRACTOR
GOVT	GOVERNMENT
H	HEIGHT
HORIZ	HORIZONTAL
HT	HEIGHT
i.e.	THAT IS
IBC	INTERNATIONAL BUILDING CODE
IN	INCH
INT	INTERIOR
LB(S)	POUND(S)
M	THOUSAND
M	METER
MAX	MAXIMUM
MC	MECHANICAL CONTRACTOR
MECH	MECHANICAL
MEZZ	MEZZANINE
MFR	MANUFACTURER
MIN	MINIMUM
MISC	MISCELLANEOUS
MM	MILLIMETER
N	NORTH
N/A	NOT APPLICABLE
NIC	NOT IN CONTRACT
NTS	NOT TO SCALE
OC	ON CENTER
OPP	OPPOSITE
OVHD	OVERHEAD
PAR	PARALLEL
PENT	PENTHOUSE
PLYWD	PLYWOOD
QTY	QUANTITY
REQ(D)	REQUIRE(D)
REV	REVISION(S)
RM	ROOM
RND	ROUND
S	SOUTH
SCHED	SCHEDULE
SECT	SECTION
SHT	SHEET
SIM	SIMILAR
SPEC	SPECIFICATION(S)
STD	STANDARD
STL	STEEL
STOR	STORAGE
STRUCT	STRUCTURAL
SYM	SYMETRICAL
TEMP	TEMPORARY
TYP	TYPICAL
UNEX	UNEXCAVATED
UNFIN	UNFINISHED
UNO	UNLESS NOTED OTHERWISE
VERT	VERTICAL
VEST	VESTIBULE
VIF	VERIFY IN FIELD
W	WEST
W/	WITH
W/O	WITHOUT

ARCHITECTURAL ABBREVIATIONS

A/E	ARCHITECT/ENGINEER
AB	AIR BARRIER
ABS	ASBESTOS
ACC	ADA ACCESSIBLE
ACR	ACRYLIC
ACT	ACOUSTIC CEILING TILE
AD	ACCESS DOOR
ADJ	ADJUSTABLE
ADJT	ADJACENT
ADMIN	ADMINISTRATION
AEC	AUTOMATED EXTERNAL DEFIBRILLATORS
AL	ALUMINUM
ALUM	ALUMINUM
AP	ACCESS PANEL
APC	ACOUSTIC PANEL CEILING
ASPH	ASPHALT
AUTO	AUTOMATIC
AVG	AVERAGE
AWP	ACOUSTIC WALL PANEL
B.O.	BOTTOM OF
BCS	BABY CHANGING STATION
BD	BOARD
BLK	BLOCK
BLKG	BLOCKING
BLKHD	BULKHEAD
BM(S)	BEAM(S)
BOT	BOTTOM
BRDG	BRIDGING
BRG	BEARING
BRKT	BRACKET
BT	BATHTUB
BTWN	BETWEEN
CAB	CABINET
CBD	CHALKBOARD
CER	CERAMIC
CF	CUBIC FEET
CFCI	CONTRACTOR FURNISHED CONTRACTOR INSTALLED
CFMF	COLD-FORMED METAL FRAMING
CG	CLEAR FLOAT GLASS
CI	CAST IRON
CIG	CLEAR INSULATING GLASS
CIP	CAST IN PLACE
CJ	CONTROL JOINT
CJA	CONTROL JOINT ABOVE
CLO	CLOSET
CLR	CLEAR
CMU	CONCRETE MASONRY UNIT
COL	COLUMN
COM	COMMON
COMB	COMBINATION
COMM	COMMUNICATIONS
COMPR	COMPRESSIBLE
CONF	CONFERENCE
CONFIG	CONFIGURATION
CORR	CORRIDOR
CP	COVER PLATE
CPT	CARPET
CR	CHAIR RAIL
CS	COUNTERSINK
CSTJ	CONSTRUCTION JOINT
CSWK	CASEWORK
CT	CERAMIC TILE
CTG	CLEAR TEMPERED FLOAT GLASS
CTIG	CLEAR TEMPERED INSULATING GLASS
CU	COPPER
CU	COMBINATION UNIT
CV	CONDOM VENDOR
CY	CUBIC YARD
CYL	CYLINDER
DB	DECIBEL
DBL	DOUBLE
DC	DUST COLLECTOR
DEPR	DEPRESS(ION)(ED)
DEPT	DEPARTMENT
DET	DETENTION
DF	DRINKING FOUNTAIN
DG	DOOR GRILLE
DIAG	DIAGONAL
DPFG	DAMPROOFING
DR	DOOR
DSN	DOWNSPOUT NOZZLE
DW	DISHWASHER
DWL(S)	DOWEL(S)
DWR	DRAWER
EB	EXPANSION BOLT
EE	EACH END
EEW	EMERGENCY EYE WASH
EEWS	EMERGENCY EYE WASH SHOWER
EFF	EFFICIENCY
EJ	EXPANSION JOINT
ELAS	ELASTOMERIC
ELEV	ELEVATOR
EMER	EMERGENCY
ENCL	ENCLOSURE
ENTR	ENTRANCE
ERF	EPOXY RESIN FLOORING
EUI	ENERGY USE INTENSITY
EW	EACH WAY
EWC	ELECTRIC WATER COOLER
EXP	EXPANSION
EXP	EXPOSED
F	FABRIC
F.O.	FACE OF
FAB	FABRICATE(D)
FB	FACE BRICK
FD	FLOOR DRAIN
FDN	FOUNDATION
FE	FIRE EXTINGUISHER
FEC	FIRE EXTINGUISHER CABINET
FF	FINISH FLOOR
FH	FIRE HYDRANT
FHC	FIRE HOSE CABINET
FIG	FIGURE
FIX	FIXTURE
FLASH	FLASHING
FLEX	FLEXIBLE
FLG	FLOORING
FLM	FULL LENGTH MIRROR
FLUOR	FLUORESCENT
FO	FINISH OPENING
FOC	FACE OF CONCRETE
FOF	FACE OF FINISH
FOM	FACE OF MASONRY
FOS	FACE OF STUD
FOW	FACE OF WALL
FP	FIREPROOFING
FR	FIRE RESISTANT
FRP	FIBERGLASS REINFORCED PANEL
FRT	FIRE RESISTANCE TREATED
FS	FLOOR SINK
FSS	FOLDING SHOWER SEAT
FTG	FOOTING
FVC	FIRE VALVE CABINET
FWC	FABRIC WALL COVERING
G	GROUT
GA	GAUGE
GAL	GALLON
GALV	GALVANIZED
GB	GRAB BAR
GD	GARBAGE DISPOSAL
GEN	GENERAL
GFA	GROSS FLOOR AREA
GL	GLUE LAMINATED
GL	GLASS
GMP	GUARANTEED MAXIMUM PRICE
GR	GUARD RAIL
GR	GRADE
GRS	GALVANIZED RIGID STEEL
GWB	GYPSUM WALL BOARD
GYP	GYPSUM
HC	HOLLOW CORE
HD	HAND DRYER
HDF	HIGH DENSITY FIBERBOARD
HDR	HEADER
HDWD	HARDWOOD
HDWR	HARDWARE
HM	HOLLOW METAL
HR	HOUR
HR	HANDRAIL
HS	HARDWARE SET
HSS	HOLLOW STRUCTURAL SHAPE
HVAC	HEATING VENTILATING AND AIR CONDITIONING
IAW	IN ACCORDANCE WITH
ID	INSIDE DIAMETER
IF	INSIDE FACE
IIP	INSULATED INFILL PANEL GLASS
IJ	ISOLATION JOINT
IJS	IN JOIST SPACE
INC	INCLUDE(ING)
INSUL	INSULATION
JAN	JANITOR
JBE	JOIST BEARING ELEVATION
JCT	JUNCTION
JFB	JOINT FILLER BOARD
JST	JOIST
JT	JOINT
KCJ	KEYED CONSTRUCTION JOINT
KD	KNOCKDOWN
KH	KITCHEN HOOD
KIT	KITCHEN
L	ANGLE
LAB	LABORATORY
LAM	LAMINATED
LAV	LAVATORY
LBR	LUMBER
LDG	LOADING
LF	LINEAR FOOT
LG	LENGTH (LONG)
LG	LAMINATED GLASS
LIN	LINEAR
LINO	LINOLEUM
LKR	LOCKER
LOC	LOCATION
LONG	LONGITUDINAL
LSC	LIFE SAFETY CODE
LTG	LIGHTING
LV	LOUVER
LVT	LUXURY VINYL TILE
MAG	MAGNETIC
MAINT	MAINTENANCE
MAN	MANUAL
MAS	MASONRY
MATL	MATERIAL
MB	MOP BASIN
MBD	MARKER BOARD
MBH	MOP/BROOM HOLDER
MC	MEDICINE CABINET
MEMB	MEMBRANE
MH	MANHOLE
MR/S	MIRROR WITH SHELF
MTD	MOUNTED
MTG	MOUNTING
MUL	MULLION
NC	NOISE CRITERIA
NFPA	NATIONAL FIRE PROTECTION ASSOCIATION
NOM	NOMINAL
O to O	OUT TO OUT
OA	OVERALL
OFCI	OWNER FURNISHED CONTRACTOR INSTALLED
OFF	OFFICE
OFOI	OWNER FURNISHED OWNER INSTALLED
OH	OPPOSITE HAND
OPG(S)	OPENING(S)
OSHA	OPERATIONAL SAFETY AND HEALTH ADMINISTRATION
OTB	OPEN TO BELOW
OVFL	OVERFLOW
P	PAINT
PAN B	PANIC BOLT
PB	PARTICLE BOARD
PC	PRECAST CONCRETE
PCD	PAPER CUP DISPENSER
PCT	PORCELAIN CERAMIC TILE
PD	PANIC DEVICE
PERF	PERFORATED
PERP	PERPENDICULAR
PG	PATTERN GLASS
PIC	PORTABLE INSTRUMENT CONNECTION
PIG	PATTERN INSULATING GLASS
PL	PLATE
PL	PROPERTY LINE
PL	PLASTIC LAMINATE
PLAM	PLASTIC LAMINATE
PLBG	PLUMBING
PR	PAIR
PREFAB	PREFABRICATED
PROJ	PROJECT(OR) (ION)
PS	PROJECTION SCREEN
PT	POINT
PTD	PAPER TOWEL DISPENSER
PTD/R	COMBINATION TOWEL DISPENSER/RECEPTACLE
PTN	PARTITION
PVC	POLYVINYL CHLORIDE
PWL	SOUND POWER LEVEL
QT	QUARRY TILE
QTR RND	QUARTER ROUND
R	RISER
RAD	RADIUS
RB	RUBBER BASE
RC	REMOTE CONTROL
RCP	REFLECTED CEILING PLAN
RD	ROOF DRAIN
REF	REFERENCE
REFL	REFLECTED
REM	REMOVABLE
RESIL	RESILIENT
RF	RESILIENT FLOORING
RF	RUBBER FLOOR
RFM	RECESSED FLOOR MAT
RH	ROBE HOOK
RI&C	ROUGH IN AND CONNECT
S	SINK
SAT	SPRAYED ACOUSTIC TREATMENT
SAW	SOUND ABSORBING WALL UNITS
SB	SPLASH BLOCK
SC	SOLID CORE
SC	SHOWER CURTAIN
SCD	SEAT COVER DISPENSER
SCH	SHOWER CURTAIN HOOK
SCR	SHOWER CURTAIN ROD
SCT	STRUCTURAL CLAY TILE
SD	SOAP DISPENSER
SECY	SECRETARY
SF	SQUARE FEET
SG	SPANDREL GLASS
SGL	SINGLE
SH	SHOWER
SHM	SECURITY HOLLOW METAL
SLNT	SEALANT
SM	SHEET METAL
SND	SANITARY NAPKIN DISPOSAL
SNV	SANITARY NAPKIN VENDOR
SPL	SOUND PRESSURE LEVEL
SQ	SQUARE
SS	SOLID SURFACE
SSA	STORM SHELTER AREA
SSS	STAINLESS STEEL SHELF
SST	STAINLESS STEEL
ST	STONE
ST	STAIR
STAG'D	STAGGERED
STC	SOUND TRANSMISSION CLASS
STGR	STRINGER
SUBFL	SUBFLOOR
SURF	SURFACE
SUSP	SUSPENDED
SVF	SHEET VINYL FLOORING
T	TREAD
T&G	TONGUE AND GROOVE
T.O.	TOP OF
TAN	TANGENT
TB	TOWEL BAR
TBD	TACK BOARD
TCP	TOILET COMPARTMENT PARTITION
TERR	TERRAZZO
TFG	TINTED FLOAT GLASS
TG	TEMPERED GLASS
TH	THRESHOLD
THK	THICK(NESS)
TI	TENANT IMPROVEMENT
TIG	TINTED INSULATING GLASS
TMR	TILT MIRROR UNIT
TOIL	TOILET
TOP	TOP OF PAVING
TRANS	TRANSVERSE
TT	TERRAZZO TILE
TTD	TOILET TISSUE DISPENSER
TTG	TINTED TEMPERED FLOAT GLASS
TTIG	TINTED TEMPERED INSULATING GLASS
TW	TACK WALL
UL	UNDERWRITERS LABORATORIES
UR	URINAL
US	UTILITY SHELF
UTIL	UTILITY
VB	VAPOR BARRIER
VB	VINYL BASE
VCB	VENTED COVE BASE
VF	VINYL FLOOR
VOC	VOLITILE ORGANIC COMPOUND
VOL	VOLUME
VP	VENEER PLASTER
VT	VINYL TILE
VWC	VINYL WALL COVERING
W	WIDE
WB	WALL BASE
WC	WATER CLOSET
WC	WALL COVERING
WCL	WATER CLOSET/LAVATORY COMBINATION
WD	WOOD
WDF	WOOD FLOORING
WDW	WINDOW
WG	POLISHED WIRE GLASS
WI	WROUGHT IRON
WOM	WALK OFF MAT
WR	WASTE RECEPTACLE
WRB	WEATHER RESISTANT BARRIER
WW	WARM WHITE
WWF	WELDED WIRE FABRIC

GENERAL SYMBOLS

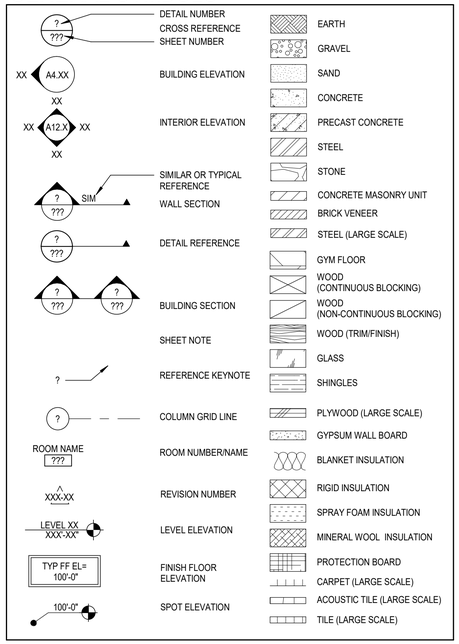

ARCHITECTURAL SYMBOLS

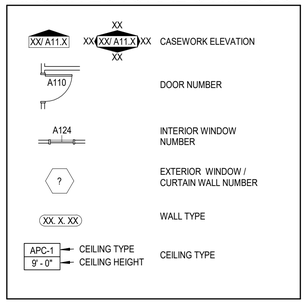

GENERAL NOTES

A. GENERAL NOTES APPLY TO ALL SHEETS.
B. DIMENSIONS ARE ACTUAL AND ARE TO FACE OF STUDS, FACE OF CONCRETE WALLS, FACE OF CMU WALLS, FACE OF FRAMES, OR CENTERLINE OF COLUMNS, UNLESS NOTED OTHERWISE.
C. INCLUDE ALL OWNER-FURNISHED AND INSTALLED ITEMS AND OWNER-FURNISHED AND CONTRACTOR-INSTALLED ITEMS IN THE CONSTRUCTION SCHEDULE, AND SHALL COORDINATE WITH THE OWNER TO ACCOMMODATE THESE ITEMS. SEE ITEMS NOTED ON COVER SHEET G0.1.
D. COORDINATE ALL MECHANICAL CHASE SIZES WITH THE MECHANICAL CONTRACTOR.
E. SEE SHEET CP1.1 FOR LOCATION OF WALLS OF FIRE-RESISTANCE-RATED CONSTRUCTION. ALL WALLS OF FIRE-RESISTANCE-RATED CONSTRUCTION SHALL EXTEND TO UNDERSIDE OF FLOOR OR ROOF DECK ABOVE.
F. ALL PENETRATIONS THROUGH WALLS SHALL BE SEALED WITH PENETRATION FIRE STOPPING MATERIAL AS REQUIRED TO ACHIEVE THE RESPECTIVE FIRE-RESISTANCE RATING AND SMOKE STOPPAGE. SEE SPECIFICATION SECTION 078413.
G. COORDINATE WITH MECHANICAL AND ELECTRICAL CONTRACTORS THE SIZE AND LOCATION OF EQUIPMENT PADS SHOWN ON PLANS.
H. CONSTRUCTION DOCUMENTS ARE COMPLEMENTARY. SEE DRAWING FOR QUANTITIES AND LOCATION OF WORK. SEE SPECIFICATIONS FOR QUALITIES AND CONDITIONS OF WORK.
I. WORK: ALL ASPECTS OF THE WORK AND ITEMS NOT SPECIFICALLY MENTIONED, BUT NECESSARY TO MAKE A COMPLETE WORKING INSTALLATION, SHALL BE INCLUDED AND INDICATED IN THE CONTRACTOR'S BID.
J. GENERAL SHEET NOTES ONLY APPLY TO PARTICULAR DRAWING OR SERIES OF DRAWINGS.
K. NO ASBESTOS OR PCB CONTAINING MATERIALS SHALL BE USED ON THIS PROJECT.
L. DO NOT SCALE DRAWINGS. DIMENSIONS NOTED PREVAIL. NOTIFY ARCHITECT IN CASE OF DISCREPANCY.
M. HORIZONTAL AND VERTICAL DIMENSIONS ARE MINIMUM DIMENSIONS. CLEARANCES ARE GIVEN TO FINISH SURFACES. GC TO VERIFY ALL CLEARANCES. NOTIFY ARCHITECT IN CASE OF DISCREPANCY.

DLR Group

© DLR Group

REGISTERED ARCHITECT
JANE E. GOODING
PORTLAND, OR
6821
STATE OF OREGON

CULINARY CLASSROOM
Westview High School - Beaverton School District
4200 NW 185th Ave, Portland, OR 97229

BID & PERMIT SET
02.18.21
REVISIONS

74-21106-00

SYMBOLS & ABBREVIATIONS

G0.2

BIM 360://74-21106-00 Westview HS Culinary/74-21106-00_WHSC_AR_2020.rvt
2/22/2021 1:44:13 AM

CODE SUMMARY

SECTION I – GOVERNING CODES
- 2019 OSSC (Structural)
- 2019 OMSC (Mechanical)
- 2019 Oregon Zero Energy Ready Commercial Code (ASHRAE Standard 90.1)
- 2017 OPSC (Plumbing)
- 2017 OESC (Electrical)
- 2019 NFPA 13 (Sprinkler Systems)
- 2019 NFPA 72 (Fire Alarm and Signaling Code)

SECTION II – BUILDING CONSTRUCTION DATA
- Type of Construction = Type II-N, Sprinklered (comparable to today's II-A)
  - Existing 1993 building permitted under 1988 Uniform Building Code with 1990 State of Oregon Amendments
- Use and occupancy = Educational occupancy (Group E)
- Maximum allowable height in stories = N/A (no changes)
- Maximum proposed height = N/A (no changes)
- Number of stories for building = 2. This T.I. project is primarily located on the ground floor (Level 1), with a mechanical shaft provided on Level 2 to rooftop.
- Total Floor Area of the Building: Approximately 240,700 sf, divided onto two floors
  - 9 separate areas via 2 hour area separation walls, with largest area at 45,700 sf
- Floor Area for this T.I. project: 1260 sf
- Basement = No
- Minimum Required Setbacks to Property Line = N/A (no changes)
  - Front: 15 / Side: 5 / Rear: 15 / Street Side: 10

SECTION III – BUILDING OCCUPANCY DATA (No changes)
- Proposing a T.I. without an occupancy change.
- Occupancy classification group(s) on this floor:
  - Educational occupancy (Group E)
- T.I. space is "unseparated" use

SECTION IV – BUILDING AREA DATA ACTUAL AND ALLOWABLE (No changes)
- There is no change in occupancy of the T.I. space from the previous tenant space use. (Skip this section.)

SECTION V – FIRE RESISTIVE BUILDING ELEMENTS (No changes)
- There is no change in occupancy of the T.I. space and there are no modifications to any of the fire resistive components of the building. (Skip this section.)
- Type I hoods shall be designed and installed in accordance with 2019 Oregon Mechanical Specialty Code 507.2. Clearances to combustibles shall conform to 507.2.6.

SECTION VI – BUILDING EXITING (No changes, see adjacent plan.)
- OSSC Table 1004.1.2
  - Square Footage of Classroom = 955
  - Occupant Load = 48
  - Maximum floor area allowance per occupant = 20 net sf
- Number of Exits Required = 1
- Minimum exit width required = 32"
- Exit width provided = Existing to remain: 39" (42" door panel minus door thickness and jamb stop)
- Existing Building has corridors that are 1-hour rated. We do not anticipate any work to these walls or ceilings.
- Emergency exit illumination – See drawing E1.1
- Exit Sign Layout = Existing internally illuminated exit light that is ceiling mounted over existing exterior door to remain (be rehung)

SECTION VII – BUILDING FIRE DETECTION AND SUPPRESSION
- Existing fire alarm system is to remain. No changes.
- Sprinkler system is required. Existing sprinkler system in this area to be adjusted to accommodate current ceiling layout. Sprinkler design is a deferred submittal.
- Type of sprinkler system is an automatic wet sprinkler system compliant with NFPA 13.
- Standpipes are not required.
- Fire department vehicular accesses provided to site remain unchanged. (No changes)
- Fire extinguisher will be provided per plans. It is to be Type K.

SECTION VIII – OCCUPANCY VENTILATION REQUIREMENTS
- Outside air / occupancy ventilation table can be found in the plans at ...
- Specific ventilation required for commercial kitchens include:
  - Type I exhaust ducts shall be designed in accordance with 2019 Oregon Mechanical Specialty Code 506.3.

SECTION IX – ENERGY CODE REQUIREMENTS
- Energy Code analysis was conducted using the prescriptive Simplified Approach Option. Form has been upload as part of the AHJ plan review submittal.
- No changes have been made to building components and their associated R / U values.
- Energy forms have been completed for HVAC and Interior Lighting. No changes to envelope or exterior lighting.

SECTION X – HAZARDOUS MATERIALS
- No hazardous chemicals or materials are expected in this project or future use of space.

SECTION XI – ACCESSIBILITY
- There is no change to site's exterior route of travel. See diagram on overall (site) plan on Cover Sheet of drawings.
- See adjacent floor plan for interior route of travel.
- See FS drawings for elevations of sinks, counters, etc. Station #7 is identified as the ADA accessible kitchen with undersink knee clearance and 2'-10" counter height.

SECTION XIII – UNDERGROUND AND PADMOUNTED TRANSFORMERS.
- N/A this project.

SECTION XIV – SPECIAL INSPECTION, STRUCTURAL OBSERVATION AND DEFERRED SUBMITTALS
- Special inspections are required for steel installation. See first "S" sheet, S0.1.
- Structural observation is not required.
- There will be deferred submittal items. See front page of plans for list.

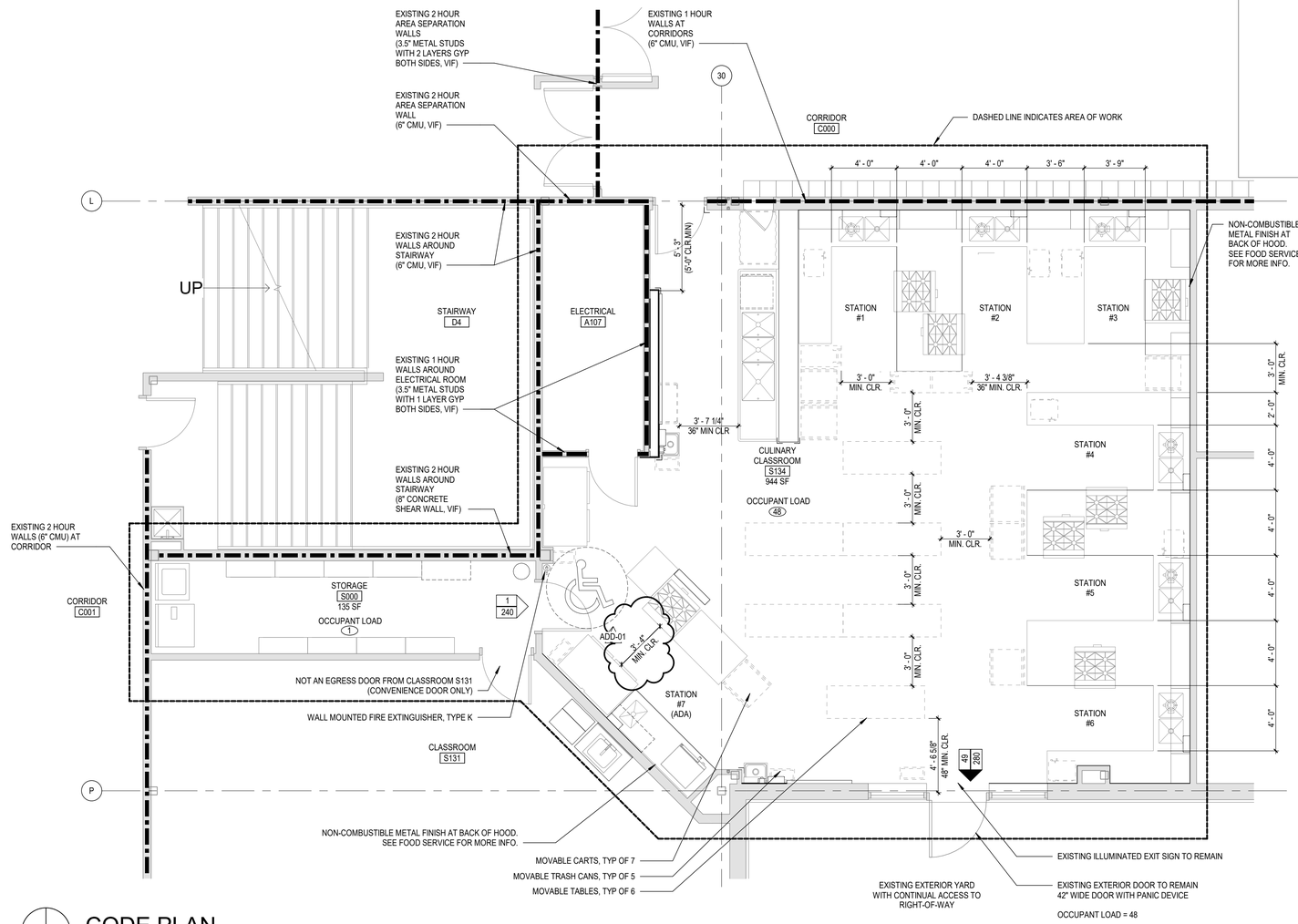

CODE PLAN

SCALE: 1/4" = 1'-0"

SYMBOL LEGEND

(###) - OCCUPANCY LOAD

0 / 0
- COMBINED OCCUPANT LOAD AT A GIVEN DOOR
- TOTAL EXIT CAPACITY OF DOOR (THE CAPACITY OF DOORS ARE DETERMINED AS FOLLOWS: CLEAR OPENING WIDHT IN INCHES DIVIDED BY 0.2)

0 / 0
- COMBINED OCCUPANT LOAD AT A GIVEN EXIT DOOR. (SUM EQUALS TOTAL OCCUPANT LOAD)
- TOTAL EXIT CAPACITY OF DOORS ARE DETERMINED AS FOLLOWS: CLEAR OPENING WIDTH IN INCHES DIVIDED BY 0.2)

WALL SEPARATION LEGEND

WALL HOURLY RATING
0 = 0 HOUR
1 = 1 HOUR
2 = 2 HOUR

DLR Group
© DLR Group

REGISTERED ARCHITECT JANE E. GOODING PORTLAND, OR 6821 STATE OF OREGON

CULINARY CLASSROOM

Westview High School - Beaverton School District

4200 NW 185th Ave, Portland, OR 97229

BID & PERMIT SET
02.18.21
REVISIONS
ADD-01 3/17/21

74-21106-00

CODE SUMMARY

CS1.1

BIM 360://74-21106-00 Westview HS Culinary/74-21106-00_WHSC_AR_2020.rvt
3/22/2021 1:39:12 AM

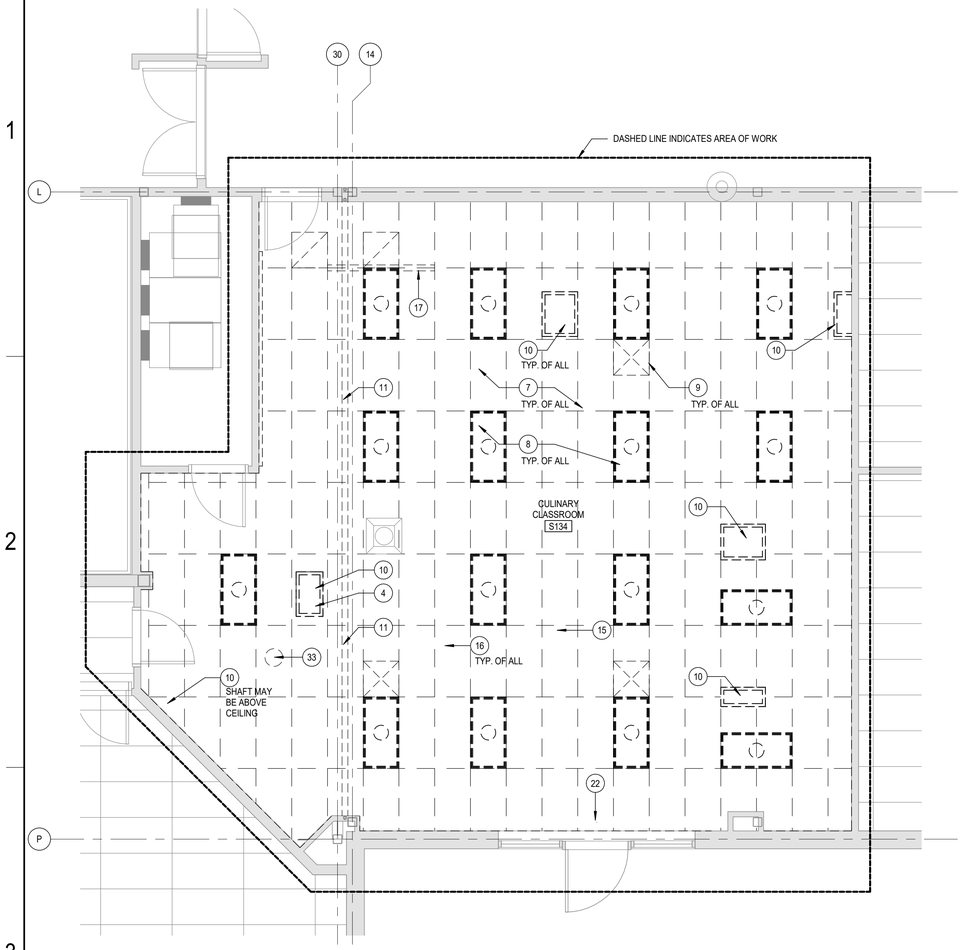

CLASSROOM DEMO REFLECTED CEILING PLAN

SCALE: 1/4" = 1'-0"

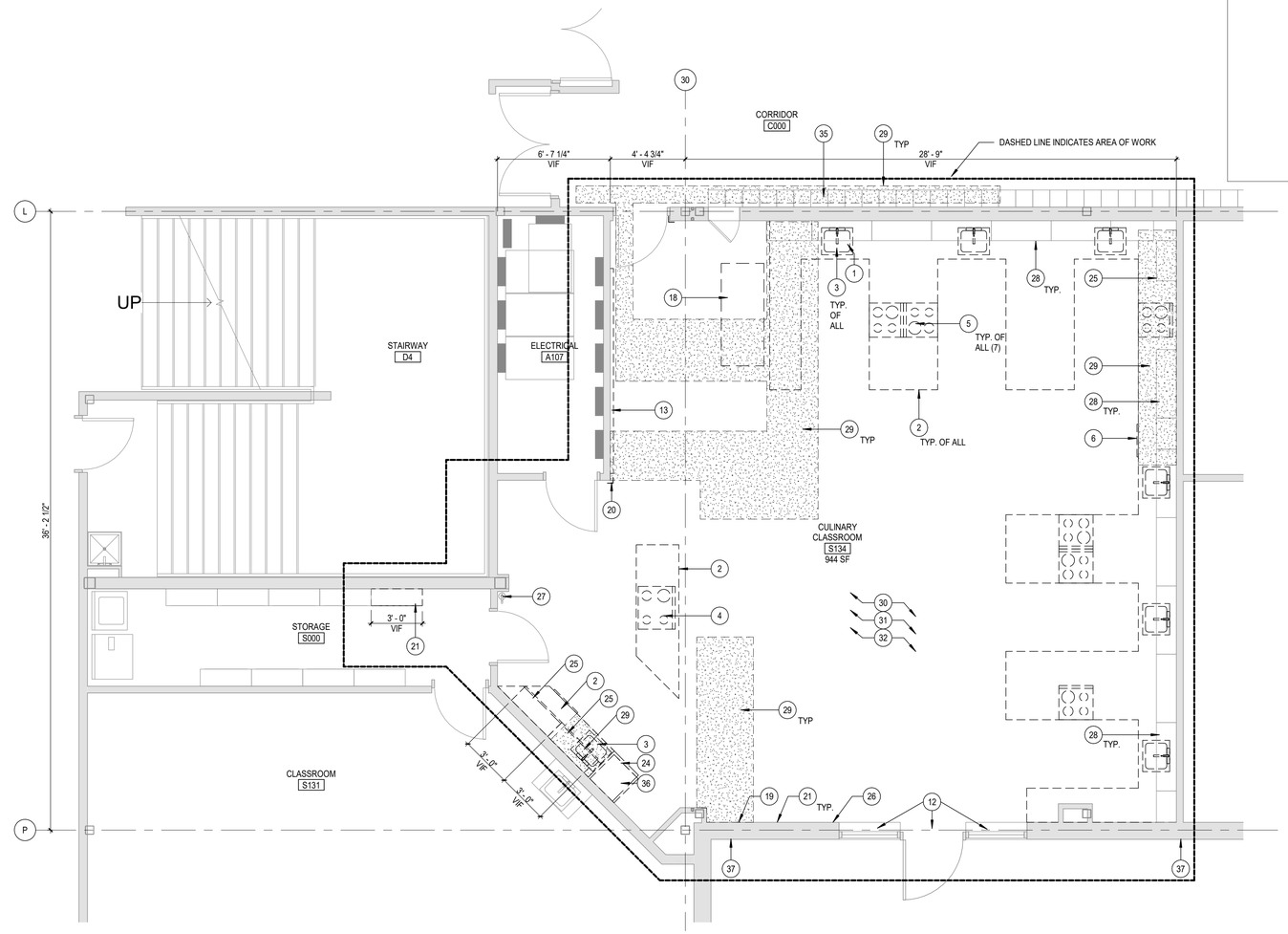

CLASSROOM DEMO PLAN

SCALE: 1/4" = 1'-0"

DEMOLITION GENERAL NOTES

DEMOLITION NOTES APPLY TO ALL DEMOLITION SHEETS.

THE CONTRACTOR SHALL:

A. COORDINATE ALL DEMOLITION AND PHASING EFFORTS WITH THE ARCHITECT AND OWNER'S REPRESENTATIVE. EVERY EFFORT SHALL BE MADE TO MINIMIZE DISRUPTION OF OWNER'S OPERATIONS. EXCESSIVE NOISE OR VIBRATION SHALL BE PRE-APPROVED AND COORDINATED WITH THE OWNER'S REPRESENTATIVE. IN ALL CASES, PROVISIONS SHALL BE MADE FOR USER'S SAFETY.
B. COORDINATE ANY DISRUPTION OF UTILITY SERVICES WITH THE OWNER AND AS SPECIFIED.
C. CONSTRUCT TEMPORARY CONSTRUCTION PARTITIONS WITHIN THE EXISTING BUILDING WHICH OFFER A ONE-HOUR ENCLOSURE TO ISOLATE ANY DEMOLITION/CONSTRUCTION WORK FROM THE GENERAL PUBLIC AND AS DEEMED NECESSARY BY THE OWNER AND CODE OFFICIAL HAVING JURISDICTION. COORDINATE LOCATIONS WITH THE OWNER AND MAINTAIN MEANS OF EGRESS THROUGHOUT THE WORK.
D. MAINTAIN A SECURE, WEATHER-TIGHT ENCLOSURE AT ALL TIMES.
E. VERIFY ALL EXISTING CONDITIONS, DIMENSIONS AND ELEVATIONS AND NOTIFY THE ARCHITECT OF ANY DISCREPANCIES.
F. REMOVE IN THEIR ENTIRETY ALL EXISTING WALLS, DOORS, MILLWORK, PLUMBING FIXTURES, CEILINGS, SOFFITS, MARKERBOARDS, AND OTHER ITEMS, AS REQUIRED TO EXECUTE THE DEMOLITION/CONSTRUCTION WORK DESCRIBED BY THE DRAWINGS.
G. THE OWNER SHALL RESERVE THE RIGHT TO SALVAGE ANY MATERIALS.
H. PROVIDE PROTECTION FOR ALL EXISTING BUILDING MATERIALS AND EQUIPMENT FROM DAMAGE DUE TO ANY DEMOLITION OR CONSTRUCTION-RELATED INCIDENT PERFORMED UNDER THIS CONTRACT.
I. REPAIR OR REPLACE ITEMS THAT ARE DAMAGED AS A RESULT OF DEMOLITION OR CONSTRUCTION TO MATCH EXISTING FINISH AND/OR CONDITION.
J. EXISTING MATERIALS SHALL NOT BE REUSED UNLESS NOTED OTHERWISE OR AS AUTHORIZED BY ARCHITECT.
K. VERIFY AND MAINTAIN THE LOCATION OF EXISTING POWER, COMMUNICATION AND DATA CABLES TO PREVENT INTERRUPTION OF THEIR SERVICE.
L. PATCH FLOOR, WALL AND CEILING PENETRATIONS RESULTING FROM REMOVAL OR RE-ROUTING OF NEW OR EXISTING PIPING, DUCTWORK, CONDUIT, AND OTHER ITEMS, AS REQUIRED TO MAINTAIN FIRE-RESISTANCE-RATED SEPARATIONS. FINISH AS REQUIRED FOR NEW OR EXISTING ADJACENT SURFACES.
M. CAP ALL DISCONNECTED MECHANICAL PIPING LINES WITHIN THE WALL OR FLOOR. PATCH AND FINISH AS REQUIRED TO MATCH NEW OR EXISTING ADJACENT SURFACES.
N. SEE MECHANICAL AND ELECTRICAL DRAWINGS AND NOTES FOR FURTHER SEQUENCING AND SCOPE OF WORK.
O. AVOID ANY DISTURBANCE OF SOILS WITHIN THE ZONE OF INFLUENCE AROUND EXISTING FOOTINGS AND FLOOR SLABS.

SHEET NOTES

1 SALVAGE DISPOSAL THIS SINK AND TURN OVER TO OWNER.
2 DEMO COUNTER AND CASEWORK BELOW
3 DEMO SINK. SEE PLUMBING FOR MORE INFO.
4 DEMO DEMOSTRATION MIRROR AND FRAME ABOVE STOVE
5 DEMO RESIDENTIAL RANGE AND OVEN
6 SALVAGE UNDERCOUNTER DISHWASHER AND REINSTALL IN FINISHED PROJECT. SEE FOOD SERVICE AND PLUMBING DRAWINGS FOR RELOCATION INFO.
7 DEMO ACT CEILING AND SUSPENSION GRID THROUGHOUT ROOM.
8 DEMO RECESSED LIGHT FIXTURES THROUGHOUT ROOM
9 DEMO CEILING SUPPLY AND RETURN GRILLES, TYP. SEE MECH.
10 DEMO RESIDENTIAL HOODS AND EXHAUST SHAFTS, TYP.
11 DEMO CEILING CONTROL JOINT COVER. (WALL COVERS TO REMAIN.)
12 DEMO HORIZONTAL BLINDS
13 DEMO WHITEBOARD AND MAP. SALVAGE FLAG AND RETURN TO OWNER.
15 REMOVE AND REINSTALL CEILING MOUNTED WAP
16 PROTECT EXISTING SPRINKLER HEADS AND PIPING. SEE FP DRAWINGS.
17 DEMO CEILING HUNG PROJECTOR SCREEN
18 DEMO COUNTER AND CASEWORK, ON CASTERS
19 REMOVE AND REINSTALL WALL MOUNTED FIRE STROBE
20 DEMO CORNER GUARD
21 DEMO 7' TALL SHELVING CASEWORK
22 REMOVE AND REINSTALL CEILING MOUNTED EXIT LIGHT
24 DEMO UPPER SHELVING (ONLY WHERE INDICATED)
25 SALVAGE AND REINSTALL ONE SECTION OF UPPER SHELVING
26 PROTECT EXISTING FIRE ALARM PULL
27 REMOVE AND REINSTALL WALL MOUNTED FIRE EXTINGUISHER
28 PROTECT EXISTING UPPER CABINETS, U.N.O.
29 (INDICATED BY HATCH) SAWCUT EXISTING SLAB-ON-GRADE TO INSTALL NEW PIPING. SEE PLUMBING DRAWINGS.
30 DEMO VCT FLOORING THROUGHOUT ROOM
31 DEMO RUBBER WALL BASE THROUGHOUT ROOM
32 DEMO BASE OF GYPSUM WALL BOARD FOR NEW CEMENT BOARD PER 4B/A7.1
33 SALVAGE AND REINSTALL PA SPEAKER (CEILING MOUNTED)
35 SALVAGE AND REINSTALL METAL LOCKERS IN HALLWAY UPON COMPLETION OF WORK. PATCH / REPLACE VCT FLOORING AFTER SAWCUTTING. SEE A1.1 AND PLUMBING DRAWINGS.
ADD-01 36 SALVAGE AND REINSTALL ICE MAKER IN ADJACENT ROOM. SEE PLUMBING FOR MORE INFO.
37 SALVAGE 6" FACE BRICK VENEER AT AREAS OF NEW EXTERIOR WALL CLEANOUTS. SEE PLUMBING FOR MORE INFO.

DEMOLITION SALVAGE LIST

THE CONTRACTOR SHALL REMOVE AND SALVAGE (TURN OVER TO OWNER):

1. LIGHT FIXTURES, TYP
2. DISPOSAL (x1)

THE CONTRACTOR SHALL REMOVE AND REINSTALL:

1. WAP
2. EXIT LIGHT FIXTURE
3. WALL MOUNTED ANALOG CLOCK
4. UNDERCOUNTER DISHWASHER
5. WALL MOUNTED FIRE EXTINGUISHER
6. UNDERCOUNTER ICE MAKER

DLR Group
© DLR Group

REGISTERED ARCHITECT
JANE E. GODDING
PORTLAND, OR
6821
STATE OF OREGON

CULINARY CLASSROOM

Westview High School - Beaverton School District

4200 NW 185th Ave, Portland, OR 97229

BID & PERMIT SET
02.18.21
REVISIONS
ADD-01 3/17/21

74-21106-00

DEMO PLANS

AD1.1

BIM 360://74-21106-00 Westview HS Culinary/74-21106-00_WHSC_AR_2020.rvt
3/22/2021 1:39:56 AM

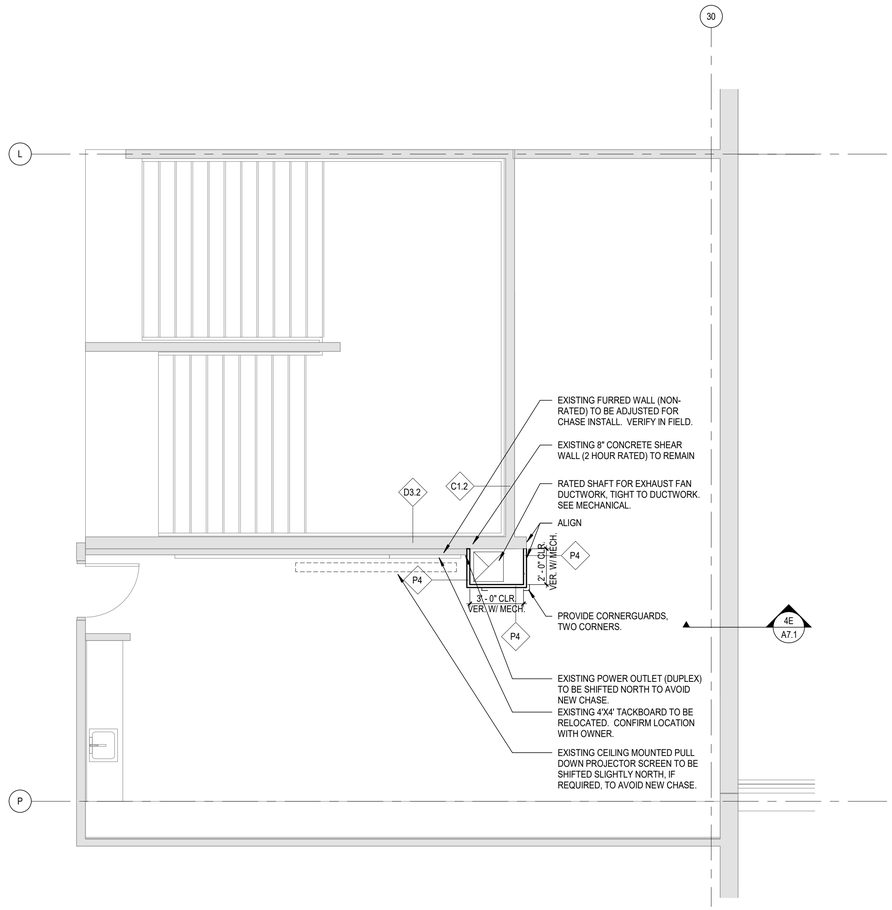

SECOND LEVEL FLOOR PLAN - MECHANICAL SHAFT

SCALE: 1/4" = 1'-0"

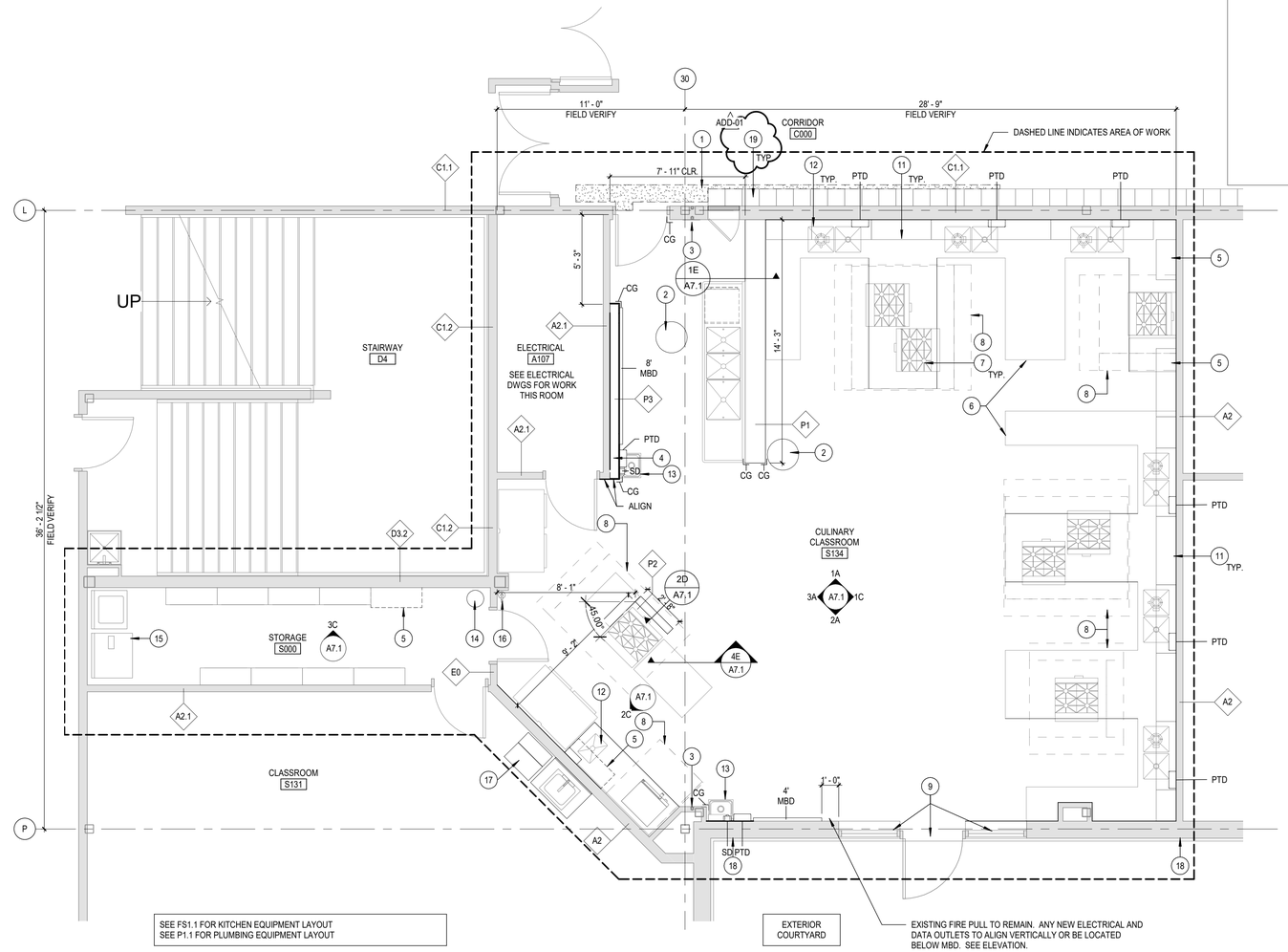

FIRST LEVEL FLOOR PLAN - CULINARY CLASSROOM

SCALE: 1/4" = 1'-0"

P1 WALL ASSEMBLY: PONY WALL W/ PLUMBING CHASE

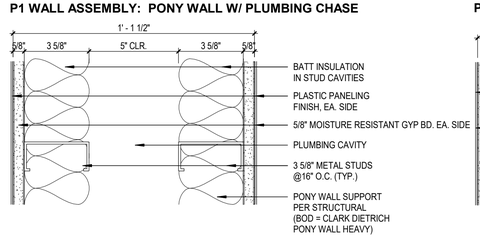

P2 WALL ASSEMBLY: PONY WALL

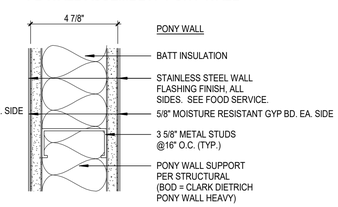

P3 WALL ASSEMBLY: FURRED / PLUMBING CHASE WALL

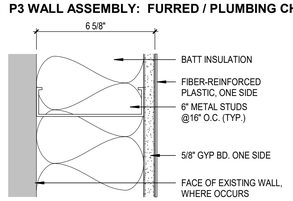

P4 WALL ASSEMBLY: UL DESIGN NO. U415 B

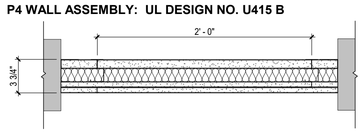

GYPSUM BOARD: ONE LAYER 1" THICK GYPSUM LINER PANEL (UL TYPE SLX™, USG PROPRIETARY)
STEEL STUDS: 2-1/2" CH STUDS, 20 GA. MSG., SPACED 24" O.C.
INSULATION: 1-1/2" GLASS FIBER BATT INSULATION IN CAVITY
GYPSUM BOARD: TWO LAYERS 5/8" THICK GYPSUM BOARD (UL TYPE SCX™, USG PROPRIETARY)
FIRE RATING 2 HOUR
*SEE A10.1 FOR HEAD OF WALL CONSTRUTION JOINT DETAIL

EXISTING WALL ASSEMBLY LIST

FIELD VERIFY ALL EXISTING PARTITION TYPES.
SEE ADJACENT DRAWINGS FOR NEW WALL ASSEMBLY TYPES

A2: 3 1/2" METAL STUDS W/ 5/8" GWB BOTH SIDES

A2.1: SAME AS A1, BUT RATED 1 HOUR

C1.1: 6" NOMINAL CMU, GROUTED SOLID 1 HOUR

C1.2: 6" NOMINAL CMU, GROUTED SOLID 2 HOUR

D3.2 8" CONCRETE (SHEAR WALL) 2 HOUR

ADD-01 NOTE AT EXISTING C1.1, C1.2, AND D3.2 WALLS: ALTHOUGH NO THROUGH PENETRATIONS ARE ANTICIPATED THIS PROJECT IN EXISTING RATED WALLS, WHERE A PENETRATING ITEM IS A MAXIMUM 6-INCH NOMINAL DIAMETER AND THE AREA OF THE OPENING THROUGH THE WALL DOES NOT EXCEED 144 SQUARE INCHES, CONCRETE, GROUT, OR MORTAR IS PERMITTED WHERE INSTALLED THE FULL THICKNESS OF THE WALL OR THE THICNESS REQUIRED TO MAINTAIN THE FIRE-RESISTANCE RATING, PER OSSC 714.4.1.

NOTE AT P4: ALTHOUGH NO THROUGH PENETRATIONS ARE ANTICIPATED THIS PROJECT IN NEW RATED WALLS, IF REQUIRED, THROUGH PENETRATIONS SHALL BE PROTECTED USING SYSTEMS INSTALLED AS TESTED IN THE APPROVED FIRE-RESISTANCE-RATED ASSEMBLY PER OSSC 714.4.1.2. ANY PENETRATIONS SHALL BE UL APPROVED BY THE "MANUFACTURER-SPECIFIC" SYSTEM COMPATIBLE WITH TEH INSTALLED FIRE-RATED ASSEMBLY SYSTEM.

GENERAL ARCHITECTURAL NOTES

1. ALL INTERIOR STUD WALLS SHALL EXTEND TO UNDERSIDE OF FLOOR OR ROOF DECK ABOVE UNLESS NOTED OTHERWISE. SEE REFLECTED CEILING PLAN NOTES.
2. PROVISIONS SHALL BE MADE AT ALL FULL HEIGHT NON-BEARING WALLS FOR 1-INCH VERTICAL MOVEMENT OF THE BUILDING STRUCTURE WITHOUT TRANSFER OF COMPRESSIVE LOADS TO WALL.
3. PROVIDE FIRESTOPPING AT RATED WALLS (INCLUDING EXISTING) TO MEET FIRE RATING OF RESPECTIVE WALLS. SEE DETAILS ON SHEET A10.1 AND SPEC 078413.
4. FURNISH AND INSTALL FIRE-TREATED WOOD BLOCKING IN METAL STUD PARTITIONS FOR THE PROPER ANCHORAGE OF ALL WALL ATTACHED ITEMS; I.E. TOILET ACCESSORIES, CASEWORK, MILLWORK, WALL-MOUNTED FIXTURES, MARKER BOARDS, TACK BOARDS, AUDIO VISUAL BRACKETS, AND OTHER WALL ATTACHED ITEMS. SEE DETAILS ON A10.1.
5. "MBD" AND "TBD" INDICATE MARKER BOARDS AND TACK BOARDS ON PLANS. THE LENGTH PRECEDES THE DESIGNATION (EXAMPLE 16' MBD). SEE WALL ELEVATIONS OR SPECIFICATIONS FOR HEIGHTS.
6. SCRIBE GYPSUM WALL BOARD OF WALLS AND PARTITIONS TO IRREGULARITIES OF DECK ABOVE. SEAL TIGHTLY AROUND ALL PENETRATIONS.
7. PROVIDE SEISMIC BRACING FOR SUSPENDED CEILINGS.
8. ALL WALLS AND EXISTING PLASTIC LAMINATE UPPER SHELVING IN CULINARY CLASSROOM TO BE PAINTED WITH EPOXY PAINT

SYMBOL LEGEND

CG = CORNERGUARD/CHANNELGUARD PER SPEC 114000 & FS1.1
MBD = MARKERBOARD
PTD = PAPER TOWEL DISPENSER
SD = SOAP DISPENSER
TBD = TACKBOARD

= WALL TYPE (SEE INFO TO THE LEFT ON THIS SHEET)

= SHEET NOTE (SEE LIST TO THE RIGHT ON THIS SHEET)

FINISH SCHEDULE FOR CULINARY CLASSROOM

WALLS: SEMI-GLOSS PAINT, ALL WALLS.
SEE SPEC 099123.
PLASTIC PANELING AT WET WALLS AS SHOWN ON ELEVATIONS.
SEE SPEC 066400.
SEE FOOD SERVICE DWGS FOR INFO ON STAINLESS STEEL WALL FINISH (ITEM #16) LOCATED BEHIND WALL ADJACENT HOODS AND AT STATION #7 PONY WALL

CEILING: ACOUSTIC PANEL CEILING AS SHOWN ON REFLECTED CEILING PLAN
SEE SPEC 095113.

FLOORS: RESILIENT SHEET FLOORING WITH INTEGRAL COVE BASE
SEE SPEC 096516.

SHEET NOTES

1 HATCH INDICATES APPROXIMATE EDGE OF VCT PATCH / REPLACEMENT (TO MATCH EXISTING). SEE PLUMBING AND DEMO FOR SAW CUT WORK.
2 GREASE INTERCEPTOR TOP PANEL, FLUSH WITH FLOORING. SEE P1.1.
3 WALL ALUMINUM SEISMIC JOINT COVER TO REMAIN
4 FURRED WALL FOR PLUMBING. AVOID PENETRATING EXISTING WALL.
5 SALVLAGE AND REINSTALL EXISTING UPPER SHELVING TO ACCOMODATE NEW WORK. SEE ELEVATIONS.
6 LOCATION OF NEW COUNTERS. SEE FOOD SERVICE DRAWINGS.
7 COOKING RANGE, TYP. OF 7. SEE FOOD SERVICE DRAWINGS.
8 LOCATION OF EXHAUST HOOD ABOVE. SEE FOOD SERVICE DRAWINGS.
9 ROLLER SHADES ON ALL EXTERIOR WINDOWS. SEE DETAIL 4B/A10.1 AND SPEC 122413.
11 EXISTING UPPER SHELVING TO REMAIN, U.N.O. APPLY FRESH PAINT TO ALL EXPOSED SIDES.
12 PREP SINK, TYP. OF 7. SEE FOOD SERVICE & PLUMBING DRAWINGS.
13 HAND SINK WITH SIGNAGE. SEE ELEVATIONS AND FOOD SERVICE DRAWINGS.
14 EXISTING INSULTATED PIPE TO REMAIN. COORDINATE WITH NEW EXHAUST DUCTWORK AND SHAFT ABOVE.
15 EXISTING WASHER/DRYER TO REMAIN. INSTALL OFCI RACK FOR STACKED W/D AND ADJUST EXISTING EXHAUST CONNECTION TO ACCOMODATED STACKED CONFIGURATION.
ADD-01 16 EXISTING FIRE EXTINGUISHER AND WALL MOUNT BRACKET TO REMAIN.
17 EXISTING ICE MAKER TO BE RELOCATED. SEE PLUMBING FOR MORE INFO.
18 EXTERIOR WALL CLEANOUT. PATCH AND SEAL EXISTING ENVELOPE AS REQUIRED TO PREVENT AIR AND WATER INTRUSION. SEE PLUMBING FOR MORE INFO.
19 REINSTALL SALVAGED LOCKERS, INCLUDING BASE AND RUBBER WALL BASE

DLR Group
© DLR Group

REGISTERED ARCHITECT
JANE E. GODDING
PORTLAND, OR
6821
STATE OF OREGON

CULINARY CLASSROOM

Westview High School - Beaverton School District

4200 NW 185th Ave, Portland, OR 97229

BID & PERMIT SET
02.18.21
REVISIONS
ADD-01 3/17/21

74-21106-00

FLOOR PLANS

A1.1

BIM 360://74-21106-00 Westview HS Culinary/74-21106-00_WHSC_AR_2020.rvt
3/22/2021 1:40:33 AM

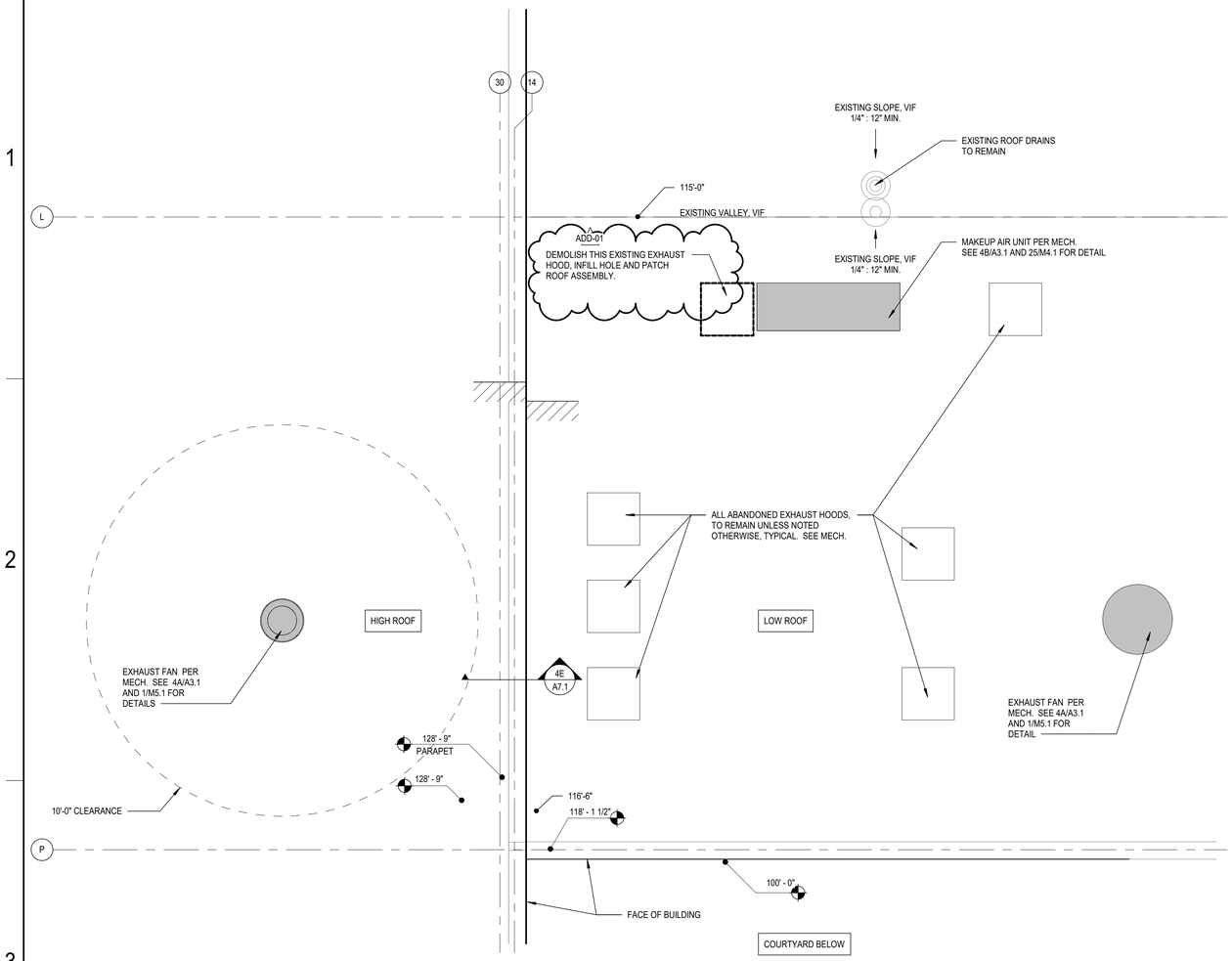

3A A3.1 PARTIAL ROOF PLAN
SCALE: 1/4" = 1'-0"

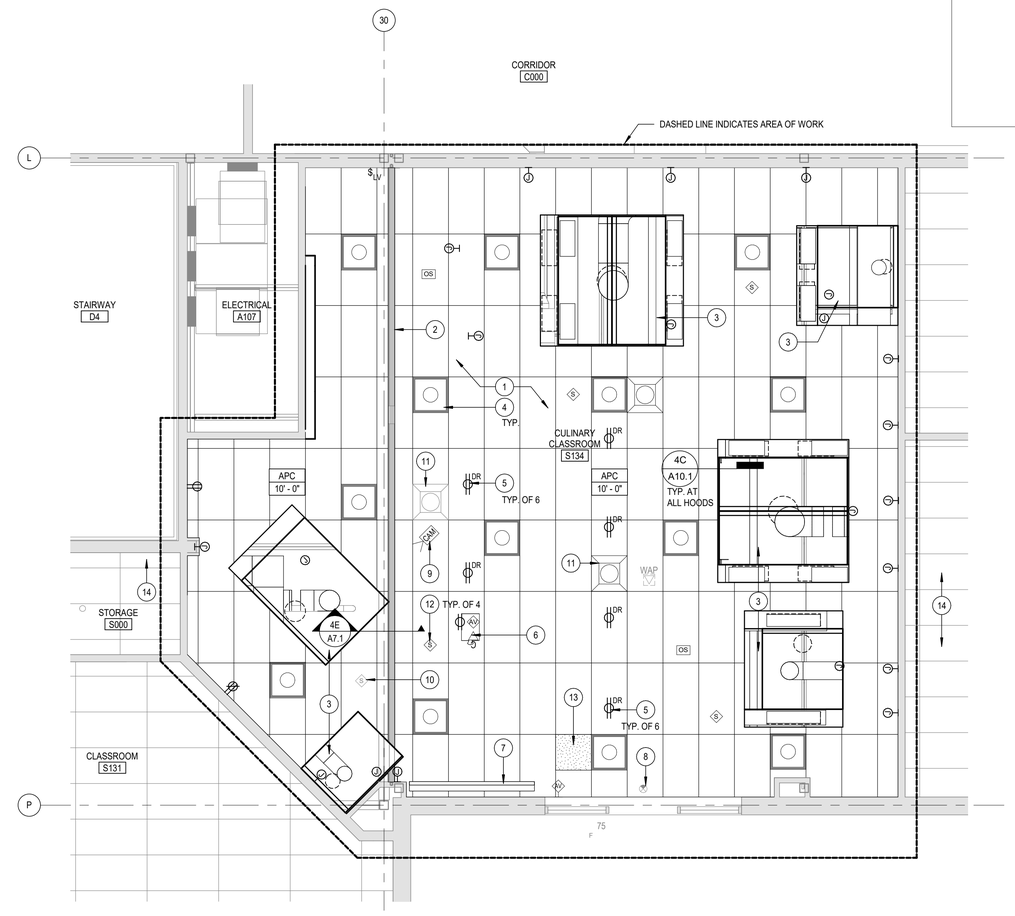

3D A3.1 REFLECTED CEILING PLAN
SCALE: 1/4" = 1'-0"

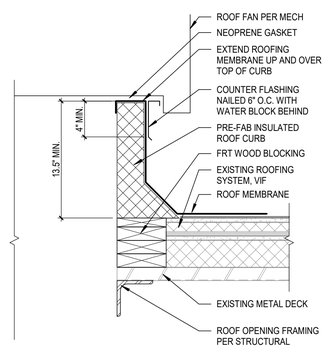

4A A3.1 ROOFTOP FAN CURB DETAIL
SCALE: 1 1/2" = 1'-0"

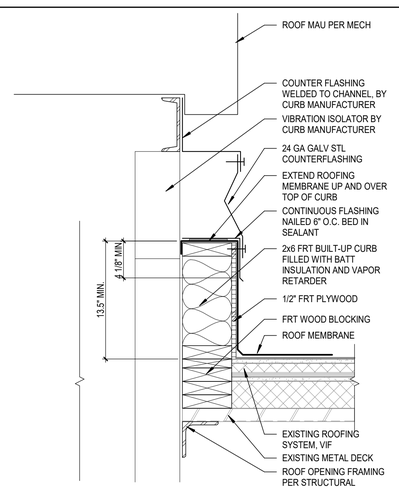

4B A3.1 ROOFTOP MECH UNIT CURB DETAIL
SCALE: 1 1/2" = 1'-0"

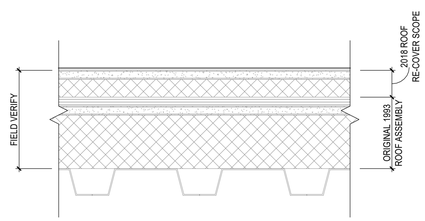

EXISTING ROOFING ASSEMBLY TO BE FIELD VERIFIED BY CONTRACTOR:
- FULLY ADHERED ELASTIC SHEET MEMBRANE (CARLISLE WARRANTY)
- 1/2" COVER BOARD - ADHERED
- 1" POLYISO - MECHANICALLY ATTACHED
- ORIGINAL ASPHALT BUR
- ORIGINAL COVER BOARD
- ORIGINAL POLYISO
- ORIGINAL STEEL DECK

4C A3.1 EXISTING ROOFING ASSEMBLY (FIELD VERIFY)
SCALE: 3" = 1'-0"

REFLECTED CEILING PLAN GENERAL NOTES

A. ALL CEILING GRIDS/PANELS SHALL BE CENTERED IN EACH ROOM UNLESS NOTED OTHERWISE.
B. CEILING HEIGHTS ARE NOTED ON THE REFLECTED CEILING PLANS ARE MEASURED FROM THE FINISH FLOOR OF THE ROOM.
C. ALL ELECTRICAL FIXTURES, SPEAKERS, SMOKE AND THERMAL DETECTORS, MECHANICAL GRILLES, SPRINKLER HEADS, AND OTHER CEILING MOUNTED DEVICES, SHALL BE CENTERED BETWEEN CEILING GRIDS UNLESS NOTED OTHERWISE. SPRINKLER HEADS SHALL BE WITHIN A 3-INCH RADIUS CENTERED BETWEEN CEILING GRIDS.
D. PROVIDE SUSPENSION SYSTEM AROUND ELECTRICAL FIXTURES, MECHANICAL GRILLES, DIFFUSERS, AND OTHER CEILING MOUNTED DEVICES.
E. ALL DIMENSIONS ON REFLECTED CEILING PLANS ARE ACTUAL AND ARE TO THE FOLLOWING UNLESS NOTED OTHERWISE:
   a. FACE OF FINISHED WALL
   b. FACE OF FINISHED BULKHEADS
   c. CENTERLINE OF COLUMNS
   d. CENTERLINE OF TEES
F. SEE A10.1 FOR STANDARD ACT SEISMIC BRACING DETAILS.

SHEET NOTES

1 ACOUSTIC PANEL CEILING. SEE SPEC 095113.
2 INTERIOR EXPANSION JOINT COVER ASSEMBLY (AT EXISTING SEISMIC JOINT). SEE DETAIL 3C/A10.1 AND SPEC 079513.
3 CANOPY HOOD. SEE FOOD SERVICE FOR MORE INFO.
4 LIGHT FIXTURE PER ELECTRICAL.
5 CEILING DROP POWER OUTLET PER ELECTRICAL
6 CEILING MOUNTED PROJECTOR. SEE 3D/A10.1 AND SPECS 274100 (PROJECTOR) AND 274123 (MOUNT).
7 MANUAL PULL-DOWN PROJECTION SCREEN. SEE 4A/A10.1 AND SPEC 274100.
8 REINSTALL SALVAGED CEILING MOUNTED EXIT LIGHT
9 CEILING MOUNTED CAMERA FOR CAPTURING STATION #7 COUNTER DEMONSTRATIONS. SEE ELECTRICAL AND SPEC 274100.
10 CEILING SPEAKER FOR PA (SALVAGED AND REINSTALLED), PER ELEC.
11 SUPPLY AND RETURN GRILLES, TYP. SEE MECH.
12 CEILING SPEAKER FOR AV (NEW, TYP OF 4), PER ELEC.
ADD-01 13 CEILING PANEL FOR AV COMPONENTS, PER ELEC.
14 EXISTING CEILING TO REMAIN THIS ROOM. IF ANY TILES ARE DAMAGED DURING CONSTRUCTION, REPLACE AS NEEDED TO MATCH EXISTING.

DLR Group
© DLR Group

REGISTERED ARCHITECT
JANE E. GODDING
PORTLAND, OR
6821
STATE OF OREGON

CULINARY CLASSROOM

Westview High School - Beaverton School District

4200 NW 185th Ave, Portland, OR 97229

BID & PERMIT SET
02.18.21
REVISIONS
ADD-01 3/17/21

74-21106-00

REFLECTED CEILING PLAN AND ROOF PLAN

A3.1

BIM 360://74-21106-00 Westview HS Culinary/74-21106-00_WHSC_AR_2020.rvt
3/22/2021 1:41:07 AM

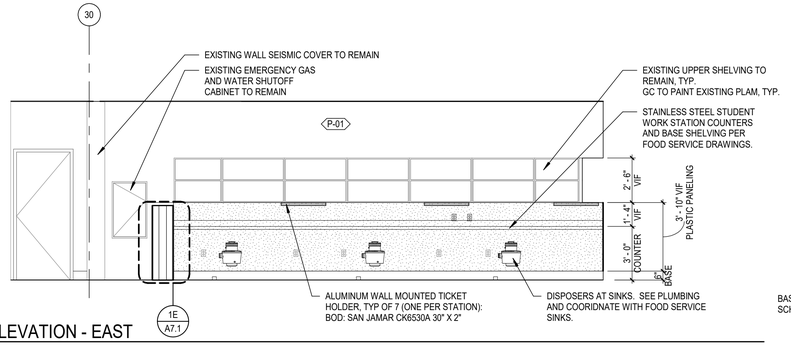

1A A7.1 INTERIOR ELEVATION - EAST
SCALE: 1/4" = 1'-0"

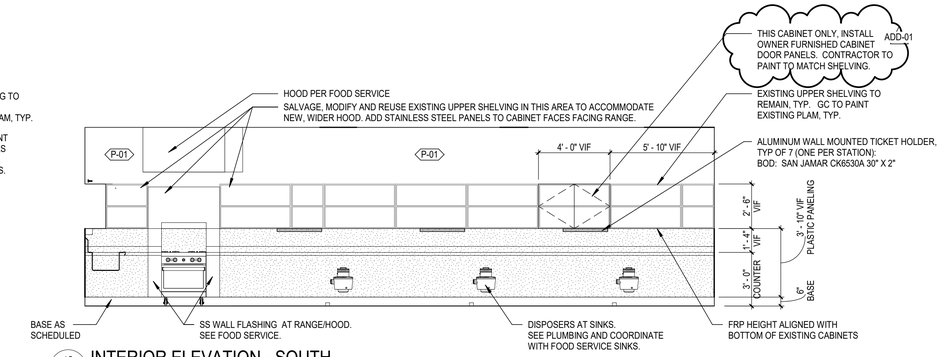

1C A7.1 INTERIOR ELEVATION - SOUTH
SCALE: 1/4" = 1'-0"

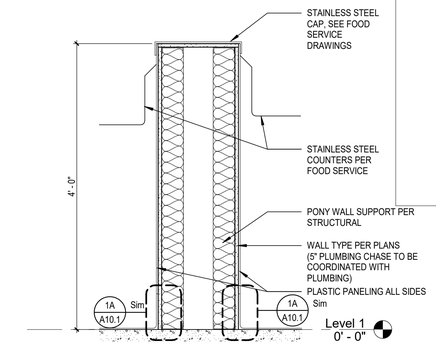

1E A7.1 WALL SECTION - 3 COMP SINK PONY WALL
SCALE: 1" = 1'-0"

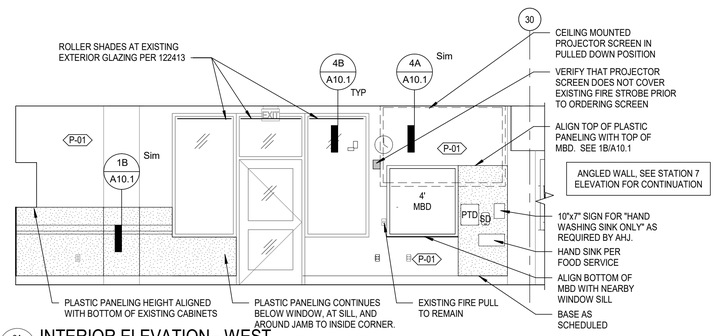

2A A7.1 INTERIOR ELEVATION - WEST
SCALE: 1/4" = 1'-0"

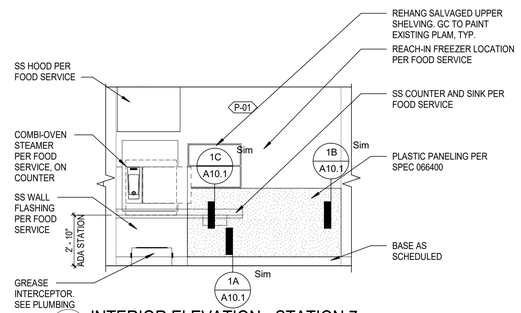

2C A7.1 INTERIOR ELEVATION - STATION 7
SCALE: 1/4" = 1'-0"

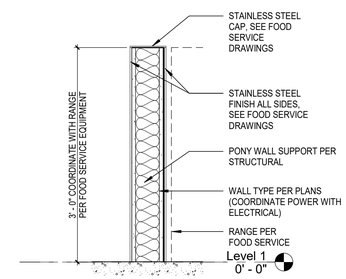

2D A7.1 WALL SECTION - STATION 7 PONY WALL
SCALE: 1" = 1'-0"

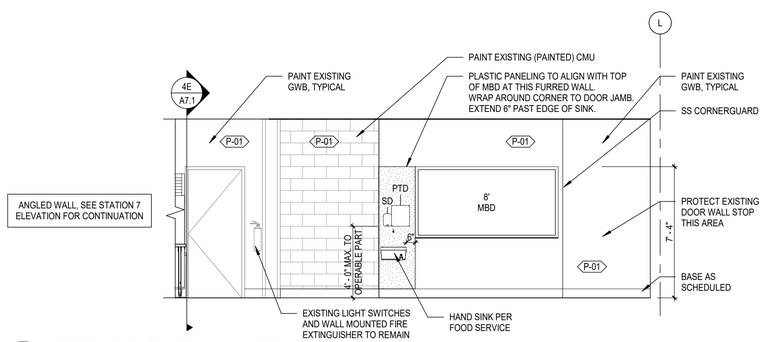

3A A7.1 INTERIOR ELEVATION - NORTH
SCALE: 1/4" = 1'-0"

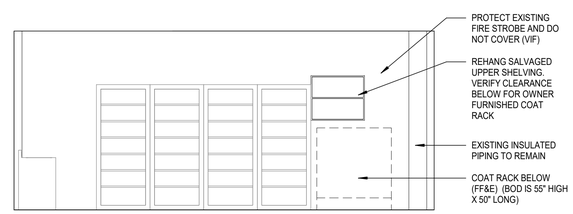

3C A7.1 INTERIOR ELEVATION - STORAGE EAST
SCALE: 1/4" = 1'-0"

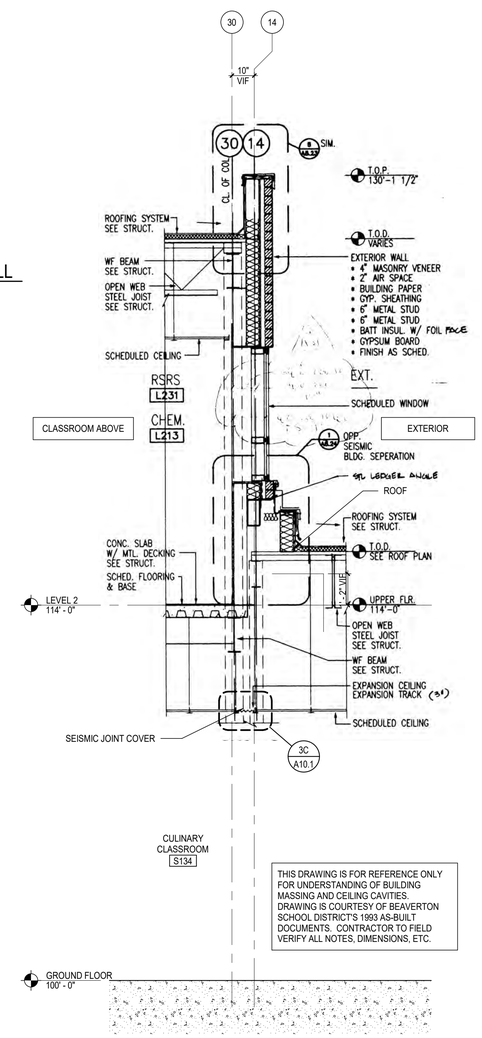

4E A7.1 WALL SECTION - THROUGH SEISMIC JOINT
SCALE: 3/8" = 1'-0"

DLR Group
© DLR Group

REGISTERED ARCHITECT
JANE E. GOODING
PORTLAND, OR 6821
STATE OF OREGON

CULINARY CLASSROOM

Westview High School - Beaverton School District

4200 NW 185th Ave, Portland, OR 97229

BID & PERMIT SET
02.18.21
REVISIONS
ADD-01 3/17/21

74-21106-00

INTERIOR ELEVATIONS & SECTIONS

A7.1

BIM 360://74-21106-00 Westview HS Culinary/74-21106-00_WHSC_AR_2020.rvt
3/22/2021 1:41:43 AM

A B C D E

1 2 3 4

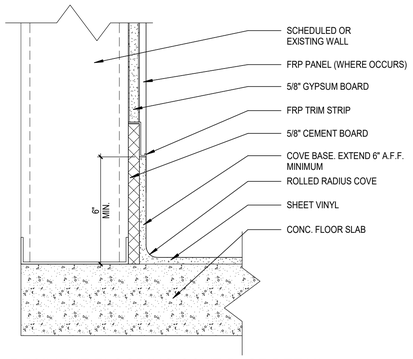

1A A10.1 RESILIENT FLOORING COVE BASE DETAIL
SCALE: 3" = 1'-0"

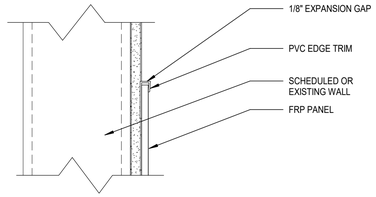

1B A10.1 PLASTIC PANELING TOP EDGE (OPEN TO ABOVE)
SCALE: 3" = 1'-0"

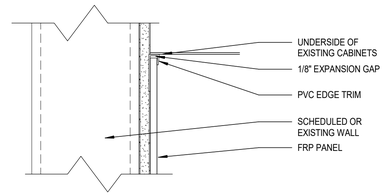

1C A10.1 PLASTIC PANELING TOP EDGE (AT EXISTING UPPERS)
SCALE: 3" = 1'-0"

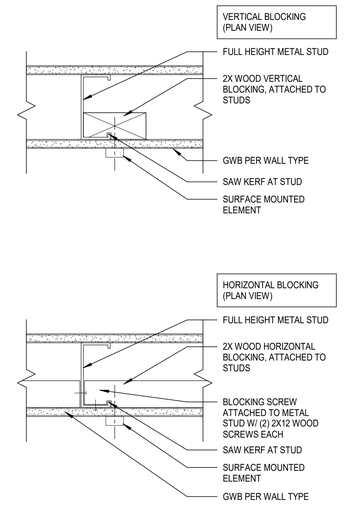

2D A10.1 BLOCKING AT INTERIOR WALL
SCALE: 3" = 1'-0"

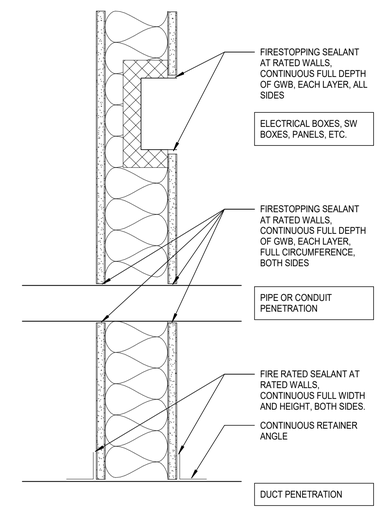

2E A10.1 WALL PENETRATIONS
SCALE: 3" = 1'-0"

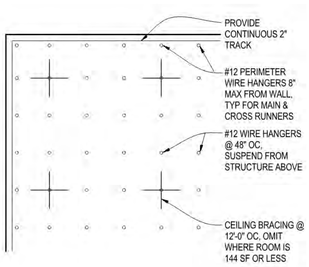

3A A10.1 TYP BRACING LAYOUT
SCALE: 1 1/2" = 1'-0"

ADD-01 ACOUSTICAL PANEL CEILING DESIGN TO BE IN ACCORDANCE WITH STATE OF OREGON STATEWIDE CODE INTERPRETATION OCTOBER 2019 NO. 10-01 CONSTRUCTION REQUIREMENTS FOR SUSPENDED CEILING SYSTEMS

CEILING SYSTEM TO BE DESIGNED AND CONSTRUCTED TO RESIST THE EFFECTS OF EARTHQUAKE MOTIONS IN ACCORDANCE WITH ASCE 7 AS MODIFIED BY OSSC SECTION 1613.4. FOR CEILING AREAS EXCEEDING 1,000 SQUARE FEET, HORIZONTAL RESTRAINT OF THE CEILING TO THE STRUCTURAL SYSTEM SHALL BE PROVIDED PER OSSC SECTION 1613.4.11.

SEE S0.1 FOR RISK CAEGORY AND SEISMIC DESIGN CATEGORY THIS PROJECT.

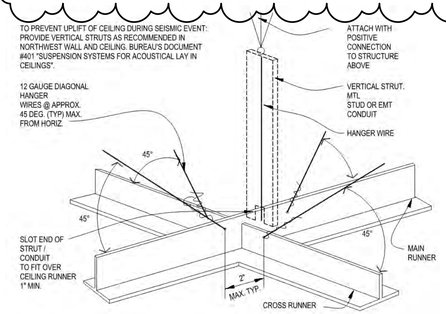

3B A10.1 TYP APC SEISMIC RESTRAINT
SCALE: 1 1/2" = 1'-0"

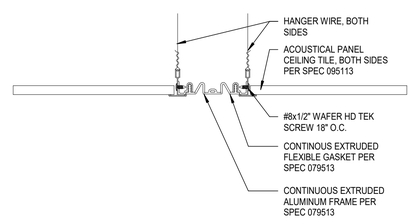

3C A10.1 SEISMIC JOINT AT ACOUSTICAL PANEL CEILING
SCALE: 3" = 1'-0"

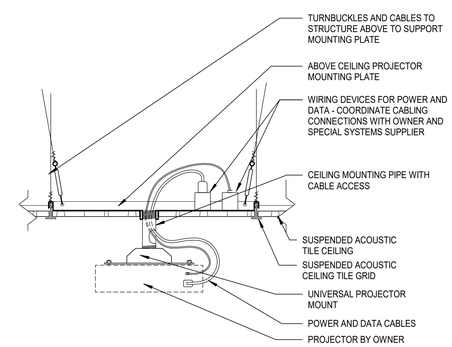

3D A10.1 PROJECTOR MOUNT
SCALE: 1 1/2" = 1'-0"

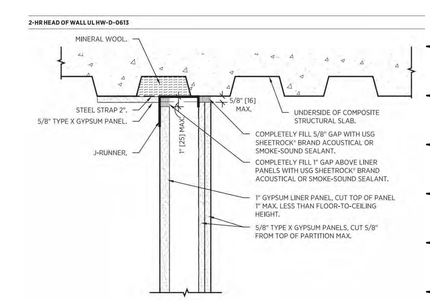

COORDINATE WITH PROPRIETARY RATED SHAFT WALL ASSEMBLY FOUND ON A1.1

ADD-01

3E A10.1 RATED WALL HEAD OF WALL DETAIL
SCALE: 1/2" = 1'-0"

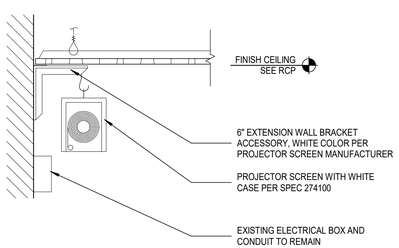

4A A10.1 PROJECTION SCREEN DETAIL
SCALE: 1 1/2" = 1'-0"

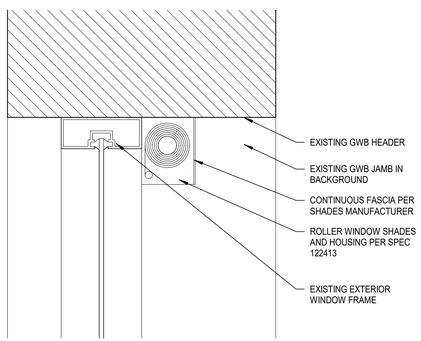

4B A10.1 WINDOW FRAME HEAD AT SHADES
SCALE: 3" = 1'-0"

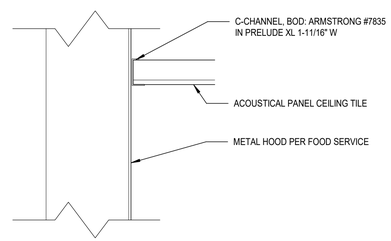

4C A10.1 APC CEILING TO METAL HOOD TRANSITION
SCALE: 3" = 1'-0"

DLR Group
© DLR Group

REGISTERED ARCHITECT
JANE E. GOODING
PORTLAND, OR
6821
STATE OF OREGON

CULINARY CLASSROOM

Westview High School - Beaverton School District

4200 NW 185th Ave, Portland, OR 97229

BID & PERMIT SET
02.18.21
REVISIONS
ADD-01 3/17/21

74-21106-00

DETAILS

A10.1

BIM 360://74-21106-00 Westview HS Culinary/74-21106-00_WHSC_AR_2020.rvt
3/22/2021 1:42:22 AM

A B C D E

ABBREVIATIONS

&	-AND
@	-AT
%%D, DEG	-DEGREE
%%C, DIA	-DIAMETER
(E), EXIST	-EXISTING
#, NO	-NUMBER
#, LB	-POUND
AB	-ANCHOR BOLT
ABV	-ABOVE
ADDL	-ADDITIONAL
ADH	-ADHESIVE
ADJ	-ADJACENT
AFS	-ABOVE FINISHED SLAB
ALT	-ALTERNATE
ALUM	-ALUMINUM
APPROX	-APPROXIMATE
AR	-AS REQUIRED
ARCH	-ARCHITECTURAL
ASPH	-ASPHALT
ASSY	-ASSEMBLY
BASE PL	-BASE PLATE
BLDG	-BUILDING
BLKG	-BLOCKING
BLW	-BELOW
BM(S)	-BEAM(S)
BO xxx	-BOTTOM OF xxx
BOT	-BOTTOM
BRB	-BUCKLING RESTRAINED BRACE
BRG	-BEARING
BS	-BOTH SIDES
BTWN	-BETWEEN
C	-CHANNEL
CANT	-CANTILEVER
CDF	-CONTROLLED DENSITY FILL
CEM PLAS	-CEMENT PLASTER
CIP	-CAST-IN-PLACE
CJ	-CONTRACTION JOINT/CONTROL JOINT
CJP	-COMPLETE JOINT PENETRATION WELD
CL	-CENTER LINE
CLR	-CLEAR(ANCE)
CLSM	-CONTROLLED LOW STRENGTH MATERIAL
CMU	-CONCRETE MASONRY UNIT
COL	-COLUMN
CONC	-CONCRETE
CONN	-CONNECTION
CONSTR	-CONTRACTOR
COORD	-COORDINATE
CSK	-COUNTER SUNK
CTR	-CENTER(ED)
D	-DEPTH/DEEP
DC	-DEMAND CRITICAL
DBL	-DOUBLE
DEG	-DEGREE
DEMO	-DEMOLITION
DET	-DETAIL
DEV	-DEVELOPMENT/DEVELOPER
DIAG	-DIAGONAL/DIAGRAM
DIM	-DIMENSION
DIST	-DISTANCE
DN	-DOWN
DWG	-DRAWING
DWL	-DOWEL
EA	-EACH
EF	-EACH FACE
EJ	-EXPANSION JOINT
EL	-ELEVATION
ELEC	-ELECTRICAL
ELEV	-ELEVATOR
EMBED	-EMBEDMENT/EMBEDDED
EOS	-EDGE OF SLAB
EOD	-EDGE OF DECK
EQ	-EQUAL
EQL SPCD	-EQUALLY SPACED
EQUIP	-EQUIPMENT
ES	-EACH SIDE
ESC	-ESCALATOR
EW	-EACH WAY
EXP	-EXPANSION
EXT	-EXTERIOR
FIN	-FINISH(ED)
FLG	-FLANGE
FLR	-FLOOR
FO xxx	-FACE OF xxx
FOC	-FACE OF CONCRETE
FOF	-FACE OF FINISH
FOS	-FACE OF STEEL
FP	-FIREPROOF(ING)/FIRE PROTECTION
FRT	-FIRE RETARDANT TREATED
FS	-FAR SIDE
FT	-FOOT, FEET
FTG	-FOOTING
GA	-GAGE/GAUGE
GALV	-GALVANIZED
GEN	-GENERAL
GLB	-GLUE LAMINATED TIMBER
GR	-GRADE
GB	-GRADE BEAM
GYP BD	-GYPSUM BOARD
H	-HIGH
HDR	-HEADER
HGR	-HANGER
HLDN	-HOLDDOWN
HORIZ	-HORIZONTAL
HSS	-HOLLOW STRUCTURAL SECTIONS
HT	-HEIGHT
HVAC	- HEATING, VENTILATION AND AIR CONDITIONING
ID	-INSIDE DIAMETER
I.F	-INSIDE FACE
IJ	-ISOLATION JOINT
IL	-INSIDE LAYER
IN	-INCHES
INFO	-INFORMATION
INSUL	-INSULATE/INSULATION
INT	-INTERIOR
JST	-JOIST
JT	-JOINT
KIP	-1,000 POUNDS
KSI	-KIPS PER SQUARE INCH
KWY	-KEYWAY
L	-ANGLE/LENGTH
LBR	-LUMBER
LLBB	-LONG LEG BACK TO BACK
LLH	-LONG LEG VERTICAL
LOC	-LOCATION
LSH	-LONG SIDE HORIZONTAL
MAX	-MAXIMUM
MB	-MACHINE BOLT
MBR	-MEMBER
MECH	-MECHANICAL
MEZZ	-MEZZANINE
MFR	-MANUFACTURE(R/D)
MRR RC	-MANUFACTURER'S RECOMMENDATIONS
MHZ	-MANHOLE
MID	-MIDDLE
MIN	-MINIMUM
MISC	-MISCELLANEOUS
NA	-NOT APPLICABLE
NIC	-NOT IN CONTRACT
NIP	-NOT IN PERMIT
NORM	-NORMAL
NS	-NEAR SIDE
NTS	-NOT TO SCALE
OC	-ON CENTER
OD	-OUTSIDE DIAMETER
O.F	-OUTSIDE FACE
OFS	-OUTSIDE FACE OF STUDS
OL	-OUTSIDE LAYER
OPH	-OPPOSITE HAND
OPNG	-OPENING
OPP	-OPPOSITE
OVS	-OVERSIZED
PAF	-POWER ACTUATED FASTENER
PAR	-PARALLEL/PARAPET
PC	-PRECAST CONCRETE
PEN	-PENETRATE/PENETRATION
PIL	-PILASTER
PJP	-PARTIAL JOINT PENETRATION WELD
PL	-PLATE
PLCS	-PLACES
PNL	-PANEL
R	-RADIUS
RC	-REINFORCED CONCRETE
RD	-ROOF DRAIN
REF	-REFERENCE
REINF	-REINFORCING
REQD	-REQUIRED
RO	-ROUGH OPENING
RTU	-ROOFTOP UNIT
SC	-SLIP CRITICAL
SCHED	-SCHEDULE
SECT	-SECTION
SEOR	-STRUCTURAL ENGINEER OF RECORD
SLBB	-SHORT LEG BACK TO BACK
SFRS	-SEISMIC FORCE RESISTING SYSTEM
SHT	-SHEET
SHTHG	-SHEATHING
SIM	-SIMILAR
SMS	-SHEET METAL SCREW
SPEC	-SPECIFICATION
SPCS	-SPACES
SQ	-SQUARE
SSH	-SHORT SLOTTED-HOLE
SST	-STAINLESS STEEL
STD	-STANDARD
STIF	-STIFFENER
STL	-STEEL
STL JST	-STEEL JOIST
STRUCT	-STRUCTURAL
SYMM	-SYMMETRICAL
TB	-THROUGH BOLT
TBC	-THREADED BAR COUPLER
TBR	-TO BE REMOVED
THK	-THICK(NESS)
TO xxx	-TOP OF xxx
TOC	-TOP OF CONCRETE
TOF	-TOP OF FOOTING
TOGB	-TOP OF GRADE BEAM
TOS	-TOP OF STEEL
TOSL	-TOP OF SLAB
TOW	-TOP OF WALL
TRANSV	-TRANSVERSE
TRTD	-TREATED
TYP	-TYPICAL
T/C	-TENSION/COMPRESSION CORD
T&B	-TOP AND BOTTOM
T&G	-TONGUE AND GROOVE
UON	-UNLESS OTHERWISE NOTED
VIF	-VERIFY IN FIELD
VNR	-VENEER
VERT	-VERTICAL
W	-WIDE/WIDTH
WD	-WOOD
WF	-WIDE FLANGE
WO	-WHERE OCCURS
WP	-WATERPROOFING/WORK POINT
WT	-WEIGHT
WHS	-WELDED HEADED STUD
WWF	-WELDED WIRE FABRIC
W/	-WITH
W/O	-WITHOUT
YD	-YARD

STRUCTURAL SHEET INDEX

SHEET NUMBER	SHEET NAME
S0.1	STRUCTURAL NOTES
S1.1	PARTIAL FOUNDATION AND FRAMING PLAN
S3.1	STRUCTURAL DETAILS

Grand total: 3

STRUCTURAL STEEL, MISC. METAL

1. STRUCTURAL STEEL DETAILING, FABRICATION AND ERECTION SHALL CONFORM TO THE BUILDING CODE AND AISC STANDARDS USING LOADS AS DEFINED IN AISC-360 SECTION B3-3 "DESIGN FOR STRENGTH USING LOAD AND RESISTANCE FACTOR DESIGN (LRFD)".
2. FABRICATOR SHALL BE AN "APPROVED FABRICATOR" IN ACCORDANCE WITH IBC SECTION 1704.2.5.1. REGISTERED AND APPROVED BY THE LOCAL BUILDING DEPARTMENT. IN LIEU OF THE PREVIOUS, FABRICATOR SHALL INCLUDE INSPECTION/TESTING SERVICES FOR IN-SHOP WORK IN THEIR BID TO MEET THE REQUIREMENTS OF IBC 1704.2.5.
3. STRUCTURAL STEEL FABRICATION AND ERECTION SHALL CONFORM TO AISC REQUIREMENTS AND THE PROJECT SPECIFICATIONS.
4. STRUCTURAL STEEL SHALL CONFORM TO THE FOLLOWING, UNLESS OTHERWISE NOTED ON THE STRUCTURAL DRAWINGS:
   - A. WIDE FLANGE SHAPES — ASTM A992, Fy=50 KSI
   - B. PLATES AND BARS — ASTM A36, Fy=36 KSI
   - C. CHANNELS AND ANGLES — ASTM A36, Fy=36 KSI
   - D. HOLLOW RECTANGULAR SECTIONS — ASTM A500C, Fy=50 KSI
   - E. ANCHOR RODS EMBEDDED IN CONCRETE — ASTM F1554 GRADE 36
   - F. THREADED RODS FOR EPOXY ANCHORAGE — ASTM A193 GRADE B7
   - G. CONNECTION BOLTS — F3125 GRADE A325N
5. THE STRUCTURAL STEEL FABRICATOR SHALL FURNISH SHOP DRAWINGS FOR REVIEW AND APPROVAL PRIOR TO THE START OF FABRICATION.
6. WELDING SHALL BE PERFORMED IN ACCORDANCE WITH AWS REQUIREMENTS. ALL WELDS SHALL BE PREQUALIFIED IN ACCORDANCE WITH AWS AND AISC STANDARDS. USE E70XX ELECTRODES, UON.
7. ALL WELDS SHALL BE PERFORMED BY WELDERS CERTIFIED IN THE JURISDICTION HAVING AUTHORITY OVER THIS PORTION OF THE WORK.
8. WELD LENGTHS CALLED FOR ON THE PLANS ARE THE NET EFFECTIVE LENGTH REQUIRED. WELD SIZE SHALL BE AISC MINIMUM, UON.
9. BEAMS AND GIRDERS SHALL NOT SUPPORT PIPING LARGER THAN 10" DIAMETER WITHOUT THE REVIEW OF THE STRUCTURAL ENGINEER OF RECORD.
10. TENSION CONTROL BOLTS MAY BE SUBSTITUTED FOR THE BOLTS SPECIFIED IN THESE PLANS AT THE DISCRETION OF THE CONTRACTOR. ASTM F3125 GRADE F1852 BOLTS MAY BE SUBSTITUTED FOR ASTM F3125 GRADE A325 BOLTS AND ASTM F3125 GRADE 2280 BOLTS MAY BE SUBSTITUTED ASTM F3125 GRADE A490 BOLTS.

COLD FORMED STEEL

1. THE DESIGN AND INSTALLATION OF COLD FORMED STEEL SHALL CONFORM TO THE REQUIREMENTS OF THE BUILDING CODE AND AISI STANDARDS.
2. COLD FORMED STEEL SHALL CONFORM TO ASTM A653SS OR A1003-H.
   A. 16GA (54MIL) AND THICKER ELEMENTS SHALL HAVE A MINIMUM YIELD STRENGTH OF 50 KSI.
   B. 18GA (43 MIL) AND THINNER ELEMENTS SHALL HAVE A MINIMUM YIELD STRENGTH OF 33 KSI.
3. STUDS, JOISTS, TRACK, BRIDGING, END CLOSURES, AND ACCESSORIES SHALL BE GALVANIZED PER THE PROJECT SPECIFICATIONS.
4. STEEL STUDS AND JOISTS SHALL BE "C" SHAPED WITH STIFFENED FLANGES, OF THE SIZE, GAUGE AND PROPERTIES SHOWN ON THE STRUCTURAL DRAWINGS, OR AS DESIGNATED WITH STEEL STUD MANUFACTURER'S ASSOCIATION (SSMA) NOMENCLATURE AS SPECIFIED IN ICC ER-3064P.
5. TRACK SHALL BE CHANNEL SHAPED, MATCHING STUD AND JOIST GAUGE, WITH MINIMUM FLANGE WIDTH OF 1 1/4" UON. BRIDGING SHALL BE PROVIDED PER THE RECOMMENDATION OF THE MANUFACTURER, UON.
6. WELDING, FABRICATION, ATTACHMENTS, ETC., SHALL BE IN CONFORMANCE WITH THE PLANS AND SPECIFICATIONS, OR, IF NOT SPECIFIED, WITH THE RECOMMENDATIONS AND SPECIFICATIONS OF THE MANUFACTURER.
7. WELDING OF COLD FORMED MEMBERS SHALL CONFORM TO AWS D1.3/D1.3M, "STRUCTURAL WELDING CODE, SHEET STEEL", 2018 EDITION.
8. SCREW CONNECTIONS SHALL BE MADE USING SELF DRILLING / SELF TAPPING SCREWS CONFORMING TO ASTM C1513 AND ASTM A510. USE SCREW SIZE AS SPECIFIED ON THE STRUCTURAL DRAWINGS. SCREWS FASTENING GYPSUM SHEATHING TO COLD FORMED STUDS OR JOISTS SHALL CONFORM TO ASTM C954.
9. MINIMUM AND DESIGN THICKNESS FOR COLD FORMED MEMBERS SHALL CONFORM TO ICC ER-3064P.
10. ALL COLD FORMED METAL FRAMING, INCLUDING INTERIOR, EXTERIOR, STRUCTURAL, AND NON-STRUCTURAL SHALL BE DESIGNED BY THE CONTRACTOR'S DELEGATED ENGINEER. PROVIDE SIGNED AND SEALED SHOP DRAWINGS AND CALCULATIONS.

SUBMITTALS

1. THE FOLLOWING ITEMS SHALL BE SUBMITTED TO THE STRUCTURAL ENGINEER FOR REVIEW AND APPROVAL PRIOR TO FABRICATION/ERECTIONS/INSTALLATION. THESE ITEMS ARE IN ADDITION TO ANY SUBMITTAL REQUIREMENTS SPECIFIED ON THESE PLANS OR IN THE PROJECT SPECIFICATIONS.

STRUCTURAL SUBMITTALS

ITEM	PROD DATA	SHOP DWGS	TEST RESULTS	CALCS	DEFERRED SUBMITTAL
STRUCTURAL STEEL	-	YES	-	-	-
COLD FORMED STEEL	YES	YES	-	YES	YES
EPOXY AND EXP ANCHORS	YES	-	-	-	-
CEILING/MEP SUPPORT AT UNTOPPED DECK	-	YES	-	YES	YES
ANCHORAGE FOR MECH/ELEC EQUIPMENT	-	YES	-	YES	YES
MEP EQUIPMENT/CONDUIT SEISMIC BRACING	YES	YES	-	YES	YES
ACOUSTICAL PANEL CEILING SEISMIC BRACING	YES	YES	-	YES	YES

2. "PROD DATA" - SUBMIT ADEQUATE DOCUMENTATION THAT THE PRODUCT PROPOSED TO BE USED MEETS THE REQUIREMENTS ON THESE PLANS AND THE PROJECT SPECIFICATIONS.
3. "SHOP DWGS" - SUBMIT COMPLETE SHOP DRAWINGS SUFFICIENT TO SHOW QUANTITIES AND KINDS OF MATERIALS, METHODS OF ASSEMBLY, AND ALL DATA REQUIRED FOR FABRICATION, ERECTION, AND INSTALLATION. THE PURPOSE OF THESE DRAWINGS IS TO DEMONSTRATE THAT THE CONTRACTOR UNDERSTANDS THE DESIGN CONCEPT DOCUMENTED HEREIN. SUBMITTALS CONSISTING OF DRAWINGS TAKEN DIRECTLY FROM THESE PLANS WILL NOT BE APPROVED.
4. "TEST RESULTS" - SUBMIT RESULTS FOR ANY TESTING REQUIRED BY BUILDING CODE OR THESE PLANS.
5. "CALCS" - SUBMIT CALCULATIONS SIGNED AND SEALED BY A DESIGN PROFESSIONAL AUTHORIZED TO PERFORM WORK IN THE PROJECT JURISDICTION.
6. "DEFERRED SUBMITTAL" - SUBMITTAL ITEMS SHALL BE SUBMITTED TO THE ENGINEER FOR REVIEW. ONCE REVIEWED, CONTRACTOR SHALL FORWARD TO THE BUILDING DEPARTMENT FOR APPROVAL. FABRICATION AND/OR INSTALLATION OF DEFERRED SUBMITTAL ITEMS SHALL NOT OCCUR UNTIL APPROVAL OF THE BUILDING DEPARTMENT IS RECEIVED.

CONCRETE

1. ALL CONCRETE CONSTRUCTION SHALL CONFORM TO THE REQUIREMENTS OF THE BUILDING CODE AND ACI SPECIFICATIONS.
2. CONCRETE SHALL CONFORM TO THE REQUIREMENTS OF THE PROJECT SPECIFICATIONS IN ADDITION TO THE REQUIREMENTS IN THESE DRAWINGS. WHERE THE SPECIFICATIONS APPEAR TO CONFLICT WITH THE REQUIREMENTS IN THESE DRAWINGS, THE CONTRACTOR SHALL OBTAIN CLARIFICATION FROM THE ARCHITECT / STRUCTURAL ENGINEER BEFORE PROCEEDING WITH WORK.
3. CONCRETE SHALL CONFORM TO THE STRENGTH, WATER-CEMENT RATIO, EXPOSURE CLASS, MAXIMUM UNIT WEIGHT AND CEMENT TYPE SPECIFIED IN THE SCHEDULE BELOW. CONCRETE STRENGTHS SHALL BE VERIFIED BY 28-DAY CYLINDER TESTS.

CONCRETE REQUIREMENTS

ELEMENT	STRENGTH f'c (psi)	MAX W/C RATIO	EXPOSURE CLASS	MAX DRY UNIT WEIGHT (pcf)	CEMENT TYPE
SLABS-ON-GRADE	4,000	0.5	NA	150	I OR II

   - A. EXPOSURE CLASSES ARE F0, S0, P0, C0 UNLESS NOTED OTHERWISE IN THE TABLE ABOVE.
   - B. THE WATER-CEMENT RATIO IN CONCRETE CONTAINING POLYSILICATE ADMIXTURES SHALL CONFORM TO THE REQUIREMENTS OF THE ADMIXTURE SUPPLIER. SUBMIT ADMIXTURE PRODUCT DATA FOR REVIEW WITH THE MIX DESIGN SUBMITTAL. REFER TO THE PROJECT SPECIFICATIONS FOR ADDITIONAL REQUIREMENTS.
   - C. CONCRETE MIXES SHALL COMPLY WITH ACI 318 SECTION 19.3 FOR THE EXPOSURE CLASSES INDICATED THE TABLE ABOVE. FOR CLASSES F1 THROUGH F3, AIR ENTRAINMENT SHALL MEET THE REQUIREMENTS OF ACI-318 TABLE 19.3.3.1.
   - D. PORTLAND CEMENT SHALL CONFORM TO ASTM C-150 OF THE TYPE SPECIFIED IN THE TABLE ABOVE.
   - E. COARSE AND FINE AGGREGATE FOR NORMAL WEIGHT CONCRETE SHALL CONFORM TO ASTM C-33.
   - F. WATER SHALL BE CLEAR, POTABLE AND SHALL CONFORM TO ASTM C-94.
   - G. CONCRETE MIXING OPERATION SHALL CONFORM TO ASTM C-94.
4. THE FOLLOWING MINIMUM CONCRETE COVER SHALL BE PROVIDED FOR REINFORCEMENT PLACED IN CAST-IN-PLACE CONCRETE:
   - A. CONCRETE CAST AGAINST AND PERMANENTLY EXPOSED TO EARTH: 3"
   - B. CONCRETE EXPOSED TO EARTH OR WEATHER:
     - #6 THROUGH #18 BARS: 2"
     - #5 BAR, W31 OR D31 WIRE, AND SMALLER: 1 1/2"
   - C. CONCRETE NOT EXPOSED TO WEATHER OR IN CONTACT WITH GROUND:
     - BEAMS, COLUMNS: 1 1/2"
     - SLABS, WALLS, JOISTS:
       - #14 AND #18 BARS: 1 1/2"
       - #11 BARS AND SMALLER: 3/4"
     - SHELLS, FOLDED PLATE MEMBERS:
       - #6 BARS AND LARGER: 3/4"
       - #5, W31 OR D31 WIRE, AND SMALLER: 1/2"
5. PLACEMENT OF CONCRETE SHALL CONFORM TO ACI REQUIREMENTS AND THE CONTRACT DOCUMENTS. INTENTIONALLY ROUGHEN ALL CONCRETE SURFACES TO A MINIMUM 1/4" AMPLITUDE AGAINST WHICH CONCRETE IS TO BE PLACED, UON.
6. PROVIDE SLEEVES FOR PLUMBING AND ELECTRICAL OPENINGS IN CONCRETE BEFORE PLACING. REINFORCING SHALL NOT BE CUTS. CORING OF CONCRETE IS NOT PERMITTED EXCEPT AS INDICATED.
7. CONDUIT OR PIPE OUTSIDE DIAMETER SHALL NOT EXCEED ONE THIRD OF THE SLAB THICKNESS AND SHALL BE PLACED BETWEEN THE TOP AND BOTTOM REINFORCING, UNLESS SPECIFICALLY DETAILED OTHERWISE. CONDUITS SHALL BE SPACED SUCH THAT THE CLEAR DISTANCE BETWEEN IS NOT LESS THAN THE LARGER OF THREE TIMES THE LARGER PIPE DIAMETER OR FOUR INCHES. CONCENTRATIONS OF CONDUIT NOT MEETING THESE LIMITATIONS SHALL BE SUBMITTED TO THE STRUCTURAL ENGINEER FOR REVIEW AND APPROVAL PRIOR TO PLACEMENT.

REINFORCING STEEL

1. REINFORCING STEEL SHALL BE DETAILED, INCLUDING HOOKS AND BENDS, AND PLACED IN ACCORDANCE WITH ACI 315 AND ACI 318.
2. REINFORCING STEEL SHALL CONFORM TO ASTM A-615 OR A-706, GRADE 60.
3. WELDED WIRE FABRIC SHALL CONFORM TO ASTM A-185.
4. ALL REINFORCING BAR BENDS SHALL BE MADE COLD. BARS SHALL NOT BE RE-BENT.
5. REINFORCING SPLICES SHALL BE MADE AS INDICATED ON THE DRAWINGS.
6. WELDED WIRE FABRIC SHALL BE LAPPED AT SPLICES SUCH THAT A MINIMUM OF THREE WIRES PARALLEL TO THE SPLICE ARE OVERLAPPED. SPLICES SHALL OVERLAP A MINIMUM OF 8 INCHES.
7. PROVIDE #4 x 2'-0" DIAGONAL BAR AT ALL REENTRANT CORNERS OF CONCRETE SLABS AT GRADE AND SLABS ON METAL DECK.
8. NO BARS PARTIALLY EMBEDDED IN HARDENED CONCRETE SHALL BE FIELD BENT UNLESS SPECIFICALLY SO DETAILED AND REVIEWED BY THE STRUCTURAL ENGINEER.
9. REINFORCEMENT SHALL BE SECURELY TIED IN PLACE PRIOR TO THE PLACEMENT OF CONCRETE OR GROUT.

POST INSTALLED ANCHORAGE

1. ADHESIVE ANCHORAGES, WHERE SPECIFIED ON THE DRAWINGS, SHALL CONFORM TO THE FOLLOWING:
   - A. CONCRETE EPOXY ANCHORS: HILTI HIT-RE 500-V3 ESR-3814
2. MECHANICAL ANCHORAGES, WHERE SPECIFIED ON THE DRAWINGS, SHALL CONFORM TO THE FOLLOWING:
   - A. CONCRETE EXPANSION ANCHORS: HILTI KWIK BOLT TZ ESR-1917
   - B. CONCRETE UNDERCUT ANCHORS: HILTI HSA ESR-1546
3. DRILLING SHALL BE PERFORMED WITH A ROTARY HAMMER DRILL AND CARBIDE TIPPED DRILL BIT IN ACCORDANCE WITH THE MANUFACTURER'S INSTRUCTIONS AND THE APPLICABLE ICC EVALUATION REPORT.
4. BORE HOLE CLEANING PROCEDURES MUST COMPLY WITH THE MANUFACTURER'S INSTRUCTIONS AND THE APPLICABLE ICC EVALUATION REPORT IN ORDER TO PRODUCE A DRY, DUST-FREE HOLE.
5. INJECTION OF ADHESIVE SHALL BE PERFORMED IN ACCORDANCE WITH MANUFACTURER'S INSTRUCTIONS AND THE APPLICABLE ICC EVALUATION REPORT IN ORDER TO PRODUCE AN AIR- VOID FREE INJECTION.
6. SPECIAL CONDITIONS SUCH AS WATER SATURATED CONCRETE, WATER-FILLED HOLES, UNDERWATER AND OVERHEAD INSTALLATIONS MUST BE APPROVED BY THE ENGINEER OF RECORD AND COMPLY WITH THE APPLICABLE ICC-ES REPORT.
7. STEEL ANCHORING ELEMENTS SHALL BE THE SIZE AND GRADE SHOWN ON THE DRAWINGS AND MUST BE CLEAN, DRY AND FREE OF ANY OIL CONTAMINANTS.
8. SUBSTITUTIONS FOR ANCHOR SYSTEMS MUST BE APPROVED BY THE STRUCTURAL ENGINEER OF RECORD PRIOR TO INSTALLATION AND SHALL HAVE A VALID ICC-ES EVALUATION IN ACCORDANCE WITH THE APPLICABLE BUILDING CODE.
9. ALL ANCHOR EMBED DEPTHS SPECIFIED ON THESE DRAWINGS ARE EFFECTIVE EMBEDMENT DEPTHS. ADDITIONAL ANCHOR LENGTH AND OR HOLE DEPTH SHALL BE PROVIDED AS REQUIRED BY THE ANCHOR MANUFACTURER AND ASSOCIATED CODE APPROVALS.

BUILDING CODE

1. ALL CONSTRUCTION, MATERIALS, AND WORKMANSHIP SHALL CONFORM TO THE REQUIREMENTS OF THESE DRAWINGS, SPECIFICATIONS, AND THE CODES, RULES AND REGULATIONS OF THE OREGON STRUCTURAL SPECIALTY CODE (OSSC), 2019 EDITION, AS ADOPTED AND AMENDED BY THE CITY OF BEAVERTON HEREINAFTER REFERED TO AS THE BUILDING CODE.

DESIGN CRITERIA

1. ROOF LIVE LOAD — 20 PSF
2. ROOF DEAD LOAD — 16 PSF PLUS STRUCTURE SELF-WEIGHT
3. WIND DESIGN CRITERIA
   - BASIC WIND SPEED, V = 103 MPH (RISK CATEGORY III)
   - EXPOSURE FACTOR B
   - INTERNAL PRESSURE COEFFICIENT GCpi = 0.18
4. SEISMIC DESIGN CRITERIA
   - RISK CATEGORY III
   - SITE CLASS D
   - IMPORTANCE FACTOR I_e - 1.0
   - S_1 = 0.422
   - S_S = 0.911
   - S_{DS} = 0.729
   - S_{D1} = 0.686
   - SEISMIC DESIGN CATEGORY D
   - LATITUDE 45.550 N
   - LONGITUDE 122.867 W

GENERAL NOTES

1. THE STRUCTURAL DRAWINGS REPRESENT THE DESIGN OF THE PRIMARY STRUCTURE BASED ON PRESCRIBED LOADS, (SEE "DESIGN CRITERIA" SECTION), IMPOSED ON THE STRUCTURE PER THE BUILDING CODE AS SPECIFIED IN THE "BUILDING CODE" SECTION. THE PRIMARY STRUCTURE OF THE BUILDING IS DEFINED AS THE FOUNDATIONS, BEARING WALLS, SHEAR WALLS, COLUMNS, BEAMS, SLABS, FLOOR FRAMING AND LATERAL FORCE RESISTING ELEMENTS REQUIRED TO MAINTAIN THE STABILITY OF THE COMPLETED STRUCTURE AS A WHOLE.
2. ALL CONSTRUCTION MATERIALS AND WORKMANSHIP SHALL CONFORM TO THE REQUIREMENTS OF THE DRAWINGS, SPECIFICATIONS, AND THE CODES, RULES AND REGULATIONS OF THE BUILDING CODE AS DEFINED IN THE "BUILDING CODE" SECTION.
3. THE CONTRACT DOCUMENTS REPRESENT THE FINISHED STRUCTURE, THEY DO NOT INDICATE THE METHOD OF CONSTRUCTION. THE CONTRACTOR SHALL PROVIDE ALL MEASURES NECESSARY TO PROTECT THE STRUCTURE DURING CONSTRUCTION. SUCH MEASURES SHALL INCLUDE, BUT NOT BE LIMITED TO, BRACING, SHORING FOR LOADS DUE TO CONSTRUCTION EQUIPMENT, ETC. OBSERVATION VISITS TO THE SITE BY THE STRUCTURAL ENGINEER SHALL NOT INCLUDE INSPECTION OF THE ABOVE ITEMS.
4. CONSTRUCTION MATERIAL AND EQUIPMENT LOADS PLACED ON THE STRUCTURE DURING THE CONSTRUCTION PROCESS SHALL NOT EXCEED THE DESIGN LIVE LOAD OF THE STRUCTURE NOTED IN THESE DRAWINGS. THE ENGINEER SHALL NOT BE RESPONSIBLE TO INVESTIGATE NOR APPROVE THE STRUCTURE FOR CONSTRUCTION MATERIAL OR EQUIPMENT LOADING.
5. THE CONTRACTOR SHALL BE RESPONSIBLE FOR TEMPORARY BRACING AS REQUIRED FOR THE STRUCTURE AND STRUCTURAL COMPONENTS UNTIL ALL MEMBERS ARE IN PLACE AND FINAL CONNECTIONS HAVE BEEN COMPLETED IN ACCORDANCE WITH THE PLANS.
6. CONSTRUCTION TOLERANCES SHALL CONFORM TO THE BUILDING STANDARDS SPECIFIED IN THE "BUILDING CODE" SECTION.
7. THE CONTRACTOR SHALL VERIFY ALL DIMENSIONS PRIOR TO CONSTRUCTION. THE ARCHITECT SHALL BE NOTIFIED OF ANY DISCREPANCIES OR INCONSISTENCIES.
8. MECHANICAL AND ELECTRICAL LOADS MAY BE SUPPORTED FROM BEAMS. LIGHT MECHANICAL AND ELECTRICAL LOADS ANCHORED INTO METAL DECK ASSEMBLY MUST BE ANCHORED INTO STRUCTURAL CONCRETE ABOVE.
9. IF ANY ERRORS OR OMISSIONS APPEAR TO EXIST IN THESE DRAWINGS, SPECIFICATIONS, OR OTHER CONTRACT DOCUMENTS; THE CONTRACTOR SHALL NOTIFY THE STRUCTURAL ENGINEER OR ARCHITECT IN WRITING OF SUCH OMISSION OR ERROR BEFORE PROCEEDING WITH THE WORK.
10. NOTES AND DETAILS SHALL TAKE PRECEDENCE OVER GENERAL NOTES AND TYPICAL DETAILS. WHERE NOTES AND DETAILS ON DRAWINGS AND THESE GENERAL NOTES AND TYPICAL DETAILS ARE IN CONFLICT WITH THE PROJECT SPECIFICATIONS, THE MOST STRINGENT SHALL APPLY. CONDITIONS NOT SPECIFICALLY SHOWN SHALL BE CONSTRUCTED AS SHOWN FOR SIMILAR WORK, SUBJECT TO REVIEW BY THE ARCHITECT AND STRUCTURAL ENGINEER.
11. MANUFACTURED MATERIALS SHALL BE APPROVED BY THE BUILDING OFFICIAL PRIOR TO THEIR USE. ALL REQUIREMENTS OF THOSE APPROVALS SHALL BE FOLLOWED.
12. SEE ARCHITECTURAL DRAWINGS AND PROJECT SPECIFICATIONS FOR THE FOLLOWING:
    - A. SIZE AND LOCATION OF ALL DOOR AND WINDOW OPENINGS AND THRESHOLD REQUIREMENTS.
    - B. SIZE AND LOCATION OF ALL NON-BEARING PARTITIONS.
    - C. SIZE AND LOCATION OF ROOF, FLOOR AND WALL OPENINGS.
    - D. SIZE AND LOCATION OF DEPRESSED AREAS, CHANGES IN ELEVATION, FLOOR AND ROOF DRAINS, SLOPES, SUMPS, CONCRETE CURBS, LEDGES, PADS AND ISLANDS, CHAMFERS, GROOVES, INSERTS, EMBEDDED ITEMS, FINISH REQUIREMENTS, MISCELLANEOUS STEEL, ETC.
    - E. DIMENSIONS NOT SHOWN ON THE STRUCTURAL DRAWINGS.
    - F. EXTERIOR WALL SYSTEMS.
13. SEE MECHANICAL, PLUMBING, ELECTRICAL AND OTHER SPECIALTY DRAWINGS AND PROJECT SPECIFICATIONS FOR THE FOLLOWING:
    - A. PIPE RUNS, SLEEVES, HANGERS, TRENCHES, WALL ROOF AND FLOOR OPENINGS, ETC., NOT SHOWN OR NOTED.
    - B. ELECTRICAL CONDUIT RUNS, BOXES, OUTLETS IN WALLS AND SLABS.
    - C. ANCHORAGE AND BRACING FOR ELECTRICAL, MECHANICAL OR PLUMBING EQUIPMENT TO THE STRUCTURE.
    - D. ANCHOR BOLTS FOR MOTOR MOUNTS.
    - E. SIZE, WEIGHT, AND LOCATION OF MACHINES AND EQUIPMENT BASES.
14. FRAMING MEMBERS WHICH ARE NOT DIMENSIONED SHALL BE EQUALLY SPACED BETWEEN DIMENSIONED POINT OF MEMBERS.
15. OPENINGS, POCKETS, ETC. SHALL NOT BE PLACED IN STRUCTURAL MEMBERS UNLESS SPECIFICALLY DETAILED ON THE STRUCTURAL DRAWINGS.
16. MATERIAL SPECIFICATIONS ARE ASTM LATEST EDITION.

SPECIAL STRUCTURAL INSPECTIONS:

1. THE FOLLOWING ITEMS REQUIRE SPECIAL INSPECTION AND TESTING IN ACCORDANCE WITH IBC SECTION 1704A.2. THE SPECIAL INSPECTION AND TESTING SHALL BE PERFORMED BY A SPECIAL INSPECTOR IN CONTRACT WITH THE OWNER AND APPROVED BY THE ARCHITECT AND BUILDING OFFICIAL. THE FREQUENCY OF INSPECTION AND TESTING SHALL BE AS OUTLINED BELOW. DEFICIENCIES SHALL BE REPORTED TO THE CONTRACTOR ON A DAILY BASIS. SUMMARY REPORTS OF ALL INSPECTIONS AND TEST RESULTS SHALL BE DISTRIBUTED TO THE OWNER, ARCHITECT, STRUCTURAL ENGINEER AND BUILDING OFFICIAL WITH DEFICIENCIES CLEARLY NOTED.

ITEM	BUILDING CODE REFERENCE
STRUCTURAL STEEL	IBC 1705A.2.1
CONCRETE CONSTRUCTION	IBC 1705A.3
SOILS	IBC 1705A.6
POST-INSTALLED ANCHORAGE	PER ICC-ESR REPORT

2. ARCHITECTURAL AND MECHANICAL/ELECTRICAL COMPONENTS SHALL BE INSPECTED PER IBC 1705A.12.5 AND IBC 1705A12.6, RESPECTIVELY.

DLR Group
© DLR Group

STRUCTURAL REGISTERED PROFESSIONAL ENGINEER 94665 OREGON March 12, 2019 WILLIAM STEVEN RAGLAND II
EXPIRES: 12/31/2022

CULINARY CLASSROOM
Westview High School - Beaverton School District
4200 NW 185th Ave, Portland, OR 97229

BID & PERMIT SET
02.18.21
REVISIONS

74-21106-00

STRUCTURAL NOTES

S0.1

BIM 360:///74-21106-00 Westview HS Culinary/74-21106-00_WHSC_ST_2020.rvt
3/15/2021 8:56:04 PM

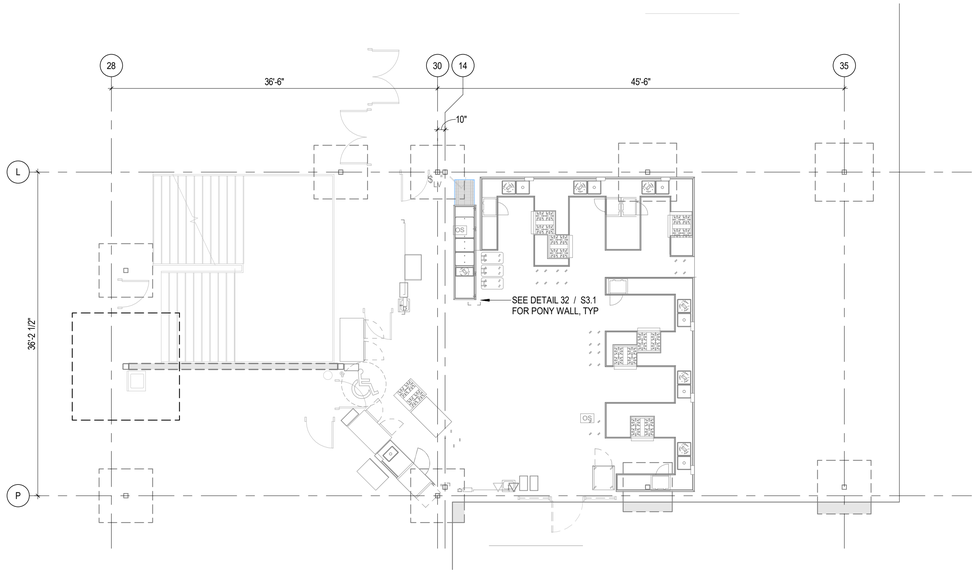

PARTIAL FOUNDATION PLAN

NORTH

SCALE: 1/8" = 1'-0"

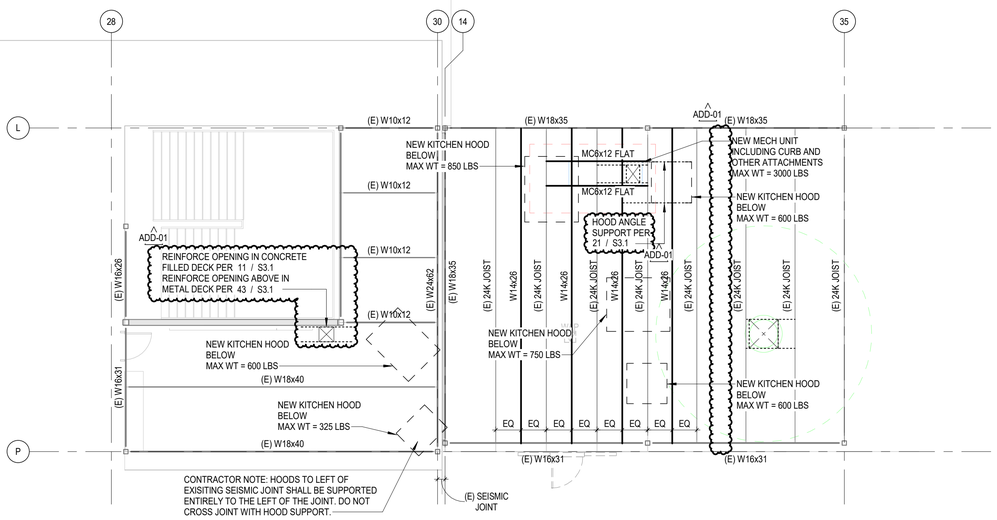

PARTIAL FRAMING PLAN

NORTH

SCALE: 1/8" = 1'-0"

FOUNDATION PLAN NOTES

1. FOR ANY DIMENSION INFORMATION NOT SHOWN, SEE ARCHITECTURAL DRAWINGS.
2. FOR ELEVATION OF FINISH FLOOR, SEE ARCHITECTURAL DRAWINGS.
3. SEE PLANS AND ARCHITECTURAL DRAWINGS FOR DEPRESSIONS, SLOPES, OPENINGS, DRAINS, TRENCHES, SLAB EDGE LOCATIONS.
4. GENERAL CONTRACTOR IS RESPONSIBLE FOR COORDINATING AND LOCATING ALL OPENINGS THROUGH THE SLAB INCLUDING BUT NOT LIMITED TO ELECTRICAL, MECHANICAL, PLUMBING, SPRINKLER AND TELEPHONE. SUBMIT TO THE STRUCTURAL ENGINEER FOR APPROVAL PRIOR TO SUBMITTAL OF REINFORCING STEEL SHOP DRAWINGS.
5. CONTRACTOR SHALL VERIFY ALL EXISTING ELEMENTS AND DIMENSIONS IN FIELD.

FRAMING PLAN NOTES

1. FOR GENERAL NOTES, SEE SHEETS S0.1.
2. FOR ANY DIMENSION INFORMATION NOT SHOWN, SEE ARCHITECTURAL DRAWINGS.
3. SEE ARCHITECTURAL AND MECHANICAL DRAWINGS FOR EXACT LOCATIONS OF MECHANICAL EQUIPMENT.
4. CONTRACTOR SHALL VERIFY ALL EXISTING ELEMENTS AND DIMENSIONS IN FIELD.

DLR Group

© DLR Group

STRUCTURAL
REGISTERED PROFESSIONAL ENGINEER
94665
OREGON
March 12, 2019
WILLIAM STEVEN RAGLAND II

EXPIRES: 12/31/2022

CULINARY CLASSROOM

Westview High School - Beaverton School District

4200 NW 185th Ave, Portland, OR 97229

BID & PERMIT SET
02.18.21
REVISIONS
ADD-01 3/17/21

74-21106-00

PARTIAL FOUNDATION AND FRAMING PLAN

S1.1

BIM 360://74-21106-00 Westview HS Culinary/74-21106-00_WHSC_ST_2020.rvt
3/15/2021 8:56:04 PM

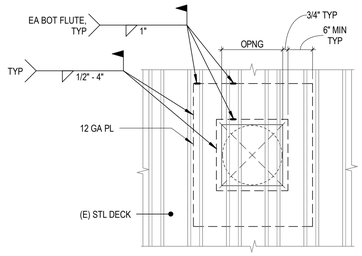

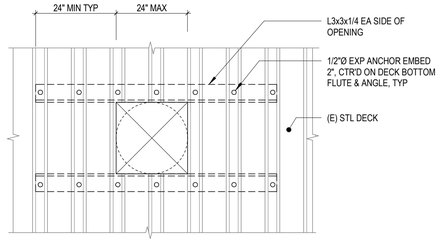

NOTE: 6" DIA OR SMALLER SEE UNREINFORCED DECK OPENING DETAILS.

(A) DECK OPENINGS 7" TO 12"

(B) DECK OPENINGS 13" TO 24"

11 / S3.1 TYPICAL OPENING IN CONCRETE FILLED DECK

SCALE: 1" = 1'-0"

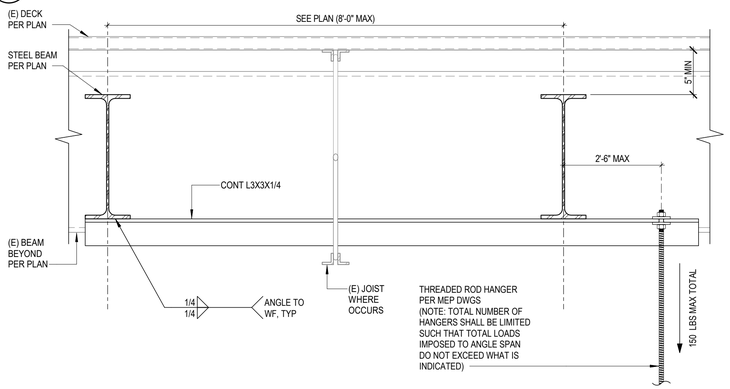

21 / S3.1 HOOD ANGLE SUPPORT

SCALE: 1 1/2" = 1'-0"

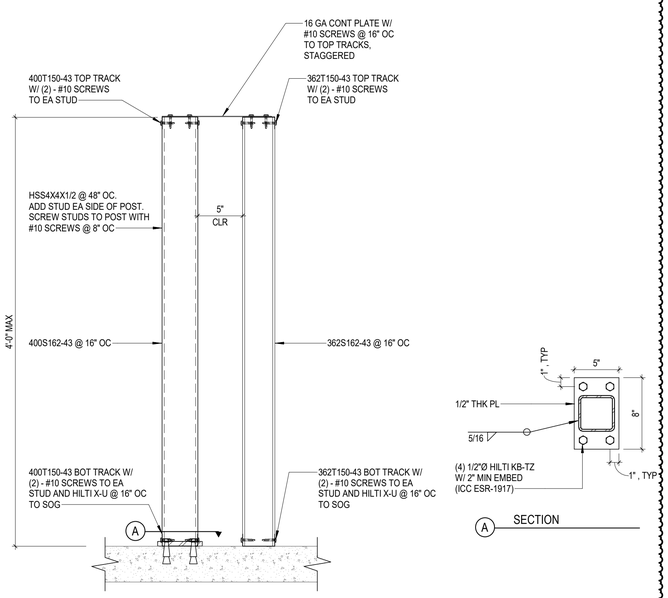

(A) SECTION

32 / S3.1 PONY WALL SUPPORT

SCALE: 1 1/2" = 1'-0"

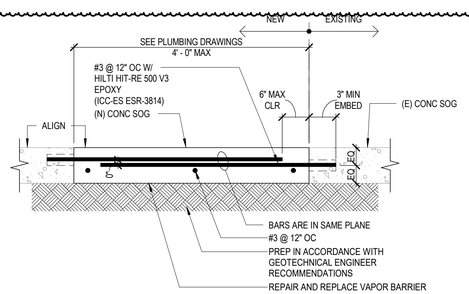

31 / S3.1 TYPICAL TRENCHING DETAIL

SCALE: 1 1/2" = 1'-0"

NOTES:
1. WHERE POSSIBLE APPLY CONCENTRATED LOADS AND SUSPENDED LOADS AT PANEL POINTS.
2. AT ALL LOCATIONS WHERE LOADS ARE NOT APPLIED AT PANEL POINTS, REINFORCE JOIST AS SHOWN ABOVE. WELD ANGLE REINFORCING TO JOIST CHORD AT APPLIED LOAD LOCATION AND TO NEAREST PANEL POINT ON THE OPPOSITE CHORD.
3. REINFORCEMENT NOT REQUIRED WHERE LOAD DOES NOT EXCEED 100 LBS.

41 / S3.1 TYP JOIST REINF AT CONCENTRATED LOADS

SCALE: 3/4" = 1'-0"

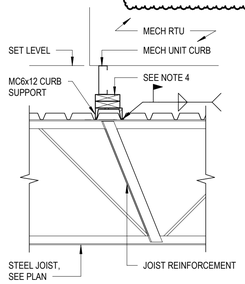

PERPENDICULAR TO JOIST

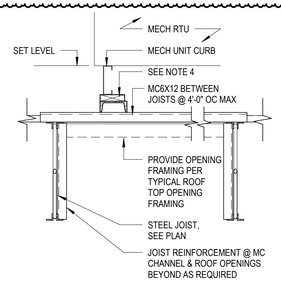

PARALLEL TO JOIST

NOTES:
1. PROVIDE STEEL ANGLE FRAMING AT RTU ROOF OPENINGS AS SHOWN IN TYPICAL DETAIL.
2. MC CHANNELS MUST BEAR ON TWO JOISTS, MIN AND MUST EXTEND THE FULL LENGTH OF THE MECH UNIT CURB.
3. IF RTU UNIT EXTENDS MORE THAN 2'-0" BEYOND A JOIST, CHANNEL MUST BE EXTENDED TO NEAREST JOIST.
4. PROVIDE BLOCKING UNDER CURB AS REQUIRED TO LEVEL UNIT. FIELD VERIFY. BLOCKING DESIGN AND ATTACHMENT BY CONTRACTOR'S ENGINEER.

42 / S3.1 TYPICAL MECH RTU SUPPORT

SCALE: 3/4" = 1'-0"

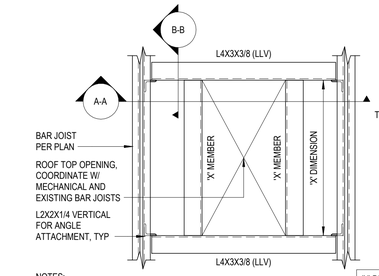

NOTES:
1. THIS DETAIL APPLIES AT EXHAUST FANS, ROOF TOP PENETRATIONS, & RTUS THAT DO NOT ALIGN WITH THE PRE-FABRICATED ROOF TOP OPENINGS.
2. VERIFY ALL DIMENSIONS WITH MECHANICAL UNIT SUPPLIER AND MEP DRAWINGS PRIOR TO FABRICATION.

'X' DIM	"X" MEMBER
≤3'-0"	L4X3X3/8 (LLV)
≤7'-6"	L4X4X3/8 (LLV)
≤9'-0"	L5X5X3/8 (LLV)

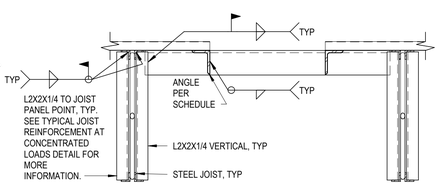

SECTION A-A

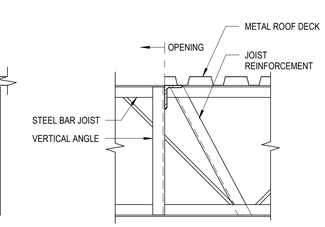

SECTION B-B

43 / S3.1 TYPICAL OPENING IN METAL DECK

ADD-01

SCALE: 1" = 1'-0"

CONNECTION NOTES:

1. BEAMS SHALL HAVE STANDARD ROUND HOLES AND CONNECTION PLATES MAY HAVE HORIZONTAL SHORT SLOTTED HOLES, UON.
2. BOLTS ARE 7/8" Ø, A325-N OR A325-TC. BOLTS MAY BE SNUG TIGHT UNLESS SPECIFICALLY CALLED OUT AS SLIP-CRITICAL.

15 / S3.1 TYP BEAM TO BEAM CONNECTION

SCALE: 1" = 1'-0"

ADD-01

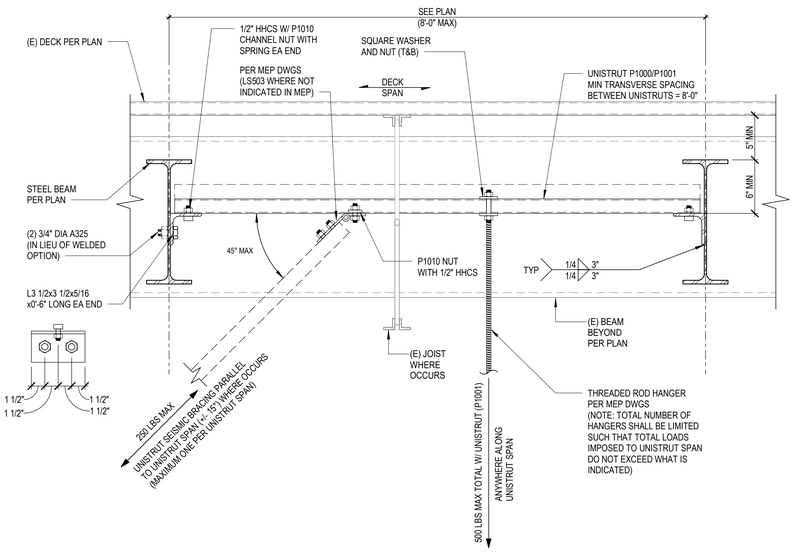

NOTES:

MAXIMUM HANGING LOAD OF 500 LBS PER SPAN IS ALLOWED FROM UNISTRUT MEMBER PROVIDED THAT ALL OF THE FOLLOWING CRITERIA ARE MET:
A. MINIMUM TRANSVERSE SPACING BETWEEN THE UNISTRUTS (ALONG STEEL SUPPORT BEAM SPAN) IS 8'-0".
B. WHERE UNISTRUT MEMBERS OCCUR ON BOTH SIDES OF STEEL SUPPORT BEAM, THEY SHALL BE STAGGERED WITH 8'-0" MINIMUM SPACING BETWEEN THEM OR REDUCE MAXIMUM ALLOWABLE HANGING LOADS TO 250 LBS MAX.
C. SIMILAR AT COMPOSITE DECK WITH EXISTING BEAM LOCATION.

(A) CONDITION 'A'
100 LBS < HANGING LOADS ≤ 500 LBS

34 / S3.1 TYPICAL MEP & HOOD HANGER/KICKER CONNECTION DETAIL AT BARE METAL DECK

SCALE: 1 1/2" = 1'-0"

DLR Group
© DLR Group

STRUCTURAL
REGISTERED PROFESSIONAL ENGINEER
94665
OREGON
March 12, 2019
WILLIAM STEVEN RAGLAND II
EXPIRES: 12/31/2022

CULINARY CLASSROOM

Westview High School - Beaverton School District

4200 NW 185th Ave, Portland, OR 97229

BID & PERMIT SET
02.18.21
REVISIONS
ADD-01 3/17/21

74-21106-00

STRUCTURAL DETAILS

S3.1

BIM 360://74-21106-00 Westview HS Culinary/74-21106-00_WHSC_ST_2020.rvt
3/15/2021 8:56:05 PM

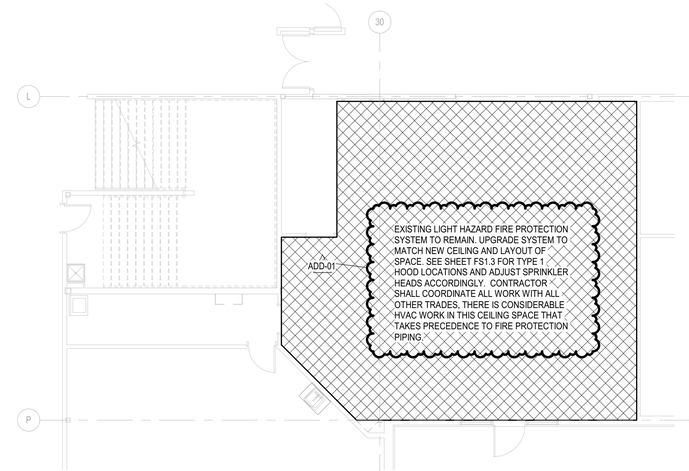

N
TRUE

FIRST LEVEL FIRE PROTECTION PLAN

SCALE: 1/8" = 1'-0"

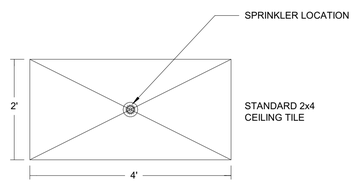

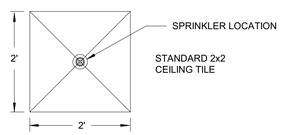

NOTE: REFER TO SPECIFICATION SECTION 15300 FOR SPRINKLER TYPES AND LOCATION REQUIREMENTS.

33 / FP1.1 LOCATION OF SPRINKLERS AT ACOUSTIC TILES

NO SCALE

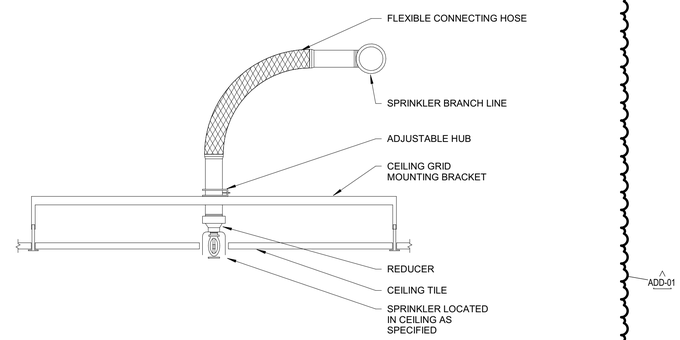

NOTES:
1. ALL FLEX HOSES SHALL BE 3'-0" MAXIMUM LENGTH. ANYTHING OVER 3'-0" LONG SHALL BE ATTACHED TO SCHEDULE 40 BLACK STEEL PIPE.

34 / FP1.1 FLEXIBLE SPRINKLER CONNECTION FOR SUSPENDED CEILINGS - RECESSED

NO SCALE

DLR Group
© DLR Group

REGISTERED PROFESSIONAL ENGINEER
95079PE
OREGON
JULY 21, 2015
RAMARD STEPHEN REIGH
EXPIRES: 12/31/2022

CULINARY CLASSROOM

Westview High School - Beaverton School District

4200 NW 185th Ave, Portland, OR 97229

BID & PERMIT SET
02/18/21
REVISIONS
ADD-01 3/17/21 ADD-01

74-21106-00

OVERALL FIRST FLOOR FIRE PROTECTION PLAN

FP1.1

BIM 360://74-21106-00 Westview HS Culinary/74-21106-00_WHSC_MEP_2020.rvt
3/12/2021 1:20:04 PM

ABBREVIATIONS

(D)	DEMOLISHED
(E)	EXISTING
(R)	RELOCATED
°C	DEGREES CELSIUS
°F	DEGREES FAHRENHEIT
Ø	DIAMETER
A AMP	AMPERE
A/C	AIR CONDITIONING(ER)
AABC	ASSOCIATED AIR BALANCE COUNCIL
AAV	AUTOMATIC AIR VENT
ACC	ACCESSIBLE
ACCU	AIR COOLED CONDENSING UNIT
AD	AREA DRAIN
AD	ACCESS DOOR
ADJ	ADJUSTABLE
AF	AIR FILTER
AGF	AIR GAP FITTING
AHRI	AIR-CONDITIONING HEATING AND REFRIGERATION INSTITUTE
AHU	AIR HANDLING UNIT
AI	AREA INLET
AMB	AMBIENT
AMBA	AMERICAN BOILER MANUFACTURERS ASSOCIATION
ANCH	ANCHOR
AP	ACCESS PANEL
AR	ACID RESISTING
AS	AIR SEPARATOR
ASCE	AMERICAN SOCIETY OF CIVIL ENGINEERS
ASHRAE	AMERICAN SOCIETY OF HEATING REFRIGERATION AND AIR CONDITIONING ENGINEERS
ASME	AMERICAN SOCIETY OF MECHANICAL ENGINEERS
AUTO	AUTOMATIC
AV	AUDIO-VIDEO, AUDIO-VISUAL
AV	AIR VENT
AWG	AMERICAN WIRE GAUGE
B	BOILER
BAS	BUILDING AUTOMATION SYSTEM
BAT	BATTERY
BBO	BOILER BLOW OFF
BC	BALANCING COCK
BC	BARE COPPER
BDD	BACK DRAFT DAMPER
BF	BOILER FEED
BFF	BELOW FINISH FLOOR
BFP	BACKFLOW PREVENTER
BFV	BUTTERFLY VALVE
BHP	BREAK HORSEPOWER
BLKG	BLOCKING
BLKHD	BULKHEAD
BMS	BUILDING MANAGEMENT SYSTEM
BOD	BOTTOM OF DUCT
BOT	BOTTOM
BPIP	BOILER PLANT INSTRUMENTATION PANEL
BTU	BRITISH THERMAL UNIT
BTUH	BRITISH THERMAL UNIT PER HOUR
BV	BALL VALVE
C	CONDUIT
C	CONDENSER WATER
CA	COMBUSTION AIR
CAP	CAPACITY
CD	CONDENSATE DRAIN
CD	CONSTRUCTION DOCUMENTS
CENT	CENTRIFUGAL
CF	CUBIC FEET
CFH	CUBIC FEET PER HOUR
CFM	CUBIC FEET PER MINUTE
CH	CHILLER
CI	CAST IRON
CI	CURB INLET
CIP	CAST IRON PIPE
CIRC	CIRCULATING
CKT	CIRCUIT
CLR	CLEAR
CO	CLEAN OUT
CO	CARBON MONOXIDE
CO2	CARBON DIOXIDE
COMB	COMBINATION
COMM	COMMUNICATIONS
COMP	COMPRESSOR UNIT
CONV	CONVECTOR
CP	CONDENSATE PUMP
CPS	CYCLES PER SECOND
CR	CONDENSER WATER RETURN
CR	CORROSION RESISTANT
CRAC	COMPUTER ROOM AIR CONDITIONING UNIT
CS	COUNTERSINK
CS	COMBINATION SEWER
CS	CONDENSER WATER SUPPLY
CSP	COMBINATION STANDPIPE
CT	COOLING TOWER
CU	CONDENSING UNIT
CUH	CABINET UNIT HEATER
CW	COLD WATER
CWR	CHILLED WATER RETURN
CWS	CHILLED WATER SUPPLY
CYL	CYLINDER
D	DRAIN
D	DIFFUSER
DB	DECIBEL
DB	DRY BULB
DBL	DOUBLE
DC	DIRECT CURRENT
DC	DUST COLLECTOR
DE	DEIONIZED WATER
DEPT	DEPARTMENT
DF	DRINKING FOUNTAIN
DFR	DIESEL FUEL RETURN
DFS	DIESEL FUEL SUPPLY
DFV	DIESEL FUEL VENT
DH	DUCT HEATER
DI	DISTILLED WATER
DIAG	DIAGONAL
DISCH	DISCHARGE
DISTR	DISTRIBUTION
DSN	DOWNSPOUT NOZZLE
DSP	DRY STANDPIPE
DW	DISHWASHER
EA	EACH
EA	EXHAUST AIR
EAT	ENTERING AIR TEMPERATURE
EDH	ELECTRIC DUCT HEATER
EER	ENERGY EFFICIENCY RATIO
EEW	EMERGENCY EYE WASH
EEWS	EMERGENCY EYE WASH SHOWER
EF	EXHAUST FAN
EFF	EFFICIENCY
EH	ELECTRICAL HEATER
ELEV	ELEVATOR
EMER	EMERGENCY
ENCL	ENCLOSURE
ESP	EXTERNAL STATIC PRESSURE
EST	ESTIMATE
ET	EXPANSION TANK
EWC	ELECTRIC WATER COOLER
EWT	ENTERING WATER TEMPERATURE
EXH	EXHAUST
EXP	EXPOSED
F	FAHRENHEIT
F	FURNACE
F	FACE
F.V.	FIELD VERIFY
FA	FIRE ALARM
FA	FACE
FA	FRESH AIR
FAA	FIRE ALARM ANNUNCIATOR
FAB	FABRICATE(D)
FACP	FIRE ALARM CONTROL PANEL
FCO	FLOOR CLEAN OUT
FCU	FAN COIL UNIT
FD	FLOOR DRAIN
FD	FIRE DAMPER
FDC	FIRE DEPARTMENT CONNECTION
FDNDR	FOUNDATION DRAIN
FE	FIRE EXTINGUISHER
FEC	FIRE EXTINGUISHER CABINET
FF	FINISH FLOOR
FH	FIRE HYDRANT
FHC	FIRE HOSE CABINET
FIX	FIXTURE
FLEX	FLEXIBLE
FM	FIRE MAIN
FM	FORCE MAIN
FME	FLOW MEASURING EQUIPMENT
FOF	FUEL OIL FILL
FOR	FUEL OIL RETURN
FOS	FUEL OIL SUPPLY
FOV	FUEL OIL VENT
FPD	FIRE PUMP DISCHARGE
FPM	FEET PER MINUTE
FS	FLOOR SINK
FSD	FIRE SMOKE DAMPER
FT	FIN TUBE
FVC	FIRE VALVE CABINET
G	GRILLE
G	NATURAL GAS
GA	GAUGE
GAL	GALLON
GALV	GALVANIZED
GCO	GRADE CLEAN OUT
GFI, GFCI	GROUND FAULT CIRCUIT INTERRUPTER
GHR	GLYCOL-WATER HEATING RETURN
GHS	GLYCOL-WATER HEATING SUPPLY
GPD	GALLONS PER DAY
GPH	GALLONS PER HOUR
GPM	GALLONS PER MINUTE
GV	GATE VALVE
GV	GREASE VENT
GVBF	GREASE VENT BELOW FLOOR
GW	GREASE WASTE
HB	HOSE BIB
HCR	HOT/CHILLED WATER RETURN
HCS	HOT/CHILLED WATER SUPPLY
HGR	HANGER
HID	HIGH INTENSITY DISCHARGE
HP	HORSE POWER
HP	HEAT PUMP
HP	HIGH PRESSURE
HPC	HIGH PRESSURE STEAM CONDENSATE
HPNG	HIGH PRESSURE NATURAL GAS
HPR	HIGH PRESSURE STEAM RETURN
HPS	HIGH PRESSURE STEAM SUPPLY
HR	HOUR
HTG	HEATING
HTR	HEATER
HTWR	HIGH TEMPERATURE HOT WATER RETURN
HTWS	HIGH TEMPERATURE HOT WATER SUPPLY
HUM	HUMIDIFIER
HV	HEATING VENTILATING UNIT
HVAC	HEATING VENTILATING AND AIR CONDITIONING
HW	DOMESTIC HOT WATER
HWC	DOMESTIC HOT WATER RECIRCULATING
HWR	HEATING WATER RETURN
HWS	HEATING WATER SUPPLY
HX	HEAT EXCHANGER
HZ	HERTZ (FREQUENCY)
IAQ	INDOOR AIR QUALITY
IAW	IN ACCORDANCE WITH
ID	INSIDE DIAMETER
IE	INVERT ELEVATION
IES	ILLUMINATING ENGINEERING SOCIETY
IH	INTAKE HOOD
INSUL	INSULATION
IP	IRON PIPE
IW	INDIRECT WASTE
JAN	JANITOR
JB	JUNCTION BOX
KH	KITCHEN HOOD
LAT	LEAVING AIR TEMPERATURE
LAV	LAVATORY
LF	LINEAR FOOT
LG	LENGTH (LONG)
LIN	LINEAR
LOX	LIQUID OXYGEN
LPG	LIQUIFIED PETROLEUM GAS
LPS	LOW PRESSURE STEAM SUPPLY
LS	LAWN SPRINKLER
LTD	LINED TRANSFER DUCT
LV	LOUVER
LWT	LEAVING WATER TEMPERATURE
MA	MIXED AIR
MAINT	MAINTENANCE
MAN	MANUAL
MATL	MATERIAL
MAU	MAKEUP AIR UNIT
MAV	MANUAL AIR VENT
MBH	THOUSAND BTU PER HOUR
MFRG	MANUFACTURING
ML	MOTORIZED LOUVER
MPG	MEDIUM PRESSURE GAS
MTD	MOUNTED
MTG	MOUNTING
MTWR	MEDIUM TEMP HOT WATER RETURN
MTWS	MEDIUM TEMP HOT WATER SUPPLY
MV	MEDICAL VACUUM
N	NITROGEN
N.C.	NORMALLY CLOSED
N.O.	NORMALLY OPEN
NEC	NATIONAL ELECTRIC CODE
NEMA	NATIONAL ELECTRICAL MANUFACTURERS ASSN.
NO	NUMBER
NOM	NOMINAL
O&M	OPERATION AND MAINTENANCE
OA	OUTSIDE AIR
OD	OUTSIDE DIAMETER
ORD	OVERFLOW ROOF DRAIN
OVFL	OVERFLOW
OX	OXYGEN
P	PUMP
P/T	PRESSURE/TEMPERATURE TEST PORT
PB	PULL BOX
PB	PUSH BUTTON
PC	PUMPED CONDENSATE
PCF	POUNDS PER CUBIC FOOT
PD	PRESSURE DROP
PD	PUMP DISCHARGE
PDI	PLUMBING & DRAINAGE INSTITUTE
PERF	PERFORATED
PERP	PERPENDICULAR
PG	PRESSURE GAUGE
PI	POINT OF INTERSECTION
PI	PRESSURE INDICATOR
PL	PLATE
PLBG	PLUMBING
PNEU	PNEUMATIC
PNL	PANEL
POC	POINT OF CONNECTION
PR	PAIR
PSI	POUNDS PER SQUARE INCH
PT	PLASTER TRAP
PVC	POLYVINYL CHLORIDE
PWR	POWER
R	RISER
RA	RETURN AIR
RAD	RADIUS
RAD	RADIATOR
RCP	REFLECTED CEILING PLAN
RCP	REINFORCED CONCRETE PIPE
RCU	RECIPROCATING CHILLER UNIT
RD	ROOF DRAIN
RD	REFRIGERANT DISCHARGE
REF	REFERENCE
REFR	REFRIGERANT
REG	REGISTER
REM	REMOVABLE
RF	RETURN FAN
RH	RELATIVE HUMIDITY
RH	REFLIEF HOOD
RHC	REHEAT COIL
RHG	REFRIGERANT HOT GAS
RL	REFRIGERANT LIQUID
RPM	REVOLUTIONS PER MINUTE
RS	REFRIGERANT SUCTION
RTU	ROOF TOP UNIT
S	SMOKE DAMPER
S	SANITARY SEWER
S	SPRINKLER LINE
SA	SUPPLY AIR
SAN	SANITARY WASTE
SC	SECURITY
SCW	SOFT COLD WATER
SD	SMOKE DETECTOR
SE	STEAM EXHAUST VENT
SGL	SINGLE
SH	SHOWER
SHW	SOFT HOT WATER
SK	SINK
SM	SPRINKLER MAIN
SP	STATIC PRESSURE (H2O)
SP	STAND PIPE
SPK	SPRINKLER
SQ	SQUARE
SS	STAINLESS STEEL
SS	SERVICE SINK
SST	SECONDARY STORM DRAINAGE
ST	STORM DRAINAGE
STOR	STORAGE
SUSP	SUSPENDED
SV	SOLENOID VALVE
SWBD	SWITCHBOARD
SWP	STEAM WORKING PRESSURE
T	TEMPERED
T	THERMOSTAT
T&B	TOP AND BOTTOM
TA	TRANSFER AIR
TB	TERMINAL BOX
TC	TEMPERATURE CONTROL
TD	TRANSFER DUCT
TEMP	TEMPERATURE
THK	THICK(NESS)
TMV	THERMOSTATIC MIXING VALVE
TOIL	TOILET
TPV	TRAP PRIMER
TS	TEMPERATURE SENSOR
TSP	TOTAL STATIC PRESSURE
TT	TEMPERATURE TRANSMITTER
UC	UNIT COOLER
UG	UNDERGROUND
UH	UNIT HEATER
UL	UNDERWRITERS LABORATORIES
UR	URINAL
UTIL	UTILITY
UV	UNIT VENTILATOR
V	VOLT
V	VENT
V	VACUUM
VA	VOLT-AMPERE
VA	VALVE
VAC	VACUUM
VAV	VARIABLE AIR VOLUME
VBF	VENT BELOW FLOOR
VCP	VITRIFIED CLAY PIPE
VD	VOLUME DAMPER
VEL	VELOCITY
VENT	VENTALATOR(TION)
VFD	VARIABLE FREQUENCY DRIVE
VOL	VOLUME
VP	VACUUM PUMP
VSMP	VARIABLE SPEED MOTOR CONTROLLER
VTR	VENT THROUGH ROOF
W	WIRE
W	WATER SERVICE
W	WIDE
W	WASTE (PLUG)
W	WATT
WB	WET BULB
WC	WATER COLUMN
WC	WATER CLOSET
WCC	WATER COOLED CONDENSER
WCL	WATER CLOSET/LAVATORY COMBINATION
WCO	WALL CLEAN OUT
WF	WASH FOUNTAIN
WFMD	WATER FLOW MEASURING DEVICE
WG	WIRE GUARD
WH	WALL HYDRANT
WH	WATER HEATER
WHA	WATER HAMMER ARRESTOR
WP	WEATHER-PROOF (NEMA 3R)
WP	WEATHERPROOF
WPB	WHIRLPOOL BATH
WSP	WET STAND PIPE
WT	WEIGHT
YH	YARD HYDRANT
ZCB	ZONE CONTROL BOX
ZCV	ZONE CONTROL VALVE

SHEET INDEX

Fire Protection
FP1.1 OVERALL FIRST FLOOR FIRE PROTECTION PLAN

Plumbing
P1.1 OVERALL FIRST FLOOR PLUMBING PLAN

P4.1 WASTE & VENT RISER DIAGRAMS

Mechanical
M0.1A MECHANICAL SYMBOLS & ABBREVIATIONS

M1.1 HVAC PLANS

M5.1 MECHANCIAL DETAILS, SCHEDULES, CONTROLS
M5.2 MECHANICAL EQUIPMENT AND SCHEDULES
M5.3 MECHANICAL EQUIPMENT AND SCHEDULES
M5.4 MECHANICAL EQUIPMENT AND SCHEDULES
M5.5 MECHANICAL EQUIPMENT AND SCHEDULES

HVAC SYMBOLS

SCHEMATIC	3D	DESCRIPTION
EA	EA	GENERAL EXHAUST AIR
GEA	GEA	GREASE EXHAUST AIR
RA	RA	RETURN AIR
OA	OA	OUTSIDE AIR
SA	SA	SUPPLY AIR
		DIFFUSER (SUPPLY)
		GRILLE (RETURN)
		GRILLE (EXHAUST)
		WALL REGISTER
		LINEAR DIFFUSER (SLOT)
AFMS	AFMS	AIR FLOW MEASURING STATION
BDD	BDD	BACKDRAFT DAMPER
RD	RD	BAROMETRIC RELIEF DAMPER
DP	DP	DIFFERENTIAL PRESSURE SENSOR
		DUCT DETECTOR
GD	GD	GRAVITY DAMPER
M	M	MOTORIZED DAMPER
PR	PR	PRESSURE REDUCING DAMPER
SB	SB	SECURITY BARS
SP	SP	STATIC PRESSURE SENSOR
VD	VD	VOLUME DAMPER
RVD	RVD	REMOTE VOLUME DAMPER
F	F	FIRE DAMPER
FS	FS	COMBINATION FIRE / SMOKE DAMPER
S	S	SMOKE DAMPER
		ROUND DUCT UP
		RECTANGULAR DUCT UP
		OVAL DUCT UP
		ROUND DUCT DOWN
		RECTANGULAR DUCT DOWN
		OVAL DUCT DOWN
		DUCT WITH INSULATION
		DUCT WITH LINING
		FLEXIBLE DUCT
		TRANSFER DUCT
		DUCT SMOKE DETECTOR
		SUPPLY ARROW
		RETURN ARROW
		EXHAUST ARROW
UC 100		DOOR UNDERCUT ARROW WITH CFM
D-1 12"x12" 200 CFM		DIFFUSER, REGISTER OR GRILLE TAG NECK SIZE (00"x00" - SQ / RECT) (0"ø ROUND) AIR FLOW (CUBIC FEET PER MINUTE)
24"x12"		TYPICAL DUCT - SIZE AS INDICATED (WIDTH x DEPTH) SIZE INDICATED FREE AREA
DDC		MECHANICAL EQUIPMENT TAG
		MECHANICAL EQUIPMENT CLEARANCE
CO2		CARBON DIOXIDE SENSOR - WALL MOUNTED
CO2		CARBON DIOXIDE SENSOR - CEILING MOUNTED
CO		CARBON MONOXIDE SENSOR - WALL MOUNTED
CO		CARBON MONOXIDE SENSOR - CEILING MOUNTED
H		HUMIDISTAT - WALL MOUNTED
H		HUMIDISTAT - CEILING MOUNTED
NO2		NITROGEN DIOXIDE SENSOR - WALL MOUNTED
NO2		NITROGEN DIOXIDE SENSOR - CEILING MOUNTED
P		PRESSURE SENSOR - WALL MOUNTED
P		PRESSURE SENSOR - CEILING MOUNTED
S		SENSOR - WALL MOUNTED
S		SENSOR - CEILING MOUNTED
T		THERMOSTAT - WALL MOUNTED
T		THERMOSTAT - CEILING MOUNTED

GENERAL SYMBOLS

	POINT OF DISCONNECT - DEMOLITION REMOVED FROM EXISTING
	POINT OF CONNECTION - NEW CONNECTS TO EXISTING
	AREA NOT IN CONTRACT

PIPING ANNOTATIONS

SCHEMATIC	3D	DESCRIPTION
		EXISTING TO REMAIN - (E) or EXIST
		ITEM TO BE DEMOLISHED - (D) or DEMO
18" CWS	18" CWS	PIPE SIZE TAG (DIAMETER WITH SYSTEM NAME)
		ABOVE GROUND PIPING
		BELOW GROUND PIPING
1/8" / 12" SLOPE	1/8" / 12" SLOPE	PIPE SLOPE
IE = -93' - 1"	IE = -93' - 8"	PIPE INVERT ELEVATION
DDC		MECHANICAL EQUIPMENT TAG
		MECHANICAL EQUIPMENT CLEARANCE

PLUMBING SYMBOLS

SCHEMATIC	3D	DESCRIPTION
CW	CW	DOMESTIC COLD WATER
		DOMESTIC COLD WATER (LINETYPE)
HW	HW	DOMESTIC HOT WATER
		DOMESTIC HOT WATER (LINETYPE)
110 HW	110 HW	DOMESTIC HOT WATER (110 °F)
140 HW	140 HW	DOMESTIC HOT WATER (140 °F)
HWC	HWC	DOMESTIC HOT WATER RECIRCULATING
		DOMESTIC HOT WATER RECIRCULATING (LINETYPE)
110 HWC	110 HWC	DOMESTIC HOT WATER RECIRCULATING (110 °F)
140 HWC	140 HWC	DOMESTIC HOT WATER RECIRCULATING (140 °F)
RD	RD	ROOF DRAIN
ORD	ORD	OVERFLOW ROOF DRAIN
SD	SD	STORM DRAIN
G	G	NATURAL GAS
GV	GV	GREASE VENT
GW	GW	GREASE WASTE
W	W	SANITARY WASTE
V	V	SANITARY VENT
CO	CO	CLEAN OUT
WCO	WCO	WALL CLEAN OUT
FCO	FCO	FLOOR CLEAN OUT
GCO	GCO	GRADE CLEAN OUT (DOUBLE CLEAN OUT)
		FLOOR DRAIN / FLOOR SINK
		ROOF DRAIN / OVERFLOW DRAIN
		DOWNSPOUT NOZZLE
		WALL HYDRANT
		HOSE BIBB
		WATER HAMMER ARRESTER
		NATURAL GAS OUTLET
XX		RISER TAG
8" ORD- 1,500 SF		ROOF DRAIN TAG
3" FS-		PLUMBING FIXTURE TAG

* NOTE *

ALL OF NOTES ON THIS SHEET ARE TO BE APPLIED TO ALL OTHER DRAWINGS IN THIS SET.

THE SYMBOLS AND ABBREVIATIONS SHOWN ON THIS SHEET MAY OR MAY NOT BE USED IN THIS SET OF DRAWINGS.

MECHANICAL PIPING SYSTEMS

SCHEMATIC	3D	DESCRIPTION
HWR	HWR	HOT WATER RETURN
HWS	HWS	HOT WATER SUPPLY
CD	CD	CONDENSATE DRAIN
SCD	SCD	SECONDARY CONDENSATE DRAIN

FIRE PROTECTION SYMBOLS

SCHEMATIC	3D	DESCRIPTION
DFP	DFP	COMBINATION FIRE AND DOMESTIC WATER
DS	DS	FIRE PROTECTION DRY
F	F	FIRE PROTECTION OTHER
PA	PA	FIRE PROTECTION PRE-ACTION
WS	WS	FIRE PROTECTION WET
		ALARM VALVE, WET
		ALARM VALVE, DRY
		FIRE PROTECTION RISER
		FIRE DEPARTMENT CONNECTION
		SPRINKLER HEAD, PENDANT
		SPRINKLER HEAD, PENDANT
		SPRINKLER HEAD, SIDE WALL
FS		FLOW SWITCH
PS		PRESSURE SWITCH
		OS&Y VALVE
		OS&Y VALVE (INDICATING)

PIPING VALVES AND FITTINGS

SCHEMATIC	3D	DESCRIPTION
		PIPE DROP
		PIPE RISE
		PIPE TEE DOWN
		PIPE TEE UP
		CONCENTRIC REDUCER
		ECCENTRIC REDUCER
		PIPE CAP
		PIPE ALIGNMENT GUIDE
		PIPE ANCHOR
		FLOW DIRECTION
		EXPANSION JOINT
		FLEXIBLE CONNECTION
		UNION
		BALANCING VALVE
		BALANCING VALVE W/ METERING POINTS
		BALL VALVE
		BUTTERFLY VALVE
		CHECK VALVE
		STEAM TRAP
		GATE VALVE
		CIRCUIT SETTER
		MANUAL AIR VENT
		AUTOMATIC AIR VENT
		PRESSURE GAUGE
		SOLENOID VALVE
		AUTOMATIC CONTROL VALVE 2-WAY
		AUTOMATIC CONTROL VALVE 3-WAY
		AUTOMATIC FLOW CONTROL VALVE
		STRAINER
		PRESSURE AND TEMPERATURE TEST PORT
		THERMOMETER
		PRESSURE REDUCING VALVE (WATER SYSTEMS) PRESSURE REGULATING VALVE (GAS SYSTEMS)
		RELIEF VALVE
		FLOW MEASURING DEVICE
		BACKFLOW PREVENTER

DLR Group
© DLR Group

REGISTERED PROFESSIONAL ENGINEER 95079PE OREGON JULY 21, 2016 HOWARD STEPHEN REIGH

EXPIRES: 12/31/2022

CULINARY CLASSROOM
Westview High School - Beaverton School District
4200 NW 185th Ave, Portland, OR 97229

BID & PERMIT SET
02/18/21
REVISIONS

74-21106-00

MECHANICAL SYMBOLS & ABBREVIATIONS

M0.1A

BIM 360://74-21106-00 Westview HS Culinary/74-21106-00_WHSC_MEP_2020.rvt
3/12/2021 1:20:14 PM

SHEET NOTES

1 RELOCATED EXISTING GRILLES.

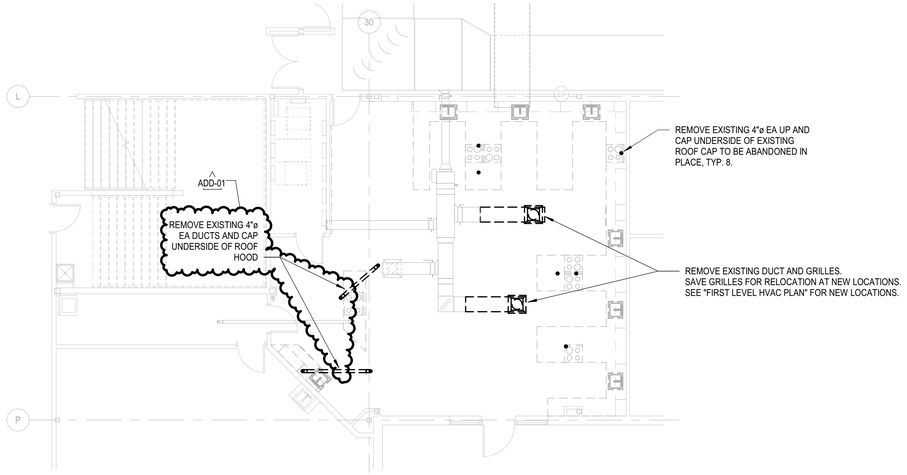

N TRUE

FIRST LEVEL HVAC DEMOLITION PLAN

SCALE: 1/8" = 1'-0"

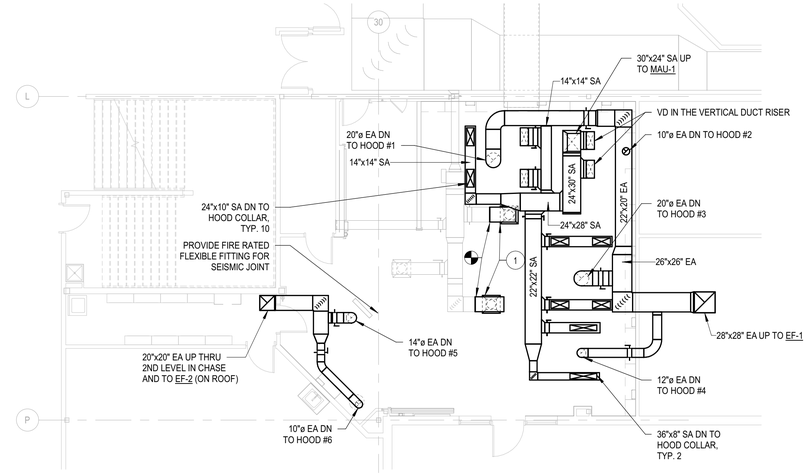

N TRUE

FIRST LEVEL HVAC PLAN

SCALE: 1/8" = 1'-0"

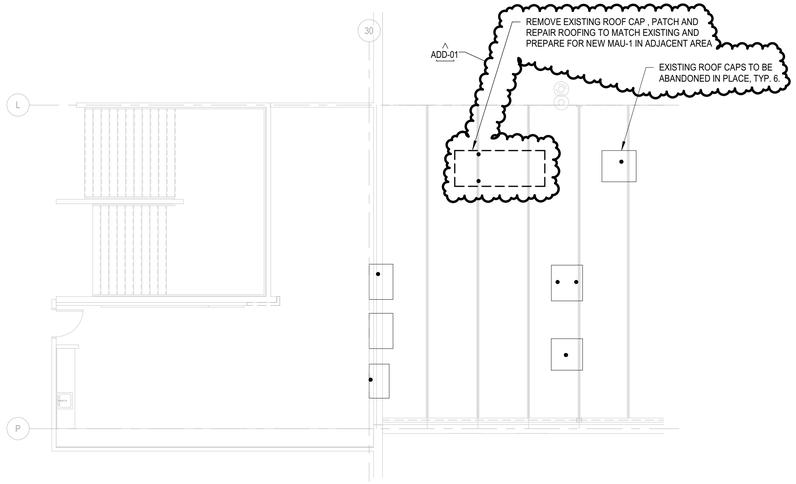

N TRUE

SECOND LEVEL HVAC DEMOLITION PLAN

SCALE: 1/8" = 1'-0"

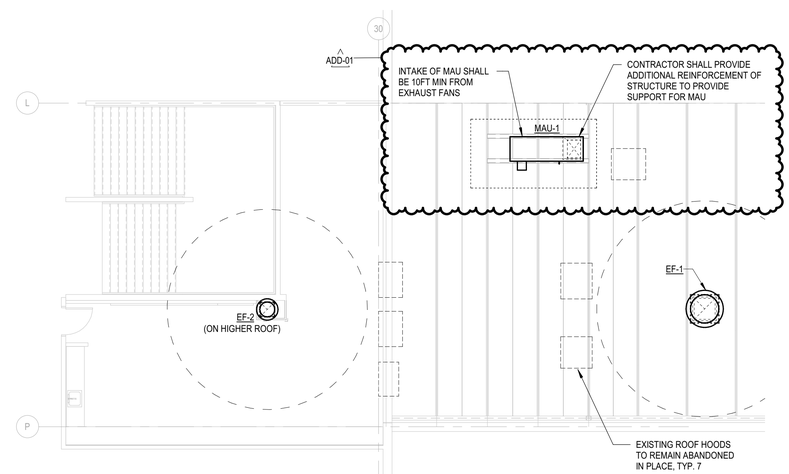

N TRUE

SECOND LEVEL HVAC PLAN

SCALE: 1/8" = 1'-0"

DLR Group

© DLR Group

REGISTERED PROFESSIONAL ENGINEER 95079PE OREGON JULY 01, 2016 RICHARD STEPHEN REIGH

EXPIRES: 12/31/2022

CULINARY CLASSROOM

Westview High School - Beaverton School District

4200 NW 185th Ave, Portland, OR 97229

BID & PERMIT SET

02/18/21

REVISIONS

ADD-01 3/17/21 ADD-01

74-21106-00

HVAC PLANS

M1.1

BIM 360://74-21106-00 Westview HS Culinary/74-21106-00_WHSC_MEP_2020.rvt

3/12/2021 1:20:18 PM

A B C D E

1 2 3 4

ADD-01

NOTES :

CURB & ROOF OPENING EXACT DIMENSIONS SHALL BE DETERMINED BY FAN MFR. COORDINATE WITH STRUCTURAL REQUIREMENTS.

MOUNT TOP OF CURB LEVEL. VERIFY ROOF SLOPE & FABRICATE CURD ACCORDINGLY.

BELT DRIVE FAN SHOWN. DIRECT DRIVE FAN SIMILAR.

INTERLOCK DAMPER TO OPERATE WITH FAN.

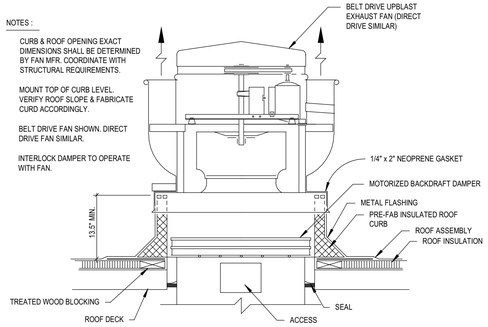

1 M5.1 UPBLAST CENTRIFUGAL ROOF FAN DETAIL
NO SCALE

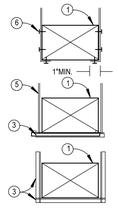

KEY NOTES:

1. DUCT
2. SHEET METAL STRAP 1" (25.4mm) WIDE, OF SAME METAL GAUGE AS DUCT.
3. STEEL ANGLE, NOT LESS THAN 1"x 1"x 1/8" (25.4 x 25.4 x 3 mm), SIZED TO MATCH DUCT.
4. SHEET METAL BAND, 1" (25.4mm) WIDE OF SAME METAL GAUGE AS DUCT.
5. ALL THREAD HANGER ROD WITH ACCESSORIES AS USED FOR LIGHT PIPE HANGER.
6. SELF TAPPING CADMIUM PLATED HEX HEADED SHEET METAL SCREW STRAPS TO BE TIGHT AGAINST DUCT.

HANGER SIZES FOR RECTANGULAR DUCT			
MAX. LENGTH ANY SIDE	HANGER	HORIZONTAL SUPPORT ANGLE	MAXIMUM SPACING
30"	1"x 18 GAUGE STRAP	NONE REQUIRED	10'-0"
36"	1/4" ROUND ROD	1-1/2" x 1-1/2" x 1/8"	8'-0"
48"	1/4" ROUND ROD	2" x 2" x 1/8"	8'-0"
60"	5/16" ROUND ROD	2" x 2" x 1/8"	8'-0"
84"	3/8" ROUND ROD	2" x 2" x 1/8"	8'-0"

2 M5.1 DUCT HANGING DETAIL
NO SCALE

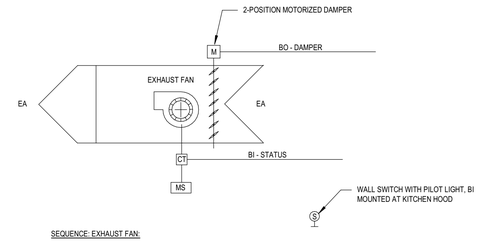

SEQUENCE: EXHAUST FAN:

RUN CONDITIONS - SWITCHED:
THE UNIT SHALL RUN WHEN SWITCH IS ON.

DAMPER:
DAMPER SHALL BE INTERLOCKED TO OPEN ANYTIME THE FAN IS COMMANDED TO RUN.

3 M5.1 EXHAUST FAN - SWITCHED (EF-2)
NO SCALE

REFERENCE ARCHITECTURAL DETAIL 4B/A3.1 FOR CURB INSTALLATION

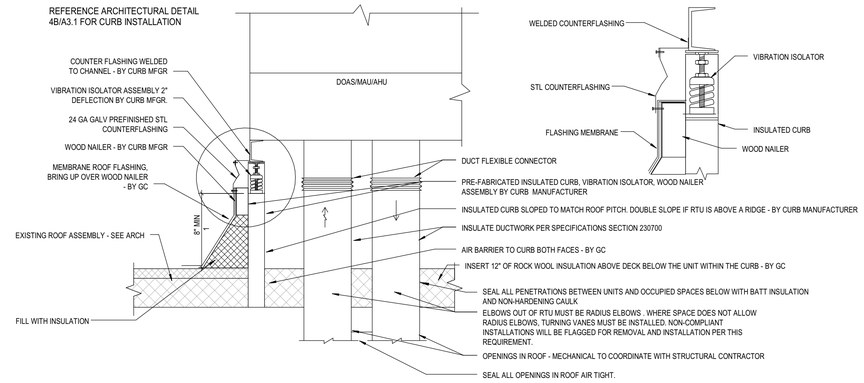

4 M5.1 MAU MOUNTING DETAIL
NO SCALE

MAU TO BE PROVIDED WITH FACTORY CONTROLLER AND INTERLOCKED WITH EXHAUST FAN.

PROVIDE A WALL SWITCH TO TURN ON THE EXHAUST FANS, AND LAND CONTACTS FROM EXHAUST FAN TO POINTS SF01 AND SFC1 ON MAU FACTORY CONTROLLER.

ANY WORK DONE ON BUILDING MANAGEMENT SYSTEM SHALL BE PERFORMED BY TRANE.

ADD-01

EXHAUST FAN (EF-1)

EXHAUST FAN SHALL RUN WHEN COMMANDED BY LOCAL OPERATOR SWITCH LOCATED AT HOOD OR WHEN HOOD TEMPERATURE INTERLOCK INDICATES THE PRESENCE OF HEAT. SWITCH WITH PILOT LIGHT BY DIV. 230900.

ALARMS SHALL BE PROVIDED AS FOLLOWS:
- EXHAUST FAN FAILURE: COMMANDED ON, BUT THE STATUS IS OFF.
- EXHAUST FAN IN HAND: COMMANDED OFF, BUT THE STATUS IS ON.
- EXHAUST FAN RUNTIME EXCEEDED: STATUS RUNTIME EXCEEDS A USER DEFINABLE LIMIT (ADJ.).

EXHAUST AIR DAMPER:
THE EXHAUST AIR DAMPER SHALL OPEN ANYTIME THE FAN RUNS AND SHALL CLOSE ANYTIME THE FAN STOPS. THE EXHAUST AIR DAMPER SHALL CLOSE 30 SEC (ADJ.) AFTER THE FAN STOPS.

INDIRECT GAS FIRED MAKEUP AIR UNIT SEQUENCE OF OPERATIONS (MAU-1)

RUN CONDITIONS - SCHEDULED:
THE UNIT SHALL RUN ANYTIME EF-1 IS ENERGIZED. THE UNIT SHALL RUN ACCORDING TO A USER DEFINABLE TIME SCHEDULE IN THE FOLLOWING MODES:

OCCUPIED MODE: THE UNIT SHALL MAINTAIN
- 75°F (ADJ.) COOLING SETPOINT
- 70°F (ADJ.) HEATING SETPOINT.

UNOCCUPIED MODE (NIGHT SETBACK): THE UNIT SHALL MAINTAIN
- 85°F (ADJ.) COOLING SETPOINT.
- 55°F (ADJ.) HEATING SETPOINT.

ALARMS SHALL BE PROVIDED AS FOLLOWS:
- HIGH ZONE TEMP: IF THE ZONE TEMPERATURE IS GREATER THAN THE COOLING SETPOINT BY A USER DEFINABLE AMOUNT (ADJ.).
- LOW ZONE TEMP: IF THE ZONE TEMPERATURE IS LESS THAN THE HEATING SETPOINT BY A USER DEFINABLE AMOUNT (ADJ.).

ZONE SETPOINT ADJUST:
THE OCCUPANT SHALL BE ABLE TO ADJUST THE ZONE TEMPERATURE HEATING AND COOLING SETPOINTS AT THE ZONE SENSOR.

THE SUPPLY FAN SHALL RUN ANYTIME THE UNIT IS COMMANDED TO RUN. TO PREVENT SHORT CYCLING, THE SUPPLY FAN SHALL HAVE A USER DEFINABLE (ADJ.) MINIMUM RUNTIME, UNLESS SHUTDOWN ON SAFETIES.

ALARMS SHALL BE PROVIDED AS FOLLOWS:
- SUPPLY FAN FAILURE: COMMANDED ON, BUT THE STATUS IS OFF.
- SUPPLY FAN IN HAND: COMMANDED OFF, BUT THE STATUS IS ON.
- SUPPLY FAN RUNTIME EXCEEDED: STATUS RUNTIME EXCEEDS A USER DEFINABLE LIMIT (ADJ.).

MAU SUPPLY FAN VFD SHALL BE SET AT CONSTANT SPEED. VFD SHALL BE INITIALLY USED FOR BALANCING.

TEMPERATURE CONTROL

TEMPERATURE DIFFERENTIAL BETWEEN MAKE UP AIR AND SPACE TEMPERATURE SETPOINT SHALL NOT EXCEED 10 DEG F.

GAS FURNACE:
THE CONTROLLER SHALL MEASURE THE SUPPLY AIR TEMPERATURE AND MODULATE THE GAS VALVE TO MAINTAIN ITS HEATING SETPOINT AND MINIMUM SUPPLY AIR TEMEPERATURE. DISCHARGE AIR TEMPERATURE SHALL BE LIMITED TO 85°F (ADJ.)

THE HEATING SHALL BE ENABLED WHENEVER:
- OUTSIDE AIR TEMPERATURE IS LESS THAN 65°F (ADJ.).
- AND THE SUPPLY AIR TEMPERATURE IS BELOW HEATING SETPOINT.
- AND THE FAN STATUS IS ON.

DX COOLING:
THE UNITS DX SYSTEM SHALL OPERATE ON INTERNAL CONTROLS TO MAINTAIN THE TEMPERATURE SETPOINT AS DETERMINED BY THE SPACE TEMPERATURE SENSOR.

THE COOLING SHALL BE ENABLED WHENEVER:
- OUTSIDE AIR TEMPERATURE IS GREATER THAN 60°F.
- AND THE ZONE TEMPERATURE IS BELOW COOLING SETPOINT.
- AND THE SUPPLY FAN STATUS IS ON.
- AND THE HEATING IS NOT ACTIVE.

CONTROL POINTS:
ANY CONTROL POINT NOT MADE AVAILABLE BY THE UNIT CONTROLLER TO EMCS SHALL BE HARDWIRED IN THE FIELD TO PROVIDE INDICATED INFORMATION.

ADD-01

PROVIDE AN ALARM FOR ICE MACHINE CONDENSATE OVERFLOW DETECTION SWITCH LOCATED NEXT TO CULINARY CLASSROOM

REMOTE SENSORS

- T — ZONE TEMPERATURE, AI; TEMPERATURE SETPOINT, AI; TIME DOVERRIDE, BI
- S — HOOD TEMPERATURE FOR FAN INTERLOCK, BI
- S — SWITCH MOUNTED AT HOOD, BI

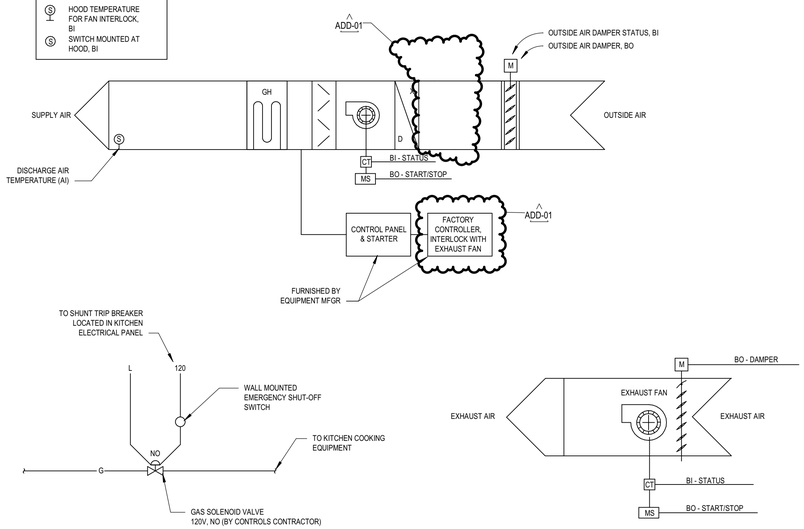

5 M5.1 MAKE-UP AIR UNIT & KITCHEN EXHAUST FAN (MAU-1/EF-1)
NO SCALE

DLR Group
© DLR Group

REGISTERED PROFESSIONAL ENGINEER
95079PE
OREGON
JULY 21, 2015
RICHARD STEPHEN REIGH
EXPIRES: 12/31/2022

CULINARY CLASSROOM

Westview High School - Beaverton School District

4200 NW 185th Ave, Portland, OR 97229

BID & PERMIT SET
02/18/21
REVISIONS
ADD-01 3/17/21 ADD-01

74-21106-00

MECHANCIAL DETAILS, SCHEDULES, CONTROLS

M5.1

BIM 360://74-21106-00 Westview HS Culinary/74-21106-00_WHSC_MEP_2020.rvt
3/12/2021 1:20:18 PM

EXHAUST FAN INFORMATION

FAN UNIT NO	TAG	QTY	FAN UNIT MODEL #	MANUFACTURER	CFM	ESP	RPM	MOTOR ENCL	HP	BHP		VOLT	FLA	DISCHARGE VELOCITY	WEIGHT (LBS)	SONES
1	EX 36 35 33 32	1	DU300HFA	CAPTIVEAIRE	7512	1.750	822	TEFC,PREMIUM	7.500	3.9540	3	460	11.1	1170 FPM	670	19.3
2	ITEM 15 21 EX	1	DU180HFA	CAPTIVEAIRE	2700	1.500	1261	ODP,PREMIUM	3.000	1.4050	3	460	4.3	624 FPM	186	17.6

CONDENSER DETAILS

FAN UNIT NO	TAG	FAN UNIT MODEL #	CONDENSER NO	TONNAGE	VOLTAGE	PHASE	FREQUENCY	MCA	RLA	MAX FUSE SIZE	MIN WIRE SIZE	SEER
3	MAU 36 35 33 32	A3-D.500-25Z-MPU	1	5	460	3 PHASE	60 HZ	10.5 AMPS	8.5 AMPS	15 AMPS	14 AWG	14
			2	5	460	3 PHASE	60 HZ	10.5 AMPS	8.5 AMPS	15 AMPS	14 AWG	14
			3	5	460	3 PHASE	60 HZ	10.5 AMPS	8.5 AMPS	15 AMPS	14 AWG	14

MUA FAN INFORMATION

FAN UNIT NO	TAG	QTY	FAN UNIT MODEL #	BLOWER	HOUSING	MIN CFM	DESIGN CFM	ESP	RPM	MOTOR ENCL	HP	BHP		VOLT	FLA	MCA	MOCP	WEIGHT (LBS)	SONES
3	MAU 36 35 33 32	1	A3-D.500-25Z-MPU	25Z-3-MOD	A3-D.500	5400	6008	0.500	1662	ODP-ECM	7.250	5.7440	3	460	7.3	9.7A	15A	2435	18.6

COILS

FAN UNIT NO	TAG	COIL TYPE	DESIGN CFM	COOLING											HEATING								
				ENTERING DB TEMP	ENTERING WB TEMP	LEAVING DB TEMP	LEAVING WB TEMP	ENTERING FLUID TEMP	LEAVING FLUID TEMP	FLUID FLOW RATE	PERCENT GLYCOL	TOTAL CAPACITY	SENSIBLE CAPACITY	LATENT CAPACITY	ENTERING DB TEMP	LEAVING DB TEMP	ENTERING FLUID TEMP	LEAVING FLUID TEMP	FLUID FLOW RATE	PERCENT GLYCOL	STEAM PRESSURE	TOTAL CAPACITY	SENSIBLE CAPACITY
3	MAU 36 35 33 32	DX	6008	92.0°F	67.0°F	71.6°F	60.1°F	---	---	---	---	126.8 MBH	126.8 MBH	0.0 MBH	---	---	---	---	---	---	---	---	---

GAS FIRED MAU

FAN UNIT NO	TAG	INPUT BTUs	OUTPUT BTUs	TEMP RISE	REQUIRED INPUT GAS PRESSURE	GAS TYPE	BURNER EFFICIENCY(%)
3	MAU 36 35 33 32	331545	305021	48°F	7 IN. W.C. - 14 IN. W.C.	NATURAL	92

FAN OPTIONS

FAN UNIT NO	TAG	QTY	DESCRIPTION
1	EX 36 35 33 32	1	GREASE BOX.
		1	LOAD REACTOR MOUNTED IN FAN.
2	ITEM 15 21 EX	1	GREASE BOX.
		1	FAN BASE CERAMIC SEAL - INSTALLED AT PLANT - FOR GREASE DUCTS.
		1	LOAD REACTOR MOUNTED IN FAN.
3	MAU 36 35 33 32	1	AC INTERLOCK RELAY - 24VAC COIL.
		1	MOTORIZED BACKDRAFT DAMPER FOR A3-D HOUSING. MEETS AMCA CLASS 1A RATING.
		1	LOW FIRE START.
		1	INLET PRESSURE GAUGE, 0-35".
		1	MANIFOLD PRESSURE GAUGE, -5 TO 15" WC.
		1	DOUBLE WALL STEEL LINER- SIZE 3 DIRECT DRIVE.
		1	FREEZESTAT (10)
		1	15 TON 3 CIRCUIT (5/5/5) MODULAR PACKAGED COOLING OPTION FOR SIZE 3 DF/EH MUA (5,400 TO 7,000 CFM), 460V, 3 PHASE. COOLING THERMOSTAT OR PROGRAMMABLE STAT REQUIRED FOR PROPER OPERATION.
		1	DOWNTURN PLENUM FOR SIZE 3 DX COIL MODULE.
		1	CONDENSER SUPPORT FOR SIZE 3, 15 TON MOD PACKAGE UNIT.
		1	MERV 13 FILTER OPTION FOR SIZE 3 MIXING BOX OR CONDENSER SUPPORT. MIXING BOX OR CONDENSER SUPPORT MUST BE SELECTED FOR THIS OPTION.
		1	COOLING THERMOSTAT AND RELAY (NOT REQ FOR EVAP).

FAN ACCESSORIES

FAN UNIT NO	TAG	EXHAUST			SUPPLY			
		GREASE CUP	GRAVITY DAMPER	WALL MOUNT	SIDE DISCHARGE	GRAVITY DAMPER	MOTORIZED DAMPER	WALL MOUNT
1	EX 36 35 33 32	YES						
2	ITEM 15 21 EX	YES						
3	MAU 36 35 33 32						YES	

CURB ASSEMBLIES

NO	ON FAN	TAG	WEIGHT	ITEM	SIZE
1	# 1	EX 36 35 33 32	75 LBS	CURB	38.500"W X 38.500"L X 30.000"H VENTED.
2	# 2	ITEM 15 21 EX	34 LBS	CURB	26.500"W X 26.500"L X 30.000"H VENTED HINGED.
3	# 3	MAU 36 35 33 32	166 LBS	CURB	35.000"W X 84.000"L X 30.000"H INSULATED.
	# 3			RAIL	6.000"W X 35.000"L X 30.000"H.
	# 3			RAIL	6.000"W X 35.000"L X 30.000"H.

FAN SOUND DATA

FAN UNIT NO	TAG	MOTOR	SOUND DATA			OCTAVE BAND SOUND DATA								
			LWA	SONES @ 5 FT	DBA @ 5 FT	DISTANCE (FT)	63 HZ	125 HZ	250 HZ	500 HZ	1 KHZ	2 KHZ	4 KHZ	8 KHZ
1	EX 36 35 33 32	EXHAUST	81.1	19.3	69.6	5	79.4	90.9	83.3	75.7	73.8	68.9	64.4	59.6
2	ITEM 15 21 EX	EXHAUST	81.5	17.6	70	5	75.9	80.1	87.5	77.4	70.4	68.3	62.2	56.4
3	MAU 36 35 33 32	SUPPLY	81.4	18.6	69.9	5	76.1	83.4	83.4	77.7	74.8	72.2	69.9	67.4

CAPTIVEAIRE
Seattle Office
1309 Pacific Ave. Everett, WA. 98201 PHONE: (425) 212-5996 FAX: (425) 212-5998 EMAIL: reg85@captiveaire.com

Westview HS R5
PORTLAND, OR, 97229

2/5/2021

4727014

JDC-85

3/4" = 1'-0"

MASTER DRAWING

DLR Group
© DLR Group

REGISTERED PROFESSIONAL ENGINEER
95079PE
OREGON
JULY 21, 2016
HOWARD STEPHEN REIGH
EXPIRES: 12/31/2022

CULINARY CLASSROOM

Westview High School - Beaverton School District
4200 NW 185th Ave, Portland, OR 97229

BID & PERMIT SET
02/18/21
REVISIONS

74-21106-00

MECHANICAL EQUIPMENT AND SCHEDULES

M5.2

BIM 360://74-21106-00 Westview HS Culinary/74-21106-00_WHSC_MEP_2020.rvt
3/12/2021 1:20:19 PM

FAN #1 DU300HFA - EXHAUST FAN (EX 36 35 33 32)

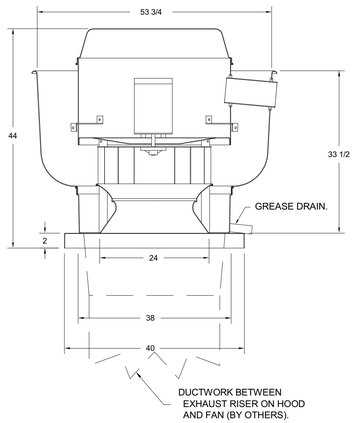

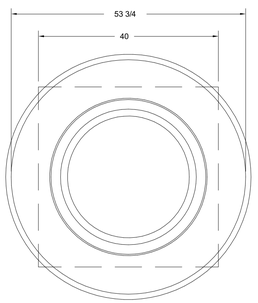

TOP VIEW

FEATURES:

- DIRECT DRIVE CONSTRUCTION (NO BELTS/PULLEYS).
- ROOF MOUNTED FANS.
- RESTAURANT MODEL.
- UL705 AND UL762 AND ULC-S645
- VARIABLE SPEED CONTROL.
- INTERNAL WIRING.
- THERMAL OVERLOAD PROTECTION (SINGLE PHASE).
- HIGH HEAT OPERATION 300°F (149°C).
- GREASE CLASSIFICATION TESTING.
- NEMA 3R SAFETY DISCONNECT SWITCH.

NORMAL TEMPERATURE TEST

EXHAUST FAN MUST OPERATE CONTINUOUSLY WHILE EXHAUSTING AIR AT 300°F (149°C) UNTIL ALL FAN PARTS HAVE REACHED THERMAL EQUILIBRIUM, AND WITHOUT ANY DETERIORATING EFFECTS TO THE FAN WHICH WOULD CAUSE UNSAFE OPERATION.

ABNORMAL FLARE-UP TEST

EXHAUST FAN MUST OPERATE CONTINUOUSLY WHILE EXHAUSTING BURNING GREASE VAPORS AT 600°F (316°C) FOR A PERIOD OF 15 MINUTES WITHOUT THE FAN BECOMING DAMAGED TO ANY EXTENT THAT COULD CAUSE AN UNSAFE CONDITION.

OPTIONS

GREASE BOX.
LOAD REACTOR MOUNTED IN FAN.

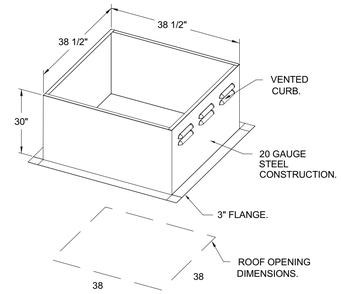

PITCHED CURBS ARE AVAILABLE FOR PITCHED ROOFS.

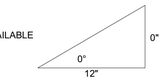

SPECIFY PITCH:
EXAMPLE: 7/12 PITCH = 30° SLOPE.

Exhaust Fan

Wiring	JOB 4727014 - Westv...	
DRAWING NUMBER EXH4727014-1	SHIP DATE 2/5/2021	MODEL DU300HFA

Installed Options

Component Identification

Label	Description	Location
LR-XX	Line/Load Reactor	[X]
MT-01	Fan Motor	[X]
SW-01	Main disconnect switch	[3]

MOTOR INFO

EXHAUST 7.5HP-460V-3P-11.1FLA

ELECTRICAL INFORMATION

MOTOR/CTRL MOP: 20A

NOTES

DENOTES FIELD WIRING
DENOTES INTERNAL WIRING

WIRE COLOR

BK - BLACK	YW - YELLOW
BL - BLUE	GR - GREEN
BR - BROWN	GY - GRAY
OR - ORANGE	PR - PURPLE
RD - RED	PK - PINK
WH - WHITE	

Exhaust Fan

Wiring	JOB 4727014 - Westv...	
DRAWING NUMBER EXH4727014-2	SHIP DATE 2/5/2021	MODEL DU180HFA

Installed Options

Component Identification

Label	Description	Location
LR-XX	Line/Load Reactor	[X]
MT-01	Fan Motor	[X]
SW-01	Main disconnect switch	[3]

MOTOR INFO

EXHAUST 3HP-460V-3P-4.3FLA

ELECTRICAL INFORMATION

MOTOR/CTRL MOP: 15A

NOTES

DENOTES FIELD WIRING
DENOTES INTERNAL WIRING

WIRE COLOR

BK - BLACK	YW - YELLOW
BL - BLUE	GR - GREEN
BR - BROWN	GY - GRAY
OR - ORANGE	PR - PURPLE
RD - RED	PK - PINK
WH - WHITE	

CAPTIVEAIRE
Seattle Office
1309 Pacific Ave, Everett, WA, 98201 PHONE: (425) 212-5996 FAX: (425) 212-5998 EMAIL: reg85@captiveaire.com

Westview HS R5
PORTLAND, OR, 97229

2/5/2021

4727014

JDC-85

3/4" = 1'-0"

MASTER DRAWING

7

DLR Group

© DLR Group

REGISTERED PROFESSIONAL ENGINEER
95079PE
OREGON
JULY 01, 2016
RICHARD STEPHEN REIGH
EXPIRES: 12/31/2022

CULINARY CLASSROOM

Westview High School - Beaverton School District

4200 NW 185th Ave, Portland, OR 97229

BID & PERMIT SET
02/18/21
REVISIONS

74-21106-00

MECHANICAL EQUIPMENT AND SCHEDULES

M5.3

BIM 360://74-21106-00 Westview HS Culinary/74-21106-00_WHSC_MEP_2020.rvt
3/12/2021 1:20:19 PM

FAN #2 DU180HFA - EXHAUST FAN (ITEM 15 21 EX)

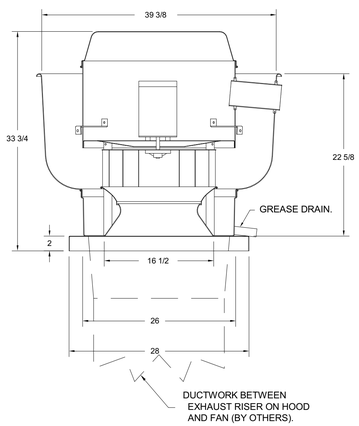

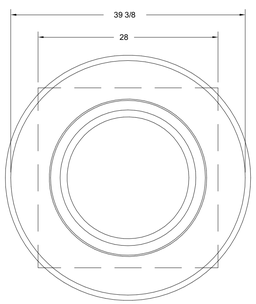

TOP VIEW

FEATURES:

- DIRECT DRIVE CONSTRUCTION (NO BELTS/PULLEYS).
- ROOF MOUNTED FANS.
- RESTAURANT MODEL.
- UL705 AND UL762 AND ULC-S645
- VARIABLE SPEED CONTROL.
- INTERNAL WIRING.
- THERMAL OVERLOAD PROTECTION (SINGLE PHASE).
- HIGH HEAT OPERATION 300°F (149°C).
- GREASE CLASSIFICATION TESTING.
- NEMA 3R SAFETY DISCONNECT SWITCH.

NORMAL TEMPERATURE TEST

EXHAUST FAN MUST OPERATE CONTINUOUSLY WHILE EXHAUSTING AIR AT 300°F (149°C) UNTIL ALL FAN PARTS HAVE REACHED THERMAL EQUILIBRIUM, AND WITHOUT ANY DETERIORATING EFFECTS TO THE FAN WHICH WOULD CAUSE UNSAFE OPERATION.

ABNORMAL FLARE-UP TEST

EXHAUST FAN MUST OPERATE CONTINUOUSLY WHILE EXHAUSTING BURNING GREASE VAPORS AT 600°F (316°C) FOR A PERIOD OF 15 MINUTES WITHOUT THE FAN BECOMING DAMAGED TO ANY EXTENT THAT COULD CAUSE AN UNSAFE CONDITION.

OPTIONS

GREASE BOX.
FAN BASE CERAMIC SEAL - INSTALLED AT PLANT - FOR GREASE DUCTS.
LOAD REACTOR MOUNTED IN FAN.

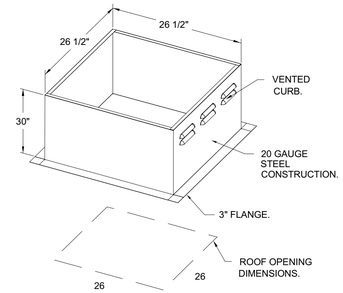

PITCHED CURBS ARE AVAILABLE FOR PITCHED ROOFS.

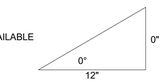

SPECIFY PITCH:
EXAMPLE: 7/12 PITCH = 30° SLOPE.

CAPTIVEAIRE
Seattle Office
1309 Pacific Ave, Everett, WA, 98201 PHONE: (425) 212-5996 FAX: (425) 212-5998 EMAIL: reg85@captiveaire.com

Westview HS R5
PORTLAND, OR, 97229

2/5/2021

4727014

JDC-85

3/4" = 1'-0"

MASTER DRAWING

8

DLR Group
© DLR Group

REGISTERED PROFESSIONAL ENGINEER
95079PE
OREGON
JULY 01, 2016
RICHARD STEPHEN REIGH
EXPIRES: 12/31/2022

CULINARY CLASSROOM

Westview High School - Beaverton School District

4200 NW 185th Ave, Portland, OR 97229

BID & PERMIT SET
02/18/21
REVISIONS

74-21106-00

MECHANICAL EQUIPMENT AND SCHEDULES

M5.4

BIM 360://74-21106-00 Westview HS Culinary/74-21106-00_WHSC_MEP_2020.rvt
3/12/2021 1:20:20 PM

FAN #3 A3-D.500-2SZ.MPU - HEATER:(MAU 36 35 33 32)
1. DIRECT GAS FIRED HEATED MAKE UP AIR UNIT WITH 25" DIRECT DRIVE FAN AND 12" BURNER.
2. INTAKE HOOD WITH EZ FILTERS.
3. DISCHARGE DIRECTION: RIGHT -> LEFT.
4. COOLING INTERLOCK RELAY. (HVAC COIL. 120V CONTACTS. LOCKS OUT BURNER CIRCUIT WHEN AC IS ENERGIZED.
5. MOTORIZED BACK DRAFT DAMPER 30" X 30" FOR SIZE 3 STANDARD & MODULAR HEATER UNITS W/EXTENDED SHAFT. STANDARD GALVANIZED CONSTRUCTION, 3/4" REAR FLANGE, LOW LEAKAGE. NFBUF5-E ACTUATOR INCLUDED.
6. LOW FIRE START. ALLOWS THE BURNER CIRCUIT TO ENERGIZE WHEN THE MODULATION CONTROL IS IN A LOW FIRE POSITION.
7. GAS PRESSURE GAUGE, 0-35", 2.5" DIAMETER, 1/4" THREAD SIZE.
8. GAS PRESSURE GAUGE, -5 TO +15 INCHES WC., 2.5" DIAMETER, 1/4" THREAD SIZE.
9. DOUBLE WALL STEEL LINER FOR DIRECT DRIVE. INCLUDES ROOF, FLOOR, AND DOOR LINERS.
10. FREEZESTAT WITH 10' SENSOR. FACTORY SET AT 35°F AND 10 MINUTES.
11. DX COIL PACKAGE UNIT FOR THIRD CONDENSER. INCLUDES CONTROL VESTIBULE. 3 DFEH MODULAR PACKAGED UNIT. INCLUDES CONDENSER, DX COIL, FILTER/DRYER KIT, HARD START KIT, THERMAL EXPANSION VALVE, R410A REFRIGERANT, AND REFRIGERANT PIPING. (5,400 TO 7,000 CFM) WHEN ORDERED WITH OPPOSITE AIRFLOW CONDENSERS ACCESS AND COIL PIPING WILL REMAIN IN STANDARD POSITION. DRAIN AND SLEEDI WILL MOVE TO THE OPPOSITE SIDE. ANY OTHER CHANGE WILL REQUIRE CLI. CONDENSERS REQUIRE SEPARATE 460V, 3 PHASE POWER SUPPLY UNLESS ORDERED WITH SINGLE POINT CONNECTION. COIL = 9EZ1002B.
12. DOWNTURN PLENUM FOR SIZE 3 COOLING COIL MODULE - REQUIRED FOR DOWN DISCHARGE COOLING COIL APPLICATIONS.
13. SUPPORT SHELL FOR SIZE 3 MODULAR PACKAGE UNIT FOR THIRD CONDENSER. INCLUDES CONTROL VESTIBULE. INCLUDES CONDENSER SUPPORTS. DOES NOT INCLUDE RETURN AIR OR INLET AIR DAMPER.
14. MERV 13 FILTER OPTION FOR SIZE 3 MIXING BOX OR CONDENSER SUPPORT. MIXING BOX OR CONDENSER SUPPORT MUST BE ORDERED WITH UNIT TO ACCEPT THIS OPTION. MERV 13 FILTERS ARE NOT INCLUDED. ORDER 4 FILTERS.
15. DX COOLING INTAKE AIR THERMOSTAT AND RELAYS MOUNTED IN UNIT - SET POINT FOR THERMOSTAT SHOULD BE 85°F.
16. HINGED DOUBLE WALL INSULATED DOOR ASSEMBLY (BURNER/BLOWER/MPU SECTION).

*NOTE: SUPPLY DUCT MUST BE INSTALLED TO MEET SMACNA STANDARDS. A MINIMUM STRAIGHT DUCT LENGTH MUST BE MAINTAINED DOWNSTREAM OF UNIT DISCHARGE AS OUTLINED IN AMCA PUBLICATION 201. WHEN USING RECTANGULAR DUCTWORK, ELBOWS MUST BE RADIUS THROAT, RADIUS BACK WITH TURNING VANES. FLEXIBLE DUCTWORK AND SQUARE THROAT/SQUARE BACK ELBOWS SHOULD NOT BE USED. ANY TRANSITION AND/OR TURNS IN THE DUCTWORK WILL CAUSE SYSTEM EFFECT. SYSTEM EFFECT WILL DRASTICALLY INCREASE STATIC PRESSURE AND REDUCE AIRFLOW. DO NOT RELY ON UNIT TO SUPPORT DUCT IN ANY WAY. FAILURE TO PROPERLY SIZE DUCTWORK MAY CAUSE SYSTEM EFFECTS AND REDUCE PERFORMANCE OF THE EQUIPMENT.
SUGGESTED STRAIGHT DUCT SIZE IS 24" x 24".

SUPPLY SIDE HEATER INFORMATION:

WINTER TEMPERATURE = 27°F.
INPUT RESULTS:
BTUH CALCULATED OFF ACTUAL AIR DENSITY.
OUTPUT
BTUH AT ALTITUDE OF 0.0 FT. = 308092.
INPUT BTUH AT ALTITUDE OF
0.0 FT. = 385115.
OUTPUT BTUH AT ALTITUDE OF 277 FT. =
305021
INPUT BTUH AT ALTITUDE OF 277 FT. = 331544.

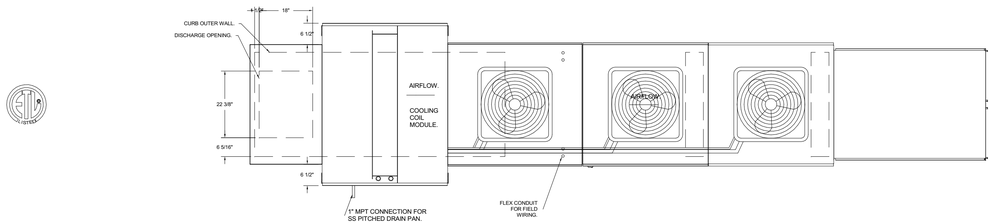

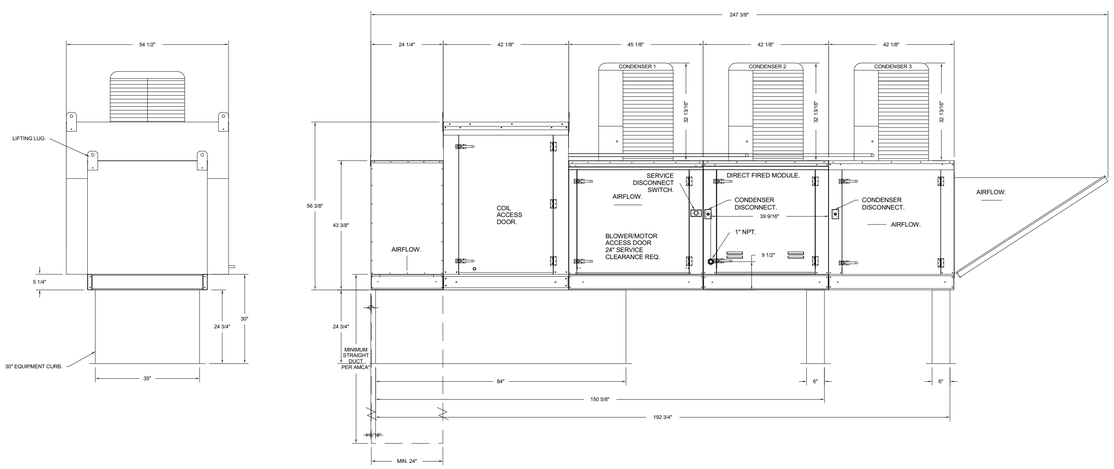

DIRECT FIRED (DF) PROFILE PLATE ASSEMBLY

DIRECT FIRED PROFILE PLATE SPECIFICATIONS:
DESCRIPTION:
DIRECT FIRED BURNERS SHALL HAVE PATENTED (US PATENT NO.: US6626238D), SELF-ADJUSTING PROFILE PLATES DESIGNED TO ENSURE PROPER AIR VELOCITY AND PRESSURE DROP ACROSS THE BURNER. PROFILE PLATES SHALL BE CAPABLE OF MAINTAINING THE ENTIRE BURNER PRODUCT EMISSIONS LEVELS TO: - DIRECT FIRED MAXIMUM OF 50PM OF CARBON MONOXIDE (CO) AND 0.5PPM OF NITROGEN DIOXIDE (NO2). - DIRECT FIRED UNITS SHALL BE CONFIGURED WITH THE BLOWER MOUNTED DOWNSTREAM OF THE BURNER. THIS ARRANGEMENT WILL PROVIDE A CONSISTENT AIRFLOW, REGARDLESS OF INLET AIR TEMPERATURE.
MOUNTING:
SPRING LOADED BURNER PROFILE PLATES ARE ENGINEERED TO AUTOMATICALLY REACT TO THE MOMENTUM OF A FRESH AIR STREAM, WITHOUT THE NEED FOR ANY MOTORS OR ACTUATORS TO MECHANICALLY ADJUST THEM. ALL PROFILE PLATES ARE, ALL OF UNITS ARE DESIGNED FOR DEMAND CONTROL VENTILATION (DCV) REQUIREMENTS.
CERTIFICATION:
ALL PROFILE PLATE ASSEMBLIES SHALL BE INCLUDED IN THE DF UNITS ETL LISTING AND COMPLY WITH COMBINED SAFETY STANDARDS ANSI Z83.4 AND CSA 3.7 (NON-RECIRCULATING OF HEATERS) AND ANSI Z83.18 (RECIRCULATING OF HEATERS).
GENERAL CONSTRUCTION:
-PROFILE PLATES SHALL BE FORMED FROM G90 GALVANIZED STEEL.
-PROFILE PLATES SHALL LAMP IN SIZE PER UNIT.
-PROFILE PLATES SHALL BE MOUNTED ALONG THE SAME PLANE AS THE DISCHARGE OF THE BURNER.
-DESIGN SHALL INCORPORATE PROPERLY TORQUED, PERMANENTLY MOUNTED SPRING HINGES.
-SPRING HINGES SHALL BE MADE FROM PLATED STEEL.

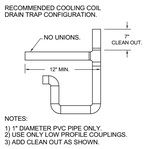

NOTES:
1) 1" DIAMETER PVC PIPE ONLY.
2) USE ONLY LOW PROFILE COUPLINGS.
3) ADD CLEAN OUT AS SHOWN.

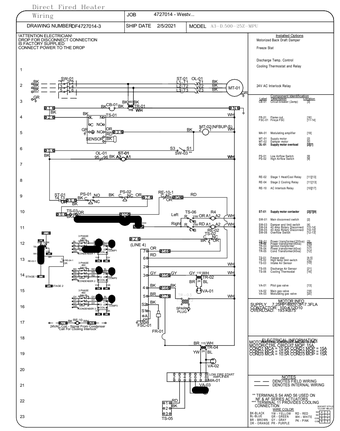

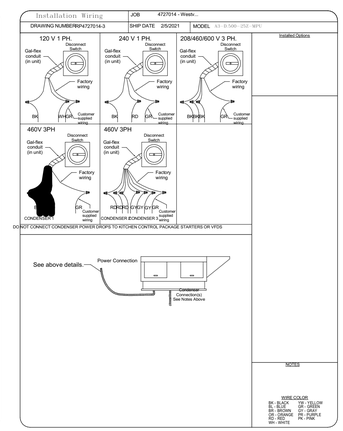

CAPTIVEAIRE
Seattle Office
1309 Pacific Ave, Everett, WA. 98201 PHONE: (425) 212-5996 FAX: (425) 212-5998 EMAIL: reg85@captiveaire.com

DLR Group
© DLR Group

REGISTERED PROFESSIONAL ENGINEER
95079PE
OREGON
JULY 01, 2015
RAYMOND STEPHEN REIGH
EXPIRES: 12/31/2022

Westview HS R5
PORTLAND, OR, 97229

2/5/2021

4727014

JDC-85

1/2" = 1'-0"

MASTER DRAWING

74-21106-00

MECHANICAL EQUIPMENT AND SCHEDULES

M5.5

CULINARY CLASSROOM
Westview High School - Beaverton School District
4200 NW 185th Ave, Portland, OR 97229

BID & PERMIT SET
02/18/21
REVISIONS

BIM 360://74-21106-00 Westview HS Culinary/74-21106-00_WHSC_MEP_2020.rvt
3/12/2021 1:20:21 PM

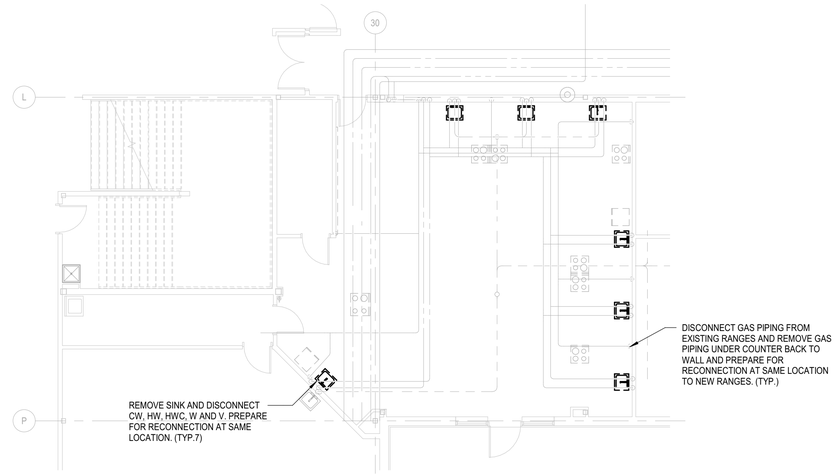

FIRST LEVEL PLUMBING DEMOLITION PLAN

SCALE: 1/8" = 1'-0"

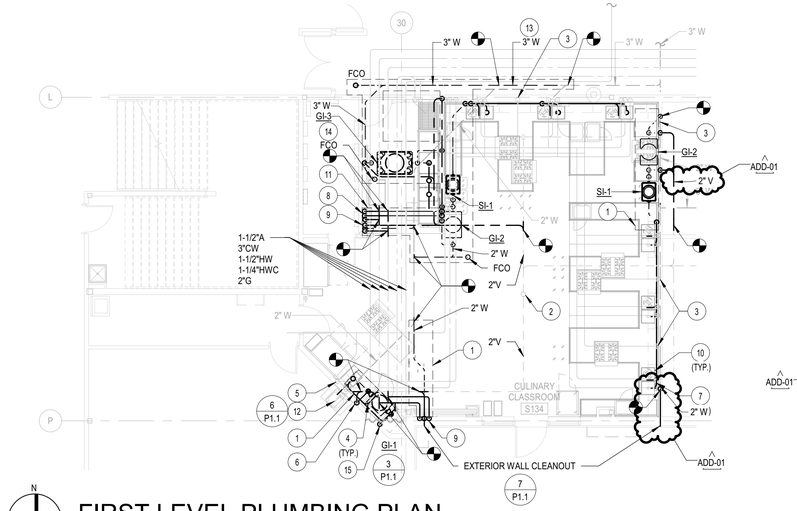

FIRST LEVEL PLUMBING PLAN

SCALE: 1/8" = 1'-0"

SHEET NOTES

1. SAW CUT (E)FLOOR FOR INSTALLATION OF NEW WASTE PIPES. SEE ARCH DRAWINGS, COORDINATE ON SITE, AND FIELD VERIFY ACTUAL CONDITION.
2. EXISTING 2-1/2"VTR TO REMAIN.
3. ROUTE NEW GAS PIPING UNDER COUNTER TO NEW RANGE AND CONNECT TO EXISTING GAS PIPING IN WALL.
4. PROVIDE A MINIMUM OF 5-1/2" CLEARANCE ABOVE GREASE INTERCEPTOR FOR ROUTINE MAINTENANCE.
5. RECONNECT EXISTING PLUMBING (CW, HW, V) TO NEW SINK. BRANCH 1/2"CW TO SERVE NEW ICE MACHINE ON THE OTHER SIDE OF THE WALL.
6. 2"V DOWN TO VENT DOWNSTREAM OF GREASE INTERCEPTOR.
7. TEE 1/2"CW BRANCH OFF FROM SINK COLD WATER DROP TO DISPOSER.
8. DROP 2"CW & 1-1/2"HW IN WALL, DOWN UNDERGROUND, AND UP HALF HEIGHT WALL BEHIND 3-COMP SINK AND WAREWASHER. BRANCH (2)1/2"CW AND (2)1/2"HW TO SERVE PRE-RINSE FAUCET AND SINK FAUCET. BRANCH 1/2"CW TO SERVE DISHWASHER DRAIN WATER TEMPERING. BRANCH 3/4"HW TO SERVE DISHWASHER. SEE FOOD SERVICE DRAWING (FS1.2) FOR EXACT LOCATION.
9. ROUTE 1/2"CW, 1/2"HW, 1-1/2"V, 2"W TO HAND SINK.
10. SEE FOOD SERVICE DRAWING FOR NEW SINKS. RECONNECT EXISTING PLUMBING (CW, HW, HWC, V) TO NEW SINKS. (TYP.7)
11. SAW CUT (E)FLOOR FOR INSTALLATION OF NEW 2"W, 2"CW & 2"HW PIPES UNDERGROUND. SEE ARCH DRAWINGS, COORDINATE ON SITE, AND FIELD VERIFY ACTUAL CONDITION.
12. ROUTE 3/4"CD FROM EXISTING ICE MACHINE'S CONDENSATE PUMP TO EXISTING SINK TAILPIECE PER DETAIL 4/P1.1. PROVIDE LITTLE GIANT ACS-2 IN-PAN CONDENSATE OVERFLOW DETECTION SWITCH AND WIRE TO AN ALARM. ADD-01
13. REMOVE EXISTING 2"W MAIN AND REPLACE WITH NEW 3"W AT SAME LOCATION.
14. COORDINATE GREASE INTERCEPTOR AND NEW WASTE PIPING WITH EXISTING FOUNDATION.
15. DROP 3/4"CW FROM NEW 1"CW MAIN OVERHEAD TO SERVE COMBI-OVEN STEAMER. BRANCH ANOTHER 3/4"CW TO SERVE WATER FILTRATION SYSTEM.

GREASE AND SOLID INTERCEPTOR SCHEDULE

MARK	TYPE	DESIGN FLOW (GPM)	LIQUID CAPACITY (GAL)	GREASE CAPACITY (LBS)	SOLID CAPACITY (GAL)	INSTALLATION ARRANGEMENT	INLET/OUTLET CONNECTIONS	WEIGHT (LBS)	BASIS OF DESIGN	NOTES
GI-1	HYDROMECHANICAL	20	10	70	-	ABOVE GRADE	2 INCHES	40	SCHIER GB-1	1, 2, 3
GI-2	HYDROMECHANICAL	35	20	130	-	BELOW GRADE	3 INCHES	50	SCHIER GB-2	2, 3
GI-3	HYDROMECHANICAL	50	65	440	-	BELOW GRADE	4 INCHES	150	SCHIER GB-50	2, 3
SI-1	SOLID INTERCEPTOR	35	16	-	2	BELOW GRADE	2 INCHES	42	STRIEM AA-2	2, 3

NOTES:
1. PROVIDE A MINIMUM OF 5-1/2" ABOVE TOP OF INTERCEPTOR FOR MAINTENANCE ACCESS.
2. PROVIDE WITH FIELD CUT RISER.
3. LOCATE COVER AND INTERCEPTOR TO ALLOW FOR FULL ACCESS TO TANK FOR PROPER MAINTENANCE.

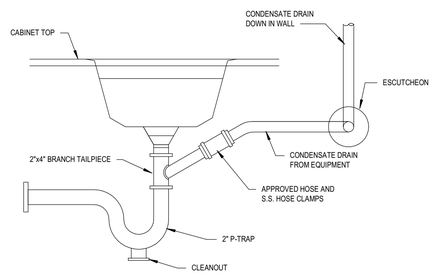

6 / P1.1 CONDENSATE LINE DRAIN CONNECTION DETAIL
NO SCALE

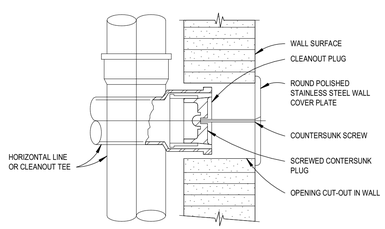

7 / P1.1 WALL CLEANOUT DETAIL
NO SCALE

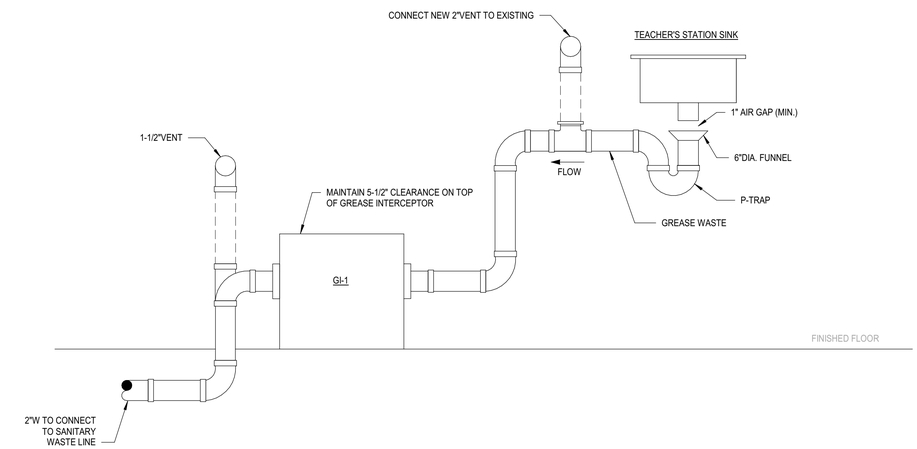

3 / P1.1 GREASE INTERCEPTOR - TEACHER'S STATION (ADA)
NO SCALE

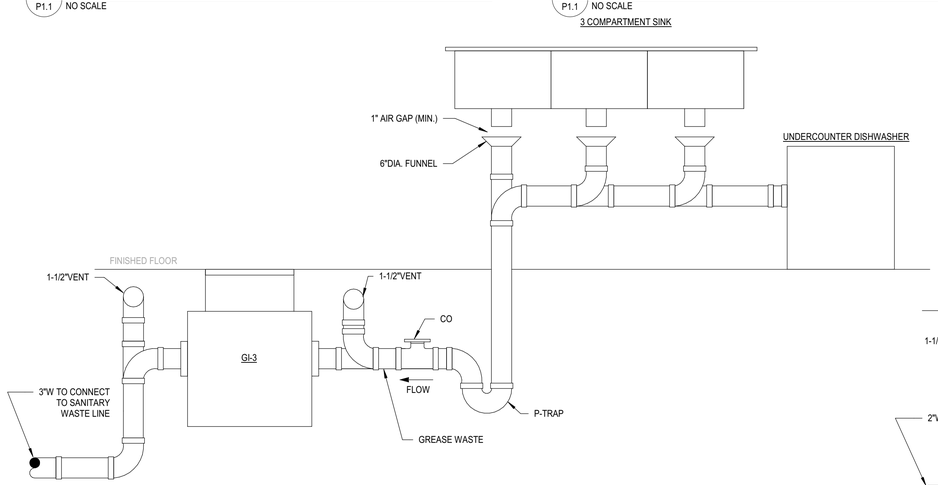

4 / P1.1 GREASE INTERCEPTOR - 3-COMP SINK & DISHWASHER
NO SCALE

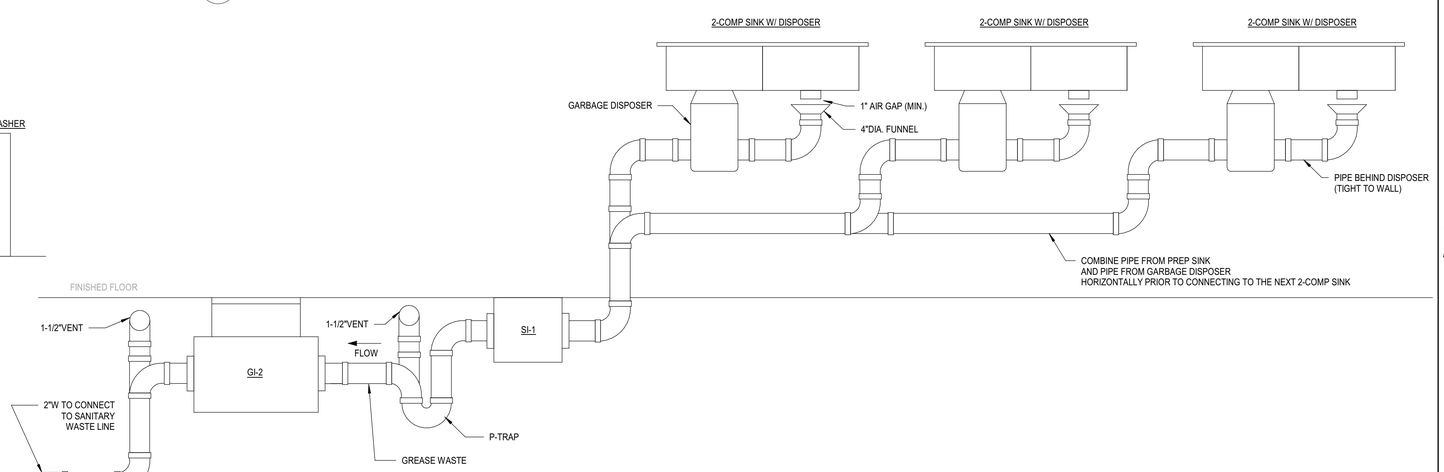

5 / P1.1 GREASE INTERCEPTOR - 2-COMP SINK WITH DISPOSER
NO SCALE

DLR Group
© DLR Group

REGISTERED PROFESSIONAL ENGINEER
95079PE
OREGON
JULY 21, 2015
HOWARD STEPHEN REIGH
EXPIRES: 12/31/2022

CULINARY CLASSROOM

Westview High School - Beaverton School District

4200 NW 185th Ave, Portland, OR 97229

BID & PERMIT SET
02/18/21
REVISIONS
ADD-01 3/17/21 ADD-01

74-21106-00

OVERALL FIRST FLOOR PLUMBING PLAN

P1.1

BIM 360://74-21106-00 Westview HS Culinary/74-21106-00_WHSC_MEP_2020.rvt
3/12/2021 1:20:24 PM

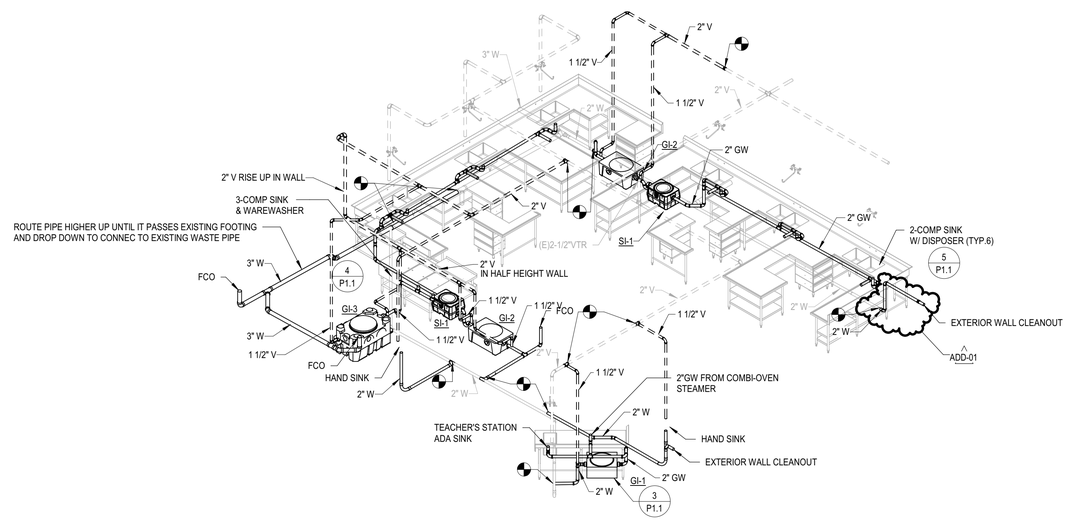

1 P4.1 WASTE & VENT RISER DIAGRAM
NO SCALE

DLR Group
© DLR Group

REGISTERED PROFESSIONAL ENGINEER
95079PE
OREGON
JULY 01, 2016
RICHARD STEPHEN REIGH
EXPIRES: 12/31/2022

CULINARY CLASSROOM

Westview High School - Beaverton School District

4200 NW 185th Ave, Portland, OR 97229

BID & PERMIT SET
02/18/21
REVISIONS
ADD-01 3/17/21 ADD-01

74-21106-00

WASTE & VENT
RISER DIAGRAMS

P4.1

BIM 360://74-21106-00 Westview HS Culinary/74-21106-00_WHSC_MEP_2020.rvt
3/12/2021 1:20:29 PM

ABBREVIATIONS

(D)	DEMOLISHED
(E)	EXISTING
(R)	RELOCATED
Ø	PHASE
A AMP	AMPERE
AC	ABOVE COUNTER
AF	AMP FRAME (CIRCUIT BREAKER)
AIC	AMPERE INTERRUPTING CAPACITY
AL	ALUMINUM
AP	WIRELESS ACCESS POINT
AT	AMP TRIP (CIRCUIT BREAKER OR FUSE)
ATS	AUTOMATIC TRANSFER SWITCH
AV	AUDIO-VIDEO, AUDIO-VISUAL
AWG	AMERICAN WIRE GAUGE
BAS	BUILDING AUTOMATION SYSTEM
BJ	BONDING JUMPER
BKR	BREAKER
BMS	BUILDING MANAGEMENT SYSTEM
C	CONDUIT
CATV	CABLE TELEVISION
CB	CIRCUIT BREAKER
CCTV	CLOSED CIRCUIT TELEVISION
CFCI	CONTRACTOR FURNISHED CONTRACTOR INSTALLED
CKT	CIRCUIT
CU	COPPER
DB	DECIBEL
DC	DIRECT CURRENT
DISC	DISCONNECT
DP	DISTRIBUTION PANELBOARD
DW	DISHWASHER
ECS	EMERGENCY COMMUNICATION SYSTEM
EGB	ELECTRICAL GROUNDING BUSBAR
EMD	ESTIMATED MAXIMUM DEMAND
EMGB	ELECTRICAL MAIN GROUNDING BUSBAR
EP	EXPLOSION PROOF
ER	EXISTING (TO BE) RELOCATED
ERMS	ENERGY REDUCTION MAINTENANCE SWITCH
EWC	ELECTRIC WATER COOLER
FA	FIRE ALARM
FAA	FIRE ALARM ANNUNCIATOR
FACP	FIRE ALARM CONTROL PANEL
FC	FOOT CANDLE
FLA	FULL LOAD AMPS
FSD	FIRE SMOKE DAMPER
G	EQUIPMENT GROUNDING CONDUCTOR
GEN	GENERATOR
GFI, GFCI	GROUND FAULT CIRCUIT INTERRUPTER
GFPE	GROUND FAULT PROTECTION OF EQUIPMENT
GND	EQUIPMENT GROUNDING CONDUCTOR
HOA	HAND-OFF-AUTOMATIC
HP	HORSE POWER
IC	INTERCOM
JB	JUNCTION BOX
KAIC	THOUSAND AMPERE INTERRUPTING CIRCUIT
KV	KILOVOLT
KVA	KILOVOLT AMPERES
KW	KILOWATT
LT	LIGHT
LTG	LIGHTING
MCA	MINIMUM CIRCUIT AMPACITY
MCB	MAIN CIRCUIT BREAKER
MLO	MAIN LUGS ONLY
MOCP	MAXIMUM OVERCURRENT PROTECTION
MRTS	MOTOR RATED TOGGLE SWITCH
MSB	MAIN SWITCHBOARD
MTD	MOUNTED
MTG	MOUNTING
MTS	MAIN TRANSFER SWITCH
N	NEUTRAL
N.C.	NORMALLY CLOSED
N.O.	NORMALLY OPEN
NF	NON-FUSED
NL	NIGHT LIGHT
OFCI	OWNER FURNISHED CONTRACTOR INSTALLED
P	POLE(S)
PB	PULL BOX
PH	PHASE
PWR	POWER
RCP	REFLECTED CEILING PLAN
RECPT	RECEPTACLE
REF	REFERENCE
SCCR	SHORT CIRCUIT CURRENT RATING
SEC	SECONDARY
SWBD	SWITCHBOARD
TBB	TELECOMMUNICATIONS BONDING BACKBONE
TC	TIME CLOCK
TGB	TELECOMMUNICATIONS GRONDING BUSBAR
TMGB	TELECOMMUNICATIONS MAIN GRONDING BUSBAR
TO	TELECOMMUNICATIONS OUTLET
TS	TAMPER SWITCH
TV	TELEVISION
UG	UNDERGROUND
V	VOLT
VA	VOLT-AMPERE
VFD	VARIABLE FREQUENCY DRIVE
W	WIRE
WG	WIRE GUARD
WP	WEATHER-PROOF (NEMA 3R)
XFMR	TRANSFORMER

GENERAL NOTES

1 PENETRATIONS IN WALLS REQUIRING PROTECTED OPENINGS MUST BE FIRESTOPPED WITH AN APPROVED MATERIAL.

GENERAL DEMOLITION NOTES

1 SEE ARCHITECTURAL DRAWINGS AND SPECIFICATIONS FOR PHASES OF DEMOLITION AND CONSTRUCTION. COORDINATE WITH GENERAL CONSTRUCTION.
2 DISCONNECT AND REMOVE ALL ELECTRICAL DEVICES AND LIGHTING FIXTURES IN DEMOLITION AREAS UNLESS NOTED OTHERWISE.
3 DISCONNECT AND REMOVE ALL ELECTRICAL DEVICES IN WALLS TO BE DEMOLISHED. WALLS TO BE DEMOLISHED ARE SHOWN DASHED. DISCONNECT AND REMOVE ASSOCIATED CONDUIT AND WIRE BACK TO LAST REMAINING DEVICE. FURNISH AND INSTALL CONDUIT AND WIRE AS NECESSARY FOR CONTINUITY OF CIRCUIT(S) TO ANY EXISTING DEVICES TO REMAIN. COORDINATE AND VERIFY REQUIREMENTS WITH NEW WORK IN AREA.
4 FURNISH AND INSTALL CONDUIT AND WIRE AS NECESSARY FOR CONTINUITY OF ANY FEEDERS OR BRANCH CIRCUITS ORIGINATING OUTSIDE THE DEMOLITION AREA THAT SERVES ANY ELECTRICAL EQUIPMENT OR DEVICES TO REMAIN AFTER DEMOLITION. MODIFY OR REPLACE AS REQUIRED.
5 FURNISH AND INSTALL CONDUIT AND/OR COMMUNICATIONS/DATA WIRING AS NECESSARY FOR CONTINUITY OF ANY WIRING ORIGINATING OUTSIDE THE DEMOLITION AREA THAT SERVES ANY COMMUNICATIONS/DATA EQUIPMENT OR DEVICES TO REMAIN AFTER DEMOLITION. MODIFY OR REPLACE AS REQUIRED.
6 DISCONNECT AND REMOVE LIGHT SWITCHES IN DEMOLITION AREAS AS NECESSARY TO ACCOMMODATE NEW DOOR CONFIGURATIONS.
7 DISCONNECT AND REMOVE ANY EXISTING ELECTRICAL DEVICES AND BACK BOXES AS NECESSARY WHERE NEW WALL CONSTRUCTION WILL INTERSECT AN EXISTING WALL. FURNISH AND INSTALL CONDUIT AND WIRE AS REQUIRED FOR CONTINUITY OF CIRCUIT(S).
8 FURNISH AND INSTALL BLANK COVER PLATES OVER ALL EXISTING UNUSED OPENINGS.

GENERAL SITE PLAN NOTES

1 ALL LIGHTING AND POWER CONDUCTORS SHALL BE INSTALLED BETWEEN 24" (MINIMUM) AND 36" (MAXIMUM) BELOW FINISHED GRADE.
2 ALL COMMUNICATIONS CONDUIT AND CABLES SHALL BE INSTALLED 36" (MINIMUM) BELOW FINISHED GRADE.
3 ALL CONDUCTORS FOR EXTERIOR LIGHTING AND POWER CIRCUITS SHALL BE #10 AWG MINIMUM.
4 PROVIDE TRANSFORMER BASE AT ALL POLE MOUNTED FIXTURES, TAP 2 LEGS OF THREE PHASE FEEDER (CIRCUITS DENOTED), PROVIDE BALLAST FUSES AT TAP, AND PROVIDE BRANCH CIRCUITS TO FIXTURES.

GENERAL SITE DEMOLITION NOTES

1 SEE ARCHITECTURAL DRAWINGS AND SPECIFICATIONS FOR PHASES OF DEMOLITION AND CONSTRUCTION. COORDINATE WITH GENERAL CONSTRUCTION.
2 DISCONNECT AND REMOVE ALL ELECTRICAL DEVICES AND LIGHTING FIXTURES IN DEMOLITION AREAS UNLESS NOTED OTHERWISE.
3 COORDINATE AND VERIFY REQUIREMENTS WITH NEW WORK IN AREA.

LIGHTING

	LIGHTING FIXTURE, SEE FIXTURE SCHEDULE
	LIGHTING FIXTURE ON EMERGENCY SYSTEM
	TRACK LIGHTING FIXTURE, SIZE PER FIXTURE SCHEDULE
	FLUORESCENT STRIP LIGHTING FIXTURE, SIZE PER FIXTURE SCHEDULE
	WALL MOUNTED FLUORESCENT STRIP LIGHTING FIXTURE
	CEILING FIXTURE, SURFACE, RECESSED OR PENDANT, SEE FIXTURE SCHEDULE
	LIGHTING FIXTURE ON EMERGENCY SYSTEM
	HIGH BAY LIGHTING FIXTURE
	WALL FIXTURE, BRACKET MOUNTED, SEE FIXTURE SCHEDULE
	SELF CONTAINED EMERGENCY LIGHTING FIXTURE
	EXIT SIGN, CEILING MOUNTED, DIRECTIONAL ARROW AS INDICATED
	EXIT SIGN, WALL MOUNTED, DIRECTIONAL ARROW AS INDICATED
	SITE LIGHTING - POLE
	POLE MOUNTED YOKE
	POLE MOUNTED AREA LIGHT
	WALL MOUNTED AREA LIGHT
	IN GRADE LIGHT FIXTURE, SEE FIXTURE SCHEDULE
	BOLLARD LIGHT FIXTURE

SWITCHES: MOUNT 42" AFF UNO

SUPPERSCRIPT, SWITCH SHALL CONTROL FIXTURE DENOTED WITH SAME LOWER CASE LETTER
SWITCH SYMBOL
SUBSCRIPT, SWITCH TYPE - SEE BELOW
LINE THRU SWITCH INDICATES A KEY OPERATED SWITCH

S	SWITCH, SINGLE POLE
S_2	SWITCH, DOUBLE POLE
S_3	SWITCH, THREE WAY
S_4	SWITCH, FOUR WAY
S_D	SWITCH, DIMMER
S_E	SWITCH, EMERGENCY
S_L	SWITCH, LOW VOLTAGE
S_M	SWITCH, MASTER
S_O	SWITCH, WALL-BOX OCCUPANCY SENSOR
S_{O2}	SWITCH, WALL-BOX OCCUPANCY SENSOR, 2-POLE
S_P	SWITCH, WITH PILOT LIGHT
S_R	SWITCH, LOW VOLTAGE, ASSOCIATED WITH RELAY PANEL
S_T	SWITCH, TIMER
S_V	SWITCH, WALL-BOX VACANCY SENSOR
S_X	SWITCH, EXPLOSION-PROOF

COMMUNICATIONS

	TELEPHONE OUTLET, WALL
W	TELEPHONE OUTLET FOR WALL-MOUNTED PHONE
P	PAY TELEPHONE OUTLET
	TELEPHONE CABINET (PBX)
	TELEPHONE BACKBOARD, SIZE AS SHOWN
	TECHNOLOGY OUTLET, WALL (VOICE, DATA, VIDEO)
MM	MULTI-MEDIA TECHNOLOGY OUTLET, WALL
SB	SMART-BOARD TECHNOLOGY OUTLET, WALL
C	TECHNOLOGY OUTLET, CEILING (MULTI-MEDIA)
	FLUSH FLOOR BOX WITH TECHNOLOGY OUTLET
MM	FLUSH FLOOR BOX WITH TWO (2) TECHNOLOGY OUTLETS (MULTI-MEDIA)
	CLOCK
M	CLOCK - MASTER
DS	CLOCK - DOUBLE FACE
C	CLOCK - OUTLET
TC	TIME CLOCK
TV	TELEVISION OUTLET, WALL
TV	TELEVISION OUTLET, CEILING
TV	TELEVISION TERMINAL CABINET
	BUZZER
C	CHIME
S	SPEAKER, WALL
S	SPEAKER, CEILING
H	SPEAKER/HORN, WALL
IC	INTERCOM CALLBACK STATION, WALL
V	VOLUME CONTROL, WALL
M	MICROPHONE CONTROL, WALL
SR	MONITOR SPEAKER RECEPTACLE, WALL
M	FLUSH FLOOR BOX WITH MICROPHONE OUTLET
D	DIRECTOR'S HEADSET, WALL

GENERAL LIGHTING NOTES

1 ALL RECESSED LIGHTING FIXTURES IN LAY-IN CEILINGS SHALL BE INSTALLED WITH 6' LONG FLEXIBLE METAL CONDUIT.
2 ALL MOUNTING HEIGHTS FOR LIGHTING FIXTURES ARE TO THE BOTTOM OF THE FIXTURES UNLESS INDICATED OTHERWISE.
3 SEE ARCHITECTURAL EXTERIOR ELEVATIONS FOR MOUNTINGbHEIGHTS OF EXTERIOR LIGHTING FIXTURES.
4 REFER TO SECTION 26 0519 FOR MINIMUM CONDUCTOR SIZE ADJUSTMENTS FOR VOLTAGE DROP.
5 **FOR TYPICAL PROJECTS WHERE WIRING IS SHOWN (EDIT AS NEEDED):
6 WIRE COUNTS FOR CIRCUIT CONDUCTORS ARE NOT SHOWN. PROVIDE PROPER NUMBER OF CONDUCTORS TO ACHIEVE CIRCUIT AND SWITCHING CONNECTIONS SHOWN.
7 MODIFICATIONS TO NUMBER OF CONDUCTORS IN HOME RUNS IN ADDITION TO CIRCUITS INDICATED ON THIS DRAWING ARE PROHIBITED.
8 **FOR TYPICAL PROJECTS WHERE WIRING IS NOT SHOWN (EDIT AS NEEDED):
9 CIRCUIT WIRING IS NOT SHOWN EXCEPT FOR SWITCHING INTENT OF FIXTURES AND CONTROL OF DEVICES.
10 PROVIDE PROPER NUMBER OF CONDUCTORS TO ACHIEVE CIRCUITING AND SWITCHING SHOWN.
11 CIRCUIT NUMBERS AT DEVICES CORRESPOND TO PANELBOARD BREAKERS (SEE PANELBOARD SCHEDULE). BRANCH CIRCUITS SHALL BE SIZED ACCORDING TO THE CIRCUIT BREAKER RATING, UNLESS INDICATED OTHERWISE ON THE ELECTRICAL EQUIPMENT SCHEDULE.

POWER

	CIRCUIT HOME RUN
	CONDUIT TURNING UP
	CONDUIT TURNING DOWN
	CONDUIT STUB-UP
	CONDUIT SLEEVE
	CONDUIT SEAL
	CONDUIT CONCEALED IN CEILING OR WALLS, POWER
	CONDUIT CONCEALED IN CEILING OR WALLS, OTHER (* = SEE ABBREVIATIONS)
	CONDUIT CONCEALED IN FLOOR OR UNDERGROUND, POWER
	CONDUIT CONCEALED IN FLOOR OR UNDERGROUND, OTHER (* = SEE ABBREVIATIONS)
	EXPOSED CONDUIT, POWER
	EXPOSED CONDUIT, OTHER (* = SEE ABBREVIATIONS)
T	TRANSFORMER
XXX	BRANCH CIRCUIT PANEL BOARD
XXX	DISTRIBUTION PANEL BOARD
	EQUIPMENT CABINET, AS NOTED
	SWITCHBOARD
XXX CT	CURRENT TRANSFORMER ENCLOSURE
M	METER
GEN	GENERATOR
ATS	AUTOMASTIC TRANSFER SWITCH
	SYSTEM GROUND ELECTRODE
T	THERMOSTAT
	MUSHROOM
M	MOTOR CONNECTION, HORSEPOWER AS INDICATED
	DISCONNECT SWITCH, WITH FUSE
NF	DISCONNECT SWITCH, WITHOUT FUSE
R	RELAY
PC	PHOTOELECTRIC CELL
	SWITCH, PUSH BUTTON, SINGLE
	SWITCH, PUSH BUTTON, DOUBLE
	SWITCH, PUSH BUTTON, TRIPLE
J	JUNCTION BOX, CEILING
J	FLUSH JUNCTION BOX, WALL MOUNTED
J	SURFACE JUNCTION BOX, CEILING MOUNTED
J	SURFACE JUNCTION BOX, WALL MOUNTED
PB	PULL BOX
	EQUIPMENT CONNECTION
	EQUIPMENT CONNECTION

RECEPTACLES

DIAGONAL LINE THROUGH SYMBOL OR DENOTED 'AC' INDICATES MOUNT DEVICE ABOUT COUNTER. WHERE INDICATED AS 'MOUNT ABOVE COUNTER' MOUNT BOTTOM OF BOX 2" ABOVE TOP OF BACKSPLASH OR 6" ABOVE COUNTERTOP IF NO BACKSPLASH EXISTS.

	SIMPLEX RECEPTACLE
	DUPLEX RECEPTACLE
	DUPLEX RECEPTACLE, GFI TYPE
	DUPLEX RECEPTACLE, MOUNT ABOVE COUNTER
	DUPLEX RECEPTACLE, GFI TYPE, MOUNT ABOVE COUNTER
	FOURPLEX RECEPTACLE
	FOURPLEX RECEPTACLE, GFI TYPE
	FOURPLEX RECEPTACLE, MOUNT ABOVE COUNTER
	FOURPLEX RECEPTACLE, GFI TYPE, MOUNT ABOVE COUNTER
	DUPLEX RECEPTACLE, FLUSH IN CEILING
WP	WEATHER RESISTANT GFI DUPLEX RECEPTACLE, MOUNT 18" AFF WITH A WEATHERPROOF, IN-USE COVER
A	SPECIAL RECEPTACLE (MARK INDICATES OUTLET IN SCHEDULE)
	FLUSH FLOOR OUTLET BOX
	FLUSH FLOOR BOX WITH DUPLEX RECEPTACLE
	FLUSH FLOOR BOX WITH FOURPLEX RECEPTACLE
	MULTIDEVICE FLOOR BOX WITH DUPLEX AND DATA OUTLETS, DIVIDED 2 GANG BOX WITH SINGLE GANG PLASTER RING
	MULTI-RECEPTACLE STRIP, SPACING AS INDICATED
	DIVIDED RACEWAY

SAFETY

	FIRE ALARM CONTROL PANEL
FAA	FIRE ALARM ANNUNCIATOR PANEL
NAC	N.A.C. EXTENDER PANEL
F	MANUAL FIRE ALARM PULL STATION
F	FIRE ALARM BELL
F	FIRE ALARM HORN
F	FIRE ALARM VISUAL WARNING SIGNAL
F	FIRE ALARM BELL, WITH VISUAL WARNING SIGNAL
F	FIRE ALARM HORN, WITH VISUAL WARNING SIGNAL
F	MINI FIRE ALARM HORN, WITH VISUAL WARNING SIGNAL
F	FIRE ALARM SPEAKER, WITH VISUAL WARNING SIGNAL
F	FIRE ALARM SPEAKER, FLUSH IN CEILING
F	FIRE ALARM SPEAKER, WITH VISUAL WARNING SIGNAL, CEILING
F	FIRE ALARM VISUAL WARNING SIGNAL, CEILING
E	ECS SPEAKER, FLUSH IN CEILING
E	ECS SPEAKER, WITH VISUAL WARNING SIGNAL, CEILING
E	ECS VISUAL WARNING SIGNAL, CEILING

GENERAL SYSTEMS NOTES

1 ELECTRICAL CONTRACTOR SHALL BE RESPONSIBLE FOR WIRING ALL ELECTRICAL ITEMS SHOWN ON THE DRAWINGS, EXCEPT ITEMS LISTED ON SHEET E0.01 GENERAL ELECTRICAL NOTES.
2 SEE FIRE ALARM ZONE SCHEDULE FOR INITIATING ZONES AND SIGNAL CIRCUITS.
3 MAXIMUM NUMBER OF 4 INFORMATION OUTLET LOCATIONS PER CONDUIT HOME RUN TO MDF OR IDF IS PERMITTED. CONDUIT SHALL BE SIZED AS FOLLOWS
   1 INFORMATION OUTLET LOCATION: 1"
   2 INFORMATION OUTLET LOCATIONS: 1 1/4"
   3 INFORMATION OUTLET LOCATIONS: 1 1/2"
4 **SELECT NEXT NOTE FOR PROJECT REQUIREMENT**
5 ALL COMMUNICATIONS CABLES SHALL BE INSTALLED IN CONDUIT, CABLE TRAY, OR SUPPORTED BY CABLE HOOKS. PROVIDE BUSHINGS AT THE ENDS OF ALL CONDUIT WHERE STUBBED ABOVE ACCESSIBLE CEILINGS OR WHERE DROPPED INTO CABLE TRAY. PROVIDE CABLE HOOKS ABOVE ACCESSIBLE CEILINGS FOR CABLE INSTALLATION WHERE NOT INSTALLED IN CONDUIT OR CABLE TRAY.
6 ALL COMMUNICATIONS CABLES SHALL BE INSTALLED IN CONDUIT OR CABLE TRAY.

* NOTE *

ALL OF NOTES ON THIS SHEET ARE TO BE APPLIED TO ALL OTHER DRAWINGS IN THIS SET.

THE SYMBOLS AND ABBREVIATIONS SHOWN ON THIS SHEET MAY OR MAY NOT BE USED IN THIS SET OF DRAWINGS.

DLR Group
© DLR Group

REGISTERED PROFESSIONAL ENGINEER 86692PE OREGON MAY 8, 2012 SEAN AVERY
EXPIRES 12/31/2021

CULINARY CLASSROOM
Westview High School - Beaverton School District
4200 NW 185th Ave, Portland, OR 97229

BID & PERMIT SET
02/18/21
REVISIONS

74-21106-00

ELECTRICAL SYMBOLS, ABBREVIATIONS & NOTES

E0.1

BIM 360://74-21106-00 Westview HS Culinary/74-21106-00_WHSC_MEP_2020.rvt
2/18/2021 3:55:34 PM

SHEET NOTES

1. DEMO CONNECTION TO EXISTING RANGE. CIRCUIT TO REMAIN FOR FUTURE RANCE RECEPTACLE.
2. DEMO CONNECTION TO EXISTING RANGE. DEMO WIRING AND CONDUIT BACK TO LAST DEVICE OT REMAIN.
3. DEMO CONNECTION TO EXISTING RANGE HOOD. CIRCUIT TO REMAIN FOR FUTURE CONNECTION TO NEW HOOD.
4. DEMO CONNECTION TO EXISTING RANGE HOOD . DEMO WIRING AND CONDUIT BACK TO LAST DEVICE OT REMAIN.
5. DEMO CONNECTION TO EXISTING DISPOSER. DEMO WIRING AND CONDUIT BACK TO LAST DEVICE OT REMAIN, INCLUDING ANY SWITCH THAT MAY BE PRESENT.
6. DEMO CONNECTION TO EXISTING DISHWASHER. WIRING TO REMAIN FOR CONNECTION TO NEW MICROWAVE.
7. CIRCUIT TO REMAIN FOR NEW FRIDGE.
8. DEMO POWER AND DATA RECEPTACLE FOR TV.
9. REUSE EXISTING CIRCUIT FOR NEW FREEZER
10. RECEPTACLE TO BE RELOCATED ABOVE COUNTER
11. RELOCATE EXISTING RECEPTACLE SOUTH. SEE NEW PLAN FOR FINAL LOCATION.
12. EXISTING TO REMAIN, PROTECT DURING CONSTRUCTION.

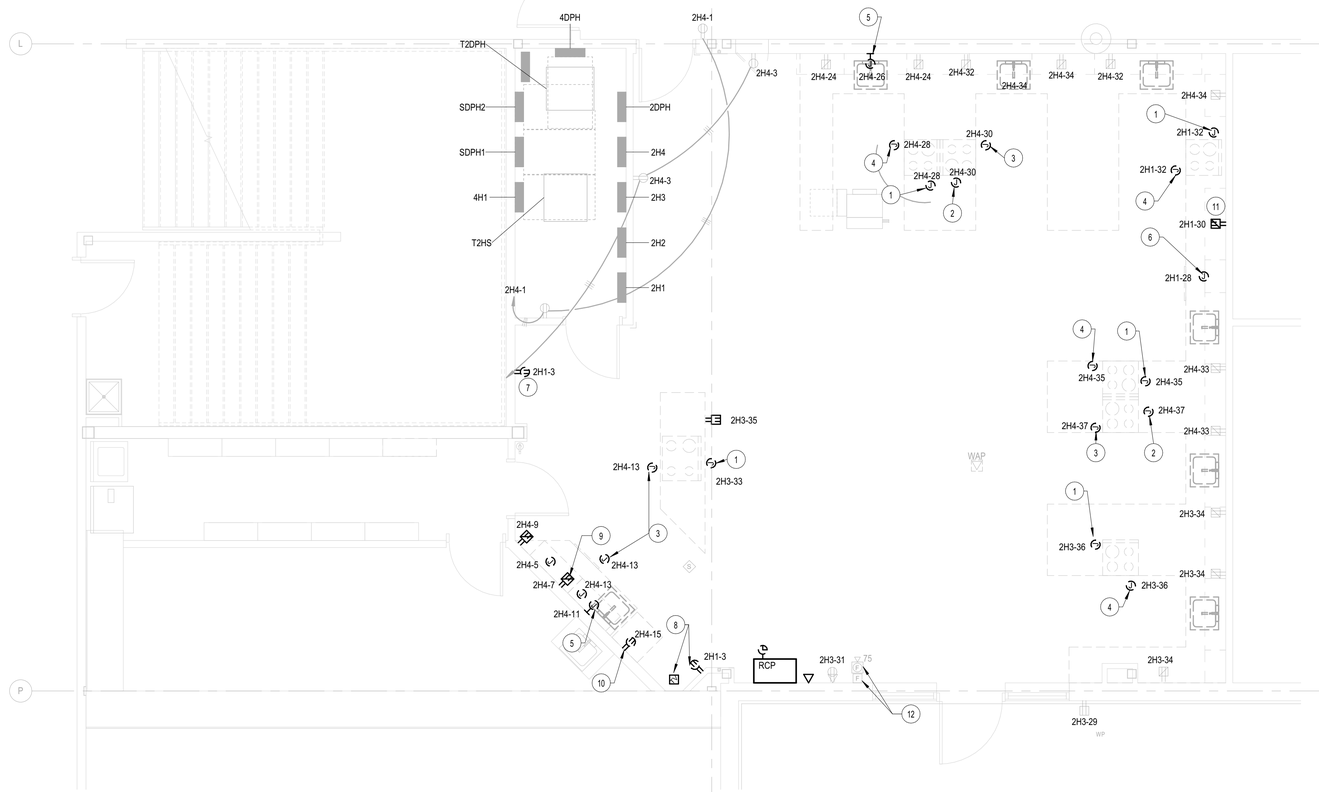

N
TRUE

FIRST LEVEL POWER DEMOLITION PLAN

SCALE: 1/4" = 1'-0"

DLR Group
© DLR Group

REGISTERED PROFESSIONAL ENGINEER
86692PE
OREGON
MAY 8, 2012
SEAN AVERY
EXPIRES 12/31/2021

CULINARY CLASSROOM

Westview High School - Beaverton School District

4200 NW 185th Ave, Portland, OR 97229

BID & PERMIT SET
02/18/21
REVISIONS

74-21106-00

FIRST LEVEL POWER DEMOLITION PLAN

ED1.1

BIM 360://74-21106-00 Westview HS Culinary/74-21106-00_WHSC_MEP_2020.rvt
2/18/2021 3:55:42 PM

SHEET NOTES

1 EXISTING TO REMAIN, PROTECT DURING CONSTRUCTION.

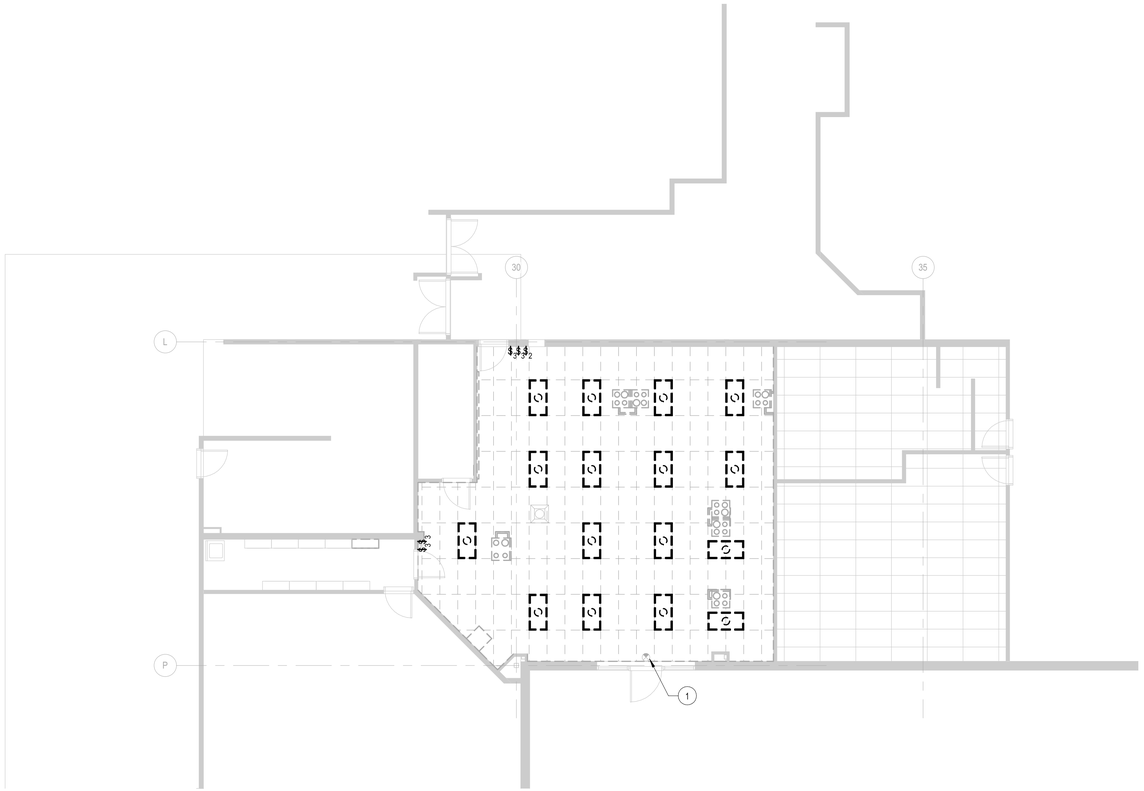

N
TRUE

FIRST LEVEL LIGHTING DEMOLITION PLAN

SCALE: 1/8" = 1'-0"

DLR Group
© DLR Group

REGISTERED PROFESSIONAL ENGINEER
86692PE
OREGON
MAY 8, 2012
SEAN AVERY
EXPIRES 12/31/2021

CULINARY CLASSROOM

Westview High School - Beaverton School District

4200 NW 185th Ave, Portland, OR 97229

BID & PERMIT SET
02/18/21
REVISIONS

74-21106-00

FIRST LEVEL LIGHTING DEMOLITION PLAN

ED1.2

BIM 360://74-21106-00 Westview HS Culinary/74-21106-00_WHSC_MEP_2020.rvt
2/18/2021 3:55:43 PM

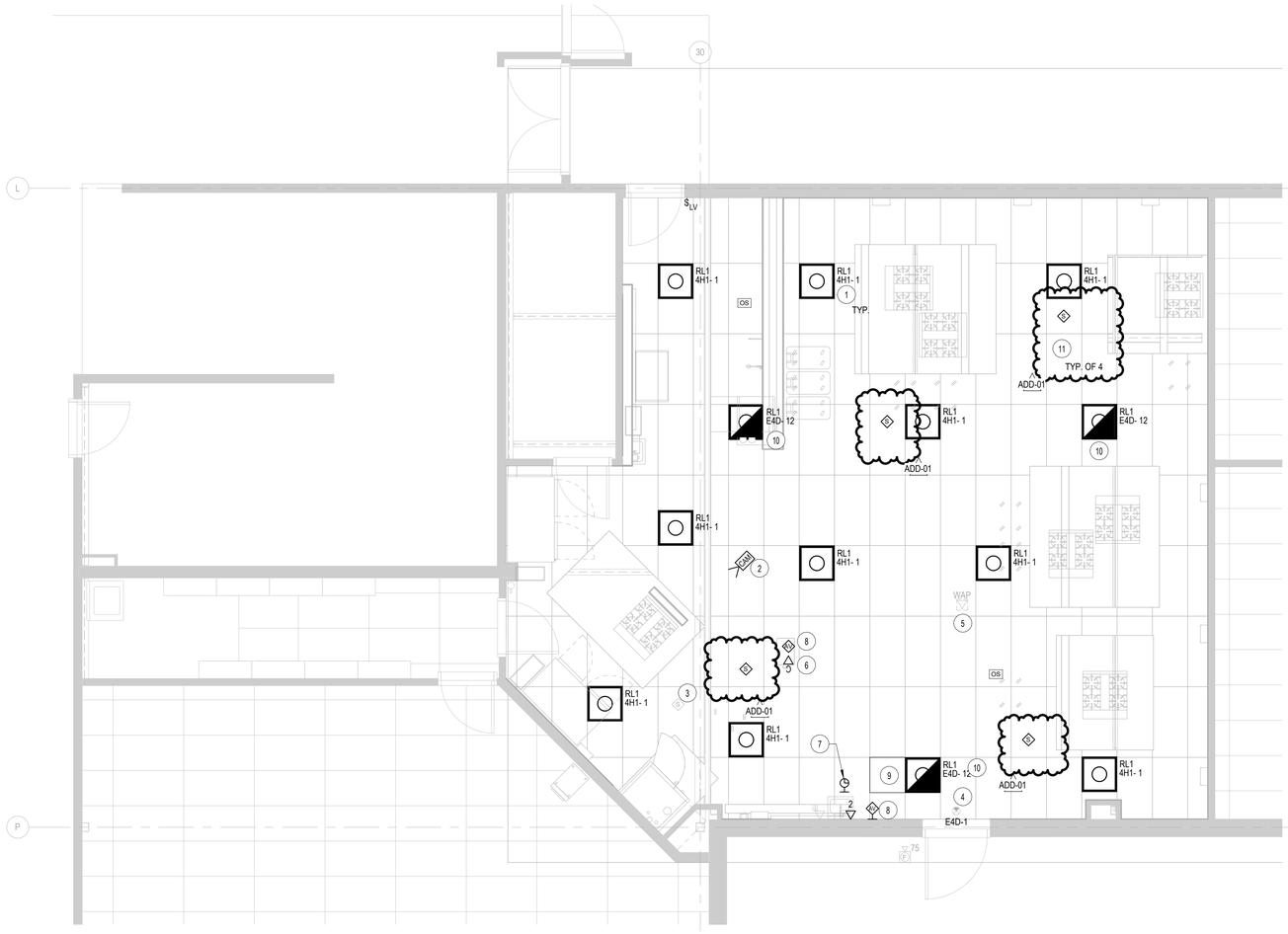

N
TRUE

FIRST LEVEL REFLECTED CEILING PLAN

SCALE: 1/4" = 1'-0"

SHEET NOTES

1. KENALL SIMPLESEAL RECESSED GRID 2X2 LED TROFFER RATED FOR FOOD PREP. SYMMETRIC OPTIC WITH DIFFUSED, IMAPCT RESISTANT ACRYLIC LENS. CLEAR POLYCARBONATE 20GA DOOR FRAME AND HOUSING. MODEL NO: CSEDO22-45LD-35K8-DIM1-DV-5F-2H-SYM-FN
2. CEILING MOUNT CAMERA ABOVE DEMO STATION. BASIS OF DESIGN: LEGRAND EASYIP. SEE SPECIFICATIONS FOR MORE INFORMATION.
3. EXISTING INTERCOM SPEAKER. DEVICE TO REMAIN ACTIVE. PROTECT DURING DEMOLITION AND REINSTALL.
4. EXISTING EXIT SIGN. PROTECT DURING CONSTRUCTION AND REMOVE/REINSTALL IN NEW CEILING.
5. EXISTING WAP. REMOVE AND PROTECT DURING CONSTRUCTION AND REINSTALL IN NEW CEILING. IF NEW CABLE TERMINATIONS ARE REQUIRED, RETEST CABLE PER DISTRICT STANDARDS.
6. PROVIDE NEW CEILING MOUNTED PROJECTOR INCLUDING CEILING MOUNT. SEE SPECIFICATIONS FOR MORE INFORMATION.
7. RELOCATE EXISTING CLOCK ABOVE FIRE ALARM STROBE.
8. PROVIDE HDMI EXTENDERS AND USB INPUT/OUTPUT PLATES PER SPEC AND DETAIL 2 THIS SHEET.
9. PROVIDE CEILING MOUNTED ENCLOSURE FOR AV COMPONENTS WITH POWER RECEPTACLES. ATLAS CR222-NR OR EQUAL. SEE DETAIL 2 THIS SHEET FOR CONTENTS.
10. CIRCUIT FIXTURE TO EXISTING EXIT SIGN CIRCUIT. PROVIDE UL924 BYPASS TO OVERRIDE LIGHTS TO FULL
11. PROVIDE NEW CEILING SPEAKER
12. PROVIDE CONNECTION FROM EXISTING PAGING SYSTEM TO PAGING INPUT ON LIGHTSPEED AMPLIFIER. FIELD VERIFY EXISTING CONDITIONS AND EXACT REQUIREMENTS.

ADD-01

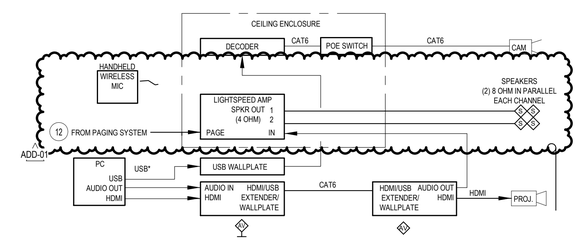

*RUN USB 3.0 DIRECTLY FROM WALLPLATE TO DECODER. NO EXTENDERS SHOULD BE USED.

2 / E1.1 TEACHING CAMERA ONE-LINE

SCALE: 12" = 1'-0"

DLR Group
© DLR Group

REGISTERED PROFESSIONAL ENGINEER
86692PE
OREGON
MAY 8, 2012
SEAN AVERY
EXPIRES 12/31/2021

CULINARY CLASSROOM

Westview High School - Beaverton School District

4200 NW 185th Ave, Portland, OR 97229

BID & PERMIT SET
02/18/21
REVISIONS
ADD-01 3/17/21 ADD-01

74-21106-00

FIRST LEVEL REFLECTED CEILING PLAN

E1.1

BIM 360://74-21106-00 Westview HS Culinary/74-21106-00_WHSC_MEP_2020.rvt
3/15/2021 12:53:48 PM

SHEET NOTES

1 UTILIZE EXISTING CIRCUIT FOR RANGE RECEPTACLES
2 UTILIZE EXISTING CIRCUIT FOR CONNECTION TO THIS HOOD.
3 UTILIZE EXISTING CIRCUIT FOR CONNECTION TO THIS MICROWAVE.
4 EXTEND EXISTING RECEPTACLE CIRCUIT TO THIS NEW RECEPTACLE.
5 REUSE EXISTING CIRCUIT AND CHANGE CIRCUIT AT PANELBOARD. PROVIDE NEW STANDARD RECEPTACLE AND NEW GFI BREAKER IN PANELBOARD FOR CIRCUIT.
5 REUSE EXISTING CIRCUIT. PROVIDE NEW STANDARD RECEPTACLE AND NEW GFI BREAKER IN PANELBOARD FOR CIRCUIT.
6 RELOCATE EXISTING RECEPTACLE ABOVE COUNTER.
7 PROVIDE CEILING RECEPTACLE WITHIN CEILING ENCLOSURE SPECIFIED ON SHEET E1.1
8 PROVIDE RECEPTACLE WITH INTEGRAL 5V POWER SUPPLY FOR AV EXTENDERS. PROVIDE 4-SQUARE BACKBOX WITH LOW VOLTAGE DIVIDER TO HOUSE DUPLEX AND AV RECEPTACLE. SEE SPECIFICATIONS FOR MORE INFORMATION.
8 PROVIDE RECEPTACLE WITH INTEGRAL 5V POWER SUPPLY FOR AV EXTENDERS. SEE SPECIFICATIONS FOR MORE INFORMATION.
9 SAWCUT FLOOR TO PROVIDE TRENCH AND UNDERSLAB CONDUIT TO NEW TEACHING STATION. USE OF EXISTING PATHWAY FOR RANGE CIRCUIT IS ACCEPTABLE IF APPROPRIATE GIVEN STATION RELOCATION.

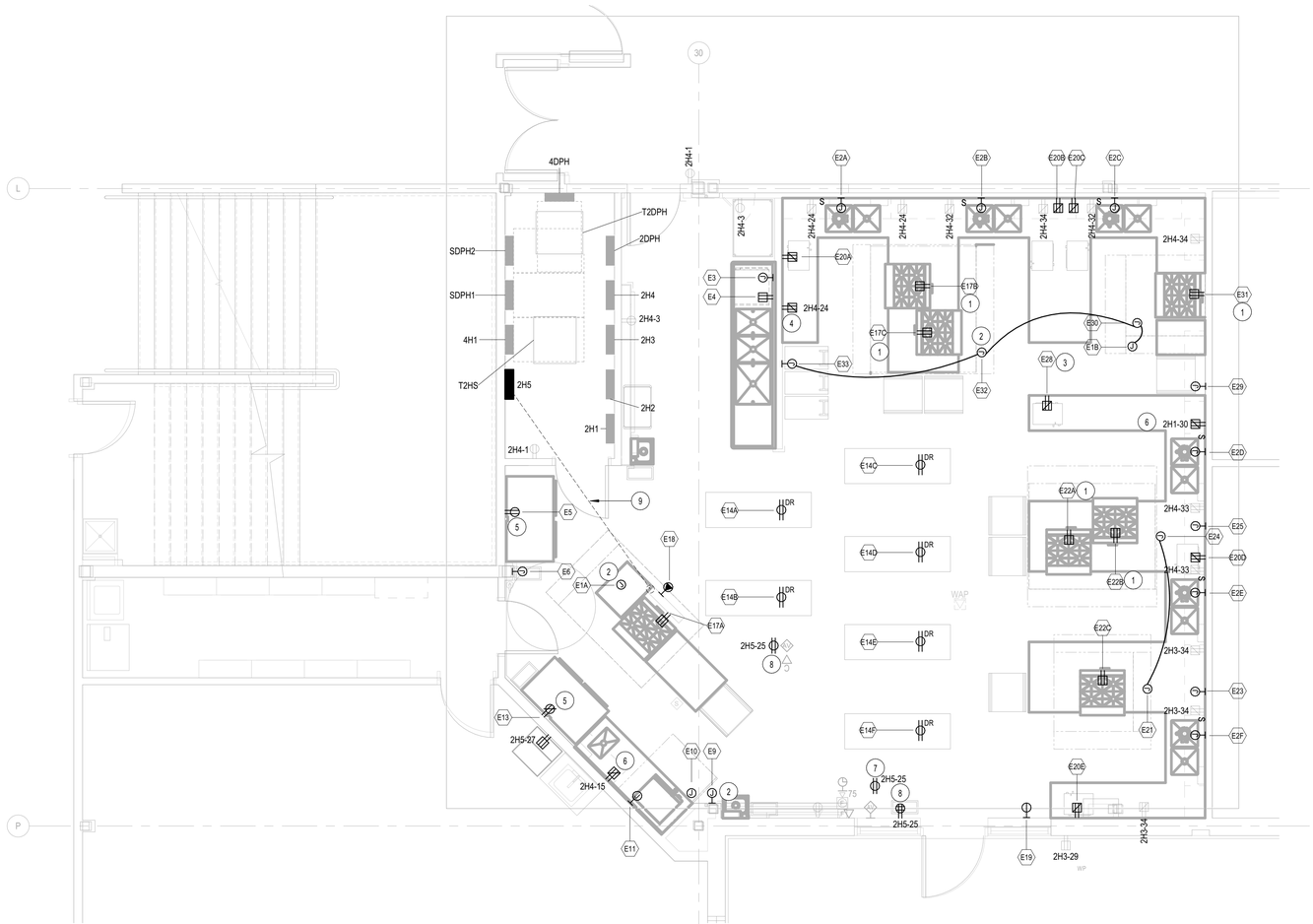

N
TRUE

FIRST LEVEL POWER PLAN

SCALE: 1/4" = 1'-0"

ELECTRICAL CONNECTION SCHEDULE - KITCHEN

MARK	EQUIPMENT NAME	ELECTRICAL DATA	CONNECTION TYPE	MOUNTING HEIGHT	FEEDER	PANEL	Circuit Number	SCHEDULE NOTES
E1A	CANOPY HOOD DEMAND CONTROL PANEL	120 V/1-200 VA	J-BOX	5' - 0"	2#12, #12G, 3/4"C	2H4	13	SEE NOTE 2
E1B	CANOPY HOOD DEMAND CONTROL PANEL	120 V/1-1200 VA	J-BOX	5' - 0"	2#12, #12G, 3/4"C	2H4	30	SEE NOTE 2
E2A	DISPOSER	208 V/3-1440 VA	J-BOX	1' - 0"	3#12, #12G, 3/4"C	2H5	1,3,5	SEE NOTE 3
E2B	DISPOSER	208 V/3-1440 VA	J-BOX	1' - 0"	3#12, #12G, 3/4"C	2H5	1,3,5	SEE NOTE 3
E2C	DISPOSER	208 V/3-1440 VA	J-BOX	1' - 0"	3#12, #12G, 3/4"C	2H5	1,3,5	SEE NOTE 3
E2D	DISPOSER	208 V/3-1440 VA	J-BOX	1' - 0"	3#12, #12G, 3/4"C	2H5	7,9,11	SEE NOTE 3
E2E	DISPOSER	208 V/3-1440 VA	J-BOX	1' - 0"	3#12, #12G, 3/4"C	2H5	7,9,11	SEE NOTE 3
E2F	DISPOSER	208 V/3-1440 VA	J-BOX	1' - 0"	3#12, #12G, 3/4"C	2H5	7,9,11	SEE NOTE 3
E3	UNDERCOUNTER DISHWASHER	208 V/3-8610 VA	J-BOX	1' - 0"	3#10, #10G, 3/4"C	2H5	13,15,17	
E4	WAREWASHER DETERGENT FEED	120 V/1-1440 VA	NEMA 5-15R	1' - 0"	2#12, #12G, 3/4"C	2H5	12	
E5	REACH-IN REFRIGIRATOR	120 V/1-984 VA	NEMA 5-15R	7' - 0"	2#12, #12G, 3/4"C	2H4	3	
E6	CANOPY HOOD ROOM SENSOR CONTROL	120 V/1-0 VA		4' - 0"				WIRE TO HOOD SC CONTROL BOARD W/2-WIRE LOW VOLT. CABLE
E9	CANOPY HOOD ROOM SENSOR CONTROL	120 V/1-200 VA		4' - 0"		2H4	13	WIRE TO HOOD SC CONTROL BOARD W/2-WIRE LOW VOLT. CABLE
E10	CANOPY HOOD LIGHT AND HOOD CONTROLS	120 V/1-200 VA	J-BOX	10' - 0"	2#12, #12G, 3/4"C	2H4	13	
E11	COMBI-OVEN STEAMER	208 V/3-11100 VA	J-BOX	1' - 6"	3#6, #10G, 3/4"C	2H4	7,9,11	SEE NOTE 1
E13	REACH-IN FREEZER	120 V/1-1344 VA	NEMA 5-15R	7' - 0"	2#12, #12G, 3/4"C	2H4	5	DEDICATED CIRCUIT. CEILING DROP CORDS
E14A	CORD DROP OUTLET	120 V/1-180 VA	NEMA 5-15R	12' - 0"	2#12, #12G, 3/4"C	2H5	18	DEDICATED CIRCUIT. CEILING DROP CORDS
E14B	CORD DROP OUTLET	120 V/1-180 VA	NEMA 5-15R	12' - 0"	2#12, #12G, 3/4"C	2H5	18	DEDICATED CIRCUIT. CEILING DROP CORDS
E14C	CORD DROP OUTLET	120 V/1-180 VA	NEMA 5-15R	12' - 0"	2#12, #12G, 3/4"C	2H5	14	DEDICATED CIRCUIT. CEILING DROP CORDS
E14D	CORD DROP OUTLET	120 V/1-180 VA	NEMA 5-15R	12' - 0"	2#12, #12G, 3/4"C	2H5	14	DEDICATED CIRCUIT. CEILING DROP CORDS
E14E	CORD DROP OUTLET	120 V/1-180 VA	NEMA 5-15R	12' - 0"	2#12, #12G, 3/4"C	2H5	16	DEDICATED CIRCUIT. CEILING DROP CORDS
E14F	CORD DROP OUTLET	120 V/1-180 VA	NEMA 5-15R	12' - 0"	2#12, #12G, 3/4"C	2H5	16	DEDICATED CIRCUIT. CEILING DROP CORDS
E17A	4-BURNER OPEN RANGE	120 V/1-480 VA	NEMA 5-15R	1' - 0"	2#12, #12G, 3/4"C	2H3	33	SEE NOTE 1
E17B	4-BURNER OPEN RANGE	120 V/1-480 VA	NEMA 5-15R	1' - 0"	2#12, #12G, 3/4"C	2H4	28	SEE NOTE 1
E17C	4-BURNER OPEN RANGE	120 V/1-480 VA	NEMA 5-15R	1' - 0"	2#12, #12G, 3/4"C	2H4	28	SEE NOTE 1
E18	INDUCTION WOK	208 V/3-1441 VA	NEMA 6-30R	2' - 0"	3#10, #10G, 3/4"C	2H5	19,21,23	DEDICATED CIRCUIT
E19	MOBILE PROOFING CABINET	120 V/1-1920 VA	NEMA 5-20R	2' - 0"	2#12, #12G, 3/4"C			
E20A	MICROWAVE OVEN	120 V/1-1608 VA	NEMA 5-15R	2' - 0"	2#12, #12G, 3/4"C	2H5	2	
E20B	MICROWAVE OVEN	120 V/1-1608 VA	NEMA 5-15R	2' - 0"	2#12, #12G, 3/4"C	2H5	4	
E20C	MICROWAVE OVEN	120 V/1-1608 VA	NEMA 5-15R	2' - 0"	2#12, #12G, 3/4"C	2H5	6	
E20D	MICROWAVE OVEN	120 V/1-1608 VA	NEMA 5-15R	2' - 0"	2#12, #12G, 3/4"C	2H5	8	
E20E	MICROWAVE OVEN	120 V/1-1608 VA	NEMA 5-15R	2' - 0"	2#12, #12G, 3/4"C	2H5	10	
E21	CANOPY HOOD LIGHTS AND HOOD CONTROLS	120 V/1-1800 VA	J-BOX	10' - 0"	2#12, #12G, 3/4"C	2H4	37	SEE NOTE 2
E22A	4-BURNER OPEN RANGE	120 V/1-480 VA	NEMA 5-15R	1' - 0"	2#12, #12G, 3/4"C	2H4	35	SEE NOTE 1
E22B	4-BURNER OPEN RANGE	120 V/1-480 VA	NEMA 5-15R	1' - 0"	2#12, #12G, 3/4"C	2H4	35	SEE NOTE 1
E22C	4-BURNER OPEN RANGE	120 V/1-480 VA	NEMA 5-15R	1' - 0"	2#12, #12G, 3/4"C	2H3	36	SEE NOTE 1
E23	CANOPY HOOD ROOM SENSOR CONTROL	120 V/1-0 VA		4' - 0"				WIRE TO HOOD SC CONTROL BOARD W/2-WIRE LOW VOLT. CABLE
E24	CANOPY HOOD LIGHTS AND HOOD CONTROLS	120 V/1-1800 VA	J-BOX	10' - 0"	2#12, #12G, 3/4"C	2H4	37	SEE NOTE 2
E25	CANOPY HOOD ROOM SENSOR CONTROL	120 V/1-0 VA		4' - 0"				WIRE TO HOOD SC CONTROL BOARD W/2-WIRE LOW VOLT. CABLE
E28	MICROWAVE OVEN	120 V/1-1608 VA	NEMA 5-15R	2' - 0"	2#12, #12G, 3/4"C	2H1	28	
E29	CANOPY HOOD ROOM SENSOR CONTROL	120 V/1-1440 VA		4' - 0"				WIRE TO HOOD SC CONTROL BOARD W/2-WIRE LOW VOLT. CABLE
E30	CANOPY HOOD LIGHTS AND HOOD CONTROLS	120 V/1-1800 VA	J-BOX	10' - 0"	2#12, #12G, 3/4"C	2H4	30	SEE NOTE 2
E31	4-BURNER OPEN RANGE	120 V/1-480 VA	NEMA 5-15R	1' - 0"	2#12, #12G, 3/4"C	2H1	32	SEE NOTE 1
E32	CANOPY HOOD LIGHTS AND HOOD CONTROLS	120 V/1-1800 VA	J-BOX	10' - 0"	2#12, #12G, 3/4"C	2H4	30	SEE NOTE 2
E33	CANOPY HOOD ROOM SENSOR CONTROL	120 V/1-0 VA		4' - 0"		2H4	30	WIRE TO HOOD SC CONTROL BOARD W/2-WIRE LOW VOLT. CABLE

NOTE 1:PROVIDE A SHUNT TRIP BREAKER OR SEPARATE CONTACTOR WIRED TO FIRE SUPPRESSION SYSTEM TO SHUT OFF RANGE VIA THE FIRE HOOD CONTROLLER. SEE HOOD DRAWINGS FOR CONNECTION DETAILS..
NOTE 2: PROVIDE CONNECTION TO FIRE SUPPRESSION PANEL AS REQUIRED. PROVIDE ALL FIELD WIRING REQUIRED FOR COMPLETE INSTALLATION INCLUDING CONTROL WIRING FOR SHUNT TRIP BREAKERS OR CONTACTORS FOR APPLIANCES LOCATED UNDER THE HOOD. PROVIDE A DOUBLE GANG 4-INCH SQUARE J-BOX WITH CONDUIT TO THE FIRE SUPPRESSION SYSTEM PANEL FOR FIRE PULL STATION INSTALLATION. COORDINATE WITH KITCHEN EQUIPMENT SUPPLIER/INSTALLER FOR EXACT REQUIREMENTS.
NOTE 3: PROVIDE CONNECTION TO DISPOSER CONTROL PANEL. SEE FOOD SERVICE DRAWINGS AND MANUFACTURER'S DRAWINGS FOR MORE INFO.

DLR Group
© DLR Group

REGISTERED PROFESSIONAL ENGINEER
86692PE
OREGON
MAY 8, 2012
SEAN AVERY
EXPIRES 12/31/2021

CULINARY CLASSROOM
Westview High School - Beaverton School District
4200 NW 185th Ave, Portland, OR 97229

BID & PERMIT SET
02/18/21
REVISIONS

74-21106-00

FIRST LEVEL POWER PLAN

E2.1

BIM 360://74-21106-00 Westview HS Culinary/74-21106-00_WHSC_MEP_2020.rvt
2/18/2021 3:55:36 PM

SHEET NOTES

1. PROVIDE CONNECTION TO ROOFTOP MECHANICAL VIA HOOD CONTROLLER. SEE HOOD SUBMITTAL FOR EXACT CONNECTION DETAILS.
2. COORDINATE WITH DIV 23 AND HOOD CONTROL MANUFACTURER'S WIRING REQUIREMENTS FOR CONNECTIONS TO MAU.

MECHANICAL AND PLUMBING EQUIPMENT CONNECTION SCHEDULE - ELECTRICAL

Mark	Unit Serves	Unit HP	Unit Disconnect	Electrical Data	Unit FLA	Unit MCA	Unit MOCP	Panel	Circuit Number	Unit Feeder	Notes
EF-1	EXHAUST FAN	7.5	30	480 V/3-9228 VA	11.1 A	13.9 A	15.0 A	4H1	19,21,23	3#12, #12G, 3/4"C	
EF-2	EXHAUST FAN	3	30	480 V/3-3576 VA	4.3 A	5.4 A	15.0 A	4H1	25,27,29	3#12, #12G, 3/4"C	
MAU-1	MAKEUP AIR UNIT	5	30	480 V/3-6069 VA	7.3 A	9.7 A	15.0 A	4H1	13,15,17	3#12, #12G, 3/4"C	

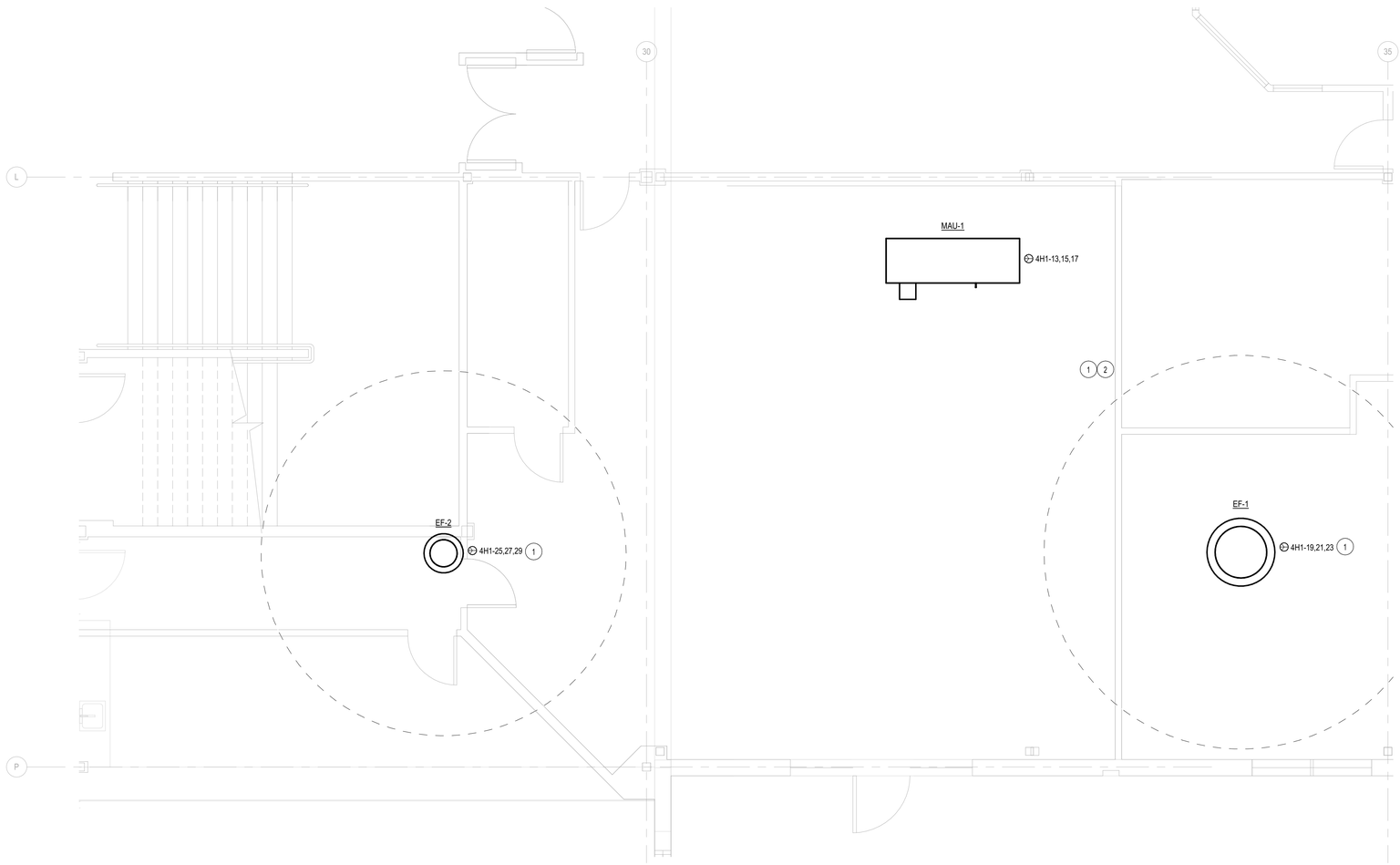

N
TRUE

ROOF POWER PLAN

SCALE: 1/4" = 1'-0"

DLR Group
© DLR Group

REGISTERED PROFESSIONAL ENGINEER
86692PE
OREGON
MAY 8, 2012
SEAN AVERY
EXPIRES 12/31/2021

CULINARY CLASSROOM

Westview High School - Beaverton School District

4200 NW 185th Ave, Portland, OR 97229

BID & PERMIT SET
02/18/21
REVISIONS

74-21106-00

ROOF POWER PLAN

E2.2

BIM 360://74-21106-00 Westview HS Culinary/74-21106-00_WHSC_MEP_2020.rvt
2/18/2021 3:55:37 PM

ONE-LINE DIAGRAM

SCALE: 1 1/2" = 1'-0"

DLR Group
© DLR Group

REGISTERED PROFESSIONAL ENGINEER
86692PE
OREGON
MAY 8, 2012
SEAN AVERY
EXPIRES 12/31/2021

CULINARY CLASSROOM

Westview High School - Beaverton School District

4200 NW 185th Ave, Portland, OR 97229

BID & PERMIT SET
02/18/21
REVISIONS

74-21106-00

ONE-LINE DIAGRAM

E5.1

BIM 360://74-21106-00 Westview HS Culinary/74-21106-00_WHSC_MEP_2020.rvt
2/18/2021 3:55:37 PM

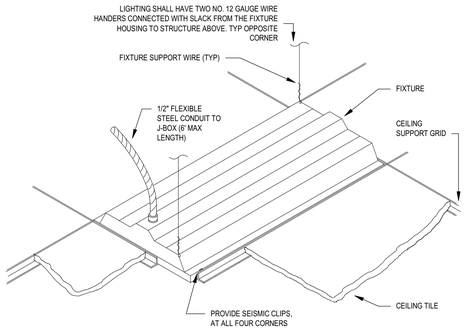

1 E6.1 RECESSED FIXTURE SEISMIC SUPPORT
NO SCALE

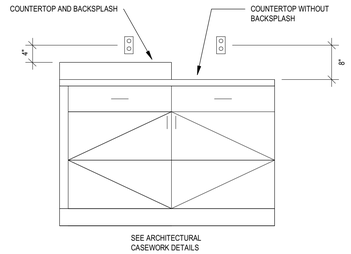

2 E6.1 ABOVE COUNTER RECEPTACLES
SCALE: 1'2" = 1'-0"

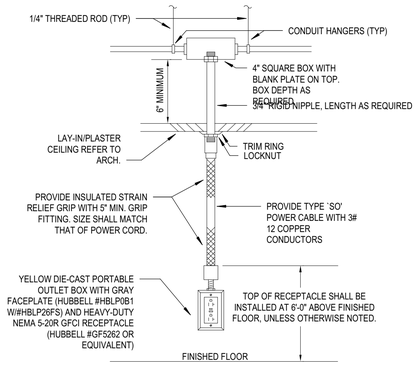

3 E6.1 DROP CORD DETAIL
SCALE: 3/16" = 1'-0"

DLR Group
© DLR Group

REGISTERED PROFESSIONAL ENGINEER
86692PE
OREGON
MAY 8, 2012
SEAN AVERY
EXPIRES 12/31/2021

CULINARY CLASSROOM

Westview High School - Beaverton School District

4200 NW 185th Ave, Portland, OR 97229

BID & PERMIT SET
02/18/21
REVISIONS

74-21106-00

ELECTRICAL DETAILS

E6.1

BIM 360://74-21106-00 Westview HS Culinary/74-21106-00_WHSC_MEP_2020.rvt
2/18/2021 3:55:38 PM

A B C D E

1 2 3 4

PANEL: 2H1

LOCATION: ELECTRICAL A107
BUS RATING: 100.0 A
MAIN BREAKER: MLO

VOLTS: 208Y/120
PHASES: 3
WIRES: 4
SCCR: 10,000

MOUNTING: SURFACE
FED FROM: 2DPH
INTEGRAL SPD: Type 1
LUG ACCESSORIES: SEE ONE-LINE

CKT	CIRCUIT DESCRIPTION	BKR TRIP	P	BKR TYPE	LOAD TYPE	PHASE A (VA)		PHASE B (VA)		PHASE C (VA)		LOAD TYPE	BKR TYPE	P	BKR TRIP	CIRCUIT DESCRIPTION	CKT
1	REC G101	20	1		R	540	864					M		1	20	75 EWC	2
3	REC G101	20	1		R			360	360			R		1	20	REC G101	4
5	REC G101	20	1		R					360	900	R		1	20	REC G101	6
7	REC G101	20	1		R	360	360					R		1	20	REC G103, EXT	8
9	REC G101	20	1		R			360	720			R		1	20	REC D163	10
11	REC G101	20	1		R					1,080	720	R		1	20	REC D163	12
13	REC D161, 167	20	1		R	540	360					R		1	20	REC D103, 106	14
15	45 WASHER	20	1		O			1,500	720			R		1	20	REC D163	16
17	REC D162	20	1		R					720	540	R		1	20	REC D163	18
19	REC D162	20	1		R	540	540					R		1	20	REC D163	20
21	REC D162	20	1		R			540	528			M		1	20	42 HEATER	22
23	46 GAS DRYER	20	1		O					200	1,200	O		1	20	SPARK CONTROL	24
25	EF 29	20	1		O	1,200	1,200					O		1	20	ABORT GATE	26
27	243 EF/4	20	1		M			864	1,608			K		1	20	113 DISHWASH	28
29	REC ROOF	20	1		R					720	1,440	R		1	20	REC COUNTER	30
31	247 EF/11A	20	1		M	864	480					K	G	1	20	RANGE (NOTE 1)	32
33	REC ROOF	20	1		R			720	0			--		1	20	SPARE	34
35	248 EF/11B	20	1		M					864	1,000	O		1	20	EF CONTROL	36
37	REC ROOF	20	1		R	720	1,000					O		1	20	HOBART	38
39	261 EF/7	20	1		M			696	1,500			O		1	20	DISHWASHER	40
41	263 EF/30	20	1		M					696	1,000	O		1	20	VAV BOXES	42
					TOTAL LOAD:	9568 VA		10476 VA		11440 VA							
					TOTAL AMPS	79.7 A		88.5 A		96.5 A							

LOAD TYPE	LOAD DESCRIPTION	CONNECTED LOAD (VA)	DEMAND...	ESTIMATED DEMAND (VA)	DEMAND FACTOR NOTES	BKR TYPE	PANEL TOTALS
L	LIGHTING	0 VA	0.00%	0 VA	CONTINUOUS LOAD @ 125%	G = GFCI (5mA)	
R	RECEPTACLES	14220 VA	85.16%	12110 VA	FIRST 10KVA @ 100%, REMAINDER @ 50%	GP = GFP (30mA)	**CONNECTED LOAD:** 31 kVA
K	KITCHEN	2088 VA	100.00%	2088 VA	NON-DWELLING KITCHEN LOADS, NEC ART. 220	ST = SHUNT TRIP	**ESTIMATED DEMAND:** 30 kVA
LM	LARGEST MOTOR	0 VA	0.00%	0 VA	LARGEST MOTOR, NEC ART. 430	LO = LOCK OUT	**CONNECTED CURRENT:** 87.4 A
M	MOTOR	5376 VA	104.02%	5592 VA			**EMD CURRENT:** 82.1 A
C	COOLING	0 VA	0.00%	0 VA			
H	HEATING	0 VA	0.00%	0 VA			
O	OTHER	9800 VA	100.00%	9800 VA			
Spare	SPARE	0 VA	0.00%	0 VA			

NOTES:
1. CIRCUITE UPDATES

PANEL: 2H3

LOCATION: ELECTRICAL A107
BUS RATING: 100.0 A
MAIN BREAKER: MLO

VOLTS: 208Y/120
PHASES: 3
WIRES: 4
SCCR: 10,000

MOUNTING: SURFACE
FED FROM: 2DPH
INTEGRAL SPD: Type 1
LUG ACCESSORIES: SEE ONE-LINE

CKT	CIRCUIT DESCRIPTION	BKR TRIP	P	BKR TYPE	LOAD TYPE	PHASE A (VA)		PHASE B (VA)		PHASE C (VA)		LOAD TYPE	BKR TYPE	P	BKR TRIP	CIRCUIT DESCRIPTION	CKT
1	REC H103	20	1		R	1,440	1,080					R		1	20	REC H118	2
3	REC H119	20	1		R			540	1,080			R		1	20	REC H118	4
5	REC H119	20	1		R					1,080	1,080	R		1	20	REC H118	6
7	REC H119	20	1		R	540	540					R		1	20	REC H118	8
9	REC H119	20	1		R			1,080	540			R		1	20	REC H118	10
11	REC H118	20	1		R					720	540	R		1	20	REC H118	12
13	REC H120, 121	20	1		R	1,080	540					R		1	20	REC H118	14
15	REC H120, 121	20	1		R			540	540			R		1	20	REC H118	16
17	REC H120, 121	20	1		R					1,080	1,080	R		1	20	RECEPTACLE	18
19	REC H103	20	1		R	720	1,080					R		1	20	SODA MACHINE	20
21	REC H118	20	1		R			720	1,080			R		1	20	SODA MACHINE	22
23	REC H118	20	1		R					540	1,080	R		1	20	REC H127	24
25	REC H117	20	1		R	540	1,080					R		1	20	REC H127	26
27	REC H117	20	1		R			540	1,080			R		1	20	REC H127	28
29	RECEPTACLE	20	1		R					360	1,080	R		1	20	REC H127	30
31	REC OS	20	1		R	180	180					R		1	20	REC EXT	32
33	106 RANGE (NOTE 1)	20	1	G	K			480	1,440			R		1	20	REC COUNTER	34
35	SPARE	20	1		--					0	480	K	G	1	20	RANGE (NOTE 1)	36
37	SPARE	20	1		--	0	1,080					R		1	20	SODA MACHINE	38
39	BENTO CART	20	1		R			900	1,080			R		1	20	SODA MACHINE	40
41	BENTO CART	20	1		R					900	1,080	R		1	20	SODA MACHINE	42
					TOTAL LOAD:	10080 VA		11640 VA		11100 VA							
					TOTAL AMPS	84.0 A		98.3 A		93.8 A							

LOAD TYPE	LOAD DESCRIPTION	CONNECTED LOAD (VA)	DEMAND...	ESTIMATED DEMAND (VA)	DEMAND FACTOR NOTES	BKR TYPE	PANEL TOTALS
L	LIGHTING	0 VA	0.00%	0 VA	CONTINUOUS LOAD @ 125%	G = GFCI (5mA)	
R	RECEPTACLES	31860 VA	65.69%	20930 VA	FIRST 10KVA @ 100%, REMAINDER @ 50%	GP = GFP (30mA)	**CONNECTED LOAD:** 33 kVA
K	KITCHEN	960 VA	100.00%	960 VA	NON-DWELLING KITCHEN LOADS, NEC ART. 220	ST = SHUNT TRIP	**ESTIMATED DEMAND:** 22 kVA
LM	LARGEST MOTOR	0 VA	0.00%	0 VA	LARGEST MOTOR, NEC ART. 430	LO = LOCK OUT	**CONNECTED CURRENT:** 91.1 A
M	MOTOR	0 VA	0.00%	0 VA			**EMD CURRENT:** 60.8 A
C	COOLING	0 VA	0.00%	0 VA			
H	HEATING	0 VA	0.00%	0 VA			
O	OTHER	0 VA	0.00%	0 VA			
Spare	SPARE	0 VA	0.00%	0 VA			

NOTES:
1. CIRCUIT UPDATED.

PANEL: 2H4

LOCATION: ELECTRICAL A107
BUS RATING: 225.0 A
MAIN BREAKER: MLO

VOLTS: 208Y/120
PHASES: 3
WIRES: 4
SCCR: 10,000

MOUNTING: SURFACE
FED FROM: 2DPH
INTEGRAL SPD: Type 1
LUG ACCESSORIES: SEE ONE-LINE

CKT	CIRCUIT DESCRIPTION	BKR TRIP	P	BKR TYPE	LOAD TYPE	PHASE A (VA)		PHASE B (VA)		PHASE C (VA)		LOAD TYPE	BKR TYPE	P	BKR TRIP	CIRCUIT DESCRIPTION	CKT
1	REC H130, 132	20	1		R	360	1,000					O		1	20	E84 MACHO	2
3	REC, FRIDGE (NOTE 1)	20	1	G	R: K			1,344	1,000			O		1	20	E85 WARMER	4
5	REACH IN FREEZER (NOTE 1)	20	1	G	K					1,344	696	M		1	20	E86 REFRIG	6
7						3,700	1,000					O		1	20	E83 WARMER	8
9	COMBI OVEN STEAMER (NOTE 1)	40	3		K			3,700	1,800			O		1	20	E82 HD GRILL	10
11										3,700	1,800	O		1	20	E81 IC FREEZE	12
13	RANGE HOOD (NOTE 1)	20	1		K	600	2,000					O		1	30	E79 ESPRESSO	14
15	RECEPT (NOTE 1)	20	1		R			180	1,500			O		1	20	E78 HOT CHOC	16
17	E68 JUICE	20	1		O					1,000	1,800	O		1	20	E76 POPCORN	18
19	SNACK BAR	20	1		O	1,800	1,000					O		1	20	E74,5 BUTTER	20
21	E73 CASH SYS	20	1		O			500	500			O		1	20	E73 CASH SYS	22
23	E70 LTG	20	1		L					500	1,620	R		1	20	RECEPTACLE	24
25	E80 SOFT	20	2		O	1,650											26
27								1,650	960			K	G	1	20	RANGES (NOTE 1)	28
29	YOGURT MACH/SNACK BAR	40	2		O					3,150	4,800	M		1	20	RANAGE HOODS (NOTE 1)	30
31						3,150	1,440					R		1	20	REC COUNTER	32
33	REC COUNTER	20	1		R			1,440	1,440			R		1	20	REC COUNTER	34
35	RANGES (NOTE 1)	20	1	G	K					960	864	R		1	20	263 EF/8	36
37	RANGE HOODS (NOTE 1)	20	1		M	3,600	864					R		1	20	264 EF/31	38
39	OVEN S140	20	2		O			1,500	1,500			O		2	20	RNG S141	40
41										1,500	1,500						42
					TOTAL LOAD:	22164 VA		19014 VA		25234 VA							
					TOTAL AMPS	188.7 A		158.5 A		214.3 A							

LOAD TYPE	LOAD DESCRIPTION	CONNECTED LOAD (VA)	DEMAND...	ESTIMATED DEMAND (VA)	DEMAND FACTOR NOTES	BKR TYPE	PANEL TOTALS
L	LIGHTING	500 VA	125.00%	625 VA	CONTINUOUS LOAD @ 125%	G = GFCI (5mA)	
R	RECEPTACLES	8568 VA	100.00%	8568 VA	FIRST 10KVA @ 100%, REMAINDER @ 50%	GP = GFP (30mA)	**CONNECTED LOAD:** 66 kVA
K	KITCHEN	15948 VA	65.00%	10366 VA	NON-DWELLING KITCHEN LOADS, NEC ART. 220	ST = SHUNT TRIP	**ESTIMATED DEMAND:** 61 kVA
LM	LARGEST MOTOR	0 VA	0.00%	0 VA	LARGEST MOTOR, NEC ART. 430	LO = LOCK OUT	**CONNECTED CURRENT:** 184.3 A
M	MOTOR	9096 VA	104.95%	9546 VA			**EMD CURRENT:** 170.4 A
C	COOLING	0 VA	0.00%	0 VA			
H	HEATING	0 VA	0.00%	0 VA			
O	OTHER	32300 VA	100.00%	32300 VA			
Spare	SPARE	0 VA	0.00%	0 VA			

NOTES:
1. CIRCUIT UPDATED.

PANEL: 2H5

LOCATION: ELECTRICAL A107
BUS RATING: 100.0 A
MAIN BREAKER: 100/3 or MLO

VOLTS: 208Y/120
PHASES: 3
WIRES: 4
SCCR: 10,000

MOUNTING: SURFACE
FED FROM: 2DPH
INTEGRAL SPD: Type 1
LUG ACCESSORIES: 2DPH

CKT	CIRCUIT DESCRIPTION	BKR TRIP	P	BKR TYPE	LOAD TYPE	PHASE A (VA)		PHASE B (VA)		PHASE C (VA)		LOAD TYPE	BKR TYPE	P	BKR TRIP	CIRCUIT DESCRIPTION	CKT
1						1,440	1,608					K		1	20	MICROWAVE	2
3	DISPOSERS	20	3		K			1,440	1,608			K		1	20	MICROWAVE	4
5										1,440	1,608	K		1	20	MICROWAVE	6
7						1,440	1,608					K		1	20	MICROWAVE	8
9	DISPOSERS	20	3		K			1,440	1,608			K		1	20	MICROWAVE	10
11										1,440	1,440	R		1	20	DETERGENT DISPENSER	12
13						2,870	360					R		1	20	CORD DROP RECEPTACLE	14
15	WAREWASHER	30	3		K			2,870	360			R		1	20	CORD DROP RECEPTACLE	16
17										2,870	360	R		1	20	CORD DROP RECEPTACLE	18
19						480											20
21	INDUCTON WOK	20	3		K			480									22
23										480							24
25	RECEPTACLE	20	1		R	720											26
27	ICE-MAKER	20	1		R			180									28
29																	30
31																	32
33																	34
35																	36
37																	38
39																	40
41																	42
					TOTAL LOAD:	10526 VA		9986 VA		9638 VA							
					TOTAL AMPS	88.2 A		83.7 A		80.3 A							

LOAD TYPE	LOAD DESCRIPTION	CONNECTED LOAD (VA)	DEMAND...	ESTIMATED DEMAND (VA)	DEMAND FACTOR NOTES	BKR TYPE	PANEL TOTALS
L	LIGHTING	0 VA	0.00%	0 VA	CONTINUOUS LOAD @ 125%	G = GFCI (5mA)	
R	RECEPTACLES	3420 VA	100.00%	3420 VA	FIRST 10KVA @ 100%, REMAINDER @ 50%	GP = GFP (30mA)	**CONNECTED LOAD:** 30 kVA
K	KITCHEN	26731 VA	65.00%	17375 VA	NON-DWELLING KITCHEN LOADS, NEC ART. 220	ST = SHUNT TRIP	**ESTIMATED DEMAND:** 21 kVA
LM	LARGEST MOTOR	0 VA	0.00%	0 VA	LARGEST MOTOR, NEC ART. 430	LO = LOCK OUT	**CONNECTED CURRENT:** 83.7 A
M	MOTOR	0 VA	0.00%	0 VA			**EMD CURRENT:** 57.7 A
C	COOLING	0 VA	0.00%	0 VA			
H	HEATING	0 VA	0.00%	0 VA			
O	OTHER	0 VA	0.00%	0 VA			
Spare	SPARE	0 VA	0.00%	0 VA			

NOTES: NEW PANEL

DLR Group
© DLR Group

REGISTERED PROFESSIONAL ENGINEER
86692PE
OREGON
MAY 8, 2012
SEAN AVERY
EXPIRES 12/31/2021

CULINARY CLASSROOM
Westview High School - Beaverton School District
4200 NW 185th Ave, Portland, OR 97229

BID & PERMIT SET
02/18/21
REVISIONS

74-21106-00

PANEL SCHEDULES

E7.1

BIM 360://74-21106-00 Westview HS Culinary/74-21106-00_WHSC_MEP_2020.rvt
2/18/2021 3:55:40 PM

PANEL: 4H1

LOCATION: ELECTRICAL A107
BUS RATING: 100.0 A
MAIN BREAKER: MLO

VOLTS: 480Y/277
PHASES: 3
WIRES: 4
SCCR: 10,000

MOUNTING: SURFACE
FED FROM: 4DPH
INTEGRAL SPD: Type 1
LUG ACCESSORIES: SEE ONE-LINE

CKT	CIRCUIT DESCRIPTION	BKR TRIP	P	BKR TYPE	LOAD TYPE	PHASE A (VA)		PHASE B (VA)		PHASE C (VA)		LOAD TYPE	BKR TYPE	P	BKR TRIP	CIRCUIT DESCRIPTION	CKT
1	LTG H128-130	20	1		L	1,856	2,808					L		1	20	LTG H122	2
3	LTG H120-1,7	20	1		L			2,822	2,160			L		1	20	LTG H122-125	4
5	SPACE	--	--	--	--					0	0	--		1	20	SPARE	6
7	LTG H104-7,10	20	1		L	2,721	0					--		1	20	SPARE	8
9	LTG H108-114	20	1		L			3,139	0			--		1	20	SPARE	10
11	LTG H117-119	20	1		L					3,139	0	--		1	20	SPARE	12
13						2,023	0					--		1	20	SPARE	14
15	MAU-1 (NOTE 1)	15	3		M			2,023	0			--		1	20	SPARE	16
17										2,023	0	--		1	20	SPARE	18
19						3,076	0					--		1	20	SPARE	20
21	EF-1 (NOTE 1)	15	3		M			3,076	0			--		1	20	SPARE	22
23										3,076	0	--		1	20	SPARE	24
25						1,192	720										26
27	EF-2(NOTE 1)	15	3		M			1,192	720			M		3	20	265 EF/32	28
29										1,192	720						30
31	SPARE	20	1		--	0	0					--	--	--	--	SPACE	32
33	SPARE	20	1		--			0	0			--	--	--	--	SPACE	34
35	SPARE	20	1		--					0	0	--	--	--	--	SPACE	36
37	SPARE	20	1		--	0	0					--	--	--	--	SPACE	38
39	SPARE	20	1		--			0	0			--	--	--	--	SPACE	40
41	SPARE	20	1		--					0	0	--	--	--	--	SPACE	42
					TOTAL LOAD:	14396 VA		15132 VA		10150 VA							
					TOTAL AMPS	54.3 A		57.0 A		36.6 A							

LOAD TYPE	LOAD DESCRIPTION	CONNECTED LOAD (VA)	DEMAND...	ESTIMATED DEMAND (VA)	DEMAND FACTOR NOTES	BKR TYPE	PANEL TOTALS
L	LIGHTING	18645 VA	125.00%	23306 VA	CONTINUOUS LOAD @ 125%	G = GFCI (5mA)	
R	RECEPTACLES	0 VA	0.00%	0 VA	FIRST 10KVA @ 100%, REMAINDER @ 50%	GP = GFP (30mA)	**CONNECTED LOAD:** 40 kVA
K	KITCHEN	0 VA	0.00%	0 VA	NON-DWELLING KITCHEN LOADS, NEC ART. 220	ST = SHUNT TRIP	**ESTIMATED DEMAND:** 47 kVA
LM	LARGEST MOTOR	0 VA	0.00%	0 VA	LARGEST MOTOR, NEC ART. 430	LO = LOCK OUT	**CONNECTED CURRENT:** 47.7 A
M	MOTOR	21033 VA	110.97%	23340 VA			**EMD CURRENT:** 56.1 A
C	COOLING	0 VA	0.00%	0 VA			
H	HEATING	0 VA	0.00%	0 VA			
O	OTHER	0 VA	0.00%	0 VA			
Spare	SPARE	0 VA	0.00%	0 VA			

NOTES:
1. CIRCUIT UPDATED.

PANEL: 2DPH

LOCATION: ELECTRICAL A107
BUS RATING: 800.0 A
MAIN BREAKER: 700 A

VOLTS: 208Y/120
PHASES: 3
WIRES: 4
SCCR: 10,000A

MOUNTING: SURFACE
FED FROM: T2DPH
INTEGRAL SPD: Type 1
LUG ACCESSORIES: SEE ONE-LINE

CKT	CIRCUIT DESCRIPTION	BKR TRIP	P	BKR TYPE	LOAD TYPE	PHASE A (VA)		PHASE B (VA)		PHASE C (VA)		LOAD TYPE	BKR TYPE	P	BKR TRIP	CIRCUIT DESCRIPTION	CKT
1						9,568	7,112										2
3	2H1	100	3		R; K; O; M			10,476	7,112			--		3	100	2A1	4
5										11,440	7,112						6
7						11,275	22,164										8
9	SPARE	125	3		--			11,275	19,014			L; R; K; O; M		3	225	2H4	10
11										11,275	25,234						12
13						10,080	10,526										14
15	2H3	100	3		R; K			11,640	9,986			R; K		3	100	2H5	16
17										11,100	9,638						18
19																	20
21																	22
23																	24
25																	26
27																	28
29																	30
31																	32
33																	34
35																	36
37																	38
39																	40
41																	42
					TOTAL LOAD:	70725 VA		69503 VA		75799 VA							
					TOTAL AMPS	590.9 A		579.2 A		633.2 A							

LOAD TYPE	LOAD DESCRIPTION	CONNECTED LOAD (VA)	DEMAND...	ESTIMATED DEMAND (VA)	DEMAND FACTOR NOTES	BKR TYPE	PANEL TOTALS
L	LIGHTING	500 VA	125.00%	625 VA	CONTINUOUS LOAD @ 125%	G = GFCI (5mA)	
R	RECEPTACLES	58068 VA	58.61%	34034 VA	FIRST 10KVA @ 100%, REMAINDER @ 50%	GP = GFP (30mA)	**CONNECTED LOAD:** 216 kVA
K	KITCHEN	45727 VA	65.00%	29723 VA	NON-DWELLING KITCHEN LOADS, NEC ART. 220	ST = SHUNT TRIP	**ESTIMATED DEMAND:** 177 kVA
LM	LARGEST MOTOR	0 VA	0.00%	0 VA	LARGEST MOTOR, NEC ART. 430	LO = LOCK OUT	**CONNECTED CURRENT:** 599.6 A
M	MOTOR	14472 VA	103.11%	14922 VA			**EMD CURRENT:** 490.1 A
C	COOLING	0 VA	0.00%	0 VA			
H	HEATING	0 VA	0.00%	0 VA			
O	OTHER	42100 VA	100.00%	42100 VA			
Spare	SPARE	55161 VA	100.00%	55161 VA	(DEMAND LOADS FOR 2A1 AND 2H2)		

NOTES:

DLR Group
© DLR Group

REGISTERED PROFESSIONAL ENGINEER
86692PE
OREGON
MAY 8, 2012
SEAN AVERY
EXPIRES 12/31/2021

CULINARY CLASSROOM

Westview High School - Beaverton School District

4200 NW 185th Ave, Portland, OR 97229

BID & PERMIT SET
02/18/21
REVISIONS

74-21106-00

PANEL SCHEDULES

E7.2

BIM 360://74-21106-00 Westview HS Culinary/74-21106-00_WHSC_MEP_2020.rvt
2/18/2021 3:55:40 PM

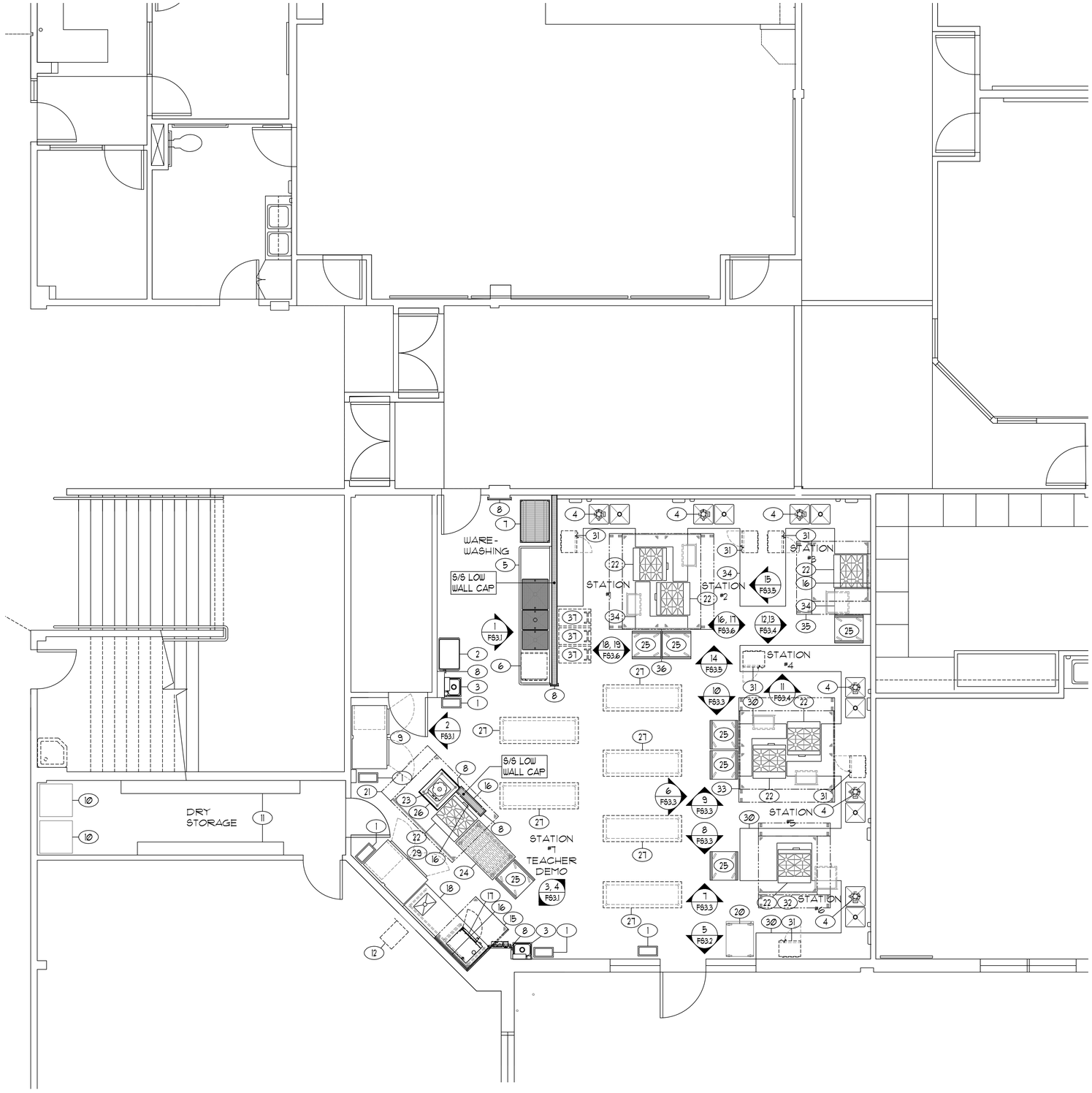

EQUIPMENT SCHEDULE

ITEM	DESCRIPTION	QUAN.	REMARKS:
1	SLIM JIM WASTE RECEPTACLES	5	---
2	UTILITY CART	1	---
3	HAND WASHING SINKS	2	---
4	DISPOSERS	6	---
5	POT WASHING SINK TABLE WITH REMOVABLE SINK COVERS	1	---
6	UNDERCOUNTER WAREWASHER	1	EXISTING/RELOCATED - ADD NEW DWT KIT
7	MOBILE POT AND PAN SHELVING	1	---
8	CORNER/CHANNEL GUARDS	LOT	---
9	REACH-IN REFRIGERATOR	1	---
10	CLOTHES WASHER AND DRYER	1	BY OWNER
11	DRY STORAGE SHELVING	LOT	EXISTING EQUIPMENT
12	CUBE ICE MACHINE	1	EXISTING EQUIPMENT - RELOCATE/REINSTALL
13	NOT USED	---	---
14	NOT USED	---	---
15	CANOPY HOOD WITH FIRE PROTECTION SYSTEM	1	---
16	STAINLESS STEEL WALL FLASHING	LOT	---
17	COMBI-OVEN STEAMER	1	---
18	ADA PREP WORK TABLE	1	---
19	NOT USED	---	---
20	MOBILE PROOFING CABINET	1	---
21	CANOPY HOOD WITH FIRE PROTECTION SYSTEM	1	---
22	4-BURNER OPEN RANGES	7	---
23	INDUCTION WOK	1	---
24	TEACHERS MAPLE TOP WORK TABLE	1	---
25	MOBILE INGREDIENT CARTS	6	---
26	MOBILE TABLE	1	---
27	MOBILE ISLAND TABLES	6	EXISTING EQUIPMENT
28	NOT USED	---	---
29	REACH-IN FREEZER	1	---
30	STUDENT WORK STATION	1	---
31	MICROWAVE OVENS	6	EXISTING/RELOCATED
32	CANOPY HOOD WITH FIRE PROTECTION SYSTEM	1	---
33	CANOPY HOOD WITH FIRE PROTECTION SYSTEM	1	---
34	STUDENT WORK STATION	1	---
35	CANOPY HOOD WITH FIRE PROTECTION SYSTEM	1	---
36	CANOPY HOOD WITH FIRE PROTECTION SYSTEM	1	---
37	MOBILE INGREDIENT BINS	3	EXISTING/RELOCATED

DLR Group
© DLR Group

HALLIDAY ASSOCIATES
656 NW NORWOOD
CAO-B, WASH. 98607
(360) 834-2504 FAX 834-2505
FOOD SERVICE CONSULTANTS
SPACE PLANNING & DESIGN

CULINARY CLASSROOM

Westview High School - Beaverton School District

4200 NW 185th Ave, Portland, OR 97229

BID & PERMIT SET

02.18.21
REVISIONS
ADD-01 3/17/21

74-21106-00

FOOD SERVICE
EQUIPMENT PLAN

FS1.1

DWG: 30U//14+21 10P00 Westview HS Culinary//14+21 10P00_WTHS0_AR_A0A01.V1
12/3/2020 2:46:27 PM

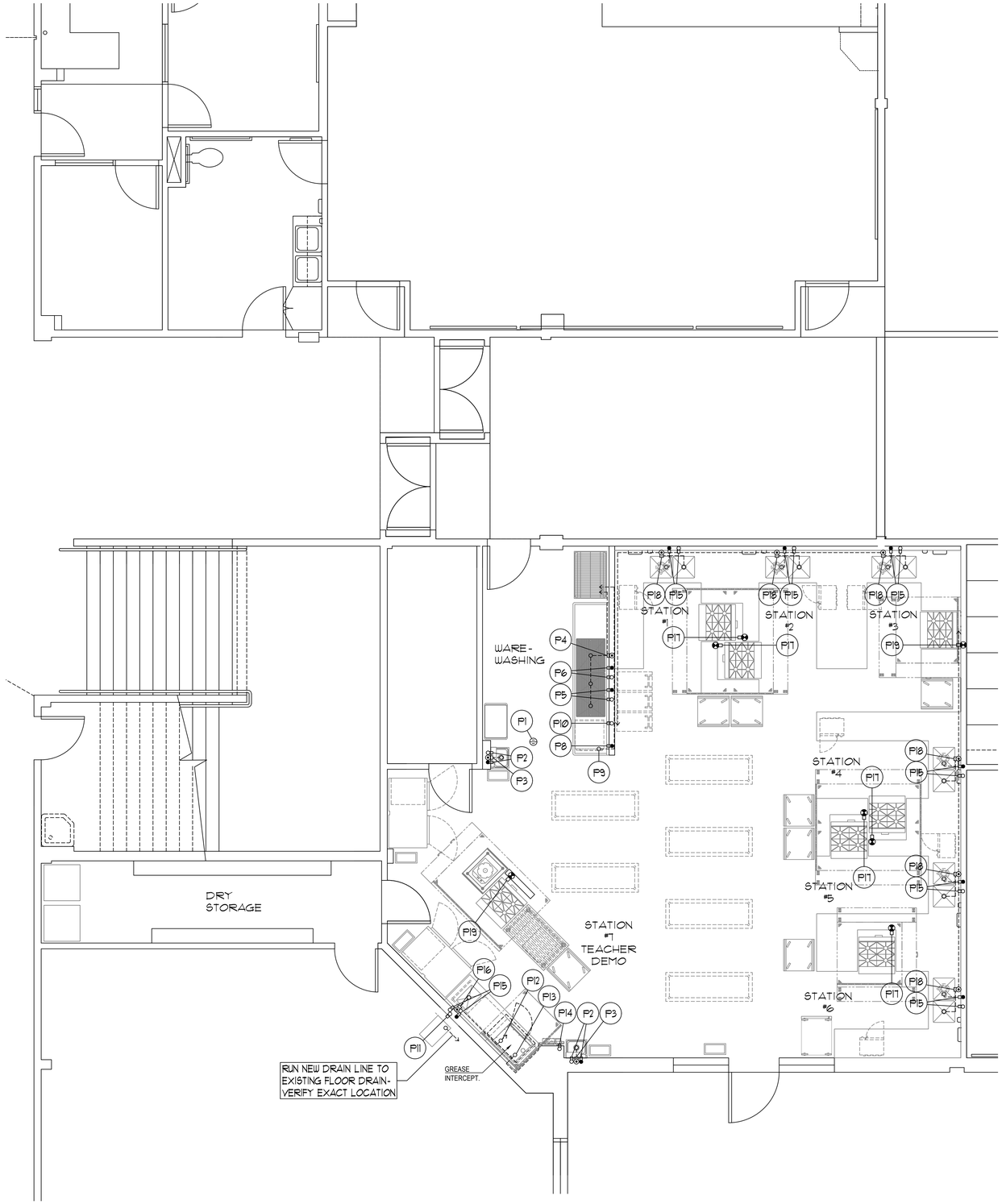

PLUMBING SCHEDULE

ITEM NO.	P. NO.	SIZE	DESCRIPTION	LOC'N.	HEIGHT	SERVICE TO :	REMARKS:
---	P1	---	FLOOR DRAIN	FLOOR	-1/2"	AREA DRAIN	
3	P2	1/2"	HOT & COLD	WALL	22"	HAND WASHING SINK	10 GPH HOT
3	P3	1-1/2"	WASTE	WALL	20"	HAND WASHING SINK	---
5	P4	2"	WASTE	WALL	9"	(3) SINK DRAINS	CONNECT TO GREASE INTERCEPTOR
5	P5	1/2"	HOT & COLD	WALL	20"	PRE-RINSE FAUCET	40 GPH HOT
5	P6	1/2"	HOT & COLD	WALL	16"	SINK FAUCET	20 GPH HOT
---	P7	---	NOT USED	---	---	---	---
6	P8	3/4"	HOT @ 120°	WALL	12"	UNDERCOUNTER DISHWASHER	23 GPH HOT @ 20 PSI
6	P9	1-1/2"	DRAIN LINE	FIXTURE	VERIFY	UNDERCOUNTER DISHWASHER	CONNECT TO GREASE INTERCEPTOR
6	P10	1/2"	COLD	WALL	12"	UNDERCOUNTER DISHWASHER DRAIN WATER TEMPERING	VERIFY REQ'S. WITH OWNER FURNISHED EQUIPMENT
12	P11	1/2"	COLD	WALL	29"	CUBE ICE MACHINE	CONNECT THROUGH WATER FILTER
17	P12	2"	DRAIN LINE	FIXTURE	VERIFY	COMBI-OVEN STEAMER	CONNECT TO GREASE INTERCEPTOR
17	P13	3/4"	COLD	WALL	40"	COMBI-OVEN STEAMER	FOR BOILER- SUPPLIED FROM P14
---	P14	3/4"	COLD	WALL	66"	WATER FILTRATION SYSTEM	INTERCONNECT WITH P13
18, 30, & 34	P15	1/2"	HOT & COLD	WALL	16"	SINK FAUCET & DISPOSER	20 GPH HOT. TEE COLD TO DISPOSER INLET
17, 18	P16	2"	WASTE	FIXTURE	VERIFY	(1) SINK DRAIN	CONNECT TO GREASE INTERCEPTOR
22	P17	3/4"	GAS	FIXTURE	30"	4-BURNER OPEN RANGE	140M BTU TOTAL CONNECTION- QUICK DISCONNECT
30, 34	P18	2"	WASTE	FIXTURE	VERIFY	(1) SINK DRAIN AND DISPOSER	CONNECT LINES TO GREASE INTERCEPTORS
22	P19	3/4"	GAS	WALL	30"	4-BURNER OPEN RANGE	140M BTU TOTAL CONNECTION- QUICK DISCONNECT

NOTE: REFER TO PLUMBING DRAWINGS CONFIRMING ALL EQUIPMENT DRAIN LINES ARE TO RUN TO GREASE INTERCEPTORS. DRAIN LINES ARE TO RUN DIRECTLY BACK TO WALLS AND RUN ALONG WALLS TO BE CLEAR OF UNDER TABLE STORAGE SPACE.

PLUMBING NOTES

1. THIS DRAWING IS NOT TO BE USED FOR ESTABLISHING ROUGH-IN LOCATIONS. REFER TO DIMENSIONED DRAWING PREPARED BY THE KITCHEN EQUIPMENT CONTRACTOR.
2. UNDER PLUMBING WORK OF DIVISION 22, MAKE ALL ROUGH-INS AND FINAL CONNECTIONS IN CONFORMANCE WITH LOCAL CODES. PROVIDE SHUT-OFF VALVES WITH PERMANENT NAME TAGS IDENTIFYING SUPPLY LINES TO EACH INDIVIDUAL PIECE OF EQUIPMENT. INCLUDE TRAPS, TAIL PIECES, AND LINE STRAINERS AS REQUIRED.
3. UNDER PLUMBING WORK OF DIVISION 22, FURNISH AND INSTALL ALL FLOOR SINKS AND AREA DRAINS FLUSH WITH FINISHED FLOOR IF CODE ALLOWS.
4. UNDER PLUMBING WORK OF DIVISION 22, FURNISH AND INSTALL GREASE TRAP OR INTERCEPTOR AS REQUIRED.
5. UNDER PLUMBING WORK OF DIVISION 22, FURNISH AND INSTALL ALL SINK WASTE LINES. USE COPPER DRAIN LINES. NO PVC IS ACCEPTABLE.
6. UNDER KITCHEN EQUIPMENT WORK OF DIVISION 11, PROVIDE FAUCETS AT EQUIPMENT. UNDER PLUMBING WORK OF DIVISION 22, INSTALL AND CONNECT FAUCETS.
7. UNDER PLUMBING WORK OF DIVISION 22, FURNISH AND INSTALL CHROME PLATED VACUUM BREAKERS OR BACKFLOW PREVENTION DEVICES ON SUPPLY LINES TO EQUIPMENT AS REQUIRED BY CODES.
8. UNDER PLUMBING WORK OF DIVISION 22, FURNISH AND INSTALL STAINLESS STEEL OR CHROME PLATED ESCUTCHEON PLATES FOR ALL WATER LINES PENETRATING COUNTER TOPS AND BACK SPLASHES.
9. UNDER PLUMBING WORK OF DIVISION 22, FURNISH PRESSURE REDUCING VALVE FOR ALL GAS AND WATER LINES. MAXIMUM WATER PRESSURE AT BOOSTER HEATER AND DISHWASHER SHALL BE 20 PSI.
10. UNDER KITCHEN EQUIPMENT WORK OF DIVISION 11, FURNISH GAS QUICK DISCONNECT ASSEMBLIES WITH CABLE RESTRAINTS FOR EACH GAS FIRED COOKING APPLIANCE.
11. UNDER PLUMBING WORK OF DIVISION 22, PROVIDE 120 DEGREE HOT WATER SUPPLY AT WAREWASHER/ BOOSTER HEATER AS SHOWN. VERIFY REQUIRED TEMPERATURE FOR SUPPLY AT SINK FAUCETS WITH LOCAL AND NATIONAL CODES.
12. UNDER PLUMBING WORK OF DIVISION 22, FURNISH AND INSTALL A SOLENOID VALVE ON PRIMARY GAS SUPPLY TO SHUT-OFF EQUIPMENT DURING FIRE SYSTEM ACTIVATION. SOLENOID SHALL BE ACCESSIBLE FOR SERVICING, TESTING, AND RESETTING IN THE EVENT OF SYSTEM ACTIVATION.
13. SEE PLUMBING AND MECHANICAL DRAWINGS FOR ADDITIONAL REQUIREMENTS.

PLUMBING SYMBOL LEGEND

COLD WATER	
HOT WATER	
WASTE	
GAS	
FLOOR DRAIN	
FLOOR SINK	

DLR Group
© DLR Group

LAURA L. BOURLAND
PROFESSIONAL MEMBER
FCSI
70094
INTERNATIONAL INSTITUTE FOR FOODSERVICE CONSULTANTS SOCIETIES

HALLIDAY ASSOCIATES
656 NW NORWOOD
TIGARD, WASH., 98607
(503) 639-7777
FOOD SERVICE CONSULTANTS
SPACE PLANNING • DESIGN

CULINARY CLASSROOM

Westview High School - Beaverton School District

4200 NW 185th Ave, Portland, OR 97229

BID & PERMIT SET

02.18.21
REVISIONS

74-21106-00

FOOD SERVICE PLUMBING PLAN

FS1.2

DWG JOB://74-21106-00 WESTVIEW FS CULINARY/74-21106-00_WTHSC_MPL_CKV.DWG
12/3/2020 2:46:27 PM

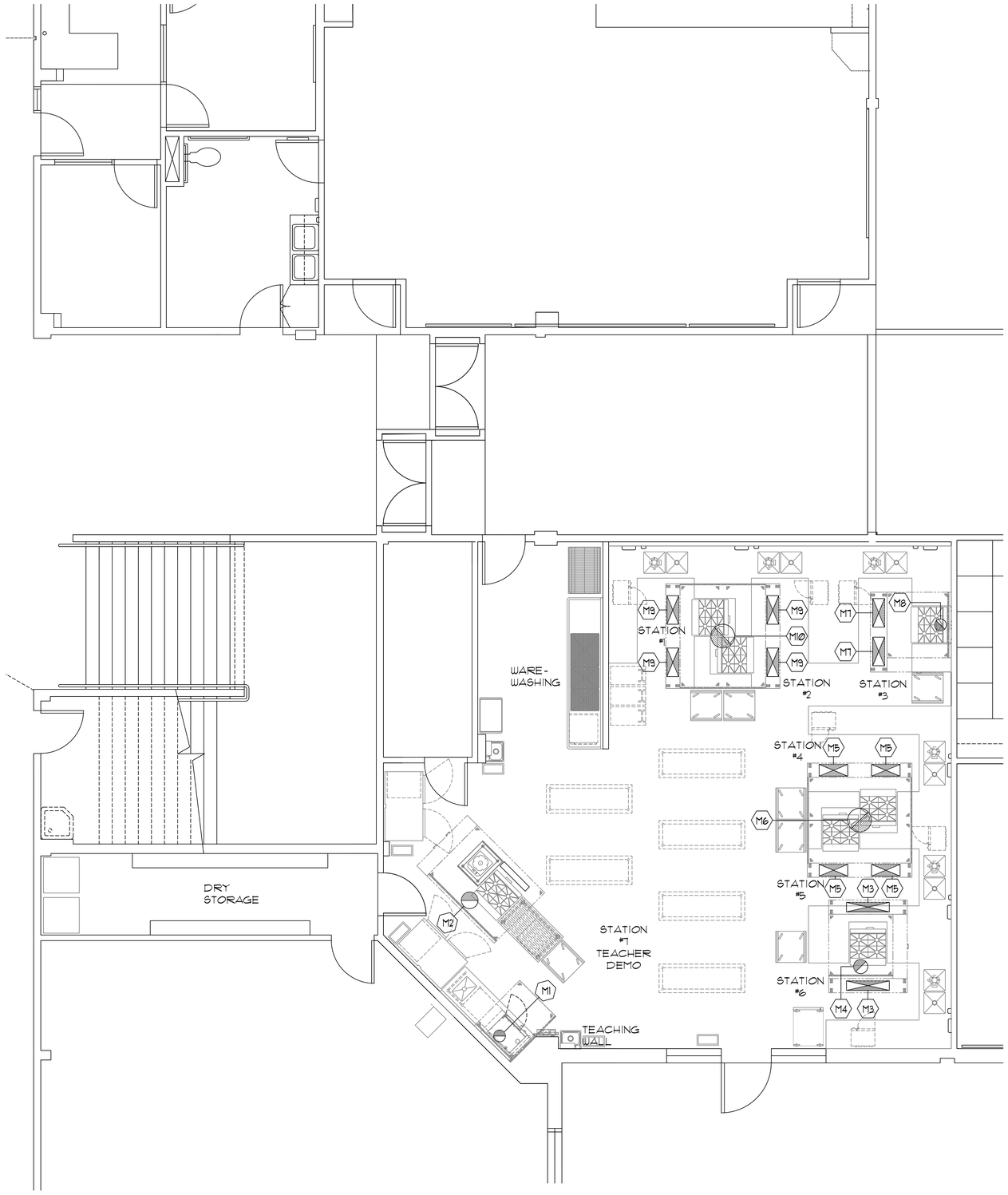

MECHANICAL NOTES

M1. ONE (1) 10" DIAMETER TYPE I EXHAUST CONNECTION AT CANOPY HOOD. 100 CFM WITH -0.333" STATIC PRESSURE AT DUCT COLLAR.

M2. ONE (1) 14" DIAMETER TYPE I EXHAUST CONNECTION AT CANOPY HOOD. 2,000 CFM WITH -1.055" STATIC PRESSURE AT DUCT COLLAR.

M3. TWO (2) 36" X 8" SUPPLY DUCT CONNECTIONS AT CANOPY HOOD. 601 CFM EACH WITH 0.134" STATIC PRESSURE AT DUCT COLLARS.

M4. ONE (1) 12" DIAMETER TYPE I EXHAUST CONNECTION AT CANOPY HOOD. 1,350 CFM WITH -0.906" STATIC PRESSURE AT DUCT COLLAR.

M5. FOUR (4) 24" X 10" SUPPLY DUCT CONNECTIONS AT CANOPY HOOD. 410 CFM EACH WITH 0.123" STATIC PRESSURE AT DUCT COLLARS.

M6. ONE (1) 20" DIAMETER TYPE I EXHAUST CONNECTION AT CANOPY HOOD. 2,508 CFM WITH -0.111" STATIC PRESSURE AT DUCT COLLAR.

M7. TWO (2) 24" X 10" SUPPLY DUCT CONNECTIONS AT CANOPY HOOD. 515 CFM EACH WITH 0.146" STATIC PRESSURE AT DUCT COLLARS.

M8. ONE (1) 10" DIAMETER TYPE I EXHAUST CONNECTION AT CANOPY HOOD. 1,146 CFM WITH -0.891" STATIC PRESSURE AT DUCT COLLAR.

M9. FOUR (4) 24" X 10" SUPPLY DUCT CONNECTIONS AT CANOPY HOOD. 410 CFM EACH WITH 0.123" STATIC PRESSURE AT DUCT COLLARS.

M10. ONE (1) 20" DIAMETER TYPE I EXHAUST CONNECTION AT CANOPY HOOD. 2,508 CFM WITH -0.111" STATIC PRESSURE AT DUCT COLLAR.

MECHANICAL SYMBOL LEGEND

SUPPLY DUCT

EXHAUST DUCT

GENERAL MECHANICAL NOTES

1. THIS DRAWING IS NOT TO BE USED FOR ESTABLISHING ROUGH-IN LOCATIONS. REFER TO DIMENSIONED DRAWING PREPARED BY THE KITCHEN EQUIPMENT CONTRACTOR.
2. CANOPY HOODS MUST BE UL LISTED AND LABELED FOR 0" CLEARANCE BY MANUFACTURER IN ACCORDANCE WITH UL 710.
3. REFER TO SHEETS FS2.1 THRU FS2.12 HOOD MANUFACTURER DRAWINGS FOR ADDITIONAL INFORMATION.
4. SEE MECHANICAL DRAWINGS FOR ADDITIONAL REQUIREMENTS.

DLR Group
© DLR Group

HALLIDAY ASSOCIATES
686 NW NORWOOD
CAMAS, WA 98607
(360) 834-8657
FOOD FACILITY CONSULTANTS
SPACE PLANNING & DESIGN

CULINARY CLASSROOM

Westview High School - Beaverton School District

4200 NW 185th Ave, Portland, OR 97229

BID & PERMIT SET

02.18.21
REVISIONS

74-21106-00

FOOD SERVICE MECHANICAL PLAN

FS1.3

DWG NAME: H:\74-21106-00 WESTVIEW FS CULINARY\74-21106-00_WTSW_FS_2021.DWG
12/3/2020 2:46:27 PM

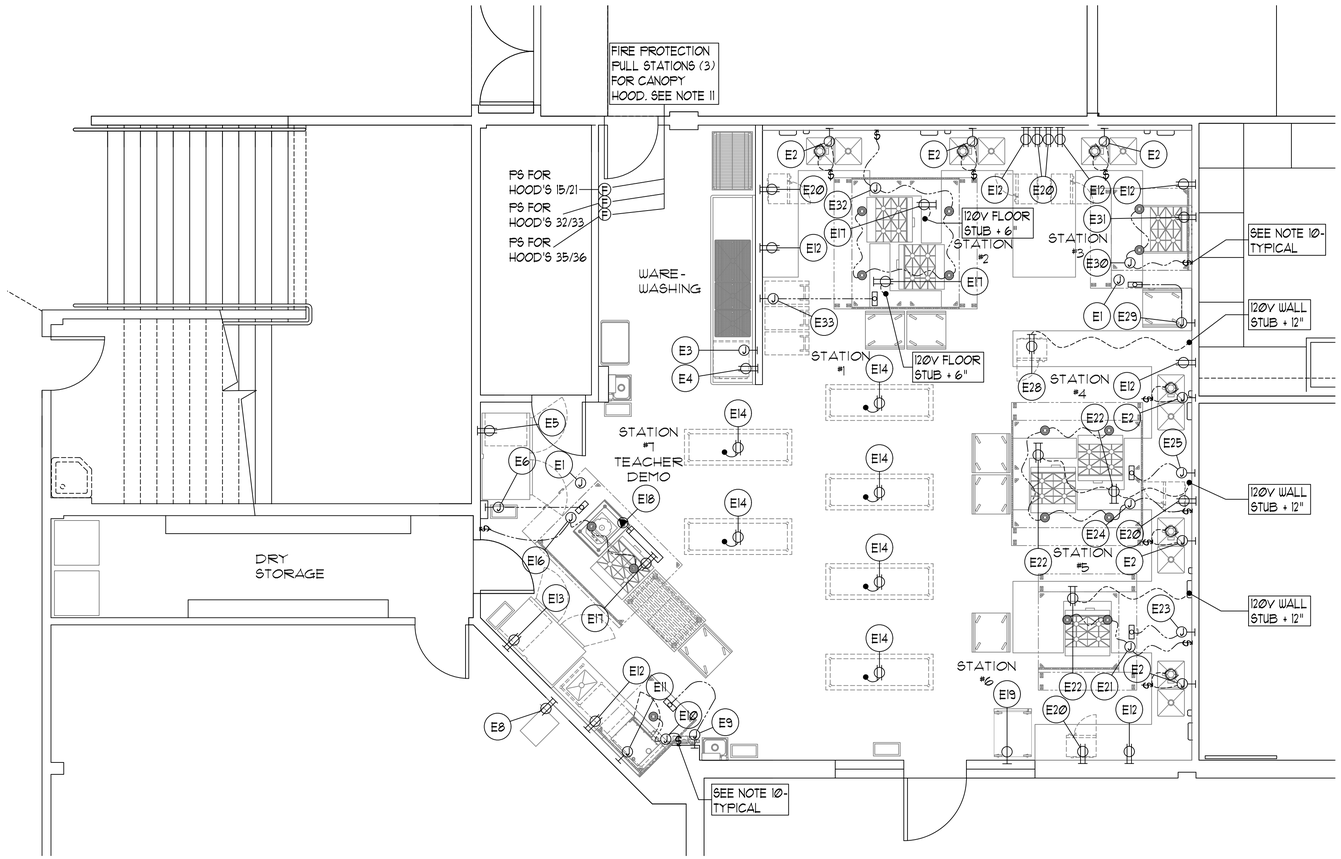

ELECTRICAL NOTES

1. THIS DRAWING IS NOT TO BE USED FOR ESTABLISHING ROUGH-IN LOCATIONS. REFER TO DIMENSIONED DRAWINGS PREPARED BY THE KITCHEN EQUIPMENT CONTRACTOR.
2. UNDER ELECTRICAL WORK OF DIVISION 26, PROVIDE ALL ROUGH-INS AND FINAL CONNECTIONS IN CONFORMANCE WITH LOCAL CODES.
3. HOOD LIGHTS ARE FURNISHED UNDER KITCHEN EQUIPMENT, DIVISION 11. UNDER ELECTRICAL WORK OF DIVISION 26, FURNISH AND INSTALL SWITCHES AND FURNISH AND INSTALL ALL INTERCONNECTING CONDUIT AND WIRING CONCEALED FROM SIGHT.
4. UNDER ELECTRICAL WORK OF DIVISION 26, FURNISH AND INSTALL ALL INTERCONNECTING WIRING ACROSS CEILING AS REQUIRED BETWEEN HOODS AND HOOD FIRE CONTROL PANEL.
5. ALL ELECTRICAL RECEPTACLES SHALL BE MOUNTED HORIZONTALLY ON FIXTURES AND WALLS.
6. UNDER ELECTRICAL WORK OF DIVISION 26, PROVIDE ALL DISCONNECTS, INTERLOCKS, AND CONTRACTORS REQUIRED BY LOCAL CODES.
7. UNDER ELECTRICAL WORK OF DIVISION 26, FURNISH AND INSTALL SHUNT TRIP CIRCUIT BREAKERS TO SHUT OFF POWER SUPPLY TO ALL ELECTRICAL COOKING EQUIPMENT DURING FIRE SYSTEM ACTIVATION.
8. UNDER WORK OF KITCHEN EQUIPMENT, DIVISION 11, FURNISH AND INSTALL STAINLESS STEEL OR CHROME PLATED ESCUTCHEON PLATES FOR ALL ELECTRICAL CONNECTIONS PENETRATING COUNTER TOPS FOR BELOW COUNTER PLUG-INS.
9. UNDER ELECTRICAL WORK OF DIVISION 26, FURNISH AND INSTALL ALL INTERCONNECTING WIRING BETWEEN WAREWASHER CONTROL PANEL AND EXHAUST FAN FOR AUTO FAN ON/OFF DURING EQUIPMENT OPERATION. SET FAN TO CONTINUE TO RUN AN EXTRA 20 MINUTES AFTER WAREWASHER IS TURNED-OFF.
10. UNDER ELECTRICAL WORK OF DIVISION 26, PROVIDE POWER TO HOOD LIGHTS AND EXHAUST FAN ON ROOF-INTERLOCK WITH MAKE-UP AIR SUPPLY UNIT PER PER MECHANICAL ENG. PLANS. INTERCONNECT TO FAN/LIGHT/WALL SWITCH FURNISHED BY HOOD MANUFACTURER AND INSTALL @ 48" ABOVE FINISHED FLOOR.
11. UNDER KITCHEN WORK OF DIVISION 11 LOCATE MANUAL FIRE SUPPRESSION PULL STATION PER CODES. PROVIDE OCTAGON BOX AND RUN EMPTY CONDUIT TO FIRE SUPPRESSION CONTROL HEAD. MINIMUM 12" RADIUS BENDS IN ANY CHANGE OF DIRECTION. SET PULL STATION BOX @ +48" AFF. TO CENTER LINE.

ELECTRICAL SCHEDULE

ITEM NO.	ENO.	VOLTS	Ø	DESCRIPTION	LOCN.	HEIGHT	SERVICE TO :	RATING	REMARKS
15,21,32,33,35,36	E1	120	1	J-BOX	WALL	60"	CANOPY HOOD DEMAND CONTROL PANEL	15 AMPS	---
4	E2	208	3	J-BOX	WALL	12"	DISPOSER	1-1/4 HP	CONNECTIONS TO DISPOSER, SOLENOID, AND SWITCH
6	E3	208	3	J-BOX	WALL	12"	UNDERCOUNTER DISHWASHER	23. 9 AMPS	VERIFY ALL REQUIREMENTS WITH EXISTING EQUIPMENT
6	E4	120	1	DCO	WALL	12"	WAREWASHER DETERGENT FEED	1440 W	VERIFY ALL REQUIREMENTS WITH EXISTING EQUIPMENT
9	E5	120	1	DCO	WALL	84"	REACH-IN REFRIGERATOR	8. 2 AMPS	FURNISHED WITH NEMA 5-15P
15	E6	SGL. GANG		J-BOX	WALL	48"	CANOPY HOOD ROOM SENSOR CONTROL	---	WIRE TO HOOD SC CONTROL BOARD W/2-WIRE LOW VOLT. CABLE
---	E7	---	--	NOT USED	---	---	---	---	---
12	E8	120	1	DCO	WALL	12"	CUBE ICE MACHINE	5 AMPS	FURNISHED WITH NEMA 5-15P
15	E9	SGL. GANG		J-BOX	WALL	48"	CANOPY HOOD ROOM SENSOR CONTROL	---	WIRE TO HOOD SC CONTROL BOARD W/2-WIRE LOW VOLT. CABLE
15	E10	120	1	J-BOX	CEILING	---	(1) CANOPY HOOD LIGHT & HOOD CONTROLS	15 AMPS	---
17	E11	208	3	J-BOX	WALL	---	COMBI-OVEN STEAMER	10. 8 KW	---
---	E12	120	1	DCO	WALL	48"	CONVENIENCE	1440 W	DEDICATED CIRCUIT
29	E13	120	1	DCO	WALL	84"	REACH-IN FREEZER	11. 2 AMPS	FURNISHED WITH NEMA 5-15P
---	E14	120	1	DCO (DROP CORD)	CEILING	72"	CONVENIENCE	1440 W	DEDICATED CIRCUIT. CEILING DROP CORDS
---	E15	---	--	NOT USED	---	---	---	---	---
21	E16	120	1	J-BOX	CEILING	---	(2) CANOPY HOOD LIGHTS & HOOD CONTROLS	15 AMPS	---
22	E17	120	1	DCO	WALL	12"	4-BURNER OPEN RANGE	4 AMPS	FURNISHED WITH NEMA 5-15P
23	E18	208	3	SCO	WALL	24"	INDUCTION WOK	4 AMPS	FURNISHED WITH NEMA 6-30P
20	E19	120	1	SCO	WALL	24"	MOBILE PROOFING CABINET	16 AMPS	FURNISHED WITH NEMA 5-20P
31	E20	120	1	DCO	WALL	24"	MICROWAVE OVEN	13. 4 AMPS	FURNISHED WITH NEMA 5-15P
32	E21	120	1	J-BOX	CEILING	---	(2) CANOPY HOOD LIGHTS & HOOD CONTROLS	15 AMPS	---
22	E22	120	1	DCO	FIXTURE	12"	4-BURNER OPEN RANGE	4 AMPS	FURNISHED WITH NEMA 5-15P. EXTEND FROM WALL STUB
32	E23	SGL. GANG		J-BOX	WALL	48"	CANOPY HOOD ROOM SENSOR CONTROL	---	WIRE TO HOOD SC CONTROL BOARD W/2-WIRE LOW VOLT. CABLE
33	E24	120	1	J-BOX	CEILING	---	(4) CANOPY HOOD LIGHTS & HOOD CONTROLS	15 AMPS	---
33	E25	SGL. GANG		J-BOX	WALL	48"	CANOPY HOOD ROOM SENSOR CONTROL	---	WIRE TO HOOD SC CONTROL BOARD W/2-WIRE LOW VOLT. CABLE
---	E26	---	--	NOT USED	---	---	---	---	---
---	E27	---	--	NOT USED	---	---	---	---	---
31	E28	120	1	DCO	FIXTURE	24"	MICROWAVE OVEN	13. 4 AMPS	FURNISHED WITH NEMA 5-15P. EXTEND FROM WALL STUB
35	E29	SGL. GANG		J-BOX	WALL	48"	CANOPY HOOD ROOM SENSOR CONTROL	---	WIRE TO HOOD SC CONTROL BOARD W/2-WIRE LOW VOLT. CABLE
35	E30	120	1	J-BOX	CEILING	---	(2) CANOPY HOOD LIGHTS & HOOD CONTROLS	15 AMPS	---
22	E31	120	1	DCO	WALL	12"	4-BURNER OPEN RANGE	4 AMPS	FURNISHED WITH NEMA 5-15P
36	E32	120	1	J-BOX	CEILING	---	(4) CANOPY HOOD LIGHTS & HOOD CONTROLS	15 AMPS	---
36	E33	SGL. GANG		J-BOX	WALL	48"	CANOPY HOOD ROOM SENSOR CONTROL	---	WIRE TO HOOD SC CONTROL BOARD W/2-WIRE LOW VOLT. CABLE

ELECTRICAL SYMBOL LEGEND

- DCO (DUPLEX CONVENIENCE OUTLET)
- J-BOX (JUNCTION BOX)
- SCO
- SWITCH(S)
- LIGHT
- FLOOR OR CEILING STUB (AS NOTED)
- CANOPY HOOD TEMP SENSOR

FIRE PROTECTION LEGEND

FIRE PROTECTION SYSTEM MANUAL PULL (F)

NOTE:
LOCATE MANUAL FIRE SUPPRESSION PULL STATIONS PER CODES - DEVICES TO BE LOCATED A MINIMUM OF 10 FEET AND A MAXIMUM OF 20 FEET FROM THE KITCHEN EXHAUST SYSTEM IT SERVES. E.C. TO PROVIDE OCTAGON BOX AND RUN EMPTY CONDUIT TO FIRE SUPPRESSION CONTROL HEAD. MINIMUM 12" RADIUS BENDS IN ANY CHANGE OF DIRECTION. SET PULL STATION BOX @ +48" AFF. TO CENTERLINE. TYPICAL ALL LOCATIONS

DLR Group
© DLR Group

LAURA L. BOURLAND
PROFESSIONAL MEMBER
FOODSERVICE CONSULTANTS SOCIETY INTERNATIONAL
700794

HALLIDAY ASSOCIATES
656 NW NORWOOD
TROUTDALE, OR 97060
503-665-8807
FOOD SERVICE CONSULTANTS
SPACE PLANNING • DESIGN

CULINARY CLASSROOM

Westview High School - Beaverton School District

4200 NW 185th Ave, Portland, OR 97229

BID & PERMIT SET

02.18.21
REVISIONS

74-21106-00

FOOD SERVICE ELECTRICAL PLAN

FS1.4

12/3/2020 2:46:27 PM

1A

FOR QUESTIONS, CALL THE
Seattle Office
Jon Clarke
PHONE: (425) 212-5996
EMAIL: reg85@captiveaire.com

PATENT NUMBERS

AC-PSP (UNITED STATES) - US PATENT 7963830 B2.
AC-PSP WALL (CANADA) - CA PATENT 2820509.
AC-PSP ISLAND (CANADA) - CA PATENT 2520330.
EXHAUST HOODS ND-2/BD-2/SND-2 (CANADA) - CA PATENT 2520435 C.

HOOD INFORMATION – JOB#4727014

HOOD NO	TAG	MODEL	MANUFACTURER	LENGTH	MAX COOKING TEMP	TYPE	APPLIANCE DUTY	DESIGN CFM/FT	TOTAL EXH CFM	EXHAUST PLENUM RISER(S) WIDTH	LENG	HEIGHT	DIA	CFM	VEL	SP	TOTAL SUPPLY CFM	HOOD CONSTRUCTION	HOOD CONFIG END TO END	ROW
1	Item 36	7230 ND1-PSP-FB	CAPTIVEAIRE	7' 2"	400 DEG	I	MEDIUM	350	2508			4"	20"	2508	1843	-0.711"	1881	304 SS 100%	ALONE	ALONE
2	Item 35	5430 ND-2-PSP-F	CAPTIVEAIRE	4' 7"	600 DEG	I	HEAVY	250	1146			4"	10"	1146	2101	-0.891"	1031	304 SS 100%	ALONE	ALONE
3	Item 33	7230 ND1-PSP-FB	CAPTIVEAIRE	7' 2"	400 DEG	I	MEDIUM	350	2508			4"	20"	2508	1843	-0.711"	1881	304 SS 100%	ALONE	ALONE
4	Item 32	5430 ND-2WI-PSP-FB	CAPTIVEAIRE	4' 6"	600 DEG	I	HEAVY	300	1350			4"	12"	1350	1719	-0.906"	1215	304 SS 100%	ALONE	ALONE
5	Item 21	6030 ND-2WI	CAPTIVEAIRE	6' 8"	600 DEG	I	HEAVY	300	2000			4"	14"	2000	1871	-1.055"	0	304 SS 100%	ALONE	ALONE
6	Item 15	5430 ND-2	CAPTIVEAIRE	3' 6"	600 DEG	I	HEAVY	200	700			4"	10"	700	1283	-0.333"	0	304 SS 100%	ALONE	ALONE

HOOD INFORMATION

HOOD NO	TAG	FILTER(S) TYPE	QTY	HEIGHT	LENGTH	EFFICIENCY @ 7 MICRONS	LIGHT(S) QTY	TYPE	WIRE GUARD	UTILITY CABINET(S) LOCATION	SIZE	FIRE SYSTEM TYPE	FIRE SYSTEM SIZE	ELECTRICAL MODEL #	SWITCHES QUANTITY	FIRE SYSTEM PIPING	HOOD HANGING WEIGHT
1	Item 36	CAPTRATE SOLO FILTER	10	20"	16"	85% SEE FILTER SPEC	4	RECESSED	NO							YES	806 LBS
2	Item 35	CAPTRATE SOLO FILTER	3	20"	16"	85% SEE FILTER SPEC	2	RECESSED	NO	RIGHT	12"x54"x30"	ANSUL R102	3.0/3.0	DCV-1011	1 LIGHT 1 FAN	YES	530 LBS
3	Item 33	CAPTRATE SOLO FILTER	10	20"	16"	85% SEE FILTER SPEC	4	RECESSED	NO							YES	698 LBS
4	Item 32	CAPTRATE SOLO FILTER	3	20"	16"	85% SEE FILTER SPEC	2	RECESSED	NO	LEFT	12"x54"x30"	ANSUL R102	3.0/3.0	DCV-1111	1 LIGHT 1 FAN	YES	540 LBS
5	Item 21	CAPTRATE SOLO FILTER	4	20"	16"	85% SEE FILTER SPEC	2	RECESSED	NO	RIGHT	12"x60"x30"	ANSUL R102	3.0/3.0			YES	543 LBS
6	Item 15	CAPTRATE SOLO FILTER	2	20"	20"	85% SEE FILTER SPEC	1	RECESSED	NO							YES	265 LBS

HOOD OPTIONS

HOOD NO	TAG	OPTION
1	Item 36	LEFT END STANDOFF(FIN/INS- ISLAND) 1" WIDE 72" LONG INSULATED.
		RIGHT END STANDOFF(FIN/INS- ISLAND) 1" WIDE 72" LONG INSULATED.
		BALANCE DAMPERS.
		INSULATION FOR TOP OF HOOD.
		SENSOR-CV.
2	Item 35	BALANCE DAMPERS.
		INSULATION FOR TOP OF HOOD.
		INSULATION FOR BACK OF HOOD.
		SENSOR-CV.
3	Item 33	LEFT END STANDOFF(FIN/INS- ISLAND) 1" WIDE 72" LONG INSULATED.
		RIGHT END STANDOFF(FIN/INS- ISLAND) 1" WIDE 72" LONG INSULATED.
		BALANCE DAMPERS.
		RISER SENSOR INSTALL 3IN DBL.
4	Item 32	BALANCE DAMPERS.
		INSULATION FOR TOP OF HOOD.
		INSULATION FOR BACK OF HOOD.
		FINISHED BACK- ISL/REV INSTALL 54.00" LONG, (FILTERS TO THE FRONT).
		SENSOR-CV.
5	Item 21	BALANCE DAMPERS.
		INSULATION FOR TOP OF HOOD.
		INSULATION FOR BACK OF HOOD.
		FINISHED BACK- ISL/REV INSTALL 80.00" LONG, (FILTERS TO THE FRONT).
		SENSOR-CV.
6	Item 15	LEFT END STANDOFF (FINISHED) 1" WIDE 54" LONG INSULATED.
		BALANCE DAMPERS.
		INSULATION FOR TOP OF HOOD.
		INSULATION FOR BACK OF HOOD.
		SENSOR-CV.
		LEFT WALL AS END PANEL.

PERFORATED SUPPLY PLENUM(S)

HOOD NO	TAG	POS	LENGTH	WIDTH	HEIGHT	TYPE	RISER(S) WIDTH	LENG	DIA	CFM	SP
1	Item 36	Back	88"	12"	6"	MUA	10"	24"		470	0.123"
						MUA	10"	24"		470	0.123"
		Front	88"	12"	6"	MUA	10"	24"		470	0.123"
						MUA	10"	24"		470	0.123"
2	Item 35	Front	67"	14"	6"	MUA	10"	24"		515	0.146"
						MUA	10"	24"		515	0.146"
3	Item 33	Back	88"	12"	6"	MUA	10"	24"		470	0.123"
						MUA	10"	24"		470	0.123"
		Front	88"	12"	6"	MUA	10"	24"		470	0.123"
						MUA	10"	24"		470	0.123"
4	Item 32	Back	66"	12"	6"	MUA	8"	36"		607	0.134"
		Front	66"	12"	6"	MUA	8"	36"		607	0.134"

SPECIFICATION: CAPTRATE• GREASE-STOP• SOLO FILTER

THE CAPTRATE GREASE-STOP SOLO FILTER IS A SINGLE-STAGE FILTER FEATURING A UNIQUE S-BAFFLE DESIGN IN CONJUNCTION WITH A SLOTTED REAR BAFFLE DESIGN, TO DELIVER EXCEPTIONAL FILTRATION EFFICIENCY.

FILTER IS STAINLESS STEEL CONSTRUCTION, AND SIZED TO FIT INTO STANDARD 2-INCH DEEP HOOD CHANNEL(S).

UNITS SHALL INCLUDE STAINLESS STEEL HANDLES AND A FASTENING DEVICE TO SECURE THE TWO COMPONENTS WHEN ASSEMBLED.

GREASE EXTRACTION EFFICIENCY PERFORMANCE SHALL REMOVE AT LEAST 75% OF GREASE PARTICLES FIVE MICRONS IN SIZE, AND 85% GREASE PARTICLES SEVEN MICRONS IN SIZE AND LARGER, WITH A CORRESPONDING PRESSURE DROP NOT TO EXCEED 1.0 INCHES OF WATER GAUGE.

THE CAPTRATE GREASE-STOP SOLO WAS TESTED TO ASTM STANDARD ASTM F2519-05. MANUFACTURER APPROVED FOR USE IN SOLID FUEL APPLICATIONS AS A SPARK ARRESTER.

EFFICIENCY VS. PARTICLE DIAMETER

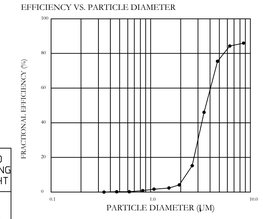

PRESSURE DROP VS. FLOW RATE

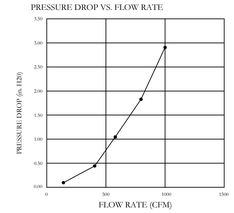

CAPTRATE FILTERS ARE BUILT IN COMPLIANCE WITH:
NFPA #96.
NSF STANDARD #2.
UL STANDARD #1046.
INT. MECH. CODE (IMC).
ULC-S649.

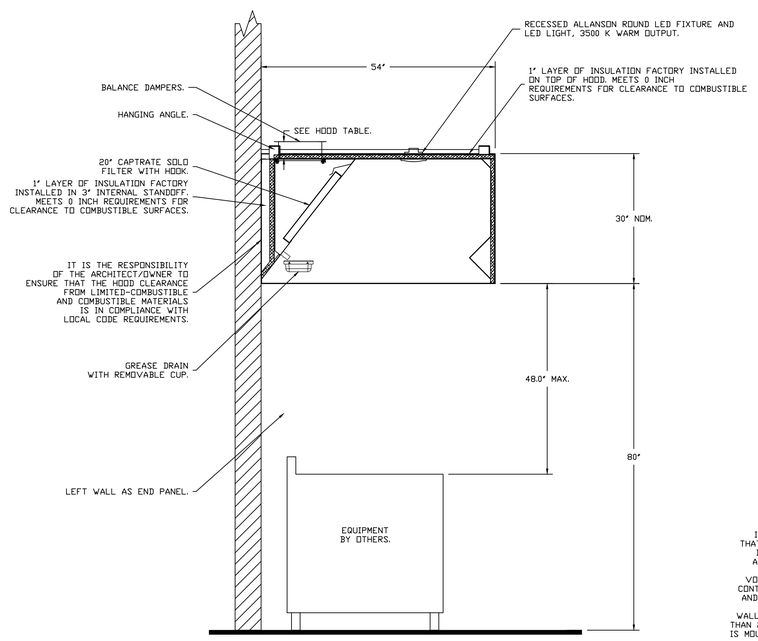

SECTION VIEW – MODEL 5430ND-2
HOOD – #6 (Item 15)

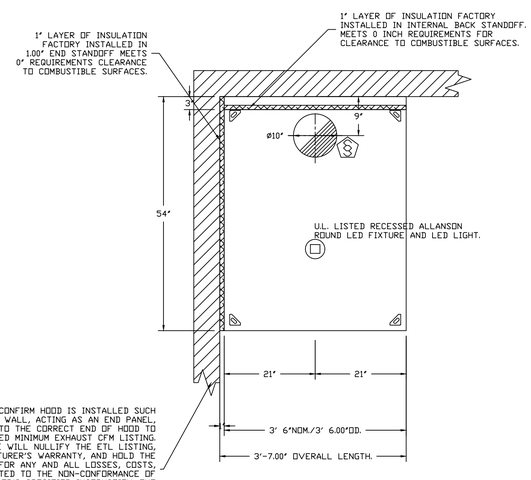

INSTALLER MUST CONFIRM HOOD IS INSTALLED SUCH THAT THE SPECIFIED WALL, ACTING AS AN END PANEL, IS MATED TIGHT TO THE CORRECT END OF HOOD TO ACHIEVE A REDUCED MINIMUM EXHAUST CFM LISTING. NON-COMPLIANCE WILL NULLIFY THE ETL LISTING, VOID THE MANUFACTURER'S WARRANTY, AND HOLD THE CONTRACTOR LIABLE FOR ANY AND ALL LOSSES, COSTS, AND EXPENSES RELATED TO THE NON-CONFORMANCE OF THE MANUFACTURER'S SPECIFIED INSTRUCTION. THE WALL ACTING AS AN END PANEL MUST EXTEND NO LESS THAN 20" FROM THE INTERSECTING WALL ON WHICH HOOD IS MOUNTED AND MUST EXTEND NO LESS THAN 20" UNDER BOTTOM OF HOOD TO BE ELIGIBLE FOR REDUCED MINIMUM EXHAUST CFM LISTING.

PLAN VIEW – HOOD #6 (Item 15)
3' 6.00" LONG 5430ND-2

REVISIONS

DESCRIPTION	DATE:

CAPTIVEAIRE
www.captiveaire.com
Seattle Office
1309 Pacific Ave, Everett, WA, 98201 PHONE: (425) 212-5996 FAX: (425) 212-5998 EMAIL: reg85@captiveaire.com

DLR Group
©DLR Group

LAURA L. BOURLAND
PROFESSIONAL MEMBER
FOODSERVICE CONSULTANTS SOCIETY INTERNATIONAL
FCSI 700794

HALLIDAY ASSOCIATES
686 NW NORWOOD
PORTLAND, OR 97229
(503) 643-1111
FOOD SERVICE CONSULTANTS
SPACE PLANNING • DESIGN

Westview HS R5
PORTLAND, OR, 97229

DATE: 2/5/2021
DWG.#: 4727014
DRAWN BY: JDC-85
SCALE: 3/4" = 1'-0"
MASTER DRAWING
SHEET NO. 1

CULINARY CLASSROOM
Westview High School - Beaverton School District
4200 NW 185th Ave, Portland, OR 97229

BID & PERMIT SET

02.18.21
REVISIONS

74-21106-00

FOOD SERVICE CANOPY HOOD DETAILS

FS2.1

DWG 3001/14-21 1UPDW WESTVIEW R5 CULINARY/14-21 1UPDW_XTTOS_CAPS_EXCLUSIVE
12/3/2020 2:46:27 PM

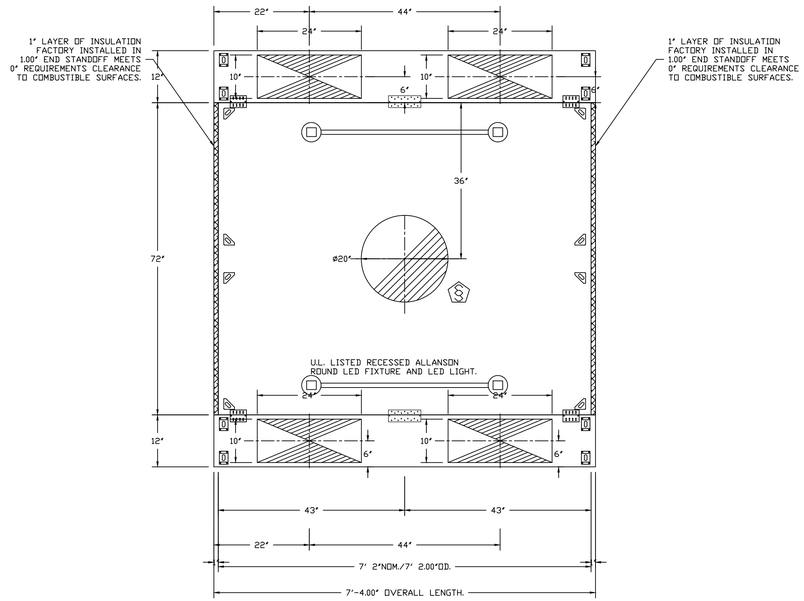

PLAN VIEW – HOOD #1 (Item 36)
7' 2.00" LONG 7230NDI-PSP-FB

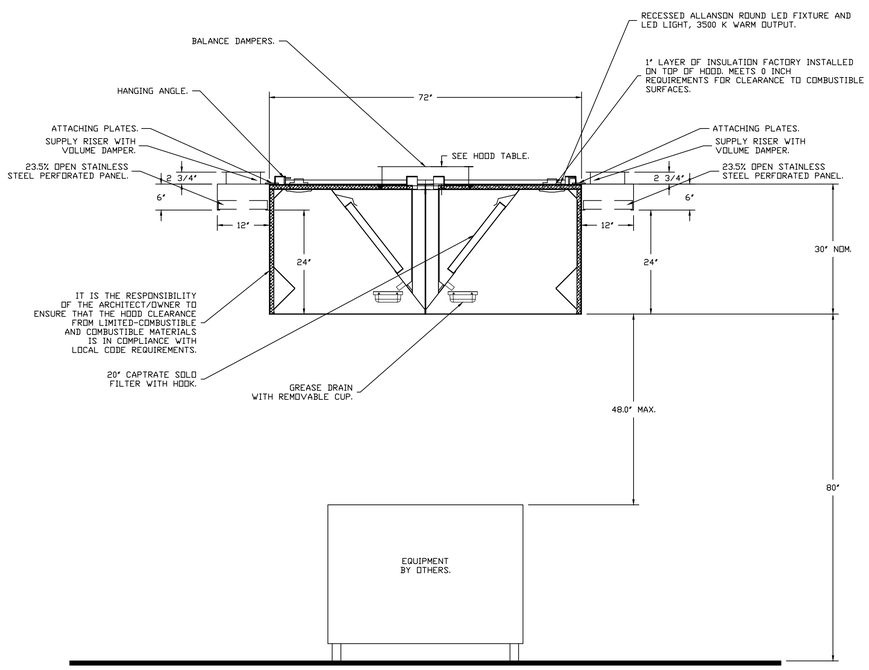

SECTION VIEW – MODEL 7230NDI-PSP-FB
HOOD – #1 (Item 36)

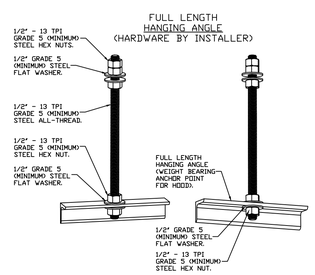

ASSEMBLY INSTRUCTIONS

HANGING ANGLE MUST BE SUPPORTED WITH 1/2" - 13 TPI GRADE 5 (MINIMUM) ALL-THREAD. SANDWICH HANGING ANGLES AND CEILING ANCHOR POINTS WITH 1/2" GRADE 5 (MINIMUM) STEEL FLAT WASHERS AND 1/2" - 13 TPI GRADE 5 (MINIMUM) HEX NUTS AS SHOWN. MUST USE DOUBLED HEX NUT CONFIGURATION ABOVE CEILING ANCHORS. SINGLE HEX NUT BENEATH HANGING ANGLE IS ACCEPTABLE FOR FULL LENGTH HANGING ANGLES. MAINTAIN 1/4" OF EXPOSED THREADS BENEATH BOTTOM HEX NUT. TORQUE ALL HEX NUTS TO 57 FT-LBS.

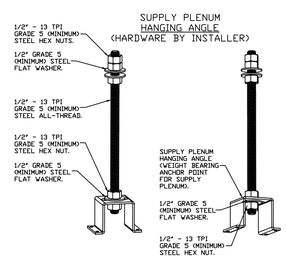

ASSEMBLY INSTRUCTIONS

HANGING ANGLE MUST BE SUPPORTED WITH 1/2" - 13 TPI GRADE 5 (MINIMUM) ALL-THREAD. SANDWICH HANGING ANGLES AND CEILING ANCHOR POINTS WITH 1/2" GRADE 5 (MINIMUM) STEEL FLAT WASHERS AND 1/2" - 13 TPI GRADE 5 (MINIMUM) HEX NUTS AS SHOWN. MUST USE DOUBLED HEX NUT CONFIGURATION ABOVE CEILING ANCHORS. SINGLE HEX NUT BENEATH HANGING ANGLE IS ACCEPTABLE FOR PSP HANGING ANGLES. MAINTAIN 1/4" OF EXPOSED THREADS BENEATH BOTTOM HEX NUT. TORQUE ALL HEX NUTS TO 57 FT-LBS.

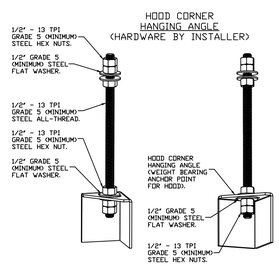

ASSEMBLY INSTRUCTIONS

HANGING ANGLE MUST BE SUPPORTED WITH 1/2" - 13 TPI GRADE 5 (MINIMUM) ALL-THREAD. SANDWICH HANGING ANGLES AND CEILING ANCHOR POINTS WITH 1/2" GRADE 5 (MINIMUM) STEEL FLAT WASHERS AND 1/2" - 13 TPI GRADE 5 (MINIMUM) HEX NUTS AS SHOWN. MUST USE DOUBLED HEX NUT CONFIGURATION BENEATH HOOD HANGING ANGLES AND ABOVE CEILING ANCHORS. MAINTAIN 1/4" OF EXPOSED THREADS BENEATH BOTTOM HEX NUT. TORQUE ALL HEX NUTS TO 57 FT-LBS.

REVISIONS

DESCRIPTION	DATE:

CAPTIVEAIRE
www.captiveaire.com
Seattle Office
1309 Pacific Ave. Everett, WA. 98201 PHONE: (425) 212-5996 FAX: (425) 212-5998 EMAIL: reg85@captiveaire.com

Westview HS R5
PORTLAND, OR, 97229

DATE: 2/5/2021

DWG.#: 4727014

DRAWN BY: JDC-85

SCALE: 3/4" = 1'-0"

MASTER DRAWING

SHEET NO. 2

DLR Group
© DLR Group

HALLIDAY ASSOCIATES
656 NW NORWOOD
P.O. BOX 1
CAMAS, WASH. 98607
(360) 834-2474
FOOD SERVICE CONSULTANTS
SPACE PLANNING • DESIGN

CULINARY CLASSROOM

Westview High School - Beaverton School District
4200 NW 185th Ave, Portland, OR 97229

BID & PERMIT SET

02.18.21
REVISIONS

74-21106-00

FOOD SERVICE CANOPY HOOD DETAILS

FS2.2

DIM JOB://74-21106-00 WESTVIEW HS C:\Utility\74-21106-00_WTS-C_PT_CAN.DWG
12/3/2020 2:46:27 PM

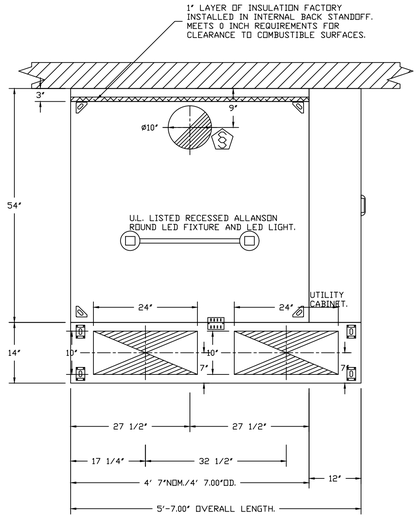

PLAN VIEW – HOOD #2 (Item 35)
4' 7.00" LONG 5430ND-2-PSP-F

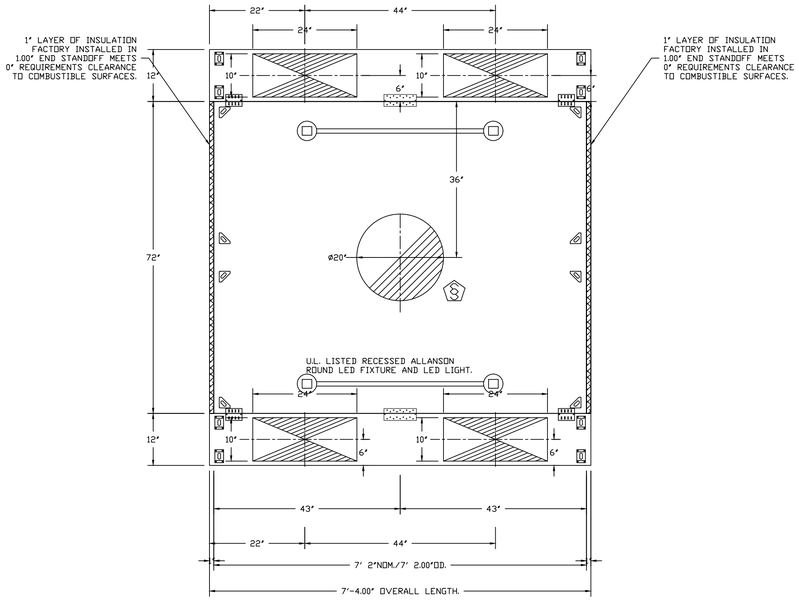

PLAN VIEW – HOOD #3 (Item 33)
7' 2.00" LONG 7230NDI-PSP-FB

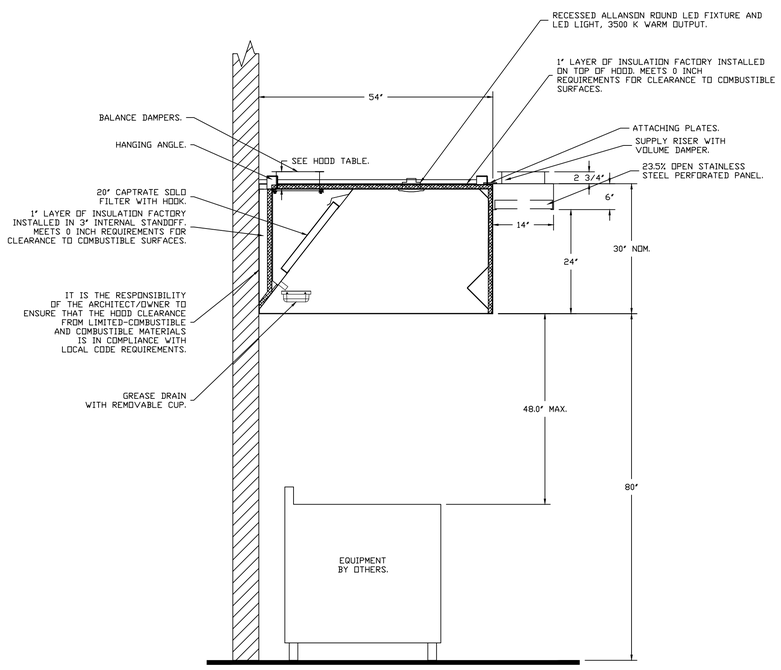

SECTION VIEW – MODEL 5430ND-2-PSP-F
HOOD – #2 (Item 35)

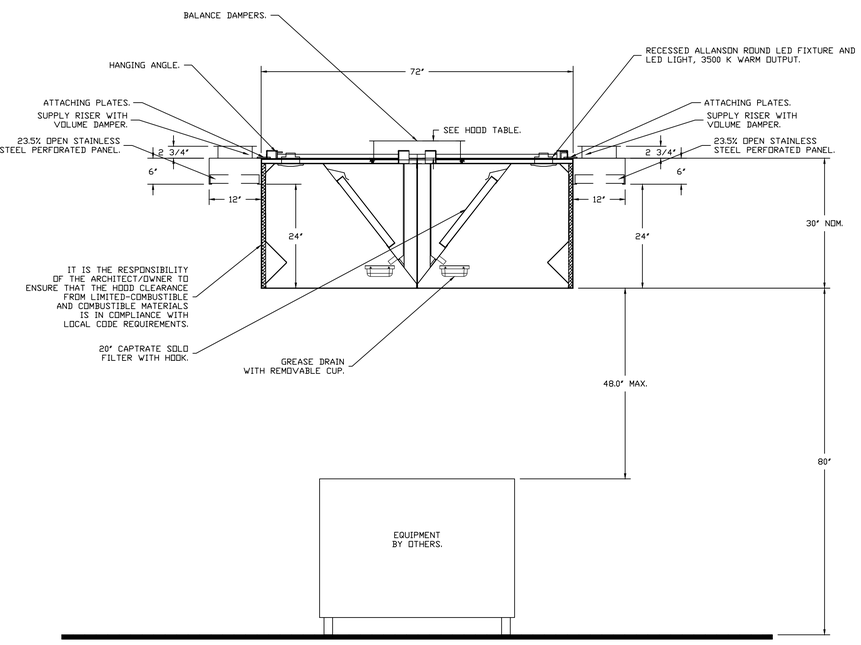

SECTION VIEW – MODEL 7230NDI-PSP-FB
HOOD – #3 (Item 33)

REVISIONS

DESCRIPTION	DATE:

CAPTIVEAIRE
www.captiveaire.com
Seattle Office
1309 Pacific Ave, Everett, WA, 98201 PHONE: (425) 212-5996 FAX: (425) 212-5998 EMAIL: reg85@captiveaire.com

DLR Group
© DLR Group

LAURA L. BOURLAND
PROFESSIONAL MEMBER
FCSI
FOODSERVICE CONSULTANTS SOCIETY INTERNATIONAL
750794

HALLIDAY ASSOCIATES
656 NW NORWOOD
GRESHAM, OR 97030
(503) 674-7777
FOOD SERVICE CONSULTANTS
SPACE PLANNING • DESIGN

Westview HS R5
PORTLAND, OR, 97229

DATE: 2/5/2021

DWG.#: 4727014

DRAWN BY: JDC-85

SCALE: 3/4" = 1'-0"

MASTER DRAWING

SHEET NO. 3

CULINARY CLASSROOM

Westview High School - Beaverton School District
4200 NW 185th Ave, Portland, OR 97229

BID & PERMIT SET

02.18.21
REVISIONS

74-21106-00

FOOD SERVICE CANOPY HOOD DETAILS

FS2.3

DIM 300//74-21100-00 WESTVIEW HS CULIN.dwg//74-21100-00_WTHS-C_RT_CAN.rvt
12/3/2020 2:46:27 PM

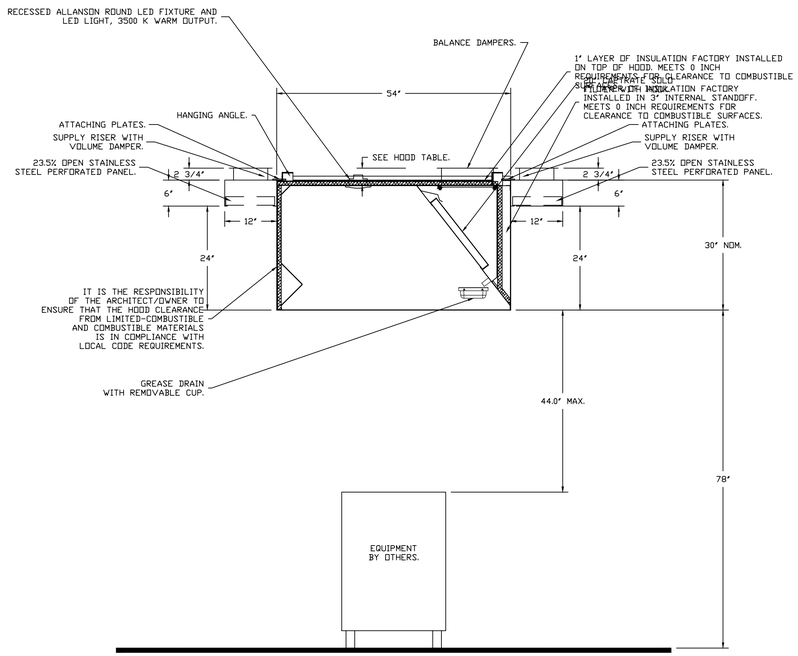

SECTION VIEW – MODEL 5430ND-2WI-PSP-FB
HOOD – #4 (Item 32)

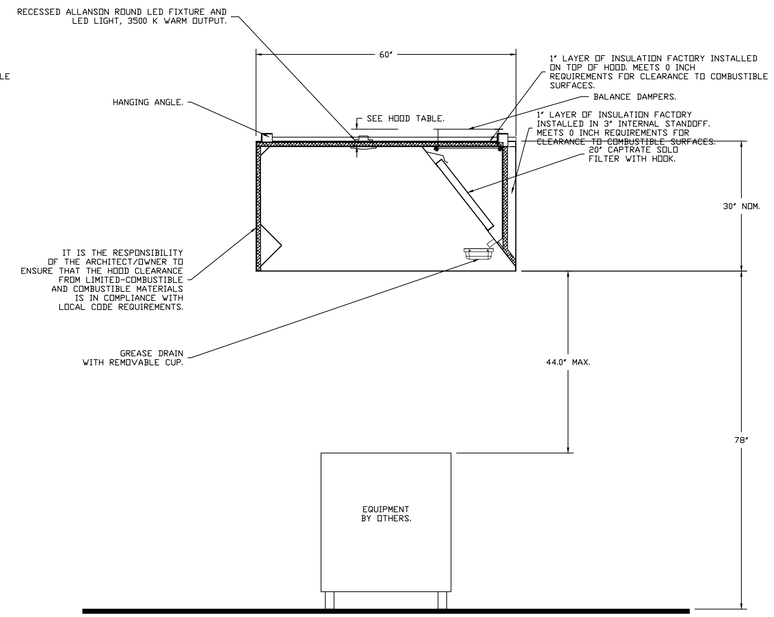

SECTION VIEW – MODEL 6030ND-2WI
HOOD – #5 (Item 21)

PLAN VIEW – HOOD #4 (Item 32)
4' 6.00" LONG 5430ND-2WI-PSP-FB

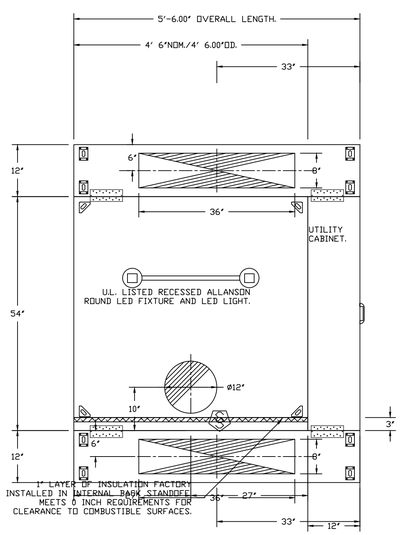

PLAN VIEW – HOOD #5 (Item 21)
6' 8.00" LONG 6030ND-2WI

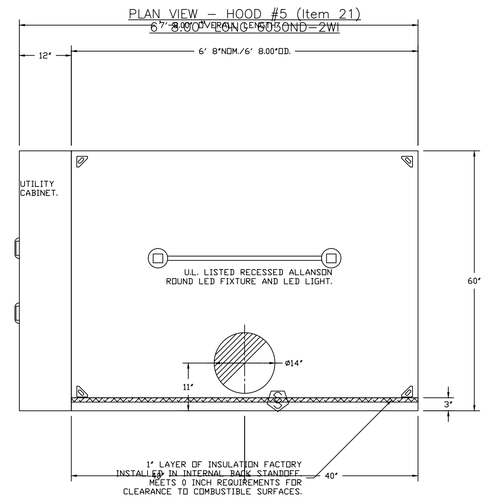

REVISIONS

DESCRIPTION	DATE:

CAPTIVEAIRE
www.captiveaire.com
Seattle Office
1309 Pacific Ave, Everett, WA, 98201 PHONE: (425) 212-5996 FAX: (425) 212-5998 EMAIL: mg85@captiveaire.com

Westview HS R5
PORTLAND, OR, 97229

DATE: 2/5/2021
DWG.#: 4727014
DRAWN BY: JDC-85
SCALE: 3/4" = 1'-0"
MASTER DRAWING
SHEET NO. 4

DLR Group
© DLR Group
HALLIDAY ASSOCIATES
656 NW NORWOOD
TROUTDALE, OR 97060
(503) 674-7100
FOOD SERVICE CONSULTANTS
SPACE PLANNING • DESIGN

CULINARY CLASSROOM

Westview High School - Beaverton School District
4200 NW 185th Ave, Portland, OR 97229

BID & PERMIT SET

02.18.21
REVISIONS

74-21106-00

FOOD SERVICE CANOPY HOOD DETAILS

FS2.4

DWG: 300.01/4421100-00 Westview HS Culinary/4421100-00_VWHS-CL_RPT_CAD.DWG
12/3/2020 2:46:27 PM

A B C D E

1A

1 2 3 4

FIRE SYSTEM INFORMATION – JOB#4727014

FIRE SYSTEM NO	TAG	TYPE	SIZE	FLOW POINTS	INSTALLATION	
					SYSTEM	LOCATION ON HOOD
1	FS 35/36	ANSUL R102	3.0/3.0	6	FIRE CABINET RIGHT	RIGHT, HOOD 2
2	FS 32/33	ANSUL R102	3.0/3.0	6	FIRE CABINET LEFT	LEFT, HOOD 4
3	FS 21 15	ANSUL R102	3.0/3.0	4	FIRE CABINET RIGHT	RIGHT, HOOD 5

GAS VALVE(S)

FIRE SYSTEM NO	TAG	TYPE	SIZE	SUPPLIED BY
1	FS 35/36	SC ELECTRICAL	2.000	CAPTIVEAIRE SYSTEMS
2	FS 32/33	SC ELECTRICAL	2.000	CAPTIVEAIRE SYSTEMS
3	FS 21 15	SC ELECTRICAL	2.000	CAPTIVEAIRE SYSTEMS

FIRE SYSTEM PARTS LIST KEY

FIRE SYSTEM NO	TAG	KEY NUMBER - PART DESCRIPTION	QTY BY FACTORY	QTY BY DIST
1	FS 35/36	0 - 0 - DISC UNION BURSTING DISC UNION ASSEMBLY FOR MANIFOLD SYSTEM.	1	0
		0 - 0 - TANK STRAP TANK STRAP - USED FOR ANSUL TANKS.	2	0
		0 - 0 - UCTANKBRACKET TANK BRACKET FOR FIRE SYSTEM TANK INSTALLATION IN UTILITY CABINETS.	2	0
		1 - 1 - AT - 3.0 TANK(#1B) - 3.0 GALLON SS TANK (FOR USE WITH AUTOMAN RELEASE, ACTUATOR, OR SS ENCLOSURE (UL/ULC)) MACOLA # 01-429862.	2	0
		3 - 3 - ANS-ELEC-AUTOMAN-SS-120 REGULATED RELEASE - ANSUL REGULATED 120V ELECTRICAL RELEASE/BRACKET ASSEMBLY, R-102, SS BOX, CARTRIDGE DETECTION, ANSUL PART # 429856.	1	0
		5 - 5 - LIQ-3.0 AGENT - ANSULEX LOW PH WET CHEMICAL AGENT, 3 GALLON (UL) 79372.	2	0
		9 - 9 - DT-CART DOUBLE TANK NITROGEN CARTRIDGE.	1	0
		10 - 10 - TLINK LINK - TEST LINK (1 TEST LINK) ANSUL PART # 24916, MACOLA # 20-24916.	1	0
		11 - 11 - MICRO-SDA MICROSWITCH KIT- INCLUDES 2 SWITCHES AND MOUNTING HARDWARE. SINGLE DUAL ELECTRIC SWITCH, ONE STANDARD SWITCH, ONE ALARM DUTY SWITCH ANSUL PART # 437155, MACOLA # 08-437155.	1	0
		12 - 12 - HOSE HOSE - RUBBER HOSE.	1	0
		27 - 27 - QPSA-1/2 PULLEY SEAL - 1/2" HOOD SEAL (UL) ANSUL PART # 423253, MACOLA # 32-79768.	1	0
		34 - 34 - RPS-A REMOTE PULL STATION - RED COMPOSITE (WITHOUT WIRE ROPE) 434618 (OLD MACOLA #06-4835).	1	0
		35 - 35 - PE-LT PULLEY ELBOW - LOW TEMP. PULLEY ELBOW, SET SCREW TYPE ANSUL PART # 415670, MACOLA # 11-415671.	2	0
		36 - 36 - PE-HT PULLEY ELBOW - HIGH TEMP PULLEY ELBOW, COMPRESSION TYPE, ANSUL PART # 423251, MACOLA # 10-45771.	1	0
2	FS 32/33	0 - 0 - DISC UNION BURSTING DISC UNION ASSEMBLY FOR MANIFOLD SYSTEM.	1	0
		0 - 0 - TANK STRAP TANK STRAP - USED FOR ANSUL TANKS.	2	0
		0 - 0 - UCTANKBRACKET TANK BRACKET FOR FIRE SYSTEM TANK INSTALLATION IN UTILITY CABINETS.	2	0
		1 - 1 - AT - 3.0 TANK(#1B) - 3.0 GALLON SS TANK (FOR USE WITH AUTOMAN RELEASE, ACTUATOR, OR SS ENCLOSURE (UL/ULC)) MACOLA # 01-429862.	2	0
		3 - 3 - ANS-ELEC-AUTOMAN-SS-120 REGULATED RELEASE - ANSUL REGULATED 120V ELECTRICAL RELEASE/BRACKET ASSEMBLY, R-102, SS BOX, CARTRIDGE DETECTION, ANSUL PART # 429856.	1	0
		5 - 5 - LIQ-3.0 AGENT - ANSULEX LOW PH WET CHEMICAL AGENT, 3 GALLON (UL) 79372.	2	0
		9 - 9 - DT-CART DOUBLE TANK NITROGEN CARTRIDGE.	1	0
		10 - 10 - TLINK LINK - TEST LINK (1 TEST LINK) ANSUL PART # 24916, MACOLA # 20-24916.	1	0
		11 - 11 - MICRO-SDA MICROSWITCH KIT- INCLUDES 2 SWITCHES AND MOUNTING HARDWARE. SINGLE DUAL ELECTRIC SWITCH, ONE STANDARD SWITCH, ONE ALARM DUTY SWITCH ANSUL PART # 437155, MACOLA # 08-437155.	1	0
		12 - 12 - HOSE HOSE - RUBBER HOSE.	1	0
		27 - 27 - QPSA-1/2 PULLEY SEAL - 1/2" HOOD SEAL (UL) ANSUL PART # 423253, MACOLA # 32-79768.	1	0
		34 - 34 - RPS-A REMOTE PULL STATION - RED COMPOSITE (WITHOUT WIRE ROPE) 434618 (OLD MACOLA #06-4835).	1	0
		35 - 35 - PE-LT PULLEY ELBOW - LOW TEMP. PULLEY ELBOW, SET SCREW TYPE ANSUL PART # 415670, MACOLA # 11-415671.	2	0
		36 - 36 - PE-HT PULLEY ELBOW - HIGH TEMP PULLEY ELBOW, COMPRESSION TYPE, ANSUL PART # 423251, MACOLA # 10-45771.	1	0
3	FS 21 15	0 - 0 - DISC UNION BURSTING DISC UNION ASSEMBLY FOR MANIFOLD SYSTEM.	1	0
		0 - 0 - TANK STRAP TANK STRAP - USED FOR ANSUL TANKS.	2	0
		0 - 0 - UCTANKBRACKET TANK BRACKET FOR FIRE SYSTEM TANK INSTALLATION IN UTILITY CABINETS.	2	0
		1 - 1 - AT - 3.0 TANK(#1B) - 3.0 GALLON SS TANK (FOR USE WITH AUTOMAN RELEASE, ACTUATOR, OR SS ENCLOSURE (UL/ULC)) MACOLA # 01-429862.	2	0
		3 - 3 - ANS-OEM REGULATED RELEASE - ANSUL REGULATED MECHANICAL RELEASE/BRACKET ASSEMBLY, OEM, R-102, CARTRIDGE DETECTION INCLUDED, ANSUL PART # 79493.	1	0
		5 - 5 - LIQ-3.0 AGENT - ANSULEX LOW PH WET CHEMICAL AGENT, 3 GALLON (UL) 79372.	0	2
		9 - 9 - DT-CART DOUBLE TANK NITROGEN CARTRIDGE.	0	1
		10 - 10 - TLINK LINK - TEST LINK (1 TEST LINK) ANSUL PART # 24916, MACOLA # 20-24916.	0	1
		11 - 11 - MICRO-SDA MICROSWITCH KIT- INCLUDES 2 SWITCHES AND MOUNTING HARDWARE. SINGLE DUAL ELECTRIC SWITCH, ONE STANDARD SWITCH, ONE ALARM DUTY SWITCH ANSUL PART # 437155, MACOLA # 08-437155.	1	0
		12 - 12 - HOSE HOSE - RUBBER HOSE.	1	0
		27 - 27 - QPSA-1/2 PULLEY SEAL - 1/2" HOOD SEAL (UL) ANSUL PART # 423253, MACOLA # 32-79768.	5	0
		34 - 34 - RPS-A REMOTE PULL STATION - RED COMPOSITE (WITHOUT WIRE ROPE) 434618 (OLD MACOLA #06-4835).	1	0
		35 - 35 - PE-LT PULLEY ELBOW - LOW TEMP. PULLEY ELBOW, SET SCREW TYPE ANSUL PART # 415670, MACOLA # 11-415671.	5	0
		36 - 36 - PE-HT PULLEY ELBOW - HIGH TEMP PULLEY ELBOW, COMPRESSION TYPE, ANSUL PART # 423251, MACOLA # 10-45771.	4	0
		ADDITIONAL PARTS TO BE DETERMINED...		

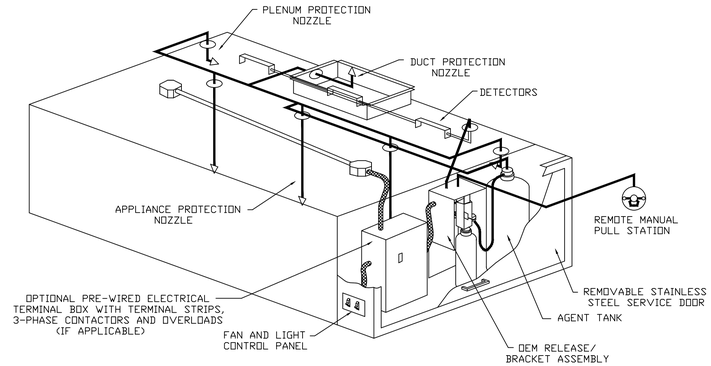

TYPICAL ANSUL R-102 SYSTEM LAYOUT

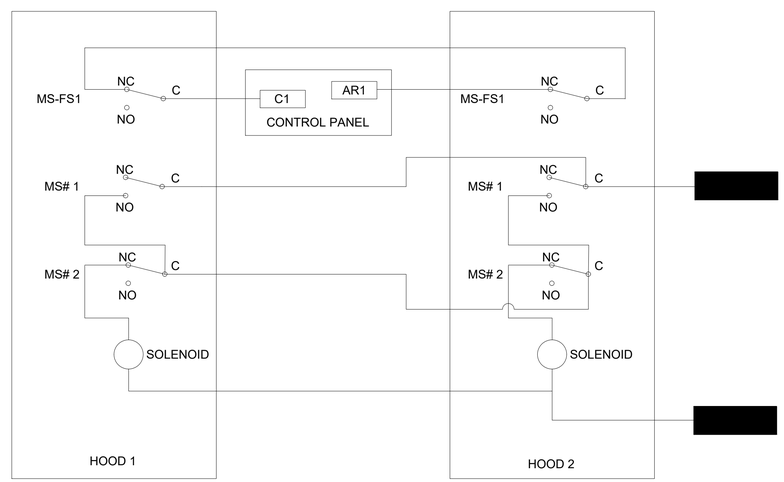

REVISIONS

DESCRIPTION	DATE:

CAPTIVEAIRE

www.captiveaire.com

Seattle Office

1309 Pacific Ave, Everett, WA, 98201 PHONE: (425) 212-5996 FAX: (425) 212-5998 EMAIL: reg85@captiveaire.com

Westview HS R5
PORTLAND, OR, 97229

DATE: 2/5/2021

DWG.#: 4727014

DRAWN BY: JDC-85

SCALE: 3/4" = 1'-0"

MASTER DRAWING

SHEET NO. 5

DLR Group
© DLR Group

LAURA L. BOURLAND
PROFESSIONAL MEMBER
FCSI
FOOD SERVICE CONSULTANTS INSTITUTE
750794

HALLIDAY ASSOCIATES
686 NW NORWOOD
STOP-B, BYAPT. 8807
PORTLAND, OR 97229
FOOD SERVICE CONSULTANTS
SPACE PLANNING • DESIGN

CULINARY CLASSROOM
Westview High School - Beaverton School District
4200 NW 185th Ave, Portland, OR 97229

BID & PERMIT SET

02.18.21
REVISIONS

74-21106-00

FOOD SERVICE CANOPY HOOD DETAILS

FS2.5

DWG 300/74-21100-00 Westview HS Culinary/74-21100-00_WHS-Sc_RR_CAN.DWG
12/3/2020 2:46:27 PM

ELECTRICAL PACKAGE – JOB#4727014

NO	TAG	PACKAGE #	LOCATION	SWITCHES LOCATION	SWITCHES QUANTITY	OPTION	FANS CONTROLLED FAN TAG	TYPE	Φ	HP	VOLT	FLA
1	ITEM 36 35	DCV-1111	UTILITY CABINET LEFT	08 – SHIP LOOSE W/ PREWIRE	1 LIGHT 1 FAN	SMART CONTROLS DCV	EX 36 35 33 32	EXHAUST	3	7.500	460	11.1
2	ITEM 21	DCV-1011	UTILITY CABINET RIGHT	08 – SHIP LOOSE W/ PREWIRE	1 LIGHT 1 FAN	SMART CONTROLS DCV	Item 15 21 EX	EXHAUST	3	3.000	460	4.3

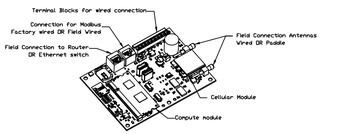

CASlink Monitor and Control

- *Hood control panel to support communications to cloud-based Building Management System.*
- *Hood Control Panel to allow cloud-based Building Management System to monitor real time parameters outlined as MONITOR in the points list.*
- *Hood Control Panel to allow cloud-based Building Management System to control parameters outlined as CONTROL in the points list.*
- *Hood Control Panel to allow cloud-based Building Management System to implement SYSTEM ECONOMIZER control strategies for fully integrated Building Management.*

MONITORING AND CONTROL POINTS LIST

DCV Packages	Function
Room Temperature	MONITOR
Duct Temperature(s)	MONITOR
MUA Discharge Temperature	MONITOR
Kitchen RTU Discharge Temperature	MONITOR
Fan Speed	MONITOR
Fan Amperage	MONITOR
Fan Power	MONITOR
VFD Faults	MONITOR
Controller Faults	MONITOR
Fan Faults	MONITOR
Fan Status	MONITOR
PCU Faults	MONITOR
PCU Filter Clog Percentages	MONITOR
Fire Condition	MONITOR
CORE Fire System	MONITOR
Building Pressures	MONITOR
Prep Time Button	MONITOR & CONTROL
Fans Button	MONITOR & CONTROL
Lights Button	MONITOR & CONTROL
Wash Button	MONITOR & CONTROL

SC Packages	Function
Room Temperature(s)	MONITOR
Duct Temperature(s)	MONITOR
MUA Discharge Temperature	MONITOR
Kitchen RTU Discharge Temperature	MONITOR
Controller Faults	MONITOR
Fan Faults	MONITOR
Fan Status	MONITOR
PCU Faults	MONITOR
PCU Filter Clog Percentages	MONITOR
Fire Condition	MONITOR
CORE Fire System	MONITOR
Building Pressures	MONITOR
Fans Button(s)	MONITOR & CONTROL
Lights Button(s)	MONITOR & CONTROL
Wash Button	MONITOR & CONTROL

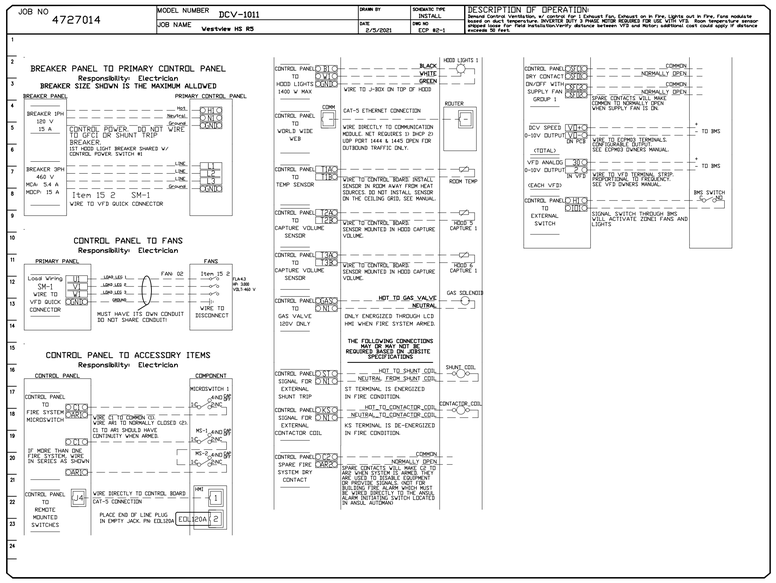

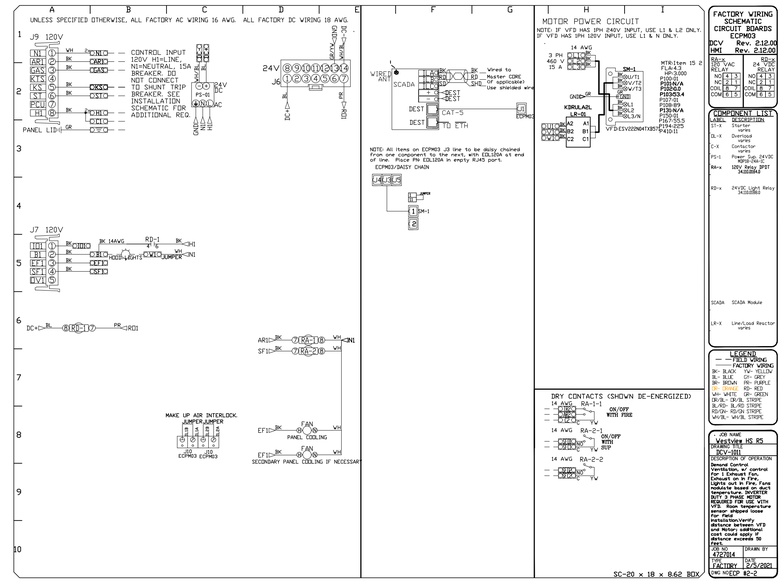

DEMAND CONTROL VENTILATION HOOD CONTROL PANEL SPECIFICATIONS:

- CONTROLS SHALL BE LISTED BY ETL (UL 508A) AND SHALL COMPLY WITH DEMAND VENTILATION SYSTEM TURNDOWN REQUIREMENTS OUTLINED IN IECC 403.2.8 (2015).
- THE CONTROL ENCLOSURE SHALL BE NEMA 1 RATED AND LISTED FOR INSTALLATION INSIDE OF THE EXHAUST HOOD UTILITY CABINET. THE CONTROL ENCLOSURE MAY BE CONSTRUCTED OF STAINLESS STEEL OR PAINTED STEEL.
- TEMPERATURE PROBE(S) LOCATED IN THE EXHAUST DUCT RISER(S) SHALL BE CONSTRUCTED OF STAINLESS STEEL.
- A DIGITAL CONTROLLER SHALL BE PROVIDED TO ACTIVATE THE HOOD EXHAUST FANS DYNAMICALLY BASED ON A FIXED DIFFERENTIAL BETWEEN THE AMBIENT AND DUCT TEMPERATURES SENSORS. THIS FUNCTION SHALL MEET THE REQUIREMENTS OF IMC 507.1.1.
- A DIGITAL CONTROLLER SHALL PROVIDE ADJUSTABLE HYSTERESIS SETTINGS TO PREVENT CYCLING OF THE FANS AFTER THE COOKING APPLIANCES HAVE BEEN TURNED OFF AND/OR THE HEAT IN THE EXHAUST SYSTEM IS REDUCED.
- A DIGITAL CONTROLLER SHALL PROVIDE AN ADJUSTABLE MINIMUM FAN RUN-TIME SETTING TO PREVENT FAN CYCLING.
- VARIABLE FREQUENCY DRIVES (VFDS) SHALL BE PROVIDED FOR FANS AS REQUIRED. THE DIGITAL CONTROLLER SHALL MODULATE THE VFDS BETWEEN A MINIMUM SETPOINT AND A MAXIMUM SETPOINT ON DEMAND. THE DUCT TEMPERATURE SENSOR INPUT(S) TO THE DIGITAL CONTROLLER SHALL BE USED TO CALCULATE THE SPEED REFERENCE SIGNAL.
- THE VFD SPEED RANGE OF OPERATION SHALL BE FROM 0% TO 100% FOR THE SYSTEM, WITH THE ACTUAL MINIMUM SPEED SET AS REQUIRED TO MEET MINIMUM VENTILATION REQUIREMENTS.
- AN INTERNAL ALGORITHM TO THE DIGITAL CONTROLLER SHALL MODULATE SUPPLY FAN VFD SPEED PROPORTIONAL TO ALL EXHAUST FANS THAT ARE LOCATED IN THE SAME FAN GROUP AS THE SUPPLY FAN.
- THE SYSTEM SHALL OPERATE IN PREP MODE DURING LIGHT COOKING LOAD OR COOL DOWN MODE WHEN SUFFICIENT HEAT REMAINS UNDERNEATH THE HOOD SYSTEM AFTER COOKING OPERATIONS HAVE COMPLETED. OPERATION DURING EITHER OF THESE PERIODS WILL DISABLE THE SUPPLY FANS AND PROVIDE AN EXHAUST FAN SPEED THAT IS EQUAL TO THE MINIMUM VENTILATION REQUIREMENT.
- A DIGITAL CONTROLLER SHALL DISABLE THE SUPPLY FAN(S), ACTIVATE THE EXHAUST FAN(S), ACTIVATE THE APPLIANCE SHUNT TRIP, AND DISABLE AN ELECTRIC GAS VALVE AUTOMATICALLY WHEN FIRE CONDITION IS DETECTED ON A COVERED HOOD.
- A DIGITAL CONTROLLER SHALL ALLOW FOR EXTERNAL BMS FAN CONTROL VIA DRY CONTACT (EXTERNAL CONTROL SHALL NOT OVERRIDE FAN OPERATION LOGIC AS REQUIRED BY CODE).
- AN LCD INTERFACE SHALL BE PROVIDED WITH THE FOLLOWING FEATURES:
  - A. ON/OFF PUSH BUTTON FAN & LIGHT SWITCH ACTIVATION.
  - B. INTEGRATED GAS VALVE RESET FOR ELECTRONIC GAS VALVES (NO RESET RELAY REQUIRED).
  - C. VFD FAULT DISPLAY WITH AUDIBLE & VISUAL ALARM NOTIFICATION.
  - D. DUCT TEMPERATURE SENSOR FAILURE DETECTION WITH AUDIBLE & VISUAL ALARM NOTIFICATION.
  - E. MIS-WIRED DUCT TEMPERATURE SENSOR DETECTION WITH AUDIBLE & VISUAL ALARM NOTIFICATION.
  - F. A SINGLE LOW VOLTAGE CAT-5 RJ45 WIRING CONNECTION.
  - G. AN ENERGY SAVINGS INDICATOR THAT UTILIZES MEASURED KWH FROM THE VFDS.

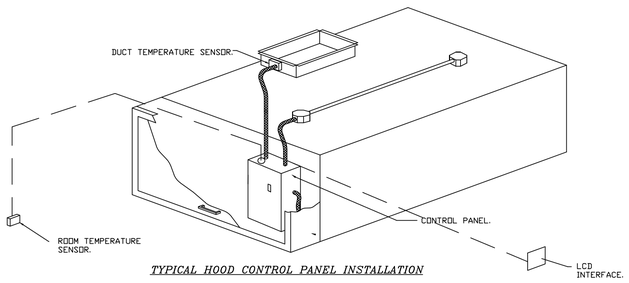

TYPICAL HOOD CONTROL PANEL INSTALLATION

SEQUENCE OF OPERATIONS:

THE HOOD CONTROL PANEL IS CAPABLE OF OPERATING IN ONE OR MORE OF THE FOLLOWING STATES AT ANY GIVEN TIME:

- AUTOMATIC: THE SYSTEM OPERATES BASED ON THE DIFFERENTIAL BETWEEN ROOM TEMPERATURE AND THE TEMPERATURE AT THE HOOD CAVITY OR EXHAUST DUCT COLLAR. FANS ACTIVATE AT A CONFIGURABLE TEMPERATURE DIFFERENTIAL THRESHOLD. DEPENDING ON THE JOB CONFIGURATION EACH FAN ZONE CAN BE CONFIGURED AS STATIC OR DYNAMIC. THESE TERMS REFER TO WHETHER A VARIABLE MOTOR (SUCH AS EC MOTORS OR VFD DRIVEN MOTORS) MODULATE WITH TEMPERATURE. IF THE PANEL IS EQUIPPED WITH VARIABLE SPEED FANS AND THE ZONE IS DEFINED AS 'DYNAMIC', THESE WILL MODULATE WITHIN A USER-DEFINED RANGE BASED ON THE TEMPERATURE DIFFERENTIAL. PANELS EQUIPPED WITH VARIABLE SPEED FANS AND A FAN ZONE DEFINED AS 'STATIC', FANS WILL RUN AT A SET SPEED CALCULATED FOR THE DRIVE. DEMAND CONTROL VENTILATION SYSTEMS ARE CAPABLE OF MODULATING EXHAUST AND MAKE UP AIR FAN SPEEDS PER THE REQUIREMENTS OUTLINED IN IECC 403.2.8.
- MANUAL: THE SYSTEM OPERATES BASED ON HUMAN INPUT FROM AN HMI.
- SCHEDULE: A WEEKLY SCHEDULE CAN BE SET TO RUN FANS FOR A SPECIFIED PERIOD THROUGHOUT THE DAY. THERE ARE THREE OCCUPIED TIMES PER DAY TO ALLOW FOR THE USER TO SET UP A TIME THAT IS SUITABLE TO THEIR NEEDS. ANY TIME THAT IS WITHIN THE DEFINED OCCUPIED TIME, THE SYSTEM WILL RUN AT MODULATION MODE AND FOLLOW THE FAN PROCEDURE ALGORITHM BASED ON TEMPERATURE DURING THIS TIME. DURING UNOCCUPIED TIME, THE SYSTEM WILL HAVE AN EXTRA OFFSET TO PREVENT UNINTENDED ACTIVATION OF THE SYSTEM DURING A TIME WHERE THE SYSTEM IS NOT BEING OCCUPIED.
- OTHER: THE SYSTEM OPERATES BASED ON THE INPUT FROM AN EXTERNAL SOURCE (DDC, BMS OR HARD-WIRED INTERLOCK).
- FIRE: UPON ACTIVATION OF THE HOOD FIRE SUPPRESSION SYSTEM, THE EXHAUST FAN WILL COME ON OR CONTINUE TO TO RUN, THE HOOD MAKEUP AIR WILL SHUTDOWN, AND A SIGNAL WILL BE SENT FOR ACTIVATING THE SHUNT TRIP BREAKER PROVIDED BY THE ELECTRICIAN. FUEL GAS WILL SHUT OFF VIA A MECHANICAL/ELECTRICAL GAS VALVE ACTUATED BY THE HOOD FIRE SUPPRESSION SYSTEM.

REVISIONS

DESCRIPTION	DATE:

CAPTIVEAIRE
www.captiveaire.com
Seattle Office
1309 Pacific Ave, Everett, WA, 98201 PHONE: (425) 212-5996 FAX: (425) 212-5998 EMAIL: reg95@captiveaire.com

DLR Group
© DLR Group

LAURA L. BOURLAND
PROFESSIONAL MEMBER
FOODSERVICE CONSULTANTS SOCIETY INTERNATIONAL
FCSI
750794

HALLIDAY ASSOCIATES
686 NW NORWOOD
CLEVELAND, MISSOURI 64034
FOOD SERVICE CONSULTANTS
SPACE PLANNING & DESIGN

Westview HS R5
PORTLAND, OR, 97229

DATE: 2/5/2021

DWG.#: 4727014

DRAWN BY: JDC-85

SCALE: 3/4" = 1'-0"

MASTER DRAWING

SHEET NO. 10

CULINARY CLASSROOM
Westview High School - Beaverton School District
4200 NW 185th Ave, Portland, OR 97229

BID & PERMIT SET

02.18.21
REVISIONS

74-21106-00

FOOD SERVICE CANOPY HOOD DETAILS

FS2.6

DWG JOB:J:\4421 NORTH\WESTVIEW HS CULINARY\4421 NORTH_WFTSO_AR_ASAUL.VT
12/3/2020 2:46:27 PM

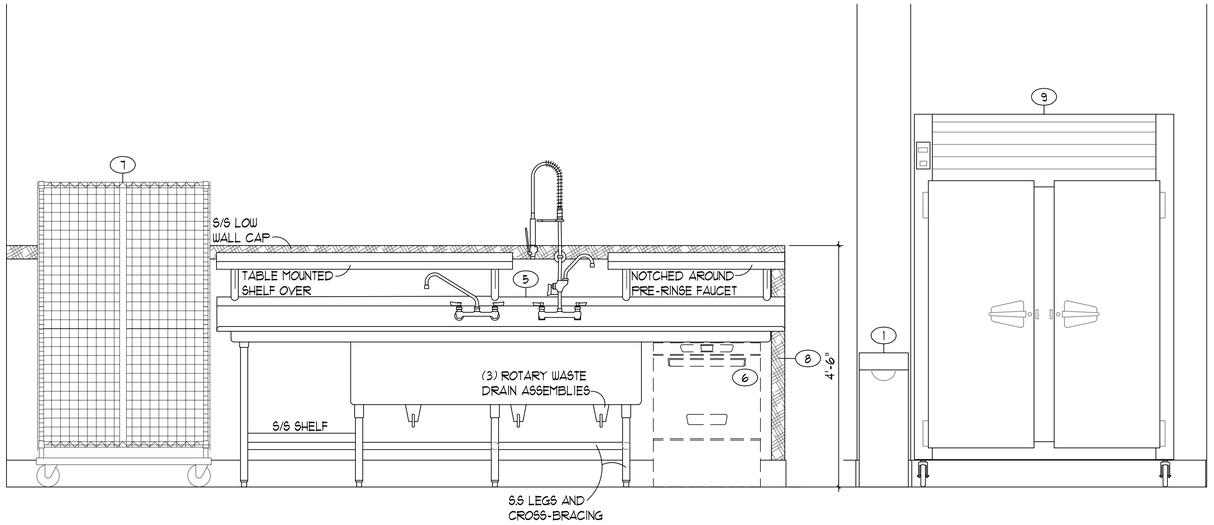

1 ELEVATION POT WASHING SINK TABLE
3/4"=1'-0"

2 ELEVATION REACH-IN REFRIGERATOR
3/4"=1'-0"

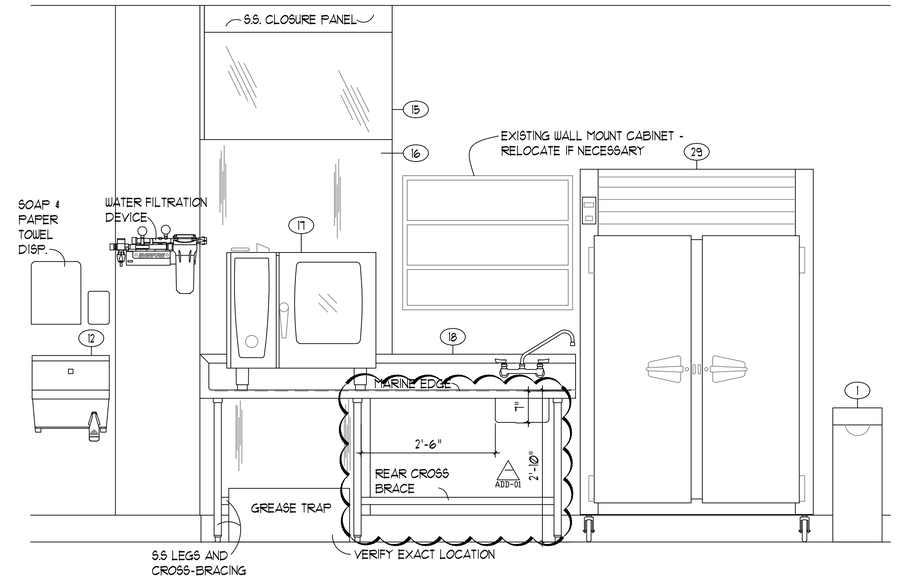

3 ELEVATION ADA PREP WORK TABLE
3/4"=1'-0"

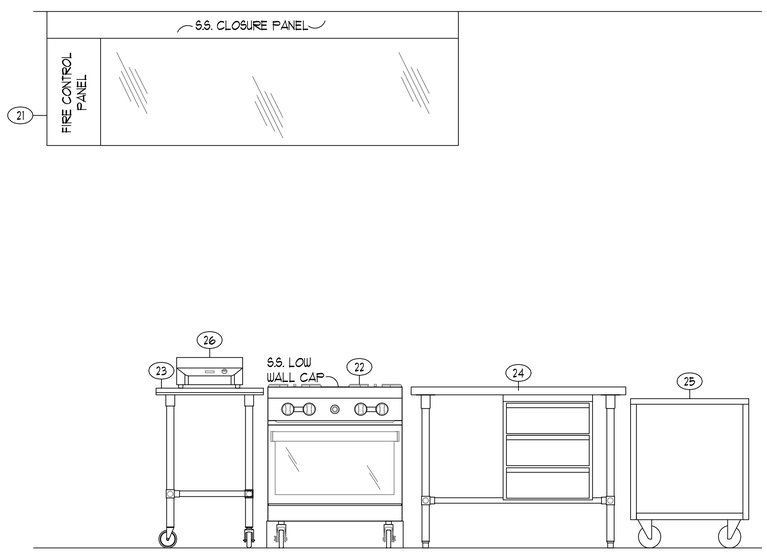

4 ELEVATION TEACHERS COOKING STATION
3/4"=1'-0"

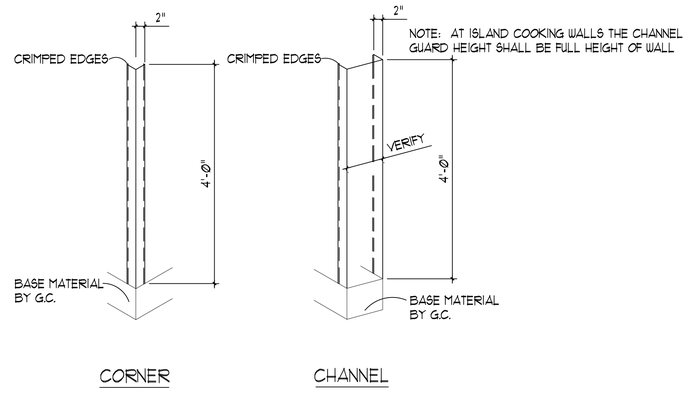

CORNER

CHANNEL

A ISOMETRIC CHANNEL/WALL GUARDS
3/4"=1'-0"

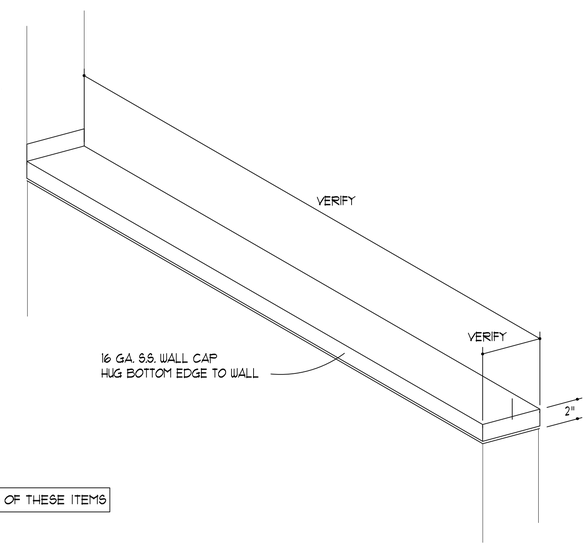

B ISOMETRIC / WALL CAP
3/4"=1'-0"

NOTE: SEE SHEET WHS-FS1.1 FOR LOCATIONS AND QUANTITIES OF THESE ITEMS

DLR Group
© DLR Group

LAURA L. BOURLAND
PROFESSIONAL MEMBER
FCSI
700794
FOODSERVICE CONSULTANTS SOCIETY INTERNATIONAL

HALLIDAY ASSOCIATES
656 NW NORWOOD
CANYON, OR 97677
(503) 834-7777
FOOD SERVICE CONSULTANTS
SPACE PLANNING & DESIGN

CULINARY CLASSROOM

Westview High School - Beaverton School District

4200 NW 185th Ave, Portland, OR 97229

BID & PERMIT SET

02.18.21
REVISIONS
ADD-01 3/17/21

74-21106-00

FOOD SERVICE ELEVATION AND FABRICATION DETAILS

FS3.1

DWG: 300.//742.1 \\DFS0 Westview HS Culinary\742.1\DFS0_FFS0_AR_ADD01.rvt
12/3/2020 2:46:27 PM

1A

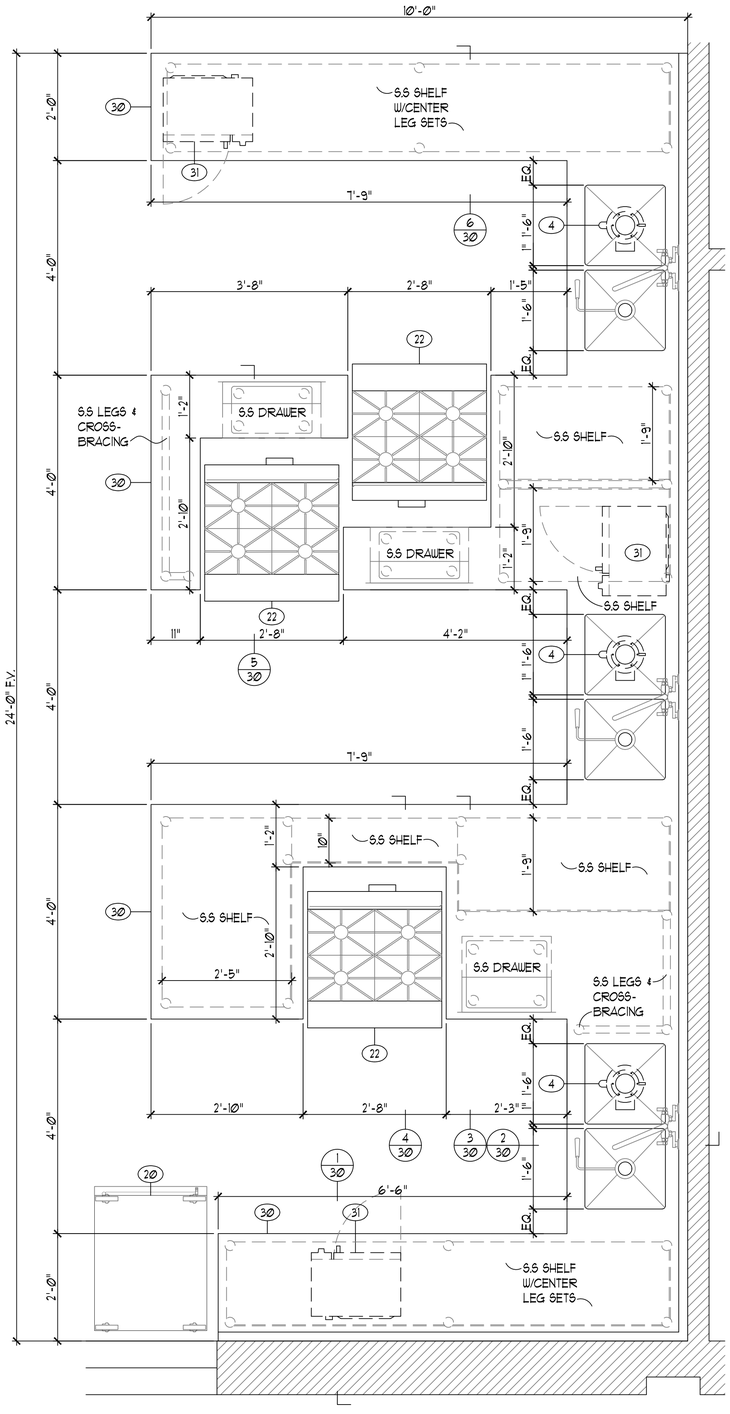

A PLAN VIEW STUDENT WORK STATION ITEM 30
3/4"=1'-0"

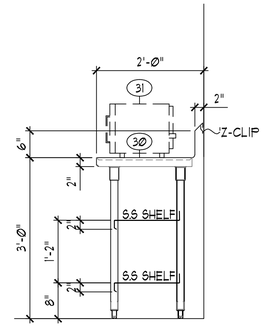

1/30 SECTION
3/4"=1'-0"

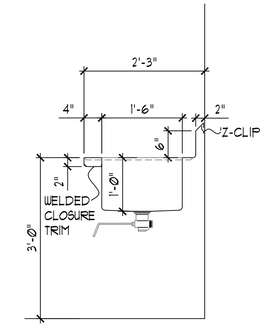

2/30 SECTION
3/4"=1'-0"

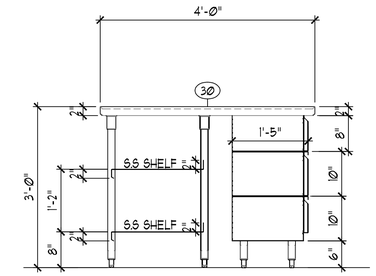

3/30 SECTION
3/4"=1'-0"

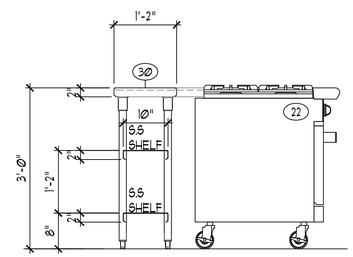

4/30 SECTION
3/4"=1'-0"

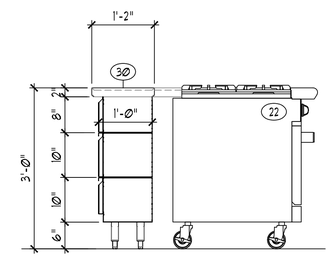

5/30 SECTION
3/4"=1'-0"

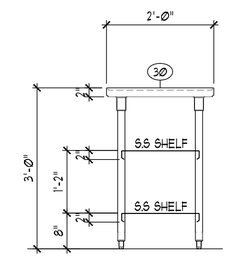

6/30 SECTION
3/4"=1'-0"

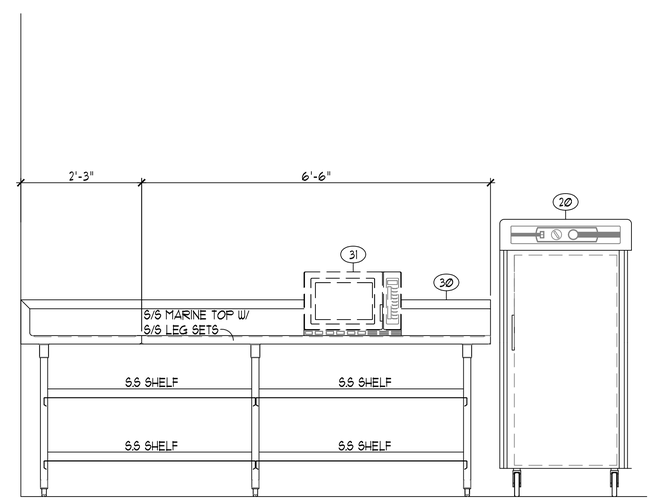

5 ELEVATION
STUDENT WORK STATION COUNTER
3/4"=1'-0"

DLR Group
© DLR Group

LAURA L. BOURLAND
FCSI
700794
CERTIFIED FACILITIES SPECIALISTS
PROFESSIONAL MEMBER
FACILITIES CONSULTANTS SOCIETY INTERNATIONAL

HALLIDAY ASSOCIATES
656 NW NORWOOD
TIGARD, OR 97223
(503) 639-8807
FOOD SERVICE CONSULTANTS
SPACE PLANNING • DESIGN

CULINARY CLASSROOM

Westview High School - Beaverton School District

4200 NW 185th Ave, Portland, OR 97229

BID & PERMIT SET

02.18.21
REVISIONS

74-21106-00

FOOD SERVICE ELEVATION AND FABRICATION DETAILS

FS3.2

DWG:30U//1=4:1 10PDU WESTVIEW HS CulinaryII=4:1 10PDU_WTRS0_AR_A0A0.LV1
12/3/2020 2:46:27 PM

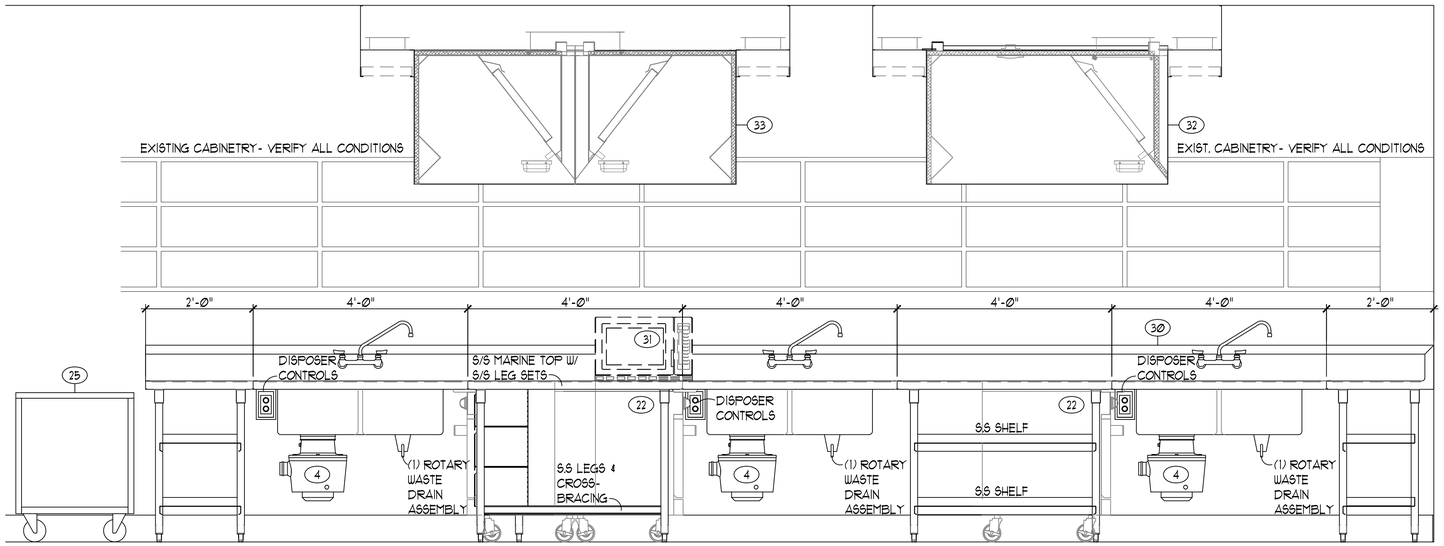

6 ELEVATION STUDENT WORK STATION COUNTER
3/4"=1'-0"

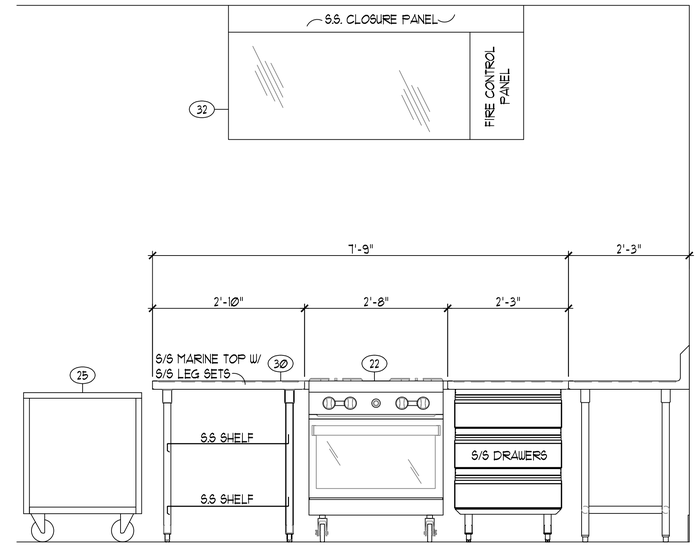

7 ELEVATION STUDENT WORK STATION COUNTER
3/4"=1'-0"

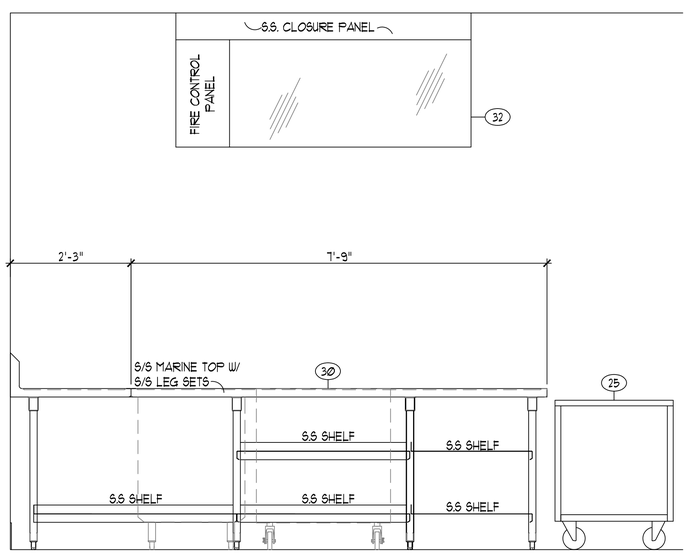

8 ELEVATION
STUDENT WORK STATION COUNTER
3/4"=1'-0"

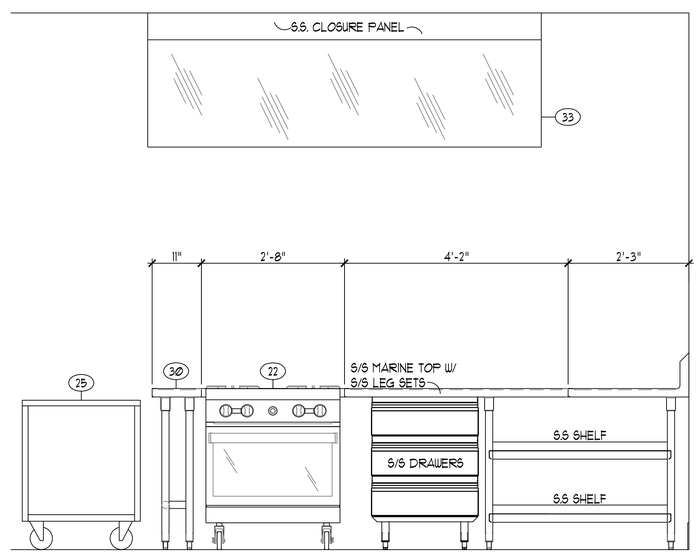

9 ELEVATION
STUDENT WORK STATION COUNTER
3/4"=1'-0"

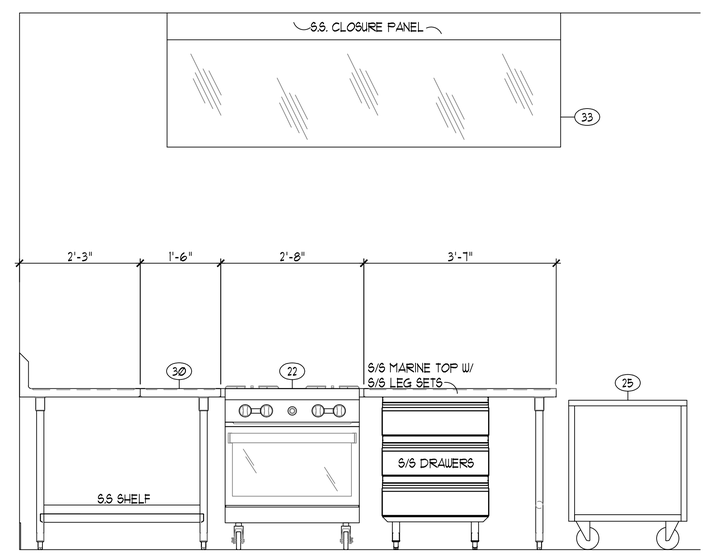

10 ELEVATION
STUDENT WORK STATION COUNTER
3/4"=1'-0"

DLR Group
© DLR Group

LAURA L. BOURLAND
FCSI
700794
FOOD SERVICE SPECIALISTS • PROFESSIONAL MEMBER
FOODSERVICE CONSULTANTS SOCIETY INTERNATIONAL

HALLIDAY ASSOCIATES
656 NW NORWOOD
CANYON, OR 97229
(503) 654-8807
FOOD SERVICE CONSULTANTS
SPACE PLANNING • DESIGN

CULINARY CLASSROOM

Westview High School - Beaverton School District

4200 NW 185th Ave, Portland, OR 97229

BID & PERMIT SET

02.18.21
REVISIONS

74-21106-00

FOOD SERVICE ELEVATION AND FABRICATION DETAILS

FS3.3

12/3/2020 2:46:27 PM

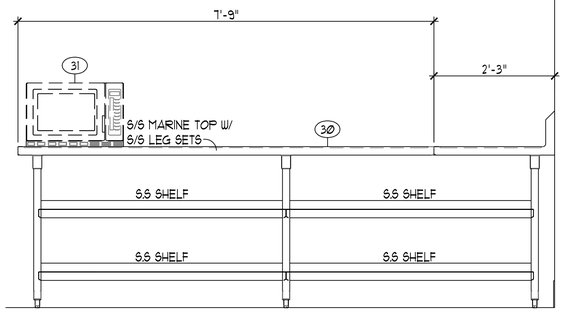

11 ELEVATION
STUDENT WORK STATION COUNTER
3/4"=1'-0"

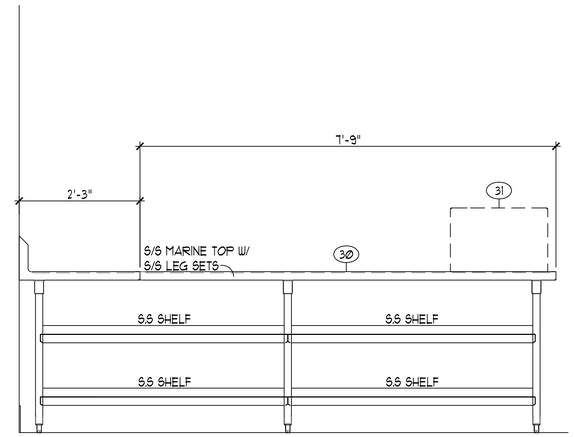

12 ELEVATION
STUDENT WORK STATION COUNTER
3/4"=1'-0"

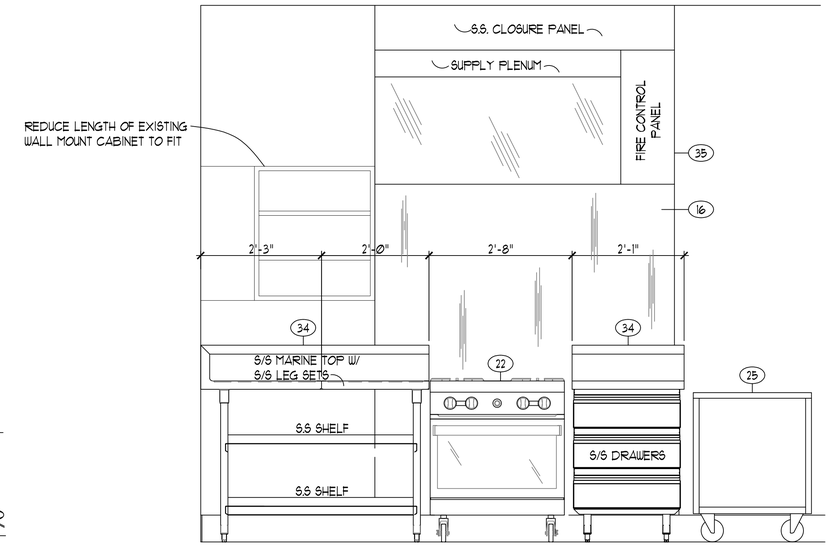

13 ELEVATION
STUDENT WORK STATION COUNTER
3/4"=1'-0"

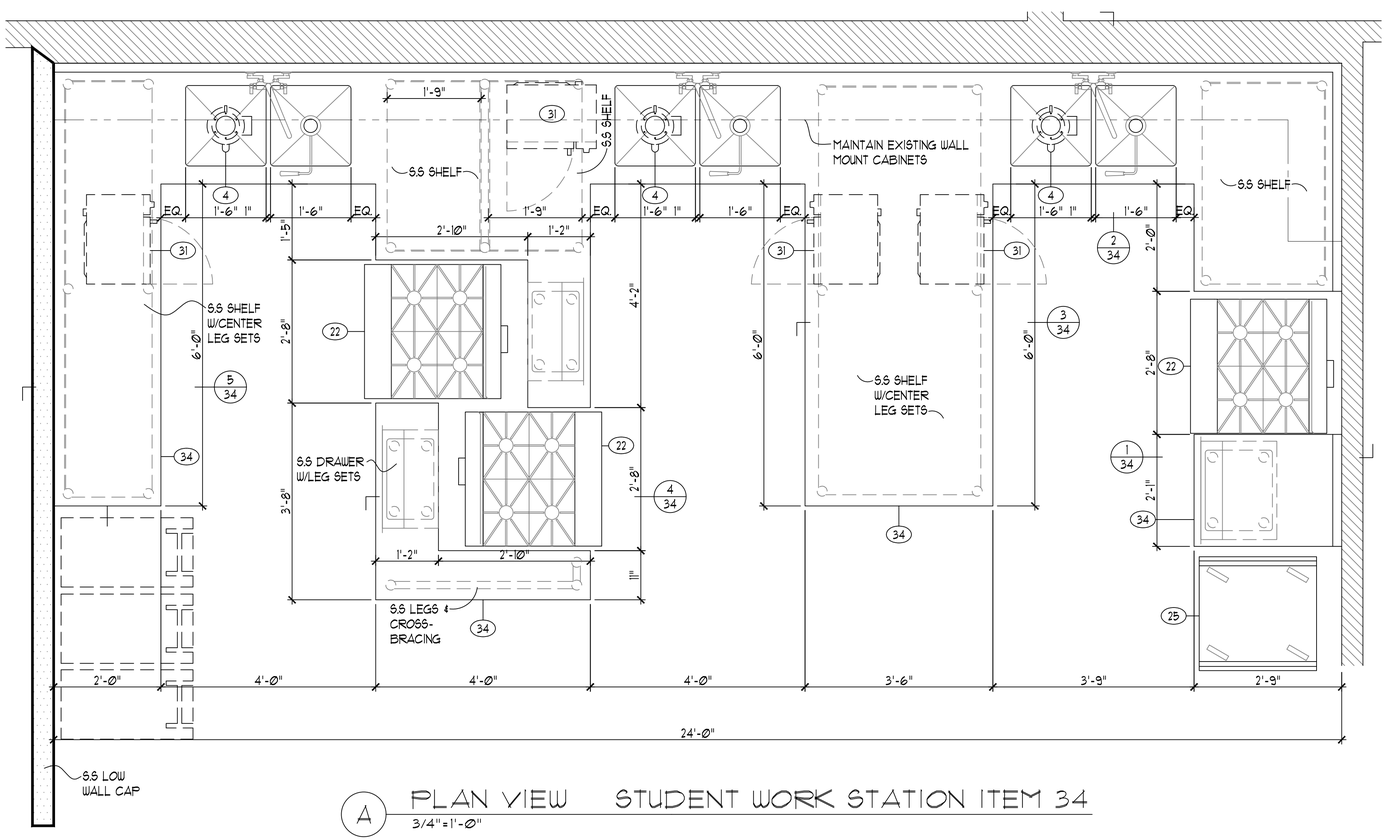

A PLAN VIEW STUDENT WORK STATION ITEM 34
3/4"=1'-0"

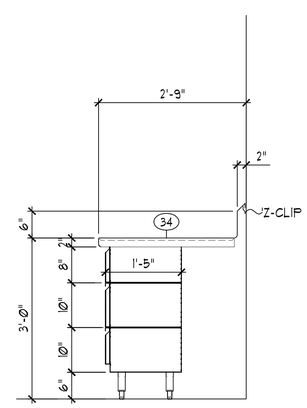

1/34 SECTION
3/4"=1'-0"

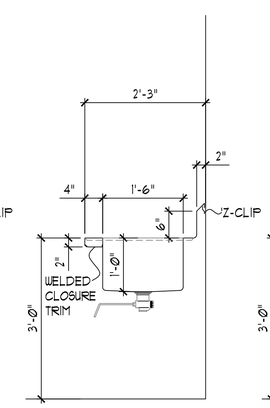

2/34 SECTION
3/4"=1'-0"

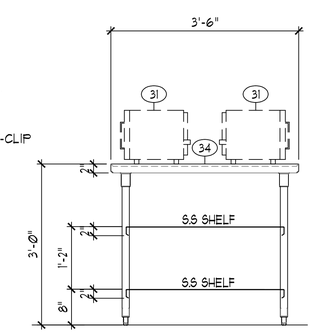

3/30 SECTION
3/4"=1'-0"

DLR Group
© DLR Group

LAURA L. BOURLAND
FCSI
700794
CERTIFIED FOODSERVICE PROFESSIONAL MEMBER
FOODSERVICE CONSULTANTS SOCIETY INTERNATIONAL

HALLIDAY ASSOCIATES
656 NW NORWOOD
TIGARD, OR 97223
(503) 639-6607
FOOD SERVICE CONSULTANTS
SPACE PLANNING & DESIGN

CULINARY CLASSROOM

Westview High School - Beaverton School District
4200 NW 185th Ave, Portland, OR 97229

BID & PERMIT SET

02.18.21
REVISIONS

74-21106-00

FOOD SERVICE
ELEVATION AND
FABRICATION
DETAILS

FS3.4

DWG 300//1=4:1 1/0PW0 WESTVIEW HS CUlINARY//1=4:1 1/0PW0_WT30_ARC_EXEC//1:1

12/3/2020 2:46:27 PM

1A

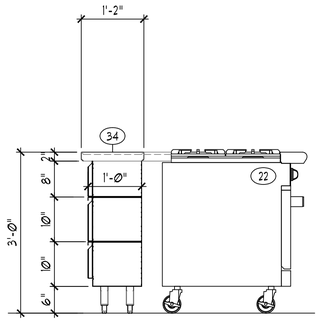

4/34 SECTION
3/4"=1'-Ø"

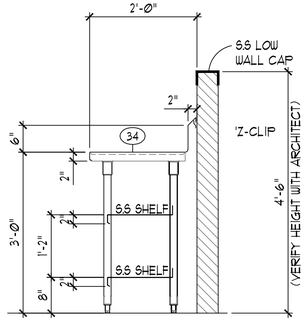

5/34 SECTION
3/4"=1'-Ø"

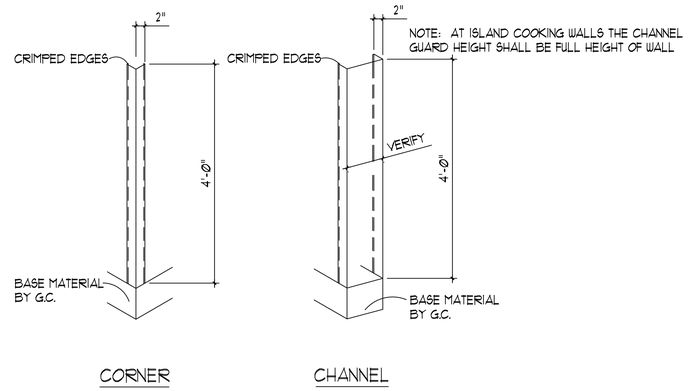

NOTE: SEE SHEET FS1.1 FOR LOCATIONS AND QUANTITIES OF THESE ITEMS

B ISOMETRIC CHANNEL/WALL GUARDS
3/4"=1'-Ø"

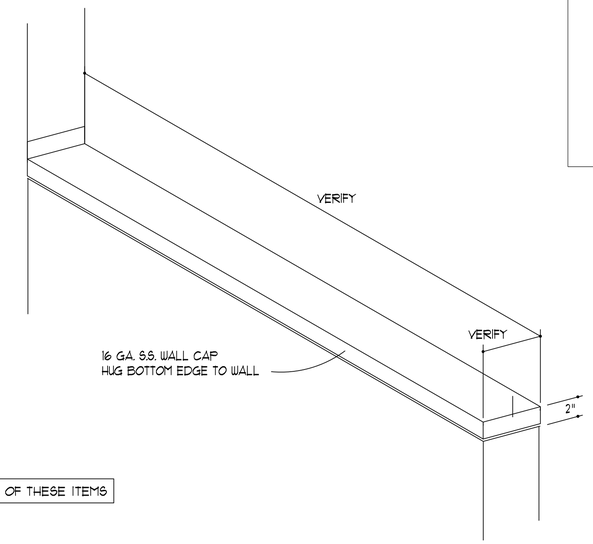

C ISOMETRIC / WALL CAP
3/4"=1'-Ø"

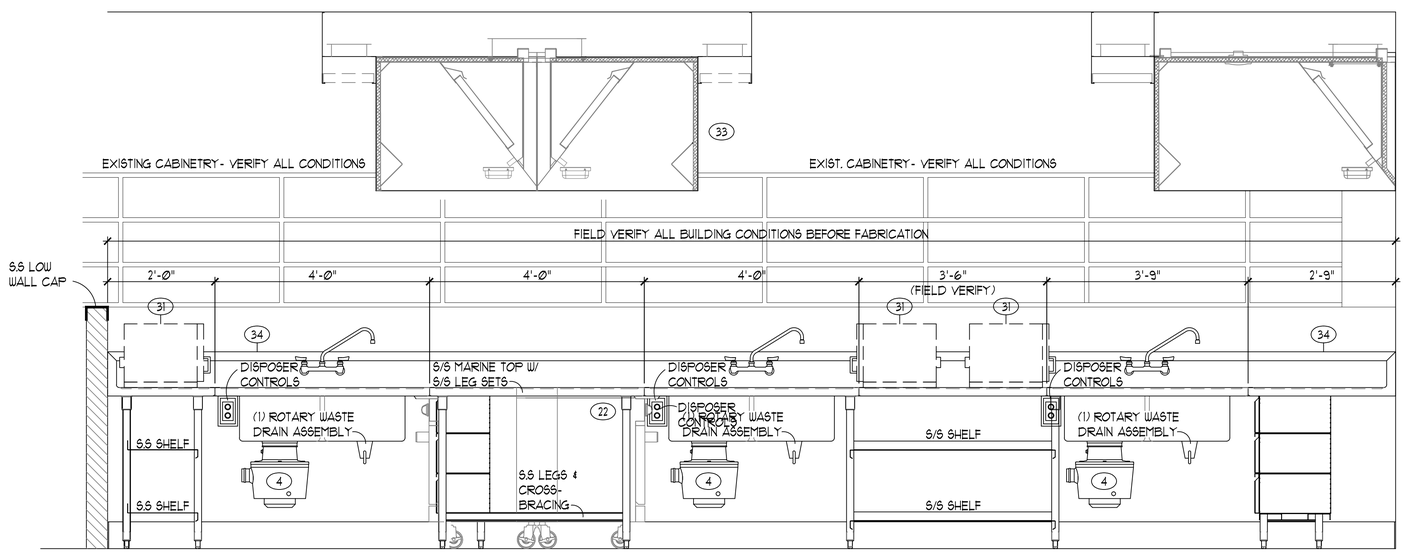

14 ELEVATION STUDENT WORK STATION COUNTER
3/4"=1'-Ø"

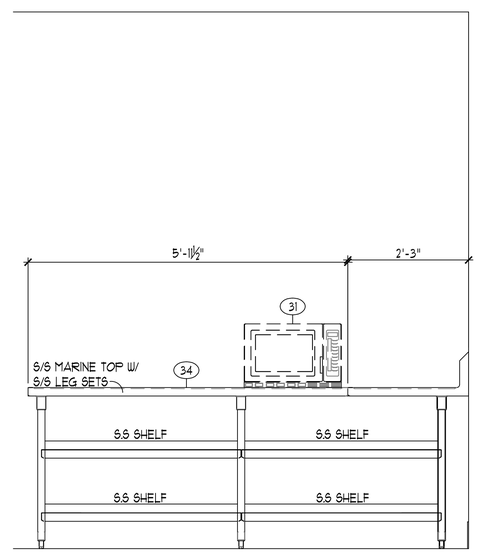

15 ELEVATION STUDENT WORK STATION COUNTER
3/4"=1'-Ø"

DLR Group
© DLR Group

LAURA L. BOURLAND
PROFESSIONAL MEMBER
FCSI
700794
INTERNATIONAL CONSULTANTS SOCIETY

HALLIDAY ASSOCIATES
656 NW NORWOOD
TIGARD, OR 97223
(503) 639-4444
FOOD FACILITY CONSULTANTS
SPACE PLANNING • DESIGN

CULINARY CLASSROOM
Westview High School - Beaverton School District
4200 NW 185th Ave, Portland, OR 97229

BID & PERMIT SET

02.18.21
REVISIONS

74-21106-00

FOOD SERVICE ELEVATION AND FABRICATION DETAILS

FS3.5

DWG 300.//742.1 \0000 Westview HS Culinary\742.1\0000_WVHS_ARC_FS3.5.DWG
12/3/2020 2:46:27 PM

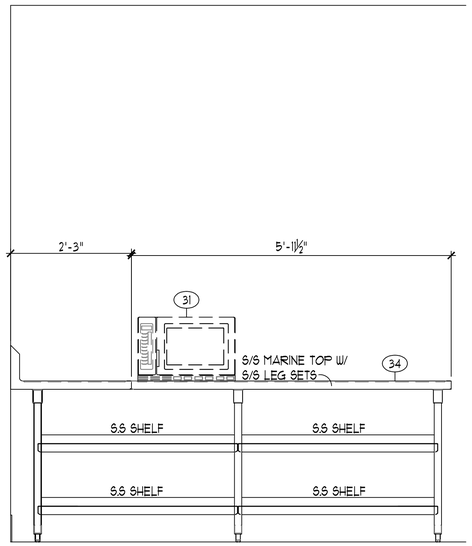

16 ELEVATION STUDENT WORK STATION COUNTER
3/4"=1'-0"

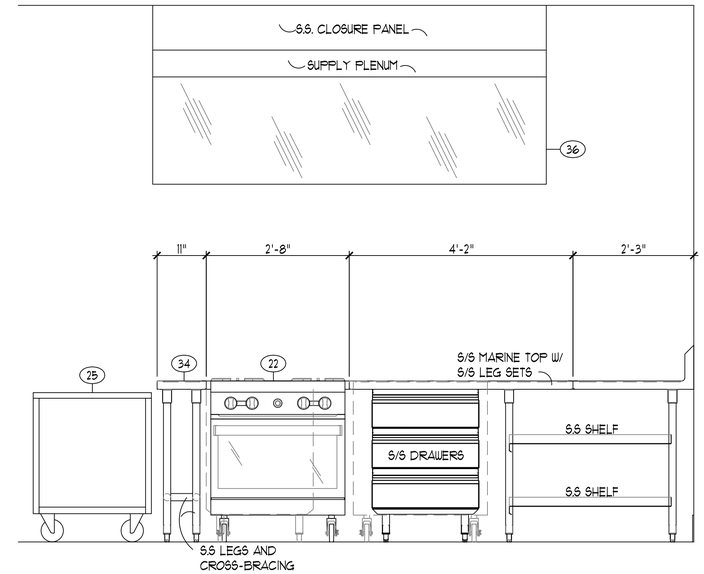

17 ELEVATION STUDENT WORK STATION COUNTER
3/4"=1'-0"

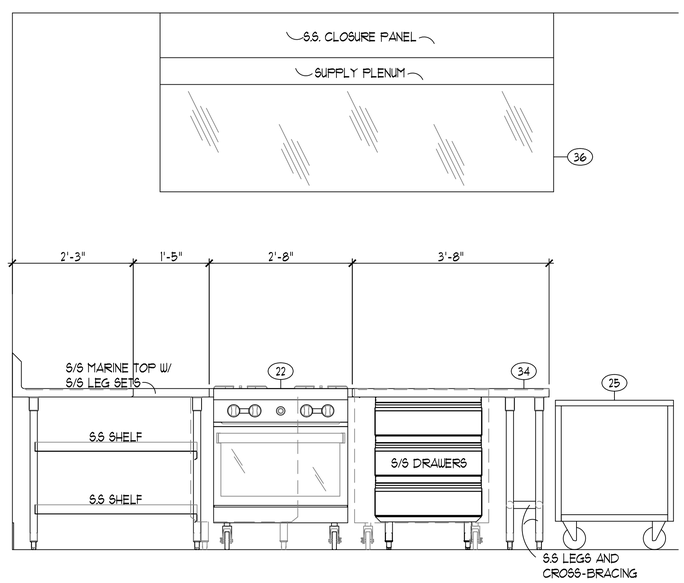

18 ELEVATION STUDENT WORK STATION COUNTER
3/4"=1'-0"

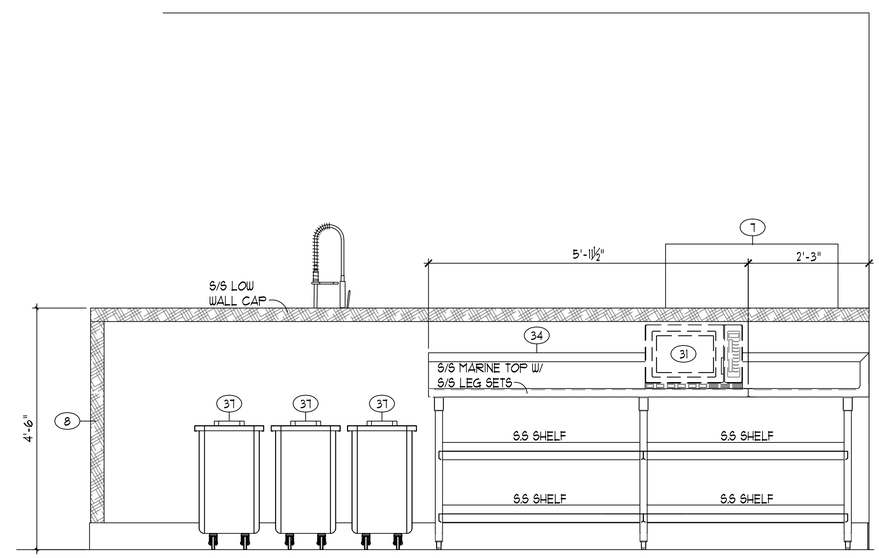

19 ELEVATION STUDENT WORK STATION COUNTER
3/4"=1'-0"

DLR Group
© DLR Group

HALLIDAY ASSOCIATES
656 NW NORWOOD
PORTLAND, OR 97229
(503) 643-8807
FOOD SERVICE CONSULTANTS
SPACE PLANNING • DESIGN

CULINARY CLASSROOM

Westview High School - Beaverton School District

4200 NW 185th Ave, Portland, OR 97229

BID & PERMIT SET

02.18.21
REVISIONS

74-21106-00

FOOD SERVICE ELEVATION AND FABRICATION DETAILS

FS3.6

12/3/2020 2:46:27 PM

SITE PLAN ELEMENTS

SITE ADDRESS: 4200 NW 185TH AVE. PORTLAND OR, 97229
TAX LOT NUMBER: 1N1190002300
PROPERTY ACCOUNT ID: R591666
SITE AREA SIZE: LOT SIZE: 44.96 ACRES
ZONING DESIGNATION: R-5
GENERAL SETBACKS:
- FRONT 15
- SIDE 5
- REAR 15
- SIDE STREET 10

LATITUDE / LONGITUDE: 45.5499299 / 122.864853
SANITATION: CLEAN WATER SERVICES (CWS)
WATER: TUALATIN VALLEY WATER (TVW)
FIRE : TUALATIN VALLEY FIRE & RESCUE (TVFR)

NOTE: THIS PROJECT INCLUDES NO SITE WORK AND VERY LIMITED EXTERIOR WORK, CONSISTING OF NEW ROOFTOP MECHANICAL UNIT AND TWO ROOFTOP EXHAUST FANS ONLY.

- EXISTING CURBS, SIDEWALKS, PLANTER STRIPS AND STORM DRAINS TO REMAIN.
- EXISTING STREET TREES TO REMAIN.
- EXISTING EASEMENTS TO REMAIN.
- EXISTING BUILDING FOOTPRINT AND EXTERIOR TO REMAIN.
- EXISTING RETAINING WALLS AND FENCES TO REMAIN.
- EXISTING FIRE TRUCK ACCESS LANES TO REMAIN
- EXISTING FIRE HYDRANTS TO REMAIN
- EXISTING EXTERIOR EGRESS PATHS TO REMAIN

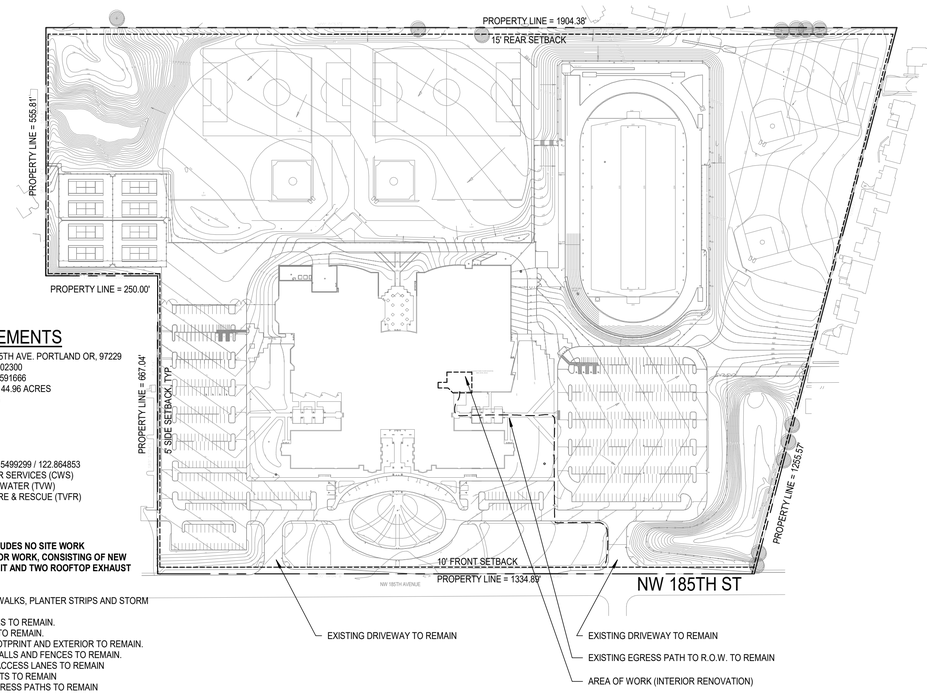

N

SITE PLAN

SCALE: 1" = 160'-0"

DLR Group
© DLR Group

REGISTERED ARCHITECT
JANE E. GOODING
PORTLAND, OR
6821
STATE OF OREGON

CULINARY CLASSROOM

Westview High School - Beaverton School District

4200 NW 185th Ave, Portland, OR 97229

BID & PERMIT SET
02.18.21
REVISIONS

74-21106-00

SITE PLAN

AS1.1

BIM 360://74-21106-00 Westview HS Culinary/74-21106-00_WHSC_AR_2020.rvt
2/23/2021 12:48:05 AM