CULINARY CLASSROOM

WESTVIEW HIGH SCHOOL - BEAVERTON SCHOOL DISTRICT

4200 NW 185th AVE,
PORTLAND, OREGON 97229

50% CD
JANUARY 21, 2021

VICINITY MAP

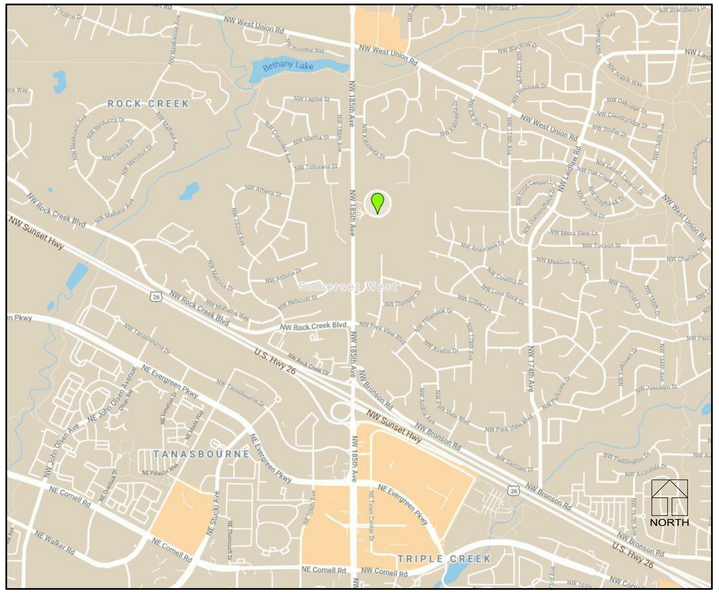

OVERALL PLAN

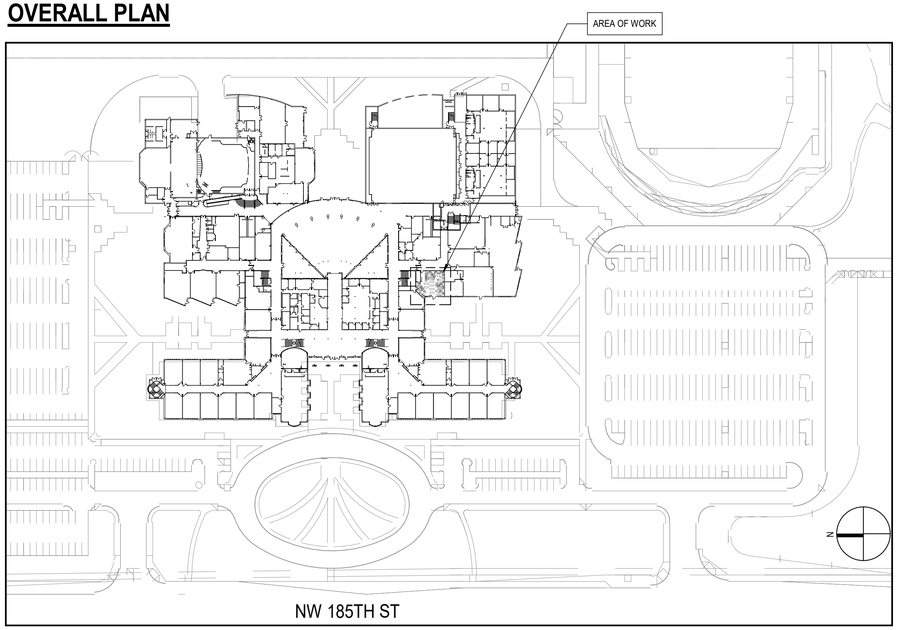

PROJECT TEAM

OWNER:
BEAVERTON SCHOOL DISTRICT
FACILITIES DEVELOPMENT
16550 SW MERLO ROAD
BEAVERTON, OR 97003
KURT MEEUWSEN & PATRICK O'HARROW

ARCHITECTURE
DLR GROUP
110 SW YAMHILL ST
PORTLAND, OR 97204
JANE GOODING

STRUCTURAL
DLR GROUP
51 UNIVERSITY ST, SUITE 600
SEATTLE, WA 98101
WILLIAM RAGLAND

MECHANICAL / PLUMBING / FIRE PROTECTION
DLR GROUP
51 UNIVERSITY ST, SUITE 600
SEATTLE, WA 98101
STEVE REIGH

ELECTRICAL & AV
DLR GROUP
110 SW YAMHILL ST
PORTLAND, OR 97204
SEAN AVERY & VITALY SHEVYAKOV

INTERIORS
DLR GROUP
51 UNIVERITY ST, SUITE 600
SEATTLE, WA 98101
BETH ROSS

FOOD SERVICE
HALLIDAY ASSOCIATES, INC
656 NW NORWOOD ST
CAMAS, WA 98607
LAURA BOURLAND

INDEX OF DRAWINGS

GENERAL
G0.0 - COVER SHEET
G0.2 - SYMBOLS & ABBREVIATIONS
CP1.1 - CODE PLAN

ARCHITECTURE
AD1.1 - DEMO PLANS (FLOOR AND RCP)
A1.1 - FLOOR PLANS
A3.1 - REFLECTED CEILING PLAN AND ROOF PLAN
A7.1 - INTERIOR ELEVATIONS & SECTIONS
A10.1 - WALL TYPES & DETAILS

FIRE PROTECTION
FP1.1 - OVERALL FIRE PROTECTION PLAN

MECHANICAL
M0.1A - MECHANICAL SYMBOLS & ABBREVIATIONS
M1.1 - HVAC PLANS (DEMO AND NEW)
M5.1 - MECHANICAL DETAILS & SCHEDULES

PLUMBING
P1.1 - PLUMBING PLANS (DEMO AND NEW)
P4.1 - WASTE & VENT RISER DIAGRAMS

ELECTRICAL & AV
E0.1 - ELECTRICAL SYMBOLS, ABBREVIATIONS & NOTES
ED1.1 - POWER DEMO PLAN
ED1.2 - LIGHTING DEMO PLAN
E1.1 - REFLECTED CEILING PLAN
E2.1 - POWER PLAN
E2.2 - SECOND LEVEL POWER PLAN (ROOF)
E5.1 - ONE-LINE DIAGRAM
E6.1 - ELECTRICAL DETAILS
E7.1 - EXISTING PANEL SCHEDULES
E7.2 - EXISTING PANEL SCHEDULES
E7.3 - PANEL SCHEDULES
E7.4 - PANEL SCHEDULES

FOOD SERVICE
FS1.1 - FOOD SERVICE EQUIPMENT PLAN
FS1.2 - FOOD SERVICE PLUMBING PLAN
FS1.3 - FOOD SERVICE MECHANICAL PLAN
FS1.4 - FOOD SERVICE ELECTRICAL PLAN
FS2.1 - FOOD SERVICE CANOPY HOOD DETAILS
FS2.2 - FOOD SERVICE CANOPY HOOD DETAILS
FS2.3 - FOOD SERVICE CANOPY HOOD DETAILS
FS2.4 - FOOD SERVICE CANOPY HOOD DETAILS
FS2.5 - FOOD SERVICE CANOPY HOOD DETAILS
FS2.6 - FOOD SERVICE CANOPY HOOD DETAILS
FS2.7 - FOOD SERVICE CANOPY HOOD DETAILS
FS2.8 - FOOD SERVICE CANOPY HOOD DETAILS
FS2.9 - FOOD SERVICE CANOPY HOOD DETAILS
FS2.10 - FOOD SERVICE CANOPY HOOD DETAILS
FS2.11 - FOOD SERVICE CANOPY HOOD DETAILS
FS2.12 - FOOD SERVICE CANOPY HOOD DETAILS

SUMMARY OF WORK

INTERIOR RENOVATION OF EXISTING CULINARY CLASSROOM. DEMOLISH RESIDENTIAL APPLIANCES, EXHAUST FANS/HOODS AND ASSOCIATED DUCTWORK, SINKS AND CASEWORK AND REPLACE WITH NEW COMMERCIAL KITCHEN EQUIPMENT AND HOODS. PROVIDE MAKEUP AIR UNIT AND NEW EXHAUST HOOD. DEMOLISH CEILING AND LIGHT FIXTURES AND REPLACE WITH NEW. PATCH VCT FLOORING AS BASE BID, AND DEMO AND REPLACE ENTIRELY WITH NON-SLIP SHEET FLOORING AS ALTERNATE. ADD CAMERA AT DEMONSTRATION TABLE AND VOICE AMPLIFICATION SYSTEM WITHIN CLASSROOM. ADD CARD READER AT STORAGE DOOR.

DEFERRED SUBMITTALS

- ATTACHMENT OF ROOFTOP MECHANICAL UNITS TO SUPPORTING CURBS
- PENETRATING FIRESTOPPING
- ACOUSTICAL PANEL CEILING SUSPENSION SYSTEMS
- SEISMIC BRACING FOR PLUMBING EQUIPMENT
- SEISMIC BRACING FOR HVAC SYSTEMS, COMPONENTS AND EQUIPMENT
- SEISMIC BRACING FOR ELECTRICAL EQUIPMENT
- KITCHEN EXHAUST HOOD, TYPE 1 FIRE SUPPRESSION SYSTEM
- HANGERS AND SUPPORT FOR ALL EQUIPMENT

DLR Group
© DLR Group

- NOT FOR CONSTRUCTION -

Consultant Logo

Project Logo

CULINARY CLASSROOM
Westview High School - Beaverton School District
4200 NW 185th Ave, Portland, OR 97229

50% CD
1.21.21
REVISIONS

74-211106-00

COVER SHEET

G0.1

BIM 360://74-211106-00 Westview HS Culinary/74-211106-00_WHSC_AR_2020.rvt
1/22/2021 3:58:01 PM

GENERAL ABBREVIATIONS

#	NUMBER
&	AND
@	AT
ADA	AMERICANS WITH DISABILITY ACT
ADDN	ADDITION OR ADDITIONAL
AFF	ABOVE FINISHED FLOOR
AFG	ABOVE FINISHED GRADE
AHJ	AUTHORITY HAVING JURISDICTION
ALT	ALTERNATE
ANSI	AMERICAN NATIONAL STANDARDS INSTITUTE
APPROX	APPROXIMATE
ARCH	ARCHITECTURAL
BLDG	BUILDING
BSMT	BASEMENT
CL	CENTER LINE
CLG	CEILING
CM	CENTIMETER
CONC	CONCRETE
CONN(S)	CONNECTION(S)
CONST	CONSTRUCTION
CONT	CONTINUOUS
CONTR	CONTRACT(OR)
CTR	CENTER
D	DEPTH
DEG	DEGREE
DEMO	DEMOLISH OR DEMOLITION
DIA	DIAMETER
DIM	DIMENSION
DIV	SPECIFICATION DIVISION
DN	DOWN
DTL	DETAIL
DWG(S)	DRAWING(S)
E	EAST
EA	EACH
EC	ELECTRICAL CONTRACTOR
EL	ELEVATION
ELEC	ELECTRICAL
ENG	ENGINEER
EQ	EQUAL
EQUIP	EQUIPMENT
EQUIV	EQUIVALENT
EXST	EXISTING
EXT	EXTERIOR
FIN	FINISHED
FL	FLOOR
FT	FEET
FUT	FUTURE
GC	GENERAL CONTRACTOR
GOVT	GOVERNMENT
H	HEIGHT
HORIZ	HORIZONTAL
HT	HEIGHT
i.e.	THAT IS
IBC	INTERNATIONAL BUILDING CODE
IN	INCH
INT	INTERIOR
LB(S)	POUND(S)
M	THOUSAND
M	METER
MAX	MAXIMUM
MC	MECHANICAL CONTRACTOR
MECH	MECHANICAL
MEZZ	MEZZANINE
MFR	MANUFACTURER
MIN	MINIMUM
MISC	MISCELLANEOUS
MM	MILLIMETER
N	NORTH
N/A	NOT APPLICABLE
NIC	NOT IN CONTRACT
NTS	NOT TO SCALE
OC	ON CENTER
OPP	OPPOSITE
OVHD	OVERHEAD
PAR	PARALLEL
PENT	PENTHOUSE
PLYWD	PLYWOOD
QTY	QUANTITY
REQ(D)	REQUIRE(D)
REV	REVISION(S)
RM	ROOM
RND	ROUND
S	SOUTH
SCHED	SCHEDULE
SECT	SECTION
SHT	SHEET
SIM	SIMILAR
SPEC	SPECIFICATION(S)
STD	STANDARD
STL	STEEL
STOR	STORAGE
STRUCT	STRUCTURAL
SYM	SYMETRICAL
TEMP	TEMPORARY
TYP	TYPICAL
UNEX	UNEXCAVATED
UNFIN	UNFINISHED
UNO	UNLESS NOTED OTHERWISE
VERT	VERTICAL
VEST	VESTIBULE
VIF	VERIFY IN FIELD
W	WEST
W/	WITH
W/O	WITHOUT

ARCHITECTURAL ABBREVIATIONS

A/E	ARCHITECT/ENGINEER
AB	AIR BARRIER
ABS	ASBESTOS
ACC	ADA ACCESSIBLE
ACR	ACRYLIC
ACT	ACOUSTIC CEILING TILE
AD	ACCESS DOOR
ADJ	ADJUSTABLE
ADJT	ADJACENT
ADMIN	ADMINISTRATION
AEC	AUTOMATED EXTERNAL DEFIBRILLATORS
AL	ALUMINUM
ALUM	ALUMINUM
AP	ACCESS PANEL
APC	ACOUSTIC PANEL CEILING
ASPH	ASPHALT
AUTO	AUTOMATIC
AVG	AVERAGE
AWP	ACOUSTIC WALL PANEL
B.O.	BOTTOM OF
BCS	BABY CHANGING STATION
BD	BOARD
BLK	BLOCK
BLKG	BLOCKING
BLKHD	BULKHEAD
BM(S)	BEAM(S)
BOT	BOTTOM
BRDG	BRIDGING
BRG	BEARING
BRKT	BRACKET
BT	BATHTUB
BTWN	BETWEEN
CAB	CABINET
CBD	CHALKBOARD
CER	CERAMIC
CF	CUBIC FEET
CFCI	CONTRACTOR FURNISHED CONTRACTOR INSTALLED
CFMF	COLD-FORMED METAL FRAMING
CG	CLEAR FLOAT GLASS
CI	CAST IRON
CIG	CLEAR INSULATING GLASS
CIP	CAST IN PLACE
CJ	CONTROL JOINT
CJA	CONTROL JOINT ABOVE
CLO	CLOSET
CLR	CLEAR
CMU	CONCRETE MASONRY UNIT
COL	COLUMN
COM	COMMON
COMB	COMBINATION
COMM	COMMUNICATIONS
COMPR	COMPRESSIBLE
CONF	CONFERENCE
CONFIG	CONFIGURATION
CORR	CORRIDOR
CP	COVER PLATE
CPT	CARPET
CR	CHAIR RAIL
CS	COUNTERSINK
CSTJ	CONSTRUCTION JOINT
CSWK	CASEWORK
CT	CERAMIC TILE
CTG	CLEAR TEMPERED FLOAT GLASS
CTIG	CLEAR TEMPERED INSULATING GLASS
CU	COPPER
CU	COMBINATION UNIT
CV	CONDOM VENDOR
CY	CUBIC YARD
CYL	CYLINDER
DB	DECIBEL
DBL	DOUBLE
DC	DUST COLLECTOR
DEPR	DEPRESS(ION)(ED)
DEPT	DEPARTMENT
DET	DETENTION
DF	DRINKING FOUNTAIN
DG	DOOR GRILLE
DIAG	DIAGONAL
DPFG	DAMPROOFING
DR	DOOR
DSN	DOWNSPOUT NOZZLE
DW	DISHWASHER
DWL(S)	DOWEL(S)
DWR	DRAWER
EB	EXPANSION BOLT
EE	EACH END
EEW	EMERGENCY EYE WASH
EEWS	EMERGENCY EYE WASH SHOWER
EFF	EFFICIENCY
EJ	EXPANSION JOINT
ELAS	ELASTOMERIC
ELEV	ELEVATOR
EMER	EMERGENCY
ENCL	ENCLOSURE
ENTR	ENTRANCE
ERF	EPOXY RESIN FLOORING
EUI	ENERGY USE INTENSITY
EW	EACH WAY
EWC	ELECTRIC WATER COOLER
EXP	EXPANSION
EXP	EXPOSED
F	FABRIC
F.O.	FACE OF
FAB	FABRICATE(D)
FB	FACE BRICK
FD	FLOOR DRAIN
FDN	FOUNDATION
FE	FIRE EXTINGUISHER
FEC	FIRE EXTINGUISHER CABINET
FF	FINISH FLOOR
FH	FIRE HYDRANT
FHC	FIRE HOSE CABINET
FIG	FIGURE
FIX	FIXTURE
FLASH	FLASHING
FLEX	FLEXIBLE
FLG	FLOORING
FLM	FULL LENGTH MIRROR
FLUOR	FLUORESCENT
FO	FINISH OPENING
FOC	FACE OF CONCRETE
FOF	FACE OF FINISH
FOM	FACE OF MASONRY
FOS	FACE OF STUD
FOW	FACE OF WALL
FP	FIREPROOFING
FR	FIRE RESISTANT
FRP	FIBERGLASS REINFORCED PANEL
FRT	FIRE RESISTANCE TREATED
FS	FLOOR SINK
FSS	FOLDING SHOWER SEAT
FTG	FOOTING
FVC	FIRE VALVE CABINET
FWC	FABRIC WALL COVERING
G	GROUT
GA	GAUGE
GAL	GALLON
GALV	GALVANIZED
GB	GRAB BAR
GD	GARBAGE DISPOSAL
GEN	GENERAL
GFA	GROSS FLOOR AREA
GL	GLUE LAMINATED
GL	GLASS
GMP	GUARANTEED MAXIMUM PRICE
GR	GUARD RAIL
GR	GRADE
GRS	GALVANIZED RIGID STEEL
GWB	GYPSUM WALL BOARD
GYP	GYPSUM
HC	HOLLOW CORE
HD	HAND DRYER
HDF	HIGH DENSITY FIBERBOARD
HDR	HEADER
HDWD	HARDWOOD
HDWR	HARDWARE
HM	HOLLOW METAL
HR	HOUR
HR	HANDRAIL
HS	HARDWARE SET
HSS	HOLLOW STRUCTURAL SHAPE
HVAC	HEATING VENTILATING AND AIR CONDITIONING
IAW	IN ACCORDANCE WITH
ID	INSIDE DIAMETER
IF	INSIDE FACE
IIP	INSULATED INFILL PANEL GLASS
IJ	ISOLATION JOINT
IJS	IN JOIST SPACE
INC	INCLUDE(ING)
INSUL	INSULATION
JAN	JANITOR
JBE	JOIST BEARING ELEVATION
JCT	JUNCTION
JFB	JOINT FILLER BOARD
JST	JOIST
JT	JOINT
KCJ	KEYED CONSTRUCTION JOINT
KD	KNOCKDOWN
KH	KITCHEN HOOD
KIT	KITCHEN
L	ANGLE
LAB	LABORATORY
LAM	LAMINATED
LAV	LAVATORY
LBR	LUMBER
LDG	LOADING
LF	LINEAR FOOT
LG	LENGTH (LONG)
LG	LAMINATED GLASS
LIN	LINEAR
LINO	LINOLEUM
LKR	LOCKER
LOC	LOCATION
LONG	LONGITUDINAL
LSC	LIFE SAFETY CODE
LTG	LIGHTING
LV	LOUVER
LVT	LUXURY VINYL TILE
MAG	MAGNETIC
MAINT	MAINTENANCE
MAN	MANUAL
MAS	MASONRY
MATL	MATERIAL
MB	MOP BASIN
MBD	MARKER BOARD
MBH	MOP/BROOM HOLDER
MC	MEDICINE CABINET
MEMB	MEMBRANE
MH	MANHOLE
MR/S	MIRROR WITH SHELF
MTD	MOUNTED
MTG	MOUNTING
MUL	MULLION
NC	NOISE CRITERIA
NFPA	NATIONAL FIRE PROTECTION ASSOCIATION
NOM	NOMINAL
O to O	OUT TO OUT
OA	OVERALL
OFCI	OWNER FURNISHED CONTRACTOR INSTALLED
OFF	OFFICE
OFOI	OWNER FURNISHED OWNER INSTALLED
OH	OPPOSITE HAND
OPG(S)	OPENING(S)
OSHA	OPERATIONAL SAFETY AND HEALTH ADMINISTRATION
OTB	OPEN TO BELOW
OVFL	OVERFLOW
P	PAINT
PAN B	PANIC BOLT
PB	PARTICLE BOARD
PC	PRECAST CONCRETE
PCD	PAPER CUP DISPENSER
PCT	PORCELAIN CERAMIC TILE
PD	PANIC DEVICE
PERF	PERFORATED
PERP	PERPENDICULAR
PG	PATTERN GLASS
PIC	PORTABLE INSTRUMENT CONNECTION
PIG	PATTERN INSULATING GLASS
PL	PLATE
PL	PROPERTY LINE
PL	PLASTIC LAMINATE
PLAM	PLASTIC LAMINATE
PLBG	PLUMBING
PR	PAIR
PREFAB	PREFABRICATED
PROJ	PROJECT(OR) (ION)
PS	PROJECTION SCREEN
PT	POINT
PTD	PAPER TOWEL DISPENSER
PTD/R	COMBINATION TOWEL DISPENSER/RECEPTACLE
PTN	PARTITION
PVC	POLYVINYL CHLORIDE
PWL	SOUND POWER LEVEL
QT	QUARRY TILE
QTR RND	QUARTER ROUND
R	RISER
RAD	RADIUS
RB	RUBBER BASE
RC	REMOTE CONTROL
RCP	REFLECTED CEILING PLAN
RD	ROOF DRAIN
REF	REFERENCE
REFL	REFLECTED
REM	REMOVABLE
RESIL	RESILIENT
RF	RESILIENT FLOORING
RF	RUBBER FLOOR
RFM	RECESSED FLOOR MAT
RH	ROBE HOOK
RI&C	ROUGH IN AND CONNECT
S	SINK
SAT	SPRAYED ACOUSTIC TREATMENT
SAW	SOUND ABSORBING WALL UNITS
SB	SPLASH BLOCK
SC	SOLID CORE
SC	SHOWER CURTAIN
SCD	SEAT COVER DISPENSER
SCH	SHOWER CURTAIN HOOK
SCR	SHOWER CURTAIN ROD
SCT	STRUCTURAL CLAY TILE
SD	SOAP DISPENSER
SECY	SECRETARY
SF	SQUARE FEET
SG	SPANDREL GLASS
SGL	SINGLE
SH	SHOWER
SHM	SECURITY HOLLOW METAL
SLNT	SEALANT
SM	SHEET METAL
SND	SANITARY NAPKIN DISPOSAL
SNV	SANITARY NAPKIN VENDOR
SPL	SOUND PRESSURE LEVEL
SQ	SQUARE
SS	SOLID SURFACE
SSA	STORM SHELTER AREA
SSS	STAINLESS STEEL SHELF
SST	STAINLESS STEEL
ST	STONE
ST	STAIR
STAG'D	STAGGERED
STC	SOUND TRANSMISSION CLASS
STGR	STRINGER
SUBFL	SUBFLOOR
SURF	SURFACE
SUSP	SUSPENDED
SVF	SHEET VINYL FLOORING
T	TREAD
T&G	TONGUE AND GROOVE
T.O.	TOP OF
TAN	TANGENT
TB	TOWEL BAR
TBD	TACK BOARD
TCP	TOILET COMPARTMENT PARTITION
TERR	TERRAZZO
TFG	TINTED FLOAT GLASS
TG	TEMPERED GLASS
TH	THRESHOLD
THK	THICK(NESS)
TI	TENANT IMPROVEMENT
TIG	TINTED INSULATING GLASS
TMR	TILT MIRROR UNIT
TOIL	TOILET
TOP	TOP OF PAVING
TRANS	TRANSVERSE
TT	TERRAZZO TILE
TTD	TOILET TISSUE DISPENSER
TTG	TINTED TEMPERED FLOAT GLASS
TTIG	TINTED TEMPERED INSULATING GLASS
TW	TACK WALL
UL	UNDERWRITERS LABORATORIES
UR	URINAL
US	UTILITY SHELF
UTIL	UTILITY
VB	VAPOR BARRIER
VB	VINYL BASE
VCB	VENTED COVE BASE
VF	VINYL FLOOR
VOC	VOLITILE ORGANIC COMPOUND
VOL	VOLUME
VP	VENEER PLASTER
VT	VINYL TILE
VWC	VINYL WALL COVERING
W	WIDE
WB	WALL BASE
WC	WATER CLOSET
WC	WALL COVERING
WCL	WATER CLOSET/LAVATORY COMBINATION
WD	WOOD
WDF	WOOD FLOORING
WDW	WINDOW
WG	POLISHED WIRE GLASS
WI	WROUGHT IRON
WOM	WALK OFF MAT
WR	WASTE RECEPTACLE
WRB	WEATHER RESISTANT BARRIER
WW	WARM WHITE
WWF	WELDED WIRE FABRIC
YD	YARD

GENERAL SYMBOLS

? / ???	DETAIL NUMBER / CROSS REFERENCE / SHEET NUMBER
XX A4.XX XX	BUILDING ELEVATION
XX A12.X XX XX	INTERIOR ELEVATION
? SIM ???	SIMILAR OR TYPICAL REFERENCE / WALL SECTION
? ???	DETAIL REFERENCE
? ??? ? ???	BUILDING SECTION
?	SHEET NOTE
?	REFERENCE KEYNOTE
?	COLUMN GRID LINE
ROOM NAME ???	ROOM NUMBER/NAME
XXX-XX	REVISION NUMBER
LEVEL XX XXX'-XX"	LEVEL ELEVATION
TYP FF EL= 100'-0"	FINISH FLOOR ELEVATION
100'-0"	SPOT ELEVATION
	EARTH
	GRAVEL
	SAND
	CONCRETE
	PRECAST CONCRETE
	STEEL
	STONE
	CONCRETE MASONRY UNIT
	BRICK VENEER
	STEEL (LARGE SCALE)
	GYM FLOOR
	WOOD (CONTINUOUS BLOCKING)
	WOOD (NON-CONTINUOUS BLOCKING)
	WOOD (TRIM/FINISH)
	GLASS
	SHINGLES
	PLYWOOD (LARGE SCALE)
	GYPSUM WALL BOARD
	BLANKET INSULATION
	RIGID INSULATION
	SPRAY FOAM INSULATION
	MINERAL WOOL INSULATION
	PROTECTION BOARD
	CARPET (LARGE SCALE)
	ACOUSTIC TILE (LARGE SCALE)
	TILE (LARGE SCALE)

ARCHITECTURAL SYMBOLS

XX/ A11.X	CASEWORK ELEVATION
A110	DOOR NUMBER
A124	INTERIOR WINDOW NUMBER
?	EXTERIOR WINDOW / CURTAIN WALL NUMBER
XX. X. XX	WALL TYPE
APC-1 / 9' - 0"	CEILING TYPE / CEILING HEIGHT — CEILING TYPE

GENERAL NOTES

A. GENERAL NOTES APPLY TO ALL SHEETS.
B. DIMENSIONS ARE ACTUAL AND ARE TO FACE OF STUDS, FACE OF CONCRETE WALLS, FACE OF CMU WALLS, FACE OF FRAMES, OR CENTERLINE OF COLUMNS, UNLESS NOTED OTHERWISE.
C. THE OWNER SHALL FURNISH AND INSTALL THE FOLLOWING ITEMS: 1. PROJECTOR
D. INCLUDE ALL OWNER-FURNISHED AND INSTALLED ITEMS AND OWNER-FURNISHED AND CONTRACTOR-INSTALLED ITEMS IN THE CONSTRUCTION SCHEDULE, AND SHALL COORDINATE WITH THE OWNER TO ACCOMMODATE THESE ITEMS.
E. COORDINATE ALL MECHANICAL CHASE SIZES WITH THE MECHANICAL CONTRACTOR.
F. SEE SHEET XX.X FOR LOCATION OF WALLS OF FIRE-RESISTANCE-RATED CONSTRUCTION. ALL WALLS OF FIRE-RESISTANCE-RATED CONSTRUCTION SHALL EXTEND TO UNDERSIDE OF FLOOR OR ROOF DECK ABOVE.
G. ALL PENETRATIONS THROUGH WALLS SHALL BE SEALED WITH PENETRATION FIRE STOPPING MATERIAL AS REQUIRED TO ACHIEVE THE RESPECTIVE FIRE-RESISTANCE RATING AND SMOKE STOPPAGE. SEE SPECIFICATION SECTION 078413.
H. COORDINATE WITH MECHANICAL AND ELECTRICAL CONTRACTORS THE SIZE AND LOCATION OF EQUIPMENT PADS SHOWN ON PLANS.
I. CONSTRUCTION DOCUMENTS ARE COMPLEMENTARY. SEE DRAWING FOR QUANTITIES AND LOCATION OF WORK. SEE SPECIFICATIONS FOR QUALITIES AND CONDITIONS OF WORK.
J. WORK: ALL ASPECTS OF THE WORK AND ITEMS NOT SPECIFICALLY MENTIONED, BUT NECESSARY TO MAKE A COMPLETE WORKING INSTALLATION, SHALL BE INCLUDED AND INDICATED IN THE CONTRACTOR'S BID.
K. GENERAL SHEET NOTES ONLY APPLY TO PARTICULAR DRAWING OR SERIES OF DRAWINGS.
L. NO ASBESTOS OR PCB CONTAINING MATERIALS SHALL BE USED ON THIS PROJECT.
M. DO NOT SCALE DRAWINGS. DIMENSIONS NOTED PREVAIL. NOTIFY ARCHITECT IN CASE OF DISCREPANCY.
N. HORIZONTAL AND VERTICAL DIMENSIONS ARE MINIMUM DIMENSIONS. CLEARANCES ARE GIVEN TO FINISH SURFACES. GC TO VERIFY ALL CLEARANCES. NOTIFY ARCHITECT IN CASE OF DISCREPANCY.

DLR Group
© DLR Group

- NOT FOR CONSTRUCTION -

Consultant Logo

Project Logo

CULINARY CLASSROOM
Westview High School - Beaverton School District
4200 NW 185th Ave, Portland, OR 97229

50% CD
1.21.21
REVISIONS

74-21106-00

SYMBOLS & ABBREVIATIONS

G0.2

BIM 360://74-21106-00 Westview HS Culinary/74-21106-00_WHSC_AR_2020.rvt
1/22/2021 3:48:13 PM

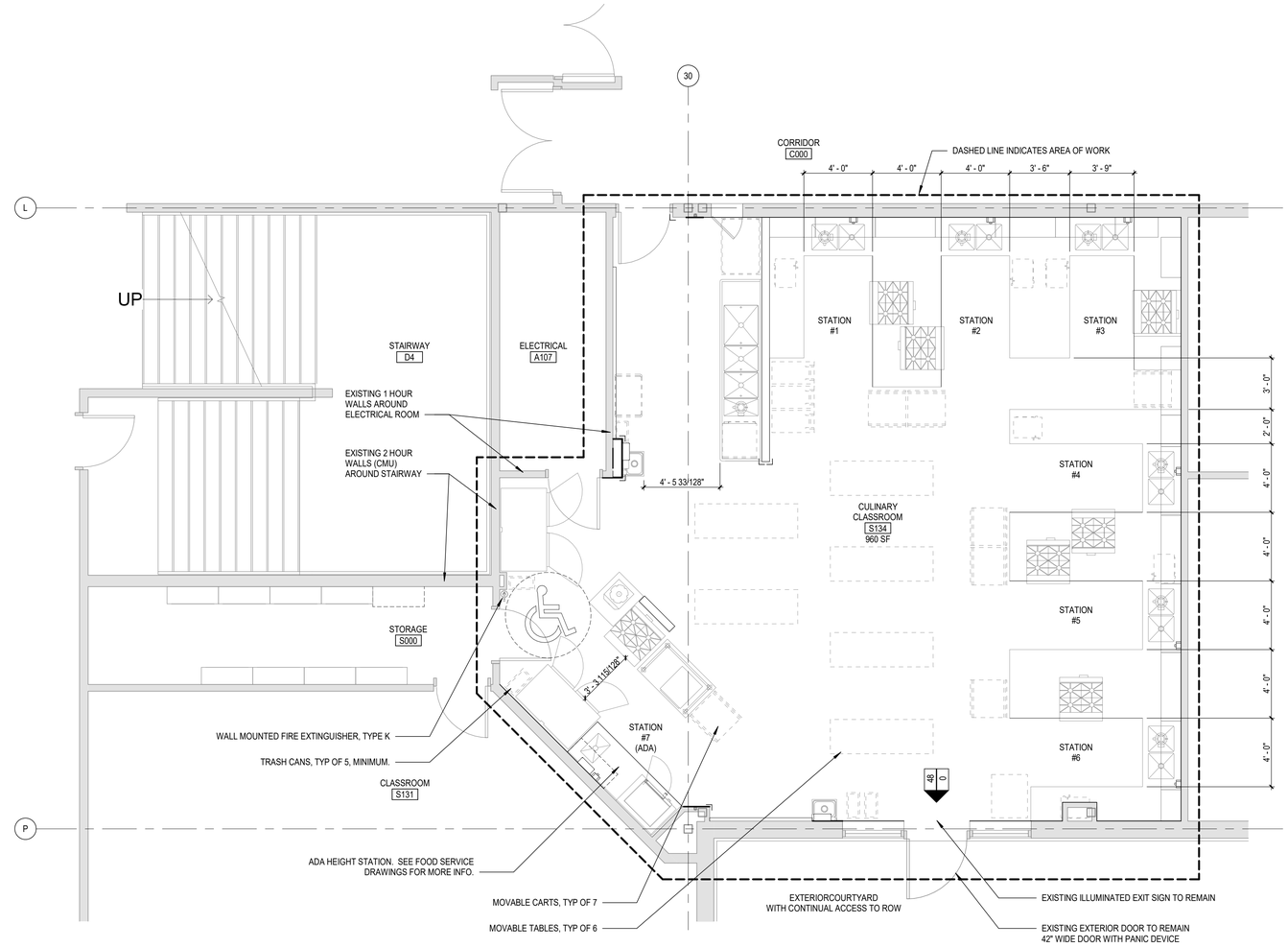

N

CODE PLAN

SCALE: 1/4" = 1'-0"

SYMBOL LEGEND

- OCCUPANCY LOAD

- ACCESSORY USE AREA
(OCCUPANCY LOAD IS NOT INCLUDED IN LOADS BEYOND THIS ROOM)

0 / 0
- COMBINED OCCUPANT LOAD AT A GIVEN DOOR OR STAIR
- TOTAL EXIT CAPACITY OF DOOR OR STAIR
(THE CAPACITY OF DOORS ARE DETERMINED AS FOLLOWS:
CLEAR OPENING WIDHT IN INCHES DIVIDED BY 0.2
THE CAPACITY OF STAIRS ARE DETERMINED AS FOLLOWS
WIDTH IN INCHES DIVIDED BY 0.3)

0 / 0
- COMBINED OCCUPANT LOAD AT A GIVEN EXIT DOOR.
(SUM OF THESE EQUALS TOTAL OCCUPANT LOAD)
- TOTAL EXIT CAPACITY OF DOOR (THE CAPACITY OF DOORS ARE DETERMINED AS FOLLOWS:
CLEAR OPENING WIDTH IN INCHES DIVIDED BY 0.2)

PD - PANIC DEVICE
XX MIN - DOOR FIRE RATING

WALL SEPARATION LEGEND

WALL HOURLY RATING		WALL FIRE RATING TYPE	
0 =	0 HOUR	C =	CORRIDOR
5 =	1/2 HOUR	EW =	EXTERIOR WALL
1 =	1 HOUR	FB =	FIRE BARRIER
2 =	2 HOUR	FP =	FIRE PARTITION
3 =	3 HOUR	FW =	FIRE WALL
4 =	4 HOUR	HX =	HORIZONTAL EXIT
SP =	SMOKE PARTITION	SB =	SMOKE BARRIER
		VS =	VERTICAL SHAFT
		VX =	VERTICAL EXIT
		XP =	EXIT PASSAGEWAY

DLR Group
© DLR Group

- NOT FOR CONSTRUCTION -

Consultant Logo

Project Logo

CULINARY CLASSROOM

Westview High School - Beaverton School District

4200 NW 185th Ave, Portland, OR 97229

50% CD
1.21.21
REVISIONS

74-21106-00

CODE PLAN

CP1.1

BIM 360://74-21106-00 Westview HS Culinary/74-21106-00_WHSC_AR_2020.rvt
1/22/2021 3:48:11 PM

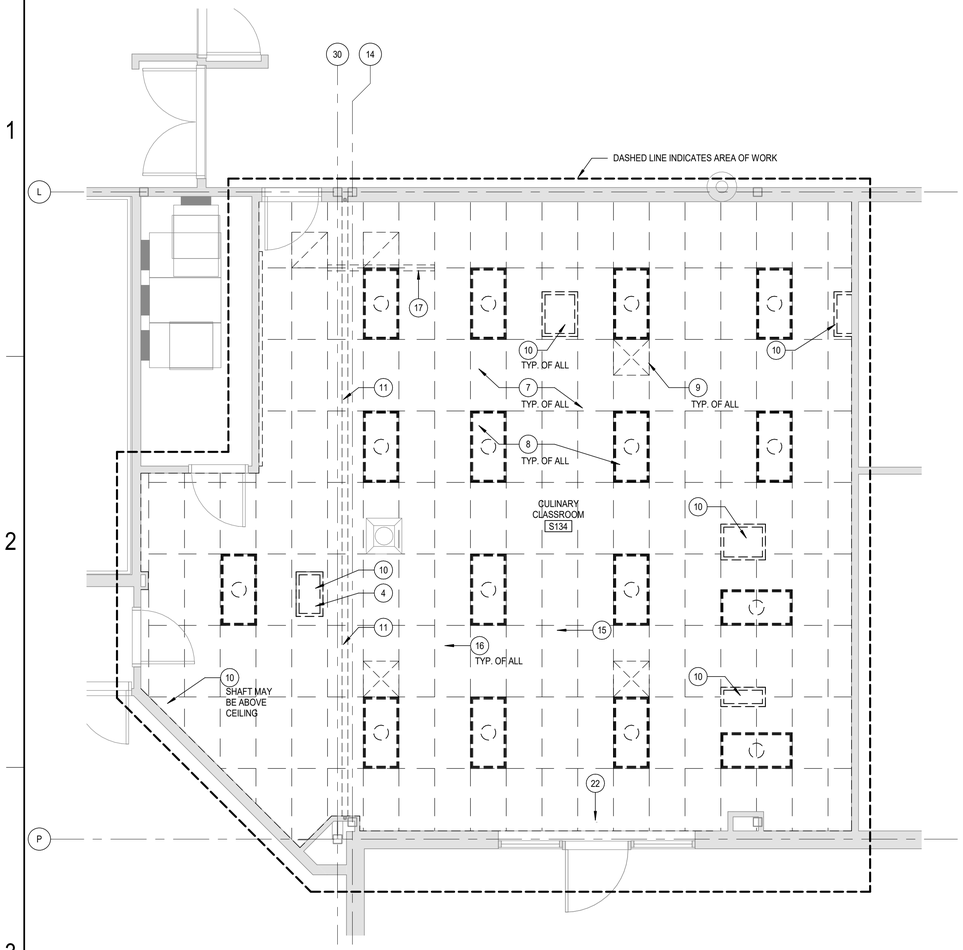

CLASSROOM DEMO REFLECTED CEILING PLAN

SCALE: 1/4" = 1'-0"

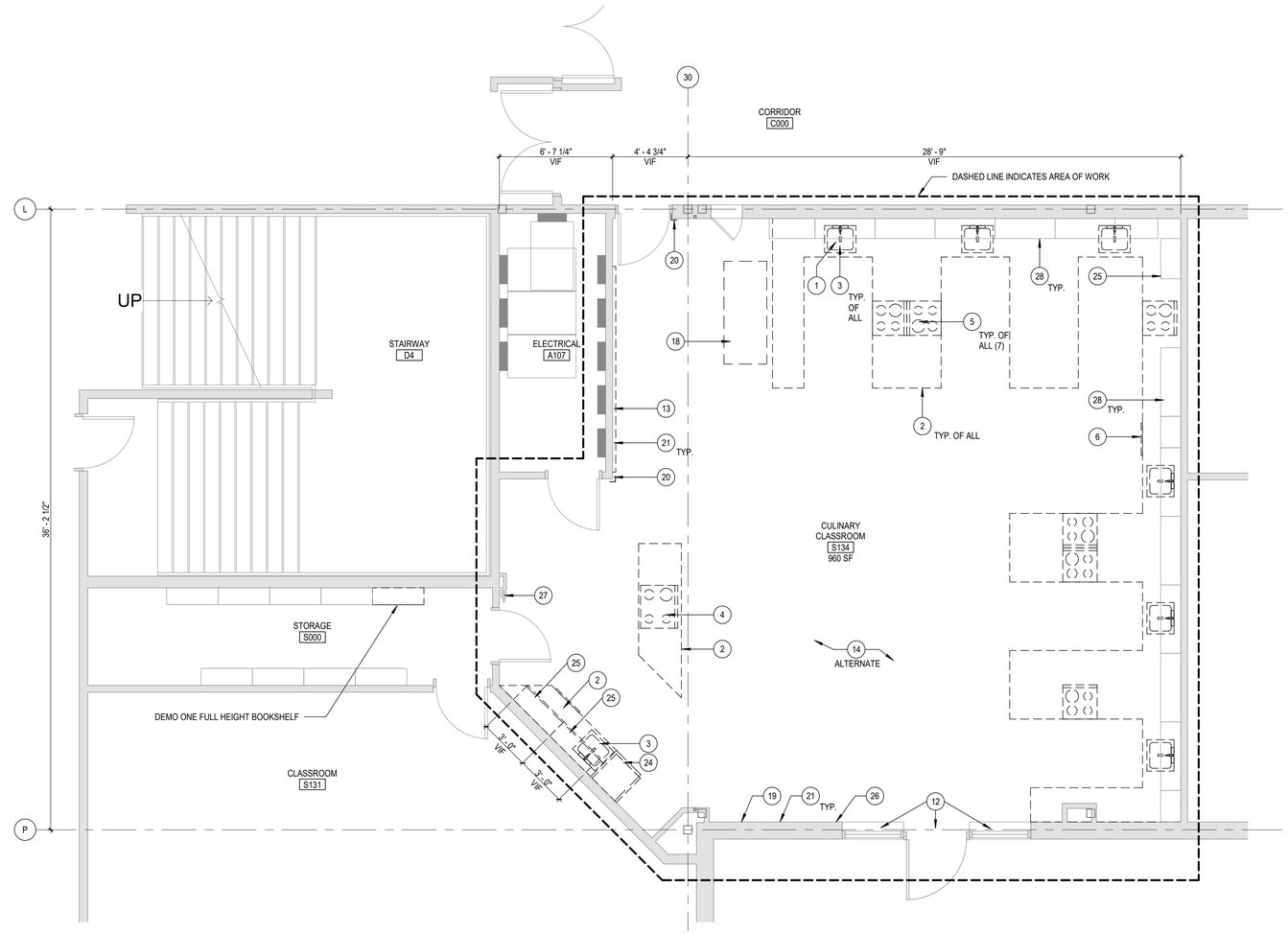

CLASSROOM DEMO PLAN

SCALE: 1/4" = 1'-0"

DEMOLITION GENERAL NOTES

DEMOLITION NOTES APPLY TO ALL DEMOLITION SHEETS.

THE CONTRACTOR SHALL:

A. COORDINATE ALL DEMOLITION AND PHASING EFFORTS WITH THE ARCHITECT AND OWNER'S REPRESENTATIVE. EVERY EFFORT SHALL BE MADE TO MINIMIZE DISRUPTION OF OWNER'S OPERATIONS. EXCESSIVE NOISE OR VIBRATION SHALL BE PRE-APPROVED AND COORDINATED WITH THE OWNER'S REPRESENTATIVE. IN ALL CASES, PROVISIONS SHALL BE MADE FOR USER'S SAFETY.
B. COORDINATE ANY DISRUPTION OF UTILITY SERVICES WITH THE OWNER AND AS SPECIFIED.
C. CONSTRUCT TEMPORARY CONSTRUCTION PARTITIONS WITHIN THE EXISTING BUILDING WHICH OFFER A ONE-HOUR ENCLOSURE TO ISOLATE ANY DEMOLITION/CONSTRUCTION WORK FROM THE GENERAL PUBLIC AND AS DEEMED NECESSARY BY THE OWNER AND CODE OFFICIAL HAVING JURISDICTION. COORDINATE LOCATIONS WITH THE OWNER AND MAINTAIN MEANS OF EGRESS THROUGHOUT THE WORK.
D. MAINTAIN A SECURE, WEATHER-TIGHT ENCLOSURE AT ALL TIMES.
E. VERIFY ALL EXISTING CONDITIONS, DIMENSIONS AND ELEVATIONS AND NOTIFY THE ARCHITECT OF ANY DISCREPANCIES.
F. REMOVE IN THEIR ENTIRETY ALL EXISTING WALLS, DOORS, MILLWORK, PLUMBING FIXTURES, CEILINGS, SOFFITS, MARKERBOARDS, AND OTHER ITEMS, AS REQUIRED TO EXECUTE THE DEMOLITION/CONSTRUCTION WORK DESCRIBED BY THE DRAWINGS.
G. THE OWNER SHALL RESERVE THE RIGHT TO SALVAGE ANY MATERIALS.
H. PROVIDE PROTECTION FOR ALL EXISTING BUILDING MATERIALS AND EQUIPMENT FROM DAMAGE DUE TO ANY DEMOLITION OR CONSTRUCTION-RELATED INCIDENT PERFORMED UNDER THIS CONTRACT.
I. REPAIR OR REPLACE ITEMS THAT ARE DAMAGED AS A RESULT OF DEMOLITION OR CONSTRUCTION TO MATCH EXISTING FINISH AND/OR CONDITION.
J. EXISTING MATERIALS SHALL NOT BE REUSED UNLESS NOTED OTHERWISE OR AS AUTHORIZED BY ARCHITECT.
K. VERIFY AND MAINTAIN THE LOCATION OF EXISTING POWER, COMMUNICATION AND DATA CABLES TO PREVENT INTERRUPTION OF THEIR SERVICE.
L. PATCH FLOOR, WALL AND CEILING PENETRATIONS RESULTING FROM REMOVAL OR RE-ROUTING OF NEW OR EXISTING PIPING, DUCTWORK, CONDUIT, AND OTHER ITEMS, AS REQUIRED TO MAINTAIN FIRE-RESISTANCE-RATED SEPARATIONS. FINISH AS REQUIRED FOR NEW OR EXISTING ADJACENT SURFACES.
M. CAP ALL DISCONNECTED MECHANICAL PIPING LINES WITHIN THE WALL OR FLOOR. PATCH AND FINISH AS REQUIRED TO MATCH NEW OR EXISTING ADJACENT SURFACES.
N. SEE MECHANICAL AND ELECTRICAL DRAWINGS AND NOTES FOR FURTHER SEQUENCING AND SCOPE OF WORK.
O. AVOID ANY DISTURBANCE OF SOILS WITHIN THE ZONE OF INFLUENCE AROUND EXISTING FOOTINGS AND FLOOR SLABS.

SHEET NOTES

1 SALVAGE DISPOSAL THIS SINK AND TURN OVER TO OWNER.
2 DEMO COUNTER AND CASEWORK BELOW
3 DEMO SINK. SEE PLUMBING FOR MORE INFO.
4 DEMO DEMOSTRATION MIRROR AND FRAME ABOVE STOVE
5 DEMO RESIDENTIAL RANGE AND OVEN
6 SALVAGE UNDERCOUNTER DISHWASHER AND REINSTALL IN FINISHED PROJECT. SEE FOOD SERVICE AND PLUMBING DRAWINGS FOR RELOCATION INFO.
7 DEMO ACT CEILING AND SUSPENSION GRID THROUGHOUT ROOM.
8 DEMO RECESSED LIGHT FIXTURE THROUGHOUT ROOM
9 DEMO CEILING SUPPLY AND RETURN GRILLES, TYP. SEE MECH.
10 DEMO RESIDENTIAL HOODS AND EXHAUST SHAFTS, TYP.
11 DEMO CEILING CONTROL JOINT COVER. (WALL COVERS TO REMAIN.)
12 DEMO HORIZONTAL BLINDS
13 DEMO WHITEBOARD AND MAP. SALVAGE FLAG AND RETURN TO OWNER.
14 ALTERNATE #1: DEMO ALL VCT FLOORING. SEE FINISH PLANS FOR MORE INFO.
15 REMOVE AND REINSTALL CEILING MOUNTED WAP
16 PROTECT EXISTING SPRINKLER HEADS AND PIPING. KEEP IN PLACE AND OPERATIONAL.
17 DEMO CEILING HUNG PROJECTOR SCREEN
18 DEMO COUNTER ANDCASEWORK, ON CASTERS
19 REMOVE AND REINSTALL WALL MOUNTED FIRE STROBE
20 DEMO CORNER GUARD
21 DEMO RUBBER BASE, THROUGHOUT ROOM
22 REMOVE AND REINSTALL CEILING MOUNTED EXIT LIGHT
24 DEMO UPPER SHELVING (ONLY WHERE INDICATED)
25 REMOVE AND REINSTALL ONE SECTION OF UPPER SHELVING
26 PROTECT EXISTING FIRE ALARM PULL
27 REMOVE AND REINSTALL WALL MOUNTED FIRE EXTINGUISHER
28 PROTECT EXISTING UPPER CABINETS, U.N.O.

DEMOLITION SALVAGE LIST

THE CONTRACTOR SHALL REMOVE AND SALVAGE (TURN OVER TO OWNER):

1. LIGHT FIXTURES, TYP
2. DISPOSAL (x1)

THE CONTRACTOR SHALL REMOVE AND REINSTALL:

1. WAP
2. EXIT LIGHT FIXTURE
3. WALL MOUNTED ANALOG CLOCK
4. UNDERCOUNTER DISHWASHER
5. WALL MOUNTED FIRE EXTINGUISHER

DLR Group
© DLR Group

- NOT FOR CONSTRUCTION -

Consultant Logo

Project Logo

CULINARY CLASSROOM

Westview High School - Beaverton School District

4200 NW 185th Ave, Portland, OR 97229

50% CD
1.21.21
REVISIONS

74-21106-00

DEMO PLANS

AD1.1

BIM 360://74-21106-00 Westview HS Culinary/74-21106-00_WHSC_AR_2020.rvt
1/22/2021 3:48:10 PM

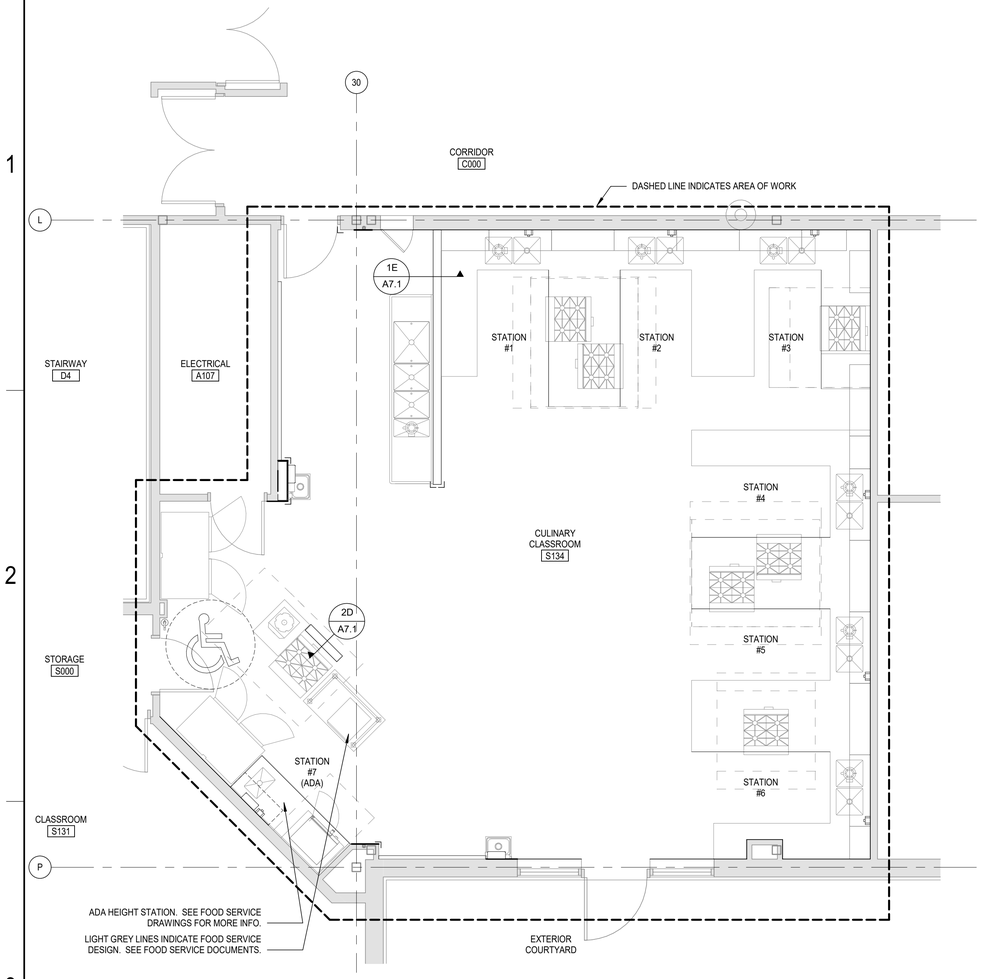

CLASSROOM FOOD SERVICE REFERENCE PLAN - SEE FS1.1

SCALE: 1/4" = 1'-0"

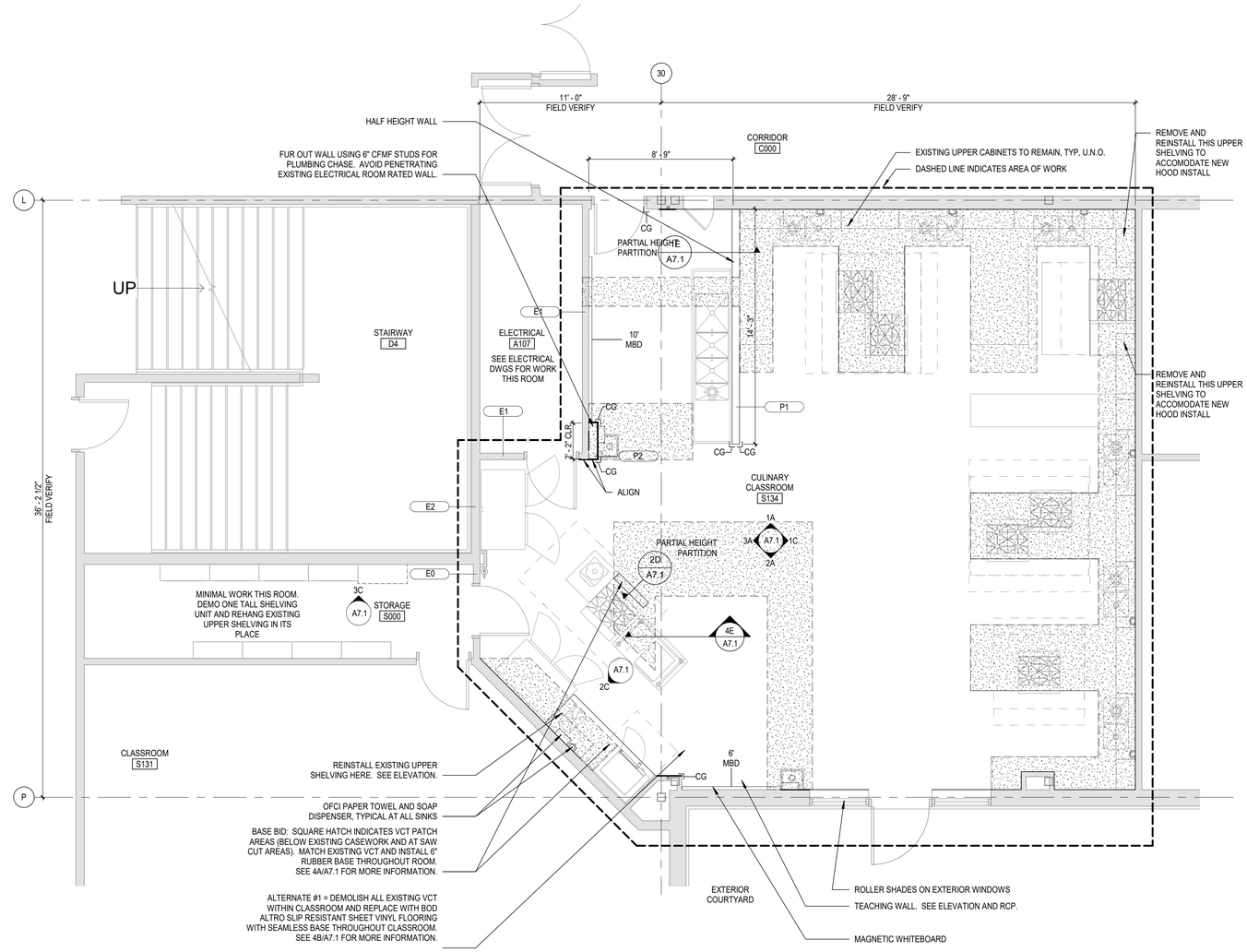

CLASSROOM FLOOR PLAN

SCALE: 1/4" = 1'-0"

GENERAL ARCHITECTURAL NOTES

1. WALL TYPES SHALL BE DESIGNATED ON FLOOR PLANS THUS: (XX.X.XX) SEE SHEET XX.X FOR WALL TYPES. ALL INTERIOR PARTITIONS ARE WALL TYPE XX.X.XX UNLESS NOTED OTHERWISE.
2. ALL INTERIOR STUD WALLS SHALL EXTEND TO UNDERSIDE OF FLOOR OR ROOF DECK ABOVE UNLESS NOTED OTHERWISE. SEE REFLECTED CEILING PLAN NOTES.
3. PROVISIONS SHALL BE MADE AT ALL FULL HEIGHT NON-BEARING WALLS FOR 1-INCH VERTICAL MOVEMENT OF THE BUILDING STRUCTURE WITHOUT TRANSFER OF COMPRESSIVE LOADS TO WALL. FILL IRREGULARITIES BETWEEN TOP OF WALL AND DECK ABOVE WITH MINERAL WOOL INSULATION OR FIRE STOPPING MATERIALS AS REQUIRED TO MEET FIRE RATING OF RESPECTIVE WALLS. SEE DETAILS ON SHEET XX.X.
4. FURNISH AND INSTALL FIRE-TREATED WOOD BLOCKING OR METAL BACKING PLATE IN METAL STUD PARTITIONS FOR THE PROPER ANCHORAGE OF ALL WALL ATTACHED ITEMS; I.E. TOILET ACCESSORIES, CASEWORK, MILLWORK, WALL-MOUNTED FIXTURES, MARKER BOARDS, TACK BOARDS, DOOR STOPS, AUDIO VISUAL BRACKETS, AND OTHER WALL ATTACHED ITEMS.
5. "MBD" AND "TBD" INDICATE MARKER BOARDS AND TACK BOARDS ON PLANS. THE LENGTH PRECEDES THE DESIGNATION (EXAMPLE 16' MBD). SEE WALL ELEVATIONS OR SPECIFICATIONS FOR HEIGHTS AND MOUNTING HEIGHTS.
6. SCRIBE GYPSUM WALL BOARD OF WALLS AND PARTITIONS TO IRREGULARITIES OF DECK ABOVE. SEAL TIGHTLY AROUND ALL PENETRATIONS.
7. PROVIDE SEISMIC BRACING FOR SUSPENDED CEILINGS OR AS SHOWN ON THE DRAWINGS.
8. ALL WALLS TO BE PAINTED EP-1 (BOD: SHERWIN WILLIAMS EPOXY PAINT), UNO

REFERENCE KEYNOTES

SHEET NOTES

1 PLAN SHEET NOTE 1
2 PLAN SHEET NOTE 2
3 PLAN SHEET NOTE 3

DLR Group
© DLR Group

- NOT FOR CONSTRUCTION -

Consultant Logo

Project Logo

CULINARY CLASSROOM

Westview High School - Beaverton School District

4200 NW 185th Ave, Portland, OR 97229

50% CD
1.21.21
REVISIONS

74-21106-00

FLOOR PLANS

A1.1

BIM 360://74-21106-00 Westview HS Culinary/74-21106-00_WHSC_AR_2020.rvt
1.22/2021 3:48:00 PM

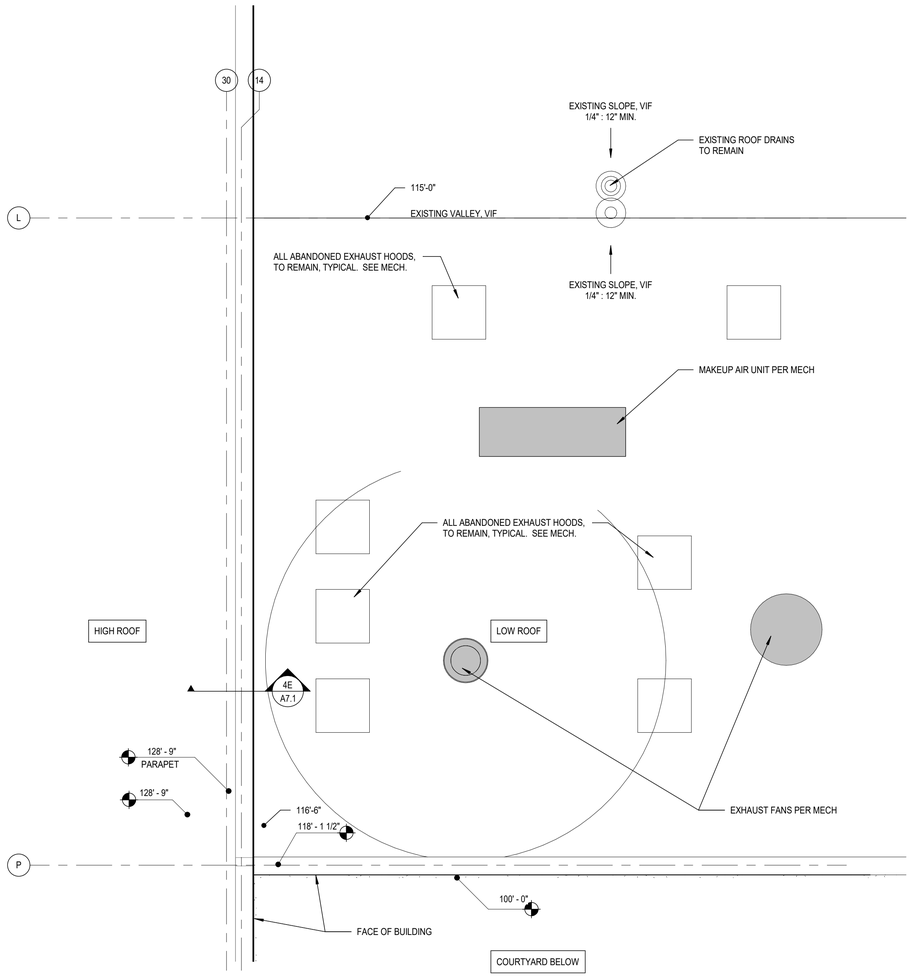

3A
A3.1
ROOF PLAN
SCALE: 1/4" = 1'-0"

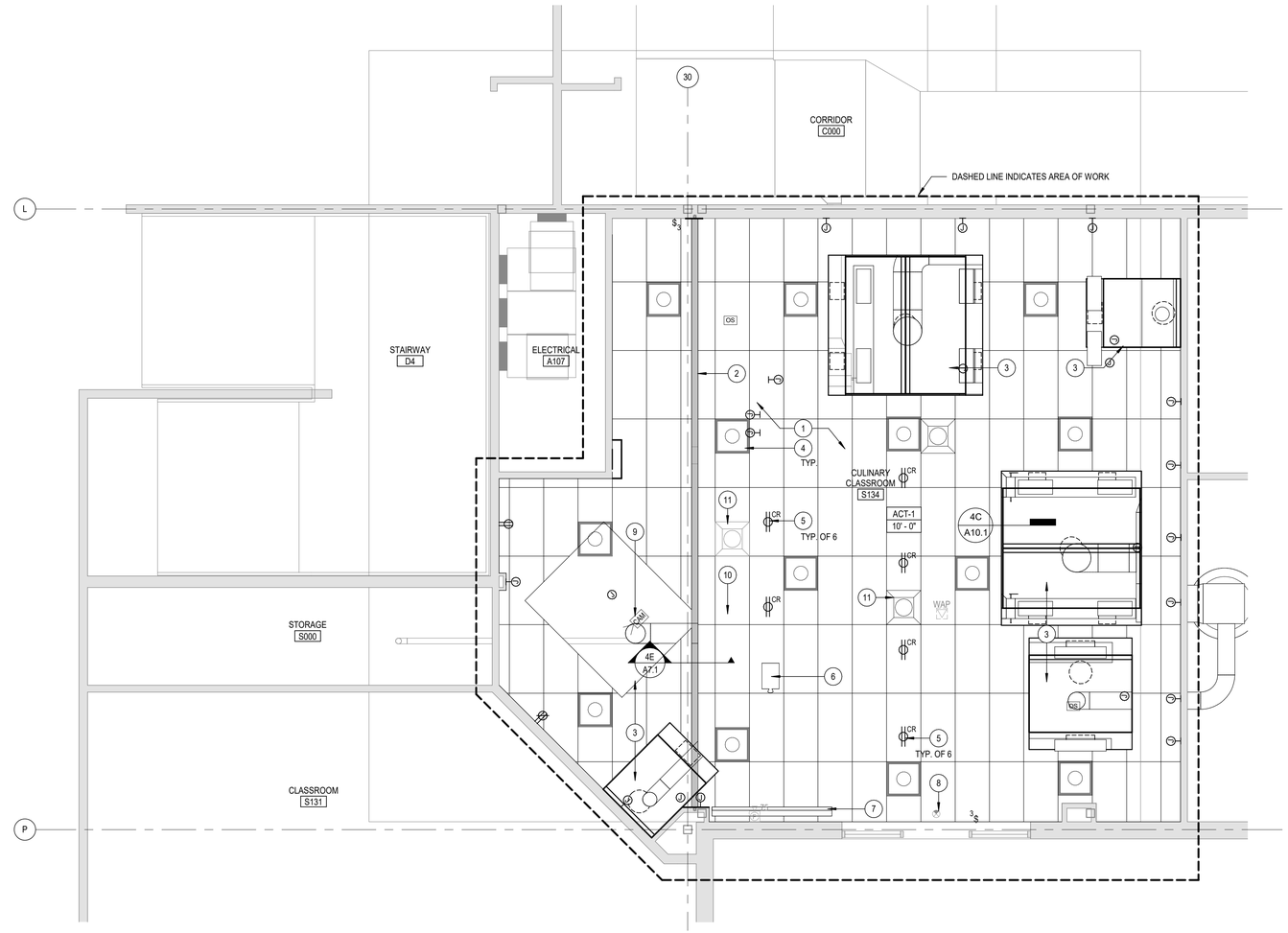

3C
A3.1
REFLECTED CEILING PLAN
SCALE: 1/4" = 1'-0"

REFLECTED CEILING PLAN GENERAL NOTES

A. ALL CEILING GRIDS/PANELS SHALL BE CENTERED IN EACH ROOM UNLESS NOTED OTHERWISE.
B. CEILING HEIGHTS ARE NOTED ON THE REFLECTED CEILING PLANS ARE MEASURED FROM THE FINISH FLOOR OF THE ROOM.
C. ALL ELECTRICAL FIXTURES, SPEAKERS, SMOKE AND THERMAL DETECTORS, MECHANICAL GRILLES, SPRINKLER HEADS, AND OTHER CEILING MOUNTED DEVICES, SHALL BE CENTERED BETWEEN CEILING GRIDS UNLESS NOTED OTHERWISE. SPRINKLER HEADS SHALL BE WITHIN A 3-INCH RADIUS CENTERED BETWEEN CEILING GRIDS.
D. PROVIDE SUSPENSION SYSTEM AROUND ELECTRICAL FIXTURES, MECHANICAL GRILLES, DIFFUSERS, AND OTHER CEILING MOUNTED DEVICES.
E. ALL DIMENSIONS ON REFLECTED CEILING PLANS ARE ACTUAL AND ARE TO THE FOLLOWING UNLESS NOTED OTHERWISE:
   a. FACE OF FINISHED WALL
   b. FACE OF FINISHED BULKHEADS
   c. CENTERLINE OF COLUMNS
   d. CENTERLINE OF TEES
F. SEE A10.1 FOR STANDARD ACT SEISMIC BRACING DETAILS.

SHEET NOTES

1 2x4 ACOUSTIC CEILING TILE (BOD IS ARMSTRONG CLEAN ROOM VL 870)
2 CEILING SEISMIC JOINT COVER (BOD IS CONSTRUCTION SPECIALTIES FLUSH THINLINE FCF 200)
3 CANOPY HOOD. SEE FOOD SERVICE FOR MORE INFO.
4 LIGHT FIXTURE PER ELECTRICAL.
5 CEILING DROP POWER OUTLET PER ELECTRICAL
6 CEILING MOUNTED PROJECTOR MOUNT (MOUNT BY GC, PROJECTOR OFCI). SEE 3D/A10.1 AND SPEC 115200 FOR MORE INFORMATION.
7 CEILING MOUNTED PULL-DOWN PROJECTOR SCREEN. SEE 4A/A10.1 FOR MORE INFORMATION.
8 REINSTALL SALVAGED CEILING MOUNTED EXIT LIGHT
9 DEMONSTRATION STATION CAMERA, PER ELEC.
10 CEILING SPEAKERS FOR VOICE AMPLIFICATION SYSTEM, PER ELEC.
11 SUPPLY AND RETURN GRILLES, TYP. SEE MECH.

DLR Group
© DLR Group

- NOT FOR CONSTRUCTION -

Consultant Logo

Project Logo

CULINARY CLASSROOM
Westview High School - Beaverton School District
4200 NW 185th Ave, Portland, OR 97229

50% CD
1.21.21
REVISIONS

74-21106-00

REFLECTED CEILING PLAN AND ROOF PLAN

A3.1

BIM 360://74-21106-00 Westview HS Culinary/74-211106-00_WHSC_AR_2020.rvt
1/22/2021 3:48:02 PM

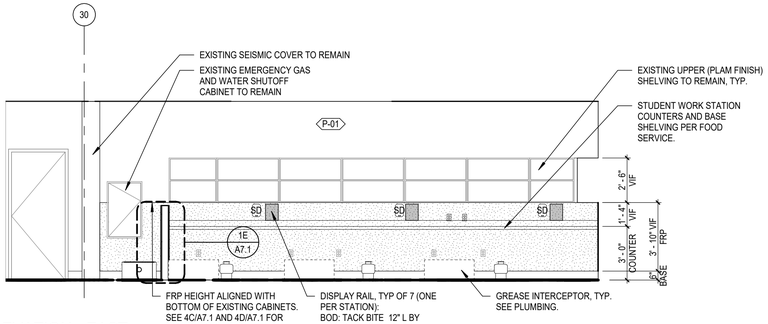

1A A7.1 INTERIOR ELEVATION - EAST
SCALE: 1/4" = 1'-0"

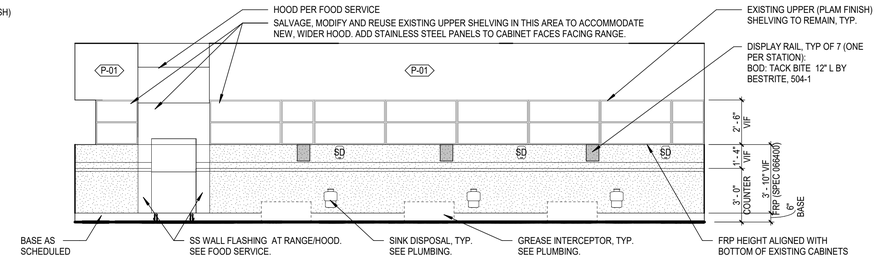

1C A7.1 INTERIOR ELEVATION - SOUTH
SCALE: 1/4" = 1'-0"

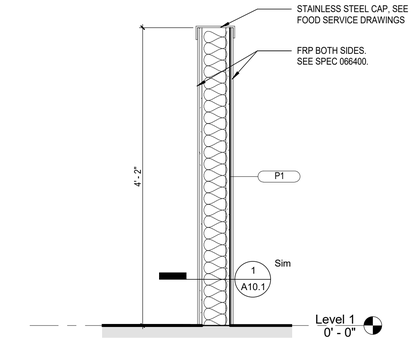

1E A7.1 SECTION - HALF HEIGHT WALL (DETAIL)
SCALE: 1" = 1'-0"

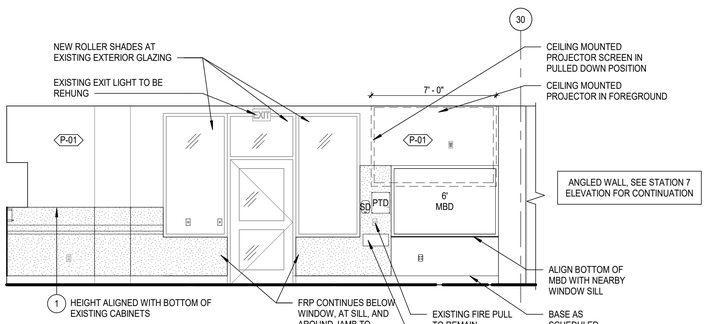

2A A7.1 INTERIOR ELEVATION - WEST
SCALE: 1/4" = 1'-0"

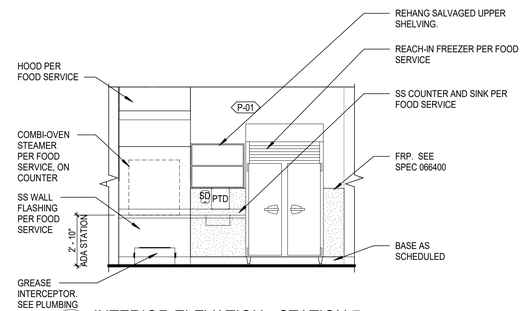

2C A7.1 INTERIOR ELEVATION - STATION 7
SCALE: 1/4" = 1'-0"

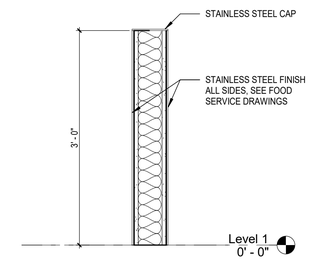

2D A7.1 STATION 7 HALF WALL
SCALE: 1" = 1'-0"

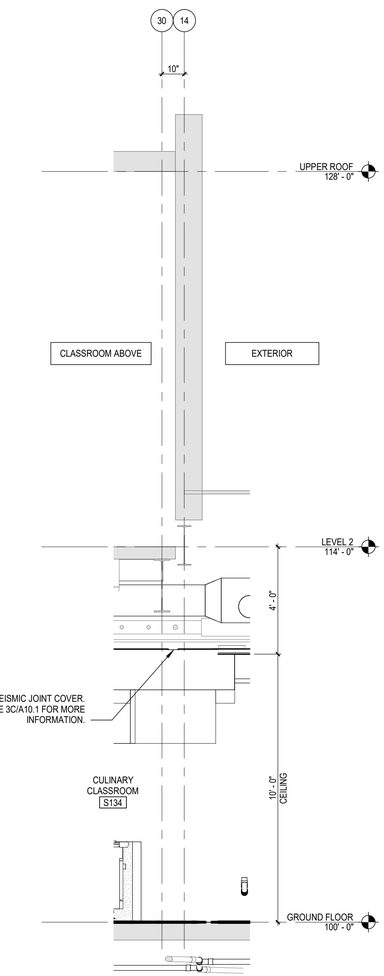

4E A7.1 WALL SECTION - THROUGH SEISMIC JOINT
SCALE: 3/8" = 1'-0"

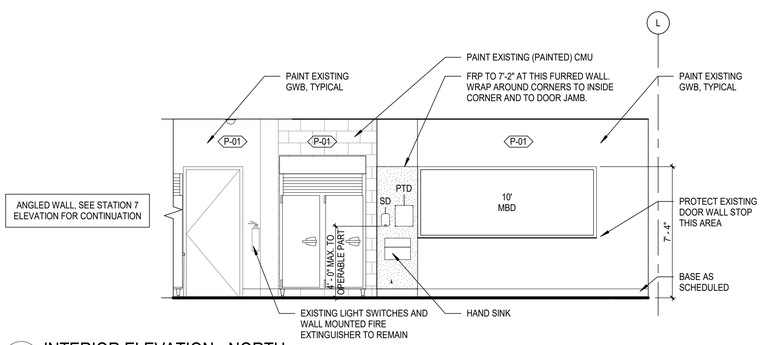

3A A7.1 INTERIOR ELEVATION - NORTH
SCALE: 1/4" = 1'-0"

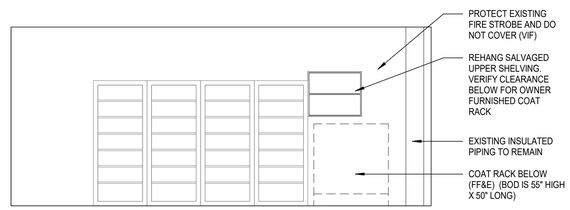

3C A7.1 INTERIOR ELEVATION - STORAGE EAST
SCALE: 1/4" = 1'-0"

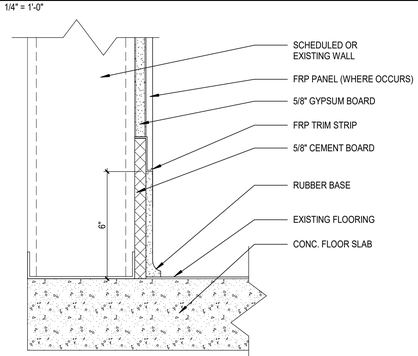

4A A7.1 RUBBER BASE AND FRP DETAIL - BASE BID
SCALE: 3" = 1'-0"

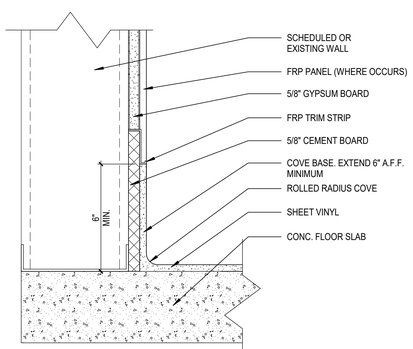

4B A7.1 VINYL FLOOR COVE DETAIL - ALTERNATE
SCALE: 3" = 1'-0"

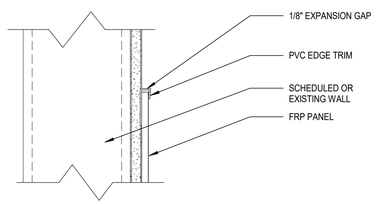

4C A7.1 FRP TOP EDGE (OPEN TO ABOVE)
SCALE: 3" = 1'-0"

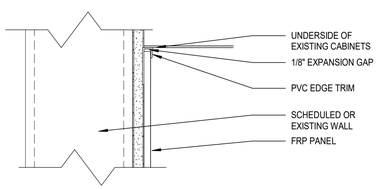

4D A7.1 FRP TOP EDGE (AT EXISTING UPPER CABINETS)
SCALE: 3" = 1'-0"

SHEET NOTES

1 FRP. BASIS OF DESIGN: CRANE COMPOSITES, GLASBORD, SMOOTH, WHITE, 4'X8' PANELS

DLR Group
© DLR Group

- NOT FOR CONSTRUCTION -

Consultant Logo

Project Logo

CULINARY CLASSROOM
Westview High School - Beaverton School District
4200 NW 185th Ave, Portland, OR 97229

50% CD
1.21.21
REVISIONS

74-21106-00

INTERIOR ELEVATIONS & SECTIONS

A7.1

BIM 360://74-21106-00 Westview HS Culinary/74-21106-00_WHSC_AR_2020.rvt
1/22/2021 3:48:08 PM

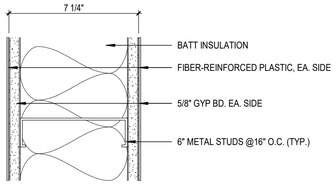

WHEN RATED (1 HR.) = U.L. DESIGN NO. U419

P1 PARTITION TYPE

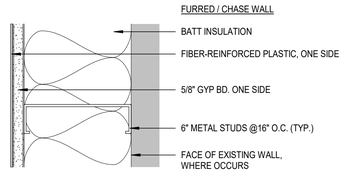

P2 PARTITION TYPE

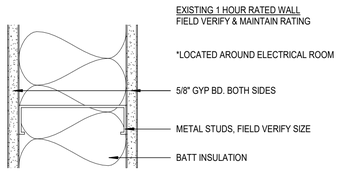

E1 PARTITION TYPE

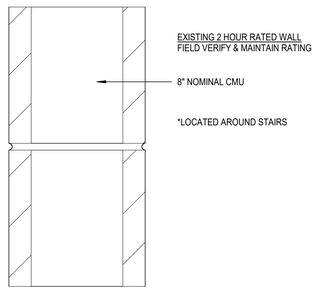

E2 PARTITION TYPE

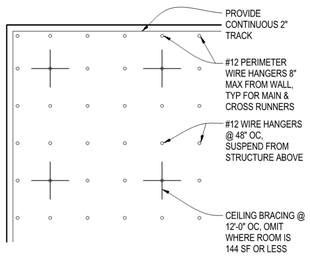

3A A10.1 TYP BRACING LAYOUT
SCALE: 1 1/2" = 1'-0"

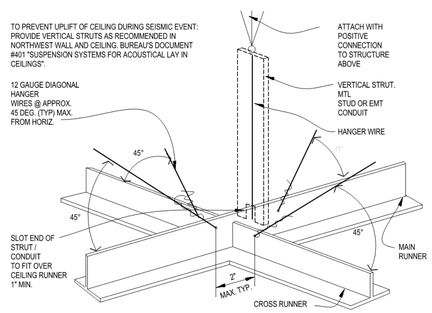

3B A10.1 TYP ACT SEISMIC RESTRAINT
SCALE: 1 1/2" = 1'-0"

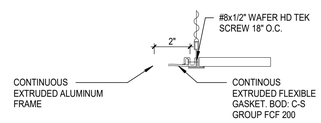

3C A10.1 SEISMIC JOINT AT ACT CEILING
SCALE: 3" = 1'-0"

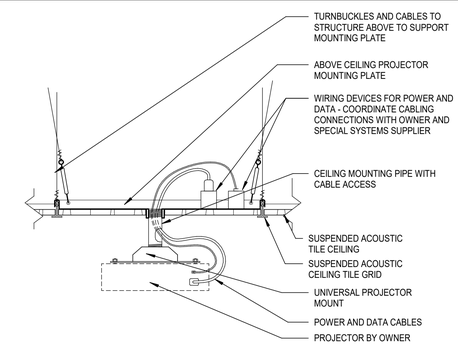

3D A10.1 PROJECTOR MOUNT
SCALE: 1 1/2" = 1'-0"

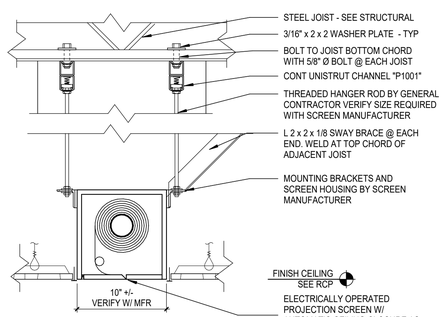

A ANCHORAGE PERP. TO JOIST

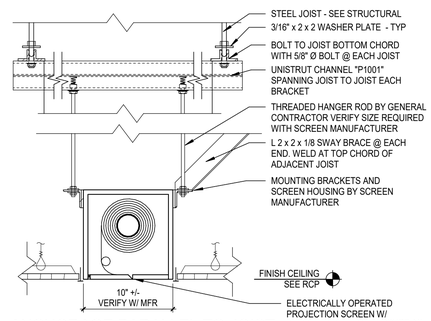

B ANCHORAGE PARALLEL TO JOIST

4A A10.1 PROJECTION SCREEN DETAIL
SCALE: 1 1/2" = 1'-0"

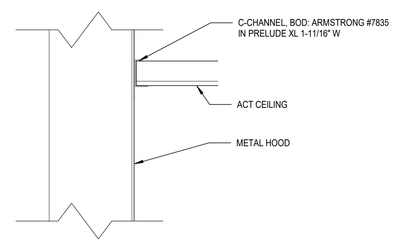

4C A10.1 ACT CEILING TO METAL HOOD TRANSITION
SCALE: 3" = 1'-0"

DLR Group
© DLR Group

- NOT FOR CONSTRUCTION -

Consultant Logo

Project Logo

CULINARY CLASSROOM
Westview High School - Beaverton School District
4200 NW 185th Ave, Portland, OR 97229

50% CD
1.21.21
REVISIONS

74-21106-00

WALL TYPES AND DETAILS

A10.1

BIM 360://74-21106-00 Westview HS Culinary/74-21106-00_WHSC_AR_2020.rvt
1/22/2021 3:48:08 PM

AUTOMATIC SPRINKLER SYSTEM DESIGN...

SYMBOL	OCCUPANCY HAZARD CLASSIFICATION	DESIGN DENSITY (GPM/SF)	DESIGN AREA
R	RESIDENTIAL (DWELLING) OCCUPANCY	0.05	400 SF
LH	LIGHT HAZARD OCCUPANCY	0.10	1500 SF
OH1	ORDINARY HAZARD, GROUP 1 OCCUPANCY	0.15	1500 SF
OH2	ORDINARY HAZARD, GROUP 2 OCCUPANCY	0.20	1500 SF
EH1	EXTRA HAZARD, GROUP 1 OCCUPANCY	0.30	2500 SF
EH2	EXTRA HAZARD, GROUP 2 OCCUPANCY	0.40	2500 SF
S	SPECIAL HAZARD OCCUPANCY		

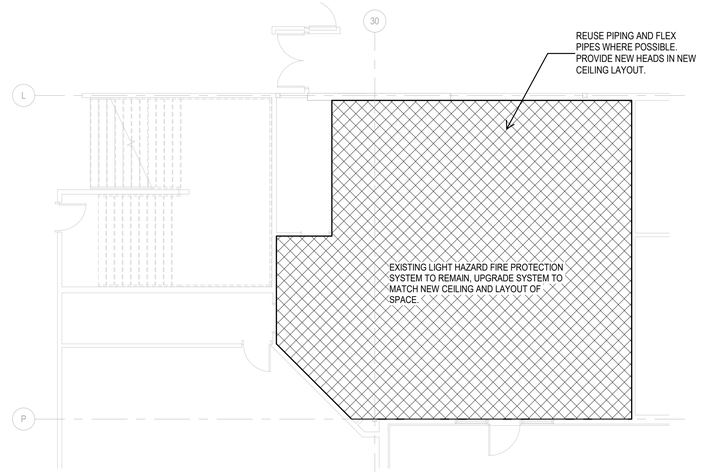

N

FIRST LEVEL FIRE PROTECTION PLAN

SCALE: 1/8" = 1'-0"

SHEET NOTES

GENERAL NOTES

A GENERAL NOTE 1
B GENERAL NOTE 2

DLR Group
© DLR Group

- NOT FOR CONSTRUCTION -

CULINARY CLASSROOM
Westview High School - Beaverton School District
4200 NW 185th Ave, Portland, OR 97229

50%CD
01/20/21
REVISIONS

74-21106-00

OVERALL FIRST FLOOR FIRE PROTECTION PLAN

FP1.1

BIM 360://74-21106-00 Westview HS Culinary/74-21106-00_WHSC_MEP_2020.rvt
12/17/2020 4:51:23 PM

ABBREVIATIONS

(D)	DEMOLISHED
(E)	EXISTING
(R)	RELOCATED
°C	DEGREES CELSIUS
°F	DEGREES FAHRENHEIT
Ø	DIAMETER
A AMP	AMPERE
A/C	AIR CONDITIONING(ER)
AABC	ASSOCIATED AIR BALANCE COUNCIL
AAV	AUTOMATIC AIR VENT
ACC	ACCESSIBLE
ACCU	AIR COOLED CONDENSING UNIT
AD	AREA DRAIN
AD	ACCESS DOOR
ADJ	ADJUSTABLE
AF	AIR FILTER
AGF	AIR GAP FITTING
AHRI	AIR-CONDITIONING HEATING AND REFRIGERATION INSTITUTE
AHU	AIR HANDLING UNIT
AI	AREA INLET
AMB	AMBIENT
AMBA	AMERICAN BOILER MANUFACTURERS ASSOCIATION
ANCH	ANCHOR
AP	ACCESS PANEL
AR	ACID RESISTING
AS	AIR SEPARATOR
ASCE	AMERICAN SOCIETY OF CIVIL ENGINEERS
ASHRAE	AMERICAN SOCIETY OF HEATING REFRIGERATION AND AIR CONDITIONING ENGINEERS
ASME	AMERICAN SOCIETY OF MECHANICAL ENGINEERS
AUTO	AUTOMATIC
AV	AUDIO-VIDEO, AUDIO-VISUAL
AV	AIR VENT
AWG	AMERICAN WIRE GAUGE
B	BOILER
BAS	BUILDING AUTOMATION SYSTEM
BAT	BATTERY
BBO	BOILER BLOW OFF
BC	BALANCING COCK
BC	BARE COPPER
BDD	BACK DRAFT DAMPER
BF	BOILER FEED
BFF	BELOW FINISH FLOOR
BFP	BACKFLOW PREVENTER
BFV	BUTTERFLY VALVE
BHP	BREAK HORSEPOWER
BLKG	BLOCKING
BLKHD	BULKHEAD
BMS	BUILDING MANAGEMENT SYSTEM
BOD	BOTTOM OF DUCT
BOT	BOTTOM
BPIP	BOILER PLANT INSTRUMENTATION PANEL
BTU	BRITISH THERMAL UNIT
BTUH	BRITISH THERMAL UNIT PER HOUR
BV	BALL VALVE
C	CONDUIT
C	CONDENSER WATER
CA	COMBUSTION AIR
CAP	CAPACITY
CD	CONDENSATE DRAIN
CD	CONSTRUCTION DOCUMENTS
CENT	CENTRIFUGAL
CF	CUBIC FEET
CFH	CUBIC FEET PER HOUR
CFM	CUBIC FEET PER MINUTE
CH	CHILLER
CI	CAST IRON
CI	CURB INLET
CIP	CAST IRON PIPE
CIRC	CIRCULATING
CKT	CIRCUIT
CLR	CLEAR
CO	CLEAN OUT
CO	CARBON MONOXIDE
CO2	CARBON DIOXIDE
COMB	COMBINATION
COMM	COMMUNICATIONS
COMP	COMPRESSOR UNIT
CONV	CONVECTOR
CP	CONDENSATE PUMP
CPS	CYCLES PER SECOND
CR	CONDENSER WATER RETURN
CR	CORROSION RESISTANT
CRAC	COMPUTER ROOM AIR CONDITIONING UNIT
CS	COUNTERSINK
CS	COMBINATION SEWER
CS	CONDENSER WATER SUPPLY
CSP	COMBINATION STANDPIPE
CT	COOLING TOWER
CU	CONDENSING UNIT
CUH	CABINET UNIT HEATER
CW	COLD WATER
CWR	CHILLED WATER RETURN
CWS	CHILLED WATER SUPPLY
CYL	CYLINDER
D	DRAIN
D	DIFFUSER
DB	DECIBEL
DB	DRY BULB
DBL	DOUBLE
DC	DIRECT CURRENT
DC	DUST COLLECTOR
DE	DEIONIZED WATER
DEPT	DEPARTMENT
DF	DRINKING FOUNTAIN
DFR	DIESEL FUEL RETURN
DFS	DIESEL FUEL SUPPLY
DFV	DIESEL FUEL VENT
DH	DUCT HEATER
DI	DISTILLED WATER
DIAG	DIAGONAL
DISCH	DISCHARGE
DISTR	DISTRIBUTION
DSN	DOWNSPOUT NOZZLE
DSP	DRY STANDPIPE
DW	DISHWASHER
EA	EACH
EA	EXHAUST AIR
EAT	ENTERING AIR TEMPERATURE
EDH	ELECTRIC DUCT HEATER
EER	ENERGY EFFICIENCY RATIO
EEW	EMERGENCY EYE WASH
EEWS	EMERGENCY EYE WASH SHOWER
EF	EXHAUST FAN
EFF	EFFICIENCY
EH	ELECTRICAL HEATER
ELEV	ELEVATOR
EMER	EMERGENCY
ENCL	ENCLOSURE
ESP	EXTERNAL STATIC PRESSURE
EST	ESTIMATE
ET	EXPANSION TANK
EWC	ELECTRIC WATER COOLER
EWT	ENTERING WATER TEMPERATURE
EXH	EXHAUST
EXP	EXPOSED
F	FAHRENHEIT
F	FURNACE
F	FACE
F.V.	FIELD VERIFY
FA	FIRE ALARM
FA	FACE
FA	FRESH AIR
FAA	FIRE ALARM ANNUNCIATOR
FAB	FABRICATE(D)
FACP	FIRE ALARM CONTROL PANEL
FCO	FLOOR CLEAN OUT
FCU	FAN COIL UNIT
FD	FLOOR DRAIN
FD	FIRE DAMPER
FDC	FIRE DEPARTMENT CONNECTION
FDNDR	FOUNDATION DRAIN
FE	FIRE EXTINGUISHER
FEC	FIRE EXTINGUISHER CABINET
FF	FINISH FLOOR
FH	FIRE HYDRANT
FHC	FIRE HOSE CABINET
FIX	FIXTURE
FLEX	FLEXIBLE
FM	FIRE MAIN
FM	FORCE MAIN
FME	FLOW MEASURING EQUIPMENT
FOF	FUEL OIL FILL
FOR	FUEL OIL RETURN
FOS	FUEL OIL SUPPLY
FOV	FUEL OIL VENT
FPD	FIRE PUMP DISCHARGE
FPM	FEET PER MINUTE
FS	FLOOR SINK
FSD	FIRE SMOKE DAMPER
FT	FIN TUBE
FVC	FIRE VALVE CABINET
G	GRILLE
G	NATURAL GAS
GA	GAUGE
GAL	GALLON
GALV	GALVANIZED
GCO	GRADE CLEAN OUT
GFI, GFCI	GROUND FAULT CIRCUIT INTERRUPTER
GHR	GLYCOL-WATER HEATING RETURN
GHS	GLYCOL-WATER HEATING SUPPLY
GPD	GALLONS PER DAY
GPH	GALLONS PER HOUR
GPM	GALLONS PER MINUTE
GV	GATE VALVE
GV	GREASE VENT
GVBF	GREASE VENT BELOW FLOOR
GW	GREASE WASTE
HB	HOSE BIB
HCR	HOT/CHILLED WATER RETURN
HCS	HOT/CHILLED WATER SUPPLY
HGR	HANGER
HID	HIGH INTENSITY DISCHARGE
HP	HORSE POWER
HP	HEAT PUMP
HP	HIGH PRESSURE
HPC	HIGH PRESSURE STEAM CONDENSATE
HPNG	HIGH PRESSURE NATURAL GAS
HPR	HIGH PRESSURE STEAM RETURN
HPS	HIGH PRESSURE STEAM SUPPLY
HR	HOUR
HTG	HEATING
HTR	HEATER
HTWR	HIGH TEMPERATURE HOT WATER RETURN
HTWS	HIGH TEMPERATURE HOT WATER SUPPLY
HUM	HUMIDIFIER
HV	HEATING VENTILATING UNIT
HVAC	HEATING VENTILATING AND AIR CONDITIONING
HW	DOMESTIC HOT WATER
HWC	DOMESTIC HOT WATER RECIRCULATING
HWR	HEATING WATER RETURN
HWS	HEATING WATER SUPPLY
HX	HEAT EXCHANGER
HZ	HERTZ (FREQUENCY)
IAQ	INDOOR AIR QUALITY
IAW	IN ACCORDANCE WITH
ID	INSIDE DIAMETER
IE	INVERT ELEVATION
IES	ILLUMINATING ENGINEERING SOCIETY
IH	INTAKE HOOD
INSUL	INSULATION
IP	IRON PIPE
IW	INDIRECT WASTE
JAN	JANITOR
JB	JUNCTION BOX
KH	KITCHEN HOOD
LAT	LEAVING AIR TEMPERATURE
LAV	LAVATORY
LF	LINEAR FOOT
LG	LENGTH (LONG)
LIN	LINEAR
LOX	LIQUID OXYGEN
LPG	LIQUIFIED PETROLEUM GAS
LPS	LOW PRESSURE STEAM SUPPLY
LS	LAWN SPRINKLER
LTD	LINED TRANSFER DUCT
LV	LOUVER
LWT	LEAVING WATER TEMPERATURE
MA	MIXED AIR
MAINT	MAINTENANCE
MAN	MANUAL
MATL	MATERIAL
MAU	MAKEUP AIR UNIT
MAV	MANUAL AIR VENT
MBH	THOUSAND BTU PER HOUR
MFRG	MANUFACTURING
ML	MOTORIZED LOUVER
MPG	MEDIUM PRESSURE GAS
MTD	MOUNTED
MTG	MOUNTING
MTWR	MEDIUM TEMP HOT WATER RETURN
MTWS	MEDIUM TEMP HOT WATER SUPPLY
MV	MEDICAL VACUUM
N	NITROGEN
N.C.	NORMALLY CLOSED
N.O.	NORMALLY OPEN
NEC	NATIONAL ELECTRIC CODE
NEMA	NATIONAL ELECTRICAL MANUFACTURERS ASSN.
NO	NUMBER
NOM	NOMINAL
O&M	OPERATION AND MAINTENANCE
OA	OUTSIDE AIR
OD	OUTSIDE DIAMETER
ORD	OVERFLOW ROOF DRAIN
OVFL	OVERFLOW
OX	OXYGEN
P	PUMP
P/T	PRESSURE/TEMPERATURE TEST PORT
PB	PULL BOX
PB	PUSH BUTTON
PC	PUMPED CONDENSATE
PCF	POUNDS PER CUBIC FOOT
PD	PRESSURE DROP
PD	PUMP DISCHARGE
PDI	PLUMBING & DRAINAGE INSTITUTE
PERF	PERFORATED
PERP	PERPENDICULAR
PG	PRESSURE GAUGE
PI	POINT OF INTERSECTION
PI	PRESSURE INDICATOR
PL	PLATE
PLBG	PLUMBING
PNEU	PNEUMATIC
PNL	PANEL
POC	POINT OF CONNECTION
PR	PAIR
PSI	POUNDS PER SQUARE INCH
PT	PLASTER TRAP
PVC	POLYVINYL CHLORIDE
PWR	POWER
R	RISER
RA	RETURN AIR
RAD	RADIUS
RAD	RADIATOR
RCP	REFLECTED CEILING PLAN
RCP	REINFORCED CONCRETE PIPE
RCU	RECIPROCATING CHILLER UNIT
RD	ROOF DRAIN
RD	REFRIGERANT DISCHARGE
REF	REFERENCE
REFR	REFRIGERANT
REG	REGISTER
REM	REMOVABLE
RF	RETURN FAN
RH	RELATIVE HUMIDITY
RH	REFLIEF HOOD
RHC	REHEAT COIL
RHG	REFRIGERANT HOT GAS
RL	REFRIGERANT LIQUID
RPM	REVOLUTIONS PER MINUTE
RS	REFRIGERANT SUCTION
RTU	ROOF TOP UNIT
S	SMOKE DAMPER
S	SANITARY SEWER
S	SPRINKLER LINE
SA	SUPPLY AIR
SAN	SANITARY WASTE
SC	SECURITY
SCW	SOFT COLD WATER
SD	SMOKE DETECTOR
SE	STEAM EXHAUST VENT
SGL	SINGLE
SH	SHOWER
SHW	SOFT HOT WATER
SK	SINK
SM	SPRINKLER MAIN
SP	STATIC PRESSURE (H2O)
SP	STAND PIPE
SPK	SPRINKLER
SQ	SQUARE
SS	STAINLESS STEEL
SS	SERVICE SINK
SST	SECONDARY STORM DRAINAGE
ST	STORM DRAINAGE
STOR	STORAGE
SUSP	SUSPENDED
SV	SOLENOID VALVE
SWBD	SWITCHBOARD
SWP	STEAM WORKING PRESSURE
T	TEMPERED
T	THERMOSTAT
T&B	TOP AND BOTTOM
TA	TRANSFER AIR
TB	TERMINAL BOX
TC	TEMPERATURE CONTROL
TD	TRANSFER DUCT
TEMP	TEMPERATURE
THK	THICK(NESS)
TMV	THERMOSTATIC MIXING VALVE
TOIL	TOILET
TPV	TRAP PRIMER
TS	TEMPERATURE SENSOR
TSP	TOTAL STATIC PRESSURE
TT	TEMPERATURE TRANSMITTER
UC	UNIT COOLER
UG	UNDERGROUND
UH	UNIT HEATER
UL	UNDERWRITERS LABORATORIES
UR	URINAL
UTIL	UTILITY
UV	UNIT VENTILATOR
V	VOLT
V	VENT
V	VACUUM
VA	VOLT-AMPERE
VA	VALVE
VAC	VACUUM
VAV	VARIABLE AIR VOLUME
VBF	VENT BELOW FLOOR
VCP	VITRIFIED CLAY PIPE
VD	VOLUME DAMPER
VEL	VELOCITY
VENT	VENTALATOR(TION)
VFD	VARIABLE FREQUENCY DRIVE
VOL	VOLUME
VP	VACUUM PUMP
VSMP	VARIABLE SPEED MOTOR CONTROLLER
VTR	VENT THROUGH ROOF
W	WIRE
W	WATER SERVICE
W	WIDE
W	WASTE (PLUG)
W	WATT
WB	WET BULB
WC	WATER COLUMN
WC	WATER CLOSET
WCC	WATER COOLED CONDENSER
WCL	WATER CLOSET/LAVATORY COMBINATION
WCO	WALL CLEAN OUT
WF	WASH FOUNTAIN
WFMD	WATER FLOW MEASURING DEVICE
WG	WIRE GUARD
WH	WALL HYDRANT
WH	WATER HEATER
WHA	WATER HAMMER ARRESTOR
WP	WEATHER-PROOF (NEMA 3R)
WP	WEATHERPROOF
WPB	WHIRLPOOL BATH
WSP	WET STAND PIPE
WT	WEIGHT
YH	YARD HYDRANT
ZCB	ZONE CONTROL BOX
ZCV	ZONE CONTROL VALVE

SHEET INDEX

Fire Protection
FP1.1 OVERALL FIRST FLOOR FIRE PROTECTION PLAN

Plumbing
P1.1 OVERALL FIRST FLOOR PLUMBING PLAN

P4.1 WASTE & VENT RISER DIAGRAMS

Mechanical
M0.1A -- OVERALL -- MECHANICAL SYMBOLS & ABBREVIATIONS

M1.1 HVAC PLANS

M5.1 MECHANCIAL DETAILS AND SCHEDULES

HVAC SYMBOLS

SCHEMATIC	3D	DESCRIPTION
EA	EA	GENERAL EXHAUST AIR
GEA	GEA	GREASE EXHAUST AIR
RA	RA	RETURN AIR
OA	OA	OUTSIDE AIR
SA	SA	SUPPLY AIR
		DIFFUSER (SUPPLY)
		GRILLE (RETURN)
		GRILLE (EXHAUST)
		WALL REGISTER
		LINEAR DIFFUSER (SLOT)
AFMS	AFMS	AIR FLOW MEASURING STATION
BDD	BDD	BACKDRAFT DAMPER
RD	RD	BAROMETRIC RELIEF DAMPER
DP	DP	DIFFERENTIAL PRESSURE SENSOR
DD	DD	DUCT DETECTOR
GD	GD	GRAVITY DAMPER
M	M	MOTORIZED DAMPER
PR	PR	PRESSURE REDUCING DAMPER
SB	SB	SECURITY BARS
SP	SP	STATIC PRESSURE SENSOR
VD	VD	VOLUME DAMPER
RVD	RVD	REMOTE VOLUME DAMPER
F	F	FIRE DAMPER
FS	FS	COMBINATION FIRE / SMOKE DAMPER
S	S	SMOKE DAMPER
		ROUND DUCT UP
		RECTANGULAR DUCT UP
		OVAL DUCT UP
		ROUND DUCT DOWN
		RECTANGULAR DUCT DOWN
		OVAL DUCT DOWN
		DUCT WITH INSULATION
		DUCT WITH LINING
		FLEXIBLE DUCT
		TRANSFER DUCT
		DUCT SMOKE DETECTOR
		SUPPLY ARROW
		RETURN ARROW
		EXHAUST ARROW
UC / 100		DOOR UNDERCUT ARROW WITH CFM
D-1 / 12"x12" / 200 CFM		DIFFUSER, REGISTER OR GRILLE TAG NECK SIZE (00"x00" - SQ / RECT) (0"ø ROUND) AIR FLOW (CUBIC FEET PER MINUTE)
24"x12"		TYPICAL DUCT - SIZE AS INDICATED (WIDTH x DEPTH) SIZE INDICATED FREE AREA
DDC		MECHANICAL EQUIPMENT TAG
		MECHANICAL EQUIPMENT CLEARANCE
CO2		CARBON DIOXIDE SENSOR - WALL MOUNTED
CO2		CARBON DIOXIDE SENSOR - CEILING MOUNTED
CO		CARBON MONOXIDE SENSOR - WALL MOUNTED
CO		CARBON MONOXIDE SENSOR - CEILING MOUNTED
H		HUMIDISTAT - WALL MOUNTED
H		HUMIDISTAT - CEILING MOUNTED
NO2		NITROGEN DIOXIDE SENSOR - WALL MOUNTED
NO2		NITROGEN DIOXIDE SENSOR - CEILING MOUNTED
P		PRESSURE SENSOR - WALL MOUNTED
P		PRESSURE SENSOR - CEILING MOUNTED
S		SENSOR - WALL MOUNTED
S		SENSOR - CEILING MOUNTED
T		THERMOSTAT - WALL MOUNTED
T		THERMOSTAT - CEILING MOUNTED

GENERAL SYMBOLS

	POINT OF DISCONNECT - DEMOLITION REMOVED FROM EXISTING
	POINT OF CONNECTION - NEW CONNECTS TO EXISTING
	AREA NOT IN CONTRACT

PIPING ANNOTATIONS

SCHEMATIC	3D	DESCRIPTION
		EXISTING TO REMAIN - (E) or EXIST
		ITEM TO BE DEMOLISHED - (D) or DEMO
18" CWS	18" CWS	PIPE SIZE TAG (DIAMETER WITH SYSTEM NAME)
		ABOVE GROUND PIPING
		BELOW GROUND PIPING
1/8" / 12" SLOPE	1/8" / 12" SLOPE	PIPE SLOPE
IE = -93' - 1"	IE = -93' - 8"	PIPE INVERT ELEVATION
DDC		MECHANICAL EQUIPMENT TAG
		MECHANICAL EQUIPMENT CLEARANCE

PLUMBING SYMBOLS

SCHEMATIC	3D	DESCRIPTION
CW	CW	DOMESTIC COLD WATER
		DOMESTIC COLD WATER (LINETYPE)
HW	HW	DOMESTIC HOT WATER
		DOMESTIC HOT WATER (LINETYPE)
110 HW	110 HW	DOMESTIC HOT WATER (110 °F)
140 HW	140 HW	DOMESTIC HOT WATER (140 °F)
HWC	HWC	DOMESTIC HOT WATER RECIRCULATING
		DOMESTIC HOT WATER RECIRCULATING (LINETYPE)
110 HWC	110 HWC	DOMESTIC HOT WATER RECIRCULATING (110 °F)
140 HWC	140 HWC	DOMESTIC HOT WATER RECIRCULATING (140 °F)
RD	RD	ROOF DRAIN
ORD	ORD	OVERFLOW ROOF DRAIN
SD	SD	STORM DRAIN
G	G	NATURAL GAS
GV	GV	GREASE VENT
GW	GW	GREASE WASTE
W	W	SANITARY WASTE
V	V	SANITARY VENT
CO	CO	CLEAN OUT
WCO	WCO	WALL CLEAN OUT
FCO	FCO	FLOOR CLEAN OUT
GCO	GCO	GRADE CLEAN OUT (DOUBLE CLEAN OUT)
		FLOOR DRAIN / FLOOR SINK
		ROOF DRAIN / OVERFLOW DRAIN
		DOWNSPOUT NOZZLE
		WALL HYDRANT
		HOSE BIBB
		WATER HAMMER ARRESTER
G		NATURAL GAS OUTLET
XX		RISER TAG
8" ORD- 1,500 SF		ROOF DRAIN TAG
3" FS-		PLUMBING FIXTURE TAG

* NOTE *

ALL OF NOTES ON THIS SHEET ARE TO BE APPLIED TO ALL OTHER DRAWINGS IN THIS SET.

THE SYMBOLS AND ABBREVIATIONS SHOWN ON THIS SHEET MAY OR MAY NOT BE USED IN THIS SET OF DRAWINGS.

MECHANICAL PIPING SYSTEMS

SCHEMATIC	3D	DESCRIPTION
HWR	HWR	HOT WATER RETURN
HWS	HWS	HOT WATER SUPPLY
CD	CD	CONDENSATE DRAIN
SCD	SCD	SECONDARY CONDENSATE DRAIN

FIRE PROTECTION SYMBOLS

SCHEMATIC	3D	DESCRIPTION
DFP	DFP	COMBINATION FIRE AND DOMESTIC WATER
DS	DS	FIRE PROTECTION DRY
F	F	FIRE PROTECTION OTHER
PA	PA	FIRE PROTECTION PRE-ACTION
WS	WS	FIRE PROTECTION WET
		ALARM VALVE, WET
		ALARM VALVE, DRY
		FIRE PROTECTION RISER
		FIRE DEPARTMENT CONNECTION
		SPRINKLER HEAD, PENDANT
		SPRINKLER HEAD, PENDANT
		SPRINKLER HEAD, SIDE WALL
FS		FLOW SWITCH
PS		PRESSURE SWITCH
		OS&Y VALVE
		OS&Y VALVE (INDICATING)

PIPING VALVES AND FITTINGS

SCHEMATIC	3D	DESCRIPTION
		PIPE DROP
		PIPE RISE
		PIPE TEE DOWN
		PIPE TEE UP
		CONCENTRIC REDUCER
		ECCENTRIC REDUCER
		PIPE CAP
		PIPE ALIGNMENT GUIDE
		PIPE ANCHOR
		FLOW DIRECTION
		EXPANSION JOINT
		FLEXIBLE CONNECTION
		UNION
		BALANCING VALVE
		BALANCING VALVE W/ METERING POINTS
		BALL VALVE
		BUTTERFLY VALVE
		CHECK VALVE
		STEAM TRAP
		GATE VALVE
		CIRCUIT SETTER
		MANUAL AIR VENT
		AUTOMATIC AIR VENT
		PRESSURE GAUGE
		SOLENOID VALVE
		AUTOMATIC CONTROL VALVE 2-WAY
		AUTOMATIC CONTROL VALVE 3-WAY
		AUTOMATIC FLOW CONTROL VALVE
		STRAINER
		PRESSURE AND TEMPERATURE TEST PORT
		THERMOMETER
		PRESSURE REDUCING VALVE (WATER SYSTEMS) PRESSURE REGULATING VALVE (GAS SYSTEMS)
		RELIEF VALVE
		FLOW MEASURING DEVICE
		BACKFLOW PREVENTER

DLR Group
© DLR Group

- NOT FOR CONSTRUCTION -

CULINARY CLASSROOM
Westview High School - Beaverton School District
4200 NW 185th Ave, Portland, OR 97229

50%CD
01/20/21
REVISIONS

74-21106-00

-- OVERALL -- MECHANICAL SYMBOLS & ABBREVIATIONS

M0.1A

BIM 360://74-21106-00 Westview HS Culinary/74-21106-00_WHSC_MEP_2020.rvt
1/21/2021 4:28:04 PM

SHEET NOTES

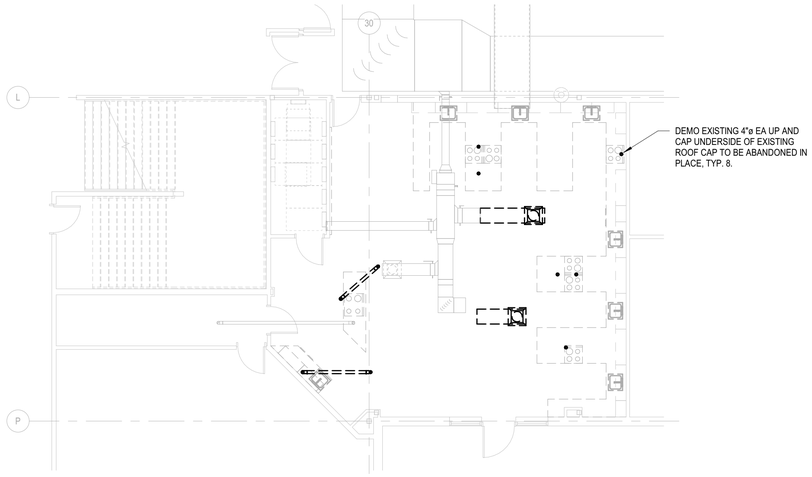

FIRST LEVEL HVAC DEMOLITION PLAN

SCALE: 1/8" = 1'-0"

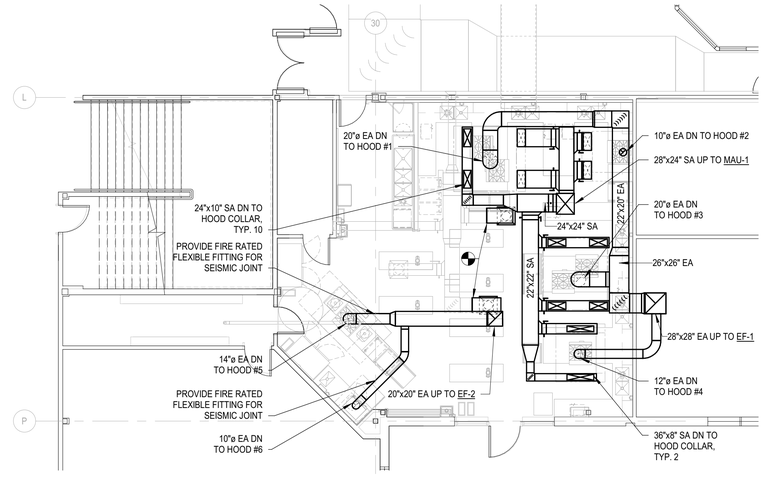

FIRST LEVEL HVAC PLAN

SCALE: 1/8" = 1'-0"

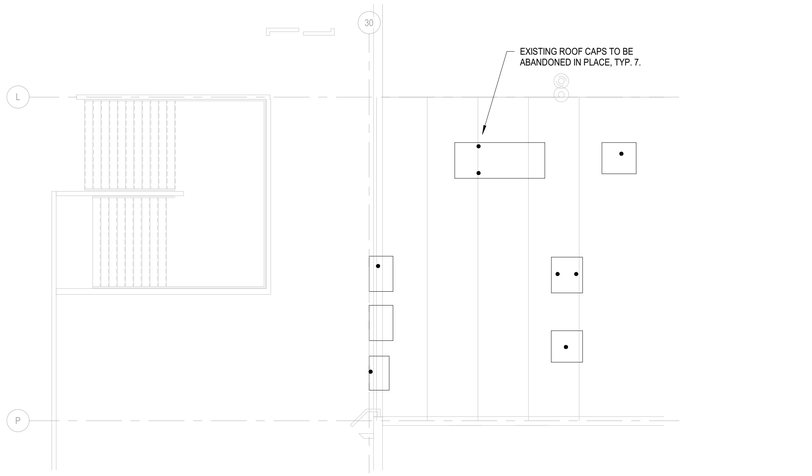

ROOFTOP HVAC DEMOLITION PLAN

SCALE: 1/8" = 1'-0"

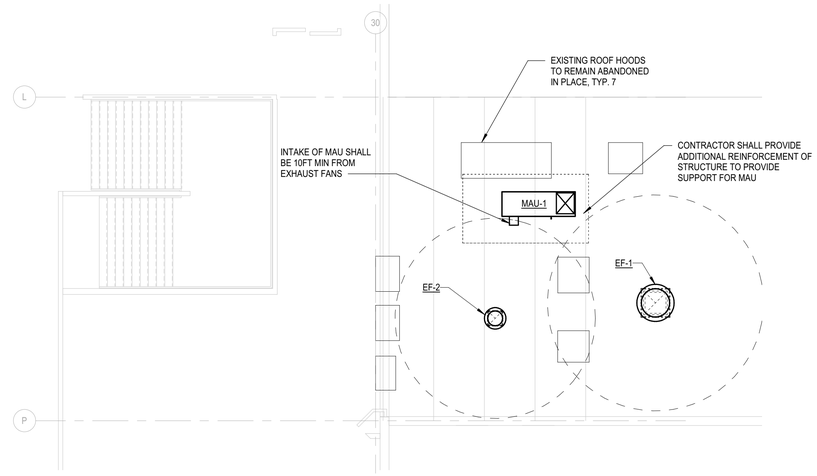

ROOFTOP HVAC PLAN

SCALE: 1/8" = 1'-0"

DLR Group
© DLR Group

- NOT FOR CONSTRUCTION -

CULINARY CLASSROOM

Westview High School - Beaverton School District

4200 NW 185th Ave, Portland, OR 97229

50%CD
01/20/21
REVISIONS

74-21106-00

HVAC PLANS

M1.1

BIM 360://74-21106-00 Westview HS Culinary/74-21106-00_WHSC_MEP_2020.rvt
1/21/2021 4:28:08 PM

NOTES :

CURB & ROOF OPENING EXACT DIMENSIONS SHALL BE DETERMINED BY FAN MFR. COORDINATE WITH STRUCTURAL REQUIREMENTS.

MOUNT TOP OF CURB LEVEL. VERIFY ROOF SLOPE & FABRICATE CURD ACCORDINGLY.

BELT DRIVE FAN SHOWN. DIRECT DRIVE FAN SIMILAR.

INTERLOCK DAMPER TO OPERATE WITH FAN.

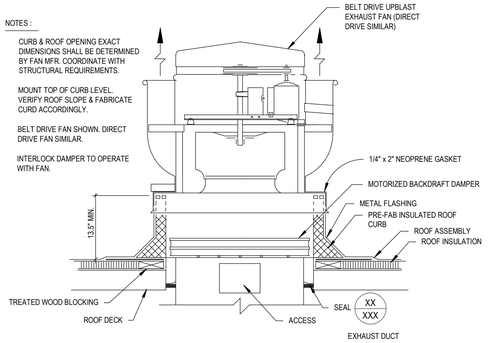

13 M5.1 UPBLAST CENTRIFUGAL ROOF FAN DETAIL
SCALE: 12" = 1'-0"

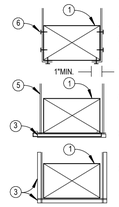

KEY NOTES:

1. DUCT
2. SHEET METAL STRAP 1" (25.4mm) WIDE, OF SAME METAL GAUGE AS DUCT.
3. STEEL ANGLE, NOT LESS THAN 1"x 1"x 1/8" (25.4 x 25.4 x 3 mm), SIZED TO MATCH DUCT.
4. SHEET METAL BAND, 1" (25.4mm) WIDE OF SAME METAL GAUGE AS DUCT.
5. ALL THREAD HANGER ROD WITH ACCESSORIES AS USED FOR LIGHT PIPE HANGER.
6. SELF TAPPING CADMIUM PLATED HEX HEADED SHEET METAL SCREW STRAPS TO BE TIGHT AGAINST DUCT.

HANGER SIZES FOR RECTANGULAR DUCT			
MAX. LENGTH ANY SIDE	HANGER	HORIZONTAL SUPPORT ANGLE	MAXIMUM SPACING
30"	1"x 18 GAUGE STRAP	NONE REQUIRED	10'-0"
36"	1/4" ROUND ROD	1-1/2" x 1-1/2" x 1/8"	8'-0"
48"	1/4" ROUND ROD	2" x 2" x 1/8"	8'-0"
60"	5/16" ROUND ROD	2" x 2" x 1/8"	8'-0"
84"	3/8" ROUND ROD	2" x 2" x 1/8"	8'-0"

14 M5.1 DUCT HANGING DETAIL
SCALE: 12" = 1'-0"

FAN SCHEDULE

NOTES:
1. SEE FOOD SERVICE PLANS FOR CHARACTERISTICS, MAKE, AND MODEL.

	ID	TYPE	ARRANGEMENT	FAN DATA														SOUND PRESS LEVEL (dBA)	ELECTRICAL DATA					INTERLOCK ID	WEIGHT (LBS)	BASIS OF DESIGN		NOTES
				DESCRIPTION	AIRFLOW (CFM)		OUTLET VELOCITY (FPM)	ESP (IN WG)	RPM	WHEEL		CLASS	DRIVE TYPE	MOTOR DATA					FLA (A)	MCA (A)	MOCP (A)	VOLT (V)	PH			MANUFACTURER	MODEL	
					DESIGN	MIN				TYPE	DIA			QTY	HP	RPM	ECM											
	EF-1																									CAPTIVEAIRE	.	
	EF-2																									CAPTIVEAIRE	.	

DLR Group
© DLR Group

- NOT FOR CONSTRUCTION -

CULINARY CLASSROOM
Westview High School - Beaverton School District
4200 NW 185th Ave, Portland, OR 97229

50%CD
01/20/21
REVISIONS

74-21106-00

MECHANCIAL DETAILS AND SCHEDULES

M5.1

BIM 360://74-21106-00 Westview HS Culinary/74-21106-00_WHSC_MEP_2020.rvt
1/21/2021 5:00:20 PM

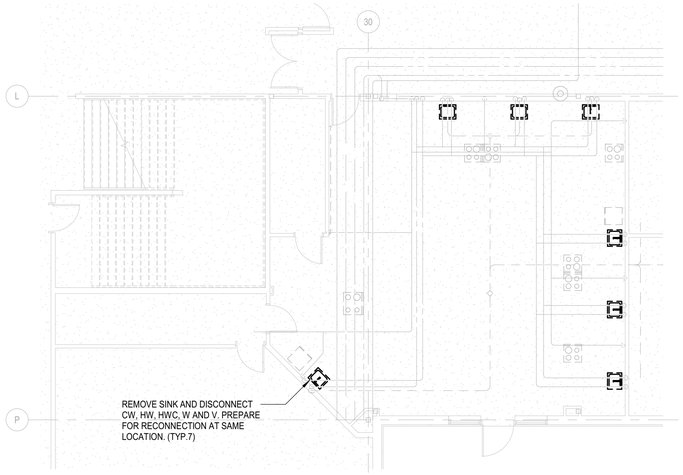

FIRST LEVEL PLUMBING DEMOLITION PLAN

SCALE: 1/8" = 1'-0"

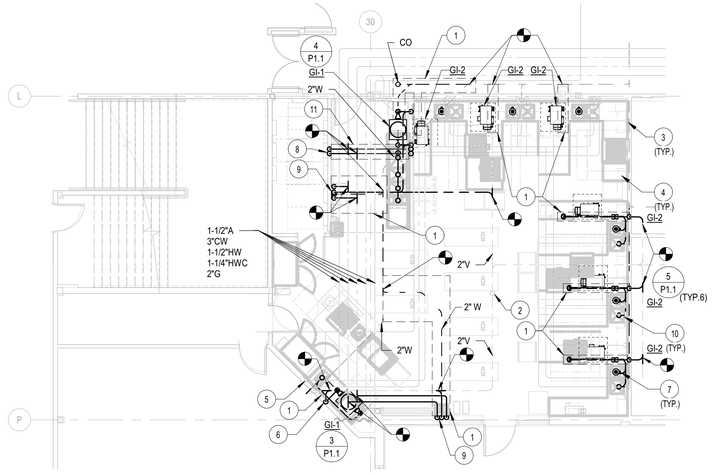

FIRST LEVEL PLUMBING PLAN

SCALE: 1/8" = 1'-0"

GREASE INTERCEPTOR SCHEDULE

NOTES:
1. PROVIDE A MINIMUM OF 5-1/2" ABOVE TOP OF INTERCEPTOR FOR MAINTENANCE ACCESS.
2. NO POWER REQUIREMENT.
3. ELECTRICAL LOAD = 110 VAC, 630 WATTS, 5.73 AMPS.

ID	TYPE	MATERIAL DESCRIPTION	DESIGN FLOW (GPM)	CAPACITY		INSTALLATION	DIMENSIONS (FT-IN)			WEIGHT (LBS)	BASIS OF DESIGN		NOTES
				LIQUID (GAL)	GREASE (LBS)	ARRANGEMENT	LENGTH	WIDTH	HEIGHT		MANUFACTURER	MODEL	
GI-1	HYDROMECHANICAL	POLYPROPYLENE	20	10	70	ABOVE GRADE	2' - 3"	1' - 11"	1' - 0"	39 lb	SCHIER	GB-1	1, 2
GI-2	AUTOMATIC GREASE REMOVAL UNIT	STAINLESS STEEL	15	2	30	ABOVE GRADE	2' - 8"	1' - 11"	1' - 2"	88 lb	GREASE GUARDIAN	GGX15	3

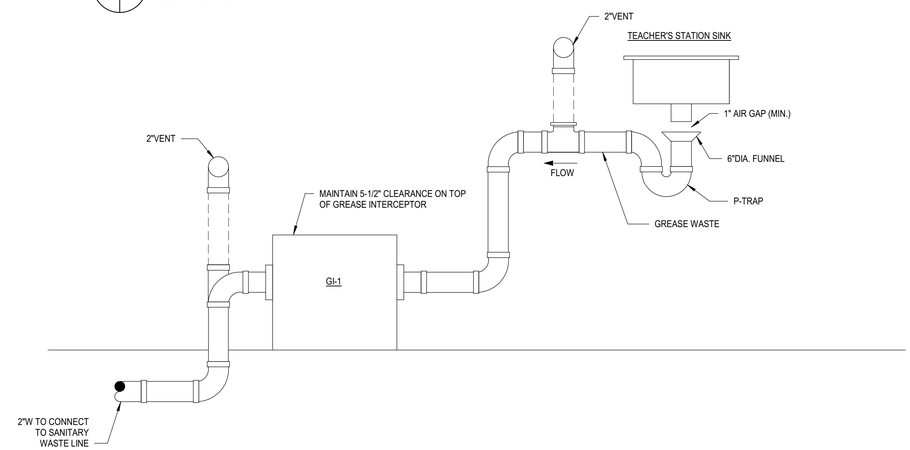

3 P1.1 GREASE INTERCEPTOR - TEACHER'S STATION (ADA)

NO SCALE

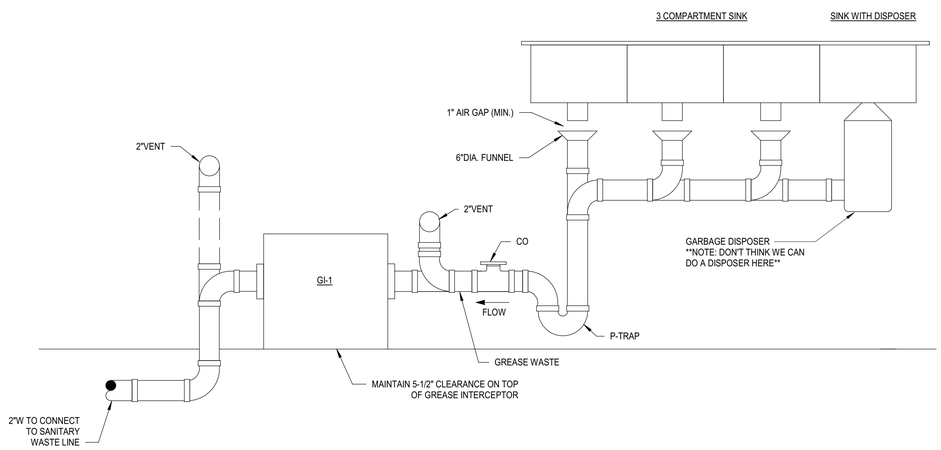

4 P1.1 GREASE INTERCEPTOR - 3-COMP SINK & DISHWASHER

NO SCALE

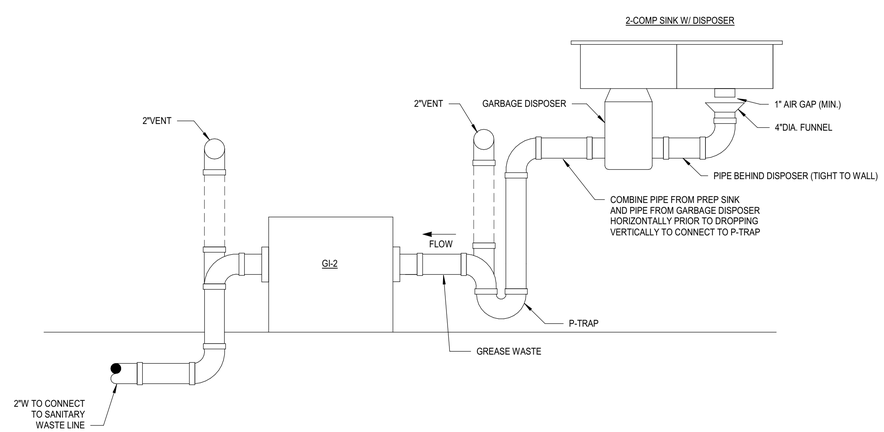

5 P1.1 GREASE INTERCEPTOR - 2-COMP SINK WITH DISPOSER

NO SCALE

SHEET NOTES

1. SAW CUT (E)FLOOR FOR INSTALLATION OF NEW WASTE PIPES.
2. EXISTING 2-1/2"VTR TO REMAIN.
3. RECONNECT GAS TO NEW RANGES (TYP.7).
4. PROVIDE A MINIMUM OF 5-1/2" CLEARANCE ABOVE GREASE INTERCEPTOR FOR ROUTINE MAINTENANCE.
5. RECONNECT EXISTING PLUMBING (CW, HW, V) TO NEW SINK.
6. 2"V DOWN TO VENT DOWNSTREAM OF GREASE INTERCEPTOR.
7. TEE 1/2"CW BRANCH OFF FROM SINK COLD WATER DROP TO DISPOSER.
8. DROP 2"CW/HW IN WALL. BRANCH (4)1/2"CW, (3)1/2"HW, (1)3/4"HW TO 3-COMP SINK, SINGLE SINK, AND DISHWASHER. SEE FOOD SERVICE DRAWING (FS1.2) FOR EXACT LOCATION.
9. ROUTE 1/2"CW, 1/2"HW, 1-1/2"V, 2"W TO HAND SINK.
10. SEE FOOD SERVICE DRAWING FOR NEW SINKS. RECONNECT EXISTING PLUMBING (CW, HW, HWC, V) TO NEW SINKS. (TYP.7)
11. SAW CUT (E)FLOOR FOR INSTALLATION OF NEW 2"CW & 2"HW PIPES UNDERGROUND.

GENERAL NOTES

A GENERAL NOTE 1
B GENERAL NOTE 2

DLR Group
© DLR Group

- NOT FOR CONSTRUCTION -

CULINARY CLASSROOM

Westview High School - Beaverton School District

4200 NW 185th Ave, Portland, OR 97229

50%CD
01/20/21
REVISIONS

74-21106-00

OVERALL FIRST FLOOR PLUMBING PLAN

P1.1

BIM 360://74-21106-00 Westview HS Culinary/74-21106-00_WHSC_MEP_2020.rvt
1/21/2021 4:28:13 PM

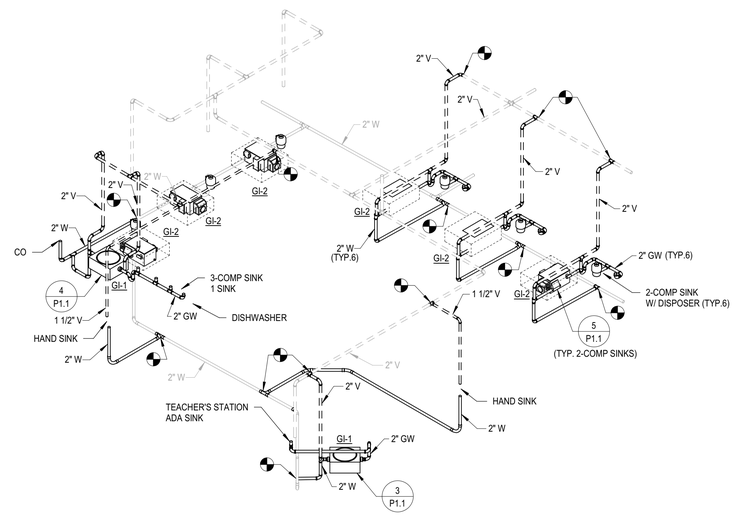

1 P4.1 WASTE & VENT RISER DIAGRAM
NO SCALE

DLR Group
© DLR Group

- NOT FOR CONSTRUCTION -

CULINARY CLASSROOM
Westview High School - Beaverton School District
4200 NW 185th Ave, Portland, OR 97229

50%CD
01/20/21
REVISIONS

74-21106-00

WASTE & VENT RISER DIAGRAMS

P4.1

BIM 360://74-21106-00 Westview HS Culinary/74-21106-00_WHSC_MEP_2020.rvt
1/21/2021 4:28:14 PM

ABBREVIATIONS

(D)	DEMOLISHED
(E)	EXISTING
(R)	RELOCATED
Ø	PHASE
A AMP	AMPERE
AC	ABOVE COUNTER
AF	AMP FRAME (CIRCUIT BREAKER)
AIC	AMPERE INTERRUPTING CAPACITY
AL	ALUMINUM
AP	WIRELESS ACCESS POINT
AT	AMP TRIP (CIRCUIT BREAKER OR FUSE)
ATS	AUTOMATIC TRANSFER SWITCH
AV	AUDIO-VIDEO, AUDIO-VISUAL
AWG	AMERICAN WIRE GAUGE
BAS	BUILDING AUTOMATION SYSTEM
BJ	BONDING JUMPER
BKR	BREAKER
BMS	BUILDING MANAGEMENT SYSTEM
C	CONDUIT
CATV	CABLE TELEVISION
CB	CIRCUIT BREAKER
CCTV	CLOSED CIRCUIT TELEVISION
CFCI	CONTRACTOR FURNISHED CONTRACTOR INSTALLED
CKT	CIRCUIT
CU	COPPER
DB	DECIBEL
DC	DIRECT CURRENT
DISC	DISCONNECT
DP	DISTRIBUTION PANELBOARD
DW	DISHWASHER
ECS	EMERGENCY COMMUNICATION SYSTEM
EGB	ELECTRICAL GROUNDING BUSBAR
EMD	ESTIMATED MAXIMUM DEMAND
EMGB	ELECTRICAL MAIN GROUNDING BUSBAR
EP	EXPLOSION PROOF
ER	EXISTING (TO BE) RELOCATED
ERMS	ENERGY REDUCTION MAINTENANCE SWITCH
EWC	ELECTRIC WATER COOLER
FA	FIRE ALARM
FAA	FIRE ALARM ANNUNCIATOR
FACP	FIRE ALARM CONTROL PANEL
FC	FOOT CANDLE
FLA	FULL LOAD AMPS
FSD	FIRE SMOKE DAMPER
G	EQUIPMENT GROUNDING CONDUCTOR
GEN	GENERATOR
GFI, GFCI	GROUND FAULT CIRCUIT INTERRUPTER
GFPE	GROUND FAULT PROTECTION OF EQUIPMENT
GND	EQUIPMENT GROUNDING CONDUCTOR
HOA	HAND-OFF-AUTOMATIC
HP	HORSE POWER
IC	INTERCOM
JB	JUNCTION BOX
KAIC	THOUSAND AMPERE INTERRUPTING CIRCUIT
KV	KILOVOLT
KVA	KILOVOLT AMPERES
KW	KILOWATT
LT	LIGHT
LTG	LIGHTING
MCA	MINIMUM CIRCUIT AMPACITY
MCB	MAIN CIRCUIT BREAKER
MLO	MAIN LUGS ONLY
MOCP	MAXIMUM OVERCURRENT PROTECTION
MRTS	MOTOR RATED TOGGLE SWITCH
MSB	MAIN SWITCHBOARD
MTD	MOUNTED
MTG	MOUNTING
MTS	MAIN TRANSFER SWITCH
N	NEUTRAL
N.C.	NORMALLY CLOSED
N.O.	NORMALLY OPEN
NF	NON-FUSED
NL	NIGHT LIGHT
OFCI	OWNER FURNISHED CONTRACTOR INSTALLED
P	POLE(S)
PB	PULL BOX
PH	PHASE
PWR	POWER
RCP	REFLECTED CEILING PLAN
RECPT	RECEPTACLE
REF	REFERENCE
SCCR	SHORT CIRCUIT CURRENT RATING
SEC	SECONDARY
SWBD	SWITCHBOARD
TBB	TELECOMMUNICATIONS BONDING BACKBONE
TC	TIME CLOCK
TGB	TELECOMMUNICATIONS GRONDING BUSBAR
TMGB	TELECOMMUNICATIONS MAIN GRONDING BUSBAR
TO	TELECOMMUNICATIONS OUTLET
TS	TAMPER SWITCH
TV	TELEVISION
UG	UNDERGROUND
V	VOLT
VA	VOLT-AMPERE
VFD	VARIABLE FREQUENCY DRIVE
W	WIRE
WG	WIRE GUARD
WP	WEATHER-PROOF (NEMA 3R)
XFMR	TRANSFORMER

GENERAL NOTES

1 PENETRATIONS IN WALLS REQUIRING PROTECTED OPENINGS MUST BE FIRESTOPPED WITH AN APPROVED MATERIAL.

GENERAL DEMOLITION NOTES

1 SEE ARCHITECTURAL DRAWINGS AND SPECIFICATIONS FOR PHASES OF DEMOLITION AND CONSTRUCTION. COORDINATE WITH GENERAL CONSTRUCTION.
2 DISCONNECT AND REMOVE ALL ELECTRICAL DEVICES AND LIGHTING FIXTURES IN DEMOLITION AREAS UNLESS NOTED OTHERWISE.
3 DISCONNECT AND REMOVE ALL ELECTRICAL DEVICES IN WALLS TO BE DEMOLISHED. WALLS TO BE DEMOLISHED ARE SHOWN DASHED. DISCONNECT AND REMOVE ASSOCIATED CONDUIT AND WIRE BACK TO LAST REMAINING DEVICE. FURNISH AND INSTALL CONDUIT AND WIRE AS NECESSARY FOR CONTINUITY OF CIRCUIT(S) TO ANY EXISTING DEVICES TO REMAIN. COORDINATE AND VERIFY REQUIREMENTS WITH NEW WORK IN AREA.
4 FURNISH AND INSTALL CONDUIT AND WIRE AS NECESSARY FOR CONTINUITY OF ANY FEEDERS OR BRANCH CIRCUITS ORIGINATING OUTSIDE THE DEMOLITION AREA THAT SERVES ANY ELECTRICAL EQUIPMENT OR DEVICES TO REMAIN AFTER DEMOLITION. MODIFY OR REPLACE AS REQUIRED.
5 FURNISH AND INSTALL CONDUIT AND/OR COMMUNICATIONS/DATA WIRING AS NECESSARY FOR CONTINUITY OF ANY WIRING ORIGINATING OUTSIDE THE DEMOLITION AREA THAT SERVES ANY COMMUNICATIONS/DATA EQUIPMENT OR DEVICES TO REMAIN AFTER DEMOLITION. MODIFY OR REPLACE AS REQUIRED.
6 DISCONNECT AND REMOVE LIGHT SWITCHES IN DEMOLITION AREAS AS NECESSARY TO ACCOMMODATE NEW DOOR CONFIGURATIONS.
7 DISCONNECT AND REMOVE ANY EXISTING ELECTRICAL DEVICES AND BACK BOXES AS NECESSARY WHERE NEW WALL CONSTRUCTION WILL INTERSECT AN EXISTING WALL. FURNISH AND INSTALL CONDUIT AND WIRE AS REQUIRED FOR CONTINUITY OF CIRCUIT(S).
8 FURNISH AND INSTALL BLANK COVER PLATES OVER ALL EXISTING UNUSED OPENINGS.

GENERAL SITE PLAN NOTES

1 ALL LIGHTING AND POWER CONDUCTORS SHALL BE INSTALLED BETWEEN 24" (MINIMUM) AND 36" (MAXIMUM) BELOW FINISHED GRADE.
2 ALL COMMUNICATIONS CONDUIT AND CABLES SHALL BE INSTALLED 36" (MINIMUM) BELOW FINISHED GRADE.
3 ALL CONDUCTORS FOR EXTERIOR LIGHTING AND POWER CIRCUITS SHALL BE #10 AWG MINIMUM.
4 PROVIDE TRANSFORMER BASE AT ALL POLE MOUNTED FIXTURES, TAP 2 LEGS OF THREE PHASE FEEDER (CIRCUITS DENOTED), PROVIDE BALLAST FUSES AT TAP, AND PROVIDE BRANCH CIRCUITS TO FIXTURES.

GENERAL SITE DEMOLITION NOTES

1 SEE ARCHITECTURAL DRAWINGS AND SPECIFICATIONS FOR PHASES OF DEMOLITION AND CONSTRUCTION. COORDINATE WITH GENERAL CONSTRUCTION.
2 DISCONNECT AND REMOVE ALL ELECTRICAL DEVICES AND LIGHTING FIXTURES IN DEMOLITION AREAS UNLESS NOTED OTHERWISE.
3 COORDINATE AND VERIFY REQUIREMENTS WITH NEW WORK IN AREA.

LIGHTING

- LIGHTING FIXTURE, SEE FIXTURE SCHEDULE
- LIGHTING FIXTURE ON EMERGENCY SYSTEM
- TRACK LIGHTING FIXTURE, SIZE PER FIXTURE SCHEDULE
- FLUORESCENT STRIP LIGHTING FIXTURE, SIZE PER FIXTURE SCHEDULE
- WALL MOUNTED FLUORESCENT STRIP LIGHTING FIXTURE
- CEILING FIXTURE, SURFACE, RECESSED OR PENDANT, SEE FIXTURE SCHEDULE
- LIGHTING FIXTURE ON EMERGENCY SYSTEM
- HIGH BAY LIGHTING FIXTURE
- WALL FIXTURE, BRACKET MOUNTED, SEE FIXTURE SCHEDULE
- SELF CONTAINED EMERGENCY LIGHTING FIXTURE
- EXIT SIGN, CEILING MOUNTED, DIRECTIONAL ARROW AS INDICATED
- EXIT SIGN, WALL MOUNTED, DIRECTIONAL ARROW AS INDICATED
- SITE LIGHTING - POLE
- POLE MOUNTED YOKE
- POLE MOUNTED AREA LIGHT
- WALL MOUNTED AREA LIGHT
- IN GRADE LIGHT FIXTURE, SEE FIXTURE SCHEDULE
- BOLLARD LIGHT FIXTURE

SWITCHES: MOUNT 42" AFF UNO

SUPPERSCRIPT, SWITCH SHALL CONTROL FIXTURE DENOTED WITH SAME LOWER CASE LETTER
SWITCH SYMBOL
SUBSCRIPT, SWITCH TYPE - SEE BELOW
LINE THRU SWITCH INDICATES A KEY OPERATED SWITCH

- S — SWITCH, SINGLE POLE
- S_2 — SWITCH, DOUBLE POLE
- S_3 — SWITCH, THREE WAY
- S_4 — SWITCH, FOUR WAY
- S_D — SWITCH, DIMMER
- S_E — SWITCH, EMERGENCY
- S_L — SWITCH, LOW VOLTAGE
- S_M — SWITCH, MASTER
- S_O — SWITCH, WALL-BOX OCCUPANCY SENSOR
- S_{O2} — SWITCH, WALL-BOX OCCUPANCY SENSOR, 2-POLE
- S_P — SWITCH, WITH PILOT LIGHT
- S_R — SWITCH, LOW VOLTAGE, ASSOCIATED WITH RELAY PANEL
- S_T — SWITCH, TIMER
- S_V — SWITCH, WALL-BOX VACANCY SENSOR
- S_X — SWITCH, EXPLOSION-PROOF

COMMUNICATIONS

- TELEPHONE OUTLET, WALL
- W — TELEPHONE OUTLET FOR WALL-MOUNTED PHONE
- P — PAY TELEPHONE OUTLET
- TELEPHONE CABINET (PBX)
- TELEPHONE BACKBOARD, SIZE AS SHOWN
- TECHNOLOGY OUTLET, WALL (VOICE, DATA, VIDEO)
- MM — MULTI-MEDIA TECHNOLOGY OUTLET, WALL
- SB — SMART-BOARD TECHNOLOGY OUTLET, WALL
- C — TECHNOLOGY OUTLET, CEILING (MULTI-MEDIA)
- FLUSH FLOOR BOX WITH TECHNOLOGY OUTLET
- MM — FLUSH FLOOR BOX WITH TWO (2) TECHNOLOGY OUTLETS (MULTI-MEDIA)
- CP — CLOCK
- CP M — CLOCK - MASTER
- CP DS — CLOCK - DOUBLE FACE
- CP C — CLOCK - OUTLET
- TC — TIME CLOCK
- TV — TELEVISION OUTLET, WALL
- TV — TELEVISION OUTLET, CEILING
- TV — TELEVISION TERMINAL CABINET
- BUZZER
- C — CHIME
- S — SPEAKER, WALL
- S — SPEAKER, CEILING
- H — SPEAKER/HORN, WALL
- IC — INTERCOM CALLBACK STATION, WALL
- V — VOLUME CONTROL, WALL
- M — MICROPHONE CONTROL, WALL
- SR — MONITOR SPEAKER RECEPTACLE, WALL
- M — FLUSH FLOOR BOX WITH MICROPHONE OUTLET
- D — DIRECTOR'S HEADSET, WALL

POWER

- CIRCUIT HOME RUN
- CONDUIT TURNING UP
- CONDUIT TURNING DOWN
- CONDUIT STUB-UP
- CONDUIT SLEEVE
- CONDUIT SEAL
- CONDUIT CONCEALED IN CEILING OR WALLS, POWER
- CONDUIT CONCEALED IN CEILING OR WALLS, OTHER (* = SEE ABBREVIATIONS)
- CONDUIT CONCEALED IN FLOOR OR UNDERGROUND, POWER
- CONDUIT CONCEALED IN FLOOR OR UNDERGROUND, OTHER (* = SEE ABBREVIATIONS)
- EXPOSED CONDUIT, POWER
- EXPOSED CONDUIT, OTHER (* = SEE ABBREVIATIONS)
- T — TRANSFORMER
- XXX — BRANCH CIRCUIT PANEL BOARD
- XXX — DISTRIBUTION PANEL BOARD
- EQUIPMENT CABINET, AS NOTED
- SWITCHBOARD
- XXX CT — CURRENT TRANSFORMER ENCLOSURE
- M — METER
- GEN — GENERATOR
- ATS — AUTOMASTIC TRANSFER SWITCH
- SYSTEM GROUND ELECTRODE
- T — THERMOSTAT
- MUSHROOM
- M — MOTOR CONNECTION, HORSEPOWER AS INDICATED
- DISCONNECT SWITCH, WITH FUSE
- NF — DISCONNECT SWITCH, WITHOUT FUSE
- R — RELAY
- PC — PHOTOELECTRIC CELL
- SWITCH, PUSH BUTTON, SINGLE
- SWITCH, PUSH BUTTON, DOUBLE
- SWITCH, PUSH BUTTON, TRIPLE
- J — JUNCTION BOX, CEILING
- J — FLUSH JUNCTION BOX, WALL MOUNTED
- J — SURFACE JUNCTION BOX, CEILING MOUNTED
- J — SURFACE JUNCTION BOX, WALL MOUNTED
- PB — PULL BOX
- EQUIPMENT CONNECTION
- EQUIPMENT CONNECTION

RECEPTACLES

DIAGONAL LINE THROUGH SYMBOL OR DENOTED 'AC' INDICATES MOUNT DEVICE ABOUT COUNTER. WHERE INDICATED AS 'MOUNT ABOVE COUNTER' MOUNT BOTTOM OF BOX 2" ABOVE TOP OF BACKSPLASH OR 6" ABOVE COUNTERTOP IF NO BACKSPLASH EXISTS.

- SIMPLEX RECEPTACLE
- DUPLEX RECEPTACLE
- DUPLEX RECEPTACLE, GFI TYPE
- DUPLEX RECEPTACLE, MOUNT ABOVE COUNTER
- DUPLEX RECEPTACLE, GFI TYPE, MOUNT ABOVE COUNTER
- FOURPLEX RECEPTACLE
- FOURPLEX RECEPTACLE, GFI TYPE
- FOURPLEX RECEPTACLE, MOUNT ABOVE COUNTER
- FOURPLEX RECEPTACLE, GFI TYPE, MOUNT ABOVE COUNTER
- DUPLEX RECEPTACLE, FLUSH IN CEILING
- WP — WEATHER RESISTANT GFI DUPLEX RECEPTACLE, MOUNT 18" AFF WITH A WEATHERPROOF, IN-USE COVER
- A — SPECIAL RECEPTACLE (MARK INDICATES OUTLET IN SCHEDULE)
- FLUSH FLOOR OUTLET BOX
- FLUSH FLOOR BOX WITH DUPLEX RECEPTACLE
- FLUSH FLOOR BOX WITH FOURPLEX RECEPTACLE
- MULTIDEVICE FLOOR BOX WITH DUPLEX AND DATA OUTLETS, DIVIDED 2 GANG BOX WITH SINGLE GANG PLASTER RING
- MULTI-RECEPTACLE STRIP, SPACING AS INDICATED
- DIVIDED RACEWAY

SAFETY

- FIRE ALARM CONTROL PANEL
- FAA — FIRE ALARM ANNUNCIATOR PANEL
- NAC — N.A.C. EXTENDER PANEL
- F — MANUAL FIRE ALARM PULL STATION
- F — FIRE ALARM BELL
- F — FIRE ALARM HORN
- F — FIRE ALARM VISUAL WARNING SIGNAL
- F — FIRE ALARM BELL, WITH VISUAL WARNING SIGNAL
- F — FIRE ALARM HORN, WITH VISUAL WARNING SIGNAL
- F — MINI FIRE ALARM HORN, WITH VISUAL WARNING SIGNAL
- F — FIRE ALARM SPEAKER, WITH VISUAL WARNING SIGNAL
- F — FIRE ALARM SPEAKER, FLUSH IN CEILING
- F — FIRE ALARM SPEAKER, WITH VISUAL WARNING SIGNAL, CEILING
- F — FIRE ALARM VISUAL WARNING SIGNAL, CEILING
- E — ECS SPEAKER, FLUSH IN CEILING
- E — ECS SPEAKER, WITH VISUAL WARNING SIGNAL, CEILING
- E — ECS VISUAL WARNING SIGNAL, CEILING

GENERAL LIGHTING NOTES

1 ALL RECESSED LIGHTING FIXTURES IN LAY-IN CEILINGS SHALL BE INSTALLED WITH 6' LONG FLEXIBLE METAL CONDUIT.
2 ALL MOUNTING HEIGHTS FOR LIGHTING FIXTURES ARE TO THE BOTTOM OF THE FIXTURES UNLESS INDICATED OTHERWISE.
3 SEE ARCHITECTURAL EXTERIOR ELEVATIONS FOR MOUNTINGbHEIGHTS OF EXTERIOR LIGHTING FIXTURES.
4 REFER TO SECTION 26 0519 FOR MINIMUM CONDUCTOR SIZE ADJUSTMENTS FOR VOLTAGE DROP.
5 **FOR TYPICAL PROJECTS WHERE WIRING IS SHOWN (EDIT AS NEEDED):
6 WIRE COUNTS FOR CIRCUIT CONDUCTORS ARE NOT SHOWN. PROVIDE PROPER NUMBER OF CONDUCTORS TO ACHIEVE CIRCUIT AND SWITCHING CONNECTIONS SHOWN.
7 MODIFICATIONS TO NUMBER OF CONDUCTORS IN HOME RUNS IN ADDITION TO CIRCUITS INDICATED ON THIS DRAWING ARE PROHIBITED.
8 **FOR TYPICAL PROJECTS WHERE WIRING IS NOT SHOWN (EDIT AS NEEDED):
9 CIRCUIT WIRING IS NOT SHOWN EXCEPT FOR SWITCHING INTENT OF FIXTURES AND CONTROL OF DEVICES.
10 PROVIDE PROPER NUMBER OF CONDUCTORS TO ACHIEVE CIRCUITING AND SWITCHING SHOWN.
11 CIRCUIT NUMBERS AT DEVICES CORRESPOND TO PANELBOARD BREAKERS (SEE PANELBOARD SCHEDULE). BRANCH CIRCUITS SHALL BE SIZED ACCORDING TO THE CIRCUIT BREAKER RATING, UNLESS INDICATED OTHERWISE ON THE ELECTRICAL EQUIPMENT SCHEDULE.

GENERAL SYSTEMS NOTES

1 ELECTRICAL CONTRACTOR SHALL BE RESPONSIBLE FOR WIRING ALL ELECTRICAL ITEMS SHOWN ON THE DRAWINGS, EXCEPT ITEMS LISTED ON SHEET E0.01 GENERAL ELECTRICAL NOTES.
2 SEE FIRE ALARM ZONE SCHEDULE FOR INITIATING ZONES AND SIGNAL CIRCUITS.
3 MAXIMUM NUMBER OF 4 INFORMATION OUTLET LOCATIONS PER CONDUIT HOME RUN TO MDF OR IDF IS PERMITTED. CONDUIT SHALL BE SIZED AS FOLLOWS
   1 INFORMATION OUTLET LOCATION: 1"
   2 INFORMATION OUTLET LOCATIONS: 1 1/4"
   3 INFORMATION OUTLET LOCATIONS: 1 1/2"
4 **SELECT NEXT NOTE FOR PROJECT REQUIREMENT**
5 ALL COMMUNICATIONS CABLES SHALL BE INSTALLED IN CONDUIT, CABLE TRAY, OR SUPPORTED BY CABLE HOOKS. PROVIDE BUSHINGS AT THE ENDS OF ALL CONDUIT WHERE STUBBED ABOVE ACCESSIBLE CEILINGS OR WHERE DROPPED INTO CABLE TRAY. PROVIDE CABLE HOOKS ABOVE ACCESSIBLE CEILINGS FOR CABLE INSTALLATION WHERE NOT INSTALLED IN CONDUIT OR CABLE TRAY.
6 ALL COMMUNICATIONS CABLES SHALL BE INSTALLED IN CONDUIT OR CABLE TRAY.

* NOTE *

ALL OF NOTES ON THIS SHEET ARE TO BE APPLIED TO ALL OTHER DRAWINGS IN THIS SET.

THE SYMBOLS AND ABBREVIATIONS SHOWN ON THIS SHEET MAY OR MAY NOT BE USED IN THIS SET OF DRAWINGS.

DLR Group
© DLR Group
- NOT FOR CONSTRUCTION -

CULINARY CLASSROOM
Westview High School - Beaverton School District
4200 NW 185th Ave, Portland, OR 97229

50%CD
01/20/21
REVISIONS

74-21106-00

ELECTRICAL SYMBOLS, ABBREVIATIONS & NOTES

E0.1

BIM 360://74-21106-00 Westview HS Culinary/74-21106-00_WHSC_MEP_2020.rvt
1/22/2021 12:10:04 PM

SHEET NOTES

1. DEMO CONNECTION TO EXISTING RANGE. CIRCUIT TO REMAIN FOR FUTURE RANCE RECEPTACLE.
2. DEMO CONNECTION TO EXISTING RANGE. DEMO WIRING AND CONDUIT BACK TO LAST DEVICE OT REMAIN.
3. DEMO CONNECTION TO EXISTING RANGE HOOD. CIRCUIT TO REMAIN FOR FUTURE CONNECTION TO NEW HOOD.
4. DEMO CONNECTION TO EXISTING RANGE HOOD . DEMO WIRING AND CONDUIT BACK TO LAST DEVICE OT REMAIN.
5. DEMO CONNECTION TO EXISTING DISPOSER . DEMO WIRING AND CONDUIT BACK TO LAST DEVICE OT REMAIN, INCLUDING ANY SWITCH THAT MAY BE PRESENT.
6. DEMO CONNECTION TO EXISTING DISHWASHER. WIRING TO REMAIN FOR CONNECTION TO NEW MICROWAVE.
7. CIRCUIT TO REMAIN FOR NEW FRIDGE.
8. DEMO POWER AND DATA RECEPTACLE FOR TV.
9. RESUSE EXISTING CIRCUIT FOR NEW FREEZER
10. RECEPTACLE TO BE RELOCATED ABOVE COUNTER
11. RELOCATE EXISTING RECEPTACLE SOUTH. SEE NEW PLAN FOR FINAL LOCATION.

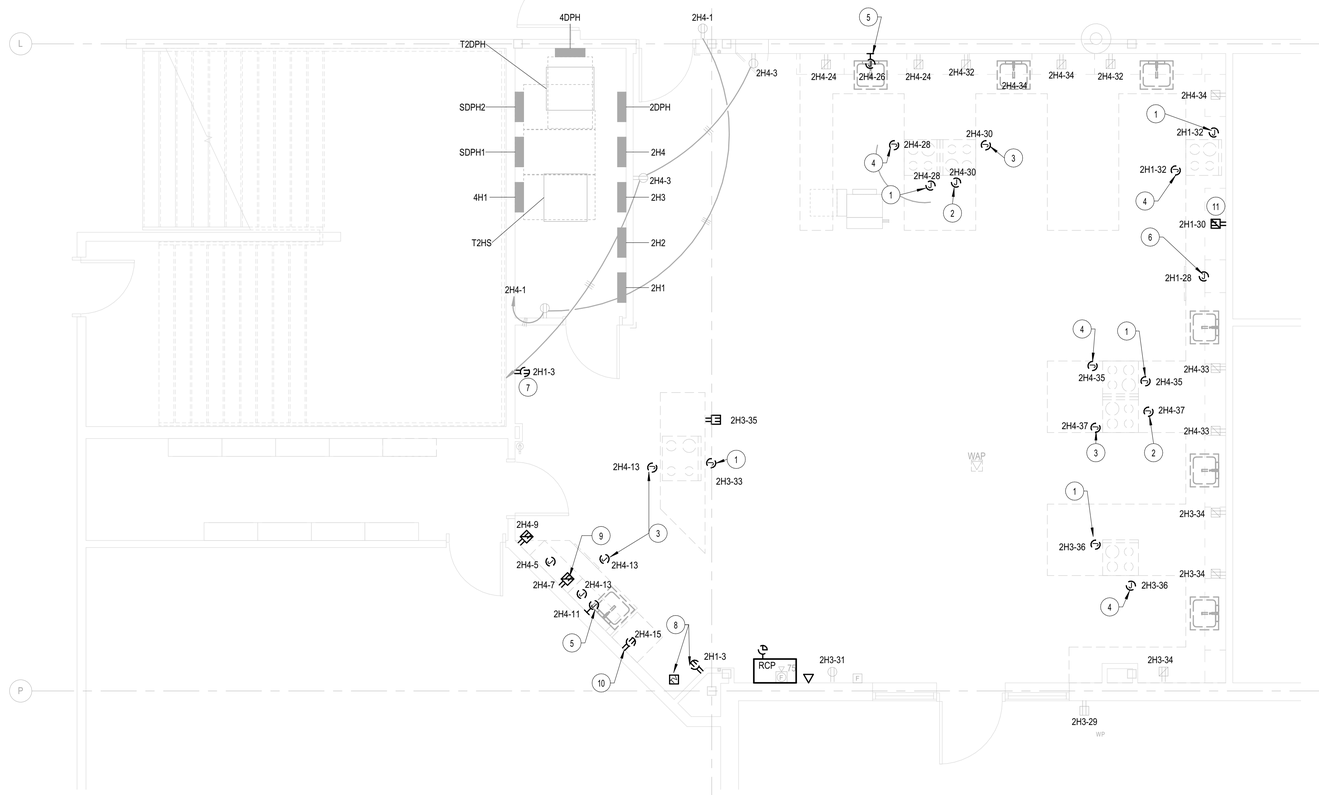

N
TRUE

FIRST LEVEL POWER DEMOLITION PLAN

SCALE: 1/4" = 1'-0"

DLR Group
© DLR Group

- NOT FOR CONSTRUCTION -

CULINARY CLASSROOM
Westview High School - Beaverton School District
4200 NW 185th Ave, Portland, OR 97229

50%CD
01/20/21
REVISIONS

74-21106-00

FIRST LEVEL POWER DEMOLITION PLAN

ED1.1

BIM 360://74-21106-00 Westview HS Culinary/74-21106-00_WHSC_MEP_2020.rvt
1/22/2021 12:10:19 PM

SHEET NOTES

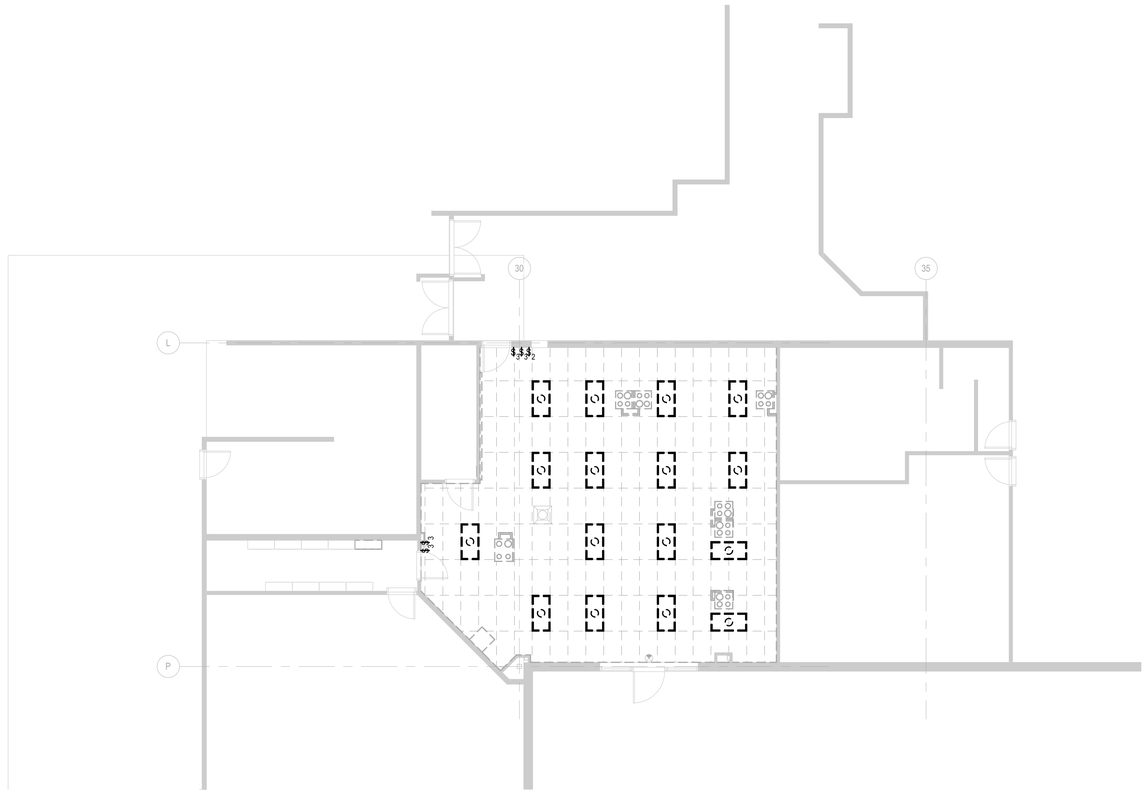

N
TRUE

FIRST LEVEL LIGHTING DEMOLITION PLAN

SCALE: 1/8" = 1'-0"

DLR Group
© DLR Group

- NOT FOR CONSTRUCTION -

CULINARY CLASSROOM

Westview High School - Beaverton School District

4200 NW 185th Ave, Portland, OR 97229

50%CD
01/20/21
REVISIONS

74-21106-00

FIRST LEVEL LIGHTING DEMOLITION PLAN

ED1.2

BIM 360://74-21106-00 Westview HS Culinary/74-21106-00_WHSC_MEP_2020.rvt
1/22/2021 12:10:20 PM

N
TRUE

FIRST LEVEL REFLECTED CEILING PLAN

SCALE: 1/4" = 1'-0"

SHEET NOTES

1. KENALL SIMPLESEAL RECESSED GRID 2X2 LED TROFFER RATED FOR FOOD PREP. SYMMETRIC OPTIC WITH DIFFUSED, IMAPCT RESISTANT ACRYLIC LENS. CLEAR POLYCARBONATE 20GA DOOR FRAME AND HOUSING.
   MODEL NO: CSEDO22-45LD-35K8-DIM1-DV-5F-2H-SYM-FN
2. CEILING MOUNT CAMERA ABOVE TEACHER'S STATION. CAMERA TO BE TIED TO THE PROJECTOR SCREEN.
   BASIS OF DESIGN: LEGRAND EASYIP ECOSYSTEM.
3. EXISTING FIRE ALARM DEVICES TO REMAIN.
4. EXISTING EXIT SIGN TO BE SAVED FOR RE-USE.
5. EXISTING WAP TO BE SAVED FOR RE-USE.

DLR Group
© DLR Group

- NOT FOR CONSTRUCTION -

CULINARY CLASSROOM

Westview High School - Beaverton School District

4200 NW 185th Ave, Portland, OR 97229

50%CD
01/20/21
REVISIONS

74-21106-00

FIRST LEVEL REFLECTED CEILING PLAN

E1.1

BIM 360://74-21106-00 Westview HS Culinary/74-21106-00_VWHSC_MEP_2020.rvt
1/22/2021 12:10:05 PM

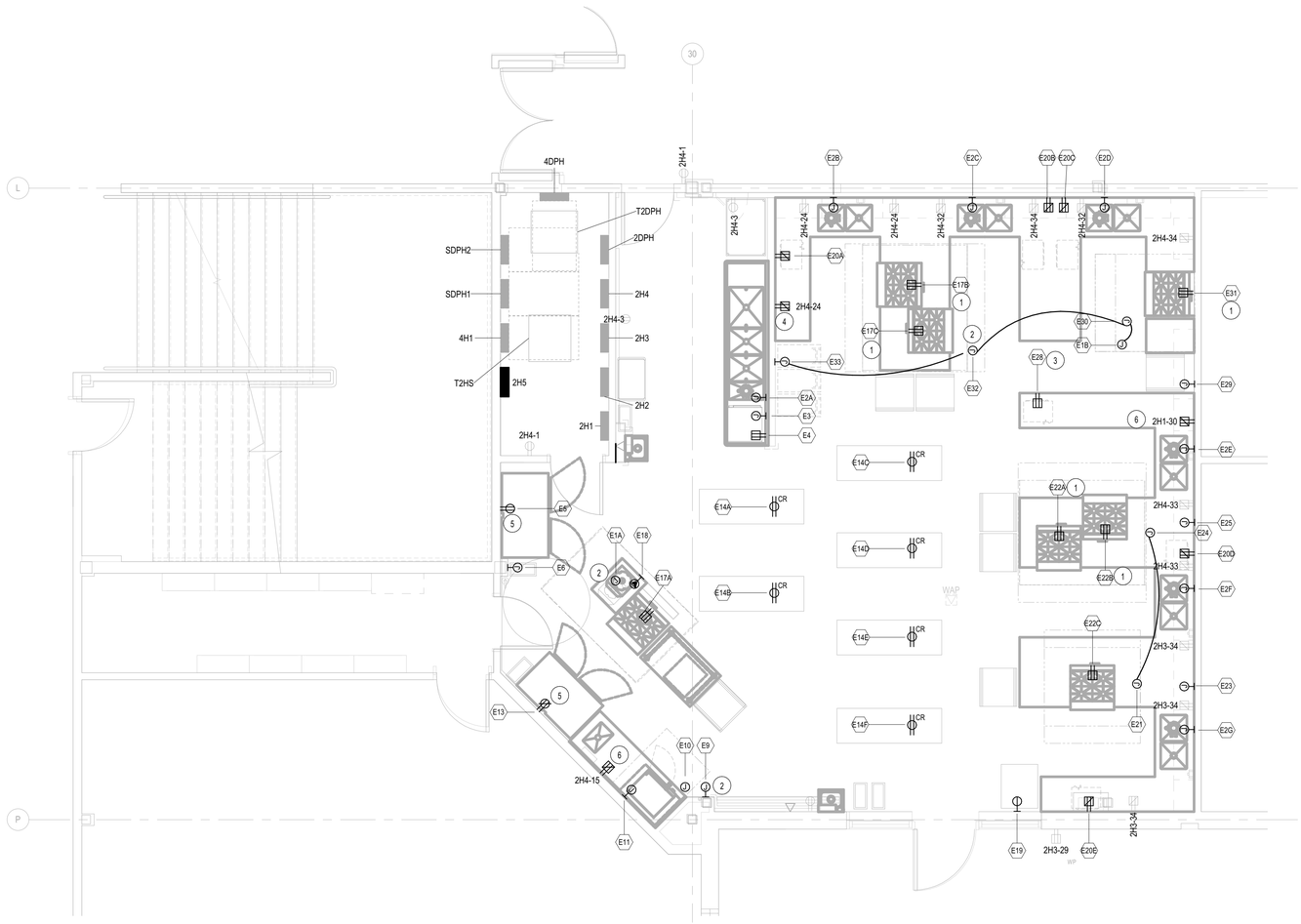

N
TRUE

FIRST LEVEL POWER PLAN

SCALE: 1/4" = 1'-0"

SHEET NOTES

1 UTILIZE EXISTING CIRCUIT FOR RANGE RECEPTACLES
2 UTILIZE EXISTING CIRCUIT FOR CONNECTION TO THIS HOOD.
3 UTILIZE EXISTING CIRCUIT FOR CONNECTION TO THIS MICROWAVE.
4 EXTEND EXISTING RECEPTACLE CIRCUIT TO THIS NEW RECEPTACLE.

ELECTRICAL CONNECTION SCHEDULE - KITCHEN

MARK	EQUIPMENT NAME	ELECTRICAL DATA	CONNECTION TYPE	MOUNTING HEIGHT	FEEDER	PANEL	Circuit Number	SCHEDULE NOTES
E1A	CANOPY HOOD DEMAND CONTROL PANEL	120 V/1-1800 VA	J-BOX	5' - 0"	2#12, #12G, 3/4"C			SEE NOTE 2
E1B	CANOPY HOOD DEMAND CONTROL PANEL	120 V/1-1200 VA	J-BOX	5' - 0"	2#12, #12G, 3/4"C	2H4	30	SEE NOTE 2
E2A	DISPOSER	208 V/3-1333 VA	J-BOX	1' - 0"	3#12, #12G, 3/4"C			SEE NOTE 3
E2B	DISPOSER	208 V/3-1333 VA	J-BOX	1' - 0"	3#12, #12G, 3/4"C	2H5	1,3,5	SEE NOTE 3
E2C	DISPOSER	208 V/3-1333 VA	J-BOX	1' - 0"	3#12, #12G, 3/4"C	2H5	1,3,5	SEE NOTE 3
E2D	DISPOSER	208 V/3-1333 VA	J-BOX	1' - 0"	3#12, #12G, 3/4"C	2H5	1,3,5	SEE NOTE 3
E2E	DISPOSER	208 V/3-1333 VA	J-BOX	1' - 0"	3#12, #12G, 3/4"C	2H5	7,9,11	SEE NOTE 3
E2F	DISPOSER	208 V/3-1333 VA	J-BOX	1' - 0"	3#12, #12G, 3/4"C	2H5	7,9,11	SEE NOTE 3
E2G	DISPOSER	208 V/3-1333 VA	J-BOX	1' - 0"	3#12, #12G, 3/4"C	2H5	7,9,11	SEE NOTE 3
E3	UNDERCOUNTER DISHWASHER	208 V/3-8610 VA	J-BOX	1' - 0"	3#10, #10G, 3/4"C			
E4	WAREWASHER DETERGENT FEED	120 V/1-1440 VA	NEMA 5-15R	1' - 0"	2#12, #12G, 3/4"C			
E5	REACH-IN REFRIGIRATOR	120 V/1-984 VA	NEMA 5-15R	7' - 0"	2#12, #12G, 3/4"C			
E6	CANOPY HOOD ROOM SENSOR CONTROL	120 V/1-0 VA		4' - 0"				WIRE TO HOOD SC CONTROL BOARD W/2-WIRE LOW VOLT. CABLE
E9	CANOPY HOOD ROOM SENSOR CONTROL	120 V/1-0 VA		4' - 0"				WIRE TO HOOD SC CONTROL BOARD W/2-WIRE LOW VOLT. CABLE
E10	CANOPY HOOD LIGHT AND HOOD CONTROLS	120 V/1-1800 VA	J-BOX	10' - 0"	2#12, #12G, 3/4"C			
E11	COMBI-OVEN STEAMER	208 V/3-11100 VA	J-BOX	1' - 6"	3#8, #10G, 3/4"C			SEE NOTE 1
E12A	CONVENIENCE OUTLET	120 V/1-1440 VA	NEMA 5-15R	4' - 0"	2#12, #12G, 3/4"C			DEDICATED CIRCUIT
E12B	CONVENIENCE OUTLET	120 V/1-180 VA	NEMA 5-15R	4' - 0"	2#12, #12G, 3/4"C	2H4	24	DEDICATED CIRCUIT
E12F	CONVENIENCE OUTLET	120 V/1-1440 VA	NEMA 5-15R	4' - 0"	2#12, #12G, 3/4"C			DEDICATED CIRCUIT
E13	REACH-IN FREEZER	120 V/1-1344 VA	NEMA 5-15R	7' - 0"	2#12, #12G, 3/4"C			DEDICATED CIRCUIT. CEILING DROP CORDS
E14A	CONVENIENCE OUTLET	120 V/1-180 VA	NEMA 5-15R	12' - 0"	2#12, #12G, 3/4"C	2H5	15	DEDICATED CIRCUIT. CEILING DROP CORDS
E14B	CONVENIENCE OUTLET	120 V/1-180 VA	NEMA 5-15R	12' - 0"	2#12, #12G, 3/4"C	2H5	15	DEDICATED CIRCUIT. CEILING DROP CORDS
E14C	CONVENIENCE OUTLET	120 V/1-180 VA	NEMA 5-15R	12' - 0"	2#12, #12G, 3/4"C	2H5	13	DEDICATED CIRCUIT. CEILING DROP CORDS
E14D	CONVENIENCE OUTLET	120 V/1-180 VA	NEMA 5-15R	12' - 0"	2#12, #12G, 3/4"C	2H5	13	DEDICATED CIRCUIT. CEILING DROP CORDS
E14E	CONVENIENCE OUTLET	120 V/1-180 VA	NEMA 5-15R	12' - 0"	2#12, #12G, 3/4"C	2H5	17	DEDICATED CIRCUIT. CEILING DROP CORDS
E14F	CONVENIENCE OUTLET	120 V/1-180 VA	NEMA 5-15R	12' - 0"	2#12, #12G, 3/4"C	2H5	17	DEDICATED CIRCUIT. CEILING DROP CORDS
E17A	4-BURNER OPEN RANGE	120 V/1-480 VA	NEMA 5-15R	1' - 0"	2#12, #12G, 3/4"C			SEE NOTE 1
E17B	4-BURNER OPEN RANGE	120 V/1-480 VA	NEMA 5-15R	1' - 0"	2#12, #12G, 3/4"C	2H4	28	SEE NOTE 1
E17C	4-BURNER OPEN RANGE	120 V/1-480 VA	NEMA 5-15R	1' - 0"	2#12, #12G, 3/4"C	2H4	28	SEE NOTE 1
E18	INDUCTION WOK	208 V/3-1441 VA	NEMA 6-30R	2' - 0"	3#10, #10G, 3/4"C			DEDICATED CIRCUIT
E19	MOBILE PROOFING CABINET	120 V/1-1920 VA	NEMA 5-20R	2' - 0"	2#12, #12G, 3/4"C			
E20A	MICROWAVE OVEN	120 V/1-1608 VA	NEMA 5-15R	2' - 0"	2#12, #12G, 3/4"C	2H5	2	
E20B	MICROWAVE OVEN	120 V/1-1608 VA	NEMA 5-15R	2' - 0"	2#12, #12G, 3/4"C	2H5	4	
E20C	MICROWAVE OVEN	120 V/1-1608 VA	NEMA 5-15R	2' - 0"	2#12, #12G, 3/4"C	2H5	6	
E20D	MICROWAVE OVEN	120 V/1-1608 VA	NEMA 5-15R	2' - 0"	2#12, #12G, 3/4"C	2H5	8	
E20E	MICROWAVE OVEN	120 V/1-1608 VA	NEMA 5-15R	2' - 0"	2#12, #12G, 3/4"C	2H5	10	
E21	CANOPY HOOD LIGHTS AND HOOD CONTROLS	120 V/1-1800 VA	J-BOX	10' - 0"	2#12, #12G, 3/4"C	2H4	37	SEE NOTE 2
E22A	4-BURNER OPEN RANGE	120 V/1-480 VA	NEMA 5-15R	1' - 0"	2#12, #12G, 3/4"C	2H4	35	SEE NOTE 1
E22B	4-BURNER OPEN RANGE	120 V/1-480 VA	NEMA 5-15R	1' - 0"	2#12, #12G, 3/4"C	2H4	35	SEE NOTE 1
E22C	4-BURNER OPEN RANGE	120 V/1-480 VA	NEMA 5-15R	1' - 0"	2#12, #12G, 3/4"C	2H3	36	SEE NOTE 1
E23	CANOPY HOOD ROOM SENSOR CONTROL	120 V/1-0 VA		4' - 0"				WIRE TO HOOD SC CONTROL BOARD W/2-WIRE LOW VOLT. CABLE
E24	CANOPY HOOD LIGHTS AND HOOD CONTROLS	120 V/1-1800 VA	J-BOX	10' - 0"	2#12, #12G, 3/4"C	2H4	37	SEE NOTE 2
E25	CANOPY HOOD ROOM SENSOR CONTROL	120 V/1-0 VA		4' - 0"				WIRE TO HOOD SC CONTROL BOARD W/2-WIRE LOW VOLT. CABLE
E28	MICROWAVE OVEN	120 V/1-1608 VA	NEMA 5-15R	2' - 0"	2#12, #12G, 3/4"C	2H1	28	
E29	CANOPY HOOD ROOM SENSOR CONTROL	120 V/1-0 VA		4' - 0"				WIRE TO HOOD SC CONTROL BOARD W/2-WIRE LOW VOLT. CABLE
E30	CANOPY HOOD LIGHTS AND HOOD CONTROLS	120 V/1-1800 VA	J-BOX	10' - 0"	2#12, #12G, 3/4"C	2H4	30	SEE NOTE 2
E31	4-BURNER OPEN RANGE	120 V/1-480 VA	NEMA 5-15R	1' - 0"	2#12, #12G, 3/4"C	2H1	32	SEE NOTE 1
E32	CANOPY HOOD LIGHTS AND HOOD CONTROLS	120 V/1-1800 VA	J-BOX	10' - 0"	2#12, #12G, 3/4"C	2H4	30	SEE NOTE 2
E33	CANOPY HOOD ROOM SENSOR CONTROL	120 V/1-0 VA		4' - 0"				WIRE TO HOOD SC CONTROL BOARD W/2-WIRE LOW VOLT. CABLE

NOTE 1:PROVIDE A SHUNT TRIP BREAKER OR SEPARATE CONTACTOR WIRED TO FIRE SUPPRESSION SYSTEM TO SHUT OFF RANGE VIA THE FIRE HOOD CONTROLLER. SEE HOOD DRAWINGS FOR CONNECTION DETAILS..
NOTE 2: PROVIDE CONNECTION TO FIRE SUPPRESSION PANEL AS REQUIRED. PROVIDE ALL FIELD WIRING REQUIRED FOR COMPLETE INSTALLATION INCLUDING CONTROL WIRING FOR SHUNT TRIP BREAKERS OR CONTACTORS FOR APPLIANCES LOCATED UNDER THE HOOD. PROVIDE A DOUBLE GANG 4-INCH SQUARE J-BOX WITH CONDUIT TO THE FIRE SUPPRESSION SYSTEM PANEL FOR FIRE PULL STATION INSTALLATION. COORDINATE WITH KITCHEN EQUIPMENT SUPPLIER/INSTALLER FOR EXACT REQUIREMENTS.
NOTE 3: PROVIDE CONNECTION TO DISPOSER CONTROL PANEL. SEE FOOD SERVICE DRAWINGS AND MANUFACTURER'S DRAWINGS FOR MORE INFO.

DLR Group
© DLR Group

- NOT FOR CONSTRUCTION -

CULINARY CLASSROOM
Westview High School - Beaverton School District
4200 NW 185th Ave, Portland, OR 97229

50%CD
01/20/21
REVISIONS

74-21106-00

FIRST LEVEL POWER PLAN

E2.1

BIM 360://74-21106-00 Westview HS Culinary/74-21106-00_WHSC_MEP_2020.rvt
1/22/2021 12:10:05 PM

SHEET NOTES

1. PROVIDE CONNECTION TO ROOFTOP MECHANICAL VIA HOOD CONTROLLER. SEE HOOD SUBMITTAL FOR EXACT CONNECTION DETAILS.
2. COORDINATE WITH DIV 23 AND HOOD CONTROL MANUFACTURER'S WIRING REQUIREMENTS FOR CONNECTIONS TO MAU.

MECHANICAL AND PLUMBING EQUIPMENT CONNECTION SCHEDULE - ELECTRICAL

Mark	Unit Serves	Unit HP	Unit Disconnect	Electrical Data	Unit FLA	Unit MCA	Unit MOCP	Panel	Circuit Number	Unit Feeder	Notes
EF-1	EXHAUST FAN	7.5	30	480 V/3-9228 VA	11.1 A	13.9 A	15.0 A	4H1	19,21,23	3#12, #12G, 3/4"C	
EF-2	EXHAUST FAN	3	30	480 V/3-3576 VA	4.3 A	5.4 A	15.0 A	4H1	25,27,29	3#12, #12G, 3/4"C	
MAU-1	MAKEUP AIR UNIT	5	30	480 V/3-4158 VA	5.0 A	6.3 A	15.0 A	4H1	13,15,17	3#12, #12G, 3/4"C	

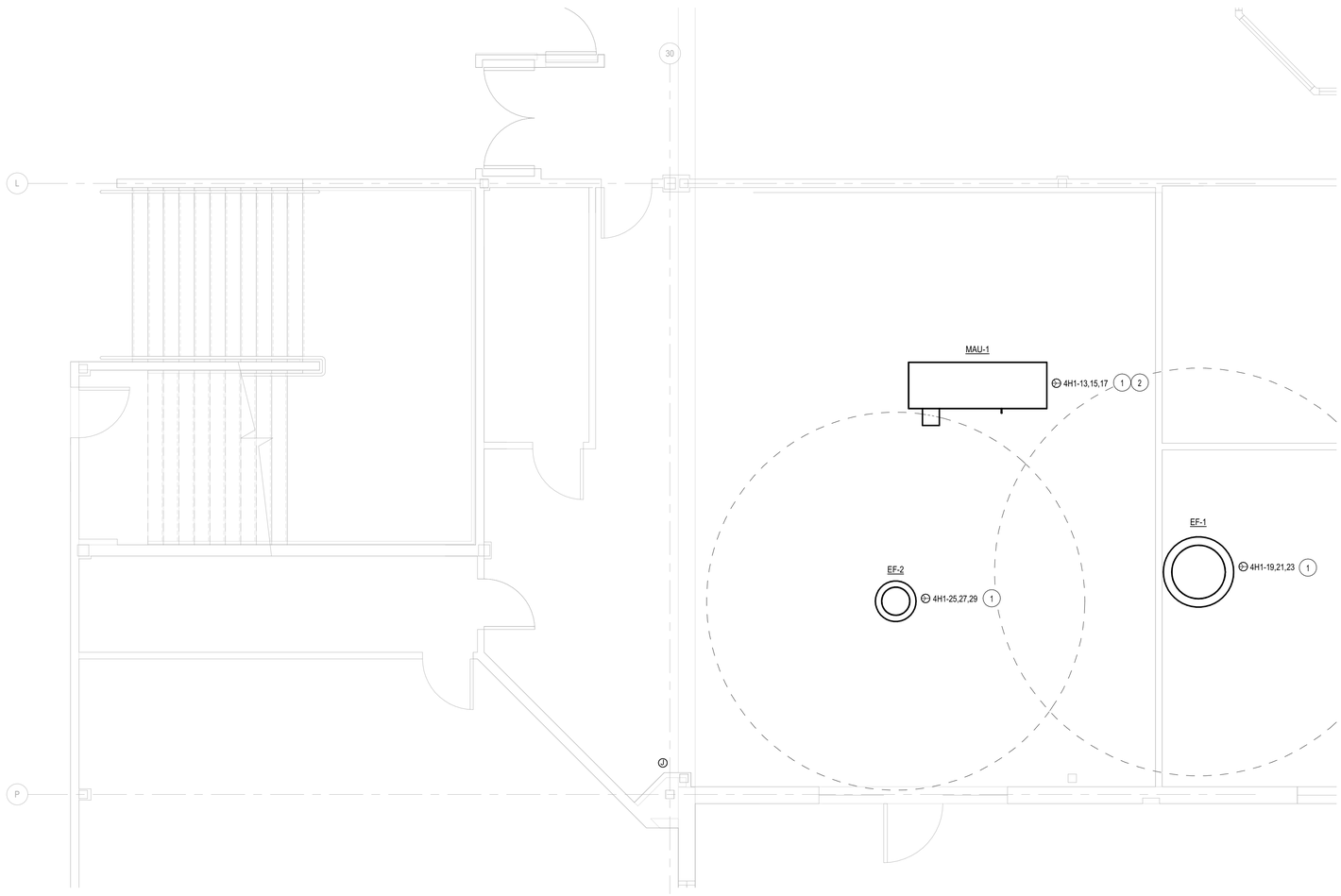

N
TRUE

SECOND LEVEL POWER PLAN

SCALE: 1/4" = 1'-0"

DLR Group
© DLR Group

- NOT FOR CONSTRUCTION -

CULINARY CLASSROOM

Westview High School - Beaverton School District

4200 NW 185th Ave, Portland, OR 97229

50%CD
01/20/21
REVISIONS

74-21106-00

SECOND LEVEL POWER PLAN

E2.2

BIM 360://74-21106-00 Westview HS Culinary/74-21106-00_WHSC_MEP_2020.rvt
1/22/2021 12:10:06 PM

ONE-LINE DIAGRAM

SCALE: 1 1/2" = 1'-0"

DLR Group
© DLR Group

- NOT FOR CONSTRUCTION -

CULINARY CLASSROOM
Westview High School - Beaverton School District
4200 NW 185th Ave, Portland, OR 97229

50%CD
01/20/21
REVISIONS

74-21106-00

ONE-LINE DIAGRAM

E5.1

BIM 360://74-21106-00 Westview HS Culinary/74-21106-00_WHSC_MEP_2020.rvt
1/22/2021 12:10:06 PM

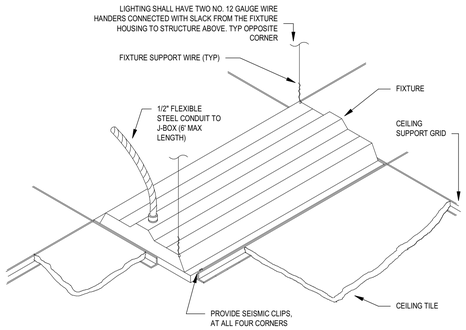

1 E6.1 RECESSED FIXTURE SEISMIC SUPPORT
NO SCALE

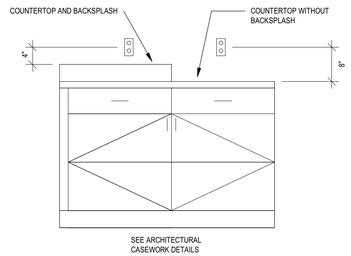

2 E6.1 ABOVE COUNTER RECEPTACLES
SCALE: 1'2" = 1'-0"

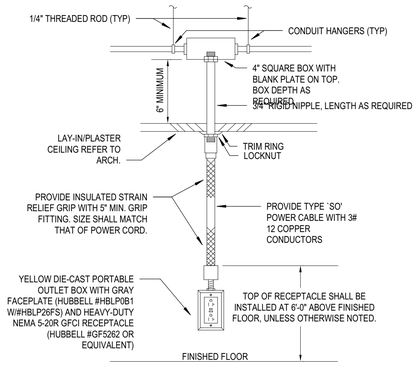

3 E6.1 DROP CORD DETAIL
SCALE: 3/16" = 1'-0"

DLR Group
© DLR Group

- NOT FOR CONSTRUCTION -

CULINARY CLASSROOM
Westview High School - Beaverton School District
4200 NW 185th Ave, Portland, OR 97229

50%CD
01/20/21
REVISIONS

74-21106-00

ELECTRICAL DETAILS

E6.1

BIM 360://74-21106-00 Westview HS Culinary/74-21106-00_WHSC_MEP_2020.rvt
1/22/2021 12:10:06 PM

A B C D E

1

PANEL SCHEDULE

PANEL:2A1-BEFORE | LOCATION: | VOLTS: | 208 Y/120 | PH:3-Phase | W:4-Wire
AMP MAIN BRKR: | AMP MLO:100 | SCCR: | 14,000 | MOUNT:SURFACE | FED FROM:

CIRCUIT DESCRIPTION	LOAD VA	CKT BKR	P	CIR #	P H	CIR #	P	CKT BKR	LOAD VA	CIRCUIT DESCRIPTION
REC A035	1080	20	1	1	A	2	1	20	360	REC A011
2 EWC	864	20	1	3	B	4	1	20	360	REC A011
REC A039,42	540	20	1	5	C	6	1	20	360	REC A011
REC A032,36	540	20	1	7	A	8	1	20	360	REC A011
2 EWC	864	20	1	9	B	10	1	20	360	REC A011
REC A027,35	360	20	1	11	C	12	1	20	360	REC A011
REC A035	1080	20	1	13	A	14	1	20	1080	REC A038
REC A035	1080	20	1	15	B	16	1	20	1080	REC A038
REC A035	1080	20	1	17	C	18	1	20	1080	REC A038
REC A035	1080	20	1	19	A	20	1	20	540	REC 31,35,106
REC A035	1080	20	1	21	B	22	1	20	540	REC 26,35,130
REC A035	1080	20	1	23	C	24	1	20	540	REC A25,29,38
2 EWC	864	20	1	25	A	26	1	20	300	PIT REC, LTG
2 EWC	864	20	1	27	B	28	1	20	864	9 SUMP PUMP
REC A006,8,10	540	20	1	29	C	30	1	20	200	10 CAB LIGHTS
REC 7,9,10,41	720	20	1	31	A	32	1	20	720	REC A07,12,42
REC A001	540	20	1	33	B	34	1	20		SPARE
REC A001	360	20	1	35	C	36	1	20		SPARE
REC A001	360	20	1	37	A	38	1	20		SPARE
2 EWC	864	20	1	39	B	40	1	20		SPARE
SPARE		20	1	41	C	42	1	20		SPARE

LOAD SUMMARY: CONNECTED FEEDER / SERVICE CALCULATION

	CONNECTED	FEEDER / SERVICE CALCULATION
LIGHTING	0.50KVA	0.63KVA (125%)
LARGEST MOTOR	0.00KVA	0.00KVA (125%)
MOTORS	5.18KVA	5.18KVA (100%)
RECEPT	19.26KVA	14.63KVA (10KVA @ 100%, REMAIN @ 50%)
KITCHEN EQUIPMENT	0.00KVA	0.00KVA (65%)
ELECTRONIC LOADS	0.00KVA	0.00KVA (100%)
ELECTRIC HEATING	0.00KVA	0.00KVA (100%)
MISC.	0.00KVA	0.00KVA (100%)
TOTALS	25KVA	20KVA HI-PHASE
	69AMPS	57AMPS 68A

PRIMARY FEEDER INPUT DATA:
Vl-l Primary: Volts
Motor (FLA): #DIV/0!
Avail. Fault (Iafc): Amps
Feeder Size: Awg.
Feeder Length (L): Ft.
Parallel Sets: 1
Power Factor % 90%
Feeder/Load Amps: Amps
'C' Value: Cu
'Volt Drop' Value:

SECONDARY FEEDER INPUT DATA:
Vl-l Secondary: Volts
Transformer KVA: KVA
Transformer Z%:
Avail. Fault (Iafc): Amps
Feeder Size: Awg.
Feeder Length (L): Ft.
Parallel Sets: 1
Power Factor % 90%
Feeder/Load Amps: Amps
'C' Value: Cu
'Volt Drop' Value:

NOTES:
1.
2.
3.
4.
5.
6.

VOLTAGE DROP CALCULATIONS:
Prim Vdrop = #VALUE! Volts
Prim Vdrop% = #VALUE!
Sec Vdrop = NA Volts
Sec Vdrop% =

RMS BOLTED 3 PHASE SHORT CIRCUIT CURRENT CALCULATIONS:
Isc (Xfmr Secondary) = N/A Amps
Isc (At Panel) = #VALUE! Amps
Isc (w/ motor contrib.) = #VALUE! Amps

V5.4

2

PANEL SCHEDULE

PANEL:2DPH-BEFORE | LOCATION: | VOLTS: | 208 Y/ 120 | PH:3-Phase | W:4-Wire
AMP MAIN BRKR:700 | AMP MLO: | SCCR: | 14,000 | MOUNT:SURFACE | FED FROM:

CIRCUIT DESCRIPTION	LOAD VA	CKT BKR	P	CIR #	P H	CIR #	P	CKT BKR	LOAD VA	CIRCUIT DESCRIPTION
PANEL 2A1	9084	100	3	1	A	2	3	100	10080	PANEL 2H3
-	9360	-	-	3	B	4	-	-	11340	-
-	6500	-	-	5	C	6	-	-	12960	-
PANEL 2H1	9088	100	3	7	A	8	3	225	19880	PANEL 2H4
-	10308	-	-	9	B	10	-	-	16574	-
-	11440	-	-	11	C	12	-	-	19206	-
PANEL 2H2	12595	125	3	13	A	14				SPACE
-	14132	-	-	15	B	16				-
-	13240	-	-	17	C	18				-
SPACE				19	A	20				SPACE
-				21	B	22				-
-				23	C	24				-
				25	A	26				
				27	B	28				
				29	C	30				
				31	A	32				
				33	B	34				
				35	C	36				
				37	A	38				
				39	B	40				
				41	C	42				

LOAD SUMMARY: CONNECTED FEEDER / SERVICE CALCULATION

	CONNECTED	FEEDER / SERVICE CALCULATION
LIGHTING	1.60KVA	2.00KVA (125%)
LARGEST MOTOR	0.00KVA	0.00KVA (125%)
MOTORS	22.27KVA	22.27KVA (100%)
RECEPT	96.84KVA	53.42KVA (10KVA @ 100%, REMAIN @ 50%)
KITCHEN EQUIPMENT	0.00KVA	0.00KVA (65%)
ELECTRONIC LOADS	0.00KVA	0.00KVA (100%)
ELECTRIC HEATING	0.00KVA	0.00KVA (100%)
MISC.	65.08KVA	65.08KVA (100%)
TOTALS	186KVA	143KVA HI-PHASE
	516AMPS	396AMPS 408A

PRIMARY FEEDER INPUT DATA:
Vl-l Primary: Volts
Motor (FLA): #DIV/0!
Avail. Fault (Iafc): Amps
Feeder Size: Awg.
Feeder Length (L): Ft.
Parallel Sets: 1
Power Factor % 90%
Feeder/Load Amps: Amps
'C' Value: Cu
'Volt Drop' Value:

SECONDARY FEEDER INPUT DATA:
Vl-l Secondary: Volts
Transformer KVA: KVA
Transformer Z%:
Avail. Fault (Iafc): Amps
Feeder Size: Awg.
Feeder Length (L): Ft.
Parallel Sets: 1
Power Factor % 90%
Feeder/Load Amps: Amps
'C' Value: Cu
'Volt Drop' Value:

NOTES:
1.
2.
3.
4.
5.
6.

VOLTAGE DROP CALCULATIONS:
Prim Vdrop = #VALUE! Volts
Prim Vdrop% = #VALUE!
Sec Vdrop = NA Volts
Sec Vdrop% =

RMS BOLTED 3 PHASE SHORT CIRCUIT CURRENT CALCULATIONS:
Isc (Xfmr Secondary) = N/A Amps
Isc (At Panel) = #VALUE! Amps
Isc (w/ motor contrib.) = #VALUE! Amps

V5.4

3

PANEL SCHEDULE

PANEL:2H1-BEFORE | LOCATION: | VOLTS: | 208 Y/120 | PH:3-Phase | W:4-Wire
AMP MAIN BRKR: | AMP MLO:100 | SCCR: | 14,000 | MOUNT:SURFACE | FED FROM:

CIRCUIT DESCRIPTION	LOAD VA	CKT BKR	P	CIR #	P H	CIR #	P	CKT BKR	LOAD VA	CIRCUIT DESCRIPTION
REC G101	540	20	1	1	A	2	1	20	864	75 EWC
REC G101	360	20	1	3	B	4	1	20	360	REC G101
REC G101	360	20	1	5	C	6	1	20	900	REC G101
REC G101	360	20	1	7	A	8	1	20	360	REC G103,EXT
REC G101	360	20	1	9	B	10	1	20	720	REC D163
REC G101	1080	20	1	11	C	12	1	20	720	REC D163
REC D161,167	540	20	1	13	A	14	1	20	360	REC D103,106
45 WASHER	1500	20	1	15	B	16	1	20	720	REC D163
REC D162	720	20	1	17	C	18	1	20	540	REC D163
REC D162	540	20	1	19	A	20	1	20	540	REC D163
REC D162	540	20	1	21	B	22	1	20	528	42 HEATER
46 GAS DRYER	200	20	1	23	C	24	1	20	1200	SPARK CONTROL
EF 29	1200	20	1	25	A	26	1	20	1200	ABORT GATE
243 EF/4	864	20	1	27	B	28	1	20	1440	COUNTER RECEPTACLE
REC ROOF	720	20	1	29	C	30	1	20	1440	REC COUNTER
247 EF/11A	864	20	1	31	A	32	1	20	900	REC 106-110
REC ROOF	720	20	1	33	B	34	1	20		SPARE
248 EF/11B	864	20	1	35	C	36	1	20	1000	EF CONTROL
REC ROOF	720	20	1	37	A	38	1	20	1000	HOBART
261 EF/7	696	20	1	39	B	40	1	20	1500	DISHWASHER
263 EF/30	696	20	1	41	C	42	1	20	1000	VAV BOXES

LOAD SUMMARY: CONNECTED FEEDER / SERVICE CALCULATION

	CONNECTED	FEEDER / SERVICE CALCULATION
LIGHTING	0.00KVA	0.00KVA (125%)
LARGEST MOTOR	0.00KVA	0.00KVA (125%)
MOTORS	5.38KVA	5.38KVA (100%)
RECEPT	16.56KVA	13.28KVA (10KVA @ 100%, REMAIN @ 50%)
KITCHEN EQUIPMENT	0.00KVA	0.00KVA (65%)
ELECTRONIC LOADS	0.00KVA	0.00KVA (100%)
ELECTRIC HEATING	0.00KVA	0.00KVA (100%)
MISC.	9.80KVA	9.80KVA (100%)
TOTALS	32KVA	28KVA HI-PHASE
	88AMPS	79AMPS 85A

PRIMARY FEEDER INPUT DATA:
Vl-l Primary: Volts
Motor (FLA): #DIV/0!
Avail. Fault (Iafc): Amps
Feeder Size: Awg.
Feeder Length (L): Ft.
Parallel Sets: 1
Power Factor % 90%
Feeder/Load Amps: Amps
'C' Value: Cu
'Volt Drop' Value:

SECONDARY FEEDER INPUT DATA:
Vl-l Secondary: Volts
Transformer KVA: KVA
Transformer Z%:
Avail. Fault (Iafc): Amps
Feeder Size: Awg.
Feeder Length (L): Ft.
Parallel Sets: 1
Power Factor % 90%
Feeder/Load Amps: Amps
'C' Value: Cu
'Volt Drop' Value:

NOTES:
1.
2.
3.
4.
5.
6.

VOLTAGE DROP CALCULATIONS:
Prim Vdrop = #VALUE! Volts
Prim Vdrop% = #VALUE!
Sec Vdrop = NA Volts
Sec Vdrop% =

RMS BOLTED 3 PHASE SHORT CIRCUIT CURRENT CALCULATIONS:
Isc (Xfmr Secondary) = N/A Amps
Isc (At Panel) = #VALUE! Amps
Isc (w/ motor contrib.) = #VALUE! Amps

V5.4

4

PANEL SCHEDULE

PANEL:2H2-BEFORE | LOCATION: | VOLTS: | 208 Y/120 | PH:3-Phase | W:4-Wire
AMP MAIN BRKR: | AMP MLO:225 | SCCR: | 14,000 | MOUNT:SURFACE | FED FROM:

CIRCUIT DESCRIPTION	LOAD VA	CKT BKR	P	CIR #	P H	CIR #	P	CKT BKR	LOAD VA	CIRCUIT DESCRIPTION
REC H101	360	20	1	1	A	2	1	20	720	109 DRYER
REC H106	540	20	1	3	B	4	1	20	864	108 WASHER
REC H107	180	20	1	5	C	6	1	30	1656	107 DISPOSER
REC H110	540	20	1	7	A	8	1	20	1080	REC H110
REC H105	540	20	1	9	B	10	1	20	864	105 REFRIG
REC H104	720	20	1	11	C	12	1	20	900	106, 110 HOOD
REC H108	360	20	1	13	A	14	1	20	1500	113 DISHWASH
REC H108	360	20	1	15	B	16	1	20	900	117 MICROWAVE
REC H108	540	20	1	17	C	18	1	20	720	REC H110
REC H112	360	20	1	19	A	20	1	20	720	REC H113, 114
REC H112	360	20	1	21	B	22	1	20	864	116 EWC
REC H112	360	20	1	23	C	24	1	20	864	116 EWC
NURSE CALL	75	20	1	25	A	26	1	20	600	LTG H130
DRYER 111	1000	20	1	27	B	28	1	20	1200	LASER
REC H130	720	20	1	29	C	30	1	20	1200	IN LASER RM
REC H130	360	20	1	31	A	32	1	20	1200	EF Z LASER
REC H130	720	20	1	33	B	34	1	20	1200	EF Z ROOM
REC H130	180	20	1	35	C	36	1	20	1200	EF Z EXHAUST
REC H128	720	20	1	37	A	38	3	50	4000	BUSWAY PRINT
REC H128	720	20	1	39	B	40	-	-	4000	-
SPARE		20	1	41	C	42	-	-	4000	-

LOAD SUMMARY: CONNECTED FEEDER / SERVICE CALCULATION

	CONNECTED	FEEDER / SERVICE CALCULATION
LIGHTING	0.60KVA	0.75KVA (125%)
LARGEST MOTOR	0.00KVA	0.00KVA (125%)
MOTORS	5.11KVA	5.11KVA (100%)
RECEPT	12.78KVA	11.39KVA (10KVA @ 100%, REMAIN @ 50%)
KITCHEN EQUIPMENT	0.00KVA	0.00KVA (65%)
ELECTRONIC LOADS	0.00KVA	0.00KVA (100%)
ELECTRIC HEATING	0.00KVA	0.00KVA (100%)
MISC.	21.48KVA	21.48KVA (100%)
TOTALS	40KVA	39KVA HI-PHASE
	111AMPS	107AMPS 114A

PRIMARY FEEDER INPUT DATA:
Vl-l Primary: 480 Volts
Motor (FLA): 6
Avail. Fault (Iafc): 31377 Amps
Feeder Size: #600 Awg.
Feeder Length (L): Ft.
Parallel Sets: 1
Power Factor % 90%
Feeder/Load Amps: Amps
'C' Value: 28033 Cu
'Volt Drop' Value: 65

SECONDARY FEEDER INPUT DATA:
Vl-l Secondary: Volts
Transformer KVA: KVA
Transformer Z%:
Avail. Fault (Iafc): Amps
Feeder Size: Awg.
Feeder Length (L): Ft.
Parallel Sets: 1
Power Factor % 90%
Feeder/Load Amps: Amps
'C' Value: Cu
'Volt Drop' Value:

NOTES:
1.
2.
3.
4.
5.
6.

VOLTAGE DROP CALCULATIONS:
Prim Vdrop = 0.00 Volts
Prim Vdrop% = 0.0%
Sec Vdrop = NA Volts
Sec Vdrop% =

RMS BOLTED 3 PHASE SHORT CIRCUIT CURRENT CALCULATIONS:
Isc (Xfmr Secondary) = N/A Amps
Isc (At Panel) = 31377 Amps
Isc (w/ motor contrib.) = 31408 Amps

V5.4

DLR Group
© DLR Group

- NOT FOR CONSTRUCTION -

CULINARY CLASSROOM
Westview High School - Beaverton School District
4200 NW 185th Ave, Portland, OR 97229

50%CD
01/20/21
REVISIONS

74-21106-00

EXISTING PANEL SCHEDULES

E7.1

BIM 360://74-21106-00 Westview HS Culinary/74-21106-00_WHSC_MEP_2020.rvt
1/22/2021 12:10:10 PM

A B C D E

1

PANEL SCHEDULE

PANEL:2H3-BEFORE | LOCATION: | VOLTS: 208Y/120 | PH:3-Phase | W:4-Wire
AMP MAIN BRKR: | AMP MLO:100 | SCCR: 14,000 | MOUNT:SURFACE | FED FROM:

CIRCUIT DESCRIPTION	LOAD VA	CKT BKR	P	CIR #	P H	CIR #	P	CKT BKR	LOAD VA	CIRCUIT DESCRIPTION
REC H103	1440	20	1	1	A	2	1	20	1080	REC H118
REC H119	540	20	1	3	B	4	1	20	1080	REC H118
REC H119	1080	20	1	5	C	6	1	20	1080	REC H118
REC H119	540	20	1	7	A	8	1	20	540	REC H118
REC H119	1080	20	1	9	B	10	1	20	540	REC H118
REC H118	720	20	1	11	C	12	1	20	540	REC H118
REC H120,121	1080	20	1	13	A	14	1	20	540	REC H118
REC H120,121	540	20	1	15	B	16	1	20	540	REC H118
REC H120,121	1080	20	1	17	C	18	1	20	1080	RECEPTACLE
REC H103	720	20	1	19	A	20	1	20	1080	SODA MACHINE
REC H118	720	20	1	21	B	22	1	20	1080	SODA MACHINE
REC H118	540	20	1	23	C	24	1	20	1080	REC H127
REC H117	540	20	1	25	A	26	1	20	1080	REC H127
REC H117	540	20	1	27	B	28	1	20	1080	REC H127
RECEPTACLE	360	20	1	29	C	30	1	20	1080	REC H127
REC OS	180	20	1	31	A	32	1	20	180	REC EXT
106 RANGE	180	20	1	33	B	34	1	20	1440	REC COUNTER
REC H129	1440	20	1	35	C	36	1	20	900	REC H106-110
SPARE		20	1	37	A	38	1	20	1080	SODA MACHINE
BENTO CART	900	20	1	39	B	40	1	20	1080	SODA MACHINE
BENTO CART	900	20	1	41	C	42	1	20	1080	SODA MACHINE

LOAD SUMMARY:	CONNECTED	FEEDER / SERVICE CALCULATION
LIGHTING	0.00KVA	0.00KVA (125%)
LARGEST MOTOR	0.00KVA	0.00KVA (125%)
MOTORS	0.00KVA	0.00KVA (100%)
RECEPT	34.38KVA	22.19KVA (10KVA @ 100%, REMAIN @ 50%)
KITCHEN EQUIPMENT	0.00KVA	0.00KVA (65%)
ELECTRONIC LOADS	0.00KVA	0.00KVA (100%)
ELECTRIC HEATING	0.00KVA	0.00KVA (100%)
MISC.	0.00KVA	0.00KVA (100%)
TOTALS	34KVA	22KVA HI-PHASE
	95AMPS	62AMPS 70A

PRIMARY FEEDER INPUT DATA:

VI-I Primary:		Volts
Motor (FLA):	#DIV/0!	
Avail. Fault (Iafc):		Amps
Feeder Size:		Awg.
Feeder Length (L):		Ft.
Parallel Sets:	1	
Power Factor %	90%	
Feeder/Load Amps:		Amps
'C' Value:		Cu
'Volt Drop' Value:		

SECONDARY FEEDER INPUT DATA:

VI-I Secondary:		Volts
Transformer KVA:		KVA
Transformer Z%:		
Avail. Fault (Iafc):		Amps
Feeder Size:		Awg.
Feeder Length (L):		Ft.
Parallel Sets:	1	
Power Factor %	90%	
Feeder/Load Amps:		Amps
'C' Value:		Cu
'Volt Drop' Value:		

NOTES:
1.
2.
3.
4.
5.
6.

VOLTAGE DROP CALCULATIONS:

Prim 'Vdrop =	#VALUE!	Volts
Prim Vdrop% =	#VALUE!	
Sec Vdrop =	NA	Volts
Sec Vdrop% =		

RMS BOLTED 3 PHASE SHORT CIRCUIT CURRENT CALCULATIONS:

Isc (Xfmr Secondary) =	N/A	Amps
Isc (At Panel) =	#VALUE!	Amps
Isc (w/ motor contrib.) =	#VALUE!	Amps

V5.4

2

PANEL SCHEDULE

PANEL:2H4-BEFORE | LOCATION: | VOLTS: 208Y/120 | PH:3-Phase | W:4-Wire
AMP MAIN BRKR: | AMP MLO:225 | SCCR: 14,000 | MOUNT:SURFACE | FED FROM:

CIRCUIT DESCRIPTION	LOAD VA	CKT BKR	P	CIR #	P H	CIR #	P	CKT BKR	LOAD VA	CIRCUIT DESCRIPTION
REC H130,132	360	20	1	1	A	2	1	20	1000	E84 MACHO
REC H129	540	20	1	3	B	4	1	20	1000	E85 WARMER
113 DISHWASH	1500	20	1	5	C	6	1	20	696	E86 REFRIG
REC MICROWAVE	1440	20	1	7	A	8	1	20	1000	E83 WARMER
REC H129	1440	20	1	9	B	10	1	20	1800	E82 HD GRILL
107 DISPOSER	1656	30	1	11	C	12	1	20	1800	E81 IC FREEZE
REC 106-110	1620	20	1	13	A	14	1	30	2000	E79 ESPRESSO
105 REFRIG	864	20	1	15	B	16	1	20	1500	E78 HOT CHOC
E68 JUICE	1000	20	1	17	C	18	1	20	1800	E76 POPCORN
SNACK BAR	1800	20	1	19	A	20	1	20	1000	E74,5 BUTTER
E73 CASH SYS	500	20	1	21	B	22	1	20	500	E73 CASH SYS
E70 LTG	500	20	1	23	C	24	1	20	1440	RECEPTACLE
E80 SOFT	1650	20	2	25	A	26	1	30	1656	107 DISPOSER
-	1650	-	-	27	B	28	1	20	900	REC 1106-110
YOGURT MACH/SNACK BAR	3150	40	2	29	C	30	1	20	900	REC 1106-110
-	3150	-	-	31	A	32	1	20	1440	REC COUNTER
REC COUNTER	1440	20	1	33	B	34	1	20	1440	REC COUNTER
REC 1106-110	900	20	1	35	C	36	1	20	864	263 EF/8
REC 1106-110	900	20	1	37	A	38	1	20	864	264 EF/31
OVEN S140	1500	20	2	39	B	40	2	20	1500	RNG S141
-	1500	-	-	41	C	42	-	-	1500	-

LOAD SUMMARY:	CONNECTED	FEEDER / SERVICE CALCULATION
LIGHTING	0.50KVA	0.63KVA (125%)
LARGEST MOTOR	0.00KVA	0.00KVA (125%)
MOTORS	6.60KVA	6.60KVA (100%)
RECEPT	14.76KVA	12.38KVA (10KVA @ 100%, REMAIN @ 50%)
KITCHEN EQUIPMENT	0.00KVA	0.00KVA (65%)
ELECTRONIC LOADS	0.00KVA	0.00KVA (100%)
ELECTRIC HEATING	0.00KVA	0.00KVA (100%)
MISC.	33.80KVA	33.80KVA (100%)
TOTALS	56KVA	53KVA HI-PHASE
	154AMPS	148AMPS 158A

PRIMARY FEEDER INPUT DATA:

VI-I Primary:		Volts
Motor (FLA):	#DIV/0!	
Avail. Fault (Iafc):		Amps
Feeder Size:		Awg.
Feeder Length (L):		Ft.
Parallel Sets:	1	
Power Factor %	90%	
Feeder/Load Amps:		Amps
'C' Value:		Cu
'Volt Drop' Value:		

SECONDARY FEEDER INPUT DATA:

VI-I Secondary:		Volts
Transformer KVA:		KVA
Transformer Z%:		
Avail. Fault (Iafc):		Amps
Feeder Size:		Awg.
Feeder Length (L):		Ft.
Parallel Sets:	1	
Power Factor %	90%	
Feeder/Load Amps:		Amps
'C' Value:		Cu
'Volt Drop' Value:		

NOTES:
1.
2.
3.
4.
5.
6.

VOLTAGE DROP CALCULATIONS:

Prim 'Vdrop =	#VALUE!	Volts
Prim Vdrop% =	#VALUE!	
Sec Vdrop =	NA	Volts
Sec Vdrop% =		

RMS BOLTED 3 PHASE SHORT CIRCUIT CURRENT CALCULATIONS:

Isc (Xfmr Secondary) =	N/A	Amps
Isc (At Panel) =	#VALUE!	Amps
Isc (w/ motor contrib.) =	#VALUE!	Amps

V5.4

3

PANEL SCHEDULE

PANEL:4DPH-BEFORE | LOCATION: | VOLTS: 480Y/277 | PH:3-Phase | W:4-Wire
AMP MAIN BRKR: | AMP MLO:1200 | SCCR: 14,000 | MOUNT:SURFACE | FED FROM:

CIRCUIT DESCRIPTION	LOAD VA	CKT BKR	P	CIR #	P H	CIR #	P	CKT BKR	LOAD VA	CIRCUIT DESCRIPTION
PANEL 4A1	5190	70	3	1	A	2	3	70	9575	PANEL 4H1
-	4540	-	-	3	B	4	-	-	7826	-
-	3100	-	-	5	C	6	-	-	3859	-
PANEL 4DPM	81113	300	3	7	A	8	3	300	60727	PANEL 2DPH VIA XFMR
-	81113	-	-	9	B	10	-	-	61714	-
-	81113	-	-	11	C	12	-	-	63346	-
SPACE				13	A	14				SPACE
-				15	B	16				-
-				17	C	18				-
SPACE				19	A	20				SPACE
-				21	B	22				-
-				23	C	24				-
				25	A	26				
				27	B	28				
				29	C	30				
				31	A	32				
				33	B	34				
				35	C	36				
				37	A	38				
				39	B	40				
				41	C	42				

LOAD SUMMARY:	CONNECTED	FEEDER / SERVICE CALCULATION
LIGHTING	76.04KVA	95.05KVA (125%)
LARGEST MOTOR	0.00KVA	0.00KVA (125%)
MOTORS	36.54KVA	36.54KVA (100%)
RECEPT	238.66KVA	124.33KVA (10KVA @ 100%, REMAIN @ 50%)
KITCHEN EQUIPMENT	0.00KVA	0.00KVA (65%)
ELECTRONIC LOADS	44.00KVA	44.00KVA (100%)
ELECTRIC HEATING	0.00KVA	0.00KVA (100%)
MISC.	67.98KVA	67.98KVA (100%)
TOTALS	463KVA	368KVA HI-PHASE
	557AMPS	443AMPS 453A

PRIMARY FEEDER INPUT DATA:

VI-I Primary:		Volts
Motor (FLA):	#DIV/0!	
Avail. Fault (Iafc):		Amps
Feeder Size:		Awg.
Feeder Length (L):		Ft.
Parallel Sets:	1	
Power Factor %	90%	
Feeder/Load Amps:		Amps
'C' Value:		Cu
'Volt Drop' Value:		

SECONDARY FEEDER INPUT DATA:

VI-I Secondary:		Volts
Transformer KVA:		KVA
Transformer Z%:		
Avail. Fault (Iafc):		Amps
Feeder Size:		Awg.
Feeder Length (L):		Ft.
Parallel Sets:	1	
Power Factor %	90%	
Feeder/Load Amps:		Amps
'C' Value:		Cu
'Volt Drop' Value:		

NOTES:
1.
2.
3.
4.
5.
6.

VOLTAGE DROP CALCULATIONS:

Prim 'Vdrop =	#VALUE!	Volts
Prim Vdrop% =	#VALUE!	
Sec Vdrop =	NA	Volts
Sec Vdrop% =		

RMS BOLTED 3 PHASE SHORT CIRCUIT CURRENT CALCULATIONS:

Isc (Xfmr Secondary) =	N/A	Amps
Isc (At Panel) =	#VALUE!	Amps
Isc (w/ motor contrib.) =	#VALUE!	Amps

V5.4

4

PANEL SCHEDULE

PANEL:4H1-BEFORE | LOCATION: | VOLTS: 480Y/277 | PH:3-Phase | W:4-Wire
AMP MAIN BRKR: | AMP MLO:100 | SCCR: 14,000 | MOUNT:SURFACE | FED FROM:

CIRCUIT DESCRIPTION	LOAD VA	CKT BKR	P	CIR #	P H	CIR #	P	BKR	LOAD VA	CIRCUIT DESCRIPTION
LTG H128-130	3326	20	1	1	A	2	1	20	2808	LTG H122
LTG H120-1,7	2822	20	1	3	B	4	1	20	2160	LTG H122-125
SPACE				5	C	6	1	20		SPARE
LTG H104-7,10	2721	20	1	7	A	8	1	20		SPARE
LTG H108-114	2124	20	1	9	B	10	1	20		SPARE
LTG H117-119	3139	20	1	11	C	12	1	20		SPARE
SPARE		20	1	13	A	14	1	20		SPARE
SPARE		20	1	15	B	16	1	20		SPARE
SPARE		20	1	17	C	18	1	20		SPARE
SPARE		20	1	19	A	20	1	20		SPARE
SPARE		20	1	21	B	22	1	20		SPARE
SPARE		20	1	23	C	24	1	20		SPARE
SPARE		20	1	25	A	26	3	20	720	265 EF/32
SPARE		20	1	27	B	28	-	-	720	-
SPARE		20	1	29	C	30	-	-	720	-
SPACE				31	A	32				SPACE
SPACE				33	B	34				SPACE
SPACE				35	C	36				SPACE
SPACE				37	A	38				SPACE
SPACE				39	B	40				SPACE
SPACE				41	C	42				SPACE

LOAD SUMMARY:	CONNECTED	FEEDER / SERVICE CALCULATION
LIGHTING	19.10KVA	23.88KVA (125%)
LARGEST MOTOR	0.00KVA	0.00KVA (125%)
MOTORS	2.16KVA	2.16KVA (100%)
RECEPT	0.00KVA	0.00KVA (10KVA @ 100%, REMAIN @ 50%)
KITCHEN EQUIPMENT	0.00KVA	0.00KVA (65%)
ELECTRONIC LOADS	0.00KVA	0.00KVA (100%)
ELECTRIC HEATING	0.00KVA	0.00KVA (100%)
MISC.	0.00KVA	0.00KVA (100%)
TOTALS	21KVA	26KVA HI-PHASE
	26AMPS	31AMPS 43A

NOTES:
1.
2.
3.
4.
5.
6.

DLR Group
© DLR Group

- NOT FOR CONSTRUCTION -

CULINARY CLASSROOM
Westview High School - Beaverton School District
4200 NW 185th Ave, Portland, OR 97229

50%CD
01/20/21
REVISIONS

74-21106-00

EXISTING PANEL SCHEDULES

E7.2

BIM 360://74-21106-00 Westview HS Culinary/74-21106-00_WHSC_MEP_2020.rvt
1/22/2021 12:10:15 PM

A B C D E

PANEL: 2H1

LOCATION: ELECTRICAL A107
BUS RATING: 0.0 A
MAIN BREAKER:

VOLTS: 208Y/120
PHASES: 3
WIRES: 4
SCCR:

MOUNTING: SURFACE
FED FROM:
INTEGRAL SPD: Type 1
LUG ACCESSORIES: SEE ONE-LINE

CKT	CIRCUIT DESCRIPTION	BKR TRIP	P	BKR TYPE	LOAD TYPE	PHASE A (VA)		PHASE B (VA)		PHASE C (VA)		LOAD TYPE	BKR TYPE	P	BKR TRIP	CIRCUIT DESCRIPTION	CKT
1	REC G101	20	1		R	540	864					M		1	20	75 EWC	2
3	REC G101	20	1		R			360	360			R		1	20	REC G101	4
5	REC G101	20	1		R					360	900	R		1	20	REC G101	6
7	REC G101	20	1		R	360	360					R		1	20	REC G103, EXT	8
9	REC G101	20	1		R			360	720			R		1	20	REC D163	10
11	REC G101	20	1		R					1,080	720	R		1	20	REC D163	12
13	REC D161, 167	20	1		R	540	360					R		1	20	REC D103, 106	14
15	45 WASHER	20	1		O			1,500	720			R		1	20	REC D163	16
17	REC D162	20	1		R					720	540	R		1	20	REC D163	18
19	REC D162	20	1		R	540	540					R		1	20	REC D163	20
21	REC D162	20	1		R			540	528			M		1	20	42 HEATER	22
23	46 GAS DRYER	20	1		O					200	1,200	O		1	20	SPARK CONTROL	24
25	EF 29	20	1		O	1,200	1,200					O		1	20	ABORT GATE	26
27	243 EF/4	20	1		M			864	1,608			K		1	20	113 DISHWASH	28
29	REC ROOF	20	1		R					720	1,440	R		1	20	REC COUNTER	30
31	247 EF/11A	20	1		M	864	480					K	G	1	20	RANGE (NOTE 1)	32
33	REC ROOF	20	1		R			720	0			--		1	20	SPARE	34
35	248 EF/11B	20	1		M					864	1,000	O		1	20	EF CONTROL	36
37	REC ROOF	20	1		R	720	1,000					O		1	20	HOBART	38
39	261 EF/7	20	1		M			696	1,500			O		1	20	DISHWASHER	40
41	263 EF/30	20	1		M					696	1,000	O		1	20	VAV BOXES	42
					TOTAL LOAD:	9568 VA		10476 VA		11440 VA							
					TOTAL AMPS	79.7 A		88.5 A		96.5 A							

LOAD TYPE	LOAD DESCRIPTION	CONNECTED LOAD (VA)	DEMAND...	ESTIMATED DEMAND (VA)	DEMAND FACTOR NOTES	BKR TYPE	PANEL TOTALS
L	LIGHTING	0 VA	0.00%	0 VA	CONTINUOUS LOAD @ 125%	G = GFCI (5mA)	
R	RECEPTACLES	14220 VA	85.16%	12110 VA	FIRST 10KVA @ 100%, REMAINDER @ 50%	GP = GFP (30mA)	**CONNECTED LOAD:** 31 kVA
K	KITCHEN	2088 VA	100.00%	2088 VA	NON-DWELLING KITCHEN LOADS, NEC ART. 220	ST = SHUNT TRIP	**ESTIMATED DEMAND:** 30 kVA
LM	LARGEST MOTOR	0 VA	0.00%	0 VA	LARGEST MOTOR, NEC ART. 430	LO = LOCK OUT	**CONNECTED CURRENT:** 87.4 A
M	MOTOR	5376 VA	104.02%	5592 VA			**EMD CURRENT:** 82.1 A
C	COOLING	0 VA	0.00%	0 VA			
H	HEATING	0 VA	0.00%	0 VA			
O	OTHER	9800 VA	100.00%	9800 VA			
Spare	SPARE	0 VA	0.00%	0 VA			

NOTES:
1. CIRCUITE UPDATES

PANEL: 2H3

LOCATION: ELECTRICAL A107
BUS RATING: 0.0 A
MAIN BREAKER:

VOLTS: 208Y/120
PHASES: 3
WIRES: 4
SCCR:

MOUNTING: SURFACE
FED FROM:
INTEGRAL SPD: Type 1
LUG ACCESSORIES: SEE ONE-LINE

CKT	CIRCUIT DESCRIPTION	BKR TRIP	P	BKR TYPE	LOAD TYPE	PHASE A (VA)		PHASE B (VA)		PHASE C (VA)		LOAD TYPE	BKR TYPE	P	BKR TRIP	CIRCUIT DESCRIPTION	CKT
1	REC H103	20	1		R	1,440	1,080					R		1	20	REC H118	2
3	REC H119	20	1		R			540	1,080			R		1	20	REC H118	4
5	REC H119	20	1		R					1,080	1,080	R		1	20	REC H118	6
7	REC H119	20	1		R	540	540					R		1	20	REC H118	8
9	REC H119	20	1		R			1,080	540			R		1	20	REC H118	10
11	REC H118	20	1		R					720	540	R		1	20	REC H118	12
13	REC H120, 121	20	1		R	1,080	540					R		1	20	REC H118	14
15	REC H120, 121	20	1		R			540	540			R		1	20	REC H118	16
17	REC H120, 121	20	1		R					1,080	1,080	R		1	20	RECEPTACLE	18
19	REC H103	20	1		R	720	1,080					R		1	20	SODA MACHINE	20
21	REC H118	20	1		R			720	1,080			R		1	20	SODA MACHINE	22
23	REC H118	20	1		R					540	1,080	R		1	20	REC H127	24
25	REC H117	20	1		R	540	1,080					R		1	20	REC H127	26
27	REC H117	20	1		R			540	1,080			R		1	20	REC H127	28
29	RECEPTACLE	20	1		R					360	1,080	R		1	20	REC H127	30
31	REC OS	20	1		R	180	180					R		1	20	REC EXT	32
33	106 RANGE (NOTE 1)	20	1	G	K			480	1,440			R		1	20	REC COUNTER	34
35	SPARE	20	1		--					0	480	K	G	1	20	RANGE (NOTE 1)	36
37	SPARE	20	1		--	0	1,080					R		1	20	SODA MACHINE	38
39	BENTO CART	20	1		R			900	1,080			R		1	20	SODA MACHINE	40
41	BENTO CART	20	1		R					900	1,080	R		1	20	SODA MACHINE	42
					TOTAL LOAD:	10080 VA		11640 VA		11100 VA							
					TOTAL AMPS	84.0 A		98.3 A		93.8 A							

LOAD TYPE	LOAD DESCRIPTION	CONNECTED LOAD (VA)	DEMAND...	ESTIMATED DEMAND (VA)	DEMAND FACTOR NOTES	BKR TYPE	PANEL TOTALS
L	LIGHTING	0 VA	0.00%	0 VA	CONTINUOUS LOAD @ 125%	G = GFCI (5mA)	
R	RECEPTACLES	31860 VA	65.69%	20930 VA	FIRST 10KVA @ 100%, REMAINDER @ 50%	GP = GFP (30mA)	**CONNECTED LOAD:** 33 kVA
K	KITCHEN	960 VA	100.00%	960 VA	NON-DWELLING KITCHEN LOADS, NEC ART. 220	ST = SHUNT TRIP	**ESTIMATED DEMAND:** 22 kVA
LM	LARGEST MOTOR	0 VA	0.00%	0 VA	LARGEST MOTOR, NEC ART. 430	LO = LOCK OUT	**CONNECTED CURRENT:** 91.1 A
M	MOTOR	0 VA	0.00%	0 VA			**EMD CURRENT:** 60.8 A
C	COOLING	0 VA	0.00%	0 VA			
H	HEATING	0 VA	0.00%	0 VA			
O	OTHER	0 VA	0.00%	0 VA			
Spare	SPARE	0 VA	0.00%	0 VA			

NOTES:
1. UPDATE CIRCUIT

PANEL: 2H4

LOCATION: ELECTRICAL A107
BUS RATING: 0.0 A
MAIN BREAKER:

VOLTS: 208Y/120
PHASES: 3
WIRES: 4
SCCR:

MOUNTING: SURFACE
FED FROM:
INTEGRAL SPD: Type 1
LUG ACCESSORIES: SEE ONE-LINE

CKT	CIRCUIT DESCRIPTION	BKR TRIP	P	BKR TYPE	LOAD TYPE	PHASE A (VA)		PHASE B (VA)		PHASE C (VA)		LOAD TYPE	BKR TYPE	P	BKR TRIP	CIRCUIT DESCRIPTION	CKT
1	REC H130, 132	20	1		R	360	1,000					O		1	20	E84 MACHO	2
3	REC, FRIDGE (NOTE 1)	20	1	G	R; K			1,344	1,000			O		1	20	E85 WARMER	4
5	REACH IN FREEZER (NOTE 1)	20	1	G	K					1,344	696	M		1	20	E86 REFRIG	6
7						3,700	1,000					O		1	20	E83 WARMER	8
9	COMBI OVEN STEAMER (NOTE 1)	40	3		K			3,700	1,800			O		1	20	E82 HD GRILL	10
11										3,700	1,800	O		1	20	E81 IC FREEZE	12
13	RANGE HOOD (NOTE 1)	20	1		K	600	2,000					O		1	30	E79 ESPRESSO	14
15	RECEPT (NOTE 1)	20	1		R			180	1,500			O		1	20	E78 HOT CHOC	16
17	E68 JUICE	20	1		O					1,000	1,800	O		1	20	E76 POPCORN	18
19	SNACK BAR	20	1		O	1,800	1,000					O		1	20	E74,5 BUTTER	20
21	E73 CASH SYS	20	1		O			500	500			O		1	20	E73 CASH SYS	22
23	E70 LTG	20	1		L					500	1,620	R		1	20	RECEPTACLE	24
25	E80 SOFT	20	2		O	1,650											26
27								1,650	960			K	G	1	20	RANGES (NOTE 1)	28
29	YOGURT MACH/SNACK BAR	40	2		O					3,150	4,800	Motor; M		1	20	RANAGE HOODS (NOTE 1)	30
31						3,150	1,440					R		1	20	REC COUNTER	32
33	REC COUNTER	20	1		R			1,440	1,440			R		1	20	REC COUNTER	34
35	RANGES (NOTE 1)	20	1	G	K					960	864	R		1	20	263 EF/8	36
37	RANGE HOODS (NOTE 1)	20	1		M	3,600	864					R		1	20	264 EF/31	38
39	OVEN S140	20	2		O			1,500	1,500			O		2	20	RNG S141	40
41										1,500	1,500						42
					TOTAL LOAD:	22164 VA		19014 VA		25234 VA							
					TOTAL AMPS	188.7 A		158.5 A		214.3 A							

LOAD TYPE	LOAD DESCRIPTION	CONNECTED LOAD (VA)	DEMAND...	ESTIMATED DEMAND (VA)	DEMAND FACTOR NOTES	BKR TYPE	PANEL TOTALS
L	LIGHTING	500 VA	125.00%	625 VA	CONTINUOUS LOAD @ 125%	G = GFCI (5mA)	
R	RECEPTACLES	8568 VA	100.00%	8568 VA	FIRST 10KVA @ 100%, REMAINDER @ 50%	GP = GFP (30mA)	**CONNECTED LOAD:** 66 kVA
K	KITCHEN	15948 VA	65.00%	10366 VA	NON-DWELLING KITCHEN LOADS, NEC ART. 220	ST = SHUNT TRIP	**ESTIMATED DEMAND:** 61 kVA
LM	LARGEST MOTOR	0 VA	0.00%	0 VA	LARGEST MOTOR, NEC ART. 430	LO = LOCK OUT	**CONNECTED CURRENT:** 184.3 A
M	MOTOR	9096 VA	104.95%	9546 VA			**EMD CURRENT:** 170.4 A
C	COOLING	0 VA	0.00%	0 VA			
H	HEATING	0 VA	0.00%	0 VA			
O	OTHER	32300 VA	100.00%	32300 VA			
Spare	SPARE	0 VA	0.00%	0 VA			

NOTES:
1. CIRCUIT UPDATED.

PANEL: 2H5

LOCATION: ELECTRICAL A107
BUS RATING: 100.0 A
MAIN BREAKER: 100/3 or MLO

VOLTS: 208Y/120
PHASES: 3
WIRES: 4
SCCR:

MOUNTING: SURFACE
FED FROM: 2DPH
INTEGRAL SPD: Type 1
LUG ACCESSORIES: 2DPH

CKT	CIRCUIT DESCRIPTION	BKR TRIP	P	BKR TYPE	LOAD TYPE	PHASE A (VA)		PHASE B (VA)		PHASE C (VA)		LOAD TYPE	BKR TYPE	P	BKR TRIP	CIRCUIT DESCRIPTION	CKT
1						1,920	1,608					K		1	20	MICROWAVE	2
3	DISPOSERS	20	3		K; M			1,920	1,608			K		1	20	MICROWAVE	4
5										1,920	1,608	K		1	20	MICROWAVE	6
7						1,440	1,608					K		1	20	MICROWAVE	8
9	DISPOSERS	20	3		K			1,440	1,608			K		1	20	MICROWAVE	10
11										1,440	1,440	R		1	20	DETERGENT DISPENSER	12
13						2,870	360					R		1	20	CORD DROP RECEPTACLE	14
15	WAREWASHER	30	3		K			2,870	360			R		1	20	CORD DROP RECEPTACLE	16
17										2,870	360	R		1	20	CORD DROP RECEPTACLE	18
19						480											20
21	INDUCTON WOK	20	3		K			480									22
23										480							24
25																	26
27																	28
29																	30
31																	32
33																	34
35																	36
37																	38
39																	40
41																	42
					TOTAL LOAD:	10286 VA		10286 VA		10118 VA							
					TOTAL AMPS	85.9 A		85.9 A		84.3 A							

LOAD TYPE	LOAD DESCRIPTION	CONNECTED LOAD (VA)	DEMAND...	ESTIMATED DEMAND (VA)	DEMAND FACTOR NOTES	BKR TYPE	PANEL TOTALS
L	LIGHTING	0 VA	0.00%	0 VA	CONTINUOUS LOAD @ 125%	G = GFCI (5mA)	
R	RECEPTACLES	2520 VA	100.00%	2520 VA	FIRST 10KVA @ 100%, REMAINDER @ 50%	GP = GFP (30mA)	**CONNECTED LOAD:** 31 kVA
K	KITCHEN	26731 VA	65.00%	17375 VA	NON-DWELLING KITCHEN LOADS, NEC ART. 220	ST = SHUNT TRIP	**ESTIMATED DEMAND:** 22 kVA
LM	LARGEST MOTOR	0 VA	0.00%	0 VA	LARGEST MOTOR, NEC ART. 430	LO = LOCK OUT	**CONNECTED CURRENT:** 85.2 A
M	MOTOR	1440 VA	125.00%	1800 VA			**EMD CURRENT:** 60.2 A
C	COOLING	0 VA	0.00%	0 VA			
H	HEATING	0 VA	0.00%	0 VA			
O	OTHER	0 VA	0.00%	0 VA			
Spare	SPARE	0 VA	0.00%	0 VA			

NOTES: NEW PANEL

DLR Group
© DLR Group

- NOT FOR CONSTRUCTION -

CULINARY CLASSROOM
Westview High School - Beaverton School District
4200 NW 185th Ave, Portland, OR 97229

50%CD
01/20/21
REVISIONS

74-21106-00

PANEL SCHEDULES

E7.3

BIM 360://74-21106-00 Westview HS Culinary/74-21106-00_WHSC_MEP_2020.rvt
1/22/2021 12:10:17 PM

PANEL: 4H1

LOCATION: ELECTRICAL A107
BUS RATING: 225.0 A
MAIN BREAKER:

VOLTS: 480Y/277
PHASES: 3
WIRES: 4
SCCR:

MOUNTING: SURFACE
FED FROM:
INTEGRAL SPD: Type 1
LUG ACCESSORIES: SEE ONE-LINE

CKT	CIRCUIT DESCRIPTION	BKR TRIP	P	BKR TYPE	LOAD TYPE	PHASE A (VA)		PHASE B (VA)		PHASE C (VA)		LOAD TYPE	BKR TYPE	P	BKR TRIP	CIRCUIT DESCRIPTION	CKT
1	LTG H128-130	20	1		Lighting	1,991	2,808					Lighting		1	20	LTG H122	2
3	LTG H120-1,7	20	1		Lighting			2,822	2,160			Lighting		1	20	LTG H122-125	4
5	SPACE	--	--	--	--					0	0	--		1	20	SPARE	6
7	LTG H104-7,10	20	1		Lighting	2,721	0					--		1	20	SPARE	8
9	LTG H108-114	20	1		Lighting			3,139	0			--		1	20	SPARE	10
11	LTG H117-119	20	1		Lighting					3,139	0	--		1	20	SPARE	12
13						1,386	0					--		1	20	SPARE	14
15	MAU-1	15	3		M			1,386	0			--		1	20	SPARE	16
17										1,386	0	--		1	20	SPARE	18
19						3,076	0					--		1	20	SPARE	20
21	EF-1	15	3		M			3,076	0			--		1	20	SPARE	22
23										3,076	0	--		1	20	SPARE	24
25						1,192	720										26
27	EF-2	15	3		M			1,192	720			M		3	20	265 EF/32	28
29										1,192	720						30
31	SPARE	20	1		--	0	0					--	--	--	--	SPACE	32
33	SPARE	20	1		--			0	0			--	--	--	--	SPACE	34
35	SPARE	20	1		--					0	0	--	--	--	--	SPACE	36
37	SPARE	20	1		--	0	0					--	--	--	--	SPACE	38
39	SPARE	20	1		--			0	0			--	--	--	--	SPACE	40
41	SPARE	20	1		--					0	0	--	--	--	--	SPACE	42
					TOTAL LOAD:	13894 VA		14495 VA		9513 VA							
					TOTAL AMPS	52.6 A		54.8 A		34.3 A							

LOAD TYPE	LOAD DESCRIPTION	CONNECTED LOAD (VA)	DEMAND...	ESTIMATED DEMAND (VA)	DEMAND FACTOR NOTES	BKR TYPE	PANEL TOTALS
L	LIGHTING	0 VA	0.00%	0 VA	CONTINUOUS LOAD @ 125%	G = GFCI (5mA)	
R	RECEPTACLES	0 VA	0.00%	0 VA	FIRST 10KVA @ 100%, REMAINDER @ 50%	GP = GFP (30mA)	**CONNECTED LOAD:** 38 kVA
K	KITCHEN	0 VA	0.00%	0 VA	NON-DWELLING KITCHEN LOADS, NEC ART. 220	ST = SHUNT TRIP	**ESTIMATED DEMAND:** 40 kVA
LM	LARGEST MOTOR	0 VA	0.00%	0 VA	LARGEST MOTOR, NEC ART. 430	LO = LOCK OUT	**CONNECTED CURRENT:** 45.6 A
M	MOTOR	19122 VA	112.06%	21429 VA			**EMD CURRENT:** 48.4 A
C	COOLING	0 VA	0.00%	0 VA			
H	HEATING	0 VA	0.00%	0 VA			
O	OTHER	0 VA	0.00%	0 VA			
Spare	SPARE	0 VA	0.00%	0 VA			

NOTES:

DLR Group
© DLR Group

- NOT FOR CONSTRUCTION -

CULINARY CLASSROOM
Westview High School - Beaverton School District
4200 NW 185th Ave, Portland, OR 97229

50%CD
01/20/21
REVISIONS

74-21106-00

PANEL SCHEDULES

E7.4

BIM 360://74-21106-00 Westview HS Culinary/74-21106-00_WHSC_MEP_2020.rvt
1/22/2021 12:10:18 PM

1A

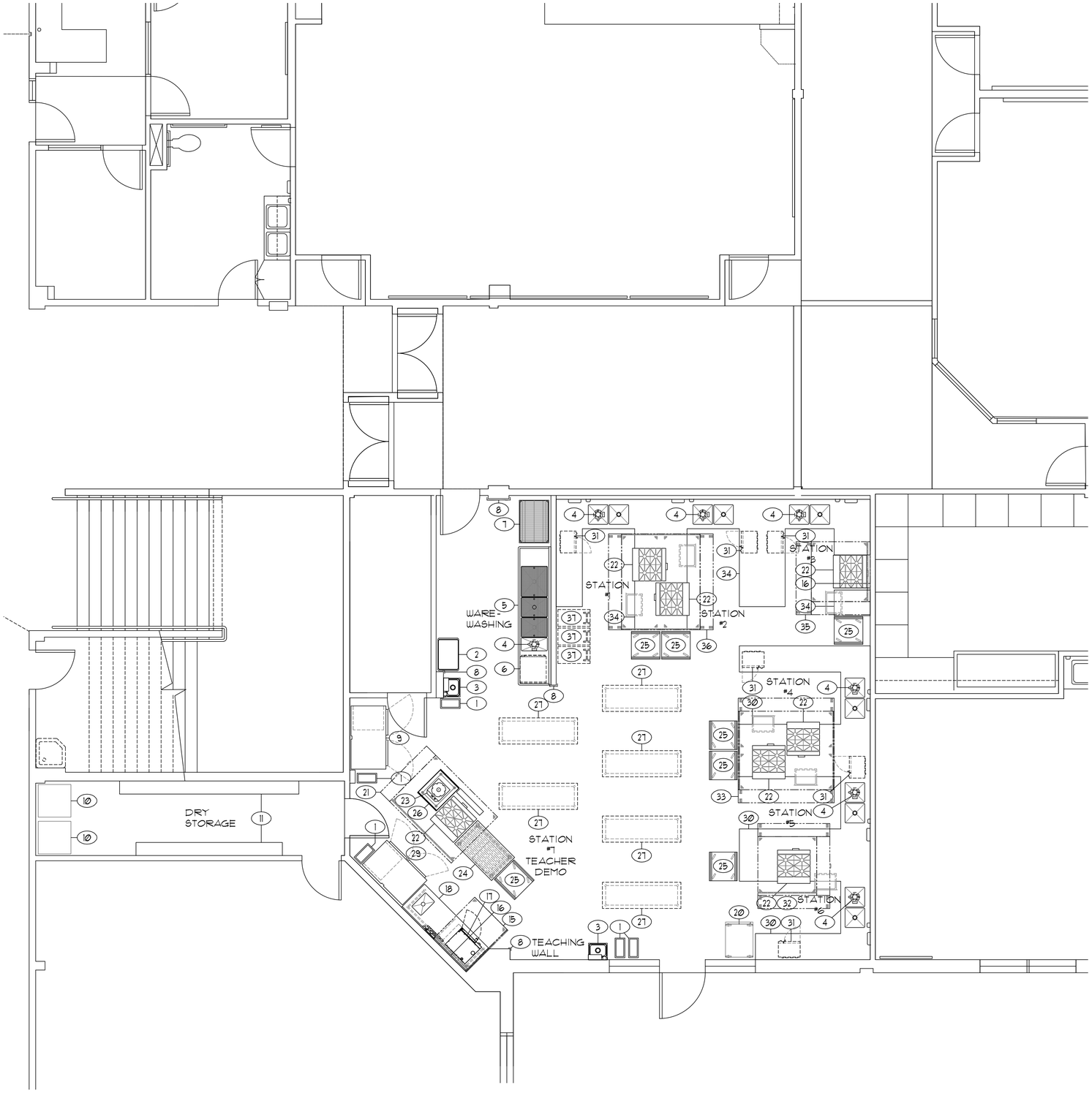

EQUIPMENT SCHEDULE

ITEM	DESCRIPTION	QUAN.	REMARKS:
1	SLIM JIM WASTE RECEPTACLES	5	---
2	UTILITY CART	1	---
3	HAND WASHING SINKS	2	---
4	DISPOSERS	7	---
5	POT WASHING SINK TABLE WITH REMOVABLE SINK COVERS	1	---
6	UNDERCOUNTER WAREWASHER	1	EXISTING/RELOCATED - ADD NEW DWT KIT
7	MOBILE POT AND PAN SHELVING	1	---
8	CORNER/CHANNEL GUARDS	LOT	---
9	REACH-IN REFRIGERATOR	1	---
10	CLOTHES WASHER AND DRYER	1	BY OWNER
11	DRY STORAGE SHELVING	LOT	EXISTING EQUIPMENT
12	NOT USED	---	---
13	NOT USED	---	---
14	NOT USED	---	---
15	CANOPY HOOD WITH FIRE PROTECTION SYSTEM	1	---
16	STAINLESS STEEL WALL FLASHING	LOT	---
17	COMBI-OVEN STEAMER	1	---
18	ADA PREP WORK TABLE	1	---
19	NOT USED	---	---
20	MOBILE PROOFING CABINET	1	---
21	CANOPY HOOD WITH FIRE PROTECTION SYSTEM	1	---
22	4-BURNER OPEN RANGES	7	---
23	INDUCTION WOK	1	---
24	TEACHERS MAPLE TOP WORK TABLE	1	---
25	MOBILE INGREDIENT CARTS	6	---
26	MOBILE TABLE	1	---
27	MOBILE ISLAND TABLES	6	EXISTING EQUIPMENT
28	NOT USED	---	---
29	REACH-IN FREEZER	1	---
30	STUDENT WORK STATION COUNTER	1	---
31	MICROWAVE OVENS	6	EXISTING/RELOCATED
32	CANOPY HOOD WITH FIRE PROTECTION SYSTEM	1	---
33	CANOPY HOOD WITH FIRE PROTECTION SYSTEM	1	---
34	STUDENT WORK STATION COUNTER	1	---
35	CANOPY HOOD WITH FIRE PROTECTION SYSTEM	1	---
36	CANOPY HOOD WITH FIRE PROTECTION SYSTEM	1	---
37	MOBILE INGREDIENT BINS	3	EXISTING/RELOCATED

DLR Group
© DLR Group

- NOT FOR CONSTRUCTION -

HALLIDAY ASSOCIATES
6564 NW NORWOOD
SUITE 100
PORTLAND, OR 97229
PH: 503.297.6657
FAX: 503.297.6657
FOODSERVICE FACILITY CONSULTANTS
SPECIALIZING IN SCHOOL FACILITIES

CULINARY CLASSROOM

Westview High School - Beaverton School District

4200 NW 185th Ave, Portland, OR 97229

50% CD
01.21.21
REVISIONS

74-21106-00

FOOD SERVICE EQUIPMENT PLAN

FS1.1

BIM 360://74-21106-00 Westview HS Culinary/74-21106-00_WHSC_AR_2020.rvt
12/3/2020 2:46:27 PM

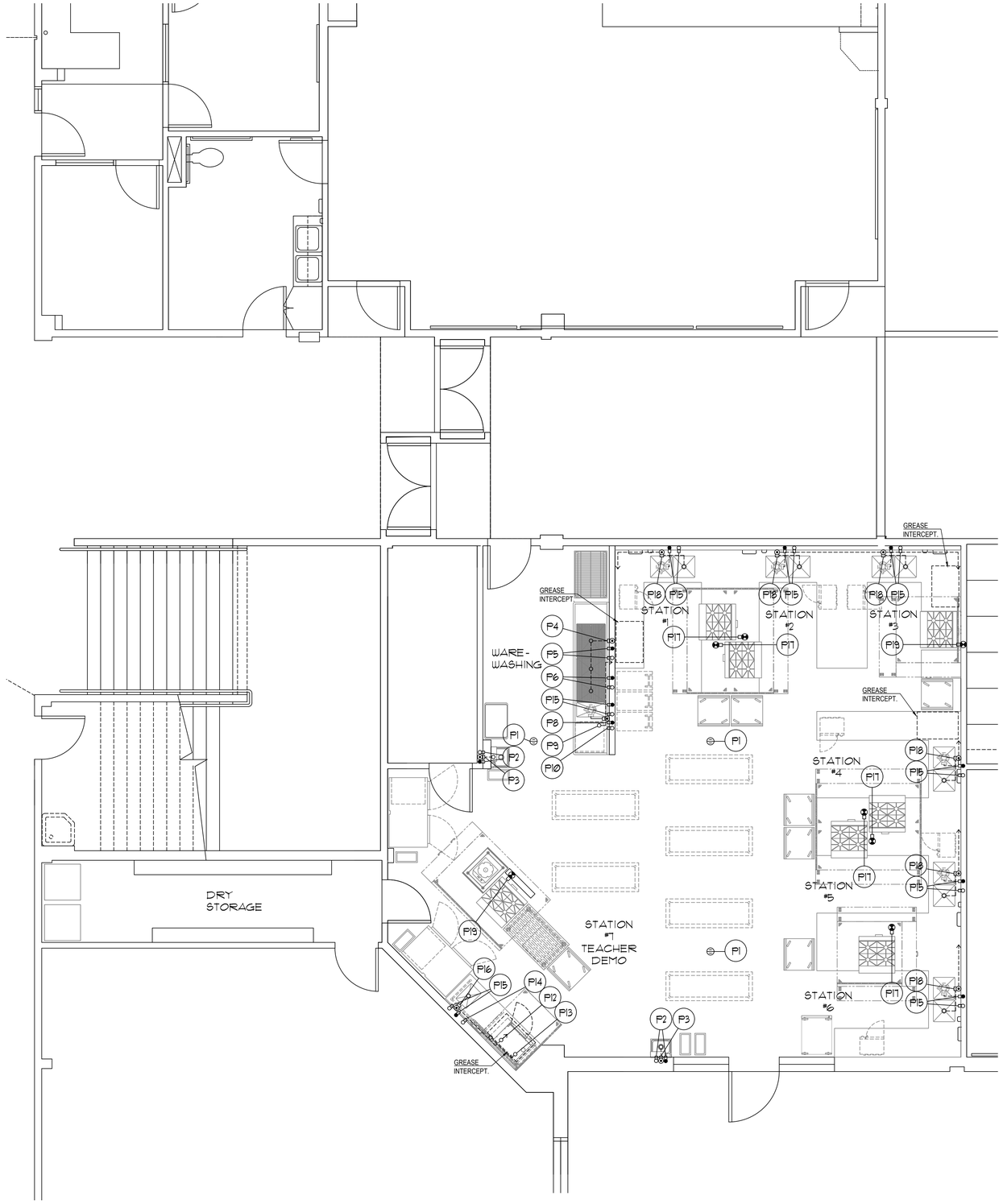

PLUMBING SCHEDULE

ITEM NO.	P. NO.	SIZE	DESCRIPTION	LOC'N.	HEIGHT	SERVICE TO :	REMARKS:
---	P1	---	FLOOR DRAIN	FLOOR	-1/2"	AREA DRAIN	
3	P2	1/2"	HOT & COLD	WALL	22"	HAND WASHING SINK	10 GPH HOT
3	P3	1-1/2"	WASTE	WALL	20"	HAND WASHING SINK	---
5	P4	2"	WASTE	WALL	9"	(2) SINK DRAINS	---
5	P5	1/2"	HOT & COLD	WALL	20"	PRE-RINSE FAUCET	40 GPH HOT
5	P6	1/2"	HOT & COLD	WALL	16"	SINK FAUCET	20 GPH HOT
4	P7	1/2"	COLD	WALL	24"	DISPOSER	---
6	P8	3/4"	HOT @ 120°	WALL	12"	UNDERCOUNTER DISHWASHER	23 GPH HOT @ 20 PSI
6	P9	1-1/2"	DRAIN LINE	FIXTURE	VERIFY	UNDERCOUNTER DISHWASHER	CONNECT TO GREASE INTERCEPTOR
6	P10	1/2"	COLD	WALL	12"	UNDERCOUNTER DISHWASHER DRAIN WATER TEMPERING	VERIFY REQ'S. WITH OWNER FURNISHED EQUIPMENT
---	P11	---	NOT USED	---	---	---	---
17	P12	2"	DRAIN LINE	FIXTURE	VERIFY	COMBI-OVEN STEAMER	CONNECT TO GREASE INTERCEPTOR
17	P13	3/4"	COLD	WALL	40"	COMBI-OVEN STEAMER	FOR BOILER- SUPPLIED FROM P14
---	P14	3/4"	COLD	WALL	66"	WATER FILTRATION SYSTEM	INTERCONNECT WITH P13
18, 30, & 34	P15	1/2"	HOT & COLD	WALL	16"	SINK FAUCET & DISPOSER	20 GPH HOT. TEE COLD TO DISPOSER INLET
17, 18	P16	2"	WASTE	FIXTURE	VERIFY	(1) SINK DRAIN	CONNECT TO GREASE INTERCEPTOR
22	P17	3/4"	GAS	FIXTURE	30"	4-BURNER OPEN RANGE	140M1 BTU TOTAL CONNECTION- QUICK DISCONNECT
30, 34	P18	2"	WASTE	FIXTURE	VERIFY	(1) SINK DRAIN AND DISPOSER	CONNECT TO GREASE INTERCEPTOR
22	P19	3/4"	GAS	WALL	30"	4-BURNER OPEN RANGE	140M BTU TOTAL CONNECTION- QUICK DISCONNECT

NOTE: REFER TO PLUMBING DRAWINGS CONFIRMING ALL EQUIPMENT DRAIN LINES ARE TO RUN TO GREASE INTERCEPTORS. DRAIN LINES ARE TO RUN DIRECTLY BACK TO WALLS AND RUN ALONG WALLS TO BE CLEAR OF UNDER TABLE STORAGE SPACE.

PLUMBING NOTES

1. THIS DRAWING IS NOT TO BE USED FOR ESTABLISHING ROUGH-IN LOCATIONS. REFER TO DIMENSIONED DRAWING PREPARED BY THE KITCHEN EQUIPMENT CONTRACTOR.
2. UNDER PLUMBING WORK OF DIVISION 22, MAKE ALL ROUGH-INS AND FINAL CONNECTIONS IN CONFORMANCE WITH LOCAL CODES. PROVIDE SHUT-OFF VALVES WITH PERMANENT NAME TAGS IDENTIFYING SUPPLY LINES TO EACH INDIVIDUAL PIECE OF EQUIPMENT. INCLUDE TRAPS, TAIL PIECES, AND LINE STRAINERS AS REQUIRED.
3. UNDER PLUMBING WORK OF DIVISION 22, FURNISH AND INSTALL ALL FLOOR SINKS AND AREA DRAINS FLUSH WITH FINISHED FLOOR IF CODE ALLOWS.
4. UNDER PLUMBING WORK OF DIVISION 22, FURNISH AND INSTALL GREASE TRAP OR INTERCEPTOR AS REQUIRED.
5. UNDER PLUMBING WORK OF DIVISION 22, FURNISH AND INSTALL ALL SINK WASTE LINES. USE COPPER DRAIN LINES. NO PVC IS ACCEPTABLE.
6. UNDER KITCHEN EQUIPMENT WORK OF DIVISION 11, PROVIDE FAUCETS AT EQUIPMENT. UNDER PLUMBING WORK OF DIVISION 22, INSTALL AND CONNECT FAUCETS.
7. UNDER PLUMBING WORK OF DIVISION 22, FURNISH AND INSTALL CHROME PLATED VACUUM BREAKERS OR BACKFLOW PREVENTION DEVICES ON SUPPLY LINES TO EQUIPMENT AS REQUIRED BY CODES.
8. UNDER PLUMBING WORK OF DIVISION 22, FURNISH AND INSTALL STAINLESS STEEL OR CHROME PLATED ESCUTCHEON PLATES FOR ALL WATER LINES PENETRATING COUNTER TOPS AND BACK SPLASHES.
9. UNDER PLUMBING WORK OF DIVISION 22, FURNISH PRESSURE REDUCING VALVE FOR ALL GAS AND WATER LINES. MAXIMUM WATER PRESSURE AT BOOSTER HEATER AND DISHWASHER SHALL BE 20 PSI.
10. UNDER KITCHEN EQUIPMENT WORK OF DIVISION 11, FURNISH GAS QUICK DISCONNECT ASSEMBLIES WITH CABLE RESTRAINTS FOR EACH GAS FIRED COOKING APPLIANCE.
11. UNDER PLUMBING WORK OF DIVISION 22, PROVIDE 120 DEGREE HOT WATER SUPPLY AT WAREWASHER/ BOOSTER HEATER AS SHOWN. VERIFY REQUIRED TEMPERATURE FOR SUPPLY AT SINK FAUCETS WITH LOCAL AND NATIONAL CODES.
12. UNDER PLUMBING WORK OF DIVISION 22, FURNISH AND INSTALL A SOLENOID VALVE ON PRIMARY GAS SUPPLY TO SHUT-OFF EQUIPMENT DURING FIRE SYSTEM ACTIVATION. SOLENOID SHALL BE ACCESSIBLE FOR SERVICING, TESTING, AND RESETTING IN THE EVENT OF SYSTEM ACTIVATION.
13. SEE PLUMBING AND MECHANICAL DRAWINGS FOR ADDITIONAL REQUIREMENTS.

PLUMBING SYMBOL LEGEND

- COLD WATER
- HOT WATER
- WASTE
- GAS
- FLOOR DRAIN
- FLOOR SINK

DLR Group
© DLR Group

- NOT FOR CONSTRUCTION -

HALLIDAY ASSOCIATES
6564 NW NORWOOD
SUITE 100
PORTLAND, OR 97229
TEL 503 297 - 6653
FAX 503 297 - 6654
FOOD & FACILITY CONSULTANTS
SPECIALIZING IN SCHOOL FACILITIES

CULINARY CLASSROOM

Westview High School - Beaverton School District

4200 NW 185th Ave, Portland, OR 97229

50% CD
01.21.21
REVISIONS

74-21106-00

FOOD SERVICE PLUMBING PLAN

FS1.2

BIM 360://74-21106-00 Westview HS Culinary/74-21106-00_WHSC_AR_2020.rvt
12/3/2020 2:46:27 PM

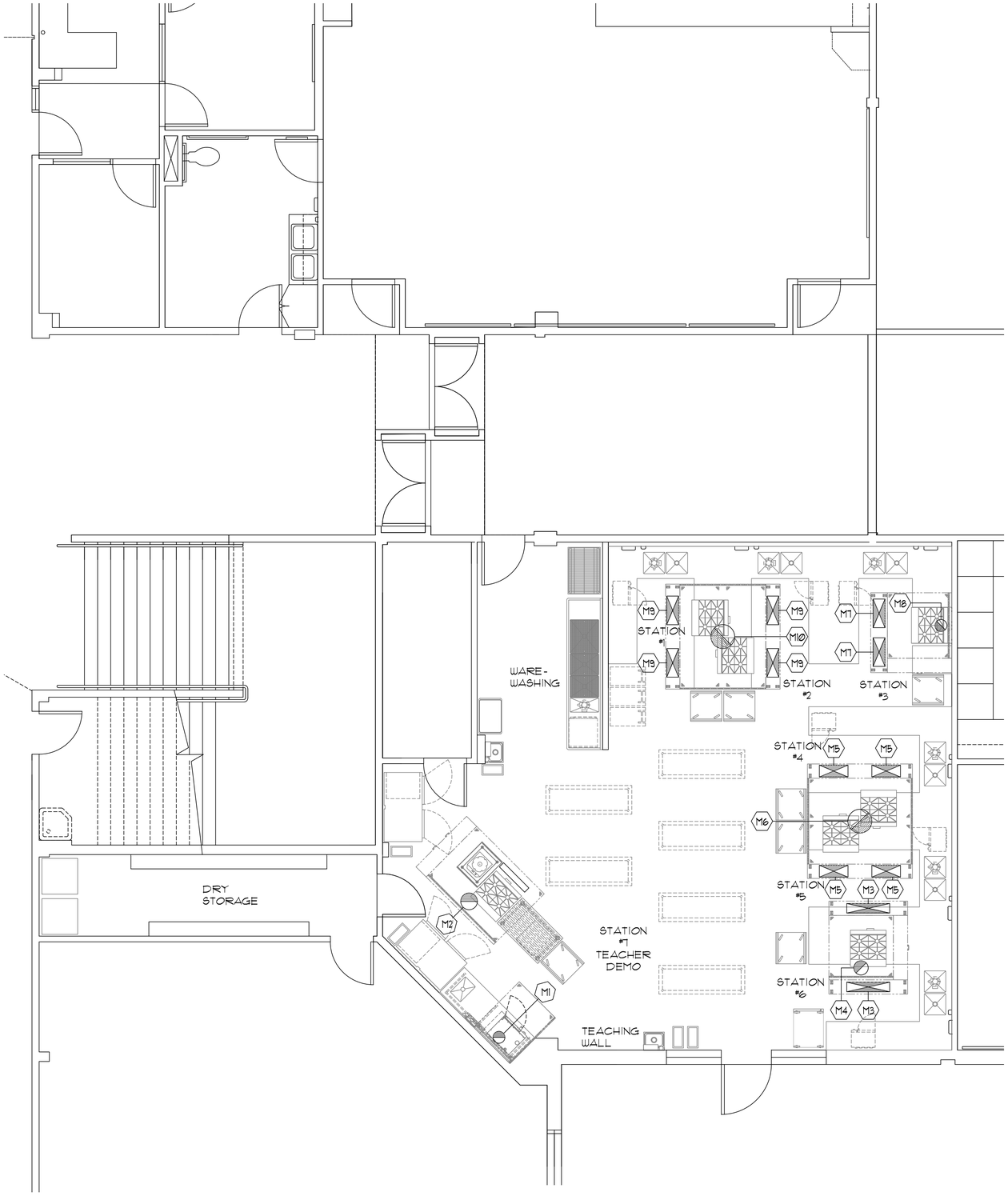

MECHANICAL NOTES

M1. ONE (1) 10" DIAMETER TYPE 1 EXHAUST CONNECTION AT CANOPY HOOD. 700 CFM WITH -0.333" STATIC PRESSURE AT DUCT COLLAR.

M2. ONE (1) 14" DIAMETER TYPE 1 EXHAUST CONNECTION AT CANOPY HOOD. 2,000 CFM WITH -1.055" STATIC PRESSURE AT DUCT COLLAR.

M3. TWO (2) 36" X 8" SUPPLY DUCT CONNECTIONS AT CANOPY HOOD. 607 CFM EACH WITH 0.134" STATIC PRESSURE AT DUCT COLLARS.

M4. ONE (1) 12" DIAMETER TYPE 1 EXHAUST CONNECTION AT CANOPY HOOD. 1,350 CFM WITH -0.906" STATIC PRESSURE AT DUCT COLLAR.

M5. FOUR (4) 24" X 10" SUPPLY DUCT CONNECTIONS AT CANOPY HOOD. 470 CFM EACH WITH 0.123" STATIC PRESSURE AT DUCT COLLARS.

M6. ONE (1) 20" DIAMETER TYPE 1 EXHAUST CONNECTION AT CANOPY HOOD. 2,508 CFM WITH -0.711" STATIC PRESSURE AT DUCT COLLAR.

M7. TWO (2) 24" X 10" SUPPLY DUCT CONNECTIONS AT CANOPY HOOD. 515 CFM EACH WITH 0.146" STATIC PRESSURE AT DUCT COLLARS.

M8. ONE (1) 10" DIAMETER TYPE 1 EXHAUST CONNECTION AT CANOPY HOOD. 1,146 CFM WITH -0.891" STATIC PRESSURE AT DUCT COLLAR.

M9. FOUR (4) 24" X 10" SUPPLY DUCT CONNECTIONS AT CANOPY HOOD. 470 CFM EACH WITH 0.123" STATIC PRESSURE AT DUCT COLLARS.

M10. ONE (1) 20" DIAMETER TYPE 1 EXHAUST CONNECTION AT CANOPY HOOD. 2,508 CFM WITH -0.711" STATIC PRESSURE AT DUCT COLLAR.

MECHANICAL SYMBOL LEGEND

SUPPLY DUCT

EXHAUST DUCT

GENERAL MECHANICAL NOTES

1. THIS DRAWING IS NOT TO BE USED FOR ESTABLISHING ROUGH-IN LOCATIONS. REFER TO DIMENSIONED DRAWING PREPARED BY THE KITCHEN EQUIPMENT CONTRACTOR.
2. CANOPY HOODS MUST BE UL LISTED AND LABELED FOR 0" CLEARANCE BY MANUFACTURER IN ACCORDANCE WITH UL 710.
3. REFER TO SHEETS FS2.1 THRU FS2.12 HOOD MANUFACTURER DRAWINGS FOR ADDITIONAL INFORMATION.
4. SEE MECHANICAL DRAWINGS FOR ADDITIONAL REQUIREMENTS.

DLR Group
© DLR Group

- NOT FOR CONSTRUCTION -

HALLIDAY ASSOCIATES
6564 NW NORWOOD
BEAVERTON, OR 97007
P.O. BOX 690
FAX 503 - 644 - 6837
FOOD FACILITY CONSULTANTS
SPECIALIZING IN SCHOOLS

CULINARY CLASSROOM

Westview High School - Beaverton School District

4200 NW 185th Ave, Portland, OR 97229

50% CD
01.21.21
REVISIONS

74-21106-00

FOOD SERVICE MECHANICAL PLAN

FS1.3

BIM 360://74-21106-00 Westview HS Culinary/74-21106-00_WHSC_AR_2020.rvt
12/3/2020 2:46:27 PM

1A

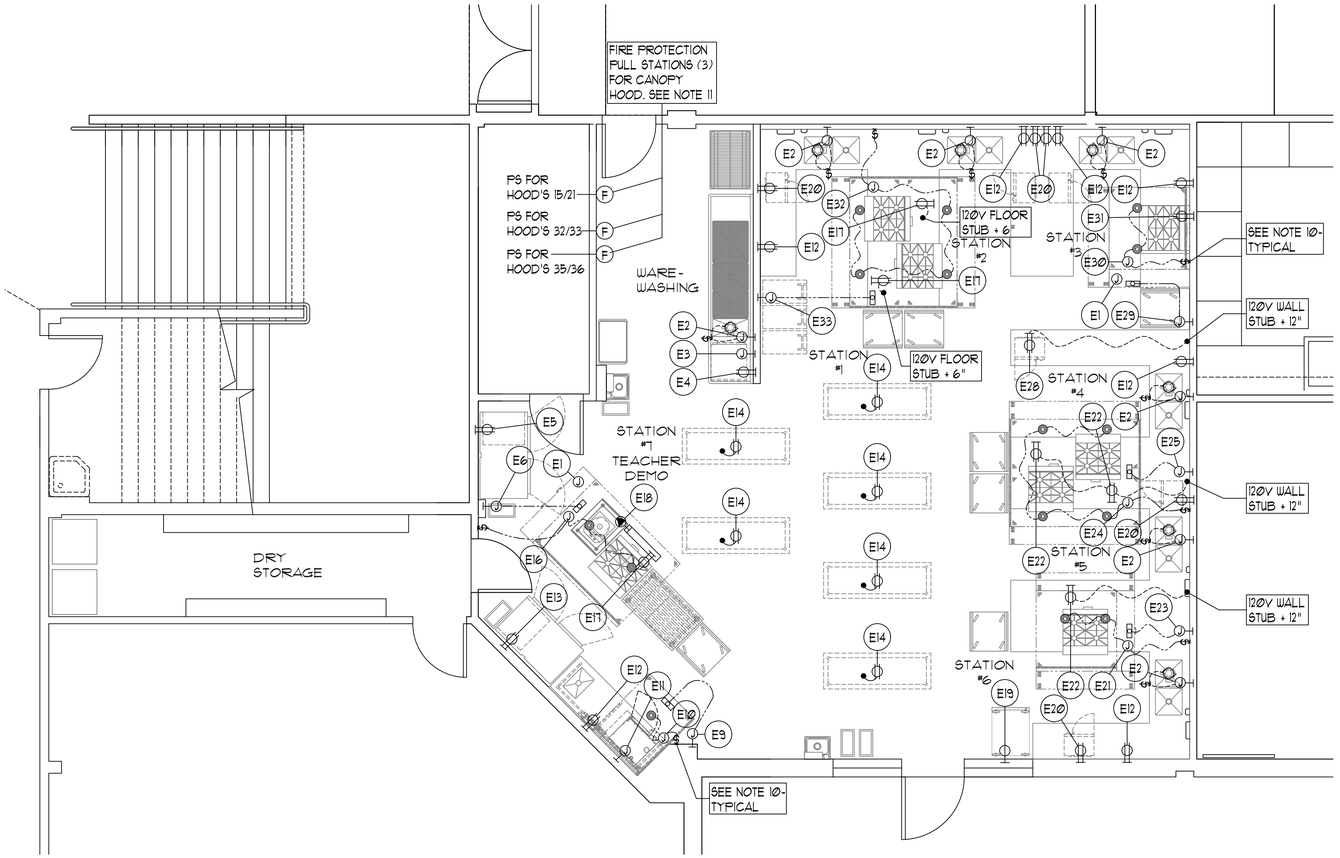

ELECTRICAL NOTES

1. THIS DRAWING IS NOT TO BE USED FOR ESTABLISHING ROUGH-IN LOCATIONS. REFER TO DIMENSIONED DRAWINGS PREPARED BY THE KITCHEN EQUIPMENT CONTRACTOR.
2. UNDER ELECTRICAL WORK OF DIVISION 26, PROVIDE ALL ROUGH-INS AND FINAL CONNECTIONS IN CONFORMANCE WITH LOCAL CODES.
3. HOOD LIGHTS ARE FURNISHED UNDER KITCHEN EQUIPMENT, DIVISION 11. UNDER ELECTRICAL WORK OF DIVISION 26, FURNISH AND INSTALL SWITCHES AND FURNISH AND INSTALL ALL INTERCONNECTING CONDUIT AND WIRING CONCEALED FROM SIGHT.
4. UNDER ELECTRICAL WORK OF DIVISION 26, FURNISH AND INSTALL ALL INTERCONNECTING WIRING ACROSS CEILING AS REQUIRED BETWEEN HOODS AND HOOD FIRE CONTROL PANEL.
5. ALL ELECTRICAL RECEPTACLES SHALL BE MOUNTED HORIZONTALLY ON FIXTURES AND WALLS.
6. UNDER ELECTRICAL WORK OF DIVISION 26, PROVIDE ALL DISCONNECTS, INTERLOCKS, AND CONTRACTORS REQUIRED BY LOCAL CODES.
7. UNDER ELECTRICAL WORK OF DIVISION 26, FURNISH AND INSTALL SHUNT TRIP CIRCUIT BREAKERS TO SHUT OFF POWER SUPPLY TO ALL ELECTRICAL COOKING EQUIPMENT DURING FIRE SYSTEM ACTIVATION.
8. UNDER WORK OF KITCHEN EQUIPMENT, DIVISION 11, FURNISH AND INSTALL STAINLESS STEEL OR CHROME PLATED ESCUTCHEON PLATES FOR ALL ELECTRICAL CONNECTIONS PENETRATING COUNTER TOPS FOR BELOW COUNTER PLUG-INS.
9. UNDER ELECTRICAL WORK OF DIVISION 26, FURNISH AND INSTALL ALL INTERCONNECTING WIRING BETWEEN WAREWASHER CONTROL PANEL AND EXHAUST FAN FOR AUTO FAN ON/OFF DURING EQUIPMENT OPERATION. SET FAN TO CONTINUE TO RUN AN EXTRA 20 MINUTES AFTER WAREWASHER IS TURNED-OFF.
10. UNDER ELECTRICAL WORK OF DIVISION 26, PROVIDE POWER TO HOOD LIGHTS AND EXHAUST FAN ON ROOF-INTERLOCK WITH MAKE-UP AIR SUPPLY UNIT PER PER MECHANICAL ENG. PLANS. INTERCONNECT TO FAN/ LIGHT/WALL SWITCH FURNISHED BY HOOD MANUFACTURER AND INSTALL @ 48" ABOVE FINISHED FLOOR.
11. UNDER KITCHEN WORK OF DIVISION 11 LOCATE MANUAL FIRE SUPPRESSION PULL STATION PER CODES. PROVIDE OCTAGON BOX AND RUN EMPTY CONDUIT TO FIRE SUPPRESSION CONTROL HEAD. MINIMUM 12" RADIUS BENDS IN ANY CHANGE OF DIRECTION. SET PULL STATION BOX @ +48" AFF. TO CENTER LINE.

ELECTRICAL SCHEDULE

ITEM NO.	E.NO.	VOLTS	Ø	DESCRIPTION	LOCN.	HEIGHT	SERVICE TO :	RATING	REMARKS
15,21,32,33,35,36	E1	120	1	J-BOX	WALL	60"	CANOPY HOOD DEMAND CONTROL PANEL	15 AMPS	---
4	E2	208	3	J-BOX	WALL	12"	DISPSOSER	1-1/4 HP	CONNECTIONS TO DISPOSER, SOLENOID, AND SWITCH
6	E3	208	3	J-BOX	WALL	12"	UNDERCOUNTER DISHWASHER	23. 9 AMPS	VERIFY ALL REQUIREMENTS WITH EXISTING EQUIPMENT
6	E4	120	1	DCO	WALL	12"	WAREWASHER DETERGENT FEED	1440 W	VERIFY ALL REQUIREMENTS WITH EXISTING EQUIPMENT
9	E5	120	1	DCO	WALL	84"	REACH-IN REFRIGERATOR	8. 2 AMPS	FURNISHED WITH NEMA 5-15P
15	E6	SGL. GANG		J-BOX	WALL	48"	CANOPY HOOD ROOM SENSOR CONTROL	---	WIRE TO HOOD SC CONTROL BOARD W/2-WIRE LOW VOLT. CABLE
---	E7	---	--	NOT USED	---	---	---	---	---
---	E8	---	--	NOT USED	---	---	---	---	---
15	E9	SGL. GANG		J-BOX	WALL	48"	CANOPY HOOD ROOM SENSOR CONTROL	---	WIRE TO HOOD SC CONTROL BOARD W/2-WIRE LOW VOLT. CABLE
15	E10	120	1	J-BOX	CEILING	---	(1) CANOPY HOOD LIGHT & HOOD CONTROLS	15 AMPS	---
17	E11	208	3	J-BOX	WALL	---	COMBI-OVEN STEAMER	10. 8 KW	---
---	E12	120	1	DCO	WALL	48"	CONVENIENCE	1440 W	DEDICATED CIRCUIT
29	E13	120	1	DCO	WALL	84"	REACH-IN FREEZER	11. 2 AMPS	FURNISHED WITH NEMA 5-15P
---	E14	120	1	DCO (DROP CORD)	CEILING	72"	CONVENIENCE	1440 W	DEDICATED CIRCUIT. CEILING DROP CORDS
---	E15	---	--	NOT USED	---	---	---	---	---
21	E16	120	1	J-BOX	CEILING	---	(2) CANOPY HOOD LIGHTS & HOOD CONTROLS	15 AMPS	---
22	E17	120	1	DCO	WALL	12"	4-BURNER OPEN RANGE	4 AMPS	FURNISHED WITH NEMA 5-15P
23	E18	208	3	SCO	WALL	24"	INDUCTION WOK	4 AMPS	FURNISHED WITH NEMA 6-30P
20	E19	120	1	SCO	WALL	24"	MOBILE PROOFING CABINET	16 AMPS	FURNISHED WITH NEMA 5-20P
31	E20	120	1	DCO	WALL	24"	MICROWAVE OVEN	13. 4 AMPS	FURNISHED WITH NEMA 5-15P
32	E21	120	1	J-BOX	CEILING	---	(2) CANOPY HOOD LIGHTS & HOOD CONTROLS	15 AMPS	---
22	E22	120	1	DCO	FIXTURE	12"	4-BURNER OPEN RANGE	4 AMPS	FURNISHED WITH NEMA 5-15P. EXTEND FROM WALL STUB
32	E23	SGL. GANG		J-BOX	WALL	48"	CANOPY HOOD ROOM SENSOR CONTROL	---	WIRE TO HOOD SC CONTROL BOARD W/2-WIRE LOW VOLT. CABLE
33	E24	120	1	J-BOX	CEILING	---	(4) CANOPY HOOD LIGHTS & HOOD CONTROLS	15 AMPS	---
33	E25	SGL. GANG		J-BOX	WALL	48"	CANOPY HOOD ROOM SENSOR CONTROL	---	WIRE TO HOOD SC CONTROL BOARD W/2-WIRE LOW VOLT. CABLE
---	E26	---	--	NOT USED	---	---	---	---	---
---	E27	---	--	NOT USED	---	---	---	---	---
31	E28	120	1	DCO	FIXTURE	24"	MICROWAVE OVEN	13. 4 AMPS	FURNISHED WITH NEMA 5-15P. EXTEND FROM WALL STUB
35	E29	SGL. GANG		J-BOX	WALL	48"	CANOPY HOOD ROOM SENSOR CONTROL	---	WIRE TO HOOD SC CONTROL BOARD W/2-WIRE LOW VOLT. CABLE
35	E30	120	1	J-BOX	CEILING	---	(2) CANOPY HOOD LIGHTS & HOOD CONTROLS	15 AMPS	---
22	E31	120	1	DCO	WALL	12"	4-BURNER OPEN RANGE	4 AMPS	FURNISHED WITH NEMA 5-15P
36	E32	120	1	J-BOX	CEILING	---	(4) CANOPY HOOD LIGHTS & HOOD CONTROLS	15 AMPS	---
36	E33	SGL. GANG		J-BOX	WALL	48"	CANOPY HOOD ROOM SENSOR CONTROL	---	WIRE TO HOOD SC CONTROL BOARD W/2-WIRE LOW VOLT. CABLE

ELECTRICAL SYMBOL LEGEND

DCO (DUPLEX CONVENIENCE OUTLET)	
J-BOX (JUNCTION BOX)	
SCO	
SWITCH(S)	$
LIGHT	
FLOOR OR CEILING STUB (AS NOTED)	•
CANOPY HOOD TEMP SENSOR	

FIRE PROTECTION LEGEND

FIRE PROTECTION SYSTEM MANUAL PULL (F)

NOTE:
LOCATE MANUAL FIRE SUPPRESSION PULL STATIONS PER CODES - DEVICES TO BE LOCATED A MINIMUM OF 10 FEET AND A MAXIMUM OF 20 FEET FROM THE KITCHEN EXHAUST SYSTEM IT SERVES. E.C. TO PROVIDE OCTAGON BOX AND RUN EMPTY CONDUIT TO FIRE SUPPRESSION CONTROL HEAD. MINIMUM 12" RADIUS BENDS IN ANY CHANGE OF DIRECTION. SET PULL STATION BOX @ +48" AFF. TO CENTERLINE. TYPICAL ALL LOCATIONS

DLR Group
© DLR Group

- NOT FOR CONSTRUCTION -

HALLIDAY ASSOCIATES
5244 NW NORWOOD
PORTLAND, OR 97229
PHO 503 297-1757
FAX 503 297-1758
SPECIALTY CONSULTANTS
FOODSERVICE FACILITY CONSULTANTS

CULINARY CLASSROOM

Westview High School - Beaverton School District

4200 NW 185th Ave, Portland, OR 97229

50% CD
01.21.21
REVISIONS

74-21106-00

FOOD SERVICE ELECTRICAL PLAN

FS1.4

BIM 360://74-21106-00 Westview HS Culinary/74-21106-00_WHSC_AR_2020.rvt
12/3/2020 2:46:27 PM

1A

FOR QUESTIONS, CALL THE
Seattle Office
Jon Clarke
PHONE: (425) 212-5996
EMAIL: reg85@captiveaire.com

PATENT NUMBERS

AC-PSP (UNITED STATES) - US PATENT 7963830 B2.
AC-PSP WALL (CANADA) - CA PATENT 2820509.
AC-PSP ISLAND (CANADA) - CA PATENT 2520330.
EXHAUST HOODS ND-2/BD-2/SND-2 (CANADA) - CA PATENT 2520435 C.

HOOD INFORMATION – JOB#4692024

HOOD NO	TAG	MODEL	MANUFACTURER	LENGTH	MAX COOKING TEMP	TYPE	APPLIANCE DUTY	DESIGN CFM/FT	TOTAL EXH CFM	EXHAUST PLENUM RISER(S) WIDTH	LENG	HEIGHT	DIA	CFM	VEL	SP	TOTAL SUPPLY CFM	HOOD CONSTRUCTION	HOOD CONFIG END TO END	ROW
1	Item 36	7230 NDI-PSP-FB	CAPTIVEAIRE	7' 2"	400 DEG	I	MEDIUM	350	2508			4"	20"	2508	1843	-0.711"	1881	304 SS 100%	ALONE	ALONE
2	Item 35	5430 ND-2-PSP-F	CAPTIVEAIRE	4' 7"	600 DEG	I	HEAVY	250	1146			4"	10"	1146	2101	-0.891"	1031	304 SS 100%	ALONE	ALONE
3	Item 33	7230 NDI-PSP-FB	CAPTIVEAIRE	7' 2"	400 DEG	I	MEDIUM	350	2508			4"	20"	2508	1843	-0.711"	1881	304 SS 100%	ALONE	ALONE
4	Item 32	5430 ND-2WI-PSP-FB	CAPTIVEAIRE	4' 6"	600 DEG	I	HEAVY	300	1350			4"	12"	1350	1719	-0.906"	1215	304 SS 100%	ALONE	ALONE
5	Item 21	6030 ND-2WI	CAPTIVEAIRE	6' 8"	600 DEG	I	HEAVY	300	2000			4"	14"	2000	1871	-1.055"	0	304 SS 100%	ALONE	ALONE
6	Item 15	5430 ND-2	CAPTIVEAIRE	3' 6"	600 DEG	I	HEAVY	200	700			4"	10"	700	1283	-0.333"	0	304 SS 100%	ALONE	ALONE

HOOD INFORMATION

HOOD NO	TAG	FILTER(S) TYPE	QTY	HEIGHT	LENGTH	EFFICIENCY @ 7 MICRONS	LIGHT(S) QTY	TYPE	WIRE GUARD	UTILITY CABINET(S) LOCATION	SIZE	FIRE SYSTEM TYPE	SIZE	ELECTRICAL MODEL #	SWITCHES QUANTITY	FIRE SYSTEM PIPING	HOOD HANGING WEIGHT
1	Item 36	CAPTRATE SOLO FILTER	10	20"	16"	85% SEE FILTER SPEC	4	RECESSED	NO							YES	806 LBS
2	Item 35	CAPTRATE SOLO FILTER	3	20"	16"	85% SEE FILTER SPEC	2	RECESSED	NO	RIGHT	12"x54"x30"	ANSUL R102	3.0/3.0	DCV-1011	1 LIGHT 1 FAN	YES	530 LBS
3	Item 33	CAPTRATE SOLO FILTER	10	20"	16"	85% SEE FILTER SPEC	4	RECESSED	NO							YES	698 LBS
4	Item 32	CAPTRATE SOLO FILTER	3	20"	16"	85% SEE FILTER SPEC	2	RECESSED	NO	LEFT	12"x54"x30"	ANSUL R102	3.0/3.0	DCV-1111	1 LIGHT 1 FAN	YES	540 LBS
5	Item 21	CAPTRATE SOLO FILTER	4	20"	16"	85% SEE FILTER SPEC	2	RECESSED	NO	RIGHT	12"x60"x30"	ANSUL R102	3.0/3.0			YES	543 LBS
6	Item 15	CAPTRATE SOLO FILTER	2	20"	20"	85% SEE FILTER SPEC	1	RECESSED	NO							YES	265 LBS

HOOD OPTIONS

HOOD NO	TAG	OPTION
1	Item 36	LEFT END STANDOFF(FIN/INS- ISLAND) 1" WIDE 72" LONG INSULATED.
		RIGHT END STANDOFF(FIN/INS- ISLAND) 1" WIDE 72" LONG INSULATED.
		BALANCE DAMPERS.
		INSULATION FOR TOP OF HOOD.
		SENSOR-CV.
2	Item 35	BALANCE DAMPERS.
		INSULATION FOR TOP OF HOOD.
		INSULATION FOR BACK OF HOOD.
		SENSOR-CV.
3	Item 33	LEFT END STANDOFF(FIN/INS- ISLAND) 1" WIDE 72" LONG INSULATED.
		RIGHT END STANDOFF(FIN/INS- ISLAND) 1" WIDE 72" LONG INSULATED.
		BALANCE DAMPERS.
		RISER SENSOR INSTALL 3IN DBL.
4	Item 32	BALANCE DAMPERS.
		INSULATION FOR TOP OF HOOD.
		INSULATION FOR BACK OF HOOD.
		FINISHED BACK- ISL/REV INSTALL 54.00" LONG, (FILTERS TO THE FRONT).
		SENSOR-CV.
5	Item 21	BALANCE DAMPERS.
		INSULATION FOR TOP OF HOOD.
		INSULATION FOR BACK OF HOOD.
		FINISHED BACK- ISL/REV INSTALL 80.00" LONG, (FILTERS TO THE FRONT).
		SENSOR-CV.
6	Item 15	LEFT END STANDOFF (FINISHED) 1" WIDE 54" LONG INSULATED.
		BALANCE DAMPERS.
		INSULATION FOR TOP OF HOOD.
		INSULATION FOR BACK OF HOOD.
		SENSOR-CV.
		LEFT WALL AS END PANEL.

PERFORATED SUPPLY PLENUM(S)

HOOD NO	TAG	POS	LENGTH	WIDTH	HEIGHT	TYPE	RISER(S) WIDTH	LENG	DIA	CFM	SP
1	Item 36	Back	88"	12"	6"	MUA	10"	24"		470	0.123"
						MUA	10"	24"		470	0.123"
		Front	88"	12"	6"	MUA	10"	24"		470	0.123"
						MUA	10"	24"		470	0.123"
2	Item 35	Front	67"	14"	6"	MUA	10"	24"		515	0.146"
						MUA	10"	24"		515	0.146"
3	Item 33	Back	88"	12"	6"	MUA	10"	24"		470	0.123"
						MUA	10"	24"		470	0.123"
		Front	88"	12"	6"	MUA	10"	24"		470	0.123"
						MUA	10"	24"		470	0.123"
4	Item 32	Back	66"	12"	6"	MUA	8"	36"		607	0.134"
		Front	66"	12"	6"	MUA	8"	36"		607	0.134"

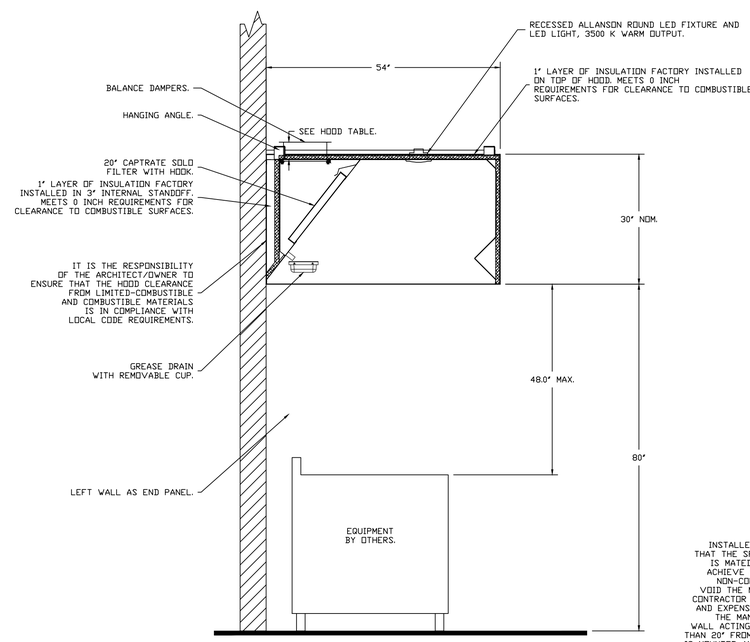

SECTION VIEW – MODEL 5430ND-2
HOOD – #6 (Item 15)

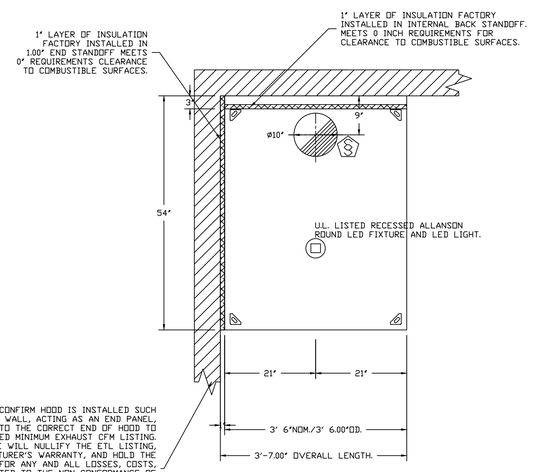

INSTALLER MUST CONFIRM HOOD IS INSTALLED SUCH THAT THE SPECIFIED WALL, ACTING AS AN END PANEL, IS MATED TIGHT TO THE CORRECT END OF HOOD TO ACHIEVE A REDUCED MINIMUM EXHAUST CFM LISTING. NON-COMPLIANCE WILL NULLIFY THE ETL LISTING, VOID THE MANUFACTURER'S WARRANTY, AND HOLD THE CONTRACTOR LIABLE FOR ANY AND ALL LOSSES, COSTS, AND EXPENSES RELATED TO THE NON-CONFORMANCE OF THE MANUFACTURER'S SPECIFIED INSTRUCTION. THE WALL ACTING AS AN END PANEL MUST EXTEND NO LESS THAN 20" FROM THE INTERSECTING WALL ON WHICH HOOD IS MOUNTED AND MUST EXTEND NO LESS THAN 20" UNDER BOTTOM OF HOOD TO BE ELIGIBLE FOR REDUCED MINIMUM EXHAUST CFM LISTING.

PLAN VIEW – HOOD #6 (Item 15)
3' 6.00" LONG 5430ND-2

SPECIFICATION: CAPTRATE• GREASE-STOP• SOLO FILTER

THE CAPTRATE GREASE-STOP SOLO FILTER IS A SINGLE-STAGE FILTER FEATURING A UNIQUE S-BAFFLE DESIGN IN CONJUNCTION WITH A SLOTTED REAR BAFFLE DESIGN, TO DELIVER EXCEPTIONAL FILTRATION EFFICIENCY.

FILTER IS STAINLESS STEEL CONSTRUCTION, AND SIZED TO FIT INTO STANDARD 2-INCH DEEP HOOD CHANNEL(S).

UNITS SHALL INCLUDE STAINLESS STEEL HANDLES AND A FASTENING DEVICE TO SECURE THE TWO COMPONENTS WHEN ASSEMBLED.

GREASE EXTRACTION EFFICIENCY PERFORMANCE SHALL REMOVE AT LEAST 75% OF GREASE PARTICLES FIVE MICRONS IN SIZE, AND 85% GREASE PARTICLES SEVEN MICRONS IN SIZE AND LARGER, WITH A CORRESPONDING PRESSURE DROP NOT TO EXCEED 1.0 INCHES OF WATER GAUGE.

THE CAPTRATE GREASE-STOP SOLO WAS TESTED TO ASTM STANDARD ASTM F2519-05. MANUFACTURER APPROVED FOR USE IN SOLID FUEL APPLICATIONS AS A SPARK ARRESTER.

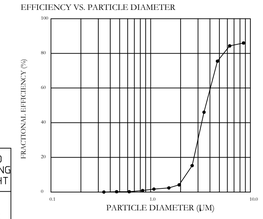

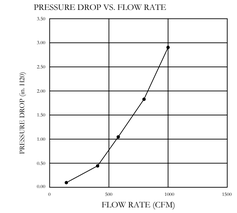

CAPTRATE FILTERS ARE BUILT IN COMPLIANCE WITH:
NFPA #96.
NSF STANDARD #2.
UL STANDARD #1046.
INT. MECH. CODE (IMC).
ULC-S649.

REVISIONS

DESCRIPTION	DATE:

CAPTIVEAIRE
www.captiveaire.com
Seattle Office
1309 Pacific Ave, Everett, WA, 98201 PHONE: (425) 212-5996 FAX: (425) 212-5998 EMAIL: reg85@captiveaire.com

Westview HS R4
PORTLAND, OR, 97229

DATE: 1/15/2021
DWG.#: 4692024
DRAWN BY: JDC-85
SCALE: 3/4" = 1'-0"
MASTER DRAWING
SHEET NO. 1

DLR Group
© DLR Group

- NOT FOR CONSTRUCTION -

HALLIDAY ASSOCIATES
6564 NW NORWOOD
PORTLAND, OR 97229
P: 503 - 641 - 6633
FAX: 503 - 641 - 6637
FOODSERVICE FACILITY CONSULTANTS
SPECIALIZING IN FOOD SERVICE EQUIPMENT DESIGN

CULINARY CLASSROOM
Westview High School - Beaverton School District
4200 NW 185th Ave, Portland, OR 97229

50% CD
01.21.21
REVISIONS

74-21106-00

FOOD SERVICE CANOPY HOOD DETAILS

FS2.1

BIM 360://74-21106-00 Westview HS Culinary/74-21106-00_WHSC_AR_2020.rvt
12/3/2020 2:46:27 PM

1A

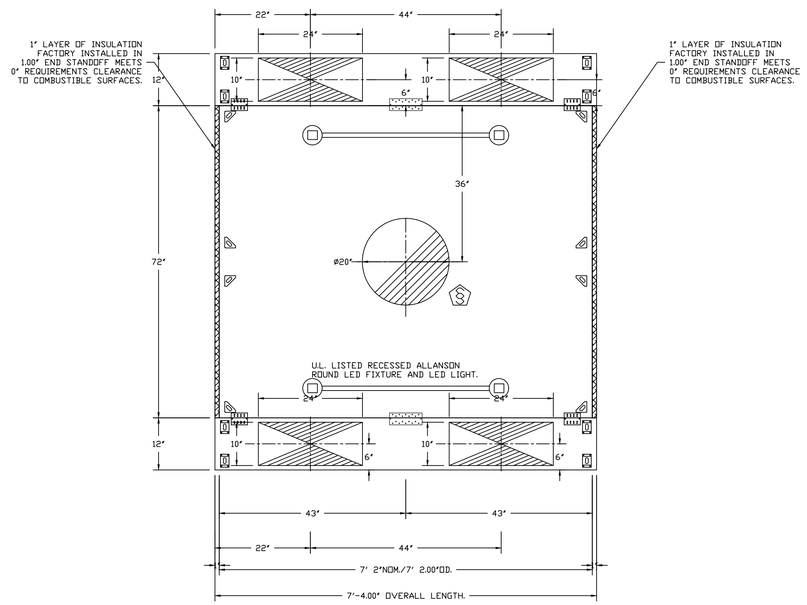

PLAN VIEW – HOOD #1 (Item 36)
7' 2.00" LONG 7230NDI-PSP-FB

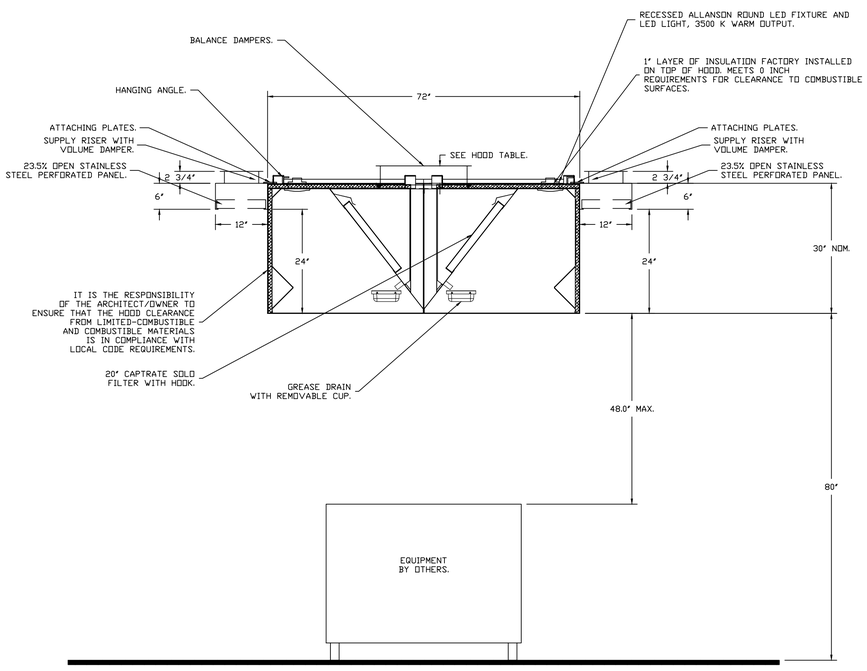

SECTION VIEW – MODEL 7230NDI-PSP-FB
HOOD – #1 (Item 36)

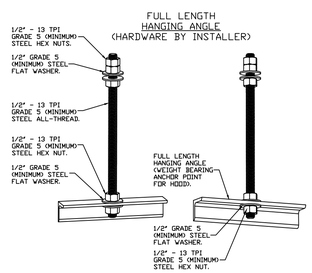

ASSEMBLY INSTRUCTIONS

HANGING ANGLE MUST BE SUPPORTED WITH 1/2" - 13 TPI GRADE 5 (MINIMUM) ALL-THREAD. SANDWICH HANGING ANGLES AND CEILING ANCHOR POINTS WITH 1/2" GRADE 5 (MINIMUM) STEEL FLAT WASHERS AND 1/2" - 13 TPI GRADE 5 (MINIMUM) HEX NUTS AS SHOWN. MUST USE DOUBLED HEX NUT CONFIGURATION ABOVE CEILING ANCHORS. SINGLE HEX NUT BENEATH HANGING ANGLE IS ACCEPTABLE FOR FULL LENGTH HANGING ANGLES. MAINTAIN 1/4" OF EXPOSED THREADS BENEATH BOTTOM HEX NUT. TORQUE ALL HEX NUTS TO 57 FT-LBS.

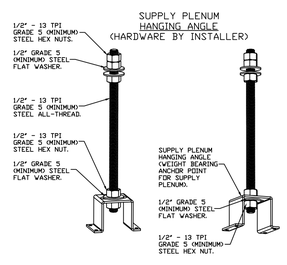

ASSEMBLY INSTRUCTIONS

HANGING ANGLE MUST BE SUPPORTED WITH 1/2" - 13 TPI GRADE 5 (MINIMUM) ALL-THREAD. SANDWICH HANGING ANGLES AND CEILING ANCHOR POINTS WITH 1/2" GRADE 5 (MINIMUM) STEEL FLAT WASHERS AND 1/2" - 13 TPI GRADE 5 (MINIMUM) HEX NUTS AS SHOWN. MUST USE DOUBLED HEX NUT CONFIGURATION ABOVE CEILING ANCHORS. SINGLE HEX NUT BENEATH HANGING ANGLE IS ACCEPTABLE FOR PSP HANGING ANGLES. MAINTAIN 1/4" OF EXPOSED THREADS BENEATH BOTTOM HEX NUT. TORQUE ALL HEX NUTS TO 57 FT-LBS.

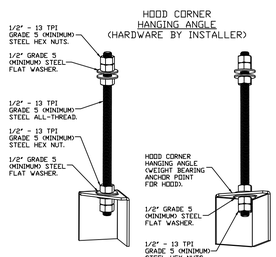

ASSEMBLY INSTRUCTIONS

HANGING ANGLE MUST BE SUPPORTED WITH 1/2" - 13 TPI GRADE 5 (MINIMUM) ALL-THREAD. SANDWICH HANGING ANGLES AND CEILING ANCHOR POINTS WITH 1/2" GRADE 5 (MINIMUM) STEEL FLAT WASHERS AND 1/2" - 13 TPI GRADE 5 (MINIMUM) HEX NUTS AS SHOWN. MUST USE DOUBLED HEX NUT CONFIGURATION BENEATH HOOD HANGING ANGLES AND ABOVE CEILING ANCHORS. MAINTAIN 1/4" OF EXPOSED THREADS BENEATH BOTTOM HEX NUT. TORQUE ALL HEX NUTS TO 57 FT-LBS.

REVISIONS

DESCRIPTION	DATE:

CAPTIVEAIRE
www.captiveaire.com
Seattle Office
1309 Pacific Ave, Everett, WA, 98201 PHONE: (425) 212-5996 FAX: (425) 212-5998 EMAIL: reg85@captiveaire.com

Westview HS R4
PORTLAND, OR, 97229

DATE: 1/15/2021
DWG.#: 4692024
DRAWN BY: JDC-85
SCALE: 3/4" = 1'-0"
MASTER DRAWING

SHEET NO. 2

DLR Group
© DLR Group

- NOT FOR CONSTRUCTION -

HALLIDAY ASSOCIATES
6564 NW NORWOOD
PO BOX 1000
FOREST GROVE, OR 97116
PH: 503 357 - 6837
FAX: 503 357 - 6843
PROJECT FACILITY CONSULTANTS
SPECIALTY MECHANICAL DESIGN

CULINARY CLASSROOM

Westview High School - Beaverton School District
4200 NW 185th Ave, Portland, OR 97229

50% CD
01.21.21
REVISIONS

74-21106-00

FOOD SERVICE CANOPY HOOD DETAILS

FS2.2

BIM 360://74-21106-00 Westview HS Culinary/74-21106-00_WHSC_AR_2020.rvt
12/3/2020 2:46:27 PM

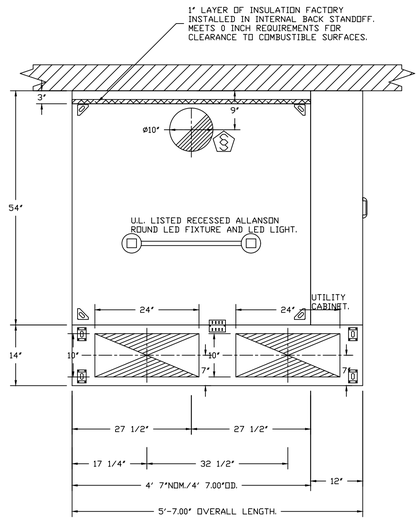

PLAN VIEW – HOOD #2 (Item 35)
4' 7.00" LONG 5430ND-2-PSP-F

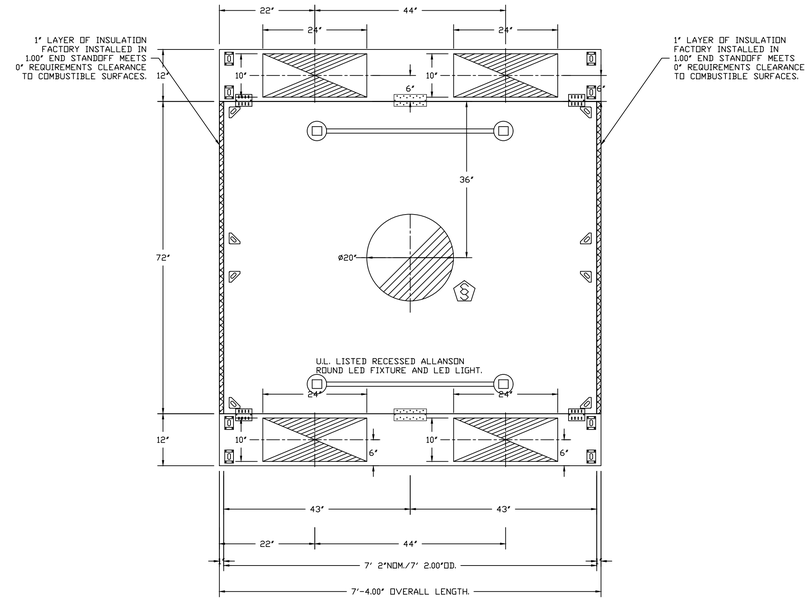

PLAN VIEW – HOOD #3 (Item 33)
7' 2.00" LONG 7230NDI-PSP-FB

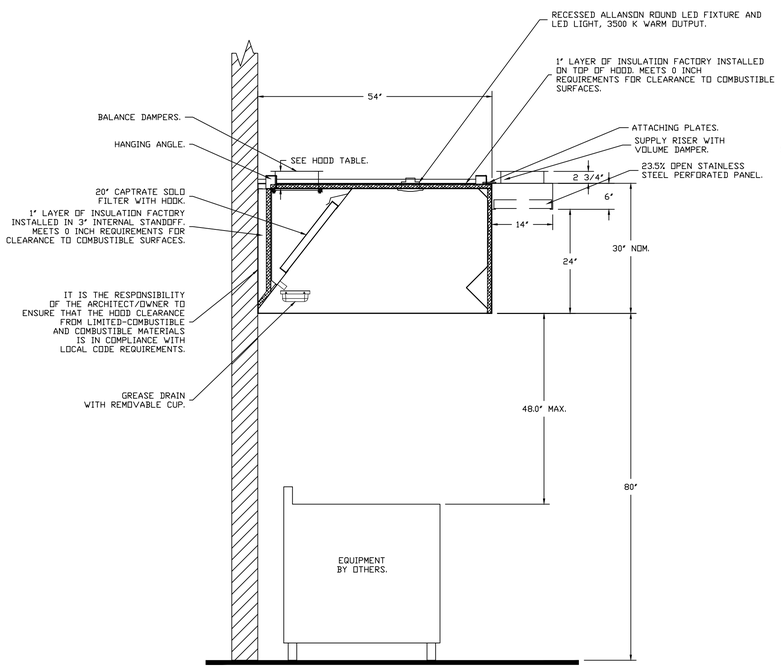

SECTION VIEW – MODEL 5430ND-2-PSP-F
HOOD – #2 (Item 35)

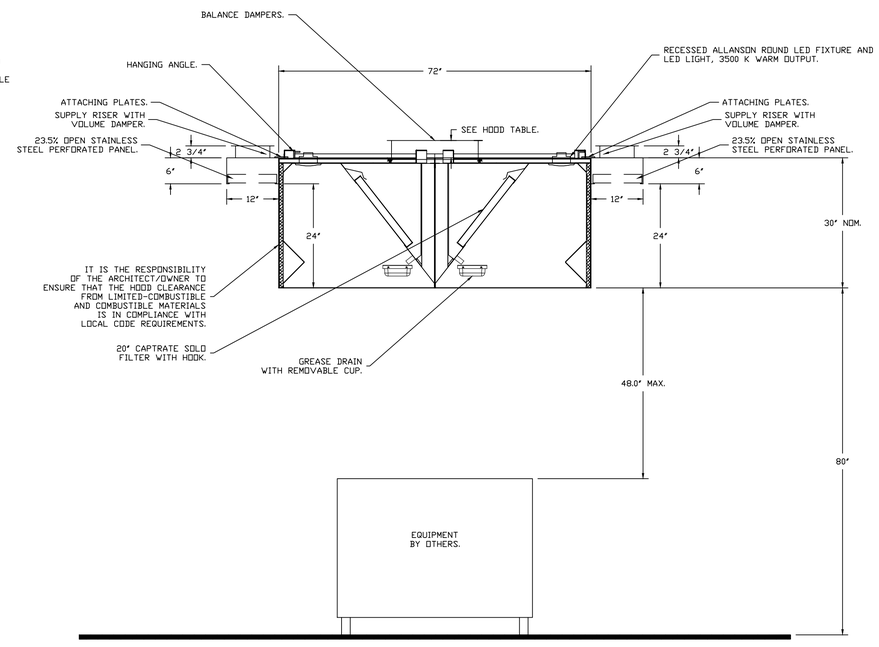

SECTION VIEW – MODEL 7230NDI-PSP-FB
HOOD – #3 (Item 33)

REVISIONS

DESCRIPTION	DATE:

CAPTIVEAIRE
www.captiveaire.com
Seattle Office
1309 Pacific Ave, Everett, WA, 98201 PHONE: (425) 212-5996 FAX: (425) 212-5998 EMAIL: reg85@captiveaire.com

Westview HS R4
PORTLAND, OR, 97229

DATE: 1/15/2021
DWG.#: 4692024
DRAWN BY: JDC-85
SCALE: 3/4" = 1'-0"
MASTER DRAWING
SHEET NO. 3

DLR Group
© DLR Group

NOT FOR CONSTRUCTION

HALLIDAY ASSOCIATES
6564 NW NORWOOD
SUITE 200
PORTLAND, OR 97229
PH: 503 297-8337
FAX: 503 297-8337
FOOD FACILITY CONSULTANTS
SPECIALIZING IN DESIGN

CULINARY CLASSROOM

Westview High School - Beaverton School District
4200 NW 185th Ave, Portland, OR 97229

50% CD
01.21.21
REVISIONS

74-21106-00

FOOD SERVICE CANOPY HOOD DETAILS

FS2.3

BIM 360://74-21106-00 Westview HS Culinary/74-21106-00_WHSC_AR_2020.rvt
12/3/2020 2:46:27 PM

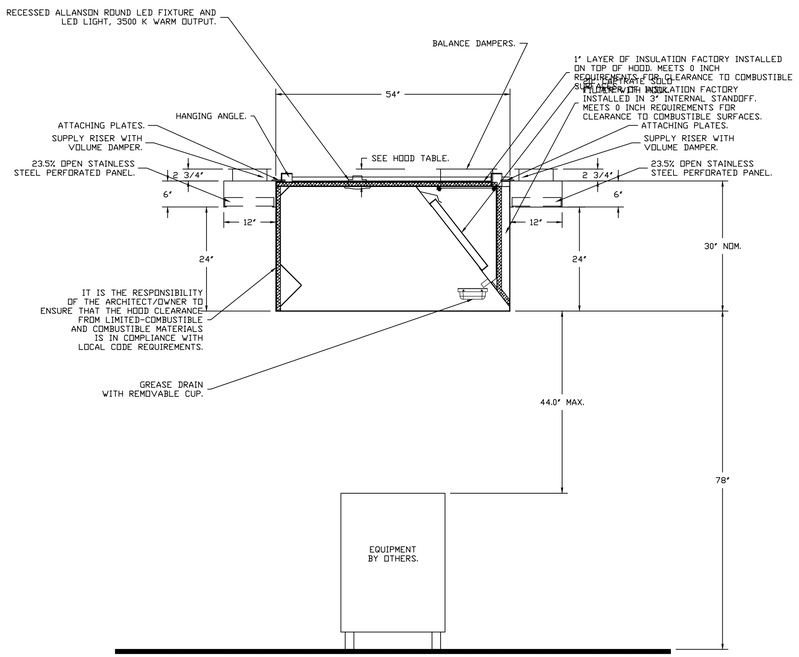

SECTION VIEW – MODEL 5430ND-2WI-PSP-FB
HOOD – #4 (Item 32)

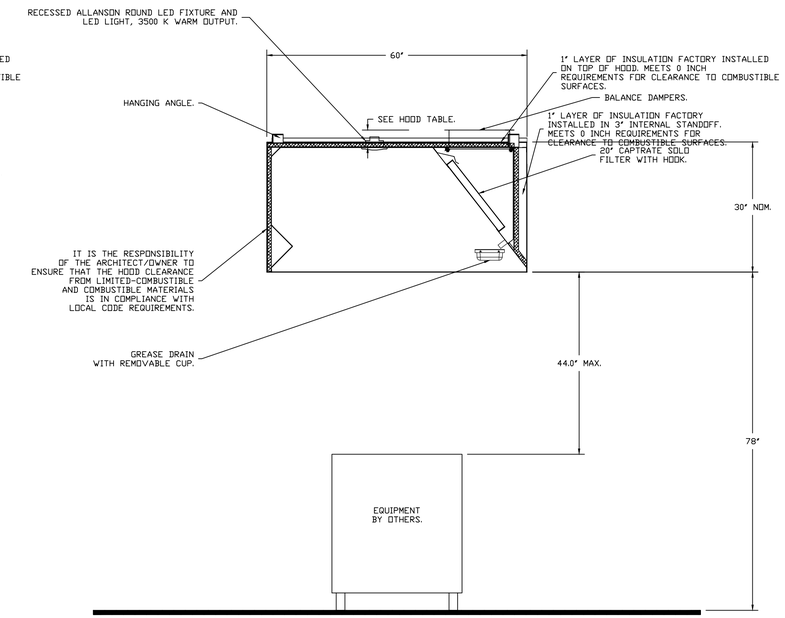

SECTION VIEW – MODEL 6030ND-2WI
HOOD – #5 (Item 21)

PLAN VIEW – HOOD #4 (Item 32)
4' 6.00" LONG 5430ND-2WI-PSP-FB

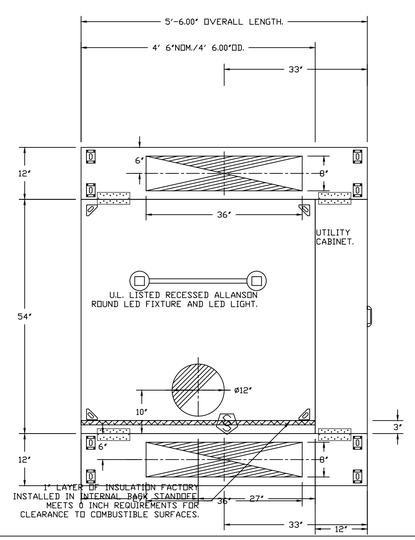

PLAN VIEW – HOOD #5 (Item 21)
6' 8.00" LONG 6030ND-2WI

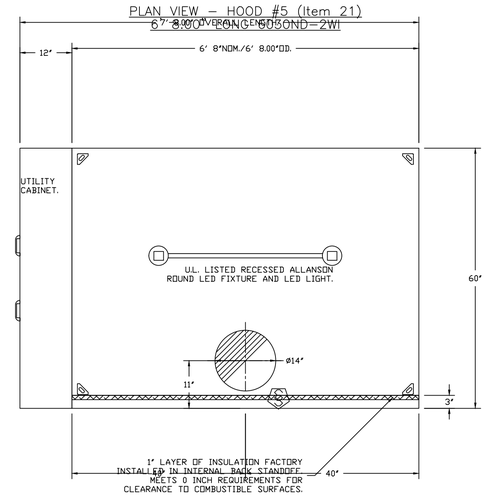

REVISIONS

DESCRIPTION	DATE:

CAPTIVEAIRE
www.captiveaire.com
Seattle Office
1309 Pacific Ave, Everett, WA, 98201 PHONE: (425) 212-5996 FAX: (425) 212-5998 EMAIL: reg85@captiveaire.com

Westview HS R4
PORTLAND, OR, 97229

DATE: 1/15/2021
DWG.#: 4692024
DRAWN BY: JDC-85
SCALE: 3/4" = 1'-0"
MASTER DRAWING

SHEET NO. 4

DLR Group
© DLR Group

- NOT FOR CONSTRUCTION -

HALLIDAY ASSOCIATES
6564 NW NORWOOD
PO BOX 1000
PORTLAND, OR 97229
503 297 8551 - 6633
FOOD FACILITY CONSULTANTS
SPECIALIZING IN DESIGN

CULINARY CLASSROOM

Westview High School - Beaverton School District
4200 NW 185th Ave, Portland, OR 97229

50% CD
01.21.21
REVISIONS

74-21106-00

FOOD SERVICE CANOPY HOOD DETAILS

FS2.4

BIM 360://74-21106-00 Westview HS Culinary/74-21106-00_WHSC_AR_2020.rvt
12/3/2020 2:46:27 PM

A B C D E

1A

1 2 3 4

FIRE SYSTEM INFORMATION – JOB#4692024

FIRE SYSTEM NO	TAG	TYPE	SIZE	FLOW POINTS	INSTALLATION	
					SYSTEM	LOCATION ON HOOD
1	FS 35/36	ANSUL R102	3.0/3.0	6	FIRE CABINET RIGHT	RIGHT, HOOD 2
2	FS 32/33	ANSUL R102	3.0/3.0	6	FIRE CABINET LEFT	LEFT, HOOD 4
3	FS 21 15	ANSUL R102	3.0/3.0	4	FIRE CABINET RIGHT	RIGHT, HOOD 5

GAS VALVE(S)

FIRE SYSTEM NO	TAG	TYPE	SIZE	SUPPLIED BY
1	FS 35/36	SC ELECTRICAL	2.000	CAPTIVEAIRE SYSTEMS
2	FS 32/33	SC ELECTRICAL	2.000	CAPTIVEAIRE SYSTEMS
3	FS 21 15	SC ELECTRICAL	2.000	CAPTIVEAIRE SYSTEMS

FIRE SYSTEM PARTS LIST KEY

FIRE SYSTEM NO	TAG	KEY NUMBER - PART DESCRIPTION	QTY BY FACTORY	QTY BY DIST
1	FS 35/36	0 - 0 - DISC UNION BURSTING DISC UNION ASSEMBLY FOR MANIFOLD SYSTEM.	1	0
		0 - 0 - TANK STRAP TANK STRAP - USED FOR ANSUL TANKS.	2	0
		0 - 0 - UCTANKBRACKET TANK BRACKET FOR FIRE SYSTEM TANK INSTALLATION IN UTILITY CABINETS.	2	0
		1 - 1 - AT - 3.0 TANK(#1B) - 3.0 GALLON SS TANK (FOR USE WITH AUTOMAN RELEASE, ACTUATOR, OR SS ENCLOSURE (UL/ULC)) MACOLA # 01-429862.	2	0
		3 - 3 - ANS-ELEC-AUTOMAN-SS-120 REGULATED RELEASE - ANSUL REGULATED 120V ELECTRICAL RELEASE/BRACKET ASSEMBLY, R-102, SS BOX, CARTRIDGE DETECTION, ANSUL PART # 429856.	1	0
		5 - 5 - LIQ-3.0 AGENT - ANSULEX LOW PH WET CHEMICAL AGENT, 3 GALLON (UL) 79372.	2	0
		9 - 9 - DT-CART DOUBLE TANK NITROGEN CARTRIDGE.	1	0
		10 - 10 - TLINK LINK - TEST LINK (1 TEST LINK) ANSUL PART # 24916, MACOLA # 20-24916.	1	0
		11 - 11 - MICRO-SDA MICROSWITCH KIT- INCLUDES 2 SWITCHES AND MOUNTING HARDWARE. SINGLE DUAL ELECTRIC SWITCH, ONE STANDARD SWITCH, ONE ALARM DUTY SWITCH ANSUL PART # 437155, MACOLA # 08-437155.	1	0
		12 - 12 - HOSE HOSE - RUBBER HOSE.	1	0
		27 - 27 - QPSA-1/2 PULLEY SEAL - 1/2" HOOD SEAL (UL) ANSUL PART # 423253, MACOLA # 32-79768.	1	0
		34 - 34 - RPS-A REMOTE PULL STATION - RED COMPOSITE (WITHOUT WIRE ROPE) 434618 (OLD MACOLA #06-4835).	1	0
		35 - 35 - PE-LT PULLEY ELBOW - LOW TEMP. PULLEY ELBOW, SET SCREW TYPE ANSUL PART # 415670, MACOLA # 11-415671.	2	0
		36 - 36 - PE-HT PULLEY ELBOW - HIGH TEMP PULLEY ELBOW, COMPRESSION TYPE, ANSUL PART # 423251, MACOLA # 10-45771.	1	0
2	FS 32/33	0 - 0 - DISC UNION BURSTING DISC UNION ASSEMBLY FOR MANIFOLD SYSTEM.	1	0
		0 - 0 - TANK STRAP TANK STRAP - USED FOR ANSUL TANKS.	2	0
		0 - 0 - UCTANKBRACKET TANK BRACKET FOR FIRE SYSTEM TANK INSTALLATION IN UTILITY CABINETS.	2	0
		1 - 1 - AT - 3.0 TANK(#1B) - 3.0 GALLON SS TANK (FOR USE WITH AUTOMAN RELEASE, ACTUATOR, OR SS ENCLOSURE (UL/ULC)) MACOLA # 01-429862.	2	0
		3 - 3 - ANS-ELEC-AUTOMAN-SS-120 REGULATED RELEASE - ANSUL REGULATED 120V ELECTRICAL RELEASE/BRACKET ASSEMBLY, R-102, SS BOX, CARTRIDGE DETECTION, ANSUL PART # 429856.	1	0
		5 - 5 - LIQ-3.0 AGENT - ANSULEX LOW PH WET CHEMICAL AGENT, 3 GALLON (UL) 79372.	2	0
		9 - 9 - DT-CART DOUBLE TANK NITROGEN CARTRIDGE.	1	0
		10 - 10 - TLINK LINK - TEST LINK (1 TEST LINK) ANSUL PART # 24916, MACOLA # 20-24916.	1	0
		11 - 11 - MICRO-SDA MICROSWITCH KIT- INCLUDES 2 SWITCHES AND MOUNTING HARDWARE. SINGLE DUAL ELECTRIC SWITCH, ONE STANDARD SWITCH, ONE ALARM DUTY SWITCH ANSUL PART # 437155, MACOLA # 08-437155.	1	0
		12 - 12 - HOSE HOSE - RUBBER HOSE.	1	0
		27 - 27 - QPSA-1/2 PULLEY SEAL - 1/2" HOOD SEAL (UL) ANSUL PART # 423253, MACOLA # 32-79768.	1	0
		34 - 34 - RPS-A REMOTE PULL STATION - RED COMPOSITE (WITHOUT WIRE ROPE) 434618 (OLD MACOLA #06-4835).	1	0
		35 - 35 - PE-LT PULLEY ELBOW - LOW TEMP. PULLEY ELBOW, SET SCREW TYPE ANSUL PART # 415670, MACOLA # 11-415671.	2	0
		36 - 36 - PE-HT PULLEY ELBOW - HIGH TEMP PULLEY ELBOW, COMPRESSION TYPE, ANSUL PART # 423251, MACOLA # 10-45771.	1	0
3	FS 21 15	0 - 0 - DISC UNION BURSTING DISC UNION ASSEMBLY FOR MANIFOLD SYSTEM.	1	0
		0 - 0 - TANK STRAP TANK STRAP - USED FOR ANSUL TANKS.	2	0
		0 - 0 - UCTANKBRACKET TANK BRACKET FOR FIRE SYSTEM TANK INSTALLATION IN UTILITY CABINETS.	2	0
		1 - 1 - AT - 3.0 TANK(#1B) - 3.0 GALLON SS TANK (FOR USE WITH AUTOMAN RELEASE, ACTUATOR, OR SS ENCLOSURE (UL/ULC)) MACOLA # 01-429862.	2	0
		3 - 3 - ANS-OEM REGULATED RELEASE - ANSUL REGULATED MECHANICAL RELEASE/BRACKET ASSEMBLY, OEM, R-102, CARTRIDGE DETECTION INCLUDED, ANSUL PART # 79493.	1	0
		5 - 5 - LIQ-3.0 AGENT - ANSULEX LOW PH WET CHEMICAL AGENT, 3 GALLON (UL) 79372.	0	2
		9 - 9 - DT-CART DOUBLE TANK NITROGEN CARTRIDGE.	0	1
		10 - 10 - TLINK LINK - TEST LINK (1 TEST LINK) ANSUL PART # 24916, MACOLA # 20-24916.	0	1
		11 - 11 - MICRO-SDA MICROSWITCH KIT- INCLUDES 2 SWITCHES AND MOUNTING HARDWARE. SINGLE DUAL ELECTRIC SWITCH, ONE STANDARD SWITCH, ONE ALARM DUTY SWITCH ANSUL PART # 437155, MACOLA # 08-437155.	1	0
		12 - 12 - HOSE HOSE - RUBBER HOSE.	1	0
		27 - 27 - QPSA-1/2 PULLEY SEAL - 1/2" HOOD SEAL (UL) ANSUL PART # 423253, MACOLA # 32-79768.	5	0
		34 - 34 - RPS-A REMOTE PULL STATION - RED COMPOSITE (WITHOUT WIRE ROPE) 434618 (OLD MACOLA #06-4835).	1	0
		35 - 35 - PE-LT PULLEY ELBOW - LOW TEMP. PULLEY ELBOW, SET SCREW TYPE ANSUL PART # 415670, MACOLA # 11-415671.	5	0
		36 - 36 - PE-HT PULLEY ELBOW - HIGH TEMP PULLEY ELBOW, COMPRESSION TYPE, ANSUL PART # 423251, MACOLA # 10-45771.	4	0
		ADDITIONAL PARTS TO BE DETERMINED...		

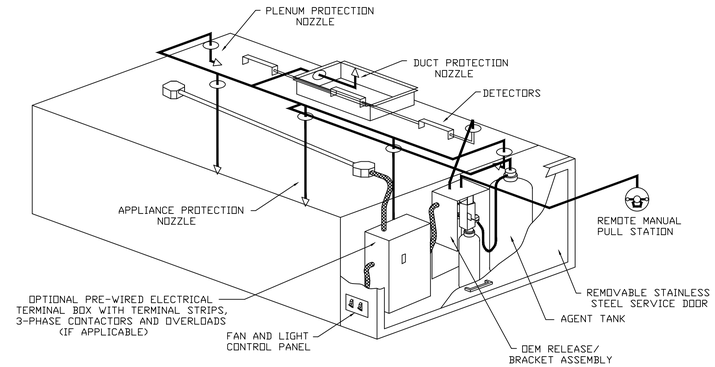

TYPICAL ANSUL R-102 SYSTEM LAYOUT

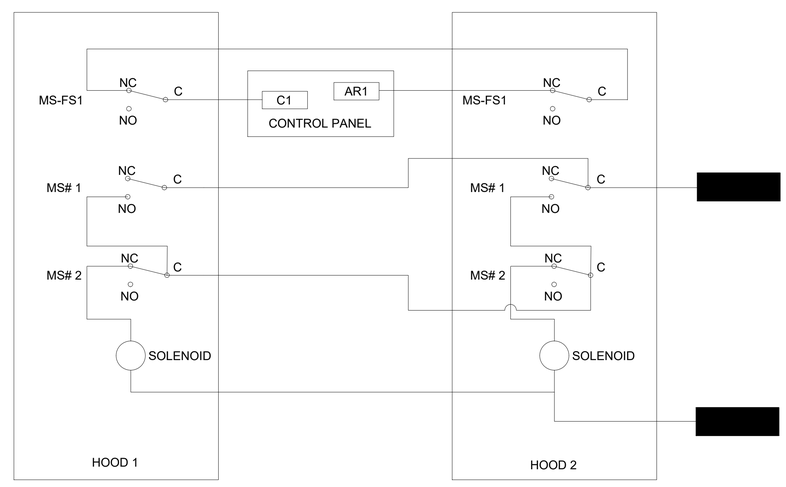

REVISIONS

DESCRIPTION	DATE:

CAPTIVEAIRE
www.captiveaire.com
Seattle Office
1309 Pacific Ave, Everett, WA, 98201 PHONE: (425) 212-5996 FAX: (425) 212-5998 EMAIL: reg85@captiveaire.com

Westview HS R4
PORTLAND, OR, 97229

DATE: 1/15/2021
DWG.#: 4692024
DRAWN BY: JDC-85
SCALE: 3/4" = 1'-0"
MASTER DRAWING
SHEET NO. 5

DLR Group
© DLR Group

NOT FOR CONSTRUCTION

HALLIDAY ASSOCIATES
6564 NW NORWOOD
PORTLAND, OR 97229
PHONE: 503-297-8337
FAX: 503-297-8338
PROFESSIONAL CONSULTANTS
SPECIALIZING IN FOODSERVICE

CULINARY CLASSROOM

Westview High School - Beaverton School District
4200 NW 185th Ave, Portland, OR 97229

50% CD
01.21.21
REVISIONS

74-21106-00

FOOD SERVICE CANOPY HOOD DETAILS

FS2.5

BIM 360://74-21106-00 Westview HS Culinary/74-211106-00_WHSC_AR_2020.rvt
12/3/2020 2:46:27 PM

1A

EXHAUST FAN INFORMATION – JOB#4692024

FAN UNIT NO	TAG	QTY	FAN UNIT MODEL #	MANUFACTURER	CFM	ESP	RPM	MOTOR ENCL	HP	BHP	ø	VOLT	FLA	DISCHARGE VELOCITY	WEIGHT (LBS)	SONES
1	EX 36 35 33 32	1	DU300HFA	CAPTIVEAIRE	7512	1.750	822	TEFC,PREMIUM	7.500	3.9540	3	460	11.1	1170 FPM	670	19.3
2	ITEM 15 21 EX	1	DU180HFA	CAPTIVEAIRE	2700	1.500	1261	ODP,PREMIUM	3.000	1.4050	3	460	4.3	624 FPM	186	17.6

MUA FAN INFORMATION – JOB#4692024

FAN UNIT NO	TAG	QTY	FAN UNIT MODEL #	BLOWER	HOUSING	MIN CFM	DESIGN CFM	ESP	RPM	MOTOR ENCL	HP	BHP	ø	VOLT	FLA	MCA	MOCP	WEIGHT (LBS)	SONES
3	MAU 36 35 33 32	1	A3-D.500-25Z	25Z-3-MOD	A3-D.500	3500	6008	0.500	1459	ODP-ECM	4.800	3.7780	3	460	5.0	6.3A	15A	1108	15

GAS FIRED MAKE-UP AIR UNIT(S)

FAN UNIT NO	TAG	INPUT BTUs	OUTPUT BTUs	TEMP RISE	REQUIRED INPUT GAS PRESSURE	GAS TYPE	BURNER EFFICIENCY(%)
3	MAU 36 35 33 32	331545	305021	48°F	7 IN. W.C. - 14 IN. W.C.	NATURAL	92

FAN OPTIONS

FAN UNIT NO	TAG	QTY	DESCRIPTION
1	EX 36 35 33 32	1	GREASE BOX.
		1	LOAD REACTOR MOUNTED IN FAN.
2	ITEM 15 21 EX	1	GREASE BOX.
		1	FAN BASE CERAMIC SEAL - INSTALLED AT PLANT - FOR GREASE DUCTS.
		1	LOAD REACTOR MOUNTED IN FAN.
3	MAU 36 35 33 32	1	AC INTERLOCK RELAY - 24VAC COIL.
		1	MOTORIZED BACKDRAFT DAMPER FOR A3-D HOUSING. MEETS AMCA CLASS 1A RATING.
		1	LOW FIRE START.
		1	INLET PRESSURE GAUGE, 0-35".
		1	MANIFOLD PRESSURE GAUGE, -5 TO 15" WC.
		1	DOUBLE WALL STEEL LINER- SIZE 3 DIRECT DRIVE.
		1	FREEZESTAT (10).
		1	INSULATION OPTION FOR VBANK FILTER SECTION.
		1	ECM WIRING PACKAGE-SUPPLY - PWM SIGNAL FROM ECPMD3 PREWIRE (3 - PHASE ZIEHL MOTOR).

FAN ACCESSORIES

FAN UNIT NO	TAG	EXHAUST			SUPPLY			
		GREASE CUP	GRAVITY DAMPER	WALL MOUNT	SIDE DISCHARGE	GRAVITY DAMPER	MOTORIZED DAMPER	WALL MOUNT
1	EX 36 35 33 32	YES						
2	ITEM 15 21 EX	YES						
3	MAU 36 35 33 32						YES	

CURB ASSEMBLIES

NO	ON FAN	TAG	WEIGHT	ITEM	SIZE
1	# 1	EX 36 35 33 32	75 LBS	CURB	38.500"W X 38.500"L X 30.000"H VENTED.
2	# 2	ITEM 15 21 EX	34 LBS	CURB	26.500"W X 26.500"L X 30.000"H VENTED HINGED.
3	# 3	MAU 36 35 33 32	109 LBS	CURB	35.000"W X 84.000"L X 30.000"H INSULATED.
	# 3			RAIL	4.000"W X 4.000"L X 48.000"H.

FAN SOUND DATA

FAN UNIT NO	TAG	MOTOR	SOUND DATA			OCTAVE BAND SOUND DATA								
			LWA	SONES @ 5 FT	DBA @ 5 FT	DISTANCE (FT)	63 HZ	125 HZ	250 HZ	500 HZ	1 KHZ	2 KHZ	4 KHZ	8 KHZ
1	EX 36 35 33 32	EXHAUST	81.1	19.3	69.6	5	79.4	90.9	83.3	75.7	73.8	68.9	64.4	59.6
2	ITEM 15 21 EX	EXHAUST	81.5	17.6	70	5	75.9	80.1	87.5	77.4	70.4	68.3	62.2	56.4
3	MAU 36 35 33 32	SUPPLY	77.9	15	66.4	5	74.1	81.4	78.4	74.1	71.7	69	66.9	64.1

REVISIONS

	DESCRIPTION	DATE:
△		
△		
△		
△		

CAPTIVEAIRE
www.captiveaire.com
Seattle Office
1309 Pacific Ave, Everett, WA, 98201 PHONE: (425) 212-5996 FAX: (425) 212-5998 EMAIL: reg85@captiveaire.com

Westview HS R4
PORTLAND, OR, 97229

DATE: 1/15/2021

DWG.#: 4692024

DRAWN BY: JDC-85

SCALE: 3/4" = 1'-0"

MASTER DRAWING

SHEET NO. 6

DLR Group
© DLR Group

- NOT FOR CONSTRUCTION -

HALLIDAY ASSOCIATES
6564 NW NORWOOD
PO BOX 1000
HILLSBORO, OR 97124
(503) 648-6657
FOOD FACILITY CONSULTANTS
SPECIALIZING IN DESIGN

CULINARY CLASSROOM
Westview High School - Beaverton School District
4200 NW 185th Ave, Portland, OR 97229

50% CD
01.21.21
REVISIONS

74-21106-00

FOOD SERVICE CANOPY HOOD DETAILS

FS2.6

BIM 360://74-21106-00 Westview HS Culinary/74-21106-00_WHSC_AR_2020.rvt
12/3/2020 2:46:27 PM

1A

ELECTRICAL PACKAGE – JOB#4692024

NO	TAG	PACKAGE #	LOCATION	SWITCHES LOCATION	SWITCHES QUANTITY	OPTION	FANS CONTROLLED FAN TAG	TYPE	Φ	HP	VOLT	FLA
1	ITEM 36 35	DCV-1111	UTILITY CABINET LEFT	08 - SHIP LOOSE W/ PREWIRE	1 LIGHT 1 FAN	SMART CONTROLS DCV	EX 36 35 33 32	EXHAUST	3	7.500	460	11.1
							MAU 36 35 33 32	SUPPLY	3	4.800	460	5.0
2	ITEM 21	DCV-1011	UTILITY CABINET RIGHT	08 - SHIP LOOSE W/ PREWIRE	1 LIGHT 1 FAN	SMART CONTROLS DCV	Item 15 21 EX	EXHAUST	3	3.000	460	4.3

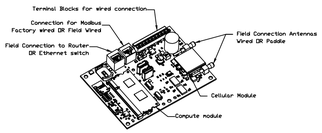

CASlink Monitor and Control

- Hood control panel to support communications to cloud-based Building Management System.
- Hood Control Panel to allow cloud-based Building Management System to monitor real time parameters outlined as MONITOR in the points list.
- Hood Control Panel to allow cloud-based Building Management System to control parameters outlined as CONTROL in the points list.
- Hood Control Panel to allow cloud-based Building Management System to implement SYSTEM ECONOMIZER control strategies for fully integrated Building Management.

MONITORING AND CONTROL POINTS LIST

DCV Packages	Function
Room Temperature	MONITOR
Duct Temperature(s)	MONITOR
MUA Discharge Temperature	MONITOR
Kitchen RTU Discharge Temperature	MONITOR
Fan Speed	MONITOR
Fan Amperage	MONITOR
Fan Power	MONITOR
VFD Faults	MONITOR
Controller Faults	MONITOR
Fan Faults	MONITOR
Fan Status	MONITOR
PCU Faults	MONITOR
PCU Filter Clog Percentages	MONITOR
Fire Condition	MONITOR
CORE Fire System	MONITOR
Building Pressures	MONITOR
Prep Time Button	MONITOR & CONTROL
Fans Button	MONITOR & CONTROL
Lights Button	MONITOR & CONTROL
Wash Button	MONITOR & CONTROL

ZC Packages	Function
Room Temperature(s)	MONITOR
Duct Temperature(s)	MONITOR
MUA Discharge Temperature	MONITOR
Kitchen RTU Discharge Temperature	MONITOR
Controller Faults	MONITOR
Fan Faults	MONITOR
Fan Status	MONITOR
PCU Faults	MONITOR
PCU Filter Clog Percentages	MONITOR
Fire Condition	MONITOR
CORE Fire System	MONITOR
Building Pressures	MONITOR
Fans Button(s)	MONITOR & CONTROL
Lights Button(s)	MONITOR & CONTROL
Wash Button	MONITOR & CONTROL

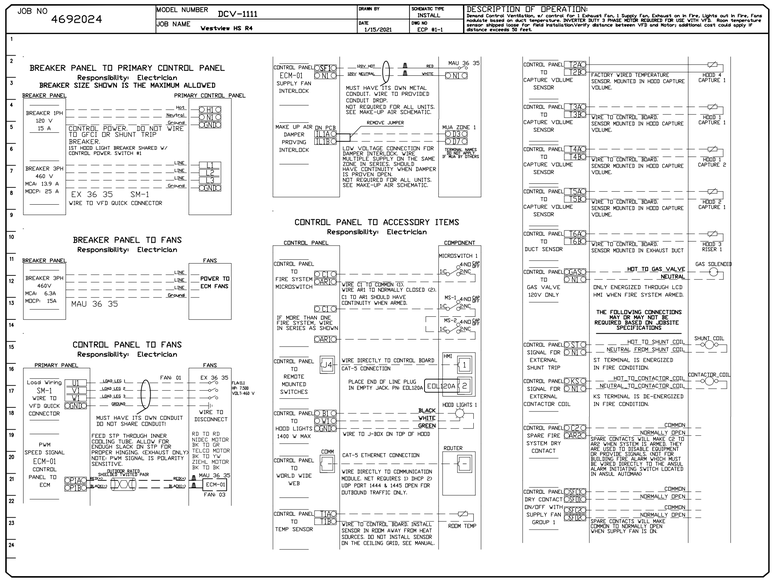

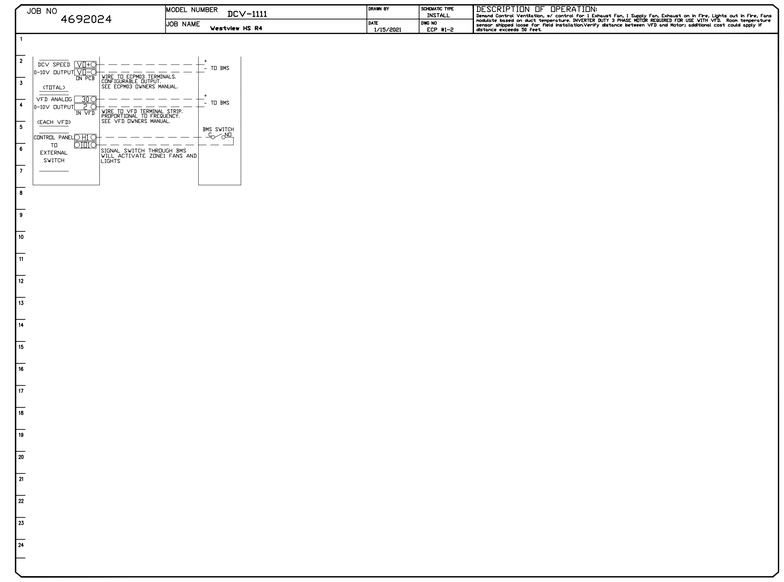

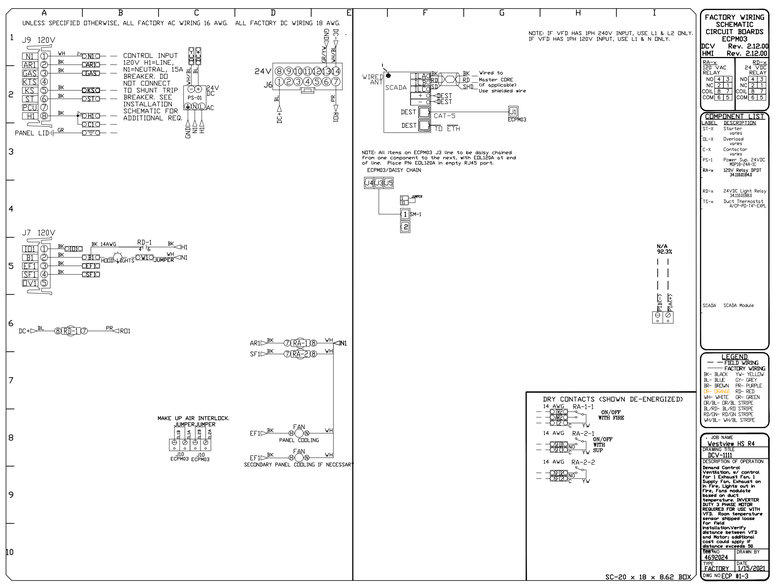

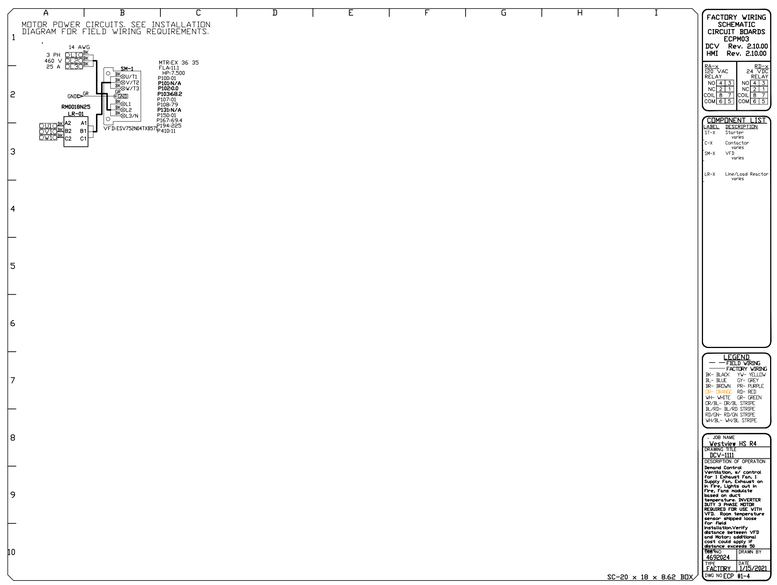

FACTORY WIRING SCHEMATIC CIRCUIT BOARDS ECPM03
DCV (HM) Rev. 2.12.00
DCV (HM) Rev. 2.10.00

COMPONENT LIST

LEGEND — FIELD WIRING — FACTORY WIRING

JOB NAME Westview HS R4
MODEL NO DCV-1111
DESCRIPTION OF OPERATION: Demand Control Ventilation, w/ control for: 1 Exhaust Fan, 1 Supply Fan, Exhaust on in Fire, Lights out in Fire, Fans modulate based on duct temperature. INVERTER DUTY 3 PHASE MOTOR REQUIRED FOR USE WITH VFD. Fans modulate based on duct temperature. Field installation/verify distance between VFD and Motors additional cost could apply if distance exceeds 50 feet.
DWG NO 4692024 DRAWN BY
DATE FACTORY 1/15/2021
SHEET NO ECP 61-3
SHEET NO ECP 61-4

REVISIONS

DESCRIPTION	DATE:

CAPTIVEAIRE
www.captiveaire.com
Seattle Office
1309 Pacific Ave, Everett, WA, 98201 PHONE: (425) 212-5996 FAX: (425) 212-5998 EMAIL: reg85@captiveaire.com

DLR Group
© DLR Group

NOT FOR CONSTRUCTION

HALLIDAY ASSOCIATES
6564 NW NORWOOD
PO BOX 345
HILLSBORO, OR 97123
503-648-6627
FAX 503-648-6653
SPECIALTY FACILITY CONSULTANTS
FOOD SERVICE EQUIPMENT

Westview HS R4
PORTLAND, OR, 97229

DATE: 1/15/2021
DWG.#: 4692024
DRAWN BY: JDC-85
SCALE: 3/4" = 1'-0"
MASTER DRAWING
SHEET NO. 10

CULINARY CLASSROOM
Westview High School - Beaverton School District
4200 NW 185th Ave, Portland, OR 97229

50% CD
01.21.21
REVISIONS

74-21106-00

FOOD SERVICE CANOPY HOOD DETAILS

FS2.7

BIM 360://74-21106-00 Westview HS Culinary/74-21106-00_WHSC_AR_2020.rvt
12/3/2020 2:46:27 PM

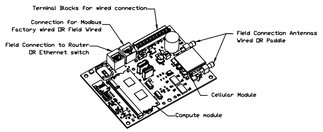

CASlink Monitor and Control

- Hood control panel to support communications to cloud-based Building Management System.
- Hood Control Panel to allow cloud-based Building Management System to monitor real time parameters outlined as MONITOR in the points list.
- Hood Control Panel to allow cloud-based Building Management System to control parameters outlined as CONTROL in the points list.
- Hood Control Panel to allow cloud-based Building Management System to implement SYSTEM ECONOMIZER control strategies for fully integrated Building Management.

MONITORING AND CONTROL POINTS LIST

DCV Packages	Function
Room Temperature	MONITOR
Duct Temperature(s)	MONITOR
MUA Discharge Temperature	MONITOR
Kitchen RTU Discharge Temperature	MONITOR
Fan Speed	MONITOR
Fan Amperage	MONITOR
Fan Power	MONITOR
VFD Faults	MONITOR
Controller Faults	MONITOR
Fan Faults	MONITOR
Fan Status	MONITOR
PCU Faults	MONITOR
PCU Filter Clog Percentages	MONITOR
Fire Condition	MONITOR
CORE Fire System	MONITOR
Building Pressures	MONITOR
Prep Time Button	MONITOR & CONTROL
Fans Button	MONITOR & CONTROL
Lights Button	MONITOR & CONTROL
Wash Button	MONITOR & CONTROL

SC Packages	Function
Room Temperature(s)	MONITOR
Duct Temperature(s)	MONITOR
MUA Discharge Temperature	MONITOR
Kitchen RTU Discharge Temperature	MONITOR
Controller Faults	MONITOR
Fan Faults	MONITOR
Fan Status	MONITOR
PCU Faults	MONITOR
PCU Filter Clog Percentages	MONITOR
Fire Condition	MONITOR
CORE Fire System	MONITOR
Building Pressures	MONITOR
Fans Button(s)	MONITOR & CONTROL
Lights Button(s)	MONITOR & CONTROL
Wash Button	MONITOR & CONTROL

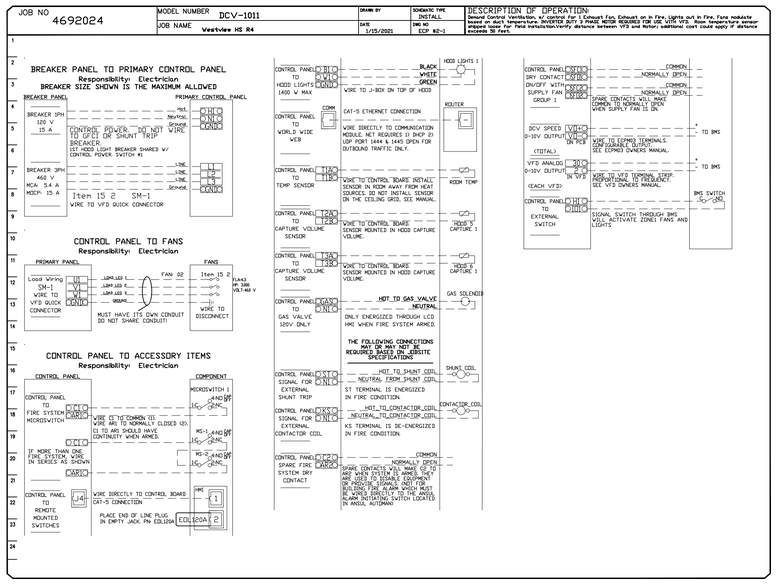

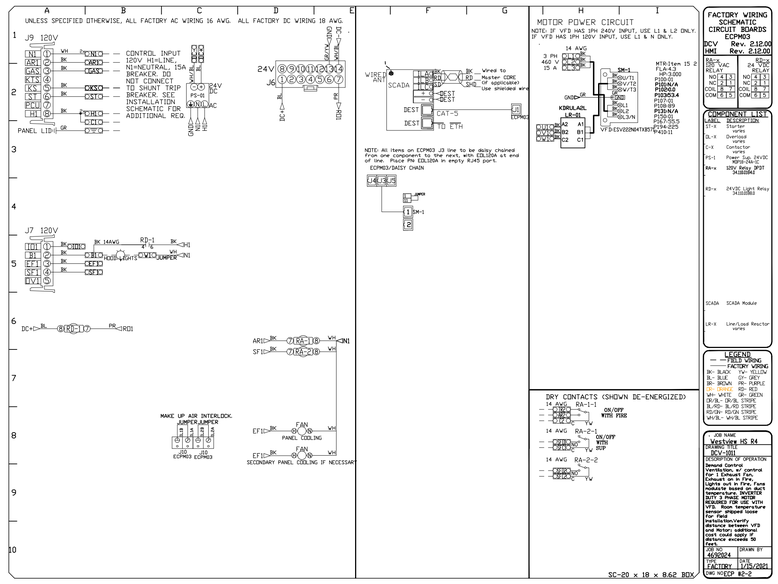

FACTORY WIRING SCHEMATIC CIRCUIT BOARDS
ECPM03
DCV Rev. 212.00
HMI Rev. 212.00

COMPONENT LIST

LEGEND

JOB NAME Westview HS R4
JOB NO DCV-1011
DESCRIPTION OF OPERATION
Demand Control Ventilation, w/ control for 1 Exhaust Fan. Exhaust on in Fire. Lights out in Fire. Fans modulate based on Demand. Room temperature sensor shipped loose for field installation/verify distance between VFD and Motor; additional cost could apply if distance exceeds 50 Feet.
DRAWN BY JDC
DATE 4/8/2024
FACTORY 1/15/2021
SHEET NO. SC-2

REVISIONS

DESCRIPTION	DATE:

CAPTIVEAIRE
www.captiveaire.com
Seattle Office
1309 Pacific Ave, Everett, WA, 98201 PHONE: (425) 212-5996 FAX: (425) 212-5998 EMAIL: reg85@captiveaire.com

Westview HS R4
PORTLAND, OR, 97229

DATE: 1/15/2021
DWG.#: 4692024
DRAWN BY: JDC-85
SCALE: 3/4" = 1'-0"
MASTER DRAWING
SHEET NO. 11

DLR Group
© DLR Group

- NOT FOR CONSTRUCTION -

HALLIDAY ASSOCIATES
6564 NW 76th AVENUE
PORTLAND, OR 97229
PH: 503 297-8557
FAX: 503 297-8558
EMAIL: HALL@HALLIDAYASSOCIATES.COM
SPECIALIZING IN FOODSERVICE FACILITY DESIGN

CULINARY CLASSROOM
Westview High School - Beaverton School District
4200 NW 185th Ave, Portland, OR 97229

50% CD
01.21.21
REVISIONS

74-21106-00

FOOD SERVICE CANOPY HOOD DETAILS

FS2.8

BIM 360://74-21106-00 Westview HS Culinary/74-21106-00_WHSC_AR_2020.rvt
12/3/2020 2:46:27 PM

DEMAND CONTROL VENTILATION HOOD CONTROL PANEL SPECIFICATIONS:

- CONTROLS SHALL BE LISTED BY ETL (UL 508A) AND SHALL COMPLY WITH DEMAND VENTILATION SYSTEM TURNDOWN REQUIREMENTS OUTLINED IN IECC 403.2.8 (2015).
- THE CONTROL ENCLOSURE SHALL BE NEMA 1 RATED AND LISTED FOR INSTALLATION INSIDE OF THE EXHAUST HOOD UTILITY CABINET. THE CONTROL ENCLOSURE MAY BE CONSTRUCTED OF STAINLESS STEEL OR PAINTED STEEL.
- TEMPERATURE PROBE(S) LOCATED IN THE EXHAUST DUCT RISER(S) SHALL BE CONSTRUCTED OF STAINLESS STEEL.
- A DIGITAL CONTROLLER SHALL BE PROVIDED TO ACTIVATE THE HOOD EXHAUST FANS DYNAMICALLY BASED ON A FIXED DIFFERENTIAL BETWEEN THE AMBIENT AND DUCT TEMPERATURES SENSORS. THIS FUNCTION SHALL MEET THE REQUIREMENTS OF IMC 507.1.1.
- A DIGITAL CONTROLLER SHALL PROVIDE ADJUSTABLE HYSTERESIS SETTINGS TO PREVENT CYCLING OF THE FANS AFTER THE COOKING APPLIANCES HAVE BEEN TURNED OFF AND/OR THE HEAT IN THE EXHAUST SYSTEM IS REDUCED.
- A DIGITAL CONTROLLER SHALL PROVIDE AN ADJUSTABLE MINIMUM FAN RUN-TIME SETTING TO PREVENT FAN CYCLING.
- VARIABLE FREQUENCY DRIVES (VFDS) SHALL BE PROVIDED FOR FANS AS REQUIRED. THE DIGITAL CONTROLLER SHALL MODULATE THE VFDS BETWEEN A MINIMUM SETPOINT AND A MAXIMUM SETPOINT ON DEMAND. THE DUCT TEMPERATURE SENSOR INPUT(S) TO THE DIGITAL CONTROLLER SHALL BE USED TO CALCULATE THE SPEED REFERENCE SIGNAL.
- THE VFD SPEED RANGE OF OPERATION SHALL BE FROM 0% TO 100% FOR THE SYSTEM, WITH THE ACTUAL MINIMUM SPEED SET AS REQUIRED TO MEET MINIMUM VENTILATION REQUIREMENTS.
- AN INTERNAL ALGORITHM TO THE DIGITAL CONTROLLER SHALL MODULATE SUPPLY FAN VFD SPEED PROPORTIONAL TO ALL EXHAUST FANS THAT ARE LOCATED IN THE SAME FAN GROUP AS THE SUPPLY FAN.
- THE SYSTEM SHALL OPERATE IN PREP MODE DURING LIGHT COOKING LOAD OR COOL DOWN MODE WHEN SUFFICIENT HEAT REMAINS UNDERNEATH THE HOOD SYSTEM AFTER COOKING OPERATIONS HAVE COMPLETED. OPERATION DURING EITHER OF THESE PERIODS WILL DISABLE THE SUPPLY FANS AND PROVIDE AN EXHAUST FAN SPEED THAT IS EQUAL TO THE MINIMUM VENTILATION REQUIREMENT.
- A DIGITAL CONTROLLER SHALL DISABLE THE SUPPLY FAN(S), ACTIVATE THE EXHAUST FAN(S), ACTIVATE THE APPLIANCE SHUNT TRIP, AND DISABLE AN ELECTRIC GAS VALVE AUTOMATICALLY WHEN FIRE CONDITION IS DETECTED ON A COVERED HOOD.
- A DIGITAL CONTROLLER SHALL ALLOW FOR EXTERNAL BMS FAN CONTROL VIA DRY CONTACT (EXTERNAL CONTROL SHALL NOT OVERRIDE FAN OPERATION LOGIC AS REQUIRED BY CODE).
- AN LCD INTERFACE SHALL BE PROVIDED WITH THE FOLLOWING FEATURES:
  - A. ON/OFF PUSH BUTTON FAN & LIGHT SWITCH ACTIVATION.
  - B. INTEGRATED GAS VALVE RESET FOR ELECTRONIC GAS VALVES (NO RESET RELAY REQUIRED).
  - C. VFD FAULT DISPLAY WITH AUDIBLE & VISUAL ALARM NOTIFICATION.
  - D. DUCT TEMPERATURE SENSOR FAILURE DETECTION WITH AUDIBLE & VISUAL ALARM NOTIFICATION.
  - E. MIS-WIRED DUCT TEMPERATURE SENSOR DETECTION WITH AUDIBLE & VISUAL ALARM NOTIFICATION.
  - F. A SINGLE LOW VOLTAGE CAT-5 RJ45 WIRING CONNECTION.
  - G. AN ENERGY SAVINGS INDICATOR THAT UTILIZES MEASURED KWH FROM THE VFDS.

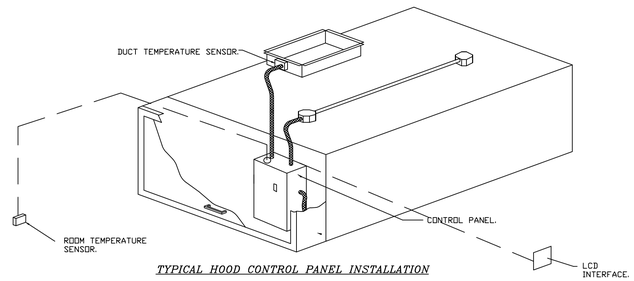

TYPICAL HOOD CONTROL PANEL INSTALLATION

SEQUENCE OF OPERATIONS:

THE HOOD CONTROL PANEL IS CAPABLE OF OPERATING IN ONE OR MORE OF THE FOLLOWING STATES AT ANY GIVEN TIME:

- AUTOMATIC: THE SYSTEM OPERATES BASED ON THE DIFFERENTIAL BETWEEN ROOM TEMPERATURE AND THE TEMPERATURE AT THE HOOD CAVITY OR EXHAUST DUCT COLLAR. FANS ACTIVATE AT A CONFIGURABLE TEMPERATURE DIFFERENTIAL THRESHOLD. DEPENDING ON THE JOB CONFIGURATION EACH FAN ZONE CAN BE CONFIGURED AS STATIC OR DYNAMIC. THESE TERMS REFER TO WHETHER A VARIABLE MOTOR (SUCH AS EC MOTORS OR VFD DRIVEN MOTORS) MODULATE WITH TEMPERATURE. IF THE PANEL IS EQUIPPED WITH VARIABLE SPEED FANS AND THE ZONE IS DEFINED AS 'DYNAMIC', THESE WILL MODULATE WITHIN A USER-DEFINED RANGE BASED ON THE TEMPERATURE DIFFERENTIAL. PANELS EQUIPPED WITH VARIABLE SPEED FANS AND A FAN ZONE DEFINED AS 'STATIC', FANS WILL RUN AT A SET SPEED CALCULATED FOR THE DRIVE. DEMAND CONTROL VENTILATION SYSTEMS ARE CAPABLE OF MODULATING EXHAUST AND MAKE UP AIR FAN SPEEDS PER THE REQUIREMENTS OUTLINED IN IECC 403.2.8.
- MANUAL: THE SYSTEM OPERATES BASED ON HUMAN INPUT FROM AN HMI.
- SCHEDULE: A WEEKLY SCHEDULE CAN BE SET TO RUN FANS FOR A SPECIFIED PERIOD THROUGHOUT THE DAY. THERE ARE THREE OCCUPIED TIMES PER DAY TO ALLOW FOR THE USER TO SET UP A TIME THAT IS SUITABLE TO THEIR NEEDS. ANY TIME THAT IS WITHIN THE DEFINED OCCUPIED TIME, THE SYSTEM WILL RUN AT MODULATION MODE AND FOLLOW THE FAN PROCEDURE ALGORITHM BASED ON TEMPERATURE DURING THIS TIME. DURING UNOCCUPIED TIME, THE SYSTEM WILL HAVE AN EXTRA OFFSET TO PREVENT UNINTENDED ACTIVATION OF THE SYSTEM DURING A TIME WHERE THE SYSTEM IS NOT BEING OCCUPIED.
- OTHER: THE SYSTEM OPERATES BASED ON THE INPUT FROM AN EXTERNAL SOURCE (DDC, BMS OR HARD-WIRED INTERLOCK).
- FIRE: UPON ACTIVATION OF THE HOOD FIRE SUPPRESSION SYSTEM, THE EXHAUST FAN WILL COME ON OR CONTINUE TO TO RUN, THE HOOD MAKEUP AIR WILL SHUTDOWN, AND A SIGNAL WILL BE SENT FOR ACTIVATING THE SHUNT TRIP BREAKER PROVIDED BY THE ELECTRICIAN. FUEL GAS WILL SHUT OFF VIA A MECHANICAL/ELECTRICAL GAS VALVE ACTUATED BY THE HOOD FIRE SUPPRESSION SYSTEM.

REVISIONS

DESCRIPTION	DATE:

CAPTIVEAIRE
www.captiveaire.com
Seattle Office
1309 Pacific Ave, Everett, WA, 98201 PHONE: (425) 212-5996 FAX: (425) 212-5998 EMAIL: reg85@captiveaire.com

Westview HS R4
PORTLAND, OR, 97229

DATE: 1/15/2021

DWG.#: 4692024

DRAWN BY: JDC-85

SCALE: 3/4" = 1'-0"

MASTER DRAWING

SHEET NO. 12

DLR Group
© DLR Group

~NOT FOR CONSTRUCTION~

HALLIDAY ASSOCIATES
6564 NW NORWOOD
PO BOX 1000
FAX 503 645-6457
TEL 503 645-6453
FOOD FACILITY CONSULTANTS
SPECIALIZING IN DESIGN

CULINARY CLASSROOM

Westview High School - Beaverton School District

4200 NW 185th Ave, Portland, OR 97229

50% CD
01.21.21
REVISIONS

74-21106-00

FOOD SERVICE CANOPY HOOD DETAILS

FS2.9

BIM 360://74-21106-00 Westview HS Culinary/74-21106-00_WHSC_AR_2020.rvt
12/3/2020 2:46:27 PM

FAN #1 DU300HFA - EXHAUST FAN (EX 36 35 33 32)

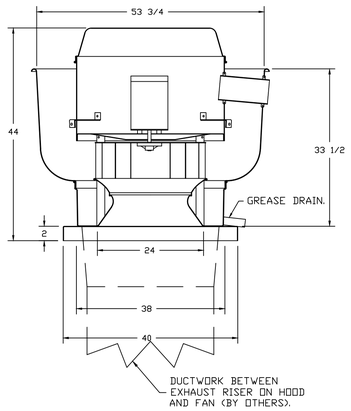

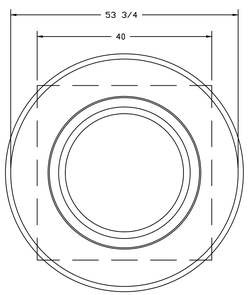

TOP VIEW

FEATURES:

- DIRECT DRIVE CONSTRUCTION (NO BELTS/PULLEYS).
- ROOF MOUNTED FANS.
- RESTAURANT MODEL.
- UL705 AND UL762 AND ULC-S645
- VARIABLE SPEED CONTROL.
- INTERNAL WIRING.
- THERMAL OVERLOAD PROTECTION (SINGLE PHASE).
- HIGH HEAT OPERATION 300°F (149°C).
- GREASE CLASSIFICATION TESTING.
- NEMA 3R SAFETY DISCONNECT SWITCH.

NORMAL TEMPERATURE TEST
EXHAUST FAN MUST OPERATE CONTINUOUSLY WHILE EXHAUSTING AIR AT 300°F (149°C) UNTIL ALL FAN PARTS HAVE REACHED THERMAL EQUILIBRIUM, AND WITHOUT ANY DETERIORATING EFFECTS TO THE FAN WHICH WOULD CAUSE UNSAFE OPERATION.

ABNORMAL FLARE-UP TEST
EXHAUST FAN MUST OPERATE CONTINUOUSLY WHILE EXHAUSTING BURNING GREASE VAPORS AT 600°F (316°C) FOR A PERIOD OF 15 MINUTES WITHOUT THE FAN BECOMING DAMAGED TO ANY EXTENT THAT COULD CAUSE AN UNSAFE CONDITION.

OPTIONS

GREASE BOX.
LOAD REACTOR MOUNTED IN FAN.

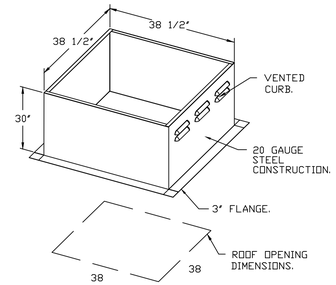

PITCHED CURBS ARE AVAILABLE FOR PITCHED ROOFS.

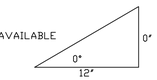

SPECIFY PITCH:
EXAMPLE: 7/12 PITCH = 30° SLOPE.

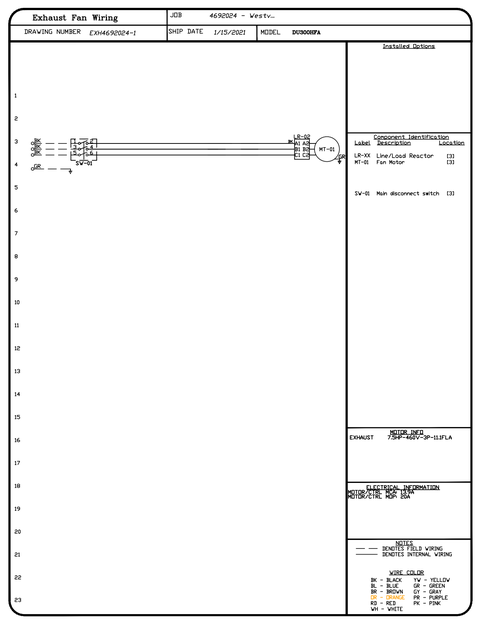

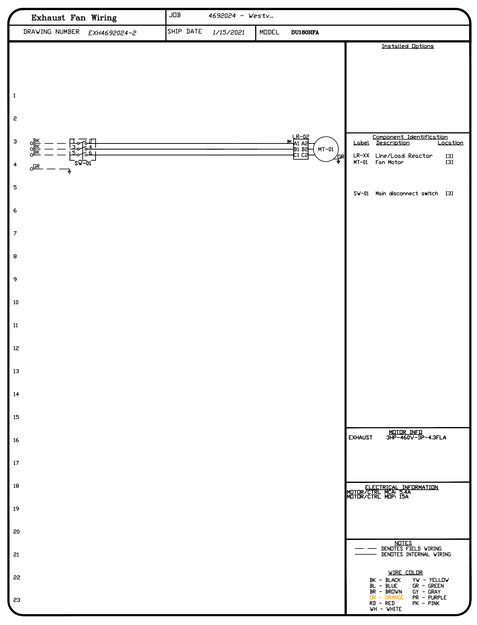

NOTE: THIS SHEET IS NOT A PART OF THE FOOD SERVICE EQUIPMENT (SECTION 114000) SCOPE. THIS SHEET'S SCOPE IS FOR THE MECHANICAL DIVISION ONLY.

REVISIONS

	DESCRIPTION	DATE:
△		
△		
△		
△		

CAPTIVEAIRE
www.captiveaire.com
Seattle Office
1309 Pacific Ave, Everett, WA, 98201 PHONE: (425) 212-5996 FAX: (425) 212-5998 EMAIL: reg65@captiveaire.com

Westview HS R4
PORTLAND, OR, 97229

DATE: 1/15/2021

DWG.#: 4692024

DRAWN BY: JDC-85

SCALE: 3/4" = 1'-0"

MASTER DRAWING

SHEET NO. 7

DLR Group
© DLR Group

- NOT FOR CONSTRUCTION -

HALLIDAY ASSOCIATES
6564 NW NORWOOD
PO BOX 2187
HILLSBORO, OR 97123
PHONE 503-648-6637
FAX 503-648-6637
FOOD FACILITY CONSULTANTS
SPECIALIZING IN DESIGN

CULINARY CLASSROOM
Westview High School - Beaverton School District
4200 NW 185th Ave, Portland, OR 97229

50% CD
01.21.21
REVISIONS

74-21106-00

FOOD SERVICE CANOPY HOOD DETAILS

FS2.10

BIM 360://74-21106-00 Westview HS Culinary/74-21106-00_WHSC_AR_2020.rvt
12/3/2020 2:46:27 PM

FAN #2 DU180HFA - EXHAUST FAN (ITEM 15.21 EX)

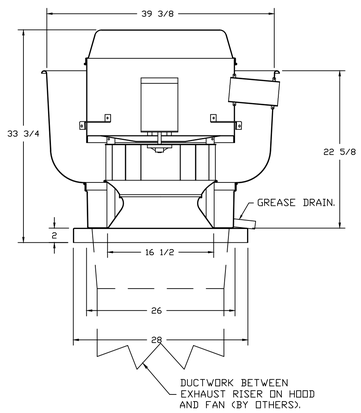

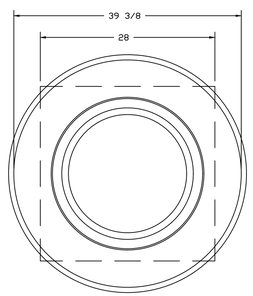

TOP VIEW

FEATURES:

- DIRECT DRIVE CONSTRUCTION (NO BELTS/PULLEYS).
- ROOF MOUNTED FANS.
- RESTAURANT MODEL.
- UL705 AND UL762 AND ULC-S645
- VARIABLE SPEED CONTROL.
- INTERNAL WIRING.
- THERMAL OVERLOAD PROTECTION (SINGLE PHASE).
- HIGH HEAT OPERATION 300°F (149°C).
- GREASE CLASSIFICATION TESTING.
- NEMA 3R SAFETY DISCONNECT SWITCH.

NORMAL TEMPERATURE TEST
EXHAUST FAN MUST OPERATE CONTINUOUSLY WHILE EXHAUSTING AIR AT 300°F (149°C) UNTIL ALL FAN PARTS HAVE REACHED THERMAL EQUILIBRIUM, AND WITHOUT ANY DETERIORATING EFFECTS TO THE FAN WHICH WOULD CAUSE UNSAFE OPERATION.

ABNORMAL FLARE-UP TEST
EXHAUST FAN MUST OPERATE CONTINUOUSLY WHILE EXHAUSTING BURNING GREASE VAPORS AT 600°F (316°C) FOR A PERIOD OF 15 MINUTES WITHOUT THE FAN BECOMING DAMAGED TO ANY EXTENT THAT COULD CAUSE AN UNSAFE CONDITION.

OPTIONS

GREASE BOX.
FAN BASE CERAMIC SEAL - INSTALLED AT PLANT - FOR GREASE DUCTS.
LOAD REACTOR MOUNTED IN FAN.

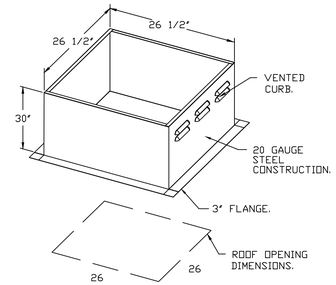

PITCHED CURBS ARE AVAILABLE FOR PITCHED ROOFS.

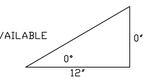

SPECIFY PITCH:
EXAMPLE: 7/12 PITCH = 30° SLOPE.

NOTE: THIS SHEET IS NOT A PART OF THE FOOD SERVICE EQUIPMENT (SECTION 114000) SCOPE. THIS SHEET'S SCOPE IS FOR THE MECHANICAL DIVISION ONLY.

REVISIONS

DESCRIPTION	DATE:

CAPTIVEAIRE
www.captiveaire.com
Seattle Office
1309 Pacific Ave, Everett, WA, 98201 PHONE: (425) 212-5996 FAX: (425) 212-5998 EMAIL: reg85@captiveaire.com

Westview HS R4
PORTLAND, OR, 97229

DATE: 1/15/2021
DWG.#: 4692024
DRAWN BY: JDC-85
SCALE: 3/4" = 1'-0"
MASTER DRAWING

SHEET NO. 8

DLR Group
© DLR Group

- NOT FOR CONSTRUCTION -

HALLIDAY ASSOCIATES
6564 NW NORWOOD
PO BOX 2157
HILLSBORO, OR 97123
PH 503 - 648 - 6633
FAX 503 - 648 - 6637
PROJECT MANAGER: DAVID HALLIDAY
SPECIALTY CONSULTANTS

CULINARY CLASSROOM

Westview High School - Beaverton School District
4200 NW 185th Ave, Portland, OR 97229

50% CD
01.21.21
REVISIONS

74-21106-00

FOOD SERVICE CANOPY HOOD DETAILS

FS2.11

BIM 360://74-21106-00 Westview HS Culinary/74-21106-00_WHSC_AR_2020.rvt
12/3/2020 2:46:27 PM

FAN #3 A3-D.500-25Z - HEATER (MAU 36 35 33 32)
1. DIRECT GAS FIRED HEATED MAKE UP AIR UNIT WITH 25" DIRECT DRIVE FAN AND 12" BURNER.
2. V-BANK TA-13 FILTERS W/INTAKE HOOD WITH EZ FILTERS - OUTDOOR.
3. DOWN DISCHARGE - AIR FLOW RIGHT -> LEFT.
4. COOLING INTERLOCK RELAY. 24VAC COIL. 120V CONTACTS. LOCKS OUT BURNER CIRCUIT WHEN AC IS ENERGIZED.
5. MOTORIZED BACK DRAFT DAMPER 30" X 30" FOR SIZE 3 STANDARD & MODULAR HEATER UNITS W/EXTENDED SHAFT, STANDARD GALVANIZED CONSTRUCTION, 3/4" REAR FLANGE, LOW LEAKAGE, NFBUP-S ACTUATOR INCLUDED.
6. LOW FIRE START. ALLOWS THE BURNER CIRCUIT TO ENERGIZE WHEN THE MODULATION CONTROL IS IN A LOW FIRE POSITION.
7. GAS PRESSURE GAUGE, 0-35", 2.5" DIAMETER, 1/4" THREAD SIZE.
8. GAS PRESSURE GAUGE, -5 TO +15 INCHES WC., 2.5" DIAMETER, 1/4" THREAD SIZE.
9. DOUBLE WALL STEEL LINER FOR DIRECT DRIVE. INCLUDES ROOF, FLOOR, AND DOOR LINERS.
10. FREEZESTAT WITH 10' SENSOR. FACTORY SET AT 35°F AND 10 MINUTES.
11. "INSULATION" FOR V-BANK INTAKE OPTION.
12. ECM WIRING PACKAGE FOR ZIEHL SUPPLY MOTORS WITH PWM SIGNAL FROM ECPM03 PREWIRE.
13. HINGED DOUBLE WALL INSULATED DOOR ASSEMBLY (BURNER/BLOWER SECTION).

*NOTE: SUPPLY DUCT MUST BE INSTALLED TO MEET SMACNA STANDARDS. A MINIMUM STRAIGHT DUCT LENGTH MUST BE MAINTAINED DOWNSTREAM OF UNIT DISCHARGE AS OUTLINED IN AMCA PUBLICATION 201. WHEN USING RECTANGULAR DUCTWORK, ELBOWS MUST BE RADIUS THROAT, RADIUS BACK WITH TURNING VANES. FLEXIBLE DUCTWORK AND SQUARE THROAT/SQUARE BACK ELBOWS SHOULD NOT BE USED. ANY TRANSITION AND/OR TURNS IN THE DUCTWORK WILL CAUSE SYSTEM EFFECT. SYSTEM EFFECT WILL DRASTICALLY INCREASE STATIC PRESSURE AND REDUCE AIRFLOW. DO NOT RELY ON UNIT TO SUPPORT DUCT IN ANY WAY. FAILURE TO PROPERLY SIZE DUCTWORK MAY CAUSE SYSTEM EFFECTS AND REDUCE PERFORMANCE OF THE EQUIPMENT.
SUGGESTED STRAIGHT DUCT SIZE IS 24" x 24".

SUPPLY SIDE HEATER INFORMATION:

WINTER TEMPERATURE = 27°F. TEMP. RISE = 48°F.
BTUs CALCULATED OFF ACTUAL AIR DENSITY.
OUTPUT BTUs AT ALTITUDE OF 0.0 FT. = 398092.
INPUT BTUs AT ALTITUDE OF 0.0 FT. = 334883.
OUTPUT BTUs AT ALTITUDE OF 277 FT. = 305021.
INPUT BTUs AT ALTITUDE OF 277 FT. = 331544.

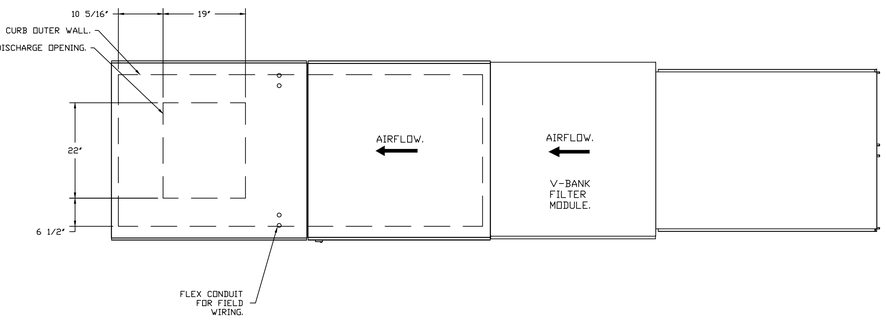

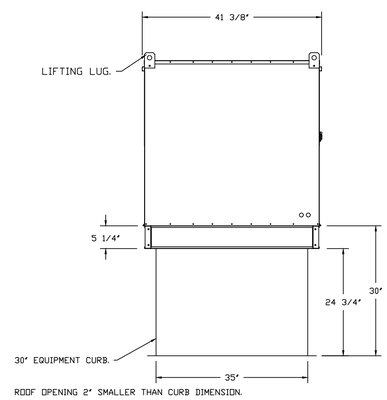

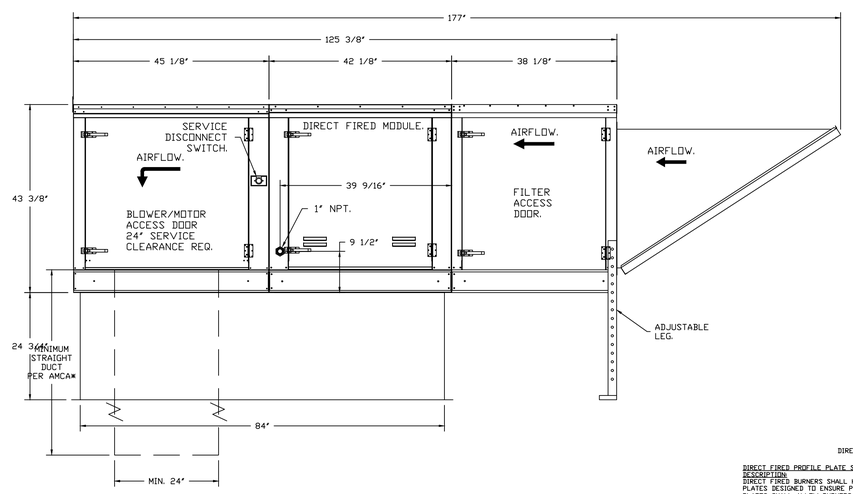

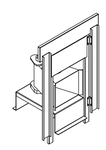

DIRECT FIRED (DF) PROFILE PLATE ASSEMBLY

DIRECT FIRED PROFILE PLATE SPECIFICATIONS:
DESCRIPTION:
DIRECT FIRED BURNERS SHALL HAVE PATENTED (US PATENT NO. US6629523B2), SELF-ADJUSTING PROFILE PLATES DESIGNED TO ENSURE PROPER AIR VELOCITY AND PRESSURE DROP ACROSS THE BURNER. PROFILE PLATES SHALL ALLOW BURNERS TO ACHIEVE CLEAN COMBUSTION BY LIMITING BY-PRODUCT LEVELS TO A MAXIMUM OF 5PPM OF CARBON MONOXIDE (CO), AND 0.5PPM OF NITROGEN DIOXIDE (NO2)DIRECT FIRED UNITS SHALL BE CONFIGURED WITH THE BLOWER MOUNTED DOWNSTREAM OF THE BURNER. THIS ARRANGEMENT WILL ENSURE A CONSISTENT AIRFLOW, REGARDLESS OF INLET AIR TEMPERATURE.

APPLICATION:
SPRING-LOADED BURNER PROFILE PLATES ARE ENGINEERED TO AUTOMATICALLY REACT TO THE MOMENTUM OF A FRESH AIR STREAM, WITHOUT THE NEED FOR ANY MOTORS OR ACTUATORS TO MECHANICALLY ADJUST THEM. WITH THIS FEATURE, ALL OF UNITS ARE DESIGNED FOR DEMAND CONTROL VENTILATION (DCV) REQUIREMENTS.

CERTIFICATIONS:
ALL PROFILE PLATE ASSEMBLIES SHALL BE INCLUDED IN THE OF UNIT'S ETL LISTING AND COMPLY WITH COMBINED SAFETY STANDARDS ANSI Z83.4 AND CSA 3.7 (NON-RECIRCULATING OF HEATERS) AND ANSI Z83.18 (RECIRCULATING OF HEATERS).

GENERAL CONSTRUCTION:
-PROFILE PLATES SHALL BE FORMED FROM G90 GALVANIZED STEEL.
-PROFILE PLATES SHALL VARY IN SIZE PER UNIT.
-PROFILE PLATES SHALL BE MOUNTED ALONG THE SAME PLANE AS THE DISCHARGE OF THE BURNER.
-DESIGN SHALL INCORPORATE PROPERLY TORQUED, PERMANENTLY MOUNTED SPRING HINGES.
-SPRING HINGES SHALL BE MADE FROM PLATED STEEL.

NOTE: THIS SHEET IS NOT A PART OF THE FOOD SERVICE EQUIPMENT (SECTION 114000) SCOPE. THIS SHEET'S SCOPE IS FOR THE MECHANICAL DIVISION ONLY.

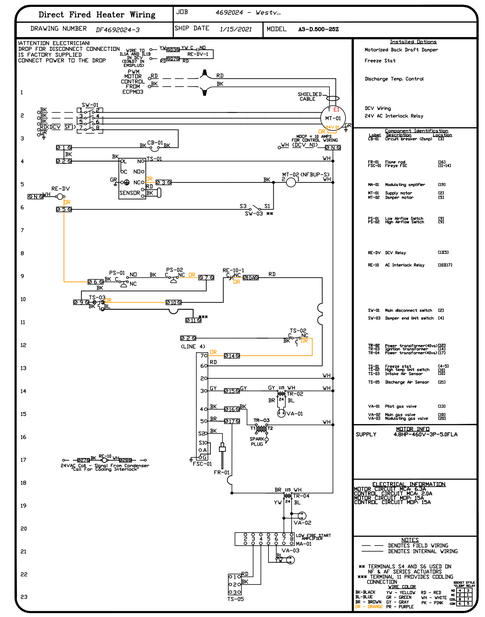

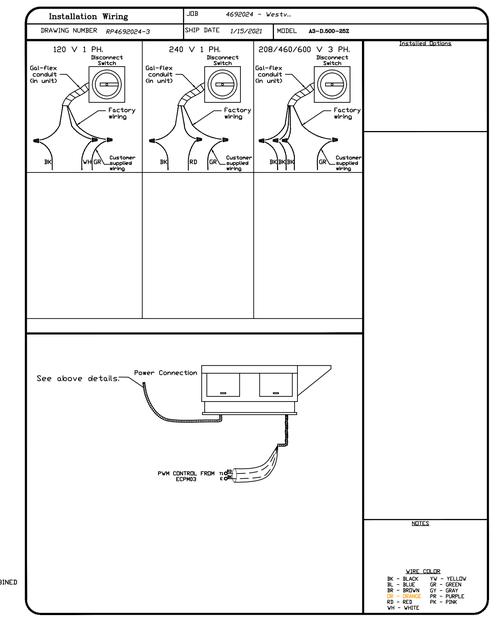

REVISIONS

DESCRIPTION	DATE:

CAPTIVEAIRE
www.captiveaire.com
Seattle Office
1309 Pacific Ave, Everett, WA, 98201 PHONE: (425) 212-5996 FAX: (425) 212-5998 EMAIL: reg95@captiveaire.com

Westview HS R4
PORTLAND, OR, 97229

DATE: 1/15/2021
DWG.#: 4692024
DRAWN BY: JDC-85
SCALE: 3/4" = 1'-0"
MASTER DRAWING
SHEET NO. 9

DLR Group
© DLR Group

- NOT FOR CONSTRUCTION -

HALLIDAY ASSOCIATES
6564 NW NORWOOD
PORTLAND, OR 97229
P.O. BOX 85134 - 97225
503-292-8134 - 6633
FOODSERVICE/FACILITY CONSULTANTS
FOOD SERVICE EQUIPMENT & SYSTEMS

CULINARY CLASSROOM
Westview High School - Beaverton School District
4200 NW 185th Ave, Portland, OR 97229

50% CD
01.21.21
REVISIONS

74-21106-00

FOOD SERVICE CANOPY HOOD DETAILS

FS2.12

BIM 360://74-21106-00 Westview HS Culinary/74-21106-00_WHSC_AR_2020.rvt
12/3/2020 2:46:27 PM