# GREENWICH HIGH SCHOOL
# CARDINAL STADIUM PHASE 1

10 Hillside Road, Greenwich, CT 06830

Board of Education Bid No. 2309-20

## GREENWICH PUBLIC SCHOOLS

290 Greenwich Avenue, Greenwich, CT 06830

## BID ISSUE

## CONSTRUCTION DOCUMENTS

## 10 November 2020


**ARCHITECT:** **KG+D ARCHITECTS, PC**
285 Main Street
Mount Kisco, NY 10549

**STRUCTURAL ENGINEER:** **THE DISALVO ENGINEERING GROUP**
Lee Corp Farm Park
83 Wooster Heights Road, Suite 200
Danbury, CT 06810

**MECHANICAL ENGINEER:** **OLA CONSULTING ENGINEERS, PC**
50 Broadway
Hawthorne, NY 10532

**CIVIL ENGINEER:** **FUSS & O'NEILL, PC**
56 Quarry Road
Trumbull, CT 06611

**LANDSCAPE ARCHITECT:** **WESLEY STOUT ASSOCIATES**
96 Main Street
New Canaan, CT 06840

# Greenwich High School
# Cardinal Stadium Phase 1
**Board of Education Bid No. 2309-20**

Greenwich Public Schools
290 Greenwich Avenue
Greenwich, CT 06830


| Section | Section Title |
|---|---|
| 00 00 01 | Index to Specifications |

**DIVISION 0 – BIDDING AND CONTRACT REQUIREMENTS**

| | |
|---|---|
| 00 10 00 | Invitation Letter |
| 00 21 00 | Instructions to Bidders |
| 00 21 01 | Bid Proposal Form |
| 00 21 02 | Bid RFI Form |
| 00 21 03 | Bid Reference Form |
| 00 41 01 | Insurance Procedure |
| 00 45 13 | Bidder Qualifications |
| 00 46 43 | Wage and Hour Rates |
| 00 46 44 | Wage Rate Attachments – *to follow via Addendum* |
| 00 50 00 | Town of Greenwich Standard Contract, Owner & Contractor - Sample |
| 00 50 01 | Waiver of Liens |
| 00 50 02 | Insurance Rider |
| 00 61 00 | Bonding Requirements |
| 00 61 01 | Acceptable Bonding Company Ratings |
| 00 61 02 | AIA A310 – Bid Bond Form |
| 00 61 03 | AIA A312 – Performance and Payment Bond Forms |
| 00 63 00 | Requests for Information (RFI) |
| 00 63 01 | RFI Form |
| 00 70 00 | AIA A201-2017 – General Conditions of the Contract for Construction |
| 00 80 00 | Information Available to All Bidders |
| 00 80 10 | Geotechnical Investigative Report |

**DIVISION 1 – GENERAL REQUIREMENTS**

| | |
|---|---|
| 00 10 00 | Description of Work |
| 01 15 00 | Special Project Procedures |
| 01 25 00 | Product Options |
| 01 29 00 | Applications for Payment |
| 01 29 03 | Labor and Materials Affidavit |
| 01 29 04 | Daily and Weekly Wage Affidavit |
| 01 31 13 | Project Coordination |
| 01 31 14 | Coordination Drawings |
| 01 31 19 | Project Meetings |
| 01 32 00 | Scheduling and Progress |
| 01 33 00 | Submittals Requirements |
| 01 33 01 | Submittal Cover |
| 01 33 06 | Specification Certification |
| 01 41 00 | Permits and Compliance |
| 01 42 19 | Codes and Standards |

| Section | Section Title |
|---|---|
| 01 43 29 | Statement of Special Inspections |
| 01 50 00 | Temporary Facilities |
| 01 56 39 | Temporary Tree and Plant Protection |
| 01 57 20 | Erosion and Sedimentation Control |
| 01 61 00 | Material and Equipment |
| 01 71 23 | Field Engineering |
| 01 74 00 | Cleaning |
| 01 74 19 | Construction Waste Management |
| 01 77 00 | Project Close Out |

**DIVISION 2 – EXISTING CONDITIONS**

| | |
|---|---|
| 02 23 50 | Site Clearing |
| 02 31 00 | Site Earthwork |
| 02 50 50 | Water Distribution |
| 02 53 00 | Sanitary Sewerage |
| 02 63 00 | Storm Drainage |
| 02 74 10 | Bituminous Concrete Paving |
| 02 75 10 | Cement Concrete Paving |
| 02 83 00 | Chain Link Fence and Gates |
| 02 91 70 | Soil Preparation |

**DIVISION 3 – CONCRETE**

| | |
|---|---|
| 03 30 10 | Miscellaneous Cast-In-Place Concrete |
| 03 35 53 | Polished Concrete Finishing |
| 03 54 00 | Floor Fill Underlayments |

**DIVISION 4 – MASONRY**

| | |
|---|---|
| 04 05 03 | Mortars |
| 04 20 00 | Unit Masonry |
| 04 72 00 | Cast Stone |

**DIVISION 5 – METALS**

| | |
|---|---|
| 05 50 00 | Metal Fabrications – Miscellaneous/Ornamental Metals |

**DIVISION 6 – WOOD, PLASTIC AND COMPOSITES**

| | |
|---|---|
| 06 20 00 | Finish Carpentry |

**DIVISION 7 – THERMAL AND MOISTURE PROTECTION**

| | |
|---|---|
| 07 13 00 | Membrane Waterproofing |
| 07 21 00 | Insulation |
| 07 26 00 | Air/Vapor Barrier Systems |
| 07 46 46 | Fiber-Cement Siding |
| 07 53 23 | EPDM Roofing |
| 07 61 10 | Sheet Metal Roofing |
| 07 62 00 | Sheet Metal Flashings and Specialties |
| 07 72 00 | Roof Accessories |
| 07 81 23 | Intumescent Fireproofing |
| 07 82 00 | Board Fire Protection |

**Section Section Title**

07 84 00 Firestopping
07 90 00 Caulking and Sealing

**DIVISION 8 – OPENINGS**
08 11 13 Hollow Metal Doors and Frames
08 31 00 Access Doors
08 33 30 Coiling Doors and Grilles
08 42 00 Fiberglass-Faced Entrance Door Systems
08 52 00 Clad Wood Windows and Doors
08 71 00 Door Hardware
08 80 00 Glass and Glazing
08 90 00 Louvers and Vents

**DIVISION 9 – FINISHES**
09 29 00 Gypsum Drywall
09 30 00 Tile Work
09 65 00 Flooring Accessories
09 67 23 Resinous Flooring
09 91 00 Painting

**DIVISION 10 – SPECIALTIES**
10 14 00 Identifying Devices
10 21 00 Toilet Compartments
10 28 00 Toilet Accessories
10 44 00 Fire Protection Specialties

**DIVISION 11 – EQUIPMENT** - NOT USED

**DIVISION 12 – FURNISHINGS**
12 36 13 Concrete Countertops

**DIVISION 13 – SPECIAL CONSTRUCTION** - NOT USED

**DIVISION 14 – CONVEYING EQUIPMENT**
14 24 00 Hydraulic Elevators

**DIVISION 15 - 21** - NOT USED

**DIVISION 22 – PLUMBING**
22 05 00 Common Work Results for Plumbing
22 05 13 Common Motor Requirements for Plumbing Equipment
22 05 16 Expansion Fittings and Loops for Plumbing Piping
22 05 17 Sleeves and Sleeve Seals for Plumbing Piping
22 05 18 Escutcheons for Plumbing Piping
22 05 19 Meters and Gages for Plumbing Piping
22 05 23 General-Duty Valves for Plumbing Piping
22 05 29 Hangers and Supports for Plumbing Piping and Equipment
22 05 53 Identification for Plumbing Piping and Equipment

**Section Section Title**

22 07 19 Plumbing Piping Insulation and Jackets
22 11 16 Domestic Water Piping
22 11 19 Domestic Water Piping Specialties
22 13 16 Sanitary Waste and Vent Piping
22 13 19 Sanitary Waste and Vent Piping Specialties
22 14 13 Facility Storm Drainage Piping
22 14 23 Storm Drainage Piping Specialties
22 40 00 Plumbing Fixtures

**DIVISION 23 – MECHANICAL**
23 05 00 Common Work Results for HVAC
23 05 13 Common Motor Requirements for HVAC Equipment
23 05 17 Sleeves and Escutcheons for HVAC Piping
23 05 18 Escutcheons for HVAC Piping
23 05 19 Meters and Gages for HVAC Piping
23 05 23 General-Duty Valves for HVAC Piping
23 05 29 Hangers and Supports for HVAC Piping and Equipment
23 05 48 Vibration Controls for HVAC Piping and Equipment
23 05 53 Identification for HVAC Piping Equipment
23 05 55 Motor Controls/VFDs
23 05 93 Testing, Adjusting, and Balancing for HVAC
23 07 13 Duct Insulation
23 07 16 HVAC Equipment Insulation
23 07 19 HVAC Piping Insulation
23 09 23 Control Dampers
23 23 00 Refrigerant Piping
23 31 13 Metal Ducts
23 33 00 Air Duct Accessories
23 34 13 Axial HVAC Fans
23 34 16 Centrifugal HVAC Fans
23 34 23 HVAC Power Ventilators
23 37 13 Diffusers, Registers and Grilles
23 41 00 Particulate Air Filtration
23 81 27 Ductless Split-System Air-Conditioners
23 83 29 Unit Heaters

**DIVISION 26 – ELECTRICAL**
26 05 19 Low-Voltage Electrical Power Conductors and Cables
26 05 26 Grounding and Bonding for Electrical Systems
26 05 29 Hangers and Supports for Electrical Systems
26 05 33 Raceways and Boxes for Electrical Systems
26 05 43 Underground Ducts and Raceways for Electrical Systems
26 05 53 Identification for Electrical Systems
26 09 23 Lighting Control Devices
26 24 13 Switchboards
26 24 16 Panelboards
26 27 13 Electricity Metering
26 27 26 Wiring Devices

**Section Section Title**

26 28 13 Fuses
26 32 13 Engine Generators
26 36 00 Transfer Switches
26 41 13 Lighting Protection for Structures
26 43 13 Surge-Protection for Low-Voltage Electrical Power Circuits
26 51 19 LED Interior Lighting
26 52 19 Emergency and Exit Lighting
26 56 19 LED Exterior Lighting

**DIVISION 27 – COMMUNICATIONS**
27 05 28 Pathways for Communications Systems
27 05 53 Identification for Communications Systems
27 15 13 Communications Copper Horizontal Cabling

**DIVISION 28 – ELECTRONIC SAFETY AND SECURITY**
28 05 13 Conductors and Cables for Electronic Safety and Security
28 05 26 Grounding and Bonding for Electronic Safety and Security
28 46 21.11 Addressable Fire-Alarm Systems

**DIVISION 29-30** - NOT USED

**DIVISION 31 – EARTHWORK**
31 00 00 Site Clearing

**DIVISION 32 – EXTERIOR IMPROVEMENTS**
32 14 00 Unit Paving
32 91 13 Soil Preparation
32 92 00 Turf and Grasses
32 93 00 Plants
32 96 00 Transplanting

**End of Index**

GREENWICH PUBLIC SCHOOLS
Purchasing Department
290 Greenwich Avenue
Greenwich, Connecticut 06830
(203) 625-7411 Email: eugene_watts@greenwich.k12.ct.us

EUGENE H. WATTS
Senior Buyer

November 12, 2020

Dear Sir/Madam:

You are invited to submit a Bid for the Greenwich High School Cardinal Stadium Phase I Renovations for Greenwich Public Schools. The attached bid specifications detail the service requirements.

Bidders are urged to read all documents carefully and fill out all information requested. Bids which are incomplete, obscure, or conditional, and which contain irregularities of any kind, will be subject to rejection for failure to comply strictly with these conditions.

Bids must be submitted on the schedule form attached hereto. All unit prices must be filled in. Each bid must be submitted with (1) original copy/set, and eight (8) copies/sets of the bid. Bidders must submit bids in a clear, concise and legible manner so as to permit proper evaluation of responsive bid. Faxed or emailed bids will not be accepted however, hand delivered, mailed or overnight bids will be accepted Monday through Friday between the hours of 8:30am -12:00pm and 1:00pm - 3:00pm in the Central Receiving Department located in the Arch Street parking lot, or by mail. The original Bid and copies must be in a sealed envelope plainly marked:

**Greenwich High School Cardinal Stadium Phase I**
**Opening Date: December 10, 2020**
**Opening Time: 11:00 a.m.**
**RFP Number: 2309-20**

**Mandatory Walk-through (Mask required)**
**Greenwich High School Cardinal Stadium**
**10 Hillside Road**
**Greenwich, CT 06830**
**November 19, 2020 @ 1:00 p.m.**

Sealed proposals for supplying the above will be received by the Purchasing Department at the above address until 11:00 a.m. at which time they will be opened and read.

All responses are subject to change based on the status of the COVID 19 pandemic and Federal Ordinances.

In accordance with the Governor's current public meeting requirements and in order to limit the spread of COVID-19, the meeting for the bid opening will be held remotely by telephone in real time. The details to join the meeting remotely are as follows:

**Dial-In by phone:**

**(US) 1 405-293-8607**

**PIN: 654 505 127#**

The meeting will be recorded and the recording will be made available on the school district's website within seven days.

Very truly yours,

Eugene H. Watts

_____

Eugene H. Watts

Section 00 21 00

Instructions to Bidders

The Architect for the project is KG+D Architects, PC, 285 Main Street, Mt. Kisco, NY, 10549.

The contact for the Owner is: Eugene Watts, Senior Buyer, Greenwich Public Schools, Havemeyer Building, 290 Greenwich Avenue, Greenwich, CT, 06830.

Contractor(s) whose bid exceeds $500,000.00 shall hold a current "DAS" Contractor Prequalification Certificate" (not a pre-determination letter) from the Department of Administrative Services of the State of Connecticut according to Connecticut General Statutes Sections 4a-100, 4b-101 and 4b-91 previously stated as Public Act 03-215 and as amended by Public Act 04-141. Bidders shall submit with their bids, unless noted otherwise, a "DAS Contractor Prequalification Certificate" along with a current "Update (bid) Statement." Failure to submit these items with the bid will result in disqualification of the bidder. If you have any questions regarding these requirements, contact the State of CT, DAS, at telephone number 860-713-5280 or visit their web site at www.das.state.ct.us.

1. BACKGROUND:

The Town of Greenwich, Connecticut is about 30 miles northeast of New York City and has a population of about 60,000 people. The Greenwich Public Schools consist of eleven neighborhood elementary schools (K-5), three middle schools (6-8), and one high school (9-12) with an offsite alternative high school program. Three of the elementary schools and one middle school also serve as magnet schools. A preschool program is also offered.

2. CONTRACT LENGTH:

The Contractor submitting this Bid shall work in accordance with the contract provided herewith for the duration of the project as indicated in the Schedule below or as approved by the Greenwich Public School District.

Owner expects to undertake the **Greenwich High School Cardinal Stadium Phase 1** project according to the following schedule:

| | |
|---|---|
| Request for Proposals Issued | November 12, 2020, Noon |
| **Pre-bid Conference** | **November 19, 2020, 1:00 p.m.**<br>**Greenwich High School Football Field**<br>**10 Hillside Road** |
| Closing date for questions via email RFI | December 3, 2020, Noon |
| Response to questions via Addendum | December 7, 2020, 4:00 p.m. |
| **Deadline to submit proposal** | **December 10, 2020, 11:00 a.m.** |
| Bid Opening | December 10, 2020, 11:00 a.m. |
| Substantial Project Completion | June 24, 2021 |

3. OPTION TO EXTEND:

The School District may, at its option and with the approval of the Contractor, extend the period of this agreement. If the School District intends to extend the contract period, the vendor shall be

notified in writing by the Purchasing Department at least fourteen (14) calendar days prior to the expiration of the original contract.

4. BID EVALUATION CRITERIA:

A committee composed of various administrators will evaluate bids. The following criteria guidelines will be used in analyzing and evaluating bids:

- Conformance to the requirements of this bid invitation, i.e. conformance to Terms, Conditions and Scope of Work
- Proven skills and technical competence
- Background on the firm
- Identification of Contractor personnel who will have principal responsibility
- Qualifications Form

5. A NARRATIVE DESCRIBING THE FIRM'S APPROACH TO UNDERTAKING THE SCOPE OF THE WORK INCLUDING:

Cost/service fee (overall cost to the School District with all factors considered). Presentation to the selection committee, if requested.

6. AWARD OF CONTRACT:

The contract(s) will be awarded by the School District to the qualified firm(s) or person(s) at compensation determined to be fair and reasonable considering budgetary limitations, scope, complexity and the nature of goods and/or services.

7. PURPOSE:

Greenwich Public Schools is soliciting bids to provide **Greenwich High School Cardinal Stadium Phase 1** at Greenwich High School.

8. OVERVIEW:

Greenwich Public Schools wishes to solicit Request for **Greenwich High School Cardinal Stadium Phase 1**, which may include alternates. Companies must be located within a 100-mile radius of the district to submit a bid. It is understood that any contract is subject to available funding.

9. THE DETAILED BID SHALL INCLUDE:

An outline of the procedures to be used to provide the Construction Work indicated herein, and how cost estimates will be calculated.

10. INTENT OF WORK

Fixed price scope of work per plans and specifications for provision of the **Greenwich High School Cardinal Stadium Phase 1** and related work.

11. SCOPE OF SERVICE:

The scope of this project includes, but is not limited to, construction of Team Building & Kiosk, foundations for new bleacher (by Others), site improvements, and related work at Greenwich High School Cardinal Stadium, 10 Hillside Road, Greenwich, CT 06830.

12. CONTRACTOR AGREEMENT

A. The contractor shall simultaneously with the signing of the Contract, furnish the Town the executed Performance, Maintenance, and Payment Bond of a surety company authorized to do business in the State of Connecticut, and acceptable to the Town, in the sum of the full amount of the Contract Obligation in the form provided by the Town. A PERFORMANCE BOND will not be required where the total estimated cost of labor and materials under the contract with respect to which such general bid is submitted is less than one-hundred thousand dollars ($100,000.00). Once a contract exceeds $100,000.00 the bidder will be responsible for obtaining and paying for all bonds required by the District.

B. Each bid shall be signed and accompanied by a bid security payable to the Town of Greenwich in the amount of ten (10%) percent of the bid and shall be in the form of a Bid Bond only as issued in the bid documents. Bid Bonds must use the Greenwich Public Schools Bid Bond Form (included within the bid documents), issued by a surety Company listed on the Current U.S. Department of Treasury's Federal Register and be licensed to underwrite bonds in the State of Connecticut.

C. Each bid shall be accompanied by a completed copy of the Bidders Qualification Questionnaire included in the bid documents. The Greenwich Public Schools reserve the right to request further information and/or supplemental information with respect to the Qualification Questionnaire at their sole discretion

D. Each bidder shall utilize the specified manufacturers. Should the Contractor desire to substitute other articles, materials, apparatus, products or process, then those specified or approved as equal, the Contractor shall apply to the Architect, in writing, for approval of such substitution, per Section 01 25 00 Product Options. It should be noted that the Bid shall not be based on a substituted article, material, apparatus, product or process. No substitution reviews shall take place prior to bid.

E. Each form of bid contains a section for alternates and/or unit prices. All alternate prices must be completed with a dollar value. Blanks, not applicable (n/a), no effect, etc. in these portions of the form of bid shall be construed to indicate that the particular Alternate shall be performed without increase to the contract price as they relate to the scope of the trade package.

F. Unit prices which do not affect the work of your trade may be filled in "not applicable (n/a)." "Not applicable” or blanks in these portions of the form of bid shall be construed to indicate that the unit price is not applicable as they relate to the scope of the trade package.

G. The successful bidder will produce for the Greenwich Public Schools review a current financial statement, which will remain strictly confidential.

H. Each bid shall be accompanied by a completely filled-in and properly executed Non-Collusion Affidavit.

I. All work shall be done in accordance with applicable State statutes; conditions of Prevailing Wages shall apply.

J. Failure to submit a bid with four copies does not constitute a material defect.

K. No Bidder may withdraw their Bid within 90-days after the actual date of Bid Opening.

L. Qualifications to the bid are not allowed. If bids are qualified, they may be deemed non-responsive and subsequently rejected.

M. If there is a conflict between the Contract Agreement and the General Conditions, the Contract Agreement shall prevail.

N. Bid awards must be approved by the Greenwich Public Schools. All contractors shall be required to execute the Greenwich Public Schools standard form of contract and accompanying payment and performance bonds without exception.

   i. The contract shall be awarded to the lowest responsible and qualified bidder, meaning the bidder whose bid is the lowest of those bidders possessing the skill, ability and integrity necessary to faithful performance of the work based on objective criteria considering past performance and financial responsibility. In considering past performance, the Greenwich Public Schools shall evaluate the skill, ability and integrity of bidders in terms of the bidders' fulfillment of contract obligations and of the bidders' experience or lack of experience with projects of similar size and scope. The Greenwich Public Schools reserves the right to consider as unqualified to do the work required by the bid documents any bidder that does not habitually perform with its own forces the major portion of the work involved in the bid documents. No contract will be awarded to any bidder who is at time of award not qualified under applicable regulations issued by the Secretary of Labor, United States Department of Labor or any applicable State and local laws and regulations.

   ii. After review of all factors, terms, and conditions, including price, the District reserves the right to reject any and all bids, or any part thereof, or waive defects in same.

13. FEE:

Indicate your Bid Fee for all services under each Contract as a lump sum. Bidder may provide a bid on any or all of the contracts proposed herein. The District reserves the right to provide payment in accordance with completion of services based on the Project Schedule.

14. BID DOCUMENTS:

Specifications can be viewed and downloaded from the Greenwich Public Schools website: www.greenwichschools.org.

If, in the interpretation of Bid Documents, requirements within the Drawings and Specifications conflict, or it appears that the Drawings and Specifications are not in agreement, the Contractor shall base his bid on (1) the greater quantity, where there is a discrepancy in quantitiy; and (2) the superior quality, where there is a discrepancy in quality.

15. PRE-BID INFORMATIONAL MEETING:

**There will be a mandatory pre-bid conference beginning at 1:00 p.m. on November 19, 2020**, commencing at **Greenwich High School Football Field, 10 Hillside Road, Greenwich, CT 06830**. After the meeting, access will be given to the proposed work site.

All bidders will be presumed to have full knowledge of the site of the work and all information available at the pre-bid meeting. No extra cost or time extensions will be granted because of lack of knowledge of apparent on-site conditions or data available during the walk through.

16. QUESTIONS:

Questions concerning this bid must be submitted on the Bidder RFI Form contained herein will be received by email only, directed to Eugene H. Watts at bid_department@greenwich.k12.ct.us, until noon on **December 3, 2020**. The "Subject" line must have **Bid# 2309-20**, **Cardinal Stadium Phase 1**. All answers will be published by written Bid Notification posted on the Greenwich Public Schools website no later than **4:00 p.m., December 7, 2020**. No questions will be accepted after 7 days prior to the Bid date at noon. It is the responsibility of all bidders to verify that they are current with all Addenda.

Failure to comply with these conditions will result in the bidder waiving his right to dispute the bid specifications and conditions. All Addenda will be posted on the District's website: www.greenwichschools.org up to 72 hours before the bid opens.

17. GENERAL TERMS AND CONDITIONS:

All responses are subject to change based on the status of the COVID 19 pandemic and Federal Ordinances.

Bidders must submit Bids in a clear, concise and legible manner so as to permit proper evaluation of responsive Bids. Faxed or emailed Bids will not be accepted, however **hand-delivered Bids will be accepted Monday through Friday between the hours of 8:30 a.m. to 12:00 p.m. and 1:00 p.m. to 3:00 p.m., in the Central Receiving Department located in the Arch Street parking lot, or by mail, until the deadline.**

The original Bid and copies must be in a sealed envelope plainly marked:

**Greenwich HS Cardinal Stadium Phase 1 Bid**
**Opening Date: 12/10/20**
**Opening Time: 11:00 a.m.**
**Bid Number: 2309-20**

Sealed Bids for supplying the above will be received by the Purchasing Department on or before 11:00 a.m. at which time they will be opened and read publicly. In accordance with the Governor's current public meeting requirements and in order to limit the spread of COVID-19, the

meeting for the bid opening will be held remotely by telephone in real time. The details to join the meeting remotely are as follows:

**Dial-in by phone:**
**(US) 1 405-293-8607 PIN: 654 505 127#**

The School District reserves the right to waive any informality in the bid or reject any or all bids or to accept any bid, which appears to be in the best interest of the District. Any bid may be withdrawn prior to the opening time and date. Any bid received after the time and date as specified will not be considered.

The School District may consider proximity of vendor's service as a factor in determining lowest responsible bid. The bidder's company must be located within a one hundred (100) mile radius of the district.

If the School District deems it necessary, the District may postpone the date for the opening of these bids by notifying each bidder by telephone, mail or the issuing of an addendum through the district's website.

The School District shall have the right to take such steps as it deems necessary to determine the ability of the bidder to perform the work and the bidder shall furnish the District with information and data for this purpose as the District may request. The right is reserved to reject any bid which, on investigation, the evidence or information submitted by such bidders does not satisfy the School District that the bidder is qualified to properly carry out the terms of the contract.

Consumption or use of alcohol and/or drugs is prohibited on school property. Any individual with alcohol or drugs will be removed from said property. Smoking is prohibited in all school buildings and on school grounds.

18. TAX:

No amount shall be added for the Connecticut Sales Tax or Federal Tax. The Greenwich Public School system is exempt from the payment of taxes imposed by the Federal Government and/or State of Connecticut. Taxes must not be included in the bid price.

19. NON-CONNECTICUT CONTRACTORS:

Pursuant to Connecticut General Statutes §12-430(7), as amended by Public Act No. 11-61, Section 66 a nonresident contractor shall comply with the State of Connecticut's bonding requirements.

20. COLLUSION AMONG BIDDERS:

More than one offer from an individual, firm, partnership, corporation or association under the same or different name will be rejected. Reasonable grounds for believing that a bidder is interested in more than one bid for the work contemplated will cause rejection of all bids in which the bidder is interested. Any or all bidders will be rejected if there is any reason for believing that collusion exists among the bidders.

Participants in such collusion may not be considered in future offers for the same work. Each bidder, by submitting a bid, certifies that it is not a part to any collusive action.

21. EMPLOYMENT DISCRIMINATION BY CONTRACTOR PROHIBITED:

The successful bidder will not discriminate against any employee or applicant for employment because of race, religion, color, sex, or national origin, except where religion, sex or national origin is a bona fide occupational qualification reasonably necessary to the normal operation of the contractor. The successful bidder agrees to post in a conspicuous place, available to employees and applicants for employment, notices setting forth the provision of this nondiscrimination clause. The successful bidder in all solicitation or advertisements for employees, placed by or on behalf of the contractor, will state that such successful Bidder is an Equal Opportunity Employer.

Notices, advertisements, and solicitations placed in accordance with Federal Law, rules or regulation shall be deemed sufficient for the purpose of meeting the requirements of this section.

22. The intention of this BID/RFP is to establish a contract with one or more contractors who will, upon request, provide the time with the services, labor, and supplies described in this solicitation. This is no guarantee as to the amount of services, labor or supplies that the School District may purchase during the term of this contract.

23. Per Connecticut General Statutes CGS § 10-221d, which went into effect July 1, 2016, and 10-222c, all people who are entering into a paid agreement with a school district must submit to a mandatory background check. If you are an individual, you must send me your employment history so that I can do the background check. If you are a company having multiple employees in the schools, you will be responsible for obtaining the background checks on each of your employees.

**End of Instructions to Bidders**

SECTION 00 41 00

**BID PROPOSAL FORM**

To: Eugene H. Watts, Senior Buyer
Greenwich Public Schools
Purchasing Department, Havemeyer Building
290 Greenwich Avenue
Greenwich, CT 06830
Phone: (203) 625-7411

PROJECT: **Greenwich High School Cardinal Stadium Phase1**
**Board of Education Bid No. 2309-20**

Bid Opening Date: **December 10, 2020, 11:00 a.m.**

Bidder's Name: _____

Street Address: _____

Municipality / State / Zip Code: _____

Telephone / Email: _____

Contact Person (printed name & title): _____

The Undersigned, in compliance with the Invitation and Instructions to Bidders, agrees that if this bid is accepted as hereinafter provided he/she will provide all labor, materials, supplies, tools, plant and equipment necessary to perform all work required for the execution of the aforementioned project in accordance with documents as prepared by KG+D Architects, PC, 285 Main Street, Mt. Kisco, NY, 10549, 914.666.5900, for the class of work at the aforementioned project as listed below:

_____ Dollars ($_____)

It is understood that the Owner reserves the right to accept or reject any and all bids that the Owner deems to be in his best interest.

Upon notification of acceptance of this proposal, the undersigned agrees to execute a contract in the form as stated within these contract documents for the amount stated.

If written Notice to Proceed, Letter of Intent or Contract is received within ninety (90) calendar days after the opening of bids, the undersigned agrees to execute said contract and furnish to the Owner within ten (10) days after receipt of said notice of award, the executed Contract, together with the Performance Bond, Labor & Material Payment Bonds and Insurance Certificates required herein.

The Undersigned agrees that the Bid Security payable to Owner accompanying this proposal is left in escrow with the Owner, that its amount is the measure of liquidated damages which the Owner will sustain by the failure of the Undersigned to execute and deliver the above named Bonds and

Contract, and that if the undersigned defaults in furnishing said bonds or in executing and delivering said Contract within ten (10) days of written notification of award of the Contract to him/her, then said Security shall be payable to the Owner for its' own account; but if this proposal is not accepted within said ninety (90) days of the time set for submission of bids, or if the Undersigned executes and delivers said Bonds and Contract, the Bid Security shall be returned to the Undersigned.

The following Addenda have been received. The noted modifications to the Bid Documents have been considered and all costs are included in the Bid Sum.

| Addendum | Date | Acknowledgment |
|---|---|---|
| | | |
| | | |
| | | |

The Undersigned hereby certifies that they are able to furnish labor that can work in harmony with all other elements of labor to be employed on the Work. Moreover the Undersigned certifies that all necessary labor and materials as required to achieve the Substantial Completion by the date given below are included in the Bid Sum, and that all necessary measures required to expedite the Work to meet the Substantial Completion date will be provided at no additional cost.

**Substantial Completion: June 24, 2021**

By submission of this Proposal the Undersigned:

- Takes notice of the time constraints set forth in the Contract Documents and agrees to the terms of the Contract that will be enforced should the time constraints not be kept.
- Acknowledges and certifies that they are licensed with the State of Connecticut as a Contractor in the jurisdiction of the work.
- Acknowledges that they have visited the site, informed themselves of the existing conditions, and have included in the Proposal a sum to cover the costs of all items in the contracts.

The Undersigned has included with this Bid the attachments noted:

- Attachment #1: Alternate Proposals
- Indemnification and Hold-Harmless Clause
- Affirmative Action Compliance Affidavit
- Non-Collusion Affidavit
- Insurance Checklist

Respectfully submitted,

Contractor Signature _____

PRINT:
Contractor Name/Title _____

Business Name_____

Business Address_____

Email Address _____

Telephone Number _____

Fax Number _____

Witness
Signature:_____Name/Title_____

SEAL IF CORPORATION

ATTACHMENT #1 - SCHEDULE OF ALTERNATE PROPOSALS

In accordance with the terms and conditions of the Contract and the Proposal Form, the undersigned agrees to execute alternates selected for the sums set forth in the following schedule of Alternate Proposals in accordance with the general description outlined in Section 01 23 00.

**Alternate 1**: State the amount to be ADDED to the Base Bid for the Contractor construct all additional site improvements, utilities, stormwater management infrastructure, pavings, railings, site lighting and related work as shown on Drawings and specified in Section 01 23 00.

ADD_____

_____Dollars ($_____)

**Alternate 2**: State the amount to be ADDED to the Base Bid for the Contractor to construct the Entry Kiosk, Kiosk gates/piers, and provide Decorative Pavers as shown on the Drawings and specified in Section 01 23 00.

ADD_____

_____Dollars ($_____)

**Alternate 3**: State the amount to be ADDED to the Base Bid for the Contractor to provide all work for the bleacher skin fabric graphics/signage including support posts as shown on the Drawings and specified in Section 01 23 00.

ADD_____

_____Dollars ($_____)

**End of Alternate Schedule**

**INDEMNIFICATION AND HOLD HARMLESS CLAUSE**

Contractor Agrees to indemnify and save harmless the Owner, and any of their agents, assigns, employees or independent contractors, the Architect and persons in his employ, from any and all liability for damages for injury to the person or property of another and from all suits and actions and all costs and damages to which such parties may be subjected resulting from the Contractor's performance of this contract, whether such performance be by the Contractor, or by any Subcontractor or employee.

I certify that I have been duly authorized to execute this Agreement on behalf of:

_____
(Name of Business)

Dated: _____ Signed _____

_____
(Print Name)

_____
(Title)

STATE OF CONNECTICUT
COMMISSION ON HUMAN RIGHTS AND OPPORTUNITIES
CONTRACT COMPLIANCE REGULATIONS

NOTIFICATION TO BIDDERS

AFFIRMATIVE ACTION COMPLIANCE AFFDAVIT

The contract to be awarded is subject to contract compliance requirements mandated by Sections 4a-60 and 4a60a of the Connecticut General Statutes; and, when the awarding agency is the State, Sections 46a-71(d) and 46a-81i(d) of the Connecticut General Statutes. There are Contract Compliance Regulations codified at Section 46a-68j-21 through 43 of the Regulations of Connecticut State Agencies, which establish a procedure for awarding all contracts covered by Sections 4a-60 and 46a-7] (d) of the Connecticut General Statutes.

According to Section 46a-68j-30(9) of the Contract Compliance Regulations, every agency awarding a contract subject to the contract compliance requirements has an obligation to "aggressively solicit the participation of legitimate minority business enterprises as bidders, contractors, subcontractors and suppliers of materials." "Minority business enterprise" is defined in Section 4a-60 of the Connecticut General Statutes as a business wherein fifty-one percent or more of the capital stock, or assets belong to a person or persons: "(1) Who are active in the daily affairs of the enterprise; (2) who have the power to direct the management and policies of the enterprise; and (3) who are members of a minority, as such term is defined in subsection (a) of Section 32-911." 'Minority" groups are defined in Section 32-9n of the Connecticut General Statutes as "(1) Black Americans... (2) Hispanic Americans... (3) persons who have origins in the Iberian Peninsula... (4) Women... (5) Asian Pacific Americans and Pacific Islanders; (6) American Indians..." An individual with a disability is also a minority business enterprise as provided by Section 4a-60g of the Connecticut General Statutes. The above definitions apply to the contract compliance requirements by virtue of Section 46a-68j-21(11) of the Contract Compliance Regulations.

The awarding agency will consider the following factors when reviewing the bidder's qualifications under the contract compliance requirements:

(a) the bidder's success in implementing an affirmative action plan;
(b) the bidder's success in developing an apprenticeship program complying with Sections 46a-68-1 to 46a68-17 of the Administrative Regulations of Connecticut State Agencies, inclusive;
(c) the bidder's promise to develop and implement a successful affirmative action plan; (d) the bidder's submission of employment statistics contained in the "Employment Information Form", indicating that the composition of its workforce is at or near parity when compared to the racial and sexual composition of the workforce in the relevant labor market area; and
(d) the bidder's promise to set aside a portion of the contract for legitimate minority business enterprises. See Section 46a-68j-30(10)(E) of the Contract Compliance Regulations.

*INSTRUCTIONS: Bidder must sign acknowledgement below and return along with bid proposal.

The undersigned acknowledges receiving and reading a copy of the "Notification to Bidders" form.

_____ _____
Signature Date

On behalf of: _____
_____

**NON-COLLUSION AFFIDAVIT**

**GREENWICH PUBLIC SCHOOLS**
**290 GREENWICH AVE**
**GREENWICH, CONNECTICUT**

**State of _____:**
**Ss:**
**County of _____ :**

**I state that I am the_____ of _____**
**(TITLE) (NAME OF MY FIRM)**
**and that I am authorized to make this affidavit on behalf of my firm, and its owners, directors, and officers. I am the person responsible in my firm for the price(s) and the amount of this Bid.**

**I state that:**

**(1) The price(s) and amount of this Bid have been arrived at independently and without consultation communication or agreement with any other contractor, Bidder/proposer or potential Bidder/proposer.**

**(2) Neither the price(s) nor the amount of this Bid/proposal, and neither the approximate price(s) nor approximate amount of this Bid/proposal, have been disclosed to any other firm or person who is a Bidder/proposer or potential Bidder/proposer, and they will not be disclosed before Bid/proposal opening.**

**(3) No attempt has been made or will be made to induce any firm or person to refrain from Bidding/proposing on this contract, or to submit a Bid/proposal higher than this Bid/proposal, or to submit any intentionally high or noncompetitive Bid/proposal or other form of complementary Bid/proposal.**

**(4) I fully understand that more than one offer from an individual, firm partnership; corporation or association under the same or different name will be rejected. Reasonable grounds for believing that a Bidder/proposer is interested in more than one Bid/proposal for the work contemplated may cause rejection of all Bid/proposal in which the Bidder/proposer is interested. Any or all Bidders/proposers will be rejected if there is any reason for believing that collusion exists among the Bidders/proposers. Participants in such collusion may not be considered in the future offers for the same work. Each Bidder/proposer by submitting a Bid/proposal certifies that it is not a part to any collusive action.**

**(5) The Bid/proposal of my firm is made in good faith and not pursuant to any agreement or discussion with, or inducement from, any firm or person to submit a complementary or other noncompetitive Bid/proposal.**

**(6) _____its affiliates, subsidiaries,**
**(NAME OF MY FIRM)**
**officers, directors and employees are not currently under investigation by any governmental agency and have not in the last four years been convicted or found liable for any act prohibited by State or Federal law in any jurisdiction, involving conspiracy or collusion with respect to Bidding/proposing on any public contract, except as follows:**

**I state that _____ understands and acknowledges**
**(NAME OF MY FIRM)**
**that the above representations are material and important, and will be relied on by Greenwich Public Schools in awarding the Bid/proposal for which this is submitted. I understand and my firm understands that any misstatement in this affidavit is and shall be treated as**

**fraudulent concealment from Greenwich Public Schools of the true facts relating to the submission of Bids/proposals for this contract.**

**(7) I agree to provide all services the date and time agreed on by**

**_____**

**(NAME OF MY FIRM)**

**and the Greenwich Board of Education. Furthermore, there will not be any cancellations to the Board of Education. If a Bidder/proposer submits a Bid/proposer on any item he/she will be responsible for delivering that item at the Bid/proposal cost, in accordance with the attached above specifications, which were submitted with this Bid/proposal and upon which the Bid/proposal was made.**

**(8) In submitting this Bid/proposal, the undersigned declares that this is made without any connection with any persons making another Bid/proposal on the same contract; that the Bid/proposal is in all respects fair and without collusion, fraud or mental reservation; and that no official of the Town, or any person in the employ of the Town, is directly or indirectly interested in said Bid/proposal or in the supplies or work to which it relates, or in any portion of the profits thereof.**

**(9) In submitting this Bid, the undersigned further declares that it has not, and will not, induce or attempt to induce any Town of Greenwich employee or officer to violate the Greenwich Code of Ethics in connection with its offer to provide goods or services under or otherwise in the performance of such contract.**

**(10) The undersigned further understands that the above declarations are material representations to the Town of Greenwich made as a condition to the acceptance of the Bid/proposal. If found to be false, the Town of Greenwich retains the right to reject said Bid/proposal and rescind any resultant contract and/or purchase order and notify the undersigned accordingly, thereby declaring as void said Bid/proposal and contract or purchase order.**

**(11) The Greenwich Code of Ethics can be found at www.greenwichct.org Code of Ethics stated as follows:**

**(12) <u>DEFINITION</u>.**

**(1) Indirect interest, without limiting its generality, shall mean and include the interest of any subcontractor in any prime contract with the Town and the interest of any person or his immediate family in any corporation, firm or partnership which as a direct or indirect interest in any transaction with the Town.**

**(2) Substantial financial interest shall mean any financial interest, direct or indirect, which is more than nominal and which is not common to the interest of other citizens of the Town.**

**(3) Town Officer shall mean and include any official, commission, committee, legislative body or other agency of the Town.**

**(4) Transaction shall mean and include the offer, sale or furnishing of any real or personal property, material, supplies otherwise, for the use and benefit of the Town for a valuable consideration, excepting the services of any person as a Town Officer.**

**(3) GIFTS AND FAVORS. No Town Officer or his immediate family shall accept any valuable gift, things, favor, loan or promise which might tend to influence the performance or nonperformance of his official duties.**

**(4) IMPROPER INFLUENCE. No Town Officer having a substantial financial interest in any transaction with the Town or in any action to be taken by the Town shall use is office to exert his influence or to vote on such transaction or action.**

**By signing this proposal, the proposer understands and agrees to the attached terms, conditions, and specifications, including Collusion among Proposers. Employment Discrimination by the Contractor Prohibited.**

_____
**SIGNATURE**

**SWORN AND SUBSCRIBED TO BEFORE ME, A NOTARY PUBLIC, IN AND FOR**

**THE COUNTY OF _____ AND THE**

**STATE OF _____THIS _____**

**DAY OF _____, 20_____**

_____ **MY COMMISSION EXPIRES_____**
**NOTARY PUBLIC**

**VENDOR INFORMATION. (Please print the following)**

_____
**VENDOR NAME**

_____
**ADDRESS**

_____
**TELEPHONE** **FAX #**

_____
**E-MAIL** **WEB SITE**

_____
**PRINT NAME** **TITLE**

**INSURANCE CHECKLIST**

**THIS PAGE MUST BE RETURNED WITH YOUR BID/PROPOSAL. FAILURE TO DO SO MAY RESULT IN YOUR BID/PROPOSAL BEING REJECTED**.

Please take the insurance requirements of the Contract to your agent/broker immediately upon receipt of the bid documents to determine your existing coverage and any costs for new or additional coverage required for the work noted in this Request for Bid/Proposal. Any bids/Bidders with deficient insurance requirements will be rejected. The firm who is awarded the Bid/Proposal must return the contract, agent/broker and insurance form within two (2) weeks from the date on the award letter.

| **PLEASE CHECK THE APPROPRIATE BOX** | | **YES** | **NO** |
|---|---|---|---|
| 1. General Aggregate | $1,000,000.00 | ☐ | ☐ |
| 2. General Liability | $2,000,000.00 | ☐ | ☐ |
| 3. Town of Greenwich & Greenwich Public School must be Named as Additional Insured | | ☐ | ☐ |
| 2. Automobile Liability | $1,000,000.00 | ☐ | ☐ |
| 3. Excess Liability | $5,000,000.00 | ☐ | ☐ |
| 4. Professional Liability | $1,000,000.00 | ☐ | ☐ |
| 5. Worker's Compensation and Employer's Liability | | ☐ | ☐ |
| 6. Ability to Return Contract and Insurance Documents Within Two (2) Weeks | | ☐ | ☐ |
| **7.** Able to Provide the Town with Thirty (30) Days Prior Written Notice of Cancellation | | ☐ | ☐ |

STATEMENT OF VENDOR:

I have read the insurance requirements for this work and have taken the documentation to my insurance agent/broker. The bid/proposal cost reflects any additional costs relating to insurance requirements for this work.

_____ _____

Signature Date

** End of Proposal Form **

# BIDDER REQUEST FOR INFORMATION

Greenwich Public Schools
Greenwich High School Cardinal Stadium Phase 1
Board of Education Bid No. 2309-20

To: Greenwich Public Schools
Mr. Eugene Watts
Email: bid_department@greenwich.k12.ct.us

**Date of Request: _____** **RFI NUMBER: _____**

| | |
|---|---|
| **Contractor**: | **Trade:** |
| **Phone**: | **Email**: |
| **Subject**: | **Drawing/Spec Reference**: |
| Question description, complete with backup data as necessary attached hereto: | |
| Proposed Solution: | |
| Submitted By: | |
| Architect's Response: | |
| Response By: | Date of Response: |

**REFERENCES:**

Please list at least three (5) school districts in Connecticut or New York of similar size to Greenwich Public Schools where you or your company has performed these services.

1._____
NAME AND ADDRESS

_____
TELEPHONE # FAX # EMAIL

_____
CONTACT PERSON AND TELEPHONE NUMBER

2._____
NAME AND ADDRESS

_____
TELEPHONE # FAX # EMAIL

_____
CONTACT PERSON AND TELEPHONE NUMBER

3._____
NAME AND ADDRESS

_____
TELEPHONE # FAX # EMAIL

_____
CONTACT PERSON AND TELEPHONE NUMBER

4._____
NAME AND ADDRESS

_____
TELEPHONE # FAX # EMAIL

_____
CONTACT PERSON AND TELEPHONE NUMBER

5._____
NAME AND ADDRESS

_____
TELEPHONE # FAX # EMAIL

_____
CONTACT PERSON AND TELEPHONE NUMBER

# INSURANCE PROCEDURE

**PLEASE NOTE:**

**THIS PAGE MUST BE RETURNED WITH YOUR BID/RFP. FAILURE TO DO SO MAY RESULT IN YOUR BID/RFP BEING REJECTED.**

Please take the insurance requirements of the Contract to your agent/broker immediately upon receipt of the bid documents to determine your existing coverage and any costs for new or additional coverage required for the work noted in this Request for BID/RFP. Any BID/RFP with deficient insurance requirements will be rejected.

STATEMENT OF VENDOR:

I have read the insurance requirements for this work and have taken the documentation to my insurance agent/broker. The BID/RFP cost reflects any additional costs relating to insurance requirements for this work.

_____ _____

Signature Date

SECTION 00 45 13

BIDDER QUALIFICATION STATEMENT

After receipt of bids and upon notification from the Architect, the bidder shall answer all questions set forth in this form within three days. Failure to answer these questions in full may be cause for rejection of the bidder's proposal. If more space is required, please attach additional sheets.

SUBMITTED TO: Greenwich Public Schools
ADDRESS: 290 Greenwich Avenue
CITY: Greenwich, CT 06830

Name of Bidder _____

Type of Business Entity _____

1. How many years has your organization been in business under your present business name? _____

2. How many years of experience in construction work of a similar type has your organization had? _____

3. If the bidder is a corporation, state the date and place of incorporation of the corporation.
_____

4. List the persons who are directors, officers, owners, managerial employees or partners in the bidder's business.
_____

_____

_____

5. Have any of the persons listed in #4 owned/ operated / been shareholders in any other companies? If so, please state name of said persons and the names of their previous affiliations / other companies:
_____

_____

6. Has any director, officer, owner or managerial employee had any professional license suspended or revoked? If yes, list the name of each individual, the professional license he/ she formerly held, whether said license was revoked or suspended and the date of the revocation or suspension.
_____

_____

7. During the three years preceding the submission of this bid. has the bidder been found guilty of any OSHA violations? If yes, describe the nature of the OSHA violation, an explanation of remediation or other steps taken regarding such violation(s).

_____

_____

8. During the five-year period preceding the submission of this bid, has the bidder been charged with any claims pertaining to unlawful intimidation or discrimination against any employee by reason of race, creed, color, disability, sex or natural origin and/ or violations of an employee's civil rights or equal employment opportunities? If yes, list the persons making such claim against the bidder, a description of the claim, the status of the claim, and what disposition (if any) has been made regarding such claim.

_____

_____

9. During the five-year period preceding the submissions of this bid, has the bidder been named as a party in any lawsuit in an action involving a claim for personal injury or wrongful death arising from performance of work related to any project in which it has been engaged? If yes, list all such lawsuits, the index number associated with said suit and the status of the lawsuit at the time of the of the submission of this bid.

_____

_____

10. During the five-year period preceding the submission of this bid, has the bidder been the subject of an investigation and/ or proceedings before the Department of Labor for alleged violations of the Labor Law as it relates to the payment of prevailing wages and/ or supplemental payment requirements? If yes, please list each such instance of the commencement of a Department of Labor proceeding, for which project such proceeding was commenced, and the status of the proceeding at the time of the submission of this bid.

_____

_____

11. During the five-year period preceding the bidder's submission of this bid, has the bidder been the subject of proceedings involving allegations that it violated the Workers' Compensation Law including but not limited to the failure to provide proof of worker's compensation or disability coverage and/ or any lapses thereof? If yes, list each such instance of violation and the status of the claimed violation at the time of the submissions of this bid.

_____

_____

13. Has the bidder, its officers, directors, owner and/ or managerial employees been convicted of a crime or been the subject of a criminal indictment during the five years preceding the submission of this bid? If the answer to this question is yes, list the name of the individual convicted or indicted the charge against the individual and the date of disposition of the charge.

_____

_____

14. During the five-year period preceding the bidder's submission of this bid, has the bidder been charged with and/ or found guilty of any violations of federal, state, or municipal environmental and/ or health laws, codes, rules and/ or regulations? If yes, list the nature of the charge against the bidder, the date of the charge, and the status of the charge at the time of the submission of this bid.

_____

_____

15. Has the bidder bid on any projects within the last three years? If the answer to this question is yes, list the last three projects bid on, whether said bid(s) was awarded to the bidder and the expected date of commencement of the work for said project. For those projects listed, if the bidder was not awarded the contract, state whether the bidder was the lowest monetary bidder.

_____

_____

16. Has the bidder ever been terminated from a project by the owner? If the answer to this question is yes, list the projects on which the bidder was terminated, the nature of the termination (convenience, suspension, for cause), and the date of said termination.

_____

_____

17. Does the bidder have any projects ongoing at the time of the submission of this bid? If yes, list the projects on which the bidder is currently working, the percentage complete, and the expected date of completion of said project.

| Contract Sum | Class of Work / %Complete | Name / Address of Owner | Name & Phone # of Contact at Owner |
|---|---|---|---|
| | | | |
| | | | |
| | | | |
| | | | |
| | | | |
| | | | |
| | | | |

19. Has the contractor completed similar contracts, at least (5) similar projects contract(s) in which the scope included school building work of which at least (2) have been of the size of more than 20,000 sf and two have been over $300,000 in construction cost value, or which you feel will qualify you for this work, within the last five years. If answer is yes, list below the construction projects your organization has under way as of this date:

| Contract Sum | Class of Work / %Complete | Names & Addresses of Owner and Architect | Contact Names & Phones of Owner and Architect |
|---|---|---|---|
| | | | |
| | | | |
| | | | |
| | | | |

20. Have you ever failed to complete any work awarded to you?
☐ Yes ☐ No; If yes, state where and why:

_____

_____

21. Has any officer or partner of your organization ever been an officer or partner of some other organization that failed to complete a construction contract? ☐ Yes ☐ No; If yes, state:

| Name of Individual(s) | Name of Owner(s) | Reason(s) |
|---|---|---|
| | | |
| | | |
| | | |

22. Has any officer or partner of your organization ever failed to complete a construction contract handled in his own name?
☐ Yes ☐ No; If yes, state:

| Name of Individual(s) | Name of Owner(s) | Reason(s) |
|---|---|---|
| | | |
| | | |
| | | |

23. Has your firm or organization ever received a Notice of Default or Notice of Termination or ever been defaulted or terminated on a Project? If yes, state:

_____

_____

24. Has your firm been involved in litigation during the past 5 years? If so, describe.

_____

_____

The undersigned hereby authorizes and requests any firm, person or corporation to furnish any information requested by the Owner or Architect in verification of the matters contained in the Bidder Qualification Statement.

Dated _____, 20___

_____
(Name of Bidder)

By _____

Title _____

AFFIDAVIT

STATE OF )
) S.S.
COUNTY OF )

_____ being duly sworn and says that he/she is

_____ of _____

_____
(Name of Organization)

and that the answers to the foregoing interrogatories and all statements therein contained are true and correct.

Subscribed and sworn to before me

this _____ day of _____ 20___

_____
Signature

_____

Notary Public, County of _____

**End of Section**

SECTION 00 46 43

WAGE AND HOUR RATES

1.01 GENERAL

A. All contractors will be bound and obligated by the Laws of the State of Connecticut to ensure payment to all workers involved with the construction of the Project.

B. Pursuant to Connecticut General Statutes § 7-112 and § 31-53: The wages paid on an hourly basis to any person performing the work of any mechanic, laborer or worker on the work herein contracted to be done and the amount of payment or contribution paid or payable on behalf of each such person to any employee welfare fund, as defined in subsection (h) of § 31-53, shall be at a rate equal to the rate customary or prevailing for the same work in the same trade or occupation in the town in which such public work is being constructed. Any Contractor who is not obligated by agreement to make payment or contribution on behalf of such persons to any such employee welfare fund shall pay to each mechanic, laborer or worker as part of such person's wages the amount of payment or contribution for such person's classification on each pay day.

C. Upon the award of the contract, the Contractor shall certify, under oath, to the Labor Commissioner the pay scale to be used by the Contractor and any of the contractor's subcontractors for work to be performed under such contract.

D. The Contractor shall: (1) keep, maintain and preserve such records relating to the wages and hours worked by each person performing the work of any mechanic, laborer and worker and a schedule of the occupation or work classification at which each person performing the work of any mechanic, laborer or worker on the project is employed during each work day and week in such manner and form as the Labor Commissioner establishes to assure proper payments due to such persons or employee welfare funds under this section or section 31-54, regardless of any contractual relationship alleged to exist between the Contractor and such person, and (2) submit monthly to the Town a certified payroll that shall consist of a complete copy of such records accompanied by a statement signed by the employer that indicates (A) such records are correct; (B) the rate of wages paid to each person performing the work of any mechanic, laborer or worker and the amount of payment or contributions paid or payable on behalf of each such person to any employee welfare fund, as defined in subsection (h) of section 31-53, are not less than the prevailing rate of wages and the amount of payment or contributions paid or payable on behalf of such person to any employee welfare fund, as determined by the Labor Commissioner pursuant to subsection (d) of section 31-53, and not less than those required by the contract to be paid; (C) the employer has complied with the provisions of section 31-53 and section 31-54; (D) each such person is covered by a workers' compensation insurance policy for the duration of such person's employment, which shall be demonstrated by submitting to the Town the name of the workers' compensation insurance carrier covering each such person, the effective and expiration dates of each policy and each policy number; (E) the employer does not receive kickbacks, as defined in 41 U.S.C. 52, from any employee or employee welfare fund; and (F) pursuant to the provisions of section

53a-157a, the employer is aware that filing a certified payroll which the employer knows to be false is a class D felony for which the employer may be fined up to five thousand dollars, imprisoned up to five years, or both.

E. Every contractor or subcontractor performing work under this contract shall post the prevailing wages as determined by the Labor Commissioner in prominent and easily accessible places at the site of work or at such place or places as are used to pay its employees their wages.

1.02 PREVAILING WAGE RATES

A. The current wage and benefit rates are available Connecticut State Labor web site. Prevailing wages for the Town of Greenwich can be found at http://www.ctdol.state.ct.us/

**End of Section**

Minimum Rates and Classifications for
Heavy/Highway Construction

ID# 20-17280

Connecticut Department of Labor
Wage and Workplace Standards

By virtue of the authority vested in the Labor Commissioner under provisions of Section 31-53 of the General Statutes of Connecticut, as amended, the following are declared to be the prevailing rates and welfare payments and will apply only where the contract is advertised for bid within 20 days of the date on which the rates are established. Any contractor or subcontractor not obligated by agreement to pay

Project Number: Greenwich
Project Town: Greenwich
State#: Greenwich
FAP#: Greenwich
Project: Renovations to Cardinal Stadium (Phase I) (Greenwich)

| CLASSIFICATION | Hourly | Benefits |
|---|---|---|
| 1) Boilermaker | 33.79 | 34% + 8.96 |
| 1a) Bricklayer, Cement Masons, Cement Finishers, Plasterers, Stone Masons | 35.72 | 33.16 |
| 2) Carpenters, Piledrivermen | 34.53 | 25.64 |
| 2a) Diver Tenders | 34.53 | 25.64 |
| 3) Divers | 42.99 | 25.64 |
| 03a) Millwrights | 34.94 | 26.19 |
| 4) Painters: (Bridge Construction) Brush, Roller, Blasting (Sand, Water, etc.), Spray | 52.25 | 22.55 |
| 4a) Painters: Brush and Roller | 35.62 | 22.55 |
| 4b) Painters: Spray Only | 38.62 | 22.55 |
| 4c) Painters: Steel Only | 37.62 | 22.55 |
| 4d) Painters: Blast and Spray | 38.62 | 22.55 |
| 4e) Painters: Tanks, Tower and Swing | 37.62 | 22.55 |

*As of:* November 12, 2020

| | | |
|---|---|---|
| 5) Electrician (Trade License required: E-1,2 L-5,6 C-5,6 T-1,2 L-1,2 V-1,2,7,8,9) | 40.0 | 36.15 |
| 6) Ironworkers: Ornamental, Reinforcing, Structural, and Precast Concrete Erection | 36.67 | 37.62 + a |
| 7) Plumbers (Trade License required: (P-1,2,6,7,8,9 J-1,2,3,4 SP-1,2) and Pipefitters (Including HVAC Work) (Trade License required: S-1,2,3,4,5,6,7,8 B-1,2,3,4 D-1,2,3,4 G-1, G-2, G-8, G-9) | 44.63 | 32.95 |
| ----LABORERS---- - | | |
| 8) Group 1: Laborer (Unskilled), Common or General, acetylene burner, concrete specialist | 31.0 | 22.15 |
| 9) Group 2: Chain saw operators, fence and guard rail erectors, pneumatic tool operators, powdermen | 31.25 | 22.15 |
| 10) Group 3: Pipelayers | 31.5 | 22.15 |
| 11) Group 4: Jackhammer/Pavement breaker (handheld); mason tenders (cement/concrete), catch basin builders, asphalt rakers, air track operators, block paver, curb setter and forklift operators | 31.5 | 22.15 |
| 12) Group 5: Toxic waste removal (non-mechanical systems) | 33.0 | 22.15 |
| 13) Group 6: Blasters | 32.75 | 22.15 |
| Group 7: Asbestos/lead removal, non-mechanical systems (does not include leaded joint pipe) | 32.0 | 22.15 |
| Group 8: Traffic control signalmen | 18.0 | 22.15 |
| Group 9: Hydraulic Drills | 29.3 | 18.90 |
| ----LABORERS (TUNNEL CONSTRUCTION, FREE AIR). Shield Drive and Liner Plate Tunnels in Free Air.---- | | |
| 13a) Miners, Motormen, Mucking Machine Operators, Nozzle Men, Grout Men, Shaft & Tunnel Steel & Rodmen, Shield & Erector, Arm Operator, Cable Tenders | 33.23 | 22.15 + a |
| 13b) Brakemen, Trackmen | 32.26 | 22.15 + a |
| ----CLEANING, CONCRETE AND CAULKING TUNNEL---- | | |

| | | |
|---|---|---|
| 14) Concrete Workers, Form Movers, and Strippers | 32.26 | 22.15 + a |
| 15) Form Erectors | 32.59 | 22.15 + a |
| ----ROCK SHAFT LINING, CONCRETE, LINING OF SAME AND TUNNEL IN FREE AIR:---- | | |
| 16) Brakemen, Trackmen, Tunnel Laborers, Shaft Laborers | 32.26 | 22.15 + a |
| 17) Laborers Topside, Cage Tenders, Bellman | 32.15 | 22.15 + a |
| 18) Miners | 33.23 | 22.15 + a |
| ----TUNNELS, CAISSON AND CYLINDER WORK IN COMPRESSED AIR: ---- | | |
| 18a) Blaster | 39.72 | 22.15 + a |
| 19) Brakemen, Trackmen, Groutman, Laborers, Outside Lock Tender, Gauge Tenders | 39.52 | 22.15 + a |
| 20) Change House Attendants, Powder Watchmen, Top on Iron Bolts | 37.54 | 22.15 + a |
| 21) Mucking Machine Operator | 40.31 | 22.15 + a |
| ----TRUCK DRIVERS----(*see note below) | | |
| Two axle trucks | 29.86 | 25.79 + a |
| Three axle trucks; two axle ready mix | 29.97 | 25.79 + a |
| Three axle ready mix | 30.03 | 25.79 + a |
| Four axle trucks, heavy duty trailer (up to 40 tons) | 30.08 | 25.79 + a |
| Four axle ready-mix | 30.13 | 25.79 + a |
| Heavy duty trailer (40 tons and over) | 30.35 | 25.79 + a |

*As of:* November 12, 2020

| | | |
|---|---|---|
| Specialized earth moving equipment other than conventional type on-the road trucks and semi-trailer (including Euclids) | 30.13 | 25.79 + a |
| ----POWER EQUIPMENT OPERATORS---- | | |
| Group 1: Crane handling or erecting structural steel or stone, hoisting engineer (2 drums or over), front end loader (7 cubic yards or over), Work Boat 26 ft. & Over, Tunnel Boring Machines. (Trade License Required) | 42.45 | 25.30 + a |
| Group 2: Cranes (100 ton rate capacity and over); Excavator over 2 cubic yards; Piledriver ($3.00 premium when operator controls hammer); Bauer Drill/Caisson. (Trade License Required) | 42.11 | 25.30 + a |
| Group 3: Excavator/Backhoe under 2 cubic yards; Cranes (under 100 ton rated capacity), Gradall; Master Mechanic; Hoisting Engineer (all types of equipment where a drum and cable are used to hoist or drag material regardless of motive power of operation), Rubber Tire Excavator (Drott-1085 or similar);Grader Operator; Bulldozer Fine Grade (slopes, shaping, laser or GPS, etc.). (Trade License Required) | 41.32 | 25.30 + a |
| Group 4: Trenching Machines; Lighter Derrick; Concrete Finishing Machine; CMI Machine or Similar; Koehring Loader (Skooper) | 40.91 | 25.30 + a |
| Group 5: Specialty Railroad Equipment; Asphalt Paver; Asphalt Spreader; Asphalt Reclaiming Machine; Line Grinder; Concrete Pumps; Drills with Self Contained Power Units; Boring Machine; Post Hole Digger; Auger; Pounder; Well Digger; Milling Machine (over 24 | 40.28 | 25.30 + a |
| Group 5 continued: Side Boom; Combination Hoe and Loader; Directional Driller. | 40.28 | 25.30 + a |
| Group 6: Front End Loader (3 up to 7 cubic yards); Bulldozer (rough grade dozer). | 39.95 | 25.30 + a |
| Group 7: Asphalt Roller; Concrete Saws and Cutters (ride on types); Vermeer Concrete Cutter; Stump Grinder; Scraper; Snooper; Skidder; Milling Machine (24 | 39.59 | 25.30 + a |
| Group 8: Mechanic, Grease Truck Operator, Hydroblaster, Barrier Mover, Power Stone Spreader; Welder; Work Boat under 26 ft.; Transfer Machine. | 39.17 | 25.30 + a |
| Group 9: Front End Loader (under 3 cubic yards), Skid Steer Loader regardless of attachments (Bobcat or Similar); Fork Lift, Power Chipper; Landscape Equipment (including hydroseeder). | 38.71 | 25.30 + a |
| Group 10: Vibratory Hammer, Ice Machine, Diesel and Air Hammer, etc. | 36.54 | 25.30 + a |
| Group 11: Conveyor, Earth Roller; Power Pavement Breaker (whiphammer), Robot Demolition Equipment. | 36.54 | 25.30 + a |

*As of:* November 12, 2020

| | | |
|---|---|---|
| Group 12: Wellpoint Operator. | 36.48 | 25.30 + a |
| Group 13: Compressor Battery Operator. | 35.86 | 25.30 + a |
| Group 14: Elevator Operator; Tow Motor Operator (Solid Tire No Rough Terrain). | 34.66 | 25.30 + a |
| Group 15: Generator Operator; Compressor Operator; Pump Operator; Welding Machine Operator; Heater Operator. | 34.23 | 25.30 + a |
| Group 16: Maintenance Engineer/Oiler | 33.54 | 25.30 + a |
| Group 17: Portable asphalt plant operator; portable crusher plant operator; portable concrete plant operator. | 38.11 | 25.30 + a |
| Group 18: Power Safety Boat; Vacuum Truck; Zim Mixer; Sweeper; (minimum for any job requiring CDL license). | 35.53 | 25.30 + a |
| **NOTE: SEE BELOW | | |
| ----LINE CONSTRUCTION----(Railroad Construction and Maintenance)---- | | |
| 20) Lineman, Cable Splicer, Technician | 48.19 | 6.5% + 22.00 |
| 21) Heavy Equipment Operator | 42.26 | 6.5% + 19.88 |
| 22) Equipment Operator, Tractor Trailer Driver, Material Men | 40.96 | 6.5% + 19.21 |
| 23) Driver Groundmen | 26.5 | 6.5% + 9.00 |
| 23a) Truck Driver | 40.96 | 6.5% + 17.76 |
| ----LINE CONSTRUCTION---- | | |
| 24) Driver Groundmen | 30.92 | 6.5% + 9.70 |
| 25) Groundmen | 22.67 | 6.5% + 6.20 |
| 26) Heavy Equipment Operators | 37.1 | 6.5% + 10.70 |

*As of:* November 12, 2020

| | | |
|---|---|---|
| 27) Linemen, Cable Splicers, Dynamite Men | 41.22 | 6.5% + 12.20 |
| 28) Material Men, Tractor Trailer Drivers, Equipment Operators | 35.04 | 6.5% + 10.45 |

## Important Information:

For use with Building, Heavy/Highway, and Residential

Welders: Rate for craft to which welding is incidental.

*Note: Hazardous waste removal work receives additional $1.25 per hour for truck drivers.

**Note: Hazardous waste premium $3.00 per hour over classified rate.

**ALL Cranes: When crane operator is operating equipment that requires a fully licensed crane operator to operate he receives an extra $4.00 premium in addition to the hourly wage rate and benefit contributions:**

1) Crane handling or erecting structural steel or stone; hoisting engineer (2 drums or over)
2) Cranes (100 ton rate capacity and over) Bauer Drill/Caisson
3) Cranes (under 100 ton rated capacity)

**Crane with boom including jib, 150 feet - $1.50 extra.**

**Crane with boom including jib, 200 feet - $2.50 extra.**

**Crane with boom including jib, 250 feet - $5.00 extra.**

**Crane with boom including jib, 300 feet - $7.00 extra.**

**Crane with boom including jib, 400 feet - $10.00 extra.**

All classifications that indicate a percentage of the fringe benefits must be calculated at the percentage rate times the "base hourly rate".

- Apprentices duly registered under the Commissioner of Labor's regulations on "Work Training Standards for Apprenticeship and Training Programs" Section 31-51-d-1 to 12, are allowed to be paid the appropriate percentage of the prevailing journeymen hourly base and the full fringe benefit rate, providing the work site ratio shall not be less than one full-time journeyperson instructing and supervising the work of one apprentice in a specific trade.

**Connecticut General Statute Section 31-55a: Annual Adjustments to wage rates by contractors doing state work**

- The Prevailing wage rates applicable to this project are subject to annual adjustments each July 1st for the duration of the project.
- Each contractor shall pay the annual adjusted prevailing wage rate that is in effect each July 1st, as posted by the Department of Labor.
- It is the contractor's responsibility to obtain the annual adjusted prevailing wage rate increases directly from the Department of Labor's website.
- The annual adjustments will be posted on the Department of Labor's Web page: www.ctdol.state.ct.us.
- The Department of Labor will continue to issue the initial prevailing wage rate schedule to the Contracting Agency for the project.
- All subsequent annual adjustments will be posted on our Web Site for contractor access.

**Effective October 1, 2005 - Public Act 05-50: any person performing the work of any mechanic, laborer, or worker shall be paid prevailing wage.**

- All Persons who perform work ON SITE must be paid prevailing wage for the appropriate mechanic, laborer, or worker classification.
- All certified payrolls must list the hours worked and wages paid to All Persons who perform work ON SITE regardless of their ownership i.e.: (Owners, Corporate Officers, LLC Members, Independent Contractors, et. al)
- Reporting and payment of wages is required regardless of any contractual relationship alleged to exist between the contractor and such person.

Unlisted classifications needed for work not included within the scope of the classifications listed may be added after award only as provided in the labor standards contract clause (29 CFR 5.5 (a) (1) (ii)).

***Please direct any questions which you may have pertaining to classification of work and payment of prevailing wages to the Wage and Workplace Standards Division, telephone (860)263-6790.***

Project: Renovations to Cardinal Stadium (Phase I) (Greenwich)

*Welders: Rate for craft to which welding is incidental.*

**Note: Hazardous waste removal work receives additional $1.25 per hour for truck drivers.*

*ALL Cranes: When crane operator is operating equipment that requires a fully licensed crane operator to operate he receives an extra $4.00 premium in addition to the hourly wage rate and benefit contributions:*

*1) Crane handling or erecting structural steel or stone; hoisting engineer (2 drums or over)*

*2) Cranes (100 ton rate capacity and over) Bauer Drill/Caisson*

Crane with 150 ft. boom (including jib) - $1.50 extra

Crane with 200 ft. boom (including jib) - $2.50 extra

Crane with 250 ft. boom (including jib) - $5.00 extra

Crane with 300 ft. boom (including jib) - $7.00 extra

Crane with 400 ft. boom (including jib) - $10.00 extra

All classifications that indicate a percentage of the fringe benefits must be calculated at the percentage rate times the "base hourly rate".

Apprentices duly registered under the Commissioner of Labor's regulations on "Work Training Standards for Apprenticeship and Training Programs" Section 31-51-d-1 to 12, are allowed to be paid the appropriate percentage of the prevailing journeymen hourly base and the full fringe benefit rate, providing the work

~~Connecticut General Statute Section 31-55a: Annual Adjustments to wage rates by contractors doing

*The Prevailing wage rates applicable to this project are subject to annual adjustments each July 1st for the duration of the project.*

*Each contractor shall pay the annual adjusted prevailing wage rate that is in effect each July 1st, as posted by the Department of Labor.*

*It is the contractor's responsibility to obtain the annual adjusted prevailing wage rate increases directly from the Department of Labor's website.*

*The annual adjustments will be posted on the Department of Labor's Web page: www.ct.gov/dol. For those without internet access, please contact the division listed below.*

*The Department of Labor will continue to issue the initial prevailing wage rate schedule to the Contracting Agency for the project.*

*All subsequent annual adjustments will be posted on our Web Site for contractor access.*

*Contracting Agencies are under no obligation pursuant to State labor law to pay any increase due to the annual adjustment provision.*

*Effective October 1, 2005 - Public Act 05-50: any person performing the work of any mechanic, laborer, or worker shall be paid prevailing wage*

All Person who perform work ON SITE must be paid prevailing wage for the appropriate mechanic, laborer, or worker classification.

All certified payrolls must list the hours worked and wages paid to All Persons who perform work ON SITE regardless of their ownership i.e.: (Owners, Corporate Officers, LLC Members, Independent Contractors, et. al)

Reporting and payment of wages is required regardless of any contractual relationship alleged to exist between the contractor and such person.

*As of:* November 12, 2020

Project: Renovations to Cardinal Stadium (Phase I) (Greenwich)

~~Unlisted classifications needed for work not included within the scope of the classifications listed may be added after award only as provided in the labor standards contract clause (29 CFR 5.5 (a) (1) (ii)).

Please direct any questions which you may have pertaining to classification of work and payment of prevailing wages to the Wage and Workplace Standards Division, telephone (860)263-6790.

*As of:* November 12, 2020

**THE FOLLOWING PAGES ARE A SAMPLE COPY OF THE TOWN OF GREENWICH CONTRACT FOR YOUR REVIEW. YOU MUST BE ABLE TO SIGN THIS CONTRACT AND MEET THE NECESSARY INSURANCE AS REQUIRED BY THE TOWN OF GREENWICH IN ORDER FOR YOUR PROPOSAL TO BE CONSIDERED.**

# State of Connecticut
# Town of Greenwich
# Contract

Town Department: Greenwich Public Schools
Division: Facilities
Name and Address Of Contractor

**Contract No. _____**
Account Name:
Account Code:
Total Amount of Contract:

This Agreement made this _____ day of _____ 2020 between Town of Greenwich hereafter called the Town and _____ hereafter called the Contractor.
Witnessed as follows:

1. The contractor agrees to furnish materials and perform services as shown in specifications and contract documents hereto attached and made a part hereof, and consisting of numbered pages from 1 to .
2. The Town agrees to pay the price designated for such materials and services upon certification by the proper agent of the Town.
3. This contract shall not be valid until approved by the Town Counsel and countersigned by the Town Comptroller.

TOWN OF GREENWICH
By_____
Its: Chief Operating Officer Sean O'Keefe

CONTRACTOR
By_____
Its:

CORPORATE ACKNOWLEDGEMENT

STATE OF
COUNTY OF } ss: _____, 2020

Personally appeared _____ of _____
Name and title of Officer (Corporation)

Signer and sealer of the foregoing instrument, who being duly authorized and appointed by the Board of Directors of said Corporation, acknowledged the foregoing instrument to be his free act and deed and the free act and deed of said _____before me
(Corporation)

_____
Notary Public (seal)

**INDIVIDUAL OR PARTNERSHIP ACKNOWLEDGEMENT**
(delete words in parenthesis if not a partnership)

STATE OF
COUNTY OF } ss: _____, 2020

Personally appeared _____, (one of the members of the partnership of) _____ , signer and sealer of the foregoing instrument and acknowledged the same to be his free act and deed (and the free act and deed of said partnership), before me

_____
Notary Public (seal)

Approved as to legal sufficiency

Date_____ _____
Town Counsel

I hereby certify that the estimated amount of this contract does not exceed the unencumbered balances of amounts duly appropriated and against which this contract is chargeable as indicated hereon.

Date_____ _____
Comptroller

# AGREEMENT
# CONTRACT NO.

THIS AGREEMENT, executed this day of in the year Two Thousand Nineteen (herein referred to as the "AGREEMENT"), by and between the Town of Greenwich, Connecticut, acting through _____ hereunto duly authorized, "OWNER" and _____, acting through _____ (insert name of individual and title) duly authorized, "CONTRACTOR".

WITNESSETH, that the parties to these presents, each in consideration of the under-taking, promises and agreements on the part of the other herein contained, have undertaken, promised and agreed to do hereby undertake, promise and agree, the Owner for itself, its successors and assigns, and the Contractor for himself and his heirs, executors, administrators, successors and assigns, as follows:

**1. <u>DEFINITIONS</u>:**

Wherever the words hereinafter defined or pronouns used in their stead occur in the Contract Documents, they shall have the following meaning:

The word "Owner" shall mean the Town of Greenwich and shall include its authorized representative.

The word "Contractor" shall mean the person or organization identified as such in this Agreement and shall include his authorized representative.

The words "Contracting Officer or Agency" shall mean that official of the Town which awards the contract, executes the Agreement and is the Owner's authorized representative.

The Information for Bidders, the Contractor's Bid as accepted by the Owner, the Contract Conditions and Specifications and the General, Technical and Materials Specifications, the Drawings, and all addenda and amendments to any of the foregoing, collectively constitute the Contract Documents, and are sometimes herein referred to as the "Contract". **2.**

**<u>DESCRIPTION OF WORK</u>:**

**3. <u>PAYMENT</u>:**

The Contractor shall be paid on a monthly basis after presentation of vouchers, and subject to acceptance and approval by the Town of Greenwich.

Such payments will be made by the Town of Greenwich monthly for all services actually rendered, and the acceptance by the Contractor of any such monthly payment shall be a release to the Town of all claims and all liability to the Contractor in connection with the contract, arising during the period for which payment is made. No payment, however, shall operate to release the Contractor or its sureties or insurers from any obligation under the Contract to be entered into or the Performance Bond or any insurance policies issued in connection with said contract.

## 4. PERFORMANCE MAINTENANCE AND PAYMENT BOND:

The Contractor shall, simultaneously with the signing of the Contract, furnish the Town the executed Performance, Maintenance and Payment Bond of a surety company authorized to do business in the State of Connecticut, and acceptable to the Town, in the sum of the full amount of the Contract obligation in the form provided by the Town.

**THE ABOVE IS ONLY REQUIRED FOR CONTRACTS EXCEEDING $100,000.00.**

## 5. GUARANTEE:

The Contractor guarantees that the Work and services to be performed, furnished, used or installed in the construction of the same, shall be free from defects and flaws, and shall be performed and furnished in strict accordance with the Drawings, if any, Specifications, and other Contract Documents, that the strength of all parts of all manufactured equipment shall be adequate and as specified and that the performance test requirements of the Contract shall be fulfilled. This guarantee shall be for a period of one year from and after the date of completion and acceptance of the Work as stated in the final estimate. The Contractor shall repair, correct or replace as required, promptly and without charge, all work, equipment and material, or parts thereof, which fail to meet the above guarantee or which in any way fail to comply with or fail to be in strict accordance with the terms and provisions and requirements of the Contract during such one-year period, and also shall repair, correct, or replace all damage to the Work resulting from such failure.

## 6. DEFECTIVE WORK:

The inspection of the Work shall not relieve the Contractor of any of his obligations to perform and complete the Work as required by the Contract. Defective work shall be corrected and unsuitable materials, equipment apparatus and other items shall be replaced by the Contractor, notwithstanding that such work, materials, equipment, apparatus and other items may have been previously overlooked or accepted or estimated for payment. If the work or any part thereof shall be found defective at any time before the final acceptance of the work, the Contractor shall forthwith make good such defect in a manner satisfactory to the Town; if any material, equipment, apparatus or other items brought upon the site for use or incorporation in the work, or selected for the same, is condemned by the Town as unsuitable or not in conformity with the Specifications or any of the other Contract Documents, the Contractor shall forthwith
remove such materials, equipment, apparatus and other items from the site of the Work and shall

at his own cost and expense make good and replace the same and any material furnished by the Town which shall be damaged or rendered defective by the handling or improper installation by the Contractor, his agents, servants, employees or subcontractors.

## 7. COMPLIANCE WITH LAWS:

The Contractor shall keep himself fully informed of all existing and future federal, state and local laws, ordinances, rules and regulations affecting those engaged or employed on the work, the materials and equipment used in the work or the conduct of the work, and of all orders, decrees and other requirements of bodies or tribunals having any jurisdiction or authority over the same. If any discrepancy or inconsistency is discovered in the Drawings, if any, Specifications or other Contract Documents in relation to any such law, ordinance, rule, regulation, order, decree or other requirement, the Contractor shall forthwith report the same to the Town in writing. The Contractor shall at all times observe and comply with, and cause all his agents, servants, employees and subcontractors to observe and comply with all such existing and future laws, ordinances, rules, regulations, orders, decrees and other requirements, and he shall protect, indemnify and save harmless the Town, its officers, agents, servants and employees from and against any and all claims, demands, suits proceedings, liabilities, judgments, penalties, losses, damages costs and expenses, including attorneys' fees, arising from or based upon any violation or claimed violation of any such law, ordinance, rule, regulation, order, decree or other requirement, whether committed by the Contractor or any of his agents, servants, employees or subcontractors.

## 8. INDEMNITY:

The Contractor shall indemnify and save harmless the Town and its officers, agents, servants and employees, from and against any and all claims, demands, suits, proceedings, liabilities, judgments, awards, losses, damages, costs and expenses, including attorneys' fees, on account of bodily injury, sickness, disease or death sustained by any person or persons or injury or damage to or destruction of any property, directly or indirectly arising out of, relating to or in connection with the Work, whether or not due or claimed to be due in whole or in part to the active, passive or concurrent negligence or fault of the Contractor, his officers, agents, servants or employees, any of his subcontractors, the Town any of his respective officers, agents, servants or employees and/or any other person or persons, and whether or not such claims, demands, suits or proceedings are just, unjust, groundless, false or fraudulent; and the Contractor shall and does hereby assume and agrees to pay for the defense of all such claims, demands, suits and proceedings; and provided that the Contractor shall not be required to indemnify the Town, its officers, agents, servants or employees against any such damages occasioned solely by acts or omissions of the Town other than supervisory acts or omissions of the Town in connection with the Work.

### INDEMNITY AGAINST SUBCONTRACTORS' CLAIMS:

If any other contractor or any subcontractor of any such other contractor shall suffer or claim to have suffered loss, damage or delay by reason of the acts or omissions of the Contractor or of any of his subcontractors, the Contractor agrees to assume the defense against any such claim and to reimburse such other contractor or subcontractor for such loss or damage. The Contractor agrees to

and does hereby indemnify and save harmless the Town from and against any and all claims by such other contractors or subcontractors, alleging such loss, damage or delay and from and against any and all claims, demands, suits, proceedings, liabilities, judgments, awards, losses, damages, costs and expenses including attorneys' fees, arising out of, relating to or resulting from such claims.

**9. PATENTS:**

The Contractor shall indemnify and save harmless the Town and all persons acting for or on behalf of the Town from all claims and liability of any nature or kind, and all damages, costs and expenses, including attorneys' fees, arising from or occasioned by an infringement or alleged infringement of any patents or patent rights on any invention, process, materials, equipment, article, or apparatus, or any part hereof, furnished and installed by the Contractor, or arising from or occasioned by the use or manufacture thereof, including their use by the Town.

**10. CHANGES:**

The Town, through its designated Agent, may make changes in the Work and in the Drawings, if any, and Specifications therefor by making alterations therein, additions, thereto or omissions therefrom. All work resulting from such changes shall be performed and furnished under and pursuant to the terms and conditions of the Contract. If such changes result in an increase or decrease in the Work to be done hereunder, or increase or decrease the quantities thereof, adjustment in compensation shall be made therefor. For eliminated or decreased work the Contractor shall allow the Town a reasonable credit as determined by the Parties. Except in an emergency endangering life or property, no change shall be made unless in pursuance of a written order from the Town authorizing the change, and no claim for additional compensation shall be valid unless the change is so ordered.

The Contractor agrees that he shall neither have nor assert any claim for or be entitled to any additional compensation for damages or for loss of anticipated profits on work that is eliminated.

**11. CLAIMS FOR DAMAGES:**

If the Contractor makes claim for any damages alleged to have been sustained by breach of contract or otherwise, he shall, within ten (10) days after occurrence of the alleged breach or within ten (10) days after such damages are alleged to have been sustained whichever date is the earlier, file with the Contracting Officer a written, itemized statement of the details of the alleged breach and the details and amount of the alleged damages. The Contractor agrees that unless such statement is made and filed as so required, his claim for damages shall be deemed waived, invalid and unenforceable, and that he shall not be entitled to any compensation for any such alleged damages. Within ten (10) days after the timely filing of such statement, the Contracting Officer shall file with the appropriate department of the Town, one copy of the statement, and shall file with the Town and the Contractor his determination thereon. The Contractor shall not be entitled to claim any additional compensation for damages by reason of any direction, instruction, determination or decision of the Town or its agents, nor shall any such claims be considered, unless the Contractor shall have complied in all respects with the provisions of this paragraph.

**12. ABANDONMENT OF THE WORK OR OTHER DEFAULT:**

If the Work shall be abandoned, or any part thereof shall be sublet without previous written consent of the Town, or the Contract or any moneys payable hereunder shall be assigned otherwise than as herein specified, or if at any time the Contracting Officer shall be of the opinion, and shall so certify in writing, that the conditions herein specified as to rate of progress are not being complied with, or that the Work or any part thereof is being unnecessarily or unreasonably delayed, or that the Contractor has violated or is in default under any of the provisions of the Contract, or if the Contractor becomes bankrupt or insolvent or goes or is put into liquidation or dissolution, either voluntarily or involuntarily, or petitions for an arrangement or reorganization under the Bankruptcy Act, or makes a general assignment for the benefit of creditors or otherwise acknowledges insolvency, the happening of any of which shall be and constitute a default under the Contract, the Town may notify the Contractor in writing, with a copy of such notice mailed to the surety, to discontinue all Work or any part thereof; thereupon the Contractor shall discontinue such Work or such part thereof as the Town may designate; and the Town may, upon giving such notice, by Contract or otherwise as it may determine, complete the Work or such part thereof and charge the entire cost and expense of so completing the work. The Town shall be entitled to reimbursement from the Contractor and the Contractor agrees to pay to the Town any losses, damages, costs and expenses, including attorneys' fees, sustained or incurred by the Town by reason of any of the foregoing causes. For the purpose of such completion the Town may for itself or for any Contractors employed by the Town take possession of and use or cause to be used any and all materials, equipment, plant, machinery, appliances, tools, supplies and such other items of every description that may be found or located at the site of the Work.

All costs, expenses, losses, damages, attorneys' fees, and any and all other charges incurred by the Town under this subsection shall be charged against the Contractor and deducted and/or paid by the Town out of any moneys due and payable or to become due or payable under the Contract to the Contractor; in computing the amounts chargeable to the Contractor, the Town shall not be held to a basis of the lowest prices for which the completion of the Work or any part thereof might have been accomplished, but all sums actually paid or obligated therefor to effect its prompt completion shall be charged to and against the account of the Contractor. In case the costs, expenses, losses, damages, attorneys' fees and other charges together with all payments theretofore made to or for the account of the Contractor are less than the sum which would have been payable under the Contract if the Work had been properly performed and completed by the
Contractor, the Contractor shall be entitled to receive the difference, and, and in case such costs, expenses, losses, damages, attorneys' fees and other charges, together with all payments theretofore made to or for the account of the Contractor, shall exceed the said sum, the Contractor shall pay the amount of the excess to the Town.

**13. <u>LIENS</u>:**

If at any time any notices of lien or other legal process are filed for labor performed or materials or equipment manufactured, furnished, or delivered to or for the Work, the Contractor shall, at its own cost and expense, promptly discharge, remove or otherwise dispose of the same, and until such discharge, removal or disposition, the Town shall have the right to retain from any moneys payable hereunder an amount which, in its sole judgment, it deems necessary to satisfy such liens and pay the costs and expenses, including attorneys' fees, of defending any actions brought to enforce the same, or incurred in connection therewith or by reason thereof.

## 14. CLAIMS:

If at any time there be any evidence of any claims for which the Contractor is or may be liable or responsible hereunder, the Contractor shall promptly settle or otherwise dispose of the same, and until such claims are settled or disposed of, the Town may retain from any moneys which would otherwise be payable hereunder so much thereof as, in its sole judgment, it may deem necessary to settle or otherwise dispose of such claims and to pay the costs and expenses, including attorneys' fees, of defending any actions brought to enforce such claims or incurred in connection therewith or by reason thereof.

## 15. LIABILITY OF TOWN:

No person, firm or corporation, other than the Contractor, who signed this Contract as such, shall have any interest herein or rights hereunder. No claim shall be made or be valid either against the Town or any agent of the Town and neither the Town nor any agent of the Town shall be liable for or be held to pay any money, except as herein provided. The acceptance by the Contractor of the payment as fixed in the final estimate shall operate as and shall be a full and complete release of the Town and of every agent of the Town of and from any and all claims, demands, damages and liabilities of, by or to the Contractor for anything done or furnished for or arising out of or relating to or by reason of the Work or for or on account of any act or neglect of the Town or of any agent of the Town or of any other person, arising out of, relating to or by reason of the Work, except the claim against the Town for the unpaid balance, if any there be, of the amounts retained as herein provided.

## 16. PROVISIONS REQUIRED BY LAW DEEMED INSERTED:

Each and every provision of law and clause required by law to be inserted in the Contract shall be deemed to be inserted herein, and the Contract shall be read and enforced as though they were included herein. If through mistake or otherwise any such provision is not inserted, or is not correctly inserted, then upon the application of either party, the Contract shall forthwith be physically amended to make such insertion.

## 17. PERMITS:

The Contractor shall, at his own expense, take out and maintain all necessary permits from the State, Town, or other public authorities; shall give all notices required by law; and shall post all bonds and pay all fees and charges incident to the due and lawful prosecution of the Work.

## 18. NOT TO SUBLET OR ASSIGN:

The Contractor shall constantly give his personal attention to the faithful prosecution of the Work, shall keep the same under his personal control, shall not assign the Contract or sublet the Work or any part thereof without the previous written consent of the Town, and shall not assign any of the moneys payable under the Contract, or his claim thereto, unless by and with the like written consent of the Town and the surety on the Contract Bonds. Any assignment or subletting in violation hereof shall be void and unenforceable.

## 19. EMPLOY COMPETENT PEOPLE:

The Contractor shall employ only competent people on the Work and shall not employ people or means which may cause strikes, work stoppages and/or disturbances by workmen employed by the Contractor, any subcontractor, the Town, the Contracting Officer or any other contractor. Whenever the Contracting Officer notifies the Contractor in writing that in his opinion any person on the Work is incompetent, unfaithful, disorderly, or otherwise unsatisfactory or not employed in accordance with the provisions of the Contract, such person shall be discharged from the Work and shall not again be employed on it, except with the written consent of the Contracting Officer.

## 20. EMPLOY SUFFICIENT LABOR AND EQUIPMENT:

If in the sole judgment of the Contracting Officer the Contractor is not employing sufficient labor, plant, equipment or other means to complete the Work within the time specified, the Contracting Officer may, after giving written notice, require the Contractor to employ such additional labor, plant, equipment and other means as the Contracting Officer deems necessary to enable the Work to progress properly.

## 21. INTOXICATING LIQUORS:

The Contractor shall not sell and shall neither permit nor suffer the introduction or use of intoxicating liquors upon or about the Work.

## 22. ACCESS TO WORK:

The Town, the Contracting Officer, and their officers, agents, servants and employees may at any and all times and for any and all purposes, enter upon the Work and the site thereof and the premises used by the Contractor, and the Contractor shall at all times provide safe and proper facilities therefor.

## 23. EXAMINATION OF WORK:

The Contracting Officer shall be furnished by the Contractor with every reason able facility for examining and inspecting the Work and for ascertaining that the Work is being performed in accordance with the requirements and intent of the Contract, even to the extent of requiring the uncovering or taking down portions of finished work by the Contractor.

## 24. EXTRA WORK:

The Contractor shall perform any extra work (work in connection with the Contract but not provided for herein) when and as ordered in writing by the Contracting Officer, at the unit prices stipulated in the Contract for such work or, if none are so stipulated, either (a) at the price agreed upon before such work is commenced and named in the written order for such work, or (b) if the Contracting Officer so elects, for the reasonable cost of such work, as determined by the Contractor and approved by the Contracting Officer, plus a percentage of such cost, as may be agreed upon by

Contract and Contracting Officer.

**25. CHANGES NOT TO AFFECT BONDS:**

It is distinctly agreed and understood that any changes made in the work or the Drawings or Specifications therefor (whether such changes increase or decrease the amount thereof or the time required for its performance) or any changes in the manner or time of payments made by the Town to the Contractor, or any other modifications of the Contract, shall in no way annul, release, diminish or affect the liability of the surety on the Contract Bonds given by the Contractor, it being the intent hereof that notwithstanding such changes the liability of the surety on said bonds continue and remain in full force and effect.

**26. PRICES FOR WORK:**

The Town shall pay and the Contractor shall receive the prices stipulated in the Bid made a part hereof as full compensation for everything performed and furnished and for all risks and obligations undertaken by the Contractor under and as required by the Contract.

**27. MONEYS MAY BE RETAINED:**

The Town may at any time retain from any moneys which would otherwise be payable hereunder so much thereof as the Town may deem necessary to complete the Work hereunder and to reimburse it for all costs, expenses, losses, damage and damages chargeable to the Contractor hereunder.

**28. USE OR PARTIAL PAYMENT NOT ACCEPTANCE:**

It is agreed that this is an entire contract for one whole and complete Work or result and that neither the Town's entrance upon or use of the Work or any part thereof nor any partial payments by the Town shall constitute an acceptance of the Work or any part thereof before its entire completion and final acceptance.

**29. NON-CONNECTICUT CONTRACTORS:**

Pursuant to Connecticut General Statutes §12-430(7), as amended by Connecticut Public Act #11-61, Section 66, a nonresident contractor shall comply with the State of Connecticut's bonding requirements.

**30. PAYMENT TO SUBCONTRACTORS:**

As required by Section 49-41a of the Connecticut General Statutes, within thirty days after payment to the Contractor by the Town for work under this Contract, he shall pay any amounts due any subcontractor, whether for labor performed or materials furnished when such labor or materials has been included in a requisition submitted by such Contractor and paid by the Town.

**31. INSURANCE:**

Insurance coverage required as noted in "Exhibit A" attached.

**32. PREVAILING WAGE RATES; CONSTRUCTION SAFETY AND HEALTH COURSE:**

Except as noted below, the Contractor shall comply with the current provisions of Section 31-53 of the General Statutes of the State of Connecticut, a part of which is quoted as follows:

"The wages paid on an hourly basis to any person performing the work of any mechanic, laborer or worker on the work herein contracted to be done and the amount of payment or contribution paid or payable on behalf of each such person to any employee or welfare fund, as defined in subsection (h) of section 31-53 of the General Statutes, shall be at a rate equal to the rate customary or prevailing for the same work in the same trade or occupation in the town in which such public works project is being constructed. Any contractor who is not obligated by agreement to make payment or contribution on behalf of such persons to any such employee welfare fund shall pay to each mechanic, laborer or worker as part of such person's wages the amount of payment or contribution for such person's classification on each pay day."

All Contractors and subcontractors shall submit certified weekly payrolls, on forms furnished by the Town, for all contracts meeting the aforementioned monetary limits. The certified payrolls shall be submitted with the Contractor's monthly certificate for payment.

Section 31-55a of the General Statutes of the State of Connecticut provides that the prevailing wage rates applicable to any awarded contract or subcontract are subject to annual adjustments each July 1st for the duration of the project.

Each Contractor that is awarded a contract shall pay the annual adjusted prevailing wage rate that is in effect each July 1st, as posted by the Department of Labor.
It is the Contractor's responsibility to obtain the annual adjusted prevailing wage rate increases directly from the Department of Labor's web site. The annual adjustments will be posted on the Department of Labor web page: www.ctdol.state.ct.us. For those without Internet access, contact the division listed below.

The Contractor shall also furnish proof with the weekly certified payroll for the first week each employee begins work that any person performing the work of a mechanic, laborer or worker has completed a course of at least ten (10) hours in duration in construction safety and health approved by the federal Occupational Safety and Health Administration in accordance with Connecticut General Statutes Section 31-53b and regulations adopted by the State of Connecticut Labor Commissioner.

The provisions of this section (32) shall not apply where the total cost of all work to be performed by all Contractors and subcontractors in connection with new construction of any public works project is less than four hundred thousand dollars ($400,000) or where the total cost of all work to be performed by all contractors and subcontractors in connection with any remodeling, refinishing, refurbishing, rehabilitation, alteration or repair of any public works project is less than one hundred thousand dollars ($100,000).

Questions can be directed to the Contract Compliance Unit, Wage and Workplace Standards Division, Connecticut Department of Labor, 200 Folly Brook Blvd., Wethersfield, CT 06109 at 860-263-6790.

**33. <u>GOVERNING LAW</u>:**

The laws of the State of Connecticut shall govern this Contract and any and all litigation related to this Contract. In the event of litigation related to this Contract, the exclusive forum shall be the State of Connecticut and the exclusive venue for such litigation shall be the Judicial District for Stamford/Norwalk at Stamford.

IN WITNESS, WHEREOF, the parties of the AGREEMENT have hereunto set their hand and seals the day first above written.

TOWN OF GREENWICH, CONNECTICUT

BY_____

THE CONTRACTOR

BY_____

# EXHIBIT A

## Insurance Requirement Sheet

**Insurance Requirements: Before starting and until final completion and acceptance of the work called for in the Contract and expiration of the guarantee period provided for in the Contract, the Contractor and its subcontractors, if any, shall procure and maintain insurance of the types and amounts checked in paragraphs A through F below for all Contract operations.**

☒ **A. General Liability, with minimum coverages for combined bodily injury and property damage liability of $2,000,000 general aggregate, $1,000,000 per occurrence including:**

- ☒ **1. Commercial General Liability.**
- ☒ **2. Town as additional insured.**
- ☐ **3. Owners and Contractors Protective Liability (separate policy in the name of the Town).**

☒ **B. Comprehensive Automobile Liability, with minimum coverages of $1,000,000 combined single limit for bodily injury and property damage, including, where applicable, coverage for any vehicle, all owned vehicles, scheduled vehicles, hired vehicles, non-owned vehicles and garage liability.**

☒ **C. Excess Liability, with minimum coverage of $5,000,000 in umbrella form, or such other form as approved by Town Department Head and Risk Management Director.**

☒ **D. Workers' Compensation and Employer's Liability, with minimum coverages as provided by Connecticut State Statutes.**

☐ **E. Professional Liability (for design and other professionals for Errors and Omissions), with minimum coverage of $1,000,000. If the policy is on a claims-made basis, coverage shall be continually renewed or extended for three (3) years after work is completed under the Contract.**

☐ **F. Other (Builder's Risk, etc.):_____.**

☒ **G. CERTIFICATE HOLDER: TOWN OF GREENWICH**
**And GREENWICH BOARD OF EDUCATION. (Also fill in on ACORD Certificate of Insurance)**
**290 Greenwich Avenue, Greenwich, CT 06830.**

The **Acord certificate of insurance form** must be executed by your insurance agent/broker and returned to this office. Company name and address must conform on all documents including insurance documentation. It is required that the agent/broker note the individual insurance companies providing coverage, rather than the insurance group, on the Acord form. The Contract number (provided to the awarded Contractor), project name and a brief description must be inserted in the "Description of Operations" field. It must be confirmed on the Acord Form that the Town of Greenwich is endorsed as an additional insured by having the appropriate box checked off and stating such in the "Description of Operations" field. **A letter from the awarded vendor's agent/broker certifying that the Town of Greenwich has been endorsed onto the general liability policy as an additional insured is also mandatory.** This letter **must follow exactly the format provided by the**

**Purchasing Department and must be signed by the same individual authorized representative who signed the Acord form.** If the insurance coverage required is provided on more than one Acord certificate of insurance, then additional endorsement letters are also required. Contract development will begin upon receipt of complete, correct insurance documentation. The Contractor shall be responsible for maintaining the above insurance coverages in force to secure all of the Contractor's obligations under the Contract with an insurance company or companies with an AM Best Rating of B+:VII or better, licensed to write such insurance in Connecticut and acceptable to the Risk Manager, Town of Greenwich. For excess liability only, non-admitted insurers are acceptable, provided they are permitted to do business through Connecticut excess line brokers per listing on the current list of Licensed Insurance Companies, Approved Reinsurers, Surplus Lines Insurers and Risk Retention Groups issued by the State of Connecticut Insurance Department.

***ACORD*** **CERTIFICATE OF LIABILITY INSURANCE**

**(SAMPLE ENDORSEMENT LETTER)**

**AGENT/BROKER**
**(LETTERHEAD)**

(Date)

Eugene H. Watts, Senior Buyer
Purchasing Department
Town of Greenwich/Board of Education
290 Greenwich Avenue – Havemeyer Building
Greenwich, CT 06830

Re: Town of Greenwich/Greenwich Board of Education / **Contract # _____**
Project Name:

Dear Mr. Watts:

The undersigned hereby certifies as follows:

(1) I am a duly licensed insurance agent under the laws of the State of **[insert State]** and an authorized representative of all companies affording coverage under the Acord form submitted herewith;

(2) The Town of Greenwich, Greenwich Board of Education, and **KG+D Architects, PC** have been endorsed as an additional insured under the general liability policy no. [insert policy number], issued by **[insert company affording coverage] to [name of insured]**;

(3) The general liability policy referenced in paragraph (2) above meets or exceeds the coverage in Commercial General Liability ISO form CG 00 01 10 01, including contractual liability;

(4) The policies listed in the Acord form submitted to the Town of Greenwich in connection with the above-referenced contract have been issued to the insured in the amounts stated and for the periods indicated in the Acord form; and

(5) The Town of Greenwich shall be given thirty (30) days prior written notice of cancellation, lapse or restrictive amendment (except ten days' notice of nonpayment) of the policies listed in the Acord form.

Sincerely,

Authorized Representative for all companies listed in the Acord form

| PRODUCER | THIS CERTIFICATE IS ISSUED AS A MATTER OF INFORMATION ONLY AND CONFERS NO RIGHTS UPON THE CERTIFICATE HOLDER, THIS CERTIFICATE DOES NOT AMEND, EXTEND OR ALTER THE COVERAGE AFFORDED BY THE POLICIES BELOW. |
|---|---|
| | INSUREERS AFFORDING COVERAGE |
| INSURED | INSURER A: |
| | INSURER B: |
| | INSURER C: |
| | INSURER D: |
| | INSURER E: |

COVERAGES

THE POLICIES OF INSURANCE LISTED BELOW HAVE BEEN ISSUED TO THE INSURED NAMED ABOVE FOR THE POLICY PERIOD INDICATED, NOTWITHSTANDING ANY REQUIREMENT, TERM OF CONDITION OF ANY CONTRACT OR OTHER DOCUMENT WITH RESPECT TO WHICH THIS CERTIFICATE MAY BE ISSUED OR MAY PERTAIN, THE INSURANCE AFFORDED BY THE POLICIES DESCRIBED HEREIN IS SUBJECT TO ALL THE TERMS, EXCLUSIONS AND CONDITIONS OF SUCH POLICIES. LIMITS SHOWN MAY HAVE BEEN REDUCED BY PAID CLAIMS.

| INSR | TYPE OF INSURANCE | POLICY NUMBER | POLICY EFFECTIVE DATE(MM/DD/YY) | POLICY EXPIRATION DATE(MM/DD/YY) | LIMITS |
|---|---|---|---|---|---|
| | GENERAL LIABILITY<br>COMMERCIAL GENERAL LIABILITY<br>☐ CLAIMS MADE ☒ OCCUR<br>☐ _____<br>☐ _____<br>GENERAL AGGREGATE LIMIT APPLIES PER:<br>☐ POLICY ☐PROJECT ☐ LOC | | | | EACH OCCURENCE<br>FIRE DAMAGE (Any one fire)<br>MED EXP (Any one person)<br>PERSONAL & ADV INJURY<br>GENERAL AGGRREGATE<br>PRODUCTS-COMP/OP AGG |
| | AUTOMOBILE LIABILITY<br>☐ ANY AUTO<br>ALL OWNED AUTOS<br>☐ SCHEDULED AUTOS<br>HIRED AUTOS<br>NON-OWNED AUTOS<br>☐ _____<br>☐ | | | | COMBINED SINGLE LIMIT (Ea accident)<br>BODILY INJURY (Per person)<br>BODILY INJURY (Per accident)<br>PROPERTY DAMAGE (Per accident) |
| | GARAGE LIABILITY<br>☐ ANY AUTO<br>☐ | | | | AUTO ONLY-EA ACCIDENT<br>OTHER THAN AUTO ONLY: EA ACC<br>AGG |
| | EXCESS LIABILITY<br>☐ OCCUR ☐ CLAIMS MADE<br>☐ DEDUCTIBLE<br>☐ RETENTION $ | | | | EACH OCCURRENCE<br>AGGREGATE |
| | WORKERS COMPENSATION AND EMPLOYERS' LIABILITY | | | | WC STATU- OTH-ER<br>E.L. EACH ACCIDENT<br>E.L. DISEASE-EA EMPLOYEE<br>E.L. DISEASE – POLICY LIMIT |
| | Professional Liability | | | | |

**DESCRIPTION OF OPERATIONS/LOCATIONS/VEHICLES/EXCLUSIONS ADDED BY ENDORSEMENT/SPECIAL PROVISIONS** Additional Insured: The Town of Greenwich, Greenwich Board of Education and _____ are named as additional insured for Contract # ____ It is agreed by both parties to Contract No _____ that the Contractors insurance will be primary and non-contributory

| CERTIFICATE HOLDER | X | ADDITIONAL INSURED; INSURER LETTER: __ | CANCELLATION |
|---|---|---|---|
| | | | |

**REQUISITION FOR PARTIAL PAYMENT - WAIVER OF LIENS**

| **PROJECT** | **OWNER** |
|---|---|
| | |
| | |
| | |
| **GENERAL CONTRACTOR** | **SUBCONTRACTOR/VENDOR** |
| | |
| | |
| | |
| **CONTRACT** | **WORK COMPLETE** |
| PROJECT: | CONTRACT - $ |
| TRADE: | CHANGE ORDERS - $ |
| CONTRACT - $ | TOTAL COMPLETE - $ |
| CHANGE ORDERS - $ | RETAINAGE (___%) - $ |
| TOTAL CONTRACT - $ | LESS PRE. REQ. - $ |
| | THIS REQUISITION - $ |

**Waiver of Lien**

The undersigned, upon receipt of the above requisition for payment, hereby releases and discharges the Owner of and from any liability or obligation in any way related to or arising out of this project up to and including the date of this document.

The undersigned further covenants and agrees that it shall not in any way claim or file a mechanic's or other lien against the premises of the above designated project, or any part thereof, or against any fund applicable thereto for any of the work, labor, materials heretofore furnished by it in connection with the improvement of said premises.

The undersigned further warrants that, in order to induce the Owner to release this partial payment, they have paid all claims for labor, material, insurance, taxes, equipment, etc., employed in the prosecution of the work above, to date of this requisition.

The undersigned hereby releases and agrees to hold the Owner harmless from any and all claims in connection with the furnishing of such labor and materials, etc., for the construction of the aforementioned project.

The undersigned further guarantees that all portions of the work furnished and/or provided by them are in accordance with the contract and that the terms of the contract with respect to these guarantees will hold for the period specified in said contract.

IN WITNESS WHEREOF, we have executed under seal this release on the date below and to be legally bound hereby:

SIGNATURE: _____ FIRM: _____

PRINT NAME:_____ DATE: _____

CORPORATE ACKNOWLEDGEMENT

State of )
) SS:
County of )

On the _____ day of _____, before me came _____ to me known and who by me being duly sworn did depose and say that he resides at _____ _____; that he is the officer of the said corporation executing the foregoing instrument, that he knows the seal of said corporation, that the seal affixed to said instrument is such corporate seal, that it was so affixed by order of the Board of Directors of said corporation and that he signed his name thereto by like order.

_____
Notary Public

INDIVIDUAL ACKNOWLEDGEMENT

State of )
) SS:
County of )

On the _____ day of _____, before me came _____ to me known and who by me being duly sworn did depose and say that he resides at _____ _____ that he is the individual who executed the foregoing instrument.

_____
Notary Public

PARTNERSHIP ACKNOWLEDGEMENT

State of )
) SS:
County of )

On the _____ day of _____, before me came _____ to me known and who by me being duly sworn did depose and say that he resides at _____ _____; that he is the partner in the firm of _____ doing business under the name of _____ and that he executed the foregoing instrument on behalf of said partnership.

_____
Notary Public

Section 00 50 02

# INSURANCE RIDER
(Supplement to Contract Insurance Requirements for this Project)

| | |
|---|---|
| Name of Insurance Producer: | |
| Name of Insured: | |

The Contractor shall purchase and maintain during the life of the contract insurances as listed herein. This insurance must be purchased from a Connecticut State licensed, A.M. Best Rated "A" or "A+" carrier. The Owner, the Architect, their Consultants and Subconsultants shall, with the exception of Worker's Compensation and Employer's Liability Insurance, be named as additional named insureds on a primary and non-contributory basis. Contractor must submit additional insured endorsements to the District for approval.

At least ten (10) working days prior to the commencement of the Work, the Contractor and all Subcontractors shall submit to the Owner, through the Architect, a Certificate of Insurance (AIA Form G705) or Accord 25-s showing evidence of insurance coverage as required by these documents. The standard Accord Form of Certificate of Insurance or insurance carrier certificate will be acceptable for employer's liability and statutory Disability. Submit all Workers' Compensation Certificates on form C-105.2.

All Certificates of Insurance must be signed by a licensed agent or authorized representative of the insurance carrier.

The certificate shall be issued to the Owner with a provision that in the event the policies are either canceled or diminished, at least 30 days prior notice thereof shall be given to the Owner.

The insurance required for this project shall be written for not less than limits of liability specified in this attachment or otherwise within the Contract Documents or required by law, whichever coverage is greater. Coverages, whether written on an occurrence or claims-made basis, shall be maintained without interruption from date of commencement of the Work until date of final payment and termination of any coverage required to be maintained after final payment.

.1 General Liability: (Occurrence Form) – Limits Per Project using ISO Form CG 00 01 07 98 or later date

| | |
|---|---|
| $2,000,000 | General Aggregate |
| $1,000,000 | Products/Completed Operations |
| $1,000,000 | Personal and Adv. Injury |
| $1,000,000 | Occurrence |
| $ 50,000 | Fire Damage |
| $ 5,000 | Medical Expense |

*Coverage to include Broad Form Property Damage, Contractual Liability, Independent Contractors, and Personal Injury. No exclusion for XCU or hazards shall be endorsed to the Policy.*

*Products and Completed Operations Coverage to be kept in force for 12 months after final payment; a renewal certificate is to be submitted for the project if the coverage renews in less than 12 months following the completion of the project.*

Coordinate requirements for additional insurance covering contractual obligations assumed by Contractor as established in the by using Endorsement ISO Form B, CG2010 11/85 or CG 20 10 10/01 plus CG 20 37 10/01 or equivalent. This endorsement must also reflect that the coverage provided is Primary and Non-Contributory. Waiver of Subrogation applies to all policies for all additional insureds.

.2 Auto Liability to cover ALL autos; or Owned, Hired, Leased and Non-Owned Autos.

| | |
|---|---|
| $1,000,000 | Combined Single Limit or |
| $ 500,000 | Bodily injury (per person) |
| $1,000,000 | Bodily injury (per accident) |
| $ 500,000 | Property Damage |
| $ 5,000 | Medical Payments |

.3 Excess Liability: Insurance is to cover all stated insurance coverages listed within this Attachment

| | |
|---|---|
| $2,000,000 | Each Occurrence |
| $2,000,000 | Aggregate |
| $ 10,000 | Retention (Maximum) |

.4 Workers' Compensation

| | |
|---|---|
| Statutory | Part A |
| Statutory | Disability |
| Employer's Liability | Part B |
| $ 500,000 | Each Accident |
| $1,000,000 | Disease Policy Limit |
| $ 500,000 | Disease Each Employee |

.5 Hazardous Material Coverage

| | |
|---|---|
| Hazardous material liability insurance as follows: | $1,000,000 occurrence/$2,000,000 aggregate, including products and completed operations. |
| Such insurance shall include coverage for the Contractor's operations including, but not limited to, removal, replacement enclosure, encapsulation and/or disposal of asbestos, or any other hazardous material, along with any related pollution events, including coverage for third-party liability claims for bodily injury, property damage and clean-up costs. If a retroactive date is used, it shall pre-date the inception of the Contract. | |
| If motor vehicles are used for transporting hazardous materials, the Contractor shall provide pollution liability broadened coverage (ISO endorsement CA 9948) as well as proof of M CS 90. | |
| Coverage shall fulfill all requirements of the Contract and General Conditions and shall extend for a period of three (3) years following acceptance by the Owner of the Certificate of Completion. | |

.6 Testing Company Errors and Omission Insurance

| | |
|---|---|
| $1,000,000 | Each Occurrence |
| $2,000,000 | Aggregate |

for the testing and other professional acts of the Contractor performed under the contract with the Owner.

Further, Contractor shall require all Subcontractors to carry similar insurance coverages and limits of liability as set forth above and adjusted to the nature of Subcontractors' operations and submit same to Owner for approval prior to start of any Work.

Further, it is not the intention of these insurance requirements to require each Subcontractor, vendor or material man involved in the work to provide “excess” coverage in the amounts stated herein but the “excess” limit shall be at least 2 times the contract sum entered into between the individual Contractor and the particular Subcontractor, vendor or material man but not less than $1,000,000.00, each occurrence, $3,000,000 aggregate and $10,000 retention (maximum).

In the event Contractor fails to obtain the required certificates of insurance from the Subcontractor and a claim is made or suffered, the Contractor shall indemnify, defend and hold harmless Owner, Architect, Engineers, Consultants and Subconsultants and their agents or employees from any and all claims for which the required insurance would have provided coverage. This indemnity obligation is in addition to any other indemnity obligation provided in the Contract.

The following shall be included as Additional Insureds

- The Town of Greenwich and the Greenwich Public Schools and any officer, member of its staff, employee, or representative of said Owner and School System.
- KG+D Architects, PC, and ALL consultants listed on the cover of the PROJECT / SPECIFICATIONS MANUAL

| Proof of Insurance shall show the following Insureds and Holder: | | |
|---|---|---|
| (a) | Certificate Holder: | |
| (b) | Additional Named Insureds, on a primary basis: | |
| | The Town of Greenwich, CT | |
| | Greenwich Public Schools | |
| | Architect: KG+D Architects, PC | |
| | Consultants: | |
| | | |
| | | |
| | | |

** End of Section **

SECTION 00 61 00

BOND REQUIREMENTS

**SEE SECTION 00 61 01 FOR ACCEPTABLE BONDING COMPANY RATINGS**

1.01 Prior to the Owner signing the contract agreement, he will require the Contractor(s) to furnish separate performance and labor and material payment bonds covering the faithful performance of the entire construction contract agreement.

The performance bond and the labor and material payment bond shall each be made out in one hundred percent (100%) of the guaranteed maximum contract amount.

1.02 The "Performance Bond" and "Labor and Material Payment Bond", A.I.A. Document A-312, as published by The American Institute of Architects shall be used and modified, if necessary, to comply with applicable statutes.

***NOTE: Date of forms to be used shall be complimentary to the date of the contract form and general conditions in these Bid Documents.***

1.03 The bonds shall be signed by an official of the bonding company and shall be accompanied by the bonding agent's written power of attorney.

1.04 Provide four (4) copies each of the bonds and the power of attorney in order that one (1) copy of each may be attached to each copy of the contract agreement.

1.05 The Contractor(s) shall include in his proposal amount the total premiums for the performance and labor and material payment bonds.

**End of Section**

SECTION 00 61 01

BONDING COMPANY REQUIREMENTS

Acceptable Bonding Company Ratings

| Contract Amounts ($) | A.M. Best Company Rating | | | | | | | |
|---|---|---|---|---|---|---|---|---|
| | A + XII | B + XI | B + X | B X | B IX | B VIII | B VII | B VI |
| 10 Million and Over | ▲ | | | | | | | |
| 7.5 to 10 Million | ▲ | ▲ | | | | | | |
| 5.0 to 7.5 Million | ▲ | ▲ | ▲ | | | | | |
| 2.5 to 5.0 Million | ▲ | ▲ | ▲ | ▲ | | | | |
| 1.0 to 2.5 Million | ▲ | ▲ | ▲ | ▲ | ▲ | | | |
| 0.5 to 1.0 Million | ▲ | ▲ | ▲ | ▲ | ▲ | ▲ | | |
| 0.25 to 0.5 Million | ▲ | ▲ | ▲ | ▲ | ▲ | ▲ | ▲ | |
| 0.25 and Under | ▲ | ▲ | ▲ | ▲ | ▲ | ▲ | ▲ | ▲ |

# AIA® Document A310™ – 2010

## *Bid Bond*

**CONTRACTOR:**
*(Name, legal status and address)*

**SURETY:**
*(Name, legal status and principal place of business)*

**ADDITIONS AND DELETIONS:**
The author of this document has added information needed for its completion. The author may also have revised the text of the original AIA standard form. An *Additions and Deletions Report* that notes added information as well as revisions to the standard form text is available from the author and should be reviewed. A vertical line in the left margin of this document indicates where the author has added necessary information and where the author has added to or deleted from the original AIA text.

This document has important legal consequences. Consultation with an attorney is encouraged with respect to its completion or modification.

Any singular reference to Contractor, Surety, Owner or other party shall be considered plural where applicable.

**OWNER:**
*(Name, legal status and address)*
Greenwich Public Schools
290 Greenwich Avenue
Greenwich, CT 06830

**BOND AMOUNT:** $

**PROJECT:**
*(Name, location or address, and Project number, if any)*
Bid No. 2309-20 - Phase 1
Greenwich High School Cardinal Stadium
10 Hillside Road
Greenwich, CT 06830

The Contractor and Surety are bound to the Owner in the amount set forth above, for the payment of which the Contractor and Surety bind themselves, their heirs, executors, administrators, successors and assigns, jointly and severally, as provided herein. The conditions of this Bond are such that if the Owner accepts the bid of the Contractor within the time specified in the bid documents, or within such time period as may be agreed to by the Owner and Contractor, and the Contractor either (1) enters into a contract with the Owner in accordance with the terms of such bid, and gives such bond or bonds as may be specified in the bidding or Contract Documents, with a surety admitted in the jurisdiction of the Project and otherwise acceptable to the Owner, for the faithful performance of such Contract and for the prompt payment of labor and material furnished in the prosecution thereof; or (2) pays to the Owner the difference, not to exceed the amount of this Bond, between the amount specified in said bid and such larger amount for which the Owner may in good faith contract with another party to perform the work covered by said bid, then this obligation shall be null and void, otherwise to remain in full force and effect. The Surety hereby waives any notice of an agreement between the Owner and Contractor to extend the time in which the Owner may accept the bid. Waiver of notice by the Surety shall not apply to any extension exceeding sixty (60) days in the aggregate beyond the time for acceptance of bids specified in the bid documents, and the Owner and Contractor shall obtain the Surety's consent for an extension beyond sixty (60) days.

If this Bond is issued in connection with a subcontractor's bid to a Contractor, the term Contractor in this Bond shall be deemed to be Subcontractor and the term Owner shall be deemed to be Contractor.

When this Bond has been furnished to comply with a statutory or other legal requirement in the location of the Project, any provision in this Bond conflicting with said statutory or legal requirement shall be deemed deleted herefrom and provisions conforming to such statutory or other legal requirement shall be deemed incorporated herein. When so

Init.
/

**AIA Document A310™ – 2010.** Copyright © 1963, 1970 and 2010 by The American Institute of Architects. **All rights reserved. WARNING: This AIA® Document is protected by U.S. Copyright Law and International Treaties. Unauthorized reproduction or distribution of this AIA® Document, or any portion of it, may result in severe civil and criminal penalties, and will be prosecuted to the maximum extent possible under the law.** This document was produced by AIA software at 11:08:24 ET on 06/28/2019 under Order No.7839248670 which expires on 02/15/2020, and is not for resale.
**User Notes:** (1733313366)

furnished, the intent is that this Bond shall be construed as a statutory bond and not as a common law bond.

Signed and sealed this day of ,

| | |
|---|---|
| | *(Contractor as Principal)* *(Seal)* |
| *(Witness)* | *(Title)* |
| | *(Surety)* *(Seal)* |
| *(Witness)* | *(Title)* |

**AIA Document A310™ – 2010.** Copyright © 1963, 1970 and 2010 by The American Institute of Architects. **All rights reserved. WARNING: This AIA® Document is protected by U.S. Copyright Law and International Treaties. Unauthorized reproduction or distribution of this AIA® Document, or any portion of it, may result in severe civil and criminal penalties, and will be prosecuted to the maximum extent possible under the law.** This document was produced by AIA software at 11:08:24 ET on 06/28/2019 under Order No.7839248670 which expires on 02/15/2020, and is not for resale.
**User Notes:** (1733313366)

# AIA® Document A312™ – 2010

## *Performance Bond*

**CONTRACTOR:**
*(Name, legal status and address)*

**SURETY:**
*(Name, legal status and principal place of business)*

**OWNER:**
*(Name, legal status and address)*
Greenwich Public Schools
290 Greenwich Avenue
Greenwich, CT 06830

**CONSTRUCTION CONTRACT**
Date:
Amount: $ 0.00
Description:
*(Name and location)*
Bid No. 2309-20 - Phase 1
Greenwich High School Cardinal Stadium
10 Hillside Road
Greenwich, CT 06830

**BOND**
Date:
*(Not earlier than Construction Contract Date)*

Amount: $
Modifications to this Bond: ☐ None ☐ See Section 16

**CONTRACTOR AS PRINCIPAL**
Company: *(Corporate Seal)*

Signature: _____
Name and Title:

**SURETY**
Company: *(Corporate Seal)*

Signature: _____
Name and Title:

*(Any additional signatures appear on the last page of this Performance Bond.)*

*(FOR INFORMATION ONLY — Name, address and telephone)*

**AGENT** or **BROKER:**

**OWNER'S REPRESENTATIVE:**
*(Architect, Engineer or other party:)*

Greenwich Public Schools
290 Greenwich Avenue
Greenwich, CT 06830

**ADDITIONS AND DELETIONS:**
The author of this document has added information needed for its completion. The author may also have revised the text of the original AIA standard form. An *Additions and Deletions Report* that notes added information as well as revisions to the standard form text is available from the author and should be reviewed. A vertical line in the left margin of this document indicates where the author has added necessary information and where the author has added to or deleted from the original AIA text.

This document has important legal consequences. Consultation with an attorney is encouraged with respect to its completion or modification.

Any singular reference to Contractor, Surety, Owner or other party shall be considered plural where applicable.

Init.
/

**AIA Document A312™ – 2010 Performance Bond.** The American Institute of Architects. **All rights reserved. WARNING: This AIA® Document is protected by U.S. Copyright Law and International Treaties. Unauthorized reproduction or distribution of this AIA® Document, or any portion of it, may result in severe civil and criminal penalties, and will be prosecuted to the maximum extent possible under the law.** This document was produced by AIA software at 11:08:02 ET on 06/28/2019 under Order No.7839248670 which expires on 02/15/2020, and is not for resale.
**User Notes:** (1194686507)

**§ 1** The Contractor and Surety, jointly and severally, bind themselves, their heirs, executors, administrators, successors and assigns to the Owner for the performance of the Construction Contract, which is incorporated herein by reference.

**§ 2** If the Contractor performs the Construction Contract, the Surety and the Contractor shall have no obligation under this Bond, except when applicable to participate in a conference as provided in Section 3.

**§ 3** If there is no Owner Default under the Construction Contract, the Surety's obligation under this Bond shall arise after

- **.1** the Owner first provides notice to the Contractor and the Surety that the Owner is considering declaring a Contractor Default. Such notice shall indicate whether the Owner is requesting a conference among the Owner, Contractor and Surety to discuss the Contractor's performance. If the Owner does not request a conference, the Surety may, within five (5) business days after receipt of the Owner's notice, request such a conference. If the Surety timely requests a conference, the Owner shall attend. Unless the Owner agrees otherwise, any conference requested under this Section 3.1 shall be held within ten (10) business days of the Surety's receipt of the Owner's notice. If the Owner, the Contractor and the Surety agree, the Contractor shall be allowed a reasonable time to perform the Construction Contract, but such an agreement shall not waive the Owner's right, if any, subsequently to declare a Contractor Default;
- **.2** the Owner declares a Contractor Default, terminates the Construction Contract and notifies the Surety; and
- **.3** the Owner has agreed to pay the Balance of the Contract Price in accordance with the terms of the Construction Contract to the Surety or to a contractor selected to perform the Construction Contract.

**§ 4** Failure on the part of the Owner to comply with the notice requirement in Section 3.1 shall not constitute a failure to comply with a condition precedent to the Surety's obligations, or release the Surety from its obligations, except to the extent the Surety demonstrates actual prejudice.

**§ 5** When the Owner has satisfied the conditions of Section 3, the Surety shall promptly and at the Surety's expense take one of the following actions:

**§ 5.1** Arrange for the Contractor, with the consent of the Owner, to perform and complete the Construction Contract;

**§ 5.2** Undertake to perform and complete the Construction Contract itself, through its agents or independent contractors;

**§ 5.3** Obtain bids or negotiated proposals from qualified contractors acceptable to the Owner for a contract for performance and completion of the Construction Contract, arrange for a contract to be prepared for execution by the Owner and a contractor selected with the Owner's concurrence, to be secured with performance and payment bonds executed by a qualified surety equivalent to the bonds issued on the Construction Contract, and pay to the Owner the amount of damages as described in Section 7 in excess of the Balance of the Contract Price incurred by the Owner as a result of the Contractor Default; or

**§ 5.4** Waive its right to perform and complete, arrange for completion, or obtain a new contractor and with reasonable promptness under the circumstances:

- **.1** After investigation, determine the amount for which it may be liable to the Owner and, as soon as practicable after the amount is determined, make payment to the Owner; or
- **.2** Deny liability in whole or in part and notify the Owner, citing the reasons for denial.

**§ 6** If the Surety does not proceed as provided in Section 5 with reasonable promptness, the Surety shall be deemed to be in default on this Bond seven days after receipt of an additional written notice from the Owner to the Surety demanding that the Surety perform its obligations under this Bond, and the Owner shall be entitled to enforce any remedy available to the Owner. If the Surety proceeds as provided in Section 5.4, and the Owner refuses the payment or the Surety has denied liability, in whole or in part, without further notice the Owner shall be entitled to enforce any remedy available to the Owner.

**§ 7** If the Surety elects to act under Section 5.1, 5.2 or 5.3, then the responsibilities of the Surety to the Owner shall not be greater than those of the Contractor under the Construction Contract, and the responsibilities of the Owner to the


**AIA Document A312™ – 2010 Performance Bond.** The American Institute of Architects. **All rights reserved. WARNING: This AIA® Document is protected by U.S. Copyright Law and International Treaties. Unauthorized reproduction or distribution of this AIA® Document, or any portion of it, may result in severe civil and criminal penalties, and will be prosecuted to the maximum extent possible under the law.** This document was produced by AIA software at 11:08:02 ET on 06/28/2019 under Order No.7839248670 which expires on 02/15/2020, and is not for resale.
**User Notes:** (1194686507)

Surety shall not be greater than those of the Owner under the Construction Contract. Subject to the commitment by the Owner to pay the Balance of the Contract Price, the Surety is obligated, without duplication, for

**.1** the responsibilities of the Contractor for correction of defective work and completion of the Construction Contract;

**.2** additional legal, design professional and delay costs resulting from the Contractor's Default, and resulting from the actions or failure to act of the Surety under Section 5; and

**.3** liquidated damages, or if no liquidated damages are specified in the Construction Contract, actual damages caused by delayed performance or non-performance of the Contractor.

**§ 8** If the Surety elects to act under Section 5.1, 5.3 or 5.4, the Surety's liability is limited to the amount of this Bond.

**§ 9** The Surety shall not be liable to the Owner or others for obligations of the Contractor that are unrelated to the Construction Contract, and the Balance of the Contract Price shall not be reduced or set off on account of any such unrelated obligations. No right of action shall accrue on this Bond to any person or entity other than the Owner or its heirs, executors, administrators, successors and assigns.

**§ 10** The Surety hereby waives notice of any change, including changes of time, to the Construction Contract or to related subcontracts, purchase orders and other obligations.

**§ 11** Any proceeding, legal or equitable, under this Bond may be instituted in any court of competent jurisdiction in the location in which the work or part of the work is located and shall be instituted within two years after a declaration of Contractor Default or within two years after the Contractor ceased working or within two years after the Surety refuses or fails to perform its obligations under this Bond, whichever occurs first. If the provisions of this Paragraph are void or prohibited by law, the minimum period of limitation available to sureties as a defense in the jurisdiction of the suit shall be applicable.

**§ 12** Notice to the Surety, the Owner or the Contractor shall be mailed or delivered to the address shown on the page on which their signature appears.

**§ 13** When this Bond has been furnished to comply with a statutory or other legal requirement in the location where the construction was to be performed, any provision in this Bond conflicting with said statutory or legal requirement shall be deemed deleted herefrom and provisions conforming to such statutory or other legal requirement shall be deemed incorporated herein. When so furnished, the intent is that this Bond shall be construed as a statutory bond and not as a common law bond.

**§ 14 Definitions**

**§ 14.1 Balance of the Contract Price.** The total amount payable by the Owner to the Contractor under the Construction Contract after all proper adjustments have been made, including allowance to the Contractor of any amounts received or to be received by the Owner in settlement of insurance or other claims for damages to which the Contractor is entitled, reduced by all valid and proper payments made to or on behalf of the Contractor under the Construction Contract.

**§ 14.2 Construction Contract.** The agreement between the Owner and Contractor identified on the cover page, including all Contract Documents and changes made to the agreement and the Contract Documents.

**§ 14.3 Contractor Default.** Failure of the Contractor, which has not been remedied or waived, to perform or otherwise to comply with a material term of the Construction Contract.

**§ 14.4 Owner Default.** Failure of the Owner, which has not been remedied or waived, to pay the Contractor as required under the Construction Contract or to perform and complete or comply with the other material terms of the Construction Contract.

**§ 14.5 Contract Documents.** All the documents that comprise the agreement between the Owner and Contractor.

**§ 15** If this Bond is issued for an agreement between a Contractor and subcontractor, the term Contractor in this Bond shall be deemed to be Subcontractor and the term Owner shall be deemed to be Contractor.


**AIA Document A312™ – 2010 Performance Bond.** The American Institute of Architects. **All rights reserved. WARNING: This AIA® Document is protected by U.S. Copyright Law and International Treaties. Unauthorized reproduction or distribution of this AIA® Document, or any portion of it, may result in severe civil and criminal penalties, and will be prosecuted to the maximum extent possible under the law.** This document was produced by AIA software at 11:08:02 ET on 06/28/2019 under Order No.7839248670 which expires on 02/15/2020, and is not for resale.
**User Notes:** (1194686507)

**§ 16** Modifications to this bond are as follows:

*(Space is provided below for additional signatures of added parties, other than those appearing on the cover page.)*

| **CONTRACTOR AS PRINCIPAL** | | **SURETY** | |
|---|---|---|---|
| Company: | *(Corporate Seal)* | Company: | *(Corporate Seal)* |
| Signature: | _____ | Signature: | _____ |
| Name and Title: | | Name and Title: | |
| Address: | | Address: | |



**AIA Document A312™ – 2010 Performance Bond.** The American Institute of Architects. **All rights reserved. WARNING: This AIA® Document is protected by U.S. Copyright Law and International Treaties. Unauthorized reproduction or distribution of this AIA® Document, or any portion of it, may result in severe civil and criminal penalties, and will be prosecuted to the maximum extent possible under the law.** This document was produced by AIA software at 11:08:02 ET on 06/28/2019 under Order No.7839248670 which expires on 02/15/2020, and is not for resale.
**User Notes:** (1194686507)

# AIA® Document A312™ – 2010

## *Payment Bond*

**CONTRACTOR:**
*(Name, legal status and address)*

**SURETY:**
*(Name, legal status and principal place of business)*

**OWNER:**
*(Name, legal status and address)*
Greenwich Public Schools
290 Greenwich Avenue
Greenwich, CT 06830

**CONSTRUCTION CONTRACT**
Date:
Amount: $ 0.00
Description:
*(Name and location)*
Bid No. 2309-20 - Phase 1
Greenwich High School Cardinal Stadium
10 Hillside Road
Greenwich, CT 06830

**BOND**
Date:
*(Not earlier than Construction Contract Date)*

Amount: $
Modifications to this Bond: ☐ None ☐ See Section 18

**CONTRACTOR AS PRINCIPAL**
Company: *(Corporate Seal)*

Signature: _____
Name and Title:

**SURETY**
Company: *(Corporate Seal)*

Signature: _____
Name and Title:

*(Any additional signatures appear on the last page of this Payment Bond.)*

*(FOR INFORMATION ONLY — Name, address and telephone)*

**AGENT** or **BROKER:**

**OWNER'S REPRESENTATIVE:**
*(Architect, Engineer or other party:)*

Greenwich Public Schools
290 Greenwich Avenue
Greenwich, CT 06830

**ADDITIONS AND DELETIONS:**
The author of this document has added information needed for its completion. The author may also have revised the text of the original AIA standard form. An *Additions and Deletions Report* that notes added information as well as revisions to the standard form text is available from the author and should be reviewed. A vertical line in the left margin of this document indicates where the author has added necessary information and where the author has added to or deleted from the original AIA text.

This document has important legal consequences. Consultation with an attorney is encouraged with respect to its completion or modification.

Any singular reference to Contractor, Surety, Owner or other party shall be considered plural where applicable.

Init.
/

**AIA Document A312™ – 2010 Payment Bond.** The American Institute of Architects. **All rights reserved. WARNING: This AIA® Document is protected by U.S. Copyright Law and International Treaties. Unauthorized reproduction or distribution of this AIA® Document, or any portion of it, may result in severe civil and criminal penalties, and will be prosecuted to the maximum extent possible under the law.** This document was produced by AIA software at 11:08:09 ET on 06/28/2019 under Order No.7839248670 which expires on 02/15/2020, and is not for resale.
**User Notes:** (1868903989)

**§ 1** The Contractor and Surety, jointly and severally, bind themselves, their heirs, executors, administrators, successors and assigns to the Owner to pay for labor, materials and equipment furnished for use in the performance of the Construction Contract, which is incorporated herein by reference, subject to the following terms.

**§ 2** If the Contractor promptly makes payment of all sums due to Claimants, and defends, indemnifies and holds harmless the Owner from claims, demands, liens or suits by any person or entity seeking payment for labor, materials or equipment furnished for use in the performance of the Construction Contract, then the Surety and the Contractor shall have no obligation under this Bond.

**§ 3** If there is no Owner Default under the Construction Contract, the Surety's obligation to the Owner under this Bond shall arise after the Owner has promptly notified the Contractor and the Surety (at the address described in Section 13) of claims, demands, liens or suits against the Owner or the Owner's property by any person or entity seeking payment for labor, materials or equipment furnished for use in the performance of the Construction Contract and tendered defense of such claims, demands, liens or suits to the Contractor and the Surety.

**§ 4** When the Owner has satisfied the conditions in Section 3, the Surety shall promptly and at the Surety's expense defend, indemnify and hold harmless the Owner against a duly tendered claim, demand, lien or suit.

**§ 5** The Surety's obligations to a Claimant under this Bond shall arise after the following:

**§ 5.1** Claimants, who do not have a direct contract with the Contractor,

- **.1** have furnished a written notice of non-payment to the Contractor, stating with substantial accuracy the amount claimed and the name of the party to whom the materials were, or equipment was, furnished or supplied or for whom the labor was done or performed, within ninety (90) days after having last performed labor or last furnished materials or equipment included in the Claim; and
- **.2** have sent a Claim to the Surety (at the address described in Section 13).

**§ 5.2** Claimants, who are employed by or have a direct contract with the Contractor, have sent a Claim to the Surety (at the address described in Section 13).

**§ 6** If a notice of non-payment required by Section 5.1.1 is given by the Owner to the Contractor, that is sufficient to satisfy a Claimant's obligation to furnish a written notice of non-payment under Section 5.1.1.

**§ 7** When a Claimant has satisfied the conditions of Sections 5.1 or 5.2, whichever is applicable, the Surety shall promptly and at the Surety's expense take the following actions:

**§ 7.1** Send an answer to the Claimant, with a copy to the Owner, within sixty (60) days after receipt of the Claim, stating the amounts that are undisputed and the basis for challenging any amounts that are disputed; and

**§ 7.2** Pay or arrange for payment of any undisputed amounts.

**§ 7.3** The Surety's failure to discharge its obligations under Section 7.1 or Section 7.2 shall not be deemed to constitute a waiver of defenses the Surety or Contractor may have or acquire as to a Claim, except as to undisputed amounts for which the Surety and Claimant have reached agreement. If, however, the Surety fails to discharge its obligations under Section 7.1 or Section 7.2, the Surety shall indemnify the Claimant for the reasonable attorney's fees the Claimant incurs thereafter to recover any sums found to be due and owing to the Claimant.

**§ 8** The Surety's total obligation shall not exceed the amount of this Bond, plus the amount of reasonable attorney's fees provided under Section 7.3, and the amount of this Bond shall be credited for any payments made in good faith by the Surety.

**§ 9** Amounts owed by the Owner to the Contractor under the Construction Contract shall be used for the performance of the Construction Contract and to satisfy claims, if any, under any construction performance bond. By the Contractor furnishing and the Owner accepting this Bond, they agree that all funds earned by the Contractor in the performance of the Construction Contract are dedicated to satisfy obligations of the Contractor and Surety under this Bond, subject to the Owner's priority to use the funds for the completion of the work.


**AIA Document A312™ – 2010 Payment Bond.** The American Institute of Architects. **All rights reserved. WARNING: This AIA® Document is protected by U.S. Copyright Law and International Treaties. Unauthorized reproduction or distribution of this AIA® Document, or any portion of it, may result in severe civil and criminal penalties, and will be prosecuted to the maximum extent possible under the law.** This document was produced by AIA software at 11:08:09 ET on 06/28/2019 under Order No.7839248670 which expires on 02/15/2020, and is not for resale.
**User Notes:** (1868903989)

**§ 10** The Surety shall not be liable to the Owner, Claimants or others for obligations of the Contractor that are unrelated to the Construction Contract. The Owner shall not be liable for the payment of any costs or expenses of any Claimant under this Bond, and shall have under this Bond no obligation to make payments to, or give notice on behalf of, Claimants or otherwise have any obligations to Claimants under this Bond.

**§ 11** The Surety hereby waives notice of any change, including changes of time, to the Construction Contract or to related subcontracts, purchase orders and other obligations.

**§ 12** No suit or action shall be commenced by a Claimant under this Bond other than in a court of competent jurisdiction in the state in which the project that is the subject of the Construction Contract is located or after the expiration of one year from the date (1) on which the Claimant sent a Claim to the Surety pursuant to Section 5.1.2 or 5.2, or (2) on which the last labor or service was performed by anyone or the last materials or equipment were furnished by anyone under the Construction Contract, whichever of (1) or (2) first occurs. If the provisions of this Paragraph are void or prohibited by law, the minimum period of limitation available to sureties as a defense in the jurisdiction of the suit shall be applicable.

**§ 13** Notice and Claims to the Surety, the Owner or the Contractor shall be mailed or delivered to the address shown on the page on which their signature appears. Actual receipt of notice or Claims, however accomplished, shall be sufficient compliance as of the date received.

**§ 14** When this Bond has been furnished to comply with a statutory or other legal requirement in the location where the construction was to be performed, any provision in this Bond conflicting with said statutory or legal requirement shall be deemed deleted herefrom and provisions conforming to such statutory or other legal requirement shall be deemed incorporated herein. When so furnished, the intent is that this Bond shall be construed as a statutory bond and not as a common law bond.

**§ 15** Upon request by any person or entity appearing to be a potential beneficiary of this Bond, the Contractor and Owner shall promptly furnish a copy of this Bond or shall permit a copy to be made.

**§ 16 Definitions**

**§ 16.1 Claim.** A written statement by the Claimant including at a minimum:

- **.1** the name of the Claimant;
- **.2** the name of the person for whom the labor was done, or materials or equipment furnished;
- **.3** a copy of the agreement or purchase order pursuant to which labor, materials or equipment was furnished for use in the performance of the Construction Contract;
- **.4** a brief description of the labor, materials or equipment furnished;
- **.5** the date on which the Claimant last performed labor or last furnished materials or equipment for use in the performance of the Construction Contract;
- **.6** the total amount earned by the Claimant for labor, materials or equipment furnished as of the date of the Claim;
- **.7** the total amount of previous payments received by the Claimant; and
- **.8** the total amount due and unpaid to the Claimant for labor, materials or equipment furnished as of the date of the Claim.

**§ 16.2 Claimant.** An individual or entity having a direct contract with the Contractor or with a subcontractor of the Contractor to furnish labor, materials or equipment for use in the performance of the Construction Contract. The term Claimant also includes any individual or entity that has rightfully asserted a claim under an applicable mechanic's lien or similar statute against the real property upon which the Project is located. The intent of this Bond shall be to include without limitation in the terms "labor, materials or equipment" that part of water, gas, power, light, heat, oil, gasoline, telephone service or rental equipment used in the Construction Contract, architectural and engineering services required for performance of the work of the Contractor and the Contractor's subcontractors, and all other items for which a mechanic's lien may be asserted in the jurisdiction where the labor, materials or equipment were furnished.

**§ 16.3 Construction Contract.** The agreement between the Owner and Contractor identified on the cover page, including all Contract Documents and all changes made to the agreement and the Contract Documents.


**AIA Document A312™ – 2010 Payment Bond.** The American Institute of Architects. **All rights reserved. WARNING: This AIA® Document is protected by U.S. Copyright Law and International Treaties. Unauthorized reproduction or distribution of this AIA® Document, or any portion of it, may result in severe civil and criminal penalties, and will be prosecuted to the maximum extent possible under the law.** This document was produced by AIA software at 11:08:09 ET on 06/28/2019 under Order No.7839248670 which expires on 02/15/2020, and is not for resale.
**User Notes:** (1868903989)

**§ 16.4 Owner Default.** Failure of the Owner, which has not been remedied or waived, to pay the Contractor as required under the Construction Contract or to perform and complete or comply with the other material terms of the Construction Contract.

**§ 16.5 Contract Documents.** All the documents that comprise the agreement between the Owner and Contractor.

**§ 17** If this Bond is issued for an agreement between a Contractor and subcontractor, the term Contractor in this Bond shall be deemed to be Subcontractor and the term Owner shall be deemed to be Contractor.

**§ 18** Modifications to this bond are as follows:

*(Space is provided below for additional signatures of added parties, other than those appearing on the cover page.)*

| **CONTRACTOR AS PRINCIPAL** | | **SURETY** | |
|---|---|---|---|
| Company: | *(Corporate Seal)* | Company: | *(Corporate Seal)* |
| Signature: | | Signature: | |
| Name and Title: | | Name and Title: | |
| Address: | | Address: | |


**AIA Document A312™ – 2010 Payment Bond.** The American Institute of Architects. **All rights reserved. WARNING: This AIA® Document is protected by U.S. Copyright Law and International Treaties. Unauthorized reproduction or distribution of this AIA® Document, or any portion of it, may result in severe civil and criminal penalties, and will be prosecuted to the maximum extent possible under the law.** This document was produced by AIA software at 11:08:09 ET on 06/28/2019 under Order No.7839248670 which expires on 02/15/2020, and is not for resale.
**User Notes:** (1868903989)

# SECTION 00 63 00

# REQUESTS FOR INFORMATION

1.1 This document is for issuance at the Post Bid/Pre-Construction Conference and specifies administrative and procedural requirements for handling requests for information (RFI's) made after award of Contract.

1.2 Attention is directed to Sections 01 33 00 and the balance of Division 1 documents as same concerns construction progress schedules, submittal schedules and submittals of shop drawings, samples and product data in general.

1.3 SUBMITTAL PROCEDURES: RFI's shall be submitted in the following manner:

A. One (1) completed copy of form following to Architect with copy(ies) to Owner (as directed) and appropriate Consultants with the following minimum information:

1. Work identified by RFI listing affected Drawing(s) and specific detail(s) and Specification paragraph reference(s).
2. Identify specific field conditions and "as-built" conditions on sketches attached to RFI submittal.
3. If RFI addresses conflict(s) in, or between, Contract Documents, describe completely and provide such data necessary to permit thorough and proper response by affected discipline.
4. Indicate proposed solution along with any impacts on cost and construction time.
5. Listing of Trade/Specialty Contractors affected by RFI and indication that RFI proposal has been coordinated with said contractors.

INCOMPLETE RFI's WILL BE RETURNED TO CONTRACTOR WITHOUT ACTION TAKEN.

1.4 REVIEW PROCEDURES/ACTION:

A. Architect/Engineer may request additional information or documentation as may be deemed necessary for fair evaluation of RFI, OR

B. Architect/Engineer will respond with reasonable promptness in writing as outlined in Section 01 33 00 and may, if appropriate, issue a "Bulletin" as a clarification to the Contract Documents

**End of Section**

**Date of Request: _____ RFI NUMBER _____**

| | |
|---|---|
| **Contractor**: | **Architect**: KG+D Architects, PC |
| **Address**: | **Address**: 285 Main Street<br>Mount Kisco, NY 10549 |
| **Telephone**: | **Telephone**: 914.666.5900 |
| **Fax**: | **Fax**: 914.666.0051 |
| **Email**: | **Email**: |
| **Project Name**: | **Project Location**: |

Description, complete with backup data as necessary attached hereto:

| | | |
|---|---|---|
| Sketches of Conditions | Spec Reference: | Drawing Reference: |

Proposed Solution:

| | |
|---|---|
| Cost Impact: | Time Impact: |

Trade/Specialty Contractors Affected:

Trade/Specialty Contractors Coordinated With:

Submitted By:

Architect's Response:

| | |
|---|---|
| Response By: | Date of Response: |

# AIA® Document A201® – 2017

## General Conditions of the Contract for Construction

**for the following PROJECT:**
*(Name and location or address)*
Bid No. 2309-20 - Phase 1
Greenwich High School - Cardinal Stadium
Greenwich, CT 06830

**THE OWNER:**
*(Name, legal status and address)*

Greenwich Public Schools
290 Greenwich Avenue
Greenwich, CT 06830

**THE ARCHITECT:**
*(Name, legal status and address)*

KG+D Architects, PC
285 Main Street
Mount Kisco, NY 10549

**ADDITIONS AND DELETIONS:**
The author of this document has added information needed for its completion. The author may also have revised the text of the original AIA standard form. An *Additions and Deletions Report* that notes added information as well as revisions to the standard form text is available from the author and should be reviewed. A vertical line in the left margin of this document indicates where the author has added necessary information and where the author has added to or deleted from the original AIA text.

This document has important legal consequences. Consultation with an attorney is encouraged with respect to its completion or modification.

For guidance in modifying this document to include supplementary conditions, see AIA Document A503™, Guide for Supplementary Conditions.

**TABLE OF ARTICLES**


1 GENERAL PROVISIONS

2 OWNER

3 CONTRACTOR

4 ARCHITECT

5 SUBCONTRACTORS

6 CONSTRUCTION BY OWNER OR BY SEPARATE CONTRACTORS

7 CHANGES IN THE WORK

8 TIME

9 PAYMENTS AND COMPLETION

10 PROTECTION OF PERSONS AND PROPERTY

11 INSURANCE AND BONDS

12 UNCOVERING AND CORRECTION OF WORK

13 MISCELLANEOUS PROVISIONS


Init.
/


**AIA Document A201® – 2017.** Copyright © 1911, 1915, 1918, 1925, 1937, 1951, 1958, 1961, 1963, 1966, 1970, 1976, 1987, 1997, 2007 and 2017 by The American Institute of Architects. All rights reserved. The "American Institute of Architects," "AIA," the AIA Logo, "A201," and "AIA Contract Documents" are registered trademarks and may not be used without permission. This document was produced by AIA software at 17:51:08 ET on 11/09/2020 under Order No.7227609709 which expires on 02/14/2021, is not for resale, is licensed for one-time use only, and may only be used in accordance with the AIA Contract Documents® Terms of Service. To report copyright violations, e-mail copyright@aia.org.
**User Notes:** (1178953302)

14 TERMINATION OR SUSPENSION OF THE CONTRACT

15 CLAIMS AND DISPUTES



**AIA Document A201® – 2017.** Copyright © 1911, 1915, 1918, 1925, 1937, 1951, 1958, 1961, 1963, 1966, 1970, 1976, 1987, 1997, 2007 and 2017 by The American Institute of Architects. All rights reserved. The "American Institute of Architects," "AIA," the AIA Logo, "A201," and "AIA Contract Documents" are registered trademarks and may not be used without permission. This document was produced by AIA software at 17:51:08 ET on 11/09/2020 under Order No.7227609709 which expires on 02/14/2021, is not for resale, is licensed for one-time use only, and may only be used in accordance with the AIA Contract Documents® Terms of Service. To report copyright violations, e-mail copyright@aia.org.
**User Notes:** (1178953302)

**INDEX**
(Topics and numbers in bold are Section headings.)


**Acceptance of Nonconforming Work**
9.6.6, 9.9.3, **12.3**
Acceptance of Work
9.6.6, 9.8.2, 9.9.3, 9.10.1, 9.10.3, 12.3
**Access to Work**
**3.16**, 6.2.1, 12.1
Accident Prevention
10
Acts and Omissions
3.2, 3.3.2, 3.12.8, 3.18, 4.2.3, 8.3.1, 9.5.1, 10.2.5, 10.2.8, 13.3.2, 14.1, 15.1.2, 15.2
Addenda
1.1.1
Additional Costs, Claims for
3.7.4, 3.7.5, 10.3.2, 15.1.5
**Additional Inspections and Testing**
9.4.2, 9.8.3, 12.2.1, **13.4**
**Additional Time, Claims for**
3.2.4, 3.7.4, 3.7.5, 3.10.2, 8.3.2, **15.1.6**
**Administration of the Contract**
3.1.3, **4.2**, 9.4, 9.5
Advertisement or Invitation to Bid
1.1.1
Aesthetic Effect
4.2.13
**Allowances**
**3.8**
**Applications for Payment**
4.2.5, 7.3.9, 9.2, **9.3**, 9.4, 9.5.1, 9.5.4, 9.6.3, 9.7, 9.10
Approvals
2.1.1, 2.3.1, 2.5, 3.1.3, 3.10.2, 3.12.8, 3.12.9, 3.12.10.1, 4.2.7, 9.3.2, 13.4.1
**Arbitration**
8.3.1, 15.3.2, **15.4**
**ARCHITECT**
**4**
**Architect**, Definition of
**4.1.1**
Architect, Extent of Authority
2.5, 3.12.7, 4.1.2, 4.2, 5.2, 6.3, 7.1.2, 7.3.4, 7.4, 9.2, 9.3.1, 9.4, 9.5, 9.6.3, 9.8, 9.10.1, 9.10.3, 12.1, 12.2.1, 13.4.1, 13.4.2, 14.2.2, 14.2.4, 15.1.4, 15.2.1
Architect, Limitations of Authority and Responsibility
2.1.1, 3.12.4, 3.12.8, 3.12.10, 4.1.2, 4.2.1, 4.2.2, 4.2.3, 4.2.6, 4.2.7, 4.2.10, 4.2.12, 4.2.13, 5.2.1, 7.4, 9.4.2, 9.5.4, 9.6.4, 15.1.4, 15.2
Architect's Additional Services and Expenses
2.5, 12.2.1, 13.4.2, 13.4.3, 14.2.4
Architect's Administration of the Contract
3.1.3, 3.7.4, 15.2, 9.4.1, 9.5
Architect's Approvals
2.5, 3.1.3, 3.5, 3.10.2, 4.2.7
Architect's Authority to Reject Work
3.5, 4.2.6, 12.1.2, 12.2.1
Architect's Copyright
1.1.7, 1.5
Architect's Decisions
3.7.4, 4.2.6, 4.2.7, 4.2.11, 4.2.12, 4.2.13, 4.2.14, 6.3, 7.3.4, 7.3.9, 8.1.3, 8.3.1, 9.2, 9.4.1, 9.5, 9.8.4, 9.9.1, 13.4.2, 15.2
Architect's Inspections
3.7.4, 4.2.2, 4.2.9, 9.4.2, 9.8.3, 9.9.2, 9.10.1, 13.4
Architect's Instructions
3.2.4, 3.3.1, 4.2.6, 4.2.7, 13.4.2
Architect's Interpretations
4.2.11, 4.2.12
Architect's Project Representative
4.2.10
Architect's Relationship with Contractor
1.1.2, 1.5, 2.3.3, 3.1.3, 3.2.2, 3.2.3, 3.2.4, 3.3.1, 3.4.2, 3.5, 3.7.4, 3.7.5, 3.9.2, 3.9.3, 3.10, 3.11, 3.12, 3.16, 3.18, 4.1.2, 4.2, 5.2, 6.2.2, 7, 8.3.1, 9.2, 9.3, 9.4, 9.5, 9.7, 9.8, 9.9, 10.2.6, 10.3, 11.3, 12, 13.3.2, 13.4, 15.2
Architect's Relationship with Subcontractors
1.1.2, 4.2.3, 4.2.4, 4.2.6, 9.6.3, 9.6.4, 11.3
Architect's Representations
9.4.2, 9.5.1, 9.10.1
Architect's Site Visits
3.7.4, 4.2.2, 4.2.9, 9.4.2, 9.5.1, 9.9.2, 9.10.1, 13.4
Asbestos
10.3.1
Attorneys' Fees
3.18.1, 9.6.8, 9.10.2, 10.3.3
Award of Separate Contracts
6.1.1, 6.1.2
**Award of Subcontracts and Other Contracts for Portions of the Work**
**5.2**
**Basic Definitions**
**1.1**
Bidding Requirements
1.1.1
Binding Dispute Resolution
8.3.1, 9.7, 11.5, 13.1, 15.1.2, 15.1.3, 15.2.1, 15.2.5, 15.2.6.1, 15.3.1, 15.3.2, 15.3.3, 15.4.1
Bonds, Lien
7.3.4.4, 9.6.8, 9.10.2, 9.10.3
**Bonds, Performance, and Payment**
7.3.4.4, 9.6.7, 9.10.3, **11.1.2**, 11.1.3, **11.5**
**Building Information Models Use and Reliance**
**1.8**
Building Permit
3.7.1
**Capitalization**
**1.3**
Certificate of Substantial Completion
9.8.3, 9.8.4, 9.8.5




**AIA Document A201® – 2017.** Copyright © 1911, 1915, 1918, 1925, 1937, 1951, 1958, 1961, 1963, 1966, 1970, 1976, 1987, 1997, 2007 and 2017 by The American Institute of Architects. All rights reserved. The "American Institute of Architects," "AIA," the AIA Logo, "A201," and "AIA Contract Documents" are registered trademarks and may not be used without permission. This document was produced by AIA software at 17:51:08 ET on 11/09/2020 under Order No.7227609709 which expires on 02/14/2021, is not for resale, is licensed for one-time use only, and may only be used in accordance with the AIA Contract Documents® Terms of Service. To report copyright violations, e-mail copyright@aia.org.
**User Notes:**
(1178953302)

**Certificates for Payment**
4.2.1, 4.2.5, 4.2.9, 9.3.3, **9.4**, 9.5, 9.6.1, 9.6.6, 9.7, 9.10.1, 9.10.3, 14.1.1.3, 14.2.4, 15.1.4
Certificates of Inspection, Testing or Approval
13.4.4
Certificates of Insurance
9.10.2
**Change Orders**
1.1.1, 3.4.2, 3.7.4, 3.8.2.3, 3.11, 3.12.8, 4.2.8, 5.2.3, 7.1.2, 7.1.3, **7.2**, 7.3.2, 7.3.7, 7.3.9, 7.3.10, 8.3.1, 9.3.1.1, 9.10.3, 10.3.2, 11.2, 11.5, 12.1.2
**Change Orders**, Definition of
**7.2.1**
**CHANGES IN THE WORK**
2.2.2, 3.11, 4.2.8, **7**, 7.2.1, 7.3.1, 7.4, 8.3.1, 9.3.1.1, 11.5
**Claims**, Definition of
**15.1.1**
Claims, Notice of
1.6.2, 15.1.3
**CLAIMS AND DISPUTES**
3.2.4, 6.1.1, 6.3, 7.3.9, 9.3.3, 9.10.4, 10.3.3, **15**, 15.4
Claims and Timely Assertion of Claims
15.4.1
**Claims for Additional Cost**
3.2.4, 3.3.1, 3.7.4, 7.3.9, 9.5.2, 10.2.5, 10.3.2, **15.1.5**
**Claims for Additional Time**
3.2.4, 3.3.1, 3.7.4, 6.1.1, 8.3.2, 9.5.2, 10.3.2, **15.1.6**
**Concealed or Unknown Conditions, Claims for**
**3.7.4**
Claims for Damages
3.2.4, 3.18, 8.3.3, 9.5.1, 9.6.7, 10.2.5, 10.3.3, 11.3, 11.3.2, 14.2.4, 15.1.7
Claims Subject to Arbitration
15.4.1
**Cleaning Up**
**3.15**, 6.3
Commencement of the Work, Conditions Relating to
2.2.1, 3.2.2, 3.4.1, 3.7.1, 3.10.1, 3.12.6, 5.2.1, 5.2.3, 6.2.2, 8.1.2, 8.2.2, 8.3.1, 11.1, 11.2, **15.1.5**
**Commencement of the Work**, Definition of
**8.1.2**
**Communications**
3.9.1, **4.2.4**
Completion, Conditions Relating to
3.4.1, 3.11, 3.15, 4.2.2, 4.2.9, 8.2, 9.4.2, 9.8, 9.9.1, 9.10, 12.2, 14.1.2, 15.1.2
**COMPLETION, PAYMENTS AND**
**9**
Completion, Substantial
3.10.1, 4.2.9, 8.1.1, 8.1.3, 8.2.3, 9.4.2, 9.8, 9.9.1, 9.10.3, 12.2, 15.1.2
Compliance with Laws
2.3.2, 3.2.3, 3.6, 3.7, 3.12.10, 3.13, 9.6.4, 10.2.2, 13.1, 13.3, 13.4.1, 13.4.2, 13.5, 14.1.1, 14.2.1.3, 15.2.8, 15.4.2, 15.4.3
Concealed or Unknown Conditions
3.7.4, 4.2.8, 8.3.1, 10.3
Conditions of the Contract
1.1.1, 6.1.1, 6.1.4
Consent, Written
3.4.2, 3.14.2, 4.1.2, 9.8.5, 9.9.1, 9.10.2, 9.10.3, 13.2, 15.4.4.2
**Consolidation or Joinder**
**15.4.4**
**CONSTRUCTION BY OWNER OR BY SEPARATE CONTRACTORS**
1.1.4, **6**
**Construction Change Directive**, Definition of
**7.3.1**
**Construction Change Directives**
1.1.1, 3.4.2, 3.11, 3.12.8, 4.2.8, 7.1.1, 7.1.2, 7.1.3, **7.3**, 9.3.1.1
Construction Schedules, Contractor's
3.10, 3.11, 3.12.1, 3.12.2, 6.1.3, 15.1.6.2
**Contingent Assignment of Subcontracts**
**5.4**, 14.2.2.2
**Continuing Contract Performance**
**15.1.4**
**Contract**, Definition of
**1.1.2**
**CONTRACT, TERMINATION OR SUSPENSION OF THE**
5.4.1.1, 5.4.2, 11.5, **14**
Contract Administration
3.1.3, 4, 9.4, 9.5
Contract Award and Execution, Conditions Relating to
3.7.1, 3.10, 5.2, 6.1
Contract Documents, Copies Furnished and Use of
1.5.2, 2.3.6, 5.3
**Contract Documents**, Definition of
**1.1.1**
**Contract Sum**
2.2.2, 2.2.4, 3.7.4, 3.7.5, 3.8, 3.10.2, 5.2.3, 7.3, 7.4, **9.1**, 9.2, 9.4.2, 9.5.1.4, 9.6.7, 9.7, 10.3.2, 11.5, 12.1.2, 12.3, 14.2.4, 14.3.2, 15.1.4.2, **15.1.5, 15.2.5**
**Contract Sum**, Definition of
**9.1**
Contract Time
1.1.4, 2.2.1, 2.2.2, 3.7.4, 3.7.5, 3.10.2, 5.2.3, 6.1.5, 7.2.1.3, 7.3.1, 7.3.5, 7.3.6, 7, 7, 7.3.10, 7.4, 8.1.1, 8.2.1, 8.2.3, 8.3.1, 9.5.1, 9.7, 10.3.2, 12.1.1, 12.1.2, 14.3.2, 15.1.4.2, 15.1.6.1, 15.2.5
**Contract Time**, Definition of
8.1.1
**CONTRACTOR**
**3**
Contractor, Definition of
**3.1, 6.1.2**
**Contractor's Construction and Submittal Schedules**
**3.10**, 3.12.1, 3.12.2, 4.2.3, 6.1.3, 15.1.6.2


**AIA Document A201® – 2017.** Copyright © 1911, 1915, 1918, 1925, 1937, 1951, 1958, 1961, 1963, 1966, 1970, 1976, 1987, 1997, 2007 and 2017 by The American Institute of Architects. All rights reserved. The "American Institute of Architects," "AIA," the AIA Logo, "A201," and "AIA Contract Documents" are registered trademarks and may not be used without permission. This document was produced by AIA software at 17:51:08 ET on 11/09/2020 under Order No.7227609709 which expires on 02/14/2021, is not for resale, is licensed for one-time use only, and may only be used in accordance with the AIA Contract Documents® Terms of Service. To report copyright violations, e-mail copyright@aia.org.
**User Notes:** (1178953302)

Contractor's Employees
2.2.4, 3.3.2, 3.4.3, 3.8.1, 3.9, 3.18.2, 4.2.3, 4.2.6, 10.2, 10.3, 11.3, 14.1, 14.2.1.1
**Contractor's Liability Insurance**
**11.1**
Contractor's Relationship with Separate Contractors and Owner's Forces
3.12.5, 3.14.2, 4.2.4, 6, 11.3, 12.2.4
Contractor's Relationship with Subcontractors
1.2.2, 2.2.4, 3.3.2, 3.18.1, 3.18.2, 4.2.4, 5, 9.6.2, 9.6.7, 9.10.2, 11.2, 11.3, 11.4
Contractor's Relationship with the Architect
1.1.2, 1.5, 2.3.3, 3.1.3, 3.2.2, 3.2.3, 3.2.4, 3.3.1, 3.4.2, 3.5.1, 3.7.4, 3.10, 3.11, 3.12, 3.16, 3.18, 4.2, 5.2, 6.2.2, 7, 8.3.1, 9.2, 9.3, 9.4, 9.5, 9.7, 9.8, 9.9, 10.2.6, 10.3, 11.3, 12, 13.4, 15.1.3, 15.2.1
Contractor's Representations
3.2.1, 3.2.2, 3.5, 3.12.6, 6.2.2, 8.2.1, 9.3.3, 9.8.2
Contractor's Responsibility for Those Performing the Work
3.3.2, 3.18, 5.3, 6.1.3, 6.2, 9.5.1, 10.2.8
Contractor's Review of Contract Documents
3.2
Contractor's Right to Stop the Work
2.2.2, 9.7
Contractor's Right to Terminate the Contract
14.1
Contractor's Submittals
3.10, 3.11, 3.12, 4.2.7, 5.2.1, 5.2.3, 9.2, 9.3, 9.8.2, 9.8.3, 9.9.1, 9.10.2, 9.10.3
Contractor's Superintendent
3.9, 10.2.6
Contractor's Supervision and Construction Procedures
1.2.2, 3.3, 3.4, 3.12.10, 4.2.2, 4.2.7, 6.1.3, 6.2.4, 7.1.3, 7.3.4, 7.3.6, 8.2, 10, 12, 14, 15.1.4
Coordination and Correlation
1.2, 3.2.1, 3.3.1, 3.10, 3.12.6, 6.1.3, 6.2.1
Copies Furnished of Drawings and Specifications
1.5, 2.3.6, 3.11
Copyrights
1.5, **3.17**
Correction of Work
2.5, 3.7.3, 9.4.2, 9.8.2, 9.8.3, 9.9.1, 12.1.2, **12.2**, 12.3, 15.1.3.1, 15.1.3.2, 15.2.1
**Correlation and Intent of the Contract Documents**
**1.2**
**Cost**, Definition of
**7.3.4**
Costs
2.5, 3.2.4, 3.7.3, 3.8.2, 3.15.2, 5.4.2, 6.1.1, 6.2.3, 7.3.3.3, 7.3.4, 7.3.8, 7.3.9, 9.10.2, 10.3.2, 10.3.6, 11.2, 12.1.2, 12.2.1, 12.2.4, 13.4, 14
**Cutting and Patching**
**3.14**, 6.2.5
Damage to Construction of Owner or Separate Contractors
3.14.2, 6.2.4, 10.2.1.2, 10.2.5, 10.4, 12.2.4
Damage to the Work
3.14.2, 9.9.1, 10.2.1.2, 10.2.5, 10.4, 12.2.4
Damages, Claims for
3.2.4, 3.18, 6.1.1, 8.3.3, 9.5.1, 9.6.7, 10.3.3, 11.3.2, 11.3, 14.2.4, 15.1.7
Damages for Delay
6.2.3, 8.3.3, 9.5.1.6, 9.7, 10.3.2, 14.3.2
**Date of Commencement of the Work**, Definition of
**8.1.2**
**Date of Substantial Completion**, Definition of
**8.1.3**
**Day**, Definition of
**8.1.4**
Decisions of the Architect
3.7.4, 4.2.6, 4.2.7, 4.2.11, 4.2.12, 4.2.13, 6.3, 7.3.4, 7.3.9, 8.1.3, 8.3.1, 9.2, 9.4, 9.5.1, 9.8.4, 9.9.1, 13.4.2, 14.2.2, 14.2.4, 15.1, 15.2
**Decisions to Withhold Certification**
9.4.1, **9.5**, 9.7, 14.1.1.3
Defective or Nonconforming Work, Acceptance, Rejection and Correction of
2.5, 3.5, 4.2.6, 6.2.3, 9.5.1, 9.5.3, 9.6.6, 9.8.2, 9.9.3, 9.10.4, 12.2.1
Definitions
1.1, 2.1.1, 3.1.1, 3.5, 3.12.1, 3.12.2, 3.12.3, 4.1.1, 5.1, 6.1.2, 7.2.1, 7.3.1, 8.1, 9.1, 9.8.1, 15.1.1
**Delays and Extensions of Time**
**3.2**, **3.7.4**, 5.2.3, 7.2.1, 7.3.1, **7.4**, **8.3**, 9.5.1, **9.7**, 10.3.2, **10.4**, 14.3.2, **15.1.6**, 15.2.5
**Digital Data Use and Transmission**
**1.7**
Disputes
6.3, 7.3.9, 15.1, 15.2
**Documents and Samples at the Site**
**3.11**
**Drawings**, Definition of
**1.1.5**
Drawings and Specifications, Use and Ownership of
3.11
Effective Date of Insurance
8.2.2
**Emergencies**
**10.4**, 14.1.1.2, **15.1.5**
Employees, Contractor's
3.3.2, 3.4.3, 3.8.1, 3.9, 3.18.2, 4.2.3, 4.2.6, 10.2, 10.3.3, 11.3, 14.1, 14.2.1.1
Equipment, Labor, or Materials
1.1.3, 1.1.6, 3.4, 3.5, 3.8.2, 3.8.3, 3.12, 3.13, 3.15.1, 4.2.6, 4.2.7, 5.2.1, 6.2.1, 7.3.4, 9.3.2, 9.3.3, 9.5.1.3, 9.10.2, 10.2.1, 10.2.4, 14.2.1.1, 14.2.1.2
Execution and Progress of the Work
1.1.3, 1.2.1, 1.2.2, 2.3.4, 2.3.6, 3.1, 3.3.1, 3.4.1, 3.7.1, 3.10.1, 3.12, 3.14, 4.2, 6.2.2, 7.1.3, 7.3.6, 8.2, 9.5.1, 9.9.1, 10.2, 10.3, 12.1, 12.2, 14.2, 14.3.1, 15.1.4


**AIA Document A201® – 2017.** Copyright © 1911, 1915, 1918, 1925, 1937, 1951, 1958, 1961, 1963, 1966, 1970, 1976, 1987, 1997, 2007 and 2017 by The American Institute of Architects. All rights reserved. The "American Institute of Architects," "AIA," the AIA Logo, "A201," and "AIA Contract Documents" are registered trademarks and may not be used without permission. This document was produced by AIA software at 17:51:08 ET on 11/09/2020 under Order No.7227609709 which expires on 02/14/2021, is not for resale, is licensed for one-time use only, and may only be used in accordance with the AIA Contract Documents® Terms of Service. To report copyright violations, e-mail copyright@aia.org.
**User Notes:** (1178953302)

Extensions of Time
3.2.4, 3.7.4, 5.2.3, 7.2.1, 7.3, 7.4, 9.5.1, 9.7, 10.3.2, 10.4, 14.3, 15.1.6, **15.2.5**
**Failure of Payment**
9.5.1.3, **9.7**, 9.10.2, 13.5, 14.1.1.3, 14.2.1.2
Faulty Work
(See Defective or Nonconforming Work)
**Final Completion and Final Payment**
4.2.1, 4.2.9, 9.8.2, **9.10**, 12.3, 14.2.4, 14.4.3
Financial Arrangements, Owner's
2.2.1, 13.2.2, 14.1.1.4
**GENERAL PROVISIONS**
**1**
**Governing Law**
**13.1**
Guarantees (See Warranty)
**Hazardous Materials and Substances**
10.2.4, **10.3**
Identification of Subcontractors and Suppliers
5.2.1
**Indemnification**
3.17, **3.18**, 9.6.8, 9.10.2, 10.3.3, 11.3
**Information and Services Required of the Owner**
2.1.2, **2.2**, 2.3, 3.2.2, 3.12.10.1, 6.1.3, 6.1.4, 6.2.5, 9.6.1, 9.9.2, 9.10.3, 10.3.3, 11.2, 13.4.1, 13.4.2, 14.1.1.4, 14.1.4, 15.1.4
**Initial Decision**
**15.2**
**Initial Decision Maker, Definition of**
1.1.8
Initial Decision Maker, Decisions
14.2.4, 15.1.4.2, 15.2.1, 15.2.2, 15.2.3, 15.2.4, 15.2.5
Initial Decision Maker, Extent of Authority
14.2.4, 15.1.4.2, 15.2.1, 15.2.2, 15.2.3, 15.2.4, 15.2.5
**Injury or Damage to Person or Property**
**10.2.8**, 10.4
Inspections
3.1.3, 3.3.3, 3.7.1, 4.2.2, 4.2.6, 4.2.9, 9.4.2, 9.8.3, 9.9.2, 9.10.1, 12.2.1, 13.4
Instructions to Bidders
1.1.1
Instructions to the Contractor
3.2.4, 3.3.1, 3.8.1, 5.2.1, 7, 8.2.2, 12, 13.4.2
**Instruments of Service**, Definition of
**1.1.7**
Insurance
6.1.1, 7.3.4, 8.2.2, 9.3.2, 9.8.4, 9.9.1, 9.10.2, 10.2.5, **11**
Insurance, Notice of Cancellation or Expiration
11.1.4, 11.2.3
**Insurance, Contractor's Liability**
**11.1**
Insurance, Effective Date of
8.2.2, 14.4.2
**Insurance, Owner's Liability**
**11.2**
**Insurance, Property**
**10.2.5**, 11.2, 11.4, 11.5
Insurance, Stored Materials
9.3.2
**INSURANCE AND BONDS**
**11**
Insurance Companies, Consent to Partial Occupancy
9.9.1
Insured loss, Adjustment and Settlement of
11.5
Intent of the Contract Documents
1.2.1, 4.2.7, 4.2.12, 4.2.13
**Interest**
**13.5**
**Interpretation**
1.1.8, 1.2.3, **1.4**, 4.1.1, 5.1, 6.1.2, 15.1.1
Interpretations, Written
4.2.11, 4.2.12
Judgment on Final Award
15.4.2
**Labor and Materials, Equipment**
1.1.3, 1.1.6, **3.4**, 3.5, 3.8.2, 3.8.3, 3.12, 3.13, 3.15.1, 5.2.1, 6.2.1, 7.3.4, 9.3.2, 9.3.3, 9.5.1.3, 9.10.2, 10.2.1, 10.2.4, 14.2.1.1, 14.2.1.2
Labor Disputes
8.3.1
Laws and Regulations
1.5, 2.3.2, 3.2.3, 3.2.4, 3.6, 3.7, 3.12.10, 3.13, 9.6.4, 9.9.1, 10.2.2, 13.1, 13.3.1, 13.4.2, 13.5, 14, 15.2.8, 15.4
Liens
2.1.2, 9.3.1, 9.3.3, 9.6.8, 9.10.2, 9.10.4, 15.2.8
Limitations, Statutes of
12.2.5, 15.1.2, 15.4.1.1
Limitations of Liability
3.2.2, 3.5, 3.12.10, 3.12.10.1, 3.17, 3.18.1, 4.2.6, 4.2.7, 6.2.2, 9.4.2, 9.6.4, 9.6.7, 9.6.8, 10.2.5, 10.3.3, 11.3, 12.2.5, 13.3.1
Limitations of Time
2.1.2, 2.2, 2.5, 3.2.2, 3.10, 3.11, 3.12.5, 3.15.1, 4.2.7, 5.2, 5.3, 5.4.1, 6.2.4, 7.3, 7.4, 8.2, 9.2, 9.3.1, 9.3.3, 9.4.1, 9.5, 9.6, 9.7, 9.8, 9.9, 9.10, 12.2, 13.4, 14, 15, 15.1.2, 15.1.3, 15.1.5
**Materials, Hazardous**
10.2.4, **10.3**
Materials, Labor, Equipment and
1.1.3, 1.1.6, 3.4.1, 3.5, 3.8.2, 3.8.3, 3.12, 3.13, 3.15.1, 5.2.1, 6.2.1, 7.3.4, 9.3.2, 9.3.3, 9.5.1.3, 9.10.2, 10.2.1.2, 10.2.4, 14.2.1.1, 14.2.1.2
Means, Methods, Techniques, Sequences and Procedures of Construction
3.3.1, 3.12.10, 4.2.2, 4.2.7, 9.4.2
Mechanic's Lien
2.1.2, 9.3.1, 9.3.3, 9.6.8, 9.10.2, 9.10.4, 15.2.8
**Mediation**
8.3.1, 15.1.3.2, 15.2.1, 15.2.5, 15.2.6, **15.3**, 15.4.1, 15.4.1.1
**Minor Changes in the Work**
1.1.1, 3.4.2, 3.12.8, 4.2.8, 7.1, **7.4**


**AIA Document A201® – 2017.** Copyright © 1911, 1915, 1918, 1925, 1937, 1951, 1958, 1961, 1963, 1966, 1970, 1976, 1987, 1997, 2007 and 2017 by The American Institute of Architects. All rights reserved. The "American Institute of Architects," "AIA," the AIA Logo, "A201," and "AIA Contract Documents" are registered trademarks and may not be used without permission. This document was produced by AIA software at 17:51:08 ET on 11/09/2020 under Order No.7227609709 which expires on 02/14/2021, is not for resale, is licensed for one-time use only, and may only be used in accordance with the AIA Contract Documents® Terms of Service. To report copyright violations, e-mail copyright@aia.org.
**User Notes:** (1178953302)

**MISCELLANEOUS PROVISIONS**
**13**
**Modifications**, Definition of
**1.1.1**
Modifications to the Contract
1.1.1, 1.1.2, 2.5, 3.11, 4.1.2, 4.2.1, 5.2.3, 7, 8.3.1, 9.7, 10.3.2
**Mutual Responsibility**
**6.2**
**Nonconforming Work, Acceptance of**
9.6.6, 9.9.3, **12.3**
Nonconforming Work, Rejection and Correction of
2.4, 2.5, 3.5, 4.2.6, 6.2.4, 9.5.1, 9.8.2, 9.9.3, 9.10.4, 12.2
**Notice**
**1.6**, 1.6.1, 1.6.2, 2.1.2, 2.2.2., 2.2.3, 2.2.4, 2.5, 3.2.4, 3.3.1, 3.7.4, 3.7.5, 3.9.2, 3.12.9, 3.12.10, 5.2.1, 7.4, 8.2.2 9.6.8, 9.7, 9.10.1, 10.2.8, 10.3.2, 11.5, 12.2.2.1, 13.4.1, 13.4.2, 14.1, 14.2.2, 14.4.2, 15.1.3, 15.1.5, 15.1.6, 15.4.1
Notice of Cancellation or Expiration of Insurance
11.1.4, 11.2.3
**Notice of Claims**
1.6.2, 2.1.2, 3.7.4, 9.6.8, 10.2.8, **15.1.3**, 15.1.5, 15.1.6, 15.2.8, 15.3.2, 15.4.1
Notice of Testing and Inspections
13.4.1, 13.4.2
Observations, Contractor's
3.2, 3.7.4
Occupancy
2.3.1, 9.6.6, 9.8
Orders, Written
1.1.1, 2.4, 3.9.2, 7, 8.2.2, 11.5, 12.1, 12.2.2.1, 13.4.2, 14.3.1
**OWNER**
**2**
**Owner**, Definition of
**2.1.1**
**Owner, Evidence of Financial Arrangements**
**2.2**, 13.2.2, 14.1.1.4
**Owner, Information and Services Required of the**
2.1.2, **2.2**, 2.3, 3.2.2, 3.12.10, 6.1.3, 6.1.4, 6.2.5, 9.3.2, 9.6.1, 9.6.4, 9.9.2, 9.10.3, 10.3.3, 11.2, 13.4.1, 13.4.2, 14.1.1.4, 14.1.4, 15.1.4
Owner's Authority
1.5, 2.1.1, 2.3.32.4, 2.5, 3.4.2, 3.8.1, 3.12.10, 3.14.2, 4.1.2, 4.2.4, 4.2.9, 5.2.1, 5.2.4, 5.4.1, 6.1, 6.3, 7.2.1, 7.3.1, 8.2.2, 8.3.1, 9.3.2, 9.5.1, 9.6.4, 9.9.1, 9.10.2, 10.3.2, 11.4, 11.5, 12.2.2, 12.3, 13.2.2, 14.3, 14.4, 15.2.7
**Owner's Insurance**
**11.2**
Owner's Relationship with Subcontractors
1.1.2, 5.2, 5.3, 5.4, 9.6.4, 9.10.2, 14.2.2
**Owner's Right to Carry Out the Work**
**2.5**, 14.2.2
**Owner's Right to Clean Up**
**6.3**
**Owner's Right to Perform Construction and to Award Separate Contracts**
**6.1**
**Owner's Right to Stop the Work**
**2.4**
Owner's Right to Suspend the Work
14.3
Owner's Right to Terminate the Contract
14.2, 14.4
**Ownership and Use of Drawings, Specifications and Other Instruments of Service**
1.1.1, 1.1.6, 1.1.7, **1.5**, 2.3.6, 3.2.2, 3.11, 3.17, 4.2.12, 5.3
**Partial Occupancy or Use**
9.6.6, **9.9**
**Patching, Cutting and**
**3.14**, 6.2.5
Patents
3.17
**Payment, Applications for**
4.2.5, 7.3.9, 9.2, **9.3**, 9.4, 9.5, 9.6.3, 9.7, 9.8.5, 9.10.1, 14.2.3, 14.2.4, 14.4.3
**Payment, Certificates for**
4.2.5, 4.2.9, 9.3.3, **9.4**, 9.5, 9.6.1, 9.6.6, 9.7, 9.10.1, 9.10.3, 14.1.1.3, 14.2.4
**Payment, Failure of**
9.5.1.3, **9.7**, 9.10.2, 13.5, 14.1.1.3, 14.2.1.2
Payment, Final
4.2.1, 4.2.9, **9.10**, 12.3, 14.2.4, 14.4.3
**Payment Bond, Performance Bond and**
7.3.4.4, 9.6.7, 9.10.3, **11.1.2**
**Payments, Progress**
9.3, **9.6**, 9.8.5, 9.10.3, 14.2.3, 15.1.4
**PAYMENTS AND COMPLETION**
**9**
Payments to Subcontractors
5.4.2, 9.5.1.3, 9.6.2, 9.6.3, 9.6.4, 9.6.7, 14.2.1.2
PCB
10.3.1
**Performance Bond and Payment Bond**
7.3.4.4, 9.6.7, 9.10.3, **11.1.2**
**Permits, Fees, Notices and Compliance with Laws**
2.3.1, **3.7**, 3.13, 7.3.4.4, 10.2.2
**PERSONS AND PROPERTY, PROTECTION OF**
**10**
Polychlorinated Biphenyl
10.3.1
**Product Data**, Definition of
**3.12.2**
**Product Data and Samples, Shop Drawings**
3.11, **3.12**, 4.2.7
**Progress and Completion**
4.2.2, **8.2**, 9.8, 9.9.1, 14.1.4, 15.1.4
**Progress Payments**
9.3, **9.6**, 9.8.5, 9.10.3, 14.2.3, 15.1.4


**AIA Document A201® – 2017.** Copyright © 1911, 1915, 1918, 1925, 1937, 1951, 1958, 1961, 1963, 1966, 1970, 1976, 1987, 1997, 2007 and 2017 by The American Institute of Architects. All rights reserved. The "American Institute of Architects," "AIA," the AIA Logo, "A201," and "AIA Contract Documents" are registered trademarks and may not be used without permission. This document was produced by AIA software at 17:51:08 ET on 11/09/2020 under Order No.7227609709 which expires on 02/14/2021, is not for resale, is licensed for one-time use only, and may only be used in accordance with the AIA Contract Documents® Terms of Service. To report copyright violations, e-mail copyright@aia.org.
**User Notes:** (1178953302)

**Project**, Definition of
**1.1.4**
Project Representatives
4.2.10
**Property Insurance**
10.2.5, **11.2**
**Proposal Requirements**
1.1.1
**PROTECTION OF PERSONS AND PROPERTY**
**10**
Regulations and Laws
1.5, 2.3.2, 3.2.3, 3.6, 3.7, 3.12.10, 3.13, 9.6.4, 9.9.1, 10.2.2, 13.1, 13.3, 13.4.1, 13.4.2, 13.5, 14, 15.2.8, 15.4
Rejection of Work
4.2.6, 12.2.1
Releases and Waivers of Liens
9.3.1, 9.10.2
Representations
3.2.1, 3.5, 3.12.6, 8.2.1, 9.3.3, 9.4.2, 9.5.1, 9.10.1
Representatives
2.1.1, 3.1.1, 3.9, 4.1.1, 4.2.10, 13.2.1
Responsibility for Those Performing the Work
3.3.2, 3.18, 4.2.2, 4.2.3, 5.3, 6.1.3, 6.2, 6.3, 9.5.1, 10
Retainage
9.3.1, 9.6.2, 9.8.5, 9.9.1, 9.10.2, 9.10.3
**Review of Contract Documents and Field Conditions by Contractor**
**3.2**, 3.12.7, 6.1.3
Review of Contractor's Submittals by Owner and Architect
3.10.1, 3.10.2, 3.11, 3.12, 4.2, 5.2, 6.1.3, 9.2, 9.8.2
Review of Shop Drawings, Product Data and Samples by Contractor
3.12
**Rights and Remedies**
1.1.2, 2.4, 2.5, 3.5, 3.7.4, 3.15.2, 4.2.6, 5.3, 5.4, 6.1, 6.3, 7.3.1, 8.3, 9.5.1, 9.7, 10.2.5, 10.3, 12.2.1, 12.2.2, 12.2.4, **13.3**, 14, 15.4
**Royalties, Patents and Copyrights**
**3.17**
Rules and Notices for Arbitration
15.4.1
**Safety of Persons and Property**
**10.2**, 10.4
**Safety Precautions and Programs**
3.3.1, 4.2.2, 4.2.7, 5.3, **10.1**, 10.2, 10.4
**Samples**, Definition of
**3.12.3**
**Samples, Shop Drawings, Product Data and**
3.11, **3.12**, 4.2.7
**Samples at the Site, Documents and**
**3.11**
**Schedule of Values**
**9.2**, 9.3.1
Schedules, Construction
3.10, 3.12.1, 3.12.2, 6.1.3, 15.1.6.2
Separate Contracts and Contractors
1.1.4, 3.12.5, 3.14.2, 4.2.4, 4.2.7, 6, 8.3.1, 12.1.2
**Separate Contractors**, Definition of
**6.1.1**
**Shop Drawings**, Definition of
**3.12.1**
**Shop Drawings, Product Data and Samples**
3.11, **3.12**, 4.2.7
**Site, Use of**
**3.13**, 6.1.1, 6.2.1
Site Inspections
3.2.2, 3.3.3, 3.7.1, 3.7.4, 4.2, 9.9.2, 9.4.2, 9.10.1, 13.4
Site Visits, Architect's
3.7.4, 4.2.2, 4.2.9, 9.4.2, 9.5.1, 9.9.2, 9.10.1, 13.4
Special Inspections and Testing
4.2.6, 12.2.1, 13.4
**Specifications**, Definition of
**1.1.6**
**Specifications**
1.1.1, **1.1.6**, 1.2.2, 1.5, 3.12.10, 3.17, 4.2.14
Statute of Limitations
15.1.2, 15.4.1.1
Stopping the Work
2.2.2, 2.4, 9.7, 10.3, 14.1
Stored Materials
6.2.1, 9.3.2, 10.2.1.2, 10.2.4
**Subcontractor**, Definition of
**5.1.1**
**SUBCONTRACTORS**
**5**
Subcontractors, Work by
1.2.2, 3.3.2, 3.12.1, 3.18, 4.2.3, 5.2.3, 5.3, 5.4, 9.3.1.2, 9.6.7
**Subcontractual Relations**
**5.3**, 5.4, 9.3.1.2, 9.6, 9.10, 10.2.1, 14.1, 14.2.1
Submittals
3.10, 3.11, 3.12, 4.2.7, 5.2.1, 5.2.3, 7.3.4, 9.2, 9.3, 9.8, 9.9.1, 9.10.2, 9.10.3
Submittal Schedule
3.10.2, 3.12.5, 4.2.7
**Subrogation, Waivers of**
6.1.1, **11.3**
**Substances, Hazardous**
**10.3**
**Substantial Completion**
4.2.9, 8.1.1, 8.1.3, 8.2.3, 9.4.2, **9.8**, 9.9.1, 9.10.3, 12.2, 15.1.2
**Substantial Completion**, Definition of
**9.8.1**
Substitution of Subcontractors
5.2.3, 5.2.4
Substitution of Architect
2.3.3
Substitutions of Materials
3.4.2, 3.5, 7.3.8
**Sub-subcontractor**, Definition of
**5.1.2**


**AIA Document A201® – 2017.** Copyright © 1911, 1915, 1918, 1925, 1937, 1951, 1958, 1961, 1963, 1966, 1970, 1976, 1987, 1997, 2007 and 2017 by The American Institute of Architects. All rights reserved. The "American Institute of Architects," "AIA," the AIA Logo, "A201," and "AIA Contract Documents" are registered trademarks and may not be used without permission. This document was produced by AIA software at 17:51:08 ET on 11/09/2020 under Order No.7227609709 which expires on 02/14/2021, is not for resale, is licensed for one-time use only, and may only be used in accordance with the AIA Contract Documents® Terms of Service. To report copyright violations, e-mail copyright@aia.org.
**User Notes:** (1178953302)

Subsurface Conditions
3.7.4
**Successors and Assigns**
**13.2**
**Superintendent**
**3.9**, 10.2.6
**Supervision and Construction Procedures**
1.2.2, **3.3**, 3.4, 3.12.10, 4.2.2, 4.2.7, 6.1.3, 6.2.4, 7.1.3, 7.3.4, 8.2, 8.3.1, 9.4.2, 10, 12, 14, 15.1.4
Suppliers
1.5, 3.12.1, 4.2.4, 4.2.6, 5.2.1, 9.3, 9.4.2, 9.5.4, 9.6, 9.10.5, 14.2.1
Surety
5.4.1.2, 9.6.8, 9.8.5, 9.10.2, 9.10.3, 11.1.2, 14.2.2, 15.2.7
Surety, Consent of
9.8.5, 9.10.2, 9.10.3
Surveys
1.1.7, 2.3.4
**Suspension by the Owner for Convenience**
**14.3**
Suspension of the Work
3.7.5, 5.4.2, 14.3
Suspension or Termination of the Contract
5.4.1.1, 14
**Taxes**
3.6, 3.8.2.1, 7.3.4.4
**Termination by the Contractor**
**14.1**, 15.1.7
**Termination by the Owner for Cause**
5.4.1.1, **14.2,** 15.1.7
**Termination by the Owner for Convenience**
**14.4**
Termination of the Architect
2.3.3
Termination of the Contractor Employment
14.2.2

**TERMINATION OR SUSPENSION OF THE CONTRACT**
**14**
**Tests and Inspections**
3.1.3, 3.3.3, 3.7.1, 4.2.2, 4.2.6, 4.2.9, 9.4.2, 9.8.3, 9.9.2, 9.10.1, 10.3.2, 12.2.1, **13.4**
**TIME**
**8**
**Time, Delays and Extensions of**
3.2.4, 3.7.4, 5.2.3, 7.2.1, 7.3.1, 7.4, **8.3**, 9.5.1, 9.7, 10.3.2, 10.4, 14.3.2, 15.1.6, 15.2.5
Time Limits
2.1.2, 2.2, 2.5, 3.2.2, 3.10, 3.11, 3.12.5, 3.15.1, 4.2, 5.2, 5.3, 5.4, 6.2.4, 7.3, 7.4, 8.2, 9.2, 9.3.1, 9.3.3, 9.4.1, 9.5, 9.6, 9.7, 9.8, 9.9, 9.10, 12.2, 13.4, 14, 15.1.2, 15.1.3, 15.4
**Time Limits on Claims**
3.7.4, 10.2.8, 15.1.2, 15.1.3
Title to Work
9.3.2, 9.3.3
**UNCOVERING AND CORRECTION OF WORK**
**12**
**Uncovering of Work**
**12.1**
Unforeseen Conditions, Concealed or Unknown
3.7.4, 8.3.1, 10.3
Unit Prices
7.3.3.2, 9.1.2
Use of Documents
1.1.1, 1.5, 2.3.6, 3.12.6, 5.3
**Use of Site**
**3.13**, 6.1.1, 6.2.1
**Values, Schedule of**
**9.2**, 9.3.1
Waiver of Claims by the Architect
13.3.2
Waiver of Claims by the Contractor
9.10.5, 13.3.2, **15.1.7**
Waiver of Claims by the Owner
9.9.3, 9.10.3, 9.10.4, 12.2.2.1, 13.3.2, 14.2.4, **15.1.7**
Waiver of Consequential Damages
14.2.4, 15.1.7
Waiver of Liens
9.3, 9.10.2, 9.10.4
**Waivers of Subrogation**
6.1.1, **11.3**
**Warranty**
**3.5**, 4.2.9, 9.3.3, 9.8.4, 9.9.1, 9.10.2, 9.10.4, 12.2.2, 15.1.2
Weather Delays
8.3, 15.1.6.2
**Work**, Definition of
**1.1.3**
Written Consent
1.5.2, 3.4.2, 3.7.4, 3.12.8, 3.14.2, 4.1.2, 9.3.2, 9.10.3, 13.2, 13.3.2, 15.4.4.2
Written Interpretations
4.2.11, 4.2.12
Written Orders
1.1.1, 2.4, 3.9, 7, 8.2.2, 12.1, 12.2, 13.4.2, 14.3.1


**AIA Document A201® – 2017.** Copyright © 1911, 1915, 1918, 1925, 1937, 1951, 1958, 1961, 1963, 1966, 1970, 1976, 1987, 1997, 2007 and 2017 by The American Institute of Architects. All rights reserved. The "American Institute of Architects," "AIA," the AIA Logo, "A201," and "AIA Contract Documents" are registered trademarks and may not be used without permission. This document was produced by AIA software at 17:51:08 ET on 11/09/2020 under Order No.7227609709 which expires on 02/14/2021, is not for resale, is licensed for one-time use only, and may only be used in accordance with the AIA Contract Documents® Terms of Service. To report copyright violations, e-mail copyright@aia.org.
**User Notes:** (1178953302)

## ARTICLE 1 GENERAL PROVISIONS

### § 1.1 Basic Definitions

#### § 1.1.1 The Contract Documents

The Contract Documents are enumerated in the Agreement between the Owner and Contractor (hereinafter the Agreement) and consist of the Agreement, Conditions of the Contract (General, Supplementary and other Conditions), Drawings, Specifications, Addenda issued prior to execution of the Contract, other documents listed in the Agreement, and Modifications issued after execution of the Contract. A Modification is (1) a written amendment to the Contract signed by both parties, (2) a Change Order, (3) a Construction Change Directive, or (4) a written order for a minor change in the Work issued by the Architect. Unless specifically enumerated in the Agreement, the Contract Documents do not include the advertisement or invitation to bid, Instructions to Bidders, sample forms, other information furnished by the Owner in anticipation of receiving bids or proposals, the Contractor's bid or proposal, or portions of Addenda relating to bidding or proposal requirements.

#### § 1.1.2 The Contract

The Contract Documents form the Contract for Construction. The Contract represents the entire and integrated agreement between the parties hereto and supersedes prior negotiations, representations, or agreements, either written or oral. The Contract may be amended or modified only by a Modification. The Contract Documents shall not be construed to create a contractual relationship of any kind (1) between the Contractor and the Architect or the Architect's consultants, (2) between the Owner and a Subcontractor or a Sub-subcontractor, (3) between the Owner and the Architect or the Architect's consultants, or (4) between any persons or entities other than the Owner and the Contractor. The Architect shall, however, be entitled to performance and enforcement of obligations under the Contract intended to facilitate performance of the Architect's duties.

#### § 1.1.3 The Work

The term "Work" means the construction and services required by the Contract Documents, whether completed or partially completed, and includes all other labor, materials, equipment, and services provided or to be provided by the Contractor to fulfill the Contractor's obligations. The Work may constitute the whole or a part of the Project.

#### § 1.1.4 The Project

The Project is the total construction of which the Work performed under the Contract Documents may be the whole or a part and which may include construction by the Owner and by Separate Contractors.

#### § 1.1.5 The Drawings

The Drawings are the graphic and pictorial portions of the Contract Documents showing the design, location and dimensions of the Work, generally including plans, elevations, sections, details, schedules, and diagrams.

#### § 1.1.6 The Specifications

The Specifications are that portion of the Contract Documents consisting of the written requirements for materials, equipment, systems, standards and workmanship for the Work, and performance of related services.

#### § 1.1.7 Instruments of Service

Instruments of Service are representations, in any medium of expression now known or later developed, of the tangible and intangible creative work performed by the Architect and the Architect's consultants under their respective professional services agreements. Instruments of Service may include, without limitation, studies, surveys, models, sketches, drawings, specifications, and other similar materials.

#### § 1.1.8 Initial Decision Maker

The Initial Decision Maker is the person identified in the Agreement to render initial decisions on Claims in accordance with Section 15.2. The Initial Decision Maker shall not show partiality to the Owner or Contractor and shall not be liable for results of interpretations or decisions rendered in good faith.

### § 1.2 Correlation and Intent of the Contract Documents

**§ 1.2.1** The intent of the Contract Documents is to include all items necessary for the proper execution and completion of the Work by the Contractor. The Contract Documents are complementary, and what is required by one shall be as binding as if required by all; performance by the Contractor shall be required only to the extent consistent with the Contract Documents and reasonably inferable from them as being necessary to produce the indicated results.


**AIA Document A201® – 2017.** Copyright © 1911, 1915, 1918, 1925, 1937, 1951, 1958, 1961, 1963, 1966, 1970, 1976, 1987, 1997, 2007 and 2017 by The American Institute of Architects. All rights reserved. The "American Institute of Architects," "AIA," the AIA Logo, "A201," and "AIA Contract Documents" are registered trademarks and may not be used without permission. This document was produced by AIA software at 17:51:08 ET on 11/09/2020 under Order No.7227609709 which expires on 02/14/2021, is not for resale, is licensed for one-time use only, and may only be used in accordance with the AIA Contract Documents® Terms of Service. To report copyright violations, e-mail copyright@aia.org.
**User Notes:** (1178953302)

**§ 1.2.1.1** The invalidity of any provision of the Contract Documents shall not invalidate the Contract or its remaining provisions. If it is determined that any provision of the Contract Documents violates any law, or is otherwise invalid or unenforceable, then that provision shall be revised to the extent necessary to make that provision legal and enforceable. In such case the Contract Documents shall be construed, to the fullest extent permitted by law, to give effect to the parties' intentions and purposes in executing the Contract.

**§ 1.2.2** Organization of the Specifications into divisions, sections and articles, and arrangement of Drawings shall not control the Contractor in dividing the Work among Subcontractors or in establishing the extent of Work to be performed by any trade.

**§ 1.2.3** Unless otherwise stated in the Contract Documents, words that have well-known technical or construction industry meanings are used in the Contract Documents in accordance with such recognized meanings.

### § 1.3 Capitalization

Terms capitalized in these General Conditions include those that are (1) specifically defined, (2) the titles of numbered articles, or (3) the titles of other documents published by the American Institute of Architects.

### § 1.4 Interpretation

In the interest of brevity the Contract Documents frequently omit modifying words such as "all" and "any" and articles such as "the" and "an," but the fact that a modifier or an article is absent from one statement and appears in another is not intended to affect the interpretation of either statement.

### § 1.5 Ownership and Use of Drawings, Specifications, and Other Instruments of Service

**§ 1.5.1** The Architect and the Architect's consultants shall be deemed the authors and owners of their respective Instruments of Service, including the Drawings and Specifications, and retain all common law, statutory, and other reserved rights in their Instruments of Service, including copyrights. The Contractor, Subcontractors, Sub-subcontractors, and suppliers shall not own or claim a copyright in the Instruments of Service. Submittal or distribution to meet official regulatory requirements or for other purposes in connection with the Project is not to be construed as publication in derogation of the Architect's or Architect's consultants' reserved rights.

**§ 1.5.2** The Contractor, Subcontractors, Sub-subcontractors, and suppliers are authorized to use and reproduce the Instruments of Service provided to them, subject to any protocols established pursuant to Sections 1.7 and 1.8, solely and exclusively for execution of the Work. All copies made under this authorization shall bear the copyright notice, if any, shown on the Instruments of Service. The Contractor, Subcontractors, Sub-subcontractors, and suppliers may not use the Instruments of Service on other projects or for additions to the Project outside the scope of the Work without the specific written consent of the Owner, Architect, and the Architect's consultants.

### § 1.6 Notice

**§ 1.6.1** Except as otherwise provided in Section 1.6.2, where the Contract Documents require one party to notify or give notice to the other party, such notice shall be provided in writing to the designated representative of the party to whom the notice is addressed and shall be deemed to have been duly served if delivered in person, by mail, by courier, or by electronic transmission if a method for electronic transmission is set forth in the Agreement.

**§ 1.6.2** Notice of Claims as provided in Section 15.1.3 shall be provided in writing and shall be deemed to have been duly served only if delivered to the designated representative of the party to whom the notice is addressed by certified or registered mail, or by courier providing proof of delivery.

### § 1.7 Digital Data Use and Transmission

The parties shall agree upon protocols governing the transmission and use of Instruments of Service or any other information or documentation in digital form. The parties will use AIA Document E203™–2013, Building Information Modeling and Digital Data Exhibit, to establish the protocols for the development, use, transmission, and exchange of digital data.

### § 1.8 Building Information Models Use and Reliance

Any use of, or reliance on, all or a portion of a building information model without agreement to protocols governing the use of, and reliance on, the information contained in the model and without having those protocols set forth in AIA Document E203™–2013, Building Information Modeling and Digital Data Exhibit, and the requisite AIA Document


**AIA Document A201® – 2017.** Copyright © 1911, 1915, 1918, 1925, 1937, 1951, 1958, 1961, 1963, 1966, 1970, 1976, 1987, 1997, 2007 and 2017 by The American Institute of Architects. All rights reserved. The "American Institute of Architects," "AIA," the AIA Logo, "A201," and "AIA Contract Documents" are registered trademarks and may not be used without permission. This document was produced by AIA software at 17:51:08 ET on 11/09/2020 under Order No.7227609709 which expires on 02/14/2021, is not for resale, is licensed for one-time use only, and may only be used in accordance with the AIA Contract Documents® Terms of Service. To report copyright violations, e-mail copyright@aia.org.
**User Notes:** (1178953302)

G202™–2013, Project Building Information Modeling Protocol Form, shall be at the using or relying party's sole risk and without liability to the other party and its contractors or consultants, the authors of, or contributors to, the building information model, and each of their agents and employees.

## ARTICLE 2 OWNER

### § 2.1 General

**§ 2.1.1** The Owner is the person or entity identified as such in the Agreement and is referred to throughout the Contract Documents as if singular in number. The Owner shall designate in writing a representative who shall have express authority to bind the Owner with respect to all matters requiring the Owner's approval or authorization. Except as otherwise provided in Section 4.2.1, the Architect does not have such authority. The term "Owner" means the Owner or the Owner's authorized representative.

**§ 2.1.2** The Owner shall furnish to the Contractor, within fifteen days after receipt of a written request, information necessary and relevant for the Contractor to evaluate, give notice of, or enforce mechanic's lien rights. Such information shall include a correct statement of the record legal title to the property on which the Project is located, usually referred to as the site, and the Owner's interest therein.

### § 2.2 Evidence of the Owner's Financial Arrangements

**§ 2.2.1** Prior to commencement of the Work and upon written request by the Contractor, the Owner shall furnish to the Contractor reasonable evidence that the Owner has made financial arrangements to fulfill the Owner's obligations under the Contract. The Contractor shall have no obligation to commence the Work until the Owner provides such evidence. If commencement of the Work is delayed under this Section 2.2.1, the Contract Time shall be extended appropriately.

**§ 2.2.2** Following commencement of the Work and upon written request by the Contractor, the Owner shall furnish to the Contractor reasonable evidence that the Owner has made financial arrangements to fulfill the Owner's obligations under the Contract only if (1) the Owner fails to make payments to the Contractor as the Contract Documents require; (2) the Contractor identifies in writing a reasonable concern regarding the Owner's ability to make payment when due; or (3) a change in the Work materially changes the Contract Sum. If the Owner fails to provide such evidence, as required, within fourteen days of the Contractor's request, the Contractor may immediately stop the Work and, in that event, shall notify the Owner that the Work has stopped. However, if the request is made because a change in the Work materially changes the Contract Sum under (3) above, the Contractor may immediately stop only that portion of the Work affected by the change until reasonable evidence is provided. If the Work is stopped under this Section 2.2.2, the Contract Time shall be extended appropriately and the Contract Sum shall be increased by the amount of the Contractor's reasonable costs of shutdown, delay and start-up, plus interest as provided in the Contract Documents.

**§ 2.2.3** After the Owner furnishes evidence of financial arrangements under this Section 2.2, the Owner shall not materially vary such financial arrangements without prior notice to the Contractor.

**§ 2.2.4** Where the Owner has designated information furnished under this Section 2.2 as "confidential," the Contractor shall keep the information confidential and shall not disclose it to any other person. However, the Contractor may disclose "confidential" information, after seven (7) days' notice to the Owner, where disclosure is required by law, including a subpoena or other form of compulsory legal process issued by a court or governmental entity, or by court or arbitrator(s) order. The Contractor may also disclose "confidential" information to its employees, consultants, sureties, Subcontractors and their employees, Sub-subcontractors, and others who need to know the content of such information solely and exclusively for the Project and who agree to maintain the confidentiality of such information.

### § 2.3 Information and Services Required of the Owner

**§ 2.3.1** Except for permits and fees that are the responsibility of the Contractor under the Contract Documents, including those required under Section 3.7.1, the Owner shall secure and pay for necessary approvals, easements, assessments and charges required for construction, use or occupancy of permanent structures or for permanent changes in existing facilities.

**§ 2.3.2** The Owner shall retain an architect lawfully licensed to practice architecture, or an entity lawfully practicing architecture, in the jurisdiction where the Project is located. That person or entity is identified as the Architect in the Agreement and is referred to throughout the Contract Documents as if singular in number.


**AIA Document A201® – 2017.** Copyright © 1911, 1915, 1918, 1925, 1937, 1951, 1958, 1961, 1963, 1966, 1970, 1976, 1987, 1997, 2007 and 2017 by The American Institute of Architects. All rights reserved. The "American Institute of Architects," "AIA," the AIA Logo, "A201," and "AIA Contract Documents" are registered trademarks and may not be used without permission. This document was produced by AIA software at 17:51:08 ET on 11/09/2020 under Order No.7227609709 which expires on 02/14/2021, is not for resale, is licensed for one-time use only, and may only be used in accordance with the AIA Contract Documents® Terms of Service. To report copyright violations, e-mail copyright@aia.org.
**User Notes:** (1178953302)

**§ 2.3.3** If the employment of the Architect terminates, the Owner shall employ a successor to whom the Contractor has no reasonable objection and whose status under the Contract Documents shall be that of the Architect.

**§ 2.3.4** The Owner shall furnish surveys describing physical characteristics, legal limitations and utility locations for the site of the Project, and a legal description of the site. The Contractor shall be entitled to rely on the accuracy of information furnished by the Owner but shall exercise proper precautions relating to the safe performance of the Work.

**§ 2.3.5** The Owner shall furnish information or services required of the Owner by the Contract Documents with reasonable promptness. The Owner shall also furnish any other information or services under the Owner's control and relevant to the Contractor's performance of the Work with reasonable promptness after receiving the Contractor's written request for such information or services.

**§ 2.3.6** Unless otherwise provided in the Contract Documents, the Owner shall furnish to the Contractor one copy of the Contract Documents for purposes of making reproductions pursuant to Section 1.5.2.

### § 2.4 Owner's Right to Stop the Work

If the Contractor fails to correct Work that is not in accordance with the requirements of the Contract Documents as required by Section 12.2 or repeatedly fails to carry out Work in accordance with the Contract Documents, the Owner may issue a written order to the Contractor to stop the Work, or any portion thereof, until the cause for such order has been eliminated; however, the right of the Owner to stop the Work shall not give rise to a duty on the part of the Owner to exercise this right for the benefit of the Contractor or any other person or entity, except to the extent required by Section 6.1.3.

### § 2.5 Owner's Right to Carry Out the Work

If the Contractor defaults or neglects to carry out the Work in accordance with the Contract Documents and fails within a ten-day period after receipt of notice from the Owner to commence and continue correction of such default or neglect with diligence and promptness, the Owner may, without prejudice to other remedies the Owner may have, correct such default or neglect. Such action by the Owner and amounts charged to the Contractor are both subject to prior approval of the Architect and the Architect may, pursuant to Section 9.5.1, withhold or nullify a Certificate for Payment in whole or in part, to the extent reasonably necessary to reimburse the Owner for the reasonable cost of correcting such deficiencies, including Owner's expenses and compensation for the Architect's additional services made necessary by such default, neglect, or failure. If current and future payments are not sufficient to cover such amounts, the Contractor shall pay the difference to the Owner. If the Contractor disagrees with the actions of the Owner or the Architect, or the amounts claimed as costs to the Owner, the Contractor may file a Claim pursuant to Article 15.

## ARTICLE 3 CONTRACTOR

### § 3.1 General

**§ 3.1.1** The Contractor is the person or entity identified as such in the Agreement and is referred to throughout the Contract Documents as if singular in number. The Contractor shall be lawfully licensed, if required in the jurisdiction where the Project is located. The Contractor shall designate in writing a representative who shall have express authority to bind the Contractor with respect to all matters under this Contract. The term "Contractor" means the Contractor or the Contractor's authorized representative.

**§ 3.1.2** The Contractor shall perform the Work in accordance with the Contract Documents.

**§ 3.1.3** The Contractor shall not be relieved of its obligations to perform the Work in accordance with the Contract Documents either by activities or duties of the Architect in the Architect's administration of the Contract, or by tests, inspections or approvals required or performed by persons or entities other than the Contractor.

### § 3.2 Review of Contract Documents and Field Conditions by Contractor

**§ 3.2.1** Execution of the Contract by the Contractor is a representation that the Contractor has visited the site, become generally familiar with local conditions under which the Work is to be performed, and correlated personal observations with requirements of the Contract Documents.


**AIA Document A201® – 2017.** Copyright © 1911, 1915, 1918, 1925, 1937, 1951, 1958, 1961, 1963, 1966, 1970, 1976, 1987, 1997, 2007 and 2017 by The American Institute of Architects. All rights reserved. The "American Institute of Architects," "AIA," the AIA Logo, "A201," and "AIA Contract Documents" are registered trademarks and may not be used without permission. This document was produced by AIA software at 17:51:08 ET on 11/09/2020 under Order No.7227609709 which expires on 02/14/2021, is not for resale, is licensed for one-time use only, and may only be used in accordance with the AIA Contract Documents® Terms of Service. To report copyright violations, e-mail copyright@aia.org.
**User Notes:** (1178953302)

**§ 3.2.2** Because the Contract Documents are complementary, the Contractor shall, before starting each portion of the Work, carefully study and compare the various Contract Documents relative to that portion of the Work, as well as the information furnished by the Owner pursuant to Section 2.3.4, shall take field measurements of any existing conditions related to that portion of the Work, and shall observe any conditions at the site affecting it. These obligations are for the purpose of facilitating coordination and construction by the Contractor and are not for the purpose of discovering errors, omissions, or inconsistencies in the Contract Documents; however, the Contractor shall promptly report to the Architect any errors, inconsistencies or omissions discovered by or made known to the Contractor as a request for information in such form as the Architect may require. It is recognized that the Contractor's review is made in the Contractor's capacity as a contractor and not as a licensed design professional, unless otherwise specifically provided in the Contract Documents.

**§ 3.2.3** The Contractor is not required to ascertain that the Contract Documents are in accordance with applicable laws, statutes, ordinances, codes, rules and regulations, or lawful orders of public authorities, but the Contractor shall promptly report to the Architect any nonconformity discovered by or made known to the Contractor as a request for information in such form as the Architect may require.

**§ 3.2.4** If the Contractor believes that additional cost or time is involved because of clarifications or instructions the Architect issues in response to the Contractor's notices or requests for information pursuant to Sections 3.2.2 or 3.2.3, the Contractor shall submit Claims as provided in Article 15. If the Contractor fails to perform the obligations of Sections 3.2.2 or 3.2.3, the Contractor shall pay such costs and damages to the Owner, subject to Section 15.1.7, as would have been avoided if the Contractor had performed such obligations. If the Contractor performs those obligations, the Contractor shall not be liable to the Owner or Architect for damages resulting from errors, inconsistencies or omissions in the Contract Documents, for differences between field measurements or conditions and the Contract Documents, or for nonconformities of the Contract Documents to applicable laws, statutes, ordinances, codes, rules and regulations, and lawful orders of public authorities.

### § 3.3 Supervision and Construction Procedures

**§ 3.3.1** The Contractor shall supervise and direct the Work, using the Contractor's best skill and attention. The Contractor shall be solely responsible for, and have control over, construction means, methods, techniques, sequences, and procedures, and for coordinating all portions of the Work under the Contract. If the Contract Documents give specific instructions concerning construction means, methods, techniques, sequences, or procedures, the Contractor shall evaluate the jobsite safety thereof and shall be solely responsible for the jobsite safety of such means, methods, techniques, sequences, or procedures. If the Contractor determines that such means, methods, techniques, sequences or procedures may not be safe, the Contractor shall give timely notice to the Owner and Architect, and shall propose alternative means, methods, techniques, sequences, or procedures. The Architect shall evaluate the proposed alternative solely for conformance with the design intent for the completed construction. Unless the Architect objects to the Contractor's proposed alternative, the Contractor shall perform the Work using its alternative means, methods, techniques, sequences, or procedures.

**§ 3.3.2** The Contractor shall be responsible to the Owner for acts and omissions of the Contractor's employees, Subcontractors and their agents and employees, and other persons or entities performing portions of the Work for, or on behalf of, the Contractor or any of its Subcontractors.

**§ 3.3.3** The Contractor shall be responsible for inspection of portions of Work already performed to determine that such portions are in proper condition to receive subsequent Work.

### § 3.4 Labor and Materials

**§ 3.4.1** Unless otherwise provided in the Contract Documents, the Contractor shall provide and pay for labor, materials, equipment, tools, construction equipment and machinery, water, heat, utilities, transportation, and other facilities and services necessary for proper execution and completion of the Work, whether temporary or permanent and whether or not incorporated or to be incorporated in the Work.

**§ 3.4.2** Except in the case of minor changes in the Work approved by the Architect in accordance with Section 3.12.8 or ordered by the Architect in accordance with Section 7.4, the Contractor may make substitutions only with the consent of the Owner, after evaluation by the Architect and in accordance with a Change Order or Construction Change Directive.


**AIA Document A201® – 2017.** Copyright © 1911, 1915, 1918, 1925, 1937, 1951, 1958, 1961, 1963, 1966, 1970, 1976, 1987, 1997, 2007 and 2017 by The American Institute of Architects. All rights reserved. The "American Institute of Architects," "AIA," the AIA Logo, "A201," and "AIA Contract Documents" are registered trademarks and may not be used without permission. This document was produced by AIA software at 17:51:08 ET on 11/09/2020 under Order No.7227609709 which expires on 02/14/2021, is not for resale, is licensed for one-time use only, and may only be used in accordance with the AIA Contract Documents® Terms of Service. To report copyright violations, e-mail copyright@aia.org.
**User Notes:** (1178953302)

**§ 3.4.3** The Contractor shall enforce strict discipline and good order among the Contractor's employees and other persons carrying out the Work. The Contractor shall not permit employment of unfit persons or persons not properly skilled in tasks assigned to them.

**§ 3.5 Warranty**

**§ 3.5.1** The Contractor warrants to the Owner and Architect that materials and equipment furnished under the Contract will be of good quality and new unless the Contract Documents require or permit otherwise. The Contractor further warrants that the Work will conform to the requirements of the Contract Documents and will be free from defects, except for those inherent in the quality of the Work the Contract Documents require or permit. Work, materials, or equipment not conforming to these requirements may be considered defective. The Contractor's warranty excludes remedy for damage or defect caused by abuse, alterations to the Work not executed by the Contractor, improper or insufficient maintenance, improper operation, or normal wear and tear and normal usage. If required by the Architect, the Contractor shall furnish satisfactory evidence as to the kind and quality of materials and equipment.

**§ 3.5.2** All material, equipment, or other special warranties required by the Contract Documents shall be issued in the name of the Owner, or shall be transferable to the Owner, and shall commence in accordance with Section 9.8.4.

**§ 3.6 Taxes**

The Contractor shall pay sales, consumer, use and similar taxes for the Work provided by the Contractor that are legally enacted when bids are received or negotiations concluded, whether or not yet effective or merely scheduled to go into effect.

**§ 3.7 Permits, Fees, Notices and Compliance with Laws**

**§ 3.7.1** Unless otherwise provided in the Contract Documents, the Contractor shall secure and pay for the building permit as well as for other permits, fees, licenses, and inspections by government agencies necessary for proper execution and completion of the Work that are customarily secured after execution of the Contract and legally required at the time bids are received or negotiations concluded.

**§ 3.7.2** The Contractor shall comply with and give notices required by applicable laws, statutes, ordinances, codes, rules and regulations, and lawful orders of public authorities applicable to performance of the Work.

**§ 3.7.3** If the Contractor performs Work knowing it to be contrary to applicable laws, statutes, ordinances, codes, rules and regulations, or lawful orders of public authorities, the Contractor shall assume appropriate responsibility for such Work and shall bear the costs attributable to correction.

**§ 3.7.4 Concealed or Unknown Conditions**

If the Contractor encounters conditions at the site that are (1) subsurface or otherwise concealed physical conditions that differ materially from those indicated in the Contract Documents or (2) unknown physical conditions of an unusual nature that differ materially from those ordinarily found to exist and generally recognized as inherent in construction activities of the character provided for in the Contract Documents, the Contractor shall promptly provide notice to the Owner and the Architect before conditions are disturbed and in no event later than 14 days after first observance of the conditions. The Architect will promptly investigate such conditions and, if the Architect determines that they differ materially and cause an increase or decrease in the Contractor's cost of, or time required for, performance of any part of the Work, will recommend that an equitable adjustment be made in the Contract Sum or Contract Time, or both. If the Architect determines that the conditions at the site are not materially different from those indicated in the Contract Documents and that no change in the terms of the Contract is justified, the Architect shall promptly notify the Owner and Contractor, stating the reasons. If either party disputes the Architect's determination or recommendation, that party may submit a Claim as provided in Article 15.

**§ 3.7.5** If, in the course of the Work, the Contractor encounters human remains or recognizes the existence of burial markers, archaeological sites or wetlands not indicated in the Contract Documents, the Contractor shall immediately suspend any operations that would affect them and shall notify the Owner and Architect. Upon receipt of such notice, the Owner shall promptly take any action necessary to obtain governmental authorization required to resume the operations. The Contractor shall continue to suspend such operations until otherwise instructed by the Owner but shall continue with all other operations that do not affect those remains or features. Requests for adjustments in the Contract Sum and Contract Time arising from the existence of such remains or features may be made as provided in Article 15.


**AIA Document A201® – 2017.** Copyright © 1911, 1915, 1918, 1925, 1937, 1951, 1958, 1961, 1963, 1966, 1970, 1976, 1987, 1997, 2007 and 2017 by The American Institute of Architects. All rights reserved. The "American Institute of Architects," "AIA," the AIA Logo, "A201," and "AIA Contract Documents" are registered trademarks and may not be used without permission. This document was produced by AIA software at 17:51:08 ET on 11/09/2020 under Order No.7227609709 which expires on 02/14/2021, is not for resale, is licensed for one-time use only, and may only be used in accordance with the AIA Contract Documents® Terms of Service. To report copyright violations, e-mail copyright@aia.org.
**User Notes:** (1178953302)

**§ 3.8 Allowances**

**§ 3.8.1** The Contractor shall include in the Contract Sum all allowances stated in the Contract Documents. Items covered by allowances shall be supplied for such amounts and by such persons or entities as the Owner may direct, but the Contractor shall not be required to employ persons or entities to whom the Contractor has reasonable objection.

**§ 3.8.2** Unless otherwise provided in the Contract Documents,

- **.1** allowances shall cover the cost to the Contractor of materials and equipment delivered at the site and all required taxes, less applicable trade discounts;
- **.2** Contractor's costs for unloading and handling at the site, labor, installation costs, overhead, profit, and other expenses contemplated for stated allowance amounts shall be included in the Contract Sum but not in the allowances; and
- **.3** whenever costs are more than or less than allowances, the Contract Sum shall be adjusted accordingly by Change Order. The amount of the Change Order shall reflect (1) the difference between actual costs and the allowances under Section 3.8.2.1 and (2) changes in Contractor's costs under Section 3.8.2.2.

**§ 3.8.3** Materials and equipment under an allowance shall be selected by the Owner with reasonable promptness.

**§ 3.9 Superintendent**

**§ 3.9.1** The Contractor shall employ a competent superintendent and necessary assistants who shall be in attendance at the Project site during performance of the Work. The superintendent shall represent the Contractor, and communications given to the superintendent shall be as binding as if given to the Contractor.

**§ 3.9.2** The Contractor, as soon as practicable after award of the Contract, shall notify the Owner and Architect of the name and qualifications of a proposed superintendent. Within 14 days of receipt of the information, the Architect may notify the Contractor, stating whether the Owner or the Architect (1) has reasonable objection to the proposed superintendent or (2) requires additional time for review. Failure of the Architect to provide notice within the 14-day period shall constitute notice of no reasonable objection.

**§ 3.9.3** The Contractor shall not employ a proposed superintendent to whom the Owner or Architect has made reasonable and timely objection. The Contractor shall not change the superintendent without the Owner's consent, which shall not unreasonably be withheld or delayed.

**§ 3.10 Contractor's Construction and Submittal Schedules**

**§ 3.10.1** The Contractor, promptly after being awarded the Contract, shall submit for the Owner's and Architect's information a Contractor's construction schedule for the Work. The schedule shall contain detail appropriate for the Project, including (1) the date of commencement of the Work, interim schedule milestone dates, and the date of Substantial Completion; (2) an apportionment of the Work by construction activity; and (3) the time required for completion of each portion of the Work. The schedule shall provide for the orderly progression of the Work to completion and shall not exceed time limits current under the Contract Documents. The schedule shall be revised at appropriate intervals as required by the conditions of the Work and Project.

**§ 3.10.2** The Contractor, promptly after being awarded the Contract and thereafter as necessary to maintain a current submittal schedule, shall submit a submittal schedule for the Architect's approval. The Architect's approval shall not be unreasonably delayed or withheld. The submittal schedule shall (1) be coordinated with the Contractor's construction schedule, and (2) allow the Architect reasonable time to review submittals. If the Contractor fails to submit a submittal schedule, or fails to provide submittals in accordance with the approved submittal schedule, the Contractor shall not be entitled to any increase in Contract Sum or extension of Contract Time based on the time required for review of submittals.

**§ 3.10.3** The Contractor shall perform the Work in general accordance with the most recent schedules submitted to the Owner and Architect.

**§ 3.11 Documents and Samples at the Site**

The Contractor shall make available, at the Project site, the Contract Documents, including Change Orders, Construction Change Directives, and other Modifications, in good order and marked currently to indicate field changes and selections made during construction, and the approved Shop Drawings, Product Data, Samples, and similar required submittals. These shall be in electronic form or paper copy, available to the Architect and Owner, and


**AIA Document A201® – 2017.** Copyright © 1911, 1915, 1918, 1925, 1937, 1951, 1958, 1961, 1963, 1966, 1970, 1976, 1987, 1997, 2007 and 2017 by The American Institute of Architects. All rights reserved. The "American Institute of Architects," "AIA," the AIA Logo, "A201," and "AIA Contract Documents" are registered trademarks and may not be used without permission. This document was produced by AIA software at 17:51:08 ET on 11/09/2020 under Order No.7227609709 which expires on 02/14/2021, is not for resale, is licensed for one-time use only, and may only be used in accordance with the AIA Contract Documents® Terms of Service. To report copyright violations, e-mail copyright@aia.org.
**User Notes:** (1178953302)

delivered to the Architect for submittal to the Owner upon completion of the Work as a record of the Work as constructed.

**§ 3.12 Shop Drawings, Product Data and Samples**

**§ 3.12.1** Shop Drawings are drawings, diagrams, schedules, and other data specially prepared for the Work by the Contractor or a Subcontractor, Sub-subcontractor, manufacturer, supplier, or distributor to illustrate some portion of the Work.

**§ 3.12.2** Product Data are illustrations, standard schedules, performance charts, instructions, brochures, diagrams, and other information furnished by the Contractor to illustrate materials or equipment for some portion of the Work.

**§ 3.12.3** Samples are physical examples that illustrate materials, equipment, or workmanship, and establish standards by which the Work will be judged.

**§ 3.12.4** Shop Drawings, Product Data, Samples, and similar submittals are not Contract Documents. Their purpose is to demonstrate how the Contractor proposes to conform to the information given and the design concept expressed in the Contract Documents for those portions of the Work for which the Contract Documents require submittals. Review by the Architect is subject to the limitations of Section 4.2.7. Informational submittals upon which the Architect is not expected to take responsive action may be so identified in the Contract Documents. Submittals that are not required by the Contract Documents may be returned by the Architect without action.

**§ 3.12.5** The Contractor shall review for compliance with the Contract Documents, approve, and submit to the Architect, Shop Drawings, Product Data, Samples, and similar submittals required by the Contract Documents, in accordance with the submittal schedule approved by the Architect or, in the absence of an approved submittal schedule, with reasonable promptness and in such sequence as to cause no delay in the Work or in the activities of the Owner or of Separate Contractors.

**§ 3.12.6** By submitting Shop Drawings, Product Data, Samples, and similar submittals, the Contractor represents to the Owner and Architect that the Contractor has (1) reviewed and approved them, (2) determined and verified materials, field measurements and field construction criteria related thereto, or will do so, and (3) checked and coordinated the information contained within such submittals with the requirements of the Work and of the Contract Documents.

**§ 3.12.7** The Contractor shall perform no portion of the Work for which the Contract Documents require submittal and review of Shop Drawings, Product Data, Samples, or similar submittals, until the respective submittal has been approved by the Architect.

**§ 3.12.8** The Work shall be in accordance with approved submittals except that the Contractor shall not be relieved of responsibility for deviations from the requirements of the Contract Documents by the Architect's approval of Shop Drawings, Product Data, Samples, or similar submittals, unless the Contractor has specifically notified the Architect of such deviation at the time of submittal and (1) the Architect has given written approval to the specific deviation as a minor change in the Work, or (2) a Change Order or Construction Change Directive has been issued authorizing the deviation. The Contractor shall not be relieved of responsibility for errors or omissions in Shop Drawings, Product Data, Samples, or similar submittals, by the Architect's approval thereof.

**§ 3.12.9** The Contractor shall direct specific attention, in writing or on resubmitted Shop Drawings, Product Data, Samples, or similar submittals, to revisions other than those requested by the Architect on previous submittals. In the absence of such notice, the Architect's approval of a resubmission shall not apply to such revisions.

**§ 3.12.10** The Contractor shall not be required to provide professional services that constitute the practice of architecture or engineering unless such services are specifically required by the Contract Documents for a portion of the Work or unless the Contractor needs to provide such services in order to carry out the Contractor's responsibilities for construction means, methods, techniques, sequences, and procedures. The Contractor shall not be required to provide professional services in violation of applicable law.

**§ 3.12.10.1** If professional design services or certifications by a design professional related to systems, materials, or equipment are specifically required of the Contractor by the Contract Documents, the Owner and the Architect will


**AIA Document A201® – 2017.** Copyright © 1911, 1915, 1918, 1925, 1937, 1951, 1958, 1961, 1963, 1966, 1970, 1976, 1987, 1997, 2007 and 2017 by The American Institute of Architects. All rights reserved. The "American Institute of Architects," "AIA," the AIA Logo, "A201," and "AIA Contract Documents" are registered trademarks and may not be used without permission. This document was produced by AIA software at 17:51:08 ET on 11/09/2020 under Order No.7227609709 which expires on 02/14/2021, is not for resale, is licensed for one-time use only, and may only be used in accordance with the AIA Contract Documents® Terms of Service. To report copyright violations, e-mail copyright@aia.org.
**User Notes:** (1178953302)

specify all performance and design criteria that such services must satisfy. The Contractor shall be entitled to rely upon the adequacy and accuracy of the performance and design criteria provided in the Contract Documents. The Contractor shall cause such services or certifications to be provided by an appropriately licensed design professional, whose signature and seal shall appear on all drawings, calculations, specifications, certifications, Shop Drawings, and other submittals prepared by such professional. Shop Drawings, and other submittals related to the Work, designed or certified by such professional, if prepared by others, shall bear such professional's written approval when submitted to the Architect. The Owner and the Architect shall be entitled to rely upon the adequacy and accuracy of the services, certifications, and approvals performed or provided by such design professionals, provided the Owner and Architect have specified to the Contractor the performance and design criteria that such services must satisfy. Pursuant to this Section 3.12.10, the Architect will review and approve or take other appropriate action on submittals only for the limited purpose of checking for conformance with information given and the design concept expressed in the Contract Documents.

**§ 3.12.10.2** If the Contract Documents require the Contractor's design professional to certify that the Work has been performed in accordance with the design criteria, the Contractor shall furnish such certifications to the Architect at the time and in the form specified by the Architect.

### § 3.13 Use of Site

The Contractor shall confine operations at the site to areas permitted by applicable laws, statutes, ordinances, codes, rules and regulations, lawful orders of public authorities, and the Contract Documents and shall not unreasonably encumber the site with materials or equipment.

### § 3.14 Cutting and Patching

**§ 3.14.1** The Contractor shall be responsible for cutting, fitting, or patching required to complete the Work or to make its parts fit together properly. All areas requiring cutting, fitting, or patching shall be restored to the condition existing prior to the cutting, fitting, or patching, unless otherwise required by the Contract Documents.

**§ 3.14.2** The Contractor shall not damage or endanger a portion of the Work or fully or partially completed construction of the Owner or Separate Contractors by cutting, patching, or otherwise altering such construction, or by excavation. The Contractor shall not cut or otherwise alter construction by the Owner or a Separate Contractor except with written consent of the Owner and of the Separate Contractor. Consent shall not be unreasonably withheld. The Contractor shall not unreasonably withhold, from the Owner or a Separate Contractor, its consent to cutting or otherwise altering the Work.

### § 3.15 Cleaning Up

**§ 3.15.1** The Contractor shall keep the premises and surrounding area free from accumulation of waste materials and rubbish caused by operations under the Contract. At completion of the Work, the Contractor shall remove waste materials, rubbish, the Contractor's tools, construction equipment, machinery, and surplus materials from and about the Project.

**§ 3.15.2** If the Contractor fails to clean up as provided in the Contract Documents, the Owner may do so and the Owner shall be entitled to reimbursement from the Contractor.

### § 3.16 Access to Work

The Contractor shall provide the Owner and Architect with access to the Work in preparation and progress wherever located.

### § 3.17 Royalties, Patents and Copyrights

The Contractor shall pay all royalties and license fees. The Contractor shall defend suits or claims for infringement of copyrights and patent rights and shall hold the Owner and Architect harmless from loss on account thereof, but shall not be responsible for defense or loss when a particular design, process, or product of a particular manufacturer or manufacturers is required by the Contract Documents, or where the copyright violations are contained in Drawings, Specifications, or other documents prepared by the Owner or Architect. However, if an infringement of a copyright or patent is discovered by, or made known to, the Contractor, the Contractor shall be responsible for the loss unless the information is promptly furnished to the Architect.


**AIA Document A201® – 2017.** Copyright © 1911, 1915, 1918, 1925, 1937, 1951, 1958, 1961, 1963, 1966, 1970, 1976, 1987, 1997, 2007 and 2017 by The American Institute of Architects. All rights reserved. The "American Institute of Architects," "AIA," the AIA Logo, "A201," and "AIA Contract Documents" are registered trademarks and may not be used without permission. This document was produced by AIA software at 17:51:08 ET on 11/09/2020 under Order No.7227609709 which expires on 02/14/2021, is not for resale, is licensed for one-time use only, and may only be used in accordance with the AIA Contract Documents® Terms of Service. To report copyright violations, e-mail copyright@aia.org.
**User Notes:** (1178953302)

### § 3.18 Indemnification

**§ 3.18.1** To the fullest extent permitted by law, the Contractor shall indemnify and hold harmless the Owner, Architect, Architect's consultants, and agents and employees of any of them from and against claims, damages, losses, and expenses, including but not limited to attorneys' fees, arising out of or resulting from performance of the Work, provided that such claim, damage, loss, or expense is attributable to bodily injury, sickness, disease or death, or to injury to or destruction of tangible property (other than the Work itself), but only to the extent caused by the negligent acts or omissions of the Contractor, a Subcontractor, anyone directly or indirectly employed by them, or anyone for whose acts they may be liable, regardless of whether or not such claim, damage, loss, or expense is caused in part by a party indemnified hereunder. Such obligation shall not be construed to negate, abridge, or reduce other rights or obligations of indemnity that would otherwise exist as to a party or person described in this Section 3.18.

**§ 3.18.2** In claims against any person or entity indemnified under this Section 3.18 by an employee of the Contractor, a Subcontractor, anyone directly or indirectly employed by them, or anyone for whose acts they may be liable, the indemnification obligation under Section 3.18.1 shall not be limited by a limitation on amount or type of damages, compensation, or benefits payable by or for the Contractor or a Subcontractor under workers' compensation acts, disability benefit acts, or other employee benefit acts.

## ARTICLE 4 ARCHITECT

### § 4.1 General

**§ 4.1.1** The Architect is the person or entity retained by the Owner pursuant to Section 2.3.2 and identified as such in the Agreement.

**§ 4.1.2** Duties, responsibilities, and limitations of authority of the Architect as set forth in the Contract Documents shall not be restricted, modified, or extended without written consent of the Owner, Contractor, and Architect. Consent shall not be unreasonably withheld.

### § 4.2 Administration of the Contract

**§ 4.2.1** The Architect will provide administration of the Contract as described in the Contract Documents and will be an Owner's representative during construction until the date the Architect issues the final Certificate for Payment. The Architect will have authority to act on behalf of the Owner only to the extent provided in the Contract Documents.

**§ 4.2.2** The Architect will visit the site at intervals appropriate to the stage of construction, or as otherwise agreed with the Owner, to become generally familiar with the progress and quality of the portion of the Work completed, and to determine in general if the Work observed is being performed in a manner indicating that the Work, when fully completed, will be in accordance with the Contract Documents. However, the Architect will not be required to make exhaustive or continuous on-site inspections to check the quality or quantity of the Work. The Architect will not have control over, charge of, or responsibility for the construction means, methods, techniques, sequences or procedures, or for the safety precautions and programs in connection with the Work, since these are solely the Contractor's rights and responsibilities under the Contract Documents.

**§ 4.2.3** On the basis of the site visits, the Architect will keep the Owner reasonably informed about the progress and quality of the portion of the Work completed, and promptly report to the Owner (1) known deviations from the Contract Documents, (2) known deviations from the most recent construction schedule submitted by the Contractor, and (3) defects and deficiencies observed in the Work. The Architect will not be responsible for the Contractor's failure to perform the Work in accordance with the requirements of the Contract Documents. The Architect will not have control over or charge of, and will not be responsible for acts or omissions of, the Contractor, Subcontractors, or their agents or employees, or any other persons or entities performing portions of the Work.

### § 4.2.4 Communications

The Owner and Contractor shall include the Architect in all communications that relate to or affect the Architect's services or professional responsibilities. The Owner shall promptly notify the Architect of the substance of any direct communications between the Owner and the Contractor otherwise relating to the Project. Communications by and with the Architect's consultants shall be through the Architect. Communications by and with Subcontractors and suppliers shall be through the Contractor. Communications by and with Separate Contractors shall be through the Owner. The Contract Documents may specify other communication protocols.


**AIA Document A201® – 2017.** Copyright © 1911, 1915, 1918, 1925, 1937, 1951, 1958, 1961, 1963, 1966, 1970, 1976, 1987, 1997, 2007 and 2017 by The American Institute of Architects. All rights reserved. The "American Institute of Architects," "AIA," the AIA Logo, "A201," and "AIA Contract Documents" are registered trademarks and may not be used without permission. This document was produced by AIA software at 17:51:08 ET on 11/09/2020 under Order No.7227609709 which expires on 02/14/2021, is not for resale, is licensed for one-time use only, and may only be used in accordance with the AIA Contract Documents® Terms of Service. To report copyright violations, e-mail copyright@aia.org.
**User Notes:** (1178953302)

**§ 4.2.5** Based on the Architect's evaluations of the Contractor's Applications for Payment, the Architect will review and certify the amounts due the Contractor and will issue Certificates for Payment in such amounts.

**§ 4.2.6** The Architect has authority to reject Work that does not conform to the Contract Documents. Whenever the Architect considers it necessary or advisable, the Architect will have authority to require inspection or testing of the Work in accordance with Sections 13.4.2 and 13.4.3, whether or not the Work is fabricated, installed or completed. However, neither this authority of the Architect nor a decision made in good faith either to exercise or not to exercise such authority shall give rise to a duty or responsibility of the Architect to the Contractor, Subcontractors, suppliers, their agents or employees, or other persons or entities performing portions of the Work.

**§ 4.2.7** The Architect will review and approve, or take other appropriate action upon, the Contractor's submittals such as Shop Drawings, Product Data, and Samples, but only for the limited purpose of checking for conformance with information given and the design concept expressed in the Contract Documents. The Architect's action will be taken in accordance with the submittal schedule approved by the Architect or, in the absence of an approved submittal schedule, with reasonable promptness while allowing sufficient time in the Architect's professional judgment to permit adequate review. Review of such submittals is not conducted for the purpose of determining the accuracy and completeness of other details such as dimensions and quantities, or for substantiating instructions for installation or performance of equipment or systems, all of which remain the responsibility of the Contractor as required by the Contract Documents. The Architect's review of the Contractor's submittals shall not relieve the Contractor of the obligations under Sections 3.3, 3.5, and 3.12. The Architect's review shall not constitute approval of safety precautions or of any construction means, methods, techniques, sequences, or procedures. The Architect's approval of a specific item shall not indicate approval of an assembly of which the item is a component.

**§ 4.2.8** The Architect will prepare Change Orders and Construction Change Directives, and may order minor changes in the Work as provided in Section 7.4. The Architect will investigate and make determinations and recommendations regarding concealed and unknown conditions as provided in Section 3.7.4.

**§ 4.2.9** The Architect will conduct inspections to determine the date or dates of Substantial Completion and the date of final completion; issue Certificates of Substantial Completion pursuant to Section 9.8; receive and forward to the Owner, for the Owner's review and records, written warranties and related documents required by the Contract and assembled by the Contractor pursuant to Section 9.10; and issue a final Certificate for Payment pursuant to Section 9.10.

**§ 4.2.10** If the Owner and Architect agree, the Architect will provide one or more Project representatives to assist in carrying out the Architect's responsibilities at the site. The Owner shall notify the Contractor of any change in the duties, responsibilities and limitations of authority of the Project representatives.

**§ 4.2.11** The Architect will interpret and decide matters concerning performance under, and requirements of, the Contract Documents on written request of either the Owner or Contractor. The Architect's response to such requests will be made in writing within any time limits agreed upon or otherwise with reasonable promptness.

**§ 4.2.12** Interpretations and decisions of the Architect will be consistent with the intent of, and reasonably inferable from, the Contract Documents and will be in writing or in the form of drawings. When making such interpretations and decisions, the Architect will endeavor to secure faithful performance by both Owner and Contractor, will not show partiality to either, and will not be liable for results of interpretations or decisions rendered in good faith.

**§ 4.2.13** The Architect's decisions on matters relating to aesthetic effect will be final if consistent with the intent expressed in the Contract Documents.

**§ 4.2.14** The Architect will review and respond to requests for information about the Contract Documents. The Architect's response to such requests will be made in writing within any time limits agreed upon or otherwise with reasonable promptness. If appropriate, the Architect will prepare and issue supplemental Drawings and Specifications in response to the requests for information.


**AIA Document A201® – 2017.** Copyright © 1911, 1915, 1918, 1925, 1937, 1951, 1958, 1961, 1963, 1966, 1970, 1976, 1987, 1997, 2007 and 2017 by The American Institute of Architects. All rights reserved. The "American Institute of Architects," "AIA," the AIA Logo, "A201," and "AIA Contract Documents" are registered trademarks and may not be used without permission. This document was produced by AIA software at 17:51:08 ET on 11/09/2020 under Order No.7227609709 which expires on 02/14/2021, is not for resale, is licensed for one-time use only, and may only be used in accordance with the AIA Contract Documents® Terms of Service. To report copyright violations, e-mail copyright@aia.org.
**User Notes:** (1178953302)

## ARTICLE 5 SUBCONTRACTORS

### § 5.1 Definitions

**§ 5.1.1** A Subcontractor is a person or entity who has a direct contract with the Contractor to perform a portion of the Work at the site. The term "Subcontractor" is referred to throughout the Contract Documents as if singular in number and means a Subcontractor or an authorized representative of the Subcontractor. The term "Subcontractor" does not include a Separate Contractor or the subcontractors of a Separate Contractor.

**§ 5.1.2** A Sub-subcontractor is a person or entity who has a direct or indirect contract with a Subcontractor to perform a portion of the Work at the site. The term "Sub-subcontractor" is referred to throughout the Contract Documents as if singular in number and means a Sub-subcontractor or an authorized representative of the Sub-subcontractor.

### § 5.2 Award of Subcontracts and Other Contracts for Portions of the Work

**§ 5.2.1** Unless otherwise stated in the Contract Documents, the Contractor, as soon as practicable after award of the Contract, shall notify the Owner and Architect of the persons or entities proposed for each principal portion of the Work, including those who are to furnish materials or equipment fabricated to a special design. Within 14 days of receipt of the information, the Architect may notify the Contractor whether the Owner or the Architect (1) has reasonable objection to any such proposed person or entity or (2) requires additional time for review. Failure of the Architect to provide notice within the 14-day period shall constitute notice of no reasonable objection.

**§ 5.2.2** The Contractor shall not contract with a proposed person or entity to whom the Owner or Architect has made reasonable and timely objection. The Contractor shall not be required to contract with anyone to whom the Contractor has made reasonable objection.

**§ 5.2.3** If the Owner or Architect has reasonable objection to a person or entity proposed by the Contractor, the Contractor shall propose another to whom the Owner or Architect has no reasonable objection. If the proposed but rejected Subcontractor was reasonably capable of performing the Work, the Contract Sum and Contract Time shall be increased or decreased by the difference, if any, occasioned by such change, and an appropriate Change Order shall be issued before commencement of the substitute Subcontractor's Work. However, no increase in the Contract Sum or Contract Time shall be allowed for such change unless the Contractor has acted promptly and responsively in submitting names as required.

**§ 5.2.4** The Contractor shall not substitute a Subcontractor, person, or entity for one previously selected if the Owner or Architect makes reasonable objection to such substitution.

### § 5.3 Subcontractual Relations

By appropriate written agreement, the Contractor shall require each Subcontractor, to the extent of the Work to be performed by the Subcontractor, to be bound to the Contractor by terms of the Contract Documents, and to assume toward the Contractor all the obligations and responsibilities, including the responsibility for safety of the Subcontractor's Work that the Contractor, by these Contract Documents, assumes toward the Owner and Architect. Each subcontract agreement shall preserve and protect the rights of the Owner and Architect under the Contract Documents with respect to the Work to be performed by the Subcontractor so that subcontracting thereof will not prejudice such rights, and shall allow to the Subcontractor, unless specifically provided otherwise in the subcontract agreement, the benefit of all rights, remedies, and redress against the Contractor that the Contractor, by the Contract Documents, has against the Owner. Where appropriate, the Contractor shall require each Subcontractor to enter into similar agreements with Sub-subcontractors. The Contractor shall make available to each proposed Subcontractor, prior to the execution of the subcontract agreement, copies of the Contract Documents to which the Subcontractor will be bound, and, upon written request of the Subcontractor, identify to the Subcontractor terms and conditions of the proposed subcontract agreement that may be at variance with the Contract Documents. Subcontractors will similarly make copies of applicable portions of such documents available to their respective proposed Sub-subcontractors.

### § 5.4 Contingent Assignment of Subcontracts

**§ 5.4.1** Each subcontract agreement for a portion of the Work is assigned by the Contractor to the Owner, provided that

- **.1** assignment is effective only after termination of the Contract by the Owner for cause pursuant to Section 14.2 and only for those subcontract agreements that the Owner accepts by notifying the Subcontractor and Contractor; and
- **.2** assignment is subject to the prior rights of the surety, if any, obligated under bond relating to the Contract.


**AIA Document A201® – 2017.** Copyright © 1911, 1915, 1918, 1925, 1937, 1951, 1958, 1961, 1963, 1966, 1970, 1976, 1987, 1997, 2007 and 2017 by The American Institute of Architects. All rights reserved. The "American Institute of Architects," "AIA," the AIA Logo, "A201," and "AIA Contract Documents" are registered trademarks and may not be used without permission. This document was produced by AIA software at 17:51:08 ET on 11/09/2020 under Order No.7227609709 which expires on 02/14/2021, is not for resale, is licensed for one-time use only, and may only be used in accordance with the AIA Contract Documents® Terms of Service. To report copyright violations, e-mail copyright@aia.org.
**User Notes:** (1178953302)

When the Owner accepts the assignment of a subcontract agreement, the Owner assumes the Contractor's rights and obligations under the subcontract.

**§ 5.4.2** Upon such assignment, if the Work has been suspended for more than 30 days, the Subcontractor's compensation shall be equitably adjusted for increases in cost resulting from the suspension.

**§ 5.4.3** Upon assignment to the Owner under this Section 5.4, the Owner may further assign the subcontract to a successor contractor or other entity. If the Owner assigns the subcontract to a successor contractor or other entity, the Owner shall nevertheless remain legally responsible for all of the successor contractor's obligations under the subcontract.

## ARTICLE 6 CONSTRUCTION BY OWNER OR BY SEPARATE CONTRACTORS

### § 6.1 Owner's Right to Perform Construction and to Award Separate Contracts

**§ 6.1.1** The term "Separate Contractor(s)" shall mean other contractors retained by the Owner under separate agreements. The Owner reserves the right to perform construction or operations related to the Project with the Owner's own forces, and with Separate Contractors retained under Conditions of the Contract substantially similar to those of this Contract, including those provisions of the Conditions of the Contract related to insurance and waiver of subrogation.

**§ 6.1.2** When separate contracts are awarded for different portions of the Project or other construction or operations on the site, the term "Contractor" in the Contract Documents in each case shall mean the Contractor who executes each separate Owner-Contractor Agreement.

**§ 6.1.3** The Owner shall provide for coordination of the activities of the Owner's own forces and of each Separate Contractor with the Work of the Contractor, who shall cooperate with them. The Contractor shall participate with any Separate Contractors and the Owner in reviewing their construction schedules. The Contractor shall make any revisions to its construction schedule deemed necessary after a joint review and mutual agreement. The construction schedules shall then constitute the schedules to be used by the Contractor, Separate Contractors, and the Owner until subsequently revised.

**§ 6.1.4** Unless otherwise provided in the Contract Documents, when the Owner performs construction or operations related to the Project with the Owner's own forces or with Separate Contractors, the Owner or its Separate Contractors shall have the same obligations and rights that the Contractor has under the Conditions of the Contract, including, without excluding others, those stated in Article 3, this Article 6, and Articles 10, 11, and 12.

### § 6.2 Mutual Responsibility

**§ 6.2.1** The Contractor shall afford the Owner and Separate Contractors reasonable opportunity for introduction and storage of their materials and equipment and performance of their activities, and shall connect and coordinate the Contractor's construction and operations with theirs as required by the Contract Documents.

**§ 6.2.2** If part of the Contractor's Work depends for proper execution or results upon construction or operations by the Owner or a Separate Contractor, the Contractor shall, prior to proceeding with that portion of the Work, promptly notify the Architect of apparent discrepancies or defects in the construction or operations by the Owner or Separate Contractor that would render it unsuitable for proper execution and results of the Contractor's Work. Failure of the Contractor to notify the Architect of apparent discrepancies or defects prior to proceeding with the Work shall constitute an acknowledgment that the Owner's or Separate Contractor's completed or partially completed construction is fit and proper to receive the Contractor's Work. The Contractor shall not be responsible for discrepancies or defects in the construction or operations by the Owner or Separate Contractor that are not apparent.

**§ 6.2.3** The Contractor shall reimburse the Owner for costs the Owner incurs that are payable to a Separate Contractor because of the Contractor's delays, improperly timed activities or defective construction. The Owner shall be responsible to the Contractor for costs the Contractor incurs because of a Separate Contractor's delays, improperly timed activities, damage to the Work or defective construction.

**§ 6.2.4** The Contractor shall promptly remedy damage that the Contractor wrongfully causes to completed or partially completed construction or to property of the Owner or Separate Contractor as provided in Section 10.2.5.


**AIA Document A201® – 2017.** Copyright © 1911, 1915, 1918, 1925, 1937, 1951, 1958, 1961, 1963, 1966, 1970, 1976, 1987, 1997, 2007 and 2017 by The American Institute of Architects. All rights reserved. The "American Institute of Architects," "AIA," the AIA Logo, "A201," and "AIA Contract Documents" are registered trademarks and may not be used without permission. This document was produced by AIA software at 17:51:08 ET on 11/09/2020 under Order No.7227609709 which expires on 02/14/2021, is not for resale, is licensed for one-time use only, and may only be used in accordance with the AIA Contract Documents® Terms of Service. To report copyright violations, e-mail copyright@aia.org.
**User Notes:** (1178953302)

**§ 6.2.5** The Owner and each Separate Contractor shall have the same responsibilities for cutting and patching as are described for the Contractor in Section 3.14.

**§ 6.3 Owner's Right to Clean Up**

If a dispute arises among the Contractor, Separate Contractors, and the Owner as to the responsibility under their respective contracts for maintaining the premises and surrounding area free from waste materials and rubbish, the Owner may clean up and the Architect will allocate the cost among those responsible.

## ARTICLE 7 CHANGES IN THE WORK

**§ 7.1 General**

**§ 7.1.1** Changes in the Work may be accomplished after execution of the Contract, and without invalidating the Contract, by Change Order, Construction Change Directive or order for a minor change in the Work, subject to the limitations stated in this Article 7 and elsewhere in the Contract Documents.

**§ 7.1.2** A Change Order shall be based upon agreement among the Owner, Contractor, and Architect. A Construction Change Directive requires agreement by the Owner and Architect and may or may not be agreed to by the Contractor. An order for a minor change in the Work may be issued by the Architect alone.

**§ 7.1.3** Changes in the Work shall be performed under applicable provisions of the Contract Documents. The Contractor shall proceed promptly with changes in the Work, unless otherwise provided in the Change Order, Construction Change Directive, or order for a minor change in the Work.

**§ 7.2 Change Orders**

**§ 7.2.1** A Change Order is a written instrument prepared by the Architect and signed by the Owner, Contractor, and Architect stating their agreement upon all of the following:

- **.1** The change in the Work;
- **.2** The amount of the adjustment, if any, in the Contract Sum; and
- **.3** The extent of the adjustment, if any, in the Contract Time.

**§ 7.3 Construction Change Directives**

**§ 7.3.1** A Construction Change Directive is a written order prepared by the Architect and signed by the Owner and Architect, directing a change in the Work prior to agreement on adjustment, if any, in the Contract Sum or Contract Time, or both. The Owner may by Construction Change Directive, without invalidating the Contract, order changes in the Work within the general scope of the Contract consisting of additions, deletions, or other revisions, the Contract Sum and Contract Time being adjusted accordingly.

**§ 7.3.2** A Construction Change Directive shall be used in the absence of total agreement on the terms of a Change Order.

**§ 7.3.3** If the Construction Change Directive provides for an adjustment to the Contract Sum, the adjustment shall be based on one of the following methods:

- **.1** Mutual acceptance of a lump sum properly itemized and supported by sufficient substantiating data to permit evaluation;
- **.2** Unit prices stated in the Contract Documents or subsequently agreed upon;
- **.3** Cost to be determined in a manner agreed upon by the parties and a mutually acceptable fixed or percentage fee; or
- **.4** As provided in Section 7.3.4.

**§ 7.3.4** If the Contractor does not respond promptly or disagrees with the method for adjustment in the Contract Sum, the Architect shall determine the adjustment on the basis of reasonable expenditures and savings of those performing the Work attributable to the change, including, in case of an increase in the Contract Sum, an amount for overhead and profit in the amount of ten percent (10 %) and an additional two percent (2%) for bonds. In such case, and also under Section 7.3.3.3, the Contractor shall keep and present, in such form as the Architect may prescribe, an itemized accounting together with appropriate supporting data. Unless otherwise provided in the Contract Documents, costs for the purposes of this Section 7.3.4 shall be limited to the following:


**AIA Document A201® – 2017.** Copyright © 1911, 1915, 1918, 1925, 1937, 1951, 1958, 1961, 1963, 1966, 1970, 1976, 1987, 1997, 2007 and 2017 by The American Institute of Architects. All rights reserved. The "American Institute of Architects," "AIA," the AIA Logo, "A201," and "AIA Contract Documents" are registered trademarks and may not be used without permission. This document was produced by AIA software at 17:51:08 ET on 11/09/2020 under Order No.7227609709 which expires on 02/14/2021, is not for resale, is licensed for one-time use only, and may only be used in accordance with the AIA Contract Documents® Terms of Service. To report copyright violations, e-mail copyright@aia.org.
**User Notes:** (1178953302)

.1 Costs of labor, including applicable payroll taxes, fringe benefits required by agreement or custom, workers' compensation insurance, and other employee costs approved by the Architect;
.2 Costs of materials, supplies, and equipment, including cost of transportation, whether incorporated or consumed;
.3 Rental costs of machinery and equipment, exclusive of hand tools, whether rented from the Contractor or others;
.4 Costs of premiums for all bonds and insurance, permit fees, and sales, use, or similar taxes, directly related to the change; and
.5 Costs of supervision and field office personnel directly attributable to the change.

**§ 7.3.5** If the Contractor disagrees with the adjustment in the Contract Time, the Contractor may make a Claim in accordance with applicable provisions of Article 15.

**§ 7.3.6** Upon receipt of a Construction Change Directive, the Contractor shall promptly proceed with the change in the Work involved and advise the Architect of the Contractor's agreement or disagreement with the method, if any, provided in the Construction Change Directive for determining the proposed adjustment in the Contract Sum or Contract Time.

**§ 7.3.7** A Construction Change Directive signed by the Contractor indicates the Contractor's agreement therewith, including adjustment in Contract Sum and Contract Time or the method for determining them. Such agreement shall be effective immediately and shall be recorded as a Change Order.

**§ 7.3.8** The amount of credit to be allowed by the Contractor to the Owner for a deletion or change that results in a net decrease in the Contract Sum shall be actual net cost as confirmed by the Architect. When both additions and credits covering related Work or substitutions are involved in a change, the allowance for overhead and profit shall be figured on the basis of net increase, if any, with respect to that change.

**§ 7.3.9** Pending final determination of the total cost of a Construction Change Directive to the Owner, the Contractor may request payment for Work completed under the Construction Change Directive in Applications for Payment. The Architect will make an interim determination for purposes of monthly certification for payment for those costs and certify for payment the amount that the Architect determines, in the Architect's professional judgment, to be reasonably justified. The Architect's interim determination of cost shall adjust the Contract Sum on the same basis as a Change Order, subject to the right of either party to disagree and assert a Claim in accordance with Article 15.

**§ 7.3.10** When the Owner and Contractor agree with a determination made by the Architect concerning the adjustments in the Contract Sum and Contract Time, or otherwise reach agreement upon the adjustments, such agreement shall be effective immediately and the Architect will prepare a Change Order. Change Orders may be issued for all or any part of a Construction Change Directive.

### § 7.4 Minor Changes in the Work

The Architect may order minor changes in the Work that are consistent with the intent of the Contract Documents and do not involve an adjustment in the Contract Sum or an extension of the Contract Time. The Architect's order for minor changes shall be in writing. If the Contractor believes that the proposed minor change in the Work will affect the Contract Sum or Contract Time, the Contractor shall notify the Architect and shall not proceed to implement the change in the Work. If the Contractor performs the Work set forth in the Architect's order for a minor change without prior notice to the Architect that such change will affect the Contract Sum or Contract Time, the Contractor waives any adjustment to the Contract Sum or extension of the Contract Time.

### § 7.5 AGREED OVERHEAD AND PROFIT RATES

**§ 7.5.1** For any adjustments to the Contract Sum which are based on other than the unit price method, the Contractor agrees to charge and accept, as payment for overhead and profit, the following percentages of costs attributable to the change in the Work:

**§ 7.5.1.1** Ten percent (10%) for Work by any individual Contractor and his subcontractors, material men, etc; When both additions and credits are involved in any one change, the allowance for overhead and profit shall be figured on the basis of the net increase, if any.


**AIA Document A201® – 2017.** Copyright © 1911, 1915, 1918, 1925, 1937, 1951, 1958, 1961, 1963, 1966, 1970, 1976, 1987, 1997, 2007 and 2017 by The American Institute of Architects. All rights reserved. The "American Institute of Architects," "AIA," the AIA Logo, "A201," and "AIA Contract Documents" are registered trademarks and may not be used without permission. This document was produced by AIA software at 17:51:08 ET on 11/09/2020 under Order No.7227609709 which expires on 02/14/2021, is not for resale, is licensed for one-time use only, and may only be used in accordance with the AIA Contract Documents® Terms of Service. To report copyright violations, e-mail copyright@aia.org.
**User Notes:** (1178953302)

**§ 7.5.1.2** Overtime, when specifically authorized by the Owner's Representative shall be paid for by the Owner on the basis of premium payment only, plus the cost of insurance and taxes based on the premium payment period. The Owner shall not pay overhead and profit for overtime.

**NOTES**

**.1** The term "Overhead" shall be determined to include any and all direct and indirect supervisory and administrative expenses normally entailed in the operation of any Project; further, cost to which overhead and profit is to be applied shall be determined in accordance with this Subparagraph.

.2 In order to facilitate checking of quotations for ADDED or DELETED Work, all proposals, other than those so minor that their propriety can be seen by inspection, shall be accompanied by a complete itemization of costs including plant, labor, materials, equipment and Subcontracts. Labor and materials shall be itemized in the manner prescribed above.

.3 Where major cost items are Subcontracts, they shall be itemized also.

.4 In no case will any change be accepted or approved without such itemization

## ARTICLE 8 TIME

### § 8.1 Definitions

**§ 8.1.1** Unless otherwise provided, Contract Time is the period of time, including authorized adjustments, allotted in the Contract Documents for Substantial Completion of the Work.

**§ 8.1.2** The date of commencement of the Work is the date established in the Agreement.

**§ 8.1.3** The date of Substantial Completion is the date certified by the Architect in accordance with Section 9.8.

**§ 8.1.4** The term "day" as used in the Contract Documents shall mean calendar day unless otherwise specifically defined.

### § 8.2 Progress and Completion

**§ 8.2.1** Time limits stated in the Contract Documents are of the essence of the Contract. By executing the Agreement, the Contractor confirms that the Contract Time is a reasonable period for performing the Work.

**§ 8.2.2** The Contractor shall not knowingly, except by agreement or instruction of the Owner in writing, commence the Work prior to the effective date of insurance required to be furnished by the Contractor and Owner.

**§ 8.2.3** The Contractor shall proceed expeditiously with adequate forces and shall achieve Substantial Completion within the Contract Time.

### § 8.3 Delays and Extensions of Time

**§ 8.3.1** If the Contractor is delayed at any time in the commencement or progress of the Work by (1) an act or neglect of the Owner or Architect, of an employee of either, or of a Separate Contractor; (2) by changes ordered in the Work; (3) by labor disputes, fire, unusual delay in deliveries, unavoidable casualties, adverse weather conditions documented in accordance with Section 15.1.6.2, or other causes beyond the Contractor's control; (4) by delay authorized by the Owner pending mediation and binding dispute resolution; or (5) by other causes that the Contractor asserts, and the Architect determines, justify delay, then the Contract Time shall be extended for such reasonable time as the Architect may determine.

**§ 8.3.2** Claims relating to time shall be made in accordance with applicable provisions of Article 15.

**§ 8.3.3** This Section 8.3 does not preclude recovery of damages for delay by either party under other provisions of the Contract Documents.


**AIA Document A201® – 2017.** Copyright © 1911, 1915, 1918, 1925, 1937, 1951, 1958, 1961, 1963, 1966, 1970, 1976, 1987, 1997, 2007 and 2017 by The American Institute of Architects. All rights reserved. The "American Institute of Architects," "AIA," the AIA Logo, "A201," and "AIA Contract Documents" are registered trademarks and may not be used without permission. This document was produced by AIA software at 17:51:08 ET on 11/09/2020 under Order No.7227609709 which expires on 02/14/2021, is not for resale, is licensed for one-time use only, and may only be used in accordance with the AIA Contract Documents® Terms of Service. To report copyright violations, e-mail copyright@aia.org.
**User Notes:** (1178953302)

## ARTICLE 9 PAYMENTS AND COMPLETION

### § 9.1 Contract Sum

**§ 9.1.1** The Contract Sum is stated in the Agreement and, including authorized adjustments, is the total amount payable by the Owner to the Contractor for performance of the Work under the Contract Documents.

**§ 9.1.2** If unit prices are stated in the Contract Documents or subsequently agreed upon, and if quantities originally contemplated are materially changed so that application of such unit prices to the actual quantities causes substantial inequity to the Owner or Contractor, the applicable unit prices shall be equitably adjusted.

### § 9.2 Schedule of Values

Where the Contract is based on a stipulated sum or Guaranteed Maximum Price, the Contractor shall submit a schedule of values to the Architect before the first Application for Payment, allocating the entire Contract Sum to the various portions of the Work. The schedule of values shall be prepared in the form, and supported by the data to substantiate its accuracy, required by the Architect. This schedule, unless objected to by the Architect, shall be used as a basis for reviewing the Contractor's Applications for Payment. Any changes to the schedule of values shall be submitted to the Architect and supported by such data to substantiate its accuracy as the Architect may require, and unless objected to by the Architect, shall be used as a basis for reviewing the Contractor's subsequent Applications for Payment.

### § 9.3 Applications for Payment

**§ 9.3.1** At least ten days before the date established for each progress payment, the Contractor shall submit to the Architect an itemized Application for Payment prepared in accordance with the schedule of values, if required under Section 9.2, for completed portions of the Work. The application shall be notarized, if required, and supported by all data substantiating the Contractor's right to payment that the Owner or Architect require, such as copies of requisitions, and releases and waivers of liens from Subcontractors and suppliers, and shall reflect retainage if provided for in the Contract Documents.

**§ 9.3.1.1** As provided in Section 7.3.9, such applications may include requests for payment on account of changes in the Work that have been properly authorized by Construction Change Directives, or by interim determinations of the Architect, but not yet included in Change Orders.

**§ 9.3.1.2** Applications for Payment shall not include requests for payment for portions of the Work for which the Contractor does not intend to pay a Subcontractor or supplier, unless such Work has been performed by others whom the Contractor intends to pay.

**§ 9.3.2** Unless otherwise provided in the Contract Documents, payments shall be made on account of materials and equipment delivered and suitably stored at the site for subsequent incorporation in the Work. If approved in advance by the Owner, payment may similarly be made for materials and equipment suitably stored off the site at a location agreed upon in writing. Payment for materials and equipment stored on or off the site shall be conditioned upon compliance by the Contractor with procedures satisfactory to the Owner to establish the Owner's title to such materials and equipment or otherwise protect the Owner's interest, and shall include the costs of applicable insurance, storage, and transportation to the site, for such materials and equipment stored off the site.

**§ 9.3.3** The Contractor warrants that title to all Work covered by an Application for Payment will pass to the Owner no later than the time of payment. The Contractor further warrants that upon submittal of an Application for Payment all Work for which Certificates for Payment have been previously issued and payments received from the Owner shall, to the best of the Contractor's knowledge, information, and belief, be free and clear of liens, claims, security interests, or encumbrances, in favor of the Contractor, Subcontractors, suppliers, or other persons or entities that provided labor, materials, and equipment relating to the Work.

### § 9.4 Certificates for Payment

**§ 9.4.1** The Architect will, within seven days after receipt of the Contractor's Application for Payment, either (1) issue to the Owner a Certificate for Payment in the full amount of the Application for Payment, with a copy to the Contractor; or (2) issue to the Owner a Certificate for Payment for such amount as the Architect determines is properly due, and notify the Contractor and Owner of the Architect's reasons for withholding certification in part as provided in Section 9.5.1; or (3) withhold certification of the entire Application for Payment, and notify the Contractor and Owner of the Architect's reason for withholding certification in whole as provided in Section 9.5.1.


**AIA Document A201® – 2017.** Copyright © 1911, 1915, 1918, 1925, 1937, 1951, 1958, 1961, 1963, 1966, 1970, 1976, 1987, 1997, 2007 and 2017 by The American Institute of Architects. All rights reserved. The "American Institute of Architects," "AIA," the AIA Logo, "A201," and "AIA Contract Documents" are registered trademarks and may not be used without permission. This document was produced by AIA software at 17:51:08 ET on 11/09/2020 under Order No.7227609709 which expires on 02/14/2021, is not for resale, is licensed for one-time use only, and may only be used in accordance with the AIA Contract Documents® Terms of Service. To report copyright violations, e-mail copyright@aia.org.
**User Notes:** (1178953302)

**§ 9.4.2** The issuance of a Certificate for Payment will constitute a representation by the Architect to the Owner, based on the Architect's evaluation of the Work and the data in the Application for Payment, that, to the best of the Architect's knowledge, information, and belief, the Work has progressed to the point indicated, the quality of the Work is in accordance with the Contract Documents, and that the Contractor is entitled to payment in the amount certified. The foregoing representations are subject to an evaluation of the Work for conformance with the Contract Documents upon Substantial Completion, to results of subsequent tests and inspections, to correction of minor deviations from the Contract Documents prior to completion, and to specific qualifications expressed by the Architect. However, the issuance of a Certificate for Payment will not be a representation that the Architect has (1) made exhaustive or continuous on-site inspections to check the quality or quantity of the Work; (2) reviewed construction means, methods, techniques, sequences, or procedures; (3) reviewed copies of requisitions received from Subcontractors and suppliers and other data requested by the Owner to substantiate the Contractor's right to payment; or (4) made examination to ascertain how or for what purpose the Contractor has used money previously paid on account of the Contract Sum.

**§ 9.5 Decisions to Withhold Certification**

**§ 9.5.1** The Architect may withhold a Certificate for Payment in whole or in part, to the extent reasonably necessary to protect the Owner, if in the Architect's opinion the representations to the Owner required by Section 9.4.2 cannot be made. If the Architect is unable to certify payment in the amount of the Application, the Architect will notify the Contractor and Owner as provided in Section 9.4.1. If the Contractor and Architect cannot agree on a revised amount, the Architect will promptly issue a Certificate for Payment for the amount for which the Architect is able to make such representations to the Owner. The Architect may also withhold a Certificate for Payment or, because of subsequently discovered evidence, may nullify the whole or a part of a Certificate for Payment previously issued, to such extent as may be necessary in the Architect's opinion to protect the Owner from loss for which the Contractor is responsible, including loss resulting from acts and omissions described in Section 3.3.2, because of

- **.1** defective Work not remedied;
- **.2** third party claims filed or reasonable evidence indicating probable filing of such claims, unless security acceptable to the Owner is provided by the Contractor;
- **.3** failure of the Contractor to make payments properly to Subcontractors or suppliers for labor, materials or equipment;
- **.4** reasonable evidence that the Work cannot be completed for the unpaid balance of the Contract Sum;
- **.5** damage to the Owner or a Separate Contractor;
- **.6** reasonable evidence that the Work will not be completed within the Contract Time, and that the unpaid balance would not be adequate to cover actual or liquidated damages for the anticipated delay; or
- **.7** repeated failure to carry out the Work in accordance with the Contract Documents.

**§ 9.5.2** When either party disputes the Architect's decision regarding a Certificate for Payment under Section 9.5.1, in whole or in part, that party may submit a Claim in accordance with Article 15.

**§ 9.5.3** When the reasons for withholding certification are removed, certification will be made for amounts previously withheld.

**§ 9.5.4** If the Architect withholds certification for payment under Section 9.5.1.3, the Owner may, at its sole option, issue joint checks to the Contractor and to any Subcontractor or supplier to whom the Contractor failed to make payment for Work properly performed or material or equipment suitably delivered. If the Owner makes payments by joint check, the Owner shall notify the Architect and the Contractor shall reflect such payment on its next Application for Payment.

**§ 9.6 Progress Payments**

**§ 9.6.1** After the Architect has issued a Certificate for Payment, the Owner shall make payment in the manner and within the time provided in the Contract Documents, and shall so notify the Architect.

**§ 9.6.2** The Contractor shall pay each Subcontractor, no later than seven days after receipt of payment from the Owner, the amount to which the Subcontractor is entitled, reflecting percentages actually retained from payments to the Contractor on account of the Subcontractor's portion of the Work. The Contractor shall, by appropriate agreement with each Subcontractor, require each Subcontractor to make payments to Sub-subcontractors in a similar manner.


**AIA Document A201® – 2017.** Copyright © 1911, 1915, 1918, 1925, 1937, 1951, 1958, 1961, 1963, 1966, 1970, 1976, 1987, 1997, 2007 and 2017 by The American Institute of Architects. All rights reserved. The "American Institute of Architects," "AIA," the AIA Logo, "A201," and "AIA Contract Documents" are registered trademarks and may not be used without permission. This document was produced by AIA software at 17:51:08 ET on 11/09/2020 under Order No.7227609709 which expires on 02/14/2021, is not for resale, is licensed for one-time use only, and may only be used in accordance with the AIA Contract Documents® Terms of Service. To report copyright violations, e-mail copyright@aia.org.
**User Notes:** (1178953302)

**§ 9.6.3** The Architect will, on request, furnish to a Subcontractor, if practicable, information regarding percentages of completion or amounts applied for by the Contractor and action taken thereon by the Architect and Owner on account of portions of the Work done by such Subcontractor.

**§ 9.6.4** The Owner has the right to request written evidence from the Contractor that the Contractor has properly paid Subcontractors and suppliers amounts paid by the Owner to the Contractor for subcontracted Work. If the Contractor fails to furnish such evidence within seven days, the Owner shall have the right to contact Subcontractors and suppliers to ascertain whether they have been properly paid. Neither the Owner nor Architect shall have an obligation to pay, or to see to the payment of money to, a Subcontractor or supplier, except as may otherwise be required by law.

**§ 9.6.5** The Contractor's payments to suppliers shall be treated in a manner similar to that provided in Sections 9.6.2, 9.6.3 and 9.6.4.

**§ 9.6.6** A Certificate for Payment, a progress payment, or partial or entire use or occupancy of the Project by the Owner shall not constitute acceptance of Work not in accordance with the Contract Documents.

**§ 9.6.7** Unless the Contractor provides the Owner with a payment bond in the full penal sum of the Contract Sum, payments received by the Contractor for Work properly performed by Subcontractors or provided by suppliers shall be held by the Contractor for those Subcontractors or suppliers who performed Work or furnished materials, or both, under contract with the Contractor for which payment was made by the Owner. Nothing contained herein shall require money to be placed in a separate account and not commingled with money of the Contractor, create any fiduciary liability or tort liability on the part of the Contractor for breach of trust, or entitle any person or entity to an award of punitive damages against the Contractor for breach of the requirements of this provision.

**§ 9.6.8** Provided the Owner has fulfilled its payment obligations under the Contract Documents, the Contractor shall defend and indemnify the Owner from all loss, liability, damage or expense, including reasonable attorney's fees and litigation expenses, arising out of any lien claim or other claim for payment by any Subcontractor or supplier of any tier. Upon receipt of notice of a lien claim or other claim for payment, the Owner shall notify the Contractor. If approved by the applicable court, when required, the Contractor may substitute a surety bond for the property against which the lien or other claim for payment has been asserted.

**§ 9.7 Failure of Payment**

If the Architect does not issue a Certificate for Payment, through no fault of the Contractor, within seven days after receipt of the Contractor's Application for Payment, or if the Owner does not pay the Contractor within seven days after the date established in the Contract Documents, the amount certified by the Architect or awarded by binding dispute resolution, then the Contractor may, upon seven additional days' notice to the Owner and Architect, stop the Work until payment of the amount owing has been received. The Contract Time shall be extended appropriately and the Contract Sum shall be increased by the amount of the Contractor's reasonable costs of shutdown, delay and start-up, plus interest as provided for in the Contract Documents.

**§ 9.8 Substantial Completion**

**§ 9.8.1** Substantial Completion is the stage in the progress of the Work when the Work or designated portion thereof is sufficiently complete in accordance with the Contract Documents so that the Owner can occupy or utilize the Work for its intended use.

**§ 9.8.2** When the Contractor considers that the Work, or a portion thereof which the Owner agrees to accept separately, is substantially complete, the Contractor shall prepare and submit to the Architect a comprehensive list of items to be completed or corrected prior to final payment. Failure to include an item on such list does not alter the responsibility of the Contractor to complete all Work in accordance with the Contract Documents.

**§ 9.8.3** Upon receipt of the Contractor's list, the Architect will make an inspection to determine whether the Work or designated portion thereof is substantially complete. If the Architect's inspection discloses any item, whether or not included on the Contractor's list, which is not sufficiently complete in accordance with the Contract Documents so that the Owner can occupy or utilize the Work or designated portion thereof for its intended use, the Contractor shall, before issuance of the Certificate of Substantial Completion, complete or correct such item upon notification by the Architect. In such case, the Contractor shall then submit a request for another inspection by the Architect to determine Substantial Completion.


**AIA Document A201® – 2017.** Copyright © 1911, 1915, 1918, 1925, 1937, 1951, 1958, 1961, 1963, 1966, 1970, 1976, 1987, 1997, 2007 and 2017 by The American Institute of Architects. All rights reserved. The "American Institute of Architects," "AIA," the AIA Logo, "A201," and "AIA Contract Documents" are registered trademarks and may not be used without permission. This document was produced by AIA software at 17:51:08 ET on 11/09/2020 under Order No.7227609709 which expires on 02/14/2021, is not for resale, is licensed for one-time use only, and may only be used in accordance with the AIA Contract Documents® Terms of Service. To report copyright violations, e-mail copyright@aia.org.
**User Notes:** (1178953302)

**§ 9.8.4** When the Work or designated portion thereof is substantially complete, the Architect will prepare a Certificate of Substantial Completion that shall establish the date of Substantial Completion; establish responsibilities of the Owner and Contractor for security, maintenance, heat, utilities, damage to the Work and insurance; and fix the time within which the Contractor shall finish all items on the list accompanying the Certificate. Warranties required by the Contract Documents shall commence on the date of Substantial Completion of the Work or designated portion thereof unless otherwise provided in the Certificate of Substantial Completion.

**§ 9.8.5** The Certificate of Substantial Completion shall be submitted to the Owner and Contractor for their written acceptance of responsibilities assigned to them in the Certificate. Upon such acceptance, and consent of surety if any, the Owner shall make payment of retainage applying to the Work or designated portion thereof. Such payment shall be adjusted for Work that is incomplete or not in accordance with the requirements of the Contract Documents.

**§ 9.9 Partial Occupancy or Use**

**§ 9.9.1** The Owner may occupy or use any completed or partially completed portion of the Work at any stage when such portion is designated by separate agreement with the Contractor, provided such occupancy or use is consented to by the insurer and authorized by public authorities having jurisdiction over the Project. Such partial occupancy or use may commence whether or not the portion is substantially complete, provided the Owner and Contractor have accepted in writing the responsibilities assigned to each of them for payments, retainage, if any, security, maintenance, heat, utilities, damage to the Work and insurance, and have agreed in writing concerning the period for correction of the Work and commencement of warranties required by the Contract Documents. When the Contractor considers a portion substantially complete, the Contractor shall prepare and submit a list to the Architect as provided under Section 9.8.2. Consent of the Contractor to partial occupancy or use shall not be unreasonably withheld. The stage of the progress of the Work shall be determined by written agreement between the Owner and Contractor or, if no agreement is reached, by decision of the Architect.

**§ 9.9.2** Immediately prior to such partial occupancy or use, the Owner, Contractor, and Architect shall jointly inspect the area to be occupied or portion of the Work to be used in order to determine and record the condition of the Work.

**§ 9.9.3** Unless otherwise agreed upon, partial occupancy or use of a portion or portions of the Work shall not constitute acceptance of Work not complying with the requirements of the Contract Documents.

**§ 9.10 Final Completion and Final Payment**

**§ 9.10.1** Upon receipt of the Contractor's notice that the Work is ready for final inspection and acceptance and upon receipt of a final Application for Payment, the Architect will promptly make such inspection. When the Architect finds the Work acceptable under the Contract Documents and the Contract fully performed, the Architect will promptly issue a final Certificate for Payment stating that to the best of the Architect's knowledge, information and belief, and on the basis of the Architect's on-site visits and inspections, the Work has been completed in accordance with the Contract Documents and that the entire balance found to be due the Contractor and noted in the final Certificate is due and payable. The Architect's final Certificate for Payment will constitute a further representation that conditions listed in Section 9.10.2 as precedent to the Contractor's being entitled to final payment have been fulfilled.

**§ 9.10.2** Neither final payment nor any remaining retained percentage shall become due until the Contractor submits to the Architect (1) an affidavit that payrolls, bills for materials and equipment, and other indebtedness connected with the Work for which the Owner or the Owner's property might be responsible or encumbered (less amounts withheld by Owner) have been paid or otherwise satisfied, (2) a certificate evidencing that insurance required by the Contract Documents to remain in force after final payment is currently in effect, (3) a written statement that the Contractor knows of no reason that the insurance will not be renewable to cover the period required by the Contract Documents, (4) consent of surety, if any, to final payment, (5) documentation of any special warranties, such as manufacturers' warranties or specific Subcontractor warranties, and (6) if required by the Owner, other data establishing payment or satisfaction of obligations, such as receipts and releases and waivers of liens, claims, security interests, or encumbrances arising out of the Contract, to the extent and in such form as may be designated by the Owner. If a Subcontractor refuses to furnish a release or waiver required by the Owner, the Contractor may furnish a bond satisfactory to the Owner to indemnify the Owner against such lien, claim, security interest, or encumbrance. If a lien, claim, security interest, or encumbrance remains unsatisfied after payments are made, the Contractor shall refund to the Owner all money that the Owner may be compelled to pay in discharging the lien, claim, security interest, or encumbrance, including all costs and reasonable attorneys' fees.


**AIA Document A201® – 2017.** Copyright © 1911, 1915, 1918, 1925, 1937, 1951, 1958, 1961, 1963, 1966, 1970, 1976, 1987, 1997, 2007 and 2017 by The American Institute of Architects. All rights reserved. The "American Institute of Architects," "AIA," the AIA Logo, "A201," and "AIA Contract Documents" are registered trademarks and may not be used without permission. This document was produced by AIA software at 17:51:08 ET on 11/09/2020 under Order No.7227609709 which expires on 02/14/2021, is not for resale, is licensed for one-time use only, and may only be used in accordance with the AIA Contract Documents® Terms of Service. To report copyright violations, e-mail copyright@aia.org.
**User Notes:** (1178953302)

**§ 9.10.3** If, after Substantial Completion of the Work, final completion thereof is materially delayed through no fault of the Contractor or by issuance of Change Orders affecting final completion, and the Architect so confirms, the Owner shall, upon application by the Contractor and certification by the Architect, and without terminating the Contract, make payment of the balance due for that portion of the Work fully completed, corrected, and accepted. If the remaining balance for Work not fully completed or corrected is less than retainage stipulated in the Contract Documents, and if bonds have been furnished, the written consent of the surety to payment of the balance due for that portion of the Work fully completed and accepted shall be submitted by the Contractor to the Architect prior to certification of such payment. Such payment shall be made under terms and conditions governing final payment, except that it shall not constitute a waiver of Claims.

**§ 9.10.4** The making of final payment shall constitute a waiver of Claims by the Owner except those arising from

- **.1** liens, Claims, security interests, or encumbrances arising out of the Contract and unsettled;
- **.2** failure of the Work to comply with the requirements of the Contract Documents;
- **.3** terms of special warranties required by the Contract Documents; or
- **.4** audits performed by the Owner, if permitted by the Contract Documents, after final payment.

**§ 9.10.5** Acceptance of final payment by the Contractor, a Subcontractor, or a supplier, shall constitute a waiver of claims by that payee except those previously made in writing and identified by that payee as unsettled at the time of final Application for Payment.

## ARTICLE 10 PROTECTION OF PERSONS AND PROPERTY

### § 10.1 Safety Precautions and Programs

The Contractor shall be responsible for initiating, maintaining, and supervising all safety precautions and programs in connection with the performance of the Contract.

### § 10.2 Safety of Persons and Property

**§ 10.2.1** The Contractor shall take reasonable precautions for safety of, and shall provide reasonable protection to prevent damage, injury, or loss to

- **.1** employees on the Work and other persons who may be affected thereby;
- **.2** the Work and materials and equipment to be incorporated therein, whether in storage on or off the site, under care, custody, or control of the Contractor, a Subcontractor, or a Sub-subcontractor; and
- **.3** other property at the site or adjacent thereto, such as trees, shrubs, lawns, walks, pavements, roadways, structures, and utilities not designated for removal, relocation, or replacement in the course of construction.

**§ 10.2.2** The Contractor shall comply with, and give notices required by applicable laws, statutes, ordinances, codes, rules and regulations, and lawful orders of public authorities, bearing on safety of persons or property or their protection from damage, injury, or loss.

**§ 10.2.3** The Contractor shall implement, erect, and maintain, as required by existing conditions and performance of the Contract, reasonable safeguards for safety and protection, including posting danger signs and other warnings against hazards; promulgating safety regulations; and notifying the owners and users of adjacent sites and utilities of the safeguards.

**§ 10.2.4** When use or storage of explosives or other hazardous materials or equipment, or unusual methods are necessary for execution of the Work, the Contractor shall exercise utmost care and carry on such activities under supervision of properly qualified personnel.

**§ 10.2.5** The Contractor shall promptly remedy damage and loss (other than damage or loss insured under property insurance required by the Contract Documents) to property referred to in Sections 10.2.1.2 and 10.2.1.3 caused in whole or in part by the Contractor, a Subcontractor, a Sub-subcontractor, or anyone directly or indirectly employed by any of them, or by anyone for whose acts they may be liable and for which the Contractor is responsible under Sections 10.2.1.2 and 10.2.1.3. The Contractor may make a Claim for the cost to remedy the damage or loss to the extent such damage or loss is attributable to acts or omissions of the Owner or Architect or anyone directly or indirectly employed by either of them, or by anyone for whose acts either of them may be liable, and not attributable to


**AIA Document A201® – 2017.** Copyright © 1911, 1915, 1918, 1925, 1937, 1951, 1958, 1961, 1963, 1966, 1970, 1976, 1987, 1997, 2007 and 2017 by The American Institute of Architects. All rights reserved. The "American Institute of Architects," "AIA," the AIA Logo, "A201," and "AIA Contract Documents" are registered trademarks and may not be used without permission. This document was produced by AIA software at 17:51:08 ET on 11/09/2020 under Order No.7227609709 which expires on 02/14/2021, is not for resale, is licensed for one-time use only, and may only be used in accordance with the AIA Contract Documents® Terms of Service. To report copyright violations, e-mail copyright@aia.org.
**User Notes:** (1178953302)

the fault or negligence of the Contractor. The foregoing obligations of the Contractor are in addition to the Contractor's obligations under Section 3.18.

**§ 10.2.6** The Contractor shall designate a responsible member of the Contractor's organization at the site whose duty shall be the prevention of accidents. This person shall be the Contractor's superintendent unless otherwise designated by the Contractor in writing to the Owner and Architect.

**§ 10.2.7** The Contractor shall not permit any part of the construction or site to be loaded so as to cause damage or create an unsafe condition.

**§ 10.2.8 Injury or Damage to Person or Property**
If either party suffers injury or damage to person or property because of an act or omission of the other party, or of others for whose acts such party is legally responsible, notice of the injury or damage, whether or not insured, shall be given to the other party within a reasonable time not exceeding 21 days after discovery. The notice shall provide sufficient detail to enable the other party to investigate the matter.

**§ 10.3 Hazardous Materials and Substances**
**§ 10.3.1** The Contractor is responsible for compliance with any requirements included in the Contract Documents regarding hazardous materials or substances. If the Contractor encounters a hazardous material or substance not addressed in the Contract Documents and if reasonable precautions will be inadequate to prevent foreseeable bodily injury or death to persons resulting from a material or substance, including but not limited to asbestos or polychlorinated biphenyl (PCB), encountered on the site by the Contractor, the Contractor shall, upon recognizing the condition, immediately stop Work in the affected area and notify the Owner and Architect of the condition.

**§ 10.3.2** Upon receipt of the Contractor's notice, the Owner shall obtain the services of a licensed laboratory to verify the presence or absence of the material or substance reported by the Contractor and, in the event such material or substance is found to be present, to cause it to be rendered harmless. Unless otherwise required by the Contract Documents, the Owner shall furnish in writing to the Contractor and Architect the names and qualifications of persons or entities who are to perform tests verifying the presence or absence of the material or substance or who are to perform the task of removal or safe containment of the material or substance. The Contractor and the Architect will promptly reply to the Owner in writing stating whether or not either has reasonable objection to the persons or entities proposed by the Owner. If either the Contractor or Architect has an objection to a person or entity proposed by the Owner, the Owner shall propose another to whom the Contractor and the Architect have no reasonable objection. When the material or substance has been rendered harmless, Work in the affected area shall resume upon written agreement of the Owner and Contractor. By Change Order, the Contract Time shall be extended appropriately and the Contract Sum shall be increased by the amount of the Contractor's reasonable additional costs of shutdown, delay, and start-up.

**§ 10.3.3** To the fullest extent permitted by law, the Owner shall indemnify and hold harmless the Contractor, Subcontractors, Architect, Architect's consultants, and agents and employees of any of them from and against claims, damages, losses, and expenses, including but not limited to attorneys' fees, arising out of or resulting from performance of the Work in the affected area if in fact the material or substance presents the risk of bodily injury or death as described in Section 10.3.1 and has not been rendered harmless, provided that such claim, damage, loss, or expense is attributable to bodily injury, sickness, disease or death, or to injury to or destruction of tangible property (other than the Work itself), except to the extent that such damage, loss, or expense is due to the fault or negligence of the party seeking indemnity.

**§ 10.3.4** The Owner shall not be responsible under this Section 10.3 for hazardous materials or substances the Contractor brings to the site unless such materials or substances are required by the Contract Documents. The Owner shall be responsible for hazardous materials or substances required by the Contract Documents, except to the extent of the Contractor's fault or negligence in the use and handling of such materials or substances.

**§ 10.3.5** The Contractor shall reimburse the Owner for the cost and expense the Owner incurs (1) for remediation of hazardous materials or substances the Contractor brings to the site and negligently handles, or (2) where the Contractor fails to perform its obligations under Section 10.3.1, except to the extent that the cost and expense are due to the Owner's fault or negligence.


**AIA Document A201® – 2017.** Copyright © 1911, 1915, 1918, 1925, 1937, 1951, 1958, 1961, 1963, 1966, 1970, 1976, 1987, 1997, 2007 and 2017 by The American Institute of Architects. All rights reserved. The "American Institute of Architects," "AIA," the AIA Logo, "A201," and "AIA Contract Documents" are registered trademarks and may not be used without permission. This document was produced by AIA software at 17:51:08 ET on 11/09/2020 under Order No.7227609709 which expires on 02/14/2021, is not for resale, is licensed for one-time use only, and may only be used in accordance with the AIA Contract Documents® Terms of Service. To report copyright violations, e-mail copyright@aia.org.
**User Notes:** (1178953302)

**§ 10.3.6** If, without negligence on the part of the Contractor, the Contractor is held liable by a government agency for the cost of remediation of a hazardous material or substance solely by reason of performing Work as required by the Contract Documents, the Owner shall reimburse the Contractor for all cost and expense thereby incurred.

**§ 10.4 Emergencies**

In an emergency affecting safety of persons or property, the Contractor shall act, at the Contractor's discretion, to prevent threatened damage, injury, or loss. Additional compensation or extension of time claimed by the Contractor on account of an emergency shall be determined as provided in Article 15 and Article 7.

## ARTICLE 11 INSURANCE AND BONDS

**§ 11.1 Contractor's Insurance and Bonds**

**§ 11.1.1** The Contractor shall purchase and maintain insurance of the types and limits of liability, containing the endorsements, and subject to the terms and conditions, as described in the Agreement or elsewhere in the Contract Documents. The Contractor shall purchase and maintain the required insurance from an insurance company or insurance companies lawfully authorized to issue insurance in the jurisdiction where the Project is located. The Owner, Architect, and Architect's consultants shall be named as additional insureds under the Contractor's commercial general liability policy or as otherwise described in the Contract Documents.

**§ 11.1.2** The Contractor shall provide surety bonds of the types, for such penal sums, and subject to such terms and conditions as required by the Contract Documents. The Contractor shall purchase and maintain the required bonds from a company or companies lawfully authorized to issue surety bonds in the jurisdiction where the Project is located.

**§ 11.1.3** Upon the request of any person or entity appearing to be a potential beneficiary of bonds covering payment of obligations arising under the Contract, the Contractor shall promptly furnish a copy of the bonds or shall authorize a copy to be furnished.

**§ 11.1.4 Notice of Cancellation or Expiration of Contractor's Required Insurance.** Within three (3) business days of the date the Contractor becomes aware of an impending or actual cancellation or expiration of any insurance required by the Contract Documents, the Contractor shall provide notice to the Owner of such impending or actual cancellation or expiration. Upon receipt of notice from the Contractor, the Owner shall, unless the lapse in coverage arises from an act or omission of the Owner, have the right to stop the Work until the lapse in coverage has been cured by the procurement of replacement coverage by the Contractor. The furnishing of notice by the Contractor shall not relieve the Contractor of any contractual obligation to provide any required coverage.

**§ 11.2 Owner's Insurance**

**§ 11.2.1** The Owner shall purchase and maintain insurance of the types and limits of liability, containing the endorsements, and subject to the terms and conditions, as described in the Agreement or elsewhere in the Contract Documents. The Owner shall purchase and maintain the required insurance from an insurance company or insurance companies lawfully authorized to issue insurance in the jurisdiction where the Project is located.

**§ 11.2.2 Failure to Purchase Required Property Insurance.** If the Owner fails to purchase and maintain the required property insurance, with all of the coverages and in the amounts described in the Agreement or elsewhere in the Contract Documents, the Owner shall inform the Contractor in writing prior to commencement of the Work. Upon receipt of notice from the Owner, the Contractor may delay commencement of the Work and may obtain insurance that will protect the interests of the Contractor, Subcontractors, and Sub-Subcontractors in the Work. When the failure to provide coverage has been cured or resolved, the Contract Sum and Contract Time shall be equitably adjusted. In the event the Owner fails to procure coverage, the Owner waives all rights against the Contractor, Subcontractors, and Sub-subcontractors to the extent the loss to the Owner would have been covered by the insurance to have been procured by the Owner. The cost of the insurance shall be charged to the Owner by a Change Order. If the Owner does not provide written notice, and the Contractor is damaged by the failure or neglect of the Owner to purchase or maintain the required insurance, the Owner shall reimburse the Contractor for all reasonable costs and damages attributable thereto.

**§ 11.2.3 Notice of Cancellation or Expiration of Owner's Required Property Insurance.** Within three (3) business days of the date the Owner becomes aware of an impending or actual cancellation or expiration of any property insurance required by the Contract Documents, the Owner shall provide notice to the Contractor of such impending or actual


**AIA Document A201® – 2017.** Copyright © 1911, 1915, 1918, 1925, 1937, 1951, 1958, 1961, 1963, 1966, 1970, 1976, 1987, 1997, 2007 and 2017 by The American Institute of Architects. All rights reserved. The "American Institute of Architects," "AIA," the AIA Logo, "A201," and "AIA Contract Documents" are registered trademarks and may not be used without permission. This document was produced by AIA software at 17:51:08 ET on 11/09/2020 under Order No.7227609709 which expires on 02/14/2021, is not for resale, is licensed for one-time use only, and may only be used in accordance with the AIA Contract Documents® Terms of Service. To report copyright violations, e-mail copyright@aia.org.
**User Notes:** (1178953302)

cancellation or expiration. Unless the lapse in coverage arises from an act or omission of the Contractor: (1) the Contractor, upon receipt of notice from the Owner, shall have the right to stop the Work until the lapse in coverage has been cured by the procurement of replacement coverage by either the Owner or the Contractor; (2) the Contract Time and Contract Sum shall be equitably adjusted; and (3) the Owner waives all rights against the Contractor, Subcontractors, and Sub-subcontractors to the extent any loss to the Owner would have been covered by the insurance had it not expired or been cancelled. If the Contractor purchases replacement coverage, the cost of the insurance shall be charged to the Owner by an appropriate Change Order. The furnishing of notice by the Owner shall not relieve the Owner of any contractual obligation to provide required insurance.

**§ 11.3 Waivers of Subrogation**

**§ 11.3.1** The Owner and Contractor waive all rights against (1) each other and any of their subcontractors, sub-subcontractors, agents, and employees, each of the other; (2) the Architect and Architect's consultants; and (3) Separate Contractors, if any, and any of their subcontractors, sub-subcontractors, agents, and employees, for damages caused by fire, or other causes of loss, to the extent those losses are covered by property insurance required by the Agreement or other property insurance applicable to the Project, except such rights as they have to proceeds of such insurance. The Owner or Contractor, as appropriate, shall require similar written waivers in favor of the individuals and entities identified above from the Architect, Architect's consultants, Separate Contractors, subcontractors, and sub-subcontractors. The policies of insurance purchased and maintained by each person or entity agreeing to waive claims pursuant to this section 11.3.1 shall not prohibit this waiver of subrogation. This waiver of subrogation shall be effective as to a person or entity (1) even though that person or entity would otherwise have a duty of indemnification, contractual or otherwise, (2) even though that person or entity did not pay the insurance premium directly or indirectly, or (3) whether or not the person or entity had an insurable interest in the damaged property.

**§ 11.3.2** If during the Project construction period the Owner insures properties, real or personal or both, at or adjacent to the site by property insurance under policies separate from those insuring the Project, or if after final payment property insurance is to be provided on the completed Project through a policy or policies other than those insuring the Project during the construction period, to the extent permissible by such policies, the Owner waives all rights in accordance with the terms of Section 11.3.1 for damages caused by fire or other causes of loss covered by this separate property insurance.

**§ 11.4 Loss of Use, Business Interruption, and Delay in Completion Insurance**

The Owner, at the Owner's option, may purchase and maintain insurance that will protect the Owner against loss of use of the Owner's property, or the inability to conduct normal operations, due to fire or other causes of loss. The Owner waives all rights of action against the Contractor and Architect for loss of use of the Owner's property, due to fire or other hazards however caused.

**§11.5 Adjustment and Settlement of Insured Loss**

**§ 11.5.1** A loss insured under the property insurance required by the Agreement shall be adjusted by the Owner as fiduciary and made payable to the Owner as fiduciary for the insureds, as their interests may appear, subject to requirements of any applicable mortgagee clause and of Section 11.5.2. The Owner shall pay the Architect and Contractor their just shares of insurance proceeds received by the Owner, and by appropriate agreements the Architect and Contractor shall make payments to their consultants and Subcontractors in similar manner.

**§ 11.5.2** Prior to settlement of an insured loss, the Owner shall notify the Contractor of the terms of the proposed settlement as well as the proposed allocation of the insurance proceeds. The Contractor shall have 14 days from receipt of notice to object to the proposed settlement or allocation of the proceeds. If the Contractor does not object, the Owner shall settle the loss and the Contractor shall be bound by the settlement and allocation. Upon receipt, the Owner shall deposit the insurance proceeds in a separate account and make the appropriate distributions. Thereafter, if no other agreement is made or the Owner does not terminate the Contract for convenience, the Owner and Contractor shall execute a Change Order for reconstruction of the damaged or destroyed Work in the amount allocated for that purpose. If the Contractor timely objects to either the terms of the proposed settlement or the allocation of the proceeds, the Owner may proceed to settle the insured loss, and any dispute between the Owner and Contractor arising out of the settlement or allocation of the proceeds shall be resolved pursuant to Article 15. Pending resolution of any dispute, the Owner may issue a Construction Change Directive for the reconstruction of the damaged or destroyed Work.


**AIA Document A201® – 2017.** Copyright © 1911, 1915, 1918, 1925, 1937, 1951, 1958, 1961, 1963, 1966, 1970, 1976, 1987, 1997, 2007 and 2017 by The American Institute of Architects. All rights reserved. The "American Institute of Architects," "AIA," the AIA Logo, "A201," and "AIA Contract Documents" are registered trademarks and may not be used without permission. This document was produced by AIA software at 17:51:08 ET on 11/09/2020 under Order No.7227609709 which expires on 02/14/2021, is not for resale, is licensed for one-time use only, and may only be used in accordance with the AIA Contract Documents® Terms of Service. To report copyright violations, e-mail copyright@aia.org.
**User Notes:** (1178953302)

## ARTICLE 12 UNCOVERING AND CORRECTION OF WORK

### § 12.1 Uncovering of Work

**§ 12.1.1** If a portion of the Work is covered contrary to the Architect's request or to requirements specifically expressed in the Contract Documents, it must, if requested in writing by the Architect, be uncovered for the Architect's examination and be replaced at the Contractor's expense without change in the Contract Time.

**§ 12.1.2** If a portion of the Work has been covered that the Architect has not specifically requested to examine prior to its being covered, the Architect may request to see such Work and it shall be uncovered by the Contractor. If such Work is in accordance with the Contract Documents, the Contractor shall be entitled to an equitable adjustment to the Contract Sum and Contract Time as may be appropriate. If such Work is not in accordance with the Contract Documents, the costs of uncovering the Work, and the cost of correction, shall be at the Contractor's expense.

### § 12.2 Correction of Work

### § 12.2.1 Before Substantial Completion

The Contractor shall promptly correct Work rejected by the Architect or failing to conform to the requirements of the Contract Documents, discovered before Substantial Completion and whether or not fabricated, installed or completed. Costs of correcting such rejected Work, including additional testing and inspections, the cost of uncovering and replacement, and compensation for the Architect's services and expenses made necessary thereby, shall be at the Contractor's expense.

### § 12.2.2 After Substantial Completion

**§ 12.2.2.1** In addition to the Contractor's obligations under Section 3.5, if, within one year after the date of Substantial Completion of the Work or designated portion thereof or after the date for commencement of warranties established under Section 9.9.1, or by terms of any applicable special warranty required by the Contract Documents, any of the Work is found to be not in accordance with the requirements of the Contract Documents, the Contractor shall correct it promptly after receipt of notice from the Owner to do so, unless the Owner has previously given the Contractor a written acceptance of such condition. The Owner shall give such notice promptly after discovery of the condition. During the one-year period for correction of Work, if the Owner fails to notify the Contractor and give the Contractor an opportunity to make the correction, the Owner waives the rights to require correction by the Contractor and to make a claim for breach of warranty. If the Contractor fails to correct nonconforming Work within a reasonable time during that period after receipt of notice from the Owner or Architect, the Owner may correct it in accordance with Section 2.5.

**§ 12.2.2.2** The one-year period for correction of Work shall be extended with respect to portions of Work first performed after Substantial Completion by the period of time between Substantial Completion and the actual completion of that portion of the Work.

**§ 12.2.2.3** The one-year period for correction of Work shall not be extended by corrective Work performed by the Contractor pursuant to this Section 12.2.

**§ 12.2.3** The Contractor shall remove from the site portions of the Work that are not in accordance with the requirements of the Contract Documents and are neither corrected by the Contractor nor accepted by the Owner.

**§ 12.2.4** The Contractor shall bear the cost of correcting destroyed or damaged construction of the Owner or Separate Contractors, whether completed or partially completed, caused by the Contractor's correction or removal of Work that is not in accordance with the requirements of the Contract Documents.

**§ 12.2.5** Nothing contained in this Section 12.2 shall be construed to establish a period of limitation with respect to other obligations the Contractor has under the Contract Documents. Establishment of the one-year period for correction of Work as described in Section 12.2.2 relates only to the specific obligation of the Contractor to correct the Work, and has no relationship to the time within which the obligation to comply with the Contract Documents may be sought to be enforced, nor to the time within which proceedings may be commenced to establish the Contractor's liability with respect to the Contractor's obligations other than specifically to correct the Work.


**AIA Document A201® – 2017.** Copyright © 1911, 1915, 1918, 1925, 1937, 1951, 1958, 1961, 1963, 1966, 1970, 1976, 1987, 1997, 2007 and 2017 by The American Institute of Architects. All rights reserved. The "American Institute of Architects," "AIA," the AIA Logo, "A201," and "AIA Contract Documents" are registered trademarks and may not be used without permission. This document was produced by AIA software at 17:51:08 ET on 11/09/2020 under Order No.7227609709 which expires on 02/14/2021, is not for resale, is licensed for one-time use only, and may only be used in accordance with the AIA Contract Documents® Terms of Service. To report copyright violations, e-mail copyright@aia.org.
**User Notes:** (1178953302)

**§ 12.3 Acceptance of Nonconforming Work**
If the Owner prefers to accept Work that is not in accordance with the requirements of the Contract Documents, the Owner may do so instead of requiring its removal and correction, in which case the Contract Sum will be reduced as appropriate and equitable. Such adjustment shall be effected whether or not final payment has been made.

## ARTICLE 13 MISCELLANEOUS PROVISIONS

**§ 13.1 Governing Law**
The Contract shall be governed by the law of the place where the Project is located, excluding that jurisdiction's choice of law rules. If the parties have selected arbitration as the method of binding dispute resolution, the Federal Arbitration Act shall govern Section 15.4.

**§ 13.2 Successors and Assigns**
**§ 13.2.1** The Owner and Contractor respectively bind themselves, their partners, successors, assigns, and legal representatives to covenants, agreements, and obligations contained in the Contract Documents. Except as provided in Section 13.2.2, neither party to the Contract shall assign the Contract as a whole without written consent of the other. If either party attempts to make an assignment without such consent, that party shall nevertheless remain legally responsible for all obligations under the Contract.

**§ 13.2.2** The Owner may, without consent of the Contractor, assign the Contract to a lender providing construction financing for the Project, if the lender assumes the Owner's rights and obligations under the Contract Documents. The Contractor shall execute all consents reasonably required to facilitate the assignment.

**§ 13.3 Rights and Remedies**
**§ 13.3.1** Duties and obligations imposed by the Contract Documents and rights and remedies available thereunder shall be in addition to and not a limitation of duties, obligations, rights, and remedies otherwise imposed or available by law.

**§ 13.3.2** No action or failure to act by the Owner, Architect, or Contractor shall constitute a waiver of a right or duty afforded them under the Contract, nor shall such action or failure to act constitute approval of or acquiescence in a breach thereunder, except as may be specifically agreed upon in writing.

**§ 13.4 Tests and Inspections**
**§ 13.4.1** Tests, inspections, and approvals of portions of the Work shall be made as required by the Contract Documents and by applicable laws, statutes, ordinances, codes, rules, and regulations or lawful orders of public authorities. Unless otherwise provided, the Contractor shall make arrangements for such tests, inspections, and approvals with an independent testing laboratory or entity acceptable to the Owner, or with the appropriate public authority, and shall bear all related costs of tests, inspections, and approvals. The Contractor shall give the Architect timely notice of when and where tests and inspections are to be made so that the Architect may be present for such procedures. The Owner shall bear costs of tests, inspections, or approvals that do not become requirements until after bids are received or negotiations concluded. The Owner shall directly arrange and pay for tests, inspections, or approvals where building codes or applicable laws or regulations so require.

**§ 13.4.2** If the Architect, Owner, or public authorities having jurisdiction determine that portions of the Work require additional testing, inspection, or approval not included under Section 13.4.1, the Architect will, upon written authorization from the Owner, instruct the Contractor to make arrangements for such additional testing, inspection, or approval, by an entity acceptable to the Owner, and the Contractor shall give timely notice to the Architect of when and where tests and inspections are to be made so that the Architect may be present for such procedures. Such costs, except as provided in Section 13.4.3, shall be at the Owner's expense.

**§ 13.4.3** If procedures for testing, inspection, or approval under Sections 13.4.1 and 13.4.2 reveal failure of the portions of the Work to comply with requirements established by the Contract Documents, all costs made necessary by such failure, including those of repeated procedures and compensation for the Architect's services and expenses, shall be at the Contractor's expense.

**§ 13.4.4** Required certificates of testing, inspection, or approval shall, unless otherwise required by the Contract Documents, be secured by the Contractor and promptly delivered to the Architect.


**AIA Document A201® – 2017.** Copyright © 1911, 1915, 1918, 1925, 1937, 1951, 1958, 1961, 1963, 1966, 1970, 1976, 1987, 1997, 2007 and 2017 by The American Institute of Architects. All rights reserved. The "American Institute of Architects," "AIA," the AIA Logo, "A201," and "AIA Contract Documents" are registered trademarks and may not be used without permission. This document was produced by AIA software at 17:51:08 ET on 11/09/2020 under Order No.7227609709 which expires on 02/14/2021, is not for resale, is licensed for one-time use only, and may only be used in accordance with the AIA Contract Documents® Terms of Service. To report copyright violations, e-mail copyright@aia.org.
**User Notes:** (1178953302)

**§ 13.4.5** If the Architect is to observe tests, inspections, or approvals required by the Contract Documents, the Architect will do so promptly and, where practicable, at the normal place of testing.

**§ 13.4.6** Tests or inspections conducted pursuant to the Contract Documents shall be made promptly to avoid unreasonable delay in the Work.

**§ 13.5 Interest**

Payments due and unpaid under the Contract Documents shall bear interest from the date payment is due at the rate the parties agree upon in writing or, in the absence thereof, at the legal rate prevailing from time to time at the place where the Project is located.

## ARTICLE 14 TERMINATION OR SUSPENSION OF THE CONTRACT

**§ 14.1 Termination by the Contractor**

**§ 14.1.1** The Contractor may terminate the Contract if the Work is stopped for a period of 30 consecutive days through no act or fault of the Contractor, a Subcontractor, a Sub-subcontractor, their agents or employees, or any other persons or entities performing portions of the Work, for any of the following reasons:

- **.1** Issuance of an order of a court or other public authority having jurisdiction that requires all Work to be stopped;
- **.2** An act of government, such as a declaration of national emergency, that requires all Work to be stopped;
- **.3** Because the Architect has not issued a Certificate for Payment and has not notified the Contractor of the reason for withholding certification as provided in Section 9.4.1, or because the Owner has not made payment on a Certificate for Payment within the time stated in the Contract Documents; or
- **.4** The Owner has failed to furnish to the Contractor reasonable evidence as required by Section 2.2.

**§ 14.1.2** The Contractor may terminate the Contract if, through no act or fault of the Contractor, a Subcontractor, a Sub-subcontractor, their agents or employees, or any other persons or entities performing portions of the Work, repeated suspensions, delays, or interruptions of the entire Work by the Owner as described in Section 14.3, constitute in the aggregate more than 100 percent of the total number of days scheduled for completion, or 120 days in any 365-day period, whichever is less.

**§ 14.1.3** If one of the reasons described in Section 14.1.1 or 14.1.2 exists, the Contractor may, upon seven days' notice to the Owner and Architect, terminate the Contract and recover from the Owner payment for Work executed, as well as reasonable overhead and profit on Work not executed, and costs incurred by reason of such termination.

**§ 14.1.4** If the Work is stopped for a period of 60 consecutive days through no act or fault of the Contractor, a Subcontractor, a Sub-subcontractor, or their agents or employees or any other persons or entities performing portions of the Work because the Owner has repeatedly failed to fulfill the Owner's obligations under the Contract Documents with respect to matters important to the progress of the Work, the Contractor may, upon seven additional days' notice to the Owner and the Architect, terminate the Contract and recover from the Owner as provided in Section 14.1.3.

**§ 14.2 Termination by the Owner for Cause**

**§ 14.2.1** The Owner may terminate the Contract if the Contractor

- **.1** repeatedly refuses or fails to supply enough properly skilled workers or proper materials;
- **.2** fails to make payment to Subcontractors or suppliers in accordance with the respective agreements between the Contractor and the Subcontractors or suppliers;
- **.3** repeatedly disregards applicable laws, statutes, ordinances, codes, rules and regulations, or lawful orders of a public authority; or
- **.4** otherwise is guilty of substantial breach of a provision of the Contract Documents.

**§ 14.2.2** When any of the reasons described in Section 14.2.1 exist, and upon certification by the Architect that sufficient cause exists to justify such action, the Owner may, without prejudice to any other rights or remedies of the Owner and after giving the Contractor and the Contractor's surety, if any, seven days' notice, terminate employment of the Contractor and may, subject to any prior rights of the surety:

- **.1** Exclude the Contractor from the site and take possession of all materials, equipment, tools, and construction equipment and machinery thereon owned by the Contractor;
- **.2** Accept assignment of subcontracts pursuant to Section 5.4; and


**AIA Document A201® – 2017.** Copyright © 1911, 1915, 1918, 1925, 1937, 1951, 1958, 1961, 1963, 1966, 1970, 1976, 1987, 1997, 2007 and 2017 by The American Institute of Architects. All rights reserved. The "American Institute of Architects," "AIA," the AIA Logo, "A201," and "AIA Contract Documents" are registered trademarks and may not be used without permission. This document was produced by AIA software at 17:51:08 ET on 11/09/2020 under Order No.7227609709 which expires on 02/14/2021, is not for resale, is licensed for one-time use only, and may only be used in accordance with the AIA Contract Documents® Terms of Service. To report copyright violations, e-mail copyright@aia.org.
**User Notes:** (1178953302)

**.3** Finish the Work by whatever reasonable method the Owner may deem expedient. Upon written request of the Contractor, the Owner shall furnish to the Contractor a detailed accounting of the costs incurred by the Owner in finishing the Work.

**§ 14.2.3** When the Owner terminates the Contract for one of the reasons stated in Section 14.2.1, the Contractor shall not be entitled to receive further payment until the Work is finished.

**§ 14.2.4** If the unpaid balance of the Contract Sum exceeds costs of finishing the Work, including compensation for the Architect's services and expenses made necessary thereby, and other damages incurred by the Owner and not expressly waived, such excess shall be paid to the Contractor. If such costs and damages exceed the unpaid balance, the Contractor shall pay the difference to the Owner. The amount to be paid to the Contractor or Owner, as the case may be, shall be certified by the Initial Decision Maker, upon application, and this obligation for payment shall survive termination of the Contract.

**§ 14.3 Suspension by the Owner for Convenience**

**§ 14.3.1** The Owner may, without cause, order the Contractor in writing to suspend, delay or interrupt the Work, in whole or in part for such period of time as the Owner may determine.

**§ 14.3.2** The Contract Sum and Contract Time shall be adjusted for increases in the cost and time caused by suspension, delay, or interruption under Section 14.3.1. Adjustment of the Contract Sum shall include profit. No adjustment shall be made to the extent

**.1** that performance is, was, or would have been, so suspended, delayed, or interrupted, by another cause for which the Contractor is responsible; or

**.2** that an equitable adjustment is made or denied under another provision of the Contract.

**§ 14.4 Termination by the Owner for Convenience**

**§ 14.4.1** The Owner may, at any time, terminate the Contract for the Owner's convenience and without cause.

**§ 14.4.2** Upon receipt of notice from the Owner of such termination for the Owner's convenience, the Contractor shall

**.1** cease operations as directed by the Owner in the notice;

**.2** take actions necessary, or that the Owner may direct, for the protection and preservation of the Work; and

**.3** except for Work directed to be performed prior to the effective date of termination stated in the notice, terminate all existing subcontracts and purchase orders and enter into no further subcontracts and purchase orders.

**§ 14.4.3** In case of such termination for the Owner's convenience, the Owner shall pay the Contractor for Work properly executed; costs incurred by reason of the termination, including costs attributable to termination of Subcontracts; and the termination fee, if any, set forth in the Agreement.

## ARTICLE 15 CLAIMS AND DISPUTES

**§ 15.1 Claims**

**§ 15.1.1 Definition**

A Claim is a demand or assertion by one of the parties seeking, as a matter of right, payment of money, a change in the Contract Time, or other relief with respect to the terms of the Contract. The term "Claim" also includes other disputes and matters in question between the Owner and Contractor arising out of or relating to the Contract. The responsibility to substantiate Claims shall rest with the party making the Claim. This Section 15.1.1 does not require the Owner to file a Claim in order to impose liquidated damages in accordance with the Contract Documents.

**§ 15.1.2 Time Limits on Claims**

The Owner and Contractor shall commence all Claims and causes of action against the other and arising out of or related to the Contract, whether in contract, tort, breach of warranty or otherwise, in accordance with the requirements of the binding dispute resolution method selected in the Agreement and within the period specified by applicable law, but in any case not more than 10 years after the date of Substantial Completion of the Work. The Owner and Contractor waive all Claims and causes of action not commenced in accordance with this Section 15.1.2.


**AIA Document A201® – 2017.** Copyright © 1911, 1915, 1918, 1925, 1937, 1951, 1958, 1961, 1963, 1966, 1970, 1976, 1987, 1997, 2007 and 2017 by The American Institute of Architects. All rights reserved. The "American Institute of Architects," "AIA," the AIA Logo, "A201," and "AIA Contract Documents" are registered trademarks and may not be used without permission. This document was produced by AIA software at 17:51:08 ET on 11/09/2020 under Order No.7227609709 which expires on 02/14/2021, is not for resale, is licensed for one-time use only, and may only be used in accordance with the AIA Contract Documents® Terms of Service. To report copyright violations, e-mail copyright@aia.org.
**User Notes:** (1178953302)

**§ 15.1.3 Notice of Claims**

**§ 15.1.3.1** Claims by either the Owner or Contractor, where the condition giving rise to the Claim is first discovered prior to expiration of the period for correction of the Work set forth in Section 12.2.2, shall be initiated by notice to the other party and to the Initial Decision Maker with a copy sent to the Architect, if the Architect is not serving as the Initial Decision Maker. Claims by either party under this Section 15.1.3.1 shall be initiated within 21 days after occurrence of the event giving rise to such Claim or within 21 days after the claimant first recognizes the condition giving rise to the Claim, whichever is later.

**§ 15.1.3.2** Claims by either the Owner or Contractor, where the condition giving rise to the Claim is first discovered after expiration of the period for correction of the Work set forth in Section 12.2.2, shall be initiated by notice to the other party. In such event, no decision by the Initial Decision Maker is required.

**§ 15.1.4 Continuing Contract Performance**

**§ 15.1.4.1** Pending final resolution of a Claim, except as otherwise agreed in writing or as provided in Section 9.7 and Article 14, the Contractor shall proceed diligently with performance of the Contract and the Owner shall continue to make payments in accordance with the Contract Documents.

**§ 15.1.4.2** The Contract Sum and Contract Time shall be adjusted in accordance with the Initial Decision Maker's decision, subject to the right of either party to proceed in accordance with this Article 15. The Architect will issue Certificates for Payment in accordance with the decision of the Initial Decision Maker.

**§ 15.1.5 Claims for Additional Cost**

If the Contractor wishes to make a Claim for an increase in the Contract Sum, notice as provided in Section 15.1.3 shall be given before proceeding to execute the portion of the Work that is the subject of the Claim. Prior notice is not required for Claims relating to an emergency endangering life or property arising under Section 10.4.

**§ 15.1.6 Claims for Additional Time**

**§ 15.1.6.1** If the Contractor wishes to make a Claim for an increase in the Contract Time, notice as provided in Section 15.1.3 shall be given. The Contractor's Claim shall include an estimate of cost and of probable effect of delay on progress of the Work. In the case of a continuing delay, only one Claim is necessary.

**§ 15.1.6.2** If adverse weather conditions are the basis for a Claim for additional time, such Claim shall be documented by data substantiating that weather conditions were abnormal for the period of time, could not have been reasonably anticipated, and had an adverse effect on the scheduled construction.

**§ 15.1.7 Waiver of Claims for Consequential Damages**

The Contractor and Owner waive Claims against each other for consequential damages arising out of or relating to this Contract. This mutual waiver includes

- **.1** damages incurred by the Owner for rental expenses, for losses of use, income, profit, financing, business and reputation, and for loss of management or employee productivity or of the services of such persons; and
- **.2** damages incurred by the Contractor for principal office expenses including the compensation of personnel stationed there, for losses of financing, business and reputation, and for loss of profit, except anticipated profit arising directly from the Work.

This mutual waiver is applicable, without limitation, to all consequential damages due to either party's termination in accordance with Article 14. Nothing contained in this Section 15.1.7 shall be deemed to preclude assessment of liquidated damages, when applicable, in accordance with the requirements of the Contract Documents.

**§ 15.2 Initial Decision**

**§ 15.2.1** Claims, excluding those where the condition giving rise to the Claim is first discovered after expiration of the period for correction of the Work set forth in Section 12.2.2 or arising under Sections 10.3, 10.4, and 11.5, shall be referred to the Initial Decision Maker for initial decision. The Architect will serve as the Initial Decision Maker, unless otherwise indicated in the Agreement. Except for those Claims excluded by this Section 15.2.1, an initial decision shall be required as a condition precedent to mediation of any Claim. If an initial decision has not been rendered within 30 days after the Claim has been referred to the Initial Decision Maker, the party asserting the Claim may demand mediation and binding dispute resolution without a decision having been rendered. Unless the Initial Decision Maker


**AIA Document A201® – 2017.** Copyright © 1911, 1915, 1918, 1925, 1937, 1951, 1958, 1961, 1963, 1966, 1970, 1976, 1987, 1997, 2007 and 2017 by The American Institute of Architects. All rights reserved. The "American Institute of Architects," "AIA," the AIA Logo, "A201," and "AIA Contract Documents" are registered trademarks and may not be used without permission. This document was produced by AIA software at 17:51:08 ET on 11/09/2020 under Order No.7227609709 which expires on 02/14/2021, is not for resale, is licensed for one-time use only, and may only be used in accordance with the AIA Contract Documents® Terms of Service. To report copyright violations, e-mail copyright@aia.org.
**User Notes:** (1178953302)

and all affected parties agree, the Initial Decision Maker will not decide disputes between the Contractor and persons or entities other than the Owner.

**§ 15.2.2** The Initial Decision Maker will review Claims and within ten days of the receipt of a Claim take one or more of the following actions: (1) request additional supporting data from the claimant or a response with supporting data from the other party, (2) reject the Claim in whole or in part, (3) approve the Claim, (4) suggest a compromise, or (5) advise the parties that the Initial Decision Maker is unable to resolve the Claim if the Initial Decision Maker lacks sufficient information to evaluate the merits of the Claim or if the Initial Decision Maker concludes that, in the Initial Decision Maker's sole discretion, it would be inappropriate for the Initial Decision Maker to resolve the Claim.

**§ 15.2.3** In evaluating Claims, the Initial Decision Maker may, but shall not be obligated to, consult with or seek information from either party or from persons with special knowledge or expertise who may assist the Initial Decision Maker in rendering a decision. The Initial Decision Maker may request the Owner to authorize retention of such persons at the Owner's expense.

**§ 15.2.4** If the Initial Decision Maker requests a party to provide a response to a Claim or to furnish additional supporting data, such party shall respond, within ten days after receipt of the request, and shall either (1) provide a response on the requested supporting data, (2) advise the Initial Decision Maker when the response or supporting data will be furnished, or (3) advise the Initial Decision Maker that no supporting data will be furnished. Upon receipt of the response or supporting data, if any, the Initial Decision Maker will either reject or approve the Claim in whole or in part.

**§ 15.2.5** The Initial Decision Maker will render an initial decision approving or rejecting the Claim, or indicating that the Initial Decision Maker is unable to resolve the Claim. This initial decision shall (1) be in writing; (2) state the reasons therefor; and (3) notify the parties and the Architect, if the Architect is not serving as the Initial Decision Maker, of any change in the Contract Sum or Contract Time or both. The initial decision shall be final and binding on the parties but subject to mediation and, if the parties fail to resolve their dispute through mediation, to binding dispute resolution.

**§ 15.2.6** Either party may file for mediation of an initial decision at any time, subject to the terms of Section 15.2.6.1.

**§ 15.2.6.1** Either party may, within 30 days from the date of receipt of an initial decision, demand in writing that the other party file for mediation. If such a demand is made and the party receiving the demand fails to file for mediation within 30 days after receipt thereof, then both parties waive their rights to mediate or pursue binding dispute resolution proceedings with respect to the initial decision.

**§ 15.2.7** In the event of a Claim against the Contractor, the Owner may, but is not obligated to, notify the surety, if any, of the nature and amount of the Claim. If the Claim relates to a possibility of a Contractor's default, the Owner may, but is not obligated to, notify the surety and request the surety's assistance in resolving the controversy.

**§ 15.2.8** If a Claim relates to or is the subject of a mechanic's lien, the party asserting such Claim may proceed in accordance with applicable law to comply with the lien notice or filing deadlines.

**§ 15.3 Mediation**

**§ 15.3.1** Claims, disputes, or other matters in controversy arising out of or related to the Contract, except those waived as provided for in Sections 9.10.4, 9.10.5, and 15.1.7, shall be subject to mediation as a condition precedent to binding dispute resolution.

**§ 15.3.2** The parties shall endeavor to resolve their Claims by mediation which, unless the parties mutually agree otherwise, shall be administered by the American Arbitration Association in accordance with its Construction Industry Mediation Procedures in effect on the date of the Agreement. A request for mediation shall be made in writing, delivered to the other party to the Contract, and filed with the person or entity administering the mediation. The request may be made concurrently with the filing of binding dispute resolution proceedings but, in such event, mediation shall proceed in advance of binding dispute resolution proceedings, which shall be stayed pending mediation for a period of 60 days from the date of filing, unless stayed for a longer period by agreement of the parties or court order. If an arbitration is stayed pursuant to this Section 15.3.2, the parties may nonetheless proceed to the selection of the arbitrator(s) and agree upon a schedule for later proceedings.


**AIA Document A201® – 2017.** Copyright © 1911, 1915, 1918, 1925, 1937, 1951, 1958, 1961, 1963, 1966, 1970, 1976, 1987, 1997, 2007 and 2017 by The American Institute of Architects. All rights reserved. The "American Institute of Architects," "AIA," the AIA Logo, "A201," and "AIA Contract Documents" are registered trademarks and may not be used without permission. This document was produced by AIA software at 17:51:08 ET on 11/09/2020 under Order No.7227609709 which expires on 02/14/2021, is not for resale, is licensed for one-time use only, and may only be used in accordance with the AIA Contract Documents® Terms of Service. To report copyright violations, e-mail copyright@aia.org.
**User Notes:** (1178953302)

**§ 15.3.3** Either party may, within 30 days from the date that mediation has been concluded without resolution of the dispute or 60 days after mediation has been demanded without resolution of the dispute, demand in writing that the other party file for binding dispute resolution. If such a demand is made and the party receiving the demand fails to file for binding dispute resolution within 60 days after receipt thereof, then both parties waive their rights to binding dispute resolution proceedings with respect to the initial decision.

**§ 15.3.4** The parties shall share the mediator's fee and any filing fees equally. The mediation shall be held in the place where the Project is located, unless another location is mutually agreed upon. Agreements reached in mediation shall be enforceable as settlement agreements in any court having jurisdiction thereof.

**§ 15.4 Arbitration**

**§ 15.4.1** If the parties have selected arbitration as the method for binding dispute resolution in the Agreement, any Claim subject to, but not resolved by, mediation shall be subject to arbitration which, unless the parties mutually agree otherwise, shall be administered by the American Arbitration Association in accordance with its Construction Industry Arbitration Rules in effect on the date of the Agreement. The Arbitration shall be conducted in the place where the Project is located, unless another location is mutually agreed upon. A demand for arbitration shall be made in writing, delivered to the other party to the Contract, and filed with the person or entity administering the arbitration. The party filing a notice of demand for arbitration must assert in the demand all Claims then known to that party on which arbitration is permitted to be demanded.

**§ 15.4.1.1** A demand for arbitration shall be made no earlier than concurrently with the filing of a request for mediation, but in no event shall it be made after the date when the institution of legal or equitable proceedings based on the Claim would be barred by the applicable statute of limitations. For statute of limitations purposes, receipt of a written demand for arbitration by the person or entity administering the arbitration shall constitute the institution of legal or equitable proceedings based on the Claim.

**§ 15.4.2** The award rendered by the arbitrator or arbitrators shall be final, and judgment may be entered upon it in accordance with applicable law in any court having jurisdiction thereof.

**§ 15.4.3** The foregoing agreement to arbitrate and other agreements to arbitrate with an additional person or entity duly consented to by parties to the Agreement, shall be specifically enforceable under applicable law in any court having jurisdiction thereof.

**§ 15.4.4 Consolidation or Joinder**

**§ 15.4.4.1** Subject to the rules of the American Arbitration Association or other applicable arbitration rules, either party may consolidate an arbitration conducted under this Agreement with any other arbitration to which it is a party provided that (1) the arbitration agreement governing the other arbitration permits consolidation, (2) the arbitrations to be consolidated substantially involve common questions of law or fact, and (3) the arbitrations employ materially similar procedural rules and methods for selecting arbitrator(s).

**§ 15.4.4.2** Subject to the rules of the American Arbitration Association or other applicable arbitration rules, either party may include by joinder persons or entities substantially involved in a common question of law or fact whose presence is required if complete relief is to be accorded in arbitration, provided that the party sought to be joined consents in writing to such joinder. Consent to arbitration involving an additional person or entity shall not constitute consent to arbitration of any claim, dispute or other matter in question not described in the written consent.

**§ 15.4.4.3** The Owner and Contractor grant to any person or entity made a party to an arbitration conducted under this Section 15.4, whether by joinder or consolidation, the same rights of joinder and consolidation as those of the Owner and Contractor under this Agreement.


**AIA Document A201® – 2017.** Copyright © 1911, 1915, 1918, 1925, 1937, 1951, 1958, 1961, 1963, 1966, 1970, 1976, 1987, 1997, 2007 and 2017 by The American Institute of Architects. All rights reserved. The "American Institute of Architects," "AIA," the AIA Logo, "A201," and "AIA Contract Documents" are registered trademarks and may not be used without permission. This document was produced by AIA software at 17:51:08 ET on 11/09/2020 under Order No.7227609709 which expires on 02/14/2021, is not for resale, is licensed for one-time use only, and may only be used in accordance with the AIA Contract Documents® Terms of Service. To report copyright violations, e-mail copyright@aia.org.
**User Notes:** (1178953302)

**SECTION 008000 - INFORMATION AVAILABLE TO ALL BIDDERS**

1.01 GENERAL

A. Geotechnical Material Information: Data in Geotechnical investigation reports included herein are provided to the Contractor for information only. Conditions are not intended as representations or warranties of accuracy or continuity between sampling locations. The Owner will not be responsible for interpretations or conclusions drawn from this data by Contractor.

End of Section

# Geotechnical Report

## Greenwich Public Schools

Greenwich High School Cardinal Stadium

10 Hillside Road
Greenwich, CT 06830

March 25, 2020

Prepared for:

**Kaeyer, Garment + Davidson Architects**
285 Main Street
Mount Kisco, NY 10549

Prepared by:

**SKYLANDS ENGINEERING, LLC**
124 Milton Road
Sparta, NJ 07871

# Geotechnical Report

## Greenwich Public Schools
Greenwich High School Cardinal Stadium

10 Hillside Road
Greenwich, CT 06830

March 25, 2020

Prepared for:

**Kaeyer, Garment + Davidson Architects**
285 Main Street
Mount Kisco, NY 10549

Prepared by:

**SKYLANDS ENGINEERING, LLC**
124 Milton Road
Sparta, NJ 07871
Certificate of Registration No. PEC.0001707

STATE OF CONNECTICUT
EUGENE SCHWARZCOCK
No. 22516
LICENSED
PROFESSIONAL ENGINEER

3-25-2020

Eugene J. Schwarzcock, Professional Engineer
Connecticut License No. PEN.0022516

Date

# TABLE OF CONTENTS

**INTRODUCTION** ..... **1**

**GEOLOGY** ..... **1**

**SUBSURFACE INVESTIGATION** ..... **1**

**SUBSURFACE CONDITIONS** ..... **2**

**DESIGN RECOMMENDATIONS**

- **HOME BLEACHERS** ..... **3**
- **VISITOR BLEACHERS** ..... **4**
- **VISITOR SIDE BUILDING** ..... **4**

**CONSTRUCTION RECOMMENDATIONS** ..... **5**

**APPENDIX**

- Boring Location Plan
- Boring Logs

## INTRODUCTION

This project consists of the replacement of two sets of bleachers, and construction of a new standalone building at the Greenwich High School Cardinal Stadium, located immediately north of Route 1, between Old Church Road and Hillside Road in the Town of Greenwich, Fairfield County, Connecticut. The new home and visitor bleachers will replace existing bleachers on the south and north side of Cardinal Field, respectively, while the visitor side building will be situated east of the new visitor bleachers.

The Home Bleachers will be ±205 ft. long x ±67 ft. wide, with ramps and stairs at each end, and with restrooms, concessions, team room, and other facilities located at ground level. It is anticipated the ground floor slab will be constructed at or near existing grade, which varies from El. 58.2 at the west end, to El. 59. No below-ground space is proposed.

The Visitor Bleachers will be ±140 ft. long x ±24 ft. wide, with ramps and stairs at each end. It is anticipated that grades around the Visitor Bleachers will not change significantly, with existing grades at ±58.5.

The new Visitor Side Building will be ±30 ft. wide x ±60 ft. long, a single story tall without basement, and will contain space for team storage, restrooms, and general storage.

This Geotechnical Report presents the findings of a subsurface investigation program prepared and conducted by others, as well as recommendations for design and construction of the planned improvements.

## GEOLOGY

Based on our review of topographic maps and published geologic data for this area of Greenwich, including the *Surficial Materials Map of Connecticut*, 1992 by Stone, Schafter, et. al., and the *Quaternary Geologic Map of Connecticut and Long Island Sound Basin*, 2005, by Stone, Schafer, et. al., this site is expected to be underlain by <40 ft. of glacial till consisting mostly of granular soils (sands and gravels). Underlying bedrock is expected to be consist of Harrison gneiss, based on the *Bedrock Geological Map of Connecticut*, 1985, by Rodgers.

## SUBSURFACE INVESTIGATION

Soiltesting, Inc. of Oxford, CT performed a total of twenty-two (22) between February 21 and 28, 2020 to identify the subsurface conditions present beneath the project site. Borings B-1 through B-7 were performed around the area of the Home Bleachers, borings B-8 through B-13 were performed around the Visitor Bleachers, and borings B-14 through B-17 were performed at the proposed Visitor Side Building. Note that three (3) borings were performed at the locations of borings B-5 and B-11 due to the presence of suspected shallow bedrock there; the additional borings were labeled as "B-#A" and "B-#B". Similarly, two (2) borings were performed at the location of boring B-17 due to the presence of boulders at shallow depth.

Most borings were sampled continuously from the ground surface to a depth of 12 ft., then at 5 ft. intervals to the completion of the boring. All borings were drilled using a 4-¼ in. hollow stem auger to advance and maintain the hole. Sampling was performed using a 2 in. O.D. split spoon sampler driven by a 140 lb. hammer with a 30 in. drop and the number of blows for each 6 in. increment was recorded,

in accordance with procedures outlined in ASTM D1586, Standard Test Method for Standard Penetration Test (SPT) and Split-Barrel Sampling of Soils. Bedrock and/or boulders was cored from selected borings using an N-size core barrel in accordance with ASTM D 2113 - Standard Practice for Rock Core Drilling and Sampling. Soil samples were classified by an experienced geologist from Soiltesting, generally in accordance with D.M. Burmister's "Suggested Test Methods for Identification of Soils" (ASTM, 1958). Bedrock samples were also classified by a geologist according to their geologic origin and measured rock quality designation (RQD). The borings were terminated at depths ranging from 2.5 ft. to 25.3 ft.

Groundwater was recorded at each boring when it was first encountered since all the borings were performed without the introduction of water.

The boring location plan, and boring logs are presented in the Appendix. The boring logs were amended by Skylands Engineering to add approximate ground elevations and groundwater elevations, as we estimated using the boring location plan and site plan elevations.

## SUBSURFACE CONDITIONS

The soils encountered beneath this site are generally consistent with the published geologic descriptions of granular glacial till. At the Home Bleachers, borings B-1 through B-7 encountered mostly medium dense and dense granular soils over generally shallow bedrock. Soils typically consisted of brown and light brown, medium to fine and coarse to fine sand, with minor percentages of silt and coarse to (mostly) fine gravel. In most borings, the soils above a depth of 4 ft. to 6 ft. were also described as being possible fill. Isolated pockets of silt were encountered sporadically, with organic silt present in the top 4 ft. of boring B-7. Cobbles and boulders were encountered within the top 6 ft. at borings B-1, B-2 and B-3 at the western end of the bleachers. Standard penetration test N-values were typically >50 blows per foot (bpf). With the exception of boring B-5, weathered bedrock was encountered beginning at depths of 16 ft. (El. 42.5) to 10 ft. (El. 48.7), with shallower rock to the east. More competent bedrock, as indicated by auger refusal, was present beginning 6 in. to 3 ft. below the weathered bedrock, except at boring B-4 where at least 12 ft. of weathered bedrock is present. Boring B-5 was performed ±60 ft. east of the proposed bleachers and adjacent to a suspected bedrock outcrop; this boring revealed shallow, medium dense brown silt with fine gravel and sand with auger refusal occurring at depths of 2.5 ft. to 4.9 ft. (El. 63.5 to El. 61.1). Groundwater was measured in all of these borings except B-5, which was performed on higher ground atop suspected bedrock. Groundwater was measured at depths ranging from 8 ft. to 12 ft. (El. 50.8 to El. 46.2). Given the gradation of the in situ soils, and relative consistency in readings, we expect these readings represent stable groundwater conditions, and not perched conditions.

At the Visitor Bleachers, borings B-8 through B-13 encountered generally similar conditions with mostly medium dense and dense granular soils over somewhat deeper bedrock. Soils typically consisted of brown, medium to fine and coarse to fine sand, with minor percentages of silt and mostly fine gravel. Isolated pockets of silt were also encountered sporadically, and organic silt was present in borings B-8, B-10, and B-13 at depths of 4 ft. (El. 53.4), 6 ft. (El. 52.5), and 2.5 ft. (El. 53.5). Cobbles and boulders were encountered randomly throughout the entire depths of these borings. Standard penetration test N-values were somewhat lower than at the Home Bleachers, with N-values generally >15 bpf. Boulders were encountered at the bottoms of many borings and so the determination of boulders, weathered bedrock, or competent bedrock is unreliable; however, auger refusal on possibly weathered bedrock occurred in boring B-8 at a depth of 24.6 (El. 32.8), B-10 at a depth of 21 ft. (El. 37.5), B-12 at a depth of

12.5 ft. (El. 39.5), and B-13 at a depth of 23 ft. (El. 33). Groundwater was encountered during drilling in four (4) of these borings, with the depth to groundwater varying from 5.5 ft. to 12 ft. (El. 47.4 to El. 46). Similar to above, given the gradation of the in situ soils, and relative consistency in readings, we believe these readings represent stable groundwater conditions, and not perched conditions.

At the Visitor Side Building, borings B-14 through B-17 encountered medium dense and dense granular soils over somewhat deeper bedrock. Soils typically consisted of brown, medium to fine and coarse to fine sand, with minor percentages of coarse to fine gravel and silt. Cobbles and boulders were encountered in borings B-16 and B-17 at relatively shallow depth – 2.5 ft. deep (El. 55.5) at B-16, between 3.5 ft. and 8.5 (El. 52.5 and EL. 47.5). Organic soils were not encountered here, other than the surficial topsoil. Standard penetration test N-values were generally >30 bpf. Weathered bedrock was encountered at depths varying from 2.5 ft. to 5.5 ft. (El. 55.5 to 52) at borings B-16 and B-15, respectively, along the east side of the proposed building, and at a depth of 15.5 ft. (El. 42.4) at boring B-14 at the southwest corner. Auger refusal, probably indicative of more competent bedrock, was encountered at borings B-16 and B-15 at depths of 11 ft. (El. 47) and 13 ft. (El. 44.5), respectively. Bedrock was not encountered within the depth of borings B-17/17A at the northwest corner, which terminated at a depth of 21.2 ft. (El. 34.8). Groundwater was encountered during drilling at all boring locations except boring B-17 which was terminated at shallow depth. Groundwater was recorded at depths ranging from 10 ft. to 12 ft. (El. 48 to el. 45.9). Similar to above, we believe these readings are the true groundwater conditions, and not perched conditions.

The individual boring logs containing specific information at each boring location is included in the Appendix.

## DESIGN RECOMMENDATIONS

### HOME BLEACHERS

Based on our review of the subsurface conditions encountered beneath the Home Bleachers area, we recommend that the in situ soils are suitable for support of spread footings and ground floor slabs on grade. The recommended frost depth for Greenwich is 42 in. however, in order to mitigate the organic silts and potential for loose fill soils, it is recommended that footings be founded at a depth of 48 in. after first removing and replacing any organic silt found at that depth, and thoroughly compacting the bottoms of footings. Footings constructed in this fashion may be designed using an allowable bearing capacity of 2 tsf and a coefficient of base sliding of 0.45. Minimum footings widths of 24 in. for walls, and 30 in. for columns are recommended to limit differential settlements. Depending on actual loads, it is anticipated that maximum post-construction foundation settlements will be no more than ¾ in., with maximum differential settlement of ½ in. Settlement will be elastic (instantaneous), with no long term consolidation settlement occurring.

The first floor may be economically designed as a slab-on-grade following removal of a minimum of 12 in. of fill and all organic soils, compaction of the underlying fills, then placement of additional structural fill up to the required elevation. Compaction should be achieved using a 10 T vibratory roller for higher compactive effort since additional fills will remain in place beneath the slab. A minimum of four (4) passes should be made with the compactor, and until no further settlement is visible. This will compact the near-surface fills to a uniform density, and provide suitable and uniform subgrade support across

the entire slab footprint. Following these recommendations, a modulus of subgrade reaction, k, equal to 200 pci is recommended for design of the slabs.

## VISITOR BLEACHERS

Similar to the above recommendations for the Home Bleachers, based on our review of the subsurface conditions beneath the proposed Visitor Bleachers we recommend that spread footings are suitable for support of these bleachers, as well. However, since organic soils were encountered to a depth of 6 ft. in the east end of these bleachers, and limited information is available from the remaining borings due to termination on boulders or distance from the proposed bleachers, we recommend the footings in the eastern 1/3 of the bleachers be excavated to a minimum depth of 60 in., the bottom of excavation inspected for the presence of any organics, then structural fill placed back up to 48 in. depth. Similarly, the remainder of the footings should be excavated to a minimum depth of 54 ft. and the bottom of excavation inspected before replacing structural fill back up to 48 in. In this manner, it may be confirmed organic soils are not present beneath these footings. Footings constructed in this fashion may also be designed using an allowable bearing capacity of 2 tsf and a coefficient of base sliding of 0.45. Minimum footings widths of 24 in. for walls, and 30 in. for columns are recommended to limit differential settlements. Depending on actual loads, it is anticipated that maximum post-construction foundation settlements will be no more than ¾ in., with maximum differential settlement of ½ in. Settlement will be elastic, with no long term consolidation settlement occurring.

Similar to the recommendations for the Home Bleachers slabs on grade, the surrounding slabs here may also be constructed as slabs-on-grade. The top 12 in. of fill and all organic soils should be removed, the subgrade compacted using a 10 T vibratory roller, then additional structural fill placed to the required elevations to provide suitable and uniform support. A minimum of two (2) passes should be made with the compactor, and until no further settlement is visible, and a modulus of subgrade reaction equal to 200 pci is recommended for design of these slabs.

## VISITOR SIDE BUILDING

Similar to the above recommendations, we recommend that spread footings are suitable for support of the Visitor Side Building. Organic soils were not encountered here, however possible fill soils were reported in the upper 8.5 ft. of boring B-17A at the northwest area of the building. Considering the light loads, we recommend spread footings be constructed at frost depth (42 in.) after compacting the subgrade using a walk-behind vibratory trench roller, jumping jack, or similar vibratory compactor until no additional settlement is visible. Because very little information on the possible fill soils was obtained during the subsurface investigation, any fill soils encountered at the bottom of footing excavation should be probed or test pitted to a maximum depth of 2 ft. below the footing to determine their composition, relative density, and extent prior to constructing footings. If loose fills are encountered, they shall be removed to a maximum depth of 2 ft. below the footing and be replaced with structural fill. If organic or otherwise unsuitable fill or soil be present, these materials shall be removed and replaced for their full depth, or to a maximum depth of 4 ft. below the footing. Footings constructed in this fashion may be designed using an allowable bearing capacity of 2 tsf and a coefficient of base sliding of 0.45. Minimum footings widths of 24 in. for walls, and 30 in. for any columns are recommended. It is anticipated that maximum post-construction foundation settlements will be no more than ½ in., with maximum differential settlement of ¼ in. Settlement will be elastic, with no long term consolidation settlement occurring.

The ground floor slab may be constructed as a slab-on-grade following compaction of the subgrade using a 10 T vibratory roller. A minimum of four (4) passes should be made with the compactor, and until no further settlement is visible. Following this a modulus of subgrade reaction equal to 200 pci is recommended for design.

In accordance with the provisions of the Connecticut Building Code Section 1613, and ASCE Chapter 20, a seismic site class of D, stiff soil, is recommended for design of the new facilities at this site, based on the information gathered through the depth of the borings, and assumed conditions to 100 ft. Based on the project location, in conjunction with the above seismic site class, the following seismic parameters follow from the Code:

| | |
|---|---|
| $S_s$ = 0.272 | $S_1$ = 0.059 |
| $F_a$ = 1.582 | $F_v$ = 2.4 |
| $S_{MS}$ = 0.431 | $S_{M1}$ = 0.142 |
| $S_{DS}$ = 0.287 | $S_{D1}$ = 0.095 |

Seismic Design Category Based on Short Period Response Accelerations = B*
Seismic Design Category Based on 1-sec Period Response Accelerations = B*
* based on assumed Risk Category III

There is no evidence of past slope instability at this site and none is expected under static or seismic loading.

The soils at this site are non-liquefiable based on their suitably high relative density, silt content, and the depth to groundwater.

## CONSTRUCTION RECOMMENDATIONS

Footings shall not be constructed on frozen or wet subgrade materials. All frozen or saturated subgrade soil should be removed and replaced with compacted structural fill, or clean crushed stone, as required.

The subgrade below all spread footings should be inspected for the presence of overly loose or collapsible fill, organics, wood or similar deleterious material and any such material should be removed and replaced with structural fill.

The need for dewatering during construction is not expected since groundwater was encountered generally at depths greater than 8 ft. below grade, which should be at least ±4 ft. below footings.

Cobbles and boulders were encountered throughout the areas of work and at varying depths. Any cobbles or boulders encountered during footing construction should be removed so that no part protrudes into the bottom or sides of foundation excavations. Excavated cobbles and boulders should be placed in areas of general site fill so that they are deeper than 3 ft. below final grade. During such burial, they should be placed so that sufficient space is provided to achieve satisfactory compaction of additional soil fill around them.

Highly organic soils encountered during foundation and site excavation should be removed completely from beneath the limits of the buildings and structures, and be replaced with compacted structural fill.

Organic soils should not be used as structural or site fill, but should be either placed in areas of general site fill, or removed offsite.

Compacted structural fill should consist of predominately well-graded, coarse to fine sand and/or gravel with a maximum 10% non-plastic fines (material passing a No. 200 sieve) and be free of organics and other deleterious materials. Aggregate size should be no larger than 3 in. in the largest dimension to facilitate proper compaction. It is estimated that ±50% of the near-surface soils will be suitable for re-use based on the reported gradations and silt contents. Representative samples of any proposed fill material should be tested for gradation and moisture-density relationship prior to use to confirm its suitability.

Structural fill material should be placed in maximum 12 in. loose lifts and compacted to 95% of its maximum dry density at optimum moisture content as determined by the Modified Proctor Density Test (ASTM D1557). These operations should be performed under full-time geotechnical inspection and testing by either the Sand Cone Method (ASTM D1556), Nuclear Density Gauge (ASTM D2922 and D3012), or other moisture/density test methods. These density tests should be performed by an experienced geotechnical inspector at sufficient frequency and spacing to ensure proper compaction, with the following criteria suggested as guidelines:

| **Location** | **Minimum Frequency of Testing** |
|---|---|
| Structural fill beneath foundations,<br>adjacent to structures,<br>beneath slabs-on-grade | 1 test per lift every 2,500 SF (slabs-on-grade)<br>1 test per lift every 100 SF (col. footings)<br>1 test per lift every 25-50 LF (wall footings) |
| Utility trenches | 1 test per lift every 50-100 LF<br>min. 3 tests per day |
| General site fill (beyond building limits) | 1 test each lift every 5,000 SF |

For excavations that extend deeper than 5 ft., sheeting, shoring, sloping, or benching of the excavation sidewalls is required per OSHA standards. Considering the available space at the site, all systems of support of excavation may be feasible for this project. While an OSHA-competent person has to confirm and assign soil type(s) during construction, for estimating and scheduling purposes the soils present on site may be assumed to be Type C and therefore would need to be sloped back at a 1.5H:1V (34°), per OSHA requirements. For the design of temporary sheeting or shoring, the following range of soil parameters are expected to be appropriate throughout this site, depending on the conditions encountered:

<u>Brown Sands (0 ft. to 15 ft.)</u>
Moist unit weight of soil, $\gamma_t$ = 110 pcf
Angle of internal friction, $\phi$ = 32°
Lateral earth pressure coefficients:
Active, $K_a$ = 0.31
Passive, $K_p$ = 3.25

All sheeting, shoring and bracing shall be designed by a professional engineer licensed in the State of Connecticut. Shorter, unbraced excavations will likely experience localized instability (i.e., sloughing) if left open for more than a few hours due to the open gradation of some of the fill material and expected rapid loss of moisture.

It is recommended that all footing excavation and subgrade preparation procedures be inspected by a qualified geotechnical engineer experienced with this type of construction.

# APPENDIX

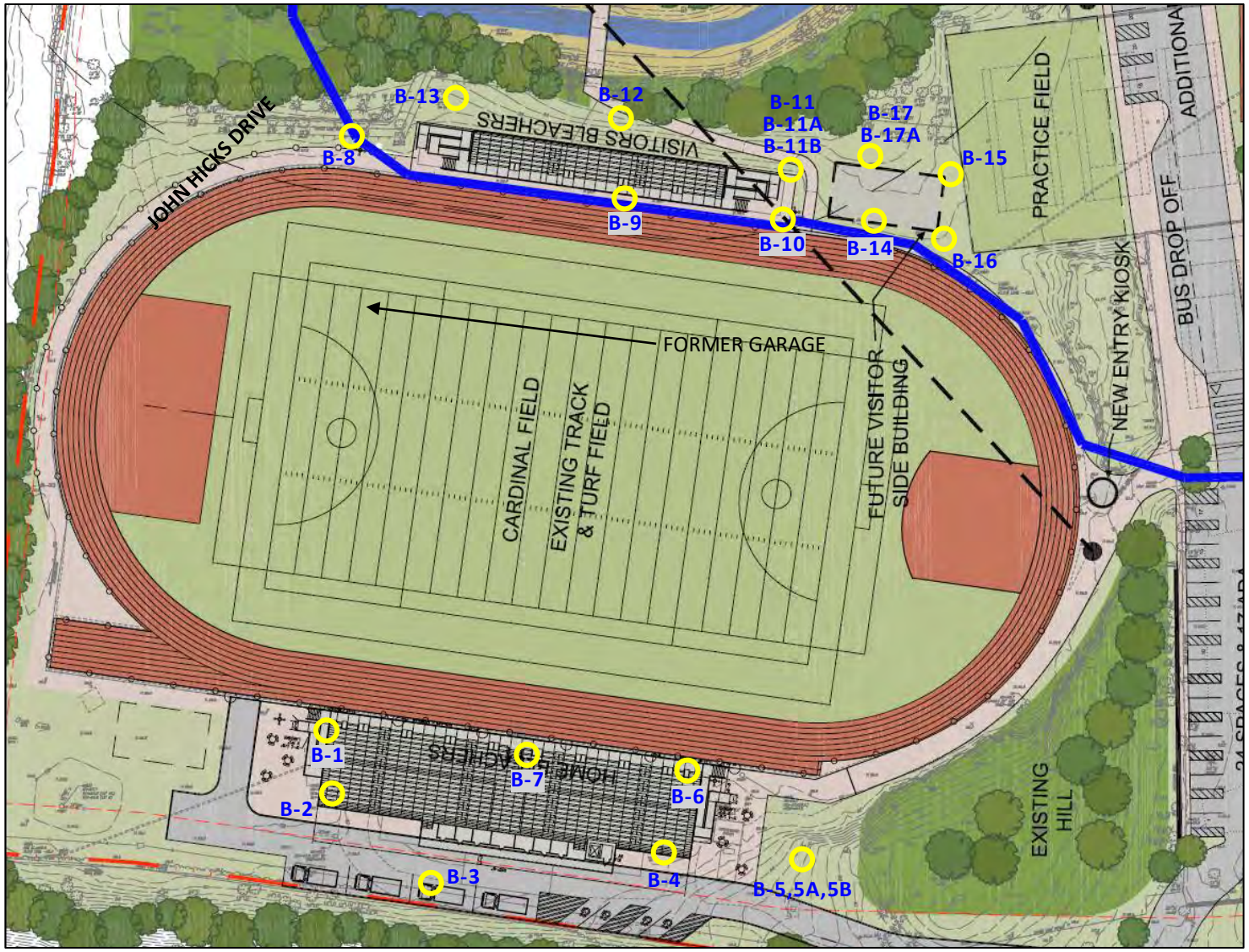


N

## LEGEND

O BORING
B-1

## SCALE

N.T.S.

NOTES:
1. BASE PLAN TAKEN FROM "GREENWICH HIGH SCHOOL CARDINAL STADIUM" PLAN, 3-10-2020, SUPPLIED BY KG+D ARCHITECTS.
2. BORING LOCATIONS TAKEN FROM "BORING LOCATION PLAN", 8-1-2019 BY KG+D ARCHITECTS, SUPPLIED BY SOILTESTING, INC.

# BORING LOCATION PLAN

GREENWICH HIGH SCHOOL CARDINAL STADIUM
10 HILLSIDE ROAD
GREENWICH, CONNECTICUT

**SKYLANDS ENGINEERING, LLC**

124 MILTON ROAD
SPARTA, NJ 07871
CERTIFICATE OF AUTHORIZATION NO. PEC.0001707

DATE: 3-25-2020

# Boring Logs

| SOILTESTING, INC. | CLIENT: Greenwich Public Schools | SHEET 1 OF 1 |
|---|---|---|
| 90 DONOVAN RD. | c/o KG&D Architects | HOLE NO. B-1 |
| OXFORD, CT 06478 | PROJECT NO. G38-1475-20 | |
| CT (203) 262-9328 | PROJECT NAME Greenwich High School | BORING LOCATIONS |
| NY (914) 946-4850 | 10 Hillside Rd | per Plan |
| FOREMAN - DRILLER | LOCATION Greenwich | |
| JK/nk | CT | |
| INSPECTOR | | OFFSET |

| | CASING | SAMPLER | CORE BAR |
|---|---|---|---|
| TYPE | HSA | SS* | |
| SIZE I.D. | 4 ¼" | 1 3/8" | |
| HAMMER WT. | | 140# | BIT |
| HAMMER FALL | | 30" | |

| | |
|---|---|
| DATE START | 2/26/20 |
| DATE FINISH | 2/26/20 |
| SURFACE ELEV. | El. ±58.5 |
| GROUND WATER ELEV. | El. ±46.5 |

GROUND WATER OBSERVATIONS
AT 12' FT AFTER 0 HOURS
AT __FT AFTER __HOURS

| DEPTH | CASING BLOWS PER FOOT | SAMPLE NO | Type | PEN | REC | DEPTH @ BOT | BLOWS PER 6 IN ON SAMPLER (FORCE ON TUBE) 0 - 6 | 6 - 12 | 12- 18 | CORE TIME PER FT (MIN) | DENSITY OR CONSIST / MOIST | STRATA CHANGE DEPTH / ELEV | FIELD IDENTIFICATION OF SOIL REMARKS INCL. COLOR, LOSS OF WASH WATER, SEAMS IN ROCK, ETC. |
|---|---|---|---|---|---|---|---|---|---|---|---|---|---|
| | | 1 | ss | 16" | 6" | 1'4" | 14 | 27 | | | moist | | DkBrn SILT, sm FM SAND, lit F gravel, cobbles |
| | | | | | | | 50/4" | | | | hard | 2'0" | |
| | | 2 | ss | 24" | 20" | 4'0" | 29 | 27 | | | dry | | |
| | | | | | | | 36 | 36 | | | v dense | 4'0" | Brn FM SAND, sm silt, lit F gravel (possible fill) |
| 5 | | 3 | ss | 24" | 20" | 6'0" | 35 | 70 | | | dry | | |
| | | | | | | | 82 | 78 | | | hard | 6'0" | Brn SILT, sm FM sand, tr F gravel |
| | | 4 | ss | 2" | 2" | 6'2" | 100/2" | | | | dry | | Brn FM SAND & F GRAVEL, tr silt, cobbles |
| | | 5 | ss | 24" | 18" | 10'0" | 30 | 25 | | | moist | | LtBrn FM SAND, lit silt, lit F gravel |
| 10 | | | | | | | 42 | 54 | | | v dense | | |
| | | 6 | ss | 24" | 16" | 12'0" | 59 | 61 | | | moist | | LtBrn FM SAND, sm silt, lit F gravel |
| | | | | | | | 58 | 60 | | | v dense | | |
| 15 | | | | | | | | | | | | | |
| | | 7 | ss | 17" | 8" | 16'5" | 25 | 52 | | | wet | 16'0" | LtBrn FM SAND, sm silt, lit F gravel |
| | | | | | | | 100/5" | | | | v dense | 17'0" | BEDROCK or boulder frags Auger refusal |
| 20 | | | | | | | | | | | | | E.O.B 17'0" |
| 25 | | | | | | | | | | | | | |
| 30 | | | | | | | | | | | | | |
| 35 | | | | | | | | | | | | | |
| 40 | | | | | | | | | | | | | * MOBILE SAFETY DRIVER WITH SAFETY HAMMER |

**NOTE: Subsoil conditions revealed by this investigation represent conditions at specific locations and may not represent conditions at other locations or times.**

GROUND SURFACE TO _____FT. USED _____CASING THEN _____ CASING TO _____FT. **HOLE NO. B-1**

A = AUGER UP = UNDISTURBED PISTON T = THINWALL V = VANE TEST
WOR = WEIGHT OF RODS WOH = WEIGHT OF HAMMER & RODS C = COARSE
SS = SPLIT TUBE SAMPLER H.S.A. = HOLLOW STEM AUGER M = MEDIUM
PROPORTIONS USED: TRACE = 0 - 10% LITTLE = 10 - 20% SOME = 20 - 35% AND =35 - 50% F = FINE

| SOILTESTING, INC.<br>90 DONOVAN RD.<br>OXFORD, CT 06478<br>CT (203) 262-9328<br>NY (914) 946-4850 | CLIENT: Greenwich Public Schools<br>c/o KG&D Architects | SHEET 1 OF 1<br>HOLE NO. B-2 |
|---|---|---|
| | PROJECT NO. G38-1475-20 | |
| | PROJECT NAME Greenwich High School<br>10 Hillside Rd | BORING LOCATIONS<br>per Plan |
| FOREMAN - DRILLER<br>JK/nk | LOCATION Greenwich<br>CT | |
| INSPECTOR | | OFFSET |
| GROUND WATER OBSERVATIONS<br>AT 12' FT AFTER 0 HOURS<br>AT __ FT AFTER __ HOURS | | DATE START 2/26/20<br>DATE FINISH 2/26/20<br>SURFACE ELEV. El. ±58.2<br>GROUND WATER ELEV. El. ±46.2 |

| | CASING | SAMPLER | CORE BAR |
|---|---|---|---|
| TYPE | HSA | SS* | |
| SIZE I.D. | 4 ¼" | 1 3/8" | |
| HAMMER WT. | | 140# | BIT |
| HAMMER FALL | | 30" | |

| DEPTH | CASING BLOWS PER FOOT | SAMPLE NO | Type | PEN | REC | DEPTH @ BOT | BLOWS PER 6 IN ON SAMPLER (FORCE ON TUBE) 0 - 6 | 6 - 12 | 12- 18 | CORE TIME PER FT (MIN) | DENSITY OR CONSIST / MOIST | STRATA CHANGE DEPTH / ELEV | FIELD IDENTIFICATION OF SOIL REMARKS INCL. COLOR, LOSS OF WASH WATER, SEAMS IN ROCK, ETC. |
|---|---|---|---|---|---|---|---|---|---|---|---|---|---|
| | | 1 | ss | 24" | 9" | 2'0" | 16 | 18 | | | moist | | DkBrn SILT & FM SAND, tr F gravel |
| | | | | | | | 22 | 24 | | | hard | 2'0" | |
| | | 2 | ss | 19" | 12" | 3'7" | 33 | 37 | | | dry | | Brn FMC SAND, lit silt, lit F gravel, cobbles (possible fill) |
| | | | | | | | 51 | 50/1" | | | v dense | | |
| 5 | | 3 | ss | 5" | 3" | 4'5" | 100/5" | | | | dry | | Brn FMC SAND, sm F gravel, cobbles, tr silt (possible fill) |
| | | 4 | ss | 24" | 16" | 8'0" | 31 | 37 | | | dry | | BrnGrey FM SAND, lit F gravel, lit C sand tr silt |
| | | | | | | | 36 | 42 | | | v dense | | |
| | | 5 | ss | 24" | 19" | 10'0" | 28 | 32 | | | moist | | LtBrn FM SAND, lit C sand, lit silt, lit F gravel |
| 10 | | | | | | | 41 | 44 | | | v dense | | |
| | | 6 | ss | 24" | 14" | 12'0" | 63 | 67 | | | moist | | LtBrn FM SAND, sm silt, lit C sand, tr F gravel |
| | | | | | | | 48 | 54 | | | v dense | | |
| 15 | | | | | | | | | | | | | |
| | | 7 | ss | 8" | 6" | 15'8" | 63 | 100/2" | | | wet | 15'6" | LtBrn FM SAND, lit silt, lit F gravel |
| | | | | | | | | | | | v dense | 16'0" | BEDROCK or boulder frags Auger refusal |
| 20 | | | | | | | | | | | | | E.O.B 16'0" |
| 25 | | | | | | | | | | | | | |
| 30 | | | | | | | | | | | | | |
| 35 | | | | | | | | | | | | | |
| 40 | | | | | | | | | | | | | * MOBILE SAFETY DRIVER WITH SAFETY HAMMER |

**NOTE: Subsoil conditions revealed by this investigation represent conditions at specific locations and may not represent conditions at other locations or times.**

GROUND SURFACE TO _____FT. USED _____CASING THEN _____ CASING TO _____FT. **HOLE NO. B-2**

A = AUGER UP = UNDISTURBED PISTON T = THINWALL V = VANE TEST

WOR = WEIGHT OF RODS WOH = WEIGHT OF HAMMER & RODS C = COARSE

SS = SPLIT TUBE SAMPLER H.S.A. = HOLLOW STEM AUGER M = MEDIUM

PROPORTIONS USED: TRACE = 0 - 10% LITTLE = 10 - 20% SOME = 20 - 35% AND =35 - 50% F = FINE

| SOILTESTING, INC. | CLIENT: Greenwich Public Schools c/o KG&D Architects | SHEET 1 OF 1 HOLE NO. B-3 |
|---|---|---|
| 90 DONOVAN RD. OXFORD, CT 06478 CT (203) 262-9328 NY (914) 946-4850 | PROJECT NO. G38-1475-20 | |
| | PROJECT NAME Greenwich High School 10 Hillside Rd | BORING LOCATIONS per Plan |
| FOREMAN - DRILLER JK/nk | LOCATION Greenwich CT | |
| INSPECTOR | | OFFSET |
| GROUND WATER OBSERVATIONS AT 9' FT AFTER 0 HOURS AT __FT AFTER __HOURS | | DATE START 2/26/20 |
| | | DATE FINISH 2/26/20 |
| | | SURFACE ELEV. El. ±58.7 |
| | | GROUND WATER ELEV. El. ±49.7 |

| | CASING | SAMPLER | CORE BAR |
|---|---|---|---|
| TYPE | HSA | SS* | |
| SIZE I.D. | 4 ¼" | 1 3/8" | |
| HAMMER WT. | | 140# | BIT |
| HAMMER FALL | | 30" | |

| DEPTH | CASING BLOWS PER FOOT | SAMPLE NO | Type | PEN | REC. | DEPTH @ BOT | BLOWS PER 6 IN ON SAMPLER (FORCE ON TUBE) 0 - 6 | 6 - 12 | 12- 18 | CORE TIME PER FT (MIN) | DENSITY OR CONSIST / MOIST | STRATA CHANGE DEPTH / ELEV | FIELD IDENTIFICATION OF SOIL REMARKS INCL. COLOR, LOSS OF WASH WATER, SEAMS IN ROCK, ETC. |
|---|---|---|---|---|---|---|---|---|---|---|---|---|---|
| | | 1 | ss | 24" | 8" | 2'0" | 10 | 15 | | | dry | | Brn MC SAND & ASPHALT, sm F gravel, boulders, |
| | | | | | | | 20 | 37 | | | dense | | cobbles 2-5' (possible fill) |
| 5 | | | | | | | | | | | | 5'0" | |
| | | 2 | ss | 24" | 16" | 7'0" | 10 | 15 | | | | 5'9" | DkBrn FM SAND, sm F gravel, lit C sand, tr silt (possible fill) |
| | | | | | | | 25 | 24 | | | dense | | Brn F SAND, lit silt, tr F gravel |
| | | 3 | ss | 24" | 24" | 9'0" | 10 | 10 | | | wet | | |
| | | | | | | | 15 | 14 | | | compact | | |
| 10 | | | | | | | | | | | | | |
| 15 | | | | | | | | | | | | 15'0" | |
| | | 4 | ss | 24" | 15" | 17'0" | 58 | 54 | | | wet/moist | | partly decomposed /weathered BEDROCK |
| | | | | | | | 57 | 60 | | | v dense | | |
| | | | | | | | | | | | | 18'0" | Auger refusal |
| 20 | | | | | | | | | | | | | E.O.B 18'0" |
| 25 | | | | | | | | | | | | | |
| 30 | | | | | | | | | | | | | |
| 35 | | | | | | | | | | | | | |
| 40 | | | | | | | | | | | | | * MOBILE SAFETY DRIVER WITH SAFETY HAMMER |

**NOTE: Subsoil conditions revealed by this investigation represent conditions at specific locations and may not represent conditions at other locations or times.**

GROUND SURFACE TO _____FT. USED _____CASING THEN _____ CASING TO _____FT. **HOLE NO. B-3**

A = AUGER UP = UNDISTURBED PISTON T = THINWALL V = VANE TEST

WOR = WEIGHT OF RODS WOH = WEIGHT OF HAMMER & RODS C = COARSE

SS = SPLIT TUBE SAMPLER H.S.A. = HOLLOW STEM AUGER M = MEDIUM

PROPORTIONS USED: TRACE = 0 - 10% LITTLE = 10 - 20% SOME = 20 - 35% AND =35 - 50% F = FINE

| SOILTESTING, INC.<br>90 DONOVAN RD.<br>OXFORD, CT 06478<br>CT (203) 262-9328<br>NY (914) 946-4850 | CLIENT: Greenwich Public Schools<br>c/o KG&D Architects | SHEET 1 OF 1<br>HOLE NO. B-4 |
|---|---|---|
| | PROJECT NO. G38-1475-20 | |
| | PROJECT NAME Greenwich High School<br>10 Hillside Rd | BORING LOCATIONS<br>per Plan |
| FOREMAN - DRILLER<br>JK/nk | LOCATION Greenwich<br>CT | |
| INSPECTOR | | OFFSET |
| GROUND WATER OBSERVATIONS<br>AT 8' FT AFTER 0 HOURS<br>AT __FT AFTER __HOURS | | DATE START 2/25/20<br>DATE FINISH 2/25/20<br>SURFACE ELEV. El. ±58.8<br>GROUND WATER ELEV. El. ±50.8 |

| | CASING | SAMPLER | CORE BAR |
|---|---|---|---|
| TYPE | HSA | SS* | |
| SIZE I.D. | 4 ¼" | 1 3/8" | |
| HAMMER WT. | | 140# | BIT |
| HAMMER FALL | | 30" | |

| DEPTH | CASING BLOWS PER FOOT | SAMPLE NO | Type | PEN | REC | DEPTH @ BOT | BLOWS PER 6 IN ON SAMPLER (FORCE ON TUBE) 0 - 6 | 6 - 12 | 12- 18 | CORE TIME PER FT (MIN) | DENSITY OR CONSIST / MOIST | STRATA CHANGE DEPTH / ELEV | FIELD IDENTIFICATION OF SOIL REMARKS INCL. COLOR, LOSS OF WASH WATER, SEAMS IN ROCK, ETC. |
|---|---|---|---|---|---|---|---|---|---|---|---|---|---|
| | | 1 | ss | 24" | 16" | 2'0 | 18 | 19 | | | dry | | 2" FC GRAVEL |
| | | | | | | | 25 | 39 | | | dense | | GreyBrn FM SAND, lit F gravel, lit C sand, tr silt |
| | | 2 | ss | 24" | 14" | 4'0" | 40 | 45 | | | dry | | TanBrn FMC SAND, sm F gravel, tr silt |
| | | | | | | | 41 | 45 | | | v dense | | |
| 5 | | 3 | ss | 24" | 23" | 6'0" | 24 | 28 | | | dry | | Brn FM SAND, sm F gravel, lit C sand |
| | | | | | | | 43 | 41 | | | v dense | | |
| | | 4 | ss | 24" | 14" | 8'0" | 38 | 57 | | | moist | | Brn FMC SAND, lit F gravel, tr silt |
| | | | | | | | 76 | 74 | | | v dense | | |
| | | 5 | ss | 24" | 24" | 10'0" | 37 | 32 | | | wet | | Brn FMC SAND, sm silt, lit F gravel |
| 10 | | | | | | | 71 | 68 | | | v dense | | |
| | | 6 | ss | 24" | 24" | 12'0" | 53 | 53 | | | wet | | Brn FMC SAND, lit silt, lit F gravel |
| | | | | | | | 61 | 74 | | | v dense | | |
| | | | | | | | | | | | | 13'0" | |
| 15 | | | | | | | | | | | | | |
| | | 7 | ss | 2" | 2" | 15'2" | 60/2" | | | | wet<br>v dense | | Brn FMC SAND & F GRAVEL, cobbles, boulders (partly decomposed BEDROCK) |
| 20 | | | | | | | | | | | | | |
| | | 8 | ss | 1" | 1" | 20'1" | 50/1" | | | | wet<br>v dense | | partly decomposed /weathered BEDROCK |
| 25 | | | | | | | | | | | | | |
| | | 9 | ss | 1" | 1" | 25'1" | 50/1" | | | | wet | 25'1" | SAME |
| 30 | | | | | | | | | | | | | E.O.B 25'1" |
| 35 | | | | | | | | | | | | | |
| 40 | | | | | | | | | | | | | * MOBILE SAFETY DRIVER WITH SAFETY HAMMER |

**NOTE: Subsoil conditions revealed by this investigation represent conditions at specific locations and may not represent conditions at other locations or times.**

GROUND SURFACE TO _____FT. USED _____CASING THEN _____ CASING TO _____FT. **HOLE NO. B-4**

A = AUGER UP = UNDISTURBED PISTON T = THINWALL V = VANE TEST

WOR = WEIGHT OF RODS WOH = WEIGHT OF HAMMER & RODS C = COARSE

SS = SPLIT TUBE SAMPLER H.S.A. = HOLLOW STEM AUGER M = MEDIUM

PROPORTIONS USED: TRACE = 0 - 10% LITTLE = 10 - 20% SOME = 20 - 35% AND =35 - 50% F = FINE

| SOILTESTING, INC.<br>90 DONOVAN RD.<br>OXFORD, CT 06478<br>CT (203) 262-9328<br>NY (914) 946-4850 | CLIENT: Greenwich Public Schools<br>c/o KG&D Architects | SHEET 1 OF 1<br>HOLE NO. B-5/B-5A/B-5B |
|---|---|---|
| | PROJECT NO. G38-1475-20 | |
| | PROJECT NAME Greenwich High School<br>10 Hillside Rd | BORING LOCATIONS<br>per Plan |
| FOREMAN - DRILLER<br>JK/nk/dd | LOCATION Greenwich<br>CT | |
| INSPECTOR | | OFFSET |
| GROUND WATER OBSERVATIONS<br>AT none FT AFTER 0 HOURS<br>AT __FT AFTER __HOURS | | DATE START 2/25/20<br>DATE FINISH 2/25/20<br>SURFACE ELEV. El. ±66<br>GROUND WATER ELEV. |

| | CASING | SAMPLER | CORE BAR |
|---|---|---|---|
| TYPE | HSA | SS* | |
| SIZE I.D. | 4 ¼" | 1 3/8" | |
| HAMMER WT. | | 140# | BIT |
| HAMMER FALL | | 30" | |

| DEPTH | CASING BLOWS PER FOOT | SAMPLE NO | Type | PEN | REC. | DEPTH @ BOT | BLOWS PER 6 IN ON SAMPLER (FORCE ON TUBE) 0 - 6 | 6 - 12 | 12- 18 | CORE TIME PER FT (MIN) | DENSITY OR CONSIST / MOIST | STRATA CHANGE DEPTH / ELEV | FIELD IDENTIFICATION OF SOIL REMARKS INCL. COLOR, LOSS OF WASH WATER, SEAMS IN ROCK, ETC. |
|---|---|---|---|---|---|---|---|---|---|---|---|---|---|
| | | 1 | ss | 24" | 16" | 2'0" | 3 | 6 | | | dry | | Brn SILT, sm F gravel, sm F sand |
| | | | | | | | 7 | 33 | | | compact | | |
| | | 2 | ss | 24" | 10" | 4'0" | 5 | 14 | | | moist | | Brn SILT, tr F gravel, lit FM sand |
| | | | | | | | 6 | 50/3" | | | compact | | |
| 5 | | | | | | | | | | | | 4'10" | Auger refusal |
| | | | | | | | | | | | | | possible BEDROCK |
| | | | | | | | | | | | | | offset 5' East to B-5A |
| 10 | | | | | | | | | | | | | |
| | B-5A | | | | | | | | | | | | B-5A |
| 5 | | | | | | | | | | | | 4'4" | Auger refusal |
| | | | | | | | | | | | | | Offset 5' North to B-5B |
| 10 | | | | | | | | | | | | | |
| | B-5B | | | | | | | | | | | | B-5B |
| | | | | | | | | | | | | 2'6" | Auger refusal |
| 5 | | | | | | | | | | | | | E.O.B 2'6" |
| 10 | | | | | | | | | | | | | |
| 15 | | | | | | | | | | | | | * CME AUTOHAMMER |
| 20 | | | | | | | | | | | | | |

**NOTE: Subsoil conditions revealed by this investigation represent conditions at specific locations and may not represent conditions at other locations or times.**

GROUND SURFACE TO _____FT. USED _____CASING THEN _____ CASING TO _____FT. **HOLE NO. B-5/B-5A/B-5B**

A = AUGER UP = UNDISTURBED PISTON T = THINWALL V = VANE TEST

WOR = WEIGHT OF RODS WOH = WEIGHT OF HAMMER & RODS C = COARSE

SS = SPLIT TUBE SAMPLER H.S.A. = HOLLOW STEM AUGER M = MEDIUM

PROPORTIONS USED: TRACE = 0 - 10% LITTLE = 10 - 20% SOME = 20 - 35% AND =35 - 50% F = FINE

| SOILTESTING, INC.<br>90 DONOVAN RD.<br>OXFORD, CT 06478<br>CT (203) 262-9328<br>NY (914) 946-4850 | CLIENT: Greenwich Public Schools<br>c/o KG&D Architects | SHEET 1 OF 1<br>HOLE NO. B-6 |
|---|---|---|
| | PROJECT NO. G38-1475-20 | |
| | PROJECT NAME Greenwich High School<br>10 Hillside Rd | BORING LOCATIONS<br>per Plan |
| FOREMAN - DRILLER<br>JK/nk | LOCATION Greenwich<br>CT | |
| INSPECTOR | | OFFSET |
| GROUND WATER OBSERVATIONS<br>AT 8' FT AFTER 0 HOURS<br>AT FT AFTER HOURS | | DATE START 2/26/20<br>DATE FINISH 2/26/20<br>SURFACE ELEV. El. ±58.7<br>GROUND WATER ELEV. El. ±50.7 |

| | CASING | SAMPLER | CORE BAR |
|---|---|---|---|
| TYPE | HSA | SS* | |
| SIZE I.D. | 4 ¼" | 1 3/8" | |
| HAMMER WT. | | 140# | BIT |
| HAMMER FALL | | 30" | |

| DEPTH | CASING BLOWS PER FOOT | SAMPLE NO | Type | PEN | REC | DEPTH @ BOT | BLOWS PER 6 IN ON SAMPLER (FORCE ON TUBE) 0 - 6 | 6 - 12 | 12- 18 | CORE TIME PER FT (MIN) | DENSITY OR CONSIST / MOIST | STRATA CHANGE DEPTH / ELEV | FIELD IDENTIFICATION OF SOIL REMARKS INCL. COLOR, LOSS OF WASH WATER, SEAMS IN ROCK, ETC. |
|---|---|---|---|---|---|---|---|---|---|---|---|---|---|
| | | 1 | ss | 24" | 12" | 2'0" | 21 | 24 | | | dry | | 3" Asphalt |
| | | | | | | | 26 | 29 | | | dense | | Brn FM SAND, sm F gravel, tr silt (possible fill) |
| | | 2 | ss | 8" | 6" | 2'8" | 39 | 50/2" | | | dry | | DkBrn FMC SAND & F GRAVEL (possible fill) |
| | | | | | | | | | | | v dense | 4'0" | |
| 5 | | 3 | ss | 24" | 15" | 6'0" | 20 | 30 | | | dry | | Brn FM SAND, sm F gravel, tr C sand |
| | | | | | | | 32 | 30 | | | v dense | | |
| | | 4 | ss | 24" | 16" | 8'0" | 21 | 34 | | | dry | | Brn FMC SAND, lit F gravel, lit gravel |
| | | | | | | | 53 | 75 | | | v dense | | |
| | | 5 | ss | 24" | 16" | 10'0" | 40 | 47 | | | wet | | Brn FMC SAND, sm F gravel, tr silt |
| 10 | | | | | | | 45 | 44 | | | v dense | 10'0" | Brn MC SAND, lit F gravel, tr silt |
| | | 6 | ss | 5" | 5" | 10'5" | 100/5" | | | | wet | | BEDROCK or boulder fragments |
| | | | | | | | | | | | | | Partly decomposed BEDROCK or boulders |
| | | | | | | | | | | | | 13'10" | Auger refusal |
| 15 | | | | | | | | | | | | | |
| | | | | | | | | | | | | | E.O.B 13'10" |
| 20 | | | | | | | | | | | | | |
| 25 | | | | | | | | | | | | | |
| 30 | | | | | | | | | | | | | |
| 35 | | | | | | | | | | | | | |
| | | | | | | | | | | | | | * MOBILE SAFETY DRIVER WITH SAFETY HAMMER |
| 40 | | | | | | | | | | | | | |

**NOTE: Subsoil conditions revealed by this investigation represent conditions at specific locations and may not represent conditions at other locations or times.**

GROUND SURFACE TO _____FT. USED _____CASING THEN _____ CASING TO _____FT. **HOLE NO. B-6**

A = AUGER UP = UNDISTURBED PISTON T = THINWALL V = VANE TEST

WOR = WEIGHT OF RODS WOH = WEIGHT OF HAMMER & RODS C = COARSE

SS = SPLIT TUBE SAMPLER H.S.A. = HOLLOW STEM AUGER M = MEDIUM

PROPORTIONS USED: TRACE = 0 - 10% LITTLE = 10 - 20% SOME = 20 - 35% AND =35 - 50% F = FINE

| SOILTESTING, INC. | CLIENT: Greenwich Public Schools | SHEET 1 OF 1 |
|---|---|---|
| 90 DONOVAN RD. | c/o KG&D Architects | HOLE NO. B-7 |
| OXFORD, CT 06478 | PROJECT NO. G38-1475-20 | |
| CT (203) 262-9328 | PROJECT NAME Greenwich High School | BORING LOCATIONS |
| NY (914) 946-4850 | 10 Hillside Rd | per Plan |
| FOREMAN - DRILLER | LOCATION Greenwich | |
| JK/nk | CT | |
| INSPECTOR | | OFFSET |

| | CASING | SAMPLER | CORE BAR |
|---|---|---|---|
| TYPE | HSA | SS* | |
| SIZE I.D. | 4 ¼" | 1 3/8" | |
| HAMMER WT. | | 140# | BIT |
| HAMMER FALL | | 30" | |

| | |
|---|---|
| DATE START | 2/26/20 |
| DATE FINISH | 2/26/20 |
| SURFACE ELEV. | El. ±58.6 |
| GROUND WATER ELEV. | El. ±48.6 |

GROUND WATER OBSERVATIONS
AT 10' FT AFTER 0 HOURS
AT __ FT AFTER __ HOURS

| DEPTH | CASING BLOWS PER FOOT | SAMPLE NO | Type | PEN | REC. | DEPTH @ BOT | BLOWS PER 6 IN ON SAMPLER (FORCE ON TUBE) 0 - 6 | 6 - 12 | 12- 18 | CORE TIME PER FT (MIN) | DENSITY OR CONSIST / MOIST | STRATA CHANGE DEPTH / ELEV | FIELD IDENTIFICATION OF SOIL REMARKS INCL. COLOR, LOSS OF WASH WATER, SEAMS IN ROCK, ETC. |
|---|---|---|---|---|---|---|---|---|---|---|---|---|---|
| | | 1 | ss | 24" | 16" | 2'0" | 4 | 20 | | | dry | 1'0" | Grey FM SAND, lit silt, lit F gravel |
| | | | | | | | 27 | 24 | | | hard | | DkBrnGrey organic SILT, lit VF sand |
| | | 2 | ss | 24" | 18" | 4'0" | 12 | 15 | | | dry | 3'0" | DkBrn organic SILT, lit VF sand |
| | | | | | | | 25 | 31 | | | hard | 4'0" | Grey organic SILT, lit F sand |
| 5 | | 3 | ss | 24" | 15" | 6'0" | 15 | 36 | | | moist | | LtBrnOrng MC SAND, sm F sand, lit F gravel |
| | | | | | | | 51 | 44 | | | v dense | | |
| | | 4 | ss | 24" | 18" | 8'0" | 41 | 48 | | | moist | | LtBrnOrng F SAND, sm silt, lit MC sand, tr F gravel |
| | | | | | | | 40 | 43 | | | v dense | | |
| | | 5 | ss | 24" | 24" | 10'0" | 21 | 18 | | | moist | | Brn FMC SAND, sm F gravel, lit silt |
| 10 | | | | | | | 42 | 43 | | | v dense | | |
| | | 6 | ss | 24" | 14" | 12'0" | 40 | 56 | | | wet | | LtBrn FM SAND, lit silt, lit F gravel |
| | | | | | | | 48 | 62 | | | v dense | | |
| 15 | | | | | | | | | | | | | |
| | | 7 | ss | 22" | 12" | 16'10" | 70 | 36 | | | wet | | Brn FMC SAND, sm F gravel, tr silt, tr decomposed rock frags |
| | | | | | | | 30 | 100/4" | | | v dense | 16'6" | |
| | | | | | | | | | | | | 17'0" | BEDROCK or boulder frags — Auger refusal |
| 20 | | | | | | | | | | | | | E.O.B 17'0" |
| 25 | | | | | | | | | | | | | |
| 30 | | | | | | | | | | | | | |
| 35 | | | | | | | | | | | | | |
| 40 | | | | | | | | | | | | | * MOBILE SAFETY DRIVER WITH SAFETY HAMMER |

**NOTE: Subsoil conditions revealed by this investigation represent conditions at specific locations and may not represent conditions at other locations or times.**

GROUND SURFACE TO _____FT. USED _____CASING THEN _____ CASING TO _____FT. **HOLE NO. B-7**

A = AUGER UP = UNDISTURBED PISTON T = THINWALL V = VANE TEST
WOR = WEIGHT OF RODS WOH = WEIGHT OF HAMMER & RODS C = COARSE
SS = SPLIT TUBE SAMPLER H.S.A. = HOLLOW STEM AUGER M = MEDIUM
PROPORTIONS USED: TRACE = 0 - 10% LITTLE = 10 - 20% SOME = 20 - 35% AND =35 - 50% F = FINE

| SOILTESTING, INC.<br>90 DONOVAN RD.<br>OXFORD, CT 06478<br>CT (203) 262-9328<br>NY (914) 946-4850 | CLIENT: Greenwich Public Schools<br>c/o KG&D Architects | SHEET 1 OF 1<br>HOLE NO. B-8 |
|---|---|---|
| | PROJECT NO. G38-1475-20 | |
| | PROJECT NAME Greenwich High School 10 Hillside Rd | BORING LOCATIONS<br>per Plan |
| FOREMAN - DRILLER<br>JK/nk | LOCATION Greenwich CT | |
| INSPECTOR | | OFFSET |
| GROUND WATER OBSERVATIONS<br>AT 10' FT AFTER 0 HOURS<br>AT __FT AFTER __HOURS | | DATE START 2/21/20<br>DATE FINISH 2/21/20<br>SURFACE ELEV. El. ±57.4<br>GROUND WATER ELEV. El. ±47.4 |

| | CASING | SAMPLER | CORE BAR |
|---|---|---|---|
| TYPE | HSA | SS* | |
| SIZE I.D. | 4 ¼" | 1 3/8" | |
| HAMMER WT. | | 140# | BIT |
| HAMMER FALL | | 30" | |

| DEPTH | CASING BLOWS PER FOOT | SAMPLE NO | Type | PEN | REC. | DEPTH @ BOT | BLOWS PER 6 IN ON SAMPLER (FORCE ON TUBE) 0 - 6 | 6 - 12 | 12- 18 | CORE TIME PER FT (MIN) | DENSITY OR CONSIST ___M OIST | STRATA CHANGE DEPTH ELEV | FIELD IDENTIFICATION OF SOIL REMARKS INCL. COLOR, LOSS OF WASH WATER, SEAMS IN ROCK, ETC. |
|---|---|---|---|---|---|---|---|---|---|---|---|---|---|
| | | 1 | ss | 24" | 8" | 2'0" | 7 | 6 | | | dry | | 2" Topsoil; DkBrn organic SILT, sm FM sand |
| | | | | | | | 10 | 3 | | | compact | | |
| | | 2 | ss | 24" | 7" | 4'0" | 3 | 5 | | | dry | | DkBrn organic SILT, sm FM sand |
| | | | | | | | 4 | 2 | | | loose | | DkBrn SILT, lit F gravel |
| 5 | | 3 | ss | 24" | 6" | 4'1" | 50/1" | | | | v dense | | |
| | | | | | | | | | | | | | SAME; boulders 4'4"-6'6" (fill) |
| | | 4 | ss | - | - | - | | | | | | | |
| | | | | | | | | | | | | 8'0" | |
| | | 5 | ss | 24" | 24" | 10'0" | 30 | 22 | | | moist/vmoist | 8'6" | Brn FMC SAND, lit silt |
| 10 | | | | | | | 24 | 28 | | | dense | 9'6" | OrngBrn SILT & VFF SAND |
| | | 6 | ss | 24" | 18" | 12'0" | 18 | 17 | | | wet | | Grey SILT & VFF SAND |
| | | | | | | | 28 | 35 | | | dense | 11'9" | |
| | | | | | | | | | | | | | BrnGrey FMC SAND, sm gravel, lit cobbles, tr boulders 12-15' |
| 15 | | | | | | | | | | | | | |
| | | 7 | ss | 18" | 10" | 16'6" | 17 | 22 | | | wet | | Grey FM SAND, lit silt, lit C sand, gravel |
| | | | | | | | 34 | | | | v dense | | |
| 20 | | | | | | | | | | | | | |
| | | 8 | ss | 10" | 10" | 20'10" | 55 | 50/4" | | | | | lit boudlers, cobbles from 18'6" |
| | | | | | | | | | | | | | SAME |
| 25 | | | | | | | | | | | | 24'6" | Auger refusal |
| | | | | | | | | | | | | | E.O.B 24'6" |
| 30 | | | | | | | | | | | | | |
| 35 | | | | | | | | | | | | | |
| | | | | | | | | | | | | | * MOBILE SAFETY DRIVER WITH SAFETY HAMMER |
| 40 | | | | | | | | | | | | | |

**NOTE: Subsoil conditions revealed by this investigation represent conditions at specific locations and may not represent conditions at other locations or times.**

GROUND SURFACE TO _____FT. USED _____CASING THEN _____ CASING TO _____FT. **HOLE NO. B-8**

A = AUGER UP = UNDISTURBED PISTON T = THINWALL V = VANE TEST

WOR = WEIGHT OF RODS WOH = WEIGHT OF HAMMER & RODS C = COARSE

SS = SPLIT TUBE SAMPLER H.S.A. = HOLLOW STEM AUGER M = MEDIUM

PROPORTIONS USED: TRACE = 0 - 10% LITTLE = 10 - 20% SOME = 20 - 35% AND =35 - 50% F = FINE

| SOILTESTING, INC. | CLIENT: Greenwich Public Schools c/o KG&D Architects | SHEET 1 OF 1 |
|---|---|---|
| 90 DONOVAN RD. | | HOLE NO. B-9 |
| OXFORD, CT 06478 | PROJECT NO. G38-1475-20 | |
| CT (203) 262-9328 | PROJECT NAME Greenwich High School | BORING LOCATIONS |
| NY (914) 946-4850 | 10 Hillside Rd | per Plan |
| FOREMAN - DRILLER | LOCATION Greenwich | |
| JK/nk | CT | |
| INSPECTOR | | OFFSET |
| GROUND WATER OBSERVATIONS | | DATE START 2/26/20 |
| AT none FT AFTER 0 HOURS | | DATE FINISH 2/26/20 |
| AT FT AFTER HOURS | | SURFACE ELEV. El. ±58.5 |
| | | GROUND WATER ELEV. |

| | CASING | SAMPLER | CORE BAR |
|---|---|---|---|
| TYPE | HSA | SS* | |
| SIZE I.D. | 4 ¼" | 1 3/8" | |
| HAMMER WT. | | 140# | BIT |
| HAMMER FALL | | 30" | |

| DEPTH | CASING BLOWS PER FOOT | SAMPLE NO | Type | PEN | REC | DEPTH @ BOT | BLOWS PER 6 IN ON SAMPLER (FORCE ON TUBE) 0 - 6 | 6 - 12 | 12- 18 | CORE TIME PER FT (MIN) | DENSITY OR CONSIST / MOIST | STRATA CHANGE DEPTH / ELEV | FIELD IDENTIFICATION OF SOIL REMARKS INCL. COLOR, LOSS OF WASH WATER, SEAMS IN ROCK, ETC. |
|---|---|---|---|---|---|---|---|---|---|---|---|---|---|
| | | 1 | ss | 24" | 18" | 2'4" | 12 | 18 | | | dry | | 4" Concrete |
| | | | | | | | 14 | 19 | | | dense | | Brn FM SAND, sm F gravel, lit silt (possible fill) |
| | | 2 | ss | 12" | 4" | 4'4" | 18 | 19 | | | dry | | |
| | | | | | | | 22 | 18 | | | dense | | SAME |
| 5 | | 3 | ss | 8" | 6" | 5'0" | 44 | 50/2" | | | dry | 5'0" | Auger refusal |
| | | | | | | | | | | | | | cobbles &/or boulder (possible fill) |
| | | | | | | | | | | | | | E.O.B 5'0" |
| 10 | | | | | | | | | | | | | |
| 15 | | | | | | | | | | | | | |
| 20 | | | | | | | | | | | | | |
| 25 | | | | | | | | | | | | | |
| 30 | | | | | | | | | | | | | |
| 35 | | | | | | | | | | | | | |
| | | | | | | | | | | | | | * MOBILE SAFETY DRIVER WITH SAFETY HAMMER |
| 40 | | | | | | | | | | | | | |

**NOTE: Subsoil conditions revealed by this investigation represent conditions at specific locations and may not represent conditions at other locations or times.**

GROUND SURFACE TO _____FT. USED _____CASING THEN _____ CASING TO _____FT. **HOLE NO. B-9**

A = AUGER UP = UNDISTURBED PISTON T = THINWALL V = VANE TEST

WOR = WEIGHT OF RODS WOH = WEIGHT OF HAMMER & RODS C = COARSE

SS = SPLIT TUBE SAMPLER H.S.A. = HOLLOW STEM AUGER M = MEDIUM

PROPORTIONS USED: TRACE = 0 - 10% LITTLE = 10 - 20% SOME = 20 - 35% AND =35 - 50% F = FINE

| SOILTESTING, INC. | CLIENT: Greenwich Public Schools c/o KG&D Architects | SHEET 1 OF 1 |
|---|---|---|
| 90 DONOVAN RD. OXFORD, CT 06478 | | HOLE NO. B-10 |
| CT (203) 262-9328 NY (914) 946-4850 | PROJECT NO. G38-1475-20 | |
| | PROJECT NAME Greenwich High School 10 Hillside Rd | BORING LOCATIONS per Plan |
| FOREMAN - DRILLER JK/nk | LOCATION Greenwich CT | |
| INSPECTOR | | OFFSET |
| GROUND WATER OBSERVATIONS | | DATE START 2/21/20 |
| AT 12' FT AFTER 0 HOURS | | DATE FINISH 2/21/20 |
| AT __FT AFTER __HOURS | | SURFACE ELEV. El. ±58.5 |
| | | GROUND WATER ELEV. El. ±46.5 |

| | CASING | SAMPLER | CORE BAR |
|---|---|---|---|
| TYPE | HSA | SS* | NQ |
| SIZE I.D. | 4 ¼" | 1 3/8" | 2" |
| HAMMER WT. | | 140# | BIT |
| HAMMER FALL | | 30" | dia |

| DEPTH | CASING BLOWS PER FOOT | SAMPLE NO | Type | PEN | REC | DEPTH @ BOT | BLOWS PER 6 IN ON SAMPLER (FORCE ON TUBE) 0 - 6 | 6 - 12 | 12- 18 | CORE TIME PER FT (MIN) | DENSITY OR CONSIST / MOIST | STRATA CHANGE DEPTH / ELEV | FIELD IDENTIFICATION OF SOIL REMARKS INCL. COLOR, LOSS OF WASH WATER, SEAMS IN ROCK, ETC. |
|---|---|---|---|---|---|---|---|---|---|---|---|---|---|
| | | 1 | ss | 24" | 20" | 2'0" | 6 | 11 | | | dry | | Brn FM SAND, sm F gravel, tr silt |
| | | | | | | | 21 | 34 | | | dense | | |
| | | 2 | ss | 9" | 9" | 2'9" | 40 | 50/3" | | | dry | 4'0" | Brn F SAND & F GRAVEL, tr silt, cobbles (fill) |
| | | | | | | | | | | | v dense | | |
| 5 | | 3 | ss | 24" | 16" | 6'0" | 60 | 33 | | | dry | 6'0" | Brn FM SAND, sm organic silt, lit F gravel |
| | | | | | | | 27 | 25 | | | v dense | | |
| | | 4 | ss | 10" | 7" | 6'10" | 57 | 50/4" | | | dry | | Brn FM SAND, sm F gravel, tr silt, cobbles |
| | | | | | | | | | | | v dense | | |
| | | 5 | ss | 24" | 18" | 10'0" | 33 | 37 | | | dry | | Brn FM SAND, lit silt, lit F gravel |
| 10 | | | | | | | 41 | 45 | | | v dense | | |
| | | 6 | ss | 24" | 14" | 12'0" | 25 | 52 | | | moist | | Brn FM SAND, sm silt, tr F gravel |
| | | | | | | | 50 | 48 | | | v dense | | |
| 15 | | | | | | | | | | | | | |
| | | 7 | ss | 10" | 7" | 15'10" | 52 | 50/4" | | | wet. | | LtBrn FMC SAND, lit F gravel, lit silt |
| 20 | | | | | | | | | | | | | |
| | | 8 | ss | 4" | 3" | 20'4" | 50/4" | | | | wet | 21'0" | Grey FM SAND & F GRAVEL, cobbles Auger refusal |
| | | 1 | C | 60" | 4" | 26'0" | RQD= 0% | | | 2 | | | highly fractured BEDROCK or boulders |
| | | | | | | | | | | 3 | | | |
| | | | | | | | | | | 2 | | | |
| 25 | | | | | | | | | | 3 | | | |
| | | | | | | | | | | 2 | | 26'0" | |
| 30 | | | | | | | | | | | | | E.O.B 26'0" |
| 35 | | | | | | | | | | | | | |
| 40 | | | | | | | | | | | | | * MOBILE SAFETY DRIVER WITH SAFETY HAMMER |

**NOTE: Subsoil conditions revealed by this investigation represent conditions at specific locations and may not represent conditions at other locations or times.**

GROUND SURFACE TO _____FT. USED _____CASING THEN _____ CASING TO _____FT. **HOLE NO. B-10**

A = AUGER UP = UNDISTURBED PISTON T = THINWALL V = VANE TEST

WOR = WEIGHT OF RODS WOH = WEIGHT OF HAMMER & RODS C = COARSE

SS = SPLIT TUBE SAMPLER H.S.A. = HOLLOW STEM AUGER M = MEDIUM

PROPORTIONS USED: TRACE = 0 - 10% LITTLE = 10 - 20% SOME = 20 - 35% AND =35 - 50% F = FINE

| SOILTESTING, INC. | CLIENT: Greenwich Public Schools | SHEET 1 OF 1 |
|---|---|---|
| 90 DONOVAN RD. | c/o KG&D Architects | HOLE NO. B-11 |
| OXFORD, CT 06478 | PROJECT NO. G38-1475-20 | |
| CT (203) 262-9328 | PROJECT NAME Greenwich High School | BORING LOCATIONS |
| NY (914) 946-4850 | 10 Hillside Rd | per Plan |
| FOREMAN - DRILLER | LOCATION Greenwich | |
| JK/nk | CT | |
| INSPECTOR | | OFFSET |
| GROUND WATER OBSERVATIONS | | DATE START 2/21/20 |
| AT none FT AFTER 0 HOURS | | DATE FINISH 2/21/20 |
| AT FT AFTER HOURS | | SURFACE ELEV. El. ±58 |
| | | GROUND WATER ELEV. |

| | CASING | SAMPLER | CORE BAR |
|---|---|---|---|
| TYPE | HSA | SS* | NQ |
| SIZE I.D. | 4 ¼" | 1 3/8" | 2" |
| HAMMER WT. | | 140# | BIT |
| HAMMER FALL | | 30" | dia |

| DEPTH | CASING BLOWS PER FOOT | SAMPLE NO | Type | PEN | REC. | DEPTH @ BOT | BLOWS PER 6 IN ON SAMPLER (FORCE ON TUBE) 0 - 6 | 6 - 12 | 12- 18 | CORE TIME PER FT (MIN) | DENSITY OR CONSIST / MOIST | STRATA CHANGE DEPTH / ELEV | FIELD IDENTIFICATION OF SOIL REMARKS INCL. COLOR, LOSS OF WASH WATER, SEAMS IN ROCK, ETC. |
|---|---|---|---|---|---|---|---|---|---|---|---|---|---|
| | | 1 | ss | 24" | 16" | 2'0" | 17 | 23 | | | dry | | DkBrn FM SAND, sm F gravel |
| | | | | | | | 22 | 27 | | | dense | | |
| | | 1 | ss | 0" | 0" | 2'0" | 50/0" | | | | | 2'6" | Auger refusal |
| | | 1 | C | 60" | 0" | 7'6" | RQD= 0% | | | 2 | | | Boulders |
| 5 | | | | | | | | | | 3 | | | |
| | | | | | | | | | | 0.5 | | | |
| | | | | | | | | | | 0.5 | | | |
| | | | | | | | | | | 0.5 | | 7'6" | |
| 10 | | | | | | | | | | | | | E.O.B 7'6" |
| 15 | | | | | | | | | | | | | |
| 20 | | | | | | | | | | | | | |
| 25 | | | | | | | | | | | | | |
| 30 | | | | | | | | | | | | | |
| 35 | | | | | | | | | | | | | |
| 40 | | | | | | | | | | | | | * MOBILE SAFETY DRIVER WITH SAFETY HAMMER |

**NOTE: Subsoil conditions revealed by this investigation represent conditions at specific locations and may not represent conditions at other locations or times.**

GROUND SURFACE TO _____FT. USED _____CASING THEN _____ CASING TO _____FT. **HOLE NO. B-11**

A = AUGER UP = UNDISTURBED PISTON T = THINWALL V = VANE TEST

WOR = WEIGHT OF RODS WOH = WEIGHT OF HAMMER & RODS C = COARSE

SS = SPLIT TUBE SAMPLER H.S.A. = HOLLOW STEM AUGER M = MEDIUM

PROPORTIONS USED: TRACE = 0 - 10% LITTLE = 10 - 20% SOME = 20 - 35% AND =35 - 50% F = FINE

| SOILTESTING, INC. | CLIENT: Greenwich Public Schools | SHEET 1 OF 1 |
|---|---|---|
| 90 DONOVAN RD. | c/o KG&D Architects | HOLE NO. B-11A/ -11B |
| OXFORD, CT 06478 | PROJECT NO. G38-1475-20 | |
| CT (203) 262-9328 | PROJECT NAME Greenwich High School | BORING LOCATIONS |
| NY (914) 946-4850 | 10 Hillside Rd | per Plan |
| FOREMAN - DRILLER | LOCATION Greenwich | |
| JK/nk | CT | |
| INSPECTOR | | OFFSET |
| GROUND WATER OBSERVATIONS | | DATE START 2/24/20 |
| AT none FT AFTER 0 HOURS | | DATE FINISH 2/24/20 |
| AT__FT AFTER__HOURS | | SURFACE ELEV. El. ±58 |
| | | GROUND WATER ELEV. |

| | CASING | SAMPLER | CORE BAR |
|---|---|---|---|
| TYPE | HSA | SS* | |
| SIZE I.D. | 4 ¼" | 1 3/8" | |
| HAMMER WT. | | 140# | BIT |
| HAMMER FALL | | 30" | |

| DEPTH | CASING BLOWS PER FOOT | SAMPLE NO | Type | PEN | REC | DEPTH @ BOT | BLOWS PER 6 IN ON SAMPLER (FORCE ON TUBE) 0 - 6 | 6 - 12 | 12- 18 | CORE TIME PER FT (MIN) | DENSITY OR CONSIST / MOIST | STRATA CHANGE DEPTH / ELEV | FIELD IDENTIFICATION OF SOIL REMARKS INCL. COLOR, LOSS OF WASH WATER, SEAMS IN ROCK, ETC. |
|---|---|---|---|---|---|---|---|---|---|---|---|---|---|
| | B-11A | | | | | | | | | | | | Offset 5' East of B-11 |
| | | | | | | | | | | | | | Boulders 1-4' |
| 5 | | 1 | ss | 4" | 1" | 4'4" | 100/4" | | | | dry | | Brn FM SAND, sm silt, lit F gravel |
| | | | | | | | | | | | v dense | 5'0" | Auger refusal |
| 10 | | | | | | | | | | | | | |
| 15 | | | | | | | | | | | | | |
| 20 | | | | | | | | | | | | | |
| | B-11B | | | | | | | | | | | | Offset 10' East of B-11 |
| | | | | | | | | | | | | | Boulders 2-5'6" |
| 5 | | | | | | | | | | | | 5'6" | Auger refusal |
| 10 | | | | | | | | | | | | | |
| 15 | | | | | | | | | | | | | |
| 20 | | | | | | | | | | | | | * MOBILE SAFETY DRIVER WITH SAFETY HAMMER |

**NOTE: Subsoil conditions revealed by this investigation represent conditions at specific locations and may not represent conditions at other locations or times.**

GROUND SURFACE TO _____FT. USED _____CASING THEN _____ CASING TO _____FT. **HOLE NO. B-11A/ -11B**

A = AUGER UP = UNDISTURBED PISTON T = THINWALL V = VANE TEST

WOR = WEIGHT OF RODS WOH = WEIGHT OF HAMMER & RODS C = COARSE

SS = SPLIT TUBE SAMPLER H.S.A. = HOLLOW STEM AUGER M = MEDIUM

PROPORTIONS USED: TRACE = 0 - 10% LITTLE = 10 - 20% SOME = 20 - 35% AND =35 - 50% F = FINE

| SOILTESTING, INC. | CLIENT: Greenwich Public Schools | SHEET 1 OF 1 |
|---|---|---|
| 90 DONOVAN RD. | c/o KG&D Architects | HOLE NO. B-12 |
| OXFORD, CT 06478 | PROJECT NO. G38-1475-20 | |
| CT (203) 262-9328 | PROJECT NAME Greenwich High School | BORING LOCATIONS |
| NY (914) 946-4850 | 10 Hillside Rd | per Plan |
| FOREMAN - DRILLER | LOCATION Greenwich | |
| JK/nk | CT | |
| INSPECTOR | | OFFSET |
| GROUND WATER OBSERVATIONS | | DATE START 2/25/20 |
| AT 5'6" FT AFTER 0 HOURS | | DATE FINISH 2/25/20 |
| AT __FT AFTER __HOURS | | SURFACE ELEV. El. ±52 |
| | | GROUND WATER ELEV. El. ±46.5 |

| | CASING | SAMPLER | CORE BAR |
|---|---|---|---|
| TYPE | HSA | SS* | |
| SIZE I.D. | 4 ¼" | 1 3/8" | |
| HAMMER WT. | | 140# | BIT |
| HAMMER FALL | | 30" | |

| DEPTH | CASING BLOWS PER FOOT | SAMPLE NO | Type | PEN | REC | DEPTH @ BOT | BLOWS PER 6 IN ON SAMPLER (FORCE ON TUBE) 0 - 6 | 6 - 12 | 12- 18 | CORE TIME PER FT (MIN) | DENSITY OR CONSIST / MOIST | STRATA CHANGE DEPTH / ELEV | FIELD IDENTIFICATION OF SOIL REMARKS INCL. COLOR, LOSS OF WASH WATER, SEAMS IN ROCK, ETC. |
|---|---|---|---|---|---|---|---|---|---|---|---|---|---|
| | | 1 | ss | 20" | 12" | 1'8" | 4 | 3 | | | dry | | DkBrn organic SILT & FM SAND, lit F gravel (possible fill) |
| | | | | | | | 11 | 50/2" | | | stiff | | |
| | | 2 | ss | 0" | 0" | 2'0" | 50/0" | | | | | | cobbles |
| | | | | | | | | | | | | 4'0" | |
| 5 | | 3 | ss | 24" | 20" | 6'0" | 7 | 8 | | | moist | | BrnOrng FM SAND, lit F gravel, lit C sand, tr silt |
| | | | | | | | 7 | 12 | | | compact | 6'0" | |
| | | 4 | ss | 24" | 18" | 8'0" | 5 | 5 | | | wet | | LtBrn SILT, sm VFF sand, tr F gravel |
| | | | | | | | 10 | 7 | | | stiff | 8'0" | |
| | | 5 | ss | 24" | 24" | 10'0" | 13 | 13 | | | wet | | Brn Orng MC SAND, sm F sand, lit silt, lit F gravel |
| 10 | | | | | | | 17 | 21 | | | compact | 10'0" | |
| | | 6 | ss | 3" | 3" | 10'3" | 60/3" | | | | wet | | Brn SILT & FM SAND, sm F gravel, lit C sand |
| | | | | | | | | | | | hard | | boulders, cobbles from 10' |
| | | | | | | | | | | | | 12'6" | Auger refusal |
| 15 | | | | | | | | | | | | | E.O.B 12'6" |
| 20 | | | | | | | | | | | | | |
| 25 | | | | | | | | | | | | | |
| 30 | | | | | | | | | | | | | |
| 35 | | | | | | | | | | | | | * CME AUTOHAMMER |
| 40 | | | | | | | | | | | | | |

**NOTE: Subsoil conditions revealed by this investigation represent conditions at specific locations and may not represent conditions at other locations or times.**

GROUND SURFACE TO _____FT. USED _____CASING THEN _____ CASING TO _____FT. **HOLE NO. B-12**

A = AUGER UP = UNDISTURBED PISTON T = THINWALL V = VANE TEST

WOR = WEIGHT OF RODS WOH = WEIGHT OF HAMMER & RODS C = COARSE

SS = SPLIT TUBE SAMPLER H.S.A. = HOLLOW STEM AUGER M = MEDIUM

PROPORTIONS USED: TRACE = 0 - 10% LITTLE = 10 - 20% SOME = 20 - 35% AND =35 - 50% F = FINE

| SOILTESTING, INC. | CLIENT: Greenwich Public Schools c/o KG&D Architects | SHEET 1 OF 1 |
|---|---|---|
| 90 DONOVAN RD. OXFORD, CT 06478 | PROJECT NO. G38-1475-20 | HOLE NO. B-13 |
| CT (203) 262-9328 NY (914) 946-4850 | PROJECT NAME Greenwich High School 10 Hillside Rd | BORING LOCATIONS per Plan |
| FOREMAN - DRILLER JK/nk | LOCATION Greenwich CT | |
| INSPECTOR | | OFFSET |

| | CASING | SAMPLER | CORE BAR |
|---|---|---|---|
| TYPE | HSA | SS* | |
| SIZE I.D. | 4 ¼" | 1 3/8" | |
| HAMMER WT. | | 140# | BIT |
| HAMMER FALL | | 30" | |

| | |
|---|---|
| DATE START | 2/25/20 |
| DATE FINISH | 2/25/20 |
| SURFACE ELEV. | El. ±56 |
| GROUND WATER ELEV. | El. ±46 |

GROUND WATER OBSERVATIONS
AT 10' FT AFTER 0 HOURS
AT __ FT AFTER __ HOURS

| DEPTH | CASING BLOWS PER FOOT | SAMPLE NO | Type | PEN | REC | DEPTH @ BOT | BLOWS PER 6 IN ON SAMPLER (FORCE ON TUBE) 0 - 6 | 6 - 12 | 12- 18 | CORE TIME PER FT (MIN) | DENSITY OR CONSIST / MOIST | STRATA CHANGE DEPTH / ELEV | FIELD IDENTIFICATION OF SOIL REMARKS INCL. COLOR, LOSS OF WASH WATER, SEAMS IN ROCK, ETC. |
|---|---|---|---|---|---|---|---|---|---|---|---|---|---|
| | | 1 | ss | 24" | 16" | 2'0" | 2 | 2 | | | dry | | 3" Topsoil |
| | | | | | | | 3 | 3 | | | stiff | | DkBrn organic SILT & FM SAND |
| | | 2 | ss | 24" | 12" | 4'0" | 8 | 12 | | | dry | 2'6" | |
| | | | | | | | 26 | 58 | | | dense | | |
| 5 | | 3 | ss | 8" | 4" | 4'8" | 18 | 50/2" | | | dry | | Brn FMC SAND, sm F gravel, lit silt |
| | | | | | | | | | | | | | Brn FM SAND & F GRAVEL, cobbles (possible fill) |
| | | 4 | ss | 24" | 0" | 8'0" | 49 | 18 | | | dry | 7'0" | no recovery |
| | | | | | | | 5 | 9 | | | v stiff | | |
| | | 5 | ss | 24" | 10" | 10'0" | 7 | 15 | | | moist | 9'0" | Brn SILT & F GRAVEL |
| 10 | | | | | | | 18 | 17 | | | dense | 10'0" | Brn FMC SAND |
| | | 6 | ss | 24" | 18" | 12'0" | 5 | 7 | | | wet | | LtBrn SILT, sm VFF sand |
| | | | | | | | 7 | 12 | | | stiff | | |
| 15 | | | | | | | | | | | | 15'0" | |
| | | 7 | ss | 24" | 16" | 17'0" | 11 | 15 | | | wet | | Brn FMC SAND, sm silt lit F gravel |
| | | | | | | | 18 | 20 | | | dense | | |
| 20 | | | | | | | | | | | | | |
| | | 8 | ss | 24" | 14" | 22'0" | 8 | 13 | | | wet | | BrnOrng MC SAND, sm F sand, tr silt |
| | | | | | | | 15 | 16 | | | compact | | |
| | | | | | | | | | | | | 23'0" | |
| | | | | | | | | | | | | | partly decomposed BEDROCK or boulder frags, sm BrnTan FMC sand |
| 25 | | 9 | ss | 1" | 1" | 25'1" | 50/1" | | | | wet | 25'1" | |
| 30 | | | | | | | | | | | | | E.O.B 25'0" |
| 35 | | | | | | | | | | | | | * CME AUTOHAMMER |
| 40 | | | | | | | | | | | | | |

**NOTE: Subsoil conditions revealed by this investigation represent conditions at specific locations and may not represent conditions at other locations or times.**

GROUND SURFACE TO _____FT. USED _____CASING THEN _____ CASING TO _____FT. **HOLE NO. B-13**

A = AUGER UP = UNDISTURBED PISTON T = THINWALL V = VANE TEST
WOR = WEIGHT OF RODS WOH = WEIGHT OF HAMMER & RODS C = COARSE
SS = SPLIT TUBE SAMPLER H.S.A. = HOLLOW STEM AUGER M = MEDIUM
PROPORTIONS USED: TRACE = 0 - 10% LITTLE = 10 - 20% SOME = 20 - 35% AND =35 - 50% F = FINE

| SOILTESTING, INC.<br>90 DONOVAN RD.<br>OXFORD, CT 06478<br>CT (203) 262-9328<br>NY (914) 946-4850 | CLIENT: Greenwich Public Schools<br>c/o KG&D Architects | SHEET 1 OF 1<br>HOLE NO. B-14 |
|---|---|---|
| | PROJECT NO. G38-1475-20 | |
| | PROJECT NAME Greenwich High School<br>10 Hillside Rd | BORING LOCATIONS<br>per Plan |
| FOREMAN - DRILLER<br>JK/nk | LOCATION Greenwich<br>CT | |
| INSPECTOR | | OFFSET |
| GROUND WATER OBSERVATIONS<br>AT 12' FT AFTER 0 HOURS<br>AT __FT AFTER __HOURS | | DATE START 2/26/20<br>DATE FINISH 2/26/20<br>SURFACE ELEV. El. ±57.9<br>GROUND WATER ELEV. El. ±45.9 |

| | CASING | SAMPLER | CORE BAR |
|---|---|---|---|
| TYPE | HSA | SS* | |
| SIZE I.D. | 4 ¼" | 1 3/8" | |
| HAMMER WT. | | 140# | BIT |
| HAMMER FALL | | 30" | |

| DEPTH | CASING BLOWS PER FOOT | SAMPLE NO | Type | PEN | REC. | DEPTH @ BOT | BLOWS PER 6 IN ON SAMPLER (FORCE ON TUBE) 0 - 6 | 6 - 12 | 12- 18 | CORE TIME PER FT (MIN) | DENSITY OR CONSIST / MOIST | STRATA CHANGE DEPTH / ELEV | FIELD IDENTIFICATION OF SOIL REMARKS INCL. COLOR, LOSS OF WASH WATER, SEAMS IN ROCK, ETC. |
|---|---|---|---|---|---|---|---|---|---|---|---|---|---|
| | | 1 | ss | 24" | 18" | 2'0" | 12 | 30 | | | dry | | 3" topsoil; Brn FM SAND, sm F gravel, lit C sand, tr silt |
| | | | | | | | 56 | 50 | | | v dense | | |
| | | 2 | ss | 24" | 17" | 4'0" | 72 | 83 | | | dry | | Brn FM SAND & F GRAVEL, lit C sand, tr silt |
| | | | | | | | 70 | 54 | | | v dense | | |
| 5 | | 3 | ss | 24" | 24" | 6'0" | 32 | 30 | | | dry | | Brn FMC SAND & F GRAVEL, lit C sand, tr silt |
| | | | | | | | 36 | 47 | | | v dense | | |
| | | 4 | ss | 24" | 10" | 8'0" | 45 | 53 | | | dry | | LtBrn FMC SAND, sm F gravel, lit silt |
| | | | | | | | 44 | 67 | | | v dense | | |
| | | 5 | ss | 24" | 22" | 10'0" | 26 | 27 | | | dry | | LtBrn FM SAND, lit F gravel, lit C sand, lit silt |
| 10 | | | | | | | 26 | 60 | | | v dense | | |
| | | 6 | ss | 24" | 17" | 12'0" | 52 | 67 | | | moist | | Brn MC SAND, sm F sand, lit silt, lit F gravel |
| | | | | | | | 73 | 58 | | | v dense | | |
| 15 | | | | | | | | | | | | | |
| | | 7 | ss | 18" | 18" | 16'6" | 25 | 44 | | | wet | 15'6" | Brn MC SAND, sm silt, sm F gravel, lit F sand |
| | | | | | | | 103 | | | | v dense | | partly decomposed BEDROCK |
| 20 | | | | | | | | | | | wet | | |
| | | 8 | ss | 3" | 3" | 20'3" | 75/3" | | | | dry | | SAME |
| 25 | | | | | | | | | | | | | |
| | | 9 | ss | 4" | 2" | 25'4" | 150/4" | | | | wet | 25'4" | SAME |
| 30 | | | | | | | | | | | | | E.O.B 25'4" |
| 35 | | | | | | | | | | | | | |
| 40 | | | | | | | | | | | | | * MOBILE SAFETY DRIVER WITH SAFETY HAMMER |

**NOTE: Subsoil conditions revealed by this investigation represent conditions at specific locations and may not represent conditions at other locations or times.**

GROUND SURFACE TO _____FT. USED _____CASING THEN _____ CASING TO _____FT. **HOLE NO. B-14**

A = AUGER UP = UNDISTURBED PISTON T = THINWALL V = VANE TEST

WOR = WEIGHT OF RODS WOH = WEIGHT OF HAMMER & RODS C = COARSE

SS = SPLIT TUBE SAMPLER H.S.A. = HOLLOW STEM AUGER M = MEDIUM

PROPORTIONS USED: TRACE = 0 - 10% LITTLE = 10 - 20% SOME = 20 - 35% AND =35 - 50% F = FINE

| SOILTESTING, INC. | CLIENT: Greenwich Public Schools | SHEET 1 OF 1 |
|---|---|---|
| 90 DONOVAN RD. | c/o KG&D Architects | HOLE NO. B-15 |
| OXFORD, CT 06478 | PROJECT NO. G38-1475-20 | |
| CT (203) 262-9328 | PROJECT NAME Greenwich High School | BORING LOCATIONS |
| NY (914) 946-4850 | 10 Hillside Rd | per Plan |
| FOREMAN - DRILLER | LOCATION Greenwich | |
| JK/nk | CT | |
| INSPECTOR | | OFFSET |

| | CASING | SAMPLER | CORE BAR |
|---|---|---|---|
| TYPE | HSA | SS* | |
| SIZE I.D. | 4 ¼" | 1 3/8" | |
| HAMMER WT. | | 140# | BIT |
| HAMMER FALL | | 30" | |

| | |
|---|---|
| DATE START | 2/24/20 |
| DATE FINISH | 2/24/20 |
| SURFACE ELEV. | El. ±57.5 |
| GROUND WATER ELEV. | El. ±47.5 |

GROUND WATER OBSERVATIONS
AT 10' FT AFTER 0 HOURS
AT __ FT AFTER __ HOURS

| DEPTH | CASING BLOWS PER FOOT | SAMPLE NO | Type | PEN | REC | DEPTH @ BOT | BLOWS PER 6 IN ON SAMPLER (FORCE ON TUBE) 0 - 6 | 6 - 12 | 12- 18 | CORE TIME PER FT (MIN) | DENSITY OR CONSIST / MOIST | STRATA CHANGE DEPTH / ELEV | FIELD IDENTIFICATION OF SOIL REMARKS INCL. COLOR, LOSS OF WASH WATER, SEAMS IN ROCK, ETC. |
|---|---|---|---|---|---|---|---|---|---|---|---|---|---|
| | | 1 | ss | 24" | 16" | 2'0" | 9 | 10 | | | dry | | 1" topsoil; Brn FM SAND, lit F gravel, lit C sand, tr silt |
| | | | | | | | 16 | 23 | | | compact | | |
| | | 2 | ss | 24" | 14" | 4'0" | 26 | 30 | | | dry | | Brn FMC SAND, sm F gravel, tr silt |
| | | | | | | | 44 | 43 | | | v dense | | |
| 5 | | 3 | ss | 21" | 8" | 5'9" | 61 | 55 | | | dry | | Brn FM SAND & F GRAVEL, lit C sand, tr silt (possible decomposed BEDROCK) |
| | | | | | | | 58 | 100/3" | | | v dense | 5'6" | |
| | | 4 | ss | 8" | 6" | 6'8" | 52 | 50/2" | | | dry | | partly decomposed BEDROCK (Brn FMC SAND & F gravel, cobbles, boulders |
| | | | | | | | | | | | v dense | | |
| | | 5 | ss | 3" | 3" | 8'3" | 50/3" | | | | wet | | SAME |
| 10 | | | | | | | | | | | v dense | | |
| | | 6 | ss | 3" | 2" | 10'2" | 50/2" | | | | wet | | SAME |
| | | | | | | | | | | | v dense | | |
| | | | | | | | | | | | | 13'0" | Auger refusal |
| 15 | | | | | | | | | | | | | E.O.B 13'0" |
| 20 | | | | | | | | | | | | | |
| 25 | | | | | | | | | | | | | |
| 30 | | | | | | | | | | | | | |
| 35 | | | | | | | | | | | | | |
| 40 | | | | | | | | | | | | | * MOBILE SAFETY DRIVER WITH SAFETY HAMMER |

**NOTE: Subsoil conditions revealed by this investigation represent conditions at specific locations and may not represent conditions at other locations or times.**

GROUND SURFACE TO _____FT. USED _____CASING THEN _____ CASING TO _____FT. **HOLE NO. B-15**

A = AUGER UP = UNDISTURBED PISTON T = THINWALL V = VANE TEST
WOR = WEIGHT OF RODS WOH = WEIGHT OF HAMMER & RODS C = COARSE
SS = SPLIT TUBE SAMPLER H.S.A. = HOLLOW STEM AUGER M = MEDIUM
PROPORTIONS USED: TRACE = 0 - 10% LITTLE = 10 - 20% SOME = 20 - 35% AND =35 - 50% F = FINE

| SOILTESTING, INC.<br>90 DONOVAN RD.<br>OXFORD, CT 06478<br>CT (203) 262-9328<br>NY (914) 946-4850 | CLIENT: Greenwich Public Schools<br>c/o KG&D Architects | SHEET 1 OF 1<br>HOLE NO. B-16 |
|---|---|---|
| | PROJECT NO. G38-1475-20 | |
| | PROJECT NAME Greenwich High School<br>10 Hillside Rd | BORING LOCATIONS<br>per Plan |
| FOREMAN - DRILLER<br>JK/nk | LOCATION Greenwich<br>CT | |
| INSPECTOR | | OFFSET |
| GROUND WATER OBSERVATIONS<br>AT 10' FT AFTER 0 HOURS<br>AT FT AFTER HOURS | | DATE START 2/24/20<br>DATE FINISH 2/24/20<br>SURFACE ELEV. El. ±58.0<br>GROUND WATER ELEV. El. ±48.0 |

| | CASING | SAMPLER | CORE BAR |
|---|---|---|---|
| TYPE | HSA | SS* | |
| SIZE I.D. | 4 ¼" | 1 3/8" | |
| HAMMER WT. | | 140# | BIT |
| HAMMER FALL | | 30" | |

| DEPTH | CASING BLOWS PER FOOT | SAMPLE NO | Type | PEN | REC. | DEPTH @ BOT | BLOWS PER 6 IN ON SAMPLER (FORCE ON TUBE) 0 - 6 | 6 - 12 | 12- 18 | CORE TIME PER FT (MIN) | DENSITY OR CONSIST / MOIST | STRATA CHANGE DEPTH / ELEV | FIELD IDENTIFICATION OF SOIL REMARKS INCL. COLOR, LOSS OF WASH WATER, SEAMS IN ROCK, ETC. |
|---|---|---|---|---|---|---|---|---|---|---|---|---|---|
| | | 1 | ss | 24" | 20" | 2'0" | 8 | 15 | | | dry | | 4" Topsoil; Brn FM SAND, lit F gravel, lit C sand, tr silt |
| | | | | | | | 15 | 17 | | | compact | | |
| | | 2 | ss | 11" | 8" | 2'11" | 30 | 50/5" | | | dry | 2'6" | Brn FM SAND, sm F gravel, tr silt, cobbles, boulders |
| | | | | | | | | | | | | | fractured partly decomposed BEDROCK |
| 5 | | 3 | ss | 2" | 2" | 4'2" | 100/2" | | | | dry | | (Brn FM SAND, sm F gravel, sm silt, lit C sand) cobbles, boulders |
| | | 4 | ss | 3" | 2:00 | 6'3" | 50/3" | | | | dry | | SAME |
| | | 5 | ss | 17" | 15" | 9'3" | 28 | 37 | | | moist | | SAME |
| 10 | | | | | | | 75/5" | | | | v dense | | |
| | | 6 | ss | 10" | 9" | 10'10" | 19 | 85/4" | | | wet | | SAME |
| | | | | | | | | | | | v dense | 11'0" | Auger refusal |
| 15 | | | | | | | | | | | | | E.O.B 11'0" |
| 20 | | | | | | | | | | | | | |
| 25 | | | | | | | | | | | | | |
| 30 | | | | | | | | | | | | | |
| 35 | | | | | | | | | | | | | |
| 40 | | | | | | | | | | | | | * MOBILE SAFETY DRIVER WITH SAFETY HAMMER |

**NOTE: Subsoil conditions revealed by this investigation represent conditions at specific locations and may not represent conditions at other locations or times.**

GROUND SURFACE TO _____FT. USED _____CASING THEN _____ CASING TO _____FT. **HOLE NO. B-16**

A = AUGER UP = UNDISTURBED PISTON T = THINWALL V = VANE TEST

WOR = WEIGHT OF RODS WOH = WEIGHT OF HAMMER & RODS C = COARSE

SS = SPLIT TUBE SAMPLER H.S.A. = HOLLOW STEM AUGER M = MEDIUM

PROPORTIONS USED: TRACE = 0 - 10% LITTLE = 10 - 20% SOME = 20 - 35% AND =35 - 50% F = FINE

| SOILTESTING, INC.<br>90 DONOVAN RD.<br>OXFORD, CT 06478<br>CT (203) 262-9328<br>NY (914) 946-4850 | CLIENT: Greenwich Public Schools<br>c/o KG&D Architects | SHEET 1 OF 1<br>HOLE NO. B-17 |
|---|---|---|
| | PROJECT NO. G38-1475-20 | |
| | PROJECT NAME Greenwich High School<br>10 Hillside Rd | BORING LOCATIONS<br>per Plan |
| FOREMAN - DRILLER<br>JK/nk | LOCATION Greenwich<br>CT | |
| INSPECTOR | | OFFSET |
| GROUND WATER OBSERVATIONS<br>AT none FT AFTER 0 HOURS<br>AT __FT AFTER __HOURS | | |

| | CASING | SAMPLER | CORE BAR |
|---|---|---|---|
| TYPE | HSA | SS* | NQ |
| SIZE I.D. | 4 ¼" | 1 3/8" | 2" |
| HAMMER WT. | | 140# | BIT |
| HAMMER FALL | | 30" | dia |

| | |
|---|---|
| DATE START | 2/21/20 |
| DATE FINISH | 2/21/20 |
| SURFACE ELEV. | El. ±56 |
| GROUND WATER ELEV. | |

| DEPTH | CASING BLOWS PER FOOT | SAMPLE NO | Type | PEN | REC. | DEPTH @ BOT | BLOWS PER 6 IN ON SAMPLER (FORCE ON TUBE) 0 - 6 | 6 - 12 | 12- 18 | CORE TIME PER FT (MIN) | DENSITY OR CONSIST / MOIST | STRATA CHANGE DEPTH / ELEV | FIELD IDENTIFICATION OF SOIL REMARKS INCL. COLOR, LOSS OF WASH WATER, SEAMS IN ROCK, ETC. |
|---|---|---|---|---|---|---|---|---|---|---|---|---|---|
| | | 1 | ss | 24" | 16" | 2'0" | 10 | 15 | | | dry | | Brn FM SAND, lit F gravel, tr silt |
| | | | | | | | 35 | 36 | | | dense | | Brn FM SAND, sm F gravel, tr silt |
| | | 2 | ss | 24" | 15" | 3'9" | 33 | 42 | | | dry | | boulders 3-4' |
| | | | | | | | 40 | 50/3" | | | v dense | 4'0" | Auger refusal |
| 5 | | 1 | C | 60" | 0" | 9'0" | RQD= 0% | | | 3 | | | Boulders to 6' |
| | | | | | | | | | | 2 | | | |
| | | | | | | | | | | 0.5 | | | |
| | | | | | | | | | | 0.5 | | | |
| | | | | | | | | | | 0.5 | | 9'0" | |
| 10 | | | | | | | | | | | | | E.O.B 9'0" |
| 15 | | | | | | | | | | | | | |
| 20 | | | | | | | | | | | | | |
| 25 | | | | | | | | | | | | | |
| 30 | | | | | | | | | | | | | |
| 35 | | | | | | | | | | | | | |
| 40 | | | | | | | | | | | | | * MOBILE SAFETY DRIVER WITH SAFETY HAMMER |

**NOTE: Subsoil conditions revealed by this investigation represent conditions at specific locations and may not represent conditions at other locations or times.**

GROUND SURFACE TO _____FT. USED _____CASING THEN _____ CASING TO _____FT. **HOLE NO. B-17**

A = AUGER UP = UNDISTURBED PISTON T = THINWALL V = VANE TEST

WOR = WEIGHT OF RODS WOH = WEIGHT OF HAMMER & RODS C = COARSE

SS = SPLIT TUBE SAMPLER H.S.A. = HOLLOW STEM AUGER M = MEDIUM

PROPORTIONS USED: TRACE = 0 - 10% LITTLE = 10 - 20% SOME = 20 - 35% AND =35 - 50% F = FINE

| SOILTESTING, INC. | CLIENT: Greenwich Public Schools | SHEET 1 OF 1 |
|---|---|---|
| 90 DONOVAN RD. | c/o KG&D Architects | HOLE NO. B-17A |
| OXFORD, CT 06478 | PROJECT NO. G38-1475-20 | |
| CT (203) 262-9328 | PROJECT NAME Greenwich High School | BORING LOCATIONS |
| NY (914) 946-4850 | 10 Hillside Rd | per Plan |
| FOREMAN - DRILLER | LOCATION Greenwich | 9' W/SW of B-17 |
| JK/nk | CT | |
| INSPECTOR | | OFFSET |

| | CASING | SAMPLER | CORE BAR |
|---|---|---|---|
| TYPE | HSA | SS* | NQ |
| SIZE I.D. | 4 ¼" | 1 3/8" | 2" |
| HAMMER WT. | | 140# | BIT |
| HAMMER FALL | | 30" | dia |

| | |
|---|---|
| DATE START | 2/28/20 |
| DATE FINISH | 2/28/20 |
| SURFACE ELEV. | El. ±56 |
| GROUND WATER ELEV. | El. ±46 |

GROUND WATER OBSERVATIONS
AT 10' FT AFTER 0 HOURS
AT __FT AFTER __HOURS

| DEPTH | CASING BLOWS PER FOOT | SAMPLE NO | Type | PEN | REC. | DEPTH @ BOT | BLOWS PER 6 IN ON SAMPLER (FORCE ON TUBE) 0 - 6 | 6 - 12 | 12- 18 | CORE TIME PER FT (MIN) | DENSITY OR CONSIST / MOIST | STRATA CHANGE DEPTH / ELEV | FIELD IDENTIFICATION OF SOIL REMARKS INCL. COLOR, LOSS OF WASH WATER, SEAMS IN ROCK, ETC. |
|---|---|---|---|---|---|---|---|---|---|---|---|---|---|
| | | | | | | | | | | | | | Brn FM SAND, lit FC gravel, tr silt |
| | | | | | | | | | | | | 3'6" | Auger refusal |
| | | | | | | | | | | | | | boulders 3'6"-8'6" (possible fill) |
| | | 1 | C | 60" | 3" | 8'6" | RQD= % | | | 1.3 | | | |
| 5 | | | | | | | | | | 1.15 | | | |
| | | | | | | | | | | 2 | | | |
| | | | | | | | | | | 1 | | | |
| | | | | | | | | | | 0.3 | | 8'6" | |
| | | 1 | ss | 18" | 12" | 10'0" | 21 | 18 | | | | | Brn FM SAND,lit silt,, FC gravel |
| 10 | | | | | | | 23 | | | | v dense | | |
| | | 2 | ss | 24" | 101" | 12'0" | 32 | 39 | | | wet | | Brn FMC SAND & F GRAVEL, tr silt |
| | | | | | | | 44 | 50 | | | v dense | | |
| 15 | | | | | | | | | | | | | |
| | | 3 | ss | 24" | 20" | 17'0" | 32 | 39 | | | wet | | Brn FMC SAND, lit F gravel |
| | | | | | | | 44 | 50 | | | v dense | | |
| 20 | | | | | | | | | | | | | |
| | | 4 | ss | 14" | 10" | 21'2" | 29 | 34 | | | | | Brn FM SAND, sm F gravel, lit C sand, tr silt |
| | | | | | | | 37 | 39 | | | | 21'2" | |
| 25 | | | | | | | | | | | | | E.O.B 21'2" |
| 30 | | | | | | | | | | | | | |
| 35 | | | | | | | | | | | | | |
| 40 | | | | | | | | | | | | | * MOBILE SAFETY DRIVER WITH SAFETY HAMMER |

**NOTE: Subsoil conditions revealed by this investigation represent conditions at specific locations and may not represent conditions at other locations or times.**

GROUND SURFACE TO _____FT. USED _____CASING THEN _____ CASING TO _____FT. **HOLE NO. B-17A**

A = AUGER UP = UNDISTURBED PISTON T = THINWALL V = VANE TEST
WOR = WEIGHT OF RODS WOH = WEIGHT OF HAMMER & RODS C = COARSE
SS = SPLIT TUBE SAMPLER H.S.A. = HOLLOW STEM AUGER M = MEDIUM
PROPORTIONS USED: TRACE = 0 - 10% LITTLE = 10 - 20% SOME = 20 - 35% AND =35 - 50% F = FINE

# SECTION 01 10 00

# DESCRIPTION OF WORK

## 1.01 GENERAL PROJECT DESCRIPTION

A. The scope of work of this project generally consists of Renovations at Greenwich High School Cardinal Stadium in Greenwich, CT, all as depicted in the Contract Documents.

B. Work locations are:
   1. Greenwich High School, 10 Hillside Road, Greenwich, CT 06830

C. The general scope of the work shall include: Renovations to the area around Greenwich HS Cardinal Stadium including construction of foundations for a new home bleacher assembly (bleacher not in contract, to be installed by others) and construction of buildings under the new bleachers to provide a home team room, public toilet rooms and support spaces. Site improvements to include utilities, site lighting, stormwater management, driveways, walkways, fencing, retaining walls, new parking area with handicapped parking spaces. Work also includes construction of a new ticket kiosk building and replacement of the performance lighting fixtures on the current poles.

D. Existing conditions are shown on the drawings to the best knowledge of the Architect. The Architect, however, cannot guarantee the correctness of the existing conditions shown and assumes no responsibility therefor. It shall be the responsibility of the Contractor to visit the site and verify all existing conditions.

E. The Contractor shall coordinate this Contractor's work with the work and progress of other separate contracts.

F. All Contractors' employees shall use a single means of access and egress, except in the case of emergency, to be designated by the General Contractor.

## 1.02 CONSTRUCTION TIME AND PHASING REQUIREMENTS

A. The Contractor is advised that "time is of the essence" for the completion of the Contract. Further, safe and legal ingress and egress shall be maintained at all times to and through the occupied portions of the construction site.

B. Work shall proceed in such a manner as to cause the least amount of disruption to the ongoing operations as possible. COORDINATE CLOSELY WITH SCHOOL OPERATING PERSONNEL.

C. All work and storage areas shall be completely enclosed by a fence or barricade at all times so that no student or the public can approach the area or the equipment. The Contractor shall maintain fences and barricades at all times and shall -
   1. Provide signs posted on fence 50 feet on center that read "Work Area - Keep Out".
   2. Maintain at all times, all exits and walkways from the Building and along the public way.

   Where the barricade is removed for work, the Contractor performing such work shall provide adequate safety personnel to prevent unauthorized persons from approaching the work area.

D. Electrical and mechanical services to existing facilities shall be maintained at all times.

## 1.03 FIELD MEASUREMENTS

A. Each Respective Contractor shall take all necessary field measurements prior to

fabrication and installation of work and shall assume complete responsibility for accuracy of same.

1.04 INITIAL SUBMITTAL REQUIREMENTS

A. Contractor shall provide bonds, insurance, emergency telephone numbers, progress scheduling, schedules of submittals, subcontractor listings, schedule of values, and the like prior to the start of any work.

1.04 QUALITY REQUIREMENTS

A. Monitor quality control over suppliers, manufacturers, Products, services, site conditions, and workmanship, to produce Work of specified quality.
B. Comply with manufacturer's instructions.
C. Comply with specified standards as minimum quality for the Work except when more stringent tolerances, codes, or specified requirements indicate higher standards or more precise workmanship.
D. Monitor fabrication and installation tolerance control of installed Products over suppliers, manufacturers, Products, site conditions, and workmanship, to produce acceptable Work. Do not permit tolerances to accumulate.
E. Comply fully with manufacturer's tolerances.

1.11 COORDINATION

A. Coordinate scheduling, submittals, and Work of various sections of specifications to ensure efficient and orderly sequence of installation of interdependent construction elements.
B. Verify utility requirement characteristics of operating equipment are compatible with building utilities.
C. Coordinate space requirements and installation of mechanical and electrical work indicated diagrammatically on Drawings. Follow routing shown for pipes, ducts, and conduit, as closely as practicable.
D. In finished areas, conceal pipes, ducts, and wiring within construction.
E. Additional coordination required with Bleacher Manufacturer, Southern Bleacher Company, and their employees for installation of the bleacher assembly. Coordination shall include measurements, scheduling, phasing and staging for the bleacher installation work. Further coordination shall also occur as required for new construction adjacent to bleacher assembly. No modifications shall be made to the bleacher assembly unless written approval by Southern Bleacher. Bleacher shall be fully protected for entire duration of the Work.

1.12 FIELD ENGINEERING

A. Contractor shall establish elevations, lines, and levels and certify elevations, lines, and levels of the Work conform with Contract Documents.

1.13 DESIGN RESPONSIBILITY

A. Contractor is responsible for design of the following components of construction:
Lateral Support Systems for Excavation
Interior Masonry Wall Reinforcing
Decorative metal gate assembly at Kiosk

1.14 SCHEDULES

A. General

1. The objective of this project is to complete the overall work in the shortest period of time and to protect the building and occupants from damages caused by weather and construction activity during the progress of the work.
2. To meet these objectives, the Contractor shall plan the work, obtain materials, and execute the construction on the most expeditious manner possible in accordance with the requirements listed below.
3. If the Contractor fails to expedite and pursue any part of the work, the Owner may terminate the contract as per Article 14.2 or may carry out the work as per Article 2.4 of the General Conditions.
4. The Contractor shall work in coordination with work of other Contractors and with School activities with special attention to noise, dust, safety and other contract requirements for work in and around the occupied building.

**B. Work Period and Milestones**

1. Owner expects to undertake the project according to the following schedule:

   **Begin Construction: January 18, 2021**
   **Mobilization & Concrete Shop Drawings: Jan 18, 2021 – Jan 29, 2021**
   **Foundations Bleacher & Team Building: Feb 1, 2021 – March 5, 2021**
   **Bleacher Installation by Others: March 8, 2021 – April 30, 2021**
   **Substantial Project Completion: June 24, 2021**

1.16 ADDITIONAL REQUIREMENTS

A. If it appears that some of the work cannot be completed by the scheduled date, the Contractor shall increase the work force or increase the hours of work, including evenings and weekends or necessary, at no additional cost to the Owner. If the work is complete but the area is not cleaned and debris or equipment is not removed, the Owner shall have the right to prepare the area for occupancy with his own forces and deduct the costs from the Contract Amount.

B. If the Contractor fails to staff the job adequately to meet the completion date, the Owner reserves the right to assume possession of the material and complete installation with the Owner's forces or other Contractors or to require the Contractor to work evenings and weekends.

C. The work area can be made available on weekends and evenings to allow the Contractor adequate time to complete the work before final completion date so long as it is in compliance with local Town ordinances.

D. In addition to the above-stated requirements for phasing of the work, the Contractors shall be fully responsible for coordinating with the District for days and/or times of day that work cannot occur or shall be limited (noise, disruptions, etc.) including but not limited to District and/or Community activities in the area, school exams, school events, etc.

E. Contractor shall be responsible for coordination of deliveries to jobsite. All deliveries for this Project shall be made at the Putnam Ave entrance to the work area, and will not be allowed through the High School grounds.

F. The Contractor is responsible for temporary protection of all work until acceptance.

F. The school will be closed on Saturdays, Sundays, regularly scheduled district holidays, and at night after cleaning crews have finished. If any Contractor wishes to work at any time when the school is normally closed, that Contractor shall

arrange and pay for custodial services for the building at the applicable district pay rates.

G. Contractors shall adhere to all local ordinances relating to work including noise limitations, days and hours allowed to do construction work, etc.

H. Contractors shall refer to the Connecticut State DAS for additional rules and regulations regarding COVID-19 and requirements for Construction Sites in the State of Connecticut.
https://portal.ct.gov/DAS/Construction-Services/DAS-Construction-Services---A-Summary-of-Resources

1.17 WASTE MANAGEMENT PROCEDURES AND DEFINITIONS

A. Waste Management Coordination: Coordinate recycling of materials with Owner and as required to conform to the Construction Waste Management Plan defined in Section 017419.

B. Contractor shall conduct Construction Waste Management meetings as outlined in Section 013119 - Project Meetings. At a minimum, waste management goals and issues shall be discussed at the following meetings:
   1. Pre-bid meeting.
   2. Pre-construction meeting.
   3. Regular job-site meetings.
   4. Job safety meetings.

C. Use on-site waste as primers, sealers, underlayments, supports, backing, blocking, furring, suspension systems, and accessories as required for any purpose in patching work damaged as a result of construction activities.

D. Waste Management Definitions
   1. Clean: Untreated and unpainted; not contaminated with oils, solvents, caulk, or the like.
   2. Construction and Demolition Waste: Solid wastes typically including building materials, packaging, trash, debris, and rubble resulting from construction, remodeling, repair and demolition operations.
   3. Hazardous: Exhibiting the characteristics of hazardous substances, i.e., ignitability, corrosivity, toxicity or reactivity.
   4. Nonhazardous: Exhibiting none of the characteristics of hazardous substances, i.e., ignitability, corrosivity, toxicity, or reactivity.
   5. Nontoxic: Neither immediately poisonous to humans nor poisonous after a long period of exposure.
   6. Recyclable: The ability of a product or material to be recovered at the end of its life cycle and remanufactured into a new product for reuse by others.
   7. Recycle: To remove a waste material from the Project site to another site for remanufacture into a new product for reuse by others.
   8. Recycling: The process of sorting, cleansing, treating and reconstituting solid waste and other discarded materials for the purpose of using the altered form. Recycling does not include burning, incinerating, or thermally destroying waste.
   9. Return: To give back reusable items or unused products to vendors for credit.
   10. Reuse: To reuse a construction waste material in some manner on the Project site.
   11. Salvage: To remove a waste material from the Project site to another site for resale or reuse by others.

12. Sediment: Soil and other debris that has been eroded and transported by storm or well production run-off water.
13. Source Separation: The act of keeping different types of waste materials separate beginning from the first time they become waste.
14. Toxic: Poisonous to humans either immediately or after a long period of exposure.
15. Trash: Any product or material unable to be reused, returned, recycled, or salvaged.
16. Volatile Organic Compounds (VOCs): Chemical compounds common in and emitted by many building products over time through outgassing including - solvents in paints and other coatings; wood preservatives; strippers and household cleaners; adhesives in particleboard, fiberboard, and some plywoods; and foam insulation.
17. Waste: Extra material or material that has reached the end of its useful life in its intended use. Waste includes salvageable, returnable, recyclable, and reusable material.
18. Waste Management Plan: A Project-related plan for the collection, transportation, and disposal of the waste generated at the construction site. The purpose of the plan is to ultimately reduce the amount of material being landfilled.

1.18 USE OF PREMISES

A. Use of Buildings and Sites:

1. Limits: Confine constructions operations to areas within contract limits indicated. Do not disturb portions of the site beyond the areas in which the Work is indicated. All areas of the site with the exception of the project area where the Work is being performed are off limits to Contractor and his employees
2. Owner Occupancy: Allow for Owner occupancy of adjacent buildings and sites and use by the public. Conduct the Work to provide the least possible interference to the activities of the Owner’s personnel and use of the buildings and sites by the public
3. Driveways and Entrances: Keep driveways and entrances serving premises clear and available to Owner, Owner's employees, the public and emergency vehicles at all times. Do not use these areas for parking or storage of materials.
   a. Schedule deliveries to minimize use of driveways and entrances.
   b. Schedule deliveries to minimize space and time requirements for storage of materials and equipment on-site.
   c. Coordinate staging, parking and storage areas with the Owner’s Representative.
4. Damages: Promptly repair damages caused to adjacent facilities by work of the Contract to a good-as-new condition acceptable to the Owner.
5. Existing Facilities: The following facilities are specifically noted as **not** to be used by Contractor or his employees:
   a. Toilet facilities
   b. Food service facilities, including kitchen and dining areas
   c. Telephones
6. Utility Shutdowns: Coordinate and schedule all utility shutdowns and cross overs with the Owner’s Representative.

1.20 OWNER OCCUPANCY REQUIREMENTS

A. Owner will occupy site and existing buildings during entire construction period. Cooperate with Owner during construction operations to minimize conflicts and facilitate Owner usage. Perform the Work so as not to interfere with Owner's operations. Occupancy level will be reduced during summer months when school is not in session. Coordinate with Owner's Representative for schedule of working hours and work restrictions during period when the buildings are occupied.

B. Comply with standards for construction projects as follows:

1. Interaction with employees and the public is strictly forbidden.
2. Use of offensive or inappropriate language is strictly forbidden.
3. The use of audio equipment (such as radios) is prohibited on the site and in the buildings.
4. Smoking is prohibited on the site and in the buildings.

1.21 PAYROLLS AND PAYROLL RECORDS – See Section 012900

A. In accordance with Connecticut Labor Law and applicable Article in the General Conditions, every contractor and subcontractor must keep original payrolls or transcripts subscribed and affirmed as true under penalty of perjury. Payrolls must be maintained for at least three years from the project's date of completion. At a minimum, payrolls must show the following information for each person employed on a public work project:

1. Name
2. Classification(s) in which the worker was employed
3. Hourly wage rate(s) paid
4. Supplements paid or provided
5. Daily and weekly number of hours worked in each classification.

B. Every contractor and subcontractor shall submit, within thirty (30) days after issuance of its first payroll and every thirty (30) days thereafter, a transcript of the original payrolls, subscribed and affirmed as true under penalty of perjury.

**End of Section**

# SECTION 01 15 00

## SPECIAL PROJECT REQUIREMENTS
(Supplement to Sections 01 31 13, 01 31 14 and 01 31 19)

1.01 GENERAL

A. Requirements set forth herein are in addition to and shall be considered as complementary to the Conditions of the Contract and the balance of Division #1 and Technical Specifications.

B. All Contractors, Subcontractors, Sub-subcontractors, Vendors and the like shall be required to familiarize themselves with said provisions.

C. This Section includes administrative and supervisory requirements necessary for coordinating construction operations including, but not necessarily limited to, the following:

1. General project coordination procedures.
2. Conservation.
3. Salvage.
4. Coordination Drawings.
5. Administrative and supervisory personnel.
6. Cleaning and protection.
7. Safety program.
8. Safe and secure storage of construction materials.
9. Fencing and Gates
10. Debris removal
11. Exiting
12. Fire and hazard prevention
13. No smoking
14. Fire extinguishers
15. Smoke detectors
16. Noise abatement procedures
17. MSDS Log

1.02 RELATED SECTIONS: The following Sections contain requirements that relate to this Section:

A. Section 01 71 23, Field Engineering specifies procedures for field engineering services, including establishment of benchmarks and control points.

B. Section 01 31 19, Project Meetings for progress meetings, coordination meetings, and preinstallation conferences.

C. Section 01 33 00, Submittals for preparing and submitting the Contractor's Construction Schedule.

D. Section 01 61 00, Materials and Equipment for coordinating general installation.

E. Section 01 77 00, Contract Closeout for coordinating contract closeout.

1.03 COORDINATION

A. Coordinate construction operations included in various Sections of these Specifications to assure efficient and orderly installation of each part of the Work. Coordinate construction operations included under different Sections that depend on each other for proper installation, connection, and operation.

1. Schedule construction operations in the sequence required to obtain the best results where installation of one part of the Work depends on

installation of other components, before or after its own installation.

2. Coordinate installation of different components to assure maximum accessibility for required maintenance, service, and repair.
3. Make provisions to accommodate items scheduled for later installation.

B. Where necessary, prepare memoranda for distribution to each party involved, outlining special procedures required for coordination. Include such items as required notices, reports, and attendance at meetings.
   1. Prepare similar memoranda for the Owner and separate contractors where coordination of their work is required.

C. Administrative Procedures: Coordinate scheduling and timing of required administrative procedures with other construction activities to avoid conflicts and assure orderly progress of the Work. Such administrative activities include, but are not limited to, the following:
   1. Preparation of schedules.
   2. Installation and removal of temporary facilities.
   3. Delivery and processing of submittals.
   4. Progress meetings.
   5. Project closeout activities.

D. Coordinate temporary enclosures with required inspections and tests to minimize the necessity of uncovering completed construction for that purpose.

1.04 CONSERVATION: Coordinate construction operations to assure that operations are carried out with consideration given to conservation of energy, water, and materials.

1.05 SALVAGE materials and equipment involved in performance of, but not actually incorporated in, the Work.

1.06 SUBMITTALS – Coordinate with Sections 01 31 13, 01 31 14 and 01 33 00 ***as applicable and contained within these specifications***.

A. Coordination Drawings: Prepare coordination drawings where careful coordination is needed for installation of products and materials fabricated by separate entities. Prepare coordination drawings where limited space availability necessitates maximum utilization of space for efficient installation of different components.
   1. Show the relationship of components shown on separate Shop Drawings.
   2. Indicate required installation sequences.

B. Staff Names: Within 15 days of commencement of construction operations, submit a list of the Contractor's principal staff assignments, including the superintendent and other personnel in attendance at the Project Site. Identify individuals and their duties and responsibilities. List their addresses and telephone numbers.

   Post copies of the list in the Project meeting room, the temporary field office, and each temporary telephone.

1.07 CLEANING AND PROTECTION – Coordinate with Project Scope

A. Contractor is to clean and protect construction in progress and adjoining materials in place, during handling and installation. Apply protective covering where required to assure protection from damage or deterioration at Substantial Completion.

B. Clean and provide maintenance on completed construction as frequently as

necessary through the remainder of the construction period. Adjust and lubricate operable components to assure operability without damaging effects.

C. Limiting Exposures: Supervise construction operations to assure that no part of the construction, completed or in progress, is subject to harmful, dangerous, damaging, or otherwise deleterious exposure during the construction period. Where applicable, such exposures include, but are not limited to, the following:
   1. Excessive static or dynamic loading.
   2. Excessive internal or external pressures.
   3. Excessively high or low temperatures.
   4. Thermal shock.
   5. Excessively high or low humidity.
   6. Air contamination or pollution.
   7. Water or ice.
   8. Solvents.
   9. Chemicals.
   10. Light.
   11. Radiation.
   12. Puncture.
   13. Abrasion.
   14. Heavy traffic.
   15. Soiling, staining, and corrosion.
   16. Bacteria.
   17. Rodent and insect infestation.
   18. Combustion.
   19. Electrical current.
   20. High-speed operation.
   21. Improper lubrication.
   22. Unusual wear or other misuse.
   23. Contact between incompatible materials.
   24. Destructive testing.
   25. Misalignment.
   26. Excessive weathering.
   27. Unprotected storage.
   28. Improper shipping or handling.
   29. Theft.
   30. Vandalism.

1.08 SAFETY PROGRAMS

A. Contractor shall to provide to the Architect and Owner's Representative copies of safety program for the project for review and comment; no review or comment made thereon shall place either the Architect or Owner's Representative in a position of liability since said review/comment on program does and shall not extend to direct control over or charge of the acts or admissions of contractors, subcontractors, agents or employees of the contractors or subcontractors or any other persons performing portions of the work.

1.09 SAFE AND SECURE STORAGE OF CONSTRUCTION MATERIALS – Coordinate with Sections 01 50 00 and 01 61 00 each as included with these documents.

A. Materials stored on the Site shall be neatly arranged and protected and shall be stored in an orderly fashion in locations that shall not interfere with the progress of

the Work.

1.10 FENCING – PROJECT; MATERIAL STORAGE AREAS; CONTAINER/REFUSE AREAS – Coordinate with Section 01 50 00

A. Barrier fencing constructed as outlined in Section 01 50 00 shall be provided surrounding all work areas, material storage locations and around dumpsters and/or chutes when involved with demolition/removal operations.

B. Fencing shall be maintained in good sound condition throughout the entire course of construction by the Contractor or their designee and removed only when directed by the Architect and/or Owner.

1.11 GATES

A. Gates in construction fencing shall be of construction outlined in Section 01 50 00 and shall be under either the Contractor or their designees' supervision throughout the work day and shall be secured in a locked condition at the close of any single business day and on all non work days. Gates shall be manned at all times work is in progress.

1.12 DEBRIS REMOVAL – Coordinate with Sections 01 50 00, 01 74 19 and 01 77 00.

A. Large amounts of debris must be removed by use of enclosed chutes or similar systems. There shall be no movement of debris through corridors of occupied spaces of the building. No materials shall be dropped or thrown outside the walls of the building.

B. Buildings occupied during any construction period shall maintain required health and safety capabilities at all times that said building is occupied.

1.13 EXITING

A. At all times, the Contractor or his designee is responsible for maintenance of safety and egress requirements from work areas.

<u>NOTE: All legal forms of egress must be maintained at all times</u>.

1.14 FIRE AND HAZARD PREVENTION – See Section 01 50 00 for requirements for fire watches, storage and maintenance of welding gasses and temporary heating and the like.

1.15 NO SMOKING – No smoking is permitted on the grounds or within the construction area of any project.

1.16 FIRE EXTINGUISHERS – Fire extinguishers shall be provided within the work area and shall be monitored on a scheduled maintenance basis and so tagged to indicate same.

1.17 SMOKE DETECTORS – The Electrical contractor shall provide a temporary battery powered smoke detection system for all areas under construction.

1.18 NOISE ABATEMENT PROCEDURES

A. Develop and maintain a noise abatement program and enforce strict discipline over all personnel to keep noise to a minimum. Equipment and work shall not produce noise in excess of 60db in occupied areas or shall be scheduled for off hours or acoustical abatement procedures shall be taken. Noise level measurements (dba) shall be taken with a type 2 sound level meter in the

occupied space in a location closest to the source of the noise.

These types of work shall be done only during the hours of 7:00 AM to 3:00 PM (**unless otherwise established by the work rules of the Jurisdiction of the Work (Building Department)** Monday through Fridays. Coordinate with the Owner's Representative for permission to perform work on Saturdays and Sundays; **in any event, all work times as established by the Jurisdiction shall be followed without exception**.

Noisy or disruptive work includes, but is not limited to, the use of any power driven tool, power saw, pneumatic hammer, hammer drill or power sander/grinder; operation of engine driven generators, air compressors or lift engines; and any other similar activity which, because of the noise generated, might disturb the surrounding neighborhood, residents and Owner's activities.

B. Execute construction work by methods and by use of equipment which will reduce excess noise.

C. Equip air compressors with silencers, and power equipment with mufflers.

1.19 MATERIAL SAFETY DATA SHEET LOG – Coordinate with Section 01 33 00

A. Contractor shall maintain "MSDS" file on site, accessible to workers and otherwise in compliance with jurisdiction's "Right To Know" legislation.

**End of Section**

# SECTION 01 23 00

# ALTERNATE PROPOSALS

1.01 GENERAL

A. The following Alternate Proposals are desired by the Owner to determine the amount to be added to or deducted from the Base Bid, if any and/or all such Alternates are accepted.

B. Should any of the Alternates herein be accepted by the Owner, the labor and materials constituting the work therein required shall include all of the agreements and conditions binding the parties to the Contract, pursuant to the Agreement, The Conditions of the Contract and the entire Division #1, General Requirements and related trade Sections of the Specifications.

1.02 REQUIREMENTS INCLUDED IN THIS SECTION

A. Alternate Proposals

1.03 ALTERNATE PROPOSALS

A. Add Alternate #1: All additional site improvements as indicated on drawings including, but not limited to, driveways, walkways, ADA parking lot, storm water management systems, retention ponds, underground and above ground utilities including utilties to the kiosk area, additional fencing and retaining walls, curb cut at Putnam Ave, and site lighting.

B. Add Alternate #2: Construction of the Kiosk Building including gates and piers, and decorative pavers in lieu of asphalt paving (add alternate #1) as indicated on Drawings.

C. Add Alternate #3: Work required for fabric bleacher signage/graphics including steel supports posts and complete signage assembly.
Signage Basis of Design = Bleacher Skin Bleacher Graphics by Big Signs, with all required fasteners and accessories.

**End of Section**

# SECTION 01 25 00

# PRODUCT OPTIONS AND SUBSTITUTIONS

1.01 GENERAL

A. Requirements set forth herein are in addition to and shall be considered as complementary to the Conditions of the Contract and the balance of Division #1 and Technical Specifications.

B. All Contractors, Subcontractors, Sub-subcontractors, Vendors and the like shall be required to familiarize themselves with said provisions.

1.02 REQUIREMENTS INCLUDED IN THIS SECTION

A. Approved Equal Clause
B. Substitution Requests
C. Options
D. Contractor's Representation
E. Reimbursements

1.03 APPROVED EQUAL CLAUSE

A. Throughout the Specifications, types of material may be specified by manufacturer's name and catalog number in order to establish standards of quality and performance and not for the purpose of limiting competition. Inclusion by name, of more than one manufacturer or fabricator, does NOT necessarily imply acceptability of standard products of those named. All manufacturers, named or proposed, shall conform, with modification as necessary, to criteria established by Contract Documents for performance, efficiency, materials and special accessories.

B. Contractor may assume the phrase "or approved equal" except that the burden is upon the Contractor to prove such equality and to satisfy Architect that proposed substitute is equal to, or superior to, the item specified.

1.04 SUBSTITUTION REQUESTS

A. If the Contractor elects to prove such equality, he must request the Architect's and the Owner's approval in writing for substitution of such items for the specified items, stating the differences involved with and submitting supporting data and samples, if required, to permit a fair evaluation of the proposed substitution with respect to -

1. Performance
2. Delivery times and effect on schedules, if any
3. Safety
4. Function
5. Appearance
6. Quality and durability
7. Any required license fees or royalties
8. Warranty terms and conditions

The contractor shall submit a separate request for each product, supported with complete data, with drawings and samples as are appropriate to substantiate the above.

B. The Architect, as set forth in the Post Bid Requirements in Section 00 21 00, will review requests for substitutions with reasonable promptness, and notify the Contractor, in writing, of the decision to accept or reject the requested substitution.

1.05 OPTIONS

A. Where Technical Specifications permit Contractor to select optional materials, items, systems, or equipment, the selection of such options is subject to the following conditions:

1. Once an option has been selected and approved, it shall be used for the entire contract.
2. The Contractor shall coordinate his selection with the drawings and specifications and make all necessary adjustments without additional cost to the Owner.

1.06 CONTRACTOR'S REPRESENTATION

A. A request for a substitution constitutes a representation that the Contractor:

1. Has investigated the proposed product and determined that it is equal to or superior in all respects to that specified;
2. Will provide the same warranties or bonds for the substitution as for the product specified;
3. Will coordinate the installation of an accepted substitution in the work, and make such other changes in the work as may be required for installation to make the work complete in all respects;
4. Will waive all claims for additional costs, under its responsibility, which may subsequently become apparent.
5. **Will have coordinated installation with all affected trade contractors, specialty contractors and the like and will be responsible for any and all costs which may arise as a result of this substitution.**

1.07 REIMBURSEMENTS

A. As outlined in Section 01 33 00, when resubmittals of materials, equipment and accessories to be incorporated in the project are necessary due to failure of Contractors to properly coordinate submittals, the submitting Contractor shall compensate the Design Professionals for required re-reviews of said submittals in accordance with the following fee schedule:

Principal's Time ---------- $ 250.00 per hour
Associate's Time ---------- $ 175.00 per hour
Employees Time ------- Direct Personnel Expenses X 3.0

Engineer's Time ---------- $ 200.00 per hour

The charges incurred will be deducted from the ensuing requisition at the direction of the Owner.

**End of Section**

# SECTION 01 29 00

# APPLICATIONS FOR PAYMENT

1.01 GENERAL

A. Requirements set forth herein are in addition to and shall be considered as complementary to the Conditions of the Contract and the balance of Division #1 and Technical Specifications.

B. This Section specifies administrative and procedural requirements governing the Contractor's Applications for Payment, and supplements provisions of the Contract.

1.02 REQUIREMENTS INCLUDED IN THIS SECTION

A. Schedule of Values

B. Applications for Payment

1.03 SCHEDULE OF VALUES

A. Coordination: Each prime Contractor shall coordinate preparation of its Schedule of Values for its part of the Work with preparation of the Contractors' Construction Schedule.

1. Correlate line items in the Schedule of Values with other required administrative schedules and forms, including:

a. Contractor's Construction Schedule

b. Application for Payment forms, including Continuation Sheets

c. List of subcontractors

d. Schedule of alternates

e. Schedule of allowances

f. List of products

g. List of principal suppliers and fabricators

h. Schedule of submittals

2. Submit the Schedule of Values to the Architect at the earliest possible date but no later than seven (7) days before the date scheduled for submittal of the initial Applications for Payment.

3. Subschedules: Where Work is separated into phases requiring separately phased payments, provide subschedules showing values correlated with each phase of payment.

B. Format and Content: Use the Project Manual Table of Contents as a guide to establish the format for the Schedule of Values. Provide at least one-line item for each Specification Section. For major trades with total line items exceeding $25,000, provide a separate, back-up breakdown of each such trade with line items for identifiable units of work within such trade each of which has a value not exceeding $25,000. Provide a computed unit price for each line total.

1. Identification: Include the following Project identification on the Schedule of Values:

a. Project name and location

b. Name of the Architect

c. Project number

d. Contractor's name and address

e. Date of submittal

2. Arrange the Schedule of Values in tabular form with separate columns to indicate the following for each item listed:
   a. Related Specification Section or Division
   b. Description of Work
   c. Name of subcontractor
   d. Name of manufacturer or fabricator
   e. Name of supplier
   f. Change Orders (numbers) that affect value
   g. Dollar value
   h. Percentage of Contract Sum to nearest one-hundredth percent, adjusted to total 100 percent
   i. Phase Area (as applicable)

   NOTE: Margins of Cost: Show line items for indirect costs and margins on actual costs only when such items are listed individually in Applications for Payment. Each item in the Schedule of Values and Applications for Payment shall be complete. Include the total cost and proportionate share of general overhead and profit margin for each item.

3. Provide a breakdown of the Contract Sum by Phase Area in sufficient detail to facilitate continued evaluation of Applications for Payment and progress reports. Coordinate with the Project Manual table of contents. Break principal subcontract amounts down into several line items.
4. Round amounts to nearest whole dollar; the total shall equal the Contract Sum.
5. Provide a separate line item in the Schedule of Values for each part of the Work where Application for Payment may include materials or equipment, purchased or fabricated and stored, but not installed.

   Differentiate between items stored on-site and items stored off-site. Include requirements for insurance and bonded warehousing, if required.

6. Provide separate line items on the Schedule of Values for initial cost of the materials, for each subsequent stage of completion, and for total installed value of that part of the Work.
7. Unit Price Work: Show the line-item value of unit-cost allowances, as a product of the unit multiplied by the measured quantity. Estimate quantities from the best indication in the Contract Documents.
8. Temporary facilities, clean-up and other major cost items and correction of existing conditions are not direct cost of actual work-in-place may be shown either as separate line items in the Schedule of Values or distributed as general overhead expense, at the Contractor's option.
9. Schedule Updating: Update and resubmit the Schedule of Values prior to the next Application for Payment when Change Orders result in a change in the Contract Sum.

1.04 APPLICATIONS FOR PAYMENT

A. Each Application for Payment shall be consistent with previous applications and payments as certified by the Architect and paid for by the Owner.

The initial Application for Payment, the Application for Payment at time of Substantial Completion and the final Application for Payment involve additional requirements.

B. Payment-Application Times: Each progress-payment date is indicated in the Agreement. The period of construction Work covered by each Application for Payment is the period indicated in the Agreement or in absence thereof the previous month.

C. Payment-Application Forms: Use AIA Document G702 and Continuation Sheets G703 as the form of Applications for Payment. Separate Continuation Sheets shall be provided for work which takes place on each building which shall detail that portion of the contract which is attributable to the specific building. The project name shall be clearly shown on the top of each continuation form.

D. Application Preparation: Complete every entry on the form. Include notarization and execution of person authorized to sign legal documents on behalf of the Contractor. The Architect will reject, and return, incomplete applications without action.

1. Entries shall match data on the approved Schedule of Values and the Contractor's Construction Schedule. Update schedules if revisions were made.
2. Include amounts of Change Orders and Construction Change Directives issued prior to the last day of the construction period covered by the application.
3. Provide copies of payrolls which are signed and notarized documenting compliance with prevailing wage laws as applicable to particular project.

E. Transmittal: Submit three (3) signed and notarized original copies of each Application for Payment to the Architect by a method ensuring receipt within 24 hours. One copy shall be complete, including waivers of lien and similar attachments, when required.

Transmit each copy with a transmittal form listing attachments and recording appropriate information related to the application, in a manner acceptable to the Architect.

F. Waivers of Mechanics Lien: With each Application for Payment, submit waivers of mechanics liens from subcontractors, sub subcontractors and suppliers for the construction period covered by the previous application.

1. Submit partial waivers on each item for the amount requested, prior to deduction for retainage, on each item.
2. When an application shows completion of an item, submit final or full waivers.
3. The Owner reserves the right to designate which entities involved in the Work must submit waivers.

   Submit final Applications for Payment with or preceded by final waivers from every entity involved with performance of the Work covered by the application who is lawfully entitled to a lien.

4. Waiver Forms: Submit waivers of lien on forms provided, and executed in a manner, acceptable to the Owner.

G. Initial Application for Payment: Administrative actions and submittals, that must precede or coincide with submittal of the first Application for Payment, shall include the following prerequisites to processing:
   1. List of subcontractors, approved
   2. List of principal suppliers and fabricators, approved
   3. Schedule of Values, approved
   4. Contractor's Construction Schedule, approved
   5. Schedule of principal products
   6. Schedule of unit prices, approved
   7. Submittal Schedule, approved
   8. List of Contractor's staff assignments
   9. List of Contractor's principal consultants
   10. Copies of building permits as applicable to project requirements
   11. Copies of authorizations and licenses from governing authorities for performance of the Work
   12. Initial progress report
   13. Report of pre-construction meeting
   14. Certificates of insurance and insurance policies
   15. Performance and payment bonds
   16. Data needed to acquire the Owner's insurance
   17. Initial settlement survey and damage report, if required by particular project
   18. Safety plan

H. Monthly Application for Payment Administrative actions and submittals, that must precede or coincide with submittal of the periodic Application for Payment, shall include the following:
   1. As-built Record documents, required documents and submittal records on site
   2. Contractor's construction schedule, updated, with corrective action plan as applicable
   3. Material Status Report
   4. Stored Materials forms
   5. Submittal Schedule and submittal status reports
   6. RFI submittal and status log
   7. Monthly Progress report, and Notarized Progress Report Statement from each Contractor’s manager/superintendent stating that the work is on schedule, and that Contractor will meet the Substantial Completion date for the Work, and the Substantial Completion dates for every portion established under Construction Phasing Schedule Section.

I. Application for Payment at Substantial Completion: Following issuance of the Certificate of Substantial Completion, submit an Application for Payment.
   1. This application shall reflect Certificates of Partial Substantial Completion issued previous to Owner occupancy of designated portions of the Work.
   2. Administrative actions and submittals that shall precede or coincide with this application include:
      a. Occupancy permits and similar approvals
      b. Warranties (guarantees) and maintenance agreements
      c. Test/adjust/balance records
      d. Maintenance instructions

e. Meter readings
f. Startup performance reports
g. Changeover information related to Owner's occupancy, use, operation, and maintenance
h. Final cleaning
i. Application for reduction of retainage and consent of surety
j. Advice on shifting insurance coverages
k. Final progress photographs
l. List of incomplete Work, recognized as exceptions to Architect's Certificate of Substantial Completion

J. Final Payment Application: Administrative actions and submittals that must precede or coincide with submittal of the final Application for Payment include the following:
1. Completion of Project closeout requirements
2. Completion of items specified for completion after Substantial Completion
3. Ensure that unsettled claims will be settled.
4. Ensure that incomplete Work is not accepted and will be completed without undue delay.
5. Transmittal of required Project construction records to the Owner
6. Certified property survey as and/if required by project documents
7. Proof that taxes, fees, and similar obligations were paid
8. Removal of temporary facilities and services
9. Removal of surplus materials, rubbish, and similar elements
10. Change of door locks to Owner's access
11. Consent of Surety to final payment

**End of Section**

SECTION 01 29 03

LABOR AND/OR MATERIALS AFFIDAVIT

STATE OF: _____)

COUNTY OF: _____)

_____
(Name)

being duly sworn, deposes and says that he/she is the _____
(Officer)

of _____
(Name of Company)

furnishing Labor and or Materials in connection with a public improvement for

_____
(Description of Improvement)

That, to his/her knowledge, all subcontractors for Labor and/or Materials Dealers have been paid the amount of money due them or not less than the amount paid by Owner to the Contractor as shown by previous requisitions.

_____
(Signature)

_____
(Title)

(Corporate Seal)

State of )
)ss:
County of )

Sworn to Before Me
This _____ Day of _____, 20___.

_____
Notary Public

(Stamp)

SECTION 01 29 04

DAILY AND WEEKLY WAGE AFFIDAVIT

STATE OF: _____)

COUNTY OF: _____)

_____
(Name)

being duly sworn, deposes and says that he/she is the _____ of
(Officer)

_____
(Name of Company)

furnishing Labor and or Materials in connection with a public improvement for

_____
(Description of Improvement)

That, to his/her knowledge, all laborers for Daily and Weekly Wages employed by

_____, on such improvement, have been paid in full except

_____
(Name and Amount Due, If Any)

This statement read, subscribed and sworn to by me to induce the said Owner to make payment under Contract for such improvement.

_____
(Signature)

_____
(Title)

(Corporate Seal)

State of )
)ss:
County of )

Sworn to Before Me
This _____ Day of ____, 20__.

_____
Notary Public
(Stamp)

# SECTION 01 31 13

# PROJECT COORDINATION

## 1.01 GENERAL

A. Requirements set forth herein are in addition to and shall be considered as complementary to the Conditions of the Contract and the balance of Division #1 and Technical Specifications.

B. All Contractors, Subcontractors, Sub-subcontractors, Vendors and the like shall be required to familiarize themselves with said provisions.

## 1.02 REQUIREMENTS INCLUDED IN THIS SECTION

A. Coordination of Work

B. Trade Contractor Obligations

## 1.03 COORDINATION OF WORK

A. As required by the General Conditions, and restated herein, each Trade and/or Specialty Contractor or Subcontractor shall compare the architectural, structural, civil/site, mechanical, plumbing and electrical Drawings and Specifications with those for all other trades and shall report any discrepancies between them to the Architect, and obtain from him written instructions for changes necessary to the work. All work shall be installed in cooperation with other trades installing interrelated work. Before installation, each Trade Contractor shall make proper provisions to avoid interference in a manner approved by the Architect. All changes required in the work caused by neglect to so advise the Architect shall be made by the offending Contractor at his own expense.

B. Each Trade Contractor shall be responsible for exact location of anchor bolts, sleeves, inserts, supports, chases, conduits and openings that may be required for the work. Attention is directed to Section 01 31 14. Each Trade Contractor shall prepare layout drawings for incorporation of items to be built-in the work, pass through the work and the like in sufficient time so as not to cause any undue delay in the execution of the work. Built-in items shall be furnished under the same Section of the Specifications as the respective items to be supported, and they shall be installed, except as otherwise specified, by the trade furnishing and installing the material in which they are to be located. The trade responsible for the installation of anchor bolts shall also insure that they are properly installed. Chases, conduits and openings shall be laid out in advance to permit provision in work. Sleeves and inserts shall not be used in any portion of the building, where their use would impair strength or construction features of the building. Sleeves, conduits and inserts shall be set in forms before concrete is poured. Extra work required where anchor bolts, supports, sleeves, chase openings, conduits or inserts have been omitted or improperly placed shall be performed at expense of trade which made error or omission.

C. Slots, chases, openings and recesses through floors, walls, ceilings and roofs as specified will be provided for the various trades in their respective materials under general construction work, but the trade requiring them shall see that they are properly located and shall do any cutting and patching caused by the neglect to do so.

D. Locations of pipes, ducts, electrical raceways, switches, panels, equipment, fixtures, etc. shall be adjusted to accommodate the work to interferences

anticipated and encountered. Each Trade Contractor shall determine, and submit for approval, the exact route and location of each pipe, duct and electrical raceway prior to fabrication.

Approval by the Architect is required prior to any such modifications.

E. Lines which pitch shall have the right of way over those which do not pitch.

For example, plumbing and condensate piping drains shall normally have right of way. **Lines whose elevations cannot be changed shall have the right of way over lines whose elevations can be changed**.

F. Offsets, transitions and changes in direction in pipes, ducts and electrical raceways shall be made as required to maintain proper headroom and pitch of sloping lines whether or not indicated on the Drawings. Each Trade Contractor shall provide air vents, sanitary vents, pull boxes, etc.; as required to effect these offsets, transitions and changes in direction.

G. Each Trade Contractor shall install all mechanical and electrical work to permit removal (without damage to other parts) of coils, heat exchanger bundles, fan shafts and wheel, draw-out circuit breakers, filters, belt guards, sheaves and drives and all other parts requiring periodic replacement or maintenance. Each Trade Contractor shall arrange pipes, ducts, raceways, traps, starters, motors, control components, and the like, to clear the openings of swinging and overhead doors and of access panels.

H. Contractor shall assign to a designated contractor who shall provide temporary weathertight and protected openings in structure to facilitate placement of equipment.

1.04 TRADE CONTRACTOR OBLIGATIONS

A. The Trade Contractors are required to supply all necessary supervision and coordination information to any other trades who are supplying work to accommodate the electrical and mechanical installations.

B. Where a trade is required to install items which it does not purchase, it shall include for such items:

1. The coordination of their delivery.
2. Their unloading from delivery trucks driven in to any designated point on the property line at grade level.
3. Their safe handling and field storage up to the time of permanent placement in the project.
4. The correction of any damage, defacement or corrosion to which they may have been subjected.
5. Their field assembly and internal connection as may be necessary for their proper operation.
6. Their mounting in place including the purchases and installation of all dunnage supporting members and fastenings necessary to adapt them to architectural and structural conditions unless support members are shown on structural or architectural drawings.
7. Their connection to building systems including the purchase and installation of all terminating fittings necessary to adapt and connect them to the building systems.

C. Items which are to be installed but not purchased as part of the work of a particular trade shall be carefully examined by this trade upon delivery to the project. Claims that any of these have been received in such condition that their installation will require procedures beyond the reasonable scope of the work of the installing trade will be considered only if presented in writing within one week of the date of delivery to the project of the items in question. The work of the installing trade shall include all procedures, regardless of how extensive, necessary to put into satisfactory operation, all items for which no claims have been submitted as outlined above.

**End of Section**

# SECTION 01 31 14

# COORDINATION DRAWINGS AND PROCEDURES

## 1.01 GENERAL

A. Requirements set forth herein are in addition to and shall be considered as complementary to the Conditions of the Contract and the balance of Division #1 and Technical Specifications.

B. All Contractors, Subcontractors, Sub-subcontractors, Vendors and the like shall be required to familiarize themselves with said provisions.

C. Coordination of the work shall be performed as outlined below.

## 1.02 REQUIREMENTS INCLUDED IN THIS SECTION

A. Scheduling (Coordinate with Section 01 32 00)

B. Coordination Drawings and Procedures - General Construction Work

C. Coordination Drawings and Procedures - Mechanical/Plumbing/Electrical Work

D. Meetings

## 1.03 SCHEDULING

A. Development of coordination drawings shall begin immediately upon award and shall not be dependent upon structural shop drawings; development shall be based upon structural information included on the Contract Documents.

B. During the “final” review of the coordination drawings, the approved structural shop/fabrication drawings shall be checked and any conflicts identified. Contractor shall coordinate and insure structural shop drawings are processed so as to meet this requirement. Failure to prosecute same in a timely manner will be cause for implementation of penalties as outlined in 1.07 herein.

C. Sheet metal specialty contractor or subcontractor shall provide initial drawings as indicated in Article 1.05 herein within six (6) weeks of issuance of Letter or Intent or Contract, whichever is earliest. Time to complete all drawings may vary based upon size and complexity of project. Extension to the six (6) weeks for final coordination drawings shall be determined prior to award by the Design Professional Team in consultation with the Contractors.

D. Each subsequent contractor, as listed in 1.05.E shall complete their work within three (3) weeks of receipt of the sheet metal drawings.

E. Progress of coordination drawings must be reported at every project meeting until accepted.

## 1.04 COORDINATION DRAWINGS AND PROCEDURES - GENERAL CONSTRUCTION WORK

**Attention is directed to this Section for coordination drawing requirements for this project. These drawings are critical to the proper execution of the Work and failure to honor these requirements may become the basis for denial of any and all claims for either or both “time” and “money”.**

A. The Contractor shall, or work with the Individual Contractors/Subcontractor to, provide fully integrated building, structural, mechanical/electrical coordination

drawings and field installation layouts for such work as directed by the Architect and/or required by job requirements so as to resolve tight field conditions except as modified in Paragraph 1.05 below.

B. These composite shop drawings and field installation layouts shall be coordinated in the field among the Contractors to verify the proper relationship to the work of other trades based on field conditions, and shall be checked for accuracy and approved by the Contractors before submission to the Architect for his review and concurrence and shall become the basis for more specific shop drawing submittals as required by the technical specifications.

C. Reflected Ceiling Systems as described in Technical Sections with the "Base" drawings for ceiling work for each area composed of reflected ceiling plans with overlay of contract drawing*s for* structural framing. Elevations of bottom of structural members and ceiling heights to be clearly identified.

The reflected ceiling drawings shall then be forwarded to the next succeeding Contractor in the following order:

1. Sheet Metal Subcontractor.
2. Fire Protection Contractor.
3. HVAC Piping and Associated Control Systems.
4. Plumbing System.
5. Electrical.
6. General Contractor for final structural review and submission to the Architect when all internal coordination requirements have been satisfied.

1.05 COORDINATION DRAWINGS AND PROCEDURES - MECHANICAL/ELECTRICAL WORK

A. Mechanical/electrical work shall be coordinated as indicated by the following procedure.

B. The HVAC Contractor and/or the Sheet Metal Subcontractor shall prepare a complete draft set of drawings on "bond" to act as background drawings at scale not less than 3/8 inch equals 1 foot, showing structure and other information as needed for coordination. He shall show sheet metal layout thereon. Upon acceptance of these "bond" drawings, the HVAC Contractor shall plot, or have plotted, a final coordination set on Vellum and these will be the Coordination Drawings.

C. ALL FIREWALLS, FIRE BARRIERS, AND SMOKE PARTITIONS MUST BE HIGHLIGHTED ON THE SHEET METAL DRAWINGS FOR APPROPRIATE COORDINATION.

D. The main paths of egress and for equipment removal, from main mechanical and electrical rooms must be clearly shown on the coordination drawings.

E. Each of the below specialty trades shall add its work to these background drawings with appropriate elevations and grid dimensions using a color coding system to be developed between trades. Specialty trade information is required for fan rooms and mechanical rooms, horizontal exits from duct shafts, crossovers, and for spaces in and above ceilings where congestion of work may occur such as corridors, and even entire floors. Drawings shall indicate horizontal and vertical dimensions, to avoid interference with structural framing, ceilings, partitions, and other services.

1. Specialty Trades
   a. Sheet Metal Subcontractor.

b. Fire Protection Contractor.
c. HVAC Piping and Associated Control Systems.
d. Plumbing System.
e. Electrical.
f. Individual Trade Contractors.
g. Construction Manager

F. Each specialty trade shall sign and date each mylar coordination drawing. Return drawings to the Sheet Metal Subcontractor, who shall route them sequentially to all specialty trades.

G. Where conflicts occur with placement of materials of various trades, the Sheet Metal Subcontractor will be responsible to coordinate the available space to accommodate all trades. Any resulting adjustments shall be initialed and dated by the specialty trade. The Sheet Metal Subcontractor shall then final date and sign each drawing.

H. A Subcontractor who fails to promptly review and incorporate his work on the drawings shall assume full responsibility of any installation conflicts affecting his work and of any schedule ramifications.

I. Sheet Metal Subcontractor shall make copies of all coordination drawings. Fabrication shall not start until such transparencies of completed coordination drawings are received by the Architect/Engineer and have been reviewed.

J. Review of coordination drawings shall not diminish responsibility under this Contract for final coordination of installation and maintenance clearances of all systems and equipment with Architectural, Structural, Mechanical, Electrical and other work.

K. After Architect/Engineer Review:
1. After review of coordination drawings, the method used to resolve interferences not previously identified shall be as in 1.06 "MEETINGS" below.
2. All changes to reviewed coordination drawings shall be approved in writing by the Architect/Engineer prior to start of work in affected area.

L. Distribution of Coordination Drawings:
1. The Sheet Metal Subcontractor shall provide the following distribution of documents:
a. One reproducible of each Coordination Drawing to each specialty trade and affected Contractor for their use.
b. One reproducible of each Coordination Drawing to Owner.
c. One reproducible of each coordination drawing to General Trade Contractors.

**<u>NOTE</u>: Electronic documents (CAD files) can be used for these operations based upon agreement between all parties and in accordance with terms and conditions set for obtaining of CAD files as per attachment to Section 01 33 00.**

M. Coordination Drawings include but are not necessarily limited to:
1. Structure.
2. Partition/room layout.
3. Ceiling tile and grid.
4. Light fixtures.
5. Access panels.

6. Sheet metal, coils, boxes, grilles, diffusers, etc.
7. HVAC piping and valves.
8. Smoke and fire dampers.
9. Soil, waste and vent piping.
10. Water piping
11. Roof drain piping.
12. Major electrical conduit runs, panelboards, feeder conduit and racks of branch conduit.
13. Above ceiling miscellaneous metal.
14. Fire Protection Systems.
15. Heat tracing of piping.
16. Equipment support, anchors, guides and seismic restraints.

N. The color coded transparencies shall be kept at the Contractor's field office for future reference in the event of conflict between the trades.

O. All coordination drawings shall be delivered to the Architect at the end of the project as part of the record drawing requirements set forth in Article 3.11 of the General Conditions.

1.06 MEETINGS – Coordinate with Section 01 31 19

A. Coordination meetings to resolve interferences in the work will be held at the project site under the direction of the Architect.

Representatives of each Contractor shall be present at each meeting.

Each Contractor shall provide the necessary manpower and/or overtime to insure that the coordination process described herein does not delay the Project Schedule.

**End of Section**

# SECTION 01 31 19

# PROJECT MEETINGS

1.01 GENERAL

A. Requirements set forth herein are in addition to and shall be considered as complementary to the Conditions of the Contract and the balance of Division #1 and Technical Specifications.

B. All Contractors, Subcontractors, Sub-subcontractors, Vendors and the like shall be required to familiarize themselves with said provisions.

1.02 REQUIREMENTS INCLUDED IN THIS SECTION

A. Initial (Kick-Off or Orientation) Meeting
B. Regular Project Meetings
C. Job Progress Meetings
D. Job Coordination Meetings
E. Mockup Review Meetings
F. Pre-Installation Conferences
G. Recording

**<u>NOTE</u>: As part of all individual meetings outlined above there shall be a Waste Management program discussion held with all responsible parties in attendance.**

1.03 INITIAL (KICK-OFF OR ORIENTATION) MEETING

A. The Owners' Representative will schedule the initial job meeting, <u>prior to the start of any work</u>, at the project site and will notify all parties concerned of the time and place of the meeting.

B. The meeting will be conducted by the Architect and shall address the conduct of the job, lines of communications, and the like. Discussions on waste management requirements as outlined in Section 01 74 19 shall be part of the agenda.

C. Attendance:
   1. General Contractor.
   2. Owners' Representative.
   3. Architect and principal consultants.
   4. Major subcontractors and suppliers as deemed appropriate.
   5. Representative of Testing Laboratory if independent.

D. Review and Discuss:
   1. Relation and coordination of various parties, and responsible personnel for each party.
   2. Use of premises, including office and storage areas, temporary controls, and security procedures.
   3. Waste management requirements as outlined in Section 01 74 19.
   4. Construction schedule and critical work sequencing.
   5. Processing of:
      a. Contract modifications.
      b. Shop Drawings, Product Data, and Samples.
      c. Applications for Payment.
      d. Substitutions.
      e. Requests for Information.
      f. Other required submittals.

6. Adequacy of distribution of Contract Documents.
7. Procedures for maintaining contract closeout submittals.
8. Installation and removal of temporary facilities.
9. Notification procedures and extent of testing and inspection services.

1.04 REGULAR PROJECT MEETING AGENDA

A. Coordinate the Work of the Project (Reference Section 01 31 14).
B. Establish a sound working relationship among the Contractors, Architect and the Owner.
C. Review and update progress, submittal and delivery schedules.
D. Review job progress.
E. Review progress payment requests; change proposals and change orders.
F. Expedite the work to completion within the project schedule.
G. Provide a 2 week look ahead schedule.

1.05 JOB PROGRESS MEETINGS

A. Unless otherwise directed, bi-weekly job meetings will be held. Present at these meetings shall be EACH CONTRACTOR or a representative authorized to make commitments for action on behalf of the Contractor and the Owner.
B. EACH CONTRACTOR shall arrange for the participation of its Subcontractors when their presence is required by the Architect.
C. The minimum agenda will cover:
   1. Review minutes of previous meetings.
   2. Note field observations, problems, and decisions.
   3. Identify present problems and resolve them.
   4. Plan work progress during next work period and its effect on the related work of others.
   5. Review shop drawings and submittal schedules.
   6. Review change order status.
   7. Review status of construction progress schedule.
   8. Coordinate occupancy arrangements and access requirements with Owner.
   9. Discussions on waste management requirements as outlined in Section 01 74 19 shall be part of the agenda.

1.06 JOB COORDINATION MEETINGS (Reference Section 01 31 14)

A. On a bi-weekly basis, either on the day of the schedule job progress meeting, or such other time established, a “working” coordination meeting will be held at the project site. Present at these meetings shall be **each contractor’s site supervisor** with men working, or **scheduled to work within the ensuing 2 weeks**, and the Owner’s site Representative.

   Further, prior to the start of any major trade work, a coordination meeting following the guidelines established herein shall be held subject to the same parties presence as for general meetings.

B. Meeting shall be used to coordinate work between contracts for the ensuing 2 weeks. At the close of the meeting, each supervisor shall, in an agreed format, provide a summarized 2 week work plan to the other contractors, Owner and Architect.

C. The time and place for the meetings will be as established in the preconstruction meeting.

D. Minutes will be taken by the party designated and distributed to all parties involved and the General Contractor will provide, at the next regular progress meeting, a verbal report of the date and time of the last coordination meeting and a listing of those present.

1.07 PRE-INSTALLATION CONFERENCES

A. Where required in individual specification Sections, convene a pre-installation conference at project site or other designated location.

B. Require attendance of parties directly affecting or affected by work of the specific Section.

C. Review conditions of installation, preparation and installation procedures, and coordination with related work.

1.08 MOCKUP REVIEW MEETING (Coordinate with Section 01 43 39)

A. Prior to start of any mockup that may be specified or required herein or within the technical specifications the following shall be accomplished:

1. Submittal of shop drawings for respective mockup;
2. Submittal of samples for respective mockup;
3. Coordination and review meeting between specialty contractors responsible for mockup and Architect and Construction Manager.

1.09 RECORDING: The Architect, as agreed to by contract, shall write minutes of all meetings and distribute them to all parties present and to those on the distribution list given out at the orientation meeting within 48 hours of the meeting.

PART 2 PRODUCTS - Not used

PART 3 EXECUTION - Not used

**End of Section**

# SECTION 01 32 00

# SCHEDULING AND PROGRESS

## Part 1 - GENERAL

1.01 DESCRIPTION

A. The Contractor shall develop a full schedule, in sufficient detail and clarity of form and technique so that the contractor can plan and control his work properly and the Owner can readily monitor and follow the progress for all portions of the work. Each Contractor shall complete his/her detailed schedule within 10 days after contract award and deliver same to the Contractor for compilation in the final schedule.

B. The schedule shall comply with the various limits imposed by the scope of work any by any contractually intermediate milestone dates and completion dates included in the contract.

C. The activities identified in the schedule shall be analyzed in detail to determine activity time durations in units of whole working days. All duration's shall be the result of definitive manpower and resource planning by the Contractor.

D. The activity data shall include activity codes to facilitate selection, sorting and preparation of summary reports and graphics. Activity codes shall be developed for:

1. Area: Subdivision of the building and site into logical modules or blocks and levels.
2. Responsibility: contractor or subcontractor responsible for the work.
3. Specifications: CSI Master format as listed in the Project Manual.
4. System: Division of the work into building systems for summary purposes.
5. Milestone: Work associated with completion of interim completion dates or milestones.
6. Pay Item: Work identified with a pay item on the Schedule of Values.

1.02 REPORTS

A. For initial submittal and each update the contractor shall prepare the following standard report:

1. Tabular Schedule Report sorted by Activity code and Early Start.

1.03 GRAPHICS

A. For initial submittal the contractor shall prepare the following graphics:

1. Pure logic diagram (Precedence Format) of entire data, not time scaled, grouped by Activity code.
2. Detailed bar chart sorted by Activity Code with Early Start and Early Finish.
3. Summary bar chart summarizing by Activity Code with Early Start and Early Finish.

B. For each update the contractor shall prepare the following graphic:

1. Bar Chart showing work activities with Early Start in the next 40 work days sorted by Activity Code and Early Start.
2. Summary Bar Chart summarizing by Activity Code showing progress with Early Start and Early Finish.

C. For each Change Order involving adjustment in the contract time for performance

the contractor shall prepare a pure logic diagram showing the changed work with all predecessor and successor activities.

1.04 SUBMITIALS

A. In no case shall first application for payment be approved prior to submission of acceptable preliminary schedule, detailed submittal schedule, and schedule of values.

B. Monthly updates, required schedules and graphics shall be submitted to the Construction Manager/Owner within five working days following the end of the preceding month. Monthly updates, schedules and graphics shall be submitted in five copies.

C. If any of the required submissions are returned to the Contractor for corrections or revisions, they shall be resubmitted within ten (10) calendar days after the return mailing date. Resubmittals shall be in the same quantities as noted above. Review and response by the Construction Manager/Owner will be given within ten (10) calendar days after resubmission.

D. Attention is directed to requirements for submission of the Proposed Product List and Status Report on Material Orders as set forth in Section 01 33 00 as a perquisite for approval of requisition and payment certifications.

1.05 PAYMENT WITHHELD

A. If the Contractor fails to submit the required material as indicated in this section within the time prescribed or revision thereof within the requested time, the Owner may withhold approval of Progress Payment Estimates until such time as the Contractor submits the required information.

1.06 UPDATES

A. Updates of the Schedule shall be made by the Contractor at the end of each month reflecting actual or reasonably anticipated progress as of the last working day of the month. Monthly updates of the Detailed Schedule will be made each month until all work is substantially complete.

B. The Contractor will meet with the Architect/Owner at the end of the updated period to review information in draft form before preparation of the required schedules and graphics. The Contractor will present data, prepared in advance, for review and approval of the Architect/Owner including:

1. Actual Start Dates.
2. Actual Completion Dates.
3. Activity percent complete and/or Remaining Duration.
4. Revised logic, changes in activity duration's or resource assignments.
5. Narrative report discussing progress through the update period; changes, delays or other circumstances affecting progress; status of the project with respect to completion schedule; and any efforts by the Contractor to improve progress.

C. The update meeting will establish the values to be submitted for payment and will be directly related to the schedule of values in the application for payment.

D. The Contractor shall prepare a report of the meeting and make all changes, additions or corrections to the data resulting from the review. The contractor shall promptly prepare the monthly submittal following the update meeting.

1.07 CHANGES, DELAYS AND EXTENSIONS OF TIME

A. When changes or delays are experienced, the Contractor shall submit to the Architect/Owner a Time Impact Analysis illustrating the influence of each change or delay on the current Contract scheduled completion date. Each time analysis shall include a network analysis demonstrating how the Contractor proposed to incorporate the change or delay into the Detailed Schedule. Additionally, the analysis shall demonstrate the time impact based on the date the change was given to the Contractor, the status of construction at that point in time, and the activity duration of all effected activities. The activity duration used in this analysis shall be those included in the latest update of the Detailed Schedule, closest to the time of delay or as adjusted by mutual agreement.

B. Each Time Impact Analysis shall be submitted within ten (10) calendar days after a delay occurs or a notice of change order is given to the Contractor. In cases where the Contractor does not submit a Time Impact Analysis for a specific change or delay with a specified period of time, it shall be mutually agreed that no time extension is required. Final evaluation of each Time Impact Analysis by the Architect/Owner shall be made within fourteen (14) calendar days after receipt unless subsequent meetings and negotiations are necessary. Adjustments in the Contract time for performance shall be made only by written change order approved by the Owner. Upon approval of the Owner, Network diagrams illustrating the influence of changes and delays shall be incorporated into the Detailed Schedule by the contractor during the first update after agreement is reached.

C. The time difference between the Early Finish date and the Late Finish Date is defined as "float." The "float" belongs to the Project and may be used by the Contractor or the Construction Manager/Owner to benefit the Project. Changes or delays that influence activities in the network with "float" and do not extend the Critical Path (the network of activities with zero days "float") shall not be justification for an adjustment in Contract time for performance.

Part 2 - NOT USED

Part 3 - NOT USED

**End of Section**

# SECTION 01 33 00

# SUBMITTAL REQUIREMENTS

NOTE: SUBMISSIONS CAN BE MADE ELECTRONICALLY PROVIDED THAT SAID SUBMISSIONS FOLLOWS THE CRITERIA OUTLINED HEREIN AND BOTH THE FORMAT FOR THE OVERALL PROCESS IS AGREED TO BETWEEN ALL PARTIES PRIOR TO INITIAL START OF THE PROJECT.

## 1.01 GENERAL

A. Requirements set forth herein are in addition to and shall be considered as complementary to the Conditions of the Contract and the balance of Division #1 and Technical Specifications.

B. All Contractors, Subcontractors, Sub-subcontractors, Vendors and the like shall be required to familiarize themselves with said provisions.

C. Where practical, submittals shall be made in groupings where installations are complimentary, i.e. steel, steel decking, steel stairs, stair railings; roof systems/flashings; etc. Failure to comply with this requirement will be cause for rejection of any or all submittals.

## 1.02 REQUIREMENTS INCLUDED IN THIS SECTION

A. Approved Equal Clause/Substitutions/Options
B. Certification
C. Manufacturer's Instructions
D. Shop Drawings
E. Samples
F. Material Safety Data Sheet (MSDS) Submittals
G. Scheduling of Submittals
H. Job Progress Schedule
I. Progress Photographs
J. Certificates
K. Construction Waste Management Procedures and Certifications – See Section 01 74 19.
L. V.O.C. Compliance certification – See individual technical sections.

## 1.03 APPROVED EQUAL CLAUSE/SUBSTITUTIONS/OPTIONS - Section 01 25 00

## 1.04 CERTIFICATION

A. Certification of compliance with specification performance standards and manufacturers' specifications and directions shall be furnished for any portion of this work for which specific performance requirements and/or manufacturers' specifications are listed.

It shall be the responsibility of the Contractor to secure two (2) copies of each certification when required and transmit same to the Architect and designated representative of the Owner.

B. Sample Certification Form (2 pages) Section 01 33 06 is included in this manual. Each item requiring certification shall be so noted and affidavits shall be filed singly to cover each specified material, installation, application and the like.

CERTIFICATIONS SHALL BE SUBMITTED AS PART OF THE CLOSE OUT DOCUMENT REQUIREMENTS SET FORTH IN SECTION 01 77 00.

C. Packaged Equipment: Where packaged (factory assembled) mechanical and electrical equipment is furnished, a certificate shall be included with the submission of shop drawings or catalog data stating that the equipment complies with OSHA, National Electric Code, and applicable Underwriter's Laboratories Standards in respect to motor protection, grounding and protection against hazards, and is approved by all Regulatory Agencies.

1.05 MANUFACTURER'S INSTRUCTIONS

A. Where in these specifications an item is called for to be installed in accordance with the manufacturer's directions, specifications or recommendations, the Contractor shall furnish the Architect with two (2) printed copies of said directions, specifications or recommendations, before the item is installed.

1.06 SHOP DRAWINGS

- Submittals shall be made in groupings where installations are complementary, i.e. steel, steel decking, steel stairs, stair railings; roof systems/flashings; mechanical and electrical apparatus and the like. Failure to comply with this requirement will be cause for rejection of any or all submittals.
- The Contractor is encouraged to submit for approval products made from recycled and/or environmentally responsible material. Every effort will be made by the Design Professional Team to approve these materials; the substitution request procedure shall still be enforced.

A. The following serves as a further definition of the requirements for shop drawing submittals as covered in the Contract:

1. The Contractor shall submit to the Architect with such promptness as to cause no delay in the work, layout, detail, schedule, setting, product data and shop drawings for each part of the work as specified or required.
   a. Submission of data for review by the Structural and Mechanical/Electrical Engineers shall be sent directly to those Engineers with duplicate transmittals sent to the Architect.
2. BEFORE SUBMITTING ANY DATA FOR APPROVAL, THE CONTRACTOR SHALL CHECK THE SUBMITTALS OF ALL SUBCONTRACTORS FOR ACCURACY AND CONTRACT COMPLIANCE. ALL SUBMITTALS SHALL BE UNDER THE COVER SHEET ATTACHED HERETO. <u>SUBMITTALS NOT COMPLYING WITH THE ABOVE</u> SHALL BE RETURNED TO THE SUBMITTING CONTRACTOR WITHOUT EXAMINATION BY THE ARCHITECT. <u>Contractor shall see that all work contiguous with and having bearing on</u>

work indicated on drawings is accurately and distinctly illustrated and that work shown is in conformity with contract requirements.

3. Shop drawings shall be numbered consecutively and shall represent:
   a. All working and erection dimensions.
   b. Arrangement and sectional views.
   c. Necessary details, including information for making connections to other work.
   d. Kinds of materials and finishes. Colors, where applicable
4. Shop drawings shall be dated, and shall generally contain:
   a. Name and Number of project.
   b. Name, address and telephone number of submitting Contractor.
   c. Description of required equipment, materials, and classification item numbers.
   d. Locations at which materials or equipment are to be installed in the Work.
   e. Identification of drawings, schedules, notes and/or details and specification sections and related paragraphs/articles to which they apply.
   f. Equipment or fixture identification corresponding to that used in Contract Documents.
   g. Accessories and special or non-standard features and materials which are being furnished.
   h. Properly marked with external connection identification as related to the project where they consist of standard factory assembly or field installation drawings.

   In addition to the general data required above, mechanical and electrical submissions shall contain:

   a. Manufacturer's specifications including materials of construction, metal gauge, thickness and finish.
   b. Certified dimensional drawings including clearances required for maintenance or access
   c. Performance data, ratings, operating characteristics, and operating limits.
   d. Electrical ratings and characteristics.
   e. Wiring and control diagrams, where applicable.
   f. Certifications requested, including UL label or listing.
   g. List of accessories which are required but are NOT being provided by the product manufacturer or are NOT being furnished under this Section. Identify the Section(s) under which the accessories are being furnished.
5. Submission of data for approval shall be accompanied by letter of transmittal, in duplicate, containing the name of the project, Contractor's name, number of drawings, titles and other pertinent data.
6. Procedure for Submitting Shop Drawings and Product Data:

The contractor shall submit five (5) copies of data, for standard manufactured items, in the form of manufacturer's catalog sheets, showing illustrated cuts of the items to be furnished, scale details, sizes, dimensions, performance characteristics, operating clearances, capacities, wiring diagrams and all other pertinent information.

Two copies of reviewed submissions will be returned to the contractor.

For all other shop drawings, Contractor shall submit one transparency for each drawing until final approval is obtained.

Each drawing transparency shall have a clear space approximately 4 inches by 10 inches on the right-hand side for stamps showing "Date Received" and disposition of submittal.

In addition to the transparency, three (3) prints shall be required.

a. After completion of checking, the Architect, and Engineer (as appropriate) will retain one print for his record and return the transparencies to the submitting Contractor.

***The average "turn around time" of any one in-house submittal by the Architect shall not exceed 15 business days for review and at least 20 business days when another consultant is involved.***

b. For drawings returned "Resubmit", "Amend & Resubmit", "Disapproved" or "Rejected-Resubmit", the original drawings shall be corrected, a new transparency made, and resubmitted until final approval.

   NOTE: The Owner reserves the right to backcharge the Contractor for the additional costs beyond the review of any resubmittal as outlined in Section 01 25 00.

c. For drawings returned "Approved", "No Exceptions Taken", "Approved as Noted", and "Make Corrections Noted", the Contractor shall obtain and provide sufficient prints as required for the field.

***NOTE: It is the responsibility of the contractor to confirm all dimensions, quantities, and the coordination of materials and products supplied by him with other trades. Approval of shop drawings containing errors does not relieve the contractor from making corrections at his expense.***

7. No work as called for by shop drawings shall be done until Architect's approval.
8. IF SUBMITTALS SHOW VARIATIONS FROM CONTRACT REQUIREMENTS BECAUSE OF STANDARD SHOP PRACTICES, OR

OTHER REASONS, CONTRACTOR SHALL MAKE SPECIFIC MENTION OF SUCH VARIATION IN HIS LETTER OF TRANSMITTAL.

9. APPROVAL OF SHOP DRAWINGS IS GENERAL. IT SHALL NOT RELIEVE CONTRACTOR OF THE RESPONSIBILITY FOR ACCURACY OF SUCH DRAWINGS, NOR FOR THE FURNISHING OF MATERIALS OR PROVISION OF WORK REQUIRED BY THE CONTRACT AND NOT SHOWN ON THE SHOP DRAWINGS.

   Unless it is an interpretation of design intent, approval of shop drawings shall not be construed as approval of departures from Contract.

10. If the Contractor should alter any information on previous submittals, besides the notations called for by the Architect, he must circle this new information to bring it to the Architect's attention.

***11. Where practical, in submitting data for approval, all associated drawings, product data and the like, relating to a complete assembly shall be submitted at one and the same time so that each may be checked in relation to the entire proposed assembly.***

   PARTIAL SUBMISSIONS WILL BE RETURNED WITHOUT ACTION TAKEN.
   EXTRANEOUS MATERIAL ON PRODUCT DATA SHEETS SHALL BE STRUCK PRIOR TO SUBMITTAL.

   Resubmittals of any data shall be “complete”, i.e. – Lighting Fixture resubmittal shall include all fixtures whether or not some have been approved so that when the entire submittal is approved, a full record copy is on file.

12. Contractor shall have copies of all approved shop drawings as listed in Paragraph 1.06.A.6 above on the job at all times and shall make them available to the Architect or the Owner's representatives.

1.07 SAMPLES

A. The following serves as a further definition of the requirements for sample submittals as covered in the Contract:
   1. Names of proposed manufacturers, materialsmen and dealers who are to furnish materials, fixtures, appliances or other fittings shall, where practical, be submitted to the Architect for early approval to afford proper investigation and check.
   2. No manufacturer will be approved for any materials to be furnished under this contract unless he shall be of good reputation and shall have plant of ample capacity and shall have successfully produced similar products.
   3. All transactions with manufacturers and subcontractors shall be through the Respective Prime Contractors.
   4. Unless otherwise specified, samples shall be in duplicate (2) and of adequate size to show quality, type, color, range, finish, texture, etc.

***INTERRELATED COLOR SELECTIONS <u>WILL NOT</u> BE MADE UNTIL ALL PERTINENT SAMPLES ARE MADE AVAILABLE TO ARCHITECT.***

Deliver one (1) sample to field office and one (1) sample to Architect's office unless otherwise directed.

5. Each sample shall be labeled, bearing material and quality names, submitting Contractor's name, and project name, and other pertinent data.

**<u>In accordance with OSHA regulation Number 1910.1200, a Material Safety Data Sheet (MSDS) shall be submitted for each product to be incorporated in the work</u>**.

The sole purpose for requiring submittal of MSDS sheets as outlined herein and respective technical sections is to advise the General Contractor that health and safety is of primary importance to the execution of the work and for the future occupants of the project under construction. It is to be assumed, and will be enforced, that the submission of MSDS sheets be made as a separate package, covered by it's own transmittal and marked "for evidence of legal compliance". This submission will be noted and returned with a stamp indicating "SUBMITTED INFORMATION ONLY, NOT REVIEWED". **Failure to observe these submittal requirements will be cause for rejection of the entire submittal.**

**The safe handling of products by the applicator according to MSDS warnings is a safety issue, like any other, entirely within the purview of the General Contractor.**

6. Where Specifications require manufacturer's printed installation directions, such directions and diagrams shall accompany samples.

   Coordinate with Paragraph 1.05 herein

7. A duplicate letter of transmittal from the submitting Contractor requesting approval of the sample shall accompany the samples.
8. Transportation charges to designated locations must be prepaid on all samples.
9. Materials shall not be ordered until approval is received in writing from the Architect.

   All materials shall be furnished equal in all respects to the samples which were approved.

1.08 MATERIAL SAFETY DATA SHEET (MSDS) SUBMITTALS

A. As specified in Paragraph 1.07 of this Section and within the technical sections forming this Specification, the Contractor is directed to the following requirements concerning "MSDS" submissions.

1. Submit MSDS's for all products used during construction whether incorporated within the work or used in the performance of the work.
2. Identify which products may be harmful to construction workers or other building occupants.
3. Develop means and methods for protection of construction workers and other building occupants from potentially harmful products. **Submit said means and methods to the Owner for review and approval**.

B. Further, the General Contractor with assistance from each individual contractor shall maintain a "MSDS" file on site, accessible to workers and otherwise in compliance with jurisdiction's "Right To Know" legislation.

C. **Attention is directed Section 01 77 00, Article 1.04.A.12 for final closeout submittal of MSDS compilation to the Owner**.

1.09 PROGRESS PHOTOGRAPHS

A. This Article includes requirements for periodic construction photography by the General Contractor, utilizing digital camera equipment, to demonstrate construction progress and to serve as a communicative device when describing a given condition to others at a remote location, by means of the internet.

B. Photography shall be taken using a digital camera and electronic program which will download the digital photos in a JPEG format to a computer with resolution adequate to demonstrate the item under discussion.

C. One set of record prints will be required and filed with the monthly requisition. The JPEG files shall be transmitted to the appropriate parties who shall then have the option to view the picture(s) on screen or print them out using their own equipment.

D. It is the intention of this Section to provide a tool to enhance communications and reduce the amount of time required to address questions arising at the Project site. In this end, the Contractor shall utilize good judgment in providing photographs that are informative, and not merely repeating what is shown in the other photographs.

E. Provide factual representation of construction extent and conditions. Provide correct exposure and focus, high resolution and sharpness, maximum depth of field, and minimum distortion, utilizing a normal lens.

F. Before starting work, the General Contractor shall take photographs of the site and the building interiors from different points of view sufficient in number to show all present conditions.

G. The minimum requirements, per requisition period are twelve (12) total (six (6) photographs of each of the Building units and six (6) interior views), and three (3) photographs of the Site Work, from different points of view designated by the Architect

1.10 CERTIFICATES

A. Submit a Summary of Solid Wastes Generated, manifests, weight tickets, and the like in accordance with requirements of Section 01 74 19 - Construction Waste Management.

B. Submit, as required by each technical section a certification for V.O.C. compliance.

**End of Section**

# SUBMITTAL COVER SHEET

**Contractor:**_____

**Address:**_____ **Telephone:** _____

Owner:

Name of Project:

**TYPE OF SUBMITTAL:**

☐Shop Drawings ☐Schedule ☐Physical Sample
☐Technical Data ☐Certificate ☐Color Sample
☐Test Report ☐Warranty ☐_____

**Submission #:** **1st** **2nd** **3rd** **4th** (circle one)

**Description:**

Product Identification: _____

_____

Manufacturer: _____

Subcontractor/Supplier:_____

**DOCUMENT REFERENCES:** (Must be fully filled out)

Spec Section No.:_____ Drawing No(s):_____

Paragraph: _____ Rm. Or Det. No(s):_____

**Contractor Remarks:**

**Contractor Submittal Review Stamp**

THE ATTACHED MATERIAL HAS BEEN REVIEWED BY THE UNDERSIGNED AND IS BELIEVED TO COMPLY WITH ALL REQUIREMENTS OF THE CONTRACT DOCUMENTS. THE UNDERSIGNED UNDERSTANDS VERIFICATION OF FIELD DIMENSIONS, AND COORDINATION WITH OTHER TRADES, REMAINS THE RESPONSIBILITY OF THE CONTRACTOR.

DATE: _____ BY (SIGN): _____

Consultant use below this line:

**Architect Submittal Review Stamp**

☐ NO EXCEPTIONS ☐ MAKE CORRECTIONS NOTED
☐ REJECTED ☐ REVISE AND RESUBMIT
☐ EXAMINED ☐ SUBMIT SPECIFIED ITEM

CHECKING IS ONLY FOR GENERAL CONFORMANCE WITH THE DESIGN CONCEPT OF THE PROJECT AND GENERAL COMPLIANCE WITH THE INFORMATION GIVEN IN THE CONTRACT DOCUMENTS. ANY ACTION SHOWN IS SUBJECT TO THE REQUIREMENTS OF THE PLANS & SPECIFICATIONS. CONTRACTOR IS RESPONSIBLE FOR DIMENSIONS WHICH SHALL BE CONFIRMED & CORRELATED AT THE JOB SITE; FABRICATION PROCESSES AND TECHNIQUES OF CONSTRUCTION; COORDINATION OF HIS WORK WITH THAT OF ALL OTHER TRADES & THE SATISFACTORY PERFORMANCE OF HIS WORK

KG+D ARCHITECTS, P.C.

DATE: _____ BY: _____

**Kaeyer, Garment + Davidson Architects, PC**
285 Main Street, Mount Kisco, New York 10549
914.666.5900 kgdarchitects.com

I/WE, the MANUFACTURER/SUPPLIER and INSTALLER of _____

_____

as specified in Section Number _____ of the Contract Documents prepared by KG+D Architects, PC, 285 Main Street, Mt. Kisco, NY 10549, for:

**Greenwich High School**
**Cardinal Stadium Phase 1**

**Greenwich Public Schools**
290 Greenwich Avenue
Greenwich, CT 06830

do herein certify that -

1. All materials furnished for said project do fully comply with all specification requirements as stated within the Contract Documents;

2. That no asbestos containing materials of any nature are used in the work;

3. That execution of the Work covered by this certification has been performed in accordance with the drawings prepared by the design professional team.

CONTRACTOR: _____

CERTIFICATION BY: _____ TITLE: _____

ADDRESS: _____

CERTIFICATION DATED: _____

Distribution:

Original and One Copy to: KG+D Architects, PC
285 Main Street
Mt. Kisco, NY 10549

Copy to: To Be Issued at Pre-Construction Meeting

CERTIFICATION OF SPECIFICATION COMPLIANCE

CORPORATE ACKNOWLEDGEMENT

State of )
) SS:
County of )

On the _____ day of _____, before me came _____ to me known and who by me being duly sworn did depose and say that he resides at _____ that he is the officer of the said corporation executing the foregoing instrument, that he knows the seal of said corporation, that the seal affixed to said instrument is such corporate seal, that it was so affixed by order of the Board of Directors of said corporation and that he signed his name thereto by like order.

_____
Notary Public

INDIVIDUAL ACKNOWLEDGEMENT

State of )
) SS:
County of )

On the _____ day of _____, before me came _____ to me known and who by me being duly sworn did depose and say that he resides at _____ that he is the individual who executed the foregoing instrument.

_____
Notary Public

PARTNERSHIP ACKNOWLEDGEMENT

State of )
) SS:
County of )

On the _____ day of _____, before me came _____ to me known and who by me being duly sworn did depose and say that he resides at _____ that he is the partner in the firm of _____ doing business under the name of _____ and that he executed the foregoing instrument on behalf of said partnership.

_____
Notary Public

# SECTION 01 41 00

# PERMITS AND COMPLIANCE

1.01 GENERAL

A. Requirements set forth herein are in addition to and shall be considered as complementary to the Conditions of the Contract and the balance of Division #1 and Technical Specifications.

B. All Contractors, Subcontractors, Sub-subcontractors, Vendors and the like shall be required to familiarize themselves with said provisions.

1.02 REQUIREMENTS INCLUDED IN THIS SECTION

A. Permits and Licenses

B. Compliance

C. Additional Compliance

1.03 PERMITS AND LICENSES

A. The Respective Contractor shall obtain, maintain and pay for all permits and licenses necessary for the execution of the work and for the use of such work when completed.

***B. This excludes the overall building permit which will be obtained by either the Architect or Owner's Representative and paid for by the Owner.***

1.04 COMPLIANCE

A. The Respective Contractor shall give all notices, pay all fees and comply with all laws, rules and regulations applicable to the work.

1.05 ADDITIONAL COMPLIANCE

A. The Contractor, Subcontractors, and the employees of the Contractor and Subcontractors, shall comply with all regulations governing conduct, access to the premises, operation of equipment and systems, and conduct while in or near the premises and shall perform the work in such a manner as not to unreasonably interrupt or interfere with the conduct of business of the Facility.

**B. Further, attention is directed to requirements of Section 01 15 00.**

**End of Section**

# SECTION 01 42 19

# CODES AND STANDARDS

## Part 1 - GENERAL

### 1.01 REFERENCE STANDARDS

The abbreviations, which may be used in the construction specifications, refer to the organizations and specifications of the organizations listed below.

| | |
|---|---|
| AABC | Associated Air Balance Council |
| AAN | American Association of Nurserymen |
| ABMA | American Boiler Manufacturers Association |
| AI | Asphalt Institute |
| ADC | Air Diffusion Council |
| ALSC | American Lumber Standards Committee |
| AMCA | Air Movement and Control Association |
| ARMA | Asphalt Roofing Manufacturers Association |
| ASC | Adhesive and Sealant Council |
| ASLA | American Society of Landscape Architects |
| AWI | Architectural Woodwork Institute |
| CBM | Certified Ballast Manufacturers |
| CLFMI | Chain Link Fence Manufacturers Institute |
| CRI | Carpet and Rug Institute |
| CS | Commercial Standard of NBS |
| FS | Federal Specifications (General Services Administration), Specifications Unit (WFSIS) |
| GANA | Glass Association of North America |
| ICBO | International Council of Building Officials |
| IEEE | The Institute of Electrical and Electronics Engineers |
| IES | Illuminating Engineering Society of North America |
| IGCC | Insulating Glass Certification Council |
| LSGA | Laminators Safety Glass Association |
| NEII | National Elevator Industry Inc. |
| NELMA | Northeastern Lumber Manufacturers' Association |
| NHLA | National Hardwood Lumber Association |
| RCSHSB | Red Cedar Shingle and Handsplit Shake Bureau |
| SIGMA | Sealed Insulating Glass Manufacturers Association |
| SPC | Southern Pine Inspection Bureau (Grading Rules) |
| SSPC | Steel Structures Painting Council |
| TIMA | Thermal Insulation Manufacturers Association |
| WMMP | Wood Moulding and Millwork Producers Association |
| WRI | Wire Reinforcement Institute, Inc. |

Further attention is directed to industry guide complied by Sweet's division of McGraw-Hill denoted as "PROJECT INFORMATION AND SERVICES" as well as in the web site www.4specs.com wherein a comprehensive list of international organizations representing building product manufacturers, associations, institutes, governmental agencies and testing bureaus is put forth.

1.02 APPLICABLE CODES: The following is a listing of applicable codes within the jurisdiction of the Work as embodied within the **2018 Connecticut State Building Code**.

| Code Type | Code Model | Amendment |
|---|---|---|
| Building/Dwelling | IBC 2015-State Building Code | |
| Structural Code | IBC 2015-State Building Code | |
| Plumbing Code | IPC 2015-State Building Code | |
| Mechanical Code | IMC 2015-State Building Code | |
| Electrical Code | 2017 NEC (NFPA-70) | |
| Accessibility Code | ICC/ANSI A117.1 2009 | |
| Energy Code | IECC 2015-State Building Code | |

Part 2 - PRODUCTS - NOT USED

Part 3 - EXECUTION - NOT USED

**End of Section**

# Statement of Special Inspections

Project: *Greenwich HS Cardinal Stadium Phase 1*

Location: *10 Hillside Road; Greenwich 06830*

Owner: *Greenwich Public School*

Owner's Address: *290 Greenwich Avenue*
*Greenwich, CT 06830*

Design Professional in Responsible Charge: *The Di Salvo Engineering Group, Structural Engineers, Inc.*
*83 Wooster Heights Rd. Suite 200, Danbury, CT 06810*

Architect of Record: *Kaeyer, Garment and Davidson Architects, PC*
*285 Main Street; Mount Kisco, NY 10549*

This *Statement of Special Inspections* is submitted as a condition for permit issuance in accordance with the Special Inspection and Structural Testing requirements of the Building Code. It includes a schedule of Special Inspection services applicable to this project as well as the name of the Special Inspection Coordinator and the identity of other approved agencies to be retained for conducting these inspections and tests. This *Statement of Special Inspections* encompass the following disciplines:

☒ Structural ☐ Mechanical/Electrical/Plumbing
☐ Architectural ☐ Other: _____

The Special Inspection Coordinator shall keep records of all inspections and shall furnish inspection reports to the Building Official and the Registered Design Professional in Responsible Charge. Discovered discrepancies shall be brought to the immediate attention of the Contractor for correction. If such discrepancies are not corrected, the discrepancies shall be brought to the attention of the Building Official and the Registered Design Professional in Responsible Charge. The Special Inspection program does not relieve the Contractor of his or her responsibilities.

Interim reports shall be submitted to the Building Official and the Registered Design Professional in Responsible Charge.

A *Final Report of Special Inspections* documenting completion of all required Special Inspections, testing and correction of any discrepancies noted in the inspections shall be submitted prior to issuance of a Certificate of Use and Occupancy.

Job site safety and means and methods of construction are solely the responsibility of the Contractor.

Interim Report Frequency: *Monthly* or ☐ per attached schedule.

Prepared by:

Trevor B. Hill, P.E.
(type or print name)

11-10-2020

Signature Date

STATE OF CONNECTICUT
TREVOR B. HILL
21710
LICENSED
PROFESSIONAL ENGINEER

*Design Professional Seal*

Owner's Authorization:
Owner to return signed copy to The Di Salvo Engineering Group

Signature Date

Building Official's Acceptance:

Signature Date

Project: *Greenwich HS Cardinal Stadium Phase 1*

# Schedule of Inspection and Testing Agencies

Statement of Special Inspections includes the following building systems:

- ☒ Soils and Foundations
- ☒ Cast-in-Place Concrete
- ☐ Precast Concrete
- ☐ Shotcrete
- ☒ Masonry Level B
- ☐ Masonry Level C
- ☒ Structural Steel
- ☐ Cold-Formed Steel Framing
- ☐ Prefabricated Cold-Formed Trusses
- ☐ Prefabricated Wall Panels
- ☐ Spray Fire Resistant Material
- ☐ Mastic and Intumescent Fire-Resistant Material
- ☒ Wood Construction
- ☐ Prefabricated Wood Trusses
- ☐ Glue Laminated Wood Construction
- ☐ Exterior Insulation and Finish System
- ☐ Mechanical & Electrical Systems
- ☐ Architectural Systems
- ☐ Special Cases

| Special Inspection Agencies | Firm | Address, Telephone |
|---|---|---|
| 1. Special Inspector | *Special Inspector to be determined by Owner.* | |
| 2 Testing Laboratory | *Testing Lab to be determined by Owner.* | |
| 3 Geotechnical Engineer | *Geotechnical Engineer to be determined by Owner.* | |

Note: The inspection and testing agent shall be engaged by the Owner or the Owner's Agent, and not by the Contractor or Subcontractor whose work is to be inspected or tested. Any conflict of interest must be disclosed to the Building Official, prior to commencing work. The Di Salvo Engineering Group takes no responsibility for the qualifications of the Special Inspector, the Testing Laboratory nor the Geotechnical Engineer.

Seismic Design Category: *B*

Basic Wind Speed (Ultimate/Nominal Wind Speed/) (mph): *130/101*

Wind Exposure Category: *C*

# Qualifications of Inspectors and Testing Technicians

The qualifications of all personnel performing Special Inspection and testing activities are subject to the approval of the Building Official. The credentials of all Inspectors and testing technicians shall be provided if requested.

## Key for Minimum Qualifications of Inspection Agents:

When the Registered Design Professional in Responsible Charge deems it appropriate that the individual performing a stipulated test or inspection have a specific certification or license as indicated below, such designation shall appear below the *Agency Number* on the Schedule.

| | |
|---|---|
| PE/SE | Structural Engineer – a licensed SE or PE specializing in the design of building structures |
| PE/GE | Geotechnical Engineer – a licensed PE specializing in soil mechanics and foundations. |
| EIT | Engineer-In-Training – a graduate engineer who has passed the Fundamentals of Engineering examination |

**American Concrete Institute (ACI) Certification**

| | |
|---|---|
| ACI-CFTT | Concrete Field Testing Technician – Grade 1. |
| ACI-CCI | Concrete Construction Inspector |
| ACI-LTT | Laboratory Testing Technician – Grade 1&2. |
| ACI-STT | Strength Testing Technician. |

**American Welding Society (AWS) Certification**

| | |
|---|---|
| AWS-CWI | Certified Welding Inspector. |
| AWS/AISC-SSI | Certified Structural Steel Inspector |

**American Society of Non-Destructive Testing (ASNT) Certification**

| | |
|---|---|
| ASNT | Non-Destructive Testing Technician – Level II or III |

**International Code Council (ICC) Certification**

| | |
|---|---|
| ICC-ECSI | Soils Special Inspector |
| ICC-SMSI | Structural Masonry Special Inspector |
| ICC-SWSI | Structural Steel and Welding Special Inspector |
| ICC-SBSI | Structural Steel and Bolting Special Inspector |
| ICC-SFSI | Spray-Applied Fireproofing Special Inspector |
| ICC-PCSI | Prestressed Concrete Special Inspector |
| ICC-RCSI | Reinforced Concrete Special Inspector |
| ICC-CBSI | Commercial Building Special Inspector |

**National Institute for Certification in Engineering Technologies (NICET)**

| | |
|---|---|
| NICET-CT | Concrete Technician – Levels I, II, III & IV |
| NICET-ST | Soils Technician - Levels I, II, III & IV |
| NICET-GET | Geotechnical Engineering Technician - Levels I, II, III & IV |

**Exterior Design Institute (EDI) Certification**

| | |
|---|---|
| EDI-EIFS | EIFS Third Party Inspector |

**Other**

| | |
|---|---|
| SCSI | Smoke Control Special Inspector |
| PE/ME | Mechanical/Electrical/Plumbing Engineer – a licensed PE specializing in the design of mechanical, electrical and plumbing building systems |
| RA | Registered Architect specializing in the design of architectural building systems |

# Soils and Foundations

Project: *Greenwich HS Cardinal Stadium Phase 1*

| Item | Agent No. (Qualif.) | Scope |
|---|---|---|
| 1. Site Preparation | *3 (PE or EIT or ICC-ECSI)* | ***Table 1705.6.5. Site Preparation.*** *Prior to placement of the prepared fill, determine that the site has been prepared in accordance with the approved soils report, as stated in Section 1803.2.* |
| | *3 (PE or EIT or ICC-ECSI)* | ***Table 1705.6.1. Footing Bottom.*** *Verify materials below footings are adequate to achieve the design bearing capacity in accordance with the approved soils report, as stated in Section 1803.2.* |
| | *3 (PE or EIT or ICC-ECSI)* | ***Table 1705.6.2. Excavation Depth.*** *Verify excavations have been extended to the proper depth and have reached proper material in accordance with the approved soils report, as stated in Section 1803.2.* |
| 2. Controlled Structural Fill | *3 (PE or EIT or ICC-ECSI)* | ***Table 1705.6.4. Placement of Fill****. Continuously verify that the use of proper materials, densities and lift thicknesses during placement and compaction of controlled fill complies with the approved soils report, as stated in Section 1803.2. Verify extent and slope of fill placement.* |
| | *2 (ICC-ECSI)* | ***Table 1705.6.3. Compacted Fill Material.*** *Perform classification and testing of controlled fill material. Perform sieve tests and modified Proctor tests of each source of fill material. Through testing, verify that the compacted fill to be used under footings and under slabs complies with the approved soils report, as stated in Section 1803.2. Review that the in-place dry density of the compacted fill complies with the approved soils report, as stated in Section 1803.2.* |
| 3. Deep Foundations | | *Not applicable.* |
| 4. Underpinning | | *Not applicable.* |
| 5. Other | *3 (PE or EIT)* | *Within the building perimeter, observe placement of underslab and perimeter drainage elements, including crushed stone, perforated pipes, and geocomposite drains.* |

# Cast-in-Place Concrete

Project: *Greenwich HS Cardinal Stadium Phase 1*

| Item | Agent No. (Qualif.) | Scope |
|---|---|---|
| 1. Mix Design | *1 (PE or EIT)*<br><br>*2 (ACI)* | ***Table 1705.3.5.*** *Review concrete mix design submittals for all classes of concrete specified on the structural drawings. Reference standard ACI 318: Ch.19, 26.4.3, 26.4.4. Reference Sections 1904.1, 1904.2.*<br><br>*Review concrete batch tickets and verify compliance with approved mix design. Verify that water added at the site does not exceed that allowed by the mix design.* |
| 2. Material Certification | *1 (PE or EIT)* | ***Section 1705.3.2. Materials.*** *Review material certificates of compliance or other acceptable documentation for all materials used in the concrete mix designs for conformance with ACI 318 Chapter 26. In the absence of sufficient data or documentation providing evidence of conformance to quality standards of materials in Chapter 26 of ACI 318, materials shall be tested in accordance with the appropriate standards and criteria.* |
| 3. Formwork Geometry | *1 (PE or EIT)* | ***Table 1705.3.12*** *Review formwork for shape, location and dimensions of the concrete member being formed. See Item 4 for the required review percentages Reference standard ACI 318: 26.11.1.2 (b).* |
| 4. Reinforcement Installation | *1 (PE or EIT)* | ***Table 1705.3.1.*** *Review the following percentages of installed reinforcement for compliance with approved shop drawings, project specifications and ACI 318: Ch. 20, 25.2, 25.3, 26.6.1-26.6.3: Footings 50%, Foundation Walls 50%, Slabs on Grade 50%, Elevated Slabs 50%, Piers 50%..* |
| 5. Post-Tensioning Operations | | *Not applicable* |
| 6. Anchors - Cast-In-Place | *2 (ACI)* | ***Table 1705.3.3*** *Reference standard ACI 318: 17.8.2.*<br>*Review 50% of cast-in-place anchors for anchor materials, size, positioning, spacing, edge distance and embedment for compliance with approved shop drawings. Review concrete placement and consolidation around anchors as per "Concrete Placement" section of this Statement.* |
| 7. Anchor Rods - Post Installed | *1 (PE or EIT) & 2 (ACI)* | ***Table 1705.3.4*** *Reference standard ACI 318: 17.8.2, 17.8.2.4*<br>*Review 75% of post-installed mechanical anchors. Continuous review of 100% of post-installed adhesive anchors or reinforcing bars installed in horizontal or upwardly inclined orientations to resist sustained tension loads, in accordance with ACI 318; for other orientations review 75% of post-installed adhesive anchors/reinforcing bars.*<br>*Review shall include 1) anchor and dowel materials, 2) adhesive materials and expiration date, 3) anchor/rebar type, size, positioning, spacing, edge distance, embedment and tightening torque, and 4) concrete type, compressive strength and thickness for compliance with approved contract documents. Review drilled holes (for proper preparation, size, depth and cleaning), and anchor and dowel installation for compliance with manufacturer's requirements.*<br>*For all of the above, initial review by Special Inspector with Testing Lab present, followed by reviews by Testing Lab.* |

## Cast-in-Place Concrete (cont'd.)

Project: *Greenwich HS Cardinal Stadium Phase 1*

| | | |
|---|---|---|
| 8. Concrete Placement | *2 (ACI)* | ***Table 1705.3.7.*** *Continuous inspection of concrete placement for proper application techniques as specified in ACI 318. 26.5. Verify that concrete conveyance and depositing avoids segregation or contamination. Verify that concrete is properly consolidated.* |
| 9. Sampling and Testing of Concrete | *2 (ACI)* | ***Table 1705.3.6.*** *Make one strength test for each day's pour exceeding 5 cubic yards, but less than 25 cubic yards, plus one set for each additional 50 cubic yards or fractions thereof from each mix design of concrete placed in any one day. (ASTM C 172, ASTM C 31, ASTM C39). Also, test each specimen for slump (ASTM C143), air content (ASTM C231 or C173), and temperature (ASTM C1064). ACI Reference ACI 318: 26.5, 26.12.* |
| 10. Curing and Protection | *1 (PE or EIT) & 2 (ACI)* | ***Table 1705.3.8.*** *Review periodically for maintenance of specified curing temperature and protection techniques, in accordance with ACI 318: 26.5.3-26.5.5. Further, when hot weather concrete conditions exist, verify that the procedure outlined in ACI 305R for Hot Weather Concreting is followed. These conditions will exist when the rate of evaporation approaches 0.21 lb./ft.$^2$/hr. For Cold Weather Concreting, follow ACI 306.1 standard spec. Initial review by Special Inspector with Testing Lab present, followed by reviews by Testing Lab.* |
| 11. Other | | |

# Masonry – Level B for Risk Category I, II or III (Non-Essential Facilities)

Project: *Greenwich HS Cardinal Stadium Phase 1*

| Item | Agent No. (Qualif.) | Scope *Section 1705.4, 1705.4.1 and ACI-530-13 Section 3.1.2: the below is for Risk Category I, II or III (non-essential facilities) for engineered masonry and for Risk Category IV for masonry veneer. Note for partitions, review of material certification is only required unless otherwise noted.* |
|---|---|---|
| 1. Material Certification | *1 (PE or EIT)* | ***ACI530-13 Table 3.1.2.1.*** *Review all material submittals for each type of structural masonry unit, mortar, grout, reinforcement and admixtures specified for conformance with the Specification for Masonry Structures (ACI 530.1-13/ASCE 6-13/TMS 602-13) Art. 1.5. Verify installed materials conform to approved samples on site.* |
| 2. Mixing of Mortar and Grout | *1 (PE or EIT) & 2 (ICC-SMSI)* | ***ACI530-13 Table 3.1.2.2.a.; ACI530-13 Table 3.1.2.3.d.*** *Conduct sufficient number of periodic field reviews of mortar and grout proportioning, mixing and consistency to establish conformance with the Specification for Masonry Structures (ACI 530.1-13/ASCE 6-13/TMS 602-13) Art. 2.1, 2.6A and 2.6B, and the construction documents. Mortar and grout shall be mixed using a measuring box for accurate proportioning. See Item 5 for the required review percentages. Initial review by Special Inspector with Testing Lab present, followed by reviews by Testing Lab.* |
| 3. Installation of Masonry | *1 (PE or EIT) & 2 (ICC-SMSI)* | ***ACI530-13 Table 3.1.2.4.a.*** *Conduct sufficient number of periodic field reviews of masonry unit and mortar installation to establish conformance with the Specification for Masonry Structures (ACI 530.1-13/ASCE 6-13/TMS 602-13) Art. 3.3F and the construction documents. See Item 5 for the required review percentages. Initial review by Special Inspector with Testing Lab present, followed by reviews by Testing Lab.* |
| 4. Mortar Joints | *1 (PE or EIT) & 2 (ICC-SMSI)* | ***ACI530-13 Table 3.1.2.2.b.; ACI530-13 Table 3.1.2.3.e.*** *Conduct sufficient number of periodic field reviews of the construction of mortar joints, including tooling and filling of joints, to establish conformance with the Specification for Masonry Structures (ACI 530.1-13/ASCE 6-13/TMS 602-13) Art. 3.3B and the construction documents. Verify that the maximum bed> Initial review by Special Inspector with Testing Lab present, followed by reviews by Testing Lab.* |
| 5. Reinforcement Installation | *1 (PE or EIT) & 2 (ICC-SMSI)* | ***ACI530-13 Table 3.1.2.2.d.; ACI530-13 Table 3.1.2.3.b.; ACI530-13 Table 3.1.2.3.c.*** *Conduct sufficient number of periodic field reviews of reinforcement installation to establish conformance with Building Code Requirements for Masonry Structures (ACI 530-13/ASCE 5-13/TMS 402-13) Sec. 6.1, 6.2.1., 6.2.6. and 6.2.7, the Specification for Masonry Structures (ACI 530.1-13/ASCE 6-13/TMS 602-13) Sections 3.2E, and 3.4, and the construction documents: shear walls, bearing walls, elevator walls, and exterior walls a minimum of 50%.. Initial review by Special Inspector with Testing Lab present, followed by reviews by Testing Lab.* |

**Masonry – Level B for Risk Category I, II or III (Non-Essential Facilities (cont'd.)**

Project: *Greenwich HS Cardinal Stadium Phase 1*

| | | |
|---|---|---|
| 6. Grouting Operations | *1 (PE or EIT) & 2 (ICC)* | ***ACI530-13 Table 3.1.2.3.a.; ACI530-13 Table 3.1.2.4.f.*** *Continuous review of all grout placement for conformance with the Specification for Masonry Structures (ACI 530.1-13/ASCE 6-13/TMS 602-13) Art. 3.5 and the construction documents. Periodically verify that 50% of grout spaces are clean and periodically inspect 50% of clean-outs for high-lift grouting for conformance with the Specification for Masonry Structures (ACI 530.1-13/ASCE 6-13/TMS 602-13) Art. 3.2D and 3.2F, and the construction documents. Initial review by Special Inspector with Testing Lab present, followed by reviews by Testing Lab.* |
| 7. Weather Protection | *1 (PE or EIT) & 2 (ICC-SMSI)* | ***ACI530-13 Table 3.1.2.4.d.*** *Conduct reviews periodically of completed masonry protection in accordance with the construction documents. Further, when the ambient temperature is below 40° F or above 90° F, review protection for conformance with the Specification for Masonry Structures (ACI 530.1-13/ASCE 6-13/TMS 602-13) Art. 1.8C and 1.8D, and the construction documents. Verify wall cavities are protected against precipitation. See Item 5 for the required review percentages. Initial review by Special Inspector with Testing Lab present, followed by reviews by Testing Lab.* |
| 8. Evaluation of Masonry Strength | *2 (ICC)* | *Units to be tested in accordance with ASTM C140.*<br><br>***ACI530-13 Table 3.1.2.5.*** *Prism test method not required, since the Unit Strength Method for specifying masonry components is used as detailed in the Specification for Masonry Structures (ACI 530.1-13/ASCE 6-13/TMS 602-13) Art. 1.4B.2.a.3, 1.4.B.2.b.3, 1.4B.2.c.3, 1.4B.3, 1.4B.4. See Item 2 above.*<br><br>*Evaluation of mortar strength: Since mortar has been specified using the Proportion Method in accordance with ASTM C270, periodically verify the proportions for mortar in accordance with ASTM C270, i.e. mortar testing is not required.*<br><br>*Evaluation of grout strength: Since grout has been specified using the Proportion Method in accordance with ASTM C476, periodically verify the proportions for grout in accordance with ASTM C476, i.e. grout testing is not required.* |
| 9. Anchors | *1 (PE or EIT) & 2 (ICC-SMSI)* | ***ACI530-13 Table 3.1.2.4.b.*** *Review 50% of anchorages to structural members, frames and other construction to verify conformance with the Building Code Requirements for Masonry Structures (ACI 530-13/ASCE 5-13/TMS 402-13) Sections 1.2.1 (e), 6.1.4.3, 6.2.1 and the construction documents. Initial review by Special Inspector with Testing Lab present, followed by reviews by Testing Lab.* |
| 10. Other | | |

# Structural Steel

Project: *Greenwich HS Cardinal Stadium Phase 1*

| Item | Agent No. (Qualif.) | Scope |
|---|---|---|
| 1. Fabricator Certification / Quality Control Procedures<br>☐ Fabricator Exempt | *1 (PE or EIT)* | ***Section 1704.2.5 and AISC 360-10, Chapter N.*** *Verify whether Fabricator holds a current American Institute of Steel Construction (AISC) certification for Certified Building Fabricator (BU).If so, special inspections as required by Section 1704.2.5.1 shall not be required. If not, perform the following:* |
| | *1 (PE or EIT) & 2 (AWS)(For Shop Inspection)* | *Prior to fabrication, verify that the fabricator maintains approved detailed fabrication and quality control procedures that provide a basis for control of the workmanship and the fabricator's ability to conform to the approved construction documents and the code. Approval of the fabricator shall be based upon review of the fabricator's written procedural and quality control manuals and periodic auditing of fabrication practices by an approved agency.* |
| | *1 (PE or EIT)* | *At the completion of fabrication, the approved fabricator shall submit a certificate of compliance to the owner or the owner's authorized agent for submittal to the building official stating that the work was performed in accordance with the approved construction documents.* |
| 2. Material Certification | *2 (ICC-SBSI, or AWS)* | ***AISC 360-10, Chapter N; Section 1705.2.1****. Periodic observation of 50% of structural steel, high-strength bolts, nuts, washers and weld filler materials for proper materials identification markings for conformance with ASTM standards specified in the approved contract documents. The inspector shall be present in the area where the work has been or is being performed, and also at the completion of the work.* |
| | *1 (PE or EIT)* | *Review structural steel manufacturer's certified mill test reports; high-strength bolts, nuts, washers and weld filler materials for manufacturer's certificate of conformance with ASTM standards specified in the approved contract documents.* |
| 3. Open Web Steel Joists | *1 (PE or EIT)* | *Visual inspection of the erected joists and joist girders to verify general compliance with details shown on the approved construction documents, such as bracing, stiffening, member locations and proper application of joint details. Verify that web stiffeners are in conformance with the approved contract documents.* |
| | *2 (AWS)* | *Section 1705.2.3 and Table 1705.2.3. Periodic visual inspection of 50% of bolted and welded end connections, and 50% of bridging to verify compliance with the bridging requirements of the Steel Joist Institute.* |

## Structural Steel (cont'd.)

Project: *Greenwich HS Cardinal Stadium Phase 1*

| | | |
|---|---|---|
| 4. Bolting | *2 (ICC-SBSI)* | ***AISC 360-10, Chapter N: Section N5.6 and Tables N5.6-1, N5.6-2 and N5.6-3.*** *High-strength, bearing–type connections: Periodic observation of 50% of bolted connections for required size, location and number of bolts and also for contact of plies. The minimum bolt tension, method of tightening and method of inspecting installed bolts shall be as specified in AISC "Specifications for Structural Joints Using High Strength Bolts" for ASTM F3125 Gr. A325 or A490 Bolts", and the commentary that follows. Use of a calibrated torque wrench on a previously tightened bolt is not an acceptable method of inspection. High-strength, slip-critical connections, in accordance with the AISC "Specifications for Structural Joints Using High Strength Bolts" for ASTM F3125 Gr. A325 or A490 Bolts", and its commentary. Continuous observation of all bolted connections, except as noted below, for required size, location and number of bolts. Verify that the specified procedure for installation is properly used for tightening bolts. Periodic observation of 50% of bolted connections installed using the direct tension indicator method or alternate design fastener (twist-off bolt) method for required size, location and number of bolts. Verify that the specified procedure for installation is properly used for tightening bolts.* |
| 5. Welding | *2 (AWS)*<br><br><br><br>*2 (ASNT)*<br><br>*2 (AWS)*<br><br><br><br><br>*2 (AWS)*<br><br>*2 (AWS)*<br><br><br><br><br><br><br>*2 (AWS)* | *Prior to fabrication, obtain and verify Welding Procedures Specifications (WPS) are followed and are performed by qualified welders, both in the shop and in the field.*<br>***AISC 360-10, Chapter N: Section N5.4 and 5.5, and Tables N5.4-1, N5.4-2 and N5.4-3.***<br>***Complete and partial penetration groove welds:*** *submit all Prequalified Complete and/or Partial Penetration Groove Weld Details. Ultrasonic test 100% of all welds.*<br>***Multi-pass fillet welds:*** *visual inspection of 100% of all shop welds if fabricator is not certified as noted in Item 1. Visual inspection of 100% of all welds and all passes being performed every third working day if fabricator is certified as noted in Item 1. Visual inspection of 100% of all field welds and all passes. Magnetic particle test 5% of all field welds for each pass.*<br>***Single-pass fillet welds larger than $^{5}/_{16}$":*** *see Multi-pass fillet welds for details except that there is only a single pass to be inspected. Also, Magnetic particle test 10% of all field welds.*<br>***Single pass fillet welds $^{5}/_{16}$" and smaller:*** *visual inspection of 50% of all shop welds if fabricator is not certified as noted in Item 1; this percentage may be reduced after fabrication starts if approved by the SER. Visual inspection of 50% of all welds being performed every third working day if fabricator is certified as noted in Item 1; this percentage may be reduced after fabrication starts if approved by the SER. Visual inspection of 50% of all field welds. Magnetic particle test 5% of all field welds.*<br>***All Welds:*** *Submit Welder Qualification Records (WQR) including process, location, position, size and type of weld along with verification of welder's certification. Before welding starts, confirm that fit-up base metal tolerances are in conformance with AWS D1.1. Inspect pre-heat, post heat and surface preparation between passes. See above for the required percentages.* |

## Structural Steel (cont'd.)

Project: *Greenwich HS Cardinal Stadium Phase 1*

| | | |
|---|---|---|
| 6. Shear Connectors | | *Not Applicable.* |
| 7. Structural Details | *1 (PE or EIT)* | ***AISC 360-10, Chapter N: Section N5.7.*** *Visual inspection of the erected steel frame to verify general compliance with details shown on the approved construction documents, such as bracing, stiffening, member locations and proper application of joint details at each connection.* |
| 8. Metal Deck | *2 (AWS)* | ***Section 1705.2.2.*** *Verify deck material and obtain manufacturer's certified test reports. Verify that welders are certified in accordance with AWS D1.3. Inspect 50% of weldments, side-lap fasteners and mechanical fasteners for required size, location and number for conformance with the approved contract documents and the Steel Deck Institute's QA/QC.* |
| 9. Other | | |

# Wood Construction

Project: *Greenwich HS Cardinal Stadium Phase 1*

| Item | Agent No. (Qualif.) | Scope |
|---|---|---|
| 1. Fabricator Certification/ Quality Control Procedures | *1 (PE or EIT)* | *Not Applicable.* |
| 2. Material Grading | *1 (PE or EIT)* | *Review 10% of grade stamps of dimensioned lumber for conformance with the contract documents.* |
| 3. Connections | *1 (PE or EIT)* | *Review 75% of hanger connections, 75% of tie-downs, 100% of shear wall hold-downs, and 50% of nailing, bolting, anchoring and other fastening of components for conformance with the contract documents.* |
| 4. Framing and Details | *1 (PE or EIT)* | *Review 75% of completed framing installation prior to concealment by surface finishes for compliance with details shown on the construction drawings including all connections to the supporting structure, field cut notches and drilled holes performed by the mechanical trades. Review all bearing points and all permanent bracing required by fabricator and the architect or engineer of record.* |
| 5. Diaphragms and Shearwalls | *1 (PE or EIT)* | *Inspect size, configuration, blocking and fastening (including holdowns, see Item 3) of shearwalls and diaphragms. Verify panel grade and thickness.* |
| 6. Other | *1 (PE or EIT)* | *Review continuous gluing operations of elements.* |

# SECTION 01 50 00

# TEMPORARY FACILITIES

## 1.01 GENERAL

A. The work of this Section includes all requirements for construction facilities and temporary controls, including temporary utilities, support facilities, and security and protection. Coordinate with Sections 01 10 00 and 01 15 00/01 for additional requirements.

B. Requirements set forth herein are in addition to and shall be considered as complementary to the Conditions of the Contract and the balance of Division #1 and Technical Specifications; further, attention of all contractors is directed to requirements set forth in Section 01 15 01 as they affect school building safety during the execution of the work of this project.

C. All Contractors, Subcontractors, Sub-subcontractors, Vendors and the like shall be required to familiarize themselves with said provisions.

D. Definitions as apply to "Contractors" involved with the work of this Project shall be as set forth in Section 01 10 00.

E. Temporary facilities and services shall be relocated throughout the duration of the Work as required by the progress of the Work, at no additional cost to the Owner.

F. Provide all required temporary protections and measures as required by the Authority Having Jurisdiction.

## 1.02 QUALITY ASSURANCE

A. Environmental Protection: Provide environmental protection as required by authorities having jurisdiction and as indicated in the Contract Documents. Coordinate with requirements of the following:
   1. 01 41 00 - Permits and Codes
   2. 01 50 00 – Temporary Facilities (Indoor Air Quality (IAQ) Management).
   3. 01 57 19 - Environmental Protection During Construction
   4. 01 74 00 - Cleaning.
   5. 01 74 19 - Construction Waste Management.

B. Regulations: Comply with industry standards and applicable laws and regulations of authorities having jurisdiction, including but not limited to:
   1. Building Code requirements
   2. Health and safety regulations
   3. Utility company regulations
   4. Police, Fire Department and Rescue Squad rules

C. Standards: Comply with NFPA Code 241, “Building Construction and Demolition Operations”, ANSI-A10 Series standards for “Safety Requirements for Construction and Demolition”, and NECA Electrical Design Library “Temporary Electrical Facilities.” Refer to “Guidelines for Bid Conditions for Temporary Job Utilities and Services”, prepared jointly by AGC and ASC, for industry recommendations.

D. Accessible Temporary Egress: Comply with applicable provisions in ADA-ABA Accessibility Guidelines and ANSI A117.1.

## 1.03 REQUIREMENTS INCLUDED IN THIS SECTION

A. Project Sign

B. Field Office
C. Temporary and Permanent Services, General
D. Temporary Light and Power
E. Temporary Heating/Cooling Facilities
F. Temporary Ventilation and Indoor Air Quality
G. Temporary Toilet Facilities
H. Temporary Water
I. Dewatering Facilities and Drains
J. Temporary Signage
K. Storage Facilities
L. Scaffolding and Staging
M. Roof Protection
N. Rubbish Container
O. Construction Fencing
P. Janitorial Service/Daily Cleanup
Q. Burning
R. Dust Control
S. Temporary Roadways
T. Maintenance of Permanent Roadways
U. Traffic Control
V. Fire Prevention Control
W. Temporary Fire Protection
X. Discontinuance, Changes and Removal

1.04 PROJECT SIGN

A. The Contractor shall provide and maintain at the site of the work, the exact location thereof to be designated by the Architect, a construction sign containing the title of the Project; the name of the Owner; the names of the Architectural/Engineering team; and such other information as may be indicated and/or required by the Architect.

B. Said project sign shall be constructed of APA A/C "MDO" plywood, edged and banded in a minimum size of 4 foot by 8 foot and shall be set on supporting system designed to withstand a minimum 50 mph wind velocity or greater as determined by codes. Graphics shall be applied by a sign painter using a maximum of 4 colors plus black and white.

C. Upon completion of the project, or as may be directed by the Architect, said sign, framing, supports and foundations shall be removed from the project site.

1.05 FIELD OFFICE

A. The Contractor, until all the work covered by the Contract is accepted by the Owner, shall provide a temporary office structure, with sanitary facilities, in accordance with provisions elsewhere described in the Contract Documents, for his use, and use of the Architect, Owner and their representatives and shall bear the cost of constructing, maintaining and removing such structure. Office shall be of such size and design as approved by the Owner and Architect

B. Further, provide:
   1. adequate heating, lighting and air conditioning in said office;
   2. all required telephone service separate from the Owner's telephone service and system;

C. The Contractor shall provide daily housekeeping for all office spaces.

D. Maintain, in the Contractor's field office, all articles necessary for First Aid treatment; further, the Contractor shall establish standing arrangements for the immediate removal and hospital treatment of any employees and other persons on the job site who may be injured or who may become ill during the course of the work.

E. Each respective Contractor will arrange for telephone service, if required, directly with the utility company.

F. Electric service will be provided in accordance with Paragraph 1.06 of this Section.

1.06 TEMPORARY AND PERMANENT SERVICES, GENERAL

A. The Contractor shall provide and maintain, either directly or through its' subcontractors, all temporary services and utilities, including all labor, materials, equipment and the like necessary to adequately furnish, deliver and maintain said services at all times when required during the term of the Contract.

B. The Contractor's use of any permanent system or service of the building or portions thereof shall be subject to the Owner's approval.

C. The Contractor shall be responsible for any and all damage to permanent services used, and shall make good any and all damage to the satisfaction of the Owner, prior to final completion and acceptance.

NOTE: In accordance with OSHA and other applicable regulations, the respective Contractors performing erection of structural steel, precast concrete and such other "skeleton" type work are solely responsible for the netting, guard rail protection and such other safety devices as deemed necessary to protect the workers and public from harm.

1.07 TEMPORARY LIGHT AND POWER

A. The Electrical Trade Contractor shall -

1. Provide all required temporary electric facilities as specified in Division 26 and further outlined below.
2. MAINTAIN AND SERVICE THE TEMPORARY ELECTRIC SYSTEM.

The energy will be supplied, **and paid for**, by the Owner; all site work will be fed from new temporary panels and service installation and all costs for service **other than usage charges** will be borne by the Electrical Contractor. Usage charges shall be borne by the General Contractor.

<u>Abuse of service will be cause for termination of service. No reimbursement will be made by Owner in the event of disconnect</u>.

The source of energy will be supplied by the Owner at specific locations to which sub-metered hook-up will be permitted.

B. Where feasible, locations for temporary power shall be from the nearest adequate duplex or simplex outlet to the work of this Contract.

In the event that this is inadequate, the Electrical Contractor shall provide, from the nearest adequately sized electric panel, the required temporary facilities in accordance with these specifications.

1.08 TEMPORARY HEATING/COOLING FACILITIES

A. The Contractor shall provide and pay for all temporary heating, coverings and enclosures necessary to properly protect all work and materials against damage by dampness and cold, to dry out the work and to facilitate the completion thereof.

The Contractor shall maintain the critical installation temperatures, provided in the technical provisions of the specifications, herein, for all work in those areas where same is being performed.

1.09 TEMPORARY VENTILATION AND MAINTENANCE OF INDOOR AIR QUALITY

A. Ventilate enclosed areas to facilitate curing of materials, disperse humidity, and prevent accumulations of dust, fumes, vapors, or gases.

B. Source Control

1. Provide low and zero VOC materials as specified.
2. Control dirt, dust, and combustion contaminants during construction. Many activities during the construction process produce odor and dust. When conducting these activities during the construction process, source control and pathway interruption isolation strategies shall be used to isolate, minimize, and reduce the introduction of particulate and odors in the construction space. Whenever possible, cutting, drilling, sawing, and sanding should be conducted out of doors or in areas where HVAC systems cannot be compromised. When welding or using internal combustion powered tools during the construction process shall be done in areas where dust and emissions can be captured and exhausted using temporary exhaust systems.
3. Dust is produced during the following activities:
   a. cutting materials,
   b. drilling materials,
   c. sawing materials,
   d. sanding materials,
   e. and rasping materials
4. The following construction activities produce combustion products and particulates:
   a. welding,
   b. cutting using torches,
   c. sawing using chain saws,
   d. heating using temporary heaters
   e. and soldering
5. **Enforce the use of Low VOC sealants, adhesives, caulks, coatings, paints, and cleaning solutions on the construction site as specified in the technical sections of the Specifications.**

C. Provide temporary fan units as required to maintain clean air for construction.

1.10 TEMPORARY TOILET FACILITIES

A. The Contractor shall provide suitable toilet facilities at approved locations complying with all state and local requirements in every respect as follows:

1. Toilets shall be portable chemical type with screened enclosures each having a urinal and closet and mounted on skids. One (1) unit shall be provided for every 25 employees.

2. Each unit shall be serviced by the renter at least twice a week, including removal of water matter, sterilizing, recharging tank, refilling tissue holders and thorough cleaning and scrubbing of entire interior.
3. Each unit shall be delivered to site, located as directed, relocated if desired, and removed from site by rental company when required.

1.11 TEMPORARY WATER

A. The Owner will provide water service to the Contractor without charge, but reserves the right to terminate, without incurring additional cost, said service in the event of abuse of such service.
B. The Contractor shall make all necessary connections and extend piping to areas required at no additional cost to the Owner.
C. The Contractor shall have all equipment for the temporary water removed at the completion of the Project or when directed by the Owner.

1.12 STORAGE FACILITIES

A. The Contractor and each subcontractor shall provide temporary storage shanties, tool houses and other facilities as required for his own use. Temporary structures shall be located where directed or approved by the Owner, and shall be removed upon completion of the work or when directed. Temporary structures shall be maintained in a neat appearance.
B. Materials delivered to the site shall be safely stored and adequately protected against loss or damage. Particular care shall be taken to protect and cover materials that are liable to be damaged by the elements.

1.13 SCAFFOLDING AND STAGING

A. All scaffold, staging and appurtenances thereto shall comply in total to the requirements of Safety and Health Regulations for Construction Chapter XVII of OSHA, Part 1926 and all related amendments.

1.14 EXTERIOR CLOSURES - Coordinate with Sections 06 10 00 and 09 29 00

A. Provide temporary weathertight closures for exterior openings to provide acceptable interior working conditions, to allow for temporary heating and maintenance of ambient temperatures required in individual specification sections, to protect the Work, and to prevent entry of unauthorized persons.
B. Provide access doors with locking hardware.

1.15 ROOF PROTECTION

A. During the construction period the Contractor shall take strict precautions against unnecessary traffic on the roofing surface.
B. The Contractor shall provide temporary protection on the roof surface when it is necessary for work to take place on completed sections.
C. Upon such notification as required in subparagraph A, the Contractor shall assume responsibility for damages, if any, to the roofing system caused by the work of other trades, except that financial liability for any and all damages rests with the offending trade.

1.16 RUBBISH CONTAINER

A. The General Contractor shall provide suitable rubbish container device (s), properly maintained and serviced, replaced as required and protected from access by the public by fencing as may be specified herein or approved by the Architect.

B. Each Contractor and Subcontractor shall sweep up and gather together daily all his own rubbish and removed materials and place same in containers to be provided by the Contractor. Wood crates and similar matter shall be broken up, securely tied into bundles and stacked alongside rubbish containers OR in locations as directed by the Contractor. Items larger then container capacity shall be removed from the site by the respective contractor.

C. THE CONTRACTOR'S ATTENTION IS DIRECTED TO THE REQUIREMENT OF RELOCATION OF THE COMPLETE REMOVAL SYSTEM AT VARIOUS TIMES THROUGHOUT THE PROJECT AS MAY BE REQUIRED TO MAINTAIN PROGRESS OF THE WORK.

1.17 CONSTRUCTION FENCING – Coordinate with Staging/Phasing Drawings as applicable to the particular project.

A. Construction fencing shall be provided enclosing all work and storage areas or where indicated on the drawings. Unless otherwise shown or directed, all fencing shall be 8 feet high, accurately aligned and plumb, adequately braced, and complete with gates, locks, and hardware as required. UNDER NO CONDITIONS SHALL FENCING BE ATTACHED OR ANCHORED TO EXISTING CONSTRUCTION OR TREES.

B. Fencing shall be as follows:

1. Fencing traversing paved areas shall be free standing sandbagged barrier type in a continuous manner, firmly aligned and securely mounted. Fencing shall essentially consist of heavy timber wood sill with chainlink fencing consisting of 2 inch posts with top and bottom rails of 1 inch pipe and No. 9 wire fabric. All fencing shall be galvanized.

2. Fencing traversing unpaved areas shall be chainlink fencing consisting of 2 inch posts with top and bottom rails of l inch pipe and No. 9 wire fabric. All fencing shall be galvanized. Posts shall be set below grade a minimum of 2 foot and firmly anchored

C. Site access gates shall be provided as required of same material as site fence complete with all operating hardware and security devices.

D. Contractor shall submit drawings showing type, materials and construction of fencing to Architect for approval before proceeding with installation.

E. All wood or metal products, unless galvanized, shall receive 2 coats of latex exterior paint of color and manufacturer as approved by the Architect.

F. Should fencing be required to be relocated during the course of the project, same shall be done at the total expense of the Contractor. At the completion of the project, the Contractor shall remove and dispose of the construction fencing.

G. The construction fence shall be MAINTAINED IN GOOD ORDER by the Contractor throughout the life of the project.

1.18 JANITORIAL SERVICE/DAILY CLEANUP

A. The Contractor shall furnish daily janitorial services for the project and perform any required maintenance of facilities as deemed necessary by the Architect during the entire life of the contract. Toilet facilities shall be kept clean and sanitary at all times. Services shall be accomplished to the satisfaction of the

Architect. The Contractor shall provide daily trash collection and cleanup of the project area and shall dispose of all discarded debris, and the like in a manner approved by the Architect.

B. The Contractor shall place foot wiping carpet at all entrances, exits to the work areas and provide daily cleaning for all dust and footprints from the corridors, stairs, and the like, caused by construction.

1.19 DUST CONTROL: The Contractor shall, at all times, provide adequate dust control measures. He shall accomplish this without interference with the operations of the Owner or the safe progress of the work.

1.20 MAINTENANCE OF PERMANENT ROADWAYS

A. The General Contractor, for the life of the project, shall immediately remove dirt and debris which may collect on permanent roadways due to the work. This includes permanent roads and sidewalks adjacent to the project site.

B. Provide vehicle tracking stone pad at entrances/exits to public roadways, min. 20 feet length, to limit sediment transported from construction site by vehicles.

1.21 TEMPORARY ROADS AND PAVED AREAS

A. Construct and maintain temporary roads and paced areas adequate to support loads and to withstand exposure to traffic during construction period. Locate temporary roads and paved areas within the construction limits indicated on the Drawings

a. Provide dust-control treatment that is non-polluting and non-tracking. Reapply treatment as required to minimize dust.

B. Provide temporary traffic controls at junction of temporary roads and walkways with public roads and walkways. Include warning signs for public traffic and “STOP” signs for entrance onto public roads. Comply with requirements of Authority Having Jurisdiction.

1.22 STORMWATER CONTROLS : Provide earthen embankments and similar barriers in and around excavations and subgrade construction, sufficient to prevent flooding by runoff of stormwater by heavy rains.

1.23 TRAFFIC CONTROL

A. Routes to and from the location of the work shall be as indicated in the Contract or as directed by the Owner through the Architect. Temporary roadways shall be closed only with prior approval of the Owner.

B. Parking areas for the use of those engaged in the work shall be as indicated on the Contract Drawings or as directed by the Owner.

C. The Contractor shall maintain parking areas for the use of those engaged in the work, including but not limited to snow removal.

1.24 FIRE PREVENTION CONTROL

A. The Contractor shall provide private unlisted telephone service reserved for fire calls at a location or locations approved by the Owner. Such service shall be in addition to any other telephone service. **Clear instructions for sending alarms shall be conspicuously posted.**

B. The Contractor shall pay all costs thereof until completion and acceptance of the work or as otherwise directed by the Owner.

C. All Contractors shall comply with the safety provisions of the National Fire Protection Association's "National Fire Codes" pertaining to the work and, particularly, in connection with any cutting or welding performed as part of the work.

1.25 TEMPORARY FIRE PROTECTION

A. Each Contractor shall take all possible precautions for the prevention of fires. Where flame cutting torches, blow torches, or welding tools are required to be used within the building, their use shall be as approved by the Architect at the site. When welding tools or torches of any type are in use, have available in the immediate vicinity of the work a fire extinguisher of the dry chemical 20 lbs. type. The fire extinguisher (s) shall be provided and maintained by the Contractor doing such work.

B. Fuel for cutting and heating torches shall be gas only and shall be contained in Underwriter's laboratory approved containers. Storage of gas shall be in locations as approved by the Owner and subject to Fire Department regulations and requirements.

C. No volatile liquids shall be used for cleaning agents or as fuels for motorized equipment or tools within a building except with the express approval of the Owner and/or Architect and in accordance with local codes. On-site bulk storage of volatile liquids shall be outside the buildings at locations directed by the Owner, who shall determine the extent of volatile liquid allowed within the building at any given time.

D. The Contractor shall comply with the following requirements relating to compressed gas:

1. Where compressed gas of any type is used for any purpose at the site, it shall be contained in cylinders complying with ICC regulations. Gases of different types shall not be stored together except when in use and when such proximity is required.

2. All gas cylinders shall be stored in sheds constructed of noncombustible materials. Sheds shall be well ventilated and without electric lights or fixtures and shall be located as far from other buildings as is practicable. All gas cylinders not in actual use, or in proposed immediate use, shall be removed from the building under construction or reconstruction. Empty gas cylinders shall be removed prior to bringing in a replacement cylinder. Cylinders shall at all times be supported and braced in an upright position. When not is use, the protective cap shall be screwed over the valve.

3. All persons required to handle gas cylinders or to act as temporary firemen (Fire Watchers) shall be able to read, write and understand the English language; they shall also be required by the Contractor to read Part 3 of Pamphlet P-1 "Safe Handling of Compressed Gases" published by the Compressed Gas Association, 500 Fifth Avenue, New York, NY 10036.

4. Where LP-Gas is required for Temporary Heat (including Construction Heat), the number of the cylinders within the structure or building shall be limited to the least amount required; in general, one (1) cylinder per heater. Cylinders and heaters shall be connected with two (2) braid neoprene hoses fitted at each end with threaded unions and capable of withstanding a pressure of 250 P.S.I. The length of those shall not exceed 30 feet and shall be protected from mechanical injury, kinking and abrasion. Heaters shall not be less than 6 feet from any cylinder and not less 10 feet from

any tarpaulins or type closure. All debris and rubbish shall be removed to prevent fire hazards.

5. Where local ordinances are in effect regarding gas cylinders, (their use, appurtenances and handling), such ordinances shall supplement the requirements of this paragraph. All personnel engaged in firewatch shall be certified by the Local Fire Department having jurisdiction.
6. LP-Gas Heating will not be permitted in enclosed areas below grade.
7. Any cylinder not having the proper ICC markings or reinspection marking, or any cylinder with a leak shall be isolated immediately away from any building and the supplier shall be immediately notified; such other precautions as may be required to prevent damage or injury shall also be taken by the Contractor.

E. The Contractor shall comply with the following requirements relating to welding and cutting:

1. All cutting and/or welding (electric or gas) must be done only by skilled, certified and licensed personnel.
2. During welding or cutting operations, a contractor's man shall act as a fire watcher. The fire watcher shall have proper eye protection and suitable fire fighting equipment including fire extinguisher (bearing current inspection Certificate), protective gloves and any other equipment deemed necessary.
3. Welding or cutting shall not be done near flammable liquid, vapors or tanks containing such material.
4. Where cutting or welding is done above or adjacent to (within two feet) combustible material or persons, a shield of incombustible material shall be installed to protect against fire or injury to sparks or hot metal.
5. Tanks supplying gases for welding or cutting are to be placed in an upright position securely fastened, and as close as practical to the operation. Tanks, actives or spares, shall be protected from excess heat and shall not be placed in stairways, hallways or exits. When not in use, protective valve cap shall be screwed on the cylinder.
6. Adequate fire extinguishing equipment shall be maintained at all welding or cutting operations.
7. The Contractor shall secure all required inspections.
8. All equipment, hoses, gauges, pressure reducing valves, torches, etc., shall be maintained in good working order and all defective equipment shall immediately be removed from the job.
9. No person shall be permitted to do any welding or cutting until his name, address and current license number have been submitted in writing to the Owner.

F. Contractors for work outside the building shall commence operations promptly on award of Contract, and shall be responsible for same being kept clear of materials and debris in connection with their own work and that of other Contractors. If a Contractor for outside work allows other contractors to deposit material and debris over its lines, the Contractor shall be responsible for all delay and extra cost occasioned thereby.

## 1.26 DISCONTINUANCE, CHANGES AND REMOVAL

A. All Contractors shall:

1. Discontinue all temporary services required by the Contract when so directed by the Owner or the Architect.
2. The discontinuance of any such temporary service prior to the completion of the work shall not render the Owner liable for any additional cost entailed thereby and each Contractor shall thereafter furnish, at no additional cost to the Owner, any and all temporary service required by such Contractor's work.
3. Remove and relocate such temporary facilities as directed by the Owner or the Architect without additional cost to the Owner, and shall restore the site and the work to a condition satisfactory to the Owner.

**End of Section**

# SECTION 01 56 39

# TEMPORARY TREE AND PLANT PROTECTION

## PART 1 - GENERAL

### 1.1 RELATED DOCUMENTS

A. Drawings and general provisions of the Contract, including General and Supplementary Conditions and Division 01 Specification Sections, apply to this Section.

### 1.2 SUMMARY

A. Section includes general protection and pruning of existing trees and plants that are affected by execution of the Work, whether temporary or permanent construction.

B. Related Requirements:

1. Section 015000 "Temporary Facilities and Controls" for temporary site fencing.
2. Section 311000 "Site Clearing" for removing existing trees and shrubs.

### 1.3 DEFINITIONS

A. Caliper: Diameter of a trunk measured by a diameter tape or the average of the smallest and largest diameters at a height 6 inches (150 mm) above the ground for trees up to and including 4-inch (100-mm) size at this height and as measured at a height of 12 inches (300 mm) above the ground for trees larger than 4-inch (100-mm) size.

B. Caliper (DBH): Diameter breast height; diameter of a trunk as measured by a diameter tape or the average of the smallest and largest diameters at a height 54 inches (1372 mm) above the ground line for trees with caliper of 8 inches or greater.

C. Plant-Protection Zone: Area surrounding individual trees, groups of trees, shrubs, or other vegetation to be protected during construction and indicated on Drawings.

D. Tree-Protection Zone: Area surrounding individual trees or groups of trees to be protected during construction and indicated on Drawings.

E. Vegetation: Trees, shrubs, groundcovers, grass, and other plants.

### 1.4 PREINSTALLATION MEETINGS

A. Preinstallation Conference: Conduct conference with Landscape Architect prior to planting installation at Greenwich Cardinal Stadium, 10 Hillside Road, Greenwich, CT 06830

1. Review methods and procedures related to temporary tree and plant protection including, but not limited to, the following:

a. Tree-service firm's personnel, and equipment needed to make progress and avoid delays.
b. Arborist's responsibilities.
c. Quality-control program.
d. Coordination of Work and equipment movement with the locations of protection zones.
e. Trenching by hand or with air spade within protection zones.
f. Field quality control.

## 1.5 ACTION SUBMITTALS

A. Product Data: For each type of product.

B. Shop Drawings:

1. Include plans, elevations, sections, and locations of protection-zone fencing and signage, showing relation of equipment-movement routes and material storage locations with protection zones.
2. Detail fabrication and assembly of protection-zone fencing and signage.
3. Indicate extent of trenching by hand or with air spade within protection zones.

C. Samples: For each type of the following:

1. Organic Mulch: 1-quart volume of organic mulch; in sealed plastic bags labeled with composition of materials by percentage of weight and source of mulch.
2. Protection-Zone Fencing: Assembled Samples of manufacturer's standard size made from full-size components.
3. Protection-Zone Signage: Full-size Samples of each size and text, ready for installation.

D. Tree Pruning Schedule: Written schedule detailing scope and extent of pruning of trees to remain that interfere with or are affected by construction.

1. Species and size of tree.
2. Location on site plan. Include unique identifier for each.
3. Reason for pruning.
4. Description of pruning to be performed.
5. Description of maintenance following pruning.

## 1.6 INFORMATIONAL SUBMITTALS

A. Qualification Data: For arborist and tree service firm.

B. Certification: From arborist, certifying that trees indicated to remain have been protected during construction according to recognized standards and that trees were promptly and properly treated and repaired when damaged.

C. Maintenance Recommendations: From arborist, for care and protection of trees affected by construction during and after completing the Work.

D. Existing Conditions: Documentation of existing trees and plantings indicated to remain, which establishes preconstruction conditions that might be misconstrued as damage caused by construction activities.

1. Use sufficiently detailed photographs or video recordings.
2. Include plans and notations to indicate specific wounds and damage conditions of each tree or other plants designated to remain.

E. Quality-control program.

## 1.7 QUALITY ASSURANCE

A. Arborist Qualifications: Certified Arborist, licensed in jurisdiction where Project is located.

B. Tree Service Firm Qualifications: An experienced tree service firm that has successfully completed temporary tree and plant protection work similar to that required for this Project and that will assign an experienced, qualified arborist to Project site during execution of the Work.

C. Quality-Control Program: Prepare a written program to systematically demonstrate the ability of personnel to properly follow procedures and handle materials and equipment during the Work without damaging trees and plantings. Include dimensioned diagrams for placement of protection zone fencing and signage, the arborist's and tree-service firm's responsibilities, instructions given to workers on the use and care of protection zones, and enforcement of requirements for protection zones.

## 1.8 FIELD CONDITIONS

A. The following practices are prohibited within protection zones:

1. Storage of construction materials, debris, or excavated material.
2. Moving or parking vehicles or equipment.
3. Foot traffic.
4. Erection of sheds or structures.
5. Impoundment of water.
6. Excavation or other digging unless otherwise indicated.
7. Attachment of signs to or wrapping materials around trees or plants unless otherwise indicated.

B. Do not direct vehicle or equipment exhaust toward protection zones.

C. Prohibit heat sources, flames, ignition sources, and smoking within or near protection zones and organic mulch.

# PART 2 - PRODUCTS

## 2.1 MATERIALS

A. Backfill Soil: Planting soil of suitable moisture content and granular texture for placing around tree; free of stones, roots, plants, sod, clods, clay lumps, pockets of coarse sand, concrete slurry, concrete layers or chunks, cement, plaster, building debris, and other extraneous materials harmful to plant growth.

1. Mixture: Well-blended mix of two parts stockpiled soil to one part planting soil.

2. Planting Soil: Planting soil as specified in Section 329113 "Soil Preparation"

B. Organic Mulch: Free from deleterious materials and suitable as a top dressing for trees and shrubs, consisting of one of the following:

1. Type: 100% fine-shredded pine bark.
2. Size Range: 3 inches maximum, 1/2 inch minimum, uniform in size.
3. Color: Natural.

C. Protection-Zone Fencing: Fencing fixed in position and meeting one of the following requirements approved by Owner: Previously used materials may be used when approved by Owner.

1. Chain-Link Protection-Zone Fencing: Polymer-coated galvanized-steel fencing fabricated from minimum 2-inch (50-mm) opening, 0.148-inch- (3.76-mm-) diameter wire chain-link fabric; with pipe posts, minimum 2-3/8-inch- (60-mm-) OD line posts, and 2-7/8-inch- (73-mm-) OD corner and pull posts[; with 1-5/8-inch-OD top rails; with 0.177-inch-diameter top tension wire and 0.177-inch-diameter bottom tension wire; with tie wires, hog ring ties, and other accessories for a complete fence system.

   a. Height: 72 inches or approved equal by Owner.
   b. Polymer-Coating Color: Black.

2. Plywood Protection-Zone Fencing: Plywood framed with four 2-by-4-inch (50-by-100-mm) rails, with 4-by-4-inch preservative-treated wood posts spaced not more than 96 inches (2400 mm) apart.

   a. Height: 72 inches or approved equal by Owner.
   b. Plywood and Lumber: Comply with requirements in Section 061000 "Rough Carpentry."

3. Wood Protection-Zone Fencing: Constructed of two 2-by-4-inch horizontal rails, with 4-by-4-inch preservative-treated wood posts spaced not more than 96 inches apart, and lower rail set halfway between top rail and ground.

   a. Height: 48 inches (1200 mm).
   b. Lumber: Comply with requirements in Section 061000 "Rough Carpentry."

4. Gates: Single and Double, as required swing access gates matching material and appearance of fencing, to allow for maintenance activities within protection zones; leaf width to be coordinated with Construction Manager and Owner.

D. Protection-Zone Signage: Shop-fabricated, rigid plastic or metal sheet with attachment holes prepunched and reinforced; legibly printed with nonfading lettering and as follows:

1. Size and Text: T.B.D.
2. Lettering: Size, Color and Background T.B.D., By Owner.

PART 3 - EXECUTION

3.1 EXAMINATION

A. Erosion and Sedimentation Control: Examine the site to verify that temporary erosion- and sedimentation-control measures are in place. Verify that flows of water redirected from construction areas or generated by construction activity do not enter or cross protection zones.

B. Prepare written report, endorsed by arborist, listing conditions detrimental to tree and plant protection.

3.2 PREPARATION

A. Locate and clearly identify trees, shrubs, and other vegetation to remain or to be relocated. Flag a 1-inch blue vinyl tape around each tree trunk at 54 inches above the ground.

B. Protect tree root systems from damage caused by runoff or spillage of noxious materials while mixing, placing, or storing construction materials. Protect root systems from ponding, eroding, or excessive wetting caused by dewatering operations.

C. Tree-Protection Zones: Mulch areas inside tree-protection zones and other areas indicated. Do not exceed indicated thickness of mulch.

1. Apply 2 to 4-inches uniform thickness of organic mulch unless otherwise indicated. Do not place mulch within 6 inches of tree trunks.

3.3 PROTECTION ZONES

A. Protection-Zone Fencing: Install protection-zone fencing along edges of protection zones before materials or equipment are brought on the site and construction operations begin in a manner that will prevent people[ from easily entering protected areas except by entrance gates. Construct fencing so as not to obstruct safe passage or visibility at vehicle intersections where fencing is located adjacent to pedestrian walkways or in close proximity to street intersections, drives, or other vehicular circulation.

1. Chain-Link Fencing: Install to comply with ASTM F567 and with manufacturer's written instructions.
2. Posts: Set or drive posts into ground one-third the total height of the fence without concrete footings. Where a post is located on existing paving or concrete to remain, provide appropriate means of post support acceptable to Architect.
3. Access Gates: Install where indicated; adjust to operate smoothly, easily, and quietly; free of binding, warp, excessive deflection, distortion, nonalignment, misplacement, disruption, or malfunction throughout entire operational range. Confirm that latches and locks engage accurately and securely without forcing or binding.

B. Protection-Zone Signage: Install protection-zone signage in visibly prominent locations in a manner approved by Architect. Install one sign spaced approximately every 20 to 30 feet on protection-zone fencing, but no fewer than four signs with each facing a different direction.

C. Maintain protection zones free of weeds and trash.

D. Maintain protection-zone fencing and signage in good condition as acceptable to Architect and remove when construction operations are complete, and equipment has been removed from the site.

1. Do not remove protection-zone fencing, even temporarily, to allow deliveries or equipment access through the protection zone.
2. Temporary access is permitted subject to preapproval in writing by arborist if a root buffer effective against soil compaction is constructed as directed by arborist. Maintain root buffer so long as access is permitted.

## 3.4 EXCAVATION

A. General: Excavate at edge of protection zones and for trenches indicated within protection zones according to requirements in Section 312000 "Earth Moving" unless otherwise indicated.

B. Trenching within Protection Zones: Where utility trenches are required within protection zones, excavate under or around tree roots by hand or with air spade, or tunnel under the roots by drilling, auger boring, or pipe jacking. Do not cut main lateral tree roots or taproots; cut only smaller roots that interfere with installation of utilities. Cut roots as required for root pruning. If excavating by hand, use narrow-tine spading forks to comb soil and expose roots.

C. Redirect roots in backfill areas where possible. If encountering large, main lateral roots, expose roots beyond excavation limits as required to bend and redirect them without breaking. If encountered immediately adjacent to location of new construction and redirection is not practical, cut roots approximately 3 inches back from new construction and as required for root pruning.

D. Do not allow exposed roots to dry out before placing permanent backfill. Provide temporary earth cover or pack with peat moss and wrap with burlap. Water and maintain in a moist condition. Temporarily support and protect roots from damage until they are permanently relocated and covered with soil.

## 3.5 ROOT PRUNING

A. Prune tree roots that are affected by temporary and permanent construction. Prune roots as recommended by Certified Arborist and as follows:

1. Cut roots manually by digging a trench and cutting exposed roots with sharp pruning instruments; do not break, tear, chop, or slant the cuts. Do not use a backhoe or other equipment that rips, tears, or pulls roots.
2. Cut Ends: Do not paint cut root ends; coat cut ends of roots more than 1-1/2 inches in diameter with an emulsified asphalt or other coating formulated for use on damaged plant tissues and that is acceptable to arborist.
3. Temporarily support and protect roots from damage until they are permanently redirected and covered with soil.
4. Cover exposed roots with burlap and water regularly.
5. Backfill as soon as possible according to requirements in Section 312000 "Earth Moving."

B. Root Pruning at Edge of Protection Zone: Prune tree roots, under direction of arborist, flush with the edge of the protection zone by cleanly cutting all roots to the depth of the required excavation.

C. Root Pruning within Protection Zone: Clear and excavate by hand or with air spade to the depth of the required excavation to minimize damage to tree root systems. If excavating by hand, use narrow-tine spading forks to comb soil to expose roots. Cleanly cut roots as close to excavation as possible.

## 3.6 CROWN PRUNING

A. Prune branches that are affected by temporary and permanent construction. Prune branches under direction of arborist.

1. Prune to remove only injured, broken, dying, or dead branches unless otherwise indicated. Do not prune for shape unless otherwise indicated.
2. Do not remove or reduce living branches to compensate for root loss caused by damaging or cutting root system.
3. Pruning Standards: Prune trees according to ANSI A300 (Part 1).

a. Type of Pruning: Cleaning, raising, reducing, and thinning as directed by arborist.
b. Specialty Pruning: Structural, restoration, vista and utility as directed by arborist.

B. Unless otherwise directed by arborist and acceptable to Architect, do not cut tree leaders.

C. Cut branches with sharp pruning instruments; do not break or chop.

D. Do not paint or apply sealants to wounds.

E. Provide subsequent maintenance pruning during Contract period as recommended by arborist.

F. Chip removed branches and dispose of off-site.

## 3.7 REGRADING

A. Lowering Grade: Where new finish grade is indicated below existing grade around trees, slope grade beyond the protection zone. Maintain existing grades within the protection zone.

B. Lowering Grade within Protection Zone: Where new finish grade is indicated below existing grade around trees, slope grade away from trees as recommended by arborist unless otherwise indicated.

1. Root Pruning: Prune tree roots exposed by lowering the grade. Do not cut main lateral roots or taproots; cut only smaller roots. Cut roots as required for root pruning.

C. Raising Grade: Where new finish grade is indicated above existing grade around trees, slope grade beyond the protection zone. Maintain existing grades within the protection zone.

D. Minor Fill within Protection Zone: Where existing grade is 2 inches or less below elevation of finish grade, fill with backfill soil. Place backfill soil in a single uncompacted layer and hand grade to required finish elevations.

3.8 FIELD QUALITY CONTROL

A. Inspections: Engage a qualified arborist to direct plant-protection measures in the vicinity of trees, shrubs, and other vegetation indicated to remain and to prepare inspection reports.

3.9 REPAIR AND REPLACEMENT

A. General: Repair or replace trees, shrubs, and other vegetation indicated to remain or to be relocated that are damaged by construction operations, in a manner approved by Architect.

1. Submit details of proposed pruning and repairs.
2. Perform repairs of damaged trunks, branches, and roots within 24 hours according to arborist's written instructions.
3. Replace trees and other plants that cannot be repaired and restored to full-growth status, as determined by Architect.

B. Trees: Remove and replace trees indicated to remain that are more than 66 percent dead or in an unhealthy condition before the end of the corrections period or are damaged during construction operations that Architect determines are incapable of restoring to normal growth pattern.

1. Small Trees: Provide new trees of same size and species as those being replaced for each tree that measures 6 inches or smaller in caliper size.
2. Large Trees: Provide one new tree(s) of 6-inch caliper size for each tree being replaced that measures more than 8 inches in caliper size.

a. Species: As selected by Architect.

3. Plant and maintain new trees as specified in Section 329300 "Plants."

C. Excess Mulch: Rake mulched area within protection zones, being careful not to injure roots. Rake to loosen and remove mulch that exceeds a 3-inch uniform thickness to remain.

D. Soil Aeration: Where directed by Architect, aerate surface soil compacted during construction. Aerate 10 feet beyond drip line and no closer than 36 inches to tree trunk. Drill 2-inch-diameter holes a minimum of 12 inches deep at 24 inches o.c. Backfill holes with an equal mix of augered soil and sand.

3.10 DISPOSAL OF SURPLUS AND WASTE MATERIALS

A. Disposal: Remove excess excavated material, displaced trees, trash, and debris and legally dispose of them off Owner's property.

**END OF SECTION 01 56 39**

# SECTION 01572

# EROSION AND SEDIMENTATION CONTROL

## PART 1 - GENERAL

### 1.1 SUMMARY

A. This Section includes furnishing, placing, and maintaining sedimentation control measures as shown on the Drawings, as directed by the Engineer, and where necessary to reduce sediment content of runoff. Control measures are to remain in place until after completion of construction. Measures include the following:

1. Silt fence.
2. Erosion control hay bales.
3. Construction entrance.
4. Erosion control blankets.
5. Silt sacks.
6. Dust control.
   a. Conduct construction operations and activities to minimize the creation and dispersion of dust. If the Engineer determines that water and or calcium chloride is required for more effective dust control, provide such measures at not additional cost.

B. Related Sections include the following:

1. Division 2 Section “Site Earthwork.”

### 1.2 SUBMITTALS

A. Material Certificates:

1. Gravel base.
2. Filter fabric.
3. Silt fence.
4. Silt sacks.
5. Calcium chloride.

### 1.3 QUALITY ASSURANCE

A. Standard Specifications: “Form 817, Standard Specifications for Roads, Bridges and Incidental Construction, State of Connecticut, Department of Transportation” and supplements.

B. Connecticut Guidelines for Soil Erosion and Sediment Control by the Connecticut Council on Soil and Water Conservation.

PART 2 - PRODUCTS

2.1 FILTER FABRIC / SILT FENCE

A. Synthetic Filter Fabric: Woven geotextile, 36 inches maximum height, conforming to the following:

| Properties | Requirement | Unit |
|---|---|---|
| Grab Tensile Strength (ASTM D4632): | 124 | Lbs |
| Grab Tensile Elongation (ASTM D4632): | 15 | Percent |
| Puncture Strength (ASTM D4833): | 65 | Lbs |
| Flow Rate (ASTM D4491): | 20 | Gal/Min/Sq. Ft. |
| UV Resistance(at 500 hours) (Retained strength) (ASTM D4355): | 80 | Percent |

B. Product and Manufacturer:

1. Harris Silt Fence by Amoco Fabrics and Filters.
2. Mutual MISF 1855 by Mutual Industries, Inc.
3. Or equal.

2.2 POSTS

A. Hardwood Stakes: 1-inch by 1-inch by 42-inch minimum.

2.3 SILT FENCE FASTENERS

A. Staples, tie wires or hog rings, as recommended by manufacturer.

1. Staples: Heavy-duty wire, 1-inch long minimum.

2.4 HAY BALES

A. Bales: Hay, weighing 40 to 120 pounds per bale.

B. Stakes: Wood, 1-inch by 1-inch by 36-inch minimum.

2.5 CONSTRUCTION ENTRANCE

A. Stone: Article M1.01 of Form 817 size as indicated on the Drawings.

B. Gravel: Article M.02.01 of Form 817, size as indicated on the Drawings.

2.6 SILT SACKS

A. Regular Flow Silt Sacks: Woven polypropylene that meets the following:

| Properties | Requirement | Unit |
|---|---|---|
| Grab Tensile Strength (ASTM D4632): | 300 | Lbs |
| Grab Tensile Elongation (ASTM D4632): | 20 | Percent |
| Puncture Strength (ASTM D4833): | 120 | Lbs |
| Mullen Burst (ASTM D3786): | 800 | PSI |
| Trapezoid Tear (ASTM D4533): | 120 | Lbs |
| Flow Rate (ASTM D4491): | 40 | Gal/Min/Sq. Ft. |
| Permittivity (ASTM D4491) | 0.55 | Sec-1 |
| UV Resistance(at 500 hours) (Retained strength) (ASTM D4355): | 80 | Percent |
| Apparent Opening Size (ASTM D4751): | #40 | US Sieve |

1. Manufacturer: ACF Environmental, 1801-A Willis Road, Richmond, VA 23237 (800-844-9223), or equal.

2.7 DUST CONTROL

A. Calcium Chloride: ASTM D98, Type 1 or Type 2.

B. Water: Potable.

PART 3 - EXECUTION

3.1 GENERAL

A. Minimize environmental damage during construction. Prevent discharge of fuel, oil, lubricants, and other fluids. Mitigate effects of discharge.

B. Install erosion and sediment control measures prior to clearing, demolition or construction.

C. Construct erosion and sediment control measures in accordance with standards and specifications of the “Guidelines for Soil Erosion and Sediment Control”, Town Regulations, Planning & Zoning Conditions of Approval, and as follows:

1. Attend a preconstruction meeting with the Engineer and wetland agent, to review permit conditions and construction methods.

2. Provide additional sedimentation and erosion controls as required by the Town and/or Engineer to address field conditions.

3. Do not discharge turbid water from dewatering to inland wetlands or watercourses.

4. All dewatering discharge and surface runoff generated during construction to be collected in frac tanks, etc. and discharged in compliance with the General Permit for the Discharge of Groundwater Remediation Wastewater to a Sanitary Sewer.

5. Weekly and prior to any anticipated rain event, inspect site. Ensure that erosion controls are properly maintained and functioning.

6. Supply a 24-hour contact name and number as part of the erosion control plan.

D. Install additional control measures, if deemed necessary by the State, Town, or Owner.

E. Implement and maintain the Erosion and Sediment Control Plan. Inform parties engaged on the construction site of the requirements and objectives of the plan. Notify the proper Town agency of transfer of this responsibility.

F. Protect catch basins throughout construction until disturbed areas are stabilized.

G. Remove and dispose of sediment from control structures in accordance with the soil management plan.

H. Control dust and wind erosion. Control dust to prevent a hazard to traffic on adjacent roadways. Dust control includes sprinkling of water and uniform application of calcium chloride on exposed soils and haul roads.

I. Do not discharge directly into wetlands or watercourses where dewatering is necessary. Utilize methods and devices as permitted by authorities having jurisdiction and appropriate regulations to minimize and retain suspended solids including pumping water into a temporary sedimentation bowl, pumping into frac tanks, providing surge protection at inlet and outlet of pumps, floating pump intake.

1. If pumping operation results in turbidity problems, stop pumping until means of controlling turbidity are determined and implemented.

J. Where control measures are required for longer than 60 days, use silt fence instead of hay bales.

K. Cut Areas

1. Establish an erosion control line (haybale check or filter fabric) at toe of slope in cut areas and slope stabilization with mulch or grass within 30 days of start of cut operations.

L. Fill Areas

1. Establish an erosion control line (woodchip berm or filter fabric) approximately 10 feet from toe of slope of proposed fill areas prior to beginning fill installation.

2. Initiate slope stabilization with mulch or grass within 30 days of start of fill installation.

M. Within 7 days of completing slope construction, stabilize slopes with vegetation or matting to minimize exposure.

N. Stockpiles

1. Side Slopes: 2:1 maximum.
2. Surround stockpiles by a sediment barrier.
3. Stabilize stockpiles left bare for more than 15 days with temporary vegetation or mulch.

O. Final Grading

1. If final grading is delayed for more than 30 days after land disturbances cease, stabilize soils with temporary vegetation or mulch.

P. Planting Season for Temporary Vegetation

1. March 1 to June 15 and August 1 to October 1.
2. After September 15, stabilize areas with haybale check, filter fabric, or woodchip mulch.

Q. Areas to Be Left Bare Prior to Finished Grading and Seeding

1. Within Planting Seasons
   a. Temporarily seed with Perennial Ryegrass
   b. Apply at a rate of 2 pounds per 1000 sq. ft. at a depth of 1/2 inch.
   c. Where grass predominates, fertilize according to a soil test at a minimum application rate of one pound per acre.
2. Outside of Planting Seasons
   a. Apply air-dried wood chip mulch, free of coarse matter.
   b. Apply at a rate of 185 to 275 pounds per 1000 sq. ft.

## 3.2 CONTROL SYSTEM

A. Silt Fence

1. Install fencing at location as shown on the Drawings or where directed by the Engineer. Maintain pitch of 2 to 20 degrees, with inclination toward potential silt source.
2. Install bottom 6 inches of fabric by trenching and burying the fabric into the notched ground.
3. Drive posts into ground a minimum of 12 inches.
4. Locate fabric splices at posts only. Provide 6-inch overlap and seal.

B. Sedimentation Control Hay Bales

1. Install at locations as shown on the Drawings or where directed by the Engineer. Place hay bales lengthwise with ends tight abutting one another. Install bales with bindings located on the sides.

2. Entrench bales 4 inches and backfill. Place backfill toward potential silt source.

3. Secure in place with 2 stakes per bale and insert straw in voids between bales.

C. Construction Entrance

1. Install at indicated site entrance locations.

3.3 SEDIMENTATION BASIN/TRAP

A. Install at locations as shown on the Drawings or where directed by the Engineer.

B. Install in advance of construction.

3.4 DUST CONTROL

A. Apply water and calcium chloride uniformly over the surface when dust becomes a nuisance or when directed by the Engineer. Provide shut-off valve in convenient location on water truck, to allow for regulating water flow.

3.5 SILT SACK

A. Remove catch basin grate, insert silt sack, and secure in place by replacing grate.

3.6 MAINTENANCE

A. Control System

1. Inspect control system immediately after each rainfall and daily during prolonged rainfall. Make repairs immediately.

2. Remove and dispose of accumulated sediments when sediment reaches approximately one-third the height of the control system, or when directed by the Engineer.

3. Replace control system promptly if fabric decomposes or system becomes ineffective prior to the expected usable life.

4. Maintain or replace system until no longer necessary for the intended purpose.

B. Silt Sack

1. Inspect after each major precipitation event. Inspect every two weeks if no major rain events have occurred.

2. Remove, clean, and reinstall silt sack when sediment accumulates to half capacity of sack.

C. Construction Entrance

1. Maintain in good condition throughout construction period.
2. Sweep adjacent roadways daily to remove tracked material from pavement.

3.7 REMOVAL

A. Remove and dispose of control system after area stabilizes with new growth or as directed by the Engineer.

**End of Section**

# SECTION 01 61 00

# MATERIAL AND EQUIPMENT

## 1.01 GENERAL

A. Requirements set forth herein are in addition to and shall be considered as complementary to the Conditions of the Contract and the balance of Division #1 and Technical Specifications.

B. All Contractors, Subcontractors, Sub-subcontractors, Vendors and the like shall be required to familiarize themselves with said provisions.

## 1.02 REQUIREMENTS INCLUDED IN THIS SECTION

A. General Standards
B. Products
C. Sustainability
D. Transportation and Handling
E. Storage and Protection

## 1.03 GENERAL STANDARDS APPLICABLE TO ALL SPECIFICATION SECTIONS

A. These provisions, standards, and tolerances shall apply to all work under this Contract. Where stricter standards and tolerances are specified elsewhere in these Specifications or in references specified in these Specifications, they shall take precedence over these standards and tolerances.

B. Build and install parts of the Work level, plumb, square, and in correct position unless specifically shown or specified otherwise.

1. No part shall be out of plumb, level, square, or correct position so much as to impair the proper functioning of the part or the Work as judged by the Architect.
2. No part shall be out of plumb, level, square, or correct position so much as to impair the aesthetic effect of the part or the Work as judged by the Architect.

C. Make joints tight and neat. Provide uniform joints in exposed work. Arrange joints to achieve the best visual effect. Refer choices of questionable visual effect to the Architect.

D. Under potentially damp conditions, provide galvanic insulation between different metals which are not adjacent on the galvanic scale.

E. Manufacturers, subcontractors, and workmen shall be experienced and skillful in performing the work assigned to them; coordinate with Article 5 of Section 00 70 00.

F. All paint used on all products shall conform to ANSI Z66.1, Specifications for Paints and Coatings Accessible to Children to Minimize Dry Film Toxicity.

G. The Drawings do not attempt to show every item of existing work to be demolished and every item of repair required to existing surfaces. Perform work required to remove existing materials which are not to be saved and to restore existing surfaces to condition equivalent to new as judged by Architect. If possible, repairs shall be indistinguishable from adjacent sound surfaces. Where it is impossible to achieve repairs which are indistinguishable from adjacent sound surfaces to remain, notify Architect, and proceed according to his instructions.

1.04 PRODUCTS

A. Products include material, equipment and systems.

B. Comply with Specifications and referenced standards as minimum requirements.

C. Components required to be supplied in quantity within a Specification Section shall be the same, and shall be interchangeable.

D. In the case of an inconsistency between Drawings and the Specifications, or within either document which is not clarified by addendum, the product of greater quality or greater quantity of work shall be provided in accordance with the Designer's interpretation.

E. Provide environmentally preferable products to the greatest extent possible. To the greatest extent possible, provide products and materials that have a lesser or reduced effect on the environment considering raw materials acquisition, production, manufacturing, packaging, distribution, reuse, operation, maintenance, and/or disposal of the product.

1.05 SUSTAINABILITY

A. In the selection of the products and materials of this section as well as for the entire project, preference will be given to those with the following characteristics:

1. Water based.
2. Water-soluble.
3. Can be cleaned up with water.
4. Non-flammable.
5. Biodegradable.
6. Low or preferably no Volatile Organic Compound (VOC) content.
7. Manufactured without compounds that contribute to ozone depletion in the upper atmosphere.
8. Manufactured without compounds that contribute to smog in the lower atmosphere.
9. Do not contain methylene-chloride.
10. Do not contain chlorinated hydrocarbons.
11. Contains the least possible of post-consumer or post-industrial waste.

1.06 TRANSPORTATION AND HANDLING

A. Arrange deliveries of materials in accordance with construction schedules in order to avoid delay in, conflict with, or the impeding of the progress of the Work and conditions at the site.

B. Deliver materials in undamaged condition, in manufacturer's original containers or packaging, with identifying labels intact and legible.

1.07 STORAGE AND PROTECTION

A. Store materials in accordance with manufacturer's instructions, with seals and labels accessible for inspection.

Contractor shall be responsible for work and equipment until fully inspected, tested and accepted. Carefully store materials and equipment which are not immediately installed after delivery to site. Close open ends of work with temporary covers or plug during construction to prevent entry of obstructing material or damaging water.

B. Materials stored on the Site shall be neatly arranged and protected, and shall be stored in an orderly fashion in locations that shall not interfere with the progress of the Work or with the operations of the Owner.

C. Interior Storage: Maintain temperature and humidity within the ranges required by manufacturer's instructions.

D. Exterior Storage:
   1. Store products subject to damage by the elements in weathertight enclosures.
   2. Store fabricated products above the ground, on blocking or skids; prevent soiling or staining. Cover products subject to damage or deterioration with impervious sheet coverings; provide adequate ventilation to avoid condensation.
   3. Store loose granular materials in a well drained area on solid surfaces to prevent mixing with foreign matter. Locate away from drainage or areas subject to flooding or storm washes.

E. Protection After Installation
   1. Provide adequate coverings to protect installed materials from damage resulting from natural elements, traffic, and subsequent construction.
   2. Remove when no longer needed.

**End of Section**

# SECTION 01 71 23

# FIELD ENGINEERING

## Part 1 - GENERAL

1.01 SUMMARY
- A. This Section specified field engineering services required for the Project, including but not limited to:
  1. Survey work.
  2. Civil, structural, or other professional engineering services specified, or required to execute Contractor's construction methods.
- B. Owner's representative will identify existing control points and property line corner stakes indicated on the Drawings, as required.

1.02 REQUIREMENTS INCLUDED IN THIS SECTION
- A. Related Requirements
- B. Qualifications of Surveyor or Engineer
- C. Survey Reference Points
- D. Project Survey Requirements
- E. Records
- F. Submittals

1.03 RELATED REQUIREMENTS
- A. Examine Contract Documents for requirements that affect work on this Section. Other Specification Sections that directly relate to work of this Section include, but are not limited to:
  1. General Conditions and Modifications to General Conditions.
  2. 01 10 00 - Description of Work
  3. 01 77 00 - Project Closeout

1.04 QUALIFICATIONS OF SURVEYOR OR ENGINEER
- A. Qualified engineer or registered land surveyor, acceptable to Architect and Owner.
- B. Registered professional engineer of the discipline required for the specific service on the Project, licensed in the state in which the Project is located.

1.05 SURVEY REFERENCE POINTS
- A. Existing basic horizontal and vertical control points for the Project are those designated on Drawings.
- B. Locate and protect control points prior to starting sitework, and preserve all permanent reference points during construction.
  1. Make no changes or relocations without prior written notice to Architect.
  2. Report to Architect when any reference point is lost or destroyed, or requires relocation because of necessary changes in grades or locations.
  3. Require surveyor to replace Project control points which may be destroyed.
     - a. Establish replacements based on original survey control.

1.06 PROJECT SURVEY REQUIREMENTS
- A. Establish a minimum of two permanent bench marks on-site, referenced to data established by survey control points.

1. Record locations, with horizontal and vertical data, on Project Record Documents.

B. Establish lines and levels, locate and lay out by instrumentation and similar appropriate means:
   1. Site improvements.
      a. Stakes for grading, fill, and topsoil placement.
      b. Utility slopes and invert elevations.
   2. Batter boards for structures.
   3. Building foundation, column locations, and floor levels.
   4. Controlling lines and levels required for mechanical and electrical trades.

C. From tine to time, verify layouts by same methods.

1.07 RECORDS

A. Maintain a complete, accurate log of all control and survey work as it progresses.

B. On completion of foundation walls and major site improvements, prepare a certified survey showing all dimensions, locations, angles, and elevations of construction in accordance with the requirements of modifications to General Conditions.

1.08 SUBMITTALS

A. Submit name and address of surveyor and professional engineer to Architect.

B. On request of Architect, submit documentation to verify accuracy of field engineering work.

C. Submit certificate signed by registered engineer or surveyor certifying that elevation and locations of improvements are in conformance, or non-conformance, with Contract Documents.

**End of Section**

# SECTION 01 74 00

# CLEANING
(Coordinate with Article 3.15 of AIA A201)

## 1.01 GENERAL

A. Requirements set forth herein are in addition to and shall be considered as complementary to the Conditions of the Contract and the balance of Division #1 and Technical Specifications.

B. All Contractors, Subcontractors, Sub-subcontractors, Vendors and the like shall be required to familiarize themselves with said provisions.

C. Definitions as apply to "Contractors" involved with the work of this Project shall be as set forth in Section 01 10 00, Article 1.01.

## 1.02 REQUIREMENTS INCLUDED IN THIS SECTION

A. Description
B. Safety Requirements
C. Materials
D. Cleaning During Construction
E. Final Cleaning

## 1.03 DESCRIPTION

A. In addition to that work required under Articles 3.15 and 6.3 of the AIA General Conditions, the Work included shall generally consist of the following:

1. Maintain premises and all properties free from accumulations of waste, debris and rubbish caused by operations connected with the Work.
2. The General Contractor shall provide for the continual removal of rubbish and debris from the area until completion of the Work and shall bear the cost of all tipping fees.
3. Each Prime Contractor shall sweep up and gather together daily, all his own rubbish and deposit same at a location, or locations, as directed by the Contractor.
4. At completion of Work, each respective Contractor shall remove waste materials, rubbish, tools, equipment, machinery and surplus materials, and clean all sight-exposed surfaces; leave project clean and ready for occupancy;
5. Staging areas, walkways, grounds and any areas affected by the work shall be cleaned of debris and restored to "new" condition by the General Contractor.
6. Perform final cleaning prior to turning the project over to the Owner.

B. Related Work Specified Elsewhere

1. 01 10 00 - Description of Work
2. 01 31 13 - Mechanical and Electrical Coordination
3. 01 73 29 - Cutting and Patching
4. 01 50 00/01 57 19 - Dust Control
5. 01 50 00 - Temporary Facilities
6. 01 77 00 - Project Closeout
7. Cleaning for specific products or work: Reference specific Section for that work.

1.04 SAFETY REQUIREMENTS

A. Standards: Maintain project in accord with following safety and insurance standards:
   1. Occupational Safety and Health Administration (OSHA).
   2. Connecticut State Building Code and amendments thereto.
   3. Life Safety Code - NFPA 101

B. Hazards Control
   1. Store volatile wastes in covered metal containers, and remove from premises daily.
   2. Prevent accumulation of wastes which create hazardous conditions.
   3. Provide adequate ventilation during use of volatile or noxious substances.

C. Conduct cleaning and disposal operations to comply with local ordinances and anti-pollution laws.
   1. Do not burn or bury rubbish and waste materials on project site.
   2. Do not dispose of volatile wastes such as mineral spirits, oil, or paint thinner in storm or sanitary drains.
   3. Do not dispose of wastes into streams or waterways.

1.05 MATERIALS

A. Use only cleaning materials recommended by manufacturer of surface to be cleaned.

B. Use cleaning materials only on surfaces recommended by cleaning material manufacturer.

C. Utilize non-toxic cleaning materials and methods.
   1. Comply with GS 37 for general purpose cleaning and bathroom cleaning.
   2. Use natural cleaning materials where feasible. Natural cleaning materials include:
      a. abrasive cleaners: substitute 1/2 lemon dipped in borax.
      b. ammonia: substitute vinegar, salt and water mixture, or baking soda and water.
      c. disinfectants: substitute 1/2 cup borax in gallon water.
      d. drain cleaners: substitute 1/4 cup baking soda and 1/4 cup vinegar in boiling water.
      e. upholstery cleaners: substitute dry cornstarch.

1.06 CLEANING DURING CONSTRUCTION

A. Execute cleaning to ensure that building, grounds, and public properties are maintained free from accumulations of waste materials and rubbish.

B. Wet down dry materials and rubbish to lay dust and prevent blowing dust.

C. At reasonable intervals during progress of work, clean site and public properties, and dispose of waste materials, debris and rubbish.

D. Provide on-site containers for collection of waste materials, debris and rubbish.

E. Should waste materials, debris and rubbish be too large for containers above, remove same from site and legally dispose of at public or private dumping areas off Owner's property.

F. Vacuum clean interior building areas when ready to receive finish painting, and continue vacuum cleaning on an as-needed basis until building is ready for substantial completion or occupancy.

G. Handle materials in a controlled manner with as few handlings as possible; do not drop or throw materials from heights.
H. Schedule cleaning operations so that dust and other contaminants resulting from cleaning process will not fall on wet, newly painted surfaces.
I. All materials and equipment shall be properly and effectively protected by Prime Contractors. All piping and conduits must be properly capped by installing contractor during construction so as to prevent obstruction and damage. Any damage resulting in the failure to use proper precautions to this work shall be replaced or altered to the satisfaction of the Architect.
J. Piping that is to be painted or insulated shall be cleaned to remove dirt and grease or oil by the installing Contractor.
K. Piping shall be cleaned inside to remove dirt and loose scale, and further, all water piping shall be flushed out prior to testing of equipment and all strainers, automatic valves, pump stuffing boxes, mechanical seals, and other parts where dirt may cause faulty operation shall be cleaned by the installing Contractor.
L. Ductwork and casings shall be cleaned on inside and outside by HVAC Contractor.
M. Clean filters installed before fans are operated. After the equipment has been used for any purpose such as testing, adjusting or temporary ventilation, filters shall be cleaned or renewed and all ducts shall be cleaned. Such work is the responsibility of the HVAC Contractor.
N. All reasonable design requirements for air venting the systems have been incorporated into the plans and specifications. Failure of air vents due to the inadequate cleaning of systems, or improper venting procedure shall be the responsibility of the HVAC Contractor.

1.07 FINAL CLEANING
A. Employ experienced workmen, or professional cleaners, for final cleaning.
B. In preparation for substantial completion or occupancy, conduct final inspection of sight-exposed interior and exterior surfaces, and of concealed spaces.
C. Remove grease, dust, dirt, stains, labels, mortar droppings, fingerprints, and other foreign materials, from sight-exposed interior and exterior finished surfaces; polish surfaces so designated to shine finish.
D. Clean and polish all hardware, grilles, fixtures, equipment and architectural metal.
E. Repair, patch and touch up marred surfaces to specified finish, to match adjacent surfaces.
F. Remove all paint, putty and other stains from all glass, and washing of glass on both sides.
G. Remove labels which are not required as permanent labels.
H. Wipe surfaces of mechanical and electrical equipment clean, remove excess lubrication and other substances.
I. Remove debris and surface dust from limited-access spaces such as plenums, shafts, and ceiling spaces.
J. Clean plumbing fixtures to a sanitary condition.
K. Remove all temporary protections (tape, oil, cosmoline, etc.).
L. Clean all floors, including grinding, if necessary, of concrete floors, if not otherwise cleanable.
M. All carpeting shall be completely and thoroughly vacuumed as part of the final cleaning.
N. Broom clean paved surfaces; rake clean other surfaces of grounds.
O. Remove snow and ice from access to building.

P. Replace air conditioning filters if units were operated during construction.

Q. Clean ducts, blowers and coils, if air conditioning units were operated without filters during construction.

NOTE: Owner will assume responsibility for cleaning as of time designated on Certificate of Substantial Completion for Owner's acceptance of Project or portion thereof.

**End of Section**

SECTION 01 74 19

CONSTRUCTION WASTE MANAGEMENT

Part 1 -GENERAL

1.01 GENERAL

A. Requirements set forth herein are in addition to and shall be considered as complementary to the General Conditions of the Contract and the balance of Division #1 and Technical Specifications.
B. All Contractors, Subcontractors, Sub-subcontractors, Vendors and the like shall be required to familiarize themselves with said provisions.
C. Definitions as apply to “Contractors" involved with the Work of this Project shall be as set forth in Division 0.

1.02 DESCRIPTION OF WORK
A. This Section specifies requirements for a complete program for implementation of waste management controls and systems for the duration of the Work.

1.03 INTENT

A. The Owner has established that this Project shall generate the least amount of waste practical and that processes that ensure the generation of as little waste as possible due to error, poor planning, breakage, mishandling, contamination, or other factors shall be employed.
B. Of the waste that is generated, as many of the waste materials as economically feasible shall be reused, salvaged, or recycled. Waste disposal in landfills shall be minimized to the greatest extent practical. With regard to these goals the Contractor shall develop, for Owner's Representative's review and Architect's review,” a Waste Management Plan for this Project. Each Contractor shall be responsible for segregating their own waste into different dumpsters as directed by the Architect and/or Owner. The Contractor shall be responsible for ensuring that debris will be disposed of at appropriately designated licensed solid waste disposal facilities, as defined by governing laws of the jurisdiction of the Work.

1.04 WASTE MANAGEMENT PLAN

A. Waste Management Plan: The General Contractor shall provide a plan containing the following:
1. Analysis of the proposed jobsite waste to be generated, including types and rough quantities.
2. Landfill Options: The name of the landfills where trash and building debris will be disposed of, the applicable landfill tipping fees, and the projected cost of disposing of all Project waste in the landfills.
3. Landfill Certification: Contractor's statement of verification that landfills proposed for use are licensed for types of waste to be deposited and have sufficient capacity to receive waste from this project.
4. Alternatives to Landfilling: A list of each material proposed to be salvaged or recycled during the course of the Project. Include the following and any

additional items proposed:

a. Cardboard
b. Clean dimensional wood
c. Beverage containers
d. Land clearing debris
e. Concrete
f. Bricks and masonry
g. Asphalt
h. Gypsum boards
i. Acoustical ceiling material (grid separate)
j. Metals from framing, banding, stud trim, ductwork, piping, rebar, roofing, other trim, steel/ iron, galvanized sheet steel, stainless steel, aluminum, copper, zinc, lead, brass and bronze

5. Meetings: A description of the regular meetings to be held to address waste management.
6. Materials Handling Procedures: A description of the means by which any waste materials identified above will be protected from contamination, and a description of the means to be employed in recycling the above materials consistent with requirements for acceptance by designated facilities.
7. Transportation: A description of the means of transportation of the recyclable materials (whether materials will be site-separated and self-hauled to designated centers, or whether mixed materials will be collected by a waste hauler and removed from the site) and destination of materials.

Part 2 -PRODUCTS -Not Used

Part 3 -EXECUTION

3.01 RECYCLING

A. Metal, including but not limited to aluminum stairs, structural beams and sections, and reinforcing steel shall be recycled.
B. Wood that is not painted and does not contain preservatives (i.e. creosote, arsenic, and chromium-containing preservatives) shall be segregated and recycled.

3.02 WASTE MANAGEMENT PLAN IMPLEMENTATION -All sorting will be done "off site" by a recognized construction and demolition processing facility who will be responsible for provision of all documentation as to where loads were processed and the recycling rate achieved.

** End of Section 01 74 19 **

# SECTION 01 77 00

# PROJECT CLOSE OUT

1.01 GENERAL

A. Requirements set forth herein are in addition to and shall be considered as complementary to the Conditions of the Contract and the balance of Division #1 and Technical Specifications. Where any apparent conflicts occur, this Section's requirements take precedence.

B. All Contractors, Subcontractors, Sub-subcontractors, Vendors and the like shall be required to familiarize themselves with said provisions.

C. Definitions as apply to "Contractors" involved with the work of this Project shall be as set forth in the Contract.

1.02 REQUIREMENTS INCLUDED IN THIS SECTION

A. Final Cleanup

B. Required Close Out Documentation

C. Orientation Instruction

D. Project Close Out Inspections

1.03 FINAL CLEANUP

A. The Contractor shall leave the work ready for use and occupancy without the need of further cleaning of any kind.

B. The Contractor shall remove all tools, appliances, project signs, material and equipment from the phased areas as soon as possible upon completion of the work.

C. The work is to be turned over to the Owner in new condition, in proper repair and in perfect adjustment.

1.04 REQUIRED CLOSE OUT DOCUMENTATION

A. Prior to final payment, ***and as part of the final requisition,*** the Owner shall receive, in addition to those documents required by the General Conditions, the following:

1. Project record documents as per Section 01 77 19
2. The Prime Contractor's general guarantees
3. Specific guarantees of material, equipment and systems installed in the work
4. A copy of all test data taken in connection with the work
5. Three (3) copies of all operation and maintenance manuals which shall include:
   a. Sequence of Operation and Control Diagrams, corrected for as-built conditions
   b. Parts List, including illustrations, assembly drawings and diagrams required for maintenance, predicted life of parts subject to wear, and recommendations for stocking spare parts
   c. Copies of accepted shop drawings, charts and diagrams
   d. Names, addresses and telephone numbers of manufacturer's representative and service company

e. Letters from each manufacturer certifying that his equipment was properly installed and is operating in accordance with manufacturer's intent
f. MSDS sheets tabulated and indexed as per specification sections
g. Copies of all test reports, including balancing, and with corrections confirmed, must be provided with the contractor's request for a substantial completion inspection
h. An "Underwriter's Certificate" shall be provided in the O&M manuals to be provided to the Owner

6. All keys, tools, screens, attic stock, spare construction material and equipment required to be furnished to the Owner as part of the work
7. Preventative Maintenance Schedule Sheets
8. Copies of all Certification of Specifications Compliance as per Section 01 33 00
9. Final survey if required by Municipality AND/OR Owner
10. Record of Manufacturers Material Safety Data Sheets (MSDS)
11. Certified Payroll Records
12. Final Summary of Solid Waste Disposal and Diversion: As specified in Section 01 74 19 - Waste Management
13. Completion of work sufficient for Owner occupation as determined by the Certifying Authority
14. Completion of work sufficient for Owner FULL USE as intended by the Architect
15. List of incomplete work
16. Warranty information
17. Documentation that user group instruction, on operable systems, have been done. (operable doors, heating plants, etc.)
18. All Fire Safing/Stopping has been certified
19. All doors, hardware, or other features in stairwells and means of egress are fully installed
20. HVAC systems testing and balancing reports (approved by Architect)
21. Fire Protection and Alarm system reports (approved)
22. All necessary inspections and approvals complete (DOH, etc) for use of systems

1.05 ORIENTATION INSTRUCTION

A. Prior to final payment appropriate maintenance personnel of the Owner shall be oriented and instructed by the Contractor in the operation of all systems and equipment as required by the Contract.

1.06 PROJECT CLOSE OUT INSPECTIONS

A. When the Work has reached such a point of completion that the building or buildings, equipment, apparatus or phase of construction or any part thereof required by the Owner for occupancy or use can be so occupied and used for the purpose intended, the Contractor, prior to notification to the Architect, shall make a preliminary inspection of the Work to ensure that all the requirements of the Contract have been met and the Work is substantially complete and is acceptable.

Upon such notification, the Owner or the Architect shall make a detailed inspection of the Work to ensure that all the requirements of the Contract have been met and that the Work is complete and is acceptable.

B. A copy of the report of the inspection shall be furnished to the Contractor as the inspection progresses so that the Contractor may proceed without delay with any part of the Work found to be incomplete or defective.

C. When the items appearing on the report of inspection have been completed or corrected, the Contractor shall so advise the Owner and the Architect. After receipt of this notification, the Owner or the Architect shall inform the Contractor of the date and time of final inspection. A copy of the report of the final inspection containing all remaining contract exceptions, omissions and incompletions shall be furnished to the Contractor.

D. After the receipt of notification of completion and all remaining contract exceptions, omissions and incompletions from the Contractor, the Owner and the Architect will reinspect the Work to verify completion of the exception items appearing on the report of final inspection.

Upon completion of reinspection, the Architect will prepare a certificate of final acceptance or will furnish to the Contractor a copy of the report of the Architect's reinspection detailing Work that is incomplete or obligations that have not been fulfilled but are required for final acceptance.

The Contractor shall pay the Architect for services performed in inspection beyond the original inspection and two reinspections of the same area, through a "credit" change order to the Owner in accordance with Schedule outlined in Section 01 25 00.

**End of Section**

# SECTION 02235

# SITE CLEARING

## PART 1 - GENERAL

### 1.1 RELATED DOCUMENTS

A. Drawings and general provisions of the Contract, including General and Supplementary Conditions and Division 1 Specification Sections, apply to this Section.

### 1.2 SUMMARY

A. This Section includes the following:

1. Protecting existing trees and vegetation to remain.
2. Removing existing trees and other vegetation.
3. Clearing and grubbing.
4. Stripping, screening, and stockpiling topsoil.
5. Removing above-grade site improvements.

B. Limits of Work: Minimize disturbance within clearing limits. Perform only as much clearing as required to complete the Work.

C. Related Sections include the following:

1. Division 1 Section “Temporary Erosion and Sediment Control” for temporary control systems including silt fence, hay bales, and construction entrance requirements.
2. Division 2 Section "Site Earthwork" for soil materials, excavating, backfilling, and site grading.

### 1.3 DEFINITIONS

A. Critical Root Zone (CRZ): Cylindrical area with a diameter 10 times the DBH including the soil within this area to a depth of 3 feet.

B. Diameter at Breast Height (DBH): Diameter of tree to be protected located 4.5 feet above existing finish grade.

C. Existing Topsoil: Natural or cultivated surface-soil layer containing organic matter and sand, silt, and clay particles; friable, pervious, and black or a darker shade of brown than underlying subsoil; reasonably free of subsoil, clay lumps, gravel, and other objects more than 2 inches in diameter; and free of subsoil and weeds, roots, toxic materials, or other nonsoil materials.

D. Tree Protection Zone (TPZ): Area surrounding individual trees or groups of trees to be protected during construction, and defined by the drip line of individual trees or the perimeter drip line of groups of trees, unless otherwise indicated.

1.4 MATERIAL OWNERSHIP

A. Except for stripped topsoil or other materials indicated to remain on Owner's property, cleared materials shall become Contractor's property and shall be removed from Project site.

1.5 SUBMITTALS

A. Photographs or videotape, sufficiently detailed, of existing conditions of trees and plantings, adjoining construction, and site improvements that might be misconstrued as damage caused by site clearing.

1.6 QUALITY ASSURANCE

A. Preconstruction Meeting: Conduct meeting with Engineer and on-site supervisor and Review the following:

1. Clearing limits.
2. Trees to be protected.
3. Location of tree protection zones.
4. Tree removal marking system and requirements

1.7 PROJECT CONDITIONS

A. Traffic: Minimize interference with adjoining roads, streets, walks, and other adjacent occupied or used facilities during site-clearing operations.

1. Do not close or obstruct streets, walks, or other adjacent occupied or used facilities without permission from Owner and authorities having jurisdiction.
2. Provide alternate routes around closed or obstructed traffic ways if required by authorities having jurisdiction.

B. Protect-In-Place Existing Site Improvements: Support and protect in place existing site improvements as indicated. Restore items promptly; do not leave until end of construction.

C. Utility Locator Service: Notify utility locator service for area where Project is located before site clearing.

D. Do not commence site clearing operations until temporary erosion and sedimentation control measures are in place.

E. Restore items and surfaces damaged by construction operations to existing condition or better.

PART 2 - PRODUCTS

2.1 SOIL MATERIALS

A. Satisfactory Soil Materials: Requirements for satisfactory soil materials are specified in Division 2 Section "Site Earthwork."

1. Obtain approved borrow soil materials off-site when satisfactory soil materials are not available on-site.

B. Tree Protection Fencing

1. Post: 4 inch by 4 inch, 6 feet long, minimum.

a. Exposed height above grade: 4 feet minimum.

2. Fence Fabric: Orange vinyl construction fencing.

PART 3 - EXECUTION

3.1 PREPARATION

A. Protect and maintain benchmarks and survey control points from disturbance during construction.

B. Protect trees to remain.

C. Protect existing site improvements to remain from damage during construction.

1. Restore damaged improvements to their original condition, as acceptable to Owner.

3.2 TREE PROTECTION

A. Erect and maintain temporary fencing around tree protection zones before starting site clearing. Remove fence when construction is complete.

1. Do not store construction materials, debris, or excavated material within fenced area.

2. Do not permit vehicles, equipment, or foot traffic within fenced area.

3. Maintain fenced area free of weeds and trash.

B. Do not excavate within tree protection zones, unless otherwise indicated.

C. Where excavation for new construction is required within tree protection zones, hand clear and excavate to minimize damage to root systems. Use narrow-tine spading forks, comb soil to expose roots, and cleanly cut roots as close to excavation as possible.

1. Cover exposed roots with burlap and water regularly.

2. Temporarily support and protect roots from damage until they are permanently redirected and covered with soil.
3. Coat cut faces of roots more than 1-1/2 inches in diameter with a root promoter.
4. Backfill with soil as soon as possible.
5. Aerate compacted soil over roots of trees to be preserved.

D. Repair or replace trees and vegetation indicated to remain that are damaged by construction operations, in a manner approved by Engineer.

1. Employ an arborist, licensed in jurisdiction where Project is located, to submit details of proposed repairs and to repair damage to trees and shrubs.
2. Replace trees that cannot be repaired and restored to full-growth status, as determined by Engineer.
3. Replace vegetation with injuries that diminish beauty or affect growth or usefulness with similar species and quality.

## 3.3 UTILITIES

A. Existing Utilities: Do not interrupt utilities serving facilities occupied by Owner or others unless permitted under the following conditions and then only after arranging to provide temporary utility services according to requirements indicated:

1. Notify Engineer not less than two days in advance of proposed utility interruptions.
2. Do not proceed with utility interruptions without Engineer's written permission.

## 3.4 CLEARING AND GRUBBING

A. Remove obstructions, trees, shrubs, grass, and other vegetation to permit installation of new construction.

1. Do not remove trees, shrubs, and other vegetation indicated to remain or to be relocated.
2. Cut minor roots and branches of trees indicated to remain in a clean and careful manner where such roots and branches obstruct installation of new construction.
3. Grind stumps and remove roots, obstructions, and debris extending to a depth of 18 inches below exposed subgrade.
   a. Remove stumps and roots to their full depth when located within 5 feet of underground structures, utility lines, footings, and paved areas.
4. Use only hand methods for grubbing within tree protection zone.

B. Fill depressions caused by clearing and grubbing operations with satisfactory soil material unless further excavation or earthwork is indicated.

1. Place fill material in horizontal layers not exceeding a loose depth of 8 inches, and compact each layer to a density equal to adjacent original ground.

3.5 TOPSOIL STRIPPING

A. Remove sod and grass before stripping topsoil.

B. Strip topsoil to whatever depths are encountered in a manner to prevent intermingling with underlying subsoil or other waste materials.

1. Remove subsoil and nonsoil materials from topsoil, including trash, debris, weeds, roots, and other waste materials.

C. Stockpile topsoil materials away from edge of excavations without intermixing with subsoil. Grade and shape stockpiles to drain surface water. Cover to prevent windblown dust.

1. Do not stockpile topsoil within tree protection zones.

2. Stockpile topsoil within designated areas located on the Drawings.

a. Remove excess topsoil to a site designated by the Owner, which is located within 10 miles roundtrip of the site.

b. Stockpile topsoil at the designated location in accordance with the Owner requirements.

1) Maintain sufficient quantities of topsoil on-site until topsoiling operations have been completed.

2) The Contractor will not be reimbursed for rehandling and retransporting topsoil to the Project site from the off-site storage location.

3.6 SITE IMPROVEMENTS

A. Remove existing above- and below-grade improvements as indicated and as necessary to facilitate new construction.

B. Remove slabs, paving, curbs, gutters, and aggregate base as indicated.

1. Unless existing full-depth joints coincide with line of demolition, neatly saw-cut length of existing pavement to remain before removing existing pavement. Saw-cut faces vertically.

a. Do not mix excavated pavement with other excavated materials.

2. Paint cut ends of steel reinforcement in concrete to remain to prevent corrosion.

C. Remove and reset existing brick pavement as required to install new utility services.

1. Reuse undamaged existing brick pavers, or replace in kind.
    a. For replaced pavers, match existing pavers in appearance, durability, size, texture and color.

3.7 DISPOSAL

A. Disposal: Remove surplus soil material, unsuitable topsoil, obstructions, demolished materials, and waste materials including trash and debris, and legally dispose of them off Owner's property.
    1. Maintain disposal routes clear and clean of dirt, and free of debris

**End of Section**

# SECTION 02310

# SITE EARTHWORK

## PART 1 - GENERAL

### 1.1 RELATED DOCUMENTS

A. Drawings and general provisions of the Contract, including General and Supplementary Conditions and Division 1 Specification Sections, apply to this Section.

### 1.2 SUMMARY

A. This Section includes the following:

1. Preparing subgrades for walks, pavements, lawns and grasses, and exterior plants.
2. Subbase course for concrete walks and pavements.
3. Subbase and base course for bituminous concrete paving.
4. Excavating and backfilling for utility trenches.
5. Excavating and backfilling trenches for buried mechanical and electrical utilities and pits for buried utility structures.

B. Related Sections include the following:

1. Division 2 Section "Site Clearing" for temporary erosion and sedimentation control measures, site stripping, grubbing, stripping and stockpiling topsoil, and removal of above- and below-grade improvements and utilities.
2. Division 2 Section "Building Excavation and Backfill" for excavation 5-feet beyond building footprint and for miscellaneous site structures.
3. Division 2 Section "Soil" and “Seeding” for finish grading, including preparing and placing topsoil and planting soil for lawns.
4. Divisions 2, 15, and 16 Sections for installing underground mechanical and electrical utilities and buried mechanical and electrical structures.

### 1.3 DEFINITIONS

A. Backfill: Soil material or controlled low-strength material used to fill an excavation.

B. Base Course:

1. Bituminous Concrete: Course placed between the subbase course or subgrade and bituminous concrete paving.

2. Cement Concrete Paving: Course placed between the subgrade and bituminous concrete paving.

3. Utilities: Course placed between the subgrade and the bottom of a precast or cast-in-place concrete structure.

C. Bedding Course: Course placed over the excavated subgrade in a trench before laying pipe.

D. Borrow Soil: Satisfactory soil imported from off-site for use as fill or backfill.

E. Excavation: Removal of material encountered above subgrade elevations and to lines and dimensions indicated.

1. Authorized Additional Excavation: Excavation below subgrade elevations or beyond indicated lines and dimensions as directed by Engineer. Authorized additional excavation and replacement material will be paid for according to Contract provisions for changes in the Work.

2. Bulk Excavation: Excavation more than 10 feet in width and more than 30 feet in length.

3. Unauthorized Excavation: Excavation below subgrade elevations or beyond indicated lines and dimensions without direction by Engineer. Unauthorized excavation, as well as remedial work directed by Engineer, shall be without additional compensation.

F. Fill: Soil materials used to raise existing grades.

G. Rock: See Division 2 Section "Building Excavation and Backfill". Structures: Buildings, footings, foundations, retaining walls, slabs, tanks, curbs, mechanical and electrical appurtenances, or other man-made stationary features constructed above or below the ground surface.

H. Subbase Course: Course placed between the subgrade and base course for bituminous concrete pavement.

I. Subgrade: Surface or elevation remaining after completing excavation, or top surface of a fill or backfill immediately below subbase, base, or topsoil materials.

J. Utilities: On-site underground pipes, conduits, ducts, and cables, located 5 feet beyond the building footprint.

## 1.4 SUBMITTALS

A. Product Data: For the following:

1. Each type of plastic warning tape.

2. Subsurface drainage and separation geotextile.

B. Material Test Reports: From a qualified testing agency indicating and interpreting test results for compliance of the following with requirements indicated:

1. Classification according to ASTM D 2487 of each on-site and borrow soil material proposed for fill and backfill.

2. Laboratory compaction curve according to ASTM D 1557 for each on-site and borrow soil material proposed for fill and backfill.

C. Pre-excavation Photographs or Videotape: Show existing conditions of adjoining construction and site improvements, including finish surfaces that might be misconstrued as damage caused by earthwork operations. Submit before earthwork begins.

1.5 QUALITY ASSURANCE

A. Form 817 State of Connecticut Department of Transportation Standard Specifications for Roads, Bridges and Incidental Construction, and issued supplements.

B. Perform excavation operations in accordance with OSHA Regulations 1926.651 and 1926.652.

1.6 PROJECT CONDITIONS

A. Existing Utilities: Do not interrupt utilities serving facilities occupied by Owner or others unless permitted in writing by Engineer and then only after arranging to provide temporary utility services according to requirements indicated.

1. Notify Engineer not less than two days in advance of proposed utility interruptions.

2. Do not proceed with utility interruptions without Engineer's written permission.

3. Contact utility-locator service for area where Project is located before excavating.

B. Demolish and completely remove from site existing underground utilities indicated to be removed. Coordinate with utility companies to shut off services if lines are active.

PART 2 - PRODUCTS

2.1 SOIL MATERIALS

A. General: Provide borrow soil materials when sufficient satisfactory soil materials are not available from excavations.

1. Provide materials free from ice, snow, trash, debris, stumps, roots, organic material, grease, oil, solvents, pesticides, herbicides, and other hazardous or deleterious materials or contaminants

B. Satisfactory Soils: ASTM D 2487 Soil Classification Groups GW, GP, GM, SW, SP, and SM, or a combination of these groups; free of rock or gravel larger than 3 inches in any dimension, debris, waste, frozen materials, vegetation, and other deleterious matter. (See Division 2 Section "Building Excavation and Backfill.")

C. Unsatisfactory Soils: Soil Classification Groups GC, SC, CL, ML, OL, CH, MH, OH, and PT according to ASTM D 2487, or a combination of these groups. (See Division 2 Section "Building Excavation and Backfill.")

1. Unsatisfactory soils also include satisfactory soils not maintained within 2 percent of optimum moisture content at time of compaction.

D. Backfill and Fill: Satisfactory soil materials.

E. Base Course Materials

1. Crushed Stone: Form 817, Section M.01.01, 1/2-inch or 3/4-inch.

2. Processed Aggregate Base: Form 817, Section M.05.01.

F. Bedding Materials

1. Sand: Form 817, Section M.03.01-2.

2. Crushed Stone: Form 817, Section M.01.01, 1/2-inch or 3/4-inch.

G. Granular Base: Form 817, Section M.02.01-1 or Section M.02.01-2.

H. Granular Fill: See Division 2 Section "Building Excavation and Backfill."

I. General Fill: See Division 2 Section "Building Excavation and Backfill."

J. Pervious Structure Backfill: See "Granular Fill."

K. Gravel Surfaces

1. Rolled Bank Gravel Surface: Form 817, Section M.02.03.

2. Traffic Bound Gravel Surface: Form 817, Section M.02.03.

## 2.2 GEOTEXTILES

A. Subsurface Drainage Geotextile: Nonwoven needle-punched geotextile, manufactured for subsurface drainage applications, made from polyolefins or polyesters; with elongation greater than 50 percent; complying with AASHTO M 288 and the following, measured per test methods referenced:

1. Grab Tensile Strength: 157 lbf; ASTM D 4632.

2. Sewn Seam Strength: 142 lbf; ASTM D 4632.

3. Tear Strength: 56 lbf; ASTM D 4533.
4. Puncture Strength: 56 lbf; ASTM D 4833.
5. Apparent Opening Size: No. 40 sieve, maximum; ASTM D 4751.
6. Permittivity: 0.5 per second, minimum; ASTM D 4491.
7. UV Stability: 50 percent after 500 hours' exposure; ASTM D 4355.

B. Separation Geotextile: Woven geotextile fabric, manufactured for separation applications, made from polyolefins or polyesters; with elongation less than 50 percent; complying with AASHTO M 288 and the following, measured per test methods referenced:

1. Grab Tensile Strength: 247 lbf; ASTM D 4632.
2. Sewn Seam Strength: 222 lbf; ASTM D 4632.
3. Tear Strength: 90 lbf; ASTM D 4533.
4. Puncture Strength: 90 lbf; ASTM D 4833.
5. Apparent Opening Size: No. 60 sieve, maximum; ASTM D 4751.
6. Permittivity: 0.02 per second, minimum; ASTM D 4491.
7. UV Stability: 50 percent after 500 hours' exposure; ASTM D 4355.

## 2.3 ACCESSORIES

A. Detectable Warning Tape: Acid- and alkali-resistant polyethylene film warning tape manufactured for marking and identifying underground utilities, a minimum of 6 inches wide and 4 mils thick, continuously inscribed with a description of the utility, with metallic core encased in a protective jacket for corrosion protection, detectable by metal detector when tape is buried up to 30 inches deep; colored as follows:

1. Red: Electric.
2. Yellow: Gas, oil, steam, and dangerous materials.
3. Orange: Telephone and other communications.
4. Blue: Water systems.
5. Green: Sewer systems.

# PART 3 - EXECUTION

## 3.1 PREPARATION

A. Protect structures, utilities, sidewalks, pavements, and other facilities from damage caused by settlement, lateral movement, undermining, washout, and other hazards created by earthwork operations.

B. Preparation of subgrade for earthwork operations including removal of vegetation, topsoil, debris, obstructions, and deleterious materials from ground surface is specified in Division 2 Section "Site Clearing."

C. Protect and maintain erosion and sedimentation controls, which are specified in Division 1 Section "Erosion and Sedimentation Control," during earthwork operations.

3.2 DEWATERING

A. Prevent surface water and ground water from entering excavations, from ponding on prepared subgrades, and from flooding Project site and surrounding area.

B. Protect subgrades from softening, undermining, washout, and damage by rain or water accumulation.

1. Reroute surface water runoff away from excavated areas. Do not allow water to accumulate in excavations. Do not use excavated trenches as temporary drainage ditches.

2. Install a dewatering system as required to keep subgrades dry and convey ground water away from excavations. Maintain until dewatering is no longer required.

3.3 EXPLOSIVES

A. Explosives: Do not use explosives.

3.4 EXCAVATION, GENERAL

A. Unclassified Excavation: Excavate to subgrade elevations regardless of the character of surface and subsurface conditions encountered. Unclassified excavated materials may include rock, soil materials, and obstructions. No changes in the Contract Sum or the Contract Time will be authorized for rock excavation or removal of obstructions.

1. If excavated materials intended for fill and backfill include unsatisfactory soil materials and rock, replace with satisfactory soil materials.

2. Remove rock to lines and grades indicated to permit installation of permanent construction without exceeding the following dimensions:

a. 24 inches outside of concrete forms other than at footings.

b. 6 inches outside of minimum required dimensions of concrete cast against grade.

c. Outside dimensions of concrete walls indicated to be cast against rock without forms or exterior waterproofing treatments.

d. 6 inches beneath bottom of concrete slabs on grade.

e. 6 inches beneath pipe in trenches, and the greater of 24 inches wider than pipe or 42 inches wide.

3.5 EXCAVATION FOR WALKS AND PAVEMENTS

A. Excavate surfaces under walks and pavements to indicated lines, cross sections, elevations, and subgrades.

3.6 EXCAVATION FOR UTILITY TRENCHES

A. Excavate trenches to indicated gradients, lines, depths, and elevations.

B. Excavate trenches to uniform widths to provide the following clearance on each side of pipe or conduit. Excavate trench walls vertically from trench bottom to 12 inches higher than top of pipe or conduit, unless otherwise indicated.

1. Clearance: As indicated.

C. Trench Bottoms: Excavate and shape trench bottoms to provide uniform bearing and support of pipes and conduit. Shape subgrade to provide continuous support for bells, joints, and barrels of pipes and for joints, fittings, and bodies of conduits. Remove projecting stones and sharp objects along trench subgrade.

1. Excavate trenches 6 inches deeper than elevation required in rock or other unyielding bearing material to allow for bedding course.

3.7 EXCAVATION FOR STRUCTURES

A. Excavate to indicated elevations and dimensions within a tolerance of plus or minus 1 inch. Extend excavations a sufficient distance from structures for placing and removing concrete formwork, for installing services and other construction, and for inspections.

1. Excavation for Underground Tanks, Basins, and Mechanical or Electrical Utility Structures: Excavate to elevations and dimensions indicated within a tolerance of plus or minus 1 inch. Do not disturb bottom of excavations intended for bearing surface.

3.8 SUBGRADE INSPECTION

A. Notify Engineer when excavations have reached required subgrade.

B. If Engineer determines that unsatisfactory soil is present, continue excavation and replace with compacted backfill or fill material as directed.

C. Proof-roll subgrade below pavements with heavy pneumatic-tired equipment to identify soft pockets and areas of excess yielding. Do not proof-roll wet or saturated subgrades.

1. Completely proof-roll subgrade in one direction, repeating proof-rolling in direction perpendicular to first direction. Limit vehicle speed to 3 mph.

2. Excavate soft spots, unsatisfactory soils, and areas of excessive pumping or rutting, as determined by Engineer, and replace with compacted backfill or fill as directed.

D. Authorized additional excavation and replacement material will be paid for according to Contract provisions for changes in the Work.

E. Reconstruct subgrades damaged by freezing temperatures, frost, rain, accumulated water, or construction activities, as directed by Engineer, without additional compensation.

3.9 UNAUTHORIZED EXCAVATION

A. Fill unauthorized excavation under foundations or wall footings by extending bottom elevation of concrete foundation or footing to excavation bottom, without altering top elevation. Lean concrete fill, with 28-day compressive strength of 2500 psi, may be used when approved by Engineer.

1. Fill unauthorized excavations under other construction or utility pipe as directed by Engineer.

3.10 STORAGE OF SOIL MATERIALS

A. Stockpile borrow soil materials and excavated satisfactory soil materials without intermixing. Place, grade, and shape stockpiles to drain surface water. Cover to prevent windblown dust.

1. Stockpile soil materials away from edge of excavations. Do not store within drip line of remaining trees.

3.11 BACKFILL

A. Place and compact backfill in excavations promptly, but not before completing the following:

1. Construction below finish grade including, where applicable, subdrainage, dampproofing, waterproofing, and perimeter insulation.
2. Surveying locations of underground utilities for Record Documents.
3. Testing and inspecting underground utilities.
4. Removing concrete formwork.
5. Removing trash and debris.
6. Removing temporary shoring and bracing, and sheeting.

B. Place backfill on subgrades free of mud, frost, snow, or ice.

3.12 UTILITY TRENCH BACKFILL

A. Place backfill on subgrades free of mud, frost, snow, or ice.

B. Place and compact bedding course on trench bottoms and where indicated. Shape bedding course to provide continuous support for bells, joints, and barrels of pipes and for joints, fittings, and bodies of conduits.

C. Place and compact initial backfill of bedding material, free of particles larger than 1 inch in any dimension, beneath utility pipe or conduit, or to a height of 12 inches over the utility pipe or conduit.

1. Carefully compact initial backfill under pipe haunches and compact evenly up on both sides and along the full length of utility piping or conduit to avoid damage or displacement of piping or conduit. Coordinate backfilling with utilities testing.

D. Backfill voids with satisfactory soil while installing and removing shoring and bracing.

E. Place and compact final backfill of satisfactory soil to final subgrade elevation.

F. Install warning tape directly above utilities, 12 inches below finished grade, except 6 inches below subgrade under pavements and slabs.

## 3.13 SOIL FILL

A. Plow, scarify, bench, or break up sloped surfaces steeper than 1 vertical to 4 horizontal so fill material will bond with existing material.

B. Place and compact fill material in layers to required elevations as follows:

1. Under grass and planted areas, use satisfactory soil material.
2. Under walks and pavements, use satisfactory soil material.
3. Under steps and ramps, use pervious structural fill.
4. Under building slabs, use pervious structural fill.
5. Under footings and foundations, use pervious structural fill.

C. Place soil fill on subgrades free of mud, frost, snow, or ice.

## 3.14 SOIL MOISTURE CONTROL

A. Uniformly moisten or aerate subgrade and each subsequent fill or backfill soil layer before compaction to within 2 percent of optimum moisture content.

1. Do not place backfill or fill soil material on surfaces that are muddy, frozen, or contain frost or ice.
2. Remove and replace, or scarify and air dry otherwise satisfactory soil material that exceeds optimum moisture content by 2 percent and is too wet to compact to specified dry unit weight.

## 3.15 COMPACTION OF SOIL BACKFILLS AND FILLS

A. Place backfill and fill soil materials in layers not more than 8 inches in loose depth for material compacted by heavy compaction equipment, and not more than 4 inches in loose depth for material compacted by hand-operated tampers.

B. Place backfill and fill soil materials evenly on all sides of structures to required elevations, and uniformly along the full length of each structure.

C. Compact soil materials to not less than the following percentages of maximum dry unit weight according to ASTM D 1557:

1. Under structures, building slabs, steps, and pavements, scarify and recompact top 12 inches of existing subgrade and each layer of backfill or fill soil material at 95 percent.

2. Under walkways, scarify and recompact top 6 inches below subgrade and compact each layer of backfill or fill soil material at 92 percent.

3. Under lawn or unpaved areas, scarify and recompact top 6 inches below subgrade and compact each layer of backfill or fill soil material at 85 percent.

4. For utility trenches, compact each layer of initial and final backfill soil material at 90 percent.

## 3.16 GRADING

A. General: Uniformly grade areas to a smooth surface, free of irregular surface changes. Comply with compaction requirements and grade to cross sections, lines, and elevations indicated.

1. Provide a smooth transition between adjacent existing grades and new grades.

2. Cut out soft spots, fill low spots, and trim high spots to comply with required surface tolerances.

B. Site Grading: Slope grades to direct water away from buildings and to prevent ponding. Finish subgrades to required elevations within the following tolerances:

1. Lawn or Unpaved Areas: Plus or minus 1 inch.

2. Walks: Plus or minus 1 inch.

3. Pavements: Plus or minus 1/2 inch.

C. Grading inside Building Lines: See Division 2 Section "Building Excavation and Backfill."

## 3.17 SUBSURFACE DRAINAGE

A. Subsurface Drain: Place subsurface drainage geotextile around perimeter of subdrainage trench. Place a 6-inch course of filter material on subsurface drainage geotextile to support subdrainage pipe. Encase subdrainage pipe in a minimum of 12 inches of filter material, placed in compacted layers 6 inches thick, and wrap in subsurface drainage geotextile, overlapping sides and ends at least 6 inches.

1. Compact each filter material layer to 90 percent of maximum dry unit weight according to ASTM D 698

## 3.18 SUBBASE AND BASE COURSES

A. Place subbase and base course on subgrades free of mud, frost, snow, or ice.

B. On prepared subgrade, place subbase and base course under pavements and walks as follows:

1. Install separation geotextile on prepared subgrade according to manufacturer's written instructions, overlapping sides and ends.
2. Place base course material over subbase course under hot-mix asphalt pavement.
3. Shape subbase and base course to required crown elevations and cross-slope grades.
4. Place subbase and base course 6 inches or less in compacted thickness in a single layer.
5. Place subbase and base course that exceeds 6 inches in compacted thickness in layers of equal thickness, with no compacted layer more than 6 inches thick or less than 3 inches thick.
6. Compact subbase and base course at optimum moisture content to required grades, lines, cross sections, and thickness to not less than 95 percent of maximum dry unit weight according to ASTM D 1557.

## 3.19 FIELD QUALITY CONTROL

A. Testing Agency: Owner will engage a qualified independent geotechnical engineer and engineering testing agency to perform on-site observation and field quality-control testing.

B. Allow testing agency to inspect and test subgrades and each fill or backfill layer. Proceed with subsequent earthwork only after test results for previously completed work comply with requirements.

C. Footing Subgrade: At footing subgrades, at least one test of each soil stratum will be performed to verify design bearing capacities. Subsequent verification and approval of other footing subgrades may be based on a visual comparison of subgrade with tested subgrade when approved by Engineer.

D. Testing agency will test compaction of soils in place according to ASTM D 1556, ASTM D 2167, ASTM D 2922, and ASTM D 2937, as applicable. Tests will be performed at the following locations and frequencies:

1. Paved Areas: At subgrade and at each compacted fill and backfill layer, at least 1 test for every 2000 sq. ft. or less of paved area, but in no case fewer than 3 tests.
2. Trench Backfill: At each compacted initial and final backfill layer, at least 1 test for each 150 feet or less of trench length, but no fewer than 2 tests.

E. When testing agency reports that subgrades, fills, or backfills have not achieved degree of compaction specified, scarify and moisten or aerate, or remove and replace soil to depth required; recompact and retest until specified compaction is obtained.

## 3.20 PROTECTION

A. Protecting Graded Areas: Protect newly graded areas from traffic, freezing, and erosion. Keep free of trash and debris.

B. Repair and reestablish grades to specified tolerances where completed or partially completed surfaces become eroded, rutted, settled, or where they lose compaction due to subsequent construction operations or weather conditions.

1. Scarify or remove and replace soil material to depth as directed by Engineer; reshape and recompact.

C. Where settling occurs before Project correction period elapses, remove finished surfacing, backfill with additional soil material, compact, and reconstruct surfacing.

1. Restore appearance, quality, and condition of finished surfacing to match adjacent work, and eliminate evidence of restoration to greatest extent possible.

## 3.21 DISPOSAL OF SURPLUS AND WASTE MATERIALS

A. Disposal: Remove surplus satisfactory soil and waste material, including unsatisfactory soil, trash, and debris, and legally dispose of it off Owner's property.

B. Disposal: Transport surplus satisfactory soil to designated storage areas on Owner's property. Stockpile or spread soil as directed by Engineer.

1. Remove waste material, including unsatisfactory soil, trash, and debris, and legally dispose of it off Owner's property.

**End of Section**

# SECTION 02505

# WATER DISTRIBUTION

## PART 1 - GENERAL

### 1.1 RELATED DOCUMENTS

A. Drawings and general provisions of the Contract, including General and Supplementary Conditions and Division 1 Specification Sections, apply to this Section.

### 1.2 SUMMARY

A. This Section includes water–distribution piping and specialties outside the building for the following:

1. Water distribution main including exterior fire main branch and domestic service.

### 1.3 SUBMITTALS

A. Product Data and Material Certificates of Compliance:

1. Piping, fittings, and structures.
2. Piping specialties.
3. Valves and accessories.

B. Field Quality-Control Test Reports: From Contractor.

### 1.4 QUALITY ASSURANCE

A. Regulatory Requirements:

1. Comply with standards of The Aquarion Water Company water system, including materials, installation, and testing, of water mains.

B. Piping materials shall bear label, stamp, or other markings of specified testing agency.

### 1.5 DELIVERY, STORAGE, AND HANDLING

A. Preparation for Transport: Prepare valves according to the following:

1. Ensure that valves are dry and internally protected against rust and corrosion.
2. Protect valves against damage to threaded ends and flange faces.
3. Set valves in best position for handling. Set valves closed to prevent rattling.

B. During Storage: Use precautions for valves, including fire hydrants, according to the following:

1. Do not remove end protectors unless necessary for inspection; then reinstall for storage.

2. Protect from weather. Store indoors and maintain temperature higher than ambient dew-point temperature. Support off the ground or pavement in watertight enclosures when outdoor storage is necessary.

C. Handling: Use sling to handle valves and fire hydrants if size requires handling by crane or lift. Rig valves to avoid damage to exposed parts. Do not use handwheels or stems as lifting or rigging points.

D. Deliver piping with factory-applied end caps. Maintain end caps through shipping, storage, and handling to prevent pipe-end damage and to prevent entrance of dirt, debris, and moisture.

E. Protect stored piping from moisture and dirt. Elevate above grade. Do not exceed structural capacity of floor when storing inside.

F. Protect flanges, fittings, and specialties from moisture and dirt.

G. Store plastic piping protected from direct sunlight. Support to prevent sagging and bending.

1.6 PROJECT CONDITIONS

A. Existing Utilities: Do not interrupt utilities serving facilities occupied by Owner or others unless permitted under the following conditions and then only after arranging to provide temporary utility services according to requirements indicated:

1. Notify Owner and Engineer not less than two days in advance of proposed utility interruptions.

2. Do not proceed with utility interruptions without Owner's and Engineer's written permission.

1.7 COORDINATION

A. Coordinate connection to water main with The Aquarion Water Company.

PART 2 - PRODUCTS

2.1 GENERAL

A. Provide materials and products in accordance with the following and The Aquarion Water Company requirements. In cases of conflicting requirements, provide items in accordance with The Aquarion Water Company requirements.

1. Ductile-Iron Pipe, cement-lined, AWWA C151, Class 52.
2. Mechanical Joint Thrust Restraint
   a. Mechanical Joint Retainer Glands
3. Push On Joint Thrust Restraint
   a. Mechanical Joint Glands and Lacing Rods; or
   b. Retaining Glands

PART 3 - EXECUTION

3.1 EARTHWORK

A. Refer to The Aquarion Water Company requirements for excavating, trenching, and backfilling; and Division 2 Section “Site Earthwork.”

3.2 GENERAL

A. Coordinate activities with The Aquarion Water Company.

B. Do not use flanges, unions, or keyed couplings for underground piping.

C. Clean interior of pipe and keep pipe clean during laying operations. Do not lay pipe in water, or when trench or weather conditions are unsuitable.

D. Close ends of piping when work is not in progress.

3.3 VALVE APPLICATIONS

A. General Application: Use mechanical-joint-end valves for NPS 3 and larger underground installation.

B. Drawings indicate valve types to be used. Where specific valve types are not indicated, the following requirements apply:
   1. Underground Valves, NPS 3 and Larger: AWWA, cast-iron, nonrising-stem, resilient-seated gate valves with valve box.

3.4 PIPING INSTALLATION

A. Install ductile-iron, water-service piping according to AWWA C600 and AWWA M41.

B. Field verify lines, grades, dimensions, and conditions affecting the Work. Field verify parts and fittings for water service lines prior to ordering or fabricating.

C. Use fittings or specials as indicated or directed for deflections from a straight line or grade, as required by vertical curves or offsets.

D. Do not cover connections or joints prior to inspection.

E. Extend water-service piping and connect to water-supply source and building water piping systems.

3.5 VALVE INSTALLATION

A. AWWA Gate Valves: Comply with AWWA C600 and AWWA M44. Install each underground valve with stem pointing up and with valve box.

3.6 CONNECTIONS

A. Drawings indicate general arrangement of piping and specialties.

B. Connect water-distribution piping to existing water main.

C. Ground equipment.

3.7 FIELD QUALITY CONTROL

A. Piping Tests: Will be conducted by The Aquarion Water Company. Assist and provide accessories as required during testing procedures.

3.8 IDENTIFICATION

A. Install continuous underground warning tape during backfilling of trench for underground water-service piping. Locate below finished grade, 2 feet above top of pipe, directly over piping. See Division 2 Section "Site Earthwork" for underground warning tapes.

3.9 CLEANING

A. Flush clean and sterilize water-distribution piping as follows:

1. Purge new water-distribution piping systems and parts of existing systems that have been altered, extended, or repaired before use.

2. Use purging and sterilization procedure prescribed by Authorities Having Jurisdiction or, if method is not prescribed by Authorities Having Jurisdiction, use procedure described in AWWA C651.

3. Fire service lines are not required to be sterilized.

B. Prepare reports of purging and disinfecting activities.

**End of Section**

# SECTION 02530

# SANITARY SEWERAGE

## PART 1 - GENERAL

### 1.1 RELATED DOCUMENTS

A. Drawings and general provisions of the Contract, including General and Supplementary Conditions and Division 1 Specification Sections, apply to this Section.

### 1.2 SUMMARY

A. This Section includes sanitary sewerage outside the building.

B. Related Sections include the following:

1. Division 2 Section “Site Earthwork."
2. Town of Greenwich DPW Sewer Division Requirements

### 1.3 DEFINITIONS

A. PVC: Polyvinyl chloride plastic.

### 1.4 PERFORMANCE REQUIREMENTS

A. Gravity-Flow, Nonpressure-Piping Pressure Ratings: At least equal to system test pressure.

### 1.5 SUBMITTALS

A. Product Certification: Pipe, fittings, precast concrete units, metal items, and miscellaneous appurtenances.

B. Product Data: For the following:

1. Pipe.

C. Shop Drawings: Include plans, elevations, details, and attachments for the following:

1. Precast concrete manholes, including accessories, and frames and covers.

D. Field Test Reports: Indicate and interpret test results for compliance with performance requirements.

1.6 QUALITY ASSURANCE

A. Regulatory Requirements:

1. Comply with the Town of Greenwich DPW Sewer Division requirements including materials, installation, and testing.

1.7 DELIVERY, STORAGE, AND HANDLING

A. Do not store plastic structures, pipe, and fittings in direct sunlight. Keep plastic items at ambient outdoor temperature.

B. Protect pipe, pipe fittings, and seals from dirt and damage.

C. Handle precast concrete structures according to manufacturer's written rigging instructions.

1.8 PROJECT CONDITIONS

A. Site Information: Perform site survey, research public utility records, and verify existing utility locations.

B. Locate existing structures and piping to be closed and abandoned.

C. Existing Utilities: Do not interrupt utilities serving facilities occupied by Owner or others unless permitted under the following conditions and then only after arranging to provide temporary utility services according to requirements indicated:

1. Notify Engineer not less than two days in advance of proposed utility interruptions.

2. Do not proceed with utility interruptions without Engineer's written permission.

PART 2 - PRODUCTS

2.1 PIPES AND FITTINGS

A. Comply with the following and the Town of Greenwich DPW Sewer Division materials. In cases of conflict, provide the Town of Greenwich DPW Sewer Division standards.

B. PVC Sewer Pipe and Fittings: According to the following:

1. PVC Sewer Pipe and Fittings, NPS 15 and Smaller: ASTM D 3034, SDR 35, for gasketed joints.

2. Gaskets: ASTM F 477, elastomeric seals; resistant to common sewage and industrial wastes.

## 2.2 CLEANOUTS

A. PVC Cleanouts:

1. Manufacturers: Subject to compliance with requirements, available manufacturers offering products that may be incorporated into the Work include, but are not limited to, the following:

   a. NDS.

   b. Zurn Light Commercial Products Operation; Zurn Plumbing Products Group.

   c. Or equal.

2. Description: PVC body with PVC threaded plug. Include PVC sewer pipe fitting and riser to cleanout of same material as sewer piping.

## 2.3 CONCRETE

A. General: Cast-in-place concrete according to ACI 318, ACI 350R, and the following:

1. Cement: ASTM C 150, Type II.

2. Fine Aggregate: ASTM C 33, sand.

3. Coarse Aggregate: ASTM C 33, crushed gravel.

4. Water: Potable.

B. Portland Cement Design Mix: 4000 psi minimum, with 0.45 maximum water-cementitious materials ratio.

1. Reinforcement Bars: ASTM A 615/A 615M, Grade 60, deformed steel.

C. Structure Channels and Benches: Factory or field formed from concrete. Portland cement design mix, 4000 psi minimum, with 0.45 maximum water-cementitious materials ratio. Include channels and benches in manholes.

1. Channels: Concrete invert, formed to same width as connected piping, with height of vertical sides to three-fourths of pipe diameter. Form curved channels with smooth, uniform radius and slope.

2. Benches: Concrete, sloped to drain into channel.

D. Ballast and Pipe Supports: Portland cement design mix, 3000 psi minimum, with 0.58 maximum water-cementitious materials ratio.

1. Reinforcement Bars: ASTM A 615/A 615M, Grade 60, deformed steel.

PART 3 - EXECUTION

3.1 EARTHWORK

A. Excavating, trenching, and backfilling are specified in the Town of Greenwich DPW Sewer Division requirements.

3.2 IDENTIFICATION

A. Materials and their installation are specified in Division 2 Section "Site Earthwork." Arrange for installing green warning tapes directly over piping and at outside edges of underground structures.

1. Use warning tape or detectable warning tape over ferrous piping.

2. Use detectable warning tape over nonferrous piping and over edges of underground structures.

3.3 PIPING APPLICATIONS

A. General: Include watertight joints.

B. Application: Pipe size and material applications as indicated.

3.4 INSTALLATION, GENERAL

A. General Locations and Arrangements: Drawing plans and details indicate general location and arrangement of underground sanitary sewerage piping. Location and arrangement of piping layout take design considerations into account. Install piping as indicated, to extent practical.

B. Install piping beginning at low point, true to grades and alignment indicated with unbroken continuity of invert. Place bell ends of piping facing upstream. Install gaskets, seals, sleeves, and couplings according to manufacturer's written instructions for using lubricants, cements, and other installation requirements. Check previously made joints as installation progresses. Maintain swab or drag in line, and pull past each joint as it is completed.

C. Use manholes for changes in direction, unless fittings are indicated. Use fittings for branch connections, unless direct tap into existing sewer is indicated.

D. Use proper size increasers, reducers, and couplings where different sizes or materials of pipes and fittings are connected. Reducing size of piping in direction of flow is prohibited.

E. Install gravity-flow piping and connect to building's sanitary drains, of sizes and in locations indicated. Terminate piping as indicated.

1. Install piping pitched down in direction of flow, at slope indicated.

F. Extend sanitary sewerage piping and connect to building's sanitary drains, of sizes and in locations indicated. Terminate piping as indicated.

3.5 PIPE JOINT CONSTRUCTION AND INSTALLATION

A. PVC Sewer Pipe and Fittings: As follows:

1. Join pipe and fittings with gaskets according to ASTM D 2321 and manufacturer's written instructions.

2. If full entry of pipe joint is not achieved, remove pipe and replace with new unit and gasket.

B. Join piping made of different materials or dimensions with couplings made for this application. Use couplings that are compatible with and that fit both systems' materials and dimensions.

3.6 CLEANOUT INSTALLATION

A. Install cleanouts and riser extensions from sewer pipes to cleanouts at grade. Use cast-iron soil pipe fittings in sewer pipes at branches for cleanouts, and use cast-iron soil pipe for riser extensions to cleanouts. Install piping so cleanouts open in direction of flow in sewer pipe.

1. Use Light-Duty, top-loading classification cleanouts in earth or unpaved foot-traffic areas.

2. Use Medium-Duty, top-loading classification cleanouts in paved foot-traffic areas.

3. Use Heavy-Duty, top-loading classification cleanouts in vehicle-traffic service areas.

B. Set cleanout frames and covers in earth in cast-in-place-concrete block, 18 by 18 by 12 inches deep. Set with tops 1 inch above surrounding grade.

C. Set cleanout frames and covers in concrete pavement and roads with tops flush with pavement surface.

3.7 CONCRETE PLACEMENT

A. Place cast-in-place concrete according to ACI 318 and ACI 350R.

3.8 FIELD QUALITY CONTROL

A. Clear interior of piping and structures of dirt and superfluous material as work progresses. Maintain swab or drag in piping, and pull past each joint as it is completed.

1. Place plug in end of incomplete piping at end of day and when work stops.

2. Flush piping between manholes and other structures to remove collected debris, if required by authorities having jurisdiction.

B. Inspect interior of piping to determine whether line displacement or other damage has occurred. Inspect after approximately 24 inches of backfill is in place; after completion of backfill and compaction; and again at completion of Project.

1. Submit separate reports for each system inspection.

2. Defects requiring correction include the following:

a. Deflection: Flexible piping with deflection that prevents passage of ball or cylinder of size not less than 92.5 percent of piping diameter.

b. Crushed, broken, cracked, or otherwise damaged piping.

c. Infiltration: Water leakage into piping; maximum of 200 gallons per inch of diameter per day, per mile of sewer.

d. Exfiltration: Water leakage from or around piping; maximum of 200 gallons per inch of diameter per day, per mile of sewer.

3. Replace defective piping using new materials, and repeat inspections until defects are within allowances specified.

4. Reinspect and repeat procedure until results are satisfactory.

C. Test new piping systems, and parts of existing systems that have been altered, extended, or repaired, for leaks and defects.

1. Do not enclose, cover, or put into service before inspection and approval.

2. Test completed piping systems according to authorities having jurisdiction.

3. Schedule tests and inspections by authorities having jurisdiction with at least 24 hours' advance notice.

4. Submit separate reports for each test.

5. If authorities having jurisdiction do not have published procedures, perform tests as follows:

a. Sanitary Sewerage Low-Pressure Air Test: Perform air test according to UNI-B-6.

1) Plastic Pipe: Perform test according to ASTM F 1417.

6. Leaks and loss in test pressure constitute defects that must be repaired.

7. Replace leaking piping using new materials, and repeat testing until leakage is within allowances specified.

**End of Section**

# SECTION 02630

# STORM DRAINAGE

## PART 1 - GENERAL

### 1.1 RELATED DOCUMENTS

A. Drawings and general provisions of the Contract, including General and Supplementary Conditions and Division 1 Specification Sections, apply to this Section.

### 1.2 SUMMARY

A. This Section includes storm drainage outside the building.

B. Related Sections include the following:

1. Division 2 Section “Site Earthwork” for excavation and backfill.
2. CT DOT – Standard Specifications for any work within state ROW.
3. Town of Greenwich – Stormwater management requirements and standard construction details.

### 1.3 DEFINITIONS

A. HDPE: High-density polyethylene plastic.

B. PVC: Polyvinyl chloride plastic.

C. RCP: Reinforced concrete pipe.

### 1.4 PERFORMANCE REQUIREMENTS

A. Gravity-Flow, Nonpressure-Piping Pressure Ratings: At least equal to system test pressure.

### 1.5 SUBMITTALS

A. Shop Drawings: Include plans, elevations, details, and attachments for the following:

1. Precast concrete manholes and other structures, including frames, covers, and grates.

B. Product and Material Certifications:

1. Piping.
2. Structures.
3. Frames, covers and grates.

C. Design Mix Certifications: For each class of cast-in-place concrete.

D. Field Test Reports: Indicate and interpret test results for compliance with performance requirements.

1.6 QUALITY ASSURANCE

A. Form 817: State of Connecticut Department of Transportation Standard Specifications for Roads, Bridges and Incidental Construction, and issued supplements.

1.7 DELIVERY, STORAGE, AND HANDLING

A. Do not store plastic structures, pipe, and fittings in direct sunlight.

B. Protect pipe, pipe fittings, and seals from dirt and damage.

C. Handle precast concrete manholes and other structures according to manufacturer's written rigging instructions.

1.8 PROJECT CONDITIONS

A. Site Information: Perform site survey, research public utility records, and verify existing utility locations.

B. Existing Utilities: Do not interrupt utilities serving facilities occupied by Owner or others unless permitted under the following conditions and then only after arranging to provide temporary utility services according to requirements indicated:

1. Notify Architect not less than 2 days in advance of proposed utility interruptions.

2. Do not proceed with utility interruptions without Engineer's written permission.

PART 2 - PRODUCTS

2.1 PIPES AND FITTINGS

A. Corrugated HDPE Pipe and Fittings: AASHTO M 294, Type S, with smooth waterway for coupling joints.

1. Soiltight Couplings: AASHTO M 294, corrugated, matching pipe and fittings to form soiltight joints.

B. Perforated and Non-perforated, PVC Sewer Pipe and Fittings: ASTM D 2729, bell-and-spigot ends, for loose joints.

C. Reinforced-Concrete Sewer Pipe and Fittings: ASTM C 76, Class III, Wall B, for gasketed joints.

1. Gaskets: ASTM C 443, rubber.

2.2 CATCH BASINS

A. Normal-Traffic, Precast Concrete Catch Basins: ASTM C 478, precast, reinforced concrete, of depth indicated, with provision for rubber gasketed joints.

1. Base Section: 8-inch minimum thickness for floor slab and 8-inch minimum thickness for walls and base riser section, and having separate base slab or base section with integral floor.

2. Riser Sections: 8-inch minimum thickness, 48-inch x 36-inch interior dimensions, and lengths to provide depth indicated.

3. Top Section: Precast concrete Greenwich conversion slab, Top section to be compatible with the standard Greenwich frames and grates.

4. Gaskets: ASTM C 443, rubber.

5. Grade Adjustment: Include a minimum of two courses of mortared brick between precast Greenwich conversion slab and the inlet frame & grate to meet required grade.

6. Pipe Connectors: ASTM C 923, resilient, of size required, for each pipe connecting to base section.

7. Trap Hoods: Campbell Foundry trap assembly, pattern No. as dictated by outlet pipe diameter; refer to construction details for size chart showing which pattern No. to use for different pipe diameters; or approved equal.

B. Frames and Grates: Heavy Duty frame and Campbell Foundry Phase II storm water compliant bicycle safe grate.

1. Type “C-1” catch basins: Heavy duty curb inlet frame, grate to be pattern No. 2617 with 8” height Type “STD” curb box.

2. Type “C-1” Curbless catch basins: Heavy duty inlet frame, grate to be pattern No. 3408.

2.3 MANHOLES

A. Normal-Traffic, Precast Concrete Catch Basins: ASTM C 478, precast, reinforced concrete, of depth indicated, with provision for rubber gasketed joints.

1. Base Section: 6-inch minimum thickness for floor slab and 5-inch minimum thickness for walls and base riser section, and having separate base slab or base section with integral floor.

2. Riser Sections: 5-inch minimum thickness, 48-inch diameter, and lengths to provide depth indicated.

3. Top Section: Eccentric-cone type, unless concentric-cone is indicated. Top of cone of size that matches grade rings.

4. Gaskets: ASTM C 443, rubber.
5. Grade Rings: Include two or three reinforced-concrete rings, of 6- to 9-inch total thickness, that match 24-inch diameter frame and grate.
6. Steps: ASTM C 478, individual steps or ladder. Cast steps or anchor ladder into base, riser, and top section sidewalls at 12- to 16-inch intervals.
7. Pipe Connectors: ASTM C 923, resilient, of size required, for each pipe connecting to base section.
8. Frames and Grates: Form 817, Section M.08.02-5.

2.4 CONCRETE

A. General: Cast-in-place concrete according to ACI 318, ACI 350R, and the following:
   1. Cement: ASTM C 150, Type II.
   2. Fine Aggregate: ASTM C 33, sand.
   3. Coarse Aggregate: ASTM C 33, crushed gravel.
   4. Water: Potable.

B. Portland Cement Design Mix: 4000 psi minimum, with 0.45 maximum water-cementitious ratio.
   1. Reinforcement Bars: ASTM A 615/A 615M, Grade 60, deformed steel.

C. Structure Channels and Benches: Factory or field formed from concrete. Portland cement design mix, 4000 psi minimum, with 0.45 maximum water-cementitious ratio.
   1. Include channels in catch basins.
      a. Channels: Concrete invert, formed to same width as connected piping, with height of vertical sides to three-fourths of pipe diameter. Form curved channels with smooth, uniform radius and slope.

D. Ballast and Pipe Supports: Portland cement design mix, 3000 psi minimum, with 0.58 maximum water-cementitious ratio.
   1. Reinforcement Bars: ASTM A 615/A 615M, Grade 60, deformed steel.

2.5 YARD DRAIN

A. Normal-Traffic, Precast Concrete Heavy Duty Yard Drains: ASTM C 478, precast, reinforced concrete, of depth indicated, with provision for rubber gasketed joints.

B. Manufacturer and Model: Advanced Drainage System, Model No. 2815AG

C. Approved equal.

MISCELLANEOUS

D. Brick: ASTM C32, Grade MS.

E. Mortar: Composed by volume, of one part portland cement and two parts sand.

F. Grout: Form 817, Section M.03.06.

G. Filter Fabric: Form 817, Section M.08.01-19.

2.6 PIPE OUTLETS

A. Riprap Basins: Broken, irregular size and shape, graded stone conforming to Form 817, Section M.12.02, size as indicated.

B. Bedding Material: Gravel base conforming to Form 817, Section M.02.01.

PART 3 - EXECUTION

3.1 EARTHWORK

A. Excavating, trenching, and backfilling are specified in Division 2 Section "Site Earthwork."

3.2 IDENTIFICATION

A. Materials and their installation are specified in Division 2 Section "Site Earthwork." Arrange for installing green warning tapes directly over piping and at outside edges of underground structures.

1. Use warning tape or detectable warning tape over ferrous piping.

2. Use detectable warning tape over nonferrous piping and over edges of underground structures.

3.3 SPECIAL PIPE COUPLING AND FITTING APPLICATIONS

A. Special Pipe Couplings: Use where required to join piping and no other appropriate method is specified. Do not use instead of specified joining methods.

1. Use the following pipe couplings for nonpressure applications:

a. Sleeve type to join piping, of same size, or with small difference in OD.

b. Increaser/reducer-pattern, sleeve type to join piping of different sizes.

c. Bushing type to join piping of different sizes where annular space between smaller piping's OD and larger piping's ID permits installation.

## 3.4 INSTALLATION, GENERAL

A. General Locations and Arrangements: Drawing plans and details indicate general location and arrangement of underground storm drainage piping. Location and arrangement of piping layout take design considerations into account. Install piping as indicated, to extent practical.

B. Install piping beginning at low point, true to grades and alignment indicated with unbroken continuity of invert. Place bell ends of piping facing upstream. Install gaskets, seals, sleeves, and couplings according to manufacturer's written instructions for use of lubricants, cements, and other installation requirements. Maintain swab or drag in line, and pull past each joint as it is completed.

C. Use manholes for changes in direction, unless fittings are indicated. Use fittings for branch connections, unless direct tap into existing sewer is indicated.

D. Use proper size increasers, reducers, and couplings where different sizes or materials of pipes and fittings are connected. Reducing size of piping in direction of flow is prohibited.

E. Install gravity-flow piping and connect to building's storm drains, of sizes and in locations indicated. Terminate piping as indicated.

1. Install piping pitched down in direction of flow, at minimum slope of 1 percent, unless otherwise indicated.

2. Install piping with 24-inch minimum cover.

F. Extend storm drainage piping and connect to building's storm drains, of sizes and in locations indicated. Terminate piping as indicated.

## 3.5 PIPE JOINT CONSTRUCTION AND INSTALLATION

A. General: Join and install pipe and fittings according to installations indicated.

B. Install with top surfaces of components, except piping, flush with finished surface.

C. PE and HDPE Pipe and Fittings: As follows:

1. Join pipe, tubing, and fittings with couplings for soiltight joints according to manufacturer's written instructions.

2. Install according to ASTM D 2321 and manufacturer's written instructions.

3. Install corrugated piping according to the Corrugated Polyethylene Pipe Association's "Recommended Installation Practices for Corrugated Polyethylene Pipe and Fittings."

D. PVC Corrugated and Sewer Pipe and Fittings: As follows:

1. Join pipe and gasketed fittings with gaskets according to ASTM D 2321.

2. Install according to ASTM D 2321.

E. Concrete Pipe and Fittings: Install according to ACPA's "Concrete Pipe Installation Manual." Use the following seals:

1. Round Pipe and Fittings: ASTM C 443, rubber gaskets.

F. System Piping Joints: Make joints using system manufacturer's couplings, unless otherwise indicated.

G. Join piping made of different materials or dimensions with couplings made for this application. Use couplings that are compatible with and that fit both systems' materials and dimensions.

3.6 CATCH-BASIN AND MANHOLE INSTALLATION

A. Install precast concrete catch basin and manhole sections according to ASTM C 891.

B. Construct catch basins and manholes to sizes and shapes indicated.

C. Set frames and grates to elevations indicated.

3.7 STORM DRAINAGE INLET AND OUTLET INSTALLATION

A. Construct inlet head walls, aprons, and sides of reinforced concrete, as indicated.

B. Construct riprap of broken stone, as indicated.

C. Install outlets that spill onto grade, anchored with concrete, where indicated.

D. Install outlets that spill onto grade, with flared end sections that match pipe, where indicated.

3.8 CONCRETE PLACEMENT

A. Place cast-in-place concrete according to ACI 318 and ACI 350R.

3.9 YARD DRAIN INSTALLATION

A. Install type of drains in locations indicated.

B. Embed drains in 4-inch minimum depth of concrete around bottom and sides.

C. Fasten grates to drains if indicated.

D. Set drain frames and covers with tops flush with pavement surface.

3.10 STORMWATER TREATMENT SYSTEM

A. Install in accordance with manufacturer’s requirements and recommendations.

## 3.11 CLOSING ABANDONED STORM DRAINAGE SYSTEMS

A. Abandoned Piping: Close open ends of abandoned underground piping indicated to remain in place. Include closures strong enough to withstand hydrostatic and earth pressures that may result after ends of abandoned piping have been closed. Use either procedure below:

1. Close open ends of piping with at least 8-inch- thick, brick masonry bulkheads.
2. Close open ends of piping with threaded metal caps, plastic plugs, or other acceptable methods suitable for size and type of material being closed. Do not use wood plugs.

## 3.12 FIELD QUALITY CONTROL

A. Clear interior of piping and structures of dirt and superfluous material as work progresses. Maintain swab or drag in piping, and pull past each joint as it is completed.

1. In large, accessible piping, brushes and brooms may be used for cleaning.
2. Place plug in end of incomplete piping at end of day and when work stops.
3. Flush piping between manholes and other structures to remove collected debris, if required by authorities having jurisdiction.

B. Inspect interior of piping to determine whether line displacement or other damage has occurred. Inspect after approximately 24 inches of backfill is in place, and again at completion of Project.

1. Submit separate reports for each system inspection.
2. Defects requiring correction include the following:
   a. Alignment: Less than full diameter of inside of pipe is visible between structures.
   b. Deflection: Flexible piping with deflection that prevents passage of ball or cylinder of size not less than 92.5 percent of piping diameter.
   c. Crushed, broken, cracked, or otherwise damaged piping.
   d. Infiltration: Water leakage into piping.
   e. Exfiltration: Water leakage from or around piping.
3. Replace defective piping using new materials, and repeat inspections until defects are within allowances specified.
4. Re-inspect and repeat procedure until results are satisfactory.

**End of Section**

# SECTION 02741

# BITUMINOUS CONCRETE PAVING

## PART 1 - GENERAL

### 1.1 SUMMARY

A. This Section includes the following:

1. Bituminous concrete paving.
2. Bituminous concrete patching.
3. Bituminous concrete paving overlay.
4. Bituminous concrete curbing.
5. Cold milling of existing bituminous concrete pavement.
6. Precast concrete wheel stops.
7. Pavement-marking paint.

B. Related Sections include the following:

1. Division 2 Section "Site Earthwork" for aggregate subbase and base courses and for aggregate pavement shoulders.
2. Town of Greenwich standard construction details for required pavement sections.

### 1.2 DEFINITIONS

A. Bituminous Concrete Base Course: Asphalt-aggregate layer placed over subgrade, aggregate subbase course, or aggregate base course; and beneath bituminous concrete surface course.

B. Bituminous Concrete Surface Course: The asphalt-aggregate top course of a bituminous concrete pavement, sometimes called a wearing course.

C. DOT: Department of Transportation.

### 1.3 SYSTEM DESCRIPTION

A. Provide bituminous concrete paving according to materials, workmanship, and other applicable requirements of standard specifications of state or local DOT.

1. Standard Specification: State of Connecticut, Standard Specifications for Roads, Bridges and Incidental Construction, Form 817.
2. Measurement and payment provisions and safety program submittals included in standard specifications do not apply to this Section.

1.4 SUBMITTALS

A. Job-Mix Design Certification: For each job mix proposed for the Work, signed by the supplier.

B. Qualification Data: For bituminous concrete supplier.

C. Material Certificates: For each paving material, signed by manufacturers.

1.5 QUALITY ASSURANCE

A. Supplier Qualifications: A qualified supplier, registered with and approved by CT DOT.

B. Regulatory Requirements: Comply with CT DOT Form 817 for bituminous concrete paving work.

C. Asphalt-Paving Publication: Comply with AI MS-22, "Construction of Hot Mix Asphalt Pavements," unless more stringent requirements are indicated.

1.6 DELIVERY, STORAGE, AND HANDLING

A. Transport bituminous concrete mixture in tight body trucks that have been previously cleaned of foreign material.

1. Tightly cover trucks with waterproof canvas or other suitable covers.

B. Deliver mixture within 25 deg F (3.9 deg C) of approved job mix formula temperature.

1.7 PROJECT CONDITIONS

A. Environmental Limitations: Do not apply asphalt materials if subgrade is wet or excessively damp or if the following conditions are not met:

1. Prime and Tack Coats: Minimum surface temperature of 60 deg F (15.5 deg C).

2. Bituminous Concrete Base Course: Minimum surface temperature of 40 deg F (4 deg C) and rising at time of placement.

3. Bituminous Concrete Surface Course: Minimum surface temperature of 60 deg F (15.5 deg C) at time of placement.

B. Pavement-Marking Paint: Proceed with pavement marking only on clean, dry surfaces and at a minimum ambient or surface temperature of 50 deg F and not exceeding 95 deg F.

PART 2 - PRODUCTS

2.1 BITUMINOUS CONCRETE

A. Materials: Section M.04 and M.05.02 of Form 817.

B. Tack Coat: AASHTO M 140 Grade SS-1 or SS-1H, emulsified asphalt or AASHTO M 208 Grade CSS-1 or CSS-1H, cationic emulsified asphalt, slow setting, diluted in half with water.

2.2 MIXES

A. Bituminous Concrete: Dense, hot-laid, bituminous concrete plant mixes approved by authorities having jurisdiction and complying with the following requirements:

1. Provide mixes with a history of satisfactory performance in geographical area where Project is located.

2. Course Depth and Class: As indicated.

2.3 AUXILIARY MATERIALS

A. Waterborne Pavement-Marking Paint:

1. Hot-Applied: Article M.07.21 of Form 817, with a 2 minute drying time.

2. Non-Heat-Applied: Article M.07.20 of Form 817, with a 15 minute drying time.

a. Color: As indicated.

B. Wheel Stops: Precast, air-entrained concrete, 4000 psi minimum compressive strength. Provide chamfered corners and drainage slots on underside and holes for anchoring to substrate.

1. Dowels: Galvanized steel.

PART 3 - EXECUTION

3.1 EXAMINATION

A. Verify that surface to receive paving is dry and in suitable condition to support paving and imposed loads.

B. Proof-roll subbase or aggregate base course using heavy, pneumatic-tired rollers to locate areas that are unstable or that require further compaction.

C. Proceed with paving only after unsatisfactory conditions have been corrected.

## 3.2 COLD MILLING

A. Utility Structures: Identify, adjust and protect utility structure frames, grates and covers.

B. Clean existing pavement surface of loose and deleterious material immediately before cold milling. Prevent milled pavement particles from entering drainage system. Remove existing bituminous concrete pavement by cold milling to grades and cross sections indicated.

1. Mill to indicated depth.
2. Mill to a uniform finished surface free of gouges, grooves, and ridges.
3. Control rate of milling to prevent tearing of existing bituminous concrete course.
4. Repair or replace curbs, manholes, and other construction damaged during cold milling.
5. Excavate and trim unbound-aggregate base course, if encountered, and keep material separate from milled bituminous concrete.
6. Keep milled pavement surface free of loose material and dust.
7. Clean adjacent roads, parking areas, and grass areas of milled pavement particles.

## 3.3 REPAIRS

A. Tack Coat: Apply uniformly to vertical surfaces abutting or projecting into new, bituminous concrete paving at a rate of 0.05 to 0.15 gal./sq. yd. (0.2 to 0.7 L/sq. m).

1. Allow tack coat to cure undisturbed before applying bituminous concrete paving.
2. Avoid smearing or staining adjoining surfaces, appurtenances, and surroundings. Remove spillages and clean affected surfaces.

B. Temporary Repair: Fill excavated pavement area with bituminous concrete base mix to indicated thickness and, while still hot, compact flush with adjacent surface.

C. Permanent Repair: Partially fill excavated pavement area with bituminous concrete base mix and, while still hot, compact. Cover bituminous concrete base course with compacted, bituminous concrete surface layer finished flush with adjacent surfaces.

## 3.4 SURFACE PREPARATION

A. General: Immediately before placing bituminous concrete, remove loose and deleterious material from substrate surfaces. Ensure that prepared subgrade is ready to receive paving.

1. Sweep loose granular particles from surface of unbound-aggregate base course. Do not dislodge or disturb aggregate embedded in compacted surface of base course.

B. Tack Coat: Apply uniformly to surfaces of existing pavement at a rate of 0.05 to 0.15 gal./sq. yd. (0.2 to 0.7 L/sq. m).

1. Allow tack coat to cure undisturbed before applying bituminous concrete paving.

2. Avoid smearing or staining adjoining surfaces, appurtenances, and surroundings. Remove spillages and clean affected surfaces.

## 3.5 BITUMINOUS CONCRETE PLACING

A. Machine place hot bituminous concrete on prepared surface, spread uniformly, and strike off. Place by hand to areas inaccessible to equipment in a manner that prevents segregation of mix. Place each course to required grade, cross section, and thickness when compacted.

1. Place bituminous concrete base course in number of lifts and thicknesses indicated.

2. Place bituminous concrete surface course in single lift.

3. Spread mix at minimum temperature of 250 deg F (121 deg C).

4. Begin applying mix along centerline of crown for crowned sections and on high side of one-way slopes, unless otherwise indicated.

5. Regulate paver machine speed to obtain smooth, continuous surface free of pulls and tears in bituminous concrete paving mat.

6. In areas inaccessible to pavers, use staked forms to maintain indicated line and grade. Prevent segregation of mix when placing mix by hand.

B. Place paving in consecutive strips not less than 10 feet (3 m) wide unless infill edge strips of a lesser width are required.

1. After first strip has been placed and rolled, place succeeding strips and extend rolling to overlap previous strips. Complete a section of bituminous concrete base course before placing bituminous concrete surface course.

C. Promptly correct surface irregularities in paving course behind paver. Use suitable hand tools to remove excess material forming high spots. Fill depressions with hot bituminous concrete to prevent segregation of mix; use suitable hand tools to smooth surface.

## 3.6 JOINTS

A. Construct joints to ensure a continuous bond between adjoining paving sections. Construct joints free of depressions with same texture and smoothness as other sections of bituminous concrete course.

1. Clean contact surfaces and apply tack coat to joints.
2. Offset longitudinal joints, in successive courses, a minimum of 6 inches (150 mm).
3. Offset transverse joints, in successive courses, a minimum of 24 inches (600 mm).
4. Construct transverse joints as described in AI MS-22, "Construction of Hot Mix Asphalt Pavements."
5. Compact joints as soon as bituminous concrete will bear roller weight without excessive displacement.
6. Compact material at joints to a density within 2 percent of specified course density.

## 3.7 COMPACTION

A. General: Begin compaction as soon as placed paving material will bear roller weight without excessive displacement. Compact material with hot, hand tampers or vibratory-plate compactors in areas inaccessible to rollers.

1. Complete compaction before mix temperature cools to 185 deg F (85 deg C).

B. Breakdown Rolling: Complete breakdown or initial rolling immediately after rolling joints and outside edge. Examine surface immediately after breakdown rolling for indicated crown, grade, and smoothness. Correct laydown and rolling operations to comply with requirements.

C. Intermediate Rolling: Begin intermediate rolling immediately after breakdown rolling while bituminous concrete is still hot enough to achieve specified density. Continue rolling until course has been uniformly compacted to the following density:

1. Average Density: 95 percent of reference maximum theoretical density according to AASHTO T 209, but not less than 92 percent nor greater than 97 percent.

D. Finish Rolling: Finish roll paved surfaces to remove roller marks while bituminous concrete is still warm.

E. Edge Shaping: While surface is being compacted and finished, trim edges of pavement to proper alignment. Bevel edges while material is still hot; compact thoroughly.

F. Repairs: Remove paved areas that are defective or contaminated with foreign materials and replace with fresh material. Compact by rolling to specified density and surface smoothness.

G. Protection: After final rolling, do not permit vehicular traffic on pavement until it has cooled and hardened.

H. Erect barricades to protect paving from traffic until mixture has cooled enough not to become marked.

3.8 INSTALLATION TOLERANCES

A. Thickness: Compact each course to produce the thickness indicated within the following tolerances:

1. Base Courses: Plus or minus 1/2 inch (13 mm).

2. Surface Course: Plus 1/4 inch (6.4 mm), no minus.

B. Surface Smoothness: Compact each course to produce a surface smoothness within the following tolerances as determined by using a 10-foot (3-m) straightedge applied transversely or longitudinally to paved areas:

1. Base Courses:

a. Roadways and Parking Lots: 3/8 inch (9.5 mm).

b. Sidewalks and Driveways: 1/4 inch (6.4 mm).

2. Surface Course: 1/4 inch (6.4 mm).

C. Variation from Design Elevation**:** [1/4 inch (6.4 mm)].

D. Curb Alignment: Place curbing to produce an alignment within 1/4 inch (6.4 mm) tolerance as determined by using a 10-foot (3-mm) straight edge along front face of curb.

3.9 BITUMINOUS CONCRETE CURBS

A. Construct bituminous concrete curbs over compacted pavement surfaces. Apply a light tack coat unless pavement surface is still tacky and free from dust. Spread mix at minimum temperature of 250 deg F (121 deg C).

B. Place bituminous concrete to curb cross section indicated or, if not indicated, to local standard shapes, by machine or by hand in wood or metal forms. Tamp hand-placed materials and screed to smooth finish. Remove forms after bituminous concrete has cooled.

C. Protect curbing for a minimum of 24 hours and until mixture has cooled so as not to become marked.

3.10 PAVEMENT MARKING

A. Do not apply pavement-marking paint until layout, colors, and placement have been verified with Engineer.

B. Allow paving to age for 30 days before starting pavement marking.

C. Sweep and clean surface to eliminate loose material and dust.

D. Apply paint with mechanical equipment to produce pavement markings, of dimensions indicated, with uniform, straight edges. Apply at manufacturer's recommended rates to provide a minimum wet film thickness of 15 mils.

3.11 WHEEL STOPS

A. Securely attach wheel stops into pavement with not less than two galvanized steel dowels embedded at one-quarter to one-third points. Securely install dowels into pavement and bond to wheel stop. Recess head of dowel beneath top of wheel stop.

3.12 FIELD QUALITY CONTROL

A. Testing Agency: Owner will engage a qualified independent testing and inspecting agency to perform field tests and inspections and to prepare test reports.

1. Testing agency will conduct and interpret tests and state in each report whether tested Work complies with or deviates from specified requirements.

B. Additional testing and inspecting, at Contractor's expense, will be performed to determine compliance of replaced or additional work with specified requirements.

C. Thickness: In-place compacted thickness of bituminous concrete courses will be determined according to ASTM D 3549.

D. Surface Smoothness: Finished surface of each bituminous concrete course will be tested for compliance with smoothness tolerances.

E. In-Place Density: Testing agency will take samples of uncompacted paving mixtures and compacted pavement according to AASHTO T 168.

1. Reference maximum theoretical density will be determined by averaging results from four samples of bituminous concrete mixture delivered daily to site, prepared according to AASHTO T 209, and compacted according to job-mix specifications.

2. In-place density of compacted pavement will be determined by testing core samples according to ASTM D 1188 or ASTM D 2726.

a. One core sample will be taken for every 1000 sq. yd. (836 sq. m) or less of installed pavement, with no fewer than 3 cores taken.

b. Field density of in-place compacted pavement may also be determined by nuclear method according to ASTM D 2950 and correlated with ASTM D 1188 or ASTM D 2726.

F. Remove and replace or install additional bituminous concrete where test results or measurements indicate that it does not comply with specified requirements.

3.13 DISPOSAL

A. Except for material indicated to be recycled, remove excavated materials from Project site and legally dispose of them in an approved landfill.

1. Do not allow excavated materials to accumulate on-site.

**End of Section**

# SECTION 02751

# CEMENT CONCRETE PAVING

## PART 1 - GENERAL

### 1.1 RELATED DOCUMENTS

A. Drawings and general provisions of the Contract, including General and Supplementary Conditions and Division 1 Specification Sections, apply to this Section.

### 1.2 SUMMARY

A. This Section includes exterior cement concrete pavement for the following:

1. Driveways.
2. Walkways.
3. Curbing.
4. Equipment pads.
5. Stamped cement concrete pavement.
6. Detectable/tactile warning surface tiles.

B. Related Sections include the following:

1. Division 2 Section "Site Earthwork" for subgrade preparation, grading, and subbase course.
2. Town of Greenwich standard construction details for concrete sidewalk and pedestrian ramp construction.

### 1.3 SUBMITTALS

A. Product Data: For each type of manufactured material and product indicated.

B. Design Mixes: For each concrete pavement mix. Include alternate mix designs when characteristics of materials, project conditions, weather, test results, or other circumstances warrant adjustments.

C. Material Certificates: Signed by manufacturers certifying that each of the following materials complies with requirements:

1. Cementitious materials and aggregates.
2. Steel reinforcement and reinforcement accessories.
3. Admixtures.
4. Curing compounds.

5. Bonding agent or adhesive.
6. Joint fillers.
7. Detectable warning tiles.

D. Mockups: Cast mockups of full-size panels of stamped cement concrete pavement to demonstrate typical pattern, texture, surface finish, color, and standard of workmanship.

1. Build mockups in the location and of the size indicated or, if not indicated, as directed by Engineer.
2. Notify Engineer seven days in advance of dates and times when mockups will be constructed.
3. Obtain Engineer's approval of mockups before starting construction.
4. Maintain mockups during construction in an undisturbed condition as a standard for judging the completed Work.
5. Approved mockups may become part of the completed Work if undisturbed at time of Substantial Completion.

## 1.4 QUALITY ASSURANCE

A. Installer Qualifications: An experienced installer who has completed pavement work similar in material, design, and extent to that indicated for this Project and whose work has resulted in construction with a record of successful in-service performance.

1. Detectable warning tile system: Engage an experienced installer certified in writing by manufacturer as qualified for installation.

B. Manufacturer Qualifications: Manufacturer of ready-mixed concrete products complying with ASTM C 94 requirements for production facilities and equipment.

C. Source Limitations: Obtain each type or class of cementitious material of the same brand from the same manufacturer's plant and each aggregate from one source.

D. ACI Publications: Comply with ACI 301, "Specification for Structural Concrete," unless modified by the requirements of the Contract Documents.

E. Concrete Testing Service: Engage a qualified independent testing agency to perform material evaluation tests and to design concrete mixes.

## 1.5 PROJECT CONDITIONS

A. Traffic Control: Maintain access for vehicular and pedestrian traffic as required for other construction activities.

PART 2 - PRODUCTS

2.1 FORMS

A. Form Materials: Plywood, metal, metal-framed plywood, or other approved panel-type materials to provide full-depth, continuous, straight, smooth exposed surfaces.

1. Use flexible or curved forms for curves of a radius 100 feet or less.

B. Form-Release Agent: Commercially formulated form-release agent that will not bond with, stain, or adversely affect concrete surfaces and will not impair subsequent treatments of concrete surfaces.

2.2 STEEL REINFORCEMENT

A. Plain-Steel Welded Wire Fabric: ASTM A 185, fabricated from as-drawn steel wire into flat sheets.

B. Reinforcement Bars: ASTM A 615/A 615M, Grade 60, deformed.

C. Joint Dowel Bars: Plain steel bars, ASTM A 615/A 615M, Grade 60. Cut bars true to length with ends square and free of burrs.

D. Tie Bars: ASTM A 615/A 615M, Grade 60, deformed.

E. Bar Supports: Bolsters, chairs, spacers, and other devices for spacing, supporting, and fastening reinforcement bars, welded wire fabric, and dowels in place. Manufacture bar supports according to CRSI's "Manual of Standard Practice" from steel wire, plastic, or precast concrete or fiber-reinforced concrete of greater compressive strength than concrete, and as follows:

1. Equip wire bar supports with sand plates or horizontal runners where base material will not support chair legs.

2.3 CONCRETE MATERIALS

A. General: Use the same brand and type of cementitious material from the same manufacturer throughout the Project.

B. Portland Cement: ASTM C 150, Type I or II.

1. Fly Ash: ASTM C 618, Class F or C.

C. Aggregate: ASTM C 33, uniformly graded, from a single source, with coarse aggregate as follows:

1. Class: 4S.

2. Maximum Aggregate Size: 3/4 inch nominal.

3. Do not use fine or coarse aggregates containing substances that cause spalling.

D. Water: ASTM C 94, potable.

2.4 ADMIXTURES

A. General: Admixtures certified by manufacturer to contain not more than 0.1 percent water-soluble chloride ions by mass of cement and to be compatible with other admixtures.

B. Air-Entraining Admixture: ASTM C 260.

C. Water-Reducing Admixture: ASTM C 494, Type A.

2.5 COLOR MATERIALS

A. Coloring Admixture: ASTM C 979, synthetic mineral-oxide pigments or colored water-reducing admixtures; color stable, nonfading, and resistant to lime and other alkalis.

1. Color: As selected by Engineer from manufacturer's full range.

2.6 IMPRINTING TOOLS

A. Stamp Mats: Semi-rigid polyurethane mats with projecting textured and ridged underside capable of imprinting texture and joint patterns on plastic concrete.

B. Stamp Tools: Open-grid aluminum or rigid plastic stamp tool capable of imprinting joint patterns on plastic concrete.

2.7 CURING MATERIALS

A. Absorptive Cover: AASHTO M 182, Class 2, burlap cloth made from jute or kenaf, weighing approximately 9 oz./sq. yd. dry.

B. Moisture-Retaining Cover: ASTM C 171, polyethylene film or white burlap-polyethylene sheet.

C. Water: Potable.

D. Clear Waterborne Membrane-Forming Curing Compound: ASTM C 309, Type 1, Class B.

2.8 DETECTABLE WARNING TILES

A. Product: Vitrified polymer composite truncated dome tiles for cast-in-place applications, meeting Americans with Disabilities Act requirements.

1. Color: Homogeneous throughout tile. Selected by Owner from manufacturer's complete color range.

2. Approved Product and Manufacturer: Armor-Tile by Engineered Plastics, Inc.

B. Stamped concrete for detectable warning system will not be allowed.

2.9 ACCESSORIES

A. Expansion- and Isolation-Joint-Filler Strips: ASTM D 1751, asphalt-saturated cellulosic fiber, or ASTM D 1752, cork or self-expanding cork.

B. Bonding Agent: ASTM C 1059, Type II, non-redispersible, acrylic emulsion or styrene butadiene.

C. Irrigation Piping Pavement Sleeves: ASTM D1785 and D2467 PVC, Schedule 40 pipe with solvent welded couplings.

1. Size: 6-inch inside diameter.

2.10 CONCRETE MIXES

A. Prepare design mixes, proportioned according to ACI 211.1 and ACI 301, for each type and strength of normal-weight concrete determined by either laboratory trial mixes or field experience.

B. Use a qualified independent testing agency for preparing and reporting proposed mix designs for the trial batch method.

1. Do not use Owner's field quality-control testing agency as the independent testing agency.

C. Proportion mixes to provide concrete with the following properties:

1. Compressive Strength (28 Days): 4000 psi.
2. Maximum Water-Cementitious Materials Ratio: 0.45.
3. Slump Limit: 4 inches.
4. Solar Reflectance Index (SRI): 29 minimum.

D. Cementitious Materials: Limit percentage, by weight, of cementitious materials other than portland cement in concrete as follows:

1. Fly Ash: 25 percent.

E. Add air-entraining admixture at manufacturer's prescribed rate to result in concrete at point of placement having an air content as follows within a tolerance of plus or minus 1.5 percent:

1. Air Content: 6.0 percent for 1-inch maximum aggregate.

2.11 CONCRETE MIXING

A. Ready-Mixed Concrete: Comply with requirements and with ASTM C 94.

PART 3 - EXECUTION

3.1 PREPARATION

A. Remove loose material from compacted subbase surface immediately before placing concrete.

3.2 COORDINATION

A. Paving and Irrigation Installers to coordinate location and installation of pavement sleeves for irrigation piping and wiring."

3.3 IRRIGATION PAVEMENT SLEEVE INSTALLATION

A. Securely cap ends of pavement sleeves prior to installation to prevent clogging.

B. Excavate and install irrigation system sleeves prior to placement of pavement aggregate base course. Backfill and thoroughly compact around and over all sleeves. Take precautions to prevent damage to sleeves during backfill and compaction process.

C. Install sleeves with a minimum cover of 18 inches below finished grade.

D. Extend pavement sleeves a minimum of 18 inches beyond edge of pavement.

E. Use detectable tape to mark end of pavement sleeves. Also, identify pavement sleeve locations on a print for use by the irrigation installer.

3.4 EDGE FORMS AND SCREED CONSTRUCTION

A. Set, brace, and secure edge forms, bulkheads, and intermediate screed guides for pavement to required lines, grades, and elevations. Install forms to allow continuous progress of work and so forms can remain in place at least 24 hours after concrete placement.

B. Clean forms after each use and coat with form release agent to ensure separation from concrete without damage.

3.5 STEEL REINFORCEMENT

A. General: Comply with CRSI's "Manual of Standard Practice" for fabricating reinforcement and with recommendations in CRSI's "Placing Reinforcing Bars" for placing and supporting reinforcement.

B. Clean reinforcement of loose rust and mill scale, earth, ice, or other bond-reducing materials.

C. Arrange, space, and securely tie bars and bar supports to hold reinforcement in position during concrete placement. Maintain minimum cover to reinforcement.

D. Install welded wire fabric in lengths as long as practicable. Lap adjoining pieces at least one full mesh, and lace splices with wire. Offset laps of adjoining widths to prevent continuous laps in either direction.

3.6 JOINTS

A. General: Construct construction, isolation, and contraction joints and tool edgings true to line with faces perpendicular to surface plane of concrete. Construct transverse joints at right angles to centerline, unless otherwise indicated.

1. When joining existing pavement, place transverse joints to align with previously placed joints, unless otherwise indicated.

B. Construction Joints: Set construction joints at side and end terminations of pavement and at locations where pavement operations are stopped for more than one-half hour, unless pavement terminates at isolation joints.

1. Provide preformed galvanized steel or plastic keyway-section forms or bulkhead forms with keys, unless otherwise indicated. Embed keys at least 1-1/2 inches into concrete.

2. Continue reinforcement across construction joints, unless otherwise indicated. Do not continue reinforcement through sides of pavement strips, unless otherwise indicated.

3. Provide tie bars at sides of pavement strips where indicated.

4. Use a bonding agent at locations where fresh concrete is placed against hardened or partially hardened concrete surfaces.

C. Isolation Joints: Form isolation joints of preformed joint-filler strips abutting concrete curbs, catch basins, manholes, inlets, structures, walks, other fixed objects, and where indicated.

1. Locate expansion joints at intervals of 15 feet, unless otherwise indicated.

2. Extend joint fillers full width and depth of joint.

3. Terminate joint filler less than 1/2 inch or more than 1 inch below finished surface if joint sealant is indicated.

4. Place top of joint filler flush with finished concrete surface if joint sealant is not indicated.

5. Furnish joint fillers in one-piece lengths. Where more than one length is required, lace or clip joint-filler sections together.

6. Protect top edge of joint filler during concrete placement with metal, plastic, or other temporary preformed cap. Remove protective cap after concrete has been placed on both sides of joint.

D. Install dowel bars and support assemblies at joints where indicated. Lubricate or asphalt-coat one-half of dowel length to prevent concrete bonding to one side of joint.

E. Contraction Joints: Form weakened-plane contraction joints, sectioning concrete into areas as indicated. Construct contraction joints for a depth equal to at least one-fourth of the concrete thickness, as follows:

1. Grooved Joints: Form contraction joints after initial floating by grooving and finishing each edge of joint with groover tool to the following radius. Repeat grooving of contraction joints after applying surface finishes. Eliminate groover marks on concrete surfaces.

a. Radius: 3/8 inch.

F. Edging: Tool edges of pavement, gutters, curbs, and joints in concrete after initial floating with an edging tool to the following radius. Repeat tooling of edges after applying surface finishes. Eliminate tool marks on concrete surfaces.

1. Radius: 3/8 inch.

## 3.7 CONCRETE PLACEMENT

A. Inspection: Before placing concrete, inspect and complete formwork installation, reinforcement steel, and items to be embedded or cast in. Notify other trades to permit installation of their work.

B. Remove snow, ice, or frost from subbase surface and reinforcement before placing concrete. Do not place concrete on frozen surfaces.

C. Moisten subbase to provide a uniform dampened condition at the time concrete is placed. Do not place concrete around manholes or other structures until they are at the required finish elevation and alignment.

D. Comply with requirements and with recommendations in ACI 304R for measuring, mixing, transporting, and placing concrete.

E. Do not add water to concrete during delivery, at Project site, or during placement.

F. Deposit and spread concrete in a continuous operation between transverse joints. Do not push or drag concrete into place or use vibrators to move concrete into place.

G. Consolidate concrete by mechanical vibrating equipment supplemented by hand-spading, rodding, or tamping. Use equipment and procedures to consolidate concrete according to recommendations in ACI 309R.

1. Consolidate concrete along face of forms and adjacent to transverse joints with an internal vibrator. Keep vibrator away from joint assemblies, reinforcement, or side forms. Use only square-faced shovels for hand-spreading and consolidation. Consolidate with care to prevent dislocating reinforcement, dowels, and joint devices.

H. Screed pavement surfaces with a straightedge and strike off. Commence initial floating using bull floats or darbies to form an open textured and uniform surface plane before excess moisture or bleed water appears on the surface. Do not further disturb concrete surfaces before beginning finishing operations or spreading dry-shake surface treatments.

I. When adjoining pavement lanes are placed in separate pours, do not operate equipment on concrete until pavement has attained 85 percent of its 28-day compressive strength.

J. Cold-Weather Placement: Comply with ACI 306.1 and as follows. Protect concrete work from physical damage or reduced strength that could be caused by frost, freezing actions, or low temperatures.

1. When air temperature has fallen to or is expected to fall below 40 deg F, uniformly heat water and aggregates before mixing to obtain a concrete mixture temperature of not less than 50 deg F and not more than 80 deg F at point of placement.

2. Do not use frozen materials or materials containing ice or snow.

3. Do not use calcium chloride, salt, or other materials containing antifreeze agents or chemical accelerators, unless otherwise specified and approved in mix designs.

K. Hot-Weather Placement: Place concrete according to recommendations in ACI 305R and as follows when hot-weather conditions exist:

1. Cool ingredients before mixing to maintain concrete temperature at time of placement below 90 deg F. Chilled mixing water or chopped ice may be used to control temperature, provided water equivalent of ice is calculated to total amount of mixing water. Using liquid nitrogen to cool concrete is Contractor's option.

2. Cover reinforcement steel with water-soaked burlap so steel temperature will not exceed ambient air temperature immediately before embedding in concrete.

3. Fog-spray forms, reinforcement steel, and subgrade just before placing concrete. Keep subgrade moisture uniform without standing water, soft spots, or dry areas.

## 3.8 DETECTABLE WARNING TILES

A. Pour and float concrete. Install tiles in accordance with manufacturer requirements and the following.

1. Set tile by tamping down into concrete until all air voids are removed, edge around the perimeter, cut off protective plastic sheet.

## 3.9 CONCRETE FINISHING

A. General: Wetting of concrete surfaces during screeding, initial floating, or finishing operations is prohibited.

B. Float Finish: Begin the second floating operation when bleed-water sheen has disappeared and the concrete surface has stiffened sufficiently to permit operations. Float surface with power-driven floats, or by hand floating if area is small or inaccessible to power units. Finish surfaces to true planes. Cut down high spots, and fill low spots. Refloat surface immediately to uniform granular texture.

1. Medium-to-Coarse-Textured Broom Finish: Provide a coarse finish by striating float-finished concrete surface 1/16 to 1/8 inch deep with a stiff-bristled broom, perpendicular to line of traffic.

3.10 STAMPING

A. Mat Stamping: While initially finished concrete is plastic, accurately align and place stamp mats in sequence. Uniformly load mats and press into concrete to produce required imprint pattern and depth of imprint on concrete surface. Remove stamp mats immediately. Hand stamp edges and surfaces unable to be imprinted by stamp mats.

1. Remove unembedded release agent no fewer than three days after stamping concrete. High pressure wash surface and joint patterns, taking care not to damage stamped concrete. Control, collect, and legally dispose of runoff.

B. Tool Stamping: While initially finished concrete is plastic, cover surface with polyethylene film, stretch taut to remove wrinkles, lap sides and ends 3 inches, and secure to edge forms. Lightly broom surface to remove air bubbles. Accurately align and place stamp tools in sequence and tamp into concrete to produce required imprint pattern and depth of imprint on concrete surface. Remove stamp tools immediately. Hand stamp edges and surfaces unable to be imprinted by stamp tools. Unroll and remove polyethylene film immediately after tool stamping.

3.11 CONCRETE PROTECTION AND CURING

A. General: Protect freshly placed concrete from premature drying and excessive cold or hot temperatures. Comply with ACI 306.1 for cold-weather protection and follow recommendations in ACI 305R for hot-weather protection during curing.

B. Begin curing after finishing concrete, but not before free water has disappeared from concrete surface.

C. Curing Methods: Cure concrete by moisture curing, moisture-retaining-cover curing, curing compound, or a combination of these as follows:

1. Moisture Curing: Keep surfaces continuously moist for not less than seven days with the following materials:

a. Water.

b. Continuous water-fog spray.

c. Absorptive cover, water saturated, and kept continuously wet. Cover concrete surfaces and edges with 12-inch lap over adjacent absorptive covers.

2. Moisture-Retaining-Cover Curing: Cover concrete surfaces with moisture-retaining cover for curing concrete, placed in widest practicable width, with sides and ends lapped at least 12 inches, and sealed by waterproof tape or adhesive. Immediately repair any holes or tears during curing period using cover material and waterproof tape.

3. Curing Compound: Apply uniformly in continuous operation by power spray or roller according to manufacturer's written instructions. Recoat areas subjected to heavy rainfall within three hours after initial application. Maintain continuity of coating and repair damage during curing period.

## 3.12 PAVEMENT TOLERANCES

A. Comply with tolerances of ACI 117 and as follows:

1. Elevation: 1/4 inch.
2. Thickness: Plus 3/8 inch, minus 1/4 inch.
3. Surface: Gap below 10-foot- long, unleveled straightedge not to exceed 1/4 inch.
4. Joint Spacing: 3 inches.
5. Contraction Joint Depth: Plus 1/4 inch, no minus.
6. Joint Width: Plus 1/8 inch, no minus.

## 3.13 FIELD QUALITY CONTROL

A. Testing Agency: Owner will engage a qualified testing and inspection agency to sample materials, perform tests, and submit test reports during concrete placement. Sampling and testing for quality control may include those specified in this Article.

B. Testing Services: Testing shall be performed according to the following requirements:

1. Sampling Fresh Concrete: Representative samples of fresh concrete shall be obtained according to ASTM C 172, except modified for slump to comply with ASTM C 94.
2. Slump: ASTM C 143; one test at point of placement for each compressive-strength test, but not less than one test for each day's pour of each type of concrete. Additional tests will be required when concrete consistency changes.
3. Air Content: ASTM C 231, pressure method; one test for each compressive-strength test, but not less than one test for each day's pour of each type of air-entrained concrete.
4. Concrete Temperature: ASTM C 1064; one test hourly when air temperature is 40 deg F and below and when 80 deg F and above, and one test for each set of compressive-strength specimens.
5. Compression Test Specimens: ASTM C 31/C 31M; one set of four standard cylinders for each compressive-strength test, unless otherwise indicated. Cylinders shall be molded and stored for laboratory-cured test specimens unless field-cured test specimens are required.

6. Compressive-Strength Tests: ASTM C 39; one set for each day's pour of each concrete class exceeding 5 cu. yd., but less than 25 cu. yd., plus one set for each additional 50 cu. yd.. One specimen shall be tested at 7 days and two specimens at 28 days; one specimen shall be retained in reserve for later testing if required.

7. When frequency of testing will provide fewer than five compressive-strength tests for a given class of concrete, testing shall be conducted from at least five randomly selected batches or from each batch if fewer than five are used.

8. When strength of field-cured cylinders is less than 85 percent of companion laboratory-cured cylinders, current operations shall be evaluated and corrective procedures shall be provided for protecting and curing in-place concrete.

9. Strength level of concrete will be considered satisfactory if averages of sets of three consecutive compressive-strength test results equal or exceed specified compressive strength and no individual compressive-strength test result falls below specified compressive strength by more than 500 psi.

C. Test results shall be reported in writing to Engineer, concrete manufacturer, and Contractor within 24 hours of testing. Reports of compressive-strength tests shall contain Project identification name and number, date of concrete placement, name of concrete testing agency, concrete type and class, location of concrete batch in pavement, design compressive strength at 28 days, concrete mix proportions and materials, compressive breaking strength, and type of break for both 7- and 28-day tests.

D. Nondestructive Testing: Impact hammer, sonoscope, or other nondestructive device may be permitted by Engineer but will not be used as the sole basis for approval or rejection.

E. Additional Tests: Testing agency shall make additional tests of the concrete when test results indicate slump, air entrainment, concrete strengths, or other requirements have not been met, as directed by Engineer. Testing agency may conduct tests to determine adequacy of concrete by cored cylinders complying with ASTM C 42, or by other methods as directed.

## 3.14 REPAIRS AND PROTECTION

A. Remove and replace concrete pavement that is broken, damaged, or defective, or does not meet requirements in this Section.

B. Drill test cores where directed by Engineer when necessary to determine magnitude of cracks or defective areas. Fill drilled core holes in satisfactory pavement areas with portland cement concrete bonded to pavement with epoxy adhesive.

C. Protect concrete from damage. Exclude traffic from pavement for at least 14 days after placement. When construction traffic is permitted, maintain pavement as clean as possible by removing surface stains and spillage of materials as they occur.

D. Maintain concrete pavement free of stains, discoloration, dirt, and other foreign material. Sweep concrete pavement not more than two days before date scheduled for Substantial Completion inspections.

3.15 DISPOSAL

A. Remove excess material from Project site, and legally dispose of them off-site.

1. Do not allow excess materials to accumulate on-site.

**End of Section**

# SECTION 02830

# CHAIN LINK FENCE AND GATES

## PART 1 - GENERAL

### 1.1 RELATED DOCUMENTS

A. Provide all labor, materials, necessary equipment and services to complete the work called for in this Section or as shown on the plans, including but not necessarily limited to the following:

### 1.2 SUMMARY

A. Related Work: The following sections contain requirements that may apply to this section:

1. Providing and installing concrete footings.
2. Providing and installing vinyl coated chain link fence and gates as indicated on drawings.
3. Provide and install all appropriate fixtures and hardware required to complete the installation of proposed chain link fence fabric, posts, horizontal rails, tension wires, tension bars.

B. Related Work: The following sections contain requirements that may apply to this section:

1. Division 2 Section “Site Earthwork”

C. Shop Drawings: Submit Shop Drawings for approval, prior to manufacturing, describing and detailing typical line post, terminal post, gate, fabric, materials, hardware assemblies, and all proposed fence/gate alignment sections.

D. Contractor to provide certified letters from manufacturers indicating conformance with specifications, manufacturing date and lot number for all materials used on the site.

### 1.3 QUALITY ASSURANCE

A. The installer must be experienced in fencing installations. Contractor shall provide three representative fencing projects to the Owner’s Representative for the review.

B. Thoroughly inspects site, related work, and Owner-supplied materials (where applicable). Notify the Owner before bidding, of any conditions adversely affecting the performance of fencing installation.

C. All fence lines shall be staked by a Licensed Land Surveyor, retained by the Contractor, as per layout and details on the Drawings.

D. Contractor shall provide warranty stating that the fencing is secure and stable, tight, corrosion-fee, in proper alignment, complete in detail and finish, and free of hazardous conditions. Any defects that develop within one year from the date of Physical Completion shall be replaced at the expense of the Contractor.

E. Standard Specifications: All work shall conform to all applicable requirements of the following Specifications, whether specifically referred to or not, except as specifically modified herein.

1. ASTM Committee F-14 Standards on Fences (latest edition).

2. Perform all shop and field welding in accordance with the pertinent recommendations of the American Welding Society.

3. Pipe ASTM A-53.

1.4 PRODUCT HANDLING:

A. All materials are to be new and delivered to the site in an undamaged condition. Store materials off the ground and protect from damage. In the event of damage, immediately make repairs and/or replace as necessary to the approval of the Owner's Representative and at no additional cost to the Owner.

PART 2 - MATERIALS

2.1 CHAIN LINK FENCE AND GATES

A. Posts:
1. Intermediate: Shall be 2-½" tube steel
2. Terminal (End, Corner and Pull): shall be 3" tube steel and shall have moisture proof post caps with acorn type design.
3. Gate: shall be 3" tube steel and shall have moisture proof post caps with acorn type design

B. Rails:
   1. Top Rail: Top rail shall be 1-5/8" tube steel galvanized weighing 1.60 pounds per lineal foot. Top rail to pass through line post cap and form a continuous brace between terminal posts.
   2. Brace Rail: Brace rail shall be 1-5/8" galvanized tube steel weighing 1.6 pounds per lineal foot. Brace rails to be located at all terminal and gate posts and equipped with a 3/8" diameter truss rod and turnbuckle. Fences 12' high or more shall have a continuous center brace rail.

C. Fabric: 2" Chain link fabric shall be galvanized steel. The steel core wire shall be 9 gauge, coated with .30 oz./sq.ft. of zinc and have a minimum breaking strength of 1290 pounds. Fabric shall be woven in a 2" mesh and both selvages shall be knuckled.

D. Bottom Tension Wire: shall be 6-gauge coil spring wire located bottom of fabric.

E. Fittings: All fence and gate fittings shall be galvanized malleable cast iron or pressed steel. Fabric shall be secured to all terminal posts with 5/16" Hook bolts, specifically designed for that purpose. Fabric shall be secured to all top and/or bottom tension wires with 6 gauge aluminum hog rings.

F. Swing Gates: shall be of the swing type and fabricated from 1 ¼" aluminum tubing with welded corners. Fabric shall be fastened to the frame on all four sides by means of "J" bolts and 5/16" tension rods as recommended by the manufacturer.
   1. Equipment: Stop and through frame fulcrum latch.

## 2.2 VINYL COATED CHAIN LINK FENCE AND GATES

A. Manufacturer: Anchor Fence, Inc. Ph: 800-239-2963 Web: www.anchorfencecompany.com
   1. Finish: All posts, rails and fittings to be coated with 10 to 15 mils of PVC
   2. Color: Black

B. Manufacturer: Hoover Fence Co. Ph: (330) 358-2335. Web: www.hooverfence.com.
   1. Finish: All posts, rails and fittings to be coated with 10 to 15 mils of PVC
   2. Color: Black

C. Manufacturer: Master Halco Ph: 888-643-3623. Web: www.masterhalco.com.
   1. Finish: All posts, rails and fittings to be coated with 10 to 15 mils of PVC
   2. Color: Black

D. Approved equal

Posts:
1. Intermediate: Shall be 1-½" square tube steel weighing 2.49 lbs./lin ft

2. Terminal (End, Corner and Pull): shall be 2-½" square tube steel weighing at least 3.98 pounds per lineal foot and shall have a 2.0 oz. /sq. ft. zinc coating minimum and shall have moisture proof post caps with acorn type design.
3. Gate: shall be 2-½" square tube steel weighing at least 3.76 pounds per lineal foot and shall have a 2.0 oz. /sq. ft. zinc coating minimum and shall have moisture proof post caps with acorn type design

E. Rails:
1. Top Rail: Top rail shall be 1-1/2" square tube steel galvanized weighing 1.60 pounds per lineal foot. Top rail to pass through line post cap and form a continuous brace between terminal posts.
2. Brace Rail: Brace rail shall be 1-1/2" galvanized square tube steel weighing 1.6 pounds per lineal foot. Brace rails to be located at all terminal and gate posts and equipped with a 3/8" diameter truss rod and turnbuckle. Fences 12' high or more shall have a continuous center brace rail.

F. Fabric: 2" Chain link fabric shall be PVC coated galvanized steel. PVC shall be applied by the thermal fusion bonded process in accordance with ASTM F-668, Class 2b. The steel core wire shall be 9 gauge, coated with .30 oz./sq.ft. of zinc and have a minimum breaking strength of 1290 pounds. Fabric shall be woven in a 2" mesh and both selvages shall be knuckled.

G. Bottom Tension Wire: shall be 7-gauge coil spring wire located bottom of fabric, and shall be PVC coated to match the fabric.

H. Fittings: All fence and gate fittings shall be galvanized malleable cast iron or pressed steel and shall be coated with 10 to 15 mils of PVC. Fabric shall be secured to all terminal posts with 5/16" Hook bolts, specifically designed for that purpose, painted to match the color of the posts and fabric. Fabric shall be secured to all top and/or bottom tension wires with 9 gauge vinyl coated aluminum hog rings.

I. Swing Gates: shall be of the swing type and fabricated from 1 ¼"" square aluminum tubing with welded corners. Fabric shall be fastened to the frame on all four sides by means of "J" bolts and 5/16" tension rods as recommended by the manufacturer. All gate frames shall be coated with 10 to 15 mils of PVC and mounting hardware shall be painted to match the fence fabric and framework.
1. Equipment: Stop and through frame fulcrum latch.

2.3 FOOTINGS

A. CONCRETE FOOTINGS: shall be neatly and evenly crowned slightly above finished grades and all concrete shall be cleaned from all posts.

B. GROUT: shall conform to Conn. D.O.T. Form 817, dated 2016 as amended: “Non-shrink, Non-staining Grout” and Sections included therein by reference.

PART 3 - EXECUTION

3.1 GENERAL

A. Install fencing and gates where as indicated on Drawings.
B. All posts shall be set plumb and held at a constant vertical and horizontal alignment.
C. Intermediate or line posts to be driven.
D. Posts are to be set in concrete footings.

3.2 VINYL COATED CHAIN LINK FENCE

A. Install: Fence and gates to the lines and details shown on the Drawings and in conformance with Conn. D.O.T. Form 817, dated 2016: “Chain Link Fence” Section 9.13 and Sections included therein by reference. Any damaged PVC or painted surface shall be touched up with vinyl paint recommended by the manufacturer.

B. Footing: Shall be a minimum of 1” above finish grade, and then toweled smoothly down to finish grade around the footing’s outer edge creating a conical cap around the post, for positive drainage. The conical footing cap can also be created by troweling on mortar after post footing has cured, at the Contractor’s discretion.

3.3 CLEAN UP

A. Job site shall be cleared of all excess material (concrete, wire, rails, pipe, etc.). All areas impacted by construction shall be re-seeded and graded and restored to as good or as better than original condition.

**End of Section**

# SECTION 02917

# SOIL PREPARATION

## PART 1 - GENERAL

### 1.1 RELATED DOCUMENTS:

A. Drawings and general provisions of the Contract, including General and Supplementary Conditions and Division 1 Specifications Sections, apply to this section.

### 1.2 SUMMARY:

A. Provide all labor, materials, necessary equipment and services to complete the work called for in this Section or as shown on the plans, including but not necessarily limited to the following

1. Topsoil
2. pH Adjusters
3. Soil Conditioners
4. Fertilizer
5. Pesticides
6. Landscape grading.

B. Related Work: The following sections contain requirements that may apply to this section

1. Division 2 Section “Plants”
2. Division 2 Section “Site Earthwork”

### 1.3 SUBMITTALS:

A. Division 1 - Submittal Requirements: Procedures for submittals.

1. Product Data: Manufacturer's data including installation and storage instructions for each product specified.
2. Assurance/Control Submittals:

a. Pesticide Control Plan: Proposed sequence of pesticide work. Include common name, chemical composition, formulation, concentration, rate and method of application, for all products furnished; and names of state certified applicator(s), in the appropriate category.

b. Test Reports: Topsoil composition

c. Certifications: Certify that topsoil, lime, aluminum sulfate and conforms to requirements specified.

d. Field Reports: Pesticide application, in duplicate.

e. Qualification Documentation: Pesticide applicator documentation of experience indicating compliance with specified qualification requirements.

1.4 QUALITY ASSURANCE:

A. Applicator Qualification: Applicator specializing in performing work of this Section with minimum 5 years documented experience.

1. Pesticide applicator: state certified, using procedures, materials and equipment of type required for work.

B. Regulatory Requirements: Conform to applicable requirements of the Local and State Department of Agriculture Extension Service of the state in which the project is located.

1.5 DELIVERY, STORAGE AND HANDLING:

A. Transport, handle, store, and protect products.

B. Deliver materials to job site in unopened containers bearing manufacturer's name and content identification, Environmental Protection Agency (EPA) registration number and manufacturer's registered uses.

C. Store materials as recommended by manufacturer.

1.6 PROJECT CONDITIONS OR SITE CONDITIONS:

A. Environmental Requirements:

1. Protection of Personnel Property: Apply pesticides so damage will not result to personnel or property from either direct spray or drifting of chemicals both on and off site.
2. Disposal of Excess Chemicals and Containers: In accordance with Federal, State laws and local rules and regulations.

PART 2 – PRODUCTS

2.1 TOPSOIL:

A. Topsoil: Approved by Testing Laboratory and the owner.

1. Containing from 5 to 20 percent organic matter as determined by soil testing service, maximum particle size ½", and with maximum 3 percent retained on ¼ inch screen.

   a. Screened
      Free of roots, rocks larger than ½", subsoil, debris, large weeds, and foreign matter.
   b. PH: 5.5 to 7.0
   c. Soluble Salts: 600 ppm maximum

2. Acceptable Textural Classes with component percentages as established by the USDA Classification system.

   a. Loamy Sand
      Sandy Loam
   b. Loam
   c. Silt loam: with a maximum of 60% silt

3. Soil Analysis: Provide with each load of on-site or imported topsoil.

   a. Imported borrow.
   b. Friable loam.
   c. Free of roots, rocks larger than 1/2 inch, subsoil, debris, large weeds, and foreign matter.

4. Obtain the topsoil from only naturally occurring, well-drained sites where topsoil occurs in minimum depth of 4": do not obtain from bogs, marshes, or wetland areas.

2.2 pH ADJUSTERS:

A. Lime:

1. Natural dolomitic limestone containing not less than 85 percent of total carbonates with a minimum of 30 percent magnesium carbonates.
2. Gradation: Minimum 75 percent passing 100-mesh sieve and 100 percent passing 20-mesh sieve.

B. Ferrous Sulfate: Commercial grade.

2.3 SOIL CONDITIONERS:

A. Use singly or in combinations required to meet requirements for topsoil.

B. Soil Conditioners: Nontoxic to plants.

C. Organic Material:

1. Stable humus-like material produced from the aerobic decomposition of bio-solids amended with yard waste. Agricultural residues and/or separated municipal solids waste manufactured by All-Gro (800) 662-2440, or approved equal.

D. Sand: Clean and free of materials harmful to plants.

E. Rotted Manure:

1. Well-rotted horse or cattle manure containing maximum 25 percent by volume of straw, sawdust, or other bedding materials; free of stones, sticks and soil.

F. Calcined Clay:

1. Granular particles produced from montmorillonite clay calcined to minimum temperature or 1200 degrees F to the following graduation:

a. Minimum 90 percent passing 8-mesh screen.
b. 99 percent retained on 60-mesh screen.
c. Maximum 2 percent passing 100-mesh screen.

2. Bulk Density: 40 pounds maximum per cubic foot.

2.4 FERTILIZER:

A. Specified in Section 02920.

2.5 PESTICIDES:

A. Specified in Section 02920.

PART 3 - EXECUTION

3.1 EXAMINATION:

A. Division 1 - Execution Requirements: Verification of existing conditions before starting work.

B. Verification of Conditions: Verify that field measurements, surfaces, and conditions are as required, and ready to receive work.

C. Report in writing to owner representative prevailing conditions that will adversely affect satisfactory execution of the work of this Section. Do not proceed with work until unsatisfactory conditions have been corrected.

D. By beginning work, Contractor accepts conditions and assumes responsibility for correcting unsuitable conditions encountered at no additional cost to the owner.

3.2 PREPARATION:

A. Subgrade:

1. After areas required to be landscaped have been brought to required subgrade, thoroughly till to minimum depth of 6 inches by scarifying, disking, harrowing, or other approved methods.
2. Remove debris and stones larger than one inch in any dimension remaining on surface after tillage.

3.3 TOPSOIL APPLICATION:

A. Immediately prior to placing topsoil, scarify subgrade to a 2-inch depth for bonding of topsoil with subsoil.

B. Grass Seed Areas: Spread topsoil evenly to a minimum depth of 6 inches. Do not spread topsoil when frozen or excessively wet or dry.

C. Existing Lawns: Scarify existing lawn area to be loamed to provide drainage through existing turf. Spread topsoil to fill holes depressions, and valleys, grade to drain. Feather edges using a hand rake to provide a smooth transition to adjacent lawn areas. Avoid damaging adjacent lawn areas to remain.

D. Plant Beds and Ground Cover Beds: Spread topsoil evenly to a depth of 12 inches and lightly compact. Till to minimum depth of 6 inches. Where planting in existing soil, spread organic material uniformly over bed to minimum depth of 3 inches and thoroughly incorporate into existing soil to a minimum depth of 6 inches to obtain a uniform soil mix. During tillage operations remove all sticks, stones, roots, and other objectionable materials. Bring plant beds to a smooth and even surface conforming to established grades.

E. Areas indicated to be seeded with “Warm season mix” and “Erosion Control Restoration Mix” to receive min 6” existing topsoil.

F. Areas to be seeded with “Wetland Seed Mix” to receive min 6” topsoil removed from the site disturbed wetlands.

G. Correct irregularities in finished surfaces to eliminate depressions.

H. Protect finished topsoil areas from damage by vehicular or pedestrian traffic.

## 3.4 FERTILIZER, pH ADJUSTERS, AND SOIL CONDITIONERS

A. Application:

1. Apply fertilizer pH adjuster and soil conditioner at rates and analysis determined by laboratory soil tests of soils at job site and topsoil supplied from off site sources.
2. Apply at rates equal to manufacturer’s recommendations.

B. Tillage: Incorporate fertilizer, pH adjusters and soil conditioners into soil to minimum depth of 6 inches. This may be done as part of the subgrade tillage operation specified above.

**End of Section**

# SECTION 03301

# MISCELLANEOUS CAST-IN-PLACE CONCRETE

## PART 1 - GENERAL

### 1.1 RELATED DOCUMENTS

A. Drawings and general provisions of the Contract, including General and Supplementary Conditions and Division 1 Specification Sections, apply to this Section.

### 1.2 SUMMARY

A. This Section specifies cast-in-place concrete, including reinforcement, concrete materials, mix design, placement procedures, and finishes.

B. Cast-in-place concrete applications include the following:
   1. Concrete stairs

C. Related Sections include the following:
   1. Division 2 Section "Site Earthwork" for subgrade preparation, grading, and subbase course.

### 1.3 SUBMITTALS

A. Material Certificates: Signed by manufacturers certifying that each of the following items complies with requirements:
   1. Design mixes.
   2. Cementitious materials and aggregates.
   3. Form materials and form-release agents.
   4. Steel reinforcement and reinforcement accessories.
   5. Admixtures.
   6. Curing materials.
   7. Bonding agents.
   8. Joint-filler strips.

### 1.4 QUALITY ASSURANCE

A. Installer Qualifications: An experienced installer who has completed concrete work similar in material, design, and extent to that indicated for this Project and whose work has resulted in construction with a record of successful in-service performance.

B. Manufacturer Qualifications: A firm experienced in manufacturing ready-mixed concrete products complying with ASTM C 94 requirements for production facilities and equipment.

C. Source Limitations: Obtain each type of cement of the same brand from the same manufacturer's plant, each aggregate from one source, and each admixture from the same manufacturer.

D. Comply with ACI 301, "Specification for Structural Concrete," including the following, unless modified by the requirements of the Contract Documents.
   1. General requirements, including quality assurance, acceptance of structure, and protection of in-place concrete.
   2. Formwork and form accessories.
   3. Steel reinforcement and supports.
   4. Concrete mixtures.
   5. Handling, placing, and constructing concrete.

1.5 DELIVERY, STORAGE, AND HANDLING

A. Deliver, store, and handle steel reinforcement to prevent bending and damage.

1.6 PROJECT CONDITIONS

A. Traffic Control: Maintain access for vehicular and pedestrian traffic as required for other construction activities.

PART 2 - PRODUCTS

2.1 FORMWORK

A. Furnish formwork and form accessories according to ACI 301.

2.2 STEEL REINFORCEMENT

A. Reinforcing Bars: ASTM A 615/A 615M, Grade 60, deformed.

B. Plain-Steel Wire: ASTM A 82/A 82M, as drawn.

C. Plain-Steel Welded Wire Reinforcement: ASTM A 185/A 185M, fabricated from as-drawn steel wire into flat sheets.

D. Deformed-Steel Welded Wire Reinforcement: ASTM A 497/A 497M, flat sheet.

2.3 CONCRETE MATERIALS

A. General: Use the same brand and type of cementitious material from the same manufacturer throughout the Project.

B. Portland Cement: ASTM C 150, Types I or II or Type I/II.

C. Normal-Weight Aggregate: ASTM C 33, uniformly graded, not exceeding 1-inch nominal size.

D. Water: Potable and complying with ASTM C 94.

2.4 ADMIXTURES

A. General: Admixtures certified by manufacturer to contain not more than 0.1 percent water-soluble chloride ions by mass of cement and to be compatible with other admixtures. Do not use admixtures containing calcium chloride.

B. Air-Entraining Admixture: ASTM C 260.

C. Water-Reducing Admixture: ASTM C 494, Type A.

2.5 RELATED MATERIALS

A. Expansion- and Isolation-Joint-Filler Strips: ASTM D 1751, asphalt-saturated cellulosic fiber, or ASTM D 1752, cork or self-expanding cork.

2.6 CURING MATERIALS

A. Evaporation Retarder: Waterborne, monomolecular film forming, manufactured for application to fresh concrete.

B. Absorptive Cover: AASHTO M 182, Class 2, burlap cloth made from jute or kenaf, weighing approximately 9 oz./sq. yd. dry.

C. Moisture-Retaining Cover: ASTM C 171, polyethylene film or white burlap-polyethylene sheet.

D. Water: Potable.

E. Clear, Waterborne, Membrane-Forming Curing Compound: ASTM C 309, Type 1, Class B.

F. Clear, Waterborne, Membrane-Forming Curing and Sealing Compound: ASTM C 1315, Type 1, Class A.

2.7 CONCRETE MIXES

A. Comply with ACI 301 requirements for concrete mixtures.

B. Prepare design mixes, proportioned according to ACI 211.1 and ACI 301, for each type and strength of normal-weight concrete determined by either laboratory trial mix or field test data bases, as follows:

1. Compressive Strength (28 Days) minimum: 3000 psi.

2. Slump: 4 inches.

C. Add air-entraining admixture at manufacturer's prescribed rate to result in concrete at point of placement having an air content of 6.0 percent within a tolerance of plus 1.0 or minus 1.5 percent.

2.8 CONCRETE MIXING

A. Ready-Mixed Concrete: Comply with ASTM C 94.

1. When air temperature is between 85 and 90 deg F, reduce mixing and delivery time from 1-1/2 hours to 75 minutes; when air temperature is above 90 deg F, reduce mixing and delivery time to 60 minutes.

PART 3 - EXECUTION

3.1 PREPARATION

A. Proof-roll prepared subbase surface to check for unstable areas and verify need for additional compaction. Proceed with pavement only after nonconforming conditions have been corrected and subgrade is ready to receive pavement.

B. Remove loose material from compacted subbase surface immediately before placing concrete.

3.2 FORMWORK

A. Design, erect, shore, brace, and maintain formwork, according to ACI 301, to support vertical, lateral, static, and dynamic loads, and construction loads that might be applied, until concrete structure can support such loads.

B. Construct formwork so concrete members and structures are of size, shape, alignment, elevation, and position indicated, within tolerance limits of ACI 117.

C. Limit concrete surface irregularities, designated by ACI 347R as abrupt or gradual, as follows:
   1. Class A, 1/8 inch.
      a. Exposed to view surfaces for retaining walls and stairs.

D. Construct forms tight enough to prevent loss of concrete mortar.

E. Fabricate forms for easy removal without hammering or prying against concrete surfaces. Provide crush or wrecking plates where stripping may damage cast concrete surfaces. Provide top forms for inclined surfaces steeper than 1.5 horizontal to 1 vertical. Kerf wood inserts for forming keyways, reglets, recesses, and the like, for easy removal.

   1. Do not use rust-stained steel form-facing material.

F. Set edge forms, bulkheads, and intermediate screed strips for slabs to achieve required lines, grades, elevations and slopes in finished concrete surfaces. Provide and secure units to support screed strips; use strike-off templates or compacting-type screeds.

G. Provide temporary openings for cleanouts and inspection ports where interior area of formwork is inaccessible. Close openings with panels tightly fitted to forms and securely braced to prevent loss of concrete mortar. Locate temporary openings in forms at inconspicuous locations.

H. Chamfer exterior corners and edges of permanently exposed concrete.

I. Form openings, chases, offsets, sinkages, keyways, reglets, blocking, screeds, and bulkheads required in the Work. Determine sizes and locations from trades providing such items.

J. Clean forms and adjacent surfaces to receive concrete. Remove chips, wood, sawdust, dirt, and other debris just before placing concrete.

K. Retighten forms and bracing before placing concrete, as required, to prevent mortar leaks and maintain proper alignment.

L. Coat contact surfaces of forms with form-release agent, according to manufacturer's written instructions, before placing reinforcement.

3.3 EMBEDDED ITEMS

A. Place and secure anchorage devices and other embedded items required for adjoining work that is attached to or supported by cast-in-place concrete. Use Setting Drawings, templates, diagrams, instructions, and directions furnished with items to be embedded.

1. Install anchor bolts, accurately located, to elevations required.

3.4 REMOVING AND REUSING FORMS

A. General: Formwork, for sides of beams, walls, columns, and similar parts of the Work, that does not support weight of concrete may be removed after cumulatively curing at not less than 50 deg F for 24 hours after placing concrete provided concrete is hard enough to not be damaged by form-removal operations and provided curing and protection operations are maintained.

B. Leave formwork, for beam soffits, joists, slabs, and other structural elements, that supports weight of concrete in place until concrete has achieved the following:

1. At least 70 percent of 28-day design compressive strength.

2. Determine compressive strength of in-place concrete by testing representative field- or laboratory-cured test specimens according to ACI 301.

3. Remove forms only if shores have been arranged to permit removal of forms without loosening or disturbing shores.

C. Clean and repair surfaces of forms to be reused in the Work. Split, frayed, delaminated, or otherwise damaged form-facing material will not be acceptable for exposed surfaces. Apply new form-release agent.

D. When forms are reused, clean surfaces, remove fins and laitance, and tighten to close joints. Align and secure joints to avoid offsets. Do not use patched forms for exposed concrete surfaces unless approved by Engineer.

3.5 STEEL REINFORCEMENT

A. General: Comply with CRSI's "Manual of Standard Practice" for placing reinforcement.

B. Clean reinforcement of loose rust and mill scale, earth, ice, and other foreign materials.

C. Accurately position, support, and secure reinforcement against displacement. Locate and support reinforcement with bar supports to maintain minimum concrete cover. Do not tack weld crossing reinforcing bars.

D. Set wire ties with ends directed into concrete, not toward exposed concrete surfaces.

3.6 JOINTS

A. General: Construct joints true to line with faces perpendicular to surface plane of concrete.

1. When joining existing pavement, place transverse joints to align with previously placed joints, unless otherwise indicated.

B. Construction Joints: Locate and install so as not to impair strength or appearance of concrete, at locations indicated or as approved by Engineer.

C. Isolation (Expansion) Joints: Install joint-filler strips at junctions with slabs-on-grade and vertical surfaces, such as column pedestals, foundation walls, grade beams, and other locations, as indicated.

1. Extend joint fillers full width and depth of joint, terminating flush with finished concrete surface, unless otherwise indicated.

D. Contraction (Control) Joints in Slabs-on-Grade: Form weakened-plane contraction joints, sectioning concrete into areas as indicated. Construct contraction joints for a depth equal to at least one-fourth of the concrete thickness, as follows:

1. Grooved Joints: Form contraction joints after initial floating by grooving and finishing each edge of joint with groover tool to a radius of 1/8 inch. Repeat grooving of contraction joints after applying surface finishes. Eliminate groover marks on concrete surfaces.

3.7 CONCRETE PLACEMENT

A. Inspection: Before placing concrete, inspect and complete formwork installation, reinforcement steel, and items to be embedded or cast in. Notify other trades to permit installation of their work.

B. Remove snow, ice, or frost from subbase surface and reinforcement before placing concrete. Do not place concrete on frozen surfaces.

C. Moisten subbase to provide a uniform dampened condition at the time concrete is placed. Do not place concrete around manholes or other structures until they are at the required finish elevation and alignment.

D. Comply with recommendations in ACI 304R for measuring, mixing, transporting, and placing concrete.

E. Do not add water to concrete during delivery, at Project site, or during placement.

F. Consolidate concrete with mechanical vibrating equipment.

G. Deposit concrete continuously or in layers of such thickness that no new concrete will be placed on concrete that has hardened enough to cause seams or planes of weakness. If a section cannot be placed continuously, provide construction joints as specified. Deposit concrete to avoid segregation.

H. Deposit concrete in forms in horizontal layers no deeper than 24 inches and in a manner to avoid inclined construction joints. Place each layer while preceding layer is still plastic, to avoid cold joints.

1. Consolidate placed concrete with mechanical vibrating equipment. Use equipment and procedures for consolidating concrete recommended by ACI 309R.

2. Do not use vibrators to transport concrete inside forms. Insert and withdraw vibrators vertically at uniformly spaced locations no farther than the visible effectiveness of the vibrator. Place vibrators to rapidly penetrate placed layer and at least 6 inches into preceding layer. Do not insert vibrators into lower layers of concrete that have begun to lose plasticity. At each insertion, limit duration of vibration to time necessary to consolidate concrete and complete embedment of reinforcement and other embedded items without causing mix constituents to segregate.

I. Deposit and consolidate concrete for floors and slabs in a continuous operation, within limits of construction joints, until placement of a panel or section is complete.

1. Consolidate concrete during placement operations so concrete is thoroughly worked around reinforcement and other embedded items and into corners.
2. Maintain reinforcement in position on chairs during concrete placement.
3. Screed slab surfaces with a straightedge and strike off to correct elevations.
4. Slope surfaces uniformly to drains where required.
5. Begin initial floating using bull floats or darbies to form a uniform and open-textured surface plane, free of humps or hollows, before excess moisture or bleedwater appears on the surface. Do not further disturb slab surfaces before starting finishing operations.

J. Cold-Weather Placement: Comply with ACI 306.1 and as follows. Protect concrete work from physical damage or reduced strength that could be caused by frost, freezing actions, or low temperatures.
   1. When air temperature has fallen to or is expected to fall below 40 deg F, uniformly heat water and aggregates before mixing to obtain a concrete mixture temperature of not less than 50 deg F and not more than 80 deg F at point of placement.
   2. Do not use frozen materials or materials containing ice or snow. Do not place concrete on frozen subgrade or on subgrade containing frozen materials.
   3. Do not use calcium chloride, salt, or other materials containing antifreeze agents or chemical accelerators, unless otherwise specified and approved in mix designs.

K. Hot-Weather Placement: Place concrete according to recommendations in ACI 305R and as follows, when hot-weather conditions exist:
   1. Cool ingredients before mixing to maintain concrete temperature below 90 deg F at time of placement. Chilled mixing water or chopped ice may be used to control temperature, provided water equivalent of ice is calculated to total amount of mixing water. Using liquid nitrogen to cool concrete is Contractor's option.
   2. Cover steel reinforcement with water-soaked burlap so steel temperature will not exceed ambient air temperature immediately before embedding in concrete.
   3. Fog-spray forms, steel reinforcement, and subgrade just before placing concrete. Keep subgrade moisture uniform without standing water, soft spots, or dry areas.

## 3.8 FINISHING FORMED SURFACES

A. Rough-Formed Finish: As-cast concrete texture imparted by form-facing material with tie holes and defective areas repaired and patched, and fins and other projections exceeding 1/4 inch in height rubbed down or chipped off.
   1. Apply to concrete surfaces not exposed to public view.

B. Smooth-Formed Finish: As-cast concrete texture imparted by form-facing material, arranged in an orderly and symmetrical manner with a minimum of seams. Repair and patch tie holes and defective areas. Completely remove fins and other projections.
   1. Apply to concrete surfaces exposed to public view or to be covered with a coating or covering material applied directly to concrete, such as waterproofing, dampproofing, veneer plaster, or painting.
   2. Apply the following rubbed finish, defined in ACI 301, to smooth-formed finished concrete.
      a. Smooth-rubbed finish.

C. Related Unformed Surfaces: At tops of walls, horizontal offsets, and similar unformed surfaces adjacent to formed surfaces, strike off smooth and finish with a texture matching adjacent formed surfaces. Continue final surface treatment of formed surfaces uniformly across adjacent unformed surfaces, unless otherwise indicated.

3.9 FINISHING UNFORMED SURFACES

A. General: Comply with ACI 302.1R for screeding, restraightening, and finishing operations for concrete surfaces. Do not wet concrete surfaces.

B. Screed surfaces with a straightedge and strike off. Begin initial floating using bull floats or darbies to form a uniform and open-textured surface plane before excess moisture or bleedwater appears on the surface.

1. Do not further disturb surfaces before starting finishing operations.

C. Float Finish: Begin the second floating operation when bleed-water sheen has disappeared and the concrete surface has stiffened sufficiently to permit operations. Float surface with power-driven floats, or by hand floating if area is small or inaccessible to power units. Finish surfaces to true planes. Cut down high spots, and fill low spots. Refloat surface immediately to uniform granular texture.

D. Nonslip Broom Finish: Apply a nonslip broom finish to exterior concrete platforms, steps, and ramps. Immediately after float finishing, roughen finished concrete surface 1/16 to 1/8 inch deep with a stiff-bristled broom, perpendicular to line of traffic.

3.10 TOLERANCES

A. Comply with ACI 117, "Specifications for Tolerances for Concrete Construction and Materials."

B. Comply with the additional requirements for pavements.
1. Elevation: 1/4 inch.
2. Thickness: Plus 3/8 inch, minus 1/4 inch.
3. Surface: Gap below 10-foot- long, unleveled straightedge not to exceed 1/4 inch.
4. Joint Spacing: 3 inches.
5. Contraction Joint Depth: Plus 1/4 inch, no minus.
6. Joint Width: Plus 1/8 inch, no minus.

3.11 CONCRETE PROTECTION AND CURING

A. General: Protect freshly placed concrete from premature drying and excessive cold or hot temperatures. Comply with ACI 306.1 for cold-weather protection,

and follow recommendations in ACI 305R for hot-weather protection during curing.

B. Begin curing after finishing concrete, but not before free water has disappeared from concrete surface.

C. Curing Methods: Cure formed and unformed concrete for at least seven days by moisture curing, moisture-retaining-cover curing, curing compound, or a combination of these as follows:

1. Moisture Curing: Keep surfaces continuously moist for not less than seven days with the following materials:
   a. Water.
   b. Continuous water-fog spray.
   c. Absorptive cover, water saturated and kept continuously wet. Cover concrete surfaces and edges with 12-inch lap over adjacent absorptive covers.

2. Moisture-Retaining-Cover Curing: Cover concrete surfaces with moisture-retaining cover for curing concrete, placed in widest practicable width, with sides and ends lapped at least 12 inches, and sealed by waterproof tape or adhesive. Immediately repair any holes or tears during curing period using cover material and waterproof tape.

3. Curing Compound: Apply uniformly in continuous operation by power spray or roller according to manufacturer's written instructions. Recoat areas subjected to heavy rainfall within three hours after initial application. Maintain continuity of coating and repair damage during curing period.

## 3.12 FIELD QUALITY CONTROL

A. Testing Agency: Owner will engage a qualified independent testing and inspecting agency to sample materials, perform tests, and submit test reports during concrete placement. Tests will be performed according to ACI 301.

1. Testing Frequency: Obtain one composite sample for each day's pour of each concrete mix exceeding 5 cu. yd., but less than 25 cu. yd., plus one set for each additional 50 cu. yd. or fraction thereof.

## 3.13 REPAIRS AND PROTECTION

A. Remove and replace concrete that does not comply with requirements in this Section.

B. Remove and replace concrete pavement that is broken, damaged, or defective, or does not meet requirements in this Section.

C. Protect concrete from damage. Exclude traffic from pavement for at least 14 days after placement. When construction traffic is permitted, maintain pavement as clean as possible by removing surface stains and spillage of materials as they occur.

D. Maintain concrete pavement free of stains, discoloration, dirt, and other foreign material. Sweep concrete pavement not more than two days before date scheduled for Substantial Completion inspections.

**End of Section**

# SECTION 03 35 53

# POLISHED CONCRETE FINISHING

## PART 1 GENERAL

### 1.1 GENERAL REQUIREMENTS

A. Work of this Section, as shown or specified, shall be in accordance with the requirements of the Contract Documents.

### 1.2 SECTION INCLUDES

A. Work of this Section includes all labor, materials, equipment, and services necessary to complete the polished concrete floor finish.

### 1.3 RELATED SECTIONS

A. Cast-in-Place Concrete - Section 033000.

### 1.4 REFERENCES

A. American Concrete Institute (ACI): ACI 302.1R Guide for Concrete Floor and Slab Construction.

B. ASTM International:

1. ASTM C 109, Compressive Strength Air-Cure Only.
2. ASTM C 348, Flexural Strength of Hydraulic-Cement Mortar.
3. ASTM F 710, Standard Test Method for pH.
4. ASTM F 1869, Moisture Vapor Emission Rate of Concrete Subfloor Using Anhydrous Calcium Chloride.
5. ASTM F 2170, Standard Test Method for Determining Relative Humidity in Concrete Floor Slab Using In-Situ-Probes.
6. ASTM E 430, Standard Test Method for Measurement of Gloss of High-Gloss Surfaces by Abridged Goniophotometry.

C. National Floor Safety Institute (NFSI): NFSI Test Method 101-A Standard for Evaluating High-Traction Flooring Materials, Coatings, and Finishes.

### 1.5 PERFORMANCE REQUIREMENTS

A. Provide polished flooring that has been selected, manufactured and installed to achieve the following:

1. Abrasion Resistance: ASTM C 779, Method A, high resistance, no more than 0.008" (0.20 mm) wear in 30 minutes.

2. Reflectivity: Increase of 35% as determined by standard gloss meter.

3. Waterproof Properties: Rilem Test Method 11.4, 70% or greater reduction in absorption.

4. Dynamic Coefficient of Friction: DCOF range of 0.35 to 0.45 under wet conditions when measured according to ANSI B101.3.

1.6 SUBMITTALS

A. Shop Drawings: Provide information on shop drawings as follows:

1. Typical layout including dimensions and floor grinding schedule.

2. Plan view of floor and joint pattern layout.

3. Areas to receive colored surface treatment.

4. Hardener, sealer, densifier in notes.

B. Samples: Submit 24" x 24" samples showing sheen and full chemical treatments, including colorant, for Architect's approval.

C. Product Data: Submit product data, including manufacturer’s SPEC-DATA® product sheet, for specified products.

1. Material Safety Data Sheets (MSDS).

2. Preparation and concrete grinding procedures.

3. Colored Concrete Surface, Dye Selection Guides.

D. Quality Assurance for Submittals:

1. Technicians and supervisors must be CPAA certified as a Craftsman or Master Craftsman; submit letter to this effect to the Architect.

2. Test Reports: Certified test reports showing compliance with specified performance characteristics and physical properties as cited in 1.5 Performance Requirements.

3. Certificates:

a. Product certificates signed by manufacturer certifying that materials comply with specified performance characteristics and criteria and physical requirements.
b. Letter of certification from the National Floor Safety Institute confirming that the system has been tested and has passed Phase Two Level of certification when tested by Method 101-A.
c. Current contractor's certificate signed by manufacturer declaring contractor is an approved installer of polishing system.

4. Manufacturer's installation instructions.

E. Warranty: Submit warranty documents specified.

F. Provide the following:

1. Manufacturer's instructions on maintenance renewal of applied treatments.

2. Protocols and product specifications for joint filing, crack repair and/or surface repair.

1.7 QUALITY ASSURANCE

A. Source Quality Control: Ensure concrete finishing components and materials are from single manufacturer.

B. Qualifications:

1. Installer must have a minimum of five (5) years' experience installing polished concrete floors and must be trained and certified by both the equipment and chemical manufacturer to process polished concrete and be certified by the Concrete Polishing Association of America (CPAA) as noted in Article 1.6, Para. D.1 herein.

2. Manufacturer Qualifications: Manufacturer capable of providing field service representation during construction and approving application method.

C. Regulatory Requirements: NFSI Test Method 101-A Phase Two Level High Traction Material.

D. Mock-Ups: Provide 100 sf sample panel at job site, at location as directed by the Architect, installed under conditions similar to those which will exist during actual placement.

1. Mock-up will be used to judge workmanship, concrete substrate preparation, operation of equipment, material application, color selection and shine.

2. Allow 24 hours for inspection of mock-up before proceeding with work.

3. When accepted, mock-up will demonstrate minimum standard of quality required for this work. Approved mock-up may remain as part of finished work.

E. Preinstallation Meetings: Conduct a preinstallation meeting to verify project requirements, manufacturer's installation instructions and manufacturer's warranty requirements. Other items for agenda of preinstallation meetings shall include, but not be limited to, the following:

1. Environmental requirements.

2. Scheduling and phasing of work.

3. Coordinating with other work and personnel.

4. Protection of adjacent surfaces.

5. Surface preparation.

6. Repair of defects and defective work prior to installation.

7. Cleaning.

8. Installation of polished floor finishes.

9. Application of liquid hardener, densifier.

10. Protection of finished surfaces after installation.

F. Coordination with Section 033000:

1. Concretet to receive polished finish shall not contain admixtures, plasticizers, slag, fly ash, or other products replacing Portland cement in the mix.

2. Concrete to receive polished finish shall be wet cured in accordance with ACI 308, "Guide to Curing Concrete."

3. Concrete to receive polished finish shall not contain any air-entraining agents.

4. Floor Flatness and Levelness: Slab to receive polished concrete must conform to the following:

   a. Flatness: Overall value 50; minimum local value 35.
   b. Levelness: Overall value 30; minimum local value 20.

5. Conform to the minimum recommendations of CPAA.

6. Size of aggregate to be coordinated with desired finish per approved sample and mock-up.

1.8 DELIVERY, STORAGE AND HANDLING

A. Delivery: Deliver materials in manufacturer's original packaging with identification labels and seals intact.

B. Storage and Protection:

1. Store materials protected from exposure to harmful weather conditions and at temperature conditions recommended by manufacturer.

2. Protect concrete slab.

   a. Protect from petroleum stains during construction.
   b. Diaper hydraulic power equipment.
   c. Restrict vehicular parking.
   d. Restrict use of pipe cutting machinery.
   e. Restrict placement of reinforcing steel on slab.
   f. Restrict use of acids or acidic detergents on slab.

1.9 PROJECT CONDITIONS

A. Ambient Conditions: Comply with manufacturer's written recommendations.

1.10 SEQUENCING

A. Sequence with Other Work: Comply with manufacturer's written recommendations for sequencing construction operations.

1.11 WARRANTY

A. Manufacturer's Warranty: Submit, for Owner's acceptance, 10-year finish warranty, commencing on the date of acceptance by the Owner, executed by an authorized company official. Manufacturer's warranty is in addition to, and does not limit, other rights Owner may have under Contract Documents.

1.12 EXTRA MATERIALS

A. Contractor to provide maintenance materials to allow for 5% of materials installed.

PART 2 PRODUCTS

2.1 POLISHED CONCRETE FINISHING PRODUCTS

A. Portland Cement-based Self-Leveling Topping to Suitable to Receive a Mechanical Polish Concrete Process.

B. Manufacturer: ARDEX Engineered Cements, or approved equal.

1. ARDEX PC-T Polished Concrete Topping; ARDEX Engineered Cements: 400 ARDEX Park Drive Aliquippa, PA 15001, 1-888-512-7339, www.ardexamericas.com

   a. Primer: ARDEX EP 2000 Substrate Preparation Epoxy.
   b. Water: Clean, potable and sufficiently cool (not warmer than 70°F/21°C).

2. Performance and Physical Properties: Meet or exceed the following values for material cured at 70°F (20°C) and 50% relative humidity:

   a. Flow Time: 10 minutes.
   b. Initial Set: Approx. 30 minutes.
   c. Final Set: Approx. 90 minutes.
   d. Compressive Strength: 6200 psi at 28 days, ASTM C 109.
   e. Flexural Strength: 1000 psi at 28 days, ASTM C 78.
   f. VOC: 0 g/l, calculated SCAQMD Rule 1168.

3. Repair Materials

   a. Where spalls, repair or minor patchwork is necessary apply ARDEX PC-R as necessary and in accordance with recommendations, applied at the appropriate time during the polishing process.

b. If necessary, correct excessive pinholes with ARDEX PC-M. Contact the ARDEX Technical Services department for recommendations.

2.2 CONCRETE POLISH EQUIPMENT AND TOOLING

A. Equipment and tooling for use as part of the multi-step dry mechanical process and accessories. Acceptable products include:

1. DIAMATIC BMG-780 or BMG-735 Planetary Grinder and Polisher or equal.

   a. Features: Large Platform: 32" planetary floor polisher. Head pressure of 600 lbs. or equivalent.
   b. Required Tooling: DIAMATIC Diamond Abrasives or equal.
      1). Metal Bonded Diamonds - 60/80 Grit of medium and hard bonded metal.
      2). Transitional Diamonds Ceramic Bonded - #1 Grit.
      3). Resin Bonded Diamonds - 200, 400, 800, 1500 Grit.

2. DIAMATIC Micro Polisher – Burnishers or equal

   a. Specific weight and RPM are required to reach temperature of 100˚F for application of ARDEX PC FINISH.
   b. Required Tooling: DIAMATIC FLOR-GRIT Diamond Impregnated Pads - 800, 1500, 3000 Grit or equal.

3. Other equipment as necessary for small areas and edge work.

4. Power generator capable of supplying a minimum output of 30kw and up, and 480 Volt three phase power.

5. All grinding and polishing completed with grinder/polisher equipment should be connected to a dust collector.

2.3 CONCRETE TREATMENT CHEMICALS

A. Concrete treatments designed for use in conjunction with the installation of the ARDEX PC-T and the ARDEX Polished Concrete System. Acceptable products include:

1. Treatment Chemicals; ARDEX Engineered Cements: 400 ARDEX Park Drive Aliquippa, PA 15001, 1-888-512-7339, www.ardexamericas.com

   a. Densifier: ARDEX PC 10 Lithium Hardener for ARDEX PC-T.
   b. Finish Treatment: ARDEX PC FINISH Stain and Wear Protection Treatment.
   c. Maintenance Treatment: DIAMATIC FLOR Maintainer™ Gloss, Stain and Wear Protectant or equal.

PART 3 EXECUTION

3.1 MANUFACTURER'S INSTRUCTIONS

A. Compliance: Comply with manufacturer's written data, including product technical bulletins, product catalog installation instructions, and product carton installation instructions.

B. Use only manufacturer's certified installers.

3.2 EXAMINATION

A. Site Verification of Conditions

1. Verify that concrete substrate conditions, which have been previously installed under other sections, are acceptable for product installation in accordance with concrete finishing manufacturer's instructions prior to installation of concrete finishing materials.

2. Concrete substrates to receive polished concrete finish must have moisture level below acceptable limits of the manufacturer when tested per ASTM F 2170. Results of such tests must be submitted to the manufacturer, who shall verify same in writing to the Architect.

B. Verify Concrete Slab Performance Requirements:

1. Verify concrete is fully cured to 28-day minimum 3500 psi strength.

2. Verify concrete surfaces received a hard steel-trowel finish (minimum 3 passes) during placement.

3.3 PREPARATION

A. All concrete subfloors must be sound, solid, clean, and free of all oil, grease, dirt, curing compounds and any substance that might act as a bond breaker before priming. Mechanically clean if necessary. Acid etching and the use of sweeping compounds and solvents are not acceptable.

B. Substrates shall be inspected for moisture or any other conditions that could affect the performance of the ARDEX system. Moisture vapor emissions shall not exceed 5 lbs/1000 sf/24 hrs, ASTM F 1869 or 85% RH, ASTM F 2170.

C. Joint Preparation: Honor all joints up through the ARDEX PC-T, including expansion joints, isolation joints and control joints (saw cuts).

1. All moving joints shall be filled with ARDEX ARDISEAL RAPID PLUS.

2. All non-moving joints shall be filled with ARDEX ARDIBOND AP, ARDEX ARDIFIX or ARDEX ARDISEAL RAPID PLUS.

3. For joints to be filled after the polish process, contact manufacturer for specific recommendations.

3.4 APPLICATION OF ARDEX PC-T

A. Priming: Concrete shall be mechanically prepared to achieve a concrete surface profile (CSP) 3 in accordance with ICRI standards and primed with ARDEX EP 2000. Follow manufacturer's installation instructions, for complete instructions please refer to the Ardex EP 2000 Technical Brochure.

1. If the ARDEX MC ULTRA Moisture Control System is used, no additional priming is needed. The sand-broadcast surface of the ARDEX MC ULTRA is the primer.

B. Mix Designs

1. Mixing Ratio: The ARDEX PC-T shall be mixed in 2-bag batches. Mix each bag of the powder with the specified amount of water in an ARDEX T-10 Mixing Drum using an ARDEX T-1 Mixing Paddle and a ½" heavy-duty drill (12 mm, min. 650 rpm). Mix thoroughly for 2-3 minutes to obtain a lump-free mixture. Follow written instructions on the ARDEX product bag label.

2. Aggregate Mix: For pre-leveling and areas to be installed over 2" (5 cm) thick, well graded, washed pea gravel may be added to reduce material costs. Mix the powder with water first, and then add from 1 part by volume of aggregate (1/8" to ¼" [3 to 6 mm] or larger). Do not use sand. The addition of aggregate will diminish the workability of the product and may make it necessary to install a finish layer. Allow the first layer to dry for 12 to 16 hours. Complete aggregate installation instructions are available in the ARDEX PC-T Technical Brochure.

3. For pump installations, the topping shall be mixed using the ARDEX Levelcraft Automatic Mixing Pump. Start the pump at 150 gallons of water per hour, and then adjust to the minimum water reading that still allows self-leveling properties. ***DO NOT OVERWATER***. Check the consistency of the product on the floor to ensure a uniform distribution of the sand aggregate at both the top surface and bottom of the pour. If settling occurs, reduce the water amount and recheck conditions during installation, such as variations in water, powder, substrate, and ambient temperature, require that the water setting be monitored and adjusted carefully to avoid over watering.

C. ARDEX PC-T™ INSTALLATION

1. The minimum installation thickness for ARDEX PC-T shall be 3/8" or ¼" over the high point in the floor. The necessary thickness will vary with jobsite conditions, and must be adequate to achieve the desired finish.

2. Pour or pump the liquid topping and spread in place with the ARDEX T-4 Spreader. Use the ARDEX T-5 Smoother for featheredge and touch-up. Wear baseball shoes with non-metallic cleats to avoid leaving marks in the liquid topping. The topping can be walked on in 2-3 hours at 70°F (21°C).

3. Allow the ARDEX PC-T to cure a minimum of 24 to 72 hours before proceeding with the polishing process.

3.5 POLISHING PROCESS FOR ARDEX PC-T

A. Process: The ARDEX Polished Concrete System is an engineered and integrated complete installation system requiring strict adherence to all specified installation processes, equipment, tooling, concrete preparation, joint treatment and chemicals to achieve the intended result. Any substitutions from the specified products and/or processes without manufacturer approval will void the system warranty.

1. LEVEL B - Medium Gloss Finish (Gloss Reading, 41-55, ASTM E 430)

a. GRIND/POLISH #1: 60/80 Grit Metal Bonded Diamonds.
   1). Broom and vacuum the floor to remove all residual dust.
b. If required, apply ARDEX PC-R to fill areas in need of minor repair.
   1). Locate areas and remove any loose decries from inside.
   2). Prepare all spall areas by cutting the edges of the spall to have a 90° edge.
   3). Chip, cut, or grind interior walls of spall to provide a clean surface free of contaminants that could act as a bond breaker.
   4). Mix and apply PC-R per manufacturer recommendations and overfill spalls slightly higher than surrounding surface.
   5). Allow to dry 2-3 hours prior to proceeding with the next step.
c. GRIND/POLISH #2: #1 Grit Transitional, Ceramic Bonded Diamonds.
   1). Broom and vacuum floor to remove dust.
d. Apply ARDEX PC 10, per application instructions at a rate of 400 sq. ft./gal.
   1). Allow ARDEX PC 10 to dry for 1 hour before beginning the next step.
e. GRIND/HONING #3: 200 grit Resin Bonded Diamond.
f. GRIND/POLISHING #4: 400 grit Resin Bonded Diamond.
   1). Broom and vacuum to remove dust.
g. GRIND/POLISH #5: 800 Resin Bonded Diamonds.
   1). Broom and vacuum to remove dust.
h. MICROPOLISH/BURNISH #1: FLOR-GRIT® 400 Grit Diamond Pad.
i. Apply ARDEX PC FINISH per application instructions at a rate of 2,500 sf/gal.
   1). Allow to dry a minimum of 15-30 minutes.
j. MICROPOLISH/BURNISH #2: FLOR-GRIT® 400 Grit Diamond Pad.
   1). Dry mop the floor clean to remove all debris.
k. Apply ARDEX PC FINISH per application instructions at a rate of 3,000 sf/gal.
   1). Allow to dry a minimum of 15-30 minutes.
l. MICROPOLISH/BURNISH #3: FLOR-GRIT® 800 Grit Diamond Pad.

2. LEVEL C - High Gloss Finish (Gloss Reading 56 or Higher, ASTM E 430)

a. GRIND/POLISH #1: 60/80 Grit Metal Bonded Diamonds.
   1). Broom and vacuum the floor to remove all residual dust.
b. If required, apply ARDEX PC-R to fill areas in need of minor repair.
   1). Locate areas and remove any loose decries from inside.

2). Prepare all spall areas by cutting the edges of the spall to have a 90° edge.
3). Chip, cut, or grind interior walls of spall to provide a clean surface free of contaminants that could act as a bond breaker.
4). Mix and apply PC-R per manufacturer recommendations and overfill spalls slightly higher than surrounding surface.
5). Allow to dry 2-3 hours prior to proceeding with the next step.

c. GRIND/POLISH #2: #1 Grit High Performance Transitional Diamonds, Ceramic Bonded.
1). Broom and vacuum floor to remove dust.

d. Apply ARDEX PC 10, per application instructions at a rate of 400 sq. ft./gal.
1). Allow ARDEX PC 10 to dry for 1 hour before beginning the next step.

e. GRIND/HONING #3: 200 grit Resin Bonded Diamond.

f. GRIND/POLISHING #4: 400 grit Resin Bonded Diamond.
1). Broom and vacuum to remove dust.

g. GRIND/POLISH #5: 800 Resin Bonded Diamonds.
1). Broom and vacuum to remove dust.

h. GRIND/POLISH #6: 1500 grit Resin Bonded Diamonds.
1). i. Broom and vacuum the floor to remove all residual dust.

i. MICROPOLISH/BURNISH #1: FLOR-GRIT® 800 Grit Diamond Pad.

j. Apply ARDEX PC FINISH per application instructions at a rate of 2,500 sf/gal.
1). i. Allow to dry a minimum of 15-30 minutes.

k. MICROPOLISH/BURNISH #2: FLOR-GRIT® 1500 Grit Diamond Pad.
1). i. Dry mop the floor clean to remove all debris.

l. Apply ARDEX PC FINISH per application instructions at a rate of 3,000 sf/gal.
1). Allow to dry a minimum of 15-30 minutes.

m. MICROPOLISH/BURNISH #3: FLOR-GRIT® 3000 Grit Diamond Pad.

B. Edge Work: Where desired, polished edge work of ARDEX PC-T shall be done with a 5" Hand Held or Walk Behind polishing tool. The edge polishing process will match the corresponding steps outlined above for the desired gloss level, and each edge polishing step shall be done immediately after the matching main polishing step.

3.6 PROTECTION

A. Protect the new ARDEX PC-T from spills and contamination by petroleum, oil, hydraulic fluid, acid and acidic detergents, paint and other liquid dripping from trades and equipment working over these substrates. If construction equipment must be used on these substrates, diaper all components that may drip fluids. Protect surface by installing the DIAMATIC PRIMO-COVER Protective Floor Covering, DIAMATIC ECONO-COVER Protective Floor Covering, or similar.

B. **Avoid moisture for 72 hours after installation.** Do not permit standing water for this period or place any protective plastic sheeting, rubber matting, rugs or furniture

that can prevent proper drying, thereby trapping moisture, which can result in a cloudy effect on the floor.

C. Light pedestrian use only in the 24 hours after installation. Normal traffic recommended 7 days after completion of the ARDEX Concrete Topping System.

3.7 MAINTENANCE

A. NOTE: Maintaining the ARDEX Polished Concrete System and adherence to a recommended cleaning schedule will help the floor hold its mechanically polished gloss longer and greatly reduce the absorption of spilled liquids. The treated concrete floor is easily maintained by regular cleaning with the Maintenance/Post Cleaning procedure, accompanied by Micro Polishing. Specific maintenance recommendations shall be provided by the certified installer performing the work of this section.

B. Newly Installed ARDEX Polished Concrete System

1. **Restrict water cleaning for 72 hours after installation of PC-T.** Use only a dry mop to clean. Avoid putting mats or covering treated surface to allow coating to fully cure out.

2. DO NOT USE cleaners that are acidic or that have citrus (de-limonene) or Butyl compounds.

3.8 FIELD QUALITY CONTROL

A. Test Reports: Provide field quality control sheen gloss reading and static coefficient of friction test results conducted as specified and recorded on floor plan diagram confirming compliance with specified performance criteria.

1. Static Coefficient of Friction: A reading of not less than 0.5 for level floor surfaces shall be achieved and documented, as determined by a certified NFSI walkway auditor using the NFSI 101-A quality control test.

2. Gloss readings should be obtained in accordance with ASTM E 430, Standard Test Method for Measurement of Gloss of High-Gloss Surfaces by Abridged Goniophotometry.

a. Readings shall be taken not less than 10'-0" (3 m) on center in field areas and within 1'-0" (0.3 m) of floor area perimeters. In no case shall a reading be below 2% of the specified minimum sheen.

END OF SECTION

# SECTION 03 54 00

# FLOOR FILL/UNDERLAYMENT SYSTEMS

## Part 1 - GENERAL

1.01 Applicable provisions of the Conditions of the Contract and Division #1, General Requirements, govern work in this Section.

1.02 DESCRIPTION OF WORK

A. The work of this Section consists of the provision of all plant, materials, labor and equipment and the like necessary and/or required for the complete execution of all floor fill/underlayment system work for this project as required by the schedules, keynotes and drawings, including, but not limited to the following:

1. The intent of this contract is to provide a consistent, level floor slab for the entire work area. The Contractor shall fully inspect the existing conditions, remedy all existing defects, and provide all necessary materials and work to achieve that resulat at no additional cost to the contract.
2. Provide a self leveling water resistant cementitious fill system, capable of featheredge finish to a maximum 1 inch thickness (without addition of aggregate), complete with appropriate primer system for substrate encountered and/or discovered, for the entire work area.
3. Preparation of new floor surfaces and protection of adjacent construction prior to placement of fill material.
4. Resultant installation shall be tested in accordance with ACI 302, Class A flatness tolerance of 1/8 inch maximum deviation under a 10 foot straight edge in any direction.

NOTE: COORDINATE WITH THE CONTRACTOR FOR BROOMING OPERATIONS PRIOR TO VACUUMING/CLEANING OPERATIONS AS PER PARAGRAPH 3.02.A HEREIN.

1.03 RELATED WORK SPECIFIED ELSEWHERE - Entire Project Specification with specific reference to those sections noted above and as follows:

A. 03 30 00 - Cast In Place Concrete
B. Division 6 – Carpentry – Rough, Framing and Finish
C. Division 9 - Finishes - Specifically flooring installations.

1.04 QUALITY ASSURANCE

A. The work of this Section shall be accomplished by a Specialty Contractors with mechanics skilled in each of the trades involved with the respective items specified herein.
B. Before starting any work under this Section, all surfaces and attachments to receive work herein shall be inspected as per Part 3, Article 3.01.
C. Installer's Qualifications: Installation shall be by a licensed applicator authorized by the manufacturer using approved mixing and pumping equipment.
D. Installation shall be in accordance with the nominated manufacturer of the material Underlayment Applicator's Manual.
E. All work of a nature conducive to high humidity conditions shall have been completed and be thoroughly dry. This contractor shall be held responsible for the

cost of replacing all work of this Section damaged due to his failure to take the above precautions.

1.05 SUBMITTALS – Coordinate with Section 01 33 00

- Submittals shall be made in groupings where installations are complementary. Failure to comply with this requirement will be cause for rejection of any or all submittals.
- As set forth in Sections 01 33 00 and 01 32 00, prepare and submit a fully developed submittal schedule; note review times set forth in Section 01 33 00 are deemed "average", for large submissions allow longer review times.
- Attention is directed to Section 01 31 14 for coordination drawing requirements for this project. These drawings are critical to the proper execution of the Work and failure to honor these requirements may become the basis for denial of any and all claims for either or both "time" and "money".
- The Contractor is encouraged to submit for approval products made from recycled and/or environmentally responsible material. Every effort will be made by the Design Professional Team to approve these materials; the substitution request procedure shall still be enforced.

A. All materials, if requested, to make up floor fill system.
B. Product Data Sheets indicating test performance, composition, application criteria, and the like.
C. Certification of specification compliance.
D. Material Safety Data Sheet (MSDS) must be submitted for each product.

1.06 DELIVERY, STORAGE, AND HANDLING

A. General Requirements: Materials shall be delivered in their original, unopened packages, and protected from exposure to the elements. Damaged or deteriorated materials shall be removed from the premises.
B. Use all means necessary to protect the materials of the section before, during and after installation and to protect the installed work and materials of all other trades.

1.07 SITE CONDITIONS

A. No other trades and no foot traffic of any kind are to be allowed in the work area from commencement of substrate preparation until minimum 24 hours after completion of finishing.

1.08 SUSTAINABILITY

A. In the selection of the products and materials of this section as well as for the entire project, preference will be given to those with the following characteristics:
   1. Water based.
   2. Water-soluble.
   3. Can be cleaned up with water.
   4. Non-flammable.
   5. Biodegradable.
   6. Low or preferably no Volatile Organic Compound (VOC) content.
   7. Manufactured without compounds that contribute to ozone depletion in the upper atmosphere.

8. Manufactured without compounds that contribute to smog in the lower atmosphere.
9. Do not contain methylene-chloride.
10. Do not contain chlorinated hydrocarbons.
11. Contains the least possible of post-consumer or post-industrial waste.

Part 2 - PRODUCTS

2.01 FLOOR FILL SYSTEM

A. Non-combustible, high density poured or pumped cement mixture which, after hardening, will comply with the following performance characteristics.

B. Material shall be similar and equal to Ardex “SD-F”, Laticrete “Supercap SC500” or equal product installed by an authorized representative of the manufacturer.

2.02 MATERIALS

A. Material shall be a special cement blend when combined with water become a liquid compound which will seek its own level and automatically produces a smooth, flat and hard surface.

B. Primer/Sealer/Bonder - floor primer, sealer and bonder, in formula as suitable for encountered substrate.

C. Aggregate (thickness over 1 inch) - 1/4 inch, maximum; 1/8 inch minimum washed and graded gravel.

D. Water - Potable free from impurities that affect the setting of underlayment.

2.03 MIXING PROPORTIONS

A. Water in quantity as directed by manufacturer to one (1) 55 pound bag of premixed underlayment material.

B. Do not over water, water amount may vary with temperatures and, aggregates, if used.

2.04 PROPERTIES

A. Compressive strength, psi, 28 days --- 4,200 (ASTM C 109)

B. Flexural strength, psi, 28 days ------ 1,000 (ASTM C 348)

C. Fire Resistance/ASTM E 84 - Class 1 -- 0/0/0

Part 3 - EXECUTION

3.01 INSPECTION AND ACCEPTANCE

A. Examine all surfaces and contiguous elements to receive work of this section and correct, as part of the Work of this Contract, any defects affecting installation. Commencement of work will be construed as complete acceptability of surfaces and contiguous elements.

3.02 INSTALLATION

A. Clean floor surfaces and other construction prior to placement of fill material.

B. Mixing of primers, if required, and fill materials shall be done in accordance with manufacturer's printed instructions.

C. Prior to installation of system, a bonding agent approved by the manufacturer of the fill system shall be applied over the entire sub-strata.

D. Place fill on prepared stratas to a minimum thickness of “feather edge” to equal

floor thickness of adjoining finish or a minimum of 1/8 inch or as may be otherwise indicated on the drawings or required by field conditions.

E. Place in a continuous operation so as to avoid seams or layers and to insure a monolithic, homogeneous product.

3.03 ENVIRONMENTAL CONSIDERATIONS

A. Provide adequate ventilation after placement of fill to insure complete drying.

B. Maintain minimum temperature of 50 degrees during and after pouring and during complete drying operation.

C. Protect from drying to fast from strong sun exposure or wind.

3.04 WASTE MANAGEMENT – Coordinate with Section 01 74 19

A. Before pours, designate a location for cleaning out equipment and disposal of excess material.

**End of Section**

SECTION 04 05 03

MORTARS

Part 1 - GENERAL

1.01 Applicable provisions of the Conditions of the Contract and Division #1, General Requirements, govern work in this Section.

1.02 DESCRIPTION OF WORK

A. This specification covers mortars for use in the construction of all unit masonry as may be required for the project. In this specification, the term mortar shall be understood to mean mortar composed of portland cement, hydrated lime, sand and water.

At the option of the Contractor, patent mix may be substituted.

**NOTE: attention is directed to Article 2.03 herein requiring custom colors will be used; contractor shall make such allowance in his proposal.**

Mortar Designations and Locations

1. Face Masonry (Brick or Block), Interior and Exterior - Type "S".
2. Cast Stone - Type "S".
3. Backup Masonry – Type “S”
4. Bearing wall construction, brick or block - Type "S"

1.03 RELATED WORK SPECIFIED ELSEWHERE - Entire Project Specification with specific reference to those sections noted above and as follows:

A. 04 20 00 – Unit Masonry
B. 04 72 00 – Cast Stone
C. 33 40 00 – Storm Drainage Work

1.04 REFERENCE STANDARDS

A. ASTM Standards
1. C 5, Quicklime for Structural Purposes
2. C 91, Masonry Cement
3. C 144, Aggregate for Masonry Mortar
4. C 150, Portland Cement
5. C 207, Hydrated Lime for Masonry Purposes
6. C 270, Mortar for Unit Masonry
7. C 387, Packaged, Dry, Combined Materials for Mortar and Concrete
8. C 476, Grout for Reinforced Masonry
9. C 595, Blended Hydraulic Cements
10. C 1142, Specification for Ready Mixed Mortar for Unit Masonry.

B. Brick Institute of America
1. M 1-72, Portland Cement-Lime Mortar for Brick Masonry.

C. Mortar shall meet the requirements of the local governing codes unless directed to the contrary by the Architect.

1.05 SUBMITTALS – Coordinate with Section 01 33 00

- Submittals shall be made in groupings where installations are complementary, i.e. steel, steel decking, steel stairs, stair railings; roof systems/flashings; mechanical and electrical apparatus and the like. Failure to comply with this requirement will be cause for rejection of any or all submittals.
- As set forth in Sections 01 33 00 and 01 32 00, prepare and submit a fully developed submittal schedule; note review times set forth in Section 01 33 00 are deemed "average", for large submissions allow longer review times.
- Attention is directed to Section 01 31 14 for coordination drawing requirements for this project. These drawings are critical to the proper execution of the Work and failure to honor these requirements may become the basis for denial of any and all claims for either or both "time" and "money".
- The Contractor is encouraged to submit for approval products made from recycled and/or environmentally responsible material. Every effort will be made by the Design Professional Team to approve these materials; the substitution request procedure shall still be enforced.

A. Certification of Specification Compliance
B. Schedule of uses, by Mortar Type.
C. Reports of quality control testing.
D. Manufacturers Material Safety Data Sheet (MSDS) must be submitted for each manufactured product.

1.06 PRODUCT DELIVERY, STORAGE AND HANDLING (Coordinate with Section 01 61 00)

A. All manufactured materials shall be delivered to the job site in unopened factory sealed containers clearly labeled as to product, manufacturer, use and/or other pertinent characteristics.
B. All packaged and loose materials shall be stored under proper environmental conditions to prevent contamination from excessive temperature changes, foreign materials and the like that may have an adverse effect on same.
   1. All perishable materials shall be properly protected and stored in weathertight structures, with floor raised not less than 1 foot above adjoining grade OR, for short intervals, on raised platforms and covered with waterproof tarps.
   2. Aggregates shall be stored in clean bins, scows or platforms having hard, clean surfaces.
   3. Aggregates of different kinds and sizes shall be placed in different stockpiles.
C. Should segregation of aggregates occur they shall be remixed to conform to the grading requirements.
D. Frozen aggregates or aggregates containing frozen lumps shall be thawed before use.
E. Cement that has hardened or partially set shall be removed from the site and not used.
F. Washed aggregates and aggregates produced or manipulated by hydraulic methods shall be allowed to drain for at least 12 hours before use.

1.07 ENVIRONMENTAL CONTROLS

A. No air-entraining admixtures or cementitious materials containing air-entraining admixtures shall be used in the mortar. No antifreeze compounds or other substances shall be used in the mortar to lower the freezing point. Calcium chloride or admixtures containing same shall not be used in any mortar employed in the Work.
B. Heat mixing water when air temperature is below 40°F (4°C) and heat aggregates when air temperature is below 32°F (0°C) to assure mortar temperatures between 40°F (4°C) and 120°F (49°C) until used.
C. Produce subsequent mortar batches within +/-10°F (5°C) of first batch.
D. Do not heat water or sand above 120°F (49°C).

1.08 SUSTAINABILITY

A. In the selection of the products and materials of this section as well as for the entire project, preference will be given to those with the following characteristics:
1. Water based.
2. Water-soluble.
3. Can be cleaned up with water.
4. Non-flammable.
5. Biodegradable.
6. Low or preferably no Volatile Organic Compound (VOC) content.
7. Manufactured without compounds that contribute to ozone depletion in the upper atmosphere.
8. Manufactured without compounds that contribute to smog in the lower atmosphere.
9. Do not contain methylene-chloride.
10. Do not contain chlorinated hydrocarbons.
11. Contains the least possible of post-consumer or post-industrial waste.

## Part 2 - PRODUCTS

2.01 GENERAL

A. All mortar mixes shall comply with the requirements set forth in ASTM C 270, "Standard Specification for MORTAR FOR UNIT MASONRY" and shall consist of mixes for respective locations designated in Paragraph 1.01.A of this Section.

NOTES:
- Ready mixed mortar conforming to ASTM C 1142 may be submitted for use providing - 1) same complies with applicable building codes, and 2) same produces both equivalent strength and meets color requirements (if any) as stated in these specifications.
- Ready mix material shall be similar and equal to that as packaged by PACKAGE PAVEMENT; PO BOX 408 STORMVILLE NY 12582-0408; 800-724-8193; www.packagepavement.com

B. Mix mortar materials to produce mortar cubes having the following compressive strengths when tested in accordance with Property Specification Table 2 of reference standard C 270.
1. Mortar Type N - 750 psi (5.2 MPa) at 28 days.
2. Mortar Type S - 1,800 psi (12.4 MPa) at 28 days.
3. Mortar Type M - 2,500 psi (17.2 MPa) at 28 days.

C. Proportion specifications (by volume) for mortar materials.

| Mortar | Type | Portland or Blended Cement | Masonry Cement M | Masonry Cement S | Masonry Cement N | Hydrated Lime or Lime Putty | Aggregate Ratio Measure in Damp Loose Condition |
|---|---|---|---|---|---|---|---|
| Cement Lime | M | 1 | | | | 1/4 | |
| | S | 1 | | | | over 1/4 to 1/2 | |
| | N | 1 | | | | over 1/2 to 1-1/4 | |
| Masonry Cement | M | 1 | | | 1 | | Not less than 2-1/4 and not more than 3 times the sum of the separate volumes of the cementitious materials. |
| | M | | 1 | | | | |
| | S | 1/2 | | | 1 | | |
| | S | | | 1 | | | |
| | N | | | | 1 | | |

2.02 MIXING PROCEDURES

A. Measure materials by volume or equivalent weight; do not measure by shovel.

B. Mix ingredients in clean mechanical mixer for a minimum of 3 minutes, maximum 5, with the maximum amount of water to produce a workable consistency.

C. Mortars that have stiffened because of evaporation of water from the mortar shall be retempered by adding water as frequently as needed to restore the required consistency. Mortars shall be used and placed in final position within 2-1/2 hours after initial mixing.

2.03 COLOR REQUIREMENTS

A. Masonry mortar for use with all exposed face masonry, cast stone sills and copings shall be colored as directed by the Architect.

Colors will be established using preweighed, prepackaged proportioned color unit bags selected from the "A", "H" or "X" color series as manufactured by Solomon Grind-Chem Services or equal by Scofield or Flamingo.

Only premixed colored mortar materials are acceptable. NO LIQUID COLORANTS SHALL BE PERMITTED.

B. Multiple colors will be used and there will be no extra charges attributed to this requirement

2.04 MORTAR ADDITIVE FOR USE WITH TYPE "N" ONLY

A. Acrylic polymer and modifier mixture similar and equal to "ACRYL 60" by Thoro, Division of BASF.

Part 3 - EXECUTION

3.01 GENERAL - Apply mortar in accordance with requirements stated in related sections as/Paragraph 1.03 herein.

3.02 CONSTRUCTION

A. Mix mortar using a mechanical mortar mixer to ensure homogeneity and workability. Hand mixing of the mortar is permitted only with written approval of the Architect/Specifier who will outline hand-mixing procedures. Observe mixing times of 4 - 5 minutes, consistent from batch to batch.
B. Use clean, potable water, add the maximum amount consistent with optimum workability. Maintain a uniform water/cement ratio.
C. Rinse out mixer following each batch.
D. At the end of the day, thoroughly rinse the mixer to avoid contamination of future mortar batches.
E. Retemper mortar by adding additional mixing water only to replace water lost due to evaporation. Do not retemper colored mortars.
F. Discard mortar 2.5 hours after initial mixing.
G. Tool mortar joints when surface is thumbprint hard. Keep tooling time consistent. Do not strike joint too early or too late in order to maintain color consistency.
H. Cure mortar a minimum of 28 days.
I. For masonry core fill grout applications, comply with the requirements of ASTM C 476.

3.03 CLEANING

A. Cleaning Method:
   1. Clean mortar only with potable water or dry brush.
   2. Clean masonry with the least aggressive cleaning solution and tec hnique possible.
   3. Comply with cleaning procedure and recommendations of the manufacturers of both the cleaning solution and the unit masonry.
   4. Utilize the same cleaning procedure on the sample panel at selection and during construction.

3.04 WASTE MANAGEMENT – Coordinate with Section 01 74 19

A. Separate and recycle waste materials in accordance with the Waste Management Plan and to the maximum extent economically feasible.
B. Place unused mixed mortar in designated locations where lower-strength mortar meets the requirements for bulk fill; for example, use as retaining wall footing ballast, cavity fill at grade, or underground utility pipe kickers.
C. Separate masonry waste and place in designated area for use as structural fill or in landscaping of the Project.

**End of Section**

SECTION 04 20 00

UNIT MASONRY

Part 1 - GENERAL

1.01 Applicable provisions of the Conditions of the Contract and Division #1, General Requirements, govern work in this Section.

1.02 DESCRIPTION OF WORK

A. The work of this Section consists of the provision of all plant, materials, labor and equipment and the like necessary and/or required for the complete execution of all unit masonry work for this project as required by the schedules, keynotes and drawings, including, but not limited to the following:

NOTE: Sections 04 05 03, 04 72 00 and 04 01 00 act as complementary to this Section and all requirements set forth therein apply to this work as if restated in full.

1. Provide modular sized face brick masonry (including required specials – i.e. “lip brick”, 45deg corner, and others) for exterior use as required by the project drawings, details and conditions encountered. Material shall be "textured" in colors and manufacture as indicated on the drawings and specified herein. Construct "wash" surfaces at exposed projecting courses of brick exceeding 3/4 inch or as may be shown and/or required to drain any horizontal projecting edges.
2. Provide ground face and split face block for exterior use using 8” x 16” units by 4 inch bed depth (UON) as well as mating corner blocks.
3. Provide load bearing concrete unit masonry backup for all locations shown and/or required. Material to be of light weight design and fully reinforced, unless otherwise shown and/or required by conditions of use.
4. Provide interior concrete masonry partitions, shafts, furring, cavities and the like shown and/or required to complete the work of the project in accordance with details and conditions. Material to be of light weight design, unless otherwise shown and/or required by conditions of use.

   NOTES: Selected concrete block required for this project will be "rated" as 1, 2, 3 and 4 hour as noted on the drawings. Material complying to these requirements shall be provided in accordance with applicable codes.

   **Attention is directed to reinforced masonry requirements shown on the drawings and specified herein; *COORDINATE VERTICAL REINFORCING WITH INSTALLATION OF REINFORCED BOND BEAMS AND SPECIFIED HORIZONTAL JOINT REINFORCEMENT*.**

5. Provide concrete or common brick for "batt" work and fillers as required to complete the work.
6. Mortar requirements for the work herein shall be as specified in Section 04 05 03 and shall be colored for all face masonry.
7. Provide all required scaffold, ties, reinforcing, and the like and perform

cleaning operations as work progresses with final cleaning of face masonry and cast stone when directed by the Architect.

8. Provide all spandrel, through wall and protective flashings at base of walls, at floor levels, at all relieving angles, hanging and fixed steel lintels, above windows and door heads, at parapets, etc. all as shown on the drawings and as required by proper industry practice to insure conformance to guaranty requirements herein contained. Flashings shall generally -
   a. Extend past face of exterior wall when set and cut off flush with wall after approval by Architect and/or, based upon type used, terminate with a stainless (0.10 inch) or copper (10 ounce) drip edge.
   b. Be bedded on masonry with bead of Type II sealant.
   c. When in block walls, be carried up face of wall a minimum of 6 inches and terminated with a termination bar or other suitable and approved sealant system, coordinate as applicable to project.
   d. When in clad exterior walls (brick veneer/cavity wall) be carried up face of wall a minimum of 6 inches and terminated with a termination bar or other suitable and approved sealant system, coordinate as applicable to project.
   e. Be pocketed at all terminations, including window and door heads and sills, with an envelope fold to form end dams.

   NOTE: Lap all flashing materials a minimum of 6 inches at joints and fully seal with "butter" coating of clear silicone.

9. Provide head joint weep holes spaced at 24 inches o.c. max horizontally.
10. Provide all preformed joint fillers, control joints and the like as shown on the drawings and/or required by conditions of construction. In general, space control joints at +/-20 feet on center with final pattern to be issued by the Architect for construction. Space expansion joints at +/-20 feet on center at all parapets and at junctures of new masonry with existing. Sealant patterns shall be as specified in Section 07 90 00 with materials set forth below:
    a. Control Joints - Type I or II with rod backer
    b. Expansion Joints - Type I or II with Type III backer
11. Install, as part of the work of this Section, the following items furnished under other sections of these specifications; this listing is deemed for information only and failure to list any such item required does not relieve this contractor from the responsibility for setting of same:
    a. Metal through wall flashings as described elsewhere herein and specified in Section 07 60 00.
    b. Loose lintels (under 100 pounds) as furnished and specified.
    c. Anchor bolts for retention of roof and other blockings required to be built-into masonry work.
    d. Access doors furnished under Section 08 31 00.
12. Perform all cutting, drilling and patching of masonry required by other sections and finish patching after such work has been installed. Consult ALL TRADES in advance and make provisions for installation of their work to avoid unnecessary cutting and patching.
13. Protect finished work and work in progress with adequate measures.
14. Provide cavity wall insulation in all new exterior walls, R- value as indicated

on details and as required by Energy Code.

15. Provide filler sections at tops of concrete masonry walls to solidly engage steel decking at all locations where walls are carried to decking. System shall be mineral wool fire rated insulation as specified in Section 07 84 00 and shall be accomplished as part of this section responsibility; Further, provide retention angles, channels, and other shapes for all concrete masonry walls terminating at or abutting to structure as indicated and/or required to comply with conditions of construction.
16. Provide continuous "net" system at bases of cavities and at all “breaks” in exterior walls i.e. – lintels, relieving angles, etc. regardless of detailing. For any cavities 1 inch or less, provide “net” system for full area of cavity.
17. Masonry work surfacing concrete surfaces shall be laid in a full bed of mortar, fully parged over applied dampproofing as specified in Section 07 13 00.
18. Provide precast concrete splash blocks under leaders and/or scuppers provided under Section 07 60 00.
19. Coordinate placement of piping, tubing, conduits, thermostats, switches, outlets and devices all as required by mechanical and electrical work. Verify locations and mounting heights of devices with Architect.
20. Perform balance of masonry work necessary and required to complete the project work.

1.03 RELATED WORK SPECIFIED ELSEWHERE - Entire Project Specification with specific reference to those sections noted above and as follows:

A. 00 80 00/05 50 00/08 31 00 - Furnishing of access panels
B. 04 72 00 – Cast Stone
C. 07 84 00 - Firestopping

1.04 QUALITY ASSURANCE

A. All work of this section will be accomplished by workmen skilled in the trade, and in conformance with industry practice governing such masonry work.
B. Materials used in connection with this work shall conform in all respects to that as required by the Applicable Building Code and requirements of Federal Specifications, ASTM Designations and Standards, with modifications as specified herein. Size backup units to bond with face units.
C. The work of this section shall further conform to the Codes, Rules and Regulations of the State of Connecticut as promulgated within the Connecticut State Uniform Fire Prevention and Building Code as identified in Section 01 42 19.
D. Reference Standards for Reinforced Masonry:
   1. Building Code Requirements for Masonry Structures (TMS 402-08/ACI 530-08/ASCE 5-08);
   2. Specification for Masonry Structures (TMS 602-08/ACI 530.1-08/ASCE 6-08);
   3. Commentary on Building Code Requirements for Masonry Structures (TMS 402-08/ACI 530-08/ASCE 5-08);
   4. Commentary on Specification for Masonry Structures (TMS 602-08/ACI 530.1-08/ASCE 6-08).

   Systems are based upon a compressive strength (f'm) of 1,600 psi minimum. Coordinate with Article "Bond Beams and Reinforced/Grouted Masonry" included

within this Section as it addresses: Methods for determination of compressive strengths;;

1.05 SUBMITTALS – Coordinate with Section 01 33 00

- Submittals shall be made in groupings where installations are complementary. Failure to comply with this requirement will be cause for rejection of any or all submittals.
- As set forth in Sections 01 33 00 and 01 32 00, prepare and submit a fully developed submittal schedule; note review times set forth in Section 01 33 00 are deemed “average”, for large submissions allow longer review times.
- Attention is directed to Section 01 31 14 for coordination drawing requirements for this project. These drawings are critical to the proper execution of the Work and failure to honor these requirements may become the basis for denial of any and all claims for either or both “time” and “money”.
- The Contractor is encouraged to submit for approval products made from recycled and/or environmentally responsible material. Every effort will be made by the Design Professional Team to approve these materials; the substitution request procedure shall still be enforced.

A. Samples and certifications of specification compliance of all materials to be incorporated in this specified work.

B. Contractor shall coordinate with balance of exterior façade elements and shall erect on the site, 3 sample panels 6 feet long by 4 feet high of each unit required and or as specified in Section 01 43 39. Full size units shall be used to show color range, bond, profile or joints and workmanship.

**Extend mockups to include backup of both masonry and stud/sheathing/air barrier/insulation systems. Coordinate with Section 01 43 39 for full mockup requirements.**

If not approved remove panel and install new panel (or panels), repeating the process until panel is approved. After approval panels will be standard of minimum requirements for workmanship. Panels shall remain until removal is authorized by the Architect.

In addition to above sample panels, Contractor shall provide sample "mockup and/or mockups" of exposed face brick masonry and ground face / split face block masonry prior to actual start of work for Architect's approval. Sample work shall be incorporated within the finished masonry. Sample work, if disapproved will be removed and replaced with satisfactory work until same is approved and accepted by the Architect. Said area shall be marked and shall serve as a sample to be followed for all exposed work constructed as part of the area involved.

C. Manufacturers Material Safety Data Sheet (MSDS) must be submitted for each manufactured product.

1.06 PRODUCT DELIVERY, STORAGE AND HANDLING (Coordinate with Section 01 61 00)

A. All materials shall be delivered to the job site in unopened factory sealed

containers clearly labeled as to product, manufacturer, color and/or other pertinent characteristics.

B. Store and handle materials so as to preclude damage of any nature.

C. Do not use materials in broken containers or in containers showing water marks or other evidence of damage. Remove such materials from the site immediately.

1.07 ENVIRONMENTAL CONDITIONS AND PROTECTION (Coordinate with Section 01 50 00)

A. Do not erect any masonry when temperature of surrounding air is below 40 F unless approved means are provided for maintaining the masonry at a temperature above this point during and for 72 hours subsequent to erecting of masonry. Do not use masonry materials which are likely to contain frost or are covered with ice or snow. Do not mix antifreeze ingredients with mortar. Take down any completed work found to be affected by frost or freezing and rebuild without change in contract price.

B. Protect fresh and uncompleted masonry against the elements when not being worked on, by use of non-staining weatherproof covering properly held in place.

C. Rake back unfinished work where possible; tooth only where absolutely necessary. Sweep previously laid work clean before resuming work.

D. Shore and brace walls as necessary for proper protection and execution of work in accordance with OSHA requirements setting forth "limited access zone" and "braced walls 8 feet and over in height" which required special attention.

E. Where a masonry bond between parts of adjoining work can not be made, provide a mechanical bond with anchors, dowels, and the like to insure proper and stable connections.

1.08 SCAFFOLDING

A. Furnish, install and maintain safe and adequate scaffolding, centering and other equipment as long as necessary.

B. Lay up masonry exposed to view or the weather in the finished building from the side of wall and/or partition on which it is exposed.

C. Holes will not be permitted in any exposed masonry.

D. All scaffold systems shall be erected and maintained in accordance with the total requirements of Safety and Health Regulations for Construction, Chapter XVII of OSHA, Part 1926 and all related amendments and all other government agencies having jurisdiction. The most stringent requirements shall govern.

1.09 SUSTAINABILITY

A. In the selection of the products and materials of this section as well as for the entire project, preference will be given to those with the following characteristics:

1. Water based.
2. Water-soluble.
3. Can be cleaned up with water.
4. Non-flammable.
5. Biodegradable.
6. Low or preferably no Volatile Organic Compound (VOC) content.
7. Manufactured without compounds that contribute to ozone depletion in the upper atmosphere.
8. Manufactured without compounds that contribute to smog in the lower atmosphere.

9. Do not contain methylene-chloride.
10. Do not contain chlorinated hydrocarbons.
11. Contains the least possible of post-consumer or post-industrial waste.

Part 2 - PRODUCTS

2.01 GENERAL MASONRY UNIT REQUIREMENTS
Defective Units: Referenced masonry unit standards may allow a certain percentage of units to exceed tolerances and to contain chips, cracks, or other defects exceeding limits stated in the standard. Do not uses units where such defects, including dimensions that vary from specified dimensions by more than stated tolerances, will be exposed in the completed Work or will impair the quality of completed masonry.

2.02 FACE BRICK MASONRY - Modular Size, conforming to ASTM C 216, Grade SW, Type FBS and special brick shapes per details, in color selected from manufacturers full range of “reds”, as manufactured by Belden Brick, Glen-Gery, or approved equal.

2.03 COMMON BRICK - ASTM C 62, Grade SW, Standard Size.

2.04 CONCRETE BRICK - ASTM C 55, Type S-1.

2.05 CONCRETE MASONRY UNITS
A. General - All units shall conform to requirements of ASTM C 90, Type I - moisture controlled units. Grout units solid for locations indicated.
B. Aggregates
1. Lightweight - ASTM C 331, 100% expanded shale, clay, slate or other lightweight-cellular and/or granulary inorganic materials each with a gradation of #4-0, Table 1 of C 331 to assure constant texture. Blending of screenings or any other deleterious substance which will impair the fire rating or insulation value is prohibited.
C. Density
1. Light Weight Units, Maximum - 104 pcf(kg/cm).
D. Linear Shrinkage - Governed by Table 1, ASTM C 90 as tested in accordance with ASTM C 426.
E. Units shall be "fire rated" as required by drawing locations and/or schedules and shall be certified by the manufacturer as complying with UL 618 for thickness and mix designs and in conformance the following “equivalent thickness” criteria for specific aggregates.

**Table 1—Fire Resistance Rating Period of Concrete Masonry Assemblies (ref. 1)**

| Aggregate type in the concrete masonry unit[2] | Minimum required equivalent thickness for fire resistance rating, in. (mm)[1] | | | | | | |
|---|---|---|---|---|---|---|---|
| | 4 hours | 3 hours | 2 hours | 1.5 hours | 1 hour | 0.75 hours | 0.5 hours |
| Calcareous or siliceous gravel | 6.2 (157) | 5.3 (135) | 4.2 (107) | 3.6 (91) | 2.8 (71) | 2.4 (61) | 2.0 (51) |
| Limestone, cinders or slag | 5.9 (150) | 5.0 (127) | 4.0 (102) | 3.4 (86) | 2.7 (69) | 2.3 (58) | 1.9 (48) |
| Expanded clay, shale or slate | 5.1 (130) | 4.4 (112) | 3.6 (91) | 3.3 (84) | 2.6 (66) | 2.2 (56) | 1.8 (46) |
| Expanded slag or pumice | 4.7 (119) | 4.0 (102) | 3.2 (81) | 2.7 (69) | 2.1 (53) | 1.9 (48) | 1.5 (38) |

1. Fire resistance rating between the hourly fire resistance rating periods listed may be determined by linear interpolation based on the equivalent thickness value of the concrete masonry assembly.
2. Minimum required equivalent thickness corresponding to the hourly fire resistance rating for units made with a combination of aggregates shall be determined by linear interpolation based on the percent by volume of each aggregate used in the manufacture.

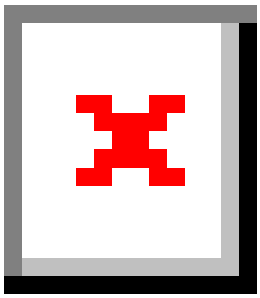

F. Face Unit Size (except brick) - 8 inches by 16 inches by bed depth required.

G. Finish and Appearance: Concrete block exposed in the finished building or receiving paint shall have uniformly fine texture free of warpage, chips, cracks, chipped edges, checks, pits, spalls or other defects that would impair the appearance of the exposed surfaces when viewed from a distance of not less than 20 feet (6.1 m) under diffused lighting.

H. Provide special shaped units as required to form bond beams, control joints, and the like all of same material as the balance of wall system.

2.05 ARCHITECTURAL/SPECIAL BLOCK REQUIREMENTS

A. Ground Face and Split Face hollow, load bearing concrete masonry units shall conform to ASTM C 90 and shall be as manufactured by Westbrook Concrete Block or approved equal. Colors shall be as selected by the Architect from manufacturers full range of selections including tans, browns, reds, blacks and whites. Special Units shall include, <u>but</u> not be limited to - outside corners and standard stretchers; bullnose outer corners; lip design; sill block and bands; and the like. General units shall be furnished in 8 inches by 16 inches face dimensions with special sizes including sills, as scheduled. All ground face and split face surfaces shall receive a factory applied pressurized silicone coating prior to shipment from the plant.

- **GFB-1 – 8 inch height, 16 inch length, 4 inch depth, split face, color 1**
- **GFB-2 – 8 inch height, 16 inch length, 4 inch depth, ground face, color 2**

B. <u>All units shall be manufactured incorporating a calcium sterate waterproofing admixture</u>.

2.06 ACCESSORIES

A. Wall reinforcement, Cavity Type - Truss Type with adjustable rectangular section; ***stainless steel***; #9 wire. Provide preformed corners.

***All face masonry veneer, whether backed by masonry or steel stud wall systems shall be reinforced with either 9 gauge or 3/16 inch diameter continuous stainless steel wire at each anchor point.***

Material similar and equal to "#185 Grip-Lok Truss" with interlocking plate for all masonry/masonry locations and "Byna-Tie" system each as manufactured by Hohmann & Barnard, Inc.; Heckman; AA Wire Products or approved equal. Size material to fit conditions.

B. Control Joints - Factory extruded solid section of rubber, 80 Durometer similar and equal to "Dur-O-Wal" Regular Rapid Control Joint. Material as furnished by Heckman or Hohmann & Barnard, Inc. shall be considered equals.

C. Soft Joints - Factory extruded closed cell neoprene with adhesive surface similar and equal to Dur-O-Wal "Rapid Soft-Joint". Material as furnished by Heckman or Hohmann & Barnard, Inc. shall be considered equals; ***NOTE: 3/4 inch soft joint required at all exterior backup walls; coordinate with top of wall anchor systems.***

D. Expansion Joints - Factory extruded closed cell neoprene with compressibility exceeding 50% similar and equal to Dur-O-Wal "Rapid Expansion Joint". Material as furnished by Heckman or Hohmann & Barnard shall be considered equals.

E. Steel column and beam ties - "Grip-Stay" System by Hohmann & Barnard, Inc., galvanized. Material as furnished by Heckman or Dur-O-Wal shall be considered equals.

F. Wall ties in addition to those furnished under Section 09 29 00 shall be preformed, **stainless steel** units, 16 gauge minimum and suitable for intended use. Provide compatible anchor ties for dovetail slots at masonry faced concrete walls; coordinate with Section 03 30 00.

G. Deck Fillers - Coordinate with Part 1; see Section 07 84 00.

H. Retention systems

1. Angles shall be a minimum 14 gauge by 6 inches by 6 inches by 6 inches spaced 24 o.c. and staggered on each side of wall to yield an effective 12 inch spacing.
2. Pre-engineered assemblies shall be similar and equal to "PTA" Series Partition Top Anchors as manufactured by Hohmann & Barnard, Inc. in design series suitable for intended application. Material furnished by Heckman or Dur-O-Wal shall be considered equals.

2.07 ANCHORAGE DEVICES/BRICK TIES – Coordinate with Section 07 26 00

A. Steel Stud Anchors: 12 gauge hot dipped galvanized, ASTM A 153, Class B2, 1.5 oz./sf. similar and equal to Hohmann and Barnard, Inc. "HB-200 S.I.S." anchorage devices with continuous wire and seismic clips.

B. Facing Masonry to backup masonry: 12 gauge hot dipped galvanized, ASTM A 153, Class B2, 1.5 oz./sf. similar and equal to Hohmann and Barnard, Inc. "200 SIS" anchorage devices with 3/16 inch Byna-Tie" type cavity design drip ties of matching material.

C. Securement fastening devices shall be non-corrosive "Tek" design with pressure distributing washer over "Textolite" strip.

2.08 SOLVENT - ProSoCo, Inc. "600 Detergent/Vanatrol" or equal by Hydrozzo, Cresset or Speeco.

2.09 THROUGH WALL AND SPANDREL FLASHINGS

A. Flashing material for use in general applications for through wall systems shall be as follows –

1. Fiberweb “Copper Aquaflash” and composed of 50 mil thick copper sheet membrane flashing consisting of a 5 oz. solid sheet of copper which is laminated on one side with polyester film and bonded on the other with a highly adhesive bitumen with a release liner.
2. Preformed or mechanically keyed flashings shall be fabricated from either 10 ounce copper or 0.010 inch stainless steel at the option of the Contractor. Products by Cheney, York or Keystone will be acceptable. Furnish prefabricated end dams/flashing corners as appropriate.
3. "5 ounce Copper Fabric Flashing" as manufactured by York Manufacturing Company; Sandell; Advanced; or approved equal. If asphalt coated material is proposed, provide <u>either</u> polymer base material compatible with sealant specified in Section 07 90 00 <u>or</u> sealant cap fabricated from either 12 ounce copper or stainless steel sheet.
4. Copper core flexible flashing with wicking fabric as manufactured by York Manufacturing, Inc. and under the trade name of “Flash-Vent” and conforming to the following:.
   a. Type: Copper core with non-asphalt adhesive glass fabric laminated to one copper face and non-woven wicking fabric laminated to opposing face with non-asphalt adhesive.
   b. Copper type, ASTM B 370-98: CDA Alloy 110, 060 temper.
   c. Copper weight – 5 oz. per sq. ft.
   d. Fabrics:
      1. Fiberglass fabric; laminated back face copper core with core weight manufacturer identified on product with color coded laminate.
      2. Non-woven wicking fabric: Fabric laminated to front face.
   e. Outside corner and splice material: York Multi-Flash.
5. "Hyload" system as manufactured by Hyload, Inc. (1-800-457-4056) and composed of surface adhered membrane of composite 40 mil membrane flexible black or gray sheet material fabricated from a mixture of pitch polymers, synthetic fibers and additives, calendered into sheet form, reeled into rolls, and cut to width; pre-formed, three dimensional flexible units to detail corners, level changes, stop ends, and special applications; joint support boards; tape and mastic.

B. Mastic/sealant: Manufacturer's standard silicone or butyl for specified flashing.

C. Drip Edge – prefabricated assembly by Hohmann and Barnard; Illinois Products Co. or approved equal in 22 gauge stainless steel or 12 ounce copper (tin coated as and if required by details). In the event that “lip” brick is required, provide lip profile drip edges.

D. End Dams: Provide prefabricated end dams fabricated from 26 gauge stainless steel with welded corners similar and equal to those provided by Hohmann and Barnard; IPCO or approved equal

E. Embedded flashing materials: Concealed Adhered Masonry Flashing
Provide copper fabric laminated sheet flashing overlapping a full bed depth stainless steel drip with materials specified above.

2.10 CAVITY WALL DRAINAGE SYSTEMS

A. Drainage system shall be "Mortar Net" manufactured by Mortar Net USA, Ltd. 1-800-664-6638 and shall conform to the following performance specifications.
   1. Size: 1 inch thick by 10 inch height by 5 foot length
   2. Material: Polyethylene or Nylon mesh in trapoezodial configuration

designed to allow moisture to flow downward in the cavity or collar joint to masonry flashing and weeps and hence to the exterior.

**DRAINAGE SYSTEM TO BE CONTINUOUS AT THE BASE OF THE WALL, AND CONTINUOUS THROUGHOUT THE ENTIRE CAVITY WHEN THE CAVITY IS 1 INCH OR LESS IN THICKNESS.**

**NOTE: System shall be extended from base of wall to underside of cast stone sills/banding/trim at all such locations.**

2.11 WEEPS

A. Weep units shall be a product known as "Cell-Vent" distributed by Dur-O-Wall; “QV - Quadro-Vent” by Hohmann and Barnard, Inc. “Mortar Maze” by Advanced Flashing Products, Inc. or equivalent product by Heckman or MRCA.

2.12 INSULATION SYSTEMS – See Section 07 21 00

2.13 BOND BEAM AND REINFORCED MASONRY SYSTEMS

A. Concrete block shall be as specified in Paragraph 2.04 above.

B. Reinforcing Steel - ASTM A 615, Grade 60; deformations ASTM A 305; coordinate with Section 03 30 00.

C. Grout Fill - Minimum 3,000 psi stone concrete conforming to design and material properties specified in Section 03 30 00.

2.14 Balance of materials shall be as specified elsewhere in this section.

Part 3 - EXECUTION

3.01 INSPECTION AND ACCEPTANCE

A. Examine all surfaces and contiguous elements to receive work of this section and correct, as part of the Work of this Contract, any defects affecting installation. Commencement of work will be construed as complete acceptability of surfaces and contiguous elements.

3.02 GENERAL MASONRY REQUIREMENTS

A. Grout solid all hollow metal, miscellaneous iron items and other built-in systems that occur in masonry construction. Provide temporary blocking as required to secure grout.

B. Set all loose steel lintels, miscellaneous items of metal construction, bearing plates, flashing, louvers, windows, access doors and other items as furnished under other sections of these specifications and required to be built into masonry work.

C. Dry-pack under all new bearing steel.

D. Construct "soft joint" where concrete masonry walls abutt structure; face brick abuts supporting steel and like conditions in accordance with B.I.A. requirements governing such work.

E. All masonry shall be laid with a vertical tolerance of 1/8 inch in 8 feet.

3.03 METAL ACCESSORIES FOR MASONRY WORK

A. Corrugated Wall Ties:

1. Furnish and install corrugated wall ties for bonding together wythes of solid walls, partitions and furring composed of double or dissimilar masonry units.

B. Joint Reinforcement:
1. Install continuous joint reinforcement in alternate bed courses of block backup for cavity walls and in every third joint of interior walls and partitions.
2. Material shall be in width suiting masonry wall thickness, 2 inches less than block width. Lap splices. Use preformed corners and tees.
3. Install in first 3 block-to-block joints over and under openings in walls and extend at least 20 inches beyond each side of opening.

C. At all columns and beams apply tie systems specified in Part 2 at 16 inch spacing; penetrations through sheathing and/or insulation shall be sealed with Type II sealant.

D. Provide vertical and horizontal bar reinforcement as shown in bond beams and wall areas.

E. Install in brick veneer and brick cavity walls at an effective spacing of 1 tie per 1.77 square feet (16 inches vertically and horizontally) "box" drip-type adjustable "**galvanized steel**" ties provided by Contractor; coordinate with Part 2 herein.

3.04 FACE MASONRY

A. Prior to starting the face masonry, build sample panels in accordance with Paragraph 1.05 herein. Do not start face masonry until such panels have been approved by the Architect.

B. Lay face masonry in running bond without headers, except where otherwise noted on drawings.

Lay out the bond of exposed face masonry in each wall surface as shown on drawings and so that no course shall finish at an external angle, corner, or joint with a piece of brick or block less than 3-3/4 and 7-5/8 inches long.

**ENSURE THAT MASONRY UNITS ARE “MIXED” FOR COLOR PATTERN TO APPROXIMATE, TO THE BEST POSSIBLE MATCH, APPROVED SAMPLE PANELS.**

C. Wet all brick thoroughly with water just prior to laying, except that brick having an initial absorption of less than 20 grams per minute per 30 square inches of bed surface, as measured in accordance with ASTM C 67, need not be wetted down.

D. Face masonry shall be installed with full head and bed joints.

E. Except for cleaning down, completely finish work as it is carried up. Lay up plumb, square, level and true to the required lines, grades and dimensions, in bond and properly anchored. In cavity walls, slope the top of the bed joints toward the center of the outer wythe to minimize mortar being squeezed into the cavity when units are shoved into line. Mortar protruding into the cavity shall be removed immediately. Point face joints as the work progresses.

F. At cavity walls, keep the space between wythes clear of all mortar drippings. Place the Mortar Net in the collar joint or cavity resting on the flashing at the base of the wall. Position with the zig-zag side up; in the event of full cavity drain fill, secure fill with adhesive to air/vapor barrier insulation layer.

G. Face joints of face masonry shall be concave tooled back from the general plane

of the face of unit. Tool and/or cut vertical joints ahead of horizontal joints. Tool joints when mortar is still plastic but somewhat hard to impress under firm thumb pressure. Slightly compress face of raked joints so that mortar surface is smooth. Clean all mortar from brick surface in open portion of tooled joints.

H. At control joints in face unit walls form a joint a maximum of 1/2 inch width (+0/-1/8 inch) by means of prefabricated elements specified in Part 2 of this Section. Joints shall be oversealed as specified in Section 07 90 00 using combination of Type II/III systems.

I. Provide inserts for weep holes and build into vertical joints of exterior wythe at the bottom of all exterior wall cavities and at all horizontal spandrel flashing where it closes off wall cavities. Weep holes shall be at every third vertical joint. Weep holes must be kept clean during construction.

J. Provide smooth beds of mortar for support of flashings. Place flashings as specified and seal or lock form all joints.

3.05 CONCRETE MASONRY

A. Lay in running bond, unless otherwise indicated on drawings, with cells in vertical position. In exposed surfaces, alternate vertical joints shall be in vertical alignment and centered on adjoining blocks. Block with concealed surfaces both sides shall have adjoining vertical joints staggered not less than 3 inches. All block shall be laid with full mortared face and cross shells, vertical and horizontal.

B. The thickness of vertical face joints shall be approximately the same thickness as the adjoining bed joints, but in no case greater. Cut CMU in circular masonry saw. No unit less than 1/2 size shall be used in wall construction with jointing visible in the finished work. Relocation of masonry openings necessitated by this requirement shall have the prior approval of the Architect.

C. Lay base with one course of units to define the spaces and locations of openings and to serve as a guide for the installation of concealed work. Start coursing, laid in mortar, bearing on concrete slabs and terminate with a full bed of mortar against framing above.

D. All concrete block partitions shall extend to the underside of the structure above unless otherwise shown. Leave space to permit installation of firestopping mortar as specified under Section 07 84 00 and caulking as applicable. All work related to these operations shall be performed by this Specialty Contractor. Provide partition anchor systems as specified in Part 1 herein.

E. Except for cleaning down, completely finish work as it is carried up. Lay up plumb, square, level and true to the required lines, grades and dimensions, in bond and properly anchored. Plaster the upper edges of shells and webs of the blocks heavily with mortar before placing the next upper block thereon.

F. Joints of CMU shall be compressed with trowel and cut flush. When the mortar has taken a slight set, joints exposed in the finished work shall be tooled to produce a concave joint.

**Horizontally scored ground face units shall have center score fully mortared and tooled to match head, bed and end joints so as to present a uniform appearance in the finished work.**

G. Reinforce all block walls and partitions as specified elsewhere in this section.

3.06 REINFORCED AND GROUTED MASONRY

A. Reinforced and grouted masonry construction shall conform to the requirements of “Building Code Requirements for Masonry Structures (TMS 402-08/ACI 530-08/ASCE 5-08)”.
B. Grouted masonry shall have a compressive strength f'm of 1,800 psi unless otherwise shown on the drawings. Strength shall be as measured by prism tests or other suitable method as outlined in Article 1.6 of reference standard.
C. Units shall be laid in running bond.
D. Grout shall be puddled in place with a 1 inch by 2 inch wood stick.

3.07 JOINTS
A. Provide prefabricated control and expansion joints in masonry where indicated on the Drawings and/or where specified. In addition, provide control joints wherever masonry abuts structure.
B. Joint reinforcing and ties shall extend through control joints and broken at expansion joints.

3.08 CAVITY WALL INSULATION – See Section 07 26 00 for this operation which shall be performed by the Air Barrier specialty contractor.

3.09 FLASHING, WEEP HOLES, AND VENTS
A. General: Install embedded flashing and weep holes in masonry at shelf angles, lintels, ledges, other obstructions to downward flow of water in wall, and where indicated.
B. Prepare masonry surface so that are smooth and free from projections that could puncture flashing. Unless otherwise indicated, place through-wall flashing on sloping bed of mortar and cover with mortar. Before covering with mortar, seal penetrations in flashing with adhesive, sealant, or tape as recommended by flashing manufacturer.
C. Install flashing as follows:
1. At masonry-veneer walls, apply flexible flashing over the air barrier to a height of 6” above the top of the cavity drainage material and secure flashing top edge with a termination bar to substrate. Apply sealant to top of termination bar. Install a 6” wide strip of compatible self-adhesive membrane over the installed termination bar and sealant, centered on the termination bar. Install metal drip edges beneath flexible flashing at exterior face of wall. Stop flexible flashing 1/2 inch (13 mm) back from outside face of wall, and adhere flexible flashing to top of metal drip edge.
2. At lintels and shelf angles, extend flashing a minimum of 4 inches (100 mm) into masonry at each end. At heads and sills, extend flashing 4 inches (100 mm) at ends and turn flashing up not less than 2 inches (50 mm) to form a pan.
3. Extend sheet metal flashing 1/2 inch (13 mm) beyond face of masonry at exterior and turn flashing down to form a drip.
4. Install end dams at all window and door flashing locations.
D. Install weep holes in the head joints in exterior wythes of the first course of masonry immediately above embedded flashing and as follows:
1. Use plastic weep hole/vents to form weep holes.
2. Space weep holes 24 inches (600 mm) o.c.
3. Place cavity drainage material immediately above flashing in cavities.
E. Install vents in vertical head joints at the top of each continuous cavity at spacing

indicated. Use plastic weep hole/vents to form vents.

F. Install reglets and nailers for flashing and other related construction where they are shown to be built into masonry.

3.10 BUILT-IN WORK

A. Coordinate to the fullest extent with the work of other trades in order that connecting and adjoining work may be properly installed.

B. Set and build in inserts, anchors, ties, bolts, blocking, plugs, and like items in contact with, supported on, or enclosed by masonry and which are furnished under other trades and contracts for setting in masonry.

C. Grout all spaces between all built-in items and masonry surrounding these items solidly with mortar.

3.11 CUTTING, PATCHING, HIDDEN PIPE, TUBING AND CONDUIT

A. Perform all cutting and patching of new work.

B. Refer to drawings and specifications for Plumbing, Heating and Electrical Work affecting the work of this section.

C. Note that all exposed interior masonry surfaces including those to receive paint or similar finish must present an attractive, even, regular appearance, unbroken except for normal jointing.

D. Cut holes for outlets, switches and receptacles neatly and, where conduits or pipe are run in partitions, cut away webs without interrupting the face of units or pattern of wall joints. Remove excess mortar.

3.12 PROTECTION

A. Protect existing construction, adjacent work and finished work from damage. Provide drop cloths or other suitable protective coverings in all areas of the work.

B. Damage caused by the handling, storing, mixing or application of materials or the failure to provide adequate protection shall be repaired or replaced at no additional cost to the Owner.

3.13 CLEANING AND POINTING

A. During the progress of the work, keep the exposed surfaces of masonry clean at all times and protected against damage. Upon completion of masonry and adjoining work likely to damage the masonry, and when directed by the Architect, clean the exposed surfaces thoroughly, using bristle brushes and clean fresh water. Wire brushes shall not be used. All cleaning operations shall proceed from top downward.

B. As cleaning progresses, examine all face joints in exposed masonry to locate cracks, holes or other defects, and point up all such defects and fill with mortar.

C. Where necessary in the opinion of the Architect, cut out defective joints and masonry units and replace with new materials, exercising extreme care to match original work.

3.14 ACCEPTANCE AND PATCHING

A. On completion of work, all equipment and rubbish resulting from the work of this section shall be removed from the premises.

B. Leave work clean, whole, and sound ready for additional finish or sealing as specified and/or as shown on the drawings.

3.15 FIELD QUALITY CONTROL

A. After installation of flashings and completion of masonry assemblies, inspect work.
   1. Verify flashings have been properly installed at all required locations to prevent water penetration.
   2. Verify weep holes have been provided to ensure proper drainage to exterior.

B. Water test flashings at minimum of 3 locations per elevation unless directed to contrary by the Architect to verify flashing has been properly installed and moisture drains through weep holes.

3.16 WASTE MANAGEMENT – Coordinate with Section 01 74 19

A. Separate and recycle waste materials in accordance with the Waste Management Plan and to the maximum extent economically feasible.

B. Fold up metal banding; flatten and place in designated area for recycling.

C. Collect wood packing shims and pallets; place in designated area.

D. Place unused mixed mortar in designated locations where lower-strength mortar meets the requirements for bulk fill; for example, use as retaining wall footing ballast, cavity fill at grade, or underground utility pipe kickers.

E. Separate masonry waste and place in designated area for use as structural fill or in landscaping of the Project.

**End of Section**

# SECTION 04 72 00

# CAST STONE

## Part 1 - GENERAL

1.01 Applicable provisions of the Conditions of the Contract and Division #1, General Requirements, govern work in this Section.

1.02 DESCRIPTION OF WORK

A. The work of this Section consists of the provision of all plant, materials, labor and equipment and the like necessary and/or required for the complete execution of all cast stone and related accessories for this project as required by the schedules, keynotes and drawings.

NOTE: Sections 04 05 03 and 04 20 00 act as complementary to this Section and all requirements set forth therein apply to this work as if restated in full.

Provide mortar and gasketing/sealing systems for element jointing. Primary seal system shall be provided under work of Section 07 90 00. All joints exposed to weather shall be sealant filled and tooled all as part of the work of Section 07 90 00 unless otherwise shown on the drawings.

B. Cast Stone suitable for use at and below grade for bottom course(s) of exterior wall assemblies as indicated on Drawings in sizes as indicated on Drawings.

C. Exterior window sills in special shape(s) as indicated on Drawings.

D. Cast stone trim, copings, sills, caps, and other shapes indicated on Drawings.

1.03 RELATED WORK SPECIFIED ELSEWHERE - Entire Project Specification with specific reference to those sections noted above and as follows:

A. 07 90 00 - Sealant Compound

1.04 QUALITY ASSURANCE

A. The fabricator/manufacturer of the cast stone and architectural precast concrete shall have a minimum of 5 years continuous operation, having experience, adequate facilities and capacity to furnish the quality, sizes and quantity of materials required without delaying the progress of the work, and whose products have been previously used and exposed to the weather with satisfactory results.

E. Manufacturer shall be a current member, in good standing, of the Cast Stone Institute.

F. Reference Standards:

1. ACI 301 - Specifications for Structural Concrete for Buildings.
2. ACI 311 - Recommended Practice for Concrete Inspection.
3. ACI 318 - Building Code Requirements for Reinforced Concrete.
4. ACI 304 - Recommended Practice for Measuring, Mixing, Transporting and Placing Concrete.
5. CRSI - Manual of Standard Practice.
6. PCI - Manual for Quality Control, MNL 117.
7. Building Code of the State of Connecticut.

D. Quality Control

Units shall shown no obvious repairs or imperfections other than minimal color variations when viewed with the unaided eye at a 3 meter (10 foot) distance in good typical daylight illumination.

1.05 SUBMITTALS – Coordinate with Section 01 33 00

- Submittals shall be made in groupings where installations are complementary, i.e. steel, steel decking, steel stairs, stair railings; roof systems/flashings; mechanical and electrical apparatus and the like. Failure to comply with this requirement will be cause for rejection of any or all submittals.
- As set forth in Sections 01 33 00 and 01 32 00, prepare and submit a fully developed submittal schedule; note review times set forth in Section 01 33 00 are deemed “average”, for large submissions allow longer review times.
- Attention is directed to Section 01 31 14 for coordination drawing requirements for this project. These drawings are critical to the proper execution of the Work and failure to honor these requirements may become the basis for denial of any and all claims for either or both “time” and “money”.
- The Contractor is encouraged to submit for approval products made from recycled and/or environmentally responsible material. Every effort will be made by the Design Professional Team to approve these materials; the substitution request procedure shall still be enforced.

A. Certification of specification compliance.

B. Shop drawings prepared by or under supervision of a qualified professional engineer, showing details and sizes of stones; arrangements of joints; bonding; inserts; joints; connections to adjoining walls or other supporting elements; reinforcing; and method of installation and anchorage. Shop drawings shall provide for the following:
   1. Suitable wash on all exterior sills, copings, projecting courses and such other elements with exposed to surfaces.
   2. Window sills shall have raised fillets at the back of stones.
   3. All projecting pieces, soffit and/or cornice stones shall have drips under the outer edges.
   4. Show setting mark of each stone and its location on the structure. The stones, when delivered, shall bear the same corresponding setting mark on an unexposed surface.
   5. Provide complete design calculations, includeing loads imposed on structure, stamped and signed by qualified professional engineer.

C. Prior to fabrication, submit test reports of the design mix in accordance with the samples approved.

D. Samples
   1. Submit 3 precast samples approximately 30 cm by 30 cm by 10 cm (12 inches by 12 inches by 4 inches), showing quality, texture, and color of the proposed finish.
   2. Submit 3 samples each of anchorages and other attachments and accessories.
   3. Prior to start of installation, and after the review of finish samples, submit 1 full size sample of each shape of required precast unit, delivered to the job site. Acceptable full size samples may be incorporated in the construction.

NOTE: Review of samples by the Architect will be for color, texture, and general condition only. Compliance with all other requirements is the exclusive responsibility of the Contractor.

E. Material Safety Data Sheet (MSDS) must be submitted for each product.
F. Mockups – Coordinate with Sections 01 43 39 and 04 20 00.
G. Where applicable, Contractor shall take all necessary field measurements prior to fabrication and shall assume complete responsibility for accuracy of same.

1.06 PRODUCT DELIVERY, STORAGE AND HANDLING (Coordinate with Section 01 61 00)
A. All cast stone shall be carefully loaded and packed for transportation exercising customary and reasonable precaution against damage while in transit.
B. Units shall be unloaded and handled by competent workmen and by such methods as will guard against damage and soiling.
C. Store units clear of ground on suitable cribbing or pallets so as to protect from damage. If material is to be stored for an extended period, covers same with non-staining waterproof material.
D. When in storage, precast units shall be stacked at support points, comparable to design support conditions.
E. The precast concrete members shall be lifted and/or supported at the supporting points when they are put into service.

1.07 SUSTAINABILITY
A. In the selection of the products and materials of this section as well as for the entire project, preference will be given to those with the following characteristics:
1. Water based.
2. Water-soluble.
3. Can be cleaned up with water.
4. Non-flammable.
5. Biodegradable.
6. Low or preferably no Volatile Organic Compound (VOC) content.
7. Manufactured without compounds that contribute to ozone depletion in the upper atmosphere.
8. Manufactured without compounds that contribute to smog in the lower atmosphere.
9. Do not contain methylene-chloride.
10. Do not contain chlorinated hydrocarbons.
11. Contains the least possible of post-consumer or post-industrial waste.

Part 2 - PRODUCTS

2.01 MANUFACTURERS
A. Manufactuer: provide products of Continental Cast Stone Manufacturing, Inc., or approved equal products.
B. Basis of Design Products: Provide Continental Select Stone modular, suitable for use at and below grade.
2.02 CAST STONE MATERIALS
A. General: Comply with ASTM C 1364 and the following:
B. Portland Cement: ASTM C 150, Type I, containing not more than 0.6o percent

toatl alkali when tested accoridng to ASTM C 114.

C. Aggregates: ASTM C 33 gradation using graded and washed natural sands, hard crushed limestone, quartz, marble or granite. Gradation may vary to achieve desired finish and texture.

D. Water: Clean and free from any acid, alkali, oil or organic matter that may interfere with the setting of the mixture.

E. Color: All colors added shall be inorganic (natural or synthetic) iron oxide pigments meeting ASTM C 979 excluding the use of a cement grade of carbon black pigment, and shall be guaranteed by the pigment manufacturer to be lime proof. Pigment amount shall not exceed 10% by weight of cement used.

F. Admixtures, if permitted, shall comply with ASTM C 494.

G. Air entrainment - Wet cast mixtures shall contain 6% air entrainment where any surface is exposed to freeze-thaw cycling. Admixture shall comply with ASTM C 290.

H. Additive to be used in the specified and approved mix at the rates noted for the particular product:
"DCI" by W.R. Grace & Co. at 3 gallons per cu.yd.
"Armatec" by Sika Corporation at 1/2 gallon per cu.yd.
"Rheocrete 222" by Master Builders Inc. at 1 gallon per cu. yd.

2.03 CONCRETE PROPERTIES

A. The manufacturer is responsible for design of mix which achieves both the strength and surface finish required for the project.

B. Concrete strength, as determined in accordance with ASTM C 39 on a cylinder of 152 mm (6 inches) diameter by 30 cm (12 inches) length, shall be not less than 6,500 psi (44.8 MPa) at the 28 day break. Tests shall be performed by an independent laboratory approved by the Architect. A minimum of 2 series of tests shall be performed, ALL costs thereof shall be borne by the Contractor.

C. Water absorption of any unit shall not exceed 6% of dry weight when tested in accordance with ASTM C 642.

2.04 REINFORCING

A. ASTM A 615, Grade 40 or 60 unless otherwise noted.

B. Galvanized Reinforcing Bars: ASTM A 767, Class II (2.0 oz. zinc psf) Class I (3.0 oz. zinc psf) hot-dip galvanized, after fabrication and bending.

C. Epoxy-Coated Reinforcing Bars: ASTM A 775.

NOTE: Cast stone shall be reinforced as may be required for handling, and to allow for temperature changes and structural stress. Provide minimum reinforcement amounting to 1/4% of the sectional area of element; should element be greater than 30 cm (12 inches) in any sectional dimension, temperature steel shall be placed in both directions.

D. Where applicable, substitute welded wire fabric conforming to ASTM A 185, galvanized as for exterior work above.

2.05 FABRICATION REQUIREMENTS

A. General

1. Fabricate the Work of this Section to the sizes and shapes indicated, and of texture matching the approved Samples.

2. Provide finished units which are straight, true to size and shape, and within the specified casting tolerances.
3. Make exposed edges sharp, straight, and square, unless indicated otherwise. Make flat surfaces into a true plane.
4. Warped, cracked, broken, spalled, stained, and otherwise defective units will not be acceptable.
5. Place and secure in the forms all anchors, clips, stud bolts, inserts, lifting devices, shear ties, and other devices required for handling and installing the precast units and for attachment of subsequent items as indicated or specified.

B. Curing
1. Form cure the Work of this Section for a minimum of 24 hours.
2. Keep wet continuously for not less than ten days after being removed from the forms.
3. Following the curing period, allow the units to air dry. Units shall not be erected before 28 days after casting.

C. Casting tolerances: Maintain casting, bowing, warping, and dimension tolerance below the following maximums:
1. Overall dimension for height and width of units: Plus zero, and minus 1.6 mm (1/16 inch) of unit length.
2. Make thickness of units plus or minus 3.2 mm (1/8 inch) maximum.
3. Bowing or warping: Do not exceed 1/360 of the length.
4. Insert locations: Place within plus or minus 6.4 mm (1/4 inch) in each direction.

2.06 COLOR AND FINISH

A. Exposed surfaces of all precast concrete items shall have a custom color and texture as selected by the Architect to match or compliment adjacent surfaces.

B. Color and texture of stones shall be generally equal to the approved sample when viewed in direct daylight at a 3 meter (10 foot) distance.

2.07 FASTENINGS

A. Anchor fastenings, fabircated from stainless steel complying with ASTM A 276 ot ASTM A 666, Type 304, shall be provided in the units in accordance with the best practices of the industry and/or as shown on the architectural drawings.

B. All anchoring loops, brackets, bolts and other fastenings projecting from units shall be of Type 304 stainless steel.

C. Dowels – Round stainless steel bars complying with ASTM A 276, Type 304, 1/2 inch (12-mm) diameter

2.08 SETTING AND POINTING MATERIALS

A. Mortar for setting of stone shall be Type "S" as specified in Section 04 05 03.

B. Pointing mortar shall consist of 1 part nonstaining white Portland Cement, (ASTM C 150), 1 part lime (ASTM C 207, Type S), 4 parts sharp clean white sand (ASTM C 144) and clean potable water. Mortar shall match existing in color; coordinate with Section 04 01 00.

C. Sealant Materials: Type I or IV as specified in Section 07 90 00.

Part 3 - EXECUTION

3.01 INSPECTION AND ACCEPTANCE

A. Examine all surfaces and contiguous elements to receive work of this section and correct, as part of the Work of this Contract, any defects affecting installation. Commencement of work will be construed as complete acceptability of surfaces and contiguous elements.

3.02 INSTALLATION

A. All stones shall be set by experienced masons, accurately and in accordance with approved shop and setting drawings in full mortar bedding with all vertical joints flushed full except as specified below.
   1. Provide flexible bearing pads where indicated on the approved Shop Drawings. Set pads on level and uniform bearing surfaces. Maintain in correct position until all units are in place.
   2. Plastic or hard rubber buttons shall be used in setting large units to sustain the weight until mortar has set.

   All anchor, dowel and similar holes shall be, in any event, filled solid with mortar or non-shrink (non-metallic) grout. **All stones set for cornices, copings, projecting course and the like exposed to wash shall be set with unfilled vertical joints or with gasket spacers and made ready to receive sealant system.**

B. Furnish nonferrous anchors and dowels of type and sizes required to restrain and/or support cast stone units to the respective trades responsible; install same where cast stone is to be anchored to cast stone.

C. When setting in mortar, thoroughly drench stones with clear water prior to setting.

D. Set and anchor all units solidly, true and level with all units lying in the same plane in proper position with all corners in accurate alignment. After units are set in, or on, the wall, cover all top surfaces and protect from the elements at the close of each day's work and keep covered and protected until all the Work is completed.

E. Expansion Joints: Provide joint sealers at expansion joints where indicated on the Drawings and where required for proper installation. (See Section 07 90 00).

F. After each stone has been set, rake all joints to a depth of 20 mm (3/4 inch) from face for pointing or sealing. Sponge faces of each stone to remove any splashed mortar or mortar smears.

G. Rake back bed joints in ALL cast stone systems exposed to the weather to permit sealing as specified in Section 07 90 00 to a minimum depth of 20 mm (3/4 inch) by width not exceeding 1:1 basis. Sealing work is subject to all labor restrictions specified in Section 07 90 00 as if restated herein.

H. Balance of jointing not exposed to the weather, i.e.; vertical shall be pointed with pointing mortar in color as directed by the Architect. Dampen joints prior to pointing; no pointing shall be done in freezing weather nor in locations exposed to hot sun without proper protective measures taken and approved by the Architect.

3.03 ERECTION TOLERANCES

A. Variations from plumb - 1/4 inch in any 20 foot run or story height; 3/8 inch total in any 40 foot run or longer.

B. Variations from level or elevation - 1/4 inch in any 20 foot run; 3/8 inch in any 40 foot run; total +/- 3/8 inch at any location.

C. Variation from theoretical position in plan - +/- 1/4 inch at any location.

D. Offsets in alignment of adjacent members at any joint - 1/16 inch in any 10 foot run; maximum 3/16 inch.
E. Out of Square 1/8 inch in 10 feet maximum, Non-cumulative.
F. Maximum Variation from dimensions shown on Shop Drawings Plus or Minus 1/8 inch.
G. Misalignment of anchors, inserts, openings: 1/8 inch maximum.
H. Bowing of units: Length of the bow divided by 360.
I. Exposed Joint Dimension (Plus 3/8 inch Minus 1/4 inch)

3.04 PATCHING AND CLEANING

A. Repair of chipped or damaged stones shall be done only by mechanics skilled in this class of work using materials furnished and directions provided by the stone manufacturer.
B. Thoroughly clean cast stone work after completion of the setting, and after completion of other work liable to damage or soil cast stone units. Clean in conjunction with the cleaning of all other masonry work. Do not clean in temperature below 50 degrees F. Clean by scrubbing with soap powder and water, applied vigorously with stiff fiber brushes, adding clean, sharp, fine, white sand to the soap and water mixture where necessary. After scrubbing, drench all surfaces of the cast stone units thoroughly with clean water. **No acids or prepared cleaners may be used without express written approval from the stone manufacturer**. Start the cleaning operation at the top of the structure and proceed downward.

3.05 WASTE MANAGEMENT – Coordinate with Section 01 74 19

A. Separate and recycle waste materials in accordance with the Waste Management Plan and to the maximum extent economically feasible.
B. Fold up metal banding; flatten and place in designated area for recycling.
C. Collect wood packing shims and pallets; place in designated area.
D. Place unused mixed mortar in designated locations where lower-strength mortar meets the requirements for bulk fill; for example, use as retaining wall footing ballast, cavity fill at grade, or underground utility pipe kickers.
E. Separate masonry waste and place in designated area for use as structural fill or in landscaping of the Project.

**End of Section**

THIS PAGE INTENTIONALLY LEFT BLANK

SECTION 05 50 00

METAL FABRICATIONS – MISCELLANEOUS/ORNAMENTAL METALS

Part 1 - GENERAL

1.01 Applicable provisions of the Conditions of the Contract and Division #1, General Requirements, govern work in this Section.

1.02 DESCRIPTION OF WORK

A. The work of this Section consists of the provision of all plant, materials, labor and equipment and the like necessary and/or required for the complete execution of all miscellaneous and ornamental metal work for this project as required by the schedules, keynotes and drawings, including, but not limited to the following:

1. Furnish and/or provide lintels as required, in sizes shown on the Architectural and Structural Drawings, or in absence thereof at door and window openings, recessed construction, duct openings and like locations supporting masonry over 3 courses above said opening and in excess of 18 inch widths.

   Assemblies shall be hot-dipped galvanized after fabrication where exposed to the weather and when used in masonry construction in the enclosed areas.

   Units under 100 lbs. in total weight and set in masonry shall be installed under Section 04 20 00 and companion sections; balance of units shall be installed under this work.

2. Provide relieving/shelf angles as detailed and specified herein; installation in concrete as applicable; coordinate with Section 04 20 00 for installation. Units shall be hot-dipped galvanized when used in exterior masonry construction.

3. Provide railing systems for project including:
   a. Site railings as detailed;

   **Note that materials, diameter and design requirements vary for locations**.

   Work herein shall include - factory prefinished steel railings as detailed, throughout the project. Furnish reverse sleeves for casting in site concrete as required. Provide brackets as necessary for support of all railings.

4. Decorative Metal Fencing as detailed.
5. Overhead Canopy at Concession Area.
6. Provide galvanized ladders for elevator pits as detailed.
7. Provide cast abrasive nosing for concrete steps each with suitable anchorage devices for same at all locations unless otherwise shown.
8. Provide plate and angle systems welded to structural steel to serve as partition supports at stair wells, shafts and the like.

9. Provide all required angles, floor plates, clips and the like as may be required for installation of the work of this section.
10. Provide all required support iron, angles and the like as required to complete the installation of the work of this project.
11. Furnish to Section 06 20 00, miscellaneous angles, clips and other metal reinforcements as may be required to complete the millwork operations; bracket supports for counters, if required, will be provided by Millwork Contractor as part of their work.
12. Provide all edge angles at pits, trenches, and the like shown and/or required.
13. Install prefabricated expansion joint assemblies as detailed and/or required by construction conditions.
14. Provide hot-dipped galvanized areaway and/or roof gratings and angle supports. Provide hinged portion with locking device as indicated on the drawings. Furnish angle frames for setting in concrete as required at areaways and other such elements.
15. Provide elevator sill supports, support brackets, guide rail inserts and the like shown and/or required; coordinate with Sections 14 20 00
16. Structural elements as indicated and/or required to frame openings for ducts, equipment and the like as well as to provide adequate support for same.
17. Cut openings in roof decking as required; provide new support framing as detailed and/or necessary to support equipment and free deck ends.
18. Perform all drilling and tapping required for attachment of this work to the work of others.
19. Protect all dissimilar materials.
20. Perform all shop, prime and field touchup painting operations.
21. Provide miscellaneous gratings, curb angle frames and the like as shown and/or required to complete the work.
22. Provide any other miscellaneous angles, channels, plates or shapes indicated or required for the proper installation of the work as shown, including all clips, anchors, bolts and the like as required to secure the work of this section to adjoining work.
23. Furnish inserts for ladders and relieving angles and such other items to Section 03 30 00 for installation; coordinate with Section 04 20 00 for installation of relieving angles; further, furnish for installation by others, all other items to be embedded in construction that are necessary for attachment of work of this Section.

NOTE: All metal work exposed to the weather or subjected to moisture shall be hot-dipped galvanized after fabrication or "zinc-rich" coated after proper preparation in accordance with the requirements of Part 2 of this Section.

1.03 RELATED WORK SPECIFIED ELSEWHERE - Entire Project Specification with specific reference to those sections noted above and as follows:
A. 07 60 00 - Flashing and Sheet Metal
B. 09 90 00 - Painting

1.04 QUALITY ASSURANCE
A. Requirements given herein may be affected by other related requirements of the

project specification. Correlation of contract requirements is the responsibility of the Contractor.

B. Coordinate work with that of all other trades affecting, or affected by work of this Section. Cooperate with such trades to assure steady progress of all work under Contract.

C. The work under this Section shall be performed by a Fabricator and Erector acceptable to the Architect. The Fabricator and Erector shall submit conclusive evidence of having satisfactorily completed work of similar scope and of having the necessary skill, equipment, facilities and capacity to fabricate the work and to perform the erection in accordance with the construction schedules and in full compliance with all requirements of the Contract Documents.

**D. Coordinate installation of anchorages for metal fabrications. Furnish setting drawings, templates, and directions for installing anchorages, including sleeves, concrete inserts, anchor bolts, and items with integral anchors, that are to be embedded in concrete or masonry. Deliver such items to Project site in time for installation.**

**E. Coordinate installation of steel weld plates and angles for casting into concrete that are specified in this Section but required for work of another Section. Deliver such items to Project site in time for installation.**

1.05 SUBMITTALS – Coordinate with Section 01 33 00

- Submittals shall be made in groupings where installations are complementary, i.e. steel, steel decking, steel stairs, stair railings; roof systems/flashings; mechanical and electrical apparatus and the like. Failure to comply with this requirement will be cause for rejection of any or all submittals.
- Submit environmental data in accordance with Table 1 of ASTM E 2129 for products provided under work of this Section.
- As set forth in Sections 01 33 00 and 01 32 00, prepare and submit a fully developed submittal schedule; note review times set forth in Section 01 33 00 are deemed “average”, for large submissions allow longer review times.
- Attention is directed to Section 01 31 14 for coordination drawing requirements for this project. These drawings are critical to the proper execution of the Work and failure to honor these requirements may become the basis for denial of any and all claims for either or both “time” and “money”.
- The Contractor is encouraged to submit for approval products made from recycled and/or environmentally responsible material. Every effort will be made by the Design Professional Team to approve these materials; the substitution request procedure shall still be enforced.

A. Shop drawings of all items to be fabricated and installed. Show dimensions and details of all items. Verify dimensions and correlate metal work with adjoining work. Obtain approval of shop drawings before fabrication.

B. Samples of all manufactured items.

C. Certification of Specification Compliance.

D. This Contractor shall take all necessary field measurements prior to fabrication and installation of work and shall assume complete responsibility for accuracy of same.

E. Manufacturers Material Safety Data Sheet (MSDS) must be submitted for each

manufactured product.

F. This Specialty Contractor shall hire a professional engineer, licensed in the jurisdiction to design all structural components and members of all fencing, railings, hangers, anchors, struts, tie-backs, bracing and like elements required to complete the work of this project as related to miscellaneous and ornamental metal operations all in accordance with the governing Building Code and subject to approval by the Architect. Coordinate work with both Sections 05 12 00 and 05 51 00 as applicable.

1.06 PRODUCT DELIVERY, STORAGE AND HANDLING (Coordinate with Section 01 61 00)

A. Stock commercial methods, materials, products, patterns and fabrication methods meeting requirements of this Specification and conforming substantially to details and design indicated on Drawings will be accepted. See Drawings for locations, sizes and details not in this section.

B. All connections shall be securely and neatly screwed, welded, tenoned, or riveted together with dowels or countersunk rivets and dressed flush. All surfaces shall be dressed smooth and be free from mill marks or imperfections. Joints shall be tight and inconspicuous without the use of painting or caulking. Permanent connections shall be riveted or welded where practicable.

C. Welding shall comply with the applicable current standards, specifications, and codes of the American Welding Society. Welds shall be continuous except where spot welding is specifically permitted by the Architect. Where exposed, welds shall be ground to a smooth surface.

D. All units shall be properly laid out and spaced between terminals so that there shall be no cutoff or other uncertain finish.

E. Joints in exterior work shall be made watertight. All miters shall be cut and finished to a perfect fit.

F. Necessary ribs, brackets, fillets and other reinforcement in cast work shall be cast integrally with the main body of the work. Castings shall be sound and free from warp or defects impairing strength or appearance. Exposed surfaces shall have smooth finish and sharp, well defined lines and arrises. Joints shall be machined to close fit.

G. All rolled shapes shall be carefully straightened and shall be free from twist before the start of fabrication. All exposed fastenings shall be evenly spaced.

H. Do all cutting, drilling, fitting and work of a similar character required in fitting and setting the materials in place, and in fitting of this work to the adjoining work of other trades.

I. Provide connecting members, bolts, anchors, clip angles, rivets, screws, expansion bolts, etc., as required for the work of this Section, and as necessary for the attachment of other materials to the work, and not specified in other sections.

J. All metal items which are to be used on the exterior or placed in exterior walls shall be hot dipped galvanized after fabrication.

K. All connecting members, bolts, anchors, etc., which are to be covered with masonry shall be installed as far as practicable as the work progresses, so as to avoid cutting or drilling.

L. Bolting, where permitted, shall be done with proper size bolts with nuts drawn tight and for permanent connections, with threads upset.

M. All operative items shall be carefully adjusted and left in satisfactory working order.

N. Where anchors and fasteners are not fully detailed, their sizes, forms, attachment and location shall be such as to conform to the best shop and industry practice. Anchors shall have protective coat of paint as specified for shop coats.

1.07 WELDING

A. Welding must be performed by welders who have been certified by an approved Testing Laboratory within previous two year period. Submit proof of such certification to Architect before work is performed. Comply with AWS D1-1 "Structural Welding Code".

B. All welding which is done on steel and miscellaneous metal work to remain exposed in the finished work shall be "Architectural", i.e. - these welds must be ground smooth and show no seams. Rules and regulations governing all welding operations are set forth in Section 01 50 00.

1.08 PAINTING AND PROTECTION OF DISSIMILAR SURFACES

A. General preparation of metal surfaces to receive shop coating shall be in accordance with the methods outlined in the Steel Structures Painting Council Specification (SSPC) as may be applicable for intended exposure and location, and further;

B. Where aluminum components are in contact with, or fastened to dissimilar metals, except stainless steel or zinc, the dissimilar metals shall be given a coat of zinc chromate primer and a heavy brush coat of alkali-resistant bituminous paint. In permanently dry locations the metals may be separated by nonabsorptive plastic tapes or gaskets.

C. Aluminum in contact with, or built into masonry, concrete, or plaster shall be given a brush coat of alkali-resistant bituminous paint, or clear methacyrlic lacquer.

D. Where aluminum is in contact with wood or other absorptive material which may become repeatedly wet, the wood or other material shall be given a coat of aluminum pigmented bituminous paint. Joints shall be sealed with sealant compound at points of contact with aluminum.

E. All ferrous metals shall be thoroughly cleaned and, except items to be encased in concrete, given a priming coat of approved shop paint. Surfaces shall be thoroughly covered and shall be free of runs or sags.

F. Items which support masonry or will be concealed in the finished work, except items encased in concrete, shall be field painted before erection of enclosing construction. Where shop coat is abraded or burned out by welding, the protection shall be the same paint as used for the shop coat, tinted to a different shade.

G. Manufacturer's standard shop coat will be accepted for items subject to foot and vehicle traffic and for built-in items, except that bituminous coatings shall not be used for items to be finished with decorator paints.

1.09 PERFORMANCE REQUIREMENTS

A. Structural Performance of Ladders: Provide ladders capable of withstanding the effects of loads and stresses within limits and under conditions specified in ANSI A14.3.

B. Thermal Movements: Provide exterior metal fabrications that allow for thermal movements resulting from the following maximum change (range) in ambient and surface temperatures by preventing buckling, opening of joints, overstressing of components, failure of connections, and other detrimental effects. Base

engineering calculation on surface temperatures of materials due to both solar heat gain and nighttime-sky heat loss. Temperature Change (Range): 120 deg F ambient; 180 deg F material surfaces.

1.10 SUSTAINABILITY

A. In the selection of the products and materials of this section as well as for the entire project, preference will be given to those with the following characteristics:
   1. Water based.
   2. Water-soluble.
   3. Can be cleaned up with water.
   4. Non-flammable.
   5. Biodegradable.
   6. Low or preferably no Volatile Organic Compound (VOC) content.
   7. Manufactured without compounds that contribute to ozone depletion in the upper atmosphere.
   8. Manufactured without compounds that contribute to smog in the lower atmosphere.
   9. Do not contain methylene-chloride.
   10. Do not contain chlorinated hydrocarbons.
   11. Contains the least possible of post-consumer or post-industrial waste.

Part 2 - PRODUCTS

2.01 GENERAL

A. For fabrication of miscellaneous and ornamental metal work which will be exposed to view in the finished work, use only materials which are smooth and free from surface blemishes including pitting, seam marks, roller marks, trade names, roughness and other defects which will be apparent in the finished products.

B. Stock materials, patterns, products and standard methods of fabrication will be approved provided they conform to specified requirements and in general to the details shown.

C. Metals and accessory items shall conform to the current applicable recognized industry standards and the following grades.

2.02 FERROUS METAL WORK

A. Structural steel shapes galvanized when exposed to weather or moisture, prime coated for interior.
   1. W-Shapes: ASTM A 992/A 992M
   2. Channels, Angle-Shapes: ASTM 36/36M
   3. Plates and Bars: ASTM 36/36M

B. Steel plates for bending or cold forming - ASTM A 283, Grade C.

C. Carbon Steel Sheets - ASTM A 653, galvanized where exposed to moisture or weather.

D. Standard Steel Sheets - ASTM A 1011, galvanized when exposed to moisture or weather.

2.03 STEEL PIPE, TUBES, BAR STOCK

A. Steel Pipe - ASTM A 53, Type S, Grade B, galvanized for moisture and/or weather exposure.
   1. Standard for general use.

2. X-Strong and/or XX-Strong for bollards, railings and other items not satisfying criteria set forth above or required to satisfy safety and performance criteria.

B. Posts, Pickets and Rails
1. All metals shall be made of milled steel suitable for hot-dip galvanizing as specified in ASTM A 384 and A 385.
2. Posts are to be square tubestock.
3. Pickets are to be poled steel square bar stock.
4. Rails are to be flat rectangular bar stock.

2.04 ALUMINUM
A. Material shall be 6063 alloy as suitable intended use and for receiving finishes as required for respective installations on project.

2.05 STAINLESS STEEL MATERIALS
A. General - ASTM A 167, AISI Types 302/304 with #4 finish for exposed surfaces and mill for concealed surfaces unless otherwise required.
B. Rails shall be provided with ANSI B36.19 designation for standard Schedule 40 pipe unless otherwise specified or required due to code conditions governing point loading restrictions.

2.06 FASTENERS, INSERTS, MISCELLANEOUS
A. Bolts & Nuts (Steel) - ASTM A 307.
B. Inserts - Threaded, wedge or slot type, galvanized castings, ASTM A 47 or A 27.
C. Fasteners and anchorage devices shall be of type, grade, class and style best suited for the respective purposes; galvanized, cadmium plated or stainless steel.
D. Use flat head Phillips type machine screws for exposed fastenings OR tamperproof devices as directed by the Architect and/or conditions of use.

2.07 NOSINGS FOR CONCRETE STAIRS
A. Furnish for installation by others, abrasive nosings Type AX full width of stair tread less 3 inches each side. Material shall be as furnished by Safe-T-Metal Company, Inc.
B. Anchorages shall be suitable for intended use.

2.08 GRATINGS
A. All areaway gratings shall be Amico Standard Welded Type “W” 15W2 or 13W2 resistance welded grating as manufactured by Alabama Metal Industries Corp. or approved equal by McNichols, IKG or Balco.
1. Bearing bars: Rectangular steel bars of an appropriate depth and thickness for the required load, on 1 3/16” centers for conventional gratings not accessible to pedestrian traffic and where accessible spacing shall be 13/16”.
2. Cross Bars: Twisted wire rod , at 2” on center, resistance welded to the bearing bars and at right angles to them.
3. Surface: The bearing bars shall have a smooth top surface.
B. Loading: At a uniform load of 100 pounds per square foot, deflection shall not exceed ¼ inch over the required span.
C. Finish: Manufacturers standard shop coat of black paint or Galvanized as required by Architect/Engineer.

D. Modify for access sections as required.
E. Evidence of structural capacity for all grating installations shall be submitted with required submittals and shall bear the seal of a professional engineer registered in the jurisdiction of the work.

2.09 PROTECTIVE COATING SYSTEMS

A. Galvanizing - ASTM A 153 for iron and steel hardware; A 123 for rolled, pressed and forged steel shapes, plates, bars and strips 1/8 inch thick and heavier; A 386 for assembled products; A 526 hot dip galvanizing in accordance with A 525, Designation G90 for all carbon steel sheet. Galvanize all structural steel tubing and pipe to ASTM A 123, and bolts, nuts and washers to A 153. Repair unacceptable galvanized surfaces in accord with ASTM A 780.
B. Protective coating - cold applied asphaltic mastic, SSPC-12, 30 dmt/coat.
C. Provide factory-applied polyamide epoxy primer over specially prepared galvanized steel, 2.0 mils dry film thickness minimum. Apply primer within 12 hours after galvanizing at the galvanizer's plant in a controlled environment meeting applicable environmental regulations, and as recommended by coating manufacturer.

*Engage the services of a galvanizer who has demonstrated a minimum of 5 years experience in the successful performance of the processes outlined in this specification in the facility where the work is to be done and who will apply the galvanizing and coating within the same facility as outlined herein*.

2.10 ORNAMENTAL GATES

A. Ornamental custom industrial grade galvanized (G-90 ASTM A653, A653M) steel gate assembly in sizes indicated on Drawings. Fully welded panel with 1"x1" pickets spaced 4" o.c., 1.75"x1.75" rails min. with 2"x2" gate ends min. Factory applied finish with epoxy primer and acrylic topcoat in color black. Provide posts sized for requirements of the assembly set in concrete footings to frost level (42" min.). Provide all required components including heavy duty hinges, latches, locks, drop rod, post caps, and the like for complete installation. Gate shall be lockable, coordinate with District for keying/locking requirements.
B. Provide custom designed gate signage with backplate welded as integral part of gate assembly. Provide factory painted aluminum lettering. Coordination required to ensure secure installation of lettering to backplate by mechanical means. Provide additional support components to gate as required for support of signage.
C. Gate assembly shall have 10 year warranty.

2.11 ALUMINUM CANOPY

A. Aluminum Canopy Assembly: Basis of Design Mapes Lumishade
B. Length: 14feet
C. Finish: Clear Anodized
D. Provide all required decking (2-1/2" W style pan min 0.32 aluminum, extruded aluminum intermediate framing, 8"H aluminum fascia (0.125 min.), hanger rods and attachment hardware as required for complete assembly per manufacturer's written requirement.
E. Submit shop drawings showing structural component locations/positions, material dimensions and construction of assembly.

2.12 FABRICATION, GENERAL
- A. Welding - Comply with requirements of the American Welding Society (AWS).
- B. All Welding: By licensed welder.
- C. Welding Electrodes - E60XX classification of AWS A5.1.
- D. Grind welds smooth.

2.13 SHOP PAINTING - (reference 09 90 00)
- A. Ferrous metal primer - modified alkyd rust inhibitive material similar and equal to Tnemec 99.
- B. Galvanized surface repairs and welds, "Zinc-Rich" material.
- C. Architectural Finish Systems: ***(Architect to provide paint sample)***
  1. All prefinished metalwork shall receive a factory applied epoxy primer, 2.0 mils dry film thickness minimum, within 12 hours after galvanizing.
  2. All metalwork shall receive two finish coats at minimum application coverage of 2.0 mils dry film thickness for each coat.
  3. Paint shall be a high quality aliphatic polyurethane as specified in Section 09 90 00, color to be selected by the Architect.

2.14 LADDER FABRICATION
- A. Two inch by 3/8 inch flat bar sides with 3/4 inch round rungs at 12 inches on center, width to be as shown, but not less than 18 inches.
- B. Rungs let into side bars, full depth, fully welded and ground smooth.
- C. Units to be galvanized after fabrication.

2.15 EXPANSION JOINT SYSTEMS – See Section 07 95 00

2.16 RAILING SYSTEM FABRICATION
- A. All rail systems required for the work of this project as per Part 1 herein shall be fabricated from scheduled materials and to the design configurations shown on the drawings and in strict accordance with the requirements of OSHA Code, Part 1926, Subpart M, governing resistance requirements and strength;

  Further, railings and barriers around stairways, stairwells, balconies, areaways and other floor openings, both exterior and interior, as well as roof railings around perimeter, openings and the like, shall, <u>unless required otherwise by the applicable building code</u>, be designed to provide railings capable of withstanding the effects of gravity loads and the following loads and stresses within limits and under conditions indicated:
  1. Handrails:
     - a. Uniform load of 50 lbf/ ft. applied in any direction.
     - b. Concentrated load of 200 lbf applied in any direction.
     - c. Uniform and concentrated loads need not be assumed to act concurrently.
  2. Top Rails of Guards:
     - a. Uniform load of 50 lbf/ ft. applied in any direction.
     - b. Concentrated load of 200 lbf applied in any direction.
     - c. Uniform and concentrated loads need not be assumed to act concurrently.
  3. Infill Area of Guards: Horizontal concentrated load of 50 lbf applied to 1 sq. ft. at any point in system, including panels, intermediate rails, balusters, or other elements composing infill area. Load on infill area need

not be assumed to act concurrently with loads on top rails.

B. All rail systems required for the work of this project as per Part 1 herein shall be fabricated from scheduled materials and to the design configurations shown on the drawings.

C. Supporting ballusters shall be fabricated using bar stock, tube, pipe or other elements indicated in metal materials as details require.

D. All railing systems shall be "seamless" and ground "smooth" so no joints are apparent.

E. All rails shall have flush welded fittings except where floor flanges and concealed splices are required. Welds shall be ground smooth for painting.

NOTE: All new stair rail systems shall in design shown, minimum 42 inches in height as per applicable Code requirements. Spacing of any opening shall not exceed 4 inches clear.

F. Single rails used for wall handrails shall have neat end fittings and be supported by brackets.

2.17 ANCHORAGE MATERIALS

A. Anchoring cement grout for railings and other such items embedded in construction and requiring same shall be "LokSet QR 10" by Fosroc/Preco. Equal materials shall have a maximum expansion rating of 0.2% and an ultimate compressive strength of 11,000 psi.

B. Mechanical/Chemical Anchors Systems:

1. Special duty anchor for hollow masonry construction shall be Hilti "HIT C-20" in rod and tube sizes required for conditions encountered and/or as dimensioned on the drawings.

2. Anchor systems for structural attachment to concrete shall be Hilti "HSL Metric Heavy-Duty Expansion Anchor" system in sizes required for conditions encountered and/or as dimensioned on the drawings.

2.18 SHELF AND RELIEVING ANGLES

A. Fabricate shelf and relieving angles from steel angles of sizes indicated and for attachment to concrete framing. Provide slotted holes to receive 3/4 inch bolts.

B. For cavity walls, provide vertical channel brackets to support shelf/relieving angles from backup masonry and concrete. Align expansion joints in angles with expansion joints in cavity wall exterior wythe.

C. Galvanize all angles to be installed on exterior framing.

D. Furnish, to Section 03 30 00 for setting, wedge-type concrete inserts, complete with fasteners, for attachment of shelf angles to cast-in-place concrete.

E. Leave 1/2 to 3/4 inches between sections of angles for expansion.

2.18 MISCELLANEOUS PLATES AND SHAPES

A. Furnish items that do not form a part of the structural steel framework, such as lintels, sill angles, miscellaneous mountings and frames, etc.

B. Provide lintels fabricated from structural steel shapes over openings in masonry walls and partitions as indicated and as required to support wall loads over openings. Provide with connections and fasteners or welds. Construct to have at least 6 inches bearing on masonry at each end.

C. Provide angles and plates, ASTM A 36/A 36M, for embedment as indicated. Galvanize embedded items exposed to the elements according to ASTM A 123/A 123M.

2.19 Balance of materials shall be as specified elsewhere in this Section.

Part 3 - EXECUTION

3.01 INSPECTION AND ACCEPTANCE

A. Examine all surfaces and contiguous elements to receive work of this section and correct, as part of the Work of this Contract, any defects affecting installation. Commencement of work will be construed as complete acceptability of surfaces and contiguous elements.

3.02 RAILING SYSTEMS

A. Rail posts, set in concrete, shall be set over reverse pipe sleeves to a minimum depth of 6 inches and anchored with "plug weld" and then smoothed and finished. Rails shall be held 1/4 inch above concrete and then fillet sealed with Type IA sealant material as specified in Section 07 90 00. Pipe sleeves shall be furnished to Section 03 30 00 for setting prior to pouring of concrete. This Contractor shall be responsible for verifying sleeve locations.

B. Rail systems set on steel stringers shall be fully welded with all welds ground smooth and flush.

C. Single pipe rails used for wall handrails shall have neat end fittings and be supported not over 6 feet apart or 10 inches from ends of wall rail by brackets secured to supporting strata by not less than three 1/4 inch expansion bolts unless otherwise detailed or required by industry practice.

D. Anchorage shall be as shown and/or required to insure total conformance with code requirements.

3.05 ACCESS LADDERS

A. Anchor top and bottom and at intermediate locations in accordance with OSHA requirements unless drawings indicate more frequent supports. **Minimum spacing of anchorage - 24 inch centers, each rail.**

3.06 PIPE SLEEVES (Coordinate requirements for sleeves with Divisions 21, 22, 23 and 26)

A. Sleeves through and in masonry or concrete for passage of any and all piping and setting of any and all required set and/or built-in items shall be standard weight, wrought iron, mild steel or cast iron, sized to allow 1/4 inch between sleeve and pipe.

3.07 LOUVERS – See Section 08 90 00

3.08 GRATINGS AND FRAMES

A. Frames where required shall be furnished to the respective subcontractor for installation in base construction. Installation shall be accomplished in accordance with details as shown on the drawings.

3.09 SADDLES

A. Saddles shall be set perfectly in full bed of Type VI caulking compound as specified in Section 07 90 00, secured with not less than three flathead

countersunk screws driven into lead expansion shields.

B. Saddles shall extend across the full width of the door openings in a single piece, neatly fitted to jamb and properly fitted and cut for hardware. Provide cover plates for hardware.

3.10 EXPANSION JOINT ASSEMBLIES

A. Install expansion joint covers for floors, junctions of floor and wall, roof joint to walls and necessary accessory and end pieces as required by the installation.

B. All parts in contact with concrete or masonry shall receive one shop coat of zinc chromate primer. All aluminum parts shall have mill finish.

C. Floor covers shall be protected during construction operations by suitable means approved by the Architect. Such protection shall be removed when directed by the Architect.

3.11 COUNTER AND VANITY SUPPORTS AND BRACKETS – Coordinate with Section 06 20 00 for manufactured elements.

A. Brackets shall be thru-toggled or bolted in masonry; attached to backplates in drywall construction and expansion bolted to concrete. Other methods of attachments shall be submitted to the Architect for approval.

3.12 MISCELLANEOUS

A. Steel lintels shall be the full thickness of the masonry and bear at least 6 inches on masonry at each end to support all openings as defined in Part 1 of this Section. No lintels shall be required for openings in masonry partitions less than 3 feet 4 inches wide and having full width metal bucks EXCEPT where same are in rated walls, coordinate with door schedules and details, nor will they be required where attached lintels are indicated on the Structural drawings.

B. Provide at the proper time all the various miscellaneous metal supports and framing not provided under other sections and required to complete the work.

C. All items of miscellaneous metal such as access doors, manhole covers, plate frames and covers, and the like not otherwise specified, but shown on the drawings shall be part of this contract.

D. Provide inserts of size and type as required as detailed and/or necessary for support of work of this project.

E. Relieving angles (not attached to structural steel or light metal framing as specified elsewhere), hangers, channel bucks, channel frames, support frames and other items of miscellaneous iron shown on the drawings but not specifically covered in the work above shall be considered to be part of work of this Section and shall be done in accordance with best industry practices.

3.13 FINISHING

A. Clean and repair any damage to paint after erection.

B. At galvanized surfaces, apply orange zinc repair paint in compliance with ASTM A 780. Galvanizing paint shall have 95% zinc by weight. Thickness shall not be lesser than required by ASTM A 123 or A 153 as applicable. ***Touchup of galvanized surfaces with aerosol spray, silver paint, brite paint, etc. is unacceptable***.

3.14 PROTECTION

A. Protect existing construction, adjacent work and finished work from damage. Provide drop cloths or other suitable protective coverings in all areas of the work.
B. Damage caused by the handling, storing, mixing or application of materials or the failure to provide adequate protection shall be repaired or replaced at no additional cost to the Owner.

3.15 ACCEPTANCE AND PATCHING
A. On completion of work, all equipment and rubbish resulting from the work of this section shall be removed from the premises.
B. Leave work clean, whole, and sound ready for additional finish or sealing as specified and/or as shown on the drawings.

3.16 WASTE MANAGEMENT – Coordinate with Section 01 74 19
A. Separate and recycle materials and material packaging in accordance with Waste Management Plan and to the maximum extent economically feasible and place in designated areas for recycling.
B. Set aside and protect materials suitable for reuse and/or remanufacturing.
C. Separate and fold up metal banding; flatten and place along with other metal scrap for recycling in designated area.

**End of Section**

SECTION 06 20 00

FINISH CARPENTRY

Part 1 - GENERAL

1.01 Applicable provisions of the Conditions of the Contract and Division #1, General Requirements, govern work in this Section.

1.02 DESCRIPTION OF WORK

A. The work of this Section consists of the provision of all plant, materials, labor and equipment and the like necessary and/or required for the complete execution of all finish carpentry, millwork and related accessories for this project as required by the schedules, keynotes and drawings, including, but not limited to the following:

CODE NOTES

- Fire treat all lumber and plywood exposed to view in the finished work, and as set forth in the "code" statement below as required and specified. Reference Section 09 90 00 for field type fire treatments ***as and if code required***.
- Further, all wood work and other applied decorative finishes exposed within the structure shall be finished and/or treated to comply with the Connecticut State Building Code setting standards for Flame Spreads for use classification in accordance with Table 803.5 of the referenced code.
- **NFPA 101, Section 10.2.1.1** - Classification of interior finish materials shall be in accordance with tests made under conditions simulating actual installations, provided that the authority having jurisdiction shall be permitted to establish the classification of any material on which a rating by standard test is not available, unless otherwise provided in 10.2.1.2.
- **NFPA 101, Section 10.2.1.2** - Materials applied directly to the surface of walls and ceilings in a total thickness of less than 0.9 mm (1/28 in.) shall be exempt from tests simulating actual installation if they meet the requirements of Class A interior wall or ceiling finish when tested in accordance with 10.2.3 using inorganic reinforced cement board as the substrate material.

SCOPE NOTES:

- All casework and interior associated wood trim to be cut and fit at the millwork shop and not by finish carpenters on site; it is recognized that some work for final installation may have to be done on site, but that shall be held to a minimum. All trim to be finish nailed, countersunk and plugged to wood blocking.
- All millwork, paneling, wainscots and trim systems provided under the work of this Section, shall, to the greatest practicable, BE SHOP FINISHED in accordance with American Woodwork Standards, Section 5 - Finishing "PREMIUM CLASSIFICATION" using the systems specified in this Section as applicable for the intended usage.
- ***Unless specified to the contrary, the core/platform for millwork items, shelving and the like, other than countertops, shall be "mill option" using plywood, solid stock, medium density fiberboard, water-***

***resistant medium density particle board and the like with no added urea-formaldehyde.***

- ***All metal items either built into millwork, surface mounted, angle/channel edge trim either of stainless steel; painted aluminum; anodized aluminum; bronze and the like shall be provided by this contractor subject to the material requirements specified in Section 05 50 00. Attachment, in all cases, shall be by hot glue, no exposed fasteners shall be employed. Work also includes the provision of "custom aluminum" extrusions for edge banding of bulletin boards; glazing systems; and the like shown; coordinate with applicable sections for profiles required.***

1. Provide millwork construction as required generally consisting of -
   a. Pantry Style Upper and base cabinets in First Aid room
   b. Slat wall- ¾" Coreboard panels, Maple finish with aluminum inserts and matching shelves 11.5"d x 2' long- Qty- 8. Include finished edge trims. (see drawings for size and location)
   c. Stained Maple supports for hooks at Team rooms
   d. Countertop at Kiosk- (Add Alt. 2 ) Plam with T edge.
   e. Backsplashes/Sidesplashes- 4"h Provide all fasteners, anchorage items and rough hardware required for the work of this Section whether or not specified in detail.
2. Perform all priming, backpainting, shop coating, and the like in conjunction with the work of this Section.
3. Provide all other labor, materials, equipment, and accessories and other items necessary to make the work of this Section complete.

1.03 RELATED WORK SPECIFIED ELSEWHERE - Entire Project Specification with specific reference to those sections noted above and as follows:

A. 06 10 00 - ROUGH CARPENTRY for wood furring, blocking, shims, and hanging strips required for installing woodwork and concealed within other construction before woodwork installation.

1.04 QUALITY ASSURANCE

A. Certification: Work in this Section shall comply with the specified grade(s) of work and section(s) of the current edition of the Architectural Woodwork Institute quality standards. Woodwork manufacturers shall be licensed by AWI as competent to perform the work specified.

B. AWS Quality Standards
   1. Quality Standard: Unless otherwise indicated, comply with the Architectural Woodwork Standard, Latest Edition, for grades of interior architectural woodwork, construction, finishes and other requirements.

C. Fabrication and Installation Qualifications: Firm which can demonstrate a minimum of 3 years of successful experience in fabricating and installing woodwork items similar in type and quality to those required for this project.

D. Reference Standards: All materials used for work of this Section shall conform with Voluntary Product Standards and trade Association Units as follows:
   1. Northeastern Lumber Manufacturer's Association Inc. (NELMA); Southern Pine Inspection Bureau (SPIB); Western Wood Products Association (WWPA).

2. American Plywood Association (APA); Douglas Fir Plywood Association (DFPA).
3. Architectural Wood Work Institute (AWI)
4. American Society for Testing and Materials (ASTM).
   E 84 Fire Resistance
5. American Wood Preservers' Association (AWPA)
   C2 Preservative Treatment by Pressure Processes.
   C20 Fire Retardant Treatment by Pressure Process
6. Applicable Federal Specifications for fasteners, bolts, nails, screws, etc.
7. American National Standards Institute (ANSI)
   A135.4 Basic Hardboard
   A208.1 Mat Formed Wood Particle Board
8. National Electrical Manufacturers Association (NEMA).
9. Builders Hardware Manufacturers Association (BHMA)
   A156.9 Cabinet Hardware
10. Hardwood Plywood & Veneer Association (HPVA)
    HP American Standard for Hardwood and Decorative Plywood
11. National Hardwood Lumber Association (NHLA)
12. Underwriters' Laboratories, Inc. (UL).
13. Structural standards as set forth by National Forest Products Association (NFPA)
14. Connecticut State Building Code.

E. Further, requirements given herein may be affected by other related requirements of the project specifications. Correlation of the contract requirements is the responsibility of the Contractor.

F. In compliance with the SED Manual of Planning Standards, Part II, Section S202, all materials incorporated in the work of this Section shall comply with the following:
   1. Class A, Flame Spread 0-25 interior finish shall be mandatory in corridors; passageways; stairs; exit ways; kitchens; maintenance, repair and custodial areas; trim/paneling systems in places of public assembly.
   2. Class C, Flame Spread Less than 200 interior finish is mandatory in all instructional and office spaces.

   In any case, regardless of the flame spread classification, no material having a smoke developed rating of 450 or more may be used in any area of work on this project.

G. Fire-Test-Response Characteristics: Where fire-retardant materials or products are indicated, provide materials and products with specified fire-test-response characteristics as determined by testing identical products per test method indicated by UL, ITS, or another testing and inspecting agency acceptable to authorities having jurisdiction. Identify with appropriate markings of applicable testing and inspecting agency in the form of separable paper label or, where required by authorities having jurisdiction, imprint on surfaces of materials that will be concealed from view after installation.

H. Fire Testing and Certification:
   1. Class A or B Fire Rated Wall Surface Assembly shall mean that the entire wall panel assembly, including surface materials, backer, core and adhesive have been tested and are certified as to Class A or B Fire rating by an organization so authorized, such as Underwriters Laboratories and

must be tested or manufactured by an approved company of the certifying agency.

I. Mockups: Build mockups to verify selections made under sample submittals and to demonstrate aesthetic effects and set quality standards for materials and execution. Approved mockups may become part of the completed Work if undisturbed at time of Substantial Completion. Retain and maintain mockup during construction in an undisturbed condition as a standard for judging the completed Work.

J. Preinstallation Conference: Conduct conference at Project site to comply with requirements in Division 01.

K. Architect's Control Samples for Transparent Finish, Veneer Grain, Figure, and Natural Characteristics.
   1. Architect will furnish Control Sample for Transparent Finish.
   2. Architect will furnish Control Sample for Veneer Grain and Figure, and Natural Characteristics.

1.05 SUBMITTALS – Coordinate with Section 01 33 00

- Submittals shall be made in groupings where installations are complementary. Failure to comply with this requirement will be cause for rejection of any or all submittals.
- As set forth in Sections 01 33 00 and 01 32 00, prepare and submit a fully developed submittal schedule; note review times set forth in Section 01 33 00 are deemed "average", for large submissions allow longer review times.
- Attention is directed to Section 01 31 14 for coordination drawing requirements for this project. These drawings are critical to the proper execution of the Work and failure to honor these requirements may become the basis for denial of any and all claims for either or both "time" and "money".
- The Contractor is encouraged to submit for approval products made from recycled and/or environmentally responsible material. Every effort will be made by the Design Professional Team to approve these materials; the substitution request procedure shall still be enforced.

A. Shop Drawings showing location of each fabricated item along with dimensioned plans and elevations; large scale details, jointing and profiles; attachment devices; material listing; finish designations; accessories and other components.
   1. Identify woodwork item using same identification system shown on Architectural Drawings.
   2. Coordinate details and cutouts to accommodate accessories specified under other Sections
   3. Show locations and sizes of cutouts and holes for plumbing fixtures, electrical components and other items installed in architectural woodwork.
   4. As applicable to the particular project show veneer leaves with dimensions, grain direction, exposed face, and identification numbers indicating the flitch and sequence within the flitch for each leaf.

   Prepare drawings to a minimum scale of 1-1/2 inches to 1 foot.

B. Samples including -
   1. Lumber and panel products with or for transparent finish, not less than 5 inches wide by 12 inches long for each species and cut for lumber and 12

inches square for panel products, finished on 1 side and 1 edge. Include at least one face veneer seam and finish as specified. Factory finished samples shall be step type indicating all finishing procedures and products. Submit samples in sets of two or more illustrating the possible range of any natural variation of the natural solid and veneer wood color.

2. Lumber and panel products with shop-applied opaque finish, 5 inches wide by 12 inches long for lumber and 12 by 12 inches for panels, for each finish system and color, with 1/2 of exposed surface finished.
3. Trim: 2 pieces, 12 inches long of each type and finish.
4. Counter Tops: 1 piece, 12 inches long, complete unit.
5. Anchorage devices to be used in the work of this section, 2 each.
6. All cabinet finish hardware, each item. Linear samples - 12 inches. Piece items, 2 each.
7. Veneer leaves representative of and selected from flitches to be used for transparent-finished woodwork. Provide one sample leaf from each 1000 square feet of veneer.
8. Plastic laminates, 8 by 10 inches for each type, color, pattern, and surface finish, with 1 sample applied to core material, and specified edge material applied to 1 edge.
9. Solid-surfacing materials, 6 inches square.

All other items as deemed necessary by the Architect.

C. Product Data: Submit manufacturer's or supplier's product data for each product and process specified as work of this Section and incorporated into items of finish carpentry. Include data for fire-retardant treatment from chemical treatment manufacturer and certification by treating plant that treated materials comply with requirements.

D. Certification of specification compliance for all work including:
1. Quality Certification: Submit woodwork Manufacturer's (Fabricator's) certification, stating that fabricated woodwork complies with AWI quality grades and other requirements indicated herein.
2. Wood Treatment Data: Submit chemical treatment manufacturer's instructions for handling, storing, installation, and finish of treated material.
3. Fire Retardant Treatment: Provide certification by treating plant that treated materials comply with requirements.

E. This Contractor shall take all necessary field measurements prior to fabrication and installation of work and shall assume complete responsibility for accuracy of same.

F. Material Safety Data Sheet (MSDS) must be submitted for each product.

1.06 ENVIRONMENTAL, STORAGE AND HANDLING REQUIREMENTS AND RESTRICTIONS (Coordinate with Section 01 61 00)

A. Deliver all materials to the job site clearly labeled as to product, manufacturer, color and/or other pertinent characteristics.

B. Protect millwork against dampness. All materials shall be stored flat and level in a fully enclosed space. **Do not store seasoned materials in wet or damp portions of buildings.**

C. Millwork and trim installations shall be done only when the temperature and humidity closely approximate the interior conditions that will exist when the building is occupied. **The heating and cooling systems shall be operating**

**before, during, and after installation, with the humidity of the interior spaces maintained between 25% and 55%.**

D. Acclimate all materials, millwork and trim for a minimum of 72 hours immediately prior to installation.

E. Store materials a minimum of 6 inches above ground on framework or blocking and cover with protective waterproof covering providing for adequate air circulation or ventilation.

F. Store doors under cover, stacked substantially upright on wood strips and with spaces between doors to assure drainage of condensation and ventilation of all surfaces.

G. Protect fire retardant materials against high humidity and moisture during storage and erection.

H. Field Measurements: Where woodwork is indicated to fit to other construction, verify dimensions of other construction by field measurements before fabrication, and indicate measurements on Shop Drawings. Coordinate fabrication schedule with construction progress to avoid delaying the Work.

1. Locate concealed framing, blocking, and reinforcements that support woodwork by field measurements before being enclosed, and indicate measurements on Shop Drawings.
2. Established Dimensions: Where field measurements cannot be made without delaying the Work, establish dimensions and proceed with fabricating woodwork without field measurements. Provide allowance for trimming at site, and coordinate construction to ensure that actual dimensions correspond to established dimensions.

1.07 COORDINATION

A. Coordinate sizes and locations of framing, blocking, furring, reinforcements, and other related units of Work specified in other Sections to ensure that interior architectural woodwork can be supported and installed as indicated.

1.08 SUSTAINABILITY

A. In the selection of the products and materials of this section as well as for the entire project, preference will be given to those with the following characteristics:

1. Water based.
2. Water-soluble.
3. Can be cleaned up with water.
4. Non-flammable.
5. Biodegradable.
6. Low or preferably no Volatile Organic Compound (VOC) content.
7. Manufactured without compounds that contribute to ozone depletion in the upper atmosphere.
8. Manufactured without compounds that contribute to smog in the lower atmosphere.
9. Do not contain methylene-chloride.
10. Do not contain chlorinated hydrocarbons.
11. Contains the least possible of post-consumer or post-industrial waste.

Part 2 - PRODUCTS

2.01 LUMBER MATERIALS

A. Grading and Fabrication: AWS, Section 3 and AWI Quality Standard 100 each setting a general classification as **"CUSTOM"** and graded as I, II or III as per AWI as applicable to intended use.
B. Moisture Content: 6 to 8%.
C. Sizing: Surface lumber 4 sides as per Simplified Practice Recommendations PS16, latest edition.
D. Species:
   1. Hardwoods
      a. Natural – Maple
      b. Painted - Poplar
   2. Softwoods – Eastern White Pine

***NOTE*: Standard molding grading will *not apply or be accepted*.**

2.02 SHEET MATERIALS AND PANELS
A. Grade panel products in accordance with AWS, Section 4 and AWI Quality Standard 200 for "Grade of Work" specified.
B. Flush Wood Panel Systems as per AWI Quality Standard 500A graded as **"CUSTOM"** and composed of hardwood plywood graded for I - Transparent finish.
   1. Grade all exposed surfaces as "A" GRADE" quality face veneer as defined by the Hardwood Plywood & Veneer Association (HPVA).
   2. All semi-exposed surfaces shall have "B" Grade face veneer.
   3. All concealed surfaces shall have veneer facing graded at the Option of the fabricator.
   4. Thickness - 3/4 inch [19 mm]
   5. Core – Mill Option
   6. Face Veneer – Maple.
   7. Cut – Plain Sliced
   8. Matching -
      a. between adjacent veneer leaves: - Slip Match and Architectural End Match
      b. Within a Single Panel Face: Balance and Center Match.
      c. In a Room, Panel to Panel: Blueprint-Matched Panels and Components.
C. Particle Board: **Minimum 48 pound density**; Grade 1-M-2 conforming to ANSI A161.1 and 161.2. **Provide "water resistant" <u>or</u> "fire retardant" material each as required by conditions of use and in accordance with governing Codes**. All such boards shall be urea-formaldehyde resin free; and shall, to the greatest extent practical, be fabricated from post consumer waste products.
D. Medium Density Fiberboard (MDF)
   1. Interior Usage: Industrial grade with a formaldehyde free binder exceeding the requirements established in ANSI A208.2, Product Class MD-Interior for use in fabrication of millwork items at option of fabricator. **Provide "fire retardant" material as required by conditions of use and in accordance with governing Codes.**

2.03 SOLID SURFACING
A. Materials, General: Provide the following solid surfacing materials in 1/2" minimum thickness unless otherwise indicated and as follows.

Sink counter and splashes at First Aide
Corian, Solid Surface, Terran Series, Color Silver birch

2.04 PLASTIC LAMINATE MATERIALS

A. Materials, General: High pressure laminated material conforming to NEMA standards for intended locations as follows.
   1. HGS for horizontal surfaces. Substitute HGF, fire rated material in areas requiring rating in accordance with code statement contained in Part 1 above.
   2. HGS or VGS and HGP for exposed vertical surfaces. Use HGP material for all post forming work requiring 3/8 inch or greater radiused edges.
   3. CLS for cabinet liners.
   4. Backer BLK for backing/balancing of assembled panels.

B. Colors and Finishes –
   First Aide vertical surfaces- Wilsonart, Phantom Charcoal #8214-28 exterior with white laminate interior
   Part of Add Alt 2 -Kiosk building, Interior countertop- Wilsonart, Pressed Linen #4991-38 supported with finished metal brackets

C. Approved Manufacturers: Formica; Wilsonart International; Pionite

D. Adhesives - as recommended by the manufacturer for intended product and substrates encountered.

E. Fabrication and application of plastic laminate shall be in accordance with industry standard practices, conditions, procedures and recommendations as set forth in NEMA LD 3-85, AWS Section 11 and AWI 200/400 as well as ANSI 161.2, MOST RESTRICTIVE shall govern. Store products in accordance with manufacturer's requirements and preconditioned prior to application and/or assembly of panels for a minimum of 48 hours at 75F and 50% RH.

2.05 GLUES AND ADHESIVES - See Section 06 10 00

2.06 ANCHORAGE AND FASTENERS

A. Size anchorage items to meet requirements and conditions at the site and shall be as set forth in Section 06 10 00 as if restated herein in full and shall be as applicable for intended usage.

B. Fasteners shall be of size and type to suit application.
   1. Interior:
      a. Finish in exposed areas: Brass in public areas; cadmium plated or stainless steel in all other locations.
      b. Finish in concealed areas: galvanized
   2. Concealed joint fasteners shall be of threaded steel or other patented type assembly.

2.07 ACCESSORIES

A. Casework and Molding Trim Systems: As detailed

B. Panel Clip Hanger System: Provide aluminum interlocking extruded Z-clip. Wood wall cleat system is not allowed. Extruded aluminum wall tracks for horizontal installation and multipolymer plastic shims as required for shimming wall tracks. Mount continuous wall tracks at 16” on centers vertically into stud framing. Anchoring into drywall only is not permitted. Extruded aluminum panel clips

attached to wall panels for friction fit to wall tracks. Mount 2" panel clips on panel backs at 16" on centers horizontally. All other components and hardware required for complete installation. Panel anchor system shall be an extruded aluminum "mated spline" system as manufactured by Monarch Metal Fabrication, Inc. (631-563-8967); Brooklyn Hardware Manufacturing, LLC (888-232-1151) or approved equal.

C. Glass: As specified in Section 08 80 00.

D. Brackets: "Work Station Brackets" by A&M Hardware fabricated from 1/8 inch steel, fully welded and rated for 1000# loading. Unit assemblies shall be prefinished with textured powder coat in manufacturer's standard colors.

2.08 PRESERVATIVE & FIRE TREATMENT - as per Section 06 10 00 as if restated herein in full and shall be as applicable for intended usage.

2.09 HARDWARE - For purposes of establishing standards of quality and levels of performance, casework hardware shall be similar and equal to one of the following:

A. Pulls: Hafele pull#115.21.001 Matt stainless steel

B. Drawer Slides: BHMA A156.9, B05091; side mounted and extending under bottom edge of drawer; full-extension type; epoxy-coated-steel with steel ball-bearings; of the following grades:

1. Box Drawer Slides: Grade 1.
2. File Drawer Slides: Grade 1HD-100.
3. Pencil Drawer Slides: Grade 2.

C. Hinges: Frameless Concealed Hinges (European Type): BHMA A156.9, B01602,100 degrees of opening, self-closing.

D. Catch: 7/8 inch diameter cylindrical magnetic.

E. Removable panels: 3M invisible nylon fastener.

F. Plug-in shelf brackets; standard metal pin design.

G. Recessed shelf standards: KV #255 with #256 matching brackets and cross shelf supports.

H. Continuous hinges: Soss

I. Wiring grommets shall be similar and equal to H'A'FELE #429.99, 60 mm diameter <u>or</u> Doug Mockett & Co., Inc "TG" each in color as selected by the Architect.

J. Door Locks: BHMA A156.11, E07121.

K. Drawer Locks: BHMA A156.11, E07041.

L. Hooks- Hafele Wardrobe Hook, Brushed Matt, Stainless Steel #842.34.000

2.10 CASEWORK FABRICATION

A. All cabinetwork shall comply, as a minimum, to the requirements of the AWS Section 10 and Quality Standards of the Architectural Woodwork Institute (AWI), Sections 400 or 1600 "Modular Cabinets" for "**Custom**" Grade, except as otherwise specified or indicated on the drawings shall apply by reference and are hereby made a part of this Specification. Attention is directed to Part 1 of this Section for Certification requirements..

B. Construction: Flush overlay <u>OR</u> as may be detailed on the drawings.

C. Materials/Panels - Reference Paragraphs 2.01 and 2.02 herein for panels and solid stock species and grade.

D. Cabinet Bases/Toe Kicks – Lumber, **not subject to mill option.**

E. Finish of exposed surfaces: Governed by ASW Section 5 and specifically those

noted below
1. Laminated Finish as per Paragraph 2.03 above.
2. Natural Finish - AWI 1500 – Conversion Varnish, medium rubbed

F. Semi-exposed surfaces: Balance sheet on door backs; quality standards govern balance of work.

2.13 MISCELLANEOUS MATERIALS

A. Furring, Blocking, Shims, and Hanging Strips: Fire-retardant-treated softwood lumber, kiln dried to less than 8 percent moisture content.

B. Anchors: Select material, type, size, and finish required for each substrate for secure anchorage. Provide nonferrous-metal or hot-dip galvanized anchors and inserts on inside face of exterior walls and elsewhere as required for corrosion resistance. Provide toothed-steel or lead expansion sleeves for drilled-in-place anchors.

C. VOC Limits for Installation Adhesives and Glues: Use installation adhesives that comply with the following limits for VOC content when calculated according to 40 CFR 59, Subpart D (EPA Method 24):
1. Wood Glues: 30 g/L.
2. Contact Adhesive: 80 g/L.
3. Special Purpose Contact Adhesive: 250 g/L.

2.14 FABRICATION REQUIREMENTS

A. Interior Woodwork Grade: Provide AWI Premium or Custom grade interior woodwork complying with the referenced quality standard applicable to the particular item specified herein.

B. Wood Moisture Content: Comply with requirements of referenced quality standard for wood moisture content in relation to ambient relative humidity during fabrication and in installation areas.

C. Sand fire-retardant-treated wood lightly to remove raised grain on exposed surfaces before fabrication.

D. Fabricate woodwork to dimensions, profiles, and details indicated. Ease edges to radius indicated for the following:
1. Corners of Cabinets and Edges of Solid-Wood (Lumber) Members and Rails: 1/16 inch.

E. Complete fabrication, including assembly, finishing, and hardware application, to maximum extent possible before shipment to Project site. Disassemble components only as necessary for shipment and installation. Where necessary for fitting at site, provide ample allowance for scribing, trimming, and fitting.

F. Shop-cut openings to maximum extent possible to receive hardware, appliances, plumbing fixtures, electrical work, and similar items. Locate openings accurately and use templates or roughing-in diagrams to produce accurately sized and shaped openings. Sand edges of cutouts to remove splinters and burrs.
1. Seal edges of openings in countertops with a coat of varnish.
2. The millwork contractor is responsible for all AV, telephone, data, security, and electrical penetrations in millwork. The electrical and AV contractors are to coordinate number, location, and type of penetrations with the millwork contractor.

G. Install glass to comply with applicable requirements in Section 08 80 00 - GLAZING and in GANA's "Glazing Manual." For glass in wood frames, secure glass with removable stops.

H. Apply .020 laminate (BKL) backing sheets to reverse side of plastic laminate finished surfaces.

I. Miscellaneous Metals. The millwork contractor is responsible for the coordination, location, requirements and installation of the metal supports and brackets provided by others incorporated in the Work of this Section, including any fasteners or materials required for installation.

2.15 FACTORY FINISHING

A. Grade: Comply with AWS Section 5 and AWI Section 1500 Premium Grade for requirements and restrictions.

1. Comply with AWI for sanding, filling countersunk fasteners, sealing concealed surfaces, and similar preparations for finishing architectural woodwork as applicable to each unit of work.
2. Back Priming: Apply two coats of sealer or primer, compatible with finish coats to concealed surfaces of woodwork. Exception; surfaces with plastic laminate, backing laminate or thermoset decorative overlay.

B. General: Finish architectural woodwork at fabrication shop as specified in this Section. Defer only final touchup, cleaning and polishing until after installation.

C. Shop Priming and Sanding: Shop apply the prime coat including back priming and sanding, for opaque finished items specified to be field finished. Comply with AWI Section 1500-T-14 shop primer for the field application of final opaque finishes.

D. Transparent Finish: Comply with requirements indicated below for finish system, staining, effect, and sheen with sheen measured on 60-degree gloss meter per ASTM D523.

1. AWI Finish System: Water White non-yellowing Conversion Varnish
2. Stain: Maple.
3. Optional Steps: Apply wash-coat sealer before staining and finishing.
4. Effect: Partially Filled Pore.
5. Sheen: Satin 35 gloss units.

2.16 Balance of materials shall be as specified elsewhere in this section.

Part 3 - EXECUTION

3.01 INSPECTION AND ACCEPTANCE

A. Examine all surfaces and contiguous elements to receive work of this section and correct, as part of the Work of this Contract, any defects affecting installation. Commencement of work will be construed as complete acceptability of surfaces and contiguous elements.

3.02 WORKMANSHIP AND CONSTRUCTION, GENERAL

A. All work hereunder shall be executed by mechanics skilled in the trade. Construction and finishing of millwork shall be specially and carefully done by experienced journeymen.

B. All finish work shall be assembled and finished at the shop, as far as practicable, and delivered to the site ready to be set in place.

C. Work shall be set plumb, level, straight and true. Secure to grounds and blocking so as to be rigid throughout. Work which adjoins other finish shall be fitted and scribed in a careful manner so as not to injure any exposed surfaces.

D. Install running and other finish trim with tight joints. Secure with finishing nails,

except as otherwise specified. Set exposed heads of nails for putty where in "painted surfaces"; do not fill where "stained" finish is noted. Sand as necessary to remove irregularities and tool marks. Leave work free from defects and blemishes and in proper condition to receive specified finishes.

E. Joints shall be tight and formed to conceal shrinkage. Corners shall be mitered unless otherwise shown.

F. Running trim shall be in long lengths and jointed only where solid fastening can be made. End joints in built-up members shall be well distributed. Miter exterior corners and cope interior angles. Where required, carefully scribe wood work to other adjacent work.

G. Perform all joining and fastening in a manner to insure work remaining permanently in place and to avoid all splitting or opening of joints.

3.03 PREPARATION FOR PAINTER'S FINISH

A. Clean, smoothly dress, and sandpaper all exposed surfaces. No plane or tool marks shall show. Further dress all exposed surfaces of interior finish woodwork with fine grit sandpaper or steel wool, to smooth and clean surfaces. Deeply set nails and screws for putty stopping or plugging as specified.

3.04 PRIMING AND BACKPAINTING

A. Materials used shall comply with requirements of such materials as specified under "Painting" Section.

B. Priming: Except where stain or natural finish is specified, thoroughly prime all sides and edges of all interior finishing lumber as soon as delivered to the site. Prime all millwork which is assembled or built up of more than one piece in the woodworking mill before material is fabricated or built up.

Trim elements scheduled to be natural finish and <u>not</u> factory finished shall be clear sealed immediately upon receipt on site to insure integrity of wood and profiles prior to erection and final finishing.

C. Backpainting: No interior millwork or trim shall be installed until all surfaces in contact with masonry or plaster, or concealed in finished work, have been backpainted with a heavy coat of alkyd paint.

3.05 INSTALLATION - ARCHITECTURAL WOODWORK

A. All paneling, trim, cabinets, casework and the like shall be installed in accordance with requirements set forth in the respective AWS Sections governing said items and specifically AWI Quality Standard 1700 for **"Custom"** work as outlined under 1700-S-1, S-2 and S-3 standards for preparation, alignment, securement, joinery and the like not withstanding any statements made within this section to the contrary.

3.06 PLASTIC LAMINATE AND SOLID SURFACING SYSTEMS INSTALLATION

A. Material and adhesive shall be as specified in Part 2 of this Section.

B. Contractor shall protect the material from damage by other contractors or materials. At completion and final acceptance of work, the protection shall be removed and work left in whole and perfect order.

C. Openings in counter tops for sinks shall be cut by this Contractor and shall conform to the size and shape of sinks furnished under "Plumbing". Metal frames,

if required, at sinks will be furnished and installed under "Plumbing".

D. Overall installation requirements shall be governed by AWS Section 11 and specifically AWI Quality Standard Section 1700 for "**Custom**" grade operations.

3.07 PREFABRICATED CASEWORK/CABINETS

A. Receive, store and set all prefabricated or vendor furnished cabinetry fabricated under AWI Quality Standard 1600 including all accessory items all as furnished, required and/or detailed.

B. Furnish and install all necessary grounds and blocking for installation of cabinet work.

C. Take all necessary care and precautions to protect finish cabinet work from damage by others.

3.08 PROTECTION

A. Protect all new and existing construction, adjacent work and finished work from and damage. PROVIDE DROP CLOTHS OR OTHER SUITABLE PROTECTIVE COVERINGS IN ALL AREAS OF THE WORK.

B. Damage caused by the handling, storing or application of materials or the failure to provide adequate protection shall be repaired or replaced at no additional cost to the Owner.

3.09 ACCEPTANCE AND PATCHING

A. On completion of work, all equipment and rubbish resulting from the work of this section shall be removed from the premises.

B. Leave work clean, whole, and sound ready for additional finish or sealing as specified and/or as shown on the drawings.

C. Clean all glass, doors, frames, and accessories free of dirt and other foreign materials after completion of installation.

3.10 WASTE MANAGEMENT

A. Separate wood waste in accordance with the Waste Management Plan.

B. Separate the following categories for salvage or reuse on site:
   1. Sheet materials larger than 2 sq. ft.
   2. Solid wood:
      a. Trim longer than 16 inches
      b. Multiple offcuts of any size larger than 12 inches

C. Recycle the following categories:
   1. Clean, unpainted engineered wood products
   2. Clean, unpainted dimensional lumber

D. Separate the following categories for disposal and place in designated areas for hazardous materials:
   1. Treated, stained, painted, or contaminated wood

**End of Section**

SECTION 07 13 00

MEMBRANE WATERPROOFING

Part 1 - GENERAL

1.01 Applicable provisions of the Conditions of the Contract and Division #1, General Requirements, govern work in this Section.

1.02 DESCRIPTION OF WORK

A. The work of this Section consists of the provision of all plant, materials, labor and equipment and the like necessary and/or required for the complete execution of the membrane waterproofing and related flashing work for this project as required by the schedules, keynotes and drawings, including but not limited to the following:

1. Smooth cast all exposed areas of existing foundation wall to receive waterproofing to 12 inches below bottom of concrete slab. Material shall be a combination of portland cement/sand and an asphaltic mastic provided by the membrane manufacturer.
2. Adhesive-coated HDPE sheet waterproofing for below grade applications at elevator pit floors.
3. Rubberized asphalt sheet waterproofing for below grade applications at elevator pit walls and other wall surfaces as indicated.
4. Drainage protection board for vertical applications
5. Provide a vertical application of sheet membrane to lap “pre-pour” system at perimeter of new construction; system to be applied to concrete foundation walls.
6. Perform all other work as may be necessary and/or required to make the work of this Section complete and to insure conformance to the terms and conditions of the guarantee requirements stated herein.

1.03 RELATED WORK SPECIFIED ELSEWHERE - Entire Project Specification with specific reference to those sections noted above and as follows:

A. 03 30 00 – Cast-In-Place Concrete
B. 07 90 00 - Caulking and Sealing/Joint Sealants

1.04 QUALITY ASSURANCE

A. Waterproofing systems shall be manufactured and marketed by a firm with a minimum of 20 years' experience in the production and sales of waterproofing. Manufacturers proposed for use, but not named in these specifications shall submit evidence of ability to meet all requirements specified, and include a list of projects of similar design and complexity completed within the past five years.
B. The installer shall demonstrate qualifications to perform the work of this Section by submitting the following:

1. Certification or written license from the Waterproofing Manufacturer that the Installer is a certified applicator.
2. List of at least 3 projects contracted within the past 5 years of similar scope and complexity to this project.
3. Installer must show evidence of adequate equipment and trained field personnel to successfully complete the project in a timely manner.
4. Installer's credentials must be approved by both the Architect and the

Waterproofing Materials Manufacturer.

C. Pre-Installation Conference: A pre-installation conference shall be held prior to commencement of field operations to establish procedures to maintain optimum working conditions and to coordinate this work with related and adjacent work. Agenda for meeting shall include review of special details and flashing.

1.05 SUBMITTALS

- As set forth in Article 14 of the General Conditions, prepare and submit a fully developed submittal schedule; review times for approval are 15 working days for primary review and 20 working days when a consultant is involved; note review times set forth above are deemed “average”, for large submissions allow longer review times.
- The Contractor is encouraged to submit for approval products made from recycled and/or environmentally responsible material. Every effort will be made by the Design Professional Team to approve these materials; the substitution request procedure shall still be enforced.

A. Submittals Package - Submit the Shop Drawings, product data, and samples specified below at the same time, as a package.

B. Shop Drawings showing locations and extent of waterproofing including details for terminations and juncture conditions.

C. Product Data, including catalog sheets, Specifications, and installation instructions for each material specified.

1. Revise the membrane manufacturer's product data as necessary to suit the requirements of the Contract Documents. Manufacturer's details are not to be used for the Work of this Contract.

a. Unless approved otherwise in writing by the Architect, the requirements of the Contract Documents take precedence over the approved waterproofing manufacturer's specifications and details.

b. Any materials, installation procedures, or details not included in the Contract Documents must be approved by the Architect.

2. Manufacturer's Warranty Sample: Submit a sample copy of the membrane manufacturer's 5 year materials warranty.

D. Samples

1. Sheet Membrane: Two 3 foot square pieces.

E. Quality Control Submittals

1. Membrane Waterproofing Manufacturer's Certification:

a. Submit a letter certifying that the manufacturer has been actively marketing the submitted system for a minimum of 3 years.

b. Submit the names and addresses of 10 previous waterproofing projects. Include the type and size of each project, and name and telephone number of a contact person at the project location.

2. Applicator's Certification:

a. Submit a letter certifying that the applicator has been actively installing waterproofing systems for the past 5 years.

b. Submit the names and addresses of 5 previous waterproofing projects. Include the type and size of each project, the waterproofing manufacturer's name, and the name and telephone

number of a contact person at the project location.

c. Submit a letter certifying that the supervisor or foreman and the workers applying the waterproofing materials have at least 3 years experience in the application of waterproofing materials.

F. Certification of Specification Compliance.

G. Material Safety Data Sheet (MSDS) must be submitted for each product.

1.06 PRODUCT DELIVERY, STORAGE AND HANDLING (Coordinate with Section 01 61 00)

A. Materials shall be delivered to the job site in unopened, original containers, identified with the manufacturer's name and brand, and labeled with pertinent information regarding grades, quantities, types, etc.

B. Materials shall be stored under conditions recommended by the manufacturer.

1.07 REFERENCE STANDARDS

A. The following standards and publications are applicable to the extent referenced in the text.

B. American Society for Testing and Materials (ASTM)

| | |
|---|---|
| C 836 | Standard Specification for High Solids, Cold Liquid-Applied Elastomeric Waterproofing Membrane for Use with Separate Wearing Course |
| C 898 | Standard Guide for Use of High Solids Content, Cold Liquid-Applied Elastomeric Waterproofing Membrane With Separate Wearing Course |
| D 412 | Standard Test Methods for Rubber Properties in Tension |
| D 570 | Standard Test Method for Water Absorption of Plastics |
| D 903 | Standard Test Method for Peel or Stripping Strength of Adhesive Bonds |
| D 1434 | Standard Test Method for Determining Gas Permeability Characteristics of Plastic Film and Sheeting |
| D 1644 | Test Methods for Nonvolatile Content of Varnishes |
| D 1876 | Standard Test Method for Peel Release of Adhesives (T-Peel) |
| D 1970 | Standard Specification for Self-Adhering Polymer Modified Bituminous Sheet Materials Used as Steep Roofing Underlayment for Ice Dam Protection |
| D 3767 | Standard Practice for Rubber - Measurements of Dimensions |
| D 4833 | Standard Test Method for Index Puncture Resistance of Geotextiles, Geomembranes, and Related Products |
| D 5385 | Standard Test Method for Hydrostatic Pressure Resistance of Waterproofing Membranes |
| E 96 | Standard Test Methods for Water Vapor Transmission of Materials |
| E 154 | Standard Test Methods for Water Vapor Retarders Used In Contact with Earth Under Concrete Slabs, on Walls, or as Ground Cover |

1.08 SPECIAL GUARANTEE/WARRANTY TERMS

A. Manufacturer's Warranty: Upon acceptance of the completed Work of this Section, furnish the membrane manufacturer's written 5 year materials warranty.

B. Contractor's written 5 years guarantee covering materials and workmanship.

C. In the event of failure of watertightness during the guarantee period, the Contractor and the manufacturer of the waterproofing and dampproofing materials jointly shall repair same, together with all damage to other parts or furnishings of the buildings resulting from such failure, at their own expense and to the satisfaction of the Architect.

D. Should the Contractor deem the work or materials shown or described herein as inadequate for the purpose of and prejudicial to the intent of this guarantee, he shall exercise any and all additional precautions necessary to fulfill the requirements of the guarantee.

1.09 SUSTAINABILITY

A. In the selection of the products and materials of this section as well as for the entire project, preference will be given to those with the following characteristics:

1. Water based.
2. Water-soluble.
3. Can be cleaned up with water.
4. Non-flammable.
5. Biodegradable.
6. Low or preferably no Volatile Organic Compound (VOC) content.
7. Manufactured without compounds that contribute to ozone depletion in the upper atmosphere.
8. Manufactured without compounds that contribute to smog in the lower atmosphere.
9. Do not contain methylene-chloride.
10. Do not contain chlorinated hydrocarbons.
11. Contains the least possible of post-consumer or post-industrial waste.

Part 2 - PRODUCTS

2.01 MANUFACTURERS

A. Products: Provide waterproofing system with all auxiliary components as required and recommended by manufacturer for applications indicated; manufactured by one of the following, or equal:

1. GCP Applied Technologies, Inc.
2. Carlisle Coatings and Waterproofing
3. Tamco Roofing products, Inc.

2.02 ACCESSORIES

A. Primers, liquid membranes and mastics shall be compatible with the preformed membrane and as recommended by the manufacturer of the membrane.

2.03 MATERIALS, SPECIFIC – RUBBERIZED ASPHALT SHEET WATERPROOFING – Rubberized asphalt self-adhering membrane integrally bonded to polyethylene sheeting, formed into uniform flexible sheets of not less than 60mils thick, complying with the following:

A. Pliability (180 degrees bend over 1 inch mandrel at -35 degrees F): Unaffected ASTM D 146.

B. Tensile Strength: 325 psi minimum ASTM D 412 (Die C) modified.

C. Elongation (Rubberized Asphalt): 300% minimum ASTM D 412 (Die C) modified.

D. Cycling Over Crack at -25 degrees F (-32 degrees C): No effect 100 cycles, ASTM D 746.
E. Puncture Resistance: 40 pounds minimum ASTM E 154.
F. Permeance: 0.05 maximum ASTM E 96 method B.
G. Water Absorption: 0.1% maximum ASTM D 570.
H. Total Membrane Thickness: 60 mils minimum.
I. Product:
1. Basis of Design - Bituthene System 4000, GCP Applied Technologies, Inc.
2. CCW MiraDRI 860/861, Carlisle Coatings and Waterproofing
3. TW-60, Tamko Roofing Products, Inc.

2.04 MATERIALS, SPECEIFIC – ADHESIVE-COATED HDPE SHEET WATERPROOFING – Adhesive-coated HDPE sheet for horizontal applications: 46-mil- (1.2mm) thick, unifrom, flexible sheets consisting of 30-mil (0.76 mm) thick, HDPE sheet coated with a pressure sensitive rubber adhesive coating, a detackifying surface treatment, an uncoated self-adhering side lap strip, and a release liner with the following physical properties
A. Tensile Strength: 4000 psi minimum ASTM D 412
B. Low-temperature Flexibility: pass at minus 10 degF (minues 25 degC); ASTM D 1970.
C. Peel Adhesion to Concrete: 5 lbf/in. (875 N/m); ASTM D 903, modified.
D. Lap Adhesion: 2.5 lbf/in (440 N/m); ASTM D 5385, modified.
E. Hydrostatic-Head Resistance: 231 feet (70m); ASTM D 903, modified.
F. Vapor Permeance: 0.01 perms (0.6 ng/Pa x s x sq. m); ASTM E 96, Water Method.
G. Water Absorption: 0.5 percent; ASTM D 570.
H. Product:
1. Basis of Design - Preprufe 300R, GCP Applied technologies, Inc.
2. Underseal Underslab Membrane; Polyguard Products, Inc.
3. Or equivalent

2.05 UNDERSLAB PRE-POUR MEMBRANE WATERPROOFING
A. Pre-applied Integrally Bonded Sheet Waterproofing Membrane: Preprufe 300R Membrane or Preprufe 300LT Membrane for application temperatures between 25°F (-4°C) and 60°F (+16°C) each by Grace Construction Products or an approved equal, shall be a 1.2mm (0.046 in) nominal thickness composite sheet membrane comprising 0.8 mm (0.030 in.) of high density polyethylene film, and layers of specially formulated synthetic adhesive layers. The membrane shall form an integral and permanent bond to poured concrete to prevent water migration at the interface of the membrane and structural concrete. Provide membrane with the following physical properties:

| Property | Test Method | Typical Value |
|---|---|---|
| Color | | White |
| Thickness | ASTM D 3767 Method A | 1.2 mm (0.046 in.) nominal |
| Lateral Water Migration Resistance | ASTM D 5385 Modified[1] | Pass at 71 m (231 ft) of hydrostatic head pressure |
| Low Temperature Flexibility | ASTM D 1970 | Unaffected at -29°C (-20° F) |
| Elongation | ASTM D 412 Modified | >500% |

| | | |
|---|---|---|
| Crack Cycling at -23°C (-10°F), 100 Cycles | ASTM C 836 | Unaffected |
| Tensile Strength, Film | ASTM D 412 | 27.6 MPa (4,000 lbs/in.$^2$) |
| Peel Adhesion to Concrete | ASTM D 903 Modified | 880 N/m (5.0 lbs/in.) |
| Lap Adhesion | ASTM D 1876 Modified | 880 N/m (5.0 lbs/in.) |
| Resistance to Hydrostatic Head | ASTM D 5385 Modified | >70 m (231 ft) |
| Puncture Resistance | ASTM E 154 | 990 N (221 lbs) |
| Permeance | ASTM E 96 Method B | 0.6 ng/Pa x s x m$^2$ (0.01 perms) |
| Water Absorption | ASTM D 570 | <0.5% |

2.05 MOLDED SHEET DRAINAGE PANELS – Nonwoven-geotextile-faced, molded-sheet drainage panel: Manufactured composite drainage panels, 3-dimensional, nonbiodegradable, manufactured with a permeable geotextile bonded to molded-plastic-sheet drainage core and designed to effectively convey water. Provide product with properties suitable for use vertically:

A. Thickness: 0.04 inches (10.16 mm) min.
B. Compressive Strength per ASTM D 1261: 15,000 pounds per sq. ft.
C. Filter Fabric Tensile Strength per ASTM D 4632: 100 pounds min.
D. Filter Fabric Puncture Resistance per ASTM D 4833: 65 pounds
E. Filter Fabric Apparent Opening Size per ASTM D 4751: Sieve size 70 max.
F. Product:
   1. Basis of Design – Hydrocut 220, GCP Applied technologies, Inc.
   2. CCW MiraDRAIN 6000/6200, Carlisle Coatings and Waterproofing
   3. Hydrodrain 400, American Hydrotech, Inc.

2.06 AUXILIARY MATERIALS

A. General: Furnish auxiliary materials recommended by waterproofing manufacturer for intended use and compatible with sheet waterproofing.
B. Adhesives and Joint Tape: Provide types of adhesive compound and tapes recommended by waterproofing sheet manufacturer for bonding to substrate (if required), for waterproofing seams in membrane, and for waterproofing joints between membrane and flashings, adjoining surfaces, and projections through membrane.
   Detail Tape for PHDP Membrane: Two-sided, pressure-sensitive, self-adhering reinforced tape, 4-1/2 inches (114mm) wide, with a tack-free protective adhesive coating on one side and release film on self-adhering side.
C. Primers: Provide type of concrete primer recommended by manufacturer of sheet waterproofing material for applications required.
D. Flashing Materials: Except as otherwise indicated, provide types of flexible sheet material for flashing as recommended by waterproofing sheet manufacturer.
E. Trowelable Liquid Membrane: Two component, cold-applied trowel grade waterproofing material used to flash corners, form fillets and detail hard-to-reach areas. Type recommended by membrane manufacturer, compatible with membrane.
F. Metal Termination Bars: Aluminum bars, approximately 1 by 1/8 inch (25 by 3 mm) thick, predrilled at 9-inch (229-mm) centers.
G. Rigid Insulation: Specified in Division 07 Section “Thermal Insulation”

2.07 Balance of materials shall be as specified elsewhere in this Section.

Part 3 - EXECUTION

3.01 INSPECTION AND ACCEPTANCE

A. Examine all surfaces and contiguous elements to receive work of this section and correct, as part of the Work of this Contract, any defects affecting installation. Commencement of work will be construed as complete acceptability of surfaces and contiguous elements.

3.02 SURFACE PREPARATION

A. General: Comply with manufacturer's instructions for preparing surface.
B. Clean, prepare, and treat substrate according to manufacturer's written instructions. Provide clean, dust-free, and dry substrate for waterproofing application.
C. Mask off adjoining surfaces not receiving waterproofing to prevent spillage affecting other construction.
D. Remove grease, oil, bitumen, form release agents, paints, and other penetrating contaminants from concrete.
E. Remove fins, ridges, mortar, and other projections and fill honeycomb, aggregate pockets, holes, and other voids.
F. Prepare, fill, prime, and treat joints and cracks in substrate in accordance with manufacturer’s directions. Remove dust and dirt from joints and cracks according to ASTM D 4258.
G. Corners: Prepare, prime, and treat inside and outside corners according to ASTM D 6135 and manufacturer’s directions.
H. Prepare, treat, and seal vertical and horizontal surfaces at terminations and penetrations through waterproofing and at drains and protrusions according to ASTM D 6135.
I. Apply primer to substrate surfaces at rate recommended by manufacturer of primary waterproofing materials. Prime only area that will be covered by waterproofing membrane in same working day. Reprime areas not covered by waterproofing membrane within 24 hours.

3.03 INSTALLATION, GENERAL

A. Comply with manufacturer's instructions for handling and installing sheet waterproofing
   1. Apply rubberized asphalt membrane waterproofing to vertical surfaces of elevator pit, foundation walls, and elsewhere as indicated on drawings.
   2. Apply adhesive coated HDPE membrane waterproofing under slab at elevator pit, for all blind pours, and elsewhere as indicated on drawings.
B. Coordinate installing waterproofing materials with associated work to provide complete system complying with combined recommendations by manufacturers and installers involved in Work. Schedule installation to minimize exposure of sheet waterproofing materials.
C. Waterstop installation: Secure material using masonry nails 1½ in. - 2 in. (40 mm – 50 mm) long with a washer ¾ in. (20 mm) in diameter. Hilti EM6-20-12 FP8 shot fired fixings with ¼ in. (6 mm) nuts and ¾ in. (20 mm) diameter washers may also be used. Fixings should be spaced at a maximum of 12 in. (300 mm) centers with

a minimum spacing that ensures proper contact to substrate. Waterstop joints should overlap a minimum of 4 in. (100 mm), ensuring full contact between jointed pieces.Immediately remove printed plastic release liner from the tape.

3.04 RUBBERIZED ASPHALT SHEET WATERPROOFING APPLICATION

A. Accurately align sheets and maintain uniform side and end laps of minimum dimensions required. Stagger end laps.

B. Apply bonding adhesive to substrate at required rate and allow to partially dry.

C. Apply waterproofing sheet to vertical surfaces in shingled fashion, starting at the low point and working toward high point of wall. Overlap all side seams a minimum of 2-1/2 inches and end laps a minimum of 5 inches. Roll all membrane with hand roller. Firmly press edges of membrane to surfaces to provide watertight seal. Apply bead of mastic to all terminations.
Provide a fillet of liquid membrane at all inside corners covered with sheet waterproofing prior to flashing with sheet waterproofing

D. Seal projections through membrane and seal seams. Bond to vertical surfaces and also, where shown or recommended by manufacturer, bond to horizontal surfaces.

E. Spread sealant or mastic bed over deck drain flange at deck drains and securely seal waterproofing sheet in place with clamping ring.

F. Apply continuous sheets over sheet strips bridging substrate cracks, construction, and contraction joints.

G. For vertical and sloped-wall membrane, finish in termination bar; otherwise finish under flashing or under masonry in joint. Seal exposed edges with mastic or sealant.

H. Repair tears, voids, and lapped seams in waterproofing not complying with requirements. Slit and flatten fishmouths and blisters. Patch with sheets extending 6 inches (150 mm) beyond repaired areas in all directions.

I. Correct deficiencies in or remove sheet waterproofing that does not comply with requirements, repair substrates, reapply waterproofing, and repair sheet flashings.

J. Immediately install drainage panels with butted joints over waterproofing membrane.

3.05 ADHESIVE-COATED HDPE SHEET WATERPROOFING APPLICATION

A. Install adhesive-coated HDPE sheets according to manufacturer's written instructions

B. Horizontal Applications: Install adhesive-coated HDPE sheet with HDPE face against substrate. Accurately align sheets and maintain uniform 3-inch- (75-mm-) minimum lap widths and end laps. Overlap and seal seams. Overlap, stagger, and seal end laps with detail tape to ensure watertight installation.

C. Corners: Seal lapped terminations and cut edges of sheet waterproofing at inside and outside corners with detail tape.

D. Seal penetrations through sheet waterproofing to provide watertight seal with detail
tape patches or wraps and a liquid-membrane troweling.

E. Install sheet waterproofing and auxiliary materials to produce a continuous watertight tie into adjacent waterproofing.

F. Repair tears, voids, and lapped seams in waterproofing not complying with

requirements. Tape perimeter of damaged or nonconforming area extending 6 inches (150 mm) beyond repaired areas in all directions. Apply a patch of sheet waterproofing and firmly secure with detail tape.

G. Correct deficiencies in or remove waterproofing that does not comply with requirements; repair substrates, reapply waterproofing, and repair sheet flashings.

3.06 MOLDED-SHEET DRAINAGE PANEL INSTALLATION

A. Place and secure molded-sheet drainage panels with geotextile facing away from wall surface, according to manufacturer's written instructions over installed waterproofing membrane. Use adhesives that do not penetrate waterproofing. Lap edges and ends of geotextile to maintain continuity. Protect installed molded-sheet drainage panels by installing protection course of rigid insulation over drainage panel, as indicated on Drawings.

3.07 INSULATION INSTALLATION

A. Install single layer of board insulation over installed drainage panel as indicated on Drawings. Cut and fit to within 3/4 inch (19 mm) of projections and penetrations.

B. On vertical surfaces, set insulation units in adhesive or tape applied according to manufacturer's written instructions.

C. Protect during subsequent construction operations.

3.08 PROTECTING AND CLEANING

A. Protect waterproofing from damage and wear during application and remainder of construction period according to manufacturer's written instructions. Do not allow traffic of any type on unprotected membrane.

B. Protect installed insulation from damage due to ultraviolet light exposure, physical abuse, and other causes. Provide temporary coverings where insulation will be subject to abuse and cannot be concealed and protected by permanent construction immediately after installation.

C. Clean spillage and soiling from adjacent construction using cleaning agents and procedures recommended by manufacturer of affected construction. FGHKDGHK

3.09 WASTE MANAGEMENT – Coordinate with Section 01 74 19

A. Separate and recycle materials and material packaging in accordance with Waste Management Plan and to the maximum extent economically feasible and place in designated areas for recycling.

B. Set aside and protect materials suitable for reuse and/or remanufacturing.

C. Separate and fold up metal banding; flatten and place along with other metal scrap for recycling in designated area.

**End of Section**

# SECTION 07 21 00

# INSULATION

## Part 1 - GENERAL

1.01 Applicable provisions of the General Conditions and Division #1, General Requirements, govern work in this Section.

1.02 DESCRIPTION OF WORK

A. The work of this Section consists of the provision of all plant, materials, labor and equipment and the like necessary and/or required for the complete execution of all insulation work for this project as required by the schedules, keynotes and drawings, including, but not limited to the following:

1. Furnish perimeter insulation materials for all areas indicated and/or where finished floor on grade is above exterior grade as well as underslab installation as inidcated on drawings.
2. Provide membrane waterproofing protection course. Coordinate with Section 07 13 00.
3. Provide batt insulation at attic and walls of Kiosk; R = 19.0. Provide “eave” baffles.
4. Pack voids in or around windows, door frames, nested studs, etc.
5. Provide air vent baffles at each roof rafter/truss to insure free air movement.
6. Provide foamed in place urethane insulation at all window gaps, door surrounds, electrical devices, sleeves and the like in exterior wall construction. Include all penetrations of rigid insulation and behind all electrical boxes located in exterior walls.
7. Furnish and/or provide balance of all required insulation systems necessary to complete the work and/or shown on the drawings.

NOTE - All insulation systems provided as part of the work of this Contract shall be in required thickness to insure full compliance with energy code requirements as promulgated by the State of Connecticut. As part of the responsibilities of the Contractor, he shall provide a schedule of insulation's, their independent aged "R" values and the overall "R" values of the proposed assemblies. This shall be provided prior to start of any insulation work.

1.03 RELATED WORK SPECIFIED ELSEWHERE - Entire Project Specification.

1.04 QUALITY ASSURANCE

A. Thermal insulation materials, forms, properties, terms and the like shall be as established under ASTM Reference Standard C 168-80a "Standard Definitions of Terms Relating to THERMAL INSULATION MATERIALS". Resistance ("R") values listed are minimum "aged" requirements.

B. All insulation materials shall be properly identified on the package with the manufacturers' name and "R" value, and shall indicate the fiber material.

C. References

1. ASTM C 612: Specifications for Mineral Fiber Block and Board Thermal

Insulation.

2. ASTM C 665: Specification for Mineral Fiber Blanket Thermal Insulation for Light Frame Construction and Manufactured Housing.
3. ASTM E 84: Test method for Surface Burning Characteristics of Building Materials.
4. ASTM E 90: Test Method for Laboratory Measurement of Airborne Sound Transmission Loss of Building Partitions.
5. ASTM E 199: Method of Fire Tests of Building Construction and Materials.
6. ASTM E 136: Test Method for Behavior of Materials in a Vertical Tube Furnace at 750 degrees C.
7. ASTM E 413: Classification for Rating Sound Insulation.

D. Regulatory Requirements:
1. Fire Performance Characteristics: Provide insulation materials whose fire performance characteristics have been determined in accordance with ASTM test method indicated below, by testing organizations acceptable to regulatory agencies having jurisdiction.
   a. Surface Burning Characteristics: ASTM E 84.
   b. Fire Resistance Ratings: ASTM E 119.
   c. Combustion Characteristics: ASTM 136

   **In all cases, materials have a smoke developed rating of less than 50.**

E. Volatile Organic Compound (VOC) Emissions: Provide products complying with GREENGUARD Product Emission Standard for Children and Schools.

F. Recycled Content: Fiberglass insulation shall contain minimum 50 percent recycled content.

G. Control Submittals
1. Test Reports: Submit certified test reports indicating compliance with material reference standard indicated for material performance characteristics and physical properties.
2. Certificates: Submit product certificates, signed by manufacturer certifying materials comply with specified performance characteristics and physical properties.

1.05 SUBMITTALS – Coordinate with Section 01 33 00

- Submittals shall be made in groupings where installations are complementary, i.e. steel, steel decking, steel stairs, stair railings; roof systems/flashings; mechanical and electrical apparatus and the like. Failure to comply with this requirement will be cause for rejection of any or all submittals.
- As set forth in Sections 01 33 00 and 01 32 00, prepare and submit a fully developed submittal schedule; note review times set forth in Section 01 33 00 are deemed “average”, for large submissions allow longer review times.
- Attention is directed to Section 01 31 14 for coordination drawing requirements for this project. These drawings are critical to the proper execution of the Work and failure to honor these requirements may become the basis for denial of any and all claims for either or both “time” and “money”.

- The Contractor is encouraged to submit for approval products made from recycled and/or environmentally responsible material. Every effort will be made by the Design Professional Team to approve these materials; the substitution request procedure shall still be enforced.

A. Product Data: Submit data on product characteristics, performance criteria, and limitations, including the following:
   1. General installation/application instruction.
   2. Environmental conditions required for installation and installation techniques.
   3. Safety requirements for application of products.
B. 12 inch square pieces of all materials to be incorporated in the work, as and if requested by Architect.
C. Mechanical fasteners, adhesives and the like.
D. Schedule of insulation locations.
E. Certification of specification compliance.
F. Material Safety Data Sheet (MSDS) must be submitted for each product.
G. Sustainable Design: Provide manufacturer's certificates prepared by an independent, third party certifying to the following:
   1. Recycled material content for products with recycled content.
   2. Volatile organic compound content for each interior adhesive and sealant and related primer.

1.06 PRODUCT DELIVERY, STORAGE AND HANDLING (Coordinate with Section 01 61 00)
A. All materials shall be delivered to the job site in unopened factory sealed packaging, clearly labeled as to product, manufacturer, values and other pertinent characteristics and stored under conditions as recommended by the manufacturer.
B. Store and protect products in accordance with manufacturer's instructions. Store with seals and labels intact and legible. Store inside and in a dry location. Protect insulation materials from moisture and soiling. Provide ventilation to prevent condensation and degradation of products.
C. Arrange storage of products to permit access for inspection. Periodically inspect to verify products are undamaged and are maintained in acceptable condition.
D. Coordinate installation with other trades whose work may be affected or have an effect on the work herein.

1.07 SUSTAINABILITY
A. In the selection of the products and materials of this section as well as for the entire project, preference will be given to those with the following characteristics:
   1. Water based.
   2. Water-soluble.
   3. Can be cleaned up with water.
   4. Non-flammable.
   5. Biodegradable.
   6. Low or preferably no Volatile Organic Compound (VOC) content.
   7. Manufactured without compounds that contribute to ozone depletion in the upper atmosphere.

8. Manufactured without compounds that contribute to smog in the lower atmosphere.
9. Do not contain methylene-chloride.
10. Do not contain chlorinated hydrocarbons.
11. Contains the least possible of post-consumer or post-industrial waste.

Part 2 - PRODUCTS

2.01 FOUNDATION UNDERSLAB AND BELOW GRADE INSULATION: Extruded polystyrene, rigid, ASTM C 578 Type IV with an "R" value (aged) of 5.0/inch at 75 degrees F mean temperature when tested in accordance with ASTM C 518 and as manufactured by one of the following:

A. Styrofoam High Performance by Dow Chemical Co., Midland, MI, telephone 800/441-4369; 15% recycled glass content, no HCFC or CFC content.
B. Foamular by Owens Corning, Toledo, OH, 800-438-7465; 20% recycled glass content, no HCFC or CFC content.
C. “Type IX EPS “RayLite”” by Diversified Foam in thickness to achieve “R” factors specified.

Products shall not be produced with or contain any of the U.S. EPA regulated CFC compounds which are listed in the Montreal Protocol.

2.02 EXTERIOR WALL INSULATION : Polyisocyanurate board insulation, rigid, ASTM C 1289, Type I, Class 2, ASTM E84 flame spread 75, smoke-devloped 450, and as manufactured by one of the following:

A. Basis of Design: Thermax (ci) Exterior Insulation bu DuPont (formally Dow)
B. Equal products by Atlas Roofing Corp, or Rmax Inc.

2.02 BATT TYPE INSULATION

A. All insulation shown on drawings or specified herein shall be “Johns Manville Unfaced Formaldehyde-free Thermal and Acoustical Fiber Glass Insulation” and shall be in thicknesses to produce Thermal resistance “R” (RSI) values as specified in Part 1 of this Section. Products by CertainTeed; OwensCorning; Knauff or approved equal and shall be suitable type to permit installation into framing system shown.
B. Foil or "FRK" faced batt insulation: Thickness to match "R" values specified. Material shall be "high performance" fiberglass as manufactured by Johns Manville, OwensCorning; CertainTeed, Knauff or approved equal and shall be suitable type to permit installation into framing system shown.
C. Batt insulation shall conform to the following:
   1. Batt Insulation, Unfaced: ASTM C 665, Type I, preformed glass fiber batt type, unfaced.
   2. Batt Insulation, Kraft Faced: ASTM C 665, Type II, Class C preformed glass fiber batt type, Kraft paper faced one side.
   3. Batt Insulation, Foil Faced: ASTM C 665, Type II, Class B preformed glass fiber batt type, foil faced one side with maximum flame/smoke properties of 75/450 in accordance with ASTM E84.

2.03 ACCESSORIES

A. Joint sealant tape: pressure sensitive design compatible with facing material.

B. Insulation Fasteners: Impale clip of galvanized steel; type recommended by insulation manufacturer for particular use intended.
C. Mechanical Insulation Fasteners: FM approved, corrosion resistant, size required to suit application.
D. Wire Mesh: Galvanized steel, hexagonal wire mesh.
E. Spindle Fasteners: Corrosion-resistant wire spindles.
F. Plated steel staples, plastic tape, and other fastening devices required to ensure tight fitting insulation.
G. Adhesive for Bonding Insulation: Product with demonstrated capability to bond insulation securely to substrates without damaging insulation and substrates.

2.04 EAVE BAFFLES
A. TuffVENT™ attic rafter vents from Weidmann shall be moisture resistant, and hence, mold resistant (ASTM D 3273-00 comparison to plywood and OSB) and shall be fabricated from 100% recycled natural fibers, a renewable resource and shall not produce toxic off-gassing; units shall be of sizes suitable for 16 inch and 24 inch centering.

2.05 SEALING FOAM
A. Single component expanding, moisture cure, polyurethane foam sealant similar and equal to “Expanding Foam Sealant” by Geocel Corporation and conforming to the following technical performance data:

| **Technical Data** | **Test Method** | **Result** |
|---|---|---|
| Thermal Conductivity | ASTM C 518 | 0.22 to 0.26 |
| Thermal Resistance | R-Value | 3.8 to 4.5 |
| Compressive Resistance | ASTM C 1621 | 8.7% @ 10% Deformation |
| Density | ASTM D 1622 | 0.94 to 1.6 lbs/ft |
| Water Absorption | ASTM D 2842 | 0.30% |
| Flame Spread | UL | 5 |
| Smoke Developed | UL | 20 |

2.06 Balance of materials shall be as specified elsewhere in this Section.

Part 3 - EXECUTION

3.01 INSPECTION AND ACCEPTANCE
A. Examine all surfaces and contiguous elements to receive work of this section and correct, as part of the Work of this Contract, any defects affecting installation. Commencement of work will be construed as complete acceptability of surfaces and contiguous elements.

3.02 BELOW GRADE INSULATION – See Section 03 30 00 for installation requirements.
A. Where the exterior grade is at or below the finished floor line, and/or as may be "scoped", the exterior foundation walls shall be insulated, on the inside from bottom of slab to 2 feet below grade, IN ALL CASES, with insulation as specified in Part 2 above.
B. Insulation shall be cemented to vertical strata with mastic approved by the manufacturer of the insulation.

C. In addition to vertical installation, carry, on compacted subgrade, insulation material inside walls.
D. Where below grade insulation is installed over drainage protection board and installed waterproofing membrane, install boards vertically, loose laid.

3.03 INSTALLATION FOR CONCRETE SUBSTRATES
A. Install board insulation on concrete substrates by adhesively attached, spindle type insulation anchors as follows: Fasten insulation anchors to concrete substrates with insulation anchor adhesive according to anchor manufacturers written instructions. Space anchors per manufacturers written instructions. Apply insualtion standoffs to each spindle to create cavity width indicated between concrete substrate and insulation. After adhesive has dried, install board insulation by pressing insulation into position over spindles and securing it tightly in place with insulation-retaining washers.
B. Install board insulation on concrete substrates by gas-actuated fastening system in accordance with manufacturer’s written instructions.

3.04 BATT INSULATION SYSTEMS
C. General: Install building insulation to comply with thermal and/or acoustical/sound control requirements. Fit insulation to areas and conditions required, without voids.
1. Fit insulation to form a complete insulation blanket around indicated areas so as to maintain integrity of insulation over entire area to be insulated.
2. Position flanged blankets as recommended by manufacturer for application and secure to framing with recommended fasteners. Tightly butt to insure full contact.
3. Position vapor retarders on inside (heated side in winter) of insulation blanket.
4. Coordinate insulation installation over or within 3 inches of lighting fixtures, fans, or other heat-generating electrical devices with manufacturer's recommendations and regulations of authorities having jurisdiction.
B. Carefully cut insulation and fit around pipes, conduits, and other obstructions.
C. Where pipes or conduits are located in stud spaces, place insulation between exterior wall and pipe.
D. At soffits, place, vapor barrier to the warm side, Joints shall be taped with approved sealant tape so as to effect tight seal.
E. Tape insulation on the side facing exterior with sealing tape as recommended by the manufacturer of the insulation so as to insure complete seal from leakage.

3.05 FIELD QUALITY CONTROL
A. Manufacturer's Field Services: Upon Owner's request, provide manufacturer's field service consisting of product use recommendations and periodic site visit for inspection of product installation in accordance with manufacturer's instructions.

3.06 PROTECTION AND CLEANUP
A. Protection: Protect installed products from damage during construction

operations until final completions.

B. Clean up, remove and dispose of excess materials, litter and debris; leave all work areas in a clean condition.

3.07 WASTE MANAGEMENT – Coordinate with Section 01 74 19

A. Plan and coordinate the insulation work to minimize the generation of offcuts and waste. Reuse insulation scraps to the maximum extent feasible.

B. Separate and recycle waste materials in accordance with the Waste Management Plan and to the maximum extent economically feasible.

C. Reuse insulation scraps in attic areas or other locations where out of view.

**End of Section**

SECTION 07 26 00

AIR/VAPOR BARRIER SYSTEMS

Part 1 - GENERAL

1.01 Applicable provisions of the Conditions of the Contract and Division #1, General Requirements, govern work in this Section.

1.02 DESCRIPTION OF WORK

A. The work of this Section consists of the provision of all plant, materials, labor and equipment and the like necessary and/or required for the complete execution of all ***air/vapor barrier/flashing*** work for this project as required by the schedules, keynotes and drawings, including, but not limited to the following:

**Definition**: Air/vapor barrier system shall be taken to mean the requisite preparation of surfaces, either liquid or sheet applied membrane and companion flashings and accessories and the required insulation installation. Further, each component of the overall system must be approved and accepted by each manufacturer involved so as to present a unified and conformed guarrantee/warranty for the project without any exceptions.

**NOTE: The work herein is classified as the primary vehicle for provision of the code required air barrier system for this building and shall incorporate any and all synthetic (self-adhering) flashings at windows, doors, louver openings and like details to insure that continuous code compliant air/vapor barrier be placed. The installation of the air barrier system will be subject to a "controlled inspection" subject to the terms and conditions of Section 01 43 26; FURTHER, work shall be extended to include insulation systems as required, including infill of anchor points. In general, materials and installation to bridge and seal the following air leakage pathways and gaps including the following are deemed part of the work program:**

- Connections of the walls to the roof air barrier.
- Connections of the walls to the foundations.
- Seismic and expansion joints.
- Openings and penetrations of window frames, store front, curtain wall.
- Door frames.
- Piping, conduit, duct and similar penetrations
- Masonry ties, screws, bolts and similar penetrations.
- All other air leakage pathways in the building envelope.

1. Provide, for Concrete unit masonry to serve as backup to finish façade material as above after all flashings have been set the required air/vapor barrier system. Coordinate with Sections 04 20 00 and 04 41 00 for execution and timing and Sections 08 40 00/08 52 00 for setting, therein, of a receiver flange for bedding of flashings/detail work.
2. Strip all openings a minimum of 12 inches wide on all sides with a 28 mil "self adhering rubberized asphalt" flashing applied to exterior sheathing and to masonry backup prior to application of liquid barrier. NOTE: modify

flashing installations as required based upon membrane materials proposed.

3. Perform all other work as may be necessary and/or required to make the work of this Section complete and to insure conformance to the terms and conditions of the guarantee requirements stated herein.
4. Encapsulate all relieving angles and other exposed iron within cavity with self adhering membrane tied into air barrier

**NOTE: Inspections shall be made in accordance with schedules developed between the affected specialty/trade contractors and the General Contractor so as not to delay the progress of the work but to insure compliance with the air barrier and flashing requirements of this project.**

1.03 RELATED WORK SPECIFIED ELSEWHERE - Entire Project Specification with specific reference to those sections noted above and as follows:

A. 05 50 00 - Metal Fabrications – Miscellaneous/Ornamental Metals
B. 06 10 00 - Rough Carpentry
C. 07 21 00 - Insulation
D. 07 60 00 - Flashing and Sheet Metal
E. 07 90 00 - Caulking and Sealing/Joint Sealants
F. 08 52 00 - Aluminum Clad Wood Windows and Doors

1.04 QUALITY ASSURANCE

A. Single-Source Responsibility: Obtain air/vapor barrier materials from a single manufacturer regularly engaged in manufacturing the product.
B. Provide products which comply with all state and local regulations controlling use of volatile organic compounds (VOCs).
C. Preconstruction Meeting: Convene 2 weeks prior to commencing Work of this section, in accordance with Section 01 31 19 - Project Meetings.
D. Field-Constructed Mockups: Prior to installation of air/vapor barrier, apply air/vapor barrier as follows to verify details under shop drawing submittals and to demonstrate tie-ins with adjoining construction, and other termination conditions, as well as qualities of materials and execution:
   1. Apply air/vapor barrier in field-constructed mockups of assemblies specified in Section 04 20 00.
   2. Apply air/vapor barrier in field-constructed mockups of assemblies specified in Section 01 43 39, “Mockups”.
   3. Construct “insitu” a series of typical exterior wall conditions as appropriate to the pace of the execution of the work incorporating back-up wall, cladding, window and door frame and sill, insulation, flashing, building corner condition, junction with roof system, and typical penetrations and gaps; illustrating materials interface and seals.
E. Test mockup for air and water infiltration to conform with Section 01 43 26 - Quality Control, in accordance with ASTM E 783, ASTM E 1105 and ASTM E 1186.
F. Cooperate and coordinate with the Owner's inspection and testing agency. Do not cover any installed air and vapor barrier membrane unless **<u>and until</u>** it has been inspected, tested and approved.
G. Reference Standards

1. ASTM C 836 Standard Specification for High Solids Content, Cold Liquid-Applied Elastomeric Waterproofing Membrane for Use with Separate Wearing Course
2. ASTM D 412 Standard Test Methods for Vulcanized Rubber and Thermoplastic Rubbers and Thermoplastic Elastomers-Tension
3. ASTM D 903 Standard Test Method for Peel or Stripping Strength of Adhesive Bonds
4. ASTM D 1970 Standard Specification for Self-Adhering Polymer Modified Bituminous Sheet Materials Used as Steep Roofing Underlayment for Ice Dam Protection
5. ASTM D 3767 Standard Practice for Rubber-Measurement of Dimensions
6. ASTM E 96 Standard Test Methods for Water Vapor Transmission of Materials
7. ASTM E 283 Standard Test Method for Determining the Rate of Air Leakage through Exterior Window, Curtain Walls, and Doors Under Specified Pressure Differences Across the Specimen
8. ASTM E 1186 Standard Practices for Air Leakage Site Detection in Building Envelopes and Air Retarder Systems
9. ASTM D 4541 Standard Test Method for Pull-Off Strength of Coatings Using Portable Adhesion Testers

1.05 SUBMITTALS – Coordinate with Section 01 33 00

- Submittals shall be made in groupings where installations are complementary. Failure to comply with this requirement will be cause for rejection of any or all submittals.
- As set forth in Sections 01 33 00 and 01 32 00, prepare and submit a fully developed submittal schedule; note review times set forth in Section 01 33 00 are deemed “average”, for large submissions allow longer review times.
- Attention is directed to Section 01 31 14 for coordination drawing requirements for this project. These drawings are critical to the proper execution of the Work and failure to honor these requirements may become the basis for denial of any and all claims for either or both “time” and “money”.
- The Contractor is encouraged to submit for approval products made from recycled and/or environmentally responsible material. Every effort will be made by the Design Professional Team to approve these materials; the substitution request procedure shall still be enforced.

A. Submit shop drawings showing locations and extent of air/vapor barrier and details of all typical conditions, intersections with other envelope systems and materials, membrane counter-flashings, and details showing how gaps in the construction will be bridged, how inside and outside corners are negotiated and how miscellaneous penetrations such as conduits, pipes, electric boxes and the like are sealed.

B. Submit manufacturer's product data sheets for each type of membrane, including manufacturer's printed instructions for evaluating, preparing, and treating substrate, temperature and other limitations of installation conditions, technical data, and tested physical and performance properties.

**<u>NOTE</u>: Evidence of adhesion in tensile testing of a minimum of 16 psi shall be submitted as part of the material package.**

C. Submit manufacturer's installation instructions,.
D. Certification by air/vapor barrier manufacturer that products supplied comply with local regulations controlling use of volatile organic compounds (VOCs).
E. Certification of compatibility by air/vapor barrier manufacturer, listing all materials on the project that it connects to or that come in contact with it.
F. Submit samples, 3 by 4 inch (75 by 100 mm) minimum size, of each air/vapor barrier material required for Project.
G. Material Safety Data Sheet (MSDS) must be submitted for each product.
H. Testing and inspection data sheets

1.06 PRODUCT DELIVERY, STORAGE AND HANDLING (Coordinate with Section 01 61 00)
A. Deliver all materials to be used in the work of this section to the project site in original sealed containers with manufacturer's brand and name clearly identified.
B. Store all materials in accordance with manufacturers directions.

1.07 PERFORMANCE REQUIREMENTS
A. Provide air/vapor barrier constructed to perform as a continuous air/vapor barrier, and as a liquid water drainage plane flashed to discharge to the exterior any incidental condensation or water penetration. Membrane shall accommodate movements of building materials by providing expansion and control joints as required, with accessory air seal materials at such locations, changes in substrate and perimeter conditions.

1.08 PROJECT CONDITIONS
A. Environmental Conditions: Apply air/vapor barrier within range of ambient and substrate temperatures recommended by air/vapor barrier manufacturer. Do not apply air/vapor barrier to a damp or wet substrate, unless the manufacturer specifically permits that for the product.
1. Do not apply air/vapor barrier in snow, rain, fog, or mist.
2. Do not apply air/vapor barrier when the temperature of substrate surfaces and surrounding air temperatures are below those recommended by the manufacturer.

1.09 SPECIAL GUARANTEE/WARRANTY TERMS
A. In addition to the terms and conditions of the Guarantee/Warranty requirements of the General Conditions, the Contractor shall guarantee all work of this section against leaks and other defects which may result from faulty workmanship or materials for an extended 5 year period from the date of Final Acceptance of the Project.

1.10 SUSTAINABILITY
A. In the selection of the products and materials of this section as well as for the entire project, preference will be given to those with the following characteristics:
1. Water based.
2. Water-soluble.
3. Can be cleaned up with water.
4. Non-flammable.

5. Biodegradable.
6. Low or preferably no Volatile Organic Compound (VOC) content.
7. Manufactured without compounds that contribute to ozone depletion in the upper atmosphere.
8. Manufactured without compounds that contribute to smog in the lower atmosphere.
9. Do not contain methylene-chloride.
10. Do not contain chlorinated hydrocarbons.
11. Contains the least possible of post-consumer or post-industrial waste.

Part 2 - PRODUCTS

2.01 MATERIALS & MANUFACTURERS

A. Liquid Materials: Trowel and/or spray applied, **minimum** total thickness of 60 mils or as applicable to the nominated material assembly.
   1. Acceptable materials:
      a. "Air Bloc 32 MR", Spray or trowel applied low VOC elastomeric emulsion air/vapor barrier as manufactured by Henry.
      b. "Procor" Air/Vapor Barrier fluid applied membrane by Grace Construction Products.
      c. "ExoAir 120 Fluid Applied Air and Vapor Membrane" by Tremco.
      d. "AIR-SHIELD LM – Liquid Membrane Air/Vapor & Liquid Moisture Barrier" by W.R. Meadows

B. Sheet Rubberized-Asphalt Barrier (SRAB): Self-adhering membrane of rubberized-asphalt integrally bonded to high density, cross-laminated polyethylene film, formed into uniform flexible sheets of not less than 40 mils total thickness. Use regular or low-temperature variety for temperature ranges specified by manufacturer. All related accessories such as primer, seam tape, mastic, fluid, and sealant shall be as recommended by, or provided by the same manufacturer as the SRAB air/vapor barrier material used. Subject to compliance with requirements, provide one of the following:
   1. "Blueskin SA" by Henry.
   2. "Perm-A-Barrier" by W. R. Grace & Company.
   3. "Air-Shield" by W. R. Meadows, Inc.
   4. "ExoAir 110" by Tremco.

2.02 AUXILIARY MATERIALS

A. Furnish auxiliary materials recommended by air/vapor barrier manufacturer for intended use and compatible with the air/vapor barrier membrane.

B. Self-adhering modified asphalt/polyethylene flashing to counterflash metal flashings: W.R. Grace Permabarrier Flashing, Henry Blueskin TWF.

C. Butyl-based peel and stick membrane: W.R. Grace Vycor Ultra to transition between air/vapor barrier membrane and TPO or EPDM membranes.

D. Primer: Water based liquid primer for concrete, masonry, gypsum sheathing, wood, metal, and painted substrates; Aquatac as manufactured by Henry, Bituthene WP3000 or Permabarrier WB Primer as recommended for the application by Grace Construction Products, Mel-Prime Water Base by W. R. Meadows or equal.

E. Primer: Solvent based, VOC compliant primer for concrete, masonry, gypsum sheathing, wood, metal, and painted substrates; Blueskin Primer by Henry, Mel-Prime VOC by W. R. Meadows,

F. Mastic, Adhesives, and Tape: Liquid mastic and adhesives, and adhesive tapes by SRAB air/vapor barrier manufacturer.

G. Stainless-Steel Sheet Flashing: ASTM A 167, Type 304, soft annealed, with No. 2D finish; minimum, 0.0156 inch (0.4 mm) thick.

H. Transition Strip: Blueskin SA as manufactured by Henry, Permabarrier, by W.R. Grace, self-adhering, smooth surfaced SBS modified bitumen membrane, nominal 40 mil thickness, width as required.

I. Transition Strip Primer: Blueskin Primer as manufactured by Henry.

J. Surface Conditioner:
   1. Description: Latex-based, water-dispersible liquid for concrete substrate preparation before application of self-adhered membranes and tapes.
      a. Flash Point: No flash to boiling point
      b. Solvent Type: Water
      c. VOC Content: Not to exceed 150 g/l
      d. Application Temperature: -4°C (25°F) and above
      e. Freeze/Thaw Stability: 5 cycles min.
      f. Freezing point (as packaged): -20°C (-5°F)
   2. Product: Perm-A-Barrier Surface Conditioner manufactured by Grace Construction Products.

K. Termination Mastic:
   1. Description: two part, elastomeric, trowel grade material designed for use with self-adhered membranes and tapes. 100 g/l max. VOC Content.
   2. Product: Bituthene Liquid Membrane manufactured by Grace Construction Products or Grace LM2 manufactured by Grace Construction Products.

L. Sheet Membrane Flashing and Transition Sheet: Non-reinforced, cured chloroprene polymer sheet (neoprene) complying with ASTM D 2000 Designation 2BC415 to 3BC620, 50 to 65 mils (1.3 to 1.6 mm) thick.
   1. Adhesive: Typical contact-type adhesive used for fully-adhered membranes.
   2. Lap Sealant: Typical urethane or silicone lap and termination sealant used for membrane edges recommended by manufacturer.
   3. Termination bars and fasteners: Stainless steel.

M. Sheet Membrane Flashing: Low modulus silicone sheet; provide manufacturer's standard system consisting of precured low-modulus silicone extrusion, in sizes to fit widths indicated, combined with a neutral-curing low modulus silicone sealant for bonding extrusions to substrates. Pecora Sil-Span, Dow 1-2-3 or equal.

N. Provide sealants in accordance with Section 07 90 00 - Joint Sealers. Comply with ASTM C 920 and ASTM C 920 classifications for type, grade, class, and uses and compatible with the nominated liquid or sheet systems and components.

2.03 Balance of materials shall be as specified elsewhere in this Section.

Part 3 - EXECUTION

3.01 INSPECTION AND ACCEPTANCE

A. Examine all surfaces and contiguous elements to receive work of this section and correct, as part of the Work of this Contract, any defects affecting installation.

Commencement of work will be construed as complete acceptability of surfaces and contiguous elements.

1. Do not proceed with installation until after minimum concrete curing period recommended by air/vapor barrier manufacturer.
2. Ensure that:
   a. surfaces are sound, dry, even, and free of oil, grease, dirt, excess mortar or other contaminants
   b. concrete surfaces are cured and dry, smooth without large voids, spalled areas or sharp protrusions.
   c. masonry joints are flush and completely filled with mortar, and all excess mortar sitting on masonry ties has been removed.
3. Verify substrate is visibly dry and free of moisture. Test for capillary moisture by plastic sheet method according to ASTM D 4263.
4. Notify Architect in writing of anticipated problems using air/vapor barrier over substrate.

3.02 SURFACE PREPARATION

A. Clean, prepare, and treat substrate according to manufacturer's written instructions. Provide clean, dust-free, and dry substrate for air/vapor barrier application.

B. Prime masonry, concrete substrates with conditioning primer when installing modified asphalt membrane transition membranes.

C. Prime wood, metal, and painted substrates with primer recommended by membrane manufacturer.

D. Prepare, treat, and seal vertical and horizontal surfaces at terminations and penetrations through air/vapor barrier and at protrusions according to air/vapor barrier manufacturer's written instructions.

E. Concrete and other Monolithic Cementitious Surfaces: ***(Coordinate all preparation efforts with work of Section 03 30 00)*** Surface irregularities and voids greater than 13 mm (1/2 inch) in depth should be pre-treated with Procor 20 or repaired with a lean mortar mix or non-shrinking grout. Remove high spots greater than 3 mm (1/8 inch) in height. On highly dusty or porous substrates provide Concrete Sealer before applying the membrane. Remove any visible water prior to application. On “green” concrete or damp substrates apply a sealer or scratch coat of membrane before applying the full thickness of the membrane.

F. Concrete Masonry Units (CMU): The CMU surface should be ***left by the specialty contractor for masonry (Section 04 20 00)*** smooth and free from projections. **The mason shall** strike all mortar joints flush to the face of the concrete block. **The mason contractor shall** fill all voids and holes, particularly at the mortar joints, with a lean mortar mix or non-shrinking grout.

3.03 APPLICATION – Liquid System

A. Application Temperature: The minimum temperature for spray application is -7°C (20°F); coordinate with manufacturer’s representative for details of cold weather spraying.

B. Spray Application: Application thickness is controlled in both horizontal and vertical applications by marking the area and spot checking the thickness with a wet film thickness gauge. Swipe and trowel marks on the membrane are acceptable as long as the minimum thickness is maintained.

C. Application of Transition Membranes

1. After allowing the Fluid Applied Membrane to cure to tack-free, apply transition membrane with a minimum overlap of 6 inches onto each surface at all beams, columns, wall, windows and all joints as indicated in detail drawings. **NOTE – transition membrane installation order may change based upon use of sheet membranes or specific materials as selected; as part of the submittal process, provide installation order.**
2. Tie in to window and door frames, spandrel panels, roof and floor intersections and changes in substrate.
3. Use pre-cut, easily handled lengths for each location.
4. Remove silicone-coated release paper and position flashing carefully before placing it against the surface.
5. When properly positioned, place against surface by pressing firmly into place by hand roller.
6. Overlap adjacent pieces 2 inches and roll all seams with a hand roller.
7. Seal top edge of transition membranes and flashing with termination mastic

3.04 APPLICATION – Sheet Membrane System

A. Sheet Rubberized Asphalt Barrier (SRAB) Air/Vapor Barrier: Install SRAB in accordance with manufacturer's recommendations and as follows:

B. Apply primer and conditioner by brush or heavy nap, natural-material roller at rate recommended by manufacturer prior to membrane installation. Allow primer and conditioner to dry completely before membrane application. Apply as many coats as necessary for proper adhesion to glass-fiber faced sheathing.

C. When membrane is properly positioned, place against surface by pressing firmly into place. Roll membrane with extension-handled countertop roller immediately after placement.

D. Apply membrane sheets in a "shingled" fashion to shed water naturally without interception by a sheet edge, unless that edge is sealed with a permanently flexible termination mastic.

E. Position subsequent sheets of membrane applied above so that membrane overlaps the membrane sheet below by 2 inches. Roll firmly into place.

F. Overlap horizontally-adjacent pieces 4 inches and roll seams.

G. Seal around all penetrations with termination mastic.

H. Coordinate the installation of air/vapor barrier with roof installer to ensure continuity of membrane with roofing membrane as specified in Section 07 53 00.

I. At changes in substrate plane, provide transition material (bead of sealant, mastic, or other material recommended by SRAB manufacturer) to eliminate all sharp 90 degree corners and to make a smooth transition from one plane to another.

J. Provide stainless steel sheet to span gaps in substrate plane and to make a smooth transition from one plane to the other. Membrane must be continuously supported by substrate.

K. At through-wall flashings, provide an additional 6 inch wide strip of SRAB counterflashing to seal top of through-wall flashing to SRAB applied to substrate. Seal exposed top edge of SRAB strip with bead of mastic as recommended by SRAB manufacturer.

L. Apply a bead or trowel coat of mastic along membrane seams, cuts, and penetrations.

M. At end of each working day, seal top edge of membrane to substrate with termination mastic.

N. Do not allow rubberized asphalt surface of the membrane to come into contact with any commercial sealant material, creosote, uncured coal tar products, TPO, EPDM or flexible PVC membranes. All sealants which must come into contact with the rubberized asphalt must be approved by the manufacturer.

O. Do not expose membrane to sunlight for more than thirty days prior to enclosure. Obtain manufacturers written approval if membrane is exposed for more than 30 days. Protect all membrane surfaces from potential UV damages.

P. Inspect installation prior to enclosing and repair punctures, damaged areas and inadequately lapped seams with a patch of SRAB membrane sized to extend 6 inches in all directions from the perimeter of the affected area. Do not cover membrane until it is inspected and tested by the Owner's independent inspection agency.

Q. Connect air/vapor barrier in exterior wall assembly continuously to the air barrier of the roof, to concrete below-grade structures, floor-to floor, window system, glazed curtain wall system, storefront system, exterior doors and all other system intersection conditions and perform sealing of all penetrations, using accessory materials in accordance with approved shop drawings and in accordance with the manufacturer’s tested assembly.

R. Connect SRAB over concrete foundations and as otherwise indicated.

S. Secure sheet seal to masonry, concrete and gypsum board materials.

T. Place liquid seal materials by spray or trowel. Caulk to ensure complete seal.

U. Lap sheet or place liquid seal onto roof membrane and seal.

V. Install sheet seal between window and door frames and adjacent wall seal materials; caulk to ensure complete seal. Position lap seal over firm bearing.

W. Apply sealant within recommended application temperature ranges. Consult manufacturer when sealant cannot be applied within these temperature ranges.

3.05 PROTECTING AND CLEANING

A. Protect air/vapor barrier system from damage during application and remainder of construction period, according to manufacturer's written instructions.

B. Clean spillage and soiling from adjacent construction using cleaning agents and procedures recommended by manufacturer of affected construction.

C. Protect air/vapor barrier from exposure to the elements as required by the manufacturer.

D. On completion of work, all equipment and rubbish resulting from the work of this section shall be removed from the premises.

3.06 WASTE MANAGEMENT – Coordinate with Section 01 74 19

A. Separate and recycle materials and material packaging in accordance with Waste Management Plan and to the maximum extent economically feasible and place in designated areas for recycling.

B. Set aside and protect materials suitable for reuse and/or remanufacturing.

C. Separate and fold up metal banding; flatten and place along with other metal scrap for recycling in designated area.

**End of Section**

# SECTION 074646 - FIBER-CEMENT SIDING

## PART 1 GENERAL

### 1.1 GENERAL REQUIREMENTS

A. Work of this Section, as shown or specified, shall be in accordance with the requirements of the Contract Documents.

### 1.2 SECTION INCLUDES

A. The Work of this Section includes all labor, materials, equipment, and services necessary to complete the fiber-cement siding as shown on the drawings and/or specified herein, including, but not necessarily limited to, the following:

1. Fiber cement siding and trim.
2. Air infiltration barrier.
3. Wall support framing system.
4. Fasteners and accessories.

### 1.3 RELATED SECTIONS

A. Wood Framing - Section 061100.

B. Joint Sealers - Section 079200.

### 1.4 QUALITY ASSURANCE

A. Use adequate numbers of skilled workmen who are thoroughly trained and experienced in the necessary crafts and who are completely familiar with the specified requirements and the methods needed for proper performance of the work of this Section.

B. Mockups: Build mockups to verify selections made under sample submittals and to demonstrate aesthetic effects and set quality standards for fabrication and installation.

1. Build mockups for siding including accessories.

   a. Size: As directed by the Architect.
   b. Show exposure, shadow detail with trim piece, and corner lapping.

2. Approved mockups may become part of the completed Work if undisturbed at time of Substantial Completion.

1.5 SUBMITTALS

A. Submit the following:

1. Materials List of items proposed to be provided under this Section.

2. Manufacturer's specifications and other data needed to prove compliance with the specified requirements.

3. Shop drawings in sufficient detail to show fabrication, installation, anchorage, and interface of the work of this Section with the work of adjacent trades.

4. Manufacturer's recommended installation procedures.

5. Submit three 6" x 6" samples of shingle siding, and full size samples of fasteners.

1.6 MATERIALS STORAGE

A. Store materials in an area protected from the weather and other trades in a clean, dry, well ventilated area. As soon as siding has been delivered and stored under cover, unwrap to allow for ventilation to prevent excessive water condensation.

B. All materials shall be delivered and stored in their original packaging, bearing the manufacturer's name, related standards and any other specification or reference accepted as standard.

1.7 WARRANTY

A. Provide manufacturer's standard 30-year warranty for fiber-cement siding.

PART 2 PRODUCTS

2.1 MATERIALS

A. Cementitious Siding Panels (Basis of Design): Provide fiber cement siding panels as manufactured by James Hardie Co., or approved equal; types as follows:

1. "Lap Siding," smooth finish, painted, 1/2" thick, 5-1/2" width, with accent trim as detailed on the drawings.

2. Soffits: "HardieSoffit," 1/4" smooth soffit panels, vented and non-vented, as indicated.

3. Trim: "HardieTrim" as indicated on the drawings.

B. Composition: Portland cement, ground sand, cellulose fiber, select additives and water; panels shall contain no asbestos, glass fibers or formaldehyde, and shall comply with ASTM C 1186, Grade II, Type A.

1. Flexural Strength (ASTM C 1185)

a. Along Direction of Sheet: 2500 psi.
b. Across Direction of Sheet: 1850 psi.

2. Surface Burning Capabilities (ASTM E 136)

   a. Flame Spread: 0.
   b. Fuel Contributed: 0.
   c. Smoke Developed: 5.

3. Thermal Resistance: Approximately R=0.51.

4. Provide factory primed surfaces for field applied paint.

   a. Finish factory primed surfaces with one coat of high quality 100 percent acrylic exterior grade paint within 180 days of installation. Follow paint manufacturer's written product recommendation and written application instructions.
   b. Alternate: Provide factory finish using manufacturer's "Color Plus" system; provide custom color as selected by the Architect.

5. Agency Approvals: Panels shall be recognized as exterior claddings by the following:

   a. National Evaluation Service (NES), Inc., Report No. NER-405 (BOCA, ICBO, SBCCI).
   b. U.S. Department of Housing and Urban Development Materials release 1263a.
   c. CCMC Evaluation Report 12678-R.

C. Connectors and Anchors

1. Connectors used with Wood Framing Members
2. Screw Fasteners: Stainless steel as instructed by manufacturer.

   a. Thermoset Polyester coating that exhibits 1,000 hours of salt spray beyond stainless steel anti-corrosiveness.
   b. Minimum No. 14 self-drill hex-head screw fastener to be used to attach horizontal rail to vertical rail.
   c. Steel Studs:
      1). Self-drill hex-head TEK screw fasteners of sufficient length.
      2). Minimum three threads must penetrate steel stud members.

3. Concrete and Masonry Wall Anchors: Mechanical and Adhesive anchors, bolts, nuts, and washers suited to use and as required for transference of design loads.

   a. Mechanical Anchors: Expansion type, conforming to ICC ES AC193.
   b. Adhesive Anchors: Torque Controlled, conforming to ICC ES AC308.

D. Accessories

1. Bracing, Furring, Bridging, Plates, Gussets, and Clips: Formed sheet steel, thickness as necessary to meet structural requirements for special conditions

encountered.

2. Galvanic Protection: Utilize tapes and other methods as necessary to separate and prevent contact between dissimilar metals.

2.2 RELATED ACCESSORIES

A. Fasteners: Fasteners for Attaching James Hardie Batten Boards: Steel Framing: No. 8 by 1-5/8 inch long by 0.323 inch HD ribbed buglehead screw.

B. Joint Treatment: Provide a one-part high performance sealant conforming to ASTM C 920, Type S, Grade NS, Class 25 meeting with the approval of the air/vapor barrier manufacturer for compatibility. Apply a 3/8" bead of sealant to the joint and trowel flat.

Apply enough of the same material to each fastener to cover completely when trowelled flat.

C. Air Infiltration Barrier: Hydrogap Drainable House Wrap by Benjamin Obdyke or eq.

PART 3 EXECUTION

3.1 INSPECTION

A. Examine the areas and conditions where fiber-cement siding is to be installed and notify the Architect of conditions detrimental to the proper and timely completion of the work. Do not proceed with the work until unsatisfactory conditions have been corrected by the Contractor in a manner acceptable to the Architect.

3.2 PREPARATION OF SUBSTRATE

A. Clean substrate of any projections and substances detrimental to siding work.

B. Coordinate installation of fiber-cement siding with flashing and other adjoining work to ensure proper sequencing. Do not install siding until all penetrations have been installed and are securely fastened against movement.

3.3 INSTALLATION

A. General: Comply with instructions and recommendations of siding manufacturer, except to extent more stringent requirements are indicated.

B. Install accessories and trim as recommended by manufacturer.

END OF SECTION

# SECTION 075323 - EPDM ROOFING

## PART 1 - GENERAL

### 1.1 RELATED DOCUMENTS

A. Applicable provisions of the Conditions of the Contract and Division 1, General Requirements, govern work in this Section.

### 1.2 SUMMARY

A. All plant, labor, materials, equipment, testing and services necessary to complete the work shown on the drawings, schedules, and keynotes, as specified, and as may be required by conditions and authorities having jurisdiction, including, but not limited to, the following:

1. Install new fully adhered EPDM roofing on new buildings.

2. Inspect the underside of the roof decks before starting work, and periodically each day as work occurs, to determine if there are conduits, pipes, ceiling hangers or fixtures next to the deck or fastened to the deck that could be affected as roof work occurs.

   a. Perform roof work so any conduits, pipes, ceiling hangers or fixtures are not disturbed.

   b. Replace and reset any conduits, pipes, ceiling hangers or fixtures that are affected by the work.

3. Clean all residual material and debris from the surface of the decks, and from within the flutes of the steel decks before starting roofing work.

4. Install a new fully adhered unreinforced 60 mil thick EPDM roofing system, including a gypsum board thermal barrier, insulation, cover board, flashing, stripping and related accessories.

5. Install new flashings at the roof drains, and all roof-mounted and roof-penetrating equipment.

6. Protect existing and new roof surfaces where material and equipment is placed on them, and where construction traffic occurs, with 6 mil fire retardant polyethylene covered with 1-1/2 inch thick foam insulation, overlaid with 2 by 10 wooden planks.

B. Related Requirements

| | | |
|---|---|---|
| 1. | Masonry | - Division 4 |
| 2. | Carpentry | - Division 6 |
| 3. | Sheet Metal Flashing & Specialties | - Section 076200 |
| 4. | Roof Accessories | - Section 077200 |

1.3 CODE APPROVAL REQUIREMENTS

A. Install roofing and insulation system components to meet the following minimum requirements:

1. The 2018 Connecticut State Building Code which includes by reference the 2015 ICC Energy Code.

2. Underwriters Laboratories Inc. Class A External Fire Rating for roof assemblies tested in accordance with ASTM E 108 or UL 790.

3. Underwriters Laboratories Inc. Standard 1256 for roof assemblies with foam insulation.

4. Minimum wind uplift pressure calculated using ASCE 7 and a safety factor of 2:
   a. Field Zone – 60 psf
   b. Perimeter Zones – 100 psf
   c. Corner Zone - 160 psf

B. Provide written certification from the roof material Manufacturer, before beginning work, to confirm the roofing system meets these requirements.

1.4 QUALITY ASSURANCE

A. Installer Qualifications:

1. A firm (Installer) with at least 5 continuous years experience performing work similar to that required for this project, employing personnel skilled in the work specified.

   a. The Installer shall directly employ the personnel performing the work of this section.

   b. The Installer shall have a full time supervisor on the roof when work is in progress. The Supervisor shall have a minimum of 5 years experience with work similar in nature and scope to this project and speak fluent English.

      1. Submit the supervisor's resume upon request.

2. The Installer shall provide a reference list of at least three previously completed projects of comparable size and similar design within a fifty mile radius of this project, which may be observed by representatives of the Owner:

   a. The reference list shall include at a minimum, the completion date, a description of the work performed, the Owner's name - contact person - phone number and address and the Architect's name - contact person and phone number.

   b. Submit the reference list upon request.

3. The Installer shall be acceptable to or licensed by the Manufacturer of the primary roofing materials and provide written certification from the Manufacturer to confirm this prior to award if requested.

B. Material Quality: Obtain each type of material from a single source to ensure consistent quality, color, pattern, and texture.

1.5 PRE-CONSTRUCTION CONFERENCE

A. Meet at the project site between one and two weeks prior to starting work, with the Architect, Owner and other representatives concerned about the work, to discuss the following:

1. How the building will be kept watertight work occurs on existing roof surfaces and at the interface between the existing and new construction.

2. How the installation of new roofing will be coordinated with the installation of adjoining masonry, wood blocking, the thermal barrier, insulation, cover board, flashings and other items to keep all components dry as construction occurs, and to provide a watertight installation.

3. Generally accepted industry practice and the Manufacturer's instructions for handling and installing his products.

4. The condition of the substrate (deck), curbs, penetrations and other preparatory work needed.

5. Incomplete submittals: note that progress payments will be not processed until all submittals are received and approved.

6. The construction schedule, weather forecast, availability of materials, personnel, equipment, and facilities needed to proceed and complete the work on schedule.

7. A schedule for Manufacturer and Architect inspections.

1.6 SUBMITTALS

A. Submit the following items far enough in advance to obtain approval prior to performing any work on site:

1. A pre-work site and building inspection report with photos to document conditions before work starts.
2. Written certification from the Manufacturer which states that the Installer is acceptable or licensed to install the specified roofing, if not previously provided.
3. Manufacturer's technical literature for all materials.
4. Samples of the Contractor’s Guarantee and Manufacturer’s warranty forms.
5. Test reports and certifications substantiating compliance with specification requirements - only if requested by the Architect.

B. Simultaneously provide all technical submittals needed for this project, for all technical sections, collated by section. Incomplete submittals will not be reviewed.

1. Submittals shall be prepared and made by the firm that will perform the actual work.

2. Provide electronic submittals on USB drives in pdf format organized in folders by Section - or via an electronic submittal exchange program if requested.

C. Safety Data Sheets: Simultaneously provide all Safety Data Sheets needed for this project, for all specification sections - collated by section, in three ring binders. Provide two binders for each building.

D. Payment requisitions will not be processed until all submittals are received and approved.

1.7 JOB CONDITIONS (CAUTIONS & WARNINGS)

A. Do not use oil or solvent based roof cement with EPDM roofing. Do not allow waste products, (petroleum grease or oil, solvents, vegetable or mineral oil, animal fat) or direct steam venting to come in contact with any roofing, insulation or flashing product. Do not expose EPDM roofing and accessories to a temperature in excess of 175 degrees Fahrenheit.

B. Splice cleaner, primer, cements and bonding adhesives are flammable. Do not breathe vapors or use near fire or flame or in a confined or unventilated area. Dispense only from a UL listed safety can or the Manufacturer’s original container.

C. Remove empty adhesive, cleaner and solvent containers and contaminated rags from the roof and legally dispose of them daily.

D. Do not apply primer, cleaners or adhesives next to ventilation system louvers or windows. Temporarily cover the louvers and windows with 6 mil fire retardant polyethylene and prevent odors from entering the building. Remove temporary covers at the end of each day's work.

1.8 DELIVERY, STORAGE AND HANDLING

A. Deliver material to the site in the Manufacturer's original and unopened packaging, with intact and legible labels which identify the products and Manufacturers,

B. Cover all stored materials, except rolls of EPDM and sealed cans of adhesives, with watertight tarpaulins installed immediately upon delivery.

C. Immediately remove insulation which gets wet from the job site.

D. Store and install all material within the Manufacturer’s recommended temperature range.

E. Do not overload the structure when storing materials on the roof.

F. Protect roof surfaces where material and equipment is placed on them, and where construction traffic occurs, with 6 mil fire retardant polyethylene, covered with 1-1/2 inch thick foam insulation, overlaid with 2 by 10 wooden planks.

1.9 GUARANTEE AND WARRANTY

A. Provide a written Manufacturer's Full System Warranty which warrants that the roofing system, including the gypsum thermal barrier, insulation, cover board, EPDM roofing and flashings, will remain in a watertight condition for a twenty year period beginning upon Final Completion.

1. Guarantee coverage shall remain in effect for gust wind speeds up to 72 miles per hour, measured at ground level at the site.

2. Guarantee coverage shall have no dollar value limit.

B. Provide a written Contractor's Guarantee which guaranties that all work will remain free of material and workmanship defects and in a watertight condition for a five year period beginning upon Final Completion:

1. Defects include but are not limited to the following: leakage, adhesive separation, delamination, lifting, loosening, splitting, cracking, joint separation, movement and undue expansion or shrinkage.

2. The Contractor shall make the repairs and modifications necessary to enable the work to perform as guaranteed at his own expense.

3. Guarantee coverage shall include removing and replacing materials installed as part of the original work, if removal is needed to affect guaranteed repairs.

4. Guarantee coverage shall remain in effect for gust wind speeds up to 72 miles per hour, measured at ground level at the site.

5. Guarantee coverage shall have no dollar value limit.

C. Provide one Contractor’s Guarantee that covers “all work performed” when a single contractor is awarded work specified in multiple Sections.

D. The Manufacturer’s Warranty and Contractors Guarantee shall take effect no more than 30 days before the completion of all punch list work.

E. The Contractor’s Surety Company may add a rider to the Performance Bond which clarifies that Performance Bond Coverage expires two years after Final Completion; i.e., Performance Bond Coverage does not run for the entire five year term of the Contractor’s Guarantee.

F. Guarantee and Warranty coverage may be cancelled, for the affected portion of the roof, if the work is damaged by winds in excess of 72 mph, by hail, lightning, insects or animals, by failure of the structural substrate, by exposure to harmful chemicals, by other trades on the roof, or by vandalism, or if the Owner fails to maintain the roof in

accordance with, or makes roof alterations contrary to, the Manufacturer's printed recommendations.

1. Guarantee and Warranty coverage shall be reinstated, for the remainder of the original period; if the Owner restores the roof to the condition it was in prior to the damage occurring.

1.10 SUBSTITUTIONS

A. The following factors will be considered when evaluating a possible alternative to the roofing system specified:

1. The wording and intent of the warranty to be issued.

2. The financial status, numbers of years in business, and stability of the entity that will issue the warranty.

3. A reference list of at least five completed similar projects of comparable size, with a successful functional history of at least five years, within an approximate fifty mile radius of the Project.

4. Technical aspects of the system, especially relating to durability, serviceability and performance.

5. The Manufacturer's ability and history providing technical support, on-site inspections and in progress assistance.

6. The availability and experience of local authorized applicators to install and maintain the proposed alternate system.

7. The Manufacturer's willingness and history responding to warranty claims previously made by the Owner, Architect or Consultant's involved in this project.

PART 2 - PRODUCTS

2.1 GENERAL

A. EPDM roof system components are specified as products of Firestone Building Products Company to establish a standard of quality. Equal products and systems from Carlisle SynTec or Johns Manville will be accepted.

B. Primary products required for this project include:

1. Gypsum thermal barrier
2. Roof insulation
3. Cover board
4. EPDM roofing
5. Primers and adhesives
6. Sealants
7. EPDM flashing
8. Fasteners

2.2 EPDM

1. Unreinforced 60 mils thick, fire retardant, EPDM (Ethylene Propylene Diene Monomer) sheet membrane conforming to the following minimum physical properties.

| PROPERTY | TEST METHOD | SPECIFICATION |
|---|---|---|
| Color | — | Gray/Black |
| Tensile Strength | ASTM D-412 | 1305 psi min. |
| Elongation | ASTM D-412 | 300% min |
| Tear Strength | ASTM D-624 | 150 lb/in min |
| Ozone Resistance | ASTM D-1149 | No cracks, 7 days/100 pphm/100ºF/50% strain |
| Heat Aging | ASTM D-573 | 1200 psi min@ 200% elongation/4 wks/240ºF |
| Brittleness Temperature | ASTM D-746 | -49ºF |
| Water Vapor Permanence | ASTM E-96 | 2.0 perm max |
| Thickness | ASTM D-412 | 60 mils plus/minus 6 mils |
| Fire Retardant | | UL Class A |

2.3 RELATED MATERIALS

A. Cleaners, adhesives, sealants, caulking and fasteners furnished by the EPDM system Manufacturer, that comply with low VOC regulations in effect at the time of application.

1. Stripping: 5 inch and 9 inch wide self adhering flashing, consisting of semi-cured EPDM factory laminated to cured seaming tape.

2. Bonding Adhesive: High strength contact adhesive.

3. Splice Adhesive: High strength synthetic polymer based contact cement formulated specifically to splice EPDM sheets.

4. Lap Sealant: EPDM rubber based gun grade sealant.

5. Water Block Seal: One component low viscosity butyl rubber sealant.

6. Pre-Molded Pipe Flashing: Pressure sensitive prefabricated flashings with pre-applied adhesive.

7. Pourable Sealer: Two component, solvent free polyurethane based sealant.

8. Reinforced Perimeter Fastening Strips: reinforced cured EPDM.

9. Seam Tape Primer: Synthetic rubber polymer based primer designed to clean and prime seam tape spice areas prior to installing the tape.

10. Seam Splice Tape: Nominal 30 mil thick cured polymer self adhesive tape with release paper carrier, 6 inches wide.

11. Plates and Bars: Galvanized and corrosion resistant specialty products.

12. Fasteners: #14 Fluorocarbon polymer coated heavy duty screws.

B. Gypsum Thermal Barrier: 5/8 inch thick fire resistant gypsum board decking with inorganic glass mat facers and a water resistant core, formulated in square edge boards, UL Class A, meeting ASTM C-1177, manufactured under the trade name Dens-Deck.

C. Insulation: Flat and tapered rigid cellular polyisocyanurate boards with fibrous felt/fiberglass mat facers, minimum compressive strength 20 psi, meeting ASTM C1289-01, Type II, Class1, Grade 2, as manufactured by Firestone under the trade name of “ISO 95+ Isocyanurate Insulation”. Minimum thickness as shown on the roof plan.

1. Tapered insulation sloping 1/8 1/4 1/2 inch per foot.
2. Crickets sloping 1/4 1/2 inch per foot.

D. Gypsum Cover Board: 1/4 inch thick fire resistant gypsum board decking with inorganic glass mat facers and a water resistant core, formulated in 4 by 4 foot square edge boards, UL Class A, meeting ASTM C-1177, manufactured under the trade name Dens-Deck Prime.

E. Tapered edge strips – high density isocyanurate or wood fiberboard strips installed at the drain sumps, and insulation transition points.

F. Insulation adhesive: Two component low rise polyurethane foam adhesive, installed with a mixing extruding Pace Cart dispenser, or with a pleural heated foam rig, Firestone I.S.O. Adhesive.

1. Use insulation adhesive suitable for application at the intended application temperatures.
2. Do not use twin cartridge “caulking gun” adhesive except on very small isolated sections of roof.

PART 3 - EXECUTION

3.1 GENERAL

A. Install all new roofing in a watertight, workmanlike manner, meeting the guarantee requirements specified herein; in accordance with the drawings and in conformance with the Manufacturer's requirements, except as enhanced by the drawings and specifications.

B. Perform work next to roof mounted mechanical equipment, so the work coincides with equipment shutdown periods and does not affect building occupants. Temporarily cover and protect equipment openings, and windows next to the work area, with 6 mil fire retardant polyethylene, so dirt, dust and odors do not enter the equipment or building. Remove covers as soon as the work is complete and at the end of each workday.

C. Clean all substrate surfaces of all laitance, dirt, oil, grease or other foreign matter; clean and remove all debris and residual material from the flutes of the metal decks.

D. Remove debris daily and as it is generated. Do not stock-pile debris on the roof. Do not leave any debris on the roof at the end of the day. Do not overload the roof structure when moving debris.

E. Install roof system components on dry surfaces only. Do not install any components when the weather and outside temperatures are not suitable in accordance with the Manufacturer's recommendations.

F. Complete all work including the equipment flashings, in sequence as quickly as possible so the smallest area possible is under construction at any one time. Complete the entire area of work begun each day, the same day, and make all exposed edges watertight at the end of each day's work.

G. Protect roof surfaces where material and equipment is placed on them, and where construction traffic occurs, with 6 mil fire retardant polyethylene, covered with 1-1/2 inch thick foam insulation, overlaid with 2 by 10 wooden planks.

3.2 SUBSTRATE INSPECTION

A. Inspect new decking before proceeding with the roofing work.

B. To be an acceptable surface for new roof components, the decks shall be well secured to the underlying structure and not rotted or otherwise deteriorated.

1. Immediately notify the Architect and Owner by telephone and in writing if defects in the substrate are discovered.

C. Maintain the building watertight in the interim, but do not install new roof system components until defects have been corrected.

3.3 GYPSUM BOARD THERMAL BARRIER

A. Install gypsum in neat straight rows, with tight joints. Fill spaces over 1/4 inch with gypsum board.

B. Fasten the gypsum thermal barrier as needed to hold it in place while the insulation gets installed.

3.4 INSULATION AND COVER BOARD

A. Install tapered insulation neatly cut at all miters and transitions. Do not lace corner boards.

B. Install insulation with joints offset between rows and layers a minimum of 12 inches. Cut insulation to fit neatly at penetrations and joints. Fill any gap which is greater than 1/4 inch with rigid insulation.

1. Do not use low rise foam adhesive to fill insulation gaps.

C. Fasten the insulation only to the top flutes of the steel decks, with screws and discs which penetrate through the deck a minimum of 3/4 inch and a maximum of 1-1/2 inches.

1. Install 16 fasteners per 4 by 8 foot insulation board in the field of the roof.
2. Install 28 fasteners per 4 by 8 foot insulation board in 12 foot wide perimeter zones.
3. Install 32 fasteners per 4 by 8 foot insulation board in 12 foot square corner zones.
4. Carefully choose the length and position of each screw to ensure the screws do not protrude through the underside of the deck where visible inside the school, and to ensure the screws do not damage conduits mounted on the underside of the deck.

D. Install gypsum cover board, using low rise polyurethane foam adhesive applied in accordance with the Manufacturer's recommendations and to achieve the specified minimum uplift resistance, over the insulation with joints offset between rows and layers a minimum of 12 inches. Cut gypsum cover board to fit neatly at penetrations and joints. Fill any gap which is greater than 1/4 inch, with gypsum board.

1. Install 1/2 inch diameter adhesive beads 12 inches on center in the field of the roof.
2. Install 1/2 inch diameter adhesive beads 6 inches on center in 12 foot wide perimeter zones.
3. Install 1/2 inch diameter adhesive beads 4 inches on center in 12 foot square corner zones.
4. Place 5 gallon pails half full of gravel or concrete on the insulation and gypsum cover boards to hold them firmly in position for at least 15 minutes while the low rise foam adhesive sets. Position the pails no more than 24 inches apart in all directions.
   a. Do not use pails of adhesive or any similar material for ballast.
   b. Cover board installed without using pails of gravel or concrete ballast shall be removed and replaced at the Contractor's expense.
      1. Removal shall include the underlying insulation; because it will be impossible to remove the cover board from the insulation without damaging the insulation facer.

3.5 EPDM

A. Place EPDM roofing on the substrate without stretching it and allow it to relax approximately one hour – before starting to adhere it to the substrate and form the seams.

B. Place adjoining sheets in the same manner lapping the edges to shed water.

C. Fully adhere EPDM to the substrate with bonding adhesive.

1. Open each can of adhesive and stir it with an electric paddle mixer for at least 5 minutes before applying the adhesive. Re-stir adhesive that isn't used within two hours of initial mixing.

2. Do not punch holes in cans of adhesive and use them in a "Better Spreader" without first opening the cans to mix them.

3. Replace used roller covers each day; discard covers after each day's use.

4. Allow bonding adhesive to dry to the touch before joining the EPDM to the substrate.

5. Roll the EPDM onto the dried bonding adhesive and immediately rub it vigorously with a soft bristle broom to ensure complete adhesion.

D. EPDM installed over improperly applied adhesive or with adhesive that wasn't stirred, and roofing installed with blisters, ridges, mole-runs and similar deficiencies shall be removed and replaced at the Contractor's expense. Removal shall include the insulation and cover board assembly.

3.6 SPLICING

A. Form EPDM roof splices with 6 inch wide field applied seam tape, or with 3 inch wide factory applied seam tape.

1. Fold the top sheet back and clean mating surfaces using clean rags with splice wash.

2. Scrub a smooth coat of QuickPrime onto mating surfaces, with long strokes, and to obtain complete coverage, using approximately 1 gallon per 225 square. Do not allow the QuickPrime to glop, streak, or puddle; allow it to dry to the touch before installing the seam tape.

3. Seam tape shall be positioned so 1/8 inch minimum and 1/2 inch maximum will be exposed at the seam edge when the seam is complete.

a. Install 5 inch uncured EPDM stripping over any seam where the tape is exposed less than 1/8 inch or more than 1/2 inch.

4. Roll and allow the top sheet to fall freely into place without stretching or wrinkling it.

5. Pull splice tape release paper from within the seam and neatly mate the seam using hand pressure to rub the membrane together.

6. Immediately roll the splice with a 2 inch wide roller, using positive pressure, toward the outer edge of splice.

B. Install uncured EPDM target patches with rounded corners, over all T-Seam intersections.

3.7 PERIMETER FASTENING

A. Secure the EPDM at the perimeter of each roof level, and at eaves, penetrations, expansion joints and slope changes greater than 1 inch in 12 inches. Utilize surface applied discs or adhere the EPDM to continuous reinforced EPDM fastening strips. Secure the discs and EPDM fastening strips 12 inches on center.

3.8 FLASHINGS

A. Utilized cured EPDM for all flashings; utilize self-curing EPDM at corners and angle changes only where required by the Manufacturer.

1. Form flashing splices, and the splice between the flashing and main roof sheet with 6 inch seam tape.

2. Adhere the flashing to vertical surfaces with bonding adhesive.

3. Fasten the top edge of all flashings, positioning the fasteners 12 inches on center, to be covered by a cap flashing.

B. Install premolded pipe flashings wherever possible. Where premolded pipe flashings cannot be installed, use field wrapped flashings. Install sealant pockets as a last resort.

3.9 MISCELLANEOUS

A. Provide any miscellaneous roofing, flashing, caulking, and metal work needed to leave the work complete and entirely watertight, neatly and carefully executed in a thorough and workmanlike manner.

3.10 CLEANING, PROTECTION AND WATERTIGHTNESS

A. Conduct an inspection of the interior and exterior of the building and grounds, and submit a written report with photos to document any pre-existing leakage or damage, prior to performing any work.

B. The Owner will conduct a similar inspection at the completion of the work, and the Contractor will be charged for all leaks and damage that weren't documented in the Contractor's report, or repaired to the Owners satisfaction at the Contractor's expense.

C. Provide any equipment, material and labor necessary to protect the site, the building, its contents and occupants, pedestrians, and surrounding landscaped and paved areas from damage due to the construction work or from inclement weather during construction.

D. Do not perform work during inclement weather. Protect incomplete work and the building from damage by inclement weather - which may occur unexpectedly. Make all work areas watertight at the end of each day's work.

E. Clean up all litter, refuse, rubbish, scrap materials and debris at least twice a day; at noon and at the end of the workday, so the roof and site presents a neat, orderly and workmanlike appearance. Place the debris in a dumpster and remove the dumpster from the site as soon as it is full or no longer being used.

F. Carefully and thoroughly clean the entire roof to remove all residual debris when all work is complete. After cleaning the roof, thoroughly clean all drain sumps, drain lines, leader heads and leaders. Do not allow debris to enter the drainage system.

3.11 ROOF INSPECTIONS BY MANUFACTURER

A. Arrange for the roofing Manufacturer, or his authorized representative, to make a minimum of five inspections in accordance with the following schedule and submit a written report of each inspection to the Architect.

   1. First inspection during the first two days of new roof installation.
   2. Second inspection when roofing is approximately one third complete.
   3. Third inspection when roofing is approximately two thirds complete.
   4. Fourth inspection when all roofing and flashings are installed.
   5. Final inspection at the completion of all work.

B. Provide 48 hours advance written notice to the Architect, so he may have a representative attend the inspections.

C. Submit the inspection reports within one week following each inspection.

   1. Payment requisitions will not be reviewed nor approved until the inspection reports are received.

END OF SECTION 075323

# SECTION 07 61 10

# SHEET METAL ROOFING

## Part 1 - GENERAL

1.01 Applicable provisions of the Conditions of the Contract and Division #1, General Requirements, govern work in this Section.

1.02 DESCRIPTION OF WORK

A. The work of this Section consists of the provision of all plant, materials, labor and equipment and the like necessary and/or required for the complete execution of all sheet metal roofing for this project as required by the schedules, keynotes and drawings, including, but not limited to the following:

1. Provide metal roofing in locations as shown on the drawings using the following -
   a. Design - standing seam
   b. Material - prefinished galvalume
2. Provide all required accessories, clips, formed closures and the like necessary to complete the work in a workmanlike and watertight manner to conform to the guarantee/warranty requirements contained herein.
3. Provide full underlay of ice and water shield throughout at all metal roof areas; cover with rosin paper and apply metal roofing.
4. Perform balance of metal work, with suitable and compatible materials, as may be required to complete the work and to insure watertight construction.

1.03 RELATED WORK SPECIFIED ELSEWHERE - Entire Project Specification.

1.04 QUALITY ASSURANCE

A. Manufacturer's Qualifications
   1. The manufacturer shall have had at least (5) five years experience in architectural and industrial roofing systems.

B. Installer Qualifications
   1. The installer shall have a minimum of 5 years experience of installation with structural field-formed concealed clip roofing systems.
   2. Manufacturer must train and certify the installer so as to provide a single source responsibility for this portion of the work.
   3. Furnish names of Owners and Architect/Engineer of 5 buildings on which Applicator has installed satisfactory roof similar to type specified herein.

C. REFERENCE STANDARDS
   1. AA - Aluminum Association
      - "Specifications for Aluminum Sheet Metal Work in Building Construction"
      - "Specifications for Aluminum Structures"
      - "Standards and Data"
   2. AISI - American Iron and Steel Institute - "Light Gauge Cold-Formed Steel Design Manual"
   3. ASTM - American Society of Testing Materials
      - A 446 - Structural, Physical Quality for Galvanized Steel Sheet

- A 525 - General Requirements for Galvanized Steel Sheet
- A 792 - General Requirements for Aluminum-Zinc Coated Sheet
- B 209 - Aluminum Alloy Sheet and Plate
- D 1056 - Flexible Cellular Materials
- E 330 - Structural Performance by Air Pressure Difference

4. NFPA - National Forest Products Association - "National Design Specifications for Stress Grade Lumber and its Fastenings"
5. NRCA - National Roofing Contractors Association - "The NRCA construction Details"
6. SMACNA - Sheet Metal and Air Conditioning Contractors National Association - "Architectural Sheet Metal Manual"
7. AWS - American Welding Society, Code for Arc and Gas Welding in Building Construction and Recommended Practice for the Spot Welding of Low Carbon Steel.

D. Design primary and secondary members and covering for applicable loads and combination of loads in accordance with Metal Building Manufacturer's Association (MBMA) "Recommended Design Practices Manual".

E. Submit written certification prepared and signed by a Professional Engineer, licensed in the jurisdiction where work is to be performed, verifying that metal roof and secondary support design submitted in accordance with requirements of Paragraph 1.05 herein meets indicated loading requirements and codes of authorities having jurisdiction.

1.05 SUBMITTALS – Coordinate with Section 01 33 00

- Submittals shall be made in groupings where installations are complementary. Failure to comply with this requirement will be cause for rejection of any or all submittals.
- As set forth in Sections 01 33 00 and 01 32 00, prepare and submit a fully developed submittal schedule; note review times set forth in Section 01 33 00 are deemed “average”, for large submissions allow longer review times.
- Attention is directed to Section 01 31 14 for coordination drawing requirements for this project. These drawings are critical to the proper execution of the Work and failure to honor these requirements may become the basis for denial of any and all claims for either or both “time” and “money”.
- The Contractor is encouraged to submit for approval products made from recycled and/or environmentally responsible material. Every effort will be made by the Design Professional Team to approve these materials; the substitution request procedure shall still be enforced.

A. Submit the following Test Reports, certified by and Independent Testing Laboratory or an independent professional engineer, to verify that the proposed roofing will meet the performance requirements of this specification.
   1. ASTM E 1592 "Standard Test Method for Structural Performance of Sheet Metal Roof and Siding Systems by Uniform Static Air Pressure Difference" test methods.
   2. Halter/Clip Fastener Pull-Out Tests and Calculations.
   3. UL 90 Classification Test Data and report number.
   4. Concentrated Load Test Data

5. Air Infiltration (E 283) and Water Penetration (E 331) Test Results

B. Submit complete shop drawings, catalog cuts, calculations with all details, roof plans, wall elevations and field installation notes clearly indicated. Drawings must be approved before fabrication can begin.

C. Furnish certified laboratory test reports showing that the proposed system has been tested and conforms to applicable provisions specified herein.

D. Samples and descriptive date:
   1. Roof panel: Full panel width, 12 inches long.
   2. System Clips/Halters: Two Required.
   3. Fasteners: Two of each type to be used with a statement identifying the intended use of each.
   4. Closure: One metal and one neoprene.
   5. Sealants: One sample of each type and statement identifying the intended use of each.

E. Show pattern, finish, color and thickness.

F. Full engineering calculations signed and sealed by a Professional Engineer registered in the jurisdiction showing conformance to the design criteria established in Paragraph 1.06 below.

G. Material Safety Data Sheet (MSDS) must be submitted for each product.

1.06 PRODUCT DELIVERY, STORAGE AND HANDLING (Coordinate with Section 01 61 00)

A. Delivery of material shall be made only after suitable facilities for its storage and protection are available on the site.

B. Upon receipt of preformed metal panels, flat sheets, flashings and panel accessories; installer shall examine each shipment for damage and for completeness of the consignment.

C. Store materials out of the weather, in a clean, dry place. One end of each container should be slightly elevated to allow any moisture to run off.

D. Panels and/or flashings with strippable film must not be stored in areas exposed to sunlight.

E. Care should be taken to prevent contact with any substance which may cause a discoloration in the finish during storage.

F. Store materials to provide ventilation and prevent bending, abrasion, or twisting.

1.07 PERFORMANCE

A. Weathertightness - When tested in accord with the principles of NAAM TM-1, the roof system shall show no leakage when exposed to rainfall at 5 inches/hour and wind velocity up to 60 mph for five minutes.

B. The installation shall be designed to safely resist the positive and negative loads as specified below:

| | |
|---|---|
| Roof covering away from edges | + 30 psf-30 psf |
| Roof ridges, eaves and rakes | + 45 psf-45 psf |
| Roof ends, eave and rake corner | + 45 psf-45 psf |

In addition loading requirements above, installation shall be designed to carry a 10 pound/square foot dead load allowance for hangers, mechanical and electrical equipment and the like.

C. Roof panel and flashing attachments shall be designed to accommodate the

thermal expansion and contraction of the exterior material through a 200 degrees F temperature change.

D. Roof panels shall carry the uniform positive design loads stated herein with a maximum total panel deflection of L/140 as measured in the flat of the panel.

E. Further, all approved systems shall be designed to meet the minimum following criteria:
   1. 30 pounds per square foot wind load (per MBMA)
   2. Snow loading provisions in accordance with Connecticut State Building Code.
   3. Factory mutual uplift requirements I-90

1.08 PROTECTION

A. Protect products and accessories against damage and discoloration.

B. Avoid overloading roof with stored materials.

C. Do not permit material storage or traffic on completed roof surfaces.

1.09 SPECIAL GUARANTEE/WARRANTY TERMS

A. In addition to the terms and conditions of the Guarantee/Warranty requirements of the General Conditions, the Contractor shall guarantee all work of this Section against leaks and other defects which may result from faulty workmanship or materials for an extended 15 year period from the date of final acceptance of the Project.

B. Material Warranty: Provide warranty issued by manufacturer to cover roof panel base metal against rupture, structural failure, or perforation due to exposure to normal atmospheric corrosion for a period of 20 years and 6 months.

1.10 SUSTAINABILITY

A. In the selection of the products and materials of this section as well as for the entire project, preference will be given to those with the following characteristics:
   1. Water based.
   2. Water-soluble.
   3. Can be cleaned up with water.
   4. Non-flammable.
   5. Biodegradable.
   6. Low or preferably no Volatile Organic Compound (VOC) content.
   7. Manufactured without compounds that contribute to ozone depletion in the upper atmosphere.
   8. Manufactured without compounds that contribute to smog in the lower atmosphere.
   9. Do not contain methylene-chloride.
   10. Do not contain chlorinated hydrocarbons.
   11. Contains the least possible of post-consumer or post-industrial waste.

Part 2 - PRODUCTS

2.01 GENERAL

A. The basic intent of this specification is to furnish a prefinished standing seam metal roofing, fascia and companion flashing and trim system using the following materials.
   1. Prefinished "Galvalume", 24 gauge ASTM A 792, Grade 40 in a field

fabricated configuration for standing seam design for sloped roof and companion fascia/trim systems. Finish of material shall be "Duranar XL" by PPG in color as directed by the Architect and conforming to AAMA 605.2 for performance. Finish shall be 0.90 dmt over 0.25 dmt primer. Bottom side shall be coated with a compatible primer to 0.25 dmt. Provide strippable coating on top side to protect finish during fabrication, shipping and handling. Strip coating prior to installation. Entire system shall be as fabricated by Butler Manufacturing under the trade name “MR-24®” roof system or “Zip Rib” by Merchant and Evans or approved equal.

B. Roof System Design:
   1. Design roof panels in accordance with AISI North American Specification for the Design of Cold-Formed Steel Structural Members.
   2. Endwall Trim and Roof Transition Flashings: Allow roof panels to move relative to wall panels as roof expands and contracts with temperature changes.

C. Roof System Performance Testing:
   1. UL Wind Uplift Classification Rating, UL 580: Class 90.
   2. Structural Performance Under Uniform Static Air Pressure Difference: Test roof system in accordance with ASTM E 1592.
   3. Roof system has been tested in accordance with U.S. Army Corps of Engineers Unified Facilities Guide Specification Section 07 61 13.
   4. FM Global (Factory Mutual):
      a. Roof system has been tested in accordance with FMRC Standard 4471 and approved as a Class 1 Panel Roof.
      b. Metal Building System Manufacturer: Provide specific assemblies to meet required wind rating in accordance with FM Global.
      c. Installation modifications or substitutions can invalidate FM Global approval.

D. Roof and Wall Panels:
   1. Factory roll-formed, 18 inches wide, 2 inches high (2-3/4 inches including seam), 18 inches on center.
   2. Flat of the Panel: Cross flutes 6 inches on center, perpendicular to major corrugations in entire length of panel to reduce wind noise.
   3. Variable Width Panels:
      a. For roof lengths not evenly divisible by the 1’-6” panel width, factory-manufactured variable-width (9-inch, 12-inch and 15-inch) panels shall be used to ensure modular, weathertight roof installation.
      b. Minimum Length: 15 feet.
      c. Supply maximum possible panel lengths.
   4. Use panels of maximum possible lengths to minimize end laps.
   5. Extend eave panels beyond structural line of sidewalls.
   6. End Laps: Floating. Allows roof panels to expand and contract with roof panel temperature changes.

E. Provision for Expansion and Contraction:
   1. Provision for Thermal Expansion Movement of Roof Panels: Clips with movable tab.
      a. Stainless Steel Tabs: Factory centered on roof clip when installed to ensure full movement in either direction.
      b. Maximum Force of 8 Pounds: Required to initiate tab movement.

c. Each Clip: Accommodates a minimum of 1.25-inch movement in either direction.

2. Roof: Provide for thermal expansion and contraction without detrimental effects on roof panels, with plus or minus 100-degree F temperature difference between interior structural framework of building and of roof panels.

F. Fasteners:

1. Make connections of roof panels to structural members, except at eaves, with clips with movable stainless steel tabs, seamed into standing seam side lap.
2. Fasten panel clips to structural members with suitable fasteners in accordance with the shop drawings.
3. Accessories: See Section 07 60 00 for sheet metal systems and Section 08 62 00 for skylight systems.

Part 3 - EXECUTION

3.01 INSPECTION AND ACCEPTANCE

A. Examine all surfaces and contiguous elements to receive work of this section and correct, as part of the Work of this Contract, any defects affecting installation. Commencement of work will be construed as complete acceptability of surfaces and contiguous elements.

3.02 HANDLING

A. Care should be taken to avoid gouging, scratching or denting.
B. Protect installed products from damage caused by foreign objects and adjacent construction until completion of project.

3.03 INSTALLATION

A. All work shall be installed in accordance with the approved shop details under direct supervision of an experienced sheet metal craftsman. Attachments and joints shall allow for expansion and contraction from temperature changes without distortion or elongation of fastener holes.
B. Panels should be installed in such a manner that, horizontal lines are true and level, and vertical lines are plumb. Roof panels shall be continuous. Fastener population and pattern for roof panels shall be as shown on erection drawings.
C. Flashing shall be installed in strict accordance with the recommended practice in the AA, NRCA and SMACNA architectural sheet metal manuals: without fasteners in end laps and isolated from dissimilar materials. All starter and edge flashings should be installed prior to panels.
D. Do not allow panels or trim to come into contact with dissimilar materials.
E. Exposed edges are permissible due to the galvanic action of the system where the zinc migrates to protect the exposed material. However, efforts should be made to reduce the amount of exposed edges.
F. Completed work shall be plumb and true, free of scrapes and dents. Panel ribs shall be on the module indicated in the contract drawings within the tolerance allowed by the actual construction dimension.

3.04 DAMAGED MATERIAL

A. Replace any materials or components that are damaged beyond repair prior to completion.
B. Each area will be wiped down as it is completed.

3.05 TOUCHUP

A. Only minor scratches and abrasions will be allowed to be touched up. Any other damaged material shall be replaced.

3.06 MISCELLANEOUS

A. The Contractor shall provide all caulking in conjunction with roofing and sheet metal where shown and/or required. Further, all ribbed, roof panel sidelaps shall be sealed with a field applied, continuous ribbon of tape or mastic type sealant. All eaves shall be sealed.
B. Sealant shall be Type IV as/Section 07 90 00.
C. Items not covered elsewhere in this Section shall be as indicated on the drawings and/or as required to provide a complete weathertight installation. Formed metal work shall accurately reproduce the detail and design shown, and profiles, bends and intersections shall be sharp, true and even. Joints shall be lapped or locked and soldered as applicable. Preformed units shall have surface applied battens.

3.07 CLEANING

A. All metal remaining exposed shall be free from any stains or blemishes, prefinished material shall be touchup as applicable, and shall be cleaned of all foreign substances after roofing is complete. All surfaces shall be left clean and satisfactory to Architect. Exposed surfaces of the building or components thereof, whether installed under this trade section or not, and which have been soiled or damaged under this section shall be cleaned and repaired at no cost to the Owner.

3.08 WASTE MANAGEMENT – Coordinate with Section 01 74 19

A. Separate and recycle materials and material packaging in accordance with Waste Management Plan and to the maximum extent economically feasible and place in designated areas for recycling.
B. Set aside and protect materials suitable for reuse and/or remanufacturing.
C. Separate and fold up metal banding; flatten and place along with other metal scrap for recycling in designated area.

**End of Section**

# SECTION 076200 - SHEET METAL FLASHINGS & SPECIALTIES

## PART 1 - GENERAL

### 1.1 RELATED DOCUMENTS

A. Applicable provisions of the Conditions of the Contract and Division 1, General Requirements, govern work in this Section.

B. SUMMARY

1. All plant, labor, materials, equipment, testing and services necessary to complete the work shown on the drawings, schedules and keynotes, as specified herein, and as may be required by conditions and authorities having jurisdiction, including, but not limited to, the following:

2. Sheet metal work that is compatible with the roofing systems specified, including cap flashings, hook strips, fascia, drip edges, gravel stops, factory fabricated roof edge systems, gutters, leaders, and miscellaneous flashings.

C. Related Requirements

| | | |
|---|---|---|
| 1. | Masonry | - Division 4 |
| 2. | Carpentry | - Division 6 |
| 3. | EPDM Roofing | - Section 075323 |
| 4. | Roof Accessories | - Section 077200 |

### 1.2 CODE APPROVAL REQUIREMENTS

A. Fabricate and install roof perimeter flashings that comply with the Connecticut State Uniform Fire Prevention and Building Code and with ANSI/SPRI ES-1 “Wind Design Standard for Edge Systems Used with Low Slope Roofing Systems” requirements.

### 1.3 QUALITY ASSURANCE

A. Installer Qualifications:

1. A firm (Installer) with at least 5 continuous years experience performing work similar to that required for this project, employing personnel skilled in the work specified.

a. The Installer shall directly employ the personnel performing the work of this section.

b. The Installer shall have a full time supervisor on the roof when work is in progress. The Supervisor shall have a minimum of 5 years experience with work similar in nature and scope to this project, and speak fluent English.

i) Submit the supervisor’s resume upon request.

2. The Installer shall provide a reference list of at least three previously completed projects of comparable size and similar design, within a fifty mile radius of this project, which may be observed by representatives of the Owner:

   a. The reference list shall include at a minimum, the completion date, a description of the work performed, the Owner's name - contact person - phone number and address and the Architect's name - contact person and phone number.

   b. Submit the reference list upon request.

B. Material Quality:

1. Obtain each product from a single Manufacturer which has manufactured the same product in the United States of America for not less than 5 continuous years.

2. Obtain copper and pre-finished sheet metal items from the same mill run to maintain consistent color hue and surface finish.

C. Pre-Construction Conference: Meet at the project site between one and two weeks prior to starting work, with the Architect, Owner and other representatives concerned about the work, to discuss the following:

1. How the building will be kept watertight as work progresses.

2. How sheet metal work will be coordinated with the installation of the thermal barrier, wood blocking, insulation, cover board, roofing, flashings, roof accessories and other items to provide a watertight installation.

3. Generally accepted industry practice and the Manufacturer's instructions for handling and installing his products.

4. The condition of the substrate, curbs, penetrations and other preparatory work needed.

5. Incomplete submittals; note that progress payments will not be processed until all submittals are received and approved.

6. The construction schedule, weather forecast, availability of materials, personnel, equipment and facilities needed to proceed and complete the work on schedule.

7. A schedule for Manufacturer and Architect inspections.

1.4 SUBMITTALS

A. Submit the following items far enough in advance to obtain approval prior to performing any work on site:

1. A pre-work site and building inspection report with photos to document conditions before work starts.

2. Manufacturer's technical literature for all materials.

3. Test reports and certifications substantiating compliance with specification requirements only if requested by the Architect.

4. 2 foot long on-site in place samples, for each sheet metal item, to show how it relates and fits on adjoining masonry and wood blocking assemblies, and with the roof, stripping, and flashings.

5. 6 inch square pieces of each type of sheet metal to show surface finish, texture and color.

6. A sample of the Contractor’s guarantee form.

B. Simultaneously provide all technical submittals needed for this project, for all technical sections, collated by section. Incomplete submittals will not be reviewed.

1. Submittals shall be prepared and made by the firm that will perform the actual work.

2. Provide electronic submittals on USB drives in pdf format organized in folders by Section, or via a submittal exchange program if requested.

C. Safety Data Sheets: Simultaneously provide all Safety Data Sheets needed for this project, for all specification sections - collated by section, in three ring binders. Provide two binders for each building.

D. Payment requisitions will not be processed until all submittals are received and approved.

1.5 JOB MOCK-UPS

A. After the submittals are approved, prepare in actual job locations, mock-ups of cap and through wall flashings, hook strips, drip edges, fascia, gravel stops, factory fabricated roof edge systems, gutters, leaders, and all other items of sheet metal and related work, for inspection and approval by the Architect.

B. Construct each mock-up of two full lengths of metal, fastened, connected and stripped-in to the related roofing system, to show the following:

1. Type, gauge, color, cross-sectional dimensions and shape, and joint and mitering techniques.

2. Related masonry work, wood blocking, and the attachment techniques and fasteners for all wood and metal components.

3. Other sheet metal related materials and their installation techniques to fully define the detailing of each mock-up.

C. Mock-ups shall be constructed to establish the minimum standard of materials and workmanship, and to assure that completed work which matches the mock-ups will be fully functional and serve the purpose for it has been designed.

D. Approved mock-ups may be left in place and incorporated into the permanent installation. Rejected mock-ups shall be removed and replaced until an acceptable mock-up is approved.

E. Do not purchase or fabricate sheet metal items until mock-up installation, inspection and approval are completed and approval is documented in writing.

1.6 DELIVERY, STORAGE AND HANDLING

A. Deliver material to the site in the Manufacturer's original and unopened packaging, with intact and legible labels which identify the products and Manufacturers,

B. Cover all stored materials with watertight tarpaulins installed immediately upon delivery.

C. Do not overload the structure when storing materials on the roof.

D. Protect existing and new roof surfaces where material and equipment is placed on them, and where construction traffic occurs, with 6 mil fire retardant polyethylene, covered with 1-1/2 inch thick foam insulation, overlaid with 2 by 10 wooden planks.

1.7 GUARANTEE

A. Provide a written Contractor's Guarantee which guarantees that all work will remain free of material and workmanship defects and in a watertight condition for a five year period beginning upon Final Completion:

1. Defects include but are not limited to the following: peeling paint, leakage, adhesive separation, delamination, lifting, loosening, splitting, cracking, and undue expansion.

2. The Contractor shall make the repairs and modifications necessary to enable the work to perform as warranted at his own expense.

3. Guarantee coverage shall include removing and replacing materials installed as part of the original work, if removal is needed to affect guaranteed repairs.

4. Guarantee coverage shall have no dollar limit.

B. Provide one Contractor’s Guarantee that covers “all work performed” when a single contractor is awarded work specified in multiple Sections.

C. The Guarantee coverage shall take affect no more than 30 days before the completion of all punch list work.

D. The Contractor's Surety Company may add a rider to the Performance Bond which clarifies that Bond Coverage expires two years after Final Completion; i.e., Performance Bond Coverage does not run for the entire five year term of the Contractor's Guarantee.

PART 2 - PRODUCTS

2.1 MATERIALS

A. Copper sheet: ASTM B370, 99.0 % pure copper, thickness 16 ounces per square foot. Use copper for all metal items not otherwise indicated

B. Zinc-Tin coated copper: copper sheet, coated on both sides, with a smooth uniform coating of zinc and tin, base metal weight 16 ounces per square foot, cold rolled temper, available as Freedom Gray Copper by Revere.

C. Solder:
1. 50-50 tin and lead for plain copper, supplied in one pound bars with the alloy mixture stamped into the bar by the Manufacturer.
2. Lead free / or pure tin solder for zinc-tin coated copper, Number 497 by Johnson Manufacturing.

D. Flux:
1. Water-Soluble Liquid Flux, Kester #3345 for iron soldering of brass and copper.
2. Tin-bearing flux such as "Flux-N-Solder E127 with pure tin" by Johnson Manufacturing.

E. Aluminum fascias, hook strips, gravel stops and miscellaneous trim: #3105-H14 alloy aluminum, minimum thickness .050 inches unless otherwise indicated, factory finished with a Fluoropolymer Kynar 500 finish, color as selected by the Architect, from the full range of custom and standard colors.

F. Factory Fabricated Roof Edge System: Extruded aluminum anchor bars secured with #10 stainless steel screws spaced 12 inches on center and .050 inch thick Kynar 500 prefinished aluminum trim covers, independently tested to comply with the ANSI / SPRI ES-1 Wind Design Guide.

G. Fasteners: fabricated of stainless steel, or material that matches the sheet metal being fastened.

H. Glass Cloth: open mesh glass fabric coated on each side with plasticized asphalt as manufactured by Karnak Corporation or equal.

I. Asphalt cement: Federal Specification SS-C-153B, Type 1, asbestos free modified bitumen grade.

J. Exterior mounted gutters: 7 inch wide, .050 inch thick, seamless aluminum box style gutters with a Kynar 500 finish, as manufactured by Garrety Gutters 800/628-5849, supported with concealed aluminum fascia brackets spaced 12 inches on center fastened with 1-1/2 inch long stainless steel screws.

K. Exterior mounted leaders and straps: .027 inch thick rectangular corrugated aluminum leaders factory finished with baked acrylic enamel. 16 ounce thick copper 16 ounce zinc-tin coated copper rectangular leaders. Fasten each leader with 1/16 inch thick by 1 inch wide straps spaced 7 feet on center.

L. Sealant: High performance, solvent free, formulated and moisture curing silyl-terminated polyether sealant, ASTM C-920, Type S, Grade NS, Class 25, NovaLink construction sealant by ChemLink, color as selected.

PART 3 - EXECUTION

3.1 GENERAL

A. Accurately reproduce the details and design shown, and form profiles, bends and intersections, sharp, true and even. Fabricate sheet metal in the shop whenever possible, and form joints, laps, splices and connections to shed water and condensation in the direction of flow.

B. Provide any miscellaneous flashing and sheet metal work not shown on the drawings but otherwise needed to leave the project complete and entirely watertight, neatly and carefully executed in a thorough and workmanlike manner.

3.2 INSPECTION

A. Examine surfaces to receive work of this section and report any defects to the Owner.

1. Maintain the building watertight in the interim, but do not install new work until the defects have been corrected.

3.3 INSTALLATION

A. Fabricate and install copper work in accordance with the current edition of "Copper and Common Sense" as published by the Revere Copper and Brass Company, unless otherwise indicated.

1. Form all joints, except loose locked sealant filled expansion joints, to overlap 2 inches.

2. Secure the joints with rivets spaced 1 inch on center positioned about 1/2 inch from the top edge of the joint, then sweat solder the joint.

3. Use solder only to fill and seal the joint, not for mechanical strength. Form soldered joints continuous, strong and free from defects, with well heated soldering irons. Do not use open flame torches for soldering.

4. Clean soldered joints daily, immediately after soldering, by washing them with soap and water applied with a soft bristle brush, then rinsing with clear water.

B. Securely fasten and anchor all work, and make provisions for thermal expansion. Submit details of expansion joints for approval. Install fasteners through one edge of metal only, use a hook strip on the other edge.

C. Use stainless steel pin Zamac type nail-in fasteners, or stainless steel screws and washers with neoprene inserts where fasteners will be exposed.

3.4 CAP FLASHINGS

A. Install new copper cap flashings built into masonry walls properly joined to all related materials in a watertight manner.

1. Solder all joints in the new cap flashing, except form 2 inch wide flat locked sealant filled expansion joints a maximum of 32 feet on center.

2. Form the flashing to turn up 2 inches inside the wall and finish with a hem on the bottom exposed edge.

3. Fasten the top edge of the cap flashing to the backup wall assembly 12 inches on center.

4. Install the new cap flashing under flexible type wall flashings where possible. Where it is not possible to lap the new cap flashing under an existing wall flashing, install a ply of glass cloth set in and coated with modified bitumen asphalt cement to connect the new cap flashing to the existing wall flashing.

5. In the absence of an existing wall flashing, or at a solid masonry wall, turn up the new cap flashing 2 inches behind the first wythe of masonry.

6. Install new cap flashings where shown on the drawings, and at a height of 10 to 12 inches above the roof surface.

B. Install new aluminum cap flashings on skylight and equipment curbs.

1. Form the cap flashing to extend at least 2 inches under the equipment or skylight, 4 inches over the base flashing, and finish with a 1/2 inch hem on the bottom edge.

2. Install a 1/2 inch thick by 2 inch wide continuous foam gasket between the cap flashing and mechanical equipment or skylight.

   a. Do not set the equipment in sealant.
   b. Do not rely on the foam gaskets installed at the factory by some skylight manufacturer's; install the specified gasket.

3. Secure the equipment or skylight to the curb with stainless steel screws spaced 12 inches on center around the entire perimeter.

3.5 DRIP EDGES

A. Fabricate drip edges to extend 1-1/2 inches past the roof edge, and turn down to ensure water cannot track back and run down the fascia. Secure the drip edge with roofing nails along the top edge, spaced 4 inches apart along the raw metal edge. Form joints in the drip edge with 6 inch wide concealed under plates which duplicate the profile of the drip edge. Set the underplates in a full bed of sealant.

3.6 HOOK STRIPS

A. Form continuous hook strips with locks that engage the superimposed trim piece a minimum of 3/4 inch, and to cover the entire underside edge of the wood blocking and neatly extend to the building wall.

B. Fasten hook strips along their bottom edge, just above the 45 degree bend, with nails spaced 4 inches on center into underlying wood blocking; Zamac type nail-in type fasteners spaced 8 inches on center into masonry surfaces, or screws spaced 8 inches on-center into sheet metal surfaces.

3.7 FASCIA

A. Fabricate new fascia to engage the hook strip 3/4 inch minimum and extend to the top of the wood fascia blocking. Secure the fascia with a continuous hook strip along the bottom edge and roofing nails along the top edge spaced 8 inches apart, positioned to be covered by the roof edge trim. Form joints in the fascia with 6 inch wide concealed under plates which duplicate the profile of the fascia. Set the underplates in a full bed of sealant.

3.8 ROOF EDGE SYSTEM

A. Install a factory fabricated roof edge system on all roof eaves.

1. Extend the roof to lap over and down the face of the fascia trim, so it stops just short of the bottom edge of the anchor bar.

2. Install the anchor bar straight, level and true, set in a full bed of sealant, and secure the bar with #10 by 2 inch long stainless steel screws spaced no more than 12 inches apart.

3. Pre-drill screw holes in the underlying metal fascia trim where extra fasteners are needed, and at corners and special conditions.

4. Install color matching under plates at each joint in the roof edge trim; set the under plates in a full bed of sealant.

3.9 CLEANING, PROTECTION AND WATERTIGHTNESS

A. Conduct an inspection of the interior and exterior of the building and grounds, and submit a written report with photos to document any pre-existing leakage or damage, prior to performing any work.

B. The Owner will conduct a similar inspection at the completion of the work, and the Contractor will be charged for all leaks and damage that weren't documented in the Contractor's report, or repaired to the Owners satisfaction at the Contractor's expense.

C. Provide any equipment, material and labor necessary to protect the site, the building, its contents and occupants, pedestrians, and surrounding landscaped and paved areas from damage due to the construction work or from inclement weather during construction.

D. Do not perform work during inclement weather. Protect incomplete work and the building from damage by inclement weather - which may occur unexpectedly. Make all work areas watertight at the end of each day's work.

E. Clean up all litter, refuse, rubbish, scrap materials and debris at least twice a day; at noon and at the end of the work day, so the roof and site presents a neat, orderly and workmanlike appearance. Place the debris in a dumpster, and remove the dumpster from the site as soon as it is full or no longer being used.

F. Carefully and thoroughly clean the entire roof to remove all residual debris when all work is complete. After cleaning the roof, thoroughly clean all drain sumps, drain lines, leader heads and leaders. Do not allow debris to enter the drainage system.

END OF SECTION 076200

# SECTION 077200 - ROOF ACCESSORIES

## PART 1 - GENERAL

### 1.1 RELATED DOCUMENTS

A. Applicable provisions of the Conditions of the Contract and Division 1, General Requirements, govern work in this Section.

### 1.2 SUMMARY

A. All plant, labor, materials, equipment, testing and services necessary to complete the work shown on the drawings schedules and keynotes, as specified herein, and as may be required by conditions and authorities having jurisdiction, including, but not limited to, the following:

1. Roof specialties that are compatible with the roofing systems specified, including:

   a. Factory fabricate pipe curb portals
   b. Aluminum smoke vent hatches.
   c. Equipment pipe supports.
   d. Roof walkway pads.

B. Related Requirements

| | |
|---|---|
| 1. Masonry | - Division 4 |
| 2. Carpentry | - Division 6 |
| 3. EPDM Roofing | - Section 075323 |
| 4. Sheet Metal Flashing & Specialties | - Section 076200 |

### 1.3 CODE APPROVAL REQUIREMENTS

A. Fabricate and install roof accessories that comply with the Connecticut State Uniform Fire Prevention and Building Code.

### 1.4 QUALITY ASSURANCE

A. Installer Qualifications:

1. A firm (Installer) with at least 5 continuous years experience performing work similar to that required for this project, employing personnel skilled in the work specified.

   a. The Installer shall directly employ the personnel performing the work of this section.

   b. The Installer shall have a full time supervisor on the roof when work is in progress. The Supervisor shall have a minimum of 5 years experience with work similar in nature and scope to this project, and speak fluent English.

      i. Submit the supervisor’s resume upon request.

2. The Installer shall provide a reference list of at least three previously completed projects of comparable size and similar design, within a fifty mile radius of this project, which may be observed by representatives of the Owner:

   a. The reference list shall include at a minimum, the completion date, a description of the work performed, the Owner's name - contact person - phone number and address and the Architect's name - contact person and phone number, and the Contractor's Supervisor's name.

   b. Submit the reference list upon request.

B. Material Quality: Obtain each product from a single Manufacturer which has manufactured the same product in the United States of America for not less than 5 continuous years.

C. Pre-Construction Conference: Meet at the project site between one and two weeks prior to starting work, with the Architect, Owner and other representatives concerned about the work, to discuss the following:

   1. How the building will be kept watertight as work progresses.

   2. How roof accessory work will be coordinated with the installation of the thermal barrier, wood blocking, insulation, cover board, roofing, flashings, and other items to provide a watertight installation.

   3. Generally accepted industry practice and the Manufacturer's instructions for handling and installing his products.

   4. The condition of the substrate, curbs, penetrations and other preparatory work needed.

   5. Incomplete submittals; note that progress payments will not be processed until all submittals are received and approved.

   6. The construction schedule, forecast weather, availability of materials, personnel, equipment and facilities needed to proceed and complete the work on schedule.

   7. A schedule for Manufacturer and Architect inspections.

1.5 SUBMITTALS

A. Submit the following items far enough in advance to obtain approval prior to performing any work:

   1. A pre-work site and building inspection report with photos to document conditions before work starts.

   2. Manufacturer's installation instructions and technical data sheets for each item. Material sample submittals are not needed unless requested to show color and texture.

3. Samples of the Contractor's and Manufacturer's guarantee/warranty forms.
4. Test reports and certifications substantiating compliance with specification requirements if requested by the Architect.

B. Simultaneously provide all technical submittals needed for this project, for all technical sections, collated by section. Incomplete submittals will not be reviewed.

1. Submittals shall be prepared and made by the firm that will perform the actual work.

2. Provide electronic submittals on USB drives in pdf format organized in folders by Section, or via an electronic submittal exchange.

C. Safety Data Sheets: Simultaneously provide all Safety Data Sheets needed for this project, for all specification sections - collated by section, in three ring binders. Provide two binders for each building.

D. Payment requisitions will not be processed until all submittals are received and approved.

1.06 DELIVERY, STORAGE AND HANDLING

A. Deliver material to the site in the Manufacturer's original and unopened packaging, with intact and legible labels which identify the products and Manufacturers,

B. Cover all stored materials with watertight tarpaulins installed immediately upon delivery.

C. Do not overload the structure when storing materials on the roof.

D. Protect existing and new roof surfaces where material and equipment is placed on them, and where construction traffic occurs, with 6 mil fire retardant polyethylene, covered with 1-1/2 inch thick foam insulation, overlaid with 2 by 10 wooden planks.

1.07 GUARANTEE

A. Provide a written Contractor's Guarantee which guarantees that all work will remain free of material and workmanship defects and in a watertight condition for a five year period beginning upon Final Completion:

1. Defects include but are not limited to the following: peeling paint, leakage, adhesive separation, delamination, lifting, loosening, splitting, cracking, movement and undue expansion.

2. The Contractor shall make the repairs and modifications necessary to enable the work to perform as warranted at his own expense.

3. Guarantee coverage shall include removing and replacing materials installed as part of the original work, if removal is needed to affect repairs.

4. Guarantee coverage shall have no dollar limit.

B. Provide one Contractor's Guarantee that covers "all work performed" when a single contractor is awarded work specified in multiple Sections.

C. The Guarantee shall take affect no more than 30 days before the satisfactory completion of all punch list work.

D. The Contractor's Surety Company may add a rider to the Performance Bond which clarifies that Performance Bond Coverage expires two years after Final Completion; i.e., Performance Bond Coverage does not run for the entire five year term of the Contractor's Guarantee.

E. Provide a Manufacturer's written warranty, which warrants the skylights will remain watertight for a minimum 5 year term beginning upon final completion.

PART 2 - PRODUCTS

2.1 GENERAL

A. Provide Manufacturer's standard units, modified as necessary to comply with the specified requirements. Fabricate each unit in a shop to the greatest extent possible, using the following components:

1. Aluminum Sheet: ASTM B 209 alloy 3003, tempered for forming and performance; mill finish, except as otherwise noted.
2. Extruded Aluminum: Standard extrusions alloy 6063-T52; 0.078 inch minimum thicknesses for primary framing and curb member legs, 0.062 inch thickness for secondary framing and covers; mill finish, except as otherwise indicated.
3. Insulation: Rigid fiber glass boards where encapsulated inside metal skirts, rigid isocyanurate where covered with roof flashings on the exterior of curbs.
4. Wood Nailers: Dimension grade Douglas Fir, not less than 1-1/2 inches thick.
5. Fasteners: Nonmagnetic stainless steel or hot dipped galvanized steel, to match the finish of the material being fastened.
6. Gaskets: Tubular neoprene or polyvinyl chloride, or block sponge neoprene.
7. Sealant: Polyisobutylene; nonhardening, nonskinning, nondrying, nonmigrating sealant.

2.2 FACTORY FABRICATED PIPE CURB PORTALS

A. Factory fabricated flashing systems, consisting of 9 inch high internally insulated galvanized steel curbs with 1-1/2 inch square wood nailers at the top edges, and 5 hole EPDM boots, with nipples that will accommodate pipes and conduits from 1/2 to 2-1/2 inches in diameter, with stainless steel hose clamps on each nipple - 5-Hole Pipe Portal Flashing System: C-555, by Portals Plus or equal.

2.3 ALUMINUM SMOKE VENT HATCHES

A. UL listed single and double leaf hatches constructed with welded double wall 11 gauge mill finish aluminum covers that incorporate insulation, and 12 inch high aluminum curbs complete with counter flashings, neoprene draft seals, 3-1/2 inch deck flanges, interior and exterior handles and tamper resistant hinges contained within the hatch, as manufactured by The Bilco Company.

1. Furnish the units with manual, fusible link and electric releases that can be reset without having to replace any parts.

a. Match the electric release voltage to the local smoke detector and alarm system.

B. Furnish hatches with 4 inch by 4 inch 6 gauge galvanized steel welded wire safety screens supported on 1-1/2 by 1-1/2 by 1/4 inch thick steel perimeter angle support frames.

C. Furnish the units in the sizes needed to fit the deck openings, and as indicated.

2.4 ALUMINUM ACCESS HATCHES

A. Hatches constructed of welded 11 gauge mill finish aluminum, with 12 inch high curbs and integral cap flashings, heavy pintle hinges, compression spring operators, a spring latch with interior and exterior handles, an interior padlock hasp, and stainless steel hardware, as manufactured by the Bilco Company, in the sizes needed to fit the deck openings, and as indicated.

2.5 EQUIPMENT PIPE SUPPORTS

A. Factory fabricated adjustable pipe supports as manufactured by Miro Industries, Inc. Model 20-Base Strut-12.

2.6 ROOF WALKWAY PADS AND CONCRETE PAVERS

A. 2 inches thick, 24 inches by 24 inches precast concrete pavers, natural buff color and finish, minimum 7500 psi compressive strength as manufactured by Hanover Architectural Products.

B. 30 inches by 30 inches hard rubber black walkway pads manufactured by Firestone.

2.7 PAINT AND PRIMER

A. Alkyd base rust inhibiting exterior primer and high gloss finish paint for ferrous metal surfaces as manufactured by Benjamin Moore or equal.

PART 3 - EXECUTION

## 3.1 INSTALLATION

A. General: Field measure existing openings. Comply with manufacturer's instructions and recommendations. Coordinate with the installation of roof deck, other substrates to receive specialty units, vapor barriers, roof insulation, roofing and flashing to ensure that each element of the work performs and fits properly, and that combined elements are waterproof and weathertight. Anchor units securely to supporting structural substrates, adequate to withstand lateral and thermal stresses as well as inward and outward loading pressures.

## 3.2 FACTORY FABRICATED PIPE CURB PORTALS

A. Install factory fabricated pipe portal flashing systems at all HVAC units, and where more than one pipe or conduit penetrates the roof.

1. Install the portal curbs on wood blocking that matches the thickness of the roof insulation.

2. Disconnect and reconnect refrigerant, power, control and condensate lines and pipes as needed to install the pipes through the flashing nipples.

   a. Install water cut off sealant between the lines / pipes and EPDM nipples, and then install a hose clamp on each nipple.

   b. Remove and replace nipples that are incorrectly cut too large.

## 3.3 SMOKE VENT HATCHES

A. Install new smoke hatch assemblies and related flashings.

B. Support the new smoke vent curbs on solid wood blocking that matches the height of the new roof.

C. Connect the smoke vent hatches to a local smoke detector and the existing smoke alarm system. Test the smoke hatches to the satisfaction of the Architect and Owner.

D. Install new safety screens to fit inside the curb openings. Wire brush, prime and install two finish coats of paint prior to installation. Fasten the screens with 5/16 inch diameter lag bolts / expansion bolts / epoxy set bolts spaced 12 inches on center around the entire perimeter of the screens.

## 3.4 ROOF WALKWAY PADS AND CONCRETE PAVERS

A. Install concrete pavers over a piece of hard rubber walkway pad to support small HVAC compressors.

B. Install hard rubber walkway pads to provide a path 2-1/2 feet wide where shown, and at all roof access points, i.e., doors, ladders and hatches, under concrete pavers used for conduit and pipe supports, and around all HVAC equipment.

1. **Adhere each pad with five self adhesive strips - do not install the pads using three strips of tape as supplied by the manufacturer.**

3.5 PAINTING

A. Wire brush the guard rail to remove loose and peeling paint and surface rust.

B. Install one coat of primer and two finish coats of paint using a brush or roller. Wait 24 hours for each coat of paint to dry before applying the next coat.

3.6 MISCELLANEOUS

A. Provide and install any sealants needed, where shown or required.

3.7 CLEANING, PROTECTION AND WATERTIGHTNESS

A. Conduct an inspection of the interior and exterior of the building and grounds, and submit a written report with photos to document any pre-existing leakage or damage, prior to performing any work.

B. The Owner will conduct a similar inspection at the completion of the work, and the Contractor will be charged for all leaks and damage that weren't documented in the Contractor's report, or repaired to the Owners satisfaction at the Contractor's expense.

C. Provide any equipment, material and labor necessary to protect the site, the building, its contents and occupants, pedestrians, and surrounding landscaped and paved areas from damage due to the construction work or from inclement weather during construction.

D. Do not perform work during inclement weather. Protect incomplete work and the building from damage by inclement weather - which may occur unexpectedly. Make all work areas watertight at the end of each day's work.

E. Clean up all litter, refuse, rubbish, scrap materials and debris at least twice a day; at noon and at the end of the work day, so the roof and site presents a neat, orderly and workmanlike appearance. Place the debris in a dumpster, and remove the dumpster from the site as soon as it is full or no longer being used.

F. Carefully and thoroughly clean the entire roof to remove all residual debris when all work is complete. After cleaning the roof, thoroughly clean all drain sumps, drain lines, leader heads and leaders. Do not allow debris to enter the drainage system.

3.8 TESTING

A. Test the smoke hatches with the Architect or Owner present, to demonstrate they are functional, particularly with regard to security, alarm signal operation, and venting. If faults are evidenced, make the needed corrections and repeat the test until no faults occur.

END OF SECTION 077200

# SECTION 078123

# INTUMESCENT FIREPROOFING

## PART 1 - GENERAL

### 1.1 RELATED DOCUMENTS

A. Drawings and general provisions of the Contract, including General and Supplementary Conditions and Division 01 Specification Sections, apply to this Section.

### 1.2 SUMMARY

A. Section includes mastic and intumescent fire-resistive coatings.

B. Related Requirements:

1. Section 078100 "Applied Fireproofing" for sprayed fire-resistive materials (SFRM).
2. Section 099646 "Intumescent Painting" for intumescent paints that are fire retarding, but not fire resistive.

### 1.3 PREINSTALLATION MEETINGS

A. Preinstallation Conference: Conduct conference at Project site.

1. Review products, design ratings, restrained and unrestrained conditions, thicknesses, and other performance requirements.

### 1.4 ACTION SUBMITTALS

A. Product Data: For each type of product.

B. Sustainability Submittals:

1. Product Data for Credit LEED EQ 4.2: For paints and coatings, documentation including printed statement of VOC content.
2. Laboratory Test Reports for Credit LEED EQ 4: For paints and coatings used inside the weatherproofing system, documentation indicating that products comply with the testing and product requirements of the California Department of Health Services' "Standard Practice for the Testing of Volatile Organic Emissions from Various Sources Using Small- Scale Environmental Chambers."
3. Product shall possess a DECLARE Label

4. Product shall possess a Health Product Declaration (HPD)

C. Shop Drawings: Framing plans or schedules, or both, indicating the following:

1. Extent of fireproofing for each construction and fire-resistance rating.
2. Applicable fire-resistance design designations of a qualified testing and inspecting agency acceptable to authorities having jurisdiction.
3. Minimum fireproofing thicknesses needed to achieve required fire-resistance rating of each structural component and assembly.
4. Treatment of fireproofing after application.

D. Samples: For each exposed product and for each color and texture specified, 4 inches (102 mm) square in size.

1.5 INFORMATIONAL SUBMITTALS

A. Qualification Data: For manufacturer, Installer and Testing Agency.

B. Product Certificates: For each type of fireproofing.

C. Evaluation Reports: For fireproofing conforming to ICC-ES.

D. Field quality-control reports.

1.6 QUALITY ASSURANCE

A. Installer Qualifications: A firm or individual certified, licensed, or otherwise qualified by fireproofing manufacturer as experienced and with sufficient trained staff to install manufacturer's products according to specified requirements.

B. Mockups: Build mockups to verify selections made under Sample submittals and to demonstrate aesthetic effects and to set quality standards for materials and execution.

1. Build mockup of each type of fireproofing and different substrate and each required finish Insert description as shown on Drawings.
2. Approval of mockups does not constitute approval of deviations from the Contract Documents contained in mockups unless Architect specifically approves such deviations in writing.
3. Subject to compliance with requirements, approved mockups may become part of the completed Work if undisturbed at time of Substantial Completion.

1.7 FIELD CONDITIONS

A. Environmental Limitations: Do not apply fireproofing when ambient or substrate temperature is 50 deg F (10 deg C) or lower unless temporary protection and heat are provided to maintain temperature at or above this level for 24 hours before, during, and for 24 hours after product application.

B. Ventilation: Ventilate building spaces during and after application of fireproofing, providing complete air exchanges according to manufacturer's written instructions.

Use natural means or, if they are inadequate, forced-air circulation until fireproofing dries thoroughly.

PART 2 - PRODUCTS

2.1 PERFORMANCE REQUIREMENTS

A. Assemblies: Provide fireproofing, including auxiliary materials, according to requirements of each fire-resistance design and manufacturer's written instructions.

B. Source Limitations: Obtain fireproofing for each fire-resistance design from single source.

C. Fire-Resistance Design: Indicated on Drawings, tested according to ANSI/ UL 263, ASTM E119; testing by a qualified testing agency. Identify products with appropriate markings of applicable testing agency.

1. Steel members are to be considered unrestrained unless specifically noted otherwise.

D. Asbestos: Provide products containing no detectable asbestos.

2.2 EXPOSED MASTIC AND INTUMESCENT FIRE-RESISTIVE COATINGS

A. Interior Conditions: Coatings limited to interior general purpose where protection of the coating during application and curing, the construction and the occupancy of the building are as recommended by the product manufacturer for the specific application, per ASTM E 2924.

1. Basis of Design: Subject to compliance with project requirements:
   a. Isolatek International, CAFCO Products; CAFCO SprayFilm WB 5

   Alternate Manufacturers: Subject to compliance with requirements, manufacturers offering products that may be incorporated into the Work include, but are not limited to, the following:
   a. A/D Fire Protection Systems Inc.; FireFilm III.
   b. International Paint Ltd: Interchar 1120 and 1120HY

2. Thickness: As required for fire-resistance design indicated, measured according to requirements of fire-resistance design.
3. Surface-Burning Characteristics: Comply with ASTM E 84; testing by a qualified testing agency. Identify products with appropriate markings of applicable testing agency.
   a. Flame-Spread Index: 5 or less.
   b. Smoke-Developed Index: 35 or less.
4. Hardness: Not less than 67, Type D durometer, according to ASTM D 2240.
5. Impact Resistance: Not less than 152 inch-lb (17.17 Nm), according to ASTM D2794
6. Abrasion Resistance: Maximum 0.2600 grams/1000 cycles, according to ASTM D4060

7. Bond Strength: Minimum 340 psi (2344 kPa), according to ASTM D4541
8. Finish: Spray-textured finish.

B. Exterior Conditions: Coatings for exterior use or interior use where exterior environmental conditions exist.

1. Basis of Design: Subject to compliance with project requirements:
   a. Isolatek International, CAFCO Products; CAFCO SprayFilm WB 4 with Topseal
   Alternate Manufacturers: Subject to compliance with requirements, manufacturers offering products that may be incorporated into the Work include, but are not limited to, the following:
   a. Albi Manufacturing, Division of StanChem Inc.; Albi Clad 800.
   b. International Paint Ltd: Interchar 212
2. Thickness: As required for fire-resistance design indicated, measured according to requirements of fire-resistance design.
3. Surface-Burning Characteristics: Comply with ASTM E 84; testing by a qualified testing agency. Identify products with appropriate markings of applicable testing agency.
   a. Flame-Spread Index: 15 or less.
   b. Smoke-Developed Index: 35 or less.
4. Hardness: Not less than 81, Type D durometer, according to ASTM D 2240.
5. Impact Resistance: Not less than 98 inch-lb (11.07 Nm), according to ASTM D2794
6. Abrasion Resistance: Maximum 0.2300 grams/1000 cycles, according to ASTM D4060
7. Bond Strength: Minimum 322 psi (2220 kPa), according to ASTM D4541
8. Finish: Spray-textured finish.

C. Color and Gloss: Shall be as required for color-coding, aesthetics or additional surface protection, approved by the thin-film fire resistive material manufacturer and applied in full accordance with the coating manufacturer's written instructions.

2.3 AUXILIARY MATERIALS

A. General: Provide auxiliary materials that are compatible with fireproofing and substrates and are approved by UL or another testing and inspecting agency acceptable to authorities having jurisdiction for use in fire-resistance designs indicated.

B. Substrate Primers: Primers approved by fireproofing manufacturer and complying with required fire-resistance design by UL or another testing and inspecting agency acceptable to authorities having jurisdiction.

C. Reinforcing Fabric: Glass- or carbon-fiber fabric of type, weight, and form required to comply with fire-resistance designs indicated; approved and provided by fireproofing manufacturer.

D. Reinforcing Mesh: Metallic mesh reinforcement of type, weight, and form required to comply with fire-resistance design indicated; approved and provided by fireproofing manufacturer. Include pins and attachment.

E. Topcoat: Finish topcoat shall be provided at all areas of exposed structure with intumescent fireproofing throughout the Project. Color as Selected by Architect. Suitable for application over applied fireproofing; of type recommended in writing by fireproofing manufacturer for each fire-resistance design.

PART 3 - EXECUTION

3.1 EXAMINATION

A. Examine substrates, areas, and conditions, with Installer present, for compliance with requirements for substrates and other conditions affecting performance of the Work and according to each fire-resistance design.

1. Verify that substrates are free of dirt, oil, grease, release agents, rolling compounds, mill scale, loose scale, incompatible primers, paints, and encapsulants, or other foreign substances capable of impairing bond of fireproofing with substrates under conditions of normal use or fire exposure.
2. Verify that objects penetrating fireproofing, including clips, hangers, support sleeves, and similar items, are securely attached to substrates.

3. Verify that substrates receiving fireproofing are not obstructed by ducts, piping, equipment, or other suspended construction that will interfere with fireproofing application.

B. Conduct tests according to fireproofing manufacturer's written instructions to verify that substrates are free of substances capable of interfering with bond.

C. Prepare written report, endorsed by Installer, listing conditions detrimental to performance of the Work.

D. Proceed with installation only after unsatisfactory conditions have been corrected.

3.2 PREPARATION

A. Cover other work subject to damage from fallout or overspray of fireproofing materials during application.

B. Clean substrates of substances that could impair bond of fireproofing.

C. Prime substrates where included in fire-resistance design and where recommended in writing by fireproofing manufacturer unless compatible shop primer has been applied and is in satisfactory condition to receive fireproofing.

D. For applications visible on completion of Project, repair substrates to remove surface imperfections that could affect uniformity of texture and thickness in finished surface of fireproofing. Remove minor projections and fill voids that would telegraph through fire- resistive products after application.

## 3.3 APPLICATION

A. Construct fireproofing assemblies that are identical to fire-resistance design indicated and products as specified, tested, and substantiated by test reports; for thickness, primers, topcoats, finishing, and other materials and procedures affecting fireproofing work.

B. Comply with fireproofing manufacturer's written instructions for mixing materials, application procedures, and types of equipment used to mix, convey, and apply fireproofing; as applicable to particular conditions of installation and as required to achieve fire-resistance ratings indicated.

C. Coordinate application of fireproofing with other construction to minimize need to cut or remove fireproofing.

1. Do not begin applying fireproofing until clips, hangers, supports, sleeves, and other items penetrating fireproofing are in place.
2. Defer installing ducts, piping, and other items that would interfere with applying fireproofing until application of fireproofing is completed.

D. Install auxiliary materials as required, as detailed, and according to fire-resistance design and fireproofing manufacturer's written instructions for conditions of exposure and intended use. For auxiliary materials, use attachment and anchorage devices of type recommended in writing by fireproofing manufacturer.

E. Spray apply fireproofing to maximum extent possible. After the spraying operation in each area, complete the coverage by trowel application or other placement method recommended in writing by fireproofing manufacturer.

F. Extend fireproofing in full thickness over entire area of each substrate to be protected.

G. Install body of fireproofing in a single course unless otherwise recommended in writing by fireproofing manufacturer.

H. Provide a uniform finish complying with description indicated for each type of fireproofing material and matching finish approved for required mockups.

I. Cure fireproofing according to fireproofing manufacturer's written instructions.

J. Do not install enclosing or concealing construction until after fireproofing has been applied, inspected, and tested and corrections have been made to deficient applications.

K. Finishes: Where indicated, apply fireproofing to produce the following finishes:

1. Manufacturer's Standard Finishes: Finish according to manufacturer's written instructions for each finish selected.
2. Spray-Textured Finish: Finish left as spray applied with no further treatment.
3. Topcoat as indicated on Drawings.

## 3.4 FIELD QUALITY CONTROL

A. Special Inspections: Owner will engage a qualified special inspector to perform the following special inspections:

1. Test and inspect as required by the IBC, Subsection 1705.14, "Mastic and Intumescent Fire-Resistant Coatings. as indicated on Schedule of Special Inspections.

B. Perform the tests and inspections of completed Work in successive stages. Do not proceed with application of fireproofing for the next area until test results for previously completed applications of fireproofing show compliance with requirements. Tested values must equal or exceed values as specified and as indicated and required for approved fire-resistance design.

C. Fireproofing will be considered defective if it does not pass tests and inspections.

1. Remove and replace fireproofing that does not pass tests and inspections, and retest.
2. Apply additional fireproofing, per manufacturer's written instructions, where test results indicate insufficient thickness, and retest.

D. Prepare test and inspection reports.

## 3.5 CLEANING, PROTECTING, AND REPAIRING

A. Cleaning: Immediately after completing spraying operations in each containable area of Project, remove material overspray and fallout from surfaces of other construction and clean exposed surfaces to remove evidence of soiling.

B. Protect fireproofing, according to advice of manufacturer and Installer, from damage resulting from construction operations or other causes, so fireproofing is without damage or deterioration at time of Substantial Completion.

C. As installation of other construction proceeds, inspect fireproofing and repair damaged areas and fireproofing removed due to work of other trades.

D. Repair fireproofing damaged by other work before concealing it with other construction.

E. Repair fireproofing by reapplying it using same method as original installation or using manufacturer's recommended trowel-applied product.

END OF SECTION 078123

# SECTION 07 82 00

# BOARD FIRE PROTECTION

## PART 1 - GENERAL

### 1.1 RELATED DOCUMENTS

A. Drawings and general provisions of the Contract, including General and Supplementary Conditions and Division 01 Specification Sections, apply to this Section.

### 1.2 SUMMARY

A. Section Includes:

1. Mineral-fiber board fire protection.

### 1.3 ACTION SUBMITTALS

A. Product Data: For the following:

1. Mineral-fiber board.
2. Joint treatment and finishing materials.

B. Shop Drawings:

1. Locations and types of surface preparations required before applying board fire protection.
2. Structural framing plan showing extent of board fire protection for each construction and fire-resistance rating, including the following:
   a. Applicable fire-resistance design designations of a qualified testing and inspecting agency acceptable to authorities having jurisdiction.
      1) For steel joist assemblies, include applicable fire-resistance design designations, with each steel joist tested with same maximum tensile stress as each steel joist indicated on Drawings. Design designations with steel joists tested at lower maximum tensile stress than those indicated are not permitted.
   b. Minimum thicknesses needed to achieve required fire-resistance ratings of structural components and assemblies.

### 1.4 INFORMATIONAL SUBMITTALS

A. Product Certificates: For each type of board fire protection.

PART 2 - PRODUCTS

2.1 PERFORMANCE REQUIREMENTS

A. Fire-Resistance Ratings: Indicated by design designations from UL's Fire Resistance Directory for board fire protection serving as direct-applied protection tested according to ASTM E119.

2.2 BOARD FIRE PROTECTION

A. Mineral-Fiber Board: White Foil-faced rigid board produced by combining slag-wool-/rock-wool fibers with thermosetting resin binders passing ASTM E136 for combustion characteristics; of thickness required to produce fire-resistance rating indicated.

1. For purposes of establishing standards of quality and levels of performance and not for the purposes of limiting competition the basis of this specification is upon factory fabricated units as manufactured by **Cafco-Board / Isolatek Type CB – 2-1/2 inch thickness**
2. Maximum Density: 10 lb/cu. ft
3. Surface-Burning Characteristics: Flame-spread and smoke-developed indexes of 15 and zero, respectively, according to ASTM E84.

2.3 ACCESSORIES

A. Anchorage Accessories: Provide manufacturer's standard board-anchorage components complying with related design of UL or of another testing and inspecting agency acceptable to authorities having jurisdiction.

B. Joint Treatment and Finishing Materials: Provide joint treatment tape and joint compounds recommended in writing by board manufacturer for finishing surfaces.

PART 3 - EXECUTION

3.1 PREPARATION

A. Install board fire protection on structural members after piping and other construction behind fire-resistive materials have been completed.

B. Welded-Stud Systems: Remove rust and scale from steel substrates at welded-steel-stud anchorage locations.

3.2 INSTALLATION

A. Install board fire protection according to manufacturer's written instructions.

B. Install board fire protection to comply with requirements for layer thicknesses and number, construction of joints and corners, and anchorage methods applicable to fire-resistance-rated assemblies indicated.

C. Install enclosing or concealing construction only after board fire protection has been applied and inspected by authorities having jurisdiction

D. Finish board exposed to view to comply with board manufacturer's written instructions and as follows:

1. At joints in board, embed tape in joint compound and apply first, fill, and finish coats of joint compounds over tape, fastener heads, and accessories.
2. Apply a topcoat of finish paint in accordance with manufacturer’s written requirements – Color as selected by Architect.

## 3.3 PROTECTION

A. Replace or repair board fire protection that has been cut away to facilitate other construction. Maintain complete coverage of full thickness on members and substrates protected by board fire protection.

1. Provide final protection and maintain conditions in a manner acceptable to Installer, manufacturer, and authorities having jurisdiction to ensure that board fire protection is without damage or deterioration at time of Substantial Completion.

## 3.4 BOARD FIRE PROTECTION SCHEDULE

A. UL-classified assemblies indicated below refer to assembly numbers in UL's "Fire Resistance Directory."

B. Roof-Ceiling Assemblies

1. UL-Classified Systems: P301

END OF SECTION 078200

# SECTION 078400 - FIRESTOPPING

## PART 1 - GENERAL

### 1.1 GENERAL REQUIREMENTS

Applicable provisions of the Conditions of the Contract and Division #1, General Requirements, govern work in this Section.

### 1.2 DESCRIPTION OF WORK

A. The work of this Section consists of the provision of all plant, materials, labor and equipment and the like necessary and/or required for the complete execution of all firestopping and smoke seal work for this project as required by the schedules, keynotes and drawings, including, but not limited to the following:

NOTES:
- Firestopping is defined as a material, or combination of materials, to restore the integrity of fire rated walls and floors by maintaining an effective barrier against the spread of flame, smoke and toxic gases and further defined in 1.04 below.
- ***Firestopping is subject to Special Inspection and shall be accomplished by a single specialty contractor experienced in this work and not by separate trades***.

1. Provide firestopping and smoke seals as indicated on the drawings and/or required to maintain full and continuous smoke and fire barrier between zones including:
   a. Through penetration firestops and smoke-stops for all fire-rated bearing and non-bearing wall and floor assemblies, both blank (empty) and those accommodating penetrating items such as cables, conduits, pipes, ducts, etc.
   b. Membrane penetration protection for fire-rated walls.
   c. Architectural/Construction joint firestops within walls, floors, or the intersection of floors to exterior walls, or the intersection of top of walls to ceilings.
   d. Top of wall firestopping in all fire-rated partitions with either mineral wool specified herein or fire-rated gaskets as specified in Sections 06 10 00 and/or 09 29 00.
   e. Top of wall and construction joint smoke-stopping in all smoke partitions.
   f. Work further includes any and all draftstop/acoustic stop annular packing for all partitions both rated and non-rated.

   Cope and seal around all structural elements to insure smoke and fire barriers.

   IT IS A MANDATE OF THIS CONTRACT THAT ALL FIRESTOPPING WORK BE ACCOMPLISHED BY A FM4991 ACCREDITED CONTRACTOR WITH AT LEAST ONE “Designated Responsible Individual

(DRI)" IN THE EMPLOY OF THE SPECIALTY CONTRACTOR FIRM. A COPY OF THE QUALITY ASSURANCE MANUAL SHALL BE MAINTAINED ON THE JOB SITE FOR REVIEW BY THE DESIGN PROFESSIONAL, CONTRACTOR AND ANY OTHER INTERESTED PARTY.

NOTE: A preinstallation conference shall be scheduled by the Contractor with this Specialty Contractor and all other Specialty Contractors, Subcontractors and the like to establish procedures to maintain optimum working conditions and to coordinate the work of this Section with related and adjacent work.

2. Provide "mice blocking" at all new vertical and horizontal penetrations, and at all existing penetrations which are exposed during the course of demolition and new construction.

1.3 RELATED WORK SPECIFIED ELSEWHERE - Entire Project Specification with specific reference to those sections noted above and as follows:

NOTE: Proper execution of this work will maintain the hourly ratings of the walls and floors and ensure progress of work in other Sections as listed below and further:

- Fire Rated: Metal sleeves for fire rated openings through floors and walls shall be provided under applicable mechanical and electrical specification sections.
- Non-Rated: Non-rated openings through floors and walls shall be sealed under applicable mechanical and electrical specification sections.
- Firestopping and smoke seals within mechanical (i.e. inside ducts, dampers) and electrical assemblies shall be sealed under applicable mechanical and electrical specifications sections and only in accordance with the equipment or device manufacturers' installation instructions. Firestopping and smoke seals around outside of such mechanical and electrical assemblies, where they penetrate fire rated separations, are the responsibility of this section.

A. Division 22 - Plumbing
B. Division 23 - HVAC
C. Division 26 - Electrical Work
D. Division 28 – Electronic Safety and Security

***It is a project requirement that each individual trade provide sleeves for all pipe and conduit penetrations as part of their work.***

1.4 QUALITY ASSURANCE

A. Firestopping systems (materials and design):
   1. Shall conform to both Flame (F) and Temperature (T) ratings as required by local building codes and as tested by nationally accepted test agencies per ASTM E 814 or UL 1479 fire tests in a configuration that is representative of field conditions.
   2. The F rating must be a minimum of 1 hour but not less than the fire resistance rating of the assembly being penetrated.

3. T rating when required by code authority shall be based on measurement of the temperature rise on penetrating item(s).
4. The fire test shall be conducted with a minimum positive pressure differential of 0.03 inches of water column.
5. For joints, must be tested to UL 2079 or E 1399 and E 1966 with movement capabilities equal to those of the anticipated conditions.
6. Where there is no specific third party tested and classified firestop system available for a particular firestop configuration, the firestopping contractor shall obtain from the firestop manufacturer an Engineering Judgment (EJ) or Equivalent Fire Resistance Rated Assembly (EFFRA) for submittal.

B. Firestopping materials and systems must be capable of closing or filling through-openings created by 1) the burning or melting of combustible pipes, cable jacketing, or pipe insulation materials, or 2) deflection of sheet metal due to thermal expansion (electrical and mechanical duct work).

C. Firestopping sealants must be flexible, allowing for normal pipe movement.

D. Firestopping materials shall not shrink upon drying as evidenced by cracking or pulling back from contact surfaces.

E. Firestopping materials shall be moisture resistant, and may not dissolve in water after curing.

F. For firestopping exposed to view, traffic, moisture, and physical damage, provide appropriate firestop systems for these conditions.

G. All firestopping materials shall be manufactured by one manufacturer (to the maximum extent possible).

H. Material used shall be in accordance with the manufacturer’s written installation instructions.

I. Firestopping shall be performed by a Specialty Contractor trained or approved, in writing, by firestop material manufacturer. Said specialist shall be as defined in the Conditions. Equipment used shall be in accordance with firestop material manufacturer's written installation instructions.

J. Materials shall conform to all applicable governing codes.

K. <u>All materials used in the work shall be certified "asbestos free"</u> and shall be free from any and all solvents or components that require hazardous waste disposal <u>or</u>, that after curing, dissolve in water.

L. All materials shall comply with the interior finish flame spread and smoke developed requirements for the area in which they are installed. Coordinate with governing codes.

M. DEFINITIONS
1. FIRESTOPPING: The use of a material or combination of materials in a fire-rated structure (wall or floor) where it has been breached, so as to restore the integrity of the fire rating on that wall or floor.
2. SYSTEM: The use of a specific firestop material or combination of materials in conjunction with a specific wall or floor construction type and a specific penetrant(s), constitutes a "System"
3. BARRIER: Any bearing or non-bearing wall or floor that has an hourly fire and smoke rating.
4. THROUGH-PENETRATION: Any penetration of a fire-rated wall or floor that completely breaches the barrier.
5. MEMBRANE-PENETRATION: Any penetration in a fire-rated wall that breaches only one side of the barrier.

6. CONSTRUCTION GAPS: Any gap, joint, or opening, whether static or dynamic, where the top of a wall may meet a floor; wall to wall applications; edge to edge floor configurations; floor to exterior wall; or any linear breach in a rated barrier. Where movement is required, the firestopping system must comply with UL2079 for dynamic joints.

1.5 SUBMITTALS – Coordinate with Section 01 33 00

- Submittals shall be made in groupings where installations are complementary. Failure to comply with this requirement will be cause for rejection of any or all submittals.
- As set forth in Sections 01 33 00 and 01 32 00, prepare and submit a fully developed submittal schedule; note review times set forth in Section 01 33 00 are deemed “average”, for large submissions allow longer review times.
- Attention is directed to Section 01 31 14 for coordination drawing requirements for this project. These drawings are critical to the proper execution of the Work and failure to honor these requirements may become the basis for denial of any and all claims for either or both “time” and “money”.
- The Contractor is encouraged to submit for approval products made from recycled and/or environmentally responsible material. Every effort will be made by the Design Professional Team to approve these materials; the substitution request procedure shall still be enforced.

**NOTE**: A "Certificate of Conformance", from the manufacturer listed in Part 2, is required with the "Submittal Package" to ensure that the material selected meets all of the criteria of this specification as set forth in Paragraph 1.04 of this Section.

A. Submit manufacturer’s product literature for each type of firestop material to be installed. Literature shall indicate product characteristics, typical uses, performance and limitation criteria, and test data. Submittal should be in compliance with Section 01 33 00.
B. UL Tested Systems: Submit drawings showing typical installation details for the methods of installation. Indicate which firestop materials will be used and thickness for different hourly ratings.
C. Engineering Judgments: Submit manufacturer's drawings for all non-standard applications where no UL tested system exists. All drawings must indicate the "Tested" UL system upon which the judgment is based so as to assess the relevance of the judgment to some known performance.
D. Submit manufacturer’s installation procedures for each type of product.
E. Approved Applicator: Submit document from manufacturer wherein manufacturer recognizes the installer as qualified or submit a list of past projects to demonstrate capability to perform intended work.
F. Upon completion, installer shall provide written certification that materials were installed in accordance with the manufacturer’s installation instructions and details.
G. Mockups:
   1. Prepare job mockup of the material proposed for use in the project as directed by Architect. Approved mockups shall be left in place as part of the finished project and will constitute the standard for remaining work, including aesthetics.

H. Material Safety Data Sheet (MSDS) must be submitted for each product.

1.6 PRODUCT DELIVERY, STORAGE AND HANDLING (Coordinate with Section 01 61 00)

A. Deliver all materials to be used in the work of this section to the project site in original sealed containers with manufacturer's brand and name, lot numbers, UL labeling, mixing and installation instructions clearly identified thereon.

B. Store all materials in accordance with manufacturer's directions. All materials shall be dated with shelf life and shall be removed from the project site at the contractors expense if date is expired.

1.7 REFERENCE STANDARDS

A. American Society for Testing and Materials (ASTM)
   1. E 814 - Standard Method of Fire Tests of Through Penetration Fire Stops.
   2. E 119 - Methods of Fire Tests of Building Construction and Materials.
   3. E 84 - Standard Test Method for Surface Burning Characteristics of Building Materials.
   4. E 136 - Test Method for Behavior of Materials in a Vertical Tube Furnace at 750F
   5. E 1399 Cyclic Movement and Measuring Minimum and Maximum Joint Widths
   6. E 1966 - Test Method for Resistance of Building Joint
   7. E 2174 - Standard Practice for On-Site Inspection of Installed Fire Stops
   8. E 2307 - Standard Test Method for Determining the Fire Endurance of Perimeter Fire Barrier Systems Using the Intermediate-Scale, Multi Story Test Apparatus (ISMA); ASTM permanent number assignment pending approval of Draft

B. Underwriters Laboratories, Inc. (UL)
   1. UL Qualified Firestop Contractor Program
   2. UL 1479 - Fire Tests of Through Penetration Fire Stops.
   3. UL 263 - Fire Tests of Building Construction and Materials.
   4. UL 723 - Surface Burning Characteristics of Building Materials.
   5. UL 2079 Tests for Fire Resistance of Building Joint Systems
   6. UL "Fire Resistance Directory", current year, including but not limited to the following:
      a. For penetrations by uninsulated, non-combustible items including steel pipe, copper pipe, rigid steel conduit and electrical metallic tubing (EMT) - UL System: CAJ1235, CAJ1404, WL1152.
      b. For penetrations by insulated, non-combustible items including steel pipe, copper pipe, rigid steel conduit and electrical metallic tubing (EMT) - UL System: CAJ5222, CAJ5250, CAJ5251, WL5171.
      c. For penetrations by PVC jacketed, flexible cable or cable bundles and plastic pipe (closed piping systems) - UL System: CAJ2401, CAJ3185, CAJ3199, CAJ3234, WL3118, WL3179, WL3199.
      d. For penetrations by combustible plastic pipe (open piping systems) - UL System: CAJ2174, CAJ2339, CAJ2351, CAJ2432, WL2168, WL2170, WL2185, WL2259.
      e. For penetrations by multiple combustible and/or non-combustible items - UL System: CAJ8101, CAJ8133, WL8007.

f. For large size/complex penetrations made to accommodate cable trays, multiple steel and copper pipes, electrical busways in raceways - UL System: CAJ1406, CAJ1502, CAJ4053, CAJ6027, WJ6004, WL1207, WL1343 WL4030, WL6018.
g. For penetrations by steel ducts - UL System: CAJ7075, CAJ7082, WJ7045, WJ7046, WL7006, WL7046, WL7081, WL7082.
h. For fire-rated construction joints and other gaps - OPL System: CEJ296P, CEJ302P.

7. For openings between structurally separate sections of wall and floors. At the top of walls - UL System: HWD0107, HWD0110, HWD0257, HWD0267, HWD0299, HWD0327, HWD0266, HWD0333, HWD0334.

C. Factory Mutual (FM) Approval Guide, current year.
1. FM Approval Standard of Firestop Contractors – Class 4991

D. Building code of the jurisdiction of the Work.

E. National Fire Protection Association
1. NFPA 101 - Life Safety Code.
2. NFPA 70 - National Electrical Code.
3. NFPA 221 - Fire Walls and Fire Barriers (preliminary to be released)
4. NFPA 251 - Fire Tests of Building Construction and Materials

F. FICA “Manual of Practice”

G. Certification of “DRI” employee(s)

H. International Firestop Council (IFC):
1. Ref. 1 Recommended IFC Guidelines for Evaluating Firestop Engineering Judgments (April 2001)
2. Ref. 2 Inspectors Field Pocket Guide

1.8 PROJECT CONDITIONS

A. Conform to manufacturer's printed instructions for installation and when applicable, curing in accordance with temperature and humidity. Conform to ventilation and safety requirements.

B. Coordinate work required with work of other trades; firestopping shall, **where practical**, precede gypsum board or other applied sheet finishing operations.

C. Where firestopping is installed at locations which will remain exposed in the finished work, provide protection as necessary to prevent damage to adjacent surfaces and finishes, and protect as required against damage from other construction operations.

1.9 SEQUENCING

A. Schedule firestopping after installation of penetrants but prior to concealing the openings.

B. Firestopping shall precede gypsum board finishing.

1.10 PROTECTION

A. A Where firestopping is installed at locations which will remain exposed in the completed work, provide protection as necessary to prevent damage to adjacent surfaces and finishes, and protect as necessary against damage from other construction activities.

1.11 SUSTAINABILITY

A. In the selection of the products and materials of this section as well as for the entire project, preference will be given to those with the following characteristics:
   1. Water based.
   2. Water-soluble.
   3. Can be cleaned up with water.
   4. Non-flammable.
   5. Biodegradable.
   6. Low or preferably no Volatile Organic Compound (VOC) content.
   7. Manufactured without compounds that contribute to ozone depletion in the upper atmosphere.
   8. Manufactured without compounds that contribute to smog in the lower atmosphere.
   9. Do not contain methylene-chloride.
   10. Do not contain chlorinated hydrocarbons.
   11. Contains the least possible of post-consumer or post-industrial waste.

PART 2 - PRODUCTS

2.1 GENERAL
   A. Firestopping materials and systems shall meet the requirements specified herein.
   B. Architect must approve in writing any alternates to the materials and systems specified herein.
   C. All firestop products and systems shall be designed and installed so that the basic sealing system will allow the full restoration of the thermal and fire resistance properties of the barrier being penetrated with minimal repair if penetrants are subsequently removed.
   D. For applications where combustible penetrants are involved, i.e.. insulated and plastic pipe, a suitable intumescent material must be used.

2.2 SPECIFICATION STANDARD: For purposes of establishing standards of quality <u>and</u> levels of performance and not for the purposes of limiting competition, the basis of this specification is upon units as manufactured by one of the following and their respective model suitable for the intended application.
   A. Hilti, Inc.
   B. Specified Technologies, Inc.
   C. Grace/IPC Corp.
   D. Nelson Firestop Products
   E. Tremco, Inc.
   F. U.S. Gypsum Company
   G. Johns Manville

2.3 PRODUCTS SHALL GENERALLY INCLUDE
   A. Cast-In-sleeves (3M CID)
   B. Mortar seals
   C. Fire stop design sealant compounds, caulk and foam systems.
   D. Putty and putty pads
   E. Firestop kits including collars, plugs, etc.
   F. Seal bags
   G. Tapes and blankets
   H. Intumescent design wrap strips

I. Mineral type unfaced safing insulation with third party wrap, 3.5 pcf density, UL R-10905 label.
J. Top of Wall Mineral Wool Strips or Plugs (Hilti CP 767/777).

2.4 ACCESSORY ELEMENTS
A. Forming, damming materials shall be mineral fiber board or other suitable material recommended by nominated system manufacturer.
B. Primers, sealant and solvent cleaners shall be as recommended by the nominated system manufacturer.
C. Metal Systems - 20 gauge phosphatized, electrogalvanized steel plate and/or galvanized steel clips.

2.5 MICE BLOCKING
A. "Stuff Fit" copper mesh crack and crevice seal by Allen Special Products, P.O. Box 605, Montgomeryville, PA 18936.

2.5 Balance of materials shall be as specified elsewhere in this Section.

PART 3 - EXECUTION

3.1INSPECTION AND ACCEPTANCE
A. Examine all surfaces and contiguous elements to receive work of this section and correct, as part of the Work of this Contract, any defects affecting installation. Commencement of work will be construed as complete acceptability of surfaces and contiguous elements.
B. Verify that environmental conditions are safe and suitable for installation of firestop products.
C. Verify that all pipe, conduit, cable, and other items which penetrate fire-rated construction have been permanently installed prior to installation of firestops.

3.2 PREPARATION
A. The surface shall be dry, clean, and free of all foreign matter. Do not apply firestopping to surfaces previously painted or treated with a sealer, curing compound, water repellant or other coatings unless tests have been performed to ensure compatibility of materials.
B. Provide primers as required which conform to manufacturer's recommendations for various substrates and conditions.
C. Mask where necessary to protect adjoining surfaces.
D. Remove excess material and stains on surfaces as required.

3.3 INSTALLATION - GENERAL SYSTEMS
A. Install in strict accordance with manufacturer's printed instructions as well as U.L guidelines and state and local fire codes.
B. Ensure that anchoring devices, backup materials, clips, sleeves, supports and other materials used in the actual fire test are installed.
C. Install firestopping with sufficient pressure to properly fill and seal openings to ensure an effective smoke seal.
D. Tool or trowel exposed surfaces. Remove excess firestop material promptly as work progresses and upon completion.
E. Install dams when required to properly contain firestopping materials within

openings and as required to achieve required fire resistance ratings. Combustible damming materials must be removed after appropriate curing. Incombustible damming materials may be left as a permanent component of the firestopping system.

3.4 FIRESTOPPING CONSTRUCTION AT BUILDING EXTERIOR PERIMETERS, INTERIOR WALLS, SHAFTS, ETC.

A. Install material of proper size on continuous plates or clips as required for proper support in order to safe-off area between exterior walls, interior walls and shafts and floor slabs and said walls and roof areas leaving NO VOIDS. Firestopping is required at all juncture conditions whether or not clips, angles or other structural elements exist either intermittently or continuously. Attach plates and/or clips to floor levels and other breaks and extend through framing to sheathing and/or other solid strata. Where metal decking flutes, either parallel or perpendicular to walls, occur and are open, same shall be fully packed and sealed with proper firestopping system. Where firestopping is accomplished after installation of drywall or other applied sheet finish, all spaces between penetrations and finish shall be filled to the thickness of said sheet finish with intumescent caulk.

B. At all linear openings, fill voids with a minimum of 6 inches of minimum 3.5 lb./cu.ft. density safing insulation as specified in Part 2 herein and cover entire surface with UL listed firestop sealant of one of nominated manufacturers identified in Part 2 herein.

3.5 FIRESTOPPING OF JOINT SYSTEMS

A. Install joint fillers to provide support of firestop materials during application and at the position required to produce the cross-sectional shapes and depths of installed firestop material relative to joint widths that allow optimum sealant movement capability and develop fire-resistance rating required.

B. Install systems by proven techniques that result in firestop materials:
   1. directly contacting and fully wetting joint substrates.
   2. completely filling recesses provided for each joint configuration, providing uniform, cross-sectional shapes and depths relative to joint width that optimize movement capability.

C. Tool non-sag firestop materials immediately after their application and prior to the time skinning or begins. Form smooth, uniform beads of configuration indicated or required to:
   1. produce fire-resistance rating
   2. to eliminate air pockets
   3. to ensure contact and adhesion with sides of joint.

3.6 PENETRATION SEALS

A. Penetrations are defined as conduits, cables, wires, piping, ducts or other elements passing through one or both outer surfaces of fire rated walls, floors or partitions and shall be firestopped on both sides of penetration in accordance with requirements set forth in Paragraph 1.04 of this Section.

B. Where sleeves are used, same shall be as specified in Part 2 herein; in event that sleeves are not used, core openings and caulk or wrap penetrating items with intumescent system the full length of penetration and seal on both sides with intumescent caulk.

Residual openings within square or rectangular holes shall be filled with compounds applicable for substrate encountered and all penetrations sealed on both sides with caulk.

3.7 MICE BLOCKING

A. At fire rated penetrations and at penetrations in finish areas, install copper mesh prior to filling or sealing the penetration.

3.8 FIELD QUALITY CONTROL

A. Contractor shall immediately notify the Architect if the firestopping systems herein specified cannot meet the requirements of the specification.
B. Contractor shall examine firestops to ensure proper installation and full compliance with this specification.
C. All areas of work must be accessible until inspection by the applicable Code authorities or an independent inspection agency employed and paid by owner. The inspector will examine penetration firestopping in accordance with ASTM E – 2174, “Standard Practice for On-Site Inspection of Installed Fire Stops and ASTM E-2393, “Standard Practice for On-Site Inspection of Installed Fire Stop Joint Systems. Inspection agency to examine firestopping and will determine, in general, that firestopping has been installed in compliance with requirements of tested and listed firestop system, and installation process conforms to FM 4991 – Standard for Approval of Firestop Contractors or UL Qualified Firestop Contractor Program.
D. Correct unacceptable firestops and provide additional inspection to verify compliance with this specification at no additional cost.

3.9 IDENTIFICATION

A. Identify firestop systems with pressure-sensitive, self-adhesive, preprinted vinyl labels. Attach labels permanently to surfaces of penetrated construction on both sides of each firestop system installation where labels will be visible to anyone seeking to remove penetrating items or firestop systems. Include the following information on labels:
   1. The words: “Warning--Firestop System--Do Not Disturb. Notify Building Management of Any Damage.”
   2. Contractor’s name, address, and phone number.
   3. Firestop system designation of applicable testing and inspecting agency.
   4. Date of installation.
   5. Firestop system manufacturer’s name.
   6. Installer’s name.

3.10 CLEANING

A. When finished work will be visible, clean adjacent surfaces in accordance with manufacturer's printed instructions.
B. If visible in the finished work, remove temporary dams after initial cure of firestops.
C. Correct staining and discoloring on adjacent surfaces.
D. Remove all debris and excess materials entirely from site and leave work in a neat and clean condition.

3.11 FIRESTOP SYSTEM SCHEDULE

A. The following schedules shall be completed by the Contractor and reviewed prior to submission to the Architect. The untitled table included shall be completed with each of the following categories of penetrating items.
   1. Single uninsulated metallic piping and conduit.
   2. Multiple uninsulated metallic piping and conduit.
   3. Uninsulated plastic piping and conduit.
   4. Insulated metallic piping.
   5. Cable tray.
   6. Electrical/telephone cable.
   7. Bus duct.
   8. Miscellaneous penetrations.
B. Complete the additional tables for the following using the format provided.
   1. Blanks, voids, holes.
   2. Engineering judgments.
   3. Fire rated/resistant joints.
   4. Ductwork engineering judgments.

3.12 WASTE MANAGEMENT – Coordinate with Section 01 74 19

A. Separate and recycle materials and material packaging in accordance with Waste Management Plan and to the maximum extent economically feasible and place in designated areas for recycling.
B. Set aside and protect materials suitable for reuse and/or remanufacturing.
C. Separate and fold up metal banding; flatten and place along with other metal scrap for recycling in designated area.

**PENETRATING ITEM:**

Manufacturer/Product Name:
Color:
Accessories:

| Floor/wall Construction | Item Size/Description | Sleeve | F Ratin | T Rating | Annular Space | Firestop Thickness | Tested Ass'y No. |
|---|---|---|---|---|---|---|---|
| | | | | | | | |
| | | | | | | | |
| | | | | | | | |
| | | | | | | | |
| | | | | | | | |
| | | | | | | | |
| | | | | | | | |
| | | | | | | | |
| | | | | | | | |

**BLANKS, VOIDS, HOLES**

Manufacturer/Product Name:
Color:
Accessories:

| Floor/wall Construction | Size/Description | F Rating | T Rating | Firestop Thickness | Tested Ass'y No. |
|---|---|---|---|---|---|
| | | | | | |
| | | | | | |
| | | | | | |
| | | | | | |
| | | | | | |
| | | | | | |
| | | | | | |
| | | | | | |
| | | | | | |
| | | | | | |

**ENGINEERING JUDGMENTS (Submit Actual Installation Drawing and Letter of Certification)**

Manufacturer/Product Name:
Color:
Accessories:

| Floor/wall Construction | Item Size/Description | F Rating | T Rating | Annular Space | Firestop Thickness | Packing Thickness |
|---|---|---|---|---|---|---|
| | | | | | | |
| | | | | | | |
| | | | | | | |
| | | | | | | |
| | | | | | | |

**FIRE RATED/RESISTANT JOINTS**

Manufacturer/Product Name:
Color:
Accessories:

| Joint Description | F Rating | T Rating | Firestop Thickness | Tested Ass'y No. |
|---|---|---|---|---|
| | | | | |
| | | | | |
| | | | | |
| | | | | |

**DUCTWORK ENGINEERING JUDGMENTS**

(Submit Actual Installation Drawing and Letter of Certification)

Manufacturer/Product Name:

Color:
Accessories:

| Wall/Fl Const. | Size | Fire Damper | F | T | Annular Space Range | Firestop Thickness | Packing Thickness |
|---|---|---|---|---|---|---|---|
| | | | | | | | |
| | | | | | | | |
| | | | | | | | |
| | | | | | | | |
| | | | | | | | |
| | | | | | | | |
| | | | | | | | |

**End of Section**

SECTION 07 90 00

CAULKING AND SEALING/JOINT SEALANTS

Part 1 - GENERAL

1.01 Applicable provisions of the Conditions of the Contract and Division #1, General Requirements, govern work in this Section.

1.02 DESCRIPTION OF WORK

A. The work of this Section consists of the provision of all plant, materials, labor and equipment and the like necessary and/or required for the complete execution of all caulking and sealing work for this project as required by the schedules, keynotes and drawings.

**NOTE: It will be the responsibility of the nominated supplier/suppliers of any sealant system proposed for use in the work to perform a "bond" test on all substrates to determine adhesion properties and requirement, if any, for primer application; coordinate with Article 1.05 herein.**

1. Provide all interior joints between dissimilar materials as indicated or required to insure positive seals -

| | |
|---|---|
| Door frames - | VI |
| Window surrounds - | VI |
| Plumbing fixtures - | II |
| Sound integrity - | VI, Exposed; V, Concealed |
| Water penetration - | II |
| Light seals - | VI |
| Mill & counter work - | VI, Dry; II for Wet |

NOTE: Sealants are generally required at the following locations -

a. Interior door frames to surrounding face construction;
b. Interior window trim/reveals to window frames;
c. Plumbing fixtures and accessories where same abut finished surfaces;
d. Scribed counter and casework systems where same abut finished surfaces;
e. Where gypsum wall board is in contact with concrete block and concrete slabs, walls and columns (tops, bottoms and sides)
f. ***Where concrete block is in contact with concrete slabs, walls and columns (tops, bottoms and sides)***

and like locations where dissimilar materials abut each other in finished areas.

1.03 RELATED WORK SPECIFIED ELSEWHERE - Entire Project Specification. Bond testing shall be performed as noted in Paragraph 1.02.A above and results submitted to Architect for file.

A. All surfaces to receive sealant shall be dry and cleaned of all foreign matter as specified in Part 3.

B. Application devices shall have nozzles of proper size and shall provide sufficient pressure to completely fill joints as detailed.

C. Sealants shall comply with VOC requirements of the Jurisdiction of the Work, or in absence of said regulation, all material shall comply with the following as applicable for particular application and shall **not** contain or be formulated with aromatic solvents, halogenated solvents, fibrous talc or asbestos, formaldehyde, mercury, lead, cadmium, hexavalent chromium or their derivatives.

D. Reference Standards

1. ASTM C 719 - Standard Test Method for Adhesion and Cohesion of Elastomeric Joint Sealants Under Cyclic Movement (Hockman Cycle).
2. ASTM C 794 - Standard Test Method for Adhesion-in-Peel of Elastomeric Joint Sealants.
3. ASTM C 834 - Latex Sealing Compounds
4. ASTM C 919 – Standard Practice for Use of Sealants in Acoustical Applications.
5. ASTM C 920 - Elastomeric Joint Sealants.
6. ASTM C 1087 - Standard Test Method for Determining Compatibility of Liquid-Applied Sealants with Accessories Used in Structural Glazing Systems.
7. ASTM C 1193 - Standard Guide for Use of Joint Sealants.
8. ASTM C 1248 - Standard Test Method for Staining of Porous Substrate by Joint Sealants.
9. ASTM C 1311 – Solvent Release Sealants.
10. ASTM C 1330 – Cylindrical Sealant Backing for Use with Cold Liquid Applied Sealants.
11. ASTM C 1401 – Standard Guide for Structural Sealant Glazing
12. ASTM C 1481 – Standard Guide for Use of Joint Sealants with Exterior Insulation and Finish Systems (EFIS)
13. ASTM D 1056 - Flexible Cellular Materials, Sponge or Expanded Rubber.
14. SWRI (Sealant, Waterproofing and Restoration Institute) - Sealant and Caulking Guide Specification.

## 1.04 SUBMITTALS

- As set forth in Article 14 of the General Conditions, prepare and submit a fully developed submittal schedule; review times for approval are 15 working days for primary review and 20 working days when a consultant is involved; note review times set forth above are deemed “average”, for large submissions allow longer review times.
- The Contractor is encouraged to submit for approval products made from recycled and/or environmentally responsible material. Every effort will be made by the Design Professional Team to approve these materials; the substitution request procedure shall still be enforced.

A. Product Data indicating for each type of sealant and component used in this work - chemical characteristics; performance criteria; substrate preparation; limitations; color availability; and the like affecting the use of each product.

B. Samples of all components to be used in the work of this section.

C. Color charts for selection.

D. Schedule of sealant locations.
E. Test Reports:
   1. Submit results of laboratory pre-construction testing.
   2. Submit results of field pre-construction testing.
   3. Submit manufacturer's recommendations for joint preparation, priming, and joint accessory materials based on test results.
   4. Submit manufacturer's recommended installation procedure modifications resulting from field adhesion tests.
F. Manufacturer's installation instructions indicating, if any, special procedures; surface preparation; perimeter conditions requiring special attention; and like items affecting installation of each product. ***Results of bond tests shall be incorporated in installation recommendations.***
G. Certification of specification compliance.
   1. Certify products are suitable for intended use and products meet or exceed specified requirements.
   2. Certify applicator is approved by manufacturer.
H. Qualifications Data: Submit applicator's qualifications, including reference projects of similar scope and complexity, with current phone numbers and contact names of architects and owners for verification.
I. Manufacturer's Field Reports:
   1. Indicate time present at project site.
   2. Include observations, indicate compliance with manufacturer's installation instructions, and supplemental instructions provided to installers.
J. Material Safety Data Sheet (MSDS) must be submitted for each product.
K. Operation and Maintenance Data:
   1. Submit recommended inspection intervals.
   2. Submit instructions for repairing and replacing failed sealant joints.

1.05 PRODUCT DELIVERY, STORAGE AND HANDLING (Coordinate with Section 01 61 00)
A. Deliver products in original factory packaging bearing identification of product, manufacturer, and batch number. Provide Material Safety Data Sheets for each product.
B. Store products in a location protected from freezing, damage, construction activity, precipitation, and direct sunlight in strict accordance with manufacturer's recommendations.
C. Condition products to approximately 60 to 70 degrees F (16 to 21 degrees C) for use in accordance with manufacturer's recommendations.
D. Handle all products with appropriate precautions and care as stated on Material Safety Data Sheet.

1.06 SPECIAL GUARANTEE/WARRANTY TERMS
A. This Contractor shall, and hereby does warrant; and the Contractor shall, and hereby does guarantee that caulking and sealing work will be free from defects of materials and workmanship for 2 years from the date of final acceptance of this work.
B. Repair and replace work which becomes defective during the guarantee term, without cost to the Owner.

1.07 SITE ENVIRONMENTAL PROCEDURES

a. Indoor Air Quality: Temporary ventilation: Provide temporary ventilation during work of this Section. Coordinate interior application of joint sealants with interior finishes schedule.

1.08 SUSTAINABILITY

A. In the selection of the products and materials of this section as well as for the entire project, preference will be given to those with the following characteristics:
   1. Water based.
   2. Water-soluble.
   3. Can be cleaned up with water.
   4. Non-flammable.
   5. Biodegradable.
   6. Low or preferably no Volatile Organic Compound (VOC) content.
   7. Manufactured without compounds that contribute to ozone depletion in the upper atmosphere.
   8. Manufactured without compounds that contribute to smog in the lower atmosphere.
   9. Do not contain methylene-chloride.
   10. Do not contain chlorinated hydrocarbons.
   11. Contains the least possible of post-consumer or post-industrial waste.

Part 2 - PRODUCTS

2.01 GENERAL

A. Joint primer, sealer and/or conditioner shall be as recommended by the sealant manufacturer for the surfaces to be adhered to.

B. Preformed joint fillers shall be nonstaining compatible with sealant and primer, and of a resilient nature and shall be one of the following:
   1. Expanded Polyethylene Joint Filler (for existing joints) - Flexible, compressible, closed-cell polyethylene of not less than 10 psi compression deflection (25%).
   2. Closed Cell Polyurethane Joint Filler (for pavements, walks, and curbs) - Resilient, compressible, semi-rigid; W.R. Meadow's Ceramar or A.C. Horn's Closed Cell Plastic Foam Filler, Code 5401.

C. Backer Rod for General Vertical Use: ASTM C 1330, Types B or C, rod stock closed cell polyethylene foam, closed cell neoprene foam, or open cell urethane foam, as recommended by sealant manufacturer as being compatible both with the sealant used and the primer. Provide the following products and certification that it meets the requirements or Architect approved substitute:
   1. SOF ROD as manufactured by Nomaco Inc. or Eva-Seal #30 Foam Backer Rod as manufactured by E-poxy Engineered Materials shall be used for all building joints. SOF ROD shall have a nonabsorbing outer skin and a highly resistant interior network of closed and open cells, which will not outgas when ruptured. Eva Seal #30 shall be a closed cell, cross-linked ethylene vinyl acetate copolymer foam.
   2. GREEN ROD as manufactured by Nomaco, Inc. shall be used for paving and floor joints. Rod shall be a closed cell polyethylene rod extruded in continuous lengths.
   3. Denver Foam as manufactured by Backer Rod Manufacturing and Supply

Co.(Open Cell)

D. Accessory Items:
   1. Bond Breaker Tape - Polyethylene or other plastic tape as recommended by the sealant manufacturer; non-bonding to sealant; self-adhesive where applicable; thickness, minimum 0.012 inch. Tapes manufactured by the following are acceptable:
      a. #40 or #531 (heavy duty) Bond Breaker Tape as manufactured by Valley Industrial Products, Huntington, New York.
      b. #50 Polyethylene Bond Breaker Tape as manufactured by Decker Mfg. Co., Fairfield, New Jersey.
      c. CRL Bond Breaker Tape as manufactured by C.R. Laurence Company Inc.
   2. Cleaning Solvents - Oil free solvents as recommended by the sealant manufacturer. Do not use reclaimed solvents.
   3. Masking Tape - Removable paper or fiber tape, self-adhesive, non-staining.
   4. Materials impregnated with oil, bitumen or similar materials shall not be used.

E. Sealant Colors
   1. Exposed materials, provide color as indicated or, if not indicated, as selected by the Architect from manufacturer's standard colors.
   2. Concealed materials, provide the natural color which has the best overall performance characteristics.

2.02 MATERIAL TABLE

NOTE: At the Contractors' option, a "Silyl-Terminated Polyether" compound as manufactured by BASF Building Products under the name "Sonolastic 150" or "ProSil[sct]1" by Pecora or "GreatSeal PE-150 Polyether Sealant" by STS Coatings, Inc. are acceptable for use in lieu of Type I and Type II materials as specified below.

A. Sealant materials shall be as follows and shall relate to scope of work described herein and shall form a general material reference for all sections performing sealant operations. Backer systems shall be as specified in Paragraph 2.01 above and as suitable for intended substrate and joint conditions.

B. Type - IA (For use with pavements, walks, curbs, plaza decks and other such locations) Sealant compound - 2 component self leveling polyurethane material similar and equal to -.
   1. BASF Building Products (Sonolastic SL2 Horizontal)
   2. Pecora (Urexpan NR-200 Horizontal/Dynatred Vertical)
   3. Tremco (THC 900/901)
   4. Mapei (Mapeflex P1 SL)

C. Type - II - GENERAL (For use in vertical expansion joints where extensive movement occurs and for general exterior sealant operations.) Sealant compound - 1 part, low-modulus silicone sealant similar and equal to -
   1. Dow Corning (795)
   2. General Electric (Silpruf)
   3. Pecora (864)

4. BASF Building Products (Omniseal)
5. Tremco (Spectrem 1 or 2 as suitable for intended application)

D. Type - IIB - SANITARY SEALS - Material shall be a single component, mildew resistant silicone sealant similar and equal to -
1. Dow Corning - 786
2. General Electric - Sanitary 1700
3. Bostik - Silicone Rubber Bathroom Caulk.
4. Pecora - #898 or 863 at option of Contractor.
5. Tremco – Tremsil 200

E. Type - V (For use in acoustical sealing operations) - Sealant compound - Butyl Rubber or Latex Base for developing acoustical requirements specified. Material shall be similar and equal to -
1. Pecora (BA-98)
2. W.W. Henry (313)
3. U.S. Gypsum (Acoustical Sealant)
4. Tremco (Acoustical Sealant)
5. Mason Industries, Inc. (Acoustical Caulking CC-75)

F. Type - VI (For interior sealant systems around door frames, window reveals and like locations in painted surfaces) - Sealant compound – Siliconized Acrylic Latex or FDC Siliconized Acrylic each with a 50 year warrantee similar and equal to:
1. RCS20 by GE-Silicones.
2. DAP® ALEX PLUS® Acrylic Latex Caulk Plus Silicone
3. LIFETIME® Siliconized Acrylic by Red Devil
4. POWERHOUSE Siliconized Acrylic Latex Caulk by Sherwin Williams

G. Type - VII – Fire Rated Caulking compound for bedding and/or sealing of joints in rated gypsum wall systems shall be similar and equal to: “AC20 – FTR” by Pecora; “Tremstop Acrylic” by Tremco; “Blockade” by DAP; “FS 1900 Series Sealant Intumescent Elastomeric Firestop” by International Protective Coatings, Inc. or approved equal.

## Part 3 - EXECUTION

### 3.01 INSPECTION AND ACCEPTANCE

A. Examine all surfaces and contiguous elements to receive work of this section and correct, as part of the Work of this Contract, any defects affecting installation. Commencement of work will be construed as complete acceptability of surfaces and contiguous elements.

### 3.02 JOINT DESIGN

A. Joints shall be a maximum of 3/8 inch deep by minimum 3/8 inch wide.
B. Joints in concrete or masonry:
1. Depth of sealant shall equal width of joints in joints up to 1/2 inch wide; joints 1/2 inch to 1 inch wide, depth shall be 1/2 inch.
2. For expansion joints or other joints 1 inch to 2 inch wide depth shall not be greater than 1/2 the applied sealant width and no greater than 5/8 inch for Type I nor 1/2 inch for Type II materials.

C. Joints in metal, glass and other non-porous surfaces: Depth shall be a minimum of 1/2 the applied sealant width, and shall in no case exceed the applied sealant width.

3.03 PREPARATION

A. Prepare joints in accordance with ASTM C 1193 and manufacturer's instructions.

B. Clean joint surfaces immediately before installation of sealant and other materials specified in this Section.

1. Remove all loose materials, dirt, dust, rust, oils and other foreign matter that will impair the performance of materials installed under this Section.
2. Remove lacquers, protective coatings and similar materials from joint faces with manufacturer's recommended solvents.
3. Do not limit cleaning of joint surfaces to solvent wiping; use methods such as grinding, etching or other approved and manufacturer's recommended means, if required, to clean the joint surfaces, assuring that the sealant materials will obtain positive and permanent adhesion.

C. For Pavements, Walks, and Curbs

1. Set joint fillers at proper depth and position as required for installation of bond breakers, backer rods, and sealants. Do not leave voids or gaps between the ends of joint filler units.
   a. Smooth Edged Joints: For joints between two concrete slabs or where new concrete abuts smooth-edged materials, use either cork joint filler or closed cell polyurethane joint filler.
   b. Irregular Edged Joints: For joints where new concrete abuts granite curbs or other irregular edges, use closed cell polyurethane joint filler.
   c. Prime all joint surfaces; Do not allow the primer/sealer to spill or migrate onto adjoining surfaces.

3.04 JOINT BACKING INSTALLATION

A. Install bond breaker tape in relaxed condition as it comes off the roll. Do not stretch the tape. Lap individual lengths.

B. Prevent three sided adhesion by use of bond breaker tapes or backer rods at the back of the joint. Install backer rods for all liquid sealants, except where specifically recommended against by sealant manufacturers. Install backer rods immediately before sealants, do not permit backer rods to get wet. Install backer rods at the proper depth to create the specified sealant depth, avoid placing backer rods too deep which will result in sealant failure due to excessive sealant depth. Backup material shall be suitable size and shape so that when compressed 20 to 50%, it will fit in all joints where required. Do not cut or puncture the surface skin of the rod.

C. Apply masking tape where required by surfaces encountered, and as may be determined by mockup testing, in continuous strips in alignment with joint edge. Remove tape immediately after joints have been sealed and tooled.

3.05 SEALANT INSTALLATION

A. Prime surfaces where required with primer recommended by sealant manufacturer and as determined by "bond" test required in Part 1 of this Section.

B. Apply, tool and finish sealant in accordance with manufacturer's recommendations.

C. Install sealants with ratchet hand gun or other approved mechanical gun. Where gun application is impracticable, install sealant by knife or by pouring, as applicable. "Gun" devices shall have nozzles of proper size and shall provide sufficient pressure to completely fill joints as detailed.

D. Finishing: Tool all vertical, non-sag sealants so as to compress the sealant, eliminating all air voids and providing a neat smoothly finished joint. Provide slightly concave joint surface, unless otherwise indicated or recommended by the manufacturer.

1. **All tooling shall be "dry".**

3.06 FIELD QUALITY CONTROL

A. Require sealant manufacturer to be present at project site to:

1. Observe sealant mockup installation and to issue reports of observations.
2. Conduct field pre-construction testing.

B. Test Samples

1. If requested by the Architect, for each 1,000 linear feet of joint installed, cut out and carefully remove a 6 inch long sample of the undisturbed sealant and joint backer material from the newly installed Work. Remove the samples in the presence of the Testing Laboratory's Representative, who will retain them for evaluating and testing.
2. Reseal cutout areas with the same type materials.

3.07 CLEANING

A. Immediately remove misapplied sealant and droppings from metal surfaces with solvents and wiping cloths. On other materials, remove misapplied sealant and droppings by methods and materials recommended in writing by the manufacturer of the sealant material.

B. After sealants are applied and before skin begins to form on sealant, remove all masking and other protection. Clean up remaining defacement caused by the Work.

C. All finished work shall be left in neat, clean condition.

3.08 WASTE MANAGEMENT – Coordinate with Section 01 74 19

A. Separate waste in accordance with the Waste Management Plan.

B. Close and seal tightly all partly used sealant containers and store protected in well-ventilated, fire-safe area at moderate temperature.

C. Place used sealant tubes and containers in areas designated for hazardous materials.

**End of Section**

# SECTION 081113

# HOLLOW METAL DOORS AND FRAMES

## PART 1 - GENERAL

### 1.1 RELATED DOCUMENTS

A. Drawings and general provisions of the Contract, including General and Supplementary Conditions and Division 01 Specification Sections, apply to this Section.

### 1.2 SUMMARY

A. Section Includes:

1. Standard and custom hollow metal doors and frames.
2. Steel sidelight, borrowed lite and transom frames.
3. Louvers installed in hollow metal doors.
4. Light frames and glazing installed in hollow metal doors.

B. Related Sections:

1. Division 04 Section "Unit Masonry" for embedding anchors for hollow metal work into masonry construction.
2. Division 08 Section “Fiberglass Reinforced Polyester (FRP) Doors”.
3. Division 08 Section "Glazing" for glass view panels in hollow metal doors.
4. Division 08 Section "Door Hardware".
5. Division 09 Sections "Exterior Painting" and "Interior Painting" for field painting hollow metal doors and frames.

C. Codes and References: Comply with the version year adopted by the Authority Having Jurisdiction.

1. ANSI/SDI A250.8 - Recommended Specifications for Standard Steel Doors and Frames.
2. ANSI/SDI A250.4 - Test Procedure and Acceptance Criteria for Physical Endurance for Steel Doors, Frames, Frames Anchors and Hardware Reinforcing.
3. ANSI/SDI A250.6 - Recommended Practice for Hardware Reinforcing on Standard Steel Doors and Frames.
4. ANSI/SDI A250.10 - Test Procedure and Acceptance Criteria for Prime Painted Steel Surfaces for Steel Doors and Frames.
5. ANSI/SDI A250.11 - Recommended Erection Instructions for Steel Frames.
6. ASTM A1008 - Standard Specification for Steel Sheet, Cold-Rolled, Carbon, Structural, High-Strength Low-Alloy and High-Strength Low-Alloy with Improved Formability.

7. ASTM A653 - Standard Specification for Steel Sheet, Zinc-Coated (Galvanized) or Zinc-Iron Alloy-Coated (Galvannealed) by the Hot-Dip Process.
8. ASTM A924 - Standard Specification for General Requirements for Steel Sheet, Metallic-Coated by the Hot-Dip Process.
9. ASTM C 1363 - Standard Test Method for Thermal Performance of Building Assemblies by Means of a Hot Box Apparatus.
10. ANSI/BHMA A156.115 - Hardware Preparation in Steel Doors and Frames.
11. ANSI/SDI 122 - Installation and Troubleshooting Guide for Standard Steel Doors and Frames.
12. ANSI/NFPA 80 - Standard for Fire Doors and Fire Windows; National Fire Protection Association.
13. ANSI/NFPA 105: Standard for the Installation of Smoke Door Assemblies.
14. NFPA 252 - Standard Methods of Fire Tests of Door Assemblies; National Fire Protection Association.
15. UL 10C - Positive Pressure Fire Tests of Door Assemblies.
16. UL 1784 - Standard for Air Leakage Tests of Door Assemblies.

## 1.3 SUBMITTALS

A. Product Data: For each type of product indicated. Include construction details, material descriptions, core descriptions, hardware reinforcements, profiles, anchors, fire-resistance rating, and finishes.

B. Door hardware supplier is to furnish templates, template reference number and/or physical hardware to the steel door and frame supplier in order to prepare the doors and frames to receive the finish hardware items.

C. Shop Drawings: Include the following:

1. Elevations of each door design.
2. Details of doors, including vertical and horizontal edge details and metal thicknesses.
3. Frame details for each frame type, including dimensioned profiles and metal thicknesses.
4. Locations of reinforcement and preparations for hardware.
5. Details of anchorages, joints, field splices, and connections.
6. Details of accessories.
7. Details of moldings, removable stops, and glazing.
8. Details of conduit and preparations for power, signal, and control systems.

D. Samples for Verification:

1. Samples are only required by request of the architect and for manufacturers that are not current members of the Steel Door Institute.

## 1.4 QUALITY ASSURANCE

A. Source Limitations: Obtain hollow metal doors and frames through one source from a single manufacturer wherever possible.

B. Quality Standard: In addition to requirements specified, furnish SDI-Certified manufacturer products that comply with ANSI/SDI A250.8, latest edition, "Recommended Specifications for Standard Steel Doors and Frames".

C. Fire-Rated Door Assemblies: Assemblies complying with NFPA 80 that are listed and labeled by a qualified testing agency, for fire-protection ratings indicated, based on testing at positive pressure according to UL10C (neutral pressure at 40” above sill) or UL 10C.

1. Oversize Fire-Rated Door Assemblies Construction: For units exceeding sizes of tested assemblies, attach construction label certifying doors are built to standard construction requirements for tested and labeled fire rated door assemblies except for size.
2. Temperature-Rise Limit: Where indicated and at vertical exit enclosures (stairwell openings) and exit passageways, provide doors that have a maximum transmitted temperature end point of not more than 450 deg F (250 deg C) above ambient after 30 minutes of standard fire-test exposure.
3. Smoke Control Door Assemblies: Comply with NFPA 105.

a. Smoke "S" Label: Doors to bear “S” label, and include smoke and draft control gasketing applied to frame and on meeting stiles of pair doors.

D. Fire-Rated, Borrowed-Light Frame Assemblies: Assemblies complying with NFPA 80 that are listed and labeled, by a testing and inspecting agency acceptable to authorities having jurisdiction, for fire-protection ratings indicated, based on testing according to NFPA 257. Provide labeled glazing material.

E. Energy Efficient Exterior Openings: Comply with minimum thermal ratings, based on ASTM C1363. Openings to be fabricated and tested as fully operable, thermal insulating door and frame assemblies.

1. Thermal Performance (Exterior Openings): Independent testing laboratory certification for exterior door assemblies being tested in accordance with ASTM C1363 and meet or exceed the following requirements:

a. Door Assembly Operable U-Factor and R-Value Ratings: U-Factor 0.29, R-Value 3.4, including insulated door, thermal-break frame and threshold.

2. Air Infiltration (Exterior Openings): Independent testing laboratory certification for exterior door assemblies being tested in accordance with ASTM E283 to meet or exceed the following requirements:

a. Rate of leakage of the door assembly shall not exceed 0.25 cfm per square foot of static differential air pressure of 1.567 psf (equivalent to 25 mph wind velocity).

F. Pre-Submittal Conference: Conduct conference in compliance with requirements in Division 01 Section "Project Meetings" with attendance by representatives of Supplier, Installer, and Contractor to review proper methods and procedures for installing hollow

metal doors and frames and to verify installation of electrical knockout boxes and conduit at frames with electrified or access control hardware.

1.5 DELIVERY, STORAGE, AND HANDLING

A. Deliver hollow metal work palletized, wrapped, or crated to provide protection during transit and Project site storage. Do not use non-vented plastic.

B. Deliver welded frames with two removable spreader bars across bottom of frames, tack welded to jambs and mullions.

C. Store hollow metal work under cover at Project site. Place in stacks of five units maximum in a vertical position with heads up, spaced by blocking, on minimum 4-inch high wood blocking. Do not store in a manner that traps excess humidity.

1. Provide minimum 1/4-inch space between each stacked door to permit air circulation. Door and frames to be stacked in a vertical upright position.

1.6 PROJECT CONDITIONS

A. Field Measurements: Verify actual dimensions of openings by field measurements before fabrication.

1.7 COORDINATION

A. Coordinate installation of anchorages for hollow metal frames. Furnish setting drawings, templates, and directions for installing anchorages, including sleeves, concrete inserts, anchor bolts, and items with integral anchors. Deliver such items to Project site in time for installation.

1.8 WARRANTY

A. Special Warranty: Manufacturer's standard form in which manufacturer agrees to repair or replace doors that fail in materials or workmanship within specified warranty period.

B. Warranty includes installation and finishing that may be required due to repair or replacement of defective doors.

PART 2 - PRODUCTS

2.1 MANUFACTURERS

A. Manufacturers: Subject to compliance with requirements, provide steel doors and frames from a SDI Certified manufacturer:

1. CECO Door Products (C).
2. Curries Company (CU).

3. Pioneer Industries (PI).

## 2.2 MATERIALS

A. Cold-Rolled Steel Sheet: ASTM A 1008/A 1008M, Commercial Steel (CS), Type B; suitable for exposed applications.

B. Metallic-Coated Steel Sheet: ASTM A 653/A 653M, Commercial Steel (CS), Type B; with minimum G60 (Z180) or A60 (ZF180) metallic coating.

C. Frame Anchors: ASTM A 653/A 653M, Commercial Steel (CS), Commercial Steel (CS), Type B; with minimum G60 (Z180) or A60 (ZF180) metallic coating.

## 2.3 HOLLOW METAL DOORS

A. General: Provide 1-3/4 inch doors of design indicated, not less than thickness indicated; fabricated with smooth surfaces, without visible joints or seams on exposed faces unless otherwise indicated. Comply with ANSI/SDI A250.8 and ANSI/NAAMM HMMA 867.

B. Exterior Doors (Energy Efficient): Face sheets fabricated of commercial quality hot-dipped zinc coated steel that complies with ASTM A924 A60. Provide doors complying with requirements indicated below by referencing ANSI/SDI A250.8 for level and model, and ANSI/SDI A250.4 for physical performance level.

1. Design: Flush panel.
2. Core Construction: Foamed in place polyurethane and steel reinforced core with no stiffener face welds.

    a. Provide 18 gauge steel vertical reinforcements 6 inches apart and welded in place. Foamed in place polyurethane core is chemically bonded to all interior surfaces. No face welding is permitted.
    b. Thermal properties to rate at a fully operable minimum U-Factor 0.374 and R-Value 2.53, including insulated door, Mercury thermal-break frame and threshold.
    c. Kerf Type Frames: Thermal properties to rate at a fully operable minimum U-Factor 0.378 and R-Value 2.5, including insulated door, kerf type frame, and threshold.

3. Level/Model: Level 3 and Physical Performance Level A (Extra Heavy Duty), Minimum 16 gauge (0.053-inch - 1.3-mm) thick steel, Model 2.
4. Vertical Edges: Vertical edges to be mechanically interlocked with hairline seam. Beveled Lock Edge, 1/8 inch in 2 inches (3 mm in 50 mm).
5. Top and Bottom Edges: Reinforce tops and bottoms of doors with a continuous steel channel not less than 16 gauge, extending the full width of the door and welded to the face sheet. Doors with an inverted top channel to include a steel closure channel, screw attached, with the web of the channel flush with the face sheets of the door. Plastic or composite channel fillers are not acceptable.
6. Hinge Reinforcement: Minimum 7 gauge (3/16") plate 1-1/4" x 9".

7. Hardware Reinforcements: Fabricate according to ANSI/SDI A250.6 with reinforcing plates from same material as door face sheets.

C. Interior Doors: Face sheets fabricated of commercial quality cold rolled steel that complies with ASTM A 1008/A 1008M. Provide doors complying with requirements indicated below by referencing ANSI/SDI A250.8 for level and model and ANSI/SDI A250.4 for physical performance level:

1. Design: Flush panel.
2. Core Construction: Manufacturer's standard vertical steel-stiffener core. Minimum 22 gauge steel-stiffeners at 6 inches on-center construction attached by spot welds spaced not more than 5" on centers. Spaces between stiffeners filled with fiberglass insulation (minimum density 0.8#/cubic ft.).

   a. Fire Door Core: As required to provide fire-protection and temperature-rise ratings indicated.

3. Level/Model: Level 2 and Physical Performance Level B (Heavy Duty), Minimum 18 gauge (0.042-inch - 1.0-mm) thick steel, Model 2.
4. Vertical Edges: Vertical edges to have the face sheets spot welded and filled full height with an epoxy filler. Welds are to be ground, filled and dressed smooth. Beveled Lock Edge, 1/8 inch in 2 inches (3 mm in 50 mm).
5. Top and Bottom Edges: Reinforce tops and bottoms of doors with a continuous steel channel not less than 16 gauge, extending the full width of the door and welded to the face sheet. Doors with an inverted top channel to include a steel closure channel, screw attached, with the web of the channel flush with the face sheets of the door. Plastic or composite channel fillers are not acceptable.
6. Hinge Reinforcement: Minimum 7 gauge (3/16") plate 1-1/4" x 9" or minimum 14 gauge continuous channel with pierced holes, drilled and tapped.
7. Hardware Reinforcements: Fabricate according to ANSI/SDI A250.6 with reinforcing plates from same material as door face sheets.

D. Manufacturers Basis of Design:

1. Curries Company (CU) - Steel-Stiffened - 747 Series.
2. Curries Company (CU) - Energy Efficient - 797 Mercury Series.

## 2.4 HOLLOW METAL FRAMES

A. General: Comply with ANSI/SDI A250.8 and with details indicated for type and profile.

B. Exterior Frames: Fabricated of hot-dipped zinc coated steel that complies with ASTM A 653/A 653M, Coating Designation A60.

1. Fabricate frames with mitered or coped corners. Profile as indicated on drawings.
2. Frames: Minimum 14 gauge (0.067-inch -1.7-mm) thick steel sheet.

C. Interior Frames: Fabricated from cold-rolled steel sheet that complies with ASTM A 1008/A 1008M.

1. Fabricate frames with mitered or coped corners. Profile as indicated on drawings.
2. Frames: Minimum 14 gauge (0.067-inch -1.7-mm) thick steel sheet.

D. Fire rated frames: Fabricate frames in accordance with NFPA 80, listed and labeled by a qualified testing agency, for fire-protection ratings indicated.

E. Hardware Reinforcement: Fabricate according to ANSI/SDI A250.6 Table 4 with reinforcement plates from same material as frames.

## 2.5 FRAME ANCHORS

A. Jamb Anchors:

1. Masonry Type: Adjustable strap-and-stirrup or T-shaped anchors to suit frame size, formed from A60 metallic coated material, not less than 0.042 inch thick, with corrugated or perforated straps not less than 2 inches wide by 10 inches long; or wire anchors not less than 0.177 inch thick.
2. Stud Wall Type: Designed to engage stud and not less than 0.042 inch thick.

B. Floor Anchors: Floor anchors to be provided at each jamb, formed from A60 metallic coated material, not less than 0.042 inches thick.

C. Mortar Guards: Formed from same material as frames, not less than 0.016 inches thick.

## 2.6 LOUVERS

A. Metal Louvers: Unless otherwise indicated provide louvers to meet the following requirements.

1. Blade Type: Vision proof inverted V or inverted Y.
2. Metal and Finish: Galvanized steel, 0.040 inch thick, factory primed for paint finish with baked enamel or powder coated finish. Match pre-finished door paint color where applicable.

B. Louvers for Fire Rated Doors: Metal louvers with fusible link and closing device, listed and labeled for use in doors with fire protection rating of 1-1/2 hours and less.

1. Manufacturers: Subject to compliance with requirements, provide louvers to meet rating indicated.
2. Metal and Finish: Galvanized steel, 0.040 inch thick, factory primed for paint finish with baked enamel or powder coated finish. Match pre-finished door paint color where applicable.

## 2.7 LIGHT OPENINGS AND GLAZING

A. Stops and Moldings: Provide stops and moldings around glazed lites where indicated. Form corners of stops and moldings with butted or mitered hairline joints at fabricator's shop. Fixed and removable stops to allow multiple glazed lites each to be removed

independently. Coordinate frame rabbet widths between fixed and removable stops with the type of glazing and installation indicated.

B. Moldings for Glazed Lites in Doors and Loose Stops for Glazed Lites in Frames: Minimum 20 gauge thick, fabricated from same material as door face sheet in which they are installed.

C. Fixed Frame Moldings: Formed integral with hollow metal frames, a minimum of 5/8 inch (16 mm) high unless otherwise indicated. Provide fixed frame moldings and stops on outside of exterior and on secure side of interior doors and frames.

D. Preformed Metal Frames for Light Openings: Manufacturer's standard frame formed of 0.048-inch-thick, cold rolled steel sheet; with baked enamel or powder coated finish; and approved for use in doors of fire protection rating indicated. Match pre-finished door paint color where applicable.

## 2.8 ACCESSORIES

A. Mullions and Transom Bars: Join to adjacent members by welding or rigid mechanical anchors.

B. Grout Guards: Formed from same material as frames, not less than 0.016 inches thick.

## 2.9 FABRICATION

A. Fabricate hollow metal work to be rigid and free of defects, warp, or buckle. Accurately form metal to required sizes and profiles, with minimum radius for thickness of metal. Where practical, fit and assemble units in manufacturer's plant. When shipping limitations so dictate, frames for large openings are to be fabricated in sections for splicing or splining in the field by others.

B. Tolerances: Fabricate hollow metal work to tolerances indicated in ANSI/SDI A250.8.

C. Hollow Metal Doors:

1. Exterior Doors: Provide optional weep-hole openings in bottom of exterior doors to permit moisture to escape where specified.
2. Glazed Lites: Factory cut openings in doors with applied trim or kits to fit. Factory install glazing where indicated.
3. Astragals: Provide overlapping astragals as noted in door hardware sets in Division 08 Section "Door Hardware" on one leaf of pairs of doors where required by NFPA 80 for fire-performance rating or where indicated. Extend minimum 3/4 inch beyond edge of door on which astragal is mounted.
4. Continuous Hinge Reinforcement: Provide welded continuous 12 gauge strap for continuous hinges specified in hardware sets in Division 08 Section "Door Hardware".

D. Hollow Metal Frames:

1. Shipping Limitations: Where frames are fabricated in sections due to shipping or handling limitations, provide alignment plates or angles at each joint, fabricated of same thickness metal as frames.
2. Welded Frames: Weld flush face joints continuously; grind, fill, dress, and make smooth, flush, and invisible.

    a. Welded frames are to be provided with two steel spreaders temporarily attached to the bottom of both jambs to serve as a brace during shipping and handling. Spreader bars are for bracing only and are not to be used to size the frame opening.

3. Sidelight and Transom Bar Frames: Provide closed tubular members with no visible face seams or joints, fabricated from same material as door frame. Fasten members at crossings and to jambs by butt welding.
4. High Frequency Hinge Reinforcement: Provide high frequency hinge reinforcements at door openings 48-inches and wider with mortise butt type hinges at top hinge locations.
5. Continuous Hinge Reinforcement: Provide welded continuous 12 gauge straps for continuous hinges specified in hardware sets in Division 08 Section "Door Hardware".
6. Provide countersunk, flat- or oval-head exposed screws and bolts for exposed fasteners unless otherwise indicated for removable stops, provide security screws at exterior locations.
7. Mortar Guards: Provide guard boxes at back of hardware mortises in frames at all hinges and strike preps regardless of grouting requirements.
8. Floor Anchors: Weld anchors to bottom of jambs and mullions with at least four spot welds per anchor.
9. Jamb Anchors: Provide number and spacing of anchors as follows:

    a. Masonry Type: Locate anchors not more than 18 inches from top and bottom of frame. Space anchors not more than 32 inches o.c. and as follows:

        1) Two anchors per jamb up to 60 inches high.
        2) Three anchors per jamb from 60 to 90 inches high.
        3) Four anchors per jamb from 90 to 120 inches high.
        4) Four anchors per jamb plus 1 additional anchor per jamb for each 24 inches or fraction thereof above 120 inches high.

    b. Stud Wall Type: Locate anchors not more than 18 inches from top and bottom of frame. Space anchors not more than 32 inches o.c. and as follows:

        1) Three anchors per jamb up to 60 inches high.
        2) Four anchors per jamb from 60 to 90 inches high.
        3) Five anchors per jamb from 90 to 96 inches high.
        4) Five anchors per jamb plus 1 additional anchor per jamb for each 24 inches or fraction thereof above 96 inches high.
        5) Two anchors per head for frames above 42 inches wide and mounted in metal stud partitions.

10. Door Silencers: Except on weatherstripped or gasketed doors, drill stops to receive door silencers. Silencers to be supplied by frame manufacturer regardless if specified in Division 08 Section "Door Hardware".
11. Bituminous Coating: Where frames are fully grouted with an approved Portland Cement based grout or mortar, coat inside of frame throat with a water based bituminous or asphaltic emulsion coating to a minimum thickness of 3 mils DFT, tested in accordance with UL 10C and applied to the frame under a 3rd party independent follow-up service procedure.

E. Hardware Preparation: Factory prepare hollow metal work to receive template mortised hardware; include cutouts, reinforcement, mortising, drilling, and tapping according to the Door Hardware Schedule and templates furnished as specified in Division 08 Section "Door Hardware."

1. Locate hardware as indicated, or if not indicated, according to ANSI/SDI A250.8.
2. Reinforce doors and frames to receive non-template, mortised and surface mounted door hardware.
3. Comply with applicable requirements in ANSI/SDI A250.6 and ANSI/DHI A115 Series specifications for preparation of hollow metal work for hardware.
4. Coordinate locations of conduit and wiring boxes for electrical connections with Division 26 Sections.

## 2.10 STEEL FINISHES

A. Prime Finishes: Doors and frames to be cleaned, and chemically treated to insure maximum finish paint adhesion. Surfaces of the door and frame exposed to view to receive a factory applied coat of rust inhibiting shop primer.

1. Shop Primer: Manufacturer's standard, fast-curing, lead and chromate free primer complying with ANSI/SDI A250.10 acceptance criteria; recommended by primer manufacturer for substrate; and compatible with substrate and field-applied coatings.

# PART 3 - EXECUTION

## 3.1 EXAMINATION

A. Examine substrates, areas, and conditions, with Installer present, for compliance with requirements for installation tolerances and other conditions affecting performance of the Work.

B. General Contractor to verify the accuracy of dimensions given to the steel door and frame manufacturer for existing openings or existing frames (strike height, hinge spacing, hinge back set, etc.).

C. Proceed with installation only after unsatisfactory conditions have been corrected.

## 3.2 PREPARATION

A. Remove welded in shipping spreaders installed at factory. Restore exposed finish by grinding, filling, and dressing, as required to make repaired area smooth, flush, and invisible on exposed faces.

B. Prior to installation, adjust and securely brace welded hollow metal frames for square, level, twist, and plumb condition.

C. Tolerances shall comply with SDI-117 "Manufacturing Tolerances Standard Steel Doors and Frames."

D. Drill and tap doors and frames to receive non-template, mortised, and surface-mounted door hardware.

## 3.3 INSTALLATION

A. General: Install hollow metal work plumb, rigid, properly aligned, and securely fastened in place; comply with Drawings and manufacturer's written instructions.

B. Hollow Metal Frames: Install hollow metal frames of size and profile indicated. Comply with ANSI/SDI A250.11 and NFPA 80 at fire rated openings.

1. Set frames accurately in position, plumbed, leveled, aligned, and braced securely until permanent anchors are set. After wall construction is complete and frames properly set and secured, remove temporary braces, leaving surfaces smooth and undamaged. Shim as necessary to comply with installation tolerances.
2. Floor Anchors: Provide floor anchors for each jamb and mullion that extends to floor, and secure with post-installed expansion anchors.
3. Masonry Walls: Coordinate installation of frames to allow for solidly filling space between frames and masonry with mortar.
4. Grout Requirements: Do not grout head of frames unless reinforcing has been installed in head of frame. Do not grout vertical or horizontal closed mullion members.

C. Hollow Metal Doors: Fit hollow metal doors accurately in frames, within clearances specified below. Shim as necessary.

1. Non-Fire-Rated Standard Steel Doors:

   a. Jambs and Head: 1/8 inch plus or minus 1/16 inch.
   b. Between Edges of Pairs of Doors: 1/8 inch plus or minus 1/16 inch.
   c. Between Bottom of Door and Top of Threshold: Maximum 3/8 inch.
   d. Between Bottom of Door and Top of Finish Floor (No Threshold): Maximum 3/4 inch.

2. Fire-Rated Doors: Install doors with clearances according to NFPA 80.

D. Field Glazing: Comply with installation requirements in Division 08 Section "Glazing" and with hollow metal manufacturer's written instructions.

## 3.4 ADJUSTING AND CLEANING

A. Final Adjustments: Check and readjust operating hardware items immediately before final inspection. Leave work in complete and proper operating condition. Remove and replace defective work, including hollow metal work that is warped, bowed, or otherwise unacceptable.

B. Remove grout and other bonding material from hollow metal work immediately after installation.

C. Prime-Coat and Painted Finish Touchup: Immediately after erection, sand smooth rusted or damaged areas of prime coat, or painted finishes, and apply touchup of compatible air drying, rust-inhibitive primer, zinc rich primer (exterior and galvanized openings) or finish paint.

END OF SECTION 081113

# SECTION 08 31 00

# ACCESS DOORS

## Part 1 - GENERAL

1.01 Applicable provisions of the Conditions of the Contract and Division #1, General Requirements, govern work in this Section.

1.02 DESCRIPTION OF WORK

A. The work of this Section consists of the furnishing, by all Prime Contractors and Subcontractor, of access doors for access to all concealed valves, shock absorbers, to all other concealed parts of the plumbing, heating, fire protection and electrical systems that require accessibility for the proper operation and maintenance of the systems to the General Contractor for installation assignments as well as access to spaces indicated on the drawings.

Access doors in gypsum and/or plaster work or masonry will be installed under the respective phases of operations governing substrates in which units are to be installed.

1.03 RELATED WORK SPECIFIED ELSEWHERE - Entire Project Specification with specific reference to those sections noted above and as follows:

A. 04 20 00 – Unit Masonry
B. 09 29 00 – Gypsum Drywall
C. Mechanical and electrical special conditions and related individual sections (Section 01 31 13 and Divisions 21, 22, 23 and 26)

1.04 QUALITY ASSURANCE

A. All materials shall be delivered to the job site in unopened factory sealed containers clearly labeled as to product, manufacturer and other pertinent characteristics.
B. Materials shall be stored under conditions recommended by the manufacturer.
C. Fire Rated Doors:
   1. Fire Rated Access Doors For Walls: Complete assemblies complying with Underwriter's Laboratories, Inc (UL) requirements for 1-1/2 hour "B Label" rating. Identify each assembly with UL label.
   2. Fire Rated Access Doors For Ceilings: Complete assemblies complying with Warnock Hersey (WHIG) requirements for one-hour combustible and one-hour non-combustible floor/ceiling systems. Identify each assembly with WHI label and additional NFPA label indicating "For Horizontal Installation".

1.05 SUBMITTALS – Coordinate with Section 01 33 00

- Submittals shall be made in groupings where installations are complementary, i.e. steel, steel decking, steel stairs, stair railings; roof systems/flashings; mechanical and electrical apparatus and the like. Failure to comply with this requirement will be cause for rejection of any or all submittals.

- As set forth in Sections 01 33 00 and 01 32 00, prepare and submit a fully developed submittal schedule; note review times set forth in Section 01 33 00 are deemed "average", for large submissions allow longer review times.
- Attention is directed to Section 01 31 14 for coordination drawing requirements for this project. These drawings are critical to the proper execution of the Work and failure to honor these requirements may become the basis for denial of any and all claims for either or both "time" and "money".
- The Contractor is encouraged to submit for approval products made from recycled and/or environmentally responsible material. Every effort will be made by the Design Professional Team to approve these materials; the substitution request procedure shall still be enforced.

A. Shop drawings of all fabricated items showing complete construction details, erection requirements and fastenings.
B. Full size samples of units to be incorporated in the work. Samples shall be incorporated as part of the contract obligations.
C. Certification of Specification Compliance.
D. Manufacturers Material Safety Data Sheet (MSDS) must be submitted for each manufactured product.

1.06 PRODUCT DELIVERY, STORAGE AND HANDLING (Coordinate with Section 01 61 00)
A. All materials shall be delivered to the job site in unopened factory sealed containers clearly labeled as to product, manufacturer and other pertinent characteristics.
B. Materials shall be stored under conditions recommended by the manufacturer.

1.07 SUSTAINABILITY
A. In the selection of the products and materials of this section as well as for the entire project, preference will be given to those with the following characteristics:
1. Water based.
2. Water-soluble.
3. Can be cleaned up with water.
4. Non-flammable.
5. Biodegradable.
6. Low or preferably no Volatile Organic Compound (VOC) content.
7. Manufactured without compounds that contribute to ozone depletion in the upper atmosphere.
8. Manufactured without compounds that contribute to smog in the lower atmosphere.
9. Do not contain methylene-chloride.
10. Do not contain chlorinated hydrocarbons.
11. Contains the least possible of post-consumer or post-industrial waste.

Part 2 - PRODUCTS

2.01 GENERAL
A. Access panels except as specified herein shall be factory prime painted and furnished with cylinder lock and two keys; keying instructions will be available

from the Owner, units shall be masterkeyed.

B. Access panels where not required to be locked and in gypsum ceilings shall be as specified in Article 2.0* hereinbelow.

2.02 FABRICATION

A. Fabricate access door assemblies as integral units complete with all parts and ready for installation.

B. Fabricate units of continuous welded steel construction unless otherwise indicated or specified. Grind welds smooth and flush with adjacent surfaces.

C. Attachment devices shall be of size and type required to secure access doors to types of supports indicated on the Drawings.

1. Allowable Size Variations: Manufacturer's standard size units which vary slightly from the sizes indicated may be acceptable, subject to the approval of the Architect.

2.03 MECHANICAL/ELECTRICAL PANELS

A. Units shall be in design and as manufactured in accordance with the following -

1. Acoustical Tile - Karp (KSTC [concealed grid] or KSTE [lay-in ceiling systems]); Milcor; Nystrom, Inc.; Larsens; MM Systems Corp. or approved equal.

2. Concrete and Masonry Surfaces – LOCKABLE - Karp (DSB-214 SM); Milcor; Nystrom, Inc.; Larsens; MM Systems Corp.; or approved equal.

3. Drywall Surfaces - LOCKABLE

a. Ceilings - Karp (KSTDW); Nystrom, Inc.; Larsens; MM Systems Corp. or approved equal.

b. Walls - Karp (RDW); Nystrom, Inc.; Larsens; MM Systems Corp. or approved equal.

c. Alternative – recessed panel to receive gypsum finish see Article 2.0* below.

2.04 GLASS FIBER REINFORCED GYPSUM ACCESS PANELS

A. Glass fiber reinforced gypsum units for use in areas not requiring LOCKING DEVICES shall be designed to blend seamlessly into a dry wall ceiling. The unit shall consist of a surround frame with pre-drilled fastener holes and tapered edge for a tape joint and a drop-in door.

B. TECHNICAL DATA

| | | |
|---|---|---|
| 1 | Shell Thickness | 1/8" to 3/16" |
| 2 | Fastener Test Pull Out (wood stud) | 525 lb avg. |
| 3 | Fastener Test Pull Out (metal stud) | 215 lb avg. |
| 4 | Fastener Push Through Test | 350 lb avg. |
| 5 | Fuel Contribution (ASTM E84-80) | 0 |
| 6 | Flame Spread (ASTM E84-80) | 0 |
| 7 | Smoke Index (ASTM E84-80) | 0 |
| 8 | Combustion (ASTM E84-80) | Non-combustible |
| 9 | Class A | Non-Rated |
| 10 | Moisture Resistant | |
| 11 | Zero Mold and Fungus Growth | |

2.05 ADDITIONAL REQUIREMENTS AND RESTRICTIONS

**A. Where units occur within rated assemblies, provide rated access doors in "B" Label construction conforming to Underwriters Laboratories File #R-10808 and/or Warnock Hersey File #U-51468 and similar and equal to those as manufactured by the above and shall be either insulated (KRP-350R) or uninsulated (KRP-450FR) as conditions dictate.**

B. Units shall be fully galvanized construction where used on exterior.

C. Units within "wet" areas shall be of stainless steel construction.

D. All units shall be equipped with suitable anchorage devices for securement to intended substrates.

NOTE: Refer to Sections 05 50 00 and 08 11 00 as well as Divisions 21, 22, 23 and 26 so as to avoid possible conflict and/or duplication, work included in said sections and divisions will govern project requirements.

Part 3 - EXECUTION

3.01 INSPECTION AND ACCEPTANCE

A. Examine all surfaces and contiguous elements to receive work of this section and correct, as part of the Work of this Contract, any defects affecting installation. Commencement of work will be construed as complete acceptability of surfaces and contiguous elements.

3.02 INSTALLATION

A. Locate all access doors in a workmanlike manner also in closets, storage rooms and/or other non-public areas, positioned so that the junction can be easily reached and the size shall be sufficient for this purpose (minimum 16 inch by 16 inch).

B. When access doors are required in corridors, lobby or other habitable areas, locate as directed by the Architect.

C. Units shall be installed in required substrates by respective trades, true to line and level in accordance with approved shop drawings.

D. All operating units shall be adjusted and left in perfect working order.

3.03 CLEANUP AND PROTECTION

A. All debris resulting from construction operations will be removed daily and upon final completion, all operating parts will be cleaned and protection removed.

3.04 WASTE MANAGEMENT – Coordinate with Section 01 74 19

A. Separate and recycle materials and material packaging in accordance with Waste Management Plan and to the maximum extent economically feasible and place in designated areas for recycling.

B. Set aside and protect materials suitable for reuse and/or remanufacturing.

C. Separate and fold up metal banding; flatten and place along with other metal scrap for recycling in designated area.

**End of Section**

SECTION 08 33 30

COILING DOORS AND GRILLES

Part 1 - GENERAL

1.01 Applicable provisions of the Conditions of the Contract and Division #1, General Requirements, govern work in this Section.

1.02 DESCRIPTION OF WORK

A. The work of this Section consists of the provision of all materials, accessories, incidentals and the like necessary and/or required for the complete execution of all coiling counter shutter and accessory work for this project as required by the schedules, keynotes and drawings, including, but not limited to the following:

1. Provide fire rated and insulated counter shutter assembly at Team Building with integral frame and counter.
2. Provide counter shutter assemblies at kiosk.
3. Provide all coil boxes, counter balances, brackets, structural supports, hangers, guide rail retainers, floor guides and the like necessary and/or required to complete the work of the Project.

1.03 RELATED WORK SPECIFIED ELSEWHERE - Entire Project Specification with specific reference to those sections noted above and as follows:

A. 05 50 00 – Miscellaneous and Ornamental Metals
B. 08 71 00 - Hardware cylinders and other locking devices

1.04 QUALITY ASSURANCE

A. The intent of this Section is to establish sole responsibility for the installation of the coiling doors and grilles including all appurtenances as required to insure total performance of systems.
B. Coordinate all work of this section with others so as to insure structural stability and appearance.
C. Fire-Test-Response Characteristics: Provide assemblies complying with NFPA 80 that are identical to door and frame assemblies tested for fire-test-response characteristics per UL 10b and NFPA 252, and that are listed and labeled for fire ratings indicated by UL, FMG, ITS, or another testing and inspecting agency acceptable to authorities having jurisdiction.
D. Qualifications:
1. Manufacturer Qualifications: ISO 9001:2000 registered and a minimum of five years experience in producing fire [and smoke control] units of the type specified.
2. Installer Qualifications: Manufacturer's approval.

1.05 SUBMITTALS – Coordinate with Section 01 33 00

- Submittals shall be made in groupings where installations are complementary. Failure to comply with this requirement will be cause for rejection of any or all

submittals.

- As set forth in Sections 01 33 00 and 01 32 00, prepare and submit a fully developed submittal schedule; note review times set forth in Section 01 33 00 are deemed “average”, for large submissions allow longer review times.
- Attention is directed to Section 01 31 14 for coordination drawing requirements for this project. These drawings are critical to the proper execution of the Work and failure to honor these requirements may become the basis for denial of any and all claims for either or both “time” and “money”.
- The Contractor is encouraged to submit for approval products made from recycled and/or environmentally responsible material. Every effort will be made by the Design Professional Team to approve these materials; the substitution request procedure shall still be enforced.

A. Product Data: For each type and size of overhead coiling door and accessory. Include the following:
   1. Summary of forces and loads on walls and jambs.
   2. Fire-Rated Doors: Include description of fire-release system including testing and resetting instructions.
B. Qualification Data: For Installer.
C. Certification of specification compliance.
D. Shop drawings, showing dimensions, connections, etc. as required by installation.
E. The Contractor shall take all necessary field measurements prior to fabrication and installation of work and shall assume complete responsibility for accuracy of same.
F. Maintenance and Operating Manuals: Furnish complete manuals describing the materials, devices and procedures to be followed in operating and maintaining all doors under this section. Include manufacturer's brochures and parts lists describing the actual materials used in the product.
G. Material Safety Data Sheet (MSDS) must be submitted for each product.

1.06 CODE AND PERFORMANCE REQUIREMENTS

A. Fire-Rated Assemblies: Provide all doors with fire resistance rating required to comply with governing regulations which are inspected, tested, listed and labeled by UL, complying with NFPA 80 for class of opening. Provide UL label permanently fastened to each fire door assembly. Door will be tested to UL10B.
B. Regulatory Requirements: Comply with applicable requirements of the laws, codes, ordinances and regulations of federal, state and municipal authorities having jurisdiction.
C. Provide doors with Underwriters' Laboratories, Inc. label for “Leakage Rated Assembly” or “S” label. Comply with NFPA 105 air leakage requirements. Pass UL test procedure 1784.
D. Structural Performance: Provide overhead coiling doors capable of withstanding the effects of gravity loads and the following loads and stresses without evidencing permanent deformation of door components:
   1. Wind Load: Uniform pressure (velocity pressure) required by Code but not less than 20 lbf/sq. ft. acting inward and outward.
E. Operation-Cycle Requirements: Provide overhead coiling door components and

operators capable of operating for not less than 20,000 cycles and for 10 cycles per day.

1.07 GUARANTEE/WARRANTY

A. Standard Warranty: Two years from date of shipment against defects in material and workmanship.

Part 2 - PRODUCTS

2.01 COUNTER UNIT ASSEMBLY: For purposes of establishing standards of quality and levels of performance and not for the purposes of limiting competition, the basis of this specification is upon units as manufactured by one of the following and their respective model suitable for the intended application.

A. Manufacturer
   1. Basis of Design - Cornell; ESC10 Counter Shutter
   2. McKeon;
   3. Cookson;
   4. Overhead Door Co.

B. Construction
   1. Curtain, Galvanized steel, No. 1F (1-1/2" high by 1/2" deep) interconnected flat-faced slats, 22 GA, ASTM A 653, with tubular aluminum bottom bar with coninuous lift handle and vinyl astragal.
   2. Provide counterbalance assembly standard with the manufacturer.
   3. Provide hood of 24 GA stainless steel, type 304 #4 finish.
   4. Unit operation – Manual Lift Push up.
   5. Locking device to receive cylinder
   6. Finish – Zirconium pre-treatment followed by baked-on polyester Powder Coat – Custom Color as selected by Architect. Min. 2.5 mils cured thickness. ASTM D-3363 pencil hardness: H or better.
   7. Mounting – Face of Wall. Provide additional blocking and accessories as required for complete installation

2.02 FIRE RATED AND INSULATED SHUTTER For purposes of establishing standards of quality and levels of performance and not for the purposes of limiting competition, the basis of this specification is upon units as manufactured by one of the following and their respective model suitable for the intended application.

A. Manufacturer
   1. Basis of Design - Cornell; ERC20 Fire-Rated Counter Shutter with integral frame and sill
   2. McKeon;
   3. Cookson;
   4. Overhead Door Co.

B. Construction
   1. Curtain, Galvanized steel, No. 10 (1-1/4" high by 3/8" deep) interconnected flat-faced slats, 22 GA, ASTM A 653, with tubular steel

bottom bar.

2. Guides, steel, 3/16 inch thick with weather seals. Attach to jambs with 3/8 inch bolts at 30 inch spacing.
3. Counterbalance assembly - standard of manufacturer.
4. Frame assembly to be integrally welded from 16 gauge stainless steel.
5. Brackets - 1/4 inch minimum steel plate with ball bearings at rotating support points. Bolt brackets to guides to support counterbalance assembly and to form end closures.
6. Hood - 16 gauge stainless steel with weather seal and reinforced top and bottom edges.
6. Operation – Manual Crank Operation tied into Fire Alarm System
7. Locking device to receive cylinder
8. Finish – Zirconium pre-treatment followed by baked-on polyester Powder Coat – Custom Color as selected by Architect. Min. 2.5 mils cured thickness. ASTM D-3363 pencil hardness: H or better.
9. Countertop: Stainless steel 14 GA type 304 #4 finish
10. Smoke Seals: UL tested brush seal bottom bar and replaceable UL listed brush seals against fascia side of curtain.
11. Fire Rating – 45 minute, UL 1784
12. Mounting – Face of Wall. Provide additional blocking and accessories as required for complete installation

Part 3 - EXECUTION

3.01 INSPECTION AND ACCEPTANCE

A. Examine all surfaces and contiguous elements to receive work of this section and correct, as part of the Work of this Contract, any defects affecting installation. Commencement of work will be construed as complete acceptability of surfaces and contiguous elements.

3.02 ERECTION

A. Perform installation using only factory approved and certified representatives of the door manufacturer.
B. Install door assemblies at locations shown in perfect alignment and elevation, plumb, level, straight and true.
C. Adjust door installation to provide uniform clearances and smooth non-binding operation.
D. Install wiring in accordance with applicable local codes and the National Electrical Code Standard. Materials shall be UL listed.
E. Test door closing sequence when activated by the building's fire alarm system. Reset door after successful test.
F. Demonstrate that each door operates in its full range of capability and that opening and closing actions proper and set the installed speed limit to that chosen by the Owner’s representative.

3.03 PROTECTION AND CLEANING

A. Protect installed work using adequate and suitable means during and after installation until accepted by owner.
B. Remove, repair or replace materials which have been damaged in any way.

C. Clean surfaces of grime and dirt using acceptable and recommended means and methods.

3.04 WASTE MANAGEMENT – Coordinate with Section 01 74 19

A. Separate and recycle materials and material packaging in accordance with Waste Management Plan and to the maximum extent economically feasible and place in designated areas for recycling.

B. Set aside and protect materials suitable for reuse and/or remanufacturing.

C. Separate and fold up metal banding; flatten and place along with other metal scrap for recycling in designated area.

**End of Section**

SECTION 08 42 00

FIBERGLASS FACED ENTRANCE DOOR SYSTEMS

Part 1 - GENERAL

1.01 Applicable provisions of the Conditions of the Contract and Division #1, General Requirements, govern work in this Section.

1.02 DESCRIPTION OF WORK

A. The work of this Section consists of the provision of all materials, accessories, incidentals and the like necessary and/or required for the complete execution of all fiberglass faced entrance door and window system work for this project as required by the schedules, keynotes and drawings, including, but not limited to the following:

1. Provide fire rated fiberglass reinforced polyester (FRP) doors in design configuration as shown on drawings
2. Provide fire rated pultruded FRP frames for door and window assemblies as scheduled.
3. Provide hardware for all doors and frames as specified in Section 08 71 00.
4. Provide glazing, fire-rated and safety as required; coordinate with Section 08 80 00.

1.03 RELATED WORK SPECIFIED ELSEWHERE - Entire Project Specification with specific reference to those sections noted above.

1.04 QUALITY ASSURANCE

A. Standards: Comply with the requirements and recommendations in applicable specifications and standards by NAAMM, AAMA and AA, including the terminology, definitions, and specifically including the "Entrance Manual" by NAAMM, except to the extent more stringent requirements are indicated.

B. For (FRP) doors comply with fire resistance and flammability regulations as interpreted by governing authorities, and as follows:

1. Face sheets tested in accordance with ASTM E 84 shall have the following ratings:
   a. Smoke Developed:
      - Exterior skin not greater than 345
      - Interior skin not greater than 320
   b. Flame Spread:
      - Exterior skin not greater than 70
      - Interior skin not greater than 10
2. Manufacturer to provide certification that the FRP Doors comply with article 2603.4.1.7 in the Connecticut State Building Code.

C. Manufacturer shall have produced aluminum and fiberglass reinforced (FRP) doors, panels and aluminum frames for at least 5 years, and shall have completed projects similar to these buildings in type and size.

D. Field Inspection and Measurement: Take field measurements prior to fabrication of any doors and frames to insure proper fitting of assemblies. Successful bidders must field verify all dimensions, sizes, quantities and the material required to complete this project. Extreme care must be taken in the examination of existing

substrates, and where required, substrates must be repaired in order to get proper anchoring for materials specified.

1.05 SUBMITTALS – Coordinate with Section 1 33 00

- Submittals shall be made in groupings where installations are complementary, i.e. steel, steel decking, steel stairs, stair railings; roof systems/flashings; mechanical and electrical apparatus and the like. Failure to comply with this requirement will be cause for rejection of any or all submittals.
- As set forth in Sections 01 33 00 and 01 32 00, prepare and submit a fully developed submittal schedule; note review times set forth in Section 01 33 00 are deemed “average”, for large submissions allow longer review times.
- Attention is directed to Section 01 31 14 for coordination drawing requirements for this project. These drawings are critical to the proper execution of the Work and failure to honor these requirements may become the basis for denial of any and all claims for either or both “time” and “money”.
- The Contractor is encouraged to submit for approval products made from recycled and/or environmentally responsible material. Every effort will be made by the Design Professional Team to approve these materials; the substitution request procedure shall still be enforced.

A. Product Data: Submit door manufacturer's product, specifications and instructions for each type of door and frame.
   1. Include details of core, stile and rail construction, including trim for lites and similar components.
   2. Include details of finish hardware mounting.
   3. Samples of each aluminum and FRP finish required, of the alloys to be used on this project. Where normal color and texture variations are expected, include two or more units in each sample to show the range of such variations.
      a. The Architect reserves the right to require samples of typical fabricated section, showing joints, exposed fastenings (if any), quality of workmanship, hardware and accessory items, before fabrication of the work proceeds.

B. Shop drawings for the fabrication and installation of the aluminum and fiberglass doors, panels, and frames, and associated components of the work. Include wall elevations at 1/2 inch scale, and half-sized detail sections of every typical composite member. Show anchors, joint system, expansion provisions, and other components not included in the manufacturer's standard data. Include field verified dimensions and glazing details, and include catalog cuts for all Finish Hardware.

C. Material Safety Data Sheet (MSDS) must be submitted for each product.

1.06 PRODUCT DELIVERY, STORAGE AND HANDLING (Coordinate with Section 01 61 00)

A. All materials supplied shall be delivered to the jobsite in their original, unopened packages, with labels intact. Materials shall be inspected for damage, and the manufacturer shall be advised immediately of any discrepancies. Unsatisfactory materials are not to be used.

B. All materials supplied shall be packaged in individual corrugated cartons. Doors

and panels shall be "floated" within cartons, with no portion of the door having contact with the outer shall of the container.

1.07 SYSTEM PERFORMANCE

A. Provide door assemblies that have been designed and fabricated to comply with requirements for system performance characteristics listed below, as demonstrated by testing manufacturer's corresponding stock systems according to test methods designated.

B. Thermal Transmission (Exterior Doors): U-value of not more than 0.09 (BTU/Hr. X sf X degrees F) per AAMA 1503.1.

C. Air Infiltration: (Applies only to single acting offset pivot, butt hung or continuous hinged entrances).

1. Air Infiltration shall be tested in accordance with ASTM E 283, at a pressure differential of 1.567 PSI (75 Pa.). A single 3 foot by 7 foot (914.4 by 2133.6) entrance door and frame shall not exceed .50 CFM per linear foot of perimeter crack. A pair of 6 foot by 7 foot (1828.8 by 2133.6) entrance doors and frame shall not exceed 1.0 CFM per linear foot of perimeter crack.

2. Provide door assemblies that have been designed and fabricated to comply with requirements for system performance characteristics listed below, as demonstrated by testing manufacturer's corresponding stock systems according to test methods designated.

D. Face Sheet: Standard interior and exterior Class C 0.120” thick, Sandstone texture, through color FRP Sheet

1. Flexural Strength, ASTM D790: 27 x $10^3$ psi.
2. Tensile Strenght, ASTM D638: 18 x $10^3$ psi.
3. Barcol Hardness, ASTM D2583: 40.
4. Gardner Impact Strength, ASTM D5420: 30 in-lb
5. Water Absorption, ASTM D570: 0.16%/24hrs at 77°F
6. Surface Burning, ASTM E84: Flame Spread ≤ 200, Smoke Developed ≤ 450.

E. Door Assembly:

1. 60 min pp category A door.
2. 90 min pp category B door.
3. 90 min pp category A door.
4. Temperature rise @ 30 min, 250 degF when vision lites do not exceed 100 sq.in.
5. Temperature rise @ 60 min, 450 defF max.

1.08 SPECIAL GUARANTEE/WARRANTY TERMS

A. Provide a written warranty cosigned by Manufacturer Installer and Contractor, agreeing to replace, at no cost to the Owner, any doors, frames and windows that fail in materials or workmanship, within the time period of acceptance, as indicated below. Failure of materials or workmanship includes excessive deflection, faulty operation of entrances, deterioration of finish, or construction, in excess of normal weathering, and defects in hardware, weatherstripping, and other components of the work.

B. Time Period: 10 years from date of substantial completion.

1.09 SUSTAINABILITY

A. In the selection of the products and materials of this section as well as for the entire project, preference will be given to those with the following characteristics:
   1. Water based.
   2. Water-soluble.
   3. Can be cleaned up with water.
   4. Non-flammable.
   5. Biodegradable.
   6. Low or preferably no Volatile Organic Compound (VOC) content.
   7. Manufactured without compounds that contribute to ozone depletion in the upper atmosphere.
   8. Manufactured without compounds that contribute to smog in the lower atmosphere.
   9. Do not contain methylene-chloride.
   10. Do not contain chlorinated hydrocarbons.
   11. Contains the least possible of post-consumer or post-industrial waste.

Part 2 - PRODUCTS

2.01 ACCEPTABLE MANUFACTURER

A. Manufacturer: Subject to exact compliance with requirements, provide products of one of the following:
   1. Basis of Design – Special-Lite, Inc. - Decatur, MI
   2. Tiger Door – Brownsville, TX
   3. Or equal.

2.02 MATERIAL AND ACCESSORIES

A. All materials shall be of the same manufacturer. No splitting of door, frame or components will be permitted.

B. Fasteners: All exposed fasteners shall have a finish to match material being fastened. 410 stainless steel or other non-corrosive metal. Must be compatible with items being fastened.

D. Sealants and Gaskets: Provide sealants and gaskets in the fabrication, assembly and installation of the work,. which are recommended by the manufacturer to remain permanently elastic, non-shrinking, non-migrating and weatherproof.

E. Glazing Gaskets: For glazing factory-installed glass, and for gaskets which are factory-installed in "captive" assembly of glazing stops, provide manufacturer's standard stripping of molded neoprene, complying with ASTM D 2000 (Designation 2BC415 to 3BC620), or molded PVC complying with ASTM C 509, Grade 4.

2.03 FABRICATION

A. Sizes and Profiles: The required sizes for door and frame units, and profiles requirements are to be field verified.

B. Coordination of Fabrication: Check the actual frame or door openings in the construction work by accurate field measurements before fabrication, and show recorded measurements on final shop drawings.

C. Factory Assembly – Door and frame components by same manufacturer

D. Conceal fasteners, wherever possible, except as otherwise noted.

E. Maintain continuity of line and accurate relation of planes and angles. Provide secure attachments and support at mechanical joints, with hairline fit at contacting

members.

F. Reinforce the work as necessary for performance requirements, and as required for support to the structure. Separate dissimilar metals with bituminous paint or preformed separators which will prevent corrosion. Separate metal surfaces at moving joints with non-metallic separators to prevent "freeze-up" of joints.

2.04 FIBERGLASS REINFORCED POLYESTER (FRP) DOORS

A. Model: Special Lite SL-20FR Sandstone Texture Fire Rated Fiberglass Door.

B. Construction:

1. Door Thickness: 1-3/4 inches.
2. Stiles:
   Single Swing: Hinge and lock stile, 2” minimum tectonite.
   Standard Pairs: Hinge stile, 2” minimum tectonite.
   Standard Pairs: Meeting edge, 3” minimum tectonite.
3. Rails:
   Top Rail, 6” minimum tectonite.
   Bottom Rail, 4” minimum for single swings, 4-1/2” minimum for pairs tectonite.
6. Cutouts: Manufacture with cutouts for required vision lites per manufacturer’s listing.
7. Edge Channels: 0.062” thick 3/4" leg, stainless steel edge channel. Apllied to entire perimeter of the door. Sealed by 3M CP 25WB + Fire Barrier caulk applied to the inside edges of all the steel edge channels.
8. Extrude top and bottom rail legs for interlocking continuous weather bar.
9. Meeting Stiles: Pile brush weatherseals. Extrude meeting stile to include integral pocket to accept pile brush weatherseals.
10. Bottom of Door: Install bottom weather bar with nylon brush weatherstripping into extruded interlocking edge of bottom rail.
11. Glue: Use of glue to bond sheet to core or extrusions is not acceptable.

C. Face Sheet:

1. Material: FRP, 0.120-inch thickness, finish color throughout.
2. Texture: Sandstone.
3. Finish: Through color selected by Architect from Manufacturers standard selections

D. Core:

1. Mineral Core.
2. 1-1/2” nominal thickness.
3. 18 pcf minimum density.

2.05 FRAMING (DOORS AND WINDOWS)

A. Materials: 1/4" thick, solid, pultruded, FRP profiles. No corrosive components or reinforcement. Solid tectonite filler. No steel or aluminum filler is allowed.

B. Perimeter Frame Members: Factory fabricated. Integral 5/8” x 2-1/4” doorstop. Mitered with 4”x4”x3/8” pultruded FRP angle reinforcement with interlocking pultruded FRP brackets. 5-3/4” or 6-3/4” jamb depth as required for assembly. 2” face on jambs, 2” or 4” face on header.

C. Anchors: Factory furnished

D. Finish: Painted, custom color as selected by Architect

2.06 GLAZING

A. Provide glazing system for doors and frames to receive lites. Design system for replacement of glass, but for non-removal of glass from the exterior.
   1. Factory Glazing
   2. Metal vision frames as required for specified glazing assembly
   3. For frames, provide manufacturer's standard "surface glazing" system of channels and captive glazing gaskets.
   4. Provide anchorage and alignment brackets for concealed support of assembly from the building structure. Allow for thermal expansion on exterior units.
   5. All glass in doors is to be factory installed.
   6. Glass for exterior doors and frames to be as specified in Section 08 80 00.

2.07 FINISH HARDWARE – See Section 08 71 00

Part 3 - EXECUTION

3.01 INSPECTION AND ACCEPTANCE

A. Examine all surfaces and contiguous elements to receive work of this section and correct, as part of the Work of this Contract, any defects affecting installation. Commencement of work will be construed as complete acceptability of surfaces and contiguous elements.

3.02 INSTALLATION

A. Comply with manufacturer's recommendations and specifications for the installation of the doors, frames, hardware and louvers.
B. Set units plumb, level and true to line, without warp or rack of doors or frames. Anchor securely in place. Separate aluminum, and other corrodible metal surfaces, from sources of corrosion or electrolytic action as points of contact with other materialism with bituminous coatings, or other means as approved by Architect.
C. Set saddles in bed of compound.
D. Clean surfaces promptly after installation of doors and frames, exercising care to avoid damage to the protective coating (if any). Remove excess glazing and sealant compounds, dirt and other substances.
E. Provide protective treatment and other precautions required through the remainder of the construction period, to ensure that the doors and frames will be without damage or deterioration (other than normal weathering) at the time of acceptance.

3.03 WASTE MANAGEMENT – Coordinate with Section 01 74 19

A. Separate and recycle materials and material packaging in accordance with Waste Management Plan and to the maximum extent economically feasible and place in designated areas for recycling.
B. Set aside and protect materials suitable for reuse and/or remanufacturing.
C. Separate and fold up metal banding; flatten and place along with other metal scrap for recycling in designated area.

**End of Section**

# SECTION 08 52 00

# CLAD WOOD WINDOWS AND DOORS

## Part 1 - GENERAL

1.01 Applicable provisions of the Conditions of the Contract and Division #1, General Requirements, govern work in this Section.

1.02 DESCRIPTION OF WORK

A. The work of this Section consists of the provision of all materials, accessories, incidentals and the like necessary and/or required for the complete execution of all clad wood windows, doors, door frames and related accessory work for this project as required by the schedules, keynotes and drawings.

NOTE: Anchorage devices shall be of such design and number so as to provide a secure mounting for a plumb and level installation without rack or warp or other distortion which may affect operation or weathertightness of window.

Anchorage system shall allow for thermal and structural movement. Anchorage systems must be designed to -

a. Support dead load of window;
b. Resist applied forces such as negative and positive wind loading;
c. Permit thermal movement.

Anchorage and sill supports of window shall be designed to adequately withstand forces from foot traffic.

1.03 RELATED WORK SPECIFIED ELSEWHERE - Entire Project Specification with specific reference to those sections noted above and as follows:

A. 06 11 00 - Material requirements and restrictions governing blocking, padding, insulation, trim and the like in connection with preparation of openings and setting of windows
B. 06 20 00 - Installation of Materials
C. 06 20 00 - Interior casings, aprons and other trim systems
D. 08 71 00 – Finish Hardware
E. 08 80 00 - Glazing material requirements and restrictions

1.04 QUALITY ASSURANCE

A. All units furnished under this section shall be made by manufacturers who have produced acceptable types of units required by these documents for at least 3 years.
B. All assemblies shall be boxed, crated or otherwise protected prior to shipment; stored off the ground in a dry, ventilated space and suitably protected from the elements until installation within the project construction. Loose hardware shall be bagged and attached to individual unit assemblies. Screens shall be attached to respective units. Glass shall be set within frames; where fixed elements, attached with loose stops.
C. Reference Standards

1. American Society for Testing and Materials (ASTM):
   a. ASTM C 1036 - Flat Glass
   b. ASTM E 283 - Rate of Air Leakage Through Exterior Windows, Curtain Walls, and Doors.
   c. ASTM E 547 - Water Penetration of Exterior Windows, by Cyclic Static Air Pressure Differential.
   d. ASTM E 330 - Structural Performance of Exterior Windows, Curtain Walls, and Doors by uniform Static Air Pressure Difference.
   e. E2190: Specification for Sealed Insulated Glass Units
   f. E2068: Standard Test Method for Determination of Operating Force of Sliding Windows and Doors
2. National Wood Window and Door Association (NWWDA):
   a. NWWDA I.S.-2 - Industry Standard for Wood Windows.
   b. NWWDA I.S.-4 - Industry Standard for Water Repellent Preservative Treatment for Millwork.
3. Architectural Woodwork Institute (AWI) Quality Standards
   a. AWI 900 - Exterior Frames
   b. AWI 1000 - Exterior Sash

   each as established for "Premium" work.
4. Architectural Woodwork Standards – Section 6.
5. American Architectural Manufacturers Association (AAMA):
   a. AAMA 2605 - Voluntary Specification for High Performance Organic Coatings on Architectural Extrusions and Panels.
   b. AAMA 2604.2 - Voluntary Specification for High Performance Organic Coatings on Architectural Extrusions and Panels.
6. National Fenestration Rating Council (NFRC):
   a. 101: Procedure for Determining Fenestration Product thermal Properties
   b. 200: Procedure for Determining Solar Heat Gain Coefficients at Normal Incidence
7. Federal Specifications (FS):
   a. FS L-S-125B - Screening, insect non-metallic.
8. American National Standards Institute (ANSI):
   a. ANSI-SMA-1004 - Aluminum Tubular Framing Screens for Windows.

1.05 SUBMITTALS – Coordinate with Section 01 33 00

- Submittals shall be made in groupings where installations are complementary. Failure to comply with this requirement will be cause for rejection of any or all submittals.
- As set forth in Sections 01 33 00 and 01 32 00, prepare and submit a fully developed submittal schedule; note review times set forth in Section 01 33 00 are deemed “average”, for large submissions allow longer review times.
- Attention is directed to Section 01 31 14 for coordination drawing requirements for this project. These drawings are critical to the proper execution of the Work and failure to honor these requirements may become the basis for denial of any and all claims for either or both “time” and “money”.

- The Contractor is encouraged to submit for approval products made from recycled and/or environmentally responsible material. Every effort will be made by the Design Professional Team to approve these materials; the substitution request procedure shall still be enforced.

A. Shop drawings which shall indicate pertinent dimensioning, general construction, component connections and locations, anchorage methods and locations, hardware locations, and installation details.
B. Window and door schedule showing number and size of rough openings necessary for framing of same.
C. Submit sample of window illustrating glazing system, quality of construction and color of finish.
D. Catalogue data on each item furnished.
E. Certification of Specification Compliance.
F. Glass and glazing data for materials.
G. Material Safety Data Sheet (MSDS) must be submitted for each product.

1.06 PRODUCT DELIVERY, STORAGE AND HANDLING (Coordinate with Section 01 61 00)
A. Deliver material to job site in manufacturer's or distributor's packaging undamaged, complete with installation instructions.
B. Prime and seal wood surfaces, including to be concealed by wall construction, if more than thirty (30) days will expire between delivery and installation
C. Store window units in an upright position in a clean and dry storage area above ground to protect from weather under provision of Section 01 66 00

1.07 DESIGN AND PERFORMANCE REQUIREMENTS
A. Window units shall meet "Grade" specifications as follows in accordance with NWWDA I.S.-2 except where more stringent requirements are specified otherwise.

| Product | Air Tested to psf | Water Tested to psf | Structural Tested to psf | Certification Rating | DP | Max Overall Width | Max Overall Height |
|---|---|---|---|---|---|---|---|
| Clad Ultimate Casement (Full Frame and Replacement) | 1.57 | 7.5 | 75 | CW-PG50-C | 50 | 36" | 96-1/8" |
| Clad Ultimate Casement (Full Frame and Replacement) | 1.57 | 7.5 | 75 | LC-PG50-C | 50 | 40" | 92" |
| Clad Ultimate Awning (Full Frame and Replacement) | 1.57 | 7.5 | 75 | CW-PG 50-AP | 50 | 48" | 47-1/8" |
| Clad Ultimate Awning (Full Frame and | 1.57 | 7.5 | 75 | LC-PG50-AP | 50 | 56" | 47-1/8" |

| | | | | | | | |
|---|---|---|---|---|---|---|---|
| Replacement) | | | | | | | |
| Clad Ultimate Awning (Full Frame and Replacement) | 1.57 | 7.5 | 75 | LC-PG50-AP | 50 | 72" | 63-1/8" |
| Clad Ultimate Casement Picture (Full Frame) | 1.57 | 7.5 | 75 | CW-PG50-FW | 50 | 72" | 71-1/8" |
| Clad Ultimate Casement Picture (Full Frame) | 1.57 | 7.5 | 75 | CW-PG50-FW | 50 | 88" | 96-1/8" |
| Clad Ultimate Casement Picture (Full Frame and Replacement) | 1.57 | 10.5 | 75 | AW-PG50-FW | 50 | 60" | 99" |
| Clad Ultimate Casement Picture (Full Frame and Replacement) | 1.57 | 7.5 | 75 | CW-PG50-FW | 50 | 64" | 96-1/8" |

1.08 MOCKUP/SAMPLE INSTALLATION

A. Provide sample installation for field testing unit performance requirement and to determine acceptability of unit installation methods.
B. Approved sample installation will represent minimum quality for the work.
C. Sample installation can be used within the work.
D. Coordinate with Section 01 43 39.

1.09 SPECIAL GUARANTEE/WARRANTY TERMS

A. Clear insulating glass with stainless steel spacers is warranted against seal failure caused by manufacturing defects and resulting in visible obstruction through the glass for twenty (20) years from the original date of purchase. Glass is warranted against stress cracks caused by manufacturing defects from ten (10) years from the original date of purchase.
B. Standard exterior cladding finish is warranted against manufacturing defects resulting in chalk, fade and loss of adhesion (peel) per the American Architectural Manufacturer's Association (AAMA) Specification 2605-11 Section 8.4 and 8.9 for twenty (20) years from the original date of purchase.
C. Factory applied interior finish is warranted to be free from finish defects for a period of five (5) years from the original date of purchase.
D. Hardware and other non-glass components are warranted to be free from manufacturing defects for ten (10) years from the original date of purchase.

1.10 SUSTAINABILITY

A. In the selection of the products and materials of this section as well as for the entire project, preference will be given to those with the following characteristics:
   1. Water based.
   2. Water-soluble.
   3. Can be cleaned up with water.
   4. Non-flammable.
   5. Biodegradable.
   6. Low or preferably no Volatile Organic Compound (VOC) content.
   7. Manufactured without compounds that contribute to ozone depletion in the upper atmosphere.
   8. Manufactured without compounds that contribute to smog in the lower atmosphere.
   9. Do not contain methylene-chloride.
   10. Do not contain chlorinated hydrocarbons.
   11. Contains the least possible of post-consumer or post-industrial waste.

Part 2 - PRODUCTS

2.01 GENERAL

A. For purposes of establishing standards of quality and levels of performance and not for the purposes of limiting competition the basis of this specification is upon factory fabricated units in sizes as shown on the drawings as manufactured by Marvin Windows and Doors; Warroad, MN. or approved equal judged in accordance with Section 01 25 00 of Division #1.

B. As established under NWWDA I.S. 2, a tolerance of plus or minus 1/32 inch (0.8 mm) from the specifications for all elements noted herein after will be permitted for all window parts.

C. Adhesives used in manufacture of finger jointed and/or edge bonded elements shall meet or exceed the wet use adhesive requirements as defined in the latest edition of ASTM D 3110.

2.02 OPERATION

A. Double/Single Hung: Factory-assembled Aluminum Clad Ultimate Casement/Awning, operating exterior swing window on Casement and a top pivoting awning (stationary or picture units)

2.03 MATERIALS

A. Frames
   1. All wood materials shall be water repellent preservative treated species in Ponderosa or other western pine standard with the manufacturer and in accordance with NWWDA I.S.-4. Wood interior members shall be clear western Pine, solid or finger jointed and veneered on interior surfaces. All lumber shall be K.D. to a moisture content of between 6% and 12% at time of machining.
   2. All exterior surfaces clad with a minimum 0.050 inch prefinished aluminum at head and jambs.
   3. Sill - solid type 6063-T6 extruded aluminum in gauge to comply with loading criteria set forth in Part 1 of this Section.
   4. Frame thickness: 1 3/16” (30mm
   5. Overall frame depth - Minimum: 5-21/32 inches.

6. Fixed framed units assembled with screws and concealed corner locks.

B. Sash:
1. Western or Ponderosa Pine, water repellent preservative treated in accordance NWWDA I.S.-4, finished on edges. Clad all exterior surfaces clad with a minimum 0.050 inch prefinished aluminum, lap jointed and sealed. Mortise and tenon corners and glue and secure with metal fasteners.
2. Sash exterior clad with 0.050” (1.3mm) thick extruded aluminum.
3. Sash thickness: 1 5/8” (41mm) and 1 7/8” (48mm) for full frame units.
4. Stiles and Rails: 2 1/16” (52mm)
5. Sash Option: tall bottom rail: 3 9/16” (90mm)
6. Interior Sash Sticking

C. Glazing:
1. Select quality complying with ASTM C1036. Insulating glass SIGMA/IGCC certified to performance level CBA when tested in accordance with ASTM E2190.
2. Glazing method: Insulating glass
3. Glazing seal: Silicone bedding on interior, acrylic foam adhesive tape on exterior
4. Glass Type: Clear LoĒ2 272® with argon.

D. Weatherstripping:
1. Weather strip at the frame is a hollow-foamed material bent around 90 degree corner to allow for seamless corner joints
2. Sash weather strip bulb shaped glass filled material.
3. Stationary units - Continuous, bulb weather strip at perimeter of sash, concealed slotted bulb weather strip on exterior of sash, pile weather strip on interior of blind stop, dual durometer bulb weather strip at bottom rail.

E. Interior Muntins: Standard Profile removable solid wood bars steel pinned at joints and fitted to sash with steel clips and tacks. Surfaces unfinished, ready for site finishing.

2.04 HARDWARE

A. Casement/Awning:
1. Steel worm-gear operator with hardened gears.
2. Operator Base: Zinc die cast with painted finish.
3. Operator Linkage, Hinge Slide, and Hinge Arms: 300 series stainless steel.
4. Exposed Fasteners: Stainless steel.
5. Hardware Salt Spray Exposure, ASTM B 117: Exceed 1,000 hours.
6. Traditional crank handle.
7. Locking System: SureLock System; Single-handle locking system with operable positive-acting arms that reach out and pull sash into locked position.
   a. Casement Windows: One installed on sash 29 inches and smaller in frame height, 2 unison operating locks installed on sash over 29 inches in frame height.
   b. Awning Windows: One installed on sash 29 inches and smaller in frame width, 2 unison operating locks installed on sash over 29 inches in frame width.
   c. Lock Handle Finish: Bright brass.

2.05 SCREENS
- A. Crank Out
  - 1. Aluminum frame finish is available in Satin, Bronze or Stone White
  - 2. Screen mesh: Charcoal Fiberglass, Charcoal Aluminum Wire.

2.06 FABRICATION
- A. Fabricate windows to accommodate the following opening tolerances:
  - 1. Vertical dimensions between high and low points: Plus 1/4 inch or minus 0 inch.
  - 2. Width dimensions: Plus 1/4 inch or minus 0 inch.
  - 3. Building columns or masonry openings: Plus or minus 1/4 inch from plumb.

2.07 FINISH
- A. Exterior aluminum surfaces shall be finished with the following multistage system:
  - 1. Clean and etch aluminum surface of oxides.
  - 2. Pretreat with chrome phosphate conversion coating.
  - 3. Pretreat with chromic acid sealer/rinse.
  - 4. Prime with a baked on epoxy primer.
  - 5. Top coat with a baked on "PVDF" based thermoplastic enamel similar and equal to PPG "Duranar". Color shall be as selected by the Architect.
- B. Interior finish: Unfinished.

2.08 GRILLES-BETWEEN-THE–GLASS (GBG)
- A. 11/16” (17mm) white contoured aluminum bar.
  - 1. Exterior Colors: Exterior matches exterior clad colors. The exterior GBG color is designed to best match the Marvin clad color when used with LoĒ glass. The use of different types of glazing may alter the exterior GBG color appearance
  - 2. Standard Interior Color: White
- B. Pattern: as shown on the drawings.

2.09 TESTING
- A. All standard operable window units shall be individually factory tested for air infiltration to ensure compliance with this specification, in accordance with ASTM E 283 and in accordance with criteria established in Paragraph 1.05 of this Section.

2.09 DOOR SYSTEMS
- A. Description: Factory assembled Aluminum Clad Wood Hinged Door units as manufactured by one of the nominated manufacturers listed in 2.01 above.
- B. Materials
  - 1. Frames and Panels: Aluminum Clad Select Softwood, kiln dried to a moisture content no greater than twelve (12) percent at the time of fabrication. No visible fasteners or finger joint material to interior. Water repellent, preservative treated in accordance with ANSI / WDMA I.S.4-94.
    - a. Panel locking stiles
    - b. Panel thickness: 1-3/4 inches (44mm).
    - c. Top rail and stile width: 6 inches (152 mm).

d. Sidelite stile width: 3 inches (76 mm).
e. Bottom rail height: 10 inches (254 mm).
f. Panel corners glued and fastened with 5/8 inch by 4 inch (16 mm by 102 mm) fluted hardwood dowels. Removable interior vinyl glazing stops with clear wood covers, no visible fasteners.

2. Glazing: Select quality complying with ASTM C 1036-91. Shall comply with 16 CFR 1201-86 Safety Standard for Architectural Glazing Materials. Glazing method: Tempered insulated glass; Clear. Glazing seal: Silicone bedding, exterior.
3. Finish: Interior - Field, see 09 90 00; exterior aluminum as specified in 2.06 above.
4. Hardware: See 08 71 00
   a. Weather Strip: Head jamb and side jambs to have two sets of bulb weather strip maintaining contact with door panels. Threshold to have bulb weather strip maintaining contact with bottom of panel. Beige fiberglass panel drip applied to bottom rail. Beige painted aluminum water shed and weep system at sill.
5. Jamb Extension: Furnish jamb extension, factory installed, for wall thickness indicated or required.

2.10 Balance of materials shall be as specified elsewhere in this Section.

Part 3 - EXECUTION

3.01 INSTALLATION
A. Install windows and doors in accordance with manufacturer's recommendations, and approved shop drawings to achieve weathertight and freely operating installation.
B. Maintain alignment with adjacent work. Secure assembly to framed openings, plumb and square, without distortion.
C. Place insulation in shim spaces around unit perimeter, to maintain continuity of building thermal barrier.
D. Install sealant and related backing materials at perimeter of assembly.
E. Leave all operable window units closed and locked.

3.02 FINAL CLEANING OF WINDOW SYSTEMS AND GLASS WORK
A. Clean window frames and glass in accordance with Section 01 77 00.
B. Remove labels and visible markings.

3.03 WASTE MANAGEMENT – Coordinate with Section 01 74 19
A. Separate and recycle materials and material packaging in accordance with Waste Management Plan and to the maximum extent economically feasible and place in designated areas for recycling.
B. Set aside and protect materials suitable for reuse and/or remanufacturing.
C. Separate and fold up metal banding; flatten and place along with other metal scrap for recycling in designated area.

**End of Section**

# SECTION 087100

# DOOR HARDWARE

## PART 1 - GENERAL

### 1.1 RELATED DOCUMENTS

A. Drawings and general provisions of the Contract, including General and Supplementary Conditions and Division 1 Specification Sections, apply to this Section.

### 1.2 SUMMARY

A. This Section includes commercial door hardware for the following:

1. Swinging doors.
2. Other doors to the extent indicated.

B. Door hardware includes, but is not necessarily limited to, the following:

1. Mechanical door hardware.
2. Cylinders specified for doors in other sections.

C. Related Sections:

1. Division 08 Section “Hollow Metal Doors and Frames”.
2. Division 08 Section “Fiberglass Doors”,

D. Codes and References: Comply with the version year adopted by the Authority Having Jurisdiction.

1. ANSI A117.1 - Accessible and Usable Buildings and Facilities.
2. ICC/IBC - International Building Code.
3. NFPA 70 - National Electrical Code.
4. NFPA 80 - Fire Doors and Windows.
5. NFPA 101 - Life Safety Code.
6. NFPA 105 - Installation of Smoke Door Assemblies.
7. State Building Codes, Local Amendments.

E. Standards: All hardware specified herein shall comply with the following industry standards:

1. ANSI/BHMA Certified Product Standards - A156 Series
2. UL10C – Positive Pressure Fire Tests of Door Assemblies

## 1.3 SUBMITTALS

A. Product Data: Manufacturer's product data sheets including installation details, material descriptions, dimensions of individual components and profiles, operational descriptions and finishes.

B. Door Hardware Schedule: Prepared by or under the supervision of supplier, detailing fabrication and assembly of door hardware, as well as procedures and diagrams. Coordinate the final Door Hardware Schedule with doors, frames, and related work to ensure proper size, thickness, hand, function, and finish of door hardware.

1. Format: Comply with scheduling sequence and vertical format in DHI's "Sequence and Format for the Hardware Schedule."

2. Organization: Organize the Door Hardware Schedule into door hardware sets indicating complete designations of every item required for each door or opening. Organize door hardware sets in same order as in the Door Hardware Sets at the end of Part 3. Submittals that do not follow the same format and order as the Door Hardware Sets will be rejected and subject to resubmission.

3. Content: Include the following information:

   a. Type, style, function, size, label, hand, and finish of each door hardware item.
   b. Manufacturer of each item.
   c. Fastenings and other pertinent information.
   d. Location of door hardware set, cross-referenced to Drawings, both on floor plans and in door and frame schedule.
   e. Explanation of abbreviations, symbols, and codes contained in schedule.
   f. Mounting locations for door hardware.
   g. Door and frame sizes and materials.
   h. Warranty information for each product.

4. Submittal Sequence: Submit the final Door Hardware Schedule at earliest possible date, particularly where approval of the Door Hardware Schedule must precede fabrication of other work that is critical in the Project construction schedule. Include Product Data, Samples, Shop Drawings of other work affected by door hardware, and other information essential to the coordinated review of the Door Hardware Schedule.

C. Keying Schedule: After a keying meeting with the owner has taken place prepare a separate keying schedule detailing final instructions. Submit the keying schedule in electronic format. Include keying system explanation, door numbers, key set symbols, hardware set numbers and special instructions. Owner must approve submitted keying schedule prior to the ordering of permanent cylinders/cores.

D. Informational Submittals:

1. Product Test Reports: Indicating compliance with cycle testing requirements, based on evaluation of comprehensive tests performed by manufacturer and witnessed by a qualified independent testing agency.

E. Operating and Maintenance Manuals: Provide manufacturers operating and maintenance manuals for each item comprising the complete door hardware installation in quantity as required in Division 01, Closeout Procedures.

## 1.4 QUALITY ASSURANCE

A. Manufacturers Qualifications: Engage qualified manufacturers with a minimum 5 years of documented experience in producing hardware and equipment similar to that indicated for this Project and that have a proven record of successful in-service performance.

B. Installer Qualifications: A minimum 3 years documented experience installing both standard and electrified door hardware similar in material, design, and extent to that indicated for this Project and whose work has resulted in construction with a record of successful in-service performance.

C. Door Hardware Supplier Qualifications: Experienced commercial door hardware distributors with a minimum 5 years documented experience supplying both mechanical and electromechanical hardware installations comparable in material, design, and extent to that indicated for this Project. Supplier recognized as a factory direct distributor by the manufacturers of the primary materials with a warehousing facility in Project's vicinity. Supplier to have on staff a certified Architectural Hardware Consultant (AHC) available during the course of the Work to consult with Contractor, Architect, and Owner concerning both standard and electromechanical door hardware and keying.

D. Source Limitations: Obtain each type and variety of door hardware specified in this section from a single source unless otherwise indicated.

1. Electrified modifications or enhancements made to a source manufacturer's product line by a secondary or third party source will not be accepted.

E. Each unit to bear third party permanent label demonstrating compliance with the referenced standards.

F. Keying Conference: Conduct conference to comply with requirements in Division 01 Section "Project Meetings." Keying conference to incorporate the following criteria into the final keying schedule document:

1. Function of building, purpose of each area and degree of security required.
2. Plans for existing and future key system expansion.
3. Requirements for key control storage and software.
4. Installation of permanent keys, cylinder cores and software.
5. Address and requirements for delivery of keys.

G. Pre-Submittal Conference: Conduct coordination conference in compliance with requirements in Division 01 Section "Project Meetings" with attendance by representatives of Supplier(s), Installer(s), and Contractor(s) to review proper methods and the procedures for receiving, handling, and installing door hardware.

1. Prior to installation of door hardware, conduct a project specific training meeting to instruct the installing contractors' personnel on the proper installation and adjustment of their respective products. Product training to be attended by installers of door hardware (including electromechanical hardware) for aluminum, hollow metal and wood doors. Training will include the use of installation manuals, hardware schedules, templates and physical product samples as required.
2. Inspect and discuss electrical roughing-in, power supply connections, and other preparatory work performed by other trades.
3. Review sequence of operation narratives for each unique access controlled opening.
4. Review and finalize construction schedule and verify availability of materials.
5. Review the required inspecting, testing, commissioning, and demonstration procedures

H. At completion of installation, provide written documentation that components were applied to manufacturer's instructions and recommendations and according to approved schedule.

## 1.5 DELIVERY, STORAGE, AND HANDLING

A. Inventory door hardware on receipt and provide secure lock-up and shelving for door hardware delivered to Project site. Do not store electronic access control hardware, software or accessories at Project site without prior authorization.

B. Tag each item or package separately with identification related to the final Door Hardware Schedule, and include basic installation instructions with each item or package.

C. Deliver, as applicable, permanent keys, cylinders, cores, access control credentials, software and related accessories directly to Owner via registered mail or overnight package service. Instructions for delivery to the Owner shall be established at the "Keying Conference".

## 1.6 COORDINATION

A. Templates: Obtain and distribute to the parties involved templates for doors, frames, and other work specified to be factory prepared for installing standard and electrified hardware. Check Shop Drawings of other work to confirm that adequate provisions are made for locating and installing hardware to comply with indicated requirements.

B. Door Hardware and Electrical Connections: Coordinate the layout and installation of scheduled electrified door hardware and related access control equipment with

required connections to source power junction boxes, low voltage power supplies, detection and monitoring hardware, and fire and detection alarm systems.

C. Door and Frame Preparation: Doors and corresponding frames are to be prepared, reinforced and pre-wired (if applicable) to receive the installation of the specified electrified, monitoring, signaling and access control system hardware without additional in-field modifications.

## 1.7 WARRANTY

A. General Warranty: Reference Division 01, General Requirements. Special warranties specified in this Article shall not deprive Owner of other rights Owner may have under other provisions of the Contract Documents and shall be in addition to, and run concurrent with, other warranties made by Contractor under requirements of the Contract Documents.

B. Warranty Period: Written warranty, executed by manufacturer(s), agreeing to repair or replace components of standard and electrified door hardware that fails in materials or workmanship within specified warranty period after final acceptance by the Owner. Failures include, but are not limited to, the following:

1. Structural failures including excessive deflection, cracking, or breakage.
2. Faulty operation of the hardware.
3. Deterioration of metals, metal finishes, and other materials beyond normal weathering.
4. Electrical component defects and failures within the systems operation.

C. Standard Warranty Period: One year from date of Substantial Completion, unless otherwise indicated.

D. Special Warranty Periods:
1. Ten years for extra heavy duty cylindrical (bored) locks and latches.
2. Five years for exit hardware.
3. Fifteen years for manual surface door closer bodies.

## 1.8 MAINTENANCE SERVICE

A. Maintenance Tools and Instructions: Furnish a complete set of specialized tools and maintenance instructions as needed for Owner's continued adjustment, maintenance, and removal and replacement of door hardware.

PART 2 - PRODUCTS

2.1 SCHEDULED DOOR HARDWARE

A. General: Provide door hardware for each door to comply with requirements in Door Hardware Sets and each referenced section that products are to be supplied under.

B. Designations: Requirements for quantity, item, size, finish or color, grade, function, and other distinctive qualities of each type of door hardware are indicated in the Door Hardware Sets at the end of Part 3. Products are identified by using door hardware designations, as follows:

1. Named Manufacturer's Products: Product designation and manufacturer are listed for each door hardware type required for the purpose of establishing requirements. Manufacturers' names are abbreviated in the Door Hardware Schedule.

C. Substitutions: Requests for substitution and product approval for inclusive mechanical and electromechanical door hardware in compliance with the specifications must be submitted in writing and in accordance with the procedures and time frames outlined in Division 01, Substitution Procedures. Approval of requests is at the discretion of the architect, owner, and their designated consultants.

2.2 HANGING DEVICES

A. Hinges: ANSI/BHMA A156.1 certified butt hinges with number of hinge knuckles and other options as specified in the Door Hardware Sets.

1. Quantity: Provide the following hinge quantity:

a. Two Hinges: For doors with heights up to 60 inches.
b. Three Hinges: For doors with heights 61 to 90 inches.
c. Four Hinges: For doors with heights 91 to 120 inches.
d. For doors with heights more than 120 inches, provide 4 hinges, plus 1 hinge for every 30 inches of door height greater than 120 inches.

2. Hinge Size: Provide the following, unless otherwise indicated, with hinge widths sized for door thickness and clearances required:

a. Widths up to 3’0”: 4-1/2” heavy weight.
b. Sizes from 3’1” to 4’0”: 5” heavy weight.

3. Hinge Weight and Base Material: Unless otherwise indicated, provide the following:

a. Heavy weight, non-ferrous, ball bearing or oil impregnated bearing hinges.

4. Hinge Options: Comply with the following:

a. Non-removable Pins: Provide set screw in hinge barrel that, when tightened into a groove in hinge pin, prevents removal of pin while door is closed; for the all out-swinging lockable doors.

5. Manufacturers:

a. McKinney Products; ASSA ABLOY Architectural Door Accessories (MK) - TA Series.

B. Continuous Geared Hinges: ANSI/BHMA A156.26 Grade 1-600 certified continuous geared hinge. with minimum 0.120-inch thick extruded 6060 T6 aluminum alloy hinge leaves and a minimum overall width of 4 inches. Hinges are non-handed, reversible and fabricated to template screw locations. Factory trim hinges to suit door height and prepare for electrical cut-outs.

1. Manufacturers:

a. Pemko Products; ASSA ABLOY Architectural Door Accessories (PE).

C. Pin and Barrel Continuous Hinges: ANSI/BHMA A156.26 Grade 1-600 certified pin and barrel continuous hinges with minimum 14 gauge Type 304 stainless steel hinge leaves, concealed teflon coated stainless pin, and twin self-lubricated nylon bearings at each knuckle separation. Factory trim hinges to suit door height and prepare for electrical cut-outs.

1. Manufacturers:

a. Markar Products; ASSA ABLOY Architectural Door Accessories (MR).
b. Pemko Products; ASSA ABLOY Architectural Door Accessories (PE).

## 2.3 DOOR OPERATING TRIM

A. Flush Bolts and Surface Bolts: ANSI/BHMA A156.3 and A156.16, Grade 1, certified.

1. Flush bolts to be furnished with top rod of sufficient length to allow bolt retraction device location approximately six feet from the floor.
2. Furnish dust proof strikes for bottom bolts.
3. Surface bolts to be minimum 8” in length and U.L. listed for labeled fire doors and U.L. listed for windstorm components where applicable.
4. Provide related accessories (mounting brackets, strikes, coordinators, etc.) as required for appropriate installation and operation.

5. Manufacturers:

a. Rockwood Products; ASSA ABLOY Architectural Door Accessories (RO).

B. Coordinators: ANSI/BHMA A156.3 certified door coordinators consisting of active-leaf, hold-open lever and inactive-leaf release trigger. Model as indicated in hardware sets.

1. Manufacturers:

    a. Rockwood Products; ASSA ABLOY Architectural Door Accessories (RO).

C. Door Push Plates and Pulls: ANSI/BHMA A156.6 certified door pushes and pulls of type and design specified in the Hardware Sets. Coordinate and provide proper width and height as required where conflicting hardware dictates.

1. Push/Pull Plates: Minimum .050 inch thick, size as indicated in hardware sets, with beveled edges, secured with exposed screws unless otherwise indicated.
2. Door Pull and Push Bar Design: Size, shape, and material as indicated in the hardware sets. Minimum clearance of 2 1/2-inches from face of door unless otherwise indicated.
3. Offset Pull Design: Size, shape, and material as indicated in the hardware sets. Minimum clearance of 2 1/2-inches from face of door and offset of 90 degrees unless otherwise indicated.
4. Fasteners: Provide manufacturer's designated fastener type as indicated in Hardware Sets.

5. Manufacturers:

    a. Rockwood Products; ASSA ABLOY Architectural Door Accessories (RO).

## 2.4 CYLINDERS AND KEYING

A. General: Cylinder manufacturer to have minimum (10) years experience designing secured master key systems and have on record a published security keying system policy.

B. Source Limitations: Obtain each type of keyed cylinder and keys from the same source manufacturer as locksets and exit devices, unless otherwise indicated.

1. Manufacturers:

    a. Arrow (AW).
    b. Sargent Manufacturing (SA).

C. Cylinders: Original manufacturer cylinders complying with the following:

1. Mortise Type: Threaded cylinders with rings and cams to suit hardware application.
2. Rim Type: Cylinders with back plate, flat-type vertical or horizontal tailpiece, and raised trim ring.
3. Bored-Lock Type: Cylinders with tailpieces to suit locks.
4. Mortise and rim cylinder collars to be solid and recessed to allow the cylinder face to be flush and be free spinning with matching finishes.
5. Keyway: Match Facility Standard.

D. Permanent Cores: Manufacturer's standard; finish face to match lockset; complying with the following:

1. Interchangeable Cores: Core insert, removable by use of a special key; usable with other manufacturers' cylinders.

E. Patented Cylinders: ANSI/BHMA A156.5, Grade 1, certified patented cylinders employing a utility patented and restricted keyway requiring the use of a patented key. Cylinders are to be protected from unauthorized manufacture and distribution by manufacturer’s United States patents. Cylinders are to be factory keyed with owner having the ability for on-site original key cutting.

1. Manufacturers:

a. Medeco (MC) - X4 Series.

F. Keying System: Each type of lock and cylinders to be factory keyed.

1. Conduct specified "Keying Conference" to define and document keying system instructions and requirements.
2. Furnish factory cut, nickel-silver large bow permanently inscribed with a visual key control number as directed by Owner.
3. Existing System: Field verify and key locks to match Owner's existing system.

G. Key Quantity: Provide the following minimum number of keys:

1. Change Keys per Cylinder: Two (2)
2. Master Keys (per Master Key Level/Group): Five (5).
3. Construction Keys (where required): Ten (10).
4. Construction Control Keys (where required): Two (2).
5. Permanent Control Keys (where required): Two (2).

H. Construction Keying: Provide construction master keyed cylinders.

I. Construction Keying: Provide temporary keyed construction cores.

J. Key Registration List (Bitting List):

1. Provide keying transcript list to Owner's representative in the proper format for importing into key control software.
2. Provide transcript list in writing or electronic file as directed by the Owner.

K. Key Control Cabinet: Provide a key control system including envelopes, labels, and tags with self-locking key clips, receipt forms, 3-way visible card index, temporary markers, permanent markers, and standard metal cabinet. Key control cabinet shall have expansion capacity of 150% of the number of locks required for the project.

1. Manufacturers:

a. Lund Equipment (LU).

b. MMF Industries (MM).
c. Telkee (TK).

L. Key Control Software: Provide one network version of "Key Wizard" branded key management software package that includes one year of technical support and upgrades to software at no charge. Provide factory key system formatted for importing into “Key Wizard” software.

## 2.5 MECHANICAL LOCKS AND LATCHING DEVICES

A. Tubular Locksets, Grade 1 (Extra-Heavy Duty): ANSI/BHMA A156.2 Series 4000, Grade 1 certified.

1. Locksets to withstand 3000 inch pounds of torque applied to the locked lever without gaining access.

2. Locksets to fit a standard 2 1/8” bore without the use of through-bolts.

3. Lever handles to be made of solid material with no plastic fillers.

4. Latchbolt head to be one-piece stainless steel construction encased within the lock body.

5. Extended cycle test: Locks to have been cycle tested in ordinance with ANSI/BHMA A156.2 requirements to 34 million cycles.

6. Furnish with standard 2 3/4” backset and 1/2" throw latchbolt (3/4" at exterior and paired openings).

7. Manufacturers:

a. Sargent Manufacturing (SA) – 11 Line.

## 2.6 AUXILIARY LOCKS

A. Mortise Deadlocks, Small Case: ANSI/BHMA A156.36, Grade 1, small case mortise type deadlocks constructed of heavy gauge wrought corrosion resistant steel. Steel or stainless steel bolts with a 1" throw and hardened steel roller pins. Deadlocks to be products of the same source manufacturer and keyway as other specified locksets.

1. Manufacturers:

a. Sargent Manufacturing (SA) - 4870 Series.

## 2.7 LOCK AND LATCH STRIKES

A. Strikes: Provide manufacturer's standard strike with strike box for each latch or lock bolt, with curved lip extended to protect frame, finished to match door hardware set, unless otherwise indicated, and as follows:

1. Flat-Lip Strikes: For locks with three-piece antifriction latchbolts, as recommended by manufacturer.
2. Extra-Long-Lip Strikes: For locks used on frames with applied wood casing trim.
3. Aluminum-Frame Strike Box: Provide manufacturer's special strike box fabricated for aluminum framing.
4. Double-lipped strikes: For locks at double acting doors. Furnish with retractable stop for rescue hardware applications.

B. Standards: Comply with the following:

1. Strikes for Mortise Locks and Latches: BHMA A156.13.
2. Strikes for Bored Locks and Latches: BHMA A156.2.
3. Strikes for Auxiliary Deadlocks: BHMA A156.36.
4. Dustproof Strikes: BHMA A156.16.

## 2.8 CONVENTIONAL EXIT DEVICES

A. General Requirements: All exit devices specified herein shall meet or exceed the following criteria:

1. At doors not requiring a fire rating, provide devices complying with NFPA 101 and listed and labeled for "Panic Hardware" according to UL305. Provide proper fasteners as required by manufacturer including sex nuts and bolts at openings specified in the Hardware Sets.

2. Where exit devices are required on fire rated doors, provide devices complying with NFPA 80 and with UL labeling indicating "Fire Exit Hardware". Provide devices with the proper fasteners for installation as tested and listed by UL. Consult manufacturer’s catalog and template book for specific requirements.

3. Except on fire rated doors, provide exit devices with key cylinder dogging device to hold the pushbar and latch in a retracted position.

4. Devices must fit flat against the door face with no gap that permits unauthorized dogging of the push bar. The addition of filler strips is required in any case where the door light extends behind the device as in a full glass configuration.

5. Lever Operating Trim: Where exit devices require lever trim, furnish manufacturer's heavy duty escutcheon trim with threaded studs for thru-bolts.

   a. Lock Trim Design: As indicated in Hardware Sets, provide finishes and designs to match that of the specified locksets.

b. Where function of exit device requires a cylinder, provide a cylinder (Rim or Mortise) as specified in Hardware Sets.

6. Rail Sizing: Provide exit device rails factory sized for proper door width application.

7. Through Bolt Installation: For exit devices and trim as indicated in Door Hardware Sets.

B. Conventional Push Rail Exit Devices (Heavy Duty): ANSI/BHMA A156.3, Grade 1 certified panic and fire exit hardware devices furnished in the functions specified in the Hardware Sets. Exit device latch to be stainless steel, pullman type, with deadlock feature.

1. Manufacturers:

a. Von Duprin (VD) - 98 Series.

## 2.9 DOOR CLOSERS

A. All door closers specified herein shall meet or exceed the following criteria:

1. General: Door closers to be from one manufacturer, matching in design and style, with the same type door preparations and templates regardless of application or spring size. Closers to be non-handed with full sized covers including installation and adjusting information on inside of cover.

2. Standards: Closers to comply with UL-10C for Positive Pressure Fire Test and be U.L. listed for use of fire rated doors.

3. Cycle Testing: Provide closers which have surpassed 15 million cycles in a test witnessed and verified by UL.

4. Size of Units: Comply with manufacturer's written recommendations for sizing of door closers depending on size of door, exposure to weather, and anticipated frequency of use. Where closers are indicated for doors required to be accessible to the physically handicapped, provide units complying with ANSI ICC/A117.1.

5. Closer Arms: Provide heavy duty, forged steel closer arms unless otherwise indicated in Hardware Sets.

6. Closers shall not be installed on exterior or corridor side of doors; where possible install closers on door for optimum aesthetics.

7. Closer Accessories: Provide door closer accessories including custom templates, special mounting brackets, spacers and drop plates as required for proper installation. Provide through-bolt and security type fasteners as specified in the hardware sets.

B. Door Closers, Surface Mounted (Heavy Duty): ANSI/BHMA A156.4, Grade 1 surface mounted, heavy duty door closers with complete spring power adjustment, sizes 1 thru 6; and fully operational adjustable according to door size, frequency of use, and opening force. Closers to be rack and pinion type, one piece cast iron or aluminum alloy body construction, with adjustable backcheck and separate non-critical valves for closing sweep and latch speed control. Provide non-handed units standard.

1. Manufacturers:

a. Norton Door Controls (NO) - 7500 Series.

## 2.10 ARCHITECTURAL TRIM

A. Door Protective Trim

1. General: Door protective trim units to be of type and design as specified below or in the Hardware Sets.

2. Size: Fabricate protection plates (kick, armor, or mop) not more than 2" less than door width (LDW) on stop side of single doors and 1” LDW on stop side of pairs of doors, and not more than 1" less than door width on pull side. Coordinate and provide proper width and height as required where conflicting hardware dictates. Height to be as specified in the Hardware Sets.

3. Where plates are applied to fire rated doors with the top of the plate more than 16” above the bottom of the door, provide plates complying with NFPA 80. Consult manufacturer’s catalog and template book for specific requirements for size and applications.

4. Protection Plates: ANSI/BHMA A156.6 certified protection plates (kick, armor, or mop), fabricated from the following:

a. Stainless Steel: 300 grade, 050-inch thick.

5. Options and fasteners: Provide manufacturer's designated fastener type as specified in the Hardware Sets. Provide countersunk screw holes.

6. Manufacturers:

a. Rockwood Products; ASSA ABLOY Architectural Door Accessories (RO).

## 2.11 DOOR STOPS AND HOLDERS

A. General: Door stops and holders to be of type and design as specified below or in the Hardware Sets.

B. Door Stops and Bumpers: ANSI/BHMA A156.16, Grade 1 certified door stops and wall bumpers. Provide wall bumpers, either convex or concave types with anchorage as

indicated, unless floor or other types of door stops are specified in Hardware Sets. Do not mount floor stops where they will impede traffic. Where floor or wall bumpers are not appropriate, provide overhead type stops and holders.

1. Manufacturers:

   a. Rockwood Products; ASSA ABLOY Architectural Door Accessories (RO).

C. Overhead Door Stops and Holders: ANSI/BHMA A156.6, Grade 1 certified overhead stops and holders to be surface or concealed types as indicated in Hardware Sets. Track, slide, arm and jamb bracket to be constructed of extruded bronze and shock absorber spring of heavy tempered steel. Provide non-handed design with mounting brackets as required for proper operation and function.

1. Manufacturers:

   a. Rixson Door Controls (RF).
   b. Rockwood Products; ASSA ABLOY Architectural Door Accessories (RO).

## 2.12 ARCHITECTURAL SEALS

A. General: Thresholds, weatherstripping, and gasket seals to be of type and design as specified below or in the Hardware Sets. Provide continuous weatherstrip gasketing on exterior doors and provide smoke, light, or sound gasketing on interior doors where indicated. At exterior applications provide non-corrosive fasteners and elsewhere where indicated.

B. Smoke Labeled Gasketing: Assemblies complying with NFPA 105 that are listed and labeled by a testing and inspecting agency acceptable to authorities having jurisdiction, for smoke control ratings indicated, based on testing according to UL 1784.

1. Provide smoke labeled perimeter gasketing at all smoke labeled openings.

C. Fire Labeled Gasketing: Assemblies complying with NFPA 80 that are listed and labeled by a testing and inspecting agency acceptable to authorities having jurisdiction, for fire ratings indicated, based on testing according to UL-10C.

1. Provide intumescent seals as indicated to meet UL10C Standard for Positive Pressure Fire Tests of Door Assemblies, and NPFA 252, Standard Methods of Fire Tests of Door Assemblies.

D. Sound-Rated Gasketing: Assemblies that are listed and labeled by a testing and inspecting agency, for sound ratings indicated.

E. Replaceable Seal Strips: Provide only those units where resilient or flexible seal strips are easily replaceable and readily available from stocks maintained by manufacturer.

F. Manufacturers:

1. Pemko Products; ASSA ABLOY Architectural Door Accessories (PE).

2.13 FABRICATION

A. Fasteners: Provide door hardware manufactured to comply with published templates generally prepared for machine, wood, and sheet metal screws. Provide screws according to manufacturers recognized installation standards for application intended.

2.14 FINISHES

A. Standard: Designations used in the Hardware Sets and elsewhere indicate hardware finishes complying with ANSI/BHMA A156.18, including coordination with traditional U.S. finishes indicated by certain manufacturers for their products.

B. Provide quality of finish, including thickness of plating or coating (if any), composition, hardness, and other qualities complying with manufacturer's standards, but in no case less than specified by referenced standards for the applicable units of hardware

C. Protect mechanical finishes on exposed surfaces from damage by applying a strippable, temporary protective covering before shipping.

PART 3 - EXECUTION

3.1 EXAMINATION

A. Examine scheduled openings, with Installer present, for compliance with requirements for installation tolerances, labeled fire door assembly construction, wall and floor construction, and other conditions affecting performance.

B. Notify architect of any discrepancies or conflicts between the door schedule, door types, drawings and scheduled hardware. Proceed only after such discrepancies or conflicts have been resolved in writing.

3.2 PREPARATION

A. Hollow Metal Doors and Frames: Comply with ANSI/DHI A115 series.

B. Wood Doors: Comply with ANSI/DHI A115-W series.

3.3 INSTALLATION

A. Install each item of mechanical and electromechanical hardware and access control equipment to comply with manufacturer's written instructions and according to specifications.

1. Installers are to be trained and certified by the manufacturer on the proper installation and adjustment of fire, life safety, and security products including: hanging devices; locking devices; closing devices; and seals.

B. Mounting Heights: Mount door hardware units at heights indicated in following applicable publications, unless specifically indicated or required to comply with governing regulations:

1. Standard Steel Doors and Frames: DHI's "Recommended Locations for Architectural Hardware for Standard Steel Doors and Frames."
2. Wood Doors: DHI WDHS.3, "Recommended Locations for Architectural Hardware for Wood Flush Doors."
3. Where indicated to comply with accessibility requirements, comply with ANSI A117.1 "Accessibility Guidelines for Buildings and Facilities."
4. Provide blocking in drywall partitions where wall stops or other wall mounted hardware is located.

C. Retrofitting: Install door hardware to comply with manufacturer's published templates and written instructions. Where cutting and fitting are required to install door hardware onto or into surfaces that are later to be painted or finished in another way, coordinate removal, storage, and reinstallation of surface protective trim units with finishing work specified in Division 9 Sections. Do not install surface-mounted items until finishes have been completed on substrates involved.

D. Thresholds: Set thresholds for exterior and acoustical doors in full bed of sealant complying with requirements specified in Division 7 Section "Joint Sealants."

E. Storage: Provide a secure lock up for hardware delivered to the project but not yet installed. Control the handling and installation of hardware items so that the completion of the work will not be delayed by hardware losses before and after installation.

## 3.4 FIELD QUALITY CONTROL

A. Field Inspection (Punch-Out Report): Reference Division 01 Section "Closeout Procedures". Final inspect installed door hardware and state in report whether work complies with or deviates from specification requirements, including whether door hardware is properly installed, operating and adjusted.

## 3.5 ADJUSTING

A. Initial Adjustment: Adjust and check each operating item of door hardware and each door to ensure proper operation or function of every unit. Replace units that cannot be adjusted to operate as intended. Adjust door control devices to compensate for final operation of heating and ventilating equipment and to comply with referenced accessibility requirements.

## 3.6 CLEANING AND PROTECTION

A. Protect all hardware stored on construction site in a covered and dry place. Protect exposed hardware installed on doors during the construction phase. Install any and all hardware at the latest possible time frame.

B. Clean adjacent surfaces soiled by door hardware installation.

C. Clean operating items as necessary to restore proper finish. Provide final protection and maintain conditions that ensure door hardware is without damage or deterioration at time of owner occupancy.

## 3.7 DEMONSTRATION

A. Instruct Owner's maintenance personnel to adjust, operate, and maintain mechanical and electromechanical door hardware.

## 3.8 DOOR HARDWARE SETS

A. The hardware sets represent the design intent and direction of the owner and architect. They are a guideline only and should not be considered a detailed hardware schedule. Discrepancies, conflicting hardware and missing items should be brought to the attention of the architect with corrections made prior to the bidding process. Omitted items not included in a hardware set should be scheduled with the appropriate additional hardware required for proper application and functionality.

B. The supplier is responsible for handing and sizing all products and providing the correct option for the appropriate door type and material where more than one is presented in the hardware sets. Quantities listed are for each pair of doors, or for each single door.

C. Manufacturer’s Abbreviations:

1. MK - McKinney
2. MR - Markar
3. PE - Pemko
4. RO - Rockwood
5. SA - SARGENT
6. VD - Von Duprin
7. MC - Medeco
8. AW - Arrow Lock
9. RF - Rixson
10. NO - Norton

## Hardware Sets

### Set: 1.0
Description: Exterior FRP Pair - Mech/Elec; Storage Room
Doors – 106, 107

| | | | | |
|---|---|---|---|---|
| 2 | Continuous Hinge (xtra HD) | X_C Series | | PE |
| 1 | Dust Proof Strike | 570 | US26D | RO |
| 1 | Flush Bolt Set (self-latching) | 2845; 2945 | US26D | RO |
| 1 | Storeroom Lock | 41 72 11G04 LL | US26D | SA |
| 1 | Small Format Inter Core | 33700006N | 26 | MC |
| 1 | Coordinator | 1700 | Black | RO |
| 2 | Surface Overhead Stop | 9-X36 | 630 | RF |
| 2 | Surface Closer (offset) | PRO 7500 | 689 | NO |
| 1 | Threshold (coord w/ details) | 1716AK FHSL14SS | | PE |
| 1 | Head & Jamb Gasketing | 2891APK | | PE |
| 2 | Sweep | 315CN | | PE |
| 1 | Astragal (outswing doors) | 355CS | | PE |

### Set: 2.0
Description: Exterior FRP Sgl - Storage; Data
Doors – 106a, 107a

| | | | | |
|---|---|---|---|---|
| 1 | Continuous Hinge (xtra HD) | X_C Series | | PE |
| 1 | Storeroom Lock | 41 72 11G04 LL | US26D | SA |
| 1 | Small Format Inter Core | 33700006N | 26 | MC |
| 1 | Surface Overhead Stop | 9-X36 | 630 | RF |
| 1 | Surface Closer (offset) | PRO 7500 | 689 | NO |
| 1 | Threshold (coord w/ details) | 1716AK FHSL14SS | | PE |
| 1 | Head & Jamb Gasketing | 2891APK | | PE |
| 1 | Sweep | 315CN | | PE |

### Set: 3.0
Description: Exterior FRP Pair - Team Room Fire Rated KRM
Doors – 114a, 114b

| | | | | |
|---|---|---|---|---|
| 2 | Continuous Hinge | FM300 | 630 | MR |
| 2 | Fire Rated Rim Exit | 98L-F 996L(Std) | US32D | VD |
| 1 | Fire Rated Keyed Mullion | KRM | | VD |
| 2 | Small Format Inter Core | 33700006N | 26 | MC |
| 2 | Rim Cylinder Housing | 16RCR-27 | US26D | AW |
| 2 | Surface Overhead Stop | 9-X36 | 630 | RF |
| 2 | Surface Closer (offset) | PRO 7500 | 689 | NO |
| 1 | Threshold (coord w/ details) | 1716AK FHSL14SS | | PE |
| 1 | Head & Jamb Gasketing | 2891APK | | PE |
| 2 | Sweep | 315CN | | PE |
| 2 | Astragal | 305CN | | PE |

**Set: 4.0**
Description: Exterior FRP Sgl - Team Room
Doors – 110, 110a, 111, 111a, 114

| | | | | |
|---|---|---|---|---|
| 1 | Continuous Hinge | FM300 | 630 | MR |
| 1 | Fire Rated Rim Exit | 98L-F 996L(Std) | US32D | VD |
| 1 | Small Format Inter Core | 33700006N | 26 | MC |
| 1 | Rim Cylinder Housing | 16RCR-27 | US26D | AW |
| 1 | Surface Overhead Stop | 9-X36 | 630 | RF |
| 1 | Surface Closer (offset) | PRO 7500 | 689 | NO |
| 1 | Threshold (coord w/ details) | 1716AK FHSL14SS | | PE |
| 1 | Head & Jamb Gasketing | 2891APK | | PE |
| 1 | Sweep | 315CN | | PE |

**Set: 5.0**
Description: Exterior FRP Sgl - Classroom Lock
Doors – 101, 104, 105, 201

| | | | | |
|---|---|---|---|---|
| 1 | Continuous Hinge (xtra HD) | X_C Series | | PE |
| 1 | Classroom Lock | 72 11G37 LL | US26D | SA |
| 1 | Small Format Inter Core | 33700006N | 26 | MC |
| 1 | Surface Overhead Stop | 9-X36 | 630 | RF |
| 1 | Surface Closer (offset) | PRO 7500 | 689 | NO |
| 1 | Threshold (coord w/ details) | 1716AK FHSL14SS | | PE |
| 1 | Head & Jamb Gasketing | 2891APK | | PE |
| 1 | Sweep | 315CN | | PE |

**Set: 6.0**
Description: Exterior FRP Sgl - Booth; Ref - Classroom Lock
Doors - 109

| | | | | |
|---|---|---|---|---|
| 1 | Continuous Hinge (xtra HD) | X_C Series | | PE |
| 1 | Classroom Lock | 72 11G37 LL | US26D | SA |
| 1 | Small Format Inter Core | 33700006N | 26 | MC |
| 1 | Surface Closer | R/PR 7500 | 689 | NO |
| 1 | Door Stop | 401; 404; 441CU (or per spec) | US26D | RO |
| 1 | Threshold (coord w/ details) | 1716AK FHSL14SS | | PE |
| 1 | Head & Jamb Gasketing | 2891APK | | PE |
| 1 | Sweep | 315CN | | PE |

**Set: 7.0**
Description: Exterior FRP Sgl - Family Toilet
Doors - 112

| | | | | |
|---|---|---|---|---|
| 1 | Continuous Hinge (xtra HD) | X_C Series | | PE |
| 1 | Privacy Lock | 11U65 LL | US26D | SA |
| 1 | Classroom Deadlock | 72 4877 | US32D | SA |
| 1 | Small Format Inter Core | 33700006N | 26 | MC |

| | | | | |
|---|---|---|---|---|
| 1 | Surface Closer | R/PR 7500 | 689 | NO |
| 1 | Door Stop | 401; 404; 441CU (or per spec) | US26D | RO |
| 1 | Threshold (coord w/ details) | 1716AK FHSL14SS | | PE |
| 1 | Head & Jamb Gasketing | 2891APK | | PE |
| 1 | Sweep | 315CN | | PE |
| 1 | Coat Hook | RM811 | US26D | RO |

Notes: Deadlock is for after-hours locking.

**Set: 8.0**
Description: Storage; Jan
Doors – 102, 103

| | | | | |
|---|---|---|---|---|
| 3 | Hinge (heavy weight) | T4A3386 (qty, size, nrp per spec) | US32D | MK |
| 1 | Classroom Lock | 72 11G37 LL | US26D | SA |
| 1 | Surface Closer | R/PR 7500 | 689 | NO |
| 1 | Kick Plate | K1050 10" 4BE CSK | US32D | RO |
| 1 | Door Stop | 401; 404; 441CU (or per spec) | US26D | RO |
| 1 | Head & Jamb Seal (adhesive) | S44BL | | PE |

**Set: 9.0**
Description: Ref Toilet
Doors - 108

| | | | | |
|---|---|---|---|---|
| 3 | Hinge (heavy weight) | T4A3386 (qty, size, nrp per spec) | US32D | MK |
| 1 | Privacy Lock | 11U65 LL | US26D | SA |
| 1 | Surface Closer | R/PR 7500 | 689 | NO |
| 1 | Kick Plate | K1050 10" 4BE CSK | US32D | RO |
| 1 | Door Stop | 401; 404; 441CU (or per spec) | US26D | RO |
| 3 | Silencer | 608 | | RO |
| 1 | Coat Hook | RM811 | US26D | RO |

**Set: 10.0**
Description: Team Room Toilet
Doors - 113

| | | | | |
|---|---|---|---|---|
| 1 | Continuous Hinge | FM300 | 630 | MR |
| 1 | Push Pull | 111x73C/73CL | US32D | RO |
| 1 | Surface Closer | R/PR 7500 | 689 | NO |
| 1 | Kick Plate | K1050 10" 4BE CSK | US32D | RO |
| 1 | Door Stop | 401; 404; 441CU (or per spec) | US26D | RO |
| 3 | Silencer | 608 | | RO |

**Set: 11.0**
Description: Roll-Up Door
Doors – 104a, K02, K03

| | | | |
|---|---|---|---|
| 1 | Hardware | Supplied with door assembly | 00 |

**Set: 12.0**
Description: Elec Pair
Doors – 114c

| | | | | |
|---|---|---|---|---|
| 6 | Hinge (heavy weight) | T4A3386 (qty, size, nrp per spec) | US32D | MK |
| 2 | Flush Bolt | 555 | US26D | RO |
| 1 | Dust Proof Strike | 570 | US26D | RO |
| 1 | Storeroom Lock | 41 72 11G04 LL | US26D | SA |
| 1 | Surface Closer | R/PR 7500 | 689 | NO |
| 2 | Door Stop | 401; 404; 441CU (or per spec) | US26D | RO |
| 1 | Astragal | 357SP | | PE |
| 2 | Silencer | 608 | | RO |

**Set: 13.0**
Description: Exterior Kiosk - Classroom Lock
Doors – K01

| | | | | |
|---|---|---|---|---|
| 1 | Continuous Hinge (xtra HD) | X_C Series | | PE |
| 1 | Classroom Lock | 72 11G37 LL | US26D | SA |
| 1 | Small Format Inter Core | 33700006N | 26 | MC |
| 1 | Surface Overhead Stop | 9-X36 | 630 | RF |
| 1 | Surface Closer | R/PR 7500 | 689 | NO |
| 1 | Threshold (coord w/ details) | 1716AK FHSL14SS | | PE |
| 1 | Head & Jamb Gasketing | 2891APK | | PE |
| 1 | Sweep | 315CN | | PE |

END OF SECTION 087100

SECTION 08 80 00

GLASS AND GLAZING

Part 1 - GENERAL

1.01 Applicable provisions of the Conditions of the Contract and Division #1, General Requirements, govern work in this Section.

1.02 DESCRIPTION OF WORK

A. The work of this Section consists of the provision of all plant, materials, labor and equipment and the like necessary and/or required for the complete execution of all glass and glazing work of this project as required by the schedules, keynotes and drawings, including, but not limited to the following:

1. Material requirements and labor restrictions are established herein for work specified in Sections 08 41 16, 08 42 00 and 08 52 00.
2. All glass shall have "pencilled" edges where exposed and "flat" or "miter" ground where butt glazed.

   **All glass for general exterior use, unless scoped otherwise above, shall be of same composition, i.e. NO variation of thickness in glass or unit assembly from one window to another.**

   NOTE: All glass thickness shall be determined by size of lights for both interior and exterior as well as wind loading for exterior locations.

3. Provide mirror systems, framed and unframed as required. Coordinate with Section 10 28 00. When direct mounted; **provide surface primer** as recommended by the manufacturer of the nominated mastic.
4. Provide fire rated glazing at exterior window and door/transom assemblies as indicated on Drawings.
5. Perform balance of glazing as may be required by the Drawings and these specifications to complete the glazing requirements of this project.

NOTE:

- Safety Glazing is required by Code:
  - Wherever glazing or any portion of glazing is within 18 inches of a floor or platform riser level.
  - At corridors, wherever glazing is within 48 inches of a floor.
  - ‘Safety Glazing’ to be at least 1/4 inch thick ‘fully tempered’ or ‘laminated’ glass.
  - Safety Glazing is to bear the certification label of the ‘Safety Glazing Certification Council’ or another certification agency acceptable to agencies having jurisdiction.
  - Safety Glazing shall further comply with the “Code of Federal Regulations Part 16, CFR 1201” or (AKA) “CPSC 16 CFR 1201” entitled “Safety Standard for Architectural Glazing Materials”.

1.03 RELATED WORK SPECIFIED ELSEWHERE - Entire Project Specification with specific reference to those sections noted above and as follows:

NOTE: Coordinate with specifications for factory glazed units. Material requirements and labor restrictions outlined herein govern said work.

A. 05 50 00 - Miscellaneous Metals
B. 07 90 00 - Caulking and Sealing/Joint Sealants
C. 09 90 00 - Painting

1.04 QUALITY ASSURANCE

A. The work of this Section shall be performed by a "Specialty Contractor as defined in the General Conditions; further, installation shall be done by a qualified installer who employs glass installers for this Project who are certified under the National Glass Association's Certified Glass Installer Program.

B. All lights within 18 inches of the floor, by CPSC Standard (#42 FR 1428; 16 CFR part 1201) and local jurisdiction labor laws be safety glazed and marked with "hazard advisory" decals in minimum 1-1/2 inch height and in design and color approved and selected for use by the Architect. Material shall be opaque non-reflective vinyl film, 0.0035 inch minimum thickness, with pressure sensitive adhesive backing (mounted or unmounted), suitable for exterior as well as interior applications.

| |
|---|
| All glazing within 18 inches of the floor shall be “safety glazed” as above. |

C. All work of this section shall be in accordance with general industry practice governing glass and glazing and shall be accomplished in accordance with the requirements of the Manual of the Glass Association of North America (GANA) and Sealed Insulation Glass Manufacturers Association, latest editions, for the surrounds specified and required.

D. All glazing products shall be labeled as to thickness and type and said labels shall be left in place for inspection until directed to remove same.

F. Conduct a quality control program that includes the following as a minimum:
   1. Inspect conditions and materials to verify conformity with the contract requirements.
   2. Inspect conditions and materials and coordinate with the Architect to verify proper substrate preparation in conformance with the contract requirements.
   3. Inspect work in progress and during inclement weather to verify that the work is in compliance with established procedures, and that there are no leaks through the curtain wall.

G. Reference Standards (**Flat Glass Industry Specifications**)

| | | |
|---|---|---|
| 1. | ASTM C 1036-01 | Standard Specification for Flat Glass |
| 2. | ASTM C 1048-04 | Standard Specification for Heat-Treated Flat Glass-Kind HS, Kind FT Coated and Uncoated Glass |
| 3. | ASTM C 1172-03 | Standard Specification for Laminated Architectural Flat Glass |
| 4. | ASTM C 1376-03 | Standard Specification for Pyrolytic and Vacuum Deposition Coatings on Flat Glass |
| 5. | ASTM E 1300-04 ϵ1 | Standard Practice for Determining Load Resistance of Glass in Buildings |

| | | |
|---|---|---|
| 6. | ASTM E 2190-02 | Standard Specification for Insulating Glass Unit Performance and Evaluation |
| 7. | ANSI Z97.1-04 | American National Standard for Safety Glazing Materials Used in Buildings - Safety Performance Specifications Method of Test |
| 8. | AAMA | Sealants Manual |
| 9. | GANA | Glazing Manual and Sealant Manual |
| 10. | SIGMA | Sealed Insulating Glass Manufacturers Association |
| 11. | ASCE 7 | Minimum Design Loads for Buildings and Other Structures |
| 12. | ASTM C 509 | Specification for Cellular Elastomeric Pre-Formed Gasket and Sealing Material |
| 13. | ASTM C 794 | Test Methods for Adhesion in Peel of Elastomeric Joint Sealants |
| 14. | ASTM C 864 | Specification for dense elastomeric compression seal gaskets, setting blocks and spacers |
| 15. | ASTM D 395 | Standard test method for rubber property - Compression set |
| 16. | ASTM D 746 | Standard test method for brittleness temperature of plastics and elastomers by impact |
| 17. | ASTM D 865 | Standard test method for rubber - Deterioration by drying in air (test tube enclosure) |
| 18. | ASTM D 897 | Tensile testing of adhesive bonds |
| 19. | ASTM D 2240 | Standard test method for rubber property - Durometer hardness |
| 20. | ASTM E 90 | Standard Test Method for Laboratory Measurement of Airborne Sound Transmission Loss of Building Partitions and Elements |
| 21. | ASTM E 546 | Test for dew point of sealed insulating glass units |
| 22. | ASTM E 773 | Standard test methods for seal durability of sealed insulating glass units |
| 23. | ASTM E 774 | Standard specification for sealed insulating glass units |
| 24. | ASTM 1332 | Standard Classification for Determination of Outdoor-Indoor Transmission Class |
| 25. | ASTM C 920 | Standard specification for elastomeric joint sealants |
| 26. | ASTM C 1087 | Standard test method for determining compatibility of liquid-applied sealants with accessories used in structural glazing systems. |

H. Fire Resistance Rated Glass: Each lite shall bear permanent, nonremovable label of UL or WHI certifying it for use in tested and rated fire resistive assemblies.

I. Fire Protective Glazing Products for Door Assemblies: Products identical to those tested per ASTM E 152 and UL 10B, labeled and listed by UL or other certification agency acceptable to authorities having jurisdiction.

J. Fire Rated Glazing Code Compliance Requirements
   1. ASTM E 119 -Fire Tests of Building Construction and Materials.
   2. NFPA 80 - Fire Doors and Windows.

3. UL 263 - Fire Resistance Ratings.
4. Building Code of the jurisdition of the Work.
5. Fire-rated, clear and wireless glazing material for use in locations such as doors, sidelites, transoms, borrowed lites, and wall applications with fire rating requirements as established herein with hose stream test; for use in interior and exterior applications.
6. Provides protection by reducing the radiant and conductive heat transfer.

1.05 SUBMITTALS – Coordinate with Section 01 33 00

- Submittals shall be made in groupings where installations are complementary. Failure to comply with this requirement will be cause for rejection of any or all submittals.
- As set forth in Sections 01 33 00 and 01 32 00, prepare and submit a fully developed submittal schedule; note review times set forth in Section 01 33 00 are deemed “average”, for large submissions allow longer review times.
- Attention is directed to Section 01 31 14 for coordination drawing requirements for this project. These drawings are critical to the proper execution of the Work and failure to honor these requirements may become the basis for denial of any and all claims for either or both “time” and “money”.
- The Contractor is encouraged to submit for approval products made from recycled and/or environmentally responsible material. Every effort will be made by the Design Professional Team to approve these materials; the substitution request procedure shall still be enforced.

A. Product Data - Manufacturer's specifications and installation instructions for each type of glass specified herein:
   1. Spacers.
   2. Compressible filler rod.
   3. Mastics/primers and the like.
B. Samples
   1. Glass: 12 inch by 12 inch pieces for each type of glass specified herein.
   2. Setting blocks, full size.
   3. Color Samples for Glazing Materials: Manufacturer's standard colors.
      a. Marking Decals: Manufacturer's standard colors.
C. Calculations: Sealed by a Professional Engineer registered in the jurisdiction of the work, showing the adequacy of the new glass to meet local code requirements; this submittal shall be made in conjunction with engineering requirements set for in Sections 08 41 16 and 08 42 00 and shall be integral with that submission.
D. Quality Control Submittals
   1. Test Reports: Certified test data to sufficiently substantiate glass or glass assembly compliance with requirements specified.
   2. Sealant Compatibility Reports: In accordance with ASTM C1087 including rubber glazing to glass and glazing sealants. Include sealant compatibility between sealant, glazing components, and aluminum frame finish. Reports shall address both chemical and adhesion compatibility issues.
   3. Submit reports for all quality control tests of shop assembled units.
   4. Certified test reports indicating the acoustical performance of the window

meets the Sound Transmission Class (STC) performance called out in the schedule or drawings. Test data shall be produced from an accredited independent acoustical laboratory. Reports should indicate that the test was performed on the window assembly of the type to be supplied in conformance with the requirements of test method ASTM E90. Test data shall indicate type of hardware used on the window. Manufacturer shall indicate whether additional treatment of the window frame, by the insertion of grout or high density glass/mineral fiber in the cavity between frame and wall, shall be necessary to meet the acoustical requirements of this specification.

E. Certification of Specification Compliance:
   1. Affidavit by the material supplier, certifying type and quality of glass furnished.
   2. Product Test Listings: From a qualified testing agency indicating fire-rated glass complies with requirements, based on comprehensive testing of current product.

F. Material Safety Data Sheet (MSDS) must be submitted for each product.

1.06 PRODUCT DELIVERY, STORAGE AND HANDLING (Coordinate with Section 01 61 00)

A. All glazing materials shall be delivered to the job site in unopened factory sealed containers clearly labeled as to product, manufacturer, color and/or other pertinent characteristics.

B. Materials shall be stored under conditions recommended by the manufacturer.

C. All measurements and sizes for the work shall be obtained and verified by the Contractor who shall be responsible for correct and accurate fitting of his work.

D. Glazing molds shall be removed and replaced in their correct locations in such a manner as not to mar moulding or the screws securing same.

E. Do not expose fire rated glass to temperatures greater than 120 degrees F during storage and transportation. Do not expose the non-PVB side of glass to UV light.

1.07 GENERAL SYSTEM REQUIREMENTS

A. General: Provide glazing systems capable of withstanding normal thermal movement and wind and impact loads (where applicable) without failure, including loss or glass breakage attributable to the following: defective manufacture, fabrication, and installation; failure of sealants or gaskets to remain watertight and airtight; deterioration of glazing materials; or other defects in construction.

B. Design Loads: Design, fabricate, and install glass to withstand an inward and outward uniform wind pressure as determined by wind-tunnel testing. The minimum design wind pressures are +50 psf/-55 psf.

C. Glass Statistical Factors (Safety Factor): Glass thicknesses are to be determined by the Contractor and/or glass manufacturer. All glass as shown will be provided in thickness such that the probability of breakage at the “Design Wind Pressure” plus live load will not exceed 1 lite per 1,000 lites. The glass manufacturer shall provide, on request, substantiating glass breakage data if such data is not otherwise available as part of the manufacturer’s published data. Minimum single lite thickness is ¼ inch. Provide glass lites in the thickness designations indicated for various size openings, but not less than thicknesses and in strengths (annealed or heat treated) required to meet or exceed the following criteria:
   1. Glass Thicknesses: Select minimum glass thicknesses to comply with ASTM E 1300, according to the following requirements:

a. Specified Design Wind Loads: As required by Code.
b. Maximum Lateral Deflection: For the following types of glass supported on all 4 edges, provide thickness required that limits center deflection at design wind pressure to 1/50 times the short side length or 1 inch, whichever is less.
1. For insulating glass.
2. For laminated-glass lites.

D. Thermal Movements: Provide glazing that allows for thermal movements resulting from the following maximum change (range) in ambient and surface temperatures acting on glass framing members and glazing components. Base engineering calculation on surface temperatures of materials due to both solar heat gain and nighttime-sky heat loss.
1. Temperature Change (Range): 120 deg F, ambient; 180 deg F, material surfaces.

E. Thermal and Optical Performance Properties: Provide glass with performance properties specified based on manufacturer's published test data, as determined according to procedures indicated below:
1. For monolithic-glass lites, properties are based on units with lites ¼" (6.0 mm) thick.
2. For laminated-glass lites, properties are based on products of construction indicated.
3. For insulating-glass units, properties are based on units with lites ¼" (6.0 mm) thick and a nominal 1/2-inch-wide interspace.
4. Center-of-Glass Values: Based on using LBL-44789 WINDOW 5.0 computer program for the following methodologies:
a. U-Factors: NFRC 100 expressed as Btu/ sq. ft. x h x deg F.
b. Solar Heat Gain Coefficient: NFRC 200.
c. Solar Optical Properties: NFRC 300.

F. Weep System: Each glass glazing rabbet shall be wept. All weeps shall be located at the lowest drainage point of the section to drain all water from the section. Weeps shall consist of three holes/slots located at the center and near the ends of the spans and shall have a dimension of 3/8 in. diameter.

1.08 SEQUENCING

A. Coordinate schedule, work, and installation procedure with other trades to ensure construction of conditions shown in Contract Documents, and to ensure protection of building and interior from weather and damage.

1.09 SPECIAL GUARANTEE/WARRANTY TERMS

A. Provide written warranty agreeing to repair or replace defective materials and workmanship during warranty period. Defective materials and workmanship include, but are not limited to: Failure as described in Performance Requirements.
B. Warranty does not include damage caused by vandalism, or natural conditions exceeding the performance requirements. Warranty and its enforcement shall not deprive Owner of other action, right or remedy.
C. Warranty period for glass and glazing shall be ten (10) years from date of substantial completion; said guarantee/warranty shall be in addition to the standard 1 year term.
D. Provide an extended 5 year guarantee/warranty against desilvering of mirrors or delamination of backing on safety glass in addition to standard 1 year term.

E. Warranty period for Fire-Rated Glass: 5 years from date of shipment by manufacturer.
F. System warranties includes materials, labor and access.

1.10 SUSTAINABILITY
A. In the selection of the products and materials of this section as well as for the entire project, preference will be given to those with the following characteristics:
1. Water based.
2. Water-soluble.
3. Can be cleaned up with water.
4. Non-flammable.
5. Biodegradable.
6. Low or preferably no Volatile Organic Compound (VOC) content.
7. Manufactured without compounds that contribute to ozone depletion in the upper atmosphere.
8. Manufactured without compounds that contribute to smog in the lower atmosphere.
9. Do not contain methylene-chloride.
10. Do not contain chlorinated hydrocarbons.
11. Contains the least possible of post-consumer or post-industrial waste.

Part 2 - PRODUCTS

2.01 GENERAL
A. Furnish all glass and glazing materials in accordance with the schedules and/or details shown on the contract drawings and in conformance with the following specifications.
B. The basis of this specification is upon “Solarban 70 XL” by PPG Industries for all exterior glazing other than that used in fire rated exterior windows and entrance doors which shall be clear/clear insulated and tempered assemblies. Products by Viracon (VE1-2M) or Cardinal Glass (LoE-270) shall be considered as equals providing they meet or exceed the following performance characteristics of the specified product. Color is a prime consideration.

**Solarban 70XL Performance Values**

| Visible Light Transmission | U-Value Winter | SHGC | Light to Solar Gain | Outdoor Visible Light Reflectance |
|---|---|---|---|---|
| 64% | 0.28 | 0.27 | 2.37 | 12% |

or approved equal conforming to the general guidelines outlined in ASTM C 1036 for flat glass and C 1048 for heat treated glass and E 2188, 2189 and 2190 for sealed insulating glass units..

NOTE: Coating system shall be "hard coat" pyrolytic or “CVD” for all single lights used in dual glazing configurations and “spectrally selective” soft coating for sealed insulating units.

**NO SOFT COATING WILL BE PERMITTED ON SINGLE LIGHTS OF GLASS IN ANY LOCATION**.

C. Glazing to have manufacturer's factory installed frit in opacity as indicated on drawings and custom pattern and gradation as selected by Architect.

2.02 INSULATING GLASS

A. Units shall be "dual seal" hermetically sealed with a primary butyl rubber, PIB or polyisbutylene and secondary seal of polysulfide or silicone sealant as may be standard with the manufacturer and compatible with glazing materials to be used in setting of glass as specified in Sections 08 40 00 and 08 51 10.

B. Individual lites shall be separated by a either aroll formed stainless steel spacer filled with a low moisture absorbing desiccant similar and equal to "ExtremEdge" Clear by Viracon or a hybrid warm edge product comprised of stainless steel and a low conductivity thermoplastic as manufactured by Technoform – TGI-Spacer. Corners of spacer shall be fused, welded or bent as standard with the manufacturer. Spacer welds or solder shall not protrude above spacer surface. Welds and solder joints shall be solid and free of pin holes.

C. Units shall be certified by the Insulating Glass Certification Council (IGCC) and shall have the IGCC label and "A" classification permanently etched in the corner of each of the insulating units used.

D. Shading coeficient for all exterior insulated glass = 0.40

E. Units shall not contain breather or capillary tubes or similar penetrations.

F. A dew/frost point above -20°F shall constitute seal failure.

G. Provide frosted interlayer at glass doors at all toilet and locker room spaces and where indicated and/or scheduled.

2.03 FLOAT GLASS

A. Monolithic annealed glass, "select" quality and thickness required.

When in low emissive configuration, glass shall be fabricated with pyrolytic metal oxide low emissive coating during manufacturing which results in a glass that can be glazed as single light without damage to the high performance coating.

2.04 SAFETY GLAZING

A. Tempered float glazing, reference ASTM C 1048.

1. All glass to be of "glazing" quality and in the case of inner lights of insulated assemblies, coated with low emissive coating system on #2 surface of assembled panel.
2. Glass shall be heat-treated by horizontal (roller Hearth) process with inherent roller-wave distortion pattern parallel to the bottom edge of the glass as installed.
3. Flatness Tolerances:
   a. Roller-Wave or Ripple: The deviation from flatness at any peak shall not exceed 0.003 inches as measured per peak to valley for 1/4 inch (6mm) thick glass. Electronic readout per lite is requird as a submittal confirming this fabrication tolerance.
   b. Bow and Warp: The bow and warp tolerences shall not exceed 1/32 inch per linear foot.
4. Material used for counter tops, glass railings and glazed wall assemblies shall be "heat soaked" to eliminate occlusions.
5. Glass edges in conjunction with butt glazed wall shall be ground square or

"flat ground" as customary in the industry

B. Laminated safety:
1. Minimum 1/4 inch material "standard" with 2 lights of clear float laminated with 0.060 inch PVB interlayer. It is the Contractor's responsibility to provide engineering confirmation of deflection criteria conforming to L/650 or 200 psf point loading with a design factor of 2.5.

NOTE: When used in insulated glass configuration, the assembly with be laminated to a 0.030 inch PVB interlayer.

2.05 FIRE RATED GLASS SYSTEMS – Safety Design
B. FireLite Plus
1. All glass designated on the drawings that is both fire-rated and safety-rated shall be 5/16 inch (8mm) thick FireLite Plus.
2. Each piece of FireLite Plus is permanently labeled with the FireLite Plus, Warnock Hersey and Underwriters Laboratories logo on sizes up to 3,325 square inches and with the FireLite Plus logo only for sizes that exceed the listing (as approved by the local authority having jurisdiction).
3. FireLite Plus shall be glazed into the appropriate fire-rated frame with an approved glazing compound (silicone or closed cell PVC tape), as supplied by the installer.
D. Glazing Accessories
1. The glazing material perimeter shall be separated from the perimeter framing system with approved flame retardant glazing tape. The fire resistant glass panels shall be continuously caulked around the edge to the retainer frame utilizing neutral cure silicone similar and equal to G.E. "Silglaze N", clear or equal by Dow Corning (790/795); Tremco (Spectrum 1 or 2) or Pecora (890/895).
2. Provide sealants for use inside of the weatherproofing system that have a VOC content of 100 g/L or less when calculated according to 40 CFR 59, Subpart D (EPA Method 24).

2.05 MIRRORS
A. Standard units - 1/4 inch float "silvering" quality glass with electrolitic application of copper to provide first quality distortion free mirrors. Products shall conform to ASTM C 1503-01.
Where frameless, all mirror edges shall be ground and polished to a 45 degree bevel. Apply water-resistant paint to rear side of units prior to setting.
B. Safety units - mirrors for all areas where same are within 18 inches of the floor or where accessible shall be as for "A" above and shall receive a Category II Tape Backing which shall conform to CPSC #16cfr1201 for safety glazing requirements. Units shall be as fabricated by Binswanger Mirror Products or other certified manufacturer.
C. Mirror Hardware:
1. Hardware: Stainless steel shapes in profiles as indicated or as required for installation per drawings and as approved by Architect
2. Fasteners: Stainless steel where exposed.
3. Anchors and Inserts: Provide devices as required for mirror hardware installation. Provide toothed or lead-shield, expansion-bolt devices for

drilled-in-place anchors. Provide galvanized anchors and inserts for applications on inside face of exterior walls and where indicated.

D. Mirror Mastic - Palmer Products Corp. ("Mirror-Mastic Bond" and "Mirro-Mastic Adhesive"); C. Gunther Company ("Ultra/Bond" and "Extra/Bond") or approved equal. Primer systems: As furnished by nominated mirror mastic manufacturer for intended substrates.

E. Fabricate mirrors in the shop to greatest extent possible. Fabricate cutouts for notches and holes in mirrors without marring visible surfaces. Locate and size cutouts so they fit closely around penetrations in mirrors.

2.06 GLAZING ACCESSORIES

A. Gaskets: Closed cell, extruded neoprene, "epdm" or silicone rubber. Exterior ( and acoustical glazing ) seals shall be "soft"; interior seals "hard". Extrusions shall be black in color. Corners shall be either vulcanized or premoulded at option of this Contractor. Size, cross section, packaging, corner conditions, etc. shall be determined by the supplier of the retaining sections and the installer of the glass.

B. Glazing Tape - 100% polybutene base material, non-skinning, non-drying, non-oxidizing, extruded of thickness 1/16 inch larger than opening and of sufficient width to provide contact at channel base or bead and finish flush with sight line. Manufacturers - Pecora, Tremco, 3M or approved equal.

C. Wet Sealants, surrounds - Acrylic terpolymer, 2 part polysulfide, single component polyurethane, butyl rubber or silicone type sealants judged and certified compatible with edge sealants on sealed units and with glazing surrounds.

D. Setting and edge blocks - Shore "A" hardness of 85 +/- 5; material shall be adjudged compatible with secondary seal of insulated glass or in case of single light, neoprene or "epdm". Spacer blocks - as above, Shore "A" of 50 +/- 5. Blocks and spacers shall comply with requirements of AAMA 501.1-94.

E. Glazing compound - standard manufacturer, F.S. TT-G-410E(1)

F. Butt and stopless glazing system sealants – Neutral cure clear silicone by General Electric – “GE1800” or equal product demonstrating chemical compatibility for edge effect equal to or exceeding performance of “GE1800” material. Glazed Wall Retainer System - extruded aluminum of size and shape indicated on the drawings and/or required to retain and support the work; coordinate with Section 08 44 10 for fire rated butt glazed wall.

Frameless glazing systems shall be composed of top and bottom retainers constructed as part of work of Section 09 29 00 employing Stylmark assemblies “110359 – Top” and “110361 – Bottom” tracks and black rolled in glazing gaskets. Sealant to vertical surrounds with “GE1800” material, black.

Part 3 - EXECUTION

3.01 INSPECTION AND ACCEPTANCE

A. Examine all surfaces and contiguous elements to receive work of this section and correct, as part of the Work of this Contract, any defects affecting installation. Commencement of work will be construed as complete acceptability of surfaces and contiguous elements.

3.02 INSTALLATION - GENERAL

A. All glass and glazing products shall be set in accordance with the applicable

setting guides of the "GANA" or "SIGMA" referenced in Article 1.04 above and as per requirements established by respective window/wall/door manufacturers in the referenced sections.

B. Surfaces shall be dry and free from dust, rust or ice before glazing. Dirty surfaces shall be cleaned with cloth saturated with turpentine or mineral spirits before glazing.

C. All sash settings shall be installed in longest practical length. Splices shall be made at joints in glass or as required. All joints shall be butt, anchored and sealed as per manufacturers recommendations.

D. Keep the glazing rabbet clean and dry during installation of glass.

E. Do not glaze units when ambient air temperature is below 40°F and in presence of any moisture.

3.03 NON-STRUCTURAL GLAZING

A. Refer to Section 08 40 00 for general aluminum framing requirements.

B. Comply with all general glazing requirements.

C. Install elastomeric antiwalk blocks at midheight of jamb in each vision glass opening. Antiwalk blocks shall be 1/8 inch narrower than the space between the glass and vertical mullion. Set blocks in dabs of sealant to hold in place.

3.04 INSTALLATION (Fire-Rated Glazing)

A. Comply with referenced GANA standards and instructions of manufacturers of glass, glazing sealants, and glazing compounds.

B. Protect glass from edge damage during handling and installation. Inspect glass during installation and discard pieces with edge damage that could affect glass performance.

C. Cut glazing tape to length and set against permanent stops, flush with sight lines to fit openings exactly, with stretch allowance during installation.

D. Place setting blocks located at quarter points of glass with edge block no more than 6 inches from corners.

E. Glaze vertically into labeled fire-rated metal frames or partition walls with same fire rating as glass and push against tape for full contact at perimeter of pane or unit; coordinate with Sections 06 20 00 for installation of frames and 08 11 00 for furnishing of fire-rated frames.

F. Place glazing tape on free perimeter of glazing in same manner described above.

G. Do not remove protective edge tape.

H. Install removable stop and secure without displacement of tape.

I. Do not pressure glaze.

J. Knife trim protruding tape.

K. Apply cap bead of silicone sealant along void between the stop and the glazing, to uniform line, with bevel to form watershed away from glass. Tool or wipe sealant surface smooth.

L. Provide minimum 3/16 inch edge clearance.

M. Install in vision panels in fire-rated doors to requirements of NFPA 80.

N. Install so that appropriate UL & Pyrostop markings remain permanently visible.

3.05 INSTALLATION – MIRRORS

A. General: Install mirrors to comply with mirror manufacturer's written instructions and with referenced GANA publications. Mount mirrors accurately in place in a manner that avoids distorting reflected images.

1. GANA Publications: "Glazing Manual" and "Mirrors, Handle with Extreme Care: Tips for the Professional on the Care and Handling of Mirrors."

B. Provide a minimum airspace of 1/8 inch (3 mm) between back of mirrors and mounting surface for air circulation between back of mirrors and face of mounting surface.

C. Install mirrors with mirror hardware. Attach mirror hardware securely to mounting surfaces with mechanical fasteners installed with anchors or inserts as applicable. Install fasteners so heads do not impose point loads on backs of mirrors.

1. Aluminum J-Channels and Cleat: Fasten J-channel directly to wall and attach top trim to continuous cleat fastened directly to wall.
2. Mirror Clips: Place a felt or plastic pad between mirror and each clip to prevent spalling of mirror edges. Locate clips so they are symmetrically placed and evenly spaced.

3.06 MARKING DECALS

A. Install two marking decals on each transparent glass door, and on each transparent glass sidelight which is wider than 20 inches between stiles. Locate decals midway between stiles 34 inches above the floorline.

3.07 GLASS SCHEDULE

A. Fire-Rated FRP Exterior Windows, Fire Rated FRP Doors and Transom
Fire-rated FireLite Plus IGU by TGP or equal – 45 Minute Fire-Rating
- 5/16” FireLite Plus – 9/16” Air Space – 1/4" Temperd glazing
- Transom – FireLite Plus IGU with Silicone Coating Opaci-Coat 3000 or equal – Color as selected by Architect from Manufacturer’s full range of selections.
Coordinate glazing with fire-rated aluminum frames manufacturer and fire-rated FRP door manufacturer.

B. Clad Windows and Doors – Manufacturer’s Standard Dual Pane Assembly with tempered glazing.
Note: Clad wood windows and doors shall have a true divided lite appearance with muntins on interior and exterior, and spacer bar between the glazing in pattern as shown on Drawings

3.08 REPLACEMENT AND CLEANING

A. All cracked, broken, scratched, stained or otherwise damaged glass and all glazing improperly set shall be replaced with perfect glass, properly set at no additional cost to the Owner.

B. Clean glass both sides after painting is complete and dry. Do not disturb glazing with scrapers. Do not use acid solution or water containing caustic soap.

C. At the time of final acceptance of the work, all glass shall be clean and undamaged and all setting materials in perfect condition.

D. Coordinate with requirements of Section 01 77 00.

3.09 WASTE MANAGEMENT – Coordinate with Section 01 74 19

A. Separate float glass and place in designated areas for reuse or recycling (cannot be recycled with beverage-container glass).

B. Separate tempered glass for use as aggregate or nonstructural fill.

C. Separate corrugated cardboard in accordance with the Waste Management Plan and place in designated areas for recycling.

**End of Section**

SECTION 08 90 00

LOUVERS AND VENTS

Part 1 - GENERAL

1.01 Applicable provisions of the Conditions of the Contract and Division #1, General Requirements govern work in this Section.

1.02 DESCRIPTION OF WORK

A. The work of this Section consists of the provision of all plant, materials, labor and equipment and the like necessary and/or required for the complete execution of louver and vent work for this project as required by the schedules, keynotes and drawings, including, but not limited to the following:

1. Provide all louver systems to the extent indicated on the drawings. Coordinate with Division 23 for safing of louvers, mechanical damper units and the like.

1.03 RELATED WORK SPECIFIED ELSEWHERE - Entire Project Specification with specific reference to those sections noted above and as follows:

A. HVAC Specialty Contractor shall provide minimum 20 gauge sheet metal blank off panels for all unused louver areas. unused louver areas, for the purpose of this Contract, shall be deemed to be all louver areas not enjoined or connected to an active plenum. In addition, exterior/visible face of blank off panel shall be cleaned and painted flat black by the HVAC Contractor, prior to installation. Screw panels to louver blades and caulk/seal to provide a weathertight seal.

1.04 QUALITY ASSURANCE

A. Performance Requirements: Provide AMCA and BSRIA test data as required to confirm that the louvers have the specified air and water performance characteristics.

B. Acoustical Performance: Where applicable, submit test reports to confirm that the louvers meet the specified STC and Noise Reduction requirements.

C. Structural Requirements: Design all materials to withstand wind and snow loads as required by the applicable building code. Maximum allowable deflection for the louver structural members to be l/180 or 0.75 inch, whichever is less.

D. Maximum allowable deflection for the louver blades to be l/120 or 0.50 inch across the weak axis, whichever is less.

E. Professional Engineer Requirements: Drawings and structural calculations to be signed and sealed by a professional engineer licensed to practice in the jurisdiction of the work.

1.05 SUBMITTALS – Coordinate with Section 01 33 00

- Submittals shall be made in groupings where installations are complementary. Failure to comply with this requirement will be cause for rejection of any or all submittals.

- As set forth in Sections 01 33 00 and 01 32 00, prepare and submit a fully developed submittal schedule; note review times set forth in Section 01 33 00 are deemed "average", for large submissions allow longer review times.
- Attention is directed to Section 01 31 14 for coordination drawing requirements for this project. These drawings are critical to the proper execution of the Work and failure to honor these requirements may become the basis for denial of any and all claims for either or both "time" and "money".
- The Contractor is encouraged to submit for approval products made from recycled and/or environmentally responsible material. Every effort will be made by the Design Professional Team to approve these materials; the substitution request procedure shall still be enforced.

A. Material Safety Data Sheet (MSDS) must be submitted for each product.
B. Product Data
   Air flow and water entrainment performance test results.
   Material types and thickness.
C. Shop Drawings
   1. Include elevations, sections and specific details for each louver.
   2. Show anchorage details and connections for all component parts.
   3. Include signed and sealed structural calculations.
D. Submit color chips for approval.

1.06 PRODUCT DELIVERY, STORAGE AND HANDLING (Coordinate with Section 01 61 00)
A. All materials shall be delivered to the job site in unopened factory sealed containers clearly labeled as to product, manufacturer, color and/or other pertinent characteristics.
B. Materials shall be stored under conditions recommended by the manufacturer.

1.07 REFERENCE STANDARDS
A. Air Movement and Control Association International, Inc.
   1. AMCA Standard 500-L-99 Laboratory Methods of Testing Louvers for Rating
   2. AMCA Publication 501 Application Manual for Louvers
B. The Aluminum Association Incorporated
   1. Aluminum Standards and Data
   2. Specifications and Guidelines for Aluminum Structures
C. American Society of Civil Engineers
   1. Minimum Design Loads for Buildings and Other Structures
D. American Society for Testing and Materials
   1. ASTM B 209
   2. ASTM B 211
   3. ASTM B 221
   4. ASTM E 90-90
E. Architectural Aluminum Manufacturers Association
   1. AAMA 800 Voluntary Specifications and Test Methods for Sealants
   2. AAMA 605.2 Voluntary Specification for High Performance Organic Coatings on Aluminum Extrusions and Panels.
   3. AAMA TIR Metal Curtain Wall Fasteners

4. AAMA 2605-98 Superior Performing Organic Coatings on Aluminum Extrusions and Panels

1.08 SUSTAINABILITY

A. In the selection of the products and materials of this section as well as for the entire project, preference will be given to those with the following characteristics:
   1. Water based.
   2. Water-soluble.
   3. Can be cleaned up with water.
   4. Non-flammable.
   5. Biodegradable.
   6. Low or preferably no Volatile Organic Compound (VOC) content.
   7. Manufactured without compounds that contribute to ozone depletion in the upper atmosphere.
   8. Manufactured without compounds that contribute to smog in the lower atmosphere.
   9. Do not contain methylene-chloride.
   10. Do not contain chlorinated hydrocarbons.
   11. Contains the least possible of post-consumer or post-industrial waste.

Part 2 - PRODUCTS

2.01 LOUVERS

A. 50% free area, 4” deep, Horizontal Blade, Drainable, Stormproof type similar to Ruskin ELF375DX – Clear annodized Class II finish. Assemblies shall be complete with all accessories including bird screens, frames, sills and all required accessories.

B. Typical Finish: Factory finished using a three-coat, shop-applied, baked-on fluoropolymer coating system based on Atochem North America, Inc., Kynar 500 resin or Ausimont U.S.A., Inc., Hylar 5000 resin (70% polyvinylidene fluoride, PVDF), formulated by a licensed manufacturer and applied by manufacturer's approved applicator to meet AAMA Publication 2605.

   Coating system shall provide minimum dry film thickness consisting of:
   1. 0.25 ± 0.05 mil primer
   2. 1.0 mil min. barrier coat
   3. 1.0 mil min. color coat

   The finish shall be in strict accordance with the formulator’s specifications and applied by an approved formulator/applicator.

   Custom color as selected by Architect.

C. Unit assemblies within building, not set in doors or transoms shall be "steel" blade, channel frame design of a minimum 50% free air and shall be fabricated from 16 gauge steel. All fabrication requirements shall be as set forth in Section 08 11 00. Units to be field finished as part of work of Section 09 90 00.

Part 3 - EXECUTION

3.01 INSPECTION AND ACCEPTANCE

A. Examine all surfaces and contiguous elements to receive work of this section and correct, as part of the Work of this Contract, any defects affecting installation. Commencement of work will be construed as complete acceptability of surfaces and contiguous elements.

3.02 INSTALLATION

A. Units shall be installed true to line and level by the manufacturer or his authorized representative in accordance with approved shop drawings.

B. All operating units shall be adjusted and left in perfect working order.

3.03 CLEANUP AND PROTECTION

A. Protect all adjacent work and finished surfaces from damage caused by the installation of the work of this Section.

B. Damage caused by the handling, storing or installation of the work herein, or failure to provide adequate protection of surrounding areas shall be repaired or replaced at no additional cost to the Owner.

C. All debris resulting from construction operations will be removed daily and upon final completion, all operating parts will be cleaned and protection removed.

3.04 WASTE MANAGEMENT – Coordinate with Section 01 74 19

A. Separate and recycle materials and material packaging in accordance with Waste Management Plan and to the maximum extent economically feasible and place in designated areas for recycling.

B. Set aside and protect materials suitable for reuse and/or remanufacturing.

C. Separate and fold up metal banding; flatten and place along with other metal scrap for recycling in designated area.

**End of Section**

SECTION 09 29 00

GYPSUM DRYWALL

Part 1 - GENERAL

1.01 Applicable provisions of the Conditions of the Contract and Division #1, General Requirements, govern work in this Section.

1.02 DESCRIPTION OF WORK

A. The work of this Section consists of the provision of all plant, materials, labor and equipment and the like necessary and/or required for the complete execution of all gypsum drywall cladding, stud framing and accessory work for this project as required by the schedules, keynotes and drawings.

1.03 RELATED WORK SPECIFIED ELSEWHERE - Entire Project Specification.

1.04 QUALITY ASSURANCE

A. All gypsum construction required under this phase of the work shall be performed in strict accordance with the following Reference Standards:
   1. Drywall Construction Guidelines promulgated by U.S. Gypsum within the 4th edition of the Gypsum Construction Handbook.
   2. ASTM C 754, Specifications for Installation of Steel Framing Members to Receive Screw Attached Gypsum Wallboard.
   3. ASTM C 840, Standard Specification for Application and Finishing of Gypsum Board.
   4. ASTM C 1178 - Standard Specification for Glass Mat Water Resistant Gypsum Backing Panel.
   5. ASTM D 3273 - Standard Test Method for Resistance to Growth of Mold on the Surface of Interior Coatings in an Environmental Chamber.
   6. ASTM E 90 - Standard Test Method for Laboratory Measurement of Airborne Sound Transmission Loss of Building Partitions and Elements.
   7. Applicable publications of the Gypsum Association; 810 First Street NE; Washington, DC 20002.
   8. Balance of ASTM specifications governing gypsum construction, framing and fasteners as applicable to intended installation including - C 36, C79, C 442, C 645, C 931, C 1002, C 1047 and, as recognized by governing agencies/code facilitators ASTM C 1396.

B. Definitions: Gypsum Board Construction Technology: Refer to ASTM C 11 and GA-505 for definitions of terms for gypsum board assemblies not defined in this Section or in other referenced standards.

C. Sound Transmission Characteristics: For gypsum board assemblies with STC ratings, provide materials and construction identical to those assemblies whose STC ratings were determined according to ASTM E 90 and classified according to ASTM E 413 by a qualified independent testing agency.

D. Fire rated Construction Ratings: Wherever fire resistance classifications (2 hour, 1 hour, and similar designations) are indicated on the Drawings, or required by local fire regulations and codes, for walls and partitions, provide materials, accessories, and use assemblies which have been listed by UL or tested in excess of requirements of ASTM E 119 for the type of construction shown and the

governing building code and fire regulations, other requirements of these specifications notwithstanding.

1.05 SUBMITTALS – Coordinate with Section 01 33 00

- Submittals shall be made in groupings where installations are complementary. Failure to comply with this requirement will be cause for rejection of any or all submittals.
- As set forth in Sections 01 33 00 and 01 32 00, prepare and submit a fully developed submittal schedule; note review times set forth in Section 01 33 00 are deemed “average”, for large submissions allow longer review times.
- Attention is directed to Section 01 31 14 for coordination drawing requirements for this project. These drawings are critical to the proper execution of the Work and failure to honor these requirements may become the basis for denial of any and all claims for either or both “time” and “money”.
- The Contractor is encouraged to submit for approval products made from recycled and/or environmentally responsible material. Every effort will be made by the Design Professional Team to approve these materials; the substitution request procedure shall still be enforced.

A. Certification of Specification Compliance on all materials.
B. Product Data: Submit manufacturers' specifications for the following products: gypsum board, joint compound, acoustical sealant, insulation, metal studs and fasteners.
C. Samples:
   1. Gypsum Board: 12 inches square, each type specified.
   2. Fasteners: 10, each type.
   3. Acoustical Sealant: 1 pint.
   4. Insulation: 12 inches square, each type specified.
   5. Studs, tracks, shoes, furring channels and accessories: 12 inch lengths, each type specified/required.
   6. Trim systems, including reveal shapes.
D. Shop drawings and engineering calculations for any special areas of construction as determined by the Architect where same, in his opinion deviates from normal construction practice.
E. Material Safety Data Sheet (MSDS) must be submitted for each product.

1.06 PRODUCT DELIVERY, STORAGE AND HANDLING (Coordinate with Section 01 61 00)
A. Delivery and Handling
   1. Deliver materials to the project site with manufacturer's labels intact and legible.
   2. Handle materials with care to prevent damage.
   3. Deliver fire rated materials bearing testing agency label and required fire classification numbers.
B. Storage
   1. Store materials inside under cover, stack flat, off floor.
   2. Stack wallboard so that long lengths are not over short lengths.
   3. Do not overload floor system.
   4. Store adhesives in dry area, provide protection against freezing at all

times.

1.07 ENVIRONMENTAL REQUIREMENTS

A. Temporary Climate control will be used to maintain dry bulb temperatures between 55 and 80 degrees F and relative humidity at less than 50% during installation, taping and curing of joint compound.

B. Ventilation

1. Provide ventilation during and following adhesives and joint treatment applications.
2. Use temporary air circulators in enclosed areas lacking natural ventilation.
3. Under slow drying conditions, allow additional drying time between coats of joint treatment.
4. Protect installed materials from drafts during hot, dry weather.

C. The moisture content of the taped and sanded gypsum board walls be measured and documented by the general contractor at two locations on each wall: the bottom edge and halfway between floor and ceiling. Specify that the interior finish may not be applied until the moisture content of the wallboard is below 0.4% on a gypsum moisture meter or below 12% on a wood meter.

D. Protection: Protect adjacent surfaces against damage and stains.

1.08 SPECIAL MATERIAL AND CONSTRUCTION REQUIREMENTS

A. All material used in areas scheduled and/or shown to receive ceramic tile shall be of fiberglass reinforced concrete panels (FRCP) or “special board” as noted in Part 2 herein. **GREEN board is precluded from use in this project**.

B. Exterior soffit treatments shall be with "exterior" board and fiberglass tape and exterior compound.

C. All ceiling work shall be with “ceiling board” and conventional finish unless otherwise noted on the finish schedules.

D. Where gypsum finish is in contact with existing or new plaster, tape system shall be of the "fiberglass" type using compatible adhesive. Finish and application shall be as specified herein.

E. Maintain fire and acoustical ratings as required by carrying assembly to structure above and safing off.

F. Double all studs at openings, anchor from floor to structure above unless otherwise directed.

G. Tolerances: Do not exceed 1/8 inch in 8 feet variation from plumb or level in any exposed line or surface, except at joints between planes or abutting edges or ends. Shim as required to comply with specified tolerances.

H. Provide control joints in all partitions at 30 foot maximum spacing; at all ceilings at 30 foot maximum centers without perimeter relief (900 square foot increments); at all ceilings at 50 maximum centers with perimeter relief (2500 square foot increments) <u>and</u> where ceilings form "L", "U" or "T" shaped configuration. Where joints are placed in rated partitions, conform to UL assembly data for particular installation; double framing at all joints.

1.09 SUSTAINABILITY

A. In the selection of the products and materials of this section as well as for the entire project, preference will be given to those with the following characteristics:

1. Water based.
2. Water-soluble.

3. Can be cleaned up with water.
4. Non-flammable.
5. Biodegradable.
6. Low or preferably no Volatile Organic Compound (VOC) content.
7. Manufactured without compounds that contribute to ozone depletion in the upper atmosphere.
8. Manufactured without compounds that contribute to smog in the lower atmosphere.
9. Do not contain methylene-chloride.
10. Do not contain chlorinated hydrocarbons.
11. Contains the least possible of post-consumer or post-industrial waste.

Part 2 - PRODUCTS

2.01 MATERIALS - GENERAL

A. Basic gypsum wallboard materials for work in this section, unless otherwise specified, shall be as far as possible by one manufacturer. Materials specified by trade name or model number are those of the United States Gypsum Company, similar and equal products of the following will be acceptable.
   1. G-P Gypsum (Dens-Glass Products)
   2. National Gypsum
   3. CertainTeed
   4. LaFarge North America

***NOTE:* Material shall be furnished with tapered edge for taping systems specified below and subject to criteria established in Part 1 above. It should be noted that no board will be permitted to be hung until a controlled environment is achieved for the work area(s) involved – i.e. fully weather protected and temperature/humidity controlled.**

2.02 WALLBOARD – SPECIFICS - Gypsum Wallboard shall conform to ASTM C 1396 for conventional material and C 1629 for abuse resistant material and shall be in 4 foot widths by largest practical length and as follows:

A. Fire rated board with tapered edge: ASTM C 1396, 5/8 inch throughout project.
B. 1/4 inch board required where curved surfaces occur.
C. Ceramic tile, marble or other "hard treatment" backup at walls scheduled - Glass mat designed gypsum panels or Fiberglass reinforced cement panels (FRCP):
   1. "Dens-Shield Tile Backer" by G-P Gypsum
   2. “GlasRoc Tile Backer” by CertainTeed
   3. "Util-A-Crete" by FinPan Inc.
   4. "Wonderboard/Glas-Crete" by Custom Building Products, Inc.
   5. "Durock" by U.S. Gypsum Co.
D. Mold resistant gypsum shaft liner panels, 1 inch by 24 inches by full height T & G.
E. Exterior ceiling board shall be specially formulated for this use, 1/2 inch minimum thickness, tapered edge design.
F. Interior ceiling board shall be specially formulated for this use, 1/2 inch minimum thickness, tapered edge design. Evidence of compliance with NER 459 code compliance document required.

2.03 FURRING CHANNELS: #25 gauge electro galvanized steel, U.S.G., Drywall Furring Channels, and/or RC1 as required installation.

2.04 ACCESSORIES

A. Corner Beads - General: #25 gauge, perforated, galvanized steel, U.S.G. Dur-A-Bead (#103), flange width as recommended by the manufacturer for each thickness of wallboard. A suitable alternative to conventional beads is the NO-COAT[a] Structural Laminate Drywall Corner "ULTRAFLEX or ULTRATRIM" manufactured by Structus Building Technologies, Inc. Corner beads to be installed at all outside corners of gypsum.

B. Casing Beads: U.S.G. No. 800 Series or similar, as required ( for all terminal edges of gypsum board as indicated ) ( where gypsum board abuts other materials unless noted otherwise ) .

C. Control Joints: U.S.G. No. 093 or similar.

D. Adhesive: recommended by the approved gypsum wallboard manufacturer for each particular installation.

E. Strapping – 20 gauge by 12 inch galvanized sheet steel or patented assembly known as "Danback® Flexible Wood Backing Plate" as distributed by Dietrich or Blaze Frame "PS52 - Flush Backing Plate" (FBP) Flush Mount Backing Profiles".

F. Provide preformed recessed wall niches, ready to receive tile finish specified in Section 09 30 00; two compartment rectangular units as manufactured by Noble Company "Pro Form – Model 304".

2.05 FASTENERS

A. Screws - Type W gypsum drywall screws for fastening gypsum board to wood framing or furring. Type W screws must penetrate into supporting construction at least 5/8 -inch. However, in two-ply construction where the face layer is screw attached, additional holding power is developed in the base ply. In multi-layer applications, screws need only penetrate ½-inch into supports. Type S screws may be substituted for Type W.

B. Expansion Anchors: Federal Specification FF-S-325, Group II, Type 4, Class 1. Provide bolts listed or approved by one or more of the following and of diameter and length as required by structural design calculations required by 1.05 above.

1. Underwriters Laboratory.
2. Warnock Hersey (ITS).
3. International Conference of Building Officials.

C. Powder Actuated Fasteners: Federal Specification FF-P-395b. Manufacturer from AISI 1062 or 1065 steel, austempered to a minimum core hardness of 50 to 54 HRC and zinc plated in accordance with ASTM B 633. Provide fasteners listed or approved by one or more of the following and of type, diameter and length as appropriate for installation and construction type.:

1. Underwriters Laboratory.
2. Warnock Hersey (ITS).
3. International Conference of Building Officials.

2.06 JOINT FINISHING SYSTEM:

A. Perforated reinforcing joint tape - Similar and equal to "Perf-A-Tape" by U.S. Gypsum.

B. Joint Compound - Regular Gypsum Installations: Similar and equal to U.S. Gypsum "Durabond" and/or "Ready-Mixed Joint Compound-All Purpose" ready

mixed joint compound in formulation as determined by the manufacturer as suitable for intended use.

C. Glass fiber pressure sensitive tape system for use with glass mat and/or fiber reinforced cement board at ceramic tile and other hard surfaced areas.
   1. Joints in "exterior soffit" systems scheduled to receive special coating finish shall be treated with uncoated fiberglass tape set into and finished with "chemical curing" waterproof compound and finished as for "Level 3".

2.07 CAULKING/SEALING: Type V for general work, Type VII for fire caulking requirements, reference Section 07 90 00.

A. Acoustical Sealant: Subject to compliance with requirements, products that may be incorporated into the Work include, but are not limited to, the following:

**NOTE: Use sealants that have a VOC content of 250 g/L or less when calculated according to 40 CFR 59, Subpart D (EPA Method 24).**

1. Acoustical Sealant for Exposed and Concealed Joints:
   a. Pecora Corp.; AC-20 FTR Acoustical and Insulation Sealant.
   b. United States Gypsum Co.; SHEETROCK Acoustical Sealant.
2. Acoustical Sealant for Concealed Joints:
   a. Ohio Sealants, Inc.; Pro-Series SC-170 Rubber Base Sound Sealant.
   b. Pecora Corp.; BA-98.
   c. Tremco, Inc.; Tremco Acoustical Sealant.

2.08 INSULATION – Coordinate with Section 07 21 00; most restrictive provisions apply.

A. Sound attenuation batt type thickness and locations shown on drawings shall be of glass fiber formulation, unfaced design and designed for friction fitting within stud cavity. Material shall be class "A" as per ASTM E 84 requirements.

B. Material binders shall be a rapidly renewable organic product and overall product shall have a minimum 35 percent recycled content, classified as post-consumer and shall be free from urea-formaldehyde resins.

C. Fully seal and tape joints when accessible, fully butt all others to insure sound tight joint.

D. Material shall be one of the following:
   1. "Sound Control" by Johns Manville
   2. "Sound Attenuation Batts" by Owens Corning.
   3. "CertaSound" by CertainTeed.

OPTION: Mineral fiber blankets similar and equal to U.S.Gypsum "Thermafiber SAFB" in 2.5 pound density.

2.09 CEILING ACCESSORIES

A. Team Building – Gypsum Board Ceilings and Soffits
   1. Drywall Grid System (Chicago Grid) by Armstrong, or equal, with all required accessories including hangers, main beams, cross tees, perimeter moldings, transition moldings, and all other accessories required for complete installation.
   2. Drywall Ceiling and Soffit Framing – Provide galvanized (G40) metal stud in web widths and spacing as required for conditions per manufacturer's

written requirements for allowable ceiling spans. ProStud by ClarkDietrich or equal.

2.10 Balance of materials required for the work shall be as specified elsewhere in this Section.

Part 3 - EXECUTION

3.01 INSPECTION AND ACCEPTANCE

A. Examine all surfaces and contiguous elements to receive work of this section and correct, as part of the Work of this Contract, any defects affecting installation. Commencement of work will be construed as complete acceptability of surfaces and contiguous elements.

3.02 INSTALLATION - PARTITION FRAMING

A. Provide drywall furring channels on walls and partitions where indicated. Secure channels to masonry or concrete at 16 inches o.c. with suitable fasteners at maximum of 24 inches o.c.

B. Shaft type partitions shall be erected in strict accordance with the manufacturer's directions.

3.03 BOARD APPLICATION General application shall be as for gypsum board following requirements set forth in basic specification and as supplemented by ASTM C 840 specifications for Application and Finishing of Gypsum Wallboard.

3.04 CORNER AND TRIM TREATMENT

A. Internal Corners - Treat as specified for joints, except that the reinforcing tape shall be folded lengthwise through the middle and fitted neatly into the corner.

B. External Corners

1. Install a corner bead fitting neatly over the corner and secured with the same type fasteners used for applying the wallboard, spacing the fasteners approximately 6 inch on centers and driving through the wallboard into the framing and furring member.

2. After the corner piece has been secured into position, treat the corner with joint compound and reinforcing tape as specified for joints.

C. Where ceiling "reveal" trim details are used at intersection of gypsum board and companion ceiling systems, same shall be set **by means of a laser "Line of Light" system** only to insure a true and level plane.

D. The drawings do not purport to show all locations and all requirements for metal trim in connection with the work of this Section. Carefully study the Drawings and the installation; provide in place all metal trim normally recommended by the manufacturer of the gypsum wallboard used in strict accordance with the manufacturer's recommended methods of installation.

3.05 GYPSUM WALLBOARD FINISHING

A. The following specification defines the level of finishing of gypsum board surfaces as defined in ASTM C 840, Article 22 and as amended by GA 214-90.

**Level "3"**

1. All joints and interior angles shall have tape embedded in joint compound and shall receive 2 separate coats of joint compound applied over all joints,

angles, fastener heads and accessories; surface shall be free of excess joint compound; all surfaces shall be smooth and free of tool marks and ridges.

LOCATIONS - Areas scheduled to receive heavy texture finishes, hand or spray applied, paneling less than 1/4 inch thickness or Class III vinyl wall coverings.

**Level "4"**

1. All joints and interior angles shall have tape embedded in joint compound and shall receive separate coats of joint compound applied over all joints, angles, fastener heads and accessories; surface shall be free of excess joint compound; all surfaces shall be smooth and free of tool marks and ridges.

   LOCATIONS - Areas scheduled to receive paint coatings; paneling less than 1/4 inch thickness or vinyl or fabric wall coverings.

B. Allow each application of compound applied to joints and fasteners to dry, then sand if necessary. Caution shall be used to avoid roughing of wallboard paper.

3.06 DRYWALL CEILINGS AND SOFFITS

A. Provide all accessory items including edge trim angles, exposed for exterior applications and concealed for attachment and taping for all interior applications. See Paragraph 3.04 herein for "**Laser**" setting of joints between walls and ceilings if reveal system is required by details.

B. Secure single or double layer of gypsum wallboard to furring channels and tape and spackle with products as per Part 2 in accordance with Paragraph 3.02 above.

3.07 FIBERGLASS REINFORCED CEMENT (FRCP) PANEL INSTALLATION

A. Install the "FRCP" board at right angle to the framing. Install the "FRCP" board with the separate boards in moderate contact but not forced into place. Stagger the boards so that the corners of any four boards will not meet a common point except in vertical corners.

B. Fasten boards to steel framing with 1-1/4 inch screws spaced 6 inches o.c. space fasteners at least 3/8 inch from edge of board. Edges or ends parallel to framing shall be continuously supported. Where two panels abut on a stud, insert the screw in the joint between the panels together with the specified washer to securely catch the edge of both panels.

C. Taping - Apply 2 inch fiberglass tape over joints and corners; embed firmly with adhesive.

3.08 HARDBOARD INSTALLATION

A. Apply panels vertically screw attached to each stud with "Tek" design screws especially selected for the purpose at minimum 8 inches on center and no less than 3/4 inch from ends. Joint treatments and spacing shall be as shown on the drawings and specified in Part 1 of this Section.

3.09 PARTITION IDENTIFICATION

A. Place identification on all partitions indicated on Drawings as having a required fire

or smoke rating, or lead lining.

B. Identification shall be as follows:
   1. Type: Same as indicated on drawing legend.
   2. Location: 10 feet on center, both sides of partitions, above ceiling lines.
   3. Place above access panels in hard ceilings.
   4. Style of Lettering: 2 inches high, helvetica style, painted with aid of stencils.
   5. Color: Red.

3.10 PROTECTION AND CLEANING

A. Protect, by suitable means, all work of this section until responsibility for same shall have been relieved by next operation.

B. This Contractor shall sweep all his debris and remove same as work progresses.

3.11 WASTE MANAGEMENT – Coordinate with Section 01 74 19

A. Separate clean waste gypsum products from contaminants for recycling in accordance with the Waste Management Plan. Do not include wood, plastic, metal, asphalt-impregnated gypsum board, or any gypsum board coated with glass fiber, vinyl, decorative paper, paint, or other finish. Place in designated area and protect from moisture and contamination.

B. Recycle clean waste gypsum products:
   1. Return to gypsum board manufacturer.
   2. Pulverize and apply on-site as soil amendment in accordance with landscape specifications. Do not use products containing glass fiber. Protect granular material from moisture.

C. Separate metal waste in accordance with the Waste Management Plan and place in designated areas for recycling or reuse.

**End of Section**

SECTION 09 30 00

TILE WORK

Part 1 - GENERAL

1.01 Applicable provisions of the Conditions of the Contract and Division #1, General Requirements, govern work in this Section.

1.02 DESCRIPTION OF WORK

A. The work of this Section consists of the provision of all plant, materials, labor and equipment and the like necessary and/or required for the complete execution of the tile work for this project as required by the schedules, keynotes and drawings.

1.03 RELATED WORK SPECIFIED ELSEWHERE - Entire Project Specification.

1.04 QUALITY ASSURANCE

A. All tile shall be standard grade and meet the requirements of ANSI A137.1, latest edition thereof, and further,

All floor and ramp surfaces shall be certified to have minimum slip resistance characteristics of 0.6 for floors and 0.8 for ramps as promulgated by the 2010 ADA requirements.

B. Prepare floors, walls and base substrates for application of finish and install same in accordance with Tile Council of North America recommendations and requirements governing said systems as listed in Part 3 of this Section.

C. Installer is to be a firm who has a minimum of five years' experience with the installation of specified materials.

1.05 SUBMITTALS

- As set forth in Article 14 of the General Conditions, prepare and submit a fully developed submittal schedule; review times for approval are 15 working days for primary review and 20 working days when a consultant is involved; note review times set forth above are deemed "average", for large submissions allow longer review times.
- The Contractor is encouraged to submit for approval products made from recycled and/or environmentally responsible material. Every effort will be made by the Design Professional Team to approve these materials; the substitution request procedure shall still be enforced.

A. Submit manufacturers' specifications and installation instructions for the following:
   1. Each type of tile and trim units specified.
   2. Waterproofing and setting materials specified.
   3. Grouting materials specified.
   4. Slate saddle type specified.
   5. Other items being incorporated in the work.

B. Shop Drawings - Submit Drawings indicating tile patterns and locations and width

of control and expansion joints in tile surface when required by Architect.

C. Samples
   1. Initial Selection: Submit manufacturer's color charts consisting of actual tiles or sections of tile showing full range of colors, textures, and patterns available for each type of tile indicated. Include grout manufacturers standard range of colors for each grout type required.
   2. Verification Samples:
      a. Samples of each type and color specified, 12 inch by 12 inch sample with tile mounted on plywood or hardboard panels and grouted.
      b. 12 inch long sample of marble saddle, leveled and finished.
      c. Trim units: 2, each type and shape specified.

D. Master Grade Certificate
   1. Before setting any tiles, furnish to the Architect a certificate of grade, etc., properly filled in on a Master Grade Certificate of the form recommended by the Department of Commerce.
   2. Certificate shall be signed by the manufacturer of the tiles and by the subcontractor for the Work, stating the grade, kind and full quantities of tiles; and give identification marks for all packages of tiles furnished under this Contract.
   3. Brand packages with corresponding shipping marks.

E. Certification of Specification Compliance.

F. Material Safety Data Sheet (MSDS) must be submitted for each product. These sheets shall be stored onsite at the contractors project office.

G. Recycled Content:
   3. Indicate recycled content; indicate percentage of pre-consumer and post-consumer recycled content per unit of product.
   4. Indicate relative dollar value of recycled content product to total dollar value of product included in project.
   5. If recycled content product is part of an assembly, indicate the percentage of recycled content product in the assembly by weight.
   6. If recycled content product is part of an assembly, indicate relative dollar value of recycled content product to total dollar value of assembly.

H. Local/Regional Materials:
   1. Sourcing location(s): Indicate location of extraction, harvesting, and recovery; indicate distance between extraction, harvesting, and recovery and the project site.
   2. Manufacturing location(s): Indicate location of manufacturing facility; indicate distance between manufacturing facility and the project site.
   3. Product Value: Indicate dollar value of product containing local/regional materials; include materials cost only.
   4. Product Component(s) Value: Where product components are sourced or manufactured in separate locations, provide location information for each component. Indicate the percentage by weight of each component per unit of product.

I. VOC data:
   1. Adhesives:
      a. Submit manufacturer’s product data for adhesives. Indicate VOC limits of the product. Submit MSDS highlighting VOC limits.

b. Submit Green Seal Certification to GS-36 and description of the basis for certification.

1.06 PRODUCT DELIVERY, STORAGE AND HANDLING

A. Delivery and Storage

1. All materials shall be delivered to the job site in unopened factory sealed containers clearly labeled as to product manufacturer, color and/or other pertinent characteristics.
2. Store all materials under cover in a manner to prevent damage and contamination; store only the specified materials at the job site.

B. Protection - Use all means necessary to protect ceramic tile materials before, during, and after installation and to protect the installed Work and materials of all other trades.

C. Replacements - In the event of damage, immediately make all repairs and replacements necessary to the approval of the Architect and at no additional cost to the Owner.

1.07 PROJECT CONDITIONS

A. Maintain environmental conditions and protect Work during and after installation to comply with referenced standards and manufacturer's printed recommendations.

B. Maintain temperatures at not less than 50 degrees F (10 degrees C) in tiled areas during installation and for 7 days after completion, unless higher temperatures are required by referenced installation standard or manufacturer's instructions.

1.08 SUSTAINABILITY

A. In the selection of the products and materials of this section as well as for the entire project, preference will be given to those with the following characteristics:

1. Water based.
2. Water-soluble.
3. Can be cleaned up with water.
4. Non-flammable.
5. Biodegradable.
6. Low or preferably no Volatile Organic Compound (VOC) content.
7. Manufactured without compounds that contribute to ozone depletion in the upper atmosphere.
8. Manufactured without compounds that contribute to smog in the lower atmosphere.
9. Do not contain methylene-chloride.
10. Do not contain chlorinated hydrocarbons.
11. Contains the least possible of post-consumer or post-industrial waste.

Part 2 - PRODUCTS

2.01 PORCELAIN TILE Garden State Tile 10 mm ,Rectified ,Color: Ash

PT-1 American Spirit , Format: 12” x 24” #AME1101133

PTB American Spirit, Cove base 6” x 12**” Note this is special order allow ample time**

2.02 CERAMIC TILE American Olean, Bright and Matte Series

CT-1 Bright, Format: 6” x 6”
Colors: Ice White #0025
CT-2 Bright, Format: 6” x 6”,
Color: Ruby Red #0021

CTB Cove Base Format: 6”h, Color- Storm Gray #0040

2.03 SLATE SADDLES: Buckingham or Pennsylvania black, 3/4 inch by 4-1/2 inches by full width of openings, notched for door stops, corners rounded, all exposed surfaces honed finish.

A. Provide at all doors abutting tile flooring regardless of schedule.

2.04 MEMBRANE WATERPROOFING

A. Trowel applied membrane waterproofing shall be a single component elastomeric and seamless membrane system similar and equal to -
   1. "Elastiment 344 Waterproof Membrane" as manufactured by Boiardi Products Corporation;
   2. "Hydroment Ultra-Set" or ”Gold” as manufactured by Bostik;
   3. "Mapelastic HPG” by Mapei;
   4. “Watertight” by Laticrete;

   each as conforming to ASTM C 836 and ANSI A136.1.

B. Sheet membrane waterproofing (incorporating crack isolation properties) shall be similar and equal to “NobleSeal TS” by the Noble Company and shall be manufactured of non-plasticized Chlorinated Polyethylene (CPE), nominal thickness of 30 mils, flexible synthetic elastomer with fabric laminated on both surfaces. Material shall conform to Thin-Bed waterproof membrane standard ANSI A118.10. Equal products shall formulated to meet “Heavy Duty Service requirements per ASTM C 627”.

C. REDGARD WATERPROOFING AND ANTI-FRACTURE MEMBRANE conforming to the following properties:

| | |
|---|---|
| Pot Life | Indefinite |
| Initial Set, ASTM C 191 @ 70 deg F (21 deg C) | 1 1/2 - 2 hours |
| Drying time before floor covering installation | 24 hours |
| ANSI 118.10 Sect # | |
| Fungus and Micro-Organism Resistance (4.2) | Passes |
| Seam Strength (4.2) | 16 lbs./2 inch width (>7.3 |

| | |
|---|---|
| | kg/5 cm) |
| Breaking Strength (4.3) | 484 psi (34.0 kg/cm2) |
| Dimensional Stability (4.4) | 0.05% |
| Waterproofness (4.5) | Passes |
| Shear Strength 12-day dry cure (5.6) | 267 psi (18.8 kg/cm2) |
| 100-day water immersion (5.7) | 89 psi (6.3 kg/cm2) |
| % Elongation ASTM D 638 | |
| 21-day dry cure | 562 psi (39.5 kg/cm2) |
| 7-day dry cure / 21-day wet cure | 657 psi (46.2 kg/cm2) |
| IAPMO/Uniform Plumbing Code 4244 | |
| Hydrostatic pressure & alkali resistance | Passes |
| Waterproofness | Passes |
| FHA 4900-1-615-5, Sections C & D | Compliant |

2.05 SETTING MATERIALS

A. Floors - Dryset Mortar, ANSI A118.1 other than those over a liquid membrane
B. Walls - Dry-Set (ANSI A118.1) or Latex Portland Cement (ANSI A118.4) Mortar
C. Bases - As for wall systems.

2.06 GROUTING MATERIALS

A. Water-Cleanable Epoxy Grout ANSI A118.3. Grout shall be stain resistant, color fast, mold and mildew inhibiting, non-sag, suitable for joints 1/16” to ½” and sanded type suitable for installing with tile.
   - Basis of design Product: Laticrete, “Spectralock Pro Epoxy Grout” or equal. In color as selected by Architect. Note: Base grout color to be the same as the floor.
B. Corner to Corner Joints throughout - "Silicone" rubber sealant in color to match grout system.

2.07 CUSTOM FABRICATED METAL EDGE STRIPS/CONTROL JOINTS/EXPANSION JOINTS, ETC.

A. Edge/divider strips shall be prefabricated from brushed stainless steel to be used as conditions required for use where tile adjoins adjacent floor finishes be it carpet, resilient or concrete.
B. Size accessories as required and/or as shown on the drawings.
C. Coordinate type and location where used with the Architect.
D. Material shall be as manufactured by Schluter Systems and shall consist of the following items and the intended locations.
   1. All outside corners of tile walls shall have Rondec trim. Provide a complete system, including end caps, etc.
   2. SCHIENE-E/V2A or RENO_EUGB-E/V2A for general use where tile/terrazzo flooring finish abuts vinyl tile finish.
   3. DILEX-EDP for all expansion/control joints in porcelain tile flooring.
   4. Adjustable Height: RENO-V.
   5. RENO-T where required to adjoin different types of floor coverings of the same height.
E. Coordinate type and location where used with the Architect.

Part 3 - EXECUTION

3.01 INSPECTION AND ACCEPTANCE

A. Examine all surfaces and contiguous elements to receive work of this section and correct, as part of the Work of this Contract, any defects affecting installation. Commencement of work will be construed as complete acceptability of surfaces and contiguous elements.

B. Verify that substrate will allow floor tile to slope to drains.

C. Before proceeding with any tile work, make sure that all waterproofing, sleeves and flashings for pipe have been installed and that piping systems have been run and tested.

D. Prepare and clean substrate in accordance with installation standards and manufacturer's instructions, and as follows:

1. Remove protrusions, bumps and ridges by grinding or chipping.
2. Repair, fill, and level cracks, holes, depressions and rough or chipped areas in substrate using patching material recommended by setting materials manufacturer.
3. Concrete slab to have light broom finish when tile is installed by the thin-set method.
4. Ensure that the substrate is within the following tolerances:
   a. Horizontal surfaces (floors) - Maximum variation in substrate shall not exceed 1/4 inch in 10 feet from required plane, depending on substrate.
   b. Vertical surfaces (walls) - Maximum variation in substrate shall not exceed 1/4 inch in 10 feet from the required plane, depending on substrate.

E. Jobsite Blending: Blend tiles before installing in accordance with reference standards to produce an even range and distribution of color and finish.

3.02 INSTALLATION - TILE WORK

A. All work shall be installed in accordance with the Recommendations of the Tile Council of North America (TCA) and the related American National Standards Institute (ANSI) Specification for the particular substrate involved be it concrete for floors or “Backerboard”, “Plaster”, “brick”, “terra cotta tile”, or “CMU” for walls.

1. Grout – Comply with ANSI A108.10
2. Saddles - TH 611
3. Joints - EJ 171, sealant Type II and/or prefabricated system by Schluter in locations as scheduled.
   a. Ceramic mosaic tile and glazed wall tile, never less than 1/8 inch, maximum 1/4 inch.
   b. Spacing, unless otherwise defined – 24 feet to 36 feet in each direction and where interior tilework exposed to moisture — 8 feet to 12 feet in each direction.
   c. Provide joints where tilework abuts restraining surfaces such as perimeter walls, dissimilar floors, curbs, columns, pipes, ceilings, and where changes occur in backing materials and at all expansion and control joints in building structure.
   d. Slate - F113 (ANSI A108.5)

B. All areas where partitions or other items are removed shall be infilled with

compatible mortar mix prior to setting of new floor.

C. Tile shall be firmly bonded in place with finish surfaces in true planes. Joints shall be straight, true and uniform in width and solidly filled. The completed work shall be free from hollow sounding areas, loose, cracked or defective tile.

D. Tile work shall be laid out so that no tiles less than one-half full size shall occur.

E. Intersections and returns shall be accurately formed. Cutting and drilling of tile shall be neatly done without marring the surface. The cut edges of tile against trim, finish or built-in items shall be carefully ground and jointed. Tile shall fit closely around electrical outlets, piping, fixtures and fittings, so that plates, collars or coverings shall overlap the tile. Recesses of proper size for built-in accessories shall be provided. Only sufficient clearance shall be allowed for leveling and plumbing to permit the metal trim to overlap the tile.

F. Joints
   1. Align all wall joints to give straight uniform grout lines, plumb and level.
   2. Align all floor joints to give straight uniform grout lines, parallel with walls.
   3. Make joints between tile sheets same width as joints within sheets so extent of each sheet is not apparent in finish work.
   4. Joints shall be grouted full and flush for square edge tile and to depth of cushion and concave for cushion edge tile.

G. Order of setting tile shall be first, base; second, walls; third, floors.

H. Provide all trimmers as necessary for a complete installation. Shapes shall be integral with wall tile (combinations) unless otherwise shown or noted. Tile plinths shall be provided where trim is shown for door openings in connection with tile base or wall finish. Wall finish shall extend into reveals of openings and shall be overlapped by trim, unless otherwise shown.

I. All tile shall have standard combinations at external and internal corners and at intersections with wall and floor finish.

3.03 GROUTING

A. Floors shall not be grouted before 72 hours after setting; walls before 24 hours. Before grouting, tile work shall be wet with clean water.

B. Follow grout manufacturer's recommendation as to grouting procedures and precautions.

C. Remove all grout haze, observing both tile and grout manufacturer's recommendations as to use of acid and chemical cleaners.

D. Rinse tile work thoroughly with clean water before and after chemical cleaners.

E. Polish surface of tilework with soft cloth.

F. Where colored joints are required, non-fading mineral oxides shall be mixed with white Portland cement to obtain desired color or an approved pre-mixed colored cement may be used.

3.04 PROTECTION AND CLEANING

A. Promptly remove all setting compound, grout and stains from face of all tile and adjoining surfaces.

B. All tiles which are cracked, broken, chipped or otherwise damaged, shall be promptly removed and replaced.

C. As soon as the tile work in each space has been grouted and cleaned, it shall be covered with either reinforced Kraft paper (Sisalkraft) or non-staining sawdust. Each of such spaces shall be closed to all traffic or work by approved barriers which shall be maintained until tiles are firmly set. Floor covering shall be kept

and maintained until completion of the work of all trades or as otherwise directed by the Architect, when it shall be removed without damage to tile or adjoining work.

D. For final acceptance of the project, leave all tile work clean, whole and in perfect condition.

3.05 WASTE MANAGEMENT – Coordinate with Section 01 74 19

A. Separate waste in accordance with the Waste Management Plan and place in designated areas in the following categories for recycling:
   1. Half tiles and larger: Set aside for reuse by Owner or nonprofit organizations such as Habitat for Humanity
   2. Broken tile, cutoffs smaller than 1/2 tile, and excess mortar and grout: Crush for use as mosaic, sub-base, or fill
   3. Separate metal waste and place in designated areas for recycling or reuse.
   4. Separate cardboard waste and place in designated areas for recycling.

**End of Section**

SECTION 09 65 00

FLOORING ACCESSORIES

Part 1 - GENERAL

1.01 Applicable provisions of the Conditions of the Contract and Division #1, General Requirements govern work in this Section.

1.02 DESCRIPTION OF WORK

A. The work of this Section consists of the provision of all plant, materials, labor and equipment and the like necessary and/or required for the complete execution of all flooring accessories for this project as required by the schedules, keynotes and drawings, including, but not limited to the following:

1. Provide cove type rubber base in all areas designated on finish schedule and/or on the drawings. Unless otherwise indicated or scheduled, provide rubber bases at all partitions.

1.03 RELATED WORK SPECIFIED ELSEWHERE - Entire Project Specification.

1.04 QUALITY ASSURANCE

A. The work of this Section shall be accomplished by a "Specialty Contractor" with mechanics skilled in the trade.

B. Certifications

1. Furnish manufacturer's certification from an independent testing laboratory acceptable to authorities having jurisdiction that resilient flooring complies with fire test performance requirements.
2. Furnish certification from flooring installer that the substrate surfaces have been examined and are acceptable for installation of the Work of this Section.

C. Fire Test Performance - Provide flooring accessories which complies with the following performance criteria as determined by an independent testing laboratory acceptable to authorities having jurisdiction.

1. ASTM E 648 (Critical Radiant Flux) of 0.45 watts per sq. cm. or greater, Class I.
2. ASTM E 662 (Smoke Generation) Maximum Specific Optical Density of 450 or less.
3. ASTM E 84 - Flame Spread: Not more than 25; rated as Class 1.

1.05 SUBMITTALS

- As set forth in Article 14 of the General Conditions, prepare and submit a fully developed submittal schedule; review times for approval are 15 working days for primary review and 20 working days when a consultant is involved; note review times set forth above are deemed “average”, for large submissions allow longer review times.
- The Contractor is encouraged to submit for approval products made from recycled and/or environmentally responsible material. Every effort will be made by the Design Professional Team to approve these materials; the substitution request

procedure shall still be enforced.

A. Product Data - Provide manufacturers' specifications, installation instructions and surface preparation requirements for each material specified.
   1. VOC data:
      a. Submit manufacturer's product data for adhesives. Indicate VOC limits of the product. Submit MSDS highlighting VOC limits.
      b. Submit Green Seal Certification to GS-36 and description of the basis for certification.
      **c. Submit manufacturer's certification that products comply with SCAQMD Rule 1168 in areas where exposure to freeze/thaw conditions and direct exposure to moisture will not occur. In areas where freeze/thaw conditions do exist or direct exposure to moisture can occur, submit manufacturer's certification that products comply with Bay Area AQMD Reg. 8, Rule 51 for containers larger than 16 oz and with California Air Resources Board (CARB) for containers 16 oz or less.]**
B. Samples
   1. For Initial Selection: Submit actual sections of flooring accessories, showing full range of colors and patterns available, for each type offlooring component required.
   2. For Verification, prior to installation, submit the following:
      a. Base: 12-inch-long sections, each type and color specified.
      b. Adhesives: One pint, each type, labeled to indicate location of use and type of surface to receive product.
D. Submit a copy of the manufacturer's recommended maintenance procedures for flooring accessories provided under this Section.
E. Certification of Specification Compliance.
F. Material Safety Data Sheet (MSDS) must be submitted for each product.

1.06 PRODUCT DELIVERY, STORAGE AND HANDLING (Coordinate with Section 01 61 00)
A. Store materials (base and adhesives) in location having a minimum temperature of 65 degrees F for at least 24 hours prior to start of laying of flooring.

1.07 PROJECT CONDITIONS/REQUIREMENTS AND RESTRICTIONS
A. Environmental Requirements: Maintain a minimum temperature in the spaces to receive the flooring and accessories of 65 degrees F (18 degrees C) for at least 48 hours before, during, and for not less than 48 hours after installation. Thereafter, maintain a minimum temperature of 55 degrees F (13 degrees C) in areas where work is completed.
B. Install flooring accessories after other finishing operations, including painting, have been completed.
C. Prior to installation ascertain that the building is sufficiently weathertight to prevent damage to the work. Roofing and roof flashings shall have been completed and roof found to be watertight. All exterior openings shall have been glazed or otherwise weather protected.
D. All work of a nature conducive to high humidity conditions shall have been completed and be thoroughly dry. This contractor shall be held responsible for the cost of replacing all work of this Section damaged due to his failure to take the

above precautions.

1.08 ADDITIONAL MATERIALS FOR MAINTENANCE

A. Prior to final acceptance of the project, furnish to the Owner additional flooring base in each color, type and pattern installed. All materials must be new, clean, undamaged and in original containers.

B. Furnish 1 roll of rubber base for future replacement. Additional material shall not be used for punch listing.

1.09 SUSTAINABILITY

A. In the selection of the products and materials of this section as well as for the entire project, preference will be given to those with the following characteristics:
   1. Water based.
   2. Water-soluble.
   3. Can be cleaned up with water.
   4. Non-flammable.
   5. Biodegradable.
   6. Low or preferably no Volatile Organic Compound (VOC) content.
   7. Manufactured without compounds that contribute to ozone depletion in the upper atmosphere or smog in the lower atmosphere.
   8. Do not contain methylene-chloride.
   9. Do not contain chlorinated hydrocarbons.
   10. Contains the least possible of post-consumer or post-industrial waste.

1.09 SPECIAL GUARANTEE/WARRANTY TERMS

A. Material defect warranty – 12 months

B. 10 year warranty, no more than 10% wear in five years and no more than 20% in ten years.

Part 2 - PRODUCTS

2.01 ACCESSORIES

A. Rubber Base: Basis of design – Johnsonite. Rubber base shall be a thermoplastic composition combined with high quality additives and colorants designed specifically to meet the performance and dimensional requirements of ASTM F 1861, Type TP, Group 2 (solid) Standard Specification for Resilient Wall Base and shall conform to the following physical characteristics. Compression type.
   1. Cardinal Stadium –(Tagged-RB)-Height: 6” High, typical.
   2. Kiosk-(Tagged-RB8)-Use Johnsonite “Millwork” Finishing system Reveal MW-XX-F ,8”h typ.
   3. Style: Cove, typical (Top corner rounded, bottom coved, coordinate with floor application for tile areas).
   4. Color: 3 colors as selected by Architect from full range of color options.
   5. Length: 120' (36.58 m) coiled lengths **only**.
   6. Furnish inside and outside corners with 6 inch (10.16 cm) returns.

B. Base shall comply with the following performance characteristics.
   1. Hardness - ASTM D 2240: Rubber - 85 Shore A.
   2. Flexibility - Will not crack, break, or show any signs of fatigue when bent around a 1/4-inch (6.4 mm) diameter cylinder.

3. Meets or exceeds the performance requirements for resistance to heat/light aging, chemicals, and dimensional stability when tested to the methods, as described, in ASTM F 1861.
4. Fire Resistance: ASTM E 84/NFPA 255 (Steiner Tunnel Test) - Class C; ASTM E 648/NFPA 253 (Critical Radiant Flux) - Class 1; ASTM E 662/NFPA 258 (Smoke Density) - 450 or less.

C. Vinyl Saddles, Reducing Strips and Termination Accessories.
1. Flush or tapered as indicated.
2. Thickness to match adjacent material.
3. Colors as selected.
4. Manufacturers – Johnsonite, Mercer, or approved equal.

3 UNDERLAYMENT

A. Material for use shall be as recommended by material manufacturer; use where necessary insure conformance as noted herein.

4 ADHESIVES AND PRIMERS

A. Materials shall be "v.o.c." compliant (green) and suitable for intended purpose be it tile, treads or other such resilient flooring material; location and structural conditions required and/or intended; use without adulteration or reducing and in accordance with manufacturer's printed instructions; types for each use shall be approved by the manufacturer of the respective materials and certifications of same in writing, shall be delivered to the Architect.

B. Wall Base adhesive: Similar and equal to Henry “595 Cove Base Adhesive”.

Part 3 - EXECUTION

3.01 INSPECTION AND ACCEPTANCE

A. Examine all surfaces and contiguous elements to receive work of this section and correct, as part of the Work of this Contract, any defects affecting installation. Commencement of work will be construed as complete acceptability of surfaces and contiguous elements.

3.02 PREPARATION, GENERAL

A. Remove from the subsurface all dirt, grease, oil, dust and other materials which might impair adherence of flooring base. Vacuum or broom-clean surfaces to be covered immediately before the application of flooring and/or base.

3.04 INSTALLATION - GENERAL

A. All floor accessories shall be installed in full accordance with the manufacturer's written instructions, using recommended adhesives, tools, and procedures.

B. Joints shall be tight, straight, inconspicuous, and neatly scribed to abutting surfaces.

3.05 RUBBER BASE INSTALLATION

A. Installation shall not begin until flooring is completed and approved.

B. Install on walls, partitions, columns, piers, cabinets, etc., to form continuous base at junction of vertical surfaces and finished floors.

C. Keep vertical joints to a minimum by setting long strips.

D. Base shall be continuous around external corners and lap a minimum of 6 inches.

E. Base shall be continuous around internal corners and lap a minimum of 2 inches.
F. When base terminates at external corner, provide integral molded corner.

3.06 CLEANING
A. Promptly remove all excess adhesives and other surface soiling or stains from face of all bases and adjoining surfaces using cleaning agents recommended by the manufacturer of the material being cleaned.
B. Perform initial maintenance according to manufacturer's instructions.
C. Any adhesive, caulking or other mastic on exposed faces shall be immediately removed with a recommended solvent.

3.07 PROTECTION
A. Protect installed accessories as recommended by the flooring manufacturer against damage from rolling loads, other trades, or the placement of fixtures and furnishings.

3.08 SITE ENVIRONMENTAL PROCEDURES
A. Indoor Air Quality: Ventilate products prior to installation. Remove from packaging and ventilate in a secure, dry, well-ventilated space free from strong contaminant sources and residues. Provide a temperature range of 60 degrees F minimum to 90-degree F maximum continuously for minimum 72 hours. Do not ventilate within limits of Work unless otherwise approved by Architect.

3.09 WASTE MANAGEMENT – Coordinate with Section 01 74 19
A. Separate waste in accordance with the Waste Management Plan and place in designated areas in the following categories for reuse:
1. Sheet materials larger than 2 sq. ft.
B. Close and seal tightly all partly used adhesive containers and store protected in well-ventilated, fire-safe area at moderate temperature.

**End of Section**

# SECTION 09 67 23

# RESINOUS FLOORING

## PART 1 GENERAL

### 1.1 SUMMARY

A. Work of this Section, as shown or specified, shall be in accordance with the requirements of the Contract Documents.

### 1.2 SECTION INCLUDES

A. Work of this Section includes all labor, materials, equipment, and services necessary to complete the hydraulic elevators, as indicated on the drawings and/or specified herein, including, but not limited to, the following:

1. Four-component troweled epoxy flooring system with integral base.

### 1.3 RELATED SECTIONS

A. Concrete - Section 033000

### 1.4 SUBMITTALS

A. Product Data: For each type of product specified. Include manufacturer's technical data, installation instructions, and recommendations for each resinous flooring component required.

B. Installer Certificates: Signed by manufacturer certifying that installers comply with specified requirements.

C. Material Certificates: In lieu of material test reports, when permitted by Architect, signed by manufacturers certifying that materials furnished comply with requirements.

D. Maintenance Data: For resinous flooring to include in maintenance manuals.

E. Mockup: Full thickness mockup in 48-inch square floor area including 48-inch length of integral cove base. Approved mockup may become part of final installation

### 1.5 QUALITY ASSURANCE

A. Installer Qualifications: Engage an experienced installer (applicator) who has specialized in installing resinous flooring similar in material, design, and extent to that indicated for this Project and who is acceptable to resinous flooring manufacturer.

B. Engage an installer who employs only persons trained and approved by resinous flooring manufacturer for installing resinous flooring systems specified.

C. Engage an installer who is certified in writing by resinous flooring manufacturer as qualified to install resinous flooring systems specified.

D. Source Limitations: Obtain primary resinous flooring materials, including primers, resins, hardening agents, and sealing or finish coats, through one source from a single manufacturer. Provide secondary materials including patching and fill material, joint sealant, and repair materials of type and from source recommended by manufacturer of primary materials.

1.6 DELIVERY, STORAGE, AND HANDLING

A. Deliver materials in original packages and containers, with seals unbroken, bearing manufacturer's labels indicating brand name and directions for storage and mixing with other components.

B. Store materials to comply with manufacturer's written instructions to prevent deterioration from moisture, heat, cold, direct sunlight, or other detrimental effects.

1.7 PROJECT CONDITIONS

A. Environmental Limitations: Comply with resinous flooring manufacturer's written instructions for substrate temperature, ambient temperature, moisture, ventilation, and other conditions affecting resinous flooring installation.

B. Close spaces to traffic during resinous flooring application and for not less than 24 hours after application, unless manufacturer recommends a longer period.

C. Concrete substrate shall be properly cure. A vapor barrier must be present for concrete subfloors on or below grade. Otherwise, an osmotic pressure resistant grout must be installed prior to the resinous flooring

1.8 WARRANTY

A. Manufacturer shall furnish a single, written warranty covering both material and workmanship for a period of (1) full years from date of installation, or provide a joint and several warranty signed on a single document by material manufacturer and applicator jointly and severally warranting the materials and workmanship for a period of (1) full year from date of installation. A sample warranty letter must be included with bid package or bid may be disqualified.

PART 2 PRODUCTS

2.1 MANUFACTURERS

A. Basis of Design Products: Provide specified materials of Stonhard or equal products of one of the following:

1. Dex-O-Tex

2. DUR-A-FLEX Inc..

2.2 MATERIALS AND COMPONENTS

A. General: Resinous Flooring: Resinous floor surfacing system consisting of primer; troweled mortar base, body coat(s) including resin, hardener, aggregates, and colorants, if any; and sealing or finish coat(s). Comply with requirements indicated in this Article.

B. Substrate Patching and Fill Material: Cementitious product approved by resinous flooring manufacturer and recommended by manufacturer for application indicated.

C. Joint Sealant: Type recommended or produced by resinous flooring manufacturer for type of service and joint condition indicated.

D. Four Component Epoxy Flooring System: Stain-resistant decorative epoxy flooring system with slip-resistant surface. System consists of three-component troweled mortar base, epoxy resin and amine curing agent undercoat, selected, graded aggregates blended with inorganic pigments, and clear epoxy sealer topcoat complying with the following

1. Basis of Design System: Stonshield HRI by Stonhard or equal.

2. Thickness of System: 3/16 inch.

3. Primer: Type recommended. by manufacturer for substrate and application indicated.

4. Troweled Mortar Basecoat: Stonshield HRI Base.

5. Undercoat: Stonshield Undercoat.

6. Aggregate: As required for color selected.

7. Topcoat: Stonkote CE4.

8. Integral Cove Base: 6" high.

9. Color : As selected by Architect from manufacturers full range of colors.

10. Reducing Strip at Edge: Schluter 1.8 Reno Ramp or equal

PART 3 EXECUTION

3.1 PREPARATION

A. General: Prepare and clean substrate according to resinous flooring manufacturer's written instructions for substrate indicated. Provide clean, dry, and neutral substrate for resinous flooring application.

B. Use patching and fill material as required to fill holes and depressions in substrate to provide a flat and even surface for flooring system. Apply patching and fill material according to manufacturer's written instructions.

C. Concrete Substrates: Provide sound concrete surfaces free of laitance, glaze, efflorescence, curing compounds, form-release agents, dust, dirt, grease, oil, and other contaminants incompatible with resinous flooring.

1. Roughen concrete substrates as follows: Shot-blast surfaces with an apparatus that abrades the concrete surface, contains the dispensed shot within the apparatus, and recirculates the shot by vacuum pickup.

2. Repair damaged and deteriorated concrete according to resinous flooring manufacturer's written recommendations.

3. Verify that concrete substrates are dry. Perform calcium chloride test as per manufacturer's directions, as follows, and other tests if recommended by resinous flooring manufacturer:
   a. Calcium Chloride Test: Perform anhydrous calcium chloride test ASTM F 1869.Proceed with application only after substrates have maximum moisture-vapor-emission rate of 3 lb of water/1000 sq. ft. (1.36 kg of water/92.9 sq. m) of slab in 24 hours.
   b. Perform moisture test at rate of three for the first 1,000 sq. ft. (92.9 sq. m) and one additional test for each 1,000 sq. ft. (92.9 sq. m) of new and existing floor area to be covered unless otherwise recommended by flooring manufacturer.

4. Verify that concrete substrates have neutral Ph and that resinous flooring will adhere to them. Perform tests recommended by manufacturer. Proceed with application only after substrates pass testing.

5. Verify that substrates and conditions are satisfactory for resin floor installation and comply with requirements specified. Do not proceed with installation until unsatisfactory conditions have been corrected.

D. Resinous Materials: Mix components and prepare materials according to resinous flooring manufacturer's written instructions.

## 3.2 APPLICATION

A. General: Apply components of resinous flooring system according to manufacturer's written instructions to produce a uniform, monolithic wearing surface of thickness indicated

1. Coordinate application of components to provide optimum adhesion of resinous flooring system to substrate and optimum intercoat adhesion.

2. Cure resinous flooring components according to manufacturer's written instructions. Prevent contamination during application and curing processes.

3. At substrate expansion and isolation joints, provide joint in resinous flooring to comply with resinous flooring manufacturer's written recommendations.
   a. Apply joint sealant to comply with manufacturer's written recommendations.

B. Pre-apply epoxy treatment to substrate cracks as required.

C. Apply primer over prepared substrate at manufacturer’s recommended rate and allow to cure as recommended by manufacturer.

D. Four Component Epoxy Flooring System: Apply troweled mortar base by screeding and troweling into wet primer. Mix and apply undercoat. Broadcast coat of aggregate into freshly rolled undercoat. Allow to cure. Scrape the floor with a steel squeegee, sweep off excess aggregate, and then vaccuum. Mix and apply topcoat.

E. Integral Cove Base: Apply cove base mix to wall surfaces at locations indicated. Round internal and external corners. Install cove base according to manufacturer's written instructions and details including taping, mixing, priming, troweling, and topcoating of cove base.

## 3.3 CLEANING, CURING AND PROTECTION

A. Protect resinous flooring from damage and wear during the remainder of construction period. Use protective methods and materials, including temporary covering, recommended in writing by resinous flooring manufacturer.

B. Cure resinous flooring materials in compliance with manufacturer's directions, taking care to prevent contamination during stages of application and prior to completion of curing process. Close area of application for a minimum of 24 hours

C. Clean resinous flooring not more than 4 days before dates scheduled for inspections intended to establish date of Substantial Completion in each Project area. Use cleaning materials and procedures recommended in writing by resinous flooring manufacturer.

END OF SECTION

# SECTION 099100
# PAINTING

## PART 1 - GENERAL

### 1.1 SUMMARY

A. This Section includes surface preparation and the application of paint systems on the following interior and exterior substrates:

1. Concrete masonry units (CMU).
2. Concrete
3. Steel and iron.
4. Galvanized metal.
5. Gypsum board.
6. Wood
7. Metal decking and framing at ceilings

B. Related Sections include the following:

1. Division 05 Sections for shop priming of metal substrates with primers specified in this Section.

### 1.2 ACTION SUBMITTALS

A. Product Data: For each type of product indicated.

B. Samples for Initial Selection: For each type of topcoat product indicated.

C. Samples for Verification: For each type of paint system and in each color and gloss of topcoat indicated.

1. Submit Samples on rigid backing, 8 inches (200 mm) square.
2. Step coats on Samples to show each coat required for system.
3. Label each coat of each Sample.
4. Label each Sample for location and application area.

D. Product List: For each product indicated, include the following:

1. Cross-reference to paint system and locations of application areas. Use same designations indicated on Drawings and in schedules.
2. Printout of current "MPI Approved Products List" for each product category specified in Part 2, with the proposed product highlighted.

1.3 QUALITY ASSURANCE

A. MPI Standards: Maintain copy of this standard at the Project site at all times.

1. Products: Complying with MPI standards indicated and listed in "MPI Approved Products List."
2. Preparation and Workmanship: Comply with requirements in "MPI Architectural Painting Specification Manual" for products and paint systems indicated.

B. Mockups: Apply benchmark samples of each paint system indicated and each color and finish selected to verify preliminary selections made under sample submittals and to demonstrate aesthetic effects and set quality standards for materials and execution.

1. Architect will select one surface to represent surfaces and conditions for application of each paint system specified in Part 3.
   a. Wall and Ceiling Surfaces: Provide samples of at least 100 sq. ft. (9 sq. m).
   b. Other Items: Architect will designate items or areas required.

2. Apply benchmark samples after permanent lighting and other environmental services have been activated.
3. Final approval of color selections will be based on benchmark samples.
   a. If preliminary color selections are not approved, apply additional benchmark samples of additional colors selected by Architect at no added cost to Owner.

1.4 DELIVERY, STORAGE, AND HANDLING

A. Store materials not in use in tightly covered containers in well-ventilated areas with ambient temperatures continuously maintained at not less than 45 deg F (7 deg C).

1. Maintain containers in clean condition, free of foreign materials and residue.
2. Remove rags and waste from storage areas daily.

1.5 PROJECT CONDITIONS

A. Apply paints only when temperature of surfaces to be painted and ambient air temperatures are between 50 and 95 deg F (10 and 35 deg C).

B. Do not apply paints when relative humidity exceeds 85 percent; at temperatures less than 5 deg F (3 deg C) above the dew point; or to damp or wet surfaces.

C. Do not apply paints in snow, rain, fog, or mist; when relative humidity exceeds 85 percent; at temperatures less than 5 deg F (3 deg C) above the dew point; or to damp or wet surfaces.

PART 2 – PRODUCTS

2.1 MANUFACTURERS

A. Manufacturers: Subject to compliance with requirements, provide products by one of the following:

1. Benjamin Moore & Co.
2. PPG Architectural Finishes, Inc.
3. Sherwin-Williams Company (The).
4. Tnemec

2.2 PAINT, GENERAL

A. Material Compatibility:

1. Provide materials for use within each paint system that are compatible with one another and substrates indicated, under conditions of service and application as demonstrated by manufacturer, based on testing and field experience.
2. For each coat in a paint system, provide products recommended in writing by manufacturers of topcoat for use in paint system and on substrate indicated.

B. VOC Content of Field-Applied Interior Paints and Coatings: Provide products that comply with the following limits for VOC content, exclusive of colorants added to a tint base, when calculated according to 40 CFR 59, Subpart D (EPA Method 24)and the OTC (Ozone Transport Commission) restrictions; these requirements do not apply to paints and coatings that are applied in a fabrication or finishing shop:

1. Flat Paints, Coatings, and Primers: VOC content of not more than 50 g/L.
2. Nonflat Paints, Coatings, and Primers: VOC content of not more than 150 g/L.
3. Anti-Corrosive and Anti-Rust Paints Applied to Ferrous Metals: VOC not more than 250 g/L.
4. Floor Coatings: VOC not more than 100 g/L.
5. Shellacs, Clear: VOC not more than 730 g/L.
6. Shellacs, Pigmented: VOC not more than 550 g/L.
7. Flat Topcoat Paints: VOC content of not more than 50 g/L.
8. Nonflat Topcoat Paints: VOC content of not more than 150 g/L.
9. Anti-Corrosive and Anti-Rust Paints Applied to Ferrous Metals: VOC not more than 250 g/L.
10. Floor Coatings: VOC not more than 100 g/L.
11. Shellacs, Clear: VOC not more than 730 g/L.
12. Shellacs, Pigmented: VOC not more than 550 g/L.
13. Primers, Sealers, and Undercoaters: VOC content of not more than 200 g/L.
14. Dry-Fog Coatings: VOC content of not more than 400 g/L.
15. Zinc-Rich Industrial Maintenance Primers: VOC content of not more than 340 g/L.
16. Pre-Treatment Wash Primers: VOC content of not more than 420 g/L.
17. Fire Retardant Paint: VOC content of not more than 60 g/L.

C. Colors: As scheduled or if not scheduled, as selected by Architect from manufacturer's full range based on the use of at least 16 different colors plus black and white.

## PART 3 - EXECUTION

### 3.1 EXAMINATION

A. Examine substrates and conditions, with Applicator present, for compliance with requirements for maximum moisture content and other conditions affecting performance of work.

B. Maximum Moisture Content of Substrates: When measured with an electronic moisture meter as follows:

1. Concrete: 12 percent.
2. Masonry: 12 percent.
3. Gypsum Board: 12 percent.
4. Wood: 15 percent

C. Verify suitability of substrates, including surface conditions and compatibility with existing finishes and primers.

D. Begin coating application only after unsatisfactory conditions have been corrected and surfaces are dry.

1. Beginning coating application constitutes Contractor's acceptance of substrates and conditions.

### 3.2 PREPARATION

A. Comply with manufacturer's written instructions and recommendations in "MPI Architectural Painting Specification Manual" applicable to substrates indicated.

B. Remove plates, machined surfaces, and similar items already in place that are not to be painted. If removal is impractical or impossible because of size or weight of item, provide surface-applied protection before surface preparation and painting.

1. After completing painting operations, use workers skilled in the trades involved to reinstall items that were removed. Remove surface-applied protection if any.
2. Do not paint over labels of independent testing agencies or equipment name, identification, performance rating, or nomenclature plates.

C. Clean substrates of substances that could impair bond of paints, including dirt, oil, grease, and incompatible paints and encapsulants.

1. Remove incompatible primers and reprime substrate with compatible primers as required to produce paint systems indicated.

D. Concrete Substrates: Remove release agents, curing compounds, efflorescence, and chalk. Do not paint surfaces if moisture content or alkalinity of surfaces to be painted exceeds that permitted in manufacturer's written instructions.

E. Concrete Masonry Substrates: Remove efflorescence and chalk. Do not paint surfaces if moisture content or alkalinity of surfaces to be painted exceeds that permitted in manufacturer's written instructions.

F. Steel Substrates: Remove rust and loose mill scale. Clean using methods recommended in writing by paint manufacturer.

G. Galvanized-Metal Substrates: Remove grease and oil residue from galvanized sheet metal fabricated from coil stock by mechanical methods to produce clean, lightly etched surfaces that promote adhesion of subsequently applied paints.

H. Gypsum Board Substrates: Do not begin paint application until finishing compound is dry and sanded smooth.

I. Wood: Clean surfaces of dirt, oil, and other foreign substances with scrapers, mineral spirits, and sandpaper, as required. Sand surfaces exposed to view smooth and dust off.

1. Scrape and clean small, dry, seasoned knots, and apply a thin coat of white shellac or other recommended knot sealer before applying primer. After priming, fill holes and imperfections in finish surfaces with putty or plastic wood filler. Sand smooth when dried.
2. Prime, stain, or seal wood to be painted immediately on delivery. Prime edges, ends, faces, undersides, and backsides of wood, including cabinets, counters, cases, and paneling.
3. Seal tops, bottoms, and cutouts of unprimed wood doors with a heavy coat of varnish or sealer immediately on delivery.
4. When transparent finish is required, backprime with spar varnish or polyurethane.

## 3.3 APPLICATION

A. Apply paints according to manufacturer's written instructions.

1. Use applicators and techniques suited for paint and substrate indicated.
2. Paint surfaces behind movable equipment and furniture same as similar exposed surfaces. Before final installation, paint surfaces behind permanently fixed equipment or furniture with prime coat only.
3. Paint front and backsides of access panels, removable or hinged covers, and similar hinged items to match exposed surfaces.

B. Application Procedures: Apply paints and coatings by brush or roller according to the manufacturer's directions, except s noted below. Spray application is not permitted for trim, ceilings and walls, unless specifically approved by Architect in advance for each individual situation. Roller application on woodwork is not permitted.

1. Apply paints to produce surface films without cloudiness, spotting, holidays, laps, brush marks, roller tracking, runs, sags, ropiness, or other surface imperfections. Cut in sharp lines and color breaks.
2. Brushes: Use brushes best suited for the type of material applied. Use brush of appropriate size for the surface or item being painted.
3. Rollers: Use rollers of carpet, velvet back, or high-pile sheep's wool as recommended by the manufacturer for the material and texture required.

C. Minimum Coating Thickness: Apply paint materials no thinner than manufacturer's recommended spreading rate. Provide the total dry film thickness of the entire system as recommended by the manufacturer.

D. Tint each undercoat a lighter shade to facilitate identification of each coat if multiple coats of same material are to be applied. Tint undercoats to match color of topcoat, but provide sufficient difference in shade of undercoats to distinguish each separate coat.

E. If undercoats or other conditions show through topcoat, apply additional coats until cured film has a uniform paint finish, color, and appearance.

F. Apply paints to produce surface films without cloudiness, spotting, holidays, laps, brush marks, roller tracking, runs, sags, ropiness, or other surface imperfections. Cut in sharp lines and color breaks.

G. Painting Mechanical and Electrical Work: Paint items exposed in equipment rooms and occupied spaces including, but not limited to, the following:

1. Mechanical Work:
   a. Uninsulated metal piping.
   b. Uninsulated plastic piping.
   c. Pipe hangers and supports.
   d. Tanks that do not have factory-applied final finishes.
   e. Visible portions of internal surfaces of metal ducts, without liner, behind air inlets and outlets.
   f. Duct, equipment, and pipe insulation having cotton or canvas insulation covering or other paintable jacket material.
   g. Mechanical equipment that is indicated to have a factory-primed finish for field painting.

2. Electrical Work:
   a. Switchgear.
   b. Panelboards.

c. Electrical equipment that is indicated to have a factory-primed finish forfield painting.

3.4 FIELD QUALITY CONTROL

A. Testing of Paint Materials: Owner reserves the right to invoke the following procedure at any time and as often as Owner deems necessary during the period when paints are being applied:

1. Owner will engage the services of a qualified testing agency to sample paint materials being used. Samples of material delivered to Project site will be taken, identified, sealed, and certified in presence of Contractor.
2. Testing agency will perform tests for compliance with product requirements.
3. Owner may direct Contractor to stop applying paints if test results show materials being used do not comply with product requirements. Contractor shall remove noncomplying-paint materials from Project site, pay for testing, and repaint surfaces painted with rejected materials. Contractor will be required to remove rejected materials from previously painted surfaces if, on repainting with complying materials, the two paints are incompatible.

3.5 CLEANING AND PROTECTION

A. At end of each workday, remove rubbish, empty cans, rags, and other discarded materials from Project site.

B. After completing paint application, clean spattered surfaces. Remove spattered paints by washing, scraping, or other methods. Do not scratch or damage adjacent finished surfaces.

C. Protect work of other trades against damage from paint application. Correct damage to work of other trades by cleaning, repairing, replacing, and refinishing, as approved by Architect, and leave in an undamaged condition.

D. At completion of construction activities of other trades, touch up and restore damaged or defaced painted surfaces.

3.6 EXTERIOR PAINTING SCHEDULE

A. General: Provide listed products or equal products of other named manufacturers in Part 2.

B. Steel and Iron Substrates: Polyurethane, Pigmented, Epoxy Zinc Rich Primer and High-Build Epoxy Coating System: Gloss or Semi-Gloss as selected by the Architect.

1. Prime Coat: Epoxy Zinc Rich Primer. Tnemec: Tneme-Zinc Series 90-97 or equal.

2. Intermediate Coat: High-performance, polyamide-epoxy coating; High-Build Epoxy Marine Coating, Low Gloss: Tnemec: Hi-Build Epoxoline, Series 66, tinted slightly lighter than top coat., or equal
3. Topcoat (Gloss)t: Aliphatic Acrylic Polyurethane, Two-Component, Pigmented, Gloss: Tnemec Endura-Shield II Series 1074.
4. Topcoat (Semi-Gloss)t: Aliphatic Acrylic Polyurethane, Two-Component, Pigmented, Semi-Gloss: Tnemec Endura-Shield II Series 1075.

C. Zinc-Coated (Galvanized) Metal: Full-gloss, acrylic latex enamel finish - 2 coats - self-priming.

1. Prime Coat: Gloss acrylic latex enamel paint; MPI # 114, X-Green 114, 154, X-Green 154, 164, LEED 2009, LEED V4.
   a. Benjamin Moore Ultra Spec D.T.M. Acrylic Gloss Enamel HP28

2. Top Coat: Gloss acrylic latex enamel paint; MPI # 114, X-Green 114, 154, X-Green 154, 164, LEED 2009, LEED V4.
   a. Benjamin Moore Ultra Spec D.T.M. Acrylic Gloss Enamel HP28

D. See Section 07 46 46 for exterior painting of fiber cement siding, trim and accessories at the Kiosk.

## 3.7 INTERIOR PAINTING SCHEDULE

A. General: Provide listed products or equal products of other named manufacturers in Part 2.

B. Gypsum Board Ceilings: Flat acrylic finish.

1. Prime Coat: Latex-based, interior primer; MPI # 50, X-Green 50, 149, X-Green 149, LEED 2009, LEED V4, CHPS Certified.
   a. Benjamin Moore; Ultra Spec 500 Interior Latex Primer N534

2. Intermediate Coat and Topcoat: Factory-formulated flat acrylic latex paint for interior application; MPI # 53, X-Green 53, 143, X-Green 143, LEED 2009, LEED V4, CHPS Certified.
   a. Benjamin Moore; Ultra Spec 500 Interior Latex Flat N536

C. Gypsum Drywall Walls: Low-luster (eggshell), acrylic finish.

1. Prime Coat: Latex-based, interior primer; MPI # 50, X-Green 50, 149, X-Green 149, LEED 2009, LEED V4, CHPS Certified.
   a. Benjamin Moore; Ultra Spec 500 Interior Latex Primer N534

2. Intermediate Coat and Topcoat: Low-luster (eggshell or satin), acrylic-latex, interior enamel; MPI # 52, X-Green 52, 145, X-Green 145, 139, X-Green 139, LEED 2009 LEED V4, CHPS Certified.
   a. Benjamin Moore; Ultra Spec 500 Latex Eggshell N538.

D. Gypsum Drywall Walls at Bathrooms and Janitor's Closets: Semi-Gloss, waterborne acrylic epoxy finish.

1. Prime Coat: Latex or two component epoxy-based, interior primer; MPI # 6, 17, X-Green 17, 39, 137, X-Green 137, LEED Credit, CHPS Certified.
   a. Benjamin Moore; Fresh Start Multi-Purpose Primer N023.

2. Intermediate Coat and Topcoat: Two component semi-gloss acrylic-epoxy;Interior/Exterior Epoxy (water based), LEED 2009.
   a. Benjamin Moore; Corotech Pre-Catalyzed Waterborne Epoxy Semi-Gloss V341.

E. Hollow Metal Doors, Frames, and Sidelights, and Ferrous Metals: Semigloss, acrylic-enamel finish.

1. Prime Coat: Rust-Inhibitive Primer (Water Based), MPI #107, X-Green 107, 134, LEED 2009, CHPS Certified.
   a. Benjamin Moore; Super Spec HP Acrylic Metal Primer P04.

2. Intermediate Coat and Topcoat: Factory-formulated semigloss acrylic-latex enamel for interior application; MPI # 141, X-Green 141, 153, X-Green 153, LEED 2009, LEED V4.
   a. Benjamin Moore; Ultra Spec HP D.T.M. Acrylic Semi-Gloss Enamel, HP29

F. Concrete Masonry Units (CMU): Alkyd, water-based finish; in sheen as selected by Architect.

1. Prime Coat/Block Filler: MPI # 4, X-Green 4, LEED 2009, LEED V4, CHPS Certified.
   a. Benjamin Moore Super Spec Masonry Interior/Exterior Hi-Build Block Filler 206.

2. Intermediate Coat and Topcoat: Alkyd, water-based finish; LEED 2009, LEED V4, CHPS Certified. One of the following:
   a. Satin: Benjamin Moore Advance Waterborne Interior Alkyd Satin 792.
   b. Semi-Gloss: Benjamin Moore Advance Waterborne Interior Alkyd Semi-Gloss 793.
   c. High Gloss: Benjamin Moore Advance Waterborne Interior Alkyd Gloss 794.

G. Concrete Masonry Units (CMU) at Bathrooms and Janitor's Closets: Semi-Gloss, waterborne acrylic epoxy finish.

1. Prime Coat: Acrylic block filler primer; LEED 2009.
   a. Benjamin Moore; Corotech Acrylic Block Filler V114..

2. Intermediate Coat and Topcoat: Two component semi-gloss acrylic-epoxy;Interior/Exterior Epoxy (water based), LEED 2009.
   a. Benjamin Moore; Corotech Pre-Catalyzed Waterborne Epoxy Semi-Gloss V341

H. Painted Woodwork: Semigloss, acrylic finish.

1. Prime Coat: Latex-based, interior primer; MPI # 50, X-Green 50, 149, X-Green 149, LEED 2009, LEED V4, CHPS Certified.
   a. Benjamin Moore; Ultra Spec 500 Interior Latex Primer N534

2. Intermediate Coat and Topcoat: Semigloss acrylic-latex, interior enamel; MPI # 43, X-Green 43, 146, X-Green 146, 140, X-Green 140, LEED 2009, LEED V4, CHPS Certified.
   a. Benjamin Moore; Ultra Spec 500 Latex Semigloss N539.

I. Exposed Equipment at Ceilings: Flat dryfall finish.

1. Prime Coat: Benjamin Moore; Corotech Prep All Universal Metal Primer V132.
2. Top Coat: Benjamin Moore; Coronado Super Kote 5000 Dry Fall Alkyd Flat 105, MPI # 55.

J. Reference Sections 078123 and 078200 for additional information on intumescent fireproofing and board protection panels.

1. Intumescent Fireproofing : At exposed areas, provide finish top coat of paint per manufacturer’s written requirements in color selected by Architect.
2. Mineral Fiber Board Protection : At exposed areas, provide finish top coat of paint per manufacturer’s written requirements in color selected by Architect.

END OF SECTION 09910

# SECTION 10 14 00

# IDENTIFYING DEVICES

## Part 1 - GENERAL

1.01 Applicable provisions of the Conditions of the Contract and Division #1, General Requirements govern work in this Section.

1.02 DESCRIPTION OF WORK

A. The work of this Section consists of the provision of all plant, materials, labor and equipment and the like necessary and/or required for the complete execution of the signage and graphics work for this project as indicated in Section 10 14 01 Signage Schedule and required by the keynotes and drawings.

1. All signage proposed for the Work shall be "accessible design" signage in accordance with ANSI A117.1 and the "ADA" requirements promulgated by the acts of 2010.
2. All type shall be produced from typeset type at least one half full size.
3. Provide exterior grade Pin mounted lettering in Times New Roman Font
   a. At Press box- “GREENWICH HIGH SCHOOL”.
   b. At Kiosk Gate- “CARDINAL STADIUM”.
   c. Above Toilet room doors “MEN” OR “WOMAN”
4. Provide room identification panel signage in brushed aluminum
5. Cast Bronze dedication plaque
6. Vinyl Banner, Qty. 4 with words “CARDINALS”, Qty. 2 with words “GREENWICH” styles , 10’h x 2’ w Pole mounted.
7. Vinyl Cardinal Decal graphic. 4 Color, Black, Greenwich Red, White and Greenwich Yellow see drawings.
8. Code signage as required by accessibility regulations and requirements of authorities having jurisdiction, Including but not limited to: Room Capacity, Elevator, Signs for accessible spaces.
9. Bleacher wrap- Add alt 3.

1.03 RELATED WORK SPECIFIED ELSEWHERE - Entire Project Specification.

1.04 QUALITY ASSURANCE

A. Requirements given herein may be affected by other related requirements of the project specification. Correlation of contract requirements is the responsibility of the Contractor.

B. The work of this Section shall be performed by a "Specialty Contractor" as defined in the General Conditions.

C. In compliance with the SED Manual of Planning Standards, Part II, Section S202, all materials incorporated in the work of this Section shall comply with the following:

- Class A, Flame Spread 0-25 interior finish shall be mandatory in corridors; passageways; stairs; exit ways; kitchens; maintenance, repair and custodial areas; trim/paneling systems in places of public assembly.
- Class C, Flame Spread Less than 200 interior finish is mandatory in all instructional and office spaces.

In any case, regardless of the flame spread classification, no material having a smoke developed rating of 450 or more may be used in any area of work on this project.

1.05 SUBMITTALS – Coordinate with Section 01 33 00

- Submittals shall be made in groupings where installations are complementary, i.e. steel, steel decking, steel stairs, stair railings; roof systems/flashings; mechanical and electrical apparatus and the like. Failure to comply with this requirement will be cause for rejection of any or all submittals.
- As set forth in Sections 01 33 00 and 01 32 00, prepare and submit a fully developed submittal schedule; note review times set forth in Section 01 33 00 are deemed “average”, for large submissions allow longer review times.
- Attention is directed to Section 01 31 14 for coordination drawing requirements for this project. These drawings are critical to the proper execution of the Work and failure to honor these requirements may become the basis for denial of any and all claims for either or both “time” and “money”.
- The Contractor is encouraged to submit for approval products made from recycled and/or environmentally responsible material. Every effort will be made by the Design Professional Team to approve these materials; the substitution request procedure shall still be enforced.

A. Shop and layout drawings of all signage systems to be employed in the work; including but not limited to style, spacing and method of securing.
B. Samples of all signage systems to be employed in the work. Signage sample submitted shall be on actual background media intended. Samples to be submitted for construction quality, finish, graphic application, type face, layout and color match.
C. Color panels of all materials to be incorporated in the work for Architect's selection.
D. Material Safety Data Sheet (MSDS) must be submitted for each product.

1.06 PRODUCT DELIVERY, STORAGE AND HANDLING (Coordinate with Section 01 61 00)
A. Deliver materials to project site in manufacturer's original unopened protective packaging.
B. Identify contents, manufacturer, brand name, and applicable standards.
C. Handle so as to prevent damage.

1.07 COORDINATION
A. Furnish full-size spacing templates for individually bundled letters and numbers for coordination with work of other trades.

1.08 SUSTAINABILITY
A. In the selection of the products and materials of this section as well as for the entire project, preference will be given to those with the following characteristics:
1. Water based.
2. Water-soluble.
3. Can be cleaned up with water.

4. Non-flammable.
5. Biodegradable.
6. Low or preferably no Volatile Organic Compound (VOC) content.
7. Manufactured without compounds that contribute to ozone depletion in the upper atmosphere.
8. Manufactured without compounds that contribute to smog in the lower atmosphere.
9. Do not contain methylene-chloride.
10. Do not contain chlorinated hydrocarbons.
11. Contains the least possible of post-consumer or post-industrial waste.

Part 2 - PRODUCTS

2.01 MATERIALS - GENERAL

A. Exterior Pin mounted letters-
   1. Aluminum Painted letters. Paint to be a 3 stage paint systems similar to Matthews paint systems. (Automotive type) Color to be selected from RAL color line. Font style as shown on drawings.
      A. Press box letters – 18" h x ¾" thick.
      B. Gate letters- 8"h x ¾" thick. Plate mounted letters (with threaded stud, drilled and tapped) .
   2. Satin Stainless steel No 4 finish, Type 304, Comply with ASTM -A666
      A. Toilet room signs- 6" h x 3/4" thick

B. Room Identification Signage- Brushed Aluminum 1/8" thick composite material with raised Characters and Grade 2 Braille in Red color with black border. Except at Type T signage the font color is to be black.

C. Cast bronze Dedication Plaque- Bronze Castings- Meet ASTM B584, Single line edge, concealed stud for mounting on substrate, ¾" thick, Leatherette finish with brushed surface, Color 1315 Dark Oxide polished with satin coating, raised copy Arial font. See drawing for layout, final wording to be coordinated with owner.

D. Bleacher wrap-Basis of design: Bleacher Skin Bleacher Graphics by Big Sign, Grand Haven Michigan. HSS 3"x0.250 galvanized posts 48" on center fastened to parapet per structural drawings. See roof plan and elevations for locations of signage assembly. Height of posts shall vary as required so that signage may be installed to within 8" of the underside of bleacher assembly. Provide additional galv. steel horizontal framing as required. Steel components shall be finish painted, see specification. Dura-Mesh (polyester scrim material), 35% wind pass-thru, all required fasteners and additional tensioning systems as required for tight and secure installation per manufacturer's written requirements.
   Design shall include custom layout of logos, text, photographs, and other imagery, to be coordinated with District. Premium inks and printing processes for durable, fade resistant imagery for life of product.

.

2.03 FASTENERS AND GLUES

A. Screws and bolts for room identification signs shall have tamperproof panhead, spannerheads (Note: One-way screws will not be acceptable), shall be appropriate for the connection and location as per industry standard and be non corrosive.

C. Fasten letters with Epoxy, pin and nutted on backside

2.04 OCCUPANCY SIGNS

A. Frame for occupancy certificate, maximum occupancy and Building signs shall be of aluminum, stain finish, with one side of frame removable.
B. For size of frames, see drawings, minimum 1/2 inch face width.
C. Provide 1/4 inch plywood backing in the frames.
D. Secure frames to walls using tamperproof devices suitable for intended substrate.
E. Safety glazing shall be as specified in Section 08 80 00.
F. Text and background colors shall be as selected by Architect .

Part 3 - EXECUTION

3.01 INSPECTION AND ACCEPTANCE

A. Examine all surfaces and contiguous elements to receive work of this section and correct, as part of the Work of this Contract, any defects affecting installation. Commencement of work will be construed as complete acceptability of surfaces and contiguous elements.
B. Warranty-

3.02 PREPARATION

A. Separate aluminum from dissimilar metal parts of anchors by a heavy coat of approved bituminous paint applied to the contact surfaces and allowed to dry before assembly.
B. All surfaces to receive applied signage shall be clean and dry and of composition that will readily accept intended signage application.
C. If composition does not readily accept or support signage report said problem with 24 hours to the Architect for resolution.

3.03 INSTALLATION - GENERAL

A. Units shall be installed true to line and level by the manufacturer or his authorized representative in accordance with approved shop and layout drawings.

B. shall be applied in accordance with manufacturer's recommendations and to configuration shown and/or scheduled.

3.04 WARRANTY

A. Manufacturer agrees to replace or repair components of signs that fail in materials or workmanship with a five year period from date of substantial completion. Failures include but are not limited to Deterioration of finishes beyond normal weathering. Separation or delamination of sheet materials or components

3.04 CLEANUP AND PROTECTION

A. All debris resulting from construction operations will be removed daily and upon final completion, all operating parts will be cleaned and protection removed.

3.05 WASTE MANAGEMENT – Coordinate with Section 01 74 19

A. Separate and recycle materials and material packaging in accordance with Waste Management Plan and to the maximum extent economically feasible and place in designated areas for recycling.
B. Set aside and protect materials suitable for reuse and/or remanufacturing.
C. Separate and fold up metal banding; flatten and place along with other metal scrap for recycling in designated area.

**End of Section**

# SECTION 10 21 00

# TOILET COMPARTMENTS

## Part 1 - GENERAL

1.01 Applicable provisions of the Conditions of the Contract and Division #1, General Requirements govern work in this Section.

1.02 DESCRIPTION OF WORK

A. The work of this Section consists of the provision of all plant, materials, labor and equipment and the like necessary and/or required for the complete execution of toilet and privacy compartment work for this project as required by the schedules, keynotes and drawings, including, but not limited to the following:

1. Provide floor mounted, ceiling braced, polymer toilet compartment enclosures and doors. All pilasters shall be of extended height to tie into ceiling above; provide shoe at top and bottom of each pilaster.
2. Provide grab bars in all handicapped compartments using material as specified herein.

**Note: Color as selected from full range of premium colors and designer colors. No Zamak will be accepted on this project.**

1.03 RELATED WORK SPECIFIED ELSEWHERE - Entire Project Specification with specific reference to those sections noted above and as follows:

A. 10 28 00 - Toilet accessories except as noted herein

1.04 QUALITY ASSURANCE

A. The manufacturer of the work required under this Section must show that he is engaged in and has been manufacturing this type of work for a period of not less than 5 years.

B. All work herein shall comply with the requirements set forth in the reference standards. The most restrictive shall apply.

1. National Fire Protection Association 101 Life Safety Code 2003 Edition, Chapters 5 and 10.
2. ANSI A117.1-2003 Specifications for Making Buildings and Facilities Accessible to and Usable by Physically Handicapped People.
3. International Code Council, International Building Code, 2015 Edition.
4. Title 24, California Code of Regulations, Parts 2, 3, and 5.
5. ADA, Accessibility Guidelines for Buildings and Facilities, Federal Register Volume 56, Number 144, Rules and Regulations.
6. American Society for Testing and Materials Standards:
   a. ASTM E 84-01 Standard Test Method for Surface Burning Characteristics of Building Material.
   b. ASTM D 2794-93(1999)e1 Standard Test Method for Resistance of Organic Coatings to the Effects of Rapid Deformation (Impact).
   c. ASTM D 2197-98(2002) Standard Test Method for Adhesion of Organic Coatings by Scrape Adhesion.
   d. ASTM D 6578-00 Standard Practice for Determination of Graffiti Resistance.

C. All polymer materials shall conform with Connecticut State Code requirements, except a flame spread rating of not more than 200 and a smoke density rating of not less than 75 or a smoke developed rating of less than 450 may be approved.

1.05 SUBMITTALS – Coordinate with Section 01 33 00

- Submittals shall be made in groupings where installations are complementary. Failure to comply with this requirement will be cause for rejection of any or all submittals.
- As set forth in Sections 01 33 00 and 01 32 00, prepare and submit a fully developed submittal schedule; note review times set forth in Section 01 33 00 are deemed “average”, for large submissions allow longer review times.
- Attention is directed to Section 01 31 14 for coordination drawing requirements for this project. These drawings are critical to the proper execution of the Work and failure to honor these requirements may become the basis for denial of any and all claims for either or both “time” and “money”.
- The Contractor is encouraged to submit for approval products made from recycled and/or environmentally responsible material. Every effort will be made by the Design Professional Team to approve these materials; the substitution request procedure shall still be enforced.

A. Product data – material specifications and the like.
B. Shop drawings showing all plans, elevation and details and showing adjoining materials and fastenings.
C. Color, construction, brackets and hardware samples. Color samples shall show entire range of stock
D. Certification of specification compliance.
E. The Contractor shall take all necessary field measurements prior to fabrication and installation work and shall assume complete responsibility for accuracy of same.
F. Material Safety Data Sheet (MSDS) must be submitted for each product.

1.06 PERFORMANCE REQUIREMENTS

A. Graffiti Resistance: Partition material shall have the following graffiti removal characteristics when tested in accordance with ASTM D 6578-00 Standard Practice for Determination of Graffiti Resistance in accordance with Section 9, “Graffiti Removal Procedure Using Manual Solvent Rubs”: Five (5) required staining agents shall be cleaned off material.
B. Scratch Resistance: Partition material shall have the following characteristics when tested in accordance with ASTM D 2197-98(2002) Standard Test Method for Adhesion of Organic Coating by Scrape Adhesion, using Gardner Stock #PA-2197/ST pointed stylus attachment on scrape tester: Maximum Load Value shall exceed 10 kilograms.
C. Impact Resistance: Partition material shall have the following characteristics when tested in accordance with ASTM D 2794-93(1999)e1 Standard Test Method for Resistance of Organic Coating to the Effects of Rapid Deformation (Impact), using .625” hemispherical indenter with 2-lb impact weight: Impact Resistance: Maximum Impact Force value shall exceed 30 inch-lbs.

D. Fire Resistance: Partition material shall comply with the following requirements, when tested in accordance with ASTM E 84: Standard Test Method for Surface Burning Characteristics of Building Materials:
   1. Smoke Developed Index: Not to exceed 450.
   2. Flame Spread Index: Not to exceed 75.
   3. Material Fire Ratings:
      a. National Fire Protection Association (NFPA): Class B.
      b. International Code Council (ICC): Class B.

1.07 SPECIAL GUARANTEE/WARRANTY TERMS - Ten-year limited warranty for panels, doors, and stiles against breakage, corrosion, delamination, and defects in factory workmanship.

1.08 SUSTAINABILITY
A. In the selection of the products and materials of this section as well as for the entire project, preference will be given to those with the following characteristics:
   1. Water based.
   2. Water-soluble.
   3. Can be cleaned up with water.
   4. Non-flammable.
   5. Biodegradable.
   6. Low or preferably no Volatile Organic Compound (VOC) content.
   7. Manufactured without compounds that contribute to ozone depletion in the upper atmosphere.
   8. Manufactured without compounds that contribute to smog in the lower atmosphere.
   9. Do not contain methylene-chloride.
   10. Do not contain chlorinated hydrocarbons.
   11. Contains the least possible of post-consumer or post-industrial waste.

Part 2 - PRODUCTS

2.01 MANUFACTURER
A. Toilet partitions and screens (as required) shall be solid 1 inch thick HDPE as manufactured by Scranton Products Hiney Hiders or equal as approved by Architect.
   1. Color: Grey “Orange Peel”

2.02 HEIGHT ABOVE FINISHED FLOOR
A. Toilet Compartments - 70 inches unless otherwise shown;

2.03 MATERIALS
A. All materials, panels, doors, pilasters and the like shall be fabricated from polymer resins under high pressure forming a single component section that is waterproof, corrosion-proof, impact-resistant, and non-absorbent, and which has a self-lubricating protective plastic glaze coating over all surfaces that resists marking with pens, pencils, lipsticks, and other writing or marking implements.

2.04 CONSTRUCTION
A. All partitions shall be 1 inch thick, with all edges machined to a radius of 0.250

inches and all sharp corners removed. All pilasters shall be ceiling high and fastened to 3 inch high, 18 gauge stainless steel shoes at both top and bottom by means of theft-proof stainless steel sex bolts.

2.05 HARDWARE AND ACCESSORIES

A. Each toilet compartment shall be complete with all hardware, door hinges, latch stop and keeper, and all necessary fittings and fastening for a complete installation.

B. Door hardware:

1. Hinge: Cast Stainless Steel Helix Hinge shall be made of Type 304 Stainless Steel and shall have a Satin finish. Hinge shall be gravity type .On doors <u>over</u> 24 inches use a oversized outswing noted wrap-around hinge.
2. Equip each door with 1 coat hook/bumper of heavy duty Stainless Steel with rubber bumper. Handicapped doors also include 1 door pull and 1 wall stop.
3. Fabricate door strike and keeper from heavy aluminum extrusion (6063-T6 Alloy) with clear anodized finish with wrap around flange surface, mounted and thru-bolted to pilaster with one-way stainless steel sex bolts.
4. Door latches - integral latch with 3/8 inch stainless steel slide bolt. Provide emergency access provisions on all latches to handicapped compartments. Include Occupancy indicator.

C. Provide aluminum strip on bottom of all panels and doors.

D. Mounting Brackets

1. Furnish full length continuous wall bracket (6063-T6 Alloy) with mill finish not less than 1.685 lbs. per linear foot for use for all panels to pilaster, pilaster to wall and panel to wall connections. Predrill wall brackets by manufacturer with holes spaced every 12 inches along full length of brackets.

2.06 GRAB BARS

A. Grab bars shall be ”H Series Grab Bars” from Tubular Specialties Manufacturing, Inc., Los Angeles, California:,

B. Material: Stainless steel type 304 (18-8), all welded construction.

C. Finish: #4 Satin

D. Gripping Surface: Smooth

E. Tubing: 1-1/2" x 18 gauge (38x1.2mm) with ends turned 90° by mandrel bending and heliarc welded to flanges to form a single structural unit.

F. Grab bars, fasteners, and anchors shall be capable of sustaining a force of 250 pounds at any point and from any direction.

G. Meet requirements of ANSI, latest edition, for "structural Strength" for grab bars. Provide 1-1/2 inch clearance between grab bar and wall surface.

H. Coordinate with companion construction trades to insure that proper blocking supports are incorporated into partition construction.

<u>NOTE</u> - If toilet partition panels require additional reinforcement to sustain the design load specified above, manufacturer to provide.

<u>Part 3 - EXECUTION</u>

3.01 INSPECTION AND ACCEPTANCE

A. Examine all surfaces and contiguous elements to receive work of this section and correct, as part of the Work of this Contract, any defects affecting installation. Commencement of work will be construed as complete acceptability of surfaces and contiguous elements.

B. Verify correct spacing and size of plumbing fixtures for compliance with ADA-AG as per Paragraph 1.03 herein.

3.02 ERECTION - GENERAL

A. Arrangement of enclosures and sizes shall be as indicated on the drawings, and the work shall be laid out from actual dimensions at the site.

B. Erect units in strict accordance with manufacturer's instructions and in accordance with approved shop drawings, so as to provide for a firm installation, straight and plumb, securely attached to floors, walls and ceilings and with all horizontal lines level.

C. Attach brackets to adjacent wall construction through use of stainless steel expansion bolts or toggle type devices spaced at 12 inch intervals, staggered, along the full length of bracket depended upon substrates encountered.

D. Through bolt wall brackets to panels and pilasters with one-way stainless steel sex bolts.

E. Anchor dividing partition panels to pilaster stiles which shall be adequately reinforced to receive dividing partition panels.

F. Clearances

1. Provide clearances of not more than 1/2 inch between pilasters and panels, panels and walls, and not more than 1 inch between pilasters and walls.
2. Clearance at vertical edges of doors shall be uniform from top to bottom and shall not exceed 3/16 inches. Doors shall be free of warps and bends.

G. Conceal all evidence of drilling, cutting and fitting of the finish surfaces.

3.03 GRAB BAR INSTALLATION

A. Install grab bars at heights above floor, and in locations related to plumbing fixtures as shown on the Drawings and in accordance with ANSI requirements.

B. Install true and plumb.

3.04 PROTECTION

A. Protect all adjacent work and finished surfaces from damage caused by the installation of the work of this Section.

B. Damage caused by the handling, storing or installation of the work herein, or failure to provide adequate protection of surrounding areas shall be repaired or replaced at no additional cost to the Owner.

3.05 ACCEPTANCE AND CLEANUP

A. After erection and until final acceptance of the buildings, protect all work from damage of any nature.

B. Any part or parts damaged shall be replaced by the Contractor without cost to the Owner. Such replacements shall include adjacent work that may be incidentally damaged.

C. All work shall be turned over to the Owner in a clean, properly installed, true to line and plumb condition.

D. Adjust hardware and leave in perfect working order.
E. Remove all protective masking and clean surfaces, leaving them free of soil and imperfection.
F. Upon completion of work, all equipment, remaining material and rubbish resulting from the work of this section shall be removed from the premises.

3.06 WASTE MANAGEMENT – Coordinate with Section 01 74 19
A. Separate and recycle materials and material packaging in accordance with Waste Management Plan and to the maximum extent economically feasible and place in designated areas for recycling.
B. Set aside and protect materials suitable for reuse and/or remanufacturing.
C. Separate and fold up metal banding; flatten and place along with other metal scrap for recycling in designated area.

**End of Section**

# SECTION 10 28 00

# TOILET ACCESSORIES

## Part 1 - GENERAL

1.01 Applicable provisions of the General Conditions and Division #1, General Requirements govern work in this Section.

1.02 DESCRIPTION OF WORK

A. Contractor shall provide grab bars, mirrors, baby changing stations, and hand dryers, in accordance with the Documents.

B. All other toilet accessories (toilet paper, sanitary disposal, garbage, soap dispenser) shall be provided by Owner for installation by Contractor in accordance with the Documents including all necessary attachment devices and backplates where required, in accordance with manufacturer and equipment scheduled herein.

C. Coordinate installation of blocking where required to be furnished and installed under Section 06 10 00 or Section 09 29 00 dependent upon material type.

D. Contractor to furnish accessories for handicapped toilet and bath areas so as to comply with ANSI A117.1, applicable barrier board requirements and ADA Act of 2010 whichsoever is most restrictive.

1.03 RELATED WORK SPECIFIED ELSEWHERE - Entire Project Specification with specific reference to those sections noted above and as follows:

A. Division 22 - Plumbing - Installation of all accessories

1.04 QUALITY ASSURANCE

A. All materials shall be delivered to the job site in unopened factory sealed containers clearly labeled as to product, manufacturer, color and/or other pertinent characteristics.

B. Materials shall be stored under conditions recommended by the manufacturer.

C. Items shall be packed separately and marked for the room in which they are to be installed; and all items shall be provided with screws, bolts and other fittings or devices required for proper installation.

1.05 SUBMITTALS – Coordinate with Section 01 33 00

- Submittals shall be made in groupings where installations are complementary, i.e. steel, steel decking, steel stairs, stair railings; roof systems/flashings; mechanical and electrical apparatus and the like. Failure to comply with this requirement will be cause for rejection of any or all submittals.
- As set forth in Sections 01 33 00 and 01 32 00, prepare and submit a fully developed submittal schedule; note review times set forth in Section 01 33 00 are deemed “average”, for large submissions allow longer review times.
- Attention is directed to Section 01 31 14 for coordination drawing requirements for this project. These drawings are critical to the proper execution of the Work and failure to honor these requirements may become the basis for denial of any and all claims for either or both “time” and “money”.

- The Contractor is encouraged to submit for approval products made from recycled and/or environmentally responsible material. Every effort will be made by the Design Professional Team to approve these materials; the substitution request procedure shall still be enforced.

A. Samples of each item specified for approval, each of which will then be installed as part of the project. Display shall be set up at job site.
B. Complete catalog cuts and schedule showing toilet room accessories specified, manufacturer, model number and locations shall be submitted for approval.
C. Manufacturing order shall not be placed until detailed schedule has been formally approved by Architect and returned to Contractor.
D. Certification of specifications compliance.
E. Material Safety Data Sheet (MSDS) must be submitted for each product.

1.06 SUSTAINABILITY

A. In the selection of the products and materials of this section as well as for the entire project, preference will be given to those with the following characteristics:
   1. Water based.
   2. Water-soluble.
   3. Can be cleaned up with water.
   4. Non-flammable.
   5. Biodegradable.
   6. Low or preferably no Volatile Organic Compound (VOC) content.
   7. Manufactured without compounds that contribute to ozone depletion in the upper atmosphere.
   8. Manufactured without compounds that contribute to smog in the lower atmosphere.
   9. Do not contain methylene-chloride.
   10. Do not contain chlorinated hydrocarbons.
   11. Contains the least possible of post-consumer or post-industrial waste.

Part 2 - PRODUCTS

2.01 STANDARD OF QUALITY AND MANUFACTURER

A. The numbers hereinafter listed in the schedule shall be considered standard of quality, design, workmanship, metal gauge, capacity and finish.
B. Products furnished by others shall conform in all respects to the specified items and shall receive Architects approval.
C. All lockable items shall be keyed alike.
D. Any accessories scheduled herein not shown on the drawings or vice-versa shall be provided. Examine Drawings for items not scheduled and supply same.

2.02 GRAB BARS

A. Grab bars specifications provided in Section 10 21 00 apply to the work of this section for all locations indicated on drawings. Grab bars are to be furnished in configuration shown and/or required to comply with ANSI A117.1, applicable Barrier Board Requirements and ADA Act of 2010 whichsoever is most restrictive. Reinforcements and attachments shall be concealed. Coordinate requirements for grab rail reinforcing with Sections 06 10 00 and 10 21 00; supplier of grab bars

is responsible to provide additional reinforcing as required.

2.04 HAND DRYERS

A. Provide Hand Dryers by Dyson, or approved equal, at areas indicated on Drawings.
   1. Dyson Airblade dB, Grey finish

2.05 MIRROR UNITS

A. Stainless Steel Framed Mirror Units: Fabricate frame from 1/2 by 1/2 by 3/8 channel shapes with square corners mitered, welded, and ground smooth, from satin-finished stainless. Provide shock absorbing strips for perimeter frame and for full size of back, with galvanized steel back, concealed wall hanger and theft proof fasteners. Mirror shall be fully tempered glass. Bobrick B-1658, or approved equivalent.
   1. Sizes: As indicated on Drawings.

2.06 BABY CHANGING STATIONS

A. Provide baby changing tables by Koala, or approved equal, at areas indicated on Drawings.
   1. Koala kare kb110-sswm

Part 3 - EXECUTION

3.01 INSTALLATION

A. The General Contractor shall assume the installation of all items unless otherwise noted.
B. The General Contractor shall check all accessories when delivered to building and verify the deliveries to be in perfect condition and in accordance with the Contract and be responsible for them until turned over to the plumber for his installation.
C. All accessories shall be set UNDER OTHER Sections of these Specifications in a permanently secure manner, plumb, square and true, using concealed type fittings and fasteners. Grab bars shall be secured with bolts through wall to anchor plates suitable for base construction. All drilling and setting shall be done without damage to adjoining work or surfaces. Scratched, damaged or unworkmanlike installations will be rejected.

3.02 WASTE MANAGEMENT – Coordinate with Section 01 74 19

A. Separate and recycle materials and material packaging in accordance with Waste Management Plan and to the maximum extent economically feasible and place in designated areas for recycling.
B. Set aside and protect materials suitable for reuse and/or remanufacturing.
C. Separate and fold up metal banding; flatten and place along with other metal scrap for recycling in designated area.

**End of Section**

THIS PAGE INTENTIONALLY LEFT BLANK

# SECTION 10 44 00

## FIRE PROTECTION SPECIALTIES
(Including Defibrillators)

## Part 1 - GENERAL

1.01 Applicable provisions of the Conditions of the Contract and Division #1, General Requirements govern work in this Section.

1.02 DESCRIPTION OF WORK

A. The work of this Section consists of the provision of all plant, materials, labor and equipment and the like necessary and/or required for the complete execution of all fire cabinets and extinguishers located as per code statement as well as one (1) AED device for the building located as directed by the Owner for this project.

Extinguishers shall be located so that no point in a corridor, lobby or stair is more than 75 feet from an extinguisher. Extinguishers shall also be placed readily accessible to mechanical/boiler rooms, kitchens, serveries, and accessible from other places which are possible sources of fire.

***NOTES:***

- ***Fire extinguishers shall be fully charged when building is accepted by Owner.***
- ***Where cabinets are located in fire rated walls, provide "Fire-FX" option for cabinet construction.***
- ***All extinguishers shall be U/L rated 2A-10BC.***

1.03 RELATED WORK SPECIFIED ELSEWHERE - Entire Project Specification with specific reference to those sections noted above and as follows:

A. 04 20 00 – Unit Masonry
B. 09 90 00 - Field Painting

1.04 QUALITY ASSURANCE

A. Conform to NFPA 10 requirements for portable fire extinguishers.
B. Provide fire extinguishers, cabinets and accessories by a single manufacturer.
C. Conform to UBC 43-6 (ASTM E 814-83) for fire resistive wall performance where necessary.
D. Americans with Disabilities Act 1990- Maximum 4 cabinet projection for corridors.
E. All materials incorporated in the work of this Section shall comply with the following:
   1. Class A, Flame Spread 0-25 interior finish shall be mandatory in corridors; passageways; stairs; exit ways; kitchens; maintenance, repair and custodial areas; trim/paneling systems in places of public assembly.
   2. Class C, Flame Spread Less than 200 interior finish is mandatory in all instructional and office spaces.

   In any case, regardless of the flame spread classification, no material having a smoke developed rating of 450 or more may be used in any area of work on this project.

1.05 SUBMITTALS – Coordinate with Section 01 33 00

- Submittals shall be made in groupings where installations are complementary, i.e. steel, steel decking, steel stairs, stair railings; roof systems/flashings; mechanical and electrical apparatus and the like. Failure to comply with this requirement will be cause for rejection of any or all submittals.
- As set forth in Sections 01 33 00 and 01 32 00, prepare and submit a fully developed submittal schedule; note review times set forth in Section 01 33 00 are deemed "average", for large submissions allow longer review times.
- Attention is directed to Section 01 31 14 for coordination drawing requirements for this project. These drawings are critical to the proper execution of the Work and failure to honor these requirements may become the basis for denial of any and all claims for either or both "time" and "money".
- The Contractor is encouraged to submit for approval products made from recycled and/or environmentally responsible material. Every effort will be made by the Design Professional Team to approve these materials; the substitution request procedure shall still be enforced.

A. Shop drawings of all fabricated items showing complete construction details, erection requirements and fastenings.
B. Full size samples of fabricated units to be incorporated in the work. Samples shall be incorporated as part of the contract obligations.
C. Samples of all other materials required to complete the work.
D. Certification of Specification Compliance.
E. Where applicable, Contractor shall take all necessary field measurements prior to fabrication and shall assume complete responsibility for accuracy of same.
F. Material Safety Data Sheet (MSDS) must be submitted for each product.

1.06 PRODUCT DELIVERY, STORAGE AND HANDLING (Coordinate with Section 01 61 00)
A. All materials shall be delivered to the job site in unopened factory sealed containers clearly labeled as to product, manufacturer, color and/or other pertinent characteristics.
B. Materials shall be stored under conditions recommended by the manufacturer.

Part 2 - PRODUCTS

2.01 ACCEPTABLE MANUFACTURERS
A. Units shall be as manufactured by J.L. Industries or equal by Potter Remmer or Larsons and shall be located as indicated on the drawings and/or in compliance with code statement in Part 1 above.
B. Cabinets: J.L. Industries – 1016-W18 and 1017-W18, finish to be electrostatic white epoxy primer finish.

2.02 FIRE EXTINGUISHERS
A. Water Type: J.L. Industries Grenadier P
B. Dry Chemical Type: J.L. Industries Cosmic or Galaxy Series
C. Carbon Dioxide Type: J.L. Industries Sentinel Series.

2.03 ACCESSORIES
- A. Extinguisher Brackets
- B. Cabinet Alarms

2.04 AUTOMATED EXTERNAL DEFIBRILLATOR
- A. Provide Zoll AED+Plus with Zoll one-piece CPR-D *padz* with CPR Feedback, Batteries, Carry case, 5 year warranty.

2.05 TRAINING UNIT
- A. Provide Zoll AED+Plus training unit with trainer remote control, AC Adapter, hand held cord, and operator manual.

2.06 AED CABINET
- A. Semi-recessed wall cabinet with strobe/alarm similar to model AMP180-14RRM by AED Superstore. Wall-mounted strobe/alarm is similar to part AMP180-14RRM.

Part 3 - EXECUTION

3.01 INSTALLATION
- A. Install items included in this section in locations and at mounting heights indicated, or if not indicated, at heights to comply with applicable regulations of governing authorities.
  1. Prepare recesses in walls for fire extinguisher cabinets as required by type and size of cabinet and style of trim and to comply with manufacturer's instructions.
  2. Securely fasten mounting brackets and fire extinguisher cabinets to structure, square and plumb, to comply with manufacturer's instructions.

3.02 CLEANUP AND PROTECTION
- A. Protect all adjacent work and finished surfaces from damage caused by the installation of the work of this Section.
- B. Damage caused by the handling, storing or installation of the work herein, or failure to provide adequate protection of surrounding areas shall be repaired or replaced at no additional cost to the Owner.
- C. All debris resulting from construction operations will be removed daily and upon final completion, all operating parts will be cleaned and protection removed.

3.03 WASTE MANAGEMENT – Coordinate with Section 01 74 19
- A. Separate and recycle materials and material packaging in accordance with Waste Management Plan and to the maximum extent economically feasible and place in designated areas for recycling.
- B. Set aside and protect materials suitable for reuse and/or remanufacturing.
- C. Separate and fold up metal banding; flatten and place along with other metal scrap for recycling in designated area.

**End of Section**

SECTION 12 36 13

CONCRETE COUNTERTOPS

Part 1 - GENERAL

1.01 Applicable provisions of the Conditions of the Contract and Division #1, General Requirements govern work in this Section.

1.02 DESCRIPTION OF WORK
A. The work of this Section consists of the provision of all plant, materials, labor and equipment and the like necessary and/or required for the complete execution of the required polished concrete counter tops for this project as required by the schedules, keynotes and drawings.

1.03 RELATED WORK SPECIFIED ELSEWHERE - Entire Project Specification with specific reference to those sections noted above and as follows:
A. 03 30 00 - Cast-In-Place Concrete.
B. 04 20 00 - Masonry Units.
C. 06 10 00 - Rough Carpentry.
D. 07 90 00 - Joint Sealers.

1.04 QUALITY ASSURANCE
A. The work of this Section shall be accomplished by a Specialty Contractors with mechanics skilled in each of the trades involved with the respective items specified herein.
B. All materials incorporated in the work of this Section shall comply with the following:
- Class A, Flame Spread 0-25 interior finish shall be mandatory in corridors; passageways; stairs; exit ways; kitchens; maintenance, repair and custodial areas; trim/paneling systems in places of public assembly.
- Class C, Flame Spread Less than 200 interior finish is mandatory in all instructional and office spaces.

In any case, regardless of the flame spread classification, no material having a smoke developed rating of 450 or more may be used in any area of work on this project.

1.05 SUBMITTALS – Coordinate with Section 01 33 00

- Submittals shall be made in groupings where installations are complementary. Failure to comply with this requirement will be cause for rejection of any or all submittals.
- As set forth in Sections 01 33 00 and 01 32 00, prepare and submit a fully developed submittal schedule; note review times set forth in Section 01 33 00 are deemed “average”, for large submissions allow longer review times.
- Attention is directed to Section 01 31 14 for coordination drawing requirements for this project. These drawings are critical to the proper execution of the Work and failure to honor these requirements may become the basis for denial of any

and all claims for either or both “time” and “money”.

- The Contractor is encouraged to submit for approval products made from recycled and/or environmentally responsible material. Every effort will be made by the Design Professional Team to approve these materials; the substitution request procedure shall still be enforced.

A. Product Data: Manufacturer's data sheets on each product to be used, including:
   1. Preparation instructions and recommendations.
   2. Storage and handling requirements and recommendations.
   3. Installation methods.
   4. Cleaning and maintenance instructions.
B. Shop Drawings: Include project-specific details.
C. Verification Samples: For each finish product specified, two hand-size samples of colors, textures and shapes to be used on the project.
D. Warranty: Copy of manufacturer’s standard warranty.
E. Certification of Specification Compliance.
F. Where applicable, Contractor shall take all necessary field measurements prior to fabrication and shall assume complete responsibility for accuracy of same.
G. Material Safety Data Sheet (MSDS) must be submitted for each product.

1.06 PERFORMANCE REQUIREMENTS
A. Countertops: Products shall meet or exceed the following performance characteristics:
   1. Accelerated Weathering: ASTM G 155, passed, 2,000 hours; no deleterious effects, no cracking, checking, crazing, erosion, rusting, blistering, peeling or delaminating.
   2. Freeze/Thaw Resistance: ICC AC 219, passed, 10 cycles; no deleterious effects, no cracking, checking, crazing, erosion, rusting, blistering, peeling or delaminating.
   3. Water Absorption: ASTM C 1185, < 4%, passed; no deleterious effects, no cracking, checking, crazing, erosion, rusting, blistering, peeling or delaminating.
   4. Tensile Adhesion: ASTM C 297, 25 PSI, Minimum 15 PSI.
   5. Water Resistance: ASTM D 2247, passed, passed 14 days; no deleterious effects, no cracking, checking, crazing, erosion, rusting, blistering, peeling or delaminating
   6. Salt Spray: ASTM B 117, no deleterious effect, passed at 300 hours; no deleterious effects, no cracking, checking, crazing, erosion, rusting, blistering, peeling or delaminating.
   7. Surface Burning Characteristics: ASTM E 84, 0 Flame Spread/ 0 Smoke Develop, passed.
   8. Compressive Strength: ASTM C 39, < 7,000 PSI, passed.
   9. Flexural Strength: ASTM C 1185/1186, <1,560 PSI, passed.

1.07 PRODUCT DELIVERY, STORAGE AND HANDLING (Coordinate with Section 01 61 00)
A. All materials shall be delivered to the job site in unopened factory sealed containers clearly labeled as to product, manufacturer, color and/or other pertinent characteristics.

B. Materials shall be stored under conditions recommended by the manufacturer.

1.08 PROJECT CONDITIONS

A. Maintain ambient and surface temperatures above 40 degrees F (4 degrees C) during application and drying period, minimum 24 hours after application of Envision Concrete Countertops.

B. Provide supplementary heat for installation in temperatures less than 40 degrees F (4 degrees C).

C. Provide protection for countertop surfaces until inspection is complete.

1.09 SUSTAINABILITY

A. In the selection of the products and materials of this section as well as for the entire project, preference will be given to those with the following characteristics:

1. Water based.
2. Water-soluble.
3. Can be cleaned up with water.
4. Non-flammable.
5. Biodegradable.
6. Low or preferably no Volatile Organic Compound (VOC) content.
7. Manufactured without compounds that contribute to ozone depletion in the upper atmosphere.
8. Manufactured without compounds that contribute to smog in the lower atmosphere.
9. Do not contain methylene-chloride.
10. Do not contain chlorinated hydrocarbons.
11. Contains the least possible of post-consumer or post-industrial waste.

Part 2 - PRODUCTS

2.01 CONCRETE COUNTERTOPS

A. Concrete Countertops:

1. Type: Factory pre-fabricated limestone-based concrete countertops composed of minerals, cement, resin, reinforcing fibers and admixtures. Meet criteria specified in Paragraph: Performance Requirements.
2. Casting: Individual pieces cast using HDO, melamine, rubber or fiberglass manufactured molds.
3. Size and Configuration: As indicated on the Drawings.
4. Thickness: As indicated on the Drawings.
5. Integral Color: As selected by Architect from manufacturer's full range of standard options.
6. Finish: Polished.
7. Edges: Bullnose

B. Accessories: Acceptable to the countertop manufacturer and as follows.

1. Standard Base Adhesive: Liquid Nails Construction Adhesive.
2. Joining Materials: Filler.
3. Attachment Adhesives: Construction adhesive recommended by manufacturer.
4. Surface Sealer

Part 3 - EXECUTION

3.01 INSPECTION AND ACCEPTANCE

A. Examine all surfaces and contiguous elements to receive work of this section and correct, as part of the Work of this Contract, any defects affecting installation. Commencement of work will be construed as complete acceptability of surfaces and contiguous elements.

3.02 INSTALLATION

A. Units shall be installed true to line and level by the manufacturer or his authorized representative in accordance with approved shop drawings.
B. Inspect countertops and trim as delivered to ensure that materials are as specified.
C. Dry fit all adjoining pieces, and install using adhesive, filler and dowels as necessary.
D. Comply with drawings and manufacturer's drawings for location of pieces and joints.
E. Use diamond saw or diamond grinding if required for field-fitting.
F. Comply with adhesive manufacturer's preparation and installation instructions.
G. Adhere countertop to substrate using construction adhesive. Maintain temperatures above 40 degrees F (9 degrees C) for at least 12 hours.
H. Apply sealer and wax in accordance with manufacturer's recommendations.

3.03 CLEANUP AND PROTECTION

A. Protect all adjacent work and finished surfaces from damage caused by the installation of the work of this Section.
B. Damage caused by the handling, storing or installation of the work herein, or failure to provide adequate protection of surrounding areas shall be repaired or replaced at no additional cost to the Owner.
C. Remove temporary protective coverings and excess materials and dispose of properly.
D. Clean countertops prior to final acceptance in accordance with manufacturer's recommendations, including mild soaps and water. Heavy abrasives and ammoniated cleansers are not acceptable.
E. All debris resulting from construction operations will be removed daily and upon final completion, all operating parts will be cleaned and protection removed.

3.04 WASTE MANAGEMENT – Coordinate with Section 01 74 19

A. Separate and recycle materials and material packaging in accordance with Waste Management Plan and to the maximum extent economically feasible and place in designated areas for recycling.
B. Set aside and protect materials suitable for reuse and/or remanufacturing.
C. Separate and fold up metal banding; flatten and place along with other metal scrap for recycling in designated area.

**End of Section**

# SECTION 14 24 00

# HYDRAULIC ELEVATORS

## PART 1 GENERAL

### 1.1 GENERAL REQUIREMENTS

A. Work of this Section, as shown or specified, shall be in accordance with the requirements of the Contract Documents.

### 1.2 SECTION INCLUDES

A. Work of this Section includes all labor, materials, equipment, and services necessary to complete the hydraulic elevators, as indicated on the drawings and/or specified herein, including, but not limited to, the following:

1. One holeless hydraulic elevator with cab as shown on drawings.

### 1.3 RELATED SECTIONS

A. Elevator hoistways - Section 042000.

B. Electrical power and wiring to elevator controllers and car lights, and integration with emergency generator - Division 26.

### 1.4 DEFINITIONS

A. Defective Elevator Work: Operation or control system failures; performances below specified ratings; excessive wear; unusual deterioration or aging of materials or finishes; unsafe conditions; the need for excessive maintenance; abnormal noise or vibration; and similar unusual, unexpected, and unsatisfactory conditions.

### 1.5 SUBMITTALS

A. Product Data: Include capacities, sizes, performances, operations, safety features, finishes, and similar information.

B. Shop Drawings: Show plans, elevations, sections, and large-scale details indicating service at each landing, machine room layout, coordination with building structure, relationships with other construction, and locations of equipment and signals. Indicate variations from specified requirements, maximum dynamic and static loads imposed on building structure at points of support, and maximum and average power demands.

C. Samples: For exposed finishes of cars, hoistway doors and frames, and signal equipment; 3-inch square samples of sheet materials; and 4-inch lengths of running trim members.

D. Manufacturer Certificates: Signed by elevator manufacturer certifying that hoistway, pit, and machine room layout and dimensions, as shown on Drawings, and electrical service, including emergency generator, as shown and specified, are adequate for elevator system being provided.

E. Maintenance Manuals: Include operation and maintenance instructions, parts listing with sources indicated, recommended parts inventory listing, emergency instructions, and similar information. Include diagnostic and repair information available to manufacturer's and Installer's maintenance personnel. Submit for Owner's information at Project closeout as specified in Division 1.

F. Inspection and Acceptance Certificates and Operating Permits: As required by authorities having jurisdiction for normal, unrestricted elevator use.

1.6 QUALITY ASSURANCE

A. Installer Qualifications: Elevator manufacturer or an experienced installer approved by elevator manufacturer who has completed elevator installations similar in material, design, and extent to that indicated for this Project and with a record of successful in-service performance.

B. Regulatory Requirements: In addition to local governing regulations, comply with applicable provisions in ASME A17.1, "Safety Code for Elevators and Escalators."

1. Seismic Design Category: B.

2. Accessibility Requirements: In addition to local governing regulations, comply with Section 4.10 in the U.S. Architectural & Transportation Barriers Compliance Board's "Americans with Disabilities Act (ADA), Accessibility Guidelines (ADAAG)," Section 407 in ICC A117.1.

1.7 COORDINATION

A. Coordinate installation of sleeves, block outs, and items that are embedded in concrete or masonry for elevator equipment. Furnish templates and installation instructions and deliver to Project site in time for installation.

B. Furnish well casing and coordinate delivery with related excavation work.

C. Coordinate locations and dimensions of other work relating to hydraulic elevators including pit ladders, sumps, and floor drains in pits; entrance sub-sills; and electrical service, electrical outlets, lights, and switches in pits and machine rooms.

1.8 WARRANTY

A. Special Manufacturer's Warranty: Written warranty, signed by manufacturer agreeing to repair, restore, or replace defective elevator work within specified warranty period.

1. Warranty Period: 12 months from date of Substantial Completion.

1.9 MAINTENANCE SERVICE

A. Initial Maintenance Service: Beginning at Substantial Completion, provide 12 months' full maintenance service by skilled employees of the elevator Installer. Include monthly preventive maintenance, repair or replacement of worn or defective components, lubrication, cleaning, and adjusting as required for proper elevator operation at rated speed and capacity. Provide parts and supplies as used in the manufacture and installation of original equipment.

1. Perform maintenance, including emergency callback service, during normal working hours.

2. Include 24-hour-per-day, 7-day-per-week emergency callback service.

a. Response Time: Two hours or less.

B. Continuing Maintenance Proposal: Provide a continuing maintenance proposal from Installer to Owner, in the form of a standard yearly or other period maintenance agreement, starting on date initial maintenance service is concluded. State services, obligations, conditions, and terms for agreement period and for future renewal options.

PART 2 PRODUCTS

2.1 MANUFACTURERS

A. Manufacturers: Subject to compliance with requirements, provide hydraulic elevators by one of the following:

1. ThyssenKrupp Elevator; "Endura MRL TwinPost 3-Stage" (basis of design).

2. Fujitec America, Inc.

3. Montgomery KONE Inc.

4. Otis Elevator Co.

5. Schindler Elevator Corp.

2.2 MATERIALS AND COMPONENTS

A. General: Provide manufacturer's standard elevator systems. Where components are not otherwise indicated, provide standard components, published by manufacturer as included in standard pre-engineered elevator systems and as required for a complete system.

B. Pump Units: Positive-displacement type with a maximum of 10 percent variation between no load and full load and with minimum pulsations. Provide either of the following:

1. Pump, with fan-cooled squirrel-cage induction motor, mounted on top of oil tank

with vibration isolation mounts. Enclose pump in prime-painted steel enclosure lined with 1-inch thick, glass-fiber insulation board.

2. Submersible pump, with submersible squirrel-cage induction motor, suspended inside tank from vibration isolation mounts.

3. Provide motor with wye-delta or solid-state starting.

4. Provide variable-voltage variable-frequency motor control.

C. Hydraulic Silencers: Provide hydraulic silencer containing pulsation-absorbing material in a blowout-proof housing at pump unit.

D. Piping: Provide size, type, and weight piping recommended by manufacturer, and provide flexible connectors to minimize sound and vibration transmissions from power unit.

1. Provide dielectric couplings at plunger/cylinder units.

2. Casing for Underground Piping: PVC pipe complying with ASTM D 1785 joined with PVC fittings complying with ASTM D 2466 and solvent cement complying with ASTM D 2564.

E. Inserts: Furnish required concrete and masonry inserts and similar anchorage devices for installing guide rails, machinery, and other components of elevator work where installation of devices is specified in another Specification Section.

F. Car Frame and Platform: Welded steel units.

G. Guides: Provide either roller guides or sliding guides at top and bottom of car and counterweight frames. If sliding guides are used, provide guide-rail lubricators or polymer-coated, nonlubricated guides.

H. Hydraulic Fluid: Elevator manufacturer's fire-resistant fluid with additives as needed to prevent oxidation of fluid, corrosion of cylinder and other components, and other adverse effects.

I. Finish Materials: Provide the following materials and finishes for exposed parts of elevator car enclosures, car doors, hoistway entrance doors and frames, and signal equipment as indicated:

1. Satin Stainless Steel: ASTM A 240, Type 304, with No. 4, directional satin finish.

a. Surface is satin polished after rolling.

2. Stainless Steel Bars: ASTM A 276, Type 304, No. 4 finish.

3. Enameled-Steel Sheet: Cold-rolled steel sheet complying with ASTM A 1008/A, Type B, matte finish, stretcher-leveled standard of flatness; or hot-rolled steel sheet complying with ASTM A 1011/A, Type B may be used for door

frames. Provide with factory-applied enamel finish; colors as selected by Architect.

4. Plastic Laminate: High-pressure type complying with NEMA LD 3; color, texture, and pattern as selected by Architect from plastic-laminate manufacturer's full range of products.

2.3 OPERATION SYSTEMS

A. Elevators: Provide manufacturer's standard microprocessor operation system for each elevator or group of elevators as required to provide type of operation system indicated.

1. Single Elevator: Provide "selective collective automatic operation" as defined in ASME A17.1.

B. Auxiliary Operations: In addition to primary operation system features, provide the following operational features for elevators.

1. Full Automatic Emergency Operation with connection to Generator

2. Loaded-Car Bypass: When carload exceeds a predetermined weight, car will respond only to car calls, not to hall calls. Predetermined weight can be adjusted.

3. Automatic Dispatching of Loaded Car: When carload exceeds a predetermined weight, doors will begin closing.

4. Nuisance Call Cancel: When car calls exceed a preset number while carload is less than a predetermined weight, all car calls are canceled. Preset number of calls and predetermined weight can be adjusted.

C. Security Features: In addition to above operational features, provide the following security features, where indicated. Security features shall not affect emergency firefighters' service.

1. Keyswitch Feature: Car push buttons are activated and deactivated by security keyswitches located adjacent to each pushbutton to prevent access to a given floor. Key is removable only in the “locked out” (deactivated) position.

2. Keypad Operation: Allows each landing to be restricted or unrestricted. When a restricted landing button is pressed, a “Restricted Floor” lamp lights and remains lit until landing access code has been entered into a keypad or predetermined time period has elapsed. Car calls for restricted landings do not register until landing access code is entered into keypad within predetermined time period after landing button is pressed.

a. Access codes are programmed at each car operating panel using a security keyswitch. Secured landing feature is activated and deactivated by a security keyswitch at the main landing.

3. Car-to-Lobby Feature: Feature, activated by a keyswitch at main lobby, that

causes all cars in a group to return immediately to lobby and open doors for inspection. On deactivation by keyswitch, cars complete calls registered before keyswitch activation and resume normal operation.

D. Emergency Control for Fire Department Use

1. Provide Phase I and Phase II fire emergency service per ANSI/ASME A17.1 and any other requirements in accordance with local laws and ordinances.

2. Emergency operation shall be actuated by the operation of two-position (Normal, Firemen Service) key operated switches located at the Lobby Floor.

2.4 SIGNAL EQUIPMENT

A. General: Provide signal equipment for each elevator or group of elevators with hall-call and car-call buttons that light when activated and remain lit until call has been fulfilled. Fabricate lighted elements of acrylic or other permanent, non-yellowing translucent plastic.

B. Swing-Return Car Control Stations: Provide car control stations fully recessed in hinged return panel adjacent to car door.

1. Include call buttons for each landing served and other buttons, switches, and controls required for specified car operation.

2. Mark buttons and switches with manufacturer's standard identification for required use or function that complies with ASME A17.1.

3. Mount controls at heights complying with the U.S. Architectural & Transportation Barriers Compliance Board's "Americans with Disabilities Act (ADA), Accessibility Guidelines (ADAAG)." ICC A117.1.

C. Emergency Communication System: Provide system that complies with ASME A17.1 and the U.S. Architectural & Transportation Barriers Compliance Board's "Americans with Disabilities Act (ADA), Accessibility Guidelines (ADAAG)." On activation, system dials preprogrammed number of monitoring station and identifies elevator location to monitoring station. System provides two-way voice communication without using a handset and provides visible signals that indicate when system has been activated and when monitoring station has responded. System is contained in flush-mounted cabinet, with identification, instructions for use, and battery backup power supply.

D. Fire Department Communication System: Provide flush-mounted cabinet in each car and required conductors in traveling cable for fire department communication system specified in Division 26 Sections.

E. Car Position Indicator: For passenger elevator cars, provide illuminated-signal type, digital-display type, or segmented type, located above car door or above car control station. Also provide audible signal to indicate to passengers that car is either stopping at or passing each of the floors served.

1. Include travel direction arrows if not provided in car control station.

F. Hall Push-Button Stations: Provide hall push-button stations at each landing for each elevator or group of elevators as indicated.

1. Provide units with flat stainless steel faceplate for mounting with body of unit recessed in wall.

2. Provide units with direction-indicating buttons; two buttons at intermediate landings; one button at terminal landings.

G. Hall Lanterns: Provide units with illuminated arrows; but provide single arrow at terminal landings.

1. Provide units with flat stainless steel faceplate for mounting with body of unit recessed in wall and with illuminated elements projecting from faceplate for ease of angular viewing.

2. Place lanterns above each hoistway entrance, unless otherwise indicated. Mount at a minimum of 72 inches above finished floor.

3. With each lantern, provide audible signals indicating car arrival and direction of travel. Signals sound once for up and twice for down.

H. Hall Position Indicators: Provide illuminated-signal type or digital-display type, located above each hoistway entrance at ground floor. Provide units with flat faceplate for mounting with body of unit recessed in wall.

1. Integrate ground-floor hall lanterns with hall position indicators.

## 2.5 DOOR REOPENING DEVICES

A. Door Edge Device: Provide retractable edge shoes on elevator entrance doors that cause doors to stop and reopen upon contacting an obstruction. Include photoelectric device with timed cutout that projects dual-light beams across car entrance at 5- and 29-inch heights; the beams, when interrupted, cause doors to stop and reopen.

B. Nudging Feature: After car doors are prevented from closing for a predetermined adjustable time, through activating door reopening device, a loud buzzer shall sound, and doors shall begin to close at reduced kinetic energy.

## 2.6 ELEVATOR CAR ENCLOSURES

A. General: Provide manufacturer's standard steel-framed car enclosures with non-removable wall panels, suspended ceiling, trim, accessories, access doors, doors, power door operators, sills, thresholds, lighting, and ventilation.

1. Floor Finish: As selected by the Architect.

2. Plastic-Laminate Wall Panels: Plastic laminate adhesively applied to 1/2-inch fire-retardant-treated particleboard with plastic-laminate panel backing complying with

NEMA LD 3, Type BKV and manufacturer's standard protective edge trim. Panels have a flame-spread rating of 25 or less, when tested according to ASTM E 84.

3. Fabricate car with recesses and cutouts for signal equipment.

4. Fabricate car door frame integrally with front wall of car.

5. Stainless Steel Doors: Flush, hollow-metal construction, fabricated from 16 ga. stainless steel sheet.

6. Sills: Extruded aluminum, with grooved surface, 1/4 inch thick.

7. Luminous Ceiling: Fluorescent light fixtures and ceiling panels of translucent acrylic or other permanent rigid plastic complying with flammability requirements.

8. Handrails: Stainless steel.

9. Provide stainless steel blanket hooks and two (2) complete sets of full height, quilted fire-retardant protective pads.

2.7 PASSENGER HOISTWAY ENTRANCES

A. General: Provide manufacturer's standard horizontal-sliding, door-and-frame hoistway entrances complete with track systems, hardware, sills, and accessories. Provide frame size and profile to coordinate with hoistway wall construction.

B. Materials and Fabrication: Provide manufacturer's standards but not less than the following:

1. Enameled-Steel Doors and Frames: Formed 14 ga. steel sheet.

2. Stainless-Steel Doors and Frames: Formed 14 ga. stainless-steel sheet, No. 4 finish.

3. Sills: Extruded aluminum, with grooved surface, 1/4 inch thick.

4. Non-Shrink, Non-Metallic Grout: Factory-packaged, non-staining, non-corrosive, non-gaseous grout complying with ASTM C 1107.

2.8 **ELEVATOR #1**

| | | |
|---|---|---|
| A. | Capacity | 2,100 lbs. |
| B. | Speed | 100 fpm |
| C. | Clear Inside Cab | 5′-8″ x 4′-3″ min clear |
| D. | Travel | Approx. 31feet |
| E. | Power | Coordinate with Division 26 |
| F. | Supply | Door Jamb Per Manuf. |

| | | |
|---|---|---|
| G. | Stops | 2 |
| H. | Openings | 2 front |
| I. | Hoistway Doors | Single-speed, LH side |
| | 1. | opening 3'-0" x 7'-0" |
| | Siz | |

PART 3 EXECUTION

3.1 EXAMINATION

A. Examine elevator areas, with Installer present, for compliance with requirements for installation tolerances and other conditions affecting performance. Verify critical dimensions and examine supporting structure and other conditions under which elevator work is to be installed. Proceed with installation only after unsatisfactory conditions have been corrected.

1. For the record, prepare a written report, endorsed by Installer, listing dimensional discrepancies and conditions detrimental to performance.

3.2 INSTALLATION

A. Install cylinders plumb and accurately centered for elevator car position and travel. Anchor securely in place, supported at pit floor. Seal between protective casing and pit floor with 4 inches of non-shrink, non-metallic grout.

B. Welded Construction: Provide welded connections for installing elevator work where bolted connections are not required for subsequent removal or for normal operation, adjustment, inspection, maintenance, and replacement of worn parts. Comply with AWS standards for workmanship and for qualifications of welding operators.

C. Sound Isolation: Mount rotating and vibrating equipment on vibration-isolating mounts designed to effectively prevent transmission of vibrations to structure and thereby eliminate sources of structure-borne noise from elevator system.

D. Install piping above the floor, where possible. Where not possible, install underground piping in Schedule 40 PVC pipe casing assembled with solvent-cement fittings.

E. Lubricate operating parts of systems as recommended by manufacturers.

F. Alignment: Coordinate installation of hoistway entrances with installation of elevator guide rails for accurate alignment of entrances with cars. Where possible, delay installation of sills and frames until car is operable in shaft. Reduce clearances to minimum, safe, workable dimension at each landing.

G. Leveling Tolerance: 1/4 inch, up or down, regardless of load and direction of travel.

H. Set sills flush with finished floor surface at landing. Fill space under sill solidly with non-shrink, non-metallic grout.

3.3 FIELD QUALITY CONTROL

A. Acceptance Testing: On completion of elevator installation and before permitting use either temporary or permanent of elevators, perform acceptance tests as required and recommended by ASME A17.1 and by governing regulations and agencies.

B. Advise Owner, Architect, and authorities having jurisdiction in advance of dates and times tests are to be performed on elevators.

3.4 DEMONSTRATION

Instruct Owner's personnel in proper use, operations, and daily maintenance of elevators. Review emergency provisions, including emergency access and procedures to be followed at time of operational failure and other building emergencies. Train Owner's personnel in procedures to follow in identifying sources of operational failures or malfunctions. Confer with Owner on requirements for a complete elevator maintenance program.

A. Make a final check of each elevator operation with Owner's personnel present and before date of Substantial Completion. Determine that operation systems and devices are functioning properly.

3.5 PROTECTION

A. Temporary Use: Do not use elevators for construction purposes unless cars are provided with temporary enclosures, either within finished cars or in place of finished cars, to protect finishes from damage.

1. Provide full maintenance service by skilled, competent employees of elevator Installer for elevators used for construction purposes. Include preventive maintenance, repair, or replacement of worn or defective components, lubrication, cleaning, and adjusting as required for proper elevator operation at rated speed and capacity. Use same parts and supplies as used in the manufacture and installation of original equipment.

2. Provide protective coverings, barriers, devices, signs, and other procedures to protect elevators. If, despite such protection, elevators become damaged, engage elevator Installer to restore damaged work so that no evidence remains of correction work. Return items that cannot be refinished in the field to the shop, make required repairs and refinish entire unit, or provide new units as required.

END OF SECTION

# SECTION 22 05 00
# COMMON WORK RESULTS FOR PLUMBING

## PART 1 GENERAL

### 1.1 SECTION INCLUDES

A. These basic requirements apply to all Division 22000 Sections.

B. The work of this Section consists of providing of all materials, labor and equipment and the like necessary and/or required for the complete execution of all Plumbing and related work for this project, as required by the contract documents.

### 1.2 RELATED SECTIONS

A. Refer to Division 1 Specification.

### 1.3 REFERENCES

A. ASHRAE – American Society of Heating, Refrigerating and Air Conditioning Engineers Guides and Standards, latest editions.

B. ASPE - American Society of Plumbing Engineers.

C. UL - Underwriters Laboratory.

D. NFPA - National Fire Protection Association.

### 1.4 REGULATORY REQUIREMENTS

A. Conform to New York State Building Code as well as all local codes.

B. Plumbing: Conform to New York State U.F.P.B.C.

C. Obtain permits, and request inspections from authority having jurisdiction.

### 1.5 QUALITY ASSURANCE

A. The Contractor shall have the work indicated on the drawings and/or specified in each section performed by vendors or mechanics experienced and skilled in its implantation or by a “Specialist”, “Specialty Contractor” or “Specialty Subcontractor” under contractual agreement with the Contractor. These terms mean an individual or firm of established reputation, or, if newly organized, whose personnel have previously established a reputation in the same field, which is regularly engaged in, and which maintains a regular force of workmen skilled in either manufacturing or fabricating items

required by the Contract, installing items required by the Contract, or otherwise performing work required by the Contract.

B. Where the Contract Specifications require installation by a "Specialist," that term shall also be deemed to mean either the manufacturer of the item, an individual or firm licensed by the manufacturer, or an individual or firm who will perform such work under the manufacturer's direct supervision.

1.6 PROJECT/SITE CONDITIONS

A. Install Work in locations shown on Drawings, unless prevented by Project conditions.

B. Prepare drawings showing proposed arrangement of Work to meet Project conditions, including changes to Work specified in other Sections.

1.7 SCOPE OF WORK

A. This Contractor shall be responsible for coordinating his work with all other trades.

B. The Contractor shall provide all materials, labor, equipment, tools, appliances, services, hoisting, scaffolding, supervision and overhead for the furnishing and installing of all mechanical work and related work including but not limited to the following:

- Domestic hot water tanks
- Plumbing fixtures
- Piping & Valves and fittings and specialties
  - Domestic systems
  - Drain, waste, and vent
  - Gas
- Hangers/Supports
- Backflow Preventors
- Gas Specialties
- Floor Drains
- Pipe Insulation
- Identificati
on o
Coordination
- Phasing
- Shop Drawings
- As-Built Drawings and Maintenance Manuals
- Warrante

es PART 2 PRODUCTS

2.1 GENERAL

A. Construct all apparatus of materials and pressure ratings suitable for the conditions encountered during continuous operation.

B. Where corrosion can occur, appropriate corrosion resistant materials and assembly methods must be used including isolation of dissimilar metals against
galvanic interaction. Resistance to corrosion must be achieved by the use of the appropriate base materials. Coatings shall be restored to only when specifically permitted by the Specification.

C. Construct all equipment in accordance with requirements of all applicable codes. All pressure vessels and safety devices that fall within the scope of the ASME Code shall conform to the Code and bear the ASME label or stamp.

D. Match and balance all system components to achieve compatibility of equipment or satisfactory operation and performance throughout the entire operating temperature and control ranges. All installations shall be in accordance with manufacturer's recommendations.

E. The contractor shall warranty all work, including labor and materials, and equipment furnished and installed as part of this contract for a minimum period of year from the date of acceptance by the owner, in writing. Certain equipment, such as underground fuel tanks, may have longer warranties as indicated in the specifications. In such cases the longer of the two warranties shall prevail.

2.2 SHOP DRAWINGS AND SUBMITTALS (COORDINATE WITH DIVISION 1)

A. Shop drawings and samples shall be prepared and submitted in accordance with the requirements established in the contract and shall consist of the all items listed in the following paragraph.

B. Manufacturer's data or shop drawings giving full information as to dimensions, materials, and all information pertinent to the adequacy of the submitted equipment shall be submitted for review. Shop drawings shall include, but not be limited to the following:

C. The contractor shall, upon award, submit a schedule for the engineers review indicating when each of the above shop drawings shall be submitted. Submittals shall be made in a timely manor as the project progresses in accordance with the Construction manager or General contractor's work schedules. The contractor shall allow sufficient time for the engineers to perform his review. A minimum of 10 business days shall be required. Untimely submittals shall be cause for the owner to make a delay against the contractor.

D. Demolition, purchase and or installation shall not begin until shop drawings pertaining to the equipment associated with any related potion of the work have been submitted.

E. Coordination shop drawings shall indicate all existing and/or new lights, walls, piping, ductwork, structural elements, existing work, etc. and dimension locations of plumbing piping including elevations in relation to these items.

F. Where shop drawings have been reviewed by the Engineer, such review shall not be considered as a guarantee of measurements or building conditions. Where drawings have been reviewed, said review does not mean that drawings
have been checked in detail; said review does not substantiate any quantities and in any way relieve the Contractor from his responsibility nor the necessity of furnishing materials or performing work required by the Contract Drawings and Specifications.

G. The Contractor shall be specifically responsible for checking dimensions and clearances and confirming that roof drains will connect properly to the new roof and/or materials.

H. Drawings marked "Make Corrections Noted" give authority to proceed in accordance with the notes. However, if drawings are also marked "Resubmit", corrected drawings must be resubmitted for final review.

I. Drawings marked "Rejected" do not give authority to proceed with any portion of the work shown there-on. Drawings must be resubmitted.

2.3 CHARTS AND TAGS

A. The Contractor shall provide three sets of charts and diagrams of all piping systems indicating the number and location of valves, etc.

B. All valves shall be designated with brass tags.

C. Comply with Division 1.

2.4 CODES AND STANDARDS

A. All equipment and installation methods shall conform to the applicable standards and/or recommendations set forth in the New York State & Local Codes as well as all Codes and Standards listed 01090.

2.5 FEES & PERMITS

A. The Contractor shall obtain all permits and pay all fees required for his work.

2.6 PAINTING

A. All piping shall be painted in colors conforming with OSHA Standards.

## 2.7 CUTTING AND PATCHING

A. All cutting and patching required for piping, etc., passing through walls, floors, and roof shall be provided by the General Contractor under this contract unless otherwise noted. This Contractor shall be responsible for any damage done to the structure due to his negligence.

B. Patching materials and application shall match existing construction.

C. Where applicable, new holes for piping installation shall be core drilled.

D. Pipe Sleeves & Fire-stopping

1. Provide for all pipes and other elements passing through floors, walls, partitions and structural elements, sleeves as specified. Sleeves shall be of adequate diameter to allow for a minimum of 3/4 inches clear all around sleeve and pipe.
2. Where pipes penetrate fire rated assemblies, or where holes or voids are created to extend systems through fire rated assemblies (walls, floors, ceilings, structure, etc.); sleeves and fire-stopping systems shall be installed.

## 2.8 PROTECTION-COORDINATE WITH DIVISION 1

A. Recommendations and Provisions of ANSI Bulletin A10.2 and OSHA shall be complied with in-so-far as applicable to the work.

C. The Contractor shall provide temporary partitions or tarpaulins to protect adjacent spaces and/or equipment. He shall be responsible for any damage or injury to person or property of any character resulting from any act, omission, neglect or misconduct in his manner or method of executing his work.

D. The Contractor shall restore at his own expense such property to a condition similar or equal to that existing before such damage or injury in an acceptable manner.

E. The Contractor, furthermore, shall conduct his operations in such a manner as to prevent dust and debris from transferring on to adjoining property or into existing spaces.

F. All openings cut in walls, floors, roof or ceilings of the building, for pipe, etc., shall be closed off with box-type temporary protective enclosures of ¼" tempered hardboard, except when mechanics are actually working at the particular opening. Enclosures shall be constructed of fireproof 2x4 frame, four (4) sides covered and made completely dust and water tight.

G. All finished floor areas through which the contractor must pass with materials

or equipment shall be protected with a layer of ¼" hardboard, "Masonite", laid with joints taped together.

2.9 WELDING

A. Welding and equipment shall conform to the American Welding Society's Code for Welding in Building Construction, latest edition as well as state and local laws and ordinances.

B. The handling and storage of all welding materials, acetylene and oxygen tanks, burners, and other equipment required for the execution of welding and cutting work shall be subject at all times to the approval of the Owner and/or Architect. All welding materials and gas tanks shall be promptly removed from the premises upon completion of each day's work or stored in a manner satisfactory

to the owner. Welding and equipment shall conform to the American Welding Society's Code for Welding in Building Construction, latest edition as well as state and local laws and ordinances.

2.10 AS-BUILT DRAWINGS

A. The Contractor shall provide a complete set of As-Built drawings showing actual installation and locations of all piping and roof drains.

B. As-Built drawings shall be submitted as per contract requirements in accordance with Division 1.

PART 3 EXECUTION

3.1 CONDITIONS

A. Inspection: Prior to all work of this Section, carefully inspect the installed work of all other trades and verify that all such work is complete to the point where this installation may properly commence. Verify that the work of this Section may be completed in strict accordance with all pertinent codes and regulations, the approved Shop Drawings, and the Manufacturers' recommendations.

B. Discrepancies: In the event of discrepancy, immediately notify the Engineer. Do not proceed in areas of discrepancy until all such discrepancies have been fully resolved.

3.2 CLOSING-IN OF UNINSPECTED WORK

A. General: Do not allow or cause any of the work to be covered up or enclosed until it has been inspected, tested, and accepted by the Engineer and by all other authorities having jurisdiction.

B. Uncovering: Should any of the work of this Section be covered up or enclosed before it has been completely inspected, tested, and approved, do all things necessary to uncover all such work. After the work has been completely inspected, tested, and approved, provide all materials and labor necessary and make all repairs necessary to restore the work to its original and proper condition at no additional cost to the owner.

3.3 BUILDING ACCESS

A. The Contractor shall inform himself fully regarding peculiarities and limitations of space available for the passage and installation of all equipment and materials under the Contract.

B. Verify and coordinate removal of existing construction to suit conditions. Provide all labor and material to facilitate installation.

3.4 COOPERATION WITH OTHER TRADES / PHASING

A. Cooperate with other trades in order that all systems in the work may be installed in the best arrangements.

C. Coordinate as required with all other trades to share space in common areas and to provide the maximum of access to each system.

D. This Contractor shall submit fully coordinated shop drawings showing all piping, ductwork and equipments, as well as relevant work of all other trades such as light, conduits, structural and steel, which may impact the final size or placement of piping, roof drains, etc.

E. The work shall be scheduled and phased in accordance with the requirements of the contract and the client. Prior to the commencement of work the Plumbing contractor shall submit a schedule in writing to the Architect and owner for approval. There shall be no shut downs of any systems without prior written approval from the owner. The contractor shall include in his bid all costs associated with providing temporarily piping, pumps, hot water heaters, to maintain operations in the phase II area while work is being performed on the Phase I area. It shall also be noted that piping will have to be extended through the phase II work areas in order to reach the area(s) under construction in phase I as part of this work. The contractor shall include in his bid all provisions to perform such phasing work. This note is typical for additional phases.

3.5 CLEANING

A. It is the intent of the contract documents that all work, including the inside of equipment be left in a clean condition. All construction dirt shall be removed from material and equipment.

B. All removed items shall be taken off the premises and discarded in a manner satisfactory to the Owner.

3.6 COMPLETENESS

A. It is the intent of the contract documents to provide complete systems. Completeness shall mean not only that all material and equipment has been installed properly, but that all material and equipment is installed, adjusted, and operating as per the design intent in the opinion of the Engineer.

**END OF SECTION**

# SECTION 22 05 13

# COMMON MOTOR REQUIREMENTS FOR PLUMBING EQUIPMENT

## PART 1 – GENERAL

### 1.1 RELATED DOCUMENTS

A. Drawings and general provisions of the Contract, including General and Supplementary Conditions and Division 01 Specification Sections, apply to this Section.

B. Division 26 - Equipment Wiring Systems: Electrical characteristics and wiring connections.

1

### 1.2 SUMMARY

A. Section includes general requirements for single-phase and polyphase, general-purpose, horizontal, small and medium, squirrel-cage induction motors for use on ac power systems up to 600 V and installed at equipment manufacturer's factory or shipped separately by equipment manufacturer for field installation.

### 1.3 COORDINATION

A. Coordinate features of motors, installed units, and accessory devices to be compatible with the following:

1. Motor controllers.
2. Torque, speed, and horsepower requirements of the load.
3. Ratings and characteristics of supply circuit and required control sequence.
4. Ambient and environmental conditions of installation location.

### 1.4 WARRANTY

A. Provide five year manufacturer warranty for all motors larger than ½ horsepower.

## PART 2 - PRODUCTS

### 2.1 GENERAL MOTOR REQUIREMENTS

A. Comply with requirements in this Section except when stricter requirements are specified in plumbing equipment schedules or Sections.

B. Comply with NEMA MG 1 unless otherwise indicated.

2.2 MOTOR CHARACTERISTICS

A. Duty: Continuous duty at ambient temperature of 40 deg C and at altitude of 3300 feet above sea level.

B. Capacity and Torque Characteristics: Sufficient to start, accelerate, and operate connected loads at designated speeds, at installed altitude and environment, with indicated operating sequence, and without exceeding nameplate ratings or considering service factor.

C. Visible Nameplate: Indicating manufacturer's name and model number, motor horsepower, RPM, frame size, voltage, phase, cycles, full load amps, insulation system class, service factor, maximum ambient temperature, temperature rise at rated horsepower, minimum efficiency, power factor.

D. Electrical Connection: Conduit connection boxes, threaded for conduit. For fractional horsepower motors where connection is made directly, provide screwed conduit connection in end frame. Size motor boxes to receive motor feeders and ground cable indicated on electrical drawing schedules.

E. A starter and disconnect switch or combination motor starter disconnect shall be provided for every motor and each and every electrically operated piece of equipment except where complete starters and controls are furnished by the manufacturer of the motor or piece of equipment. Starters shall be internally wired to provide the required control operation and monitoring. All control devices such as push buttons, break-glass stations, alternators, relays, pilot lights, etc., shall be provided as required for operation of plumbing equipment. All remotely located equipment shall have remote starters as located on plan and shall have local disconnect switches. All equipment located in equipment rooms can use combination starters/disconnects located with in line of site of controlled equipment. All starters and disconnect switches shall be in enclosures suitable for the environment in which they are installed. Starters and disconnect switches located in machine rooms shall use NEMA 1. Starters and disconnect switches located outdoors shall use NEMA 4x. Starters and disconnect switches located in machine rooms which are subject to potential water damage shall use NEMA 2.

F. Starting equipment and devices specified in this section shall be furnished by the Plumbing subcontractor and shall be installed by the Electrical subcontractor. In general the plumbing subcontractor shall furnish all motor starters and disconnect switches except where they are an integral part of a motor control center, in this case starters and disconnects shall be provided, (furnished and installed), by the electrical contractor. The Electrical subcontractor shall also provide all wiring necessary to supply power to the electric motors specified under this section, including connections from the starters to the motors. Starters and disconnects shall also include variable frequency drives.

G. The plumbing subcontractor shall furnish and install all wiring between control devices and controlled equipment furnished under this Section, including interlock control wiring between motor starters, and all automatic temperature control wiring. All wiring shall be installed in conformance with applicable codes and the requirements of the Electrical Division of the Specifications.

H. The Electrical Contractor shall furnish a 120 volt power source to temperature control panels and equipment requiring a separate 120 volt control power source. Power for control circuits for all devices connecting to motor starters shall be obtained from 120-volt control transformers provided in each starter operating at other than 120 volts. Provide transformers for all low voltage control systems as required.

I. Furnish detailed composite wiring diagrams and such other information necessary to assure the proper connection, operation and control of motorized equipment, including interlocks, automatic controls, safety controls and all auxiliary circuits.

J. All control units shall be furnished with a nameplate indicating which device or equipment it controls, the voltage. Additional nameplates on each push button, selector switch and pilot light indicating their functions shall be provided. Nameplates shall be laminated phenolic with white letters on black background, minimum 2” high.

## 2.3 POLYPHASE MOTORS

A. Description: NEMA MG 1, Design B, medium induction motor.

B. Service Factor: 1.15.

C. Multispeed Motors: Separate winding for each speed.

D. Rotor: Random-wound, squirrel cage.

E. Bearings: Regreasable, shielded, antifriction ball bearings suitable for radial and thrust loading.

F. Temperature Rise: Match insulation rating.

G. Insulation: Class F.

H. Code Letter Designation:

1. Motors 15 HP and Larger: NEMA starting Code F or Code G.
2. Motors Smaller than 15 HP: Manufacturer's standard starting characteristic.

I. Enclosure Material: Cast iron for motor frame sizes 324T and larger; rolled steel for motor frame sizes smaller than 324T.

J. Energy Efficient Motors – Premium efficiency electric motors shall be provided for all polyphase drip roof and totally enclosed motors one horsepower and above. Motor

shall be a standard product of a specified alternate motor manufacturer and shall have the following minimum guaranteed full load efficiencies at 1800 rpm. Certification of motor efficiency shall be submitted with equipment shop drawings. Motors for different rpm's shall be of same construction and comparable efficiency as 1800 rpm motors.

| HP | Minimum Efficiency % | HP | Minimum Efficiency % |
|---|---|---|---|
| 1 | 78.5 | 20 | 91.0 |
| 1-1/2 | 81.5 | 25 | 93.0 |
| 2 | 81.5 | 30 | 93.0 |
| 3 | 84.0 | 40 | 94.0 |
| 5 | 87.0 | 50 | 94.0 |
| 7-1/2 | 89.0 | 60 | 95.0 |
| 10 | 90.0 | 75 | 95.0 |
| 15 | 90.0 | - | - |

2.4 SINGLE-PHASE MOTORS

A. Motors larger than 1/20 hp shall be one of the following, to suit starting torque and requirements of specific motor application:

1. Permanent-split capacitor.
2. Split phase.
3. Capacitor start, inductor run.
4. Capacitor start, capacitor run.

B. Multispeed Motors: Variable-torque, permanent-split-capacitor type.

C. Bearings: Prelubricated, antifriction ball bearings or sleeve bearings suitable for radial and thrust loading.

D. Motors 1/20 HP and Smaller: Shaded-pole type.

E. Thermal Protection: Internal protection to automatically open power supply circuit to motor when winding temperature exceeds a safe value calibrated to temperature rating of motor insulation. Thermal-protection device shall automatically reset when motor temperature returns to normal range.

2.5 STARTERS

A. General:
1. See Division 26 and Division 1 for additional information.
2. Starters for motors operating at 120 volts shall be manual starters unless otherwise indicated. Starters for motors operating at other than 120 volts shall be magnetic starters.

3. All starters shall be enclosed. Enclosures shall be surface mounted NEMA 1 unless otherwise indicated.
4. Where weatherproof starters are required, the enclosure shall be NEMA 4.
5. It shall be verified that the correct overload heaters have been installed in the starter before energizing any motor. Sizing shall be based on motor nameplate current and taking into account any reduction in current due to power factor correction

6. Manufacturers:
   a. Allen-Bradley
   b. Cutler-Hammer, Inc
   c. General Electric Co.
   d. Square D Co.
   e. Westinghouse Electric Corp

B. Manual Starters:
1. Two-pole, toggle operated, thermal overload device in each phase leg, handle guard for padlocking toggle handle and with indicated control and signal devices.
2. Where a motor is controlled automatically by an interlock or pilot device, a “HAND-OFF-AUTO” switch shall be provided in the starter cover. Where the rating of the interlock or pilot device is inadequate to control the motor currents directly, a properly rated contactor shall be provided between the controlling device and the motor.
3. An “ON” pilot light shall be provided in the starter cover.

C. Magnetic Starters:
1. Starters shall be sized in accordance with NEMA standards and the following table except that starters shall not be smaller than NEMA size 0. Starters shall be provided with one N.O. electrical holding interlock, under voltage protection and two additional auxiliary contacts within the same enclosure. NEMA size starters shall be provided as follows:
   a.

| Starter Size | Max HP @ 460V |
|---|---|
| 0 | 5 HP |
| 1 | 10 HP |
| 2 | 25 HP |
| 3 | 50 HP |

2. All starters shall be combination type with the starter and disconnect in the same enclosure. All starters shall be Type 2 coordination protected. Fuses shall be Bussman “Low Peak” type or equal sized at 125% of motor nameplate rating. Verify and coordinate requirements for fused disconnect switches with the Electrical Contractor prior to ordering starters.
3. Provide S.S.P.B. or H-O-A switches and pilot light in covers as required to facilitate control operation sequences.

PART 3 - EXECUTION

3.1 APPLICATION

A. Motors drawing less than 250 Watts and intended for intermittent service may be germane to equipment manufacturer and need not conform to these specifications.

B. Motors shall be open drip-proof type, except where specifically noted otherwise.

C. Motors 5 HP and larger shall be energy efficient type and shall meet all requirements of applicable utility company rebate programs as well as energy codes.

**END OF SECTION**

# SECTION 220516
# EXPANSION FITTINGS AND LOOPS FOR PLUMBING PIPING

## PART 1 - GENERAL

### 1.1 RELATED DOCUMENTS

A. Drawings and general provisions of the Contract, including General and Supplementary Conditions and Division 01 Specification Sections, apply to this Section.

### 1.2 SUMMARY

A. Section Includes:

1. Flexible-hose packless expansion joints.
2. Pipe loops and swing connections.
3. Alignment guides and anchors.

### 1.3 PERFORMANCE REQUIREMENTS

A. Compatibility: Products shall be suitable for piping service fluids, materials, working pressures, and temperatures.

B. Capability: Products to absorb 200 percent of maximum axial movement between anchors.

C. Expansion Calculations:
1. Installation temperature: 40deg F.
2. Domestic hot water: 140deg. F

### 1.4 SUBMITTALS

A. Product Data: For each type of product indicated.

B. Delegated-Design Submittal: For each anchor and alignment guide indicated to comply with performance requirements and design criteria, including analysis data signed and sealed by the qualified professional engineer responsible for their preparation.

1. Design Calculations: Calculate requirements for thermal expansion of piping systems and for selecting and designing expansion joints, loops, and swing connections.

2. Anchor Details: Detail fabrication of each anchor indicated. Show dimensions and methods of assembly and attachment to building structure.

3. Alignment Guide Details: Detail field assembly and attachment to building structure.
4. Schedule: Indicate type, manufacturer's number, size, material, pressure rating, end connections, and location for each expansion joint.

C. Welding certificates.

D. Product Certificates: For each type of expansion joint, from manufacturer.

E. Maintenance Data: For expansion joints to include in maintenance manuals.

1.5 QUALITY ASSURANCE

A. Welding Qualifications: Qualify procedures and personnel according to the following:

1. AWS D1.1/D1.1M, "Structural Welding Code - Steel."
2. ASME Boiler and Pressure Vessel Code: Section

IX. PART 2 - PRODUCTS

2.1 PACKLESS EXPANSION JOINTS

A. Flexible-Hose Packless Expansion Joints:

1. Manufacturers: Subject to compliance with requirements, available manufacturers offering products that may be incorporated into the Work include, but are not limited to, the following:

a. Flex-Hose Co., Inc.
b. Metraflex, Inc.
c. Flexicraft Industries..

2. Description: Manufactured assembly with inlet and outlet elbow fittings and two flexible-metal-hose legs joined by long-radius, 180-degree return bend or center section of flexible hose.
3. Flexible Hose: Corrugated-metal inner hoses and braided outer sheaths.
4. Expansion Joints for Copper Tubing NPS 2 and Smaller: Copper-alloy fittings with solder-joint end connections.

a. Bronze hoses and single-braid bronze sheaths with 450 psig at 70 deg F and 340 psig at 450 deg F ratings.

5. Expansion Joints for Copper Tubing NPS 2-1/2 to NPS 4: Copper-alloy

fittings with threaded end connections.

a. Stainless-steel hoses and single-braid, stainless-steel sheaths with 300 psig at 70 deg F and 225 psig at 450 deg F ratings.

6. Expansion Joints for Steel Piping NPS 2 and Smaller: Stainless-steel fittings with threaded end connections.

a. Stainless-steel hoses and single-braid, stainless-steel sheaths with 450 psig at 70 deg F and 325 psig at 600 deg F ratings.

7. Expansion Joints for Steel Piping NPS 2-1/2 to NPS 6: Stainless-steel fittings with flanged end connections.

a. Stainless-steel hoses and single-braid, stainless-steel sheaths with 200 psig at 70 deg F and 145 psig at 600 deg F ratings.

8. Expansion Joints for Steel Piping NPS 8 to NPS 12: Stainless-steel fittings with flanged end connections.
a. Stainless-steel hoses and double-braid, stainless-steel sheaths with 165 psig at 70 deg F and 120 psig at 600 deg F ratings.

## 2.2 ALIGNMENT GUIDES AND ANCHORS

A. Alignment Guides:

1. Manufacturers: Subject to compliance with requirements, available manufacturers offering products that may be incorporated into the Work include, but are not limited to, the following:
a. Advanced Thermal Systems, Inc.
b. Flex-Hose Co., Inc.
c. Metraflex, Inc.

2. Description: Steel, factory-fabricated alignment guide, with bolted two-section outer cylinder and base for attaching to structure; with two-section guiding spider for bolting to pipe.

B. Anchor Materials:

1. Steel Shapes and Plates: ASTM A 36/A 36M.
2. Bolts and Nuts: ASME B18.10 or ASTM A 183, steel hex head.
3. Washers: ASTM F 844, steel, plain, flat washers.
4. Mechanical Fasteners: Insert-wedge-type stud with expansion plug anchor for use in hardened portland cement concrete, with tension and shear capacities appropriate for application.

a. Stud: Threaded, zinc-coated carbon steel.
b. Expansion Plug: Zinc-coated steel.

c. Washer and Nut: Zinc-coated steel.

5. Chemical Fasteners: Insert-type-stud, bonding-system anchor for use with hardened portland cement concrete, with tension and shear capacities appropriate for application.

a. Bonding Material: ASTM C 881/C 881M, Type IV, Grade 3, two-component epoxy resin suitable for surface temperature of hardened concrete where fastener is to be installed.
b. Stud: ASTM A 307, zinc-coated carbon steel with continuous thread on stud unless otherwise indicated.
c. Washer and Nut: Zinc-coated

steel. PART 3 - EXECUTION

3.1 EXPANSION-JOINT INSTALLATION

A. Install expansion joints of sizes matching sizes of piping in which they are installed.

B. Install metal-bellows expansion joints according to EJMA's "Standards of the Expansion Joint Manufacturers Association, Inc."

C. Install rubber packless expansion joints according to FSA-NMEJ-702.

3.2 PIPE LOOP AND SWING CONNECTION INSTALLATION

A. Connect risers and branch connections to mains with at least five pipe fittings including tee in main.

3.3 ALIGNMENT-GUIDE AND ANCHOR INSTALLATION

A. Install alignment guides to guide expansion and to avoid end-loading and torsional stress.

B. Install two guide(s) on each side of pipe expansion fittings and loops. Install guides nearest to expansion joint not more than four pipe diameters from expansion joint.

C. Attach guides to pipe and secure guides to building structure.

D. Install anchors at locations to prevent stresses from exceeding those permitted by ASME B31.9 and to prevent transfer of loading and stresses to connected equipment.

E. Anchor Attachments:

1. Anchor Attachment to Black-Steel Pipe: Attach by welding. Comply with ASME B31.9 and ASME Boiler and Pressure Vessel Code: Section IX, "Welding and Brazing Qualifications."
2. Anchor Attachment to Galvanized-Steel Pipe: Attach with pipe hangers. Use MSS SP-69, Type 42, riser clamp welded to anchor.
3. Anchor Attachment to Copper Tubing: Attach with pipe hangers. Use MSS SP- 69, Type 24, U-bolts bolted to anchor.

F. Fabricate and install steel anchors by welding steel shapes, plates, and bars. Comply with ASME B31.9 and AWS D1.1/D1.1M.

1. Anchor Attachment to Steel Structural Members: Attach by welding.
2. Anchor Attachment to Concrete Structural Members: Attach by fasteners. Follow fastener manufacturer's written instructions.

3. Use grout to form flat bearing surfaces for guides and anchors attached to concrete.

**END OF SECTION**

# SECTION 22 05 17
# SLEEVES AND SLEEVE SEALS FOR PLUMBING PIPING

## PART 1 - GENERAL

### 1.1 RELATED DOCUMENTS

A. Drawings and general provisions of the Contract, including General and Supplementary Conditions and Division 01 Specification Sections, apply to this Section.

### 1.2 SUMMARY

A. Section Includes:

1. Sleeves.
2. Stack-sleeve fittings.
3. Grout.

### 1.3 SUBMITTALS

A. Product Data: For each type of product indicated.

## PART 2 - PRODUCTS

### 2.1 SLEEVES

A. Cast-Iron Wall Pipes: Cast or fabricated of cast or ductile iron and equivalent to ductile-iron pressure pipe, with plain ends and integral waterstop unless otherwise indicated.

B. Galvanized-Steel Wall Pipes: ASTM A 53/A 53M, Schedule 80, with plain ends and welded steel collar; zinc coated.

C. Galvanized-Steel-Pipe Sleeves: ASTM A 53/A 53M, Type E, Grade B, Schedule 80, zinc coated, with plain ends.

D. Galvanized-Steel-Sheet Sleeves: 0.0239-inch minimum thickness; round tube closed with welded longitudinal joint.

### 2.2 STACK-SLEEVE FITTINGS

A. Manufacturers: Subject to compliance with requirements, available manufacturers offering products that may be incorporated into the Work include, but are not limited to, the following:

1. Smith, Jay R. Mfg. Co.
2. Zurn Specification Drainage Operation; Zurn Plumbing Products Group.

B. Description: Manufactured, cast-iron sleeve with integral clamping flange. Include clamping ring, bolts, and nuts for membrane flashing.

1. Underdeck Clamp: Clamping ring with setscrews.

## 2.3 GROUT

A. Standard: ASTM C 1107/C 1107M, Grade B, post-hardening and volume-adjusting, dry, hydraulic-cement grout.

B. Characteristics: Nonshrink; recommended for interior and exterior applications. Premixed and factory packaged.

C. Design Mix: 5000-psi, 28-day compressive strength.

# PART 3 - EXECUTION

## 3.1 SLEEVE INSTALLATION

A. Install sleeves for piping passing through penetrations in floors, partitions, roofs, and walls.

B. Install sleeves in concrete floors, and concrete walls as new slabs and walls are constructed.
1. Cut sleeves to length for mounting flush with both surfaces.

a. Exception: Extend sleeves installed in floors of mechanical equipment areas or other wet areas 2 inches above finished floor level.

2. Using grout, seal the space outside of sleeves in slabs and walls without sleeve-seal system.

C. Install sleeves for pipes passing through interior partitions.

1. Cut sleeves to length for mounting flush with both surfaces.
2. Install sleeves that are large enough to provide 1/4-inch annular clear space between sleeve and pipe or pipe insulation.
3. Seal annular space between sleeve and piping or piping insulation; use joint

sealants appropriate for size, depth, and location of joint. Comply with requirements for sealants specified in Division 07 Section "Joint Sealants."

D. Fire-Barrier Penetrations: Maintain indicated fire rating of walls, partitions, ceilings, and floors at pipe penetrations. Seal pipe penetrations with firestop materials. Comply with requirements for firestopping specified in Division 07 Section "Penetration Firestopping."

## 3.2 STACK-SLEEVE-FITTING INSTALLATION

A. Install stack-sleeve fittings in new slabs as slabs are constructed.

1. Install fittings that are large enough to provide 1/4-inch annular clear space between sleeve and pipe or pipe insulation.
2. Secure flashing between clamping flanges for pipes penetrating floors with membrane waterproofing. Comply with requirements for flashing specified in Division 07 Section "Sheet Metal Flashing and Trim."
3. Install section of cast-iron soil pipe to extend sleeve to 2 inches above finished floor level.
4. Extend cast-iron sleeve fittings below floor slab as required to secure clamping ring if ring is specified.
5. Using grout, seal the space around outside of stack-sleeve fittings.

B. Fire-Barrier Penetrations: Maintain indicated fire rating of floors at pipe penetrations. Seal pipe penetrations with firestop materials. Comply with requirements for firestopping specified in Division 07 Section "Penetration Firestopping."

## 3.3 SLEEVE SCHEDULE

A. Use sleeves for the following piping-penetration applications:

1. Exterior Concrete Walls above Grade:

   a. Piping Smaller Than NPS 6: Cast-iron wall sleeves, Galvanized-steel wall sleeves, Galvanized-steel-pipe sleeves.
   b. Piping NPS 6 and Larger: Cast-iron wall sleeves, Galvanized-steel wall sleeves, Galvanized-steel-pipe sleeves.

2. Concrete Slabs-on-Grade:

   a. Piping Smaller Than NPS 6: Cast-iron wall sleeves with sleeve-seal system, Galvanized-steel wall sleeves with sleeve-seal system.

   b. Piping NPS 6 and Larger: Cast-iron wall sleeves with sleeve-seal system, Galvanized-steel-pipe sleeves. Select sleeve size to allow for 1-inch annular clear space between piping and sleeve for installing sleeve-seal system.

3. Concrete Slabs above Grade:

   a. Piping Smaller Than NPS 6 : Galvanized-steel-pipe sleeves, Stack-sleeve
   b. fittings.
   c. Piping NPS 6 and Larger: Galvanized-steel-pipe sleeves, Stack-sleeve fittings.

4. Interior Partitions:

   a. Piping Smaller Than NPS 6: Galvanized-steel-pipe sleeves.
   b. Piping NPS 6 and Larger: Galvanized-steel-sheet sleeves.

**END OF SECTION*

# SECTION 22 05 18
# ESCUTCHEOUNS FOR PLUMBING PIPING

## PART 1 - GENERAL

### 1.1 RELATED DOCUMENTS

A. Drawings and general provisions of the Contract, including General and Supplementary Conditions and Division 01 Specification Sections, apply to this Section.

### 1.2 SUMMARY

A. Section Includes:

1. Escutcheons.
2. Floor plates.

### 1.3 SUBMITTALS

A. Product Data: For each type of product

indicated. PART 2 - PRODUCTS

### 2.1 ESCUTCHEONS

A. One-Piece, Cast-Brass Type: With polished, chrome-plated finish and setscrew fastener.

B. One-Piece, Deep-Pattern Type: Deep-drawn, box-shaped brass with chrome-plated finish and spring-clip fasteners.

C. One-Piece, Stamped-Steel Type: With chrome-plated finish and spring-clip fasteners.

D. Split-Casting Brass Type: With polished, chrome-plated finish and with concealed hinge and setscrew.

E. Split-Plate, Stamped-Steel Type: With chrome-plated finish, concealed hinge, and spring-clip fasteners.

## 2.2 FLOOR PLATES

A. One-Piece Floor Plates: Cast-iron flange with holes for fasteners.

B. Split-Casting Floor Plates: Cast brass with concealed hinge.

## 3.1 INSTALLATION

A. Install escutcheons for piping penetrations of walls, ceilings, and finished floors.

B. Install escutcheons with ID to closely fit around pipe, tube, and insulation of insulated piping and with OD that completely covers opening.

1. Escutcheons for New Piping:

   a. Piping with Fitting or Sleeve Protruding from Wall: One-piece, deep- pattern type.
   b. Chrome-Plated Piping: One-piece, cast-brass or split-casting brass type with polished, chrome-plated finish.
   c. Insulated Piping: One-piece, stamped-steel type or split-plate, stamped- steel type with concealed hinge.
   d. Bare Piping at Wall and Floor Penetrations in Finished Spaces: One-piece, cast-brass or split-casting brass type with polished, chrome-plated finish.
   e. Bare Piping at Ceiling Penetrations in Finished Spaces: One-piece, cast- brass or split-casting brass type with polished, chrome-plated finish.
   f. Bare Piping in Unfinished Service Spaces: One-piece, stamped-steel type or split-plate, stamped-steel type with concealed hinge.
   g. Bare Piping in Equipment Rooms: Split-plate, stamped-steel type with concealed hinge.

2. Escutcheons for Existing Piping:

   a. Chrome-Plated Piping: Split-casting brass type with polished, chrome- plated finish.
   b. Insulated Piping: Split-plate, stamped-steel type with concealed hinge.
   c. Bare Piping at Wall and Floor Penetrations in Finished Spaces: Split- casting brass type with polished, chrome-plated finish.
   d. Bare Piping at Ceiling Penetrations in Finished Spaces: Split-casting brass type with polished, chrome-plated finish.
   e. Bare Piping in Unfinished Service Spaces: Split-plate, stamped-steel type with concealed hinge.
   f. Bare Piping in Equipment Rooms: Split-plate, stamped-steel type with concealed hinge.

C. Install floor plates for piping penetrations of equipment-room floors.

D. Install floor plates with ID to closely fit around pipe, tube, and insulation of piping and with OD that completely covers opening.

1. New Piping: One-piece, floor-plate type.
2. Existing Piping: Split-casting, floor-plate type.

3.2 FIELD QUALITY CONTROL

A. Replace broken and damaged escutcheons and floor plates using new materials.

**END OF SECTION**

# SECTION 220519
# METERS AND GAGES FOR PLUMBING PIPING

## PART 1 - GENERAL

### 1.1 RELATED DOCUMENTS

A. Drawings and general provisions of the Contract, including General and Supplementary Conditions and Division 01 Specification Sections, apply to this Section.

### 1.2 SUMMARY

A. Section Includes:
1. Liquid-in-glass thermometers.
2. Thermowells.
3. Dial-type pressure gages.
4. Gage attachments.
5. Test plugs.
6. Test-plug kits.

B. Related Sections:

1. Division 22 Section “Domestic Water Piping" for water meters inside the building.

### 1.3 SUBMITTALS

A. Product Data: For each type of product indicated.

B. Product Certificates: For each type of meter and gage, from manufacturer.

C. Operation and Maintenance Data: For meters and gages to include in operation and maintenance manuals.

## PART 2 - PRODUCTS

### 2.1 LIQUID-IN-GLASS THERMOMETERS

A. Metal-Case, Industrial-Style, Liquid-in-Glass Thermometers:

1. Basis-of-Design Product: Subject to compliance with requirements, provide Weskler; Model AS5 or comparable product by one of the following:

a. Flo Fab Inc.
b. Palmer Wahl Instrumentation Group.
c. Trerice, H. O. Co.
d. Weiss Instruments, Inc.

2. Standard: ASME B40.200.
3. Case: Cast aluminum; 7-inch nominal size unless otherwise indicated.
4. Case Form: Adjustable angle with positive locking device unless otherwise indicated.
5. Tube: Glass with magnifying lens and blue organic liquid.
6. Tube Background: Nonreflective aluminum with permanently etched scale markings graduated in deg F .
7. Window: Glass.
8. Stem: Brass and of length to suit installation.

a. Design for Thermowell Installation: Bare stem.

9. Connector: 1-1/4 inches, with ASME B1.1 screw threads.
10. Accuracy: Plus or minus 1 percent of scale range or one scale division, to a maximum of 1.5 percent of scale range.

## 2.2 THERMOWELLS

A. Thermowells:

1. Standard: ASME B40.200.
2. Description: Pressure-tight, socket-type fitting made for insertion into piping tee fitting.
3. Material for Use with Copper Tubing: CNR or CUNI.
4. Type: Stepped shank unless straight or tapered shank is indicated.
5. External Threads: NPS 1/2, NPS 3/4, or NPS 1, ASME B1.20.1 pipe threads.
6. Internal Threads: 1/2, 3/4, and 1 inch, with ASME B1.1 screw threads.
7. Bore: Diameter required to match thermometer bulb or stem.
8. Insertion Length: Length required to match thermometer bulb or stem.
9. Lagging Extension: Include on thermowells for insulated piping and tubing.
10. Bushings: For converting size of thermowell's internal screw thread to size of thermometer connection.

B. Heat-Transfer Medium: Mixture of graphite and glycerin.

## 2.3 PRESSURE GAGES

A. Direct-Mounted or remote mounted, Metal-Case, Dial-Type Pressure Gages:

1. Basis-of-Design Product: Subject to compliance with requirements, provide Weskler; Model 251L4 or comparable product by one of the following:

a. Palmer Wahl Instrumentation Group.
b. Trerice, H. O. Co.
c. Weiss Instruments, Inc.

2. Standard: ASME B40.100.
3. Case: Liquid-filled type(s); stainless steel; 4-1/2-inch 2 – ½" nominal diameter.
4. Pressure-Element Assembly: Bourdon tube unless otherwise indicated.
5. Pressure Connection: Brass, with NPS 1/4, ASME B1.20.1 pipe threads and bottom-outlet type unless back-outlet type is indicated.
6. Movement: Mechanical, with link to pressure element and connection to pointer.
7. Dial: Nonreflective aluminum with permanently etched scale markings graduated in psi.
8. Pointer: Dark-colored metal.
9. Window: Glass.
10. Ring: Stainless steel.
11. Accuracy: Plus or minus 1.5 percent of full-scale range.

## 2.4 GAGE ATTACHMENTS

A. Snubbers: ASME B40.100, brass; with NPS 1/4 or NPS 1/2, ASME B1.20.1 pipe threads and porous-metal-type surge-dampening device. Include extension for use on insulated piping.

B. Valves: Brass or stainless-steel needle, with NPS 1/4, ASME B1.20.1 pipe threads.

## 2.5 TEST PLUGS

A. Basis-of-Design Product: Subject to compliance with requirements, provide Watts; TP Series or comparable product by one of the following:

1. Trerice, H. O. Co.
2. Weiss Instruments, Inc.
3. Petersen Companies.

B. Description: Test-station fitting made for insertion into piping tee fitting.

C. Body: Brass or stainless steel with core inserts and gasketed and threaded cap. Include extended stem on units to be installed in insulated piping.

D. Thread Size: NPS 1/4, ASME B1.20.1 pipe thread.

E. Minimum Pressure and Temperature Rating: 500 psig at 200 deg F.

F. Core Inserts: EPDM self-sealing rubber.

2.6 TEST-PLUG KITS

A. Basis-of-Design Product: Subject to compliance with requirements, provide Watts; TP Series or comparable product by one of the following:

1. Trerice, H. O. Co.
2. Weiss Instruments, Inc.
3. Petersen Companies.

B. Furnish one test-plug kit(s) containing one thermometer(s), one pressure gage and adapter, and carrying case. Thermometer sensing elements, pressure gage, and adapter probes shall be of diameter to fit test plugs and of length to project into piping.

C. High-Range Thermometer: Small, bimetallic insertion type with 1- to 2-inch-diameter dial and tapered-end sensing element. Dial range shall be at least.

D. Pressure Gage: Small, Bourdon-tube insertion type with 2- to 3-inch- diameter dial and probe. Dial range shall be at least 0 to 200 psig.

E. Carrying Case: Metal or plastic, with formed instrument padding.

F. PART 3 - EXECUTION

3.1 INSTALLATION

A. Install thermowells with socket extending to center of pipe and in vertical position in piping tees.

B. Install thermowells of sizes required to match thermometer connectors. Include bushings if required to match sizes.

C. Install thermowells with extension on insulated piping.

D. Fill thermowells with heat-transfer medium.

E. Install direct-mounted thermometers in thermowells and adjust vertical and tilted positions.

F. Install direct-mounted pressure gages in piping tees with pressure gage located on pipe at the most readable position.

G. Install valve and snubber in piping for each pressure gage for fluids.

H. Install test plugs in piping tees adjacent to thermometer and pressure gage taps

I. Install thermometers in the following locations:

1. Inlet and outlet of each water heater.

2. Inlets and outlets of each domestic water heat exchanger.
3. Inlet and outlet of each domestic hot-water storage tank.
4. Inlet and outlet of each remote domestic water chiller.

J. Install pressure gages in the following locations:

1. Building water service entrance into building.
2. Inlet and outlet of each pressure-reducing valve.
3. Suction and discharge of each water pump.
4. Inlet and outlet of each water filter.

## 3.2 CONNECTIONS

A. Install meters and gages adjacent to machines and equipment to allow service and maintenance of meters, gages, machines, and equipment.

## 3.3 ADJUSTING

A. Adjust faces of meters and gages to proper angle for best visibility.

## 3.4 THERMOMETER SCALE-RANGE SCHEDULE

A. Scale Range for Domestic Cold-Water Piping: 40 to 100 deg F.

B. Scale Range for Domestic Hot and Hot Water Recirculation Water Piping: 40 to 140 deg F.

## 3.5 PRESSURE-GAGE SCALE-RANGE SCHEDULE

1. Scale Range for Water Service Piping: 0 to 100 psi.

*END OF SECTION*

# SECTION 22 05 23
# GENERAL-DUTY VALVES OR PLUMBING PIPING

## PART 1 - GENERAL

### 1.1 RELATED DOCUMENTS

A. Drawings and general provisions of the Contract, including General and Supplementary Conditions and Division 01 Specification Sections, apply to this Section.

### 1.2 SUMMARY

A. Section Includes:
1. Brass ball valves.
2. Iron, single-flange butterfly valves.
3. Iron, grooved-end butterfly valves.
4. Bronze lift check valves.
5. Bronze swing check valves.
6. Bronze gate valves.
7. Iron gate valves.
8. Bronze globe valves.
9. Iron globe valbes.
10. Lubricated plug valves.

B. Related Sections:

1. Division 22 plumbing piping Sections for specialty valves applicable to those Sections only.
2. Division 22 Section "Identification for Plumbing Piping and Equipment" for valve tags and schedules.
3. Division 33 water distribution piping Sections for general-duty and specialty valves for site construction piping.

### 1.3 DEFINITIONS

A. CWP: Cold working pressure.

B. EPDM: Ethylene propylene copolymer rubber.

C. NBR: Acrylonitrile-butadiene, Buna-N, or nitrile rubber.

D. NRS: Nonrising stem.

E. OS&Y: Outside screw and yoke.

F. RS: Rising stem.

1.4 SUBMITTALS

A. Product Data: For each type of valve indicated.

1.5 QUALITY ASSURANCE

A. Source Limitations for Valves: Obtain each type of valve from single source from single manufacturer.

B. ASME Compliance:

1. ASME B16.10 and ASME B16.34 for ferrous valve dimensions and design criteria.
2. ASME B31.1 for power piping valves.
3. ASME B31.9 for building services piping valves.

C. NSF Compliance: NSF 61 for valve materials for potable-water service.

1.6 DELIVERY, STORAGE, AND HANDLING

A. Prepare valves for shipping as follows:

1. Protect internal parts against rust and corrosion.
2. Protect threads, flange faces, grooves, and weld ends.
3. Set gate valves closed to prevent rattling.
4. Set ball valves open to minimize exposure of functional surfaces.
5. Set butterfly valves closed or slightly open.
6. Block check valves in either closed or open position.

B. Use the following precautions during storage:

1. Maintain valve end protection.
2. Store valves indoors and maintain at higher than ambient dew point temperature. If outdoor storage is necessary, store valves off the ground in watertight enclosures.

C. Use sling to handle large valves; rig sling to avoid damage to exposed parts. Do not use handwheels or stems as lifting or rigging points.

PART 2 - PRODUCTS

2.1 GENERAL REQUIREMENTS FOR VALVES

A. Refer to valve schedule articles for applications of valves.

B. Valve Pressure and Temperature Ratings: Not less than indicated and as required for system pressures and temperatures.

C. Valve Sizes: Same as upstream piping unless otherwise indicated.

D. Valve Actuator Types:
   1. Handwheel: For valves other than quarter-turn types.
   2. Handlever: For quarter-turn valves NPS 6 and smaller.

E. Valves in Insulated Piping: With 2-inch stem extensions and the following features:

   1. Gate Valves: With rising stem.
   2. Ball Valves: With extended operating handle of non-thermal-conductive material, and protective sleeve that allows operation of valve without breaking the vapor seal or disturbing insulation.
   3. Butterfly Valves: With extended neck.

F. Valve-End Connections:

   1. Flanged: With flanges according to ASME B16.1 for iron valves.
   2. Grooved: With grooves according to AWWA C606.
   3. Solder Joint: With sockets according to ASME B16.18.
   4. Threaded: With threads according to ASME B1.20.1.

G. Valve Bypass and Drain Connections: MSS SP-45.

## 2.2 BRASS BALL VALVES

A. Two-Piece, Full-Port, Brass Ball Valves with Brass Trim:

   1. Description:

      a. Standard: MSS SP-110.
      b. SWP Rating: 150 psig.
      c. CWP Rating: 600 psig.
      d. Body Design: Two piece.
      e. Body Material: Forged brass.
      f. Seats: PTFE or TFE.
      g. Stem: Brass.
      h. Ball: Chrome-plated brass.
      i. Port: Full.

B. Two-Piece, Regular-Port, Brass Ball Valves with Brass Trim:

   1. Description:

a. Standard: MSS SP-110.
b. SWP Rating: 150 psig.
c. CWP Rating: 600 psig.
d. Body Design: Two piece.
e. Body Material: Forged brass.
f. Seats: PTFE or TFE.
g. Stem: Brass.
h. Ball: Chrome-plated brass.
i. Port: Regular.

## 2.3 IRON, SINGLE-FLANGE BUTTERFLY VALVES

A. Iron, Single-Flange Butterfly Valves with EPDM or NBR Seat and Aluminum-Bronze Disc:

1. Manufacturers: Subject to compliance with requirements, available manufacturers offering products that may be incorporated into the Work include, but are not limited to, the following:
   a. Crane Co.; Crane Valve Group; Jenkins Valves.
   b. Crane Co.; Crane Valve Group; Stockham Division.
   c. NIBCO INC.
   d. Watts Regulator Co.; a division of Watts Water Technologies, Inc.

2. Description:

   a. Standard: MSS SP-67, Type I.
   b. CWP Rating: 250 psig.
   c. Body Design: Lug type; suitable for bidirectional dead-end service at rated pressure without use of downstream flange.
   d. Body Material: ASTM A 126, cast iron or ASTM A 536, ductile iron.
   e. Seat: EPDM or NBR.
   f. Stem: One- or two-piece stainless steel.
   g. Disc: Aluminum bronze.

## 2.4 IRON, GROOVED-END BUTTERFLY VALVES

A. Iron, Grooved-End Butterfly Valves:

1. Manufacturers: Subject to compliance with requirements, available manufacturers offering products that may be incorporated into the Work include, but are not limited to, the following:

   a. Kennedy Valve; a division of McWane, Inc.
   b. Shurjoint Piping Products.
   c. Tyco Fire Products LP; Grinnell Mechanical Products.
   d. Victaulic Company.

2. Description:

a. Standard: MSS SP-67, Type I.
b. CWP Rating, NPS 8 and Smaller: 300 psig.
c. CWP Rating, NPS 10 and Larger: 200 psig.
d. Body Material: Coated, ductile iron.
e. Stem: Two-piece stainless steel.
f. Disc: Coated, ductile iron.
g. Seal: EPDM.

## 2.5 BRONZE LIFT CHECK VALVES

A. Class 125, Lift Check Valves with Bronze Disc:

1. Manufacturers: Subject to compliance with requirements, available manufacturers offering products that may be incorporated into the Work include, but are not limited to, the following:

a. Crane Co.; Crane Valve Group; Crane Valves.
b. Crane Co.; Crane Valve Group; Jenkins Valves.
c. Crane Co.; Crane Valve Group; Stockham Division.

2. Description:

a. Standard: MSS SP-80, Type 2.
b. CWP Rating: 200 psig.
c. Body Design: Vertical flow.
d. Body Material: ASTM B 61 or ASTM B 62, bronze.
e. Disc: Bronze.

## 2.6 BRONZE SWING CHECK VALVES

A. Class 125, Bronze Swing Check Valves with Bronze Disc:

1. Manufacturers: Subject to compliance with requirements, available manufacturers offering products that may be incorporated into the Work include, but are not limited to, the following:
a. Crane Co.; Crane Valve Group; Crane Valves.
b. Crane Co.; Crane Valve Group; Jenkins Valves.
c. Crane Co.; Crane Valve Group; Stockham Division.
d. Milwaukee Valve Company.
e. NIBCO INC.
f. Watts Regulator Co.; a division of Watts Water Technologies, Inc.

2. Description:

   a. Standard: MSS SP-80, Type 3.
   b. CWP Rating: 200 psig.
   c. Body Design: Horizontal flow.
   d. Body Material: ASTM B 62, bronze.
   e. Disc: Bronze.

## 2.7 BRONZE GATE VALVES

A. Class 125, NRS Bronze Gate Valves:

1. Manufacturers: Subject to compliance with requirements, available manufacturers offering products that may be incorporated into the Work include, but are not limited to, the following:
   a. Crane Co.; Crane Valve Group; Crane Valves.
   b. Crane Co.; Crane Valve Group; Jenkins Valves.
   c. Crane Co.; Crane Valve Group; Stockham Division.
   d. Milwaukee Valve Company.
   e. NIBCO INC.
   f. Watts Regulator Co.; a division of Watts Water Technologies, Inc.

2. Description:

   a. Standard: MSS SP-80, Type 1.
   b. CWP Rating: 200 psig.
   c. Body Material: ASTM B 62, bronze with integral seat and screw-in bonnet.
   d. Ends: Threaded or solder joint.
   e. Stem: Bronze.
   f. Disc: Solid wedge; bronze.
   g. Packing: Asbestos free.
   h. Handwheel: Malleable iron**,** bronze, or aluminum.

B. Class 125, NRS Bronze Gate Valves:

1. Manufacturers: Subject to compliance with requirements, available manufacturers offering products that may be incorporated into the Work include, but are not limited to, the following:
   a. Crane Co.; Crane Valve Group; Crane Valves.
   b. Crane Co.; Crane Valve Group; Jenkins Valves.
   c. Crane Co.; Crane Valve Group; Stockham Division.
   d. Hammond Valve.
   e. Milwaukee Valve Company.
   f. NIBCO INC.
   g. Watts Regulator Co.; a division of Watts Water Technologies, Inc.

2. Description:

   a. Standard: MSS SP-80, Type 2.
   b. CWP Rating: 300 psig.
   c. Body Material: ASTM B 62, bronze with integral seat and screw-in bonnet.
   d. Ends: Threaded or solder joint
   e. Stem: Bronze.
   f. Disc: Solid wedge; bronze.
   g. Packing: Asbestos free.
   h. Handwheel: Malleable iron, bronze, or aluminum.

## 2.8 IRON GATE VALVES

A. Class 150, OS&Y, Iron Gate Valves:

1. Manufacturers: Subject to compliance with requirements, available manufacturers offering products that may be incorporated into the Work include, but are not limited to, the following:

   a. Crane Co.; Crane Valve Group; Crane Valves.
   b. Crane Co.; Crane Valve Group; Jenkins Valves.
   c. Crane Co.; Crane Valve Group; Stockham Division.
   d. Milwaukee Valve Company.
   e. NIBCO INC.
   f. Watts Regulator Co.; a division of Watts Water Technologies, Inc.

2. Description:

   a. Standard: MSS SP-70, Type I.
   b. CWP Rating: 200 psig.
   c. Body Material: ASTM A 126, gray iron with bolted bonnet.
   d. Ends: Flanged.
   e. Trim: Bronze.
   f. Disc: Solid wedge.
   g. Packing and Gasket: Asbestos free.

B. Class 250, OS&Y, Iron Gate Valves:

1. Manufacturers: Subject to compliance with requirements, available manufacturers offering products that may be incorporated into the Work include, but are not limited to, the following:

   a. Crane Co.; Crane Valve Group; Crane Valves.
   b. Crane Co.; Crane Valve Group; Stockham Division.
   c. Milwaukee Valve Company.
   d. NIBCO INC.
   e. Watts Regulator Co.; a division of Watts Water Technologies, Inc.

2. Description:

   a. Standard: MSS SP-70, Type I.
   b. CWP Rating: 500 psig.
   c. Body Material: ASTM A 126, gray iron with bolted bonnet.
   d. Ends: Flanged.
   e. Trim: Bronze.
   f. Disc: Solid wedge.
   g. Packing and Gasket: Asbestos free.

## 2.9 BRONZE GLOBE VALVES

A. Class 125, Bronze Globe Valves with Bronze Disc:

1. Manufacturers: Subject to compliance with requirements, provide products by one of the following:

   a. Crane Co.; Crane Valve Group; Crane Valves.
   b. Crane Co.; Crane Valve Group; Stockham Division.
   c. Milwaukee Valve Company.
   d. NIBCO INC.
   e. Watts Regulator Co.; a division of Watts Water Technologies, Inc.

2. Description:

   a. Standard: MSS SP-80, Type 2.
   b. CWP Rating: 200psig.
   c. Body Material: ASTM B 62, bronze with integral seat and screw-in bonnet.
   d. Ends: Threaded or solder joint.
   e. Stem: Bronze.
   f. Disc:Bronze, PTFE, or TFE
   g. Packing: Asbestos free.
   h. Handwheel: Malleable iron, bronze, or aluminum.

## 2.10 IRON GLOBE VALVES

A. Class 125, Iron Globe Valves:

1. Manufacturers: Subject to compliance with requirements, provide products by one of the following:

   a. Crane Co.; Crane Valve Group; Crane Valves.
   b. Crane Co.; Crane Valve Group; Jenkins Valves.
   c. Crane Co.; Crane Valve Group; Stockham Division.
   d. Milwaukee Valve Company.
   e. NIBCO INC.

f. Watts Regulator Co.; a division of Watts Water Technologies, Inc.

2. Description:

a. Standard: MSS SP-85, Type I.
b. CWP Rating: 200 psig.
c. Body Material: ASTM A 126, gray iron with bolted bonnet.
d. Ends: Flanged.
e. Trim: Bronze.
f. Packing and Gasket: Asbestos free.

## 2.11 LUBRICATED PLUG VALVES

A. Class 125, Cylindrical, Lubricated Plug Valves:

1. Manufacturers: Subject to compliance with requirements, provide products by one of the following:

a. Homestead Valve; a division of Olson Technologies, Inc.
b. Milliken Valve Company.
c. R & M Energy Systems; a unit of Robbins & Myers, Inc.

2. Description:

a. Standard: MSS SP-78, Type IV.
b. CWP Rating: 200 psig.
c. Body Material: ASTM A 48/A 48M or ASTM A 126, cast iron with lubrication-sealing system.
d. Plug: Cast iron or bronze with sealant groove.
e. Ends: threaded or flanged

# PART 3 - EXECUTION

## 3.1 EXAMINATION

A. Examine valve interior for cleanliness, freedom from foreign matter, and corrosion. Remove special packing materials, such as blocks, used to prevent disc movement during shipping and handling.

B. Operate valves in positions from fully open to fully closed. Examine guides and seats made accessible by such operations.

C. Examine threads on valve and mating pipe for form and cleanliness.

D. Examine mating flange faces for conditions that might cause leakage. Check bolting for proper size, length, and material. Verify that gasket is of proper size, that its material composition is suitable for service, and that it is free from defects and damage.

E. Do not attempt to repair defective valves; replace with new valves.

## 3.2 VALVE INSTALLATION

A. Install valves with unions or flanges at each piece of equipment arranged to allow service, maintenance, and equipment removal without system shutdown.

B. Locate valves for easy access and provide separate support where necessary.

C. Install valves in horizontal piping with stem at or above center of pipe.

D. Install valves in position to allow full stem movement.

E. Install check valves for proper direction of flow and as follows:

1. Swing Check Valves: In horizontal position with hinge pin level.
2. Lift Check Valves: With stem upright and plumb.

F. All valves used in any system shall have a pressure class that exceeds the pressure of the system it is installed in.

## 3.3 ADJUSTING

A. Adjust or replace valve packing after piping systems have been tested and put into service but before final adjusting and balancing. Replace valves if persistent leaking occurs.

## 3.4 GENERAL REQUIREMENTS FOR VALVE APPLICATIONS

A. If valve applications are not indicated, use the following:

1. Shutoff Service: Ball, butterfly, or gate valves.
2. Butterfly Valve Dead-End Service: Single-flange (lug) type.
3. Throttling Service: Globe or ball valves.
4. Pump-Discharge Check Valves:

   a. NPS 2 and Smaller: Bronze swing check valves with bronze or nonmetallic disc.
   b. NPS 2-1/2 and Larger for Sanitary Waste and Storm Drainage: Iron swing check valves with lever and weight or spring.

B. If valves with specified SWP classes or CWP ratings are not available, the same types of valves with higher SWP classes or CWP ratings may be substituted.

C. Select valves, except wafer types, with the following end connections:

1. For Copper Tubing, NPS 2 and Smaller: Threaded ends except where solder-joint valve-end option is indicated in valve schedules below.
2. For Copper Tubing, NPS 2-1/2 to NPS 4: Flanged ends except where threaded valve-end option is indicated in valve schedules below.
3. For Steel Piping, NPS 2 and Smaller: Threaded ends.
4. For Steel Piping, NPS 2-1/2 to NPS 4: Flanged ends except where threaded valve-end option is indicated in valve schedules below.
5. For Grooved-End Copper Tubing and Steel Piping: Valve ends may be grooved.

## 3.5 DOMESTIC, HOT- AND COLD-WATER VALVE SCHEDULE

A. Pipe NPS 2 and Smaller:

1. Brass Valves: May be provided with lead free solder-joint ends instead of threaded ends.
2. Ball Valves: Two piece, full port, brass with brass trim.
3. Bronze Swing Check Valves: Class 150, bronze disc.
4. Bronze Gate Valves: Class 150.

B. Pipe NPS 2-1/2 and Larger:

1. Iron Valves, NPS 2-1/2 to NPS 4: May be provided with threaded ends instead of flanged ends.
2. Iron, Single-Flange Butterfly Valves: 200 CWP, EPDM, NBR seat, aluminum-bronze disc.
3. Iron, Grooved-End Butterfly Valves: 175 CWP.
4. Iron Gate Valves: Class 150.

## 3.6 SANITARY WASTE AND STORM-DRAINAGE VALVE SCHEDULE

A. Pipe NPS 2 and Smaller:

1. Bronze Valves: May be provided with solder-joint ends instead of threaded ends.
2. Bronze Swing Check Valves: Class 150, nonmetallic disc.
3. Bronze Gate Valves: Class 150.

B. Pipe NPS 2-1/2 and Larger:

1. Iron Valves, NPS 2-1/2 to NPS 4: May be provided with threaded ends instead of flanged ends.
2. Iron Gate Valves: Class 150.

3. Iron Swing Check Valves: Class 150.
4. Iron Globe Valves: Class 150.

**END OF SECTION**

# SECTION 22 05 29 - HANGERS AND SUPPORTS FOR PLUMBING PIPING AND EQUIPMENT

## PART 1 - GENERAL

### 1.1 RELATED DOCUMENTS

A. Drawings and general provisions of the Contract, including General and Supplementary Conditions and Division 01 Specification Sections, apply to this Section.

### 1.2 SUMMARY

A. Section Includes:

1. Metal pipe hangers and supports.
2. Trapeze pipe hangers.
3. Thermal-hanger shield inserts.
4. Fastener systems.
5. Pipe stands.
6. Pipe positioning systems.

B. Related Sections:

1. Division 05 Section "Metal Fabrications" for structural-steel shapes and plates for trapeze hangers for pipe and equipment supports.
2. Division 21 fire-suppression piping Sections for pipe hangers for fire-suppression piping.

### 1.3 DEFINITIONS

A. MSS: Manufacturers Standardization Society of The Valve and Fittings Industry Inc.

### 1.4 PERFORMANCE REQUIREMENTS

A. Delegated Design: Design trapeze pipe hangers and equipment supports, including comprehensive engineering analysis by a qualified professional engineer, using performance requirements and design criteria indicated.

B. Structural Performance: Hangers and supports for plumbing piping and equipment shall withstand the effects of gravity loads and stresses within limits and under conditions indicated according to ASCE/SEI 7.

1. Design supports for multiple pipes, including pipe stands, capable of supporting combined weight of supported systems, system contents, and test water.

1.5 SUBMITTALS

A. Product Data: For each type of product indicated.

B. Shop Drawings: Show fabrication and installation details and include calculations for the following; include Product Data for components:

1. Trapeze pipe hangers.
2. Metal framing systems.
3. Fiberglass strut systems.
4. Pipe stands.

C. Delegated-Design Submittal: For trapeze hangers indicated to comply with performance requirements and design criteria, including analysis data signed and sealed by the qualified professional engineer responsible for their preparation.

1. Detail fabrication and assembly of trapeze hangers.
2. Design Calculations: Calculate requirements for designing trapeze hangers.

D. Welding certificates.

1.6 QUALITY ASSURANCE

A. Structural Steel Welding Qualifications: Qualify procedures and personnel according to AWS D1.1/D1.1M, "Structural Welding Code - Steel."

B. Pipe Welding Qualifications: Qualify procedures and operators according to ASME Boiler and Pressure Vessel Code.

PART 2 - PRODUCTS

2.1 METAL PIPE HANGERS AND SUPPORTS

A. Carbon-Steel Pipe Hangers and Supports:

1. Description: MSS SP-58, Types 1 through 58, factory-fabricated components.
2. Galvanized Metallic Coatings: Pregalvanized or hot dipped.
3. Nonmetallic Coatings: Plastic coating, jacket, or liner.
4. Padded Hangers: Hanger with fiberglass or other pipe insulation pad or cushion to support bearing surface of piping.
5. Hanger Rods: Continuous-thread rod, nuts, and washer made of carbon steel.

B. Copper Pipe Hangers:

1. Description: MSS SP-58, Types 1 through 58, copper-coated-steel, factory-fabricated components.
2. Hanger Rods: Continuous-thread rod, nuts, and washer made of copper-coated steel or stainless steel.

## 2.2 TRAPEZE PIPE HANGERS

A. Description: MSS SP-69, Type 59, shop- or field-fabricated pipe-support assembly made from structural carbon-steel shapes with MSS SP-58 carbon-steel hanger rods, nuts, saddles, and U-bolts.

## 2.3 THERMAL-HANGER SHIELD INSERTS

A. Manufacturers: Subject to compliance with requirements, available manufacturers offering products that may be incorporated into the Work include, but are not limited to, the following:
   1. National Pipe Hanger Corporation.
   2. Pipe Shields, Inc.; a subsidiary of Piping Technology & Products, Inc.
   3. Rilco Manufacturing Co., Inc.
   4. Other manufacturers offering equivalent products.

B. Insulation-Insert Material for Cold Piping: ASTM C 552, Type II cellular glass with 100-psig or ASTM C 591, Type VI, Grade 1 polyisocyanurate with 125-psig minimum compressive strength and vapor barrier.

C. Insulation-Insert Material for Hot Piping: ASTM C 552, Type II cellular glass with 100-psig or ASTM C 591, Type VI, Grade 1 polyisocyanurate with 125-psig minimum compressive strength.

D. For Trapeze or Clamped Systems: Insert and shield shall cover entire circumference of pipe.

E. For Clevis or Band Hangers: Insert and shield shall cover lower 180 degrees of pipe.

F. Insert Length: Extend 2 inches beyond sheet metal shield for piping operating below ambient air temperature.

## 2.4 FASTENER SYSTEMS

A. Powder-Actuated Fasteners: Threaded-steel stud, for use in hardened portland cement concrete with pull-out, tension, and shear capacities appropriate for supported loads and building materials where used.

B. Mechanical-Expansion Anchors: Insert-wedge-type, zinc-coated steel anchors, for use in hardened portland cement concrete; with pull-out, tension, and shear capacities appropriate for supported loads and building materials where used.

## 2.5 PIPE STANDS

A. General Requirements for Pipe Stands: Shop- or field-fabricated assemblies made of manufactured corrosion-resistant components to support roof-mounted piping.

B. Compact Pipe Stand: One-piece plastic unit with integral-rod roller, pipe clamps, or V-shaped cradle to support pipe, for roof installation without membrane penetration.

C. Low-Type, Single-Pipe Stand: One-piece stainless-steel base unit with plastic roller, for roof installation without membrane penetration.

D. High-Type, Single-Pipe Stand:

1. Description: Assembly of base, vertical and horizontal members, and pipe support, for roof installation without membrane penetration.
2. Base: Stainless steel.
3. Vertical Members: Two or more cadmium-plated-steel or stainless-steel, continuous-thread rods.
4. Horizontal Member: Cadmium-plated-steel or stainless-steel rod with plastic or stainless-steel, roller-type pipe support.

E. High-Type, Multiple-Pipe Stand:

1. Description: Assembly of bases, vertical and horizontal members, and pipe supports, for roof installation without membrane penetration.
2. Bases: One or more; plastic.
3. Vertical Members: Two or more protective-coated-steel channels.
4. Horizontal Member: Protective-coated-steel channel.
5. Pipe Supports: Galvanized-steel, clevis-type pipe hangers.

## 2.6 PIPE POSITIONING SYSTEMS

A. Description: IAPMO PS 42, positioning system of metal brackets, clips, and straps for positioning piping in pipe spaces; for plumbing fixtures in commercial applications.

## 2.7 MISCELLANEOUS MATERIALS

A. Structural Steel: ASTM A 36/A 36M, carbon-steel plates, shapes, and bars; black and galvanized.

B. Grout: ASTM C 1107, factory-mixed and -packaged, dry, hydraulic-cement, nonshrink and nonmetallic grout; suitable for interior and exterior applications.

1. Properties: Nonstaining, noncorrosive, and nongaseous.
2. Design Mix: 5000-psi, 28-day compressive strength.

PART 3 - EXECUTION

3.1 HANGER AND SUPPORT INSTALLATION

A. Metal Pipe-Hanger Installation: Comply with MSS SP-69 and MSS SP-89. Install hangers, supports, clamps, and attachments as required to properly support piping from the building structure.

B. Metal Trapeze Pipe-Hanger Installation: Comply with MSS SP-69 and MSS SP-89. Arrange for grouping of parallel runs of horizontal piping, and support together on field-fabricated trapeze pipe hangers.

1. Pipes of Various Sizes: Support together and space trapezes for smallest pipe size or install intermediate supports for smaller diameter pipes as specified for individual pipe hangers.
2. Field fabricate from ASTM A 36/A 36M, carbon-steel shapes selected for loads being supported. Weld steel according to AWS D1.1/D1.1M.

C. Thermal-Hanger Shield Installation: Install in pipe hanger or shield for insulated piping.

D. Fastener System Installation:

1. Install powder-actuated fasteners for use in lightweight concrete or concrete slabs less than 4 inches thick in concrete after concrete is placed and completely cured. Use operators that are licensed by powder-actuated tool manufacturer. Install fasteners according to powder-actuated tool manufacturer's operating manual.
2. Install mechanical-expansion anchors in concrete after concrete is placed and completely cured. Install fasteners according to manufacturer's written instructions.

E. Pipe Stand Installation:

1. Pipe Stand: Assemble components and mount on smooth roof surface. Do not penetrate roof membrane.

F. Pipe Positioning-System Installation: Install support devices to make rigid supply and waste piping connections to each plumbing fixture. See Division 22 plumbing fixture Sections for requirements for pipe positioning systems for plumbing fixtures.

G. Install hangers and supports complete with necessary attachments, inserts, bolts, rods, nuts, washers, and other accessories.

H. Install hangers and supports to allow controlled thermal and seismic movement of piping systems, to permit freedom of movement between pipe anchors, and to facilitate action of expansion joints, expansion loops, expansion bends, and similar units.

I. Install lateral bracing with pipe hangers and supports to prevent swaying.

J. Install building attachments within concrete slabs or attach to structural steel. Install additional attachments at concentrated loads, including valves, flanges, and strainers, NPS 2-1/2 and larger and at changes in direction of piping. Install concrete inserts before concrete is placed; fasten inserts to forms and install reinforcing bars through openings at top of inserts.

K. Load Distribution: Install hangers and supports so that piping live and dead loads and stresses from movement will not be transmitted to connected equipment.

L. Pipe Slopes: Install hangers and supports to provide indicated pipe slopes and to not exceed maximum pipe deflections allowed by ASME B31.9 for building services piping.

M. Insulated Piping:

1. Attach clamps and spacers to piping.

   a. Piping Operating above Ambient Air Temperature: Clamp may project through insulation.
   b. Piping Operating below Ambient Air Temperature: Use thermal-hanger shield insert with clamp sized to match OD of insert.
   c. Do not exceed pipe stress limits allowed by ASME B31.9 for building services piping.

2. Install MSS SP-58, Type 39, protection saddles if insulation without vapor barrier is indicated. Fill interior voids with insulation that matches adjoining insulation.

   a. Option: Thermal-hanger shield inserts may be used. Include steel weight-distribution plate for pipe NPS 4 and larger if pipe is installed on rollers.

3. Install MSS SP-58, Type 40, protective shields on cold piping with vapor barrier. Shields shall span an arc of 180 degrees.

   a. Option: Thermal-hanger shield inserts may be used. Include steel weight-distribution plate for pipe NPS 4 and larger if pipe is installed on rollers.

4. Shield Dimensions for Pipe: Not less than the following:

   a. NPS 1/4 to NPS 3-1/2: 12 inches long and 0.048 inch thick.
   b. NPS 4: 12 inches long and 0.06 inch thick.
   c. NPS 5 and NPS 6: 18 inches long and 0.06 inch thick.
   d. NPS 8 to NPS 14: 24 inches long and 0.075 inch thick.
   e. NPS 16 to NPS 24: 24 inches long and 0.105 inch thick.

5. Pipes NPS 8 and Larger: Include wood or reinforced calcium-silicate-insulation inserts of length at least as long as protective shield.
6. Thermal-Hanger Shields: Install with insulation same thickness as piping insulation.

## 3.2 METAL FABRICATIONS

A. Cut, drill, and fit miscellaneous metal fabrications for trapeze pipe hangers.

B. Fit exposed connections together to form hairline joints. Field weld connections that cannot be shop welded because of shipping size limitations.

C. Field Welding: Comply with AWS D1.1/D1.1M procedures for shielded, metal arc welding; appearance and quality of welds; and methods used in correcting welding work; and with the following:

1. Use materials and methods that minimize distortion and develop strength and corrosion resistance of base metals.
2. Obtain fusion without undercut or overlap.
3. Remove welding flux immediately.
4. Finish welds at exposed connections so no roughness shows after finishing and so contours of welded surfaces match adjacent contours.

## 3.3 ADJUSTING

A. Hanger Adjustments: Adjust hangers to distribute loads equally on attachments and to achieve indicated slope of pipe.

B. Trim excess length of continuous-thread hanger and support rods to 1-1/2 inches.

## 3.4 PAINTING

A. Touchup: Clean field welds and abraded areas of shop paint. Paint exposed areas immediately after erecting hangers and supports. Use same materials as used for shop painting. Comply with SSPC-PA 1 requirements for touching up field-painted surfaces.

1. Apply paint by brush or spray to provide a minimum dry film thickness of 2.0 mils.

B. Touchup: Cleaning and touchup painting of field welds, bolted connections, and abraded areas of shop paint on miscellaneous metal are specified in Division 09 painting Sections**.**

C. Galvanized Surfaces: Clean welds, bolted connections, and abraded areas and apply galvanizing-repair paint to comply with ASTM A 780.

## 3.5 HANGER AND SUPPORT SCHEDULE

A. Specific hanger and support requirements are in Sections specifying piping systems and equipment.

B. Comply with MSS SP-69 for pipe-hanger selections and applications that are not

specified in piping system Sections.

C. Use hangers and supports with galvanized metallic coatings for piping that will not have field-applied finish.

D. Use nonmetallic coatings on attachments for electrolytic protection where attachments are in direct contact with copper tubing.

E. Use carbon-steel pipe hangers and supports, and metal trapeze pipe hangers and attachments for general service applications.

F. Use copper-plated pipe hangers and copper or stainless-steel attachments for copper piping and tubing.

G. Use padded hangers for piping that is subject to scratching.

H. Use thermal-hanger shield inserts for insulated piping and tubing.

I. Horizontal-Piping Hangers and Supports: Unless otherwise indicated and except as specified in piping system Sections, install the following types:

1. Adjustable, Steel Clevis Hangers (MSS Type 1): For suspension of noninsulated or insulated, stationary pipes NPS 1/2 to NPS 30.
2. Yoke-Type Pipe Clamps (MSS Type 2): For suspension of up to 1050 deg F, pipes NPS 4 to NPS 24, requiring up to 4 inches of insulation.
3. Carbon- or Alloy-Steel, Double-Bolt Pipe Clamps (MSS Type 3): For suspension of pipes NPS 3/4 to NPS 36, requiring clamp flexibility and up to 4 inches of insulation.
4. Steel Pipe Clamps (MSS Type 4): For suspension of cold and hot pipes NPS 1/2 to NPS 24 if little or no insulation is required.
5. Pipe Hangers (MSS Type 5): For suspension of pipes NPS 1/2 to NPS 4, to allow off-center closure for hanger installation before pipe erection.
6. Adjustable, Swivel Split- or Solid-Ring Hangers (MSS Type 6): For suspension of noninsulated, stationary pipes NPS 3/4 to NPS 8.
7. Adjustable, Steel Band Hangers (MSS Type 7): For suspension of noninsulated, stationary pipes NPS 1/2 to NPS 8.
8. Adjustable Band Hangers (MSS Type 9): For suspension of noninsulated, stationary pipes NPS 1/2 to NPS 8.
9. Adjustable, Swivel-Ring Band Hangers (MSS Type 10): For suspension of noninsulated, stationary pipes NPS 1/2 to NPS 8.
10. Split Pipe Ring with or without Turnbuckle Hangers (MSS Type 11): For suspension of noninsulated, stationary pipes NPS 3/8 to NPS 8.
11. Extension Hinged or Two-Bolt Split Pipe Clamps (MSS Type 12): For suspension of noninsulated, stationary pipes NPS 3/8 to NPS 3.
12. U-Bolts (MSS Type 24): For support of heavy pipes NPS 1/2 to NPS 30.
13. Clips (MSS Type 26): For support of insulated pipes not subject to expansion or contraction.
14. Pipe Saddle Supports (MSS Type 36): For support of pipes NPS 4 to NPS 36, with steel-pipe base stanchion support and cast-iron floor flange or carbon-steel plate.

15. Pipe Stanchion Saddles (MSS Type 37): For support of pipes NPS 4 to NPS 36, with steel-pipe base stanchion support and cast-iron floor flange or carbon-steel plate, and with U-bolt to retain pipe.
16. Adjustable Pipe Saddle Supports (MSS Type 38): For stanchion-type support for pipes NPS 2-1/2 to NPS 36 if vertical adjustment is required, with steel-pipe base stanchion support and cast-iron floor flange.
17. Single-Pipe Rolls (MSS Type 41): For suspension of pipes NPS 1 to NPS 30, from two rods if longitudinal movement caused by expansion and contraction might occur.
18. Adjustable Roller Hangers (MSS Type 43): For suspension of pipes NPS 2-1/2 to NPS 24, from single rod if horizontal movement caused by expansion and contraction might occur.
19. Complete Pipe Rolls (MSS Type 44): For support of pipes NPS 2 to NPS 42 if longitudinal movement caused by expansion and contraction might occur but vertical adjustment is not necessary.
20. Pipe Roll and Plate Units (MSS Type 45): For support of pipes NPS 2 to NPS 24 if small horizontal movement caused by expansion and contraction might occur and vertical adjustment is not necessary.
21. Adjustable Pipe Roll and Base Units (MSS Type 46): For support of pipes NPS 2 to NPS 30 if vertical and lateral adjustment during installation might be required in addition to expansion and contraction.

J. Vertical-Piping Clamps: Unless otherwise indicated and except as specified in piping system Sections, install the following types:

1. Extension Pipe or Riser Clamps (MSS Type 8): For support of pipe risers NPS 3/4 to NPS 24.
2. Carbon- or Alloy-Steel Riser Clamps (MSS Type 42): For support of pipe risers NPS 3/4 to NPS 24 if longer ends are required for riser clamps.

K. Hanger-Rod Attachments: Unless otherwise indicated and except as specified in piping system Sections, install the following types:

1. Steel Turnbuckles (MSS Type 13): For adjustment up to 6 inches for heavy loads.
2. Steel Clevises (MSS Type 14): For 120 to 450 deg F piping installations.
3. Swivel Turnbuckles (MSS Type 15): For use with MSS Type 11, split pipe rings.
4. Malleable-Iron Sockets (MSS Type 16): For attaching hanger rods to various types of building attachments.
5. Steel Weldless Eye Nuts (MSS Type 17): For 120 to 450 deg F piping installations.

L. Building Attachments: Unless otherwise indicated and except as specified in piping system Sections, install the following types:

1. Steel or Malleable Concrete Inserts (MSS Type 18): For upper attachment to suspend pipe hangers from concrete ceiling.
2. Top-Beam C-Clamps (MSS Type 19): For use under roof installations with bar-joist construction, to attach to top flange of structural shape.

3. Side-Beam or Channel Clamps (MSS Type 20): For attaching to bottom flange of beams, channels, or angles.
4. Center-Beam Clamps (MSS Type 21): For attaching to center of bottom flange of beams.
5. Welded Beam Attachments (MSS Type 22): For attaching to bottom of beams if loads are considerable and rod sizes are large.
6. C-Clamps (MSS Type 23): For structural shapes.
7. Top-Beam Clamps (MSS Type 25): For top of beams if hanger rod is required tangent to flange edge.
8. Side-Beam Clamps (MSS Type 27): For bottom of steel I-beams.
9. Steel-Beam Clamps with Eye Nuts (MSS Type 28): For attaching to bottom of steel I-beams for heavy loads.
10. Linked-Steel Clamps with Eye Nuts (MSS Type 29): For attaching to bottom of steel I-beams for heavy loads, with link extensions.
11. Malleable-Beam Clamps with Extension Pieces (MSS Type 30): For attaching to structural steel.
12. Welded-Steel Brackets: For support of pipes from below or for suspending from above by using clip and rod. Use one of the following for indicated loads:

    a. Light (MSS Type 31): 750 lb.
    b. Medium (MSS Type 32): 1500 lb.
    c. Heavy (MSS Type 33): 3000 lb.

13. Side-Beam Brackets (MSS Type 34): For sides of steel or wooden beams.
14. Plate Lugs (MSS Type 57): For attaching to steel beams if flexibility at beam is required.
15. Horizontal Travelers (MSS Type 58): For supporting piping systems subject to linear horizontal movement where headroom is limited.

M. Saddles and Shields: Unless otherwise indicated and except as specified in piping system Sections, install the following types:

1. Steel-Pipe-Covering Protection Saddles (MSS Type 39): To fill interior voids with insulation that matches adjoining insulation.
2. Protection Shields (MSS Type 40): Of length recommended in writing by manufacturer to prevent crushing insulation.
3. Thermal-Hanger Shield Inserts: For supporting insulated pipe.

N. Spring Hangers and Supports: Unless otherwise indicated and except as specified in piping system Sections, install the following types:

1. Restraint-Control Devices (MSS Type 47): Where indicated to control piping movement.
2. Spring Cushions (MSS Type 48): For light loads if vertical movement does not exceed 1-1/4 inches.
3. Spring-Cushion Roll Hangers (MSS Type 49): For equipping Type 41, roll hanger with springs.
4. Spring Sway Braces (MSS Type 50): To retard sway, shock, vibration, or thermal expansion in piping systems.

5. Variable-Spring Hangers (MSS Type 51): Preset to indicated load and limit variability factor to 25 percent to allow expansion and contraction of piping system from hanger.
6. Variable-Spring Base Supports (MSS Type 52): Preset to indicated load and limit variability factor to 25 percent to allow expansion and contraction of piping system from base support.
7. Variable-Spring Trapeze Hangers (MSS Type 53): Preset to indicated load and limit variability factor to 25 percent to allow expansion and contraction of piping system from trapeze support.
8. Constant Supports: For critical piping stress and if necessary to avoid transfer of stress from one support to another support, critical terminal, or connected equipment. Include auxiliary stops for erection, hydrostatic test, and load-adjustment capability. These supports include the following types:

    a. Horizontal (MSS Type 54): Mounted horizontally.
    b. Vertical (MSS Type 55): Mounted vertically.
    c. Trapeze (MSS Type 56): Two vertical-type supports and one trapeze member.

O. Comply with MSS SP-69 for trapeze pipe-hanger selections and applications that are not specified in piping system Sections.

P. Comply with MFMA-103 for metal framing system selections and applications that are not specified in piping system Sections.

Q. Use pipe positioning systems in pipe spaces behind plumbing fixtures to support supply and waste piping for plumbing fixtures.

END OF SECTION 220529

# SECTION 22 05 53
# IDENTIFICATION FOR PLUMBING PIPING AND EQUIPMENT

## PART 1 - GENERAL

### 1.1 RELATED DOCUMENTS

A. Drawings and general provisions of the Contract, including General and Supplementary Conditions and Division 01 Specification Sections, apply to this Section.

### 1.2 SUMMARY

A. Section Includes:
   1. Warning signs and labels.
   2. Pipe labels.
   3. Stencils.
   4. Valve tags.
   5. Warning tags.

### 1.3 SUBMITTALS

A. Product Data: For each type of product indicated.

B. Samples: For color, letter style, and graphic representation required for each identification material and device.

C. Equipment Label Schedule: Include a listing of all equipment to be labeled with the proposed content for each label.

D. Valve numbering scheme.

E. Valve Schedules: For each piping system to include in maintenance manuals.

### 1.4 COORDINATION

A. Coordinate installation of identifying devices with completion of covering and painting of surfaces where devices are to be applied.

B. Coordinate installation of identifying devices with locations of access panels and doors.

C. Install identifying devices before installing acoustical ceilings and similar concealment.

PART 2 - PRODUCTS

2.1 WARNING SIGNS AND LABELS

A. Material and Thickness: Multilayer, multicolor, plastic labels for mechanical engraving, 1/8 inch thick, and having predrilled holes for attachment hardware.

B. Letter Color: White.

C. Background Color: Black.

D. Maximum Temperature: Able to withstand temperatures up to 160 deg F.

E. Minimum Label Size: Length and width vary for required label content, but not less than 2-1/2 by 3/4 inch.

F. Minimum Letter Size: 1/4 inch for name of units if viewing distance is less than 24 inches, 1/2 inch for viewing distances up to 72 inches, and proportionately larger lettering for greater viewing distances. Include secondary lettering two-thirds to three-fourths the size of principal lettering.

G. Fasteners: Stainless-steel rivets or self-tapping screws.

H. Adhesive: Contact-type permanent adhesive, compatible with label and with substrate.

I. Label Content: Include caution and warning information, plus emergency notification instructions.

2.2 PIPE LABELS

A. General Requirements for Manufactured Pipe Labels: Preprinted, color-coded, with lettering indicating service, and showing flow direction.

B. Pretensioned Pipe Labels: Precoiled, semirigid plastic formed to partially cover circumference of pipe and to attach to pipe without fasteners or adhesive.

C. Self-Adhesive Pipe Labels: Printed plastic with contact-type, permanent-adhesive backing.

D. Pipe Label Contents: Include identification of piping service using same designations or abbreviations as used on Drawings, pipe size, and an arrow indicating flow direction.

1. Flow-Direction Arrows: Integral with piping system service lettering to accommodate both directions, or as separate unit on each pipe label to indicate flow direction.
2. Lettering Size: At least 1-1/2 inches high.

## 2.3 STENCILS

A. Stencils: Prepared with letter sizes according to ASME A13.1 for piping; and minimum letter height of 3/4 inch for access panel and door labels, equipment labels, and similar operational instructions.
1. Stencil Paint: Exterior, gloss, black unless otherwise indicated. Paint may be in pressurized spray-can form.
2. Identification Paint: Exterior, enamel in colors according to ASME A13.1 unless otherwise indicated.

## 2.4 VALVE TAGS

A. Valve Tags: Stamped or engraved with 1/4-inch letters for piping system abbreviation and 1/2-inch numbers.

1. Tag Material: Brass, 0.032-inch minimum thickness, and having predrilled or stamped holes for attachment hardware.
2. Fasteners: Brass wire-link or beaded chain; or S-hook.

B. Valve Schedules: For each piping system, on 8-1/2-by-11-inch bond paper. Tabulate valve number, piping system, system abbreviation (as shown on valve tag), location of valve (room or space), normal-operating position (open, closed, or modulating), and variations for identification. Mark valves for emergency shutoff and similar special uses.

1. Valve-tag schedule shall be included in operation and maintenance data.

## 2.5 WARNING TAGS

A. Warning Tags: Preprinted or partially preprinted, accident-prevention tags, of plasticized card stock with matte finish suitable for writing.

1. Size: 3 by 5-1/4 inches minimum.
2. Fasteners: Brass grommet and wire.

3. Nomenclature: Large-size primary caption such as "DANGER," "CAUTION," or "DO NOT OPERATE."
4. Color: Yellow background with black lettering.

PART 3 - EXECUTION

3.1 PREPARATION

A. Clean piping and equipment surfaces of substances that could impair bond of identification devices, including dirt, oil, grease, release agents, and incompatible primers, paints, and encapsulants.

3.2 PIPE LABEL INSTALLATION

A. Piping Color-Coding: Painting of piping is specified in Division 09 Section "Interior Painting."

B. Stenciled Pipe Label Option: Stenciled labels may be provided instead of manufactured pipe labels, at Installer's option. Install stenciled pipe labels with painted, color-coded bands or rectangles on each piping system.

1. Identification Paint: Use for contrasting background.
2. Stencil Paint: Use for pipe marking.

C. Locate pipe labels where piping is exposed or above accessible ceilings in finished spaces; machine rooms; accessible maintenance spaces such as shafts, tunnels, and plenums; and exterior exposed locations as follows:

1. Near each valve and control device.
2. Near each branch connection, excluding short takeoffs for fixtures and terminal units. Where flow pattern is not obvious, mark each pipe at branch.
3. Near penetrations through walls, floors, ceilings, and inaccessible enclosures.
4. At access doors, manholes, and similar access points that permit view of concealed piping.
5. Near major equipment items and other points of origination and termination.
6. Spaced at maximum intervals of 50 feet along each run. Reduce intervals to 25 feet in areas of congested piping and equipment.
7. On piping above removable acoustical ceilings. Omit intermediately spaced labels.

3.3 VALVE-TAG INSTALLATION

A. Install tags on valves and control devices in piping systems, except check valves;

valves within factory-fabricated equipment units; shutoff valves; faucets; convenience and lawn-watering hose connections; and similar roughing-in connections of end-use fixtures and units. List tagged valves in a valve schedule.

B. Valve-Tag Application Schedule: Tag valves according to size, shape, and color scheme and with captions similar to those indicated in the following subparagraphs:

1. Valve-Tag Size and Shape:

   a. Cold Water: 1-1/2 inches round.
   b. Hot Water: 1-1/2 inches round.
   c. Sanitary waste and storm drainage: 1-1/2 inches round.
   d. Gas: 1-1/2 inches, round.

2. Valve-Tag Color:

   a. Cold Water: Green.
   b. Hot Water: Green.
   c. Sanitary waste and storm drainage: Natural.
   d. Gas: Yellow.

3. Letter Color:

   a. Cold Water: White.
   b. Hot Water: White.
   c. Sanitary waste and storm drainage: white.

## 3.4 WARNING-TAG INSTALLATION

A. Write required message on, and attach warning tags to, equipment and other items where required.

**END OF SECTION**

# SECTION 22 07 19
# PLUMBING PIPING INSULATION

## PART 1 - GENERAL

### 1.1 RELATED DOCUMENTS

A. Drawings and general provisions of the Contract, including General and Supplementary Conditions and Division 01 Specification Sections, apply to this Section.

### 1.2 SUMMARY

A. Section includes insulating the following plumbing piping services:

1. Domestic cold-water piping.
2. Domestic hot-water piping.
3. Domestic recirculating hot-water piping.
4. Sanitary waste piping exposed to freezing conditions.
5. Storm-water piping exposed to freezing conditions.
6. Roof drains and rainwater leaders.
7. Supplies and drains for handicap-accessible lavatories and sinks.

B. Related Sections:

1. Section 221116 "Domestic Water Piping."

### 1.3 ACTION SUBMITTALS

A. Product Data: For each type of product indicated. Include thermal conductivity, water-vapor permeance thickness, and jackets (both factory- and field-applied, if any).

B. Shop Drawings: Include plans, elevations, sections, details, and attachments to other work.

1. Detail application of protective shields, saddles, and inserts at hangers for each type of insulation and hanger.
2. Detail insulation application at pipe expansion joints for each type of insulation.
3. Detail insulation application at elbows, fittings, flanges, valves, and specialties for each type of insulation.
4. Detail removable insulation at piping specialties, equipment connections, and access panels.

5. Detail application of field-applied jackets.

C. Samples: For each type of insulation and jacket indicated. Identify each Sample, describing product and intended use. Sample sizes are as follows:

1. Preformed Pipe Insulation Materials: 12 inches long by NPS 2.
2. Jacket Materials for Pipe: 12 inches long by NPS 2.
3. Sheet Jacket Materials: 12 inches square.
4. Manufacturer's Color Charts: For products where color is specified, show the full range of colors available for each type of finish material.

## 1.4 INFORMATIONAL SUBMITTALS

A. Qualification Data: For qualified Installer.

B. Material Test Reports: From a qualified testing agency acceptable to authorities having jurisdiction indicating, interpreting, and certifying test results for compliance of insulation materials, sealers, attachments, cements, and jackets, with requirements indicated. Include dates of tests and test methods employed.

C. Field quality-control reports.

## 1.5 QUALITY ASSURANCE

A. Installer Qualifications: Skilled mechanics who have successfully completed an apprenticeship program or another craft training program certified by the Department of Labor, Bureau of Apprenticeship and Training.

B. Surface-Burning Characteristics: For insulation and related materials, as determined by testing identical products according to ASTM E 84 by a testing agency acceptable to authorities having jurisdiction. Factory label insulation and jacket materials and adhesive, mastic, tapes, and cement material containers, with appropriate markings of applicable testing agency.

1. Insulation Installed Indoors: Flame-spread index of 25 or less, and smoke-developed index of 50 or less.
2. Insulation Installed Outdoors: Flame-spread index of 75 or less, and smoke-developed index of 150 or less.

C. Comply with the following applicable standards and other requirements specified for miscellaneous components:

1. Supply and Drain Protective Shielding Guards: ICC A117.1.

## 1.6 DELIVERY, STORAGE, AND HANDLING

A. Packaging: Insulation material containers shall be marked by manufacturer with appropriate ASTM standard designation, type and grade, and maximum use temperature.

## 1.7 COORDINATION

A. Coordinate sizes and locations of supports, hangers, and insulation shields specified in Section 220529 "Hangers and Supports for Plumbing Piping and Equipment."

B. Coordinate clearance requirements with piping Installer for piping insulation application. Before preparing piping Shop Drawings, establish and maintain clearance requirements for installation of insulation and field-applied jackets and finishes and for space required for maintenance.

## 1.8 SCHEDULING

A. Schedule insulation application after pressure testing systems and, where required, after installing and testing heat tracing. Insulation application may begin on segments that have satisfactory test results.

B. Complete installation and concealment of plastic materials as rapidly as possible in each area of construction.

# PART 2 - PRODUCTS

## 2.1 INSULATION MATERIALS

A. Comply with requirements in "Piping Insulation Schedule, General," "Indoor Piping Insulation Schedule," "Outdoor, Aboveground Piping Insulation Schedule," and "Outdoor, Underground Piping Insulation Schedule" articles for where insulating materials shall be applied.

B. Products shall not contain asbestos, lead, mercury, or mercury compounds.

C. Products that come in contact with stainless steel shall have a leachable chloride content of less than 50 ppm when tested according to ASTM C 871.

D. Insulation materials for use on austenitic stainless steel shall be qualified as acceptable according to ASTM C 795.

E. Foam insulation materials shall not use CFC or HCFC blowing agents in the manufacturing process.

F. Cellular Glass: Inorganic, incombustible, foamed or cellulated glass with annealed, rigid, hermetically sealed cells. Factory-applied jacket requirements are specified in "Factory-Applied Jackets" Article.

1. Products: Subject to compliance with requirements, available products that may be incorporated into the Work include, but are not limited to, the following:

   a. Pittsburgh Corning Corporation; Foamglas.
2. Block Insulation: ASTM C 552, Type I.
3. Special-Shaped Insulation: ASTM C 552, Type III.
4. Preformed Pipe Insulation without Jacket: Comply with ASTM C 552, Type II, Class 1.
5. Preformed Pipe Insulation with Factory-Applied ASJ: Comply with ASTM C 552, Type II, Class 2.
6. Factory fabricate shapes according to ASTM C 450 and ASTM C 585.

G. Flexible Elastomeric Insulation: Closed-cell, sponge- or expanded-rubber materials. Comply with ASTM C 534, Type I for tubular materials.

1. Products: Subject to compliance with requirements, available products that may be incorporated into the Work include, but are not limited to, the following:

   a. Aeroflex USA, Inc.; Aerocel.
   b. Armacell LLC; AP Armaflex.
   c. K-Flex USA; Insul-Lock, Insul-Tube, and K-FLEX LS.

H. Mineral-Fiber Blanket Insulation: Mineral or glass fibers bonded with a thermosetting resin. Comply with ASTM C 553, Type II and ASTM C 1290, Type I. Factory-applied jacket requirements are specified in "Factory-Applied Jackets" Article.

1. Products: Subject to compliance with requirements, available products that may be incorporated into the Work include, but are not limited to, the following:

   a. CertainTeed Corp.; SoftTouch Duct Wrap.
   b. Johns Manville; Microlite.
   c. Knauf Insulation; Friendly Feel Duct Wrap.
   d. Manson Insulation Inc.; Alley Wrap.
   e. Owens Corning; SOFTR All-Service Duct Wrap.

I. Mineral-Fiber, Preformed Pipe Insulation:

1. Products: Subject to compliance with requirements, available products that may be incorporated into the Work include, but are not limited to, the following:

   a. Fibrex Insulations Inc.; Coreplus 1200.
   b. Johns Manville; Micro-Lok.
   c. Knauf Insulation; 1000-Degree Pipe Insulation.

d. Manson Insulation Inc.; Alley-K.
e. Owens Corning; Fiberglas Pipe Insulation.

2. Type I, 850 Deg F Materials: Mineral or glass fibers bonded with a thermosetting resin. Comply with ASTM C 547, Type I, Grade A, with factory-applied ASJ. Factory-applied jacket requirements are specified in "Factory-Applied Jackets" Article.

## 2.2 INSULATING CEMENTS

A. Mineral-Fiber Insulating Cement: Comply with ASTM C 195.

1. Products: Subject to compliance with requirements, available products that may be incorporated into the Work include, but are not limited to, the following:

a. Ramco Insulation, Inc.; Super-Stik.

B. Expanded or Exfoliated Vermiculite Insulating Cement: Comply with ASTM C 196.

1. Products: Subject to compliance with requirements, available products that may be incorporated into the Work include, but are not limited to, the following:

a. Ramco Insulation, Inc.; Thermokote V.

C. Mineral-Fiber, Hydraulic-Setting Insulating and Finishing Cement: Comply with ASTM C 449.

1. Products: Subject to compliance with requirements, available products that may be incorporated into the Work include, but are not limited to, the following:

a. Ramco Insulation, Inc.; Ramcote 1200 and Quik-Cote.

## 2.3 ADHESIVES

A. Materials shall be compatible with insulation materials, jackets, and substrates and for bonding insulation to itself and to surfaces to be insulated, unless otherwise indicated.

B. Cellular-Glass Adhesive: Two-component, thermosetting urethane adhesive containing no flammable solvents, with a service temperature range of minus 100 to plus 200 deg F.

1. Products: Subject to compliance with requirements, available products that may be incorporated into the Work include, but are not limited to, the following:

a. Foster Brand, Specialty Construction Brands, Inc., a business of H. B. Fuller Company; 81-84.

2. For indoor applications, adhesive shall have a VOC content of 50 g/L or less when calculated according to 40 CFR 59, Subpart D (EPA Method 24).

C. Flexible Elastomeric Adhesive: Comply with MIL-A-24179A, Type II, Class I.

1. Products: Subject to compliance with requirements, available products that may be incorporated into the Work include, but are not limited to, the following:

   a. Aeroflex USA, Inc.; Aeroseal.
   b. Armacell LLC; Armaflex 520 Adhesive.
   c. Foster Brand, Specialty Construction Brands, Inc., a business of H. B. Fuller Company; 85-75.
   d. K-Flex USA; R-373 Contact Adhesive.

2. For indoor applications, adhesive shall have a VOC content of 50 g/L or less when calculated according to 40 CFR 59, Subpart D (EPA Method 24).

D. Mineral-Fiber Adhesive: Comply with MIL-A-3316C, Class 2, Grade A.

1. Products: Subject to compliance with requirements, available products that may be incorporated into the Work include, but are not limited to, the following:

   a. Childers Brand, Specialty Construction Brands, Inc., a business of H. B. Fuller Company; CP-127.
   b. Eagle Bridges - Marathon Industries; 225.
   c. Foster Brand, Specialty Construction Brands, Inc., a business of H. B. Fuller Company; 85-60/85-70.
   d. Mon-Eco Industries, Inc.; 22-25.

2. For indoor applications, adhesive shall have a VOC content of 80 g/L or less when calculated according to 40 CFR 59, Subpart D (EPA Method 24).

E. ASJ Adhesive, and FSK Jacket Adhesive: Comply with MIL-A-3316C, Class 2, Grade A for bonding insulation jacket lap seams and joints.

1. Products: Subject to compliance with requirements, available products that may be incorporated into the Work include, but are not limited to, the following:

   a. Childers Brand, Specialty Construction Brands, Inc., a business of H. B. Fuller Company; CP-82.
   b. Eagle Bridges - Marathon Industries; 225.
   c. Foster Brand, Specialty Construction Brands, Inc., a business of H. B. Fuller Company; 85-20.
   d. Mon-Eco Industries, Inc.; 22-25.

2. For indoor applications, adhesive shall have a VOC content of 50 g/L or less when calculated according to 40 CFR 59, Subpart D (EPA Method 24).

F. PVC Jacket Adhesive: Compatible with PVC jacket.

1. Products: Subject to compliance with requirements, available products that may be incorporated into the Work include, but are not limited to, the following:

   a. Dow Corning Corporation; 739, Dow Silicone.
   b. Johns Manville; Zeston Perma-Weld, CEEL-TITE Solvent Welding Adhesive.
   c. P.I.C. Plastics, Inc.; Welding Adhesive.
   d. Speedline Corporation; Polyco VP Adhesive.

2. For indoor applications, adhesive shall have a VOC content of 50 g/L or less when calculated according to 40 CFR 59, Subpart D (EPA Method 24).

## 2.4 SEALANTS

A. Joint Sealants:

1. Joint Sealants for Cellular-Glass and Phenolic Products: Subject to compliance with requirements, available products that may be incorporated into the Work include, but are not limited to, the following:

   a. Childers Brand, Specialty Construction Brands, Inc., a business of H. B. Fuller Company; CP-76.
   b. Eagle Bridges - Marathon Industries; 405.
   c. Foster Brand, Specialty Construction Brands, Inc., a business of H. B. Fuller Company; 30-45.
   d. Mon-Eco Industries, Inc.; 44-05.
   e. Pittsburgh Corning Corporation; Pittseal 444.

2. Materials shall be compatible with insulation materials, jackets, and substrates.
3. Permanently flexible, elastomeric sealant.
4. Service Temperature Range: Minus 100 to plus 300 deg F.
5. Color: White or gray.
6. For indoor applications, sealants shall have a VOC content of 420 g/L or less when calculated according to 40 CFR 59, Subpart D (EPA Method 24).

B. FSK and Metal Jacket Flashing Sealants:

1. Products: Subject to compliance with requirements, available products that may be incorporated into the Work include, but are not limited to, the following:

   a. Childers Brand, Specialty Construction Brands, Inc., a business of H. B. Fuller Company; CP-76.
   b. Eagle Bridges - Marathon Industries; 405.
   c. Foster Brand, Specialty Construction Brands, Inc., a business of H. B. Fuller Company; 95-44.

d. Mon-Eco Industries, Inc.; 44-05.

2. Materials shall be compatible with insulation materials, jackets, and substrates.
3. Fire- and water-resistant, flexible, elastomeric sealant.
4. Service Temperature Range: Minus 40 to plus 250 deg F.
5. Color: Aluminum.
6. For indoor applications, sealants shall have a VOC content of 420 g/L or less when calculated according to 40 CFR 59, Subpart D (EPA Method 24).

C. ASJ Flashing Sealants, and Vinyl, PVDC, and PVC Jacket Flashing Sealants:

1. Products: Subject to compliance with requirements, available products that may be incorporated into the Work include, but are not limited to, the following:

a. Childers Brand, Specialty Construction Brands, Inc., a business of H. B. Fuller Company; CP-76.

2. Materials shall be compatible with insulation materials, jackets, and substrates.
3. Fire- and water-resistant, flexible, elastomeric sealant.
4. Service Temperature Range: Minus 40 to plus 250 deg F.
5. Color: White.
6. For indoor applications, sealants shall have a VOC content of 420 g/L or less when calculated according to 40 CFR 59, Subpart D (EPA Method 24).

## 2.5 FACTORY-APPLIED JACKETS

A. Insulation system schedules indicate factory-applied jackets on various applications. When factory-applied jackets are indicated, comply with the following:

1. ASJ: White, kraft-paper, fiberglass-reinforced scrim with aluminum-foil backing; complying with ASTM C 1136, Type I.
2. ASJ-SSL: ASJ with self-sealing, pressure-sensitive, acrylic-based adhesive covered by a removable protective strip; complying with ASTM C 1136, Type I.
3. FSK Jacket: Aluminum-foil, fiberglass-reinforced scrim with kraft-paper backing; complying with ASTM C 1136, Type II.

## 2.6 FIELD-APPLIED JACKETS

A. Field-applied jackets shall comply with ASTM C 921, Type I, unless otherwise indicated.

B. PVC Jacket: High-impact-resistant, UV-resistant PVC complying with ASTM D 1784, Class 16354-C; thickness as scheduled; roll stock ready for shop or field cutting and forming. Thickness is indicated in field-applied jacket schedules.

1. Products: Subject to compliance with requirements, available products that may be incorporated into the Work include, but are not limited to, the following:

    a. Johns Manville; Zeston.
    b. P.I.C. Plastics, Inc.; FG Series.
    c. Proto Corporation; LoSmoke.
    d. Speedline Corporation; SmokeSafe.

2. Adhesive: As recommended by jacket material manufacturer.
3. Color: White.
4. Factory-fabricated fitting covers to match jacket if available; otherwise, field fabricate.

    a. Shapes: 45- and 90-degree, short- and long-radius elbows, tees, valves, flanges, unions, reducers, end caps, soil-pipe hubs, traps, mechanical joints, and P-trap and supply covers for lavatories.

C. Metal Jacket:

1. Products: Subject to compliance with requirements, available products that may be incorporated into the Work include, but are not limited to, the following:

    a. Childers Brand, Specialty Construction Brands, Inc., a business of H. B. Fuller Company; Metal Jacketing Systems.
    b. ITW Insulation Systems; Aluminum and Stainless Steel Jacketing.
    c. RPR Products, Inc.; Insul-Mate.

2. Aluminum Jacket: Comply with ASTM B 209, Alloy 3003, 3005, 3105, or 5005, Temper H-14.

    a. Sheet and roll stock ready for shop or field sizing.
    b. Finish and thickness are indicated in field-applied jacket schedules.
    c. Moisture Barrier for Indoor Applications: 1-mil- thick, heat-bonded polyethylene and kraft paper.
    d. Factory-Fabricated Fitting Covers:

        1) Same material, finish, and thickness as jacket.
        2) Preformed 2-piece or gore, 45- and 90-degree, short- and long-radius elbows.
        3) Tee covers.
        4) Flange and union covers.
        5) End caps.
        6) Beveled collars.
        7) Valve covers.
        8) Field fabricate fitting covers only if factory-fabricated fitting covers are not available.

D. Underground Direct-Buried Jacket: 125-mil- thick vapor barrier and waterproofing membrane consisting of a rubberized bituminous resin reinforced with a woven-glass fiber or polyester scrim and laminated aluminum foil.

1. Products: Subject to compliance with requirements, available products that may be incorporated into the Work include, but are not limited to, the following:

   a. Pittsburgh Corning Corporation; Pittwrap.
   b. Polyguard Products, Inc.; Insulrap No Torch 125.

2.7 TAPES

A. ASJ Tape: White vapor-retarder tape matching factory-applied jacket with acrylic adhesive, complying with ASTM C 1136.

1. Products: Subject to compliance with requirements, available products that may be incorporated into the Work include, but are not limited to, the following:

   a. ABI, Ideal Tape Division; 428 AWF ASJ.
   b. Avery Dennison Corporation, Specialty Tapes Division; Fasson 0836.
   c. Compac Corporation; 104 and 105.
   d. Venture Tape; 1540 CW Plus, 1542 CW Plus, and 1542 CW Plus/SQ.

2. Width: 3 inches.
3. Thickness: 11.5 mils.
4. Adhesion: 90 ounces force/inch in width.
5. Elongation: 2 percent.
6. Tensile Strength: 40 lbf/inch in width.
7. ASJ Tape Disks and Squares: Precut disks or squares of ASJ tape.

B. FSK Tape: Foil-face, vapor-retarder tape matching factory-applied jacket with acrylic adhesive; complying with ASTM C 1136.

1. Products: Subject to compliance with requirements, available products that may be incorporated into the Work include, but are not limited to, the following:

   a. ABI, Ideal Tape Division; 491 AWF FSK.
   b. Avery Dennison Corporation, Specialty Tapes Division; Fasson 0827.
   c. Compac Corporation; 110 and 111.
   d. Venture Tape; 1525 CW NT, 1528 CW, and 1528 CW/SQ.

2. Width: 3 inches.
3. Thickness: 6.5 mils.
4. Adhesion: 90 ounces force/inch in width.
5. Elongation: 2 percent.
6. Tensile Strength: 40 lbf/inch in width.
7. FSK Tape Disks and Squares: Precut disks or squares of FSK tape.

C. PVC Tape: White vapor-retarder tape matching field-applied PVC jacket with acrylic adhesive; suitable for indoor and outdoor applications.

1. Products: Subject to compliance with requirements, available products that may be incorporated into the Work include, but are not limited to, the following:

   a. ABI, Ideal Tape Division; 370 White PVC tape.
   b. Compac Corporation; 130.
   c. Venture Tape; 1506 CW NS.

2. Width: 2 inches.
3. Thickness: 6 mils.
4. Adhesion: 64 ounces force/inch in width.
5. Elongation: 500 percent.
6. Tensile Strength: 18 lbf/inch in width.

D. Aluminum-Foil Tape: Vapor-retarder tape with acrylic adhesive.

1. Products: Subject to compliance with requirements, available products that may be incorporated into the Work include, but are not limited to, the following:
   a. ABI, Ideal Tape Division; 488 AWF.
   b. Avery Dennison Corporation, Specialty Tapes Division; Fasson 0800.
   c. Compac Corporation; 120.
   d. Venture Tape; 3520 CW.

2. Width: 2 inches.
3. Thickness: 3.7 mils.
4. Adhesion: 100 ounces force/inch in width.
5. Elongation: 5 percent.
6. Tensile Strength: 34 lbf/inch in width.

## 2.8 SECUREMENTS

A. Bands:

1. Products: Subject to compliance with requirements, available products that may be incorporated into the Work include, but are not limited to, the following:

   a. ITW Insulation Systems; Gerrard Strapping and Seals.
   b. RPR Products, Inc.; Insul-Mate Strapping and Seals.

2. Stainless Steel: ASTM A 167 or ASTM A 240/A 240M, Type 304 or Type 316; 0.015 inch thick, 1/2 inch wide with wing seal or closed seal.
3. Aluminum: ASTM B 209, Alloy 3003, 3005, 3105, or 5005; Temper H-14, 0.020 inch thick, 1/2 inch wide with wing seal or closed seal.

B. Staples: Outward-clinching insulation staples, nominal 3/4-inch- wide, stainless steel or Monel.

## 2.9 PROTECTIVE SHIELDING GUARDS

A. Protective Shielding Pipe Covers:

1. Manufacturers: Subject to compliance with requirements, available manufacturers offering products that may be incorporated into the Work include, but are not limited to, the following:
   a. Insul-Tect Products Co.; a subsidiary of MVG Molded Products.
   b. McGuire Manufacturing.
   c. Truebro; a brand of IPS Corporation.
   d. Zurn Industries, LLC; Tubular Brass Plumbing Products Operation.

2. Description: Manufactured plastic wraps for covering plumbing fixture hot- and cold-water supplies and trap and drain piping. Comply with Americans with Disabilities Act (ADA) requirements.

B. Protective Shielding Piping Enclosures:

1. Manufacturers: Subject to compliance with requirements, available manufacturers offering products that may be incorporated into the Work include, but are not limited to, the following:

   a. Truebro; a brand of IPS Corporation.
   b. Zurn Industries, LLC; Tubular Brass Plumbing Products Operation.

2. Description: Manufactured plastic enclosure for covering plumbing fixture hot- and cold-water supplies and trap and drain piping. Comply with ADA requirements.

# PART 3 - EXECUTION

## 3.1 EXAMINATION

A. Examine substrates and conditions for compliance with requirements for installation tolerances and other conditions affecting performance of insulation application.

1. Verify that systems to be insulated have been tested and are free of defects.
2. Verify that surfaces to be insulated are clean and dry.

B. Proceed with installation only after unsatisfactory conditions have been corrected.

## 3.2 PREPARATION

A. Surface Preparation: Clean and dry surfaces to receive insulation. Remove materials that will adversely affect insulation application.

B. Coordinate insulation installation with the trade installing heat tracing. Comply with requirements for heat tracing that apply to insulation.

C. Mix insulating cements with clean potable water; if insulating cements are to be in contact with stainless-steel surfaces, use demineralized water.

## 3.3 GENERAL INSTALLATION REQUIREMENTS

A. Install insulation materials, accessories, and finishes with smooth, straight, and even surfaces; free of voids throughout the length of piping including fittings, valves, and specialties.

B. Install insulation materials, forms, vapor barriers or retarders, jackets, and thicknesses required for each item of pipe system as specified in insulation system schedules.

C. Install accessories compatible with insulation materials and suitable for the service. Install accessories that do not corrode, soften, or otherwise attack insulation or jacket in either wet or dry state.

D. Install insulation with longitudinal seams at top and bottom of horizontal runs.

E. Install multiple layers of insulation with longitudinal and end seams staggered.

F. Do not weld brackets, clips, or other attachment devices to piping, fittings, and specialties.

G. Keep insulation materials dry during application and finishing.

H. Install insulation with tight longitudinal seams and end joints. Bond seams and joints with adhesive recommended by insulation material manufacturer.

I. Install insulation with least number of joints practical.

J. Apply adhesives, mastics, and sealants at manufacturer's recommended coverage rate and wet and dry film thicknesses.

K. Install insulation with factory-applied jackets as follows:

1. Draw jacket tight and smooth.
2. Cover circumferential joints with 3-inch- wide strips, of same material as insulation jacket. Secure strips with adhesive and outward clinching staples along both edges of strip, spaced 4 inches o.c.

3. Overlap jacket longitudinal seams at least 1-1/2 inches. Install insulation with longitudinal seams at bottom of pipe. Clean and dry surface to receive self-sealing lap. Staple laps with outward clinching staples along edge at 4 inches o.c.

    a. For below-ambient services, apply vapor-barrier mastic over staples.

4. Cover joints and seams with tape, according to insulation material manufacturer's written instructions, to maintain vapor seal.
5. Where vapor barriers are indicated, apply vapor-barrier mastic on seams and joints and at ends adjacent to pipe flanges and fittings.

L. Cut insulation in a manner to avoid compressing insulation more than 75 percent of its nominal thickness.

M. Finish installation with systems at operating conditions. Repair joint separations and cracking due to thermal movement.

N. Repair damaged insulation facings by applying same facing material over damaged areas. Extend patches at least 4 inches beyond damaged areas. Adhere, staple, and seal patches similar to butt joints.

O. For above-ambient services, do not install insulation to the following:

1. Vibration-control devices.
2. Testing agency labels and stamps.
3. Nameplates and data plates.
4. Cleanouts.

## 3.4 PENETRATIONS

A. Insulation Installation at Roof Penetrations: Install insulation continuously through roof penetrations.

1. Seal penetrations with flashing sealant.
2. For applications requiring only indoor insulation, terminate insulation above roof surface and seal with joint sealant. For applications requiring indoor and outdoor insulation, install insulation for outdoor applications tightly joined to indoor insulation ends. Seal joint with joint sealant.
3. Extend jacket of outdoor insulation outside roof flashing at least 2 inches below top of roof flashing.
4. Seal jacket to roof flashing with flashing sealant.

B. Insulation Installation at Underground Exterior Wall Penetrations: Terminate insulation flush with sleeve seal. Seal terminations with flashing sealant.

C. Insulation Installation at Aboveground Exterior Wall Penetrations: Install insulation continuously through wall penetrations.

1. Seal penetrations with flashing sealant.
2. For applications requiring only indoor insulation, terminate insulation inside wall surface and seal with joint sealant. For applications requiring indoor and outdoor insulation, install insulation for outdoor applications tightly joined to indoor insulation ends. Seal joint with joint sealant.
3. Extend jacket of outdoor insulation outside wall flashing and overlap wall flashing at least 2 inches.
4. Seal jacket to wall flashing with flashing sealant.

D. Insulation Installation at Interior Wall and Partition Penetrations (That Are Not Fire Rated): Install insulation continuously through walls and partitions.

E. Insulation Installation at Fire-Rated Wall and Partition Penetrations: Install insulation continuously through penetrations of fire-rated walls and partitions.

1. Comply with requirements in Section 078413 "Penetration Firestopping" for firestopping and fire-resistive joint sealers.

F. Insulation Installation at Floor Penetrations:

1. Pipe: Install insulation continuously through floor penetrations.
2. Seal penetrations through fire-rated assemblies. Comply with requirements in Section 078413 "Penetration Firestopping."

## 3.5 GENERAL PIPE INSULATION INSTALLATION

A. Requirements in this article generally apply to all insulation materials except where more specific requirements are specified in various pipe insulation material installation articles.

B. Insulation Installation on Fittings, Valves, Strainers, Flanges, and Unions:

1. Install insulation over fittings, valves, strainers, flanges, unions, and other specialties with continuous thermal and vapor-retarder integrity unless otherwise indicated.
2. Insulate pipe elbows using preformed fitting insulation or mitered fittings made from same material and density as adjacent pipe insulation. Each piece shall be butted tightly against adjoining piece and bonded with adhesive. Fill joints, seams, voids, and irregular surfaces with insulating cement finished to a smooth, hard, and uniform contour that is uniform with adjoining pipe insulation.
3. Insulate tee fittings with preformed fitting insulation or sectional pipe insulation of same material and thickness as used for adjacent pipe. Cut sectional pipe insulation to fit. Butt each section closely to the next and hold in place with tie wire. Bond pieces with adhesive.
4. Insulate valves using preformed fitting insulation or sectional pipe insulation of same material, density, and thickness as used for adjacent pipe. Overlap adjoining pipe insulation by not less than two times the thickness of pipe

insulation, or one pipe diameter, whichever is thicker. For valves, insulate up to and including the bonnets, valve stuffing-box studs, bolts, and nuts. Fill joints, seams, and irregular surfaces with insulating cement.

5. Insulate strainers using preformed fitting insulation or sectional pipe insulation of same material, density, and thickness as used for adjacent pipe. Overlap adjoining pipe insulation by not less than two times the thickness of pipe insulation, or one pipe diameter, whichever is thicker. Fill joints, seams, and irregular surfaces with insulating cement. Insulate strainers so strainer basket flange or plug can be easily removed and replaced without damaging the insulation and jacket. Provide a removable reusable insulation cover. For below-ambient services, provide a design that maintains vapor barrier.
6. Insulate flanges and unions using a section of oversized preformed pipe insulation. Overlap adjoining pipe insulation by not less than two times the thickness of pipe insulation, or one pipe diameter, whichever is thicker.
7. Cover segmented insulated surfaces with a layer of finishing cement and coat with a mastic. Install vapor-barrier mastic for below-ambient services and a breather mastic for above-ambient services. Reinforce the mastic with fabric-reinforcing mesh. Trowel the mastic to a smooth and well-shaped contour.
8. For services not specified to receive a field-applied jacket except for flexible elastomeric, install fitted PVC cover over elbows, tees, strainers, valves, flanges, and unions. Terminate ends with PVC end caps. Tape PVC covers to adjoining insulation facing using PVC tape.
9. Stencil or label the outside insulation jacket of each union with the word "union." Match size and color of pipe labels.

C. Insulate instrument connections for thermometers, pressure gages, pressure temperature taps, test connections, flow meters, sensors, switches, and transmitters on insulated pipes. Shape insulation at these connections by tapering it to and around the connection with insulating cement and finish with finishing cement, mastic, and flashing sealant.

## 3.6 INSTALLATION OF CELLULAR-GLASS INSULATION

A. Insulation Installation on Straight Pipes and Tubes:

1. Secure each layer of insulation to pipe with wire or bands and tighten bands without deforming insulation materials.
2. Where vapor barriers are indicated, seal longitudinal seams, end joints, and protrusions with vapor-barrier mastic and joint sealant.
3. For insulation with factory-applied jackets on above-ambient services, secure laps with outward clinched staples at 6 inches o.c.
4. For insulation with factory-applied jackets on below-ambient services, do not staple longitudinal tabs. Instead, secure tabs with additional adhesive as recommended by insulation material manufacturer and seal with vapor-barrier mastic and flashing sealant.

B. Insulation Installation on Pipe Flanges:

1. Install preformed pipe insulation to outer diameter of pipe flange.
2. Make width of insulation section same as overall width of flange and bolts, plus twice the thickness of pipe insulation.
3. Fill voids between inner circumference of flange insulation and outer circumference of adjacent straight pipe segments with cut sections of cellular-glass block insulation of same thickness as pipe insulation.
4. Install jacket material with manufacturer's recommended adhesive, overlap seams at least 1 inch, and seal joints with flashing sealant.

C. Insulation Installation on Pipe Fittings and Elbows:

1. Install preformed sections of same material as straight segments of pipe insulation when available. Secure according to manufacturer's written instructions.
2. When preformed sections of insulation are not available, install mitered sections of cellular-glass insulation. Secure insulation materials with wire or bands.

D. Insulation Installation on Valves and Pipe Specialties:

1. Install preformed sections of cellular-glass insulation to valve body.
2. Arrange insulation to permit access to packing and to allow valve operation without disturbing insulation.
3. Install insulation to flanges as specified for flange insulation application.

## 3.7 INSTALLATION OF FLEXIBLE ELASTOMERIC INSULATION

A. Seal longitudinal seams and end joints with manufacturer's recommended adhesive to eliminate openings in insulation that allow passage of air to surface being insulated.

B. Insulation Installation on Pipe Flanges:

1. Install pipe insulation to outer diameter of pipe flange.
2. Make width of insulation section same as overall width of flange and bolts, plus twice the thickness of pipe insulation.
3. Fill voids between inner circumference of flange insulation and outer circumference of adjacent straight pipe segments with cut sections of sheet insulation of same thickness as pipe insulation.
4. Secure insulation to flanges and seal seams with manufacturer's recommended adhesive to eliminate openings in insulation that allow passage of air to surface being insulated.

C. Insulation Installation on Pipe Fittings and Elbows:

1. Install mitered sections of pipe insulation.

2. Secure insulation materials and seal seams with manufacturer's recommended adhesive to eliminate openings in insulation that allow passage of air to surface being insulated.

D. Insulation Installation on Valves and Pipe Specialties:

1. Install preformed valve covers manufactured of same material as pipe insulation when available.
2. When preformed valve covers are not available, install cut sections of pipe and sheet insulation to valve body. Arrange insulation to permit access to packing and to allow valve operation without disturbing insulation.
3. Install insulation to flanges as specified for flange insulation application.
4. Secure insulation to valves and specialties and seal seams with manufacturer's recommended adhesive to eliminate openings in insulation that allow passage of air to surface being insulated.

## 3.8 INSTALLATION OF MINERAL-FIBER INSULATION

A. Insulation Installation on Straight Pipes and Tubes:

1. Secure each layer of preformed pipe insulation to pipe with wire or bands and tighten bands without deforming insulation materials.
2. Where vapor barriers are indicated, seal longitudinal seams, end joints, and protrusions with vapor-barrier mastic and joint sealant.
3. For insulation with factory-applied jackets on above-ambient surfaces, secure laps with outward clinched staples at 6 inches o.c.
4. For insulation with factory-applied jackets on below-ambient surfaces, do not staple longitudinal tabs. Instead, secure tabs with additional adhesive as recommended by insulation material manufacturer and seal with vapor-barrier mastic and flashing sealant.

B. Insulation Installation on Pipe Flanges:

1. Install preformed pipe insulation to outer diameter of pipe flange.
2. Make width of insulation section same as overall width of flange and bolts, plus twice the thickness of pipe insulation.
3. Fill voids between inner circumference of flange insulation and outer circumference of adjacent straight pipe segments with mineral-fiber blanket insulation.
4. Install jacket material with manufacturer's recommended adhesive, overlap seams at least 1 inch, and seal joints with flashing sealant.

C. Insulation Installation on Pipe Fittings and Elbows:

1. Install preformed sections of same material as straight segments of pipe insulation when available.

2. When preformed insulation elbows and fittings are not available, install mitered sections of pipe insulation, to a thickness equal to adjoining pipe insulation. Secure insulation materials with wire or bands.

D. Insulation Installation on Valves and Pipe Specialties:

1. Install preformed sections of same material as straight segments of pipe insulation when available.
2. When preformed sections are not available, install mitered sections of pipe insulation to valve body.
3. Arrange insulation to permit access to packing and to allow valve operation without disturbing insulation.
4. Install insulation to flanges as specified for flange insulation application.

## 3.9 FIELD-APPLIED JACKET INSTALLATION

A. Where glass-cloth jackets are indicated, install directly over bare insulation or insulation with factory-applied jackets.

1. Draw jacket smooth and tight to surface with 2-inch overlap at seams and joints.
2. Embed glass cloth between two 0.062-inch- thick coats of lagging adhesive.
3. Completely encapsulate insulation with coating, leaving no exposed insulation.

B. Where FSK jackets are indicated, install as follows:

1. Draw jacket material smooth and tight.
2. Install lap or joint strips with same material as jacket.
3. Secure jacket to insulation with manufacturer's recommended adhesive.
4. Install jacket with 1-1/2-inch laps at longitudinal seams and 3-inch- wide joint strips at end joints.
5. Seal openings, punctures, and breaks in vapor-retarder jackets and exposed insulation with vapor-barrier mastic.

C. Where PVC jackets are indicated, install with 1-inch overlap at longitudinal seams and end joints. Seal with manufacturer's recommended adhesive.

1. Apply two continuous beads of adhesive to seams and joints, one bead under lap and the finish bead along seam and joint edge.

D. Where metal jackets are indicated, install with 2-inch overlap at longitudinal seams and end joints. Overlap longitudinal seams arranged to shed water. Seal end joints with weatherproof sealant recommended by insulation manufacturer. Secure jacket with stainless-steel bands 12 inches o.c. and at end joints.

## 3.10 FINISHES

A. Color: Final color as selected by Architect. Vary first and second coats to allow visual inspection of the completed Work.

B. Do not field paint aluminum or stainless-steel jackets.

## 3.11 FIELD QUALITY CONTROL

A. Testing Agency: Engage a qualified testing agency to perform tests and inspections.

B. Perform tests and inspections.

C. Tests and Inspections:

1. Inspect pipe, fittings, strainers, and valves, randomly selected by Architect, by removing field-applied jacket and insulation in layers in reverse order of their installation. Extent of inspection shall be limited to three locations of straight pipe, three locations of threaded fittings, three locations of welded fittings, two locations of threaded strainers, two locations of welded strainers, three locations of threaded valves, and three locations of flanged valves for each pipe service defined in the "Piping Insulation Schedule, General" Article.

D. All insulation applications will be considered defective Work if sample inspection reveals noncompliance with requirements.

## 3.12 PIPING INSULATION SCHEDULE, GENERAL

A. Acceptable preformed pipe and tubular insulation materials and thicknesses are identified for each piping system and pipe size range. If more than one material is listed for a piping system, selection from materials listed is Contractor's option.

B. Items Not Insulated: Unless otherwise indicated, do not install insulation on the following:

1. Drainage piping located in crawl spaces.
2. Underground piping.
3. Chrome-plated pipes and fittings unless there is a potential for personnel injury.

## 3.13 PIPING INSULATION SCHEDULE

A. Domestic Cold Water:

1. NPS 1-1/2 and Smaller: Insulation shall be one of the following:

a. Cellular Glass: 1 inches thick.
b. Flexible Elastomeric: 1 inch thick.
c. Mineral-Fiber, Preformed Pipe Insulation, Type I: 1 inch thick.

2. NPS 2 and Larger: Insulation shall be one of the following:

a. Cellular Glass: 1-1/2 inches thick.
b. Flexible Elastomeric: 1-1/2 inch thick.
c. Mineral-Fiber, Preformed Pipe Insulation, Type I: 1-1/2 inch thick.

B. Domestic Hot and Recirculated Hot Water:

1. NPS 1-1/2 and Smaller: Insulation shall be one of the following: (T < 140° F)

a. Cellular Glass: 1 inch thick.
b. Flexible Elastomeric: 1 inch thick.
c. Mineral-Fiber, Preformed Pipe Insulation, Type I: 1 inch thick.

2. NPS 2 and Larger: Insulation shall be one of the following: (T < 140° F)

a. Cellular Glass: 1-1/2 inches thick.
b. Flexible Elastomeric: 1-1/2 inches thick.
c. Mineral-Fiber, Preformed Pipe Insulation, Type I: 1-1/2 inches thick.

C. Roof Drain Bodies and storm risers and horizontal offsets inside building:

1. All Pipe Sizes: Insulation shall be one of the following:

a. Cellular Glass: 1 inches thick.
b. Flexible Elastomeric: 1 inch thick.
c. Mineral-Fiber, Preformed Pipe Insulation, Type I: 1 inch thick.

D. All Sanitary waste and storm piping in garages or areas not heated.:

1. All Pipe Sizes: Insulation shall be one of the following:

a. Cellular Glass: 1 inches thick.
b. Mineral-Fiber, Preformed Pipe Insulation, Type I: 1 inch thick.

## 3.14 INDOOR, FIELD-APPLIED JACKET SCHEDULE

A. Install jacket over insulation material. For insulation with factory-applied jacket, install the field-applied jacket over the factory-applied jacket.

B. If more than one material is listed, selection from materials listed is Contractor's option.

C. Piping, Concealed:

1. ASJ

D. Piping, Exposed:

1. All exposed sanitary, waste, storm, hot water cold water, and vent piping and fittings which are exposed to view in garages, public areas, (as well as insulated piping in equipment rooms), shall be completely covered with white Zeston 2000 PVC insulated piping and fitting covers. Apply as per manufacturer with perma weld adhesive. All labels and flow arrows shall be applied over PVC jacket.

**END OF SECTION**

# SECTION 22 11 16
# DOMESTIC WATER PIPING

## PART 1 - GENERAL

### 1.1 RELATED DOCUMENTS

A. Drawings and general provisions of the Contract, including General and Supplementary Conditions and Division 01 Specification Sections, apply to this Section.

### 1.2 SUMMARY

A. Section Includes:

1. Aboveground domestic water pipes, tubes, fittings, and specialties inside the building.
2. Specialty valves.
3. Flexible connectors.
4. Water meters furnished by utility company for installation by Contractor.

B. Related Section:

1. Division 22 Section "Facility Water Distribution Piping" for water-service piping and water meters outside the building from source to the point where water-service piping enters the building.

### 1.3 SUBMITTALS

A. Product Data: For the following products:

1. Specialty valves.
2. Transition fittings.
3. Dielectric fittings.
4. Flexible connectors.

B. Water Samples: Specified in "Cleaning" Article.

C. Coordination Drawings: For piping in equipment rooms and other congested areas, drawn to scale, on which the following items are shown and coordinated with each other, using input from Installers of the items involved:

1. Fire-suppression-water piping.
2. Domestic water piping, storm water piping and sanitary piping.
3. HVAC hydronic piping and Ductwork.
4. Electrical conduits.

D. Field quality-control reports.

1.4 QUALITY ASSURANCE

A. Piping materials shall bear label, stamp, or other markings of specified testing agency.

B. Comply with NSF 61 for potable domestic water piping and components.

1.5 PROJECT CONDITIONS

A. Interruption of Existing Water Service: Do not interrupt water service to facilities occupied by Owner or others unless permitted under the following conditions and then only after arranging to provide temporary water service according to requirements indicated:

1. Notify Construction Manager, Owner no fewer than two days in advance of proposed interruption of water service.
2. Do not proceed with interruption of water service without Construction Manager's, Owner's written permission.

PART 2 - PRODUCTS

2.1 PIPING MATERIALS

A. Comply with requirements in "Piping Schedule" Article for applications of pipe, tube, fitting materials, and joining methods for specific services, service locations, and pipe sizes.

B. Potable-water piping and components shall comply with NSF 14 and NSF 61 Annex G. Plastic piping components shall be marked with "NSF-pw."

C. Comply with NSF Standard 372 for low lead.

2.2 COPPER TUBE AND FITTINGS

A. Hard Copper Tube: ASTM B 88, Type L water tube, drawn temper.

1. Cast-Copper Solder-Joint Fittings: ASME B16.18, pressure fittings.

2. Wrought-Copper Solder-Joint Fittings: ASME B16.22, wrought-copper pressure fittings.
3. Bronze Flanges: ASME B16.24, Class 150, with solder-joint ends.
4. Copper Unions: MSS SP-123, cast-copper-alloy, hexagonal-stock body, with ball-and-socket, metal-to-metal seating surfaces, and solder-joint or threaded ends.

B. Copper Unions:

1. MSS SP-123.
2. Cast-copper-alloy, hexagonal-stock body.
3. Ball-and-socket, metal-to-metal seating surfaces.
4. Solder-joint or threaded ends.

## 2.3 PIPING JOINING MATERIALS

A. Pipe-Flange Gasket Materials: AWWA C110, rubber, flat face, 1/8 inch thick or ASME B16.21, nonmetallic and asbestos free, unless otherwise indicated; full-face or ring type unless otherwise indicated.

B. Metal, Pipe-Flange Bolts and Nuts: ASME B18.2.1, carbon steel unless otherwise indicated.

C. Solder Filler Metals: ASTM B 32, lead-free alloys. Include water-flushable flux according to ASTM B 813.

D. Brazing Filler Metals: AWS A5.8/A5.8M, BCuP Series, copper-phosphorus alloys for general-duty brazing unless otherwise indicated.

## 2.4 SPECIALTY VALVES

A. Comply with requirements in Division 22 Section "General-Duty Valves for Plumbing Piping" for general-duty metal valves.

B. Comply with requirements in Division 22 Section "Domestic Water Piping Specialties" for balancing valves, drain valves, backflow preventers, and vacuum breakers.

## 2.5 TRANSITION FITTINGS

A. General Requirements:

1. Same size as pipes to be joined.
2. Pressure rating at least equal to pipes to be joined.
3. End connections compatible with pipes to be joined.

B. Fitting-Type Transition Couplings: Manufactured piping coupling or specified piping system fitting.

2.6 DIELECTRIC FITTINGS

A. General Requirements: Assembly of copper alloy and ferrous materials or ferrous material body with separating nonconductive insulating material suitable for system fluid, pressure, and temperature.

B. Dielectric Unions:

1. Manufacturers: Subject to compliance with requirements, available manufacturers offering products that may be incorporated into the Work include, but are not limited to, the following:

a. Capitol Manufacturing Company.
b. Central Plastics Company.
c. Watts Regulator Co.; a division of Watts Water Technologies, Inc.
d. Zurn Plumbing Products Group; Wilkins Water Control Products.

2. Description:

a. Pressure Rating: 150 psig at 180 deg F.
b. End Connections: Solder-joint copper alloy and threaded ferrous.

C. Dielectric Flanges:

1. Manufacturers: Subject to compliance with requirements, available manufacturers offering products that may be incorporated into the Work include, but are not limited to, the following:

a. Capitol Manufacturing Company.
b. Central Plastics Company.
c. EPCO Sales, Inc.
d. Watts Regulator Co.; a division of Watts Water Technologies, Inc.

2. Description:

a. Factory-fabricated, bolted, companion-flange assembly.
b. Pressure Rating: 150 psig.
c. End Connections: Solder-joint copper alloy and threaded ferrous; threaded solder-joint copper alloy and threaded ferrous.

D. Dielectric-Flange Kits:

1. Manufacturers: Subject to compliance with requirements, available manufacturers

offering products that may be incorporated into the Work include, but are not limited to, the following:

a. Advance Products & Systems, Inc.
b. Calpico, Inc.
c. Central Plastics Company.
d. Pipeline Seal and Insulator, Inc.

2. Description:

a. Nonconducting materials for field assembly of companion flanges.
b. Pressure Rating: 150 psig.
c. Gasket: Neoprene or phenolic.
d. Bolt Sleeves: Phenolic or polyethylene.
e. Washers: Phenolic with steel backing washers.

E. Dielectric Couplings:

1. Manufacturers: Subject to compliance with requirements, available manufacturers offering products that may be incorporated into the Work include, but are not limited to, the following:

a. Calpico, Inc.
b. Lochinvar Corporation.

2. Description:

a. Galvanized-steel coupling.
b. Pressure Rating: 300 psig at 225 deg F.
c. End Connections: Female threaded.
d. Lining: Inert and noncorrosive, thermoplastic.

## PART 3 - EXECUTION

### 3.1 PIPING INSTALLATION

A. Drawing plans, schematics, and diagrams indicate general location and arrangement of domestic water piping. Indicated locations and arrangements are used to size pipe and calculate friction loss, expansion, and other design considerations. Install piping as indicated unless deviations to layout are approved on Coordination Drawings.

B. Install shutoff valve, hose-end drain valve, strainer, pressure gage, and test tee with valve, inside the building at each domestic water service entrance. Comply with requirements in Division 22 Section "Domestic Water Piping Specialties" for drain valves and strainers.

C. Install shutoff valve immediately upstream of each dielectric fitting.

D. Install domestic water piping level without pitch and plumb.

E. Install piping concealed from view and protected from physical contact by building occupants unless otherwise indicated and except in equipment rooms and service areas.

F. Install piping indicated to be exposed and piping in equipment rooms and service areas at right angles or parallel to building walls. Diagonal runs are prohibited unless specifically indicated otherwise.

G. Install piping above accessible ceilings to allow sufficient space for ceiling panel removal, and coordinate with other services occupying that space.

H. Install piping adjacent to equipment and specialties to allow service and maintenance.

I. Install piping to permit valve servicing.

J. Install valves to isolate each fixture.

K. Install nipples, unions, special fittings, and valves with pressure ratings the same as or higher than system pressure rating used in applications below unless otherwise indicated.

L. Install piping free of sags and bends.

M. Install fittings for changes in direction and branch connections.

N. Install unions in copper tubing at final connection to each piece of equipment, machine, and specialty.

O. Install sleeves for piping penetrations of walls, ceilings, and floors. Comply with requirements for sleeves specified in Division 22 Section "Sleeves and Sleeve Seals for Plumbing Piping."

P. Install sleeve seals for piping penetrations of concrete walls and slabs. Comply with requirements for sleeve seals specified in Division 22 Section "Sleeves and Sleeve Seals for Plumbing Piping."

Q. Install escutcheons for piping penetrations of walls, ceilings, and floors. Comply with requirements for escutcheons specified in Division 22 Section "Escutcheons for Plumbing Piping."

## 3.2 JOINT CONSTRUCTION

A. Ream ends of pipes and tubes and remove burrs. Bevel plain ends of steel pipe.

B. Remove scale, slag, dirt, and debris from inside and outside of pipes, tubes, and fittings before assembly.

C. Threaded Joints: Thread pipe with tapered pipe threads according to ASME B1.20.1. Cut threads full and clean using sharp dies. Ream threaded pipe ends to remove burrs and restore full ID. Join pipe fittings and valves as follows:

1. Apply appropriate tape or thread compound to external pipe threads.
2. Damaged Threads: Do not use pipe or pipe fittings with threads that are corroded or damaged.

D. Brazed Joints: Join copper tube and fittings according to CDA's "Copper Tube Handbook," "Brazed Joints" Chapter.

E. Soldered Joints: Apply ASTM B 813, water-flushable flux to end of tube. Join copper tube and fittings according to ASTM B 828 or CDA's "Copper Tube Handbook."

F. Copper-Tubing Grooved Joints: Roll groove end of tube. Assemble coupling with housing, gasket, lubricant, and bolts. Join copper tube and grooved-end fittings according to AWWA C606 for roll-grooved joints.

G. Dissimilar-Material Piping Joints: Make joints using adapters compatible with materials of both piping systems.

## 3.3 VALVE INSTALLATION

A. General-Duty Valves: Comply with requirements in Division 22 Section "General-Duty Valves for Plumbing Piping" for valve installations.

B. Install shutoff valve close to water main on each branch and riser serving plumbing fixtures or equipment, on each water supply to equipment, and on each water supply to plumbing fixtures that do not have supply stops. Use ball or gate valves for piping NPS 2 and smaller. Use butterfly or gate valves for piping NPS 2-1/2and larger.

C. Install drain valves for equipment at base of each water riser, at low points in horizontal piping, and where required to drain water piping. Drain valves are specified in Division 22 Section "Domestic Water Piping Specialties."

1. Hose-End Drain Valves: At low points in water mains, risers, and branches.
2. Stop-and-Waste Drain Valves: Instead of hose-end drain valves where indicated.

## 3.4 DIELECTRIC FITTING INSTALLATION

A. Install dielectric fittings in piping at connections of dissimilar metal piping and tubing.

B. Dielectric Fittings for NPS 2and Smaller: Use dielectric couplings or nipples or unions.

C. Dielectric Fittings for NPS 2-1/2 to NPS 4: Use dielectric flanges.

## 3.5 HANGER AND SUPPORT INSTALLATION

A. Comply with requirements in Division 22 Section "Vibration and Seismic Controls for Plumbing Piping and Equipment" for seismic-restraint devices.

B. Comply with requirements in Division 22 Section "Hangers and Supports for Plumbing Piping and Equipment" for pipe hanger and support products and installation.

1. Vertical Piping: MSS Type 8 or 42, clamps.
2. Individual, Straight, Horizontal Piping Runs:

   a. 100 Feet and Less: MSS Type 1, adjustable, steel clevis hangers.
   b. Longer Than 100 Feet: MSS Type 43, adjustable roller hangers.
   c. Longer Than 100 Feet If Indicated: MSS Type 49, spring cushion rolls.

3. Multiple, Straight, Horizontal Piping Runs 100 Feet or Longer: MSS Type 44, pipe rolls. Support pipe rolls on trapeze.
4. Base of Vertical Piping: MSS Type 52, spring hangers.

C. Support vertical piping and tubing at base and at each floor.

D. Rod diameter may be reduced one size for double-rod hangers, to a minimum of 3/8 inch.

E. Install hangers for copper tubing with the following maximum horizontal spacing and minimum rod diameters:

1. NPS 3/4 and Smaller: 60 inches with 3/8-inch rod.
2. NPS 1 and NPS 1-1/4: 72 inches with 3/8-inch rod.
3. NPS 1-1/2 and NPS 2: 96 inches with 3/8-inch rod.
4. NPS 2-1/2: 108 inches with 1/2-inch rod.
5. NPS 3 to NPS 5: 10 feet with 1/2-inch rod.

F. Install supports for vertical copper tubing every 10 feet

G. Support piping and tubing not listed in this article according to MSS SP-69 and manufacturer's written instructions.

## 3.6 CONNECTIONS

A. Drawings indicate general arrangement of piping, fittings, and specialties.

B. Install piping adjacent to equipment and machines to allow service and maintenance.

C. Connect domestic water piping to exterior water-service piping. Use transition fitting to join dissimilar piping materials.

D. Connect domestic water piping to water-service piping with shutoff valve; extend and connect to the following:
   1. Domestic Water Booster Pumps: Cold-water suction and discharge piping.
   2. Water Heaters: Cold-water inlet and hot-water outlet piping in sizes indicated, but not smaller than sizes of water heater connections.
   3. Plumbing Fixtures: Cold- and hot-water-supply piping in sizes indicated, but not smaller than that required by plumbing code.
   4. Equipment: Cold- and hot-water-supply piping as indicated, but not smaller than equipment connections. Provide shutoff valve and union for each connection. Use flanges instead of unions for NPS 2-1/2 and larger.

## 3.7 IDENTIFICATION

A. Identify system components. Comply with requirements in Division 22 Section "Identification for Plumbing Piping and Equipment" for identification materials and installation.

B. Label pressure piping with system operating pressure.

## 3.8 FIELD QUALITY CONTROL

A. Perform tests and inspections.

B. Piping Inspections:

   1. Do not enclose, cover, or put piping into operation until it has been inspected and approved by authorities having jurisdiction.
   2. During installation, notify authorities having jurisdiction at least one day before inspection must be made. Perform tests specified below in presence of authorities having jurisdiction:

      a. Roughing-in Inspection: Arrange for inspection of piping before concealing or closing-in after roughing-in and before setting fixtures.
      b. Final Inspection: Arrange final inspection for authorities having jurisdiction to observe tests specified below and to ensure compliance with requirements.

   3. Reinspection: If authorities having jurisdiction find that piping will not pass tests or inspections, make required corrections and arrange for reinspection.
   4. Reports: Prepare inspection reports and have them signed by authorities having jurisdiction.

C. Piping Tests:

1. Fill domestic water piping. Check components to determine that they are not air bound and that piping is full of water.
2. Test for leaks and defects in new piping and parts of existing piping that have been altered, extended, or repaired. If testing is performed in segments, submit a separate report for each test, complete with diagram of portion of piping tested.
3. Leave new, altered, extended, or replaced domestic water piping uncovered and unconcealed until it has been tested and approved. Expose work that was covered or concealed before it was tested.
4. Cap and subject piping to static water pressure of 50 psig above operating pressure, without exceeding pressure rating of piping system materials. Isolate test source and allow to stand for four hours. Leaks and loss in test pressure constitute defects that must be repaired.
5. Repair leaks and defects with new materials and retest piping or portion thereof until satisfactory results are obtained.
6. Prepare reports for tests and for corrective action required.

D. Domestic water piping will be considered defective if it does not pass tests and inspections.

E. Prepare test and inspection reports.

## 3.9 ADJUSTING

A. Perform the following adjustments before operation:

1. Close drain valves, hydrants, and hose bibbs.
2. Open shutoff valves to fully open position.
3. Open throttling valves to proper setting.
4. Remove plugs used during testing of piping and for temporary sealing of piping during installation.
5. Remove and clean strainer screens. Close drain valves and replace drain plugs.
6. Remove filter cartridges from housings and verify that cartridges are as specified for application where used and are clean and ready for use.
7. Check plumbing specialties and verify proper settings, adjustments, and operation.

## 3.10 CLEANING

A. Clean and disinfect potable domestic water piping as follows:

1. Purge new piping and parts of existing piping that have been altered, extended, or repaired before using.
2. Use purging and disinfecting procedures prescribed by authorities having jurisdiction; if methods are not prescribed, use procedures described in either AWWA C651 or AWWA C652 or follow procedures described below:

a. Flush piping system with clean, potable water until dirty water does not appear at outlets.
b. Fill and isolate system according to either of the following:

1) Fill system or part thereof with water/chlorine solution with at least 50 ppm of chlorine. Isolate with valves and allow to stand for 24 hours.
2) Fill system or part thereof with water/chlorine solution with at least 200 ppm of chlorine. Isolate and allow to stand for three hours.

c. Flush system with clean, potable water until no chlorine is in water coming from system after the standing time.
d. Submit water samples in sterile bottles to authorities having jurisdiction. Repeat procedures if biological examination shows contamination.

B. Prepare and submit reports of purging and disinfecting activities.

C. Clean interior of domestic water piping system. Remove dirt and debris as work progresses.

3.11 PIPING SCHEDULE

A. Transition and special fittings with pressure ratings at least equal to piping rating may be used in applications below unless otherwise indicated.

B. Flanges and unions may be used for above ground piping joints unless otherwise indicated.

C. Aboveground domestic water piping shall be one of the following:
1. Hard copper tube, ASTM B 88, Type L; cast- or wrought- copper solder-joint fittings; and brazed or soldered joints.

D. Aboveground domestic water piping, NPS 2 and smaller, shall be one of the following:

1. Galvanized-steel pipe and nipples; galvanized, gray-iron threaded fittings; and threaded joints.
2. Hard copper tube, ASTM B 88, Type L; copper, solder-joint fittings; and joints.
3. Hard copper tube, ASTM B 88, Type L; copper pressure-seal-joint fittings; and pressure-sealed joints.

E. Aboveground domestic water piping, NPS 2-1/2 to NPS 4, shall be one of the following:
1. Hard copper tube, ASTM B 88, Type L; cast- or wrought-copper, solder-joint fittings; and brazed soldered joints.
2. Hard copper tube, ASTM B 88, Type L or; copper pressure-seal-joint fittings; and pressure-sealed joints.
3. Hard copper tube, ASTM B 88, Type L or; grooved-joint, copper-tube appurtenances; and grooved joints.

4

3.12 VALVE SCHEDULE

A. Drawings indicate valve types to be used. Where specific valve types are not indicated, the following requirements apply:

1. Shutoff Duty: Use ball or gate valves for piping NPS 2and smaller. Use butterfly, ball, or gate valves with flanged ends for piping NPS 2-1/2and larger.
2. Throttling Duty: Use ball or globe valves for piping NPS 2 and smaller. Use butterfly or ball valves with flanged ends for piping NPS 2-1/2 and larger.
3. Hot-Water Circulation Piping, Balancing Duty: Memory-stop balancing valves.
4. Drain Duty: Hose-end drain valves.

B. Use check valves to maintain correct direction of domestic water flow to and from equipment.

**END OF SECTION**

# SECTION 22 11 19
# DOMESTIC WATER PIPING SPECIALTIES

## PART 1 – GENERAL

### 1.1 RELATED DOCUMENTS

A. Drawings and general provisions of the Contract, including General and Supplementary Conditions and Division 01 Specification Sections, apply to this Section.

### 1.2 SUMMARY

A. This Section includes the following domestic water piping specialties:

1. Vacuum breakers.
2. Backflow preventers.
3. Water pressure-reducing valves
4. Balancing valves.
5. Temperature-actuated water mixing valves.
6. Strainers.
7. Outlet boxes
8. Hose bibbs.
9. Wall hydrants.
10. Drain valves.
11. Water hammer arresters.
12. Air vents.
13. Trap-seal primer valves.
14. Trap seal primer systems
15. Flexible connections

B. Related Sections include the following:

1. Division 22 Section "Meters and Gages for Plumbing Piping" for thermometers, pressure gages, and flow meters in domestic water piping.
2. Division 22 Section "Domestic Water Piping".

### 1.3 PERFORMANCE REQUIREMENTS

A. Minimum Working Pressure for Domestic Water Piping Specialties: 125 psig, unless otherwise indicated.

1.4 SUBMITTALS

A. Product Data: For each type of product indicated.

B. Field quality-control test reports.

C. Operation and Maintenance Data: For domestic water piping specialties to include in emergency, operation, and maintenance manuals.

1.5 QUALITY ASSURANCE

A. Electrical Components, Devices, and Accessories: Listed and labeled as defined in NFPA 70, Article 100, by a testing agency acceptable to authorities having jurisdiction, and marked for intended use.

B. NSF Compliance:

1. Comply with NSF 14, "Plastics Piping Components and Related Materials," for plastic domestic water piping components.
2. Comply with NSF 61, "Drinking Water System Components - Health Effects; Sections 1 through 9."

PART 2 - PRODUCTS

2.1 GENERAL REQUIREMENTS FOR PIPING SPECIALTIES

A. Potable-water piping and components shall comply with NSF 61 Annex G and NSF 14.

2.2 PERFORMANCE REQUIREMENTS

A. Minimum Working Pressure for Domestic Water Piping Specialties: 125 psig unless otherwise indicated.

2.3 VACUUM BREAKERS

A. Pipe-Applied, Atmospheric-Type Vacuum Breakers:

1. Available Manufacturers: Subject to compliance with requirements, manufacturers offering products that may be incorporated into the Work include, but are not limited to, the following:

a. FEBCO

b. Zurn Industries, LLC
c. Watts
d. Ames Co.

2. Standard: ASSE 1001.
3. Size: NPS 1/4 to NPS 3, as required to match connected piping.
4. Body: Bronze.
5. Inlet and Outlet Connections: Threaded.
6. Finish: Chrome plated.

B. Hose-Connection Vacuum Breakers:
1. Available Manufacturers: Subject to compliance with requirements, manufacturers offering products that may be incorporated into the Work include, but are not limited to, the following:

a. FEBCO
b. Zurn Industries, LLC
c. Watts
d. Ames Co.

2.
3. Standard: ASSE 1011.
4. Body: Bronze, nonremovable, with manual drain.
5. Outlet Connection: Garden-hose threaded complying with ASME B1.20.7.
6. Finish: Chrome or nickel plated.

C. Laboratory-Faucet Vacuum Breakers:
1. Available Manufacturers: Subject to compliance with requirements, manufacturers offering products that may be incorporated into the Work include, but are not limited to, the following:

a. FEBCO
b. Zurn Industries, LLC
c. Watts
d. Ames Co.

2.
3. Standard: ASSE 1035.
4. Size: NPS 1/4 or NPS 3/8 matching faucet size.
5. Body: Bronze.
6. End Connections: Threaded.
7. Finish: Chrome plated.

## 2.4 BACKFLOW PREVENTERS

A. Double-Detector Check Backflow-Prevention Assemblies:

1. Ames Co. or a comparable product by one of the following as indicated on Drawings:

a. FEBCO; SPX Valves & Controls.
b. Zurn Plumbing Products Group; Wilkins Div.
c. Watts Industries

2. Standard: ASSE 1015.
3. Operation: Continuous-pressure applications, unless otherwise indicated.
4. Pressure Loss: 5 psig maximum, through middle 1/3 of flow range.
5. Size, Design Flow Rate: as indicated on drawings.
6. Body: stainless steel.
7. End Connections: Flanged.
8. Configuration: Designed for horizontal, straight through flow.
9. Accessories:

   a. Valves: Outside screw and yoke gate-type with flanged ends on inlet and outlet.

B. Reduced-Pressure-Principle Backflow Preventers:

1. Ames Co. model as indicated on Drawings, or a comparable product by one of the following as indicated on Drawings:

   a. Watts Industries.
   b. Conbraco Industries, Inc.
   c. FEBCO; SPX Valves & Controls.

2. Standard: ASSE 1013.
3. Operation: Continuous-pressure applications.
4. Pressure Loss: 12 psig maximum, through middle 1/3 of flow range.
5. Body: Bronze for NPS 2 and smaller.
6. End Connections: Threaded for NPS 2 and smaller.
7. Configuration: Designed for horizontal, straight through flow.
8. Accessories:

   a. Valves: Ball type with threaded ends on inlet and outlet of NPS 2 and smaller.
   b. Air-Gap Fitting: ASME A112.1.2, matching backflow-preventer connection.

C. Backflow-Preventer Test Kits:

1. Available Manufacturers: Subject to compliance with requirements, manufacturers offering products that may be incorporated into the Work include, but are not limited to, the following:

   a. FEBCO; SPX Valves & Controls.
   b. Watts Industries, Inc.; Water Products Div.
   c. Zurn Plumbing Products Group; Wilkins Div.

2. Description: Factory calibrated, with gages, fittings, hoses, and carrying case with test-procedure instructions.

## 2.5 WATER PRESSURE-REDUCING VALVES

A. Water Regulators:
1. Available Manufacturers: Subject to compliance with requirements, manufacturers offering products that may be incorporated into the Work include, but are not limited to, the following:
   a. zurn
   b. Watts
   c. Josam.
2. Standard: ASSE 1003.
3. Pressure Rating: Initial working pressure of 150 psig.
4. Body: Bronze with chrome-plated finish for NPS 2 and smaller; cast iron with interior lining that complies with AWWA C550 or that is FDA approved for NPS 2-1/2 and NPS 3.
5. Valves for Booster Heater Water Supply: Include integral bypass.
6. End Connections: Threaded for NPS 2 and smaller; flanged for NPS 2-1/2 and NPS 3.

B. Water-Control Valves:
1. Available Manufacturers: Subject to compliance with requirements, manufacturers offering products that may be incorporated into the Work include, but are not limited to, the following:

   a. FEBCO
   b. Zurn Industries, LLC
   c. Watts
   d. Ames Co.
2. Description: Pilot-operated, diaphragm-type, single-seated, main water-control valve.
3. Pressure Rating: Initial working pressure of 150 psig minimum with AWWA C550 or FDA-approved, interior epoxy coating. Include small pilot-control valve, restrictor device, specialty fittings, and sensor piping.
4. Main Valve Body: Cast- or ductile-iron body with AWWA C550 or FDA-approved, interior epoxy coating; or stainless-steel body.

   a. Pattern: Angle or Globe-valve design.
   b. Trim: Stainless steel.

5. Design Flow: as per plan
6. Design Inlet Pressure: as per plan
7. Design Outlet Pressure Setting: as per plan
8. End Connections: Threaded for NPS 2 and smaller; flanged for NPS 2-1/2 and larger.

## 2.6 BALANCING VALVES

A. Memory-Stop Balancing Valves:

1. Available Manufacturers: Subject to compliance with requirements, manufacturers offering products that may be incorporated into the Work include, but are not limited to, the following:

   a. Conbraco Industries, Inc.
   b. Crane Co.; Crane Valve Group
   c. Milwaukee Valve Company.
   d. NIBCO INC.

2. Standard: MSS SP-110 for two-piece, copper-alloy ball valves.
3. Pressure Rating: 400-psig minimum CWP.
4. Size: NPS 2 or smaller.
5. Body: Copper alloy.
6. Port: Standard or full port.
7. Ball: Chrome-plated brass.
8. Seats and Seals: Replaceable.
9. End Connections: Solder joint or threaded.
10. Handle: Vinyl-covered steel with memory-setting device.

## 2.7 TEMPERATURE-ACTUATED WATER MIXING VALVES

A. Individual-Fixture, Water Tempering Valves:

1. Lawler Company Model 911, or a comparable product by one of the following:

   a. Armstrong International, Inc.
   b. Leonard Valve Company.
   c. Powers; a Watts Industries Co.
   d. Symmons Industries, Inc.

2. Standard: ASSE 1016, thermostatically controlled water tempering valve.
3. Pressure Rating: 125 psigminimum, unless otherwise indicated.
4. Body: Bronze body with corrosion-resistant interior components.
5. Temperature Control: Adjustable.
6. Inlets and Outlet: Threaded.
7. Finish: Rough or chrome-plated bronze.
8. Tempered-Water Setting: 80˚F

B. Primary Thermostatic, Water Mixing Valves:

1. Available Manufacturers: Subject to compliance with requirements, manufacturers offering products that may be incorporated into the Work include, but are not limited to, the following:

a. Holby Valve Co., Inc.
b. Lawler Manufacturing Company, Inc.
c. Leonard Valve Company.
d. Powers; a Watts Industries Co.
e. Symmons Industries, Inc.

2. Standard: ASSE 1017.
3. Pressure Rating: 125 psig.
4. Type: Exposed-mounting, thermostatically controlled water mixing valve.
5. Material: Bronze body with corrosion-resistant interior components.
6. Connections: Threaded union inlets and outlet.
7. Accessories: Manual temperature control, check stops on hot- and cold-water supplies, and adjustable, temperature-control handle.
8. Valve Pressure Rating: 125 psig minimum, unless otherwise indicated.
9. Tempered-Water Setting: 120˚F
10. Valve Finish: Rough bronze.
11. Piping Finish: Copper

C. Manifold, Thermostatic, Water Mixing-Valve Assemblies:
1. Available Manufacturers: Subject to compliance with requirements, manufacturers offering products that may be incorporated into the Work include, but are not limited to, the following:

a. Holby Valve Co., Inc.
b. Lawler Manufacturing Company, Inc.
c. Leonard Valve Company.
d. Powers; a Watts Industries Co.
e. Symmons Industries, Inc.

2. Description: Factory-fabricated, cabinet-type, thermostatically controlled, water mixing-valve assembly in two or three-valve parallel arrangement.
3. Large-Flow Parallel: Thermostatic, water mixing valve and downstream-pressure regulator with pressure gages on inlet and outlet.
4. Intermediate-Flow Parallel: Thermostatic, water mixing valve and downstream-pressure regulator with pressure gages on inlet and outlet.
5. Small-Flow Parallel: Thermostatic, water mixing valve.
6. Thermostatic Mixing Valves: Comply with ASSE 1017. Include check stops on hot- and cold-water inlets and shutoff valve on outlet.
7. Water Regulator(s): Comply with ASSE 1003. Include pressure gage on inlet and outlet.
8. Pressure Rating: 125 psig minimum unless otherwise indicated.
9. Cabinet: Factory fabricated, stainless steel, for recessed mounting and with hinged, stainless-steel door.
10. Selected Large-Flow, Tempered-Water Valve Size: .
11. Tempered-Water Setting: .
12. Unit Tempered-Water Design Flow Rate: .
13. Unit Minimum Tempered-Water Design Flow Rate: .
14. Selected Unit Flow Rate at 45-psig Pressure Drop: .
15. Unit Pressure Drop at Design Flow Rate: .

16. Unit Tempered-Water Outlet Size: end connection.
17. Unit Hot- and Cold-Water Inlet Size: end connections.
18. Thermostatic Mixing Valve and Water Regulator Finish: Polished, chrome plated.
19. Piping Finish: Chrome plated.

## 2.8 STRAINERS FOR DOMESTIC WATER PIPING

A. Y-Pattern Strainers:

1. Pressure Rating: 125 psig minimum, unless otherwise indicated.
2. Body: Bronze for NPS 2 and smaller; cast iron with interior lining complying with AWWA C550 or FDA-approved, epoxy coating and for NPS 2-1/2 and larger.
3. End Connections: Threaded for NPS 2 and smaller;flanged for NPS 2-1/2 and larger.
4. Screen: Stainless steel with round perforations, unless otherwise indicated.
5. Perforation Size:

    a. StrainersNPS 2 and Smaller: 0.033 inch.
    b. Strainers NPS 2-1/2 to NPS 4: 0.062 inch.

6. Drain: Factory-installed, hose-end drain valve.

## 2.9 OUTLET BOXES

A. Clothes Washer Outlet Boxes:
1. Mounting: Recessed.
2. Material and Finish: Enameled-steel or epoxy-painted-steel or box and faceplate.
3. Faucet: Combination valved fitting or separate hot- and cold-water valved fittings complying with ASME A112.18.1. Include garden-hose thread complying with ASME B1.20.7 on outlets.
4. Supply Shutoff Fittings: NPS 1/2 gate, globe, or ball valves and NPS 1/2 copper, water tubing.
5. Drain: NPS NPS 2 standpipe and P-trap for direct waste connection to drainage piping.
6. Inlet Hoses: Two 60-inch-long, rubber household clothes washer inlet hoses with female, garden-hose-thread couplings. Include rubber washers.
7. Drain Hose: One 48-inch-long, rubber household clothes washer drain hose with hooked end.

B. Icemaker Outlet Boxes:
1. Mounting: Recessed.
2. Material and Finish: Enameled-steel or epoxy-painted-steel or Stainless-steel box and faceplate.
3. Faucet: Valved fitting complying with ASME A112.18.1. Include NPS 1/2 or smaller copper tube outlet.

4. Supply Shutoff Fitting: NPS 1/2 gate, globe, or ball valve and NPS 1/2 copper, water tubing.

## 2.10 HOSE BIBBS

A. Interior Mechanical Room Application:

1. Available Manufacturers:
   a. Watts.
   b. Nibco.
   c. Chicago.

2. Standard: ASME A112.18.1 for sediment faucets.
3. Body Material: Bronze.
4. Seat: Bronze, replaceable.
5. Supply Connections: NPS 3/4 threaded or solder-joint inlet.
6. Outlet Connection: Garden-hose thread complying with ASME B1.20.7.
7. Pressure Rating: 125 psig.
8. Vacuum Breaker: Integral, drainable, hose-connection vacuum breaker complying with ASSE 1011.
9. Finish for Equipment Rooms: Rough bronze, or chrome or nickel plated.
10. Operation for Equipment Rooms: Wheel handle or operating key.
11. Include operating key with each operating-key hose bibb.

B. Interior Toilet Room Application:

1. Available Manufacturers:

   a. Woodford Manufacturing.
   b. Chicago Faucet.

2. Body: Bronze or brass with integral mounting flange.
3. Seat: Bronze, replaceable.
4. Supply Connections: NPS 3/4 threaded or solder-joint inlet.
5. Outlet Connection: Garden-hose thread complying with ASME B1.20.7.
6. Pressure Rating: 125 psig.
7. Vacuum Breaker: Integral, drainable, hose-connection vacuum breaker complying with ASSE 1011.
8. Finish: chrome or nickel plated.
9. Operation: Wheel handle or operating key.
10. Include operating key with each operating-key hose bibb.

## 2.11 WALL HYDRANTS

A. Nonfreeze Wall Hydrants:
   1. Standard: ASME A112.21.3M for concealed-outlet, self-draining wall hydrants.
   2. Pressure Rating: 125 psig.

3. Operation: Loose key.
4. Casing and Operating Rod: Of length required to match wall thickness. Include wall clamp.
5. Inlet: NPS 3/4 or NPS 1.
6. Outlet: Concealed, with integral vacuum breaker and garden-hose thread complying with ASME B1.20.7.
7. Box: Deep, flush mounted with cover.
8. Box and Cover Finish: Polished nickel bronze or Chrome plated.
9. Outlet: Exposed, with integral vacuum breaker and garden-hose thread complying with ASME B1.20.7.
10. Nozzle and Wall-Plate Finish: Polished nickel bronze in public area, Rough bronze in utility rooms.
11. Operating Keys(s): One with each wall hydrant.

B. Nonfreeze, Hot- and Cold-Water Wall Hydrants:
1. Standard: ASME A112.21.3M for concealed-outlet, self-draining wall hydrants.
2. Pressure Rating: 125 psig.
3. Operation: Loose key.
4. Casing and Operating Rods: Of length required to match wall thickness. Include wall clamps.
5. Inlet: NPS 3/4 or NPS 1.
6. Outlet: Concealed.
7. Box: Deep, flush mounted with cover.
8. Box and Cover Finish: Polished nickel bronze in exposed public area, or Chrome plated.
9. Vacuum Breaker:
   a. Nonremovable, manual-drain-type, hose-connection vacuum breaker complying with ASSE 1011 or backflow preventer complying with ASSE 1052.
   b. Garden-hose thread complying with ASME B1.20.7 on outlet.
10. Operating Key(s): One with each wall hydrant.

C. Vacuum Breaker Wall

Hydrants: 1.
2. Standard: ASSE 1019, Type A or Type B.
3. Type: Freeze-resistant, automatic draining with integral air-inlet valve.
4. Classification: Type A, for automatic draining with hose removed or Type B, for automatic draining with hose removed or with hose attached and nozzle closed.
5. Pressure Rating: 125 psig.
6. Operation: Loose key or wheel handle.
7. Casing and Operating Rod: Of length required to match wall thickness. Include wall clamp.
8. Inlet: NPS 1/2 or NPS 3/4.
9. Outlet: Exposed with garden-hose thread complying with ASME B1.20.7.

## 2.12 DRAIN VALVES

A. Ball-Valve-Type, Hose-End Drain Valves:

1. Standard: MSS SP-110 for standard-port, two-piece ball valves.
2. Pressure Rating: 400-psig minimum CWP.
3. Size: NPS 3/4.
4. Body: Copper alloy.
5. Ball: Chrome-plated brass.
6. Seats and Seals: Replaceable.
7. Handle: Vinyl-covered steel.
8. Inlet: Threaded or solder joint.
9. Outlet: Threaded, short nipple with garden-hose thread complying with ASME B1.20.7 and cap with brass chain.

B. Gate-Valve-Type, Hose-End Drain Valves:

1. Standard: MSS SP-80 for gate valves.
2. Pressure Rating: Class 125.
3. Size: NPS 3/4.
4. Body: ASTM B 62 bronze.
5. Inlet: NPS 3/4 threaded or solder joint.
6. Outlet: Garden-hose thread complying with ASME B1.20.7 and cap with brass chain.

C. Gate-Valve-Type, Hose-End Drain Valves:

1. Standard: MSS SP-80 for gate valves.
2. Pressure Rating: Class 125.
3. Size: NPS 3/4.
4. Body: ASTM B 62 bronze.
5. Inlet: NPS 3/4 threaded or solder joint.
6. Outlet: Garden-hose thread complying with ASME B1.20.7 and cap with brass chain.

D. Stop-and-Waste Drain Valves:

1. Standard: MSS SP-110 for ball valves or MSS SP-80 for gate valves.
2. Pressure Rating: 200-psig minimum CWP or Class 125.
3. Size: NPS 3/4.
4. Body: Copper alloy or ASTM B 62 bronze.
5. Drain: NPS 1/8 side outlet with cap.

## 2.13 WATER HAMMER ARRESTERS

A. Water Hammer Arresters:

1. Available Manufacturers:
   a. AMTROL, Inc.
   b. Josam Company.
   c. PPP Inc.
   d. Watts Drainage Products Inc.
   e. Zurn Plumbing Products Group; Specification Drainage Operation.
   f. Jay R. Smith.

2. Standard: ASSE 1010 or PDI-WH 201.
3. Type: Stainless steel construction with metal bellows, pre-charged.
4. Size: ASSE 1010, Sizes AA and A through F or PDI-WH 201, Sizes A through F.

## 2.14 AIR VENTS

A. Bolted-Construction Automatic Air Vents:

1. Body: Bronze.
2. Pressure Rating and Temperature: 125-psig minimum pressure rating at 140 deg F.
3. Float: Replaceable, corrosion-resistant metal.
4. Mechanism and Seat: Stainless steel.
5. Size: NPS 3/8 minimum inlet.
6. Inlet and Vent Outlet End Connections: Threaded.

B. Welded-Construction Automatic Air Vents:

1. Body: Stainless steel.
2. Pressure Rating: 150-psig minimum pressure rating.
3. Float: Replaceable, corrosion-resistant metal.
4. Mechanism and Seat: Stainless steel.
5. Size: NPS 3/8 minimum inlet.
6. Inlet and Vent Outlet End Connections: Threaded.

## 2.15 TRAP-SEAL PRIMER VALVES

A. Supply-Type, Trap-Seal Primer Valves:

1. PPP Inc Model P-2 with Distrubution Unit DU-2 or a comparable product by one of the following:

   a. Smith, Jay R. Mfg. Co.; Division of Smith Industries, Inc.
   b. Watts Industries, Inc.; Water Products Div.

2. Standard: ASSE 1018.
3. Pressure Rating: 125 psig minimum.
4. Body: Bronze.

5. Inlet and Outlet Connections: NPS 1/2 threaded, union, or solder joint.
6. Gravity Drain Outlet Connection: NPS 1/2 threaded or solder joint.
7. Finish: Chrome plated, or rough bronze for units used with pipe or tube that is not chrome finished.

## 2.16 TRAP-SEAL PRIMER SYSTEMS

A. Trap-Seal Primer Systems:

1.
2. Standard: ASSE 1044.
3. Piping: NPS 3/4, ASTM B 88, Type L; copper, water tubing.
4. Cabinet: Recessed-mounted steel box with stainless-steel cover.
5. Electric Controls: 24-hour timer, solenoid valve, and manual switch for 120-V ac power.

    a. Electrical Components, Devices, and Accessories: Listed and labeled as defined in NFPA 70, by a qualified testing agency, and marked for intended location and application.

6. Vacuum Breaker: ASSE 1001.
7. Number Outlets: Four.
8. Size Outlets: NPS 1/2.

## 2.17 FLEXIBLE CONNECTORS

A. Manufacturers: Subject to compliance with requirements, provide products by one of the following:

1. Flex Pression Ltd.
2. Flex-Hose Co., Inc.
3. Metraflex Company (The).
4. Universal Metal Hose.

B. Bronze-Hose Flexible Connectors: Corrugated-bronze tubing with bronze wire-braid covering and ends brazed to inner tubing.

1. Working-Pressure Rating: Minimum 200 psig.
2. End Connections NPS 2 and Smaller: Threaded copper pipe or plain-end copper tube.
3. End Connections NPS 2-1/2 and Larger: Flanged copper alloy.

C. Stainless-Steel-Hose Flexible Connectors: Corrugated-stainless-steel tubing with stainless-steel wire-braid covering and ends welded to inner tubing.

1. Working-Pressure Rating: Minimum 200 psig.

2. End Connections NPS 2 and Smaller: Threaded steel-pipe nipple.
3. End Connections NPS 2-1/2 and Larger: Flanged steel nipple.

PART 3 - EXCUTION

3.1 INSTALLATION

A. Refer to Division 22 Section "Common Work Results for Plumbing" for piping joining materials, joint construction, and basic installation requirements.

B. Install balancing valves in locations where they can easily be adjusted.

C. Install temperature-actuated water mixing valves with check stops or shutoff valves on inlets and with shutoff valve on outlet.

1. Install thermometers and water regulators if specified.

D. Install Y-pattern strainers for water on supply side of each control valve, solenoid valve, and pump, and where indicated on Drawings.

E. Install water hammer arresters in water piping according to PDI-WH 201.

F. Install air vents at high points of water piping.

G. Install supply-type, trap-seal primer valves with outlet piping pitched down toward drain trap a minimum of 1 percent, and connect to floor-drain body, trap, or inlet fitting. Adjust valve for proper flow.

H. Install backflow preventers in each water supply to mechanical equipment and systems and to other equipment and water systems that may be sources of contamination. Comply with authorities having jurisdiction.

1. Locate backflow preventers in same room as connected equipment or system.
2. Install drain for backflow preventers with atmospheric-vent drain connection with air-gap fitting, fixed air-gap fitting, or equivalent positive pipe separation of at least two pipe diameters in drain piping and pipe to floor drain. Locate air-gap device attached to or under backflow preventer. Simple air breaks are not acceptable for this application.
3. Do not install bypass piping around backflow preventers.

I. All valves, fittings and specialties shall have a pressure class rating that exceeds the pressure of the system it is installed in.

## 3.2 CONNECTIONS

A. Piping installation requirements are specified in other Division 22 Sections. Drawings indicate general arrangement of piping and specialties.

B. Ground equipment according to Division 26 Section "Grounding and Bonding for Electrical Systems."

C. Connect wiring according to Division 26 Section "Low-Voltage Electrical Power Conductors and Cables."

## 3.3 LABELING AND IDENTIFYING

A. Equipment Nameplates and Signs: Install engraved plastic-laminate equipment nameplate or sign on or near each of the following:

1. Pressure vacuum breakers.
2. Intermediate atmospheric-vent backflow preventers.
3. Reduced-pressure-principle backflow preventers.
4. Double-check, backflow-prevention assemblies.
5. Carbonated-beverage-machine backflow preventers.
6. Dual-check-valve backflow preventers.
7. Reduced-pressure-detector, fire-protection, backflow-preventer assemblies.
8. Double-check, detector-assembly backflow preventers.
9. Water pressure-reducing valves.
10. Calibrated balancing valves.
11. Primary, thermostatic, water mixing valves.
12. Manifold, thermostatic, water mixing-valve assemblies.
13. Photographic-process, thermostatic, water mixing-valve assemblies.
14. Primary water tempering valves.
15. Outlet boxes.
16. Hose stations.
17. Supply-type, trap-seal primer valves.

18. Trap-seal primer systems.

B. Distinguish among multiple units, inform operator of operational requirements, indicate safety and emergency precautions, and warn of hazards and improper operations, in addition to identifying unit. Nameplates and signs are specified in Division 22 Section "Identification for Plumbing Piping and Equipment."

## 3.4 FIELD QUALITY CONTROL

A. Perform the following tests and prepare test reports:

1. Test each pressure vacuum breaker, reduced-pressure-principle backflow

preventer double-check, backflow-prevention assembly and double-check, detector-assembly backflow preventer backflow preventer according to authorities having jurisdiction and the device's reference standard.

B. Remove and replace malfunctioning domestic water piping specialties and retest as specified above.

3.5 ADJUSTING

A. Set field-adjustable pressure set points of water pressure-reducing valves.

B. Set field-adjustable temperature set points of temperature-actuated water mixing valves.

**END OF SECTION**

# SECTION 22 13 16
# SANITARY WASTE AND VENT PIPING

## PART 1 - GENERAL

### 1.1 RELATED DOCUMENTS

A. Drawings and general provisions of the Contract, including General and Supplementary Conditions and Division 01 Specification Sections, apply to this Section.

### 1.2 SUMMARY

A. Section Includes:

1. Pipe, tube, and fittings.
2. Specialty pipe fittings.
3. Encasement for underground metal piping.

B. Related Requirements:

1. Section 221313 "Facility Sanitary Sewers" for sanitary sewerage piping and structures outside the building.
2. Section 221329 "Sanitary Sewerage Pumps" for effluent and sewage pumps.

### 1.3 SUBMITTALS

A. Product Data: For each type of product indicated.

B. Field quality-control reports.

### 1.4 QUALITY ASSURANCE

A. Piping materials shall bear label, stamp, or other markings of specified testing agency.

### 1.5 PROJECT CONDITIONS

A. Interruption of Existing Sanitary Waste Service: Do not interrupt service to facilities occupied by Owner or others unless permitted under the following conditions and then only after arranging to provide temporary service according to requirements indicated:

1. Notify Construction Manager, Owner no fewer than two days in advance of proposed interruption of sanitary waste service.
2. Do not proceed with interruption of sanitary waste service without Construction Manager's, Owner's written permission.

PART 2 - PRODUCTS

2.1 PERFORMANCE REQUIREMENTS

A. Components and installation shall be capable of withstanding the following minimum working pressure unless otherwise indicated:

1. Soil, Waste, and Vent Piping: 300-foot head of water
2. Waste, Force-Main Piping: 100 psig.

2.2 PIPING MATERIALS

A. Piping materials shall bear label, stamp, or other markings of specified testing agency.

B. Comply with requirements in "Piping Schedule" Article for applications of pipe, tube, fitting materials, and joining methods for specific services, service locations, and pipe sizes.

2.3 HUBLESS, CAST-IRON SOIL PIPE AND FITTINGS

A. Pipe and Fittings: ASTM A 888 or CISPI 301.

B. Sovent Stack Fittings: ASME B16.45 or ASSE 1043, hubless, cast-iron aerator and deaerator drainage fittings.

C. CISPI, Hubless-Piping Couplings:
1. Manufacturers: Subject to compliance with requirements, available manufacturers offering products that may be incorporated into the Work include, but are not limited to, the following:

a. ANACO-Husky.
b. Dallas Specialty & Mfg. Co.
c. MIFAB, Inc.
d. Tyler Pipe.

2. Standards: ASTM C 1277 and CISPI 310.
3. Description: Stainless-steel corrugated shield with stainless-steel bands and tightening devices; and ASTM C 564, rubber sleeve with integral, center pipe stop.

D. Heavy-Duty, Hubless-Piping Couplings:
   1. Manufacturers: Subject to compliance with requirements, available manufacturers offering products that may be incorporated into the Work include, but are not limited to, the following:

      a. ANACO-Husky.
      b. Dallas Specialty & Mfg. Co.
      c. MIFAB, Inc.
      d. Tyler Pipe.

   2. Standards: ASTM C 1277 and ASTM C 1540.
   3. Description: Stainless-steel shield with stainless-steel bands and tightening devices; and ASTM C 564, rubber sleeve with integral, center pipe stop.

E. Cast-Iron, Hubless-Piping Couplings:
   1. Manufacturers: Subject to compliance with requirements, available manufacturers offering products that may be incorporated into the Work include, but are not limited to, the following:

      a. ANACO-Husky.
      b. Dallas Specialty & Mfg. Co.
      c. MIFAB, Inc.
      d. Tyler Pipe.

   2. Standard: ASTM C 1277.
   3. Description: Two-piece ASTM A 48/A 48M, cast-iron housing; stainless-steel bolts and nuts; and ASTM C 564, rubber sleeve with integral, center pipe stop.

F. No Hub Fitting Restraints;
   1. Basis-of-Design Product: Subject to compliance with requirements, provide Holdrite: 117 Series No Hub Fitting Restraints or comparable

   2. Description: CISPI Designation 301-12, large diameter no-hub cast iron fittings, 4” and over in size, shall be provided with supplemental support to minimize the risk of joints separation under high thrust conditions. Auxiliary restraint products used shall be manufactured assemblies with thrust pressure rating adequate for the specific installation. Field devised methods and materials shall not be used to accomplish this application solution.

## 2.4 DUCTILE-IRON, GRAVITY SEWER PIPE AND FITTINGS

A. Pipe: ASTM A 746, for push-on joints.

B. Standard Fittings: AWWA C110/A21.10, ductile or gray iron, for push-on joints.

C. Compact Fittings: AWWA C153/A21.53, ductile iron, for push-on joints.

D. Gaskets: AWWA C111/A21.11, rubber.

2.5 DUCTILE-IRON, PRESSURE PIPE AND FITTINGS

A. Mechanical-Joint Piping:

1. Pipe: AWWA C151/A21.51, with bolt holes in bell.
2. Standard Fittings: AWWA C110/A21.10, ductile or gray iron, with bolt holes in bell.
3. Compact Fittings: AWWA C153/A21.53, with bolt holes in bells.
4. Glands: Cast or ductile iron; with bolt holes and high-strength, cast-iron or high-strength, low-alloy steel bolts and nuts.

2.6 Gaskets: AWWA C111/A21.11, rubber, of shape matching pipe, fittings, and glands

2.7 COPPER TUBE AND FITTINGS

A. Copper DWV Tube: ASTM B 306, drainage tube, drawn temper.

B. Copper Drainage Fittings: ASME B16.23, cast copper or ASME B16.29, wrought copper, solder-joint fittings.

C. Hard Copper Tube: ASTM B 88, Type L and Type M, water tube, drawn temper.

D. Soft Copper Tube: ASTM B 88, Type L, water tube, annealed temper.

E. Copper Pressure Fittings:

1. Copper Fittings: ASME B16.18, cast-copper-alloy or ASME B16.22, wrought-copper, solder-joint fittings. Furnish wrought-copper fittings if indicated.
2. Copper Unions: MSS SP-123, copper-alloy, hexagonal-stock body with ball-and-socket, metal-to-metal seating surfaces, and solder-joint or threaded ends.

F. Copper Flanges: ASME B16.24, Class 150, cast copper with solder-joint end.

1. Flange Gasket Materials: ASME B16.21, full-face, flat, nonmetallic, asbestos-free, 1/8-inch maximum thickness unless thickness or specific material is indicated.
2. Flange Bolts and Nuts: ASME B18.2.1, carbon steel unless otherwise indicated.

G. Solder: ASTM B 32, lead free with ASTM B 813, water-flushable flux.

2.8 SPECIALTY PIPE FITTINGS

A. Transition Couplings:

1. General Requirements: Fitting or device for joining piping with small differences in OD's or of different materials. Include end connections same size as and compatible with pipes to be joined.
2. Fitting-Type Transition Couplings: Manufactured piping coupling or specified piping system fitting.
3. Unshielded, Nonpressure Transition Couplings:

    a. Standard: ASTM C 1173.
    b. Description: Elastomeric, sleeve-type, reducing or transition pattern. Include shear ring and corrosion-resistant-metal tension band and tightening mechanism on each end.
    c. Sleeve Materials:

        1) For Cast-Iron Soil Pipes: ASTM C 564, rubber.
        2) For Plastic Pipes: ASTM F 477, elastomeric seal or ASTM D 5926, PVC.
        3) For Dissimilar Pipes: ASTM D 5926, PVC or other material compatible with pipe materials being joined.

4. Shielded, Nonpressure Transition Couplings:

    a. Standard: ASTM C 1460.
    b. Description: Elastomeric or rubber sleeve with full-length, corrosion-resistant outer shield and corrosion-resistant-metal tension band and tightening mechanism on each end.

B. Dielectric Fittings:

1. General Requirements: Assembly of copper alloy and ferrous materials with separating nonconductive insulating material. Include end connections compatible with pipes to be joined.
2. Dielectric Unions:

    a. Manufacturers: Subject to compliance with requirements, available manufacturers offering products that may be incorporated into the Work include, but are not limited to, the following:

        1) Capitol Manufacturing Company.
        2) Hart Industries International, Inc.
        3) Watts Regulator Co.; a division of Watts Water Technologies, Inc.
        4) Wilkins; a Zurn company.

    b. Description:

        1) Standard: ASSE 1079.
        2) Pressure Rating: 125 psig minimum at 180 deg F.
        3) End Connections: Solder-joint copper alloy and threaded ferrous.

3. Dielectric Nipples:

   a. Manufacturers: Subject to compliance with requirements, available manufacturers offering products that may be incorporated into the Work include, but are not limited to, the following:

      1) Grinnell Mechanical Products.
      2) Precision Plumbing Products, Inc.
      3) Victaulic Company.

   b. Description:

      1) Electroplated steel nipple complying with ASTM F 1545.
      2) Pressure Rating: 300 psig at 225 deg F.
      3) End Connections: Male threaded or grooved.
      4) Lining: Inert and noncorrosive, propylene.

## 2.9 ENCASEMENT FOR UNDERGROUND METAL PIPING

A. Standard: ASTM A 674 or AWWA C105/A 21.5.

B. Material: high-density, cross-laminated polyethylene film of 0.004-inch minimum thickness.

C. Form: Sheet or tube.

D. Color: Black or natural.

# PART 3 - EXECUTION

## 3.1 PIPING INSTALLATION

A. Drawing plans, schematics, and diagrams indicate general location and arrangement of piping systems. Indicated locations and arrangements were used to size pipe and calculate friction loss, expansion, and other design considerations. Install piping as indicated unless deviations to layout are approved on coordination drawings.

B. Install piping in concealed locations unless otherwise indicated and except in equipment rooms and service areas.

C. Install piping indicated to be exposed and piping in equipment rooms and service areas at right angles or parallel to building walls. Diagonal runs are prohibited unless specifically indicated otherwise.

D. Install piping above accessible ceilings to allow sufficient space for ceiling panel removal.

E. Install piping to permit valve servicing.

F. Install piping at indicated slopes.

G. Install piping free of sags and bends.

H. Install fittings for changes in direction and branch connections.

I. Install piping to allow application of insulation.

J. Make changes in direction for soil and waste drainage and vent piping using appropriate branches, bends, and long-sweep bends. Sanitary tees and short-sweep 1/4 bends may be used on vertical stacks if change in direction of flow is from horizontal to vertical. Use long-turn, double Y-branch and 1/8-bend fittings if two fixtures are installed back to back or side by side with commo drainpipe. Straight tees, elbows, and crosses may be used on vent lines. Do not change direction of flow more than 90 degrees. Use proper size of standard increasers and reducers if pipes of different sizes are connected. Reducing size of drainage piping in direction of flow is prohibited.

K. Lay buried building waste piping beginning at low point of each system.

1. Install true to grades and alignment indicated, with unbroken continuity of invert. Place hub ends of piping upstream.
2. Install required gaskets according to manufacturer's written instructions for use of lubricants, cements, and other installation requirements.
3. Maintain swab in piping and pull past each joint as completed.

L. Install soil and waste drainage and vent piping at the following minimum slopes unless otherwise indicated:

1. Horizontal Sanitary Drainage Piping: 2 percent downward in direction of flow.
2. Vent Piping: 1 percent down toward vertical fixture vent or toward vent stack.

M. Install cast-iron soil piping according to CISPI's "Cast Iron Soil Pipe and Fittings Handbook," Chapter IV, "Installation of Cast Iron Soil Pipe and Fittings."

N. Install aboveground copper tubing according to CDA's "Copper Tube Handbook."

O. Install engineered soil and waste and vent piping systems as follows:

1. Combination Waste and Vent: Comply with standards of authorities having jurisdiction.

2. Hubless, Single-Stack Drainage System: Comply with ASME B16.45 and hubless, single-stack aerator fitting manufacturer's written installation instructions.

3. Reduced-Size Venting: Comply with standards of authorities having jurisdiction.

P. Install underground, ductile-iron, force-main piping according to AWWA C600.

1. Install buried piping inside building between wall and floor penetrations and connection to sanitary sewer piping outside building with restrained joints.
2. Anchor pipe to wall or floor. Install thrust-block supports at vertical and horizontal offsets.
3. Install encasement on piping according to ASTM A 674 or AWWA C105/A 21.5.

Q. Install underground, copper, force-main tubing according to CDA's "Copper Tube Handbook."

1. Install encasement on piping according to ASTM A 674 or AWWA C105/A 21.5.

R. Install force mains at elevations indicated

S. Plumbing Specialties:

1. Install cleanouts at grade and extend to where building sanitary drains connect to building sanitary sewers in sanitary drainage gravity-flow piping. Install cleanout fitting with closure plug inside the building in sanitary drainage force-main piping. Comply with requirements for cleanouts specified in Division 22 Section "Sanitary Waste Piping Specialties."
2. Install drains in sanitary drainage gravity-flow piping. Comply with requirements for drains specified in Division 22 Section "Sanitary Waste Piping Specialties."

3. Install backwater valves in sanitary waster gravity-flow piping.

a. Comply with requirements for backwater valves specified in Section 221319 "Sanitary Waste Piping Specialties."

T. Do not enclose, cover, or put piping into operation until it is inspected and approved by authorities having jurisdiction.

U. Install sleeves for piping penetrations of walls, ceilings, and floors. Comply with requirements for sleeves specified in Division 22 Section "Sleeves and Sleeve Seals for Plumbing Piping."

V. Install sleeve seals for piping penetrations of concrete walls and slabs. Comply with requirements for sleeve seals specified in Division 22 Section "Sleeves and Sleeve Seals for Plumbing Piping."

W. Install escutcheons for piping penetrations of walls, ceilings, and floors. Comply with requirements for escutcheons specified in Division 22 Section "Escutcheons for Plumbing Piping."

## 3.2 JOINT CONSTRUCTION

A. Join hub-and-spigot, cast-iron soil piping with gasket joints according to CISPI's "Cast Iron Soil Pipe and Fittings Handbook" for compression joints.

B. Join hub-and-spigot, cast-iron soil piping with calked joints according to CISPI's "Cast Iron Soil Pipe and Fittings Handbook" for lead-and-oakum calked joints.

C. Join hubless, cast-iron soil piping according to CISPI 310 and CISPI's "Cast Iron Soil Pipe and Fittings Handbook" for hubless-piping coupling joints.

D. Threaded Joints: Thread pipe with tapered pipe threads according to ASME B1.20.1. Cut threads full and clean using sharp dies. Ream threaded pipe ends to remove burrs and restore full ID. Join pipe fittings and valves as follows:

1. Apply appropriate tape or thread compound to external pipe threads unless dry seal threading is specified.

2. Damaged Threads: Do not use pipe or pipe fittings with threads that are corroded or damaged. Do not use pipe sections that have cracked or open welds.

E. Join copper tube and fittings with soldered joints according to ASTM B 828. Use ASTM B 813, water-flushable, lead-free flux and ASTM B 32, lead-free-alloy solder.

F. Grooved Joints: Cut groove ends of pipe according to AWWA C606. Lubricate and install gasket over ends of pipes or pipe and fitting. Install coupling housing sections, over gasket, with keys seated in piping grooves. Install and tighten housing bolts.

G. Flanged Joints: Align bolt holes. Select appropriate gasket material, size, type, and thickness. Install gasket concentrically positioned. Use suitable lubricants on bolt threads. Torque bolts in cross pattern.

H. Install No Hub Fitting Restraints on all piping 4 inch and over in size, shall be provided with supplemental support to minimize the risk of joints separation under high thrust conditions. Auxiliary restraint products used shall be manufactured assemblies with thrust pressure rating adequate for the specific installation. Field devised methods and materials shall not be used to accomplish this application solution.

## 3.3 SPECIALTY PIPE FITTING INSTALLATION

A. Transition Couplings:

1. Install transition couplings at joints of piping with small differences in OD's.
2. In Drainage Piping: Shielded, non-pressure transition couplings.

B. Dielectric Fittings:

1. Install dielectric fittings in piping at connections of dissimilar metal piping and tubing.
2. Dielectric Fittings for NPS 2 and Smaller: Use dielectric nipples or unions.
3. Dielectric Fittings for NPS 2-1/2 to NPS 4: Use dielectric nipples.
4. Dielectric Fittings for NPS 5 and Larger: Use dielectric flange kits.

## 3.4 VALVE INSTALLATION

A. Comply with requirements in Section 220523.12 "Ball Valves for Plumbing Piping," Section 220523.13 "Butterfly Valves for Plumbing Piping," Section 220523.14 "Check Valves for Plumbing Piping," and Section 220523.15 "Gate Valves for Plumbing Piping" for general-duty valve installation requirements.

B. Shutoff Valves:

1. Install shutoff valve on each sewage pump discharge.
2. Install gate or full-port ball valve for piping NPS 2 and smaller.
3. Install gate valve for piping NPS 2-1/2 and larger.

C. Check Valves: Install swing check valve, between pump and shutoff valve, on each sewage pump discharge.

D. Backwater Valves: Install backwater valves in piping subject to backflow.

1. Horizontal Piping: Horizontal backwater valves. Use normally closed type unless otherwise indicated.
2. Floor Drains: Drain outlet backwater valves unless drain has integral backwater valve.
3. Install backwater valves in accessible locations.
4. Comply with requirements for backwater valve specified in Section 221319 "Sanitary Waste Piping Specialties."

## 3.5 HANGER AND SUPPORT INSTALLATION

A. Comply with requirements for pipe hanger and support devices and installation specified in Division 22 Section "Hangers and Supports for Plumbing Piping and Equipment."

1. Install carbon-steel pipe hangers for horizontal piping in noncorrosive environments.

2. Install carbon-steel pipe support clamps for vertical piping in noncorrosive environments.
3. Install stainless-steel pipe support clamps for vertical piping in corrosive environments.
4. Vertical Piping: MSS Type 8 or Type 42, clamps.
5. Install individual, straight, horizontal piping runs:

    a. 100 Feet and Less: MSS Type 1, adjustable, steel clevis hangers.
    b. Longer Than 100 Feet: MSS Type 43, adjustable roller hangers.
    c. Longer Than 100 Feet if Indicated: MSS Type 49, spring cushion rolls.

6. Multiple, Straight, Horizontal Piping Runs 100 Feet or Longer: MSS Type 44, pipe rolls. Support pipe rolls on trapeze.
7. Base of Vertical Piping: MSS Type 52, spring hangers.

B. Support horizontal piping and tubing within 12 inches of each fitting, valve, and coupling.

C. Rod diameter may be reduced one size for double-rod hangers, with 3/8-inch minimum rods.

D. Install hangers for cast-iron soil piping with the following maximum horizontal spacing and minimum rod diameters:

1. NPS 1-1/2 and NPS 2: 60 inches with 3/8-inch rod.
2. NPS 3: 60 inches with 1/2-inch rod.
3. NPS 4 and NPS 5: 60 inches with 5/8-inch rod.
4. NPS 6 and NPS 8 : 60 inches with 3/4-inch rod.
5. NPS 10 and NPS 12 60 inches with 7/8-inch rod.
6. Spacing for 10-foot lengths may be increased to 10 feet. Spacing for fittings is limited to 60 inches.

E. Install supports for vertical cast-iron soil piping every 15 feet and or at every floor

F. Install hangers for steel piping with the following maximum horizontal spacing and minimum rod diameters:

1. NPS 1-1/4: 84 inches with 3/8-inch rod.
2. NPS 1-1/2: 108 inches with 3/8-inch rod.
3. NPS 2: 10 feet with 3/8-inch rod.
4. NPS 2-1/2: 11 feet with 1/2-inch rod.
5. NPS 3: 12 feet with 1/2-inch rod.
6. NPS 4 and NPS 5: 12 feet with 5/8-inch rod.
7. NPS 4 and NPS 5: 12 feet with 5/8-inch rod.
8. NPS 6 and NPS 8: 12 feet with 3/4-inch rod.
9. NPS 10 and NPS 12 : 12 feet with 7/8-inchrod

G. Install hangers for copper tubing with the following maximum horizontal spacing and minimum rod diameters:

1. NPS 1-1/4: 72 inches with 3/8-inch rod.
2. NPS 1-1/2 and NPS 2: 96 inches with 3/8-inch rod.
3. NPS 2-1/2: 108 inches with 1/2-inch rod.
4. NPS 3 and NPS 5: 10 feet with 1/2-inch rod.
5. NPS 6: 10 feet with 5/8-inch rod.
6. NPS 8: 10 feet with 3/4-inch rod

H. Install supports for vertical copper tubing every 10 feet and at every floor

3.6 CONNECTIONS

A. Drawings indicate general arrangement of piping, fittings, and specialties.

B. Connect soil and waste piping to exterior sanitary sewerage piping. Use transition fitting to join dissimilar piping materials.

C. Connect waste and vent piping to the following:

1. Plumbing Fixtures: Connect waste piping in sizes indicated, but not smaller than required by plumbing code.
2. Plumbing Fixtures and Equipment: Connect atmospheric vent piping in sizes indicated, but not smaller than required by authorities having jurisdiction.
3. Plumbing Specialties: Connect waste and vent piping in sizes indicated, but not smaller than required by plumbing code.
4. Install test tees (wall cleanouts) in conductors near floor and floor cleanouts with cover flush with floor.

5. Comply with requirements for backwater valves cleanouts and drains specified in Section 221319 "Sanitary Waste Piping Specialties."
6. Equipment: Connect waste piping as indicated.

   a. Provide shutoff valve if indicated and union for each connection.
   b. Use flanges instead of unions for connections NPS 2-1/2 and larger.

D. Connect force-main piping to the following:

1. Sanitary Sewer: To exterior force main.
2. Sewage Pump: To sewage pump discharge.

E. Where installing piping adjacent to equipment, allow space for service and maintenance of equipment.

F. Make connections according to the following unless otherwise indicated:

1. Install unions, in piping NPS 2 and smaller, adjacent to each valve and at final connection to each piece of equipment.
2. Install flanges, in piping NPS 2-1/2 and larger, adjacent to flanged valves and at final connection to each piece of equipment.

## 3.7 IDENTIFICATION

A. Identify exposed sanitary waste and vent piping. Comply with requirements for identification specified in Division 22 Section "Identification for Plumbing Piping and Equipment."

## 3.8 FIELD QUALITY CONTROL

A. During installation, notify authorities having jurisdiction at least 24 hours before inspection must be made. Perform tests specified below in presence of authorities having jurisdiction.

1. Roughing-in Inspection: Arrange for inspection of piping before concealing or closing-in after roughing-in and before setting fixtures.
2. Final Inspection: Arrange for final inspection by authorities having jurisdiction to observe tests specified below and to ensure compliance with requirements.

B. Reinspection: If authorities having jurisdiction find that piping will not pass test or inspection, make required corrections and arrange for reinspection.

C. Reports: Prepare inspection reports and have them signed by authorities having jurisdiction.

D. Test sanitary drainage and vent piping according to procedures of authorities having jurisdiction or, in absence of published procedures, as follows:

1. Test for leaks and defects in new piping and parts of existing piping that have been altered, extended, or repaired. If testing is performed in segments, submit separate report for each test, complete with diagram of portion of piping tested.
2. Leave uncovered and unconcealed new, altered, extended, or replaced drainage and vent piping until it has been tested and approved. Expose work that was covered or concealed before it was tested.
3. Roughing-in Plumbing Test Procedure: Test drainage and vent piping except outside leaders on completion of roughing-in. Close openings in piping system and fill with water to point of overflow, but not less than 10-foot head of water. From 15 minutes before inspection starts to completion of inspection, water level must not drop. Inspect joints for leaks.
4. Finished Plumbing Test Procedure: After plumbing fixtures have been set and traps filled with water, test connections and prove they are gastight and watertight. Plug vent-stack openings on roof and building drains where they

leave building. Introduce air into piping system equal to pressure of 1-inch wg. Use U-tube or manometer inserted in trap of water closet to measure this pressure. Air pressure must remain constant without introducing additional air throughout period of inspection. Inspect plumbing fixture connections for gas and water leaks.

5. Repair leaks and defects with new materials and retest piping, or portion thereof, until satisfactory results are obtained.
6. Prepare reports for tests and required corrective action.

E. Test force-main piping according to procedures of authorities having jurisdiction or, in absence of published procedures, as follows:

1. Leave uncovered and unconcealed new, altered, extended, or replaced force-main piping until it has been tested and approved.

   a. Expose work that was covered or concealed before it was tested.

2. Cap and subject piping to static-water pressure of 50 psig above operating pressure, without exceeding pressure rating of piping system materials.

   a. Isolate test source and allow to stand for four hours.
   b. Leaks and loss in test pressure constitute defects that must be repaired.

3. Repair leaks and defects with new materials and retest piping, or portion thereof, until satisfactory results are obtained.
4. Prepare reports for tests and required corrective action.

## 3.9 CLEANING AND PROTECTION

A. Clean interior of piping. Remove dirt and debris as work progresses.

B. Protect drains during remainder of construction period to avoid clogging with dirt and debris and to prevent damage from traffic and construction work.

C. Place plugs in ends of uncompleted piping at end of day and when work stops.

## 3.10 PIPING SCHEDULE

A. Aboveground, soil and waste piping NPS 4 and smaller shall be any of the following:

1. Service class, cast-iron soil pipe and fittings; gaskets; and gasketed joints.
2. Hubless, cast-iron soil pipe and fittings; heavyduty hubless-piping couplings; and coupled joints.
3. Copper DWV tube, copper drainage fittings, and soldered joints.
4. Dissimilar Pipe-Material Couplings: Shielded, pressure transition couplings.

B. Aboveground, soil and waste piping NPS 5 and larger shall be any of the following:

1. Service class, cast-iron soil pipe and fittings; gaskets; and gasketed joints.
2. Hubless, cast-iron soil pipe and fittings; heavy duty hubless-piping couplings; and coupled joints.
3. Galvanized-steel pipe, drainage fittings, and threaded joints.
4. Dissimilar Pipe-Material Couplings: Shielded, pressure transition couplings.

C. Aboveground, vent piping NPS 4 and smaller shall be any of the following:

1. Service class, cast-iron soil pipe and fittings; gaskets; and gasketed joints.
2. Copper DWV tube, copper drainage fittings, and soldered joints.

   a. Option for Vent Piping, NPS 2-1/2 and NPS 3-1/2: Hard copper tube, Type M; copper pressure fittings; and soldered joints.

3. Dissimilar Pipe-Material Couplings: Shielded, pressure transition couplings.

D. Aboveground, vent piping NPS 5 and larger shall be any of the following:

1. Service class, cast-iron soil pipe and fittings; gaskets; and gasketed joints.
2. Hubless, cast-iron soil pipe and fittings; heavy-duty hubless-piping couplings; and coupled joints.
3. Galvanized-steel pipe, drainage fittings, and threaded joints.
4. Dissimilar Pipe-Material Couplings: Shielded, pressure transition couplings.

E. Underground, soil, waste, and vent piping NPS 4 and smaller shall be any of the following:

1. Extra heavy class, cast-iron soil piping; gaskets; and gasketed joints.
2. Dissimilar Pipe-Material Couplings: Shielded, pressure transition couplings.

F. Underground, soil and waste piping NPS 5 and larger shall be any of the following:

1. Extra heavy class, cast-iron soil piping; gaskets; and gasketed joints.
2. Dissimilar Pipe-Material Couplings: Shielded, pressure transition couplings.

G. Aboveground sanitary-sewage force mains NPS 1-1/2 and NPS 2 shall be any of the following:

1. Hard copper tube, Type L; copper pressure fittings; and soldered joints.

2. Galvanized-steel pipe, pressure fittings, and threaded joints.

H. Aboveground sanitary-sewage force mains NPS 2-1/2 to NPS 6 shall be any of the following:

1. Hard copper tube, Type L; copper pressure fittings; and soldered joints.
2. Galvanized-steel pipe, pressure fittings, and threaded joints.

I. Underground sanitary-sewage force mains NPS 4 and smaller shall be any of the following:
   1. Ductile-iron, mechanical-joint piping and mechanical joints.
   2. Fitting-type transition coupling for piping smaller than NPS 1-1/2 and pressure transition coupling for NPS 1-1/2 and larger if dissimilar pipe materials.

J. Underground sanitary-sewage force mains NPS 5 and larger shall be any of the following:
   1. Ductile-iron, mechanical-joint piping and mechanical joints.
   2. Pressure transition couplings if dissimilar pipe materials.

**END OF SECTION**

# SECTION 22 13 19
# SANITARY WASTE PIPING SPECIALTIES

## PART 1 - GENERAL

### 1.1 RELATED DOCUMENTS

A. Drawings and general provisions of the Contract, including General and Supplementary Conditions and Division 01 Specification Sections, apply to this Section.

### 1.2 SUMMARY

A. This Section includes the following sanitary drainage piping specialties:
   1. Cleanouts.
   2. Floor Drains.
   3. Roof flashing assemblies.
   4. Through-penetration firestop assemblies.
   5. Miscellaneous sanitary drainage piping specialties.
   6. Solids interceptors.

B. Related Sections include the following:

   1. Division 22 Section "Sanitary waste and vent piping.

### 1.3 DEFINITIONS

A. ABS: Acrylonitrile-butadiene-styrene plastic.

B. HDPE: High-density polyethylene plastic.

C. PE: Polyethylene plastic.

D. PP: Polypropylene plastic.

E. PVC: Polyvinyl chloride plastic.

### 1.4 SUBMITTALS

A. Product Data: For each type of product indicated. Include rated capacities, operating characteristics, and accessories for the following:

1. Grease interceptors.

B. Shop Drawings: Show fabrication and installation details for frost-resistant vent terminals.

1. Wiring Diagrams: Power, signal, and control wiring.

C. Field quality-control test reports.

D. Operation and Maintenance Data: For drainage piping specialties to include in emergency, operation, and maintenance manuals.

1.5 QUALITY ASSURANCE

A. Drainage piping specialties shall bear label, stamp, or other markings of specified testing agency.

B. Electrical Components, Devices, and Accessories: Listed and labeled as defined in NFPA 70, Article 100, by a testing agency acceptable to authorities having jurisdiction, and marked for intended use.

C. Comply with NSF 14, "Plastics Piping Components and Related Materials," for plastic sanitary piping specialty components.

PART 2 - PRODUCTS

2.1 ASSEMBLY DESCRIPTIONS

A. Sanitary waste piping specialties shall bear label, stamp, or other markings of specified testing agency.

B. Comply with NSF 14 for plastic sanitary waste piping specialty components.

C. Electrical Components, Devices, and Accessories: Listed and labeled as defined in NFPA 70, by a qualified testing, and marked for intended location and application.

2.2 BACKWATER VALVES

A. Horizontal, Cast-Iron Backwater Valves:

1. Manufacturers: Subject to compliance with requirements, provide products by one of the following:

a. Jay R. Smith Mfg. Co.
b. Josam Company.
c. MIFAB, Inc.
d. Watts; a Watts Water Technologies company.
e. Zurn Industries, LLC.

2. Standard: ASME A112.14.1.

3. Size: Same as connected piping.
4. Body: Cast iron.
5. Cover: Cast iron with bolted or threaded access check valve.
6. End Connections: Hubless.
7. Type Check Valve: Removable, bronze, swing check, factory assembled or field modified to hang open for airflow unless subject to backflow condition.
8. Extension: ASTM A 74, Service class; full-size, cast-iron, soil-pipe extension to field-installed cleanout at floor; replaces backwater valve cover.

B. Drain-Outlet Backwater Valves:

1. Manufacturers: Subject to compliance with requirements, provide products by one of the following:

a. Jay R. Smith Mfg. Co.
b. Josam Company.
c. Watts; a Watts Water Technologies company.
d. Zurn Industries, LLC.

2. Size: Same as floor drain outlet.

3. Body: Cast iron or bronze made for vertical installation in bottom outlet of floor drain.
4. Check Valve: Removable ball float.
5. Inlet: Threaded.
6. Outlet: Threaded or spigot.

## 2.3 CLEANOUTS

A. Cast Iron Exposed Cleanouts:

1. Available Manufacturers:

a. Josam Company; Josam Div.
b. MIFAB, Inc.
c. Smith, Jay R. Mfg. Co.; Division of Smith Industries, Inc.
d. Tyler Pipe; Wade Div.
e. Watts Drainage Products Inc.
f. Zurn Plumbing Products Group; Specification Drainage Operation.

2. Standard: ASME A112.36.2M for cast iron for cleanout test tee.

3. Size: Same as connected drainage piping
4. Body Material: cast-iron soil pipe T-branch or Hubless, cast-iron soil pipe test tee as required to match connected piping.
5. Closure: Countersunk or raised-head, brass plug.
6. Closure Plug Size: Same as or not more than one size smaller than cleanout size.
7. Closure: Stainless-steel plug with seal.

B. Cast Iron Exposed Floor Cleanouts:

1. Available Manufacturers:

   a. Josam Company; Josam Div.
   b. Watts Drainage Products Inc.
   c. Zurn Plumbing Products Group; Light Commercial Operation.
   d. Wade
   e. Jay R. Smith.

2. Standard: ASME A112.36.2M.
3. Size: Same as connected branch.
4. Type: Threaded, adjustable housing.
5. Body or Ferrule: Cast iron.
6. Clamping Device: Required.
7. Outlet Connection: Threaded.
8. Closure: Brass plug with tapered threads.
9. Adjustable Housing Material: Cast iron.
10. Frame and Cover Material and Finish: Nickel-bronze, copper alloy.
11. Frame and Cover Shape: Round.
12. Top Loading Classification: Medium Duty.
13. Riser: ASTM A 74, Service class, cast-iron drainage pipe fitting and riser to cleanout.
14. Standard: ASME A112.3.1.
15. Size: Same as connected branch.
16. Housing: Stainless steel.
17. Closure: Stainless steel with seal.
18. Riser: Stainless-steel drainage pipe fitting to cleanout.

C. Cast-Iron Wall Cleanouts:
1. Available Manufacturers:

   a. Josam Company; Josam Div.
   b. MIFAB, Inc.
   c. Watts Drainage Products Inc.
   d. Zurn Plumbing Products Group; Specification Drainage Operation.
   e. Wade
   f. Jay R. Smith

2. Standard: ASME A112.36.2M. Include wall access.
3. Size: Same as connected drainage piping.
4. Body: Hub-and-spigot, cast-iron soil pipe T-branch, or Hubless, cast-iron soil pipe test tee as required to match connected piping.
5. Closure: cast-iron plug.
6. Closure Plug Size: Same as or not more than one size smaller than cleanout size.
7. Wall Access: Round, flat, chrome-plated brass or stainless-steel cover plate with screw.
8. Wall Access: Round, nickel-bronze, copper-alloy, or stainless-steel wall-installation frame and cover.

## 2.4 FLOOR DRAINS

A. Cast-Iron Floor Drains:
1. Available manufacturers:
   a. Josam Company; Josam Div.
   b. Tyler Pipe; Wade Div.
   c. Watts Drainage Products Inc.
   d. Zurn Plumbing Products Group; Light Commercial Operation.
   e. Jay R. Smith

2. Standard: ASME A112.6.3.
3. Pattern: Floor drain.
4. Body Material: Gray iron.
5. Anchor Flange: Required.
6. Clamping Device: Required.
7. Sediment Bucket: Not required for finished areas.
8. Top or Strainer Material: Nickel bronze.
9. Top Shape: Round.
10. Top Loading Classification: Light Duty.
11. Trap Material: Cast iron.
12. Trap Pattern: Standard P-trap.

## 2.5 THROUGH-PENETRATION FIRESTOP ASSEMBLIES

A. Through-Penetration Firestop Assemblies:
1. Manufacturers: Subject to compliance with requirements, provide products by one of the following:

   a. ProSet Systems Inc.

2. Standard: UL 1479 assembly of sleeve and stack fitting with firestopping plug.
3. Size: Same as connected soil, waste, or vent stack.
4. Sleeve: Molded PVC plastic, of length to match slab thickness and with integral nailing flange on one end for installation in cast-in-place concrete slabs.

5. Stack Fitting: ASTM A 48/A 48M, gray-iron, hubless-pattern, wye branch with neoprene O-ring at base and gray-iron plug in thermal-release harness. Include PVC protective cap for plug.

6. Special Coating: Corrosion resistant on interior of fittings.

## 2.6 MISCELLANEOUS SANITARY DRAINAGE PIPING SPECIALTIES

A. Open Drains:

1. Description: Shop or field fabricate from ASTM A 74, Service class, hub-and-spigot, cast-iron soil-pipe fittings. Include P-trap, hub-and-spigot riser section; and where required, increaser fitting joined with ASTM C 564 rubber gaskets.
2. Size: Same as connected waste piping.

B. Deep-Seal Traps:

1. Description: Cast-iron or bronze casting, with inlet and outlet matching connected piping and cleanout trap-seal primer valve connection.
2. Size: Same as connected waste piping.

   a. NPS 2: 4-inch-minimum water seal.
   b. NPS 2-1/2 and Larger: 5-inch-minimum water seal.

C. Floor-Drain, Trap-Seal Primer Fittings:

1. Description: Cast iron, with threaded inlet and threaded or spigot outlet, and trap-seal primer valve connection.
2. Size: Same as floor drain outlet with NPS 1/2 side inlet.

D. Air-Gap Fittings:

1. Standard: ASME A112.1.2, for fitting designed to ensure fixed, positive air gap between installed inlet and outlet piping.
2. Body: Bronze or cast iron.
3. Inlet: Opening in top of body.
4. Outlet: Larger than inlet.
5. Size: Same as connected waste piping and with inlet large enough for associated indirect waste piping.

E. Sleeve Flashing Device:

1. Description: Manufactured, cast-iron fitting, with clamping device that forms sleeve for pipe floor penetrations of floor membrane. Include galvanized-steel pipe extension in top of fitting that will extend 2 inches above finished floor and galvanized-steel pipe extension in bottom of fitting that will extend through floor slab.

2. Size: As required for close fit to riser or stack piping.

F. Stack Flashing Fittings:

1. Description: Counter-flashing-type, cast-iron fitting, with bottom recess for terminating roof membrane, and with threaded or hub top for extending vent pipe.
2. Size: Same as connected stack vent or vent stack.

G. Vent Caps:

1. Description: Cast-iron body with threaded or hub inlet and vandal-proof design. Include vented hood and setscrews to secure to vent pipe.
2. Size: Same as connected stack vent or vent stack.

H. Frost-Resistant Vent Terminals:

1. Description: Manufactured or shop-fabricated assembly constructed of copper, lead-coated copper, or galvanized steel.

2. Design: To provide 1-inch enclosed air space between outside of pipe and inside of flashing collar extension, with counterflashing.

I. Expansion Joints:

1. Standard: ASME A112.6.4.
2. Body: Cast iron with bronze sleeve, packing, and gland.
3. End Connections: Matching connected piping.
4. Size: Same as connected soil, waste, or vent piping.

## 2.7 FLASHING MATERIALS

A. Lead Sheet: ASTM B 749, Type L51121, copper bearing, with the following minimum weights and thicknesses, unless otherwise indicated: (NOT USED)

1. General Use: 4.0-lb/sq. ft., 0.0625-inch thickness.
2. Vent Pipe Flashing: 3.0-lb/sq. ft., 0.0469-inch thickness.
3. Burning: 6-lb/sq. ft., 0.0938-inch thickness.

B. Copper Sheet: ASTM B 152/B 152M, of the following minimum weights and thicknesses, unless otherwise indicated:

1. General Applications: 12 oz./sq. ft. thickness.
2. Vent Pipe Flashing: 8 oz./sq. ft. thickness.

C. Zinc-Coated Steel Sheet: ASTM A 653/A 653M, with 0.20 percent copper content and 0.04-inch minimum thickness, unless otherwise indicated. Include G90 hot-dip galvanized, mill-phosphatized finish for painting if indicated.

D. Elastic Membrane Sheet: ASTM D 4068, flexible, chlorinated polyethylene, 40-mil minimum thickness.

E. Fasteners: Metal compatible with material and substrate being fastened.

F. Metal Accessories: Sheet metal strips, clamps, anchoring devices, and similar accessory units required for installation; matching or compatible with material being installed.

G. Solder: ASTM B 32, lead-free alloy.

H. Bituminous Coating: SSPC-Paint 12, solvent-type, bituminous mastic.

## 2.8 SOLIDS INTERCEPTORS

A. Solids Interceptors:
   1. Jay R. Smith Model 8710 or a comparable product by one of the following:
      a. Josam Company; Josam Div.
      b. Tyler Pipe; Wade Div.
      c. Watts Drainage Products Inc.
      d. Zurn Plumbing Products Group; Specification Drainage Operation.
   2. Type: Factory-fabricated interceptor made for removing and retaining sediment from wastewater.
   3. Body Material: Cast iron or steel.
   4. Interior Separation Device: Screens.
   5. Interior Lining: Corrosion-resistant enamel.
   6. Mounting: Above floor.

# PART 3 - EXECUTION

## 3.1 INSTALLATION

A. Refer to Division 22 Section "Common Work Results for Plumbing" for piping joining materials, joint construction, and basic installation requirements.

B. Install backwater valves in building drain piping.
   1. For interior installation, provide cleanout deck plate flush with floor and centered over backwater valve cover, and of adequate size to remove valve cover for servicing.

C. Install cleanouts in aboveground piping and building drain piping according to the following, unless otherwise indicated:

1. Size same as drainage piping up to NPS 4. Use NPS 4 for larger drainage piping unless larger cleanout is indicated.
2. Locate at each change in direction of piping greater than 45 degrees.
3. Locate at minimum intervals of 50 feetfor piping NPS 4 and smaller and 100 feet for larger piping.
4. Locate at base of each vertical soil and waste stack.

D. For cleanouts located in concealed piping, install cleanout wall access covers, of types indicated, with frame and cover flush with finished wall.

E. For floor cleanouts for piping below floors, install cleanout deck plates with top flush with finished floor.

F. Install floor drains at low points of surface areas to be drained. Set grates of drains flush with finished floor, unless otherwise indicated.

1. Position floor drains for easy access and maintenance.
2. Set floor drains below elevation of surrounding finished floor to allow floor drainage. Set with grates depressed according to the following drainage area radii:
   a. Radius, 30 Inches or Less: Equivalent to 1 percent slope, but not less than 1/4-inch total depression.
   b. Radius, 30 to 60 Inches: Equivalent to 1 percent slope.
   c. Radius, 60 Inches or Larger: Equivalent to 1 percent slope, but not greater than 1-inch total depression.
3. Install floor-drain flashing collar or flange so no leakage occurs between drain and adjoining flooring. Maintain integrity of waterproof membranes where penetrated.
4. Install individual traps for floor drains connected to sanitary building drain, unless otherwise indicated.

G. Install through-penetration firestop assemblies in plastic conductors and stacks at floor penetrations.

H. Install sleeve flashing device with each riser and stack passing through floors with waterproof membrane.

I. Install expansion joints on vertical stacks and conductors. Position expansion joints for easy access and maintenance.

J. Install roof flashing assemblies on sanitary stack vents and vent stacks that extend through roof.

K. Install flashing fittings on sanitary stack vents and vent stacks that extend through roof.

L. Install floor-drain, trap-seal primer fittings on inlet to floor drains that require trap-seal primer connection.

1. Exception: Fitting may be omitted if trap has trap-seal primer connection.
2. Size: Same as floor drain inlet.

M. Install air-gap fittings on indirect-waste piping discharge into sanitary drainage system.

N. Install sleeve flashing device with each riser and stack passing through floors with waterproof membrane.

O. Install vent caps on each vent pipe passing through roof.

P. Install expansion joints on vertical stacks and conductors. Position expansion joints for easy access and maintenance.

Q. Install frost-proof vent caps on each vent pipe passing through roof. Maintain 1-inch clearance between vent pipe and roof substrate.

R. Install wood-blocking reinforcement for wall-mounting-type specialties.

S. Install traps on plumbing specialty drain outlets. Omit traps on indirect wastes unless trap is indicated.

T. All valves, fittings and specialties shall have a pressure class rating that exceeds the pressure of the system it is installed in.

## 3.2 CONNECTIONS

A. Piping installation requirements are specified in other Division 22 Sections. Drawings indicate general arrangement of piping, fittings, and specialties.

B. Install piping adjacent to equipment to allow service and maintenance.

C. Grease Interceptors: Connect inlet and outlet to unit, and connect flow-control fitting and vent to unit inlet piping.

D. Ground equipment according to Division 26 Section "Grounding and Bonding for Electrical Systems."

## 3.3 FLASHING INSTALLATION

A. Fabricate flashing from single piece unless large pans, sumps, or other drainage shapes are required. Join flashing according to the following if required:

1. Lead Sheets: Burn joints of lead sheets 6.0-lb/sq. ft., 0.0938-inch thickness or thicker. Solder joints of lead sheets 4.0-lb/sq. ft., 0.0625-inch thickness or thinner.

2. Copper Sheets: Solder joints of copper sheets.

B. Install sheet flashing on pipes, sleeves, and specialties passing through or embedded in floors and roofs with waterproof membrane.

1. Pipe Flashing: Sleeve type, matching pipe size, with minimum length of 10 inches, and skirt or flange extending at least 8 inches around pipe.
2. Sleeve Flashing: Flat sheet, with skirt or flange extending at least 8 inches around sleeve.
3. Embedded Specialty Flashing: Flat sheet, with skirt or flange extending at least 8 inches around specialty.

C. Set flashing on floors and roofs in solid coating of bituminous cement.

D. Secure flashing into sleeve and specialty clamping ring or device.

E. Install flashing for piping passing through roofs with counterflashing or commercially made flashing fittings, according to Division 07 Section "Sheet Metal Flashing and Trim."

F. Extend flashing up vent pipe passing through roofs and turn down into pipe, or secure flashing into cast-iron sleeve having calking recess.

G. Fabricate and install flashing and pans, sumps, and other drainage shapes.

## 3.4 LABELING AND IDENTIFYING

A. Equipment Nameplates and Signs: Install engraved plastic-laminate equipment nameplate or sign on or near each of the following:

1. Intercepters.

B. Distinguish among multiple units, inform operator of operational requirements, indicate safety and emergency precautions, and warn of hazards and improper operations, in addition to identifying unit.

1. Nameplates and signs are specified in Section 220553 "Identification for Plumbing Piping and Equipment."

## 3.5 FIELD QUALITY CONTROL

A. Tests and Inspections:

1. Leak Test: After installation, charge system and test for leaks. Repair leaks and retest until no leaks exist.
2. Test and adjust controls and safeties. Replace damaged and malfunctioning controls and equipment.

## 3.6 PROTECTION

A. Protect drains during remainder of construction period to avoid clogging with dirt or debris and to prevent damage from traffic or construction work.

B. Place plugs in ends of uncompleted piping at end of each day or when work stops.

* * END OF SECTION**

# SECTION 221413
# FACILITY STORM DRAINAGE PIPING

## PART 1 - GENERAL

### 1.1 RELATED DOCUMENTS

A. Drawings and general provisions of the Contract, including General and Supplementary Conditions and Division 01 Specification Sections, apply to this Section.

### 1.2 SUMMARY

A. This Section includes the following storm drainage piping inside the building:

1. Pipe, tube, and fittings.
2. Special pipe fittings.

B. Related Sections include the following:

1. Division 22 Section "Sump Pumps."

### 1.3 DEFINITIONS

A. ABS: Acrylonitrile-butadiene-styrene plastic.

B. LLDPE: Linear, low-density polyethylene plastic.

C. PE: Polyethylene plastic.

D. PVC: Polyvinyl chloride plastic.

E. TPE: Thermoplastic elastomer.

### 1.4 PERFORMANCE REQUIREMENTS

A. Components and installation shall be capable of withstanding the following minimum working-pressure, unless otherwise indicated:

1. Storm Drainage Piping: 10-foot head of water.

B. Seismic Performance: Soil, waste, and vent piping and support and installation shall be capable of withstanding the effects of seismic events determined according to ASCE 7, "Minimum Design Loads for Buildings and Other Structures."

1.5 SUBMITTALS

A. Product Data: For pipe, tube, fittings, and couplings.

B. Shop Drawings:

1. Design Calculations: Signed and sealed by a qualified professional engineer for selecting seismic restraints.

C. Field quality-control inspection and test reports.

1.6 QUALITY ASSURANCE

A. Piping materials shall bear label, stamp, or other markings of specified testing agency.

B. Comply with NSF 14, "Plastics Piping Systems Components and Related Materials," for plastic piping components. Include marking with "NSF-drain" for plastic drain piping and "NSF-sewer" for plastic sewer piping.

PART 2 - PRODUCTS

2.1 MANUFACTURERS

A. In other Part 2 articles where titles below introduce lists, the following requirements apply to product selection:

1. Available Manufacturers: Subject to compliance with requirements, manufacturers offering products that may be incorporated into the Work include, but are not limited to, manufacturers specified.
2. Manufacturers: Subject to compliance with requirements, provide products by one of the manufacturers specified.

2.2 PIPING MATERIALS

A. Refer to Part 3 "Piping Applications" Article for applications of pipe, tube, fitting, and joining materials.

2.3 HUB-AND-SPIGOT, CAST-IRON SOIL PIPE AND FITTINGS

A. Pipe and Fittings: ASTM A 74, Service and Extra-Heavy class(es).

B. Gaskets: ASTM C 564, rubber.

C. Calking Materials: ASTM B 29, pure lead and oakum or hemp fiber.

2.4 HUBLESS CAST-IRON SOIL PIPE AND FITTINGS

A. Pipe and Fittings: ASTM A 888 or CISPI 301.

B. Shielded Couplings: ASTM C 1277 assembly of metal shield or housing, corrosion-resistant fasteners, and rubber sleeve with integral, center pipe stop.

1. Heavy-Duty, Shielded, Stainless-Steel Couplings: With stainless-steel shield, stainless-steel bands and tightening devices, and ASTM C 564, rubber sleeve.

a. Available Manufacturers:

1) ANACO.
2) Clamp-All Corp.
3) Ideal Div.; Stant Corp.
4) Mission Rubber Co.
5) Tyler Pipe; Soil Pipe Div.

PART 3 - EXECUTION

3.1 EXCAVATION

A. Refer to Division 31 Section "Earth Moving" for excavating, trenching, and backfilling.

3.2 PIPING APPLICATIONS

A. Flanges and unions may be used on aboveground pressure piping, unless otherwise indicated.

B. Aboveground, storm drainage piping NPS 8 and smaller shall be the following:

1. Hubless cast-iron soil pipe and fittings; heavy-duty shielded, stainless-steel couplings; and coupled joints.

C. Underground, storm drainage piping: shall be the following:

1. Service class, cast-iron soil pipe and fittings; gaskets; and gasketed joints.

3.3 PIPING INSTALLATION

A. Storm sewer and drainage piping outside the building are specified in Division 33 Section "Storm Utility Drainage Piping."

B. Basic piping installation requirements are specified in Division 22 Section "Common Work Results for Plumbing."

C. Install seismic restraints on piping. Seismic-restraint devices are specified in Division 22 Section "Vibration and Seismic Controls for Plumbing Piping and Equipment."

D. Install cleanouts at grade and extend to where building storm drains connect to building storm sewers. Cleanouts are specified in Division 22 Section "Storm Drainage Piping Specialties."

E. Install cleanout fitting with closure plug inside the building in storm drainage force-main piping.

F. Make changes in direction for storm drainage piping using appropriate branches, bends, and long-sweep bends. Do not change direction of flow more than 90 degrees. Use proper size of standard increasers and reducers if pipes of different sizes are connected. Reducing size of drainage piping in direction of flow is prohibited.

G. Lay buried building storm drainage piping beginning at low point of each system. Install true to grades and alignment indicated, with unbroken continuity of invert. Place hub ends of piping upstream. Install required gaskets according to manufacturer's written instructions for use of lubricants, cements, and other installation requirements. Maintain swab in piping and pull past each joint as completed.

H. Install storm drainage piping at the following minimum slopes, unless otherwise indicated:

1. Building Storm Drain: 1 percent downward in direction of flow for piping NPS 3 and smaller; 1 percent downward in direction of flow for piping NPS 4 and larger.
2. Horizontal Storm-Drainage Piping: 2 percent downward in direction of flow.

I. Sleeves are not required for cast-iron soil piping passing through concrete slabs-on-grade if slab is without membrane waterproofing.

J. Do not enclose, cover, or put piping into operation until it is inspected and approved by authorities having jurisdiction.

K. Install sleeves for piping penetrations of walls, ceilings, and floors. Comply with requirements for sleeves specified in Division 22 Section "Sleeves and Sleeve Seals for Plumbing Piping."

L. Install sleeve seals for piping penetrations of concrete walls and slabs. Comply with requirements for sleeve seals specified in Division 22 Section "Sleeves and Sleeve Seals for Plumbing Piping."

M. Install escutcheons for piping penetrations of walls, ceilings, and floors. Comply with requirements for escutcheons specified in Division 22 Section "Escutcheons for Plumbing Piping."

## 3.4 JOINT CONSTRUCTION

A. Basic piping joint construction requirements are specified in Division 22 Section "Common Work Results for Plumbing."

B. Hub-and-Spigot, Cast-Iron Soil Piping Gasketed Joints: Join according to CISPI's "Cast Iron Soil Pipe and Fittings Handbook" for compression joints.

C. Hub-and-Spigot, Cast-Iron Soil Piping Calked Joints: Join according to CISPI's "Cast Iron Soil Pipe and Fittings Handbook" for lead and oakum calked joints.

D. Hubless Cast-Iron Soil Piping Coupled Joints: Join according to CISPI 310 and CISPI's "Cast Iron Soil Pipe and Fittings Handbook" for hubless-coupling joints.

## 3.5 HANGER AND SUPPORT INSTALLATION

A. Seismic-restraint devices are specified in Division 22 Section "Vibration and Seismic Controls for Plumbing Piping and Equipment."

B. Pipe hangers and supports are specified in Division 22 Section "Hangers and Supports for Plumbing Piping and Equipment." Install the following:

1. Vertical Piping: MSS Type 8 or Type 42, clamps.
2. Individual, Straight, Horizontal Piping Runs: According to the following:

    a. 100 Feet and Less: MSS Type 1, adjustable, steel clevis hangers.
    b. Longer Than 100 Feet: MSS Type 43, adjustable roller hangers.
    c. Longer Than 100 Feet, if Indicated: MSS Type 49, spring cushion rolls.

3. Multiple, Straight, Horizontal Piping Runs 100 Feet or Longer: MSS Type 44, pipe rolls. Support pipe rolls on trapeze.
4. Base of Vertical Piping: MSS Type 52, spring hangers.

C. Install supports according to Division 22 Section "Hangers and Supports for Plumbing Piping and Equipment."

D. Support vertical piping and tubing at base and at each floor.

E. Rod diameter may be reduced 1 size for double-rod hangers, with 3/8-inch minimum rods.

F. Install hangers for cast-iron soil piping with the following maximum horizontal spacing and minimum rod diameters:

1. NPS 1-1/2 and NPS 2: 60 inches with 3/8-inch rod.
2. NPS 3: 60 inches with 1/2-inch rod.
3. NPS 4 and NPS 5: 60 inches with 5/8-inch rod.
4. NPS 6: 60 inches with 3/4-inch rod.
5. NPS 8 to NPS 12: 60 inches with 7/8-inch rod.

6. Spacing for 10-foot lengths may be increased to 10 feet. Spacing for fittings is limited to 60 inches.

G. Install supports for vertical cast-iron soil piping every 15 feet.

## 3.6 CONNECTIONS

A. Drawings indicate general arrangement of piping, fittings, and specialties.

B. Connect interior storm drainage piping to exterior storm drainage piping. Use transition fitting to join dissimilar piping materials.

C. Connect storm drainage piping to roof drains and storm drainage specialties.

## 3.7 FIELD QUALITY CONTROL

A. During installation, notify authorities having jurisdiction at least 24 hours before inspection must be made. Perform tests specified below in presence of authorities having jurisdiction.

1. Roughing-in Inspection: Arrange for inspection of piping before concealing or closing-in after roughing-in.
2. Final Inspection: Arrange for final inspection by authorities having jurisdiction to observe tests specified below and to ensure compliance with requirements.

B. Reinspection: If authorities having jurisdiction find that piping will not pass test or inspection, make required corrections and arrange for reinspection.

C. Reports: Prepare inspection reports and have them signed by authorities having jurisdiction.

D. Test storm drainage piping according to procedures of authorities having jurisdiction or, in absence of published procedures, as follows:

1. Test for leaks and defects in new piping and parts of existing piping that have been altered, extended, or repaired. If testing is performed in segments, submit separate report for each test, complete with diagram of portion of piping tested.
2. Leave uncovered and unconcealed new, altered, extended, or replaced storm drainage piping until it has been tested and approved. Expose work that was covered or concealed before it was tested.
3. Test Procedure: Test storm drainage piping on completion of roughing-in. Close openings in piping system and fill with water to point of overflow, but not less than 10-foot head of water. From 15 minutes before inspection starts to completion of inspection, water level must not drop. Inspect joints for leaks.
4. Repair leaks and defects with new materials and retest piping, or portion thereof, until satisfactory results are obtained.
5. Prepare reports for tests and required corrective action.

3.8 CLEANING

A. Clean interior of piping. Remove dirt and debris as work progresses.

B. Protect drains during remainder of construction period to avoid clogging with dirt and debris and to prevent damage from traffic and construction work.

C. Place plugs in ends of uncompleted piping at end of day and when work stops.

**END OF SECTION**

# SECTION 221423
# STORM DRAINAGE PIPING SPECIALTIES

## PART 1 – GENERAL

### 1.1 RELATED DOCUMENTS

A. Drawings and general provisions of the Contract, including General and Supplementary Conditions and Division 01 Specification Sections, apply to this Section.

### 1.2 SUMMARY

A. This Section includes the following storm drainage piping specialties:

1. Cleanouts.
2. Through-penetration firestop assemblies.
3. Roof drains.
4. Flashing materials.

B. Related Sections include the following:

1. Division 22 Section "Sanitary Waste Piping Specialties" for backwater valves, floor drains, trench drains and channel drainage systems connected to sanitary sewer, air admittance valves, FOG disposal systems, grease interceptors and removal devices, oil interceptors, and solid interceptors.

### 1.3 DEFINITIONS

A. ABS: Acrylonitrile-butadiene-styrene plastic.

B. PUR: Polyurethane plastic.

### 1.4 SUBMITTALS

A. Product Data: For each type of product indicated.

### 1.5 QUALITY ASSURANCE

A. Drainage piping specialties shall bear label, stamp, or other markings of specified testing agency.

1.6 COORDINATION

A. Coordinate size and location of roof penetrations.

PART 2 - PRODUCTS

2.1 BACKWATER VALVES

A. Horizontal, Cast-Iron Backwater Valves :

1. Basis-of-Design Product: Subject to compliance with requirements, provide the product indicated on Drawings or a comparable product by one of the following:

a. Josam Company; Josam Div.
b. Smith, Jay R. Mfr. Co.; Division of Smith Industries, Inc.
c. Watts Drainage Products Inc.
d. Zurn Plumbing Products Group; Specification Drainage Operation.

B. Drain-Outlet Backwater Valves :

1. Available Manufacturers: Subject to compliance with requirements, manufacturers offering products that may be incorporated into the Work include, but are not limited to, the following:

a. Josam Company; Josam Div.
b. Smith, Jay R. Mfr. Co.; Division of Smith Industries, Inc.
c. Watts Drainage Products Inc.
d. Zurn Plumbing Products Group; Specification Drainage Operation.

2. Size: Same as floor drain outlet.
3. Body: Cast iron or bronze made for vertical installation in bottom outlet of floor drain.
4. Check Valve: Removable ball float.
5. Inlet: Threaded.
6. Outlet: Threaded or spigot.

2.2 CLEANOUTS

A. Exposed Metal Cleanouts :

1. Basis-of-Design Product: Subject to compliance with requirements, provide the product indicated on Drawings or a comparable product by one of the following:

a. Josam Company; Josam Div.
b. MIFAB, Inc.

c. Smith, Jay R. Mfg. Co.; Division of Smith Industries, Inc.
d. Zurn Plumbing Products Group; Specification Drainage Operation.

B. Metal Floor Cleanouts :

1. Basis-of-Design Product: Subject to compliance with requirements, provide the product indicated on Drawings or a comparable product by one of the following:

a. Josam Company; Josam Div.
b. Smith, Jay R. Mfg. Co.; Division of Smith Industries, Inc.
c. Zurn Plumbing Products Group; Light Commercial Operation.

C. Cast-Iron Wall Cleanouts :

1. Basis-of-Design Product: Subject to compliance with requirements, provide the product indicated on Drawings or a comparable product by one of the following:

a. Josam Company; Josam Div.
b. Smith, Jay R. Mfg. Co.; Division of Smith Industries, Inc.
c. Zurn Plumbing Products Group; Specification Drainage Operation.

## 2.3 TRENCH DRAINS

A. Trench Drains :

1. Basis-of-Design Product: Subject to compliance with requirements, provide the product indicated on Drawings or a comparable product by one of the following:

a. Josam Company; Josam Div.
b. Smith, Jay R. Mfg. Co.; Division of Smith Industries, Inc.
c. Watts Drainage Products Inc.
d. Zurn Plumbing Products Group; Specification Drainage Operation.

## 2.4 ROOF DRAINS

A. Metal Roof Drains :

1. Basis-of-Design Product: Subject to compliance with requirements, provide the product indicated on Drawings or a comparable product by one of the following:

a. Josam Company; Josam Div.
b. Smith, Jay R. Mfg. Co.; Division of Smith Industries, Inc.
c. Watts Drainage Products Inc.
d. Zurn Plumbing Products Group; Light Commercial Operation.
e. Zurn Plumbing Products Group; Specification Drainage Operation.

2.5 FLASHING MATERIALS

A. Copper Sheet: ASTM B 152/B 152M, 12 oz./sq. ft. thickness.

B. Zinc-Coated Steel Sheet: ASTM A 653/A 653M, with 0.20 percent copper content and 0.04-inch minimum thickness, unless otherwise indicated. Include G90 hot-dip galvanized, mill-phosphatized finish for painting if indicated.

C. Fasteners: Metal compatible with material and substrate being fastened.

D. Metal Accessories: Sheet metal strips, clamps, anchoring devices, and similar accessory units required for installation; matching or compatible with material being installed.

E. Solder: ASTM B 32, lead-free alloy.

F. Bituminous Coating: SSPC-Paint 12, solvent-type, bituminous mastic.

PART 3 - EXECUTION

3.1 INSTALLATION

A. Refer to Division 22 Section "Common Work Results for Plumbing" for piping joining materials, joint construction, and basic installation requirements.

B. Install cleanouts in aboveground piping and building drain piping according to the following, unless otherwise indicated:

1. Size same as drainage piping up to NPS 4. Use NPS 4 for larger drainage piping unless larger cleanout is indicated.
2. Locate at each change in direction of piping greater than 45 degrees.
3. Locate at minimum intervals of 50 feet for piping NPS 4 and smaller and 100 feet for larger piping.
4. Locate at base of each vertical soil and waste stack.

C. For floor cleanouts for piping below floors, install cleanout deck plates with top flush with finished floor.

D. For cleanouts located in concealed piping, install cleanout wall access covers, of types indicated, with frame and cover flush with finished wall.

E. Install trench drains at low points of surface areas to be drained. Set grates of drains flush with finished surface, unless otherwise indicated.

F. Assemble and install ASME A112.3.1, stainless-steel channel drainage systems

according to ASME A112.3.1. Install on support devices so that top will be flush with surface.

G. Assemble non-ASME A112.3.1, stainless-steel channel drainage system components according to manufacturer's written instructions. Install on support devices so that top will be flush with adjacent surface.

H. Assemble plastic channel drainage system components according to manufacturer's written instructions. Install on support devices so that top will be flush with adjacent surface.

I. Install through-penetration firestop assemblies in plastic [**conductors**][ **and** ][**stacks**] at floor penetrations.

J. Install roof drains at low points of roof areas according to roof membrane manufacturer's written installation instructions. Roofing materials are specified in Division 07.

1. Install roof-drain flashing collar or flange so that there will be no leakage between drain and adjoining roofing. Maintain integrity of waterproof membranes where penetrated.
2. Position roof drains for easy access and maintenance.

K. Install sleeve flashing device with each riser and stack passing through floors with waterproof membrane.

L. Install conductor nozzles at exposed bottom of conductors where they spill onto grade.

M. Install escutcheons at wall, floor, and ceiling penetrations in exposed finished locations and within cabinets and millwork. Use deep-pattern escutcheons if required to conceal protruding pipe fittings.

## 3.2 CONNECTIONS

A. Piping installation requirements are specified in other Division 22 Sections. Drawings indicate general arrangement of piping, fittings, and specialties.

## 3.3 FLASHING INSTALLATION

A. Fabricate flashing from single piece unless large pans, sumps, or other drainage shapes are required. Join flashing according to the following if required:

1. Lead Sheets: Burn joints of lead sheets 6.0-lb/sq. ft., 0.0938-inch thickness or thicker. Solder joints of lead sheets 4.0-lb/sq. ft., 0.0625-inch thickness or thinner.
2. Copper Sheets: Solder joints of copper sheets.

B. Install sheet flashing on pipes, sleeves, and specialties passing through or embedded in floors and roofs with waterproof membrane.

1. Pipe Flashing: Sleeve type, matching pipe size, with minimum length of 10 inches, and skirt or flange extending at least 8 inches around pipe.
2. Sleeve Flashing: Flat sheet, with skirt or flange extending at least 8 inches around sleeve.

3. Embedded Specialty Flashing: Flat sheet, with skirt or flange extending at least 8 inches around specialty.

C. Set flashing on floors and roofs in solid coating of bituminous cement.

D. Secure flashing into sleeve and specialty clamping ring or device.

E. Fabricate and install flashing and pans, sumps, and other drainage shapes.

3.4 PROTECTION

A. Protect drains during remainder of construction period to avoid clogging with dirt or debris and to prevent damage from traffic or construction work.

B. Place plugs in ends of uncompleted piping at end of each day or when work stops.

* * END OF SECTION**

# SECTION 22 40 00
# PLUMBING FIXTURES

## PART 1 - GENERAL

### 1.1 RELATED DOCUMENTS

A. Drawings and general provisions of the Contract, including General and Supplementary Conditions and Division 01 Specification Sections, apply to this Section.

### 1.2 SUMMARY

A. This Section includes the following conventional plumbing fixtures and related components:

1. Faucets for lavatories and sinks.
2. Flushometers.
3. Toilet seats.
4. Protective shielding guards.
5. Fixture supports.
6. Water closets.
7. Urinals.
8. Lavatories.
9. Commercial sinks.
10. Service sinks.

B. Related Sections include the following:

1. Division 10 Section "Toilet, Bath, and Laundry Accessories."
2. Division 22 Section "Domestic Water Piping Specialties" for backflow preventers, floor drains, and specialty fixtures not included in this Section.

### 1.3 DEFINITIONS

A. ABS: Acrylonitrile-butadiene-styrene plastic.

B. Accessible Fixture: Plumbing fixture that can be approached, entered, and used by people with disabilities.

C. Cast Polymer: Cast-filled-polymer-plastic material. This material includes cultured-marble and solid-surface materials.

D. Cultured Marble: Cast-filled-polymer-plastic material with surface coating.

E. Fitting: Device that controls the flow of water into or out of the plumbing fixture. Fittings specified in this Section include supplies and stops, faucets and spouts, shower heads and tub spouts, drains and tailpieces, and traps and waste pipes. Piping and general-duty valves are included where indicated.

F. FRP: Fiberglass-reinforced plastic.

G. PMMA: Polymethyl methacrylate (acrylic) plastic.

H. PVC: Polyvinyl chloride plastic.

I. Solid Surface: Nonporous, homogeneous, cast-polymer-plastic material with heat-, impact-, scratch-, and stain-resistance qualities.

## 1.4 SUBMITTALS

A. Product Data: For each type of plumbing fixture indicated. Include selected fixture and trim, fittings, accessories, appliances, appurtenances, equipment, and supports. Indicate materials and finishes, dimensions, construction details, and flow-control rates.

B. Shop Drawings: Diagram power, signal, and control wiring.

C. Operation and Maintenance Data: For plumbing fixtures to include in emergency, operation, and maintenance manuals.

D. Warranty: Special warranty specified in this Section.

## 1.5 QUALITY ASSURANCE

A. Source Limitations: Obtain plumbing fixtures, faucets, and other components of each category through one source from a single manufacturer.

1. Exception: If fixtures, faucets, or other components are not available from a single manufacturer, obtain similar products from other manufacturers specified for that category.

B. Electrical Components, Devices, and Accessories: Listed and labeled as defined in NFPA 70, Article 100, by a testing agency acceptable to authorities having jurisdiction, and marked for intended use.

C. Regulatory Requirements: Comply with requirements in ICC A117.1, "Accessible and Usable Buildings and Facilities" for plumbing fixtures for people with disabilities.

D. Regulatory Requirements: Comply with requirements in Public Law 102-486, "Energy Policy Act," about water flow and consumption rates for plumbing fixtures.

E. NSF Standard: Comply with NSF 61, "Drinking Water System Components--Health Effects," for fixture materials that will be in contact with potable water.

F. Select combinations of fixtures and trim, faucets, fittings, and other components that are compatible.

G. Comply with the following applicable standards and other requirements specified for plumbing fixtures:

1. Enameled, Cast-Iron Fixtures: ASME A112.19.1M.
2. Porcelain-Enameled, Formed-Steel Fixtures: ASME A112.19.4M.
3. Solid-Surface-Material Lavatories and Sinks: ANSI/ICPA SS-1.
4. Stainless-Steel Commercial, Handwash Sinks: NSF 2 construction.
5. Vitreous-China Fixtures: ASME A112.19.2M.
6. Water-Closet, Flush Valve, Tank Trim: ASME A112.19.5.

H. Comply with the following applicable standards and other requirements specified for lavatory and sink faucets:

1. Faucets: ASME A112.18.1.
2. Hose-Connection Vacuum Breakers: ASSE 1011.
3. Hose-Coupling Threads: ASME B1.20.7.
4. Integral, Atmospheric Vacuum Breakers: ASSE 1001.
5. NSF Potable-Water Materials: NSF 61.
6. Pipe Threads: ASME B1.20.1.
7. Sensor-Actuated Faucets and Electrical Devices: UL 1951.
8. Supply Fittings: ASME A112.18.1.
9. Brass Waste Fittings: ASME A112.18.2.

I. Comply with the following applicable standards and other requirements specified for miscellaneous fittings:

1. Atmospheric Vacuum Breakers: ASSE 1001.
2. Brass and Copper Supplies: ASME A112.18.1.
3. Manual-Operation Flushometers: ASSE 1037.
4. Plastic Tubular Fittings: ASTM F 409.
5. Brass Waste Fittings: ASME A112.18.2.
6. Sensor-Operation Flushometers: ASSE 1037 and UL 1951.

J. Comply with the following applicable standards and other requirements specified for miscellaneous components:

1. Floor Drains: ASME A112.6.3.
2. Hose-Coupling Threads: ASME B1.20.7.
3. Off-Floor Fixture Supports: ASME A112.6.1M.
4. Pipe Threads: ASME B1.20.1.
5. Plastic Toilet Seats: ANSI Z124.5.
6. Supply and Drain Protective Shielding Guards: ICC A117.1.

1.6 WARRANTY

A. Special Warranties: Manufacturer's standard form in which manufacturer agrees to repair or replace components of whirlpools that fail in materials or workmanship within specified warranty period.

1. Failures include, but are not limited to, the following:

a. Structural failures of unit shell.
b. Faulty operation of controls, blowers, pumps, heaters, and timers.
c. Deterioration of metals, metal finishes, and other materials beyond normal use.

2. Warranty Period for Commercial Applications: One year(s) from date of Substantial Completion.

1.7 EXTRA MATERIALS

A. Furnish extra materials described below that match products installed and that are packaged with protective covering for storage and identified with labels describing contents.

1. Faucet Washers and O-Rings: Equal to 10 percent of amount of each type and size installed.
2. Faucet Cartridges and O-Rings: Equal to 5 percent of amount of each type and size installed.
3. Flushometer Valve, Repair Kits: Equal to 10 percent of amount of each type installed, but no fewer than 12 of each type.
4. Provide hinged-top wood or metal box, or individual metal boxes, with separate compartments for each type and size of extra materials listed above.
5. Toilet Seats: Equal to 5 percent of amount of each type installed.

PART 2 - PRODUCTS

2.1 LAVATORY FAUCETS

A. Lavatory Faucets: as specified on contract drawings.

2.2 FLUSHOMETERS: as specified on contract drawings.

2.3 PROTECTIVE SHIELDING GUARDS

A. Protective Shielding Pipe Covers:

1. Manufacturers: Subject to compliance with requirements, provide products by one of the following:

   a. Engineered Brass Co.
   b. Insul-Tect Products Co.; a Subsidiary of MVG Molded Products.
   c. McGuire Manufacturing Co., Inc.
   d. Plumberex Specialty Products Inc.
   e. TCI Products.
   f. TRUEBRO, Inc.
   g. Zurn Plumbing Products Group; Tubular Brass Plumbing Products Operation.

2. Description: Manufactured plastic wraps for covering plumbing fixture hot- and cold-water supplies and trap and drain piping. Comply with Americans with Disabilities Act (ADA) requirements.

B. Protective Shielding Piping Enclosures:

1. Manufacturers: Subject to compliance with requirements, provide products by one of the following:

   a. TRUEBRO, Inc.

2. Description: Manufactured plastic enclosure for covering plumbing fixture hot- and cold-water supplies and trap and drain piping. Comply with ADA requirements.

## 2.4 FIXTURE SUPPORTS

A. Available Manufacturers: Subject to compliance with requirements, manufacturers offering products that may be incorporated into the Work include, but are not limited to, the following:

1. Josam Company.
2. Smith, Jay R. Mfg. Co.
3. Watts Drainage Products Inc.; a div. of Watts Industries, Inc.
4. Zurn Plumbing Products Group; Specification Drainage Operation.

B. Water-Closet Supports:

1. Description: Combination carrier designed for accessible or standard mounting height of wall-mounting, water-closet-type fixture. Include single or double, vertical or horizontal, hub-and-spigot or hubless waste fitting as required for piping arrangement; faceplates; couplings with gaskets; feet; and fixture bolts and hardware matching fixture. Include additional extension coupling, faceplate, and feet for installation in wide pipe space.

C. Support shall be Extra Heavy Duty, rated for 750 lbs.

Urinal Supports:

1. Description: Type I, urinal carrier with fixture support plates and coupling with seal and fixture bolts and hardware matching fixture for wall-mounting, urinal-type fixture. Include steel uprights with feet.
2. Accessible-Fixture Support: Include rectangular steel uprights.

D. Lavatory Supports (for wall-hung lav.):

1. Description: Type II, lavatory carrier with concealed arms and tie rod for wall-mounting, lavatory-type fixture. Include steel uprights with feet.
2. Accessible-Fixture Support: Include rectangular steel uprights.

## 2.5 WATER CLOSETS

A. Water Closets:

1. Refer to Plumbing fixture schedule on contract drawings model as indicated or a comparable product by one of the following:

   a. Crane Plumbing, L.L.C./Fiat Products.
   b. Eljer.
   c. Kohler Co.
   d. TOTO USA, Inc.

## 2.6 URINALS

A. Urinals:

1. Refer to Plumbing fixture schedule on contract drawings model as indicated or a comparable product by one of the following:

   a. Crane Plumbing, L.L.C./Fiat Products.
   b. Kohler Co.
   c. Toto USA, Inc.

2. Description: Refer to plumbing fixture schedule on contract drawings.

## 2.7 LAVATORIES

A. Wall Hung Lavatories:

1. Refer to Plumbing fixture schedule on contract drawings model as indicated or a comparable product by one of the following:

a. Eljer.
b. Kohler
c. Crane Plumbing, L.L.C./Fiat Products.
d. Toto USA, Inc.

2. Description: Refer to plumbing fixture schedule on contract drawings.

B. Countertop Lavatories: Refer to plumbing fixtures schedule on contract drawings.

1. Refer to Plumbing fixture schedule on contract drawings model as indicated or a comparable product by one of the following:

a. Eljer.
b. Kohler
c. Crane Plumbing, L.L.C./Fiat Products.
d. Toto USA, Inc.

2. Refer to architectural specifications for sink and matching solid surface countertop.
3. The plumbing contractor shall provide the countertop mounted faucet, and all required supplies, drainage piping, drain grid, and trap.

## 2.8 SERVICE BASINS

A. Square Service Basins:

1. Refer to Plumbing fixture schedule on contract drawings model as indicated or a comparable product by one of the following:

a. Acorn Engineering Company.
b. Florestone Products Co., Inc.
c. Precast Terrazzo Enterprises, Inc.
d. Stern-Williams Co., Inc.

2. Description: Flush-to-wall, floor-mounting, precast fixture with rim guard.

a. Shape: Square, 24x24 inches.
b. Height: 10 inches.
c. Tiling Flange: On two sides.
d. Rim Guard: On front top surfaces.

3. Faucet: Fiat model 830-AA wall mounted service faucet with vacuum breaker, adjustable wall brace, pail hook, and ¾” hose threads at spout outlet. 4-arm handles on 8” centers.
4. Accessories

a. Drain model #302. Dome strainer with lint basket and NPS 2 outlet.
b. Model 889CC - Mop Bracket.

c. Model 823AA - 2'-6" length of 5/8" rubber hose with female coupling and Fiat's hose bracket.
d. Model MSG-2424 Stainless Steel Wall Guards. Mount to adjacent walls

PART 3 - EXECUTION

3.1 EXAMINATION

A. Examine roughing-in of water supply and sanitary drainage and vent piping systems to verify actual locations of piping connections before plumbing fixture installation.

B. Examine cabinets, counters, floors, and walls for suitable conditions where fixtures will be installed.

C. Proceed with installation only after unsatisfactory conditions have been corrected.

3.2 INSTALLATION

A. Assemble plumbing fixtures, trim, fittings, and other components according to manufacturers' written instructions.

B. Install off-floor supports, affixed to building substrate, for wall-mounting fixtures.

1. Use carrier supports with waste fitting and seal for back-outlet fixtures.
2. Use carrier supports without waste fitting for fixtures with tubular waste piping.
3. Use chair-type carrier supports with rectangular steel uprights for accessible fixtures.

C. Install back-outlet, wall-mounting fixtures onto waste fitting seals and attach to supports.

D. Install wall-mounting fixtures with tubular waste piping attached to supports.

E. Install floor-mounting, back-outlet water closets attached to building floor substrate and wall bracket and onto waste fitting seals.

F. Install counter-mounting fixtures in and attached to casework.

G. Install fixtures level and plumb according to roughing-in drawings.

H. Install water-supply piping with stop on each supply to each fixture to be connected to water distribution piping. Attach supplies to supports or substrate within pipe spaces behind fixtures. Install stops in locations where they can be easily reached for operation.

1. Exception: Use ball, gate, or globe valves if supply stops are not specified with fixture. Valves are specified in Division 22 Section "General-Duty Valves for Plumbing Piping."

I. Install trap and tubular waste piping on drain outlet of each fixture to be directly connected to sanitary drainage system.

J. Install tubular waste piping on drain outlet of each fixture to be indirectly connected to drainage system.

K. Install flushometer valves for accessible water closets and urinals with handle mounted on wide side of compartment. Install other actuators in locations that are easy for people with disabilities to reach.

L. Install toilet seats on water closets.

M. Install faucet-spout fittings with specified flow rates and patterns in faucet spouts if faucets are not available with required rates and patterns. Include adapters if required.

N. Install water-supply flow-control fittings with specified flow rates in fixture supplies at stop valves.

O. Install faucet flow-control fittings with specified flow rates and patterns in faucet spouts if faucets are not available with required rates and patterns. Include adapters if required.

P. Install traps on fixture outlets.

1. Exception: Omit trap on fixtures with integral traps.
2. Exception: Omit trap on indirect wastes, unless otherwise indicated.

Q. Install escutcheons at piping wall ceiling penetrations in exposed, finished locations and within cabinets and millwork. Use deep-pattern escutcheons if required to conceal protruding fittings. Escutcheons are specified in Division 22 Section "Escutcheons for Plumbing Piping."

R. Seal joints between fixtures and walls, floors, and countertops using sanitary-type, one-part, mildew-resistant silicone sealant. Match sealant color to fixture color. Sealants are specified in Division 07 Section "Joint Sealants."

## 3.3 CONNECTIONS

A. Piping installation requirements are specified in other Division 22 Sections. Drawings indicate general arrangement of piping, fittings, and specialties.

B. Connect fixtures with water supplies, stops, and risers, and with traps, soil, waste, and vent piping. Use size fittings required to match fixtures.

C. Ground equipment according to Division 26 Section "Grounding and Bonding for Electrical Systems."

D. Connect wiring according to Division 26 Section "Low-Voltage Electrical Power Conductors and Cables."

## 3.4 FIELD QUALITY CONTROL

A. Verify that installed plumbing fixtures are categories and types specified for locations where installed.

B. Check that plumbing fixtures are complete with trim, faucets, fittings, and other specified components.

C. Inspect installed plumbing fixtures for damage. Replace damaged fixtures and components.

D. Test installed fixtures after water systems are pressurized for proper operation. Replace malfunctioning fixtures and components, then retest. Repeat procedure until units operate properly.

## 3.5 ADJUSTING

A. Operate and adjust faucets and controls. Replace damaged and malfunctioning fixtures, fittings, and controls.

B. Operate and adjust controls. Replace damaged and malfunctioning units and controls.

C. Adjust water pressure at faucets and flushometer valves to produce proper flow and stream.

D. Replace washers and seals of leaking and dripping faucets and stops.

## 3.6 CLEANING

A. Clean fixtures, faucets, and other fittings with manufacturers' recommended cleaning methods and materials. Do the following:

1. Remove faucet spouts and strainers, remove sediment and debris, and reinstall strainers and spouts.
2. Remove sediment and debris from drains.

B. After completing installation of exposed, factory-finished fixtures, faucets, and fittings, inspect exposed finishes and repair damaged finishes.

3.7 PROTECTION

A. Provide protective covering for installed fixtures and fittings.

B. Do not allow use of plumbing fixtures for temporary facilities unless approved in writing by Owner.

**END OF SECTION**

# SECTION 230500
# COMMON WORK RESULTS FOR HVAC

## PART 1 - GENERAL

### 1.1 RELATED DOCUMENTS

A. Drawings and general provisions of the Contract, including General and Supplementary Conditions and Division 01 Specification Sections, apply to this Section.

### 1.2 SUMMARY

A. This Section includes the following:

1. Piping materials and installation instructions common to most piping systems.
2. Transition fittings.
3. Dielectric fittings.
4. Mechanical sleeve seals.
5. Sleeves.
6. Escutcheons.
7. Grout.
8. HVAC demolition.
9. Equipment installation requirements common to equipment sections.
10. Painting and finishing.
11. Concrete bases.
12. Supports and anchorages.

### 1.3 DEFINITIONS

A. Finished Spaces: Spaces other than mechanical and electrical equipment rooms, furred spaces, pipe and duct chases, unheated spaces immediately below roof, spaces above ceilings, unexcavated spaces, crawlspaces, and tunnels.

B. Exposed, Interior Installations: Exposed to view indoors. Examples include finished occupied spaces and mechanical equipment rooms.

C. Exposed, Exterior Installations: Exposed to view outdoors or subject to outdoor ambient temperatures and weather conditions. Examples include rooftop locations.

D. Concealed, Interior Installations: Concealed from view and protected from physical contact by building occupants. Examples include above ceilings and chases.

E. Concealed, Exterior Installations: Concealed from view and protected from weather conditions and physical contact by building occupants but subject to outdoor ambient temperatures. Examples include installations within unheated shelters.

F. The following are industry abbreviations for rubber materials:

1. EPDM: Ethylene-propylene-diene terpolymer rubber.
2. NBR: Acrylonitrile-butadiene rubber.

## 1.4 SUBMITTALS

A. Product Data: For the following:

1. Transition fittings.
2. Dielectric fittings.
3. Mechanical sleeve seals.
4. Escutcheons.

B. Welding certificates.

## 1.5 QUALITY ASSURANCE

A. Steel Support Welding: Qualify processes and operators according to AWS D1.1, "Structural Welding Code--Steel."

B. Steel Pipe Welding: Qualify processes and operators according to ASME Boiler and Pressure Vessel Code: Section IX, "Welding and Brazing Qualifications."

1. Comply with provisions in ASME B31 Series, "Code for Pressure Piping."
2. Certify that each welder has passed AWS qualification tests for welding processes involved and that certification is current.

C. Electrical Characteristics for HVAC Equipment: Equipment of higher electrical characteristics may be furnished provided such proposed equipment is approved in writing and connecting electrical services, circuit breakers, and conduit sizes are appropriately modified. If minimum energy ratings or efficiencies are specified, equipment shall comply with requirements.

## 1.6 DELIVERY, STORAGE, AND HANDLING

A. Deliver pipes and tubes with factory-applied end caps. Maintain end caps through shipping, storage, and handling to prevent pipe end damage and to prevent entrance of dirt, debris, and moisture.

1.7 COORDINATION

A. Arrange for pipe spaces, chases, slots, and openings in building structure during progress of construction, to allow for HVAC installations.

B. Coordinate installation of required supporting devices and set sleeves in poured-in-place concrete and other structural components as they are constructed.

C. Coordinate requirements for access panels and doors for HVAC items requiring access that are concealed behind finished surfaces. Access panels and doors are specified in Division 08 Section "Access Doors and Frames."

D. Coordination: Coordinate construction operations included in different Sections of the Specifications to ensure efficient and orderly installation of each part of the Work. Coordinate construction operations, included in different Sections, that depend on each other for proper installation, connection, and operation.

E. Coordination: Each contractor shall coordinate its construction operations with those of other contractors and entities to ensure efficient and orderly installation of each part of the Work. Each contractor shall coordinate its operations with operations, included in different Sections, that depend on each other for proper installation, connection, and operation.

1. Schedule construction operations in sequence required to obtain the best results where installation of one part of the Work depends on installation of other components, before or after its own installation.
2. Coordinate installation of different components with other contractors to ensure maximum accessibility for required maintenance, service, and repair.
3. Make adequate provisions to accommodate items scheduled for later installation.
4. Where availability of space is limited, coordinate installation of different components to ensure maximum performance and accessibility for required maintenance, service, and repair of all components, including mechanical and electrical.

PART 2 - PRODUCTS

2.1 MANUFACTURERS

A. In other Part 2 articles where subparagraph titles below introduce lists, the following requirements apply for product selection:

1. Available Manufacturers: Subject to compliance with requirements, manufacturers offering products that may be incorporated into the Work include, but are not limited to, the manufacturers specified.
2. Manufacturers: Subject to compliance with requirements, provide products by the manufacturers specified.

## 2.2 PIPE, TUBE, AND FITTINGS

A. Refer to individual Division 23 piping Sections for pipe, tube, and fitting materials and joining methods.

B. Pipe Threads: ASME B1.20.1 for factory-threaded pipe and pipe fittings.

## 2.3 JOINING MATERIALS

A. Refer to individual Division 23 piping Sections for special joining materials not listed below.

B. Pipe-Flange Gasket Materials: Suitable for chemical and thermal conditions of piping system contents.

1. ASME B16.21, nonmetallic, flat, asbestos-free, 1/8-inch maximum thickness unless thickness or specific material is indicated.

   a. Full-Face Type: For flat-face, Class 125, cast-iron and cast-bronze flanges.
   b. Narrow-Face Type: For raised-face, Class 250, cast-iron and steel flanges.

2. AWWA C110, rubber, flat face, 1/8 inch thick, unless otherwise indicated; and full-face or ring type, unless otherwise indicated.

C. Flange Bolts and Nuts: ASME B18.2.1, carbon steel, unless otherwise indicated.

D. Solder Filler Metals: ASTM B 32, lead-free alloys. Include water-flushable flux according to ASTM B 813.

E. Brazing Filler Metals: AWS A5.8, BCuP Series, copper-phosphorus alloys for general-duty brazing, unless otherwise indicated; and AWS A5.8, BAg1, silver alloy for refrigerant piping, unless otherwise indicated.

F. Welding Filler Metals: Comply with AWS D10.12 for welding materials appropriate for wall thickness and chemical analysis of steel pipe being welded.

## 2.4 DIELECTRIC FITTINGS

A. Description: Combination fitting of copper alloy and ferrous materials with threaded, solder-joint, plain, or weld-neck end connections that match piping system materials.

B. Insulating Material: Suitable for system fluid, pressure, and temperature.

C. Dielectric Unions: Factory-fabricated, union assembly, for 250-psig minimum working pressure at 180 deg F.

1. Available Manufacturers:
   a. Central Plastics Company.
   b. Watts Industries, Inc.; Water Products Div.
   c. Zurn Industries, Inc.; Wilkins Div.

D. Dielectric Flanges: Factory-fabricated, companion-flange assembly, for 150- or 300-psig minimum working pressure as required to suit system pressures.

1. Available Manufacturers:
   a. Central Plastics Company.
   b. Epco Sales, Inc.
   c. Watts Industries, Inc.; Water Products Div.

E. Dielectric-Flange Kits: Companion-flange assembly for field assembly. Include flanges, full-face- or ring-type neoprene or phenolic gasket, phenolic or polyethylene bolt sleeves, phenolic washers, and steel backing washers.

1. Available Manufacturers:

   a. Advance Products & Systems, Inc.
   b. Calpico, Inc.
   c. Central Plastics Company.
   d. Pipeline Seal and Insulator, Inc.

2. Separate companion flanges and steel bolts and nuts shall have 150- or 300-psig minimum working pressure where required to suit system pressures.

F. Dielectric Couplings: Galvanized-steel coupling with inert and noncorrosive, thermoplastic lining; threaded ends; and 300-psig minimum working pressure at 225 deg F.

1. Available Manufacturers:

   a. Calpico, Inc.
   b. Lochinvar Corp.

G. Dielectric Nipples: Electroplated steel nipple with inert and noncorrosive, thermoplastic lining; plain, threaded, or grooved ends; and 300-psig minimum working pressure at 225 deg F.

1. Available Manufacturers:

   a. Perfection Corp.
   b. Precision Plumbing Products, Inc.
   c. Sioux Chief Manufacturing Co., Inc.
   d. Victaulic Co. of America.

## 2.5 MECHANICAL SLEEVE SEALS

A. Description: Modular sealing element unit, designed for field assembly, to fill annular space between pipe and sleeve.

1. Available Manufacturers:

   a. Advance Products & Systems, Inc.
   b. Calpico, Inc.
   c. Metraflex Co.
   d. Pipeline Seal and Insulator, Inc.

2. Sealing Elements: EPDM or NBRinterlocking links shaped to fit surface of pipe. Include type and number required for pipe material and size of pipe.
3. Pressure Plates: Carbon steel or stainless steel. Include two for each sealing element.
4. Connecting Bolts and Nuts: Carbon steel with corrosion-resistant coating or stainless steel of length required to secure pressure plates to sealing elements. Include one for each sealing element.

## 2.6 SLEEVES

A. Galvanized-Steel Sheet: 0.0239-inch minimum thickness; round tube closed with welded longitudinal joint.

B. Steel Pipe: ASTM A 53, Type E, Grade B, Schedule 40, galvanized, plain ends.

C. Cast Iron: Cast or fabricated "wall pipe" equivalent to ductile-iron pressure pipe, with plain ends and integral waterstop, unless otherwise indicated.

D. Stack Sleeve Fittings: Manufactured, cast-iron sleeve with integral clamping flange. Include clamping ring and bolts and nuts for membrane flashing.

1. Underdeck Clamp: Clamping ring with set screws.

## 2.7 ESCUTCHEONS

A. Description: Manufactured wall and ceiling escutcheons and floor plates, with an ID to closely fit around pipe, tube, and insulation of insulated piping and an OD that completely covers opening.

B. One-Piece, Deep-Pattern Type: Deep-drawn, box-shaped brass with polished chrome-plated finish.

C. One-Piece, Cast-Brass Type: With set screw.

1. Finish: Polished chrome-plated and rough brass.

D. Split-Casting, Cast-Brass Type: With concealed hinge and set screw.

1. Finish: Polished chrome-plated and rough brass.

E. One-Piece, Stamped-Steel Type: With set screw and chrome-plated finish.

F. Split-Plate, Stamped-Steel Type: With concealed hinge, set screw , and chrome-plated finish.

G. One-Piece, Floor-Plate Type: Cast-iron floor plate.

H. Split-Casting, Floor-Plate Type: Cast brass with concealed hinge and set screw.

## 2.8 GROUT

A. Description: ASTM C 1107, Grade B, nonshrink and nonmetallic, dry hydraulic-cement grout.

1. Characteristics: Post-hardening, volume-adjusting, nonstaining, noncorrosive, nongaseous, and recommended for interior and exterior applications.
2. Design Mix: 5000-psi, 28-day compressive strength.
3. Packaging: Premixed and factory packaged.

# PART 3 - EXECUTION

## 3.1 HVAC DEMOLITION

A. Refer to Division 01 Section "Cutting and Patching" and Division 02 Section "Selective Structure Demolition" for general demolition requirements and procedures.

B. Disconnect, demolish, and remove HVAC systems, equipment, and components indicated to be removed.

1. Piping to Be Removed: Remove portion of piping indicated to be removed and cap or plug remaining piping with same or compatible piping material.
2. Piping to Be Abandoned in Place: Drain piping and cap or plug piping with same or compatible piping material.
3. Ducts to Be Removed: Remove portion of ducts indicated to be removed and plug remaining ducts with same or compatible ductwork material.
4. Ducts to Be Abandoned in Place: Cap or plug ducts with same or compatible ductwork material.
5. Equipment to Be Removed: Disconnect and cap services and remove equipment.

6. Equipment to Be Removed and Reinstalled: Disconnect and cap services and remove, clean, and store equipment; when appropriate, reinstall, reconnect, and make equipment operational.
7. Equipment to Be Removed and Salvaged: Disconnect and cap services and remove equipment and deliver to Owner.

C. If pipe, insulation, or equipment to remain is damaged in appearance or is unserviceable, remove damaged or unserviceable portions and replace with new products of equal capacity and quality.

## 3.2 PIPING SYSTEMS - COMMON REQUIREMENTS

A. Install piping according to the following requirements and Division 23 Sections specifying piping systems.

B. Drawing plans, schematics, and diagrams indicate general location and arrangement of piping systems. Indicated locations and arrangements were used to size pipe and calculate friction loss, expansion, pump sizing, and other design considerations. Install piping as indicated unless deviations to layout are approved on Coordination Drawings.

C. Install piping in concealed locations, unless otherwise indicated and except in equipment rooms and service areas.

D. Install piping indicated to be exposed and piping in equipment rooms and service areas at right angles or parallel to building walls. Diagonal runs are prohibited unless specifically indicated otherwise.

E. Install piping above accessible ceilings to allow sufficient space for ceiling panel removal.

F. Install piping to permit valve servicing.

G. Install piping at indicated slopes.

H. Install piping free of sags and bends.

I. Install fittings for changes in direction and branch connections.

J. Install piping to allow application of insulation.

K. Select system components with pressure rating equal to or greater than system operating pressure.

L. Install escutcheons for penetrations of walls, ceilings, and floors according to the following:

1. New Piping:

a. Piping with Fitting or Sleeve Protruding from Wall: One-piece, deep-pattern type.
b. Chrome-Plated Piping: One-piece, cast-brass type with polished chrome-plated finish.
c. Insulated Piping: One-piece, stamped-steel type with spring clips.
d. Bare Piping at Wall and Floor Penetrations in Finished Spaces: One-piece, cast-brass type with polished chrome-plated finish.
e. Bare Piping at Ceiling Penetrations in Finished Spaces: One-piece , cast-brass type with polished chrome-plated finish.
f. Bare Piping in Unfinished Service Spaces: One-piece, cast-brass type with rough-brass finish.
g. Bare Piping in Equipment Rooms: One-piece, cast-brass type.
h. Bare Piping at Floor Penetrations in Equipment Rooms: One-piece, floor-plate type.

2. Existing Piping: Use the following:

a. Chrome-Plated Piping: Split-casting, cast-brass type with chrome-plated finish.

b. Insulated Piping: Split-plate, stamped-steel type with concealed hinge and spring clips.
c. Bare Piping at Wall and Floor Penetrations in Finished Spaces: Split-casting, cast-brass type with chrome-plated finish.
d. Bare Piping at Ceiling Penetrations in Finished Spaces: Split-casting, cast-brass type with chrome-plated finish.
e. Bare Piping in Unfinished Service Spaces: Split-casting, cast-brass type with rough-brass finish.
f. Bare Piping in Equipment Rooms: Split-casting, cast-brass type.
g. Bare Piping at Floor Penetrations in Equipment Rooms: Split-casting, floor-plate type.

M. Sleeves are not required for core-drilled holes.

N. Permanent sleeves are not required for holes formed by removable PE sleeves.

O. Install sleeves for pipes passing through concrete and masonry walls and concrete floor and roof slabs and gypsum board walls.

1. Cut sleeves to length for mounting flush with both surfaces.

a. Exception: Extend sleeves installed in floors of mechanical equipment areas or other wet areas 2 inches above finished floor level. Extend cast-iron sleeve fittings below floor slab as required to secure clamping ring if ring is specified.

2. Install sleeves in new walls and slabs as new walls and slabs are constructed.

3. Install sleeves that are large enough to provide 1/4-inch annular clear space between sleeve and pipe or pipe insulation. Use the following sleeve materials:

   a. Steel Pipe Sleeves: For pipes smaller than NPS 6.
   b. Steel Sheet Sleeves: For pipes NPS 6 and larger, penetrating gypsum-board partitions.
   c. Stack Sleeve Fittings: For pipes penetrating floors with membrane waterproofing. Secure flashing between clamping flanges. Install section of cast-iron soil pipe to extend sleeve to 2 inches above finished floor level. Refer to Division 07 Section "Sheet Metal Flashing and Trim" for flashing.

      1) Seal space outside of sleeve fittings with grout.

4. Except for underground wall penetrations, seal annular space between sleeve and pipe or pipe insulation, using joint sealants appropriate for size, depth, and location of joint. Refer to Division 07 Section "Joint Sealants" for materials and installation.

P. Aboveground, Exterior-Wall Pipe Penetrations: Seal penetrations using sleeves and mechanical sleeve seals. Select sleeve size to allow for 1-inch annular clear space between pipe and sleeve for installing mechanical sleeve seals.

1. Install steel pipe for sleeves smaller than 6 inches in diameter.
2. Install cast-iron "wall pipes" for sleeves 6 inches and larger in diameter.
3. Mechanical Sleeve Seal Installation: Select type and number of sealing elements required for pipe material and size. Position pipe in center of sleeve. Assemble mechanical sleeve seals and install in annular space between pipe and sleeve. Tighten bolts against pressure plates that cause sealing elements to expand and make watertight seal.

Q. Underground, Exterior-Wall Pipe Penetrations: Install cast-iron "wall pipes" for sleeves. Seal pipe penetrations using mechanical sleeve seals. Select sleeve size to allow for 1-inch annular clear space between pipe and sleeve for installing mechanical sleeve seals.

1. Mechanical Sleeve Seal Installation: Select type and number of sealing elements required for pipe material and size. Position pipe in center of sleeve. Assemble mechanical sleeve seals and install in annular space between pipe and sleeve. Tighten bolts against pressure plates that cause sealing elements to expand and make watertight seal.

R. Fire-Barrier Penetrations: Maintain indicated fire rating of walls, partitions, ceilings, and floors at pipe penetrations. Seal pipe penetrations with firestop materials. Refer to Division 07 Section "Penetration Firestopping" for materials.

S. Verify final equipment locations for roughing-in.

T. Refer to equipment specifications in other Sections of these Specifications for roughing-in requirements.

## 3.3 PIPING JOINT CONSTRUCTION

A. Join pipe and fittings according to the following requirements and Division 23 Sections specifying piping systems.

B. Ream ends of pipes and tubes and remove burrs. Bevel plain ends of steel pipe.

C. Remove scale, slag, dirt, and debris from inside and outside of pipe and fittings before assembly.

D. Soldered Joints: Apply ASTM B 813, water-flushable flux, unless otherwise indicated, to tube end. Construct joints according to ASTM B 828 or CDA's "Copper Tube Handbook," using lead-free solder alloy complying with ASTM B 32.

E. Brazed Joints: Construct joints according to AWS's "Brazing Handbook," "Pipe and Tube" Chapter, using copper-phosphorus brazing filler metal complying with AWS A5.8.

F. Threaded Joints: Thread pipe with tapered pipe threads according to ASME B1.20.1. Cut threads full and clean using sharp dies. Ream threaded pipe ends to remove burrs and restore full ID. Join pipe fittings and valves as follows:

1. Apply appropriate tape or thread compound to external pipe threads unless dry seal threading is specified.
2. Damaged Threads: Do not use pipe or pipe fittings with threads that are corroded or damaged. Do not use pipe sections that have cracked or open welds.

G. Welded Joints: Construct joints according to AWS D10.12, using qualified processes and welding operators according to Part 1 "Quality Assurance" Article.

H. Flanged Joints: Select appropriate gasket material, size, type, and thickness for service application. Install gasket concentrically positioned. Use suitable lubricants on bolt threads.

## 3.4 PIPING CONNECTIONS

A. Make connections according to the following, unless otherwise indicated:

1. Install unions, in piping NPS 2 and smaller, adjacent to each valve and at final connection to each piece of equipment.
2. Install flanges, in piping NPS 2-1/2 and larger, adjacent to flanged valves and at final connection to each piece of equipment.

3. Dry Piping Systems: Install dielectric unions and flanges to connect piping materials of dissimilar metals.
4. Wet Piping Systems: Install dielectric coupling and nipple fittings to connect piping materials of dissimilar metals.

## 3.5 EQUIPMENT INSTALLATION - COMMON REQUIREMENTS

A. Install equipment to allow maximum possible headroom unless specific mounting heights are not indicated.

B. Install equipment level and plumb, parallel and perpendicular to other building systems and components in exposed interior spaces, unless otherwise indicated.

C. Install HVAC equipment to facilitate service, maintenance, and repair or replacement of components. Connect equipment for ease of disconnecting, with minimum interference to other installations. Extend grease fittings to accessible locations.

D. Install equipment to allow right of way for piping installed at required slope.

## 3.6 PAINTING

A. Painting of HVAC systems, equipment, and components is specified in Division 09 Sections "Interior Painting" and "Exterior Painting."

B. Damage and Touchup: Repair marred and damaged factory-painted finishes with materials and procedures to match original factory finish.

## 3.7 CONCRETE BASES

A. Concrete Bases: Anchor equipment to concrete base according to equipment manufacturer's written instructions and according to seismic codes at Project.

1. Construct concrete bases of dimensions indicated, but not less than 4 inches larger in both directions than supported unit.
2. Install dowel rods to connect concrete base to concrete floor. Unless otherwise indicated, install dowel rods on 18-inch centers around the full perimeter of the base.
3. Install epoxy-coated anchor bolts for supported equipment that extend through concrete base, and anchor into structural concrete floor.
4. Place and secure anchorage devices. Use supported equipment manufacturer's setting drawings, templates, diagrams, instructions, and directions furnished with items to be embedded.
5. Install anchor bolts to elevations required for proper attachment to supported equipment.

6. Install anchor bolts according to anchor-bolt manufacturer's written instructions.
7. Use 3000-psi, 28-day compressive-strength concrete and reinforcement.

## 3.8 ERECTION OF METAL SUPPORTS AND ANCHORAGES

A. Refer to Division 05 Section "Metal Fabrications" for structural steel.

B. Cut, fit, and place miscellaneous metal supports accurately in location, alignment, and elevation to support and anchor HVAC materials and equipment.

C. Field Welding: Comply with AWS D1.1.

## 3.9 GROUTING

A. Mix and install grout for HVAC equipment base bearing surfaces, pump and other equipment base plates, and anchors.

B. Clean surfaces that will come into contact with grout.

C. Provide forms as required for placement of grout.

D. Avoid air entrapment during placement of grout.

E. Place grout, completely filling equipment bases.

F. Place grout on concrete bases and provide smooth bearing surface for equipment.

G. Place grout around anchors.

H. Cure placed grout.

**END OF SECTION**

# SECTION 230513
# COMMON MOTOR REQUIREMENTS FOR HVAC EQUIPMENT

## PART 1 - GENERAL

### 1.1 RELATED DOCUMENTS

A. Drawings and general provisions of the Contract, including General and Supplementary Conditions and Division 01 Specification Sections, apply to this Section.

### 1.2 SUMMARY

A. Section includes general requirements for single-phase and polyphase, general-purpose, horizontal, small and medium, squirrel-cage induction motors for use on ac power systems up to 600 V and installed at equipment manufacturer's factory or shipped separately by equipment manufacturer for field installation.

### 1.3 COORDINATION

A. Coordinate features of motors, installed units, and accessory devices to be compatible with the following:

1. Motor controllers.
2. Torque, speed, and horsepower requirements of the load.
3. Ratings and characteristics of supply circuit and required control sequence.
4. Ambient and environmental conditions of installation location.

## PART 2 - PRODUCTS

### 2.1 GENERAL MOTOR REQUIREMENTS

A. Comply with requirements in this Section except when stricter requirements are specified in HVAC equipment schedules or Sections.

B. Comply with NEMA MG 1 unless otherwise indicated.

C. Comply with IEEE 841 for severe-duty motors.

## 2.2 MOTOR CHARACTERISTICS

A. Duty: Continuous duty at ambient temperature of 40 deg C and at altitude of 3300 feet above sea level.

B. Capacity and Torque Characteristics: Sufficient to start, accelerate, and operate connected loads at designated speeds, at installed altitude and environment, with indicated operating sequence, and without exceeding nameplate ratings or considering service factor.

## 2.3 POLYPHASE MOTORS

A. Description: NEMA MG 1, Design B, medium induction motor.

B. Efficiency: Energy efficient, as defined in NEMA MG 1.

C. Service Factor: 1.15.

D. Multispeed Motors: Variable torque.

1. For motors with 2:1 speed ratio, consequent pole, single winding.
2. For motors with other than 2:1 speed ratio, separate winding for each speed.

E. Multispeed Motors: Separate winding for each speed.

F. Rotor: Random-wound, squirrel cage.

G. Bearings: Regreasable, shielded, antifriction ball bearings suitable for radial and thrust loading.

H. Temperature Rise: Match insulation rating.

I. Insulation: Class F.

J. Code Letter Designation:

1. Motors 15 HP and Larger: NEMA starting Code F or Code G.
2. Motors Smaller than 15 HP: Manufacturer's standard starting characteristic.

K. Enclosure Material: Cast iron for motor frame sizes 324T and larger; rolled steel for motor frame sizes smaller than 324T.

## 2.4 POLYPHASE MOTORS WITH ADDITIONAL REQUIREMENTS

A. Motors Used with Reduced-Voltage and Multispeed Controllers: Match wiring

connection requirements for controller with required motor leads. Provide terminals in motor terminal box, suited to control method.

B. Motors Used with Variable Frequency Controllers: Ratings, characteristics, and features coordinated with and approved by controller manufacturer.

1. Windings: Copper magnet wire with moisture-resistant insulation varnish, designed and tested to resist transient spikes, high frequencies, and short time rise pulses produced by pulse-width modulated inverters.

2. Energy- and Premium-Efficient Motors: Class B temperature rise; Class F insulation.
3. Inverter-Duty Motors: Class F temperature rise; Class H insulation.
4. Thermal Protection: Comply with NEMA MG 1 requirements for thermally protected motors.

C. Severe-Duty Motors: Comply with IEEE 841, with 1.15 minimum service factor.

## 2.5 SINGLE-PHASE MOTORS

A. Motors larger than 1/20 hp shall be one of the following, to suit starting torque and requirements of specific motor application:

1. Permanent-split capacitor.
2. Split phase.
3. Capacitor start, inductor run.
4. Capacitor start, capacitor run.

B. Multispeed Motors: Variable-torque, permanent-split-capacitor type.

C. Bearings: Pre-lubricated, antifriction ball bearings or sleeve bearings suitable for radial and thrust loading.

D. Motors 1/20 HP and Smaller: Shaded-pole type.

E. Thermal Protection: Internal protection to automatically open power supply circuit to motor when winding temperature exceeds a safe value calibrated to temperature rating of motor insulation. Thermal-protection device shall automatically reset when motor temperature returns to normal range.

**END OF SECTION**

# SECTION 230517
# SLEEVES AND SLEEVE SEALS FOR HVAC PIPING

## PART 1 - GENERAL

### 1.1 RELATED DOCUMENTS

A. Drawings and general provisions of the Contract, including General and Supplementary Conditions and Division 01 Specification Sections, apply to this Section.

### 1.2 SUMMARY

A. Section Includes:

1. Sleeves.
2. Stack-sleeve fittings.
3. Sleeve-seal systems.
4. Sleeve-seal fittings.
5. Grout.

### 1.3 SUBMITTALS

A. Product Data: For each type of product indicated.

## PART 2 - PRODUCTS

### 2.1 SLEEVES

A. Cast-Iron Wall Pipes: Cast or fabricated of cast or ductile iron and equivalent to ductile-iron pressure pipe, with plain ends and integral waterstop unless otherwise indicated.

B. Galvanized-Steel Wall Pipes: ASTM A 53/A 53M, Schedule 40, with plain ends and welded steel collar; zinc coated.

C. Galvanized-Steel-Pipe Sleeves: ASTM A 53/A 53M, Type E, Grade B, Schedule 40, zinc coated, with plain ends.

D. Galvanized-Steel-Sheet Sleeves: 0.0239-inch minimum thickness; round tube closed with welded longitudinal joint.

E. Molded-PE or -PP Sleeves: Removable, tapered-cup shaped, and smooth outer surface with nailing flange for attaching to wooden forms.

## 2.2 STACK-SLEEVE FITTINGS

A. Manufacturers: Subject to compliance with requirements, available manufacturers offering products that may be incorporated into the Work include, but are not limited to, the following:

1. Smith, Jay R. Mfg. Co.
2. Zurn Specification Drainage Operation; Zurn Plumbing Products Group.

B. Description: Manufactured, cast-iron sleeve with integral clamping flange. Include clamping ring, bolts, and nuts for membrane flashing.

1. Underdeck Clamp: Clamping ring with setscrews.

## 2.3 SLEEVE-SEAL SYSTEMS

A. Manufacturers: Subject to compliance with requirements, available manufacturers offering products that may be incorporated into the Work include, but are not limited to, the following:

1. Advance Products & Systems, Inc
2. CALPICO, Inc.
3. Metraflex Company (The).

B. Description: Modular sealing-element unit, designed for field assembly, for filling annular space between piping and sleeve.

1. Sealing Elements: EPDM-rubber or NBR interlocking links shaped to fit surface of pipe. Include type and number required for pipe material and size of pipe.
2. Pressure Plates: Carbon steel or Stainless steel.
3. Connecting Bolts and Nuts: Carbon steel, with corrosion-resistant coating, or Stainless steel of length required to secure pressure plates to sealing elements.

## 2.4 SLEEVE-SEAL FITTINGS

A. Manufacturers: Subject to compliance with requirements, provide products by one of the following available manufacturers offering products that may be incorporated into the Work include, but are not limited to, the following:

1. Presealed Systems.

B. Description: Manufactured plastic, sleeve-type, waterstop assembly made for

imbedding in concrete slab or wall. Unit has plastic or rubber waterstop collar with center opening to match piping OD.

2.5 GROUT

A. Standard: ASTM C 1107/C 1107M, Grade B, post-hardening and volume-adjusting, dry, hydraulic-cement grout.

B. Characteristics: Nonshrink; recommended for interior and exterior applications.

C. Design Mix: 5000-psi, 28-day compressive strength.

D. Packaging: Premixed and factory packaged.

PART 3 - EXECUTION

3.1 SLEEVE INSTALLATION

A. Install sleeves for piping passing through penetrations in floors, partitions, roofs, and walls.

B. For sleeves that will have sleeve-seal system installed, select sleeves of size large enough to provide 1-inch annular clear space between piping and concrete slabs and walls.

1. Sleeves are not required for core-drilled holes.

C. Install sleeves in concrete floors, concrete roof slabs, and concrete walls as new slabs and walls are constructed.

1. Permanent sleeves are not required for holes in slabs formed by molded-PE or -PP sleeves.
2. Cut sleeves to length for mounting flush with both surfaces.

a. Exception: Extend sleeves installed in floors of mechanical equipment areas or other wet areas 2 inches above finished floor level.

3. Using grout, seal the space outside of sleeves in slabs and walls without sleeve-seal system.

D. Install sleeves for pipes passing through interior partitions.

1. Cut sleeves to length for mounting flush with both surfaces.
2. Install sleeves that are large enough to provide 1/4-inch annular clear space between sleeve and pipe or pipe insulation.

3. Seal annular space between sleeve and piping or piping insulation; use joint sealants appropriate for size, depth, and location of joint. Comply with requirements for sealants specified in Division 07 Section "Joint Sealants."

E. Fire-Barrier Penetrations: Maintain indicated fire rating of walls, partitions, ceilings, and floors at pipe penetrations. Seal pipe penetrations with firestop materials. Comply with requirements for firestopping specified in Division 07 Section "Penetration Firestopping"

3.2 STACK-SLEEVE-FITTING INSTALLATION

A. Install stack-sleeve fittings in new slabs as slabs are constructed.

1. Install fittings that are large enough to provide 1/4-inch annular clear space between sleeve and pipe or pipe insulation.
2. Secure flashing between clamping flanges for pipes penetrating floors with membrane waterproofing. Comply with requirements for flashing specified in Division 07 Section "Sheet Metal Flashing and Trim."
3. Install section of cast-iron soil pipe to extend sleeve to 2 inches above finished floor level.
4. Extend cast-iron sleeve fittings below floor slab as required to secure clamping ring if ring is specified.
5. Using grout, seal the space around outside of stack-sleeve fittings.

B. Fire-Barrier Penetrations: Maintain indicated fire rating of floors at pipe penetrations. Seal pipe penetrations with firestop materials. Comply with requirements for firestopping specified in Division 07 Section "Penetration Firestopping."

3.3 SLEEVE-SEAL-SYSTEM INSTALLATION

A. Install sleeve-seal systems in sleeves in exterior concrete walls and slabs-on-grade at service piping entries into building.

B. Select type, size, and number of sealing elements required for piping material and size and for sleeve ID or hole size. Position piping in center of sleeve. Center piping in penetration, assemble sleeve-seal system components, and install in annular space between piping and sleeve. Tighten bolts against pressure plates that cause sealing elements to expand and make a watertight seal.

3.4 SLEEVE-SEAL-FITTING INSTALLATION

A. Install sleeve-seal fittings in new walls and slabs as they are constructed.

B. Assemble fitting components of length to be flush with both surfaces of concrete slabs and walls. Position waterstop flange to be centered in concrete slab or wall.

C. Secure nailing flanges to concrete forms.

D. Using grout, seal the space around outside of sleeve-seal fittings.

3.5 SLEEVE AND SLEEVE-SEAL SCHEDULE

A. Use sleeves and sleeve seals for the following piping-penetration applications:

1. Exterior Concrete Walls above Grade:

   a. Piping Smaller Than NPS 6 : Cast-iron wall sleeves Galvanized-steel wall sleeves or Galvanized-steel-pipe sleeves.

   b. Piping NPS 6 and Larger: Cast-iron wall sleeves, Galvanized-steel wall sleeves or Galvanized-steel-pipe sleeves.

2. Exterior Concrete Walls below Grade:

   a. Piping Smaller Than NPS 6: Cast-iron wall sleeves with sleeve-seal system Galvanized-steel wall sleeves with sleeve-seal system Galvanized-steel-pipe sleeves with sleeve-seal system or Sleeve-seal fittings.

      1) Select sleeve size to allow for 1-inch annular clear space between piping and sleeve for installing sleeve-seal system.

   b. Piping NPS 6 and Larger: Cast-iron wall sleeves with sleeve-seal system or Galvanized-steel-pipe sleeves with sleeve-seal system.

      1) Select sleeve size to allow for 1-inch annular clear space between piping and sleeve for installing sleeve-seal system.

3. Concrete Slabs-on-Grade:

   a. Piping Smaller Than NPS 6: Cast-iron wall sleeves with sleeve-seal system, Galvanized-steel wall sleeves with sleeve-seal system, Galvanized-steel-pipe sleeves with sleeve-seal system or Sleeve- seal fittings.

      1) Select sleeve size to allow for 1-inch annular clear space between piping and sleeve for installing sleeve-seal system.

   b. Piping NPS 6 and Larger: Cast-iron wall sleeves with sleeve-seal system, Galvanized-steel wall sleeves with sleeve-seal system, or Galvanized-steel-pipe sleeves with sleeve-seal system or Galvanized-steel-pipe sleeves.
      1) Select sleeve size to allow for 1-inch annular clear space between piping and sleeve for installing sleeve-seal system.

4. Concrete Slabs above Grade:

a. Piping Smaller Than NPS 6: or Galvanized-steel-pipe sleeves Stack-sleeve fittings Sleeve-seal fittings.
b. Piping NPS 6 and Larger: Galvanized-steel-pipe sleeves or Stack-sleeve fittings.

5. Interior Partitions:
   a. Piping Smaller Than NPS 6: Galvanized-steel-pipe sleeves.
   b. Piping NPS 6 and Larger: Galvanized-steel-sheet sleeves.

**END OF SECTION**

# SECTION 230518
# ESCUTCHEONS FOR HVAC PIPING

## PART 1 - GENERAL

### 1.1 RELATED DOCUMENTS

A. Drawings and general provisions of the Contract, including General and Supplementary Conditions and Division 01 Specification Sections, apply to this Section.

### 1.2 SUMMARY

A. Section Includes:

1. Escutcheons.
2. Floor plates.

### 1.3 SUBMITTALS

A. Product Data: For each type of product indicated.

## PART 2 - PRODUCTS

### 2.1 ESCUTCHEONS

A. One-Piece, Cast-Brass Type: With polished, chrome-plated and rough-brass finish and setscrew fastener.

B. One-Piece, Deep-Pattern Type: Deep-drawn, box-shaped brass with chrome-plated finish and spring-clip fasteners.

C. One-Piece, Stamped-Steel Type: With chrome-plated finish and spring-clip fasteners.

D. Split-Casting Brass Type: With polished, chrome-plated and rough-brass finish and with concealed hinge and setscrew.

E. Split-Plate, Stamped-Steel Type: With chrome-plated finish, concealed and exposed-rivet hinge, and spring-clip fasteners.

## 2.2 FLOOR PLATES

A. One-Piece Floor Plates: Cast-iron flange with holes for fasteners.

B. Split-Casting Floor Plates: Cast brass with concealed hinge.

# PART 3 - EXECUTION

## 3.1 INSTALLATION

A. Install escutcheons for piping penetrations of walls, ceilings, and finished floors.

B. Install escutcheons with ID to closely fit around pipe, tube, and insulation of piping and with OD that completely covers opening.

1. Escutcheons for New Piping:

   a. Piping with Fitting or Sleeve Protruding from Wall: One-piece, deep-pattern type.
   b. Chrome-Plated Piping: One-piece, cast-brass type with polished, chrome-plated finish.
   c. Insulated Piping: One-piece, stamped-steel type or split-plate, stamped-steel type with concealed hinge.
   d. Bare Piping at Wall and Floor Penetrations in Finished Spaces: One-piece, cast-brass type with polished, chrome-plated finish.
   e. Bare Piping at Ceiling Penetrations in Finished Spaces: One-piece, cast-brass type with polished, chrome-plated finish.
   f. Bare Piping in Unfinished Service Spaces: One-piece, cast-brass type with rough-brass finish.
   g. Bare Piping in Equipment Rooms: One-piece, cast-brass type with rough-brass finish.

2. Escutcheons for Existing Piping:

   a. Chrome-Plated Piping: Split-casting brass type with polished, chrome-plated finish.
   b. Insulated Piping: Split-plate, stamped-steel type with concealed hinge.
   c. Bare Piping at Wall and Floor Penetrations in Finished Spaces: Split-casting brass type with polished, chrome-plated finish.
   d. Bare Piping at Ceiling Penetrations in Finished Spaces: Split-casting brass type with polished, chrome-plated finish.
   e. Bare Piping in Unfinished Service Spaces: Split-casting brass type with rough-brass finish.
   f. Bare Piping in Equipment Rooms: Split-casting brass type with rough-brass finish.

C. Install floor plates for piping penetrations of equipment-room floors.

D. Install floor plates with ID to closely fit around pipe, tube, and insulation of piping and with OD that completely covers opening.

1. New Piping: One-piece, floor-plate type.

2. Existing Piping: Split-casting, floor-plate type.

3.2 FIELD QUALITY CONTROL

A. Replace broken and damaged escutcheons and floor plates using new materials.

* * END OF SECTION**

# SECTION 230519
# METERS AND GAGES FOR HVAC PIPING

## PART 1 - GENERAL

### 1.1 RELATED DOCUMENTS

A. Drawings and general provisions of the Contract, including General and Supplementary Conditions and Division 01 Specification Sections, apply to this Section.

### 1.2 SUMMARY

A. Section Includes:

1. Bimetallic-actuated thermometers.
2. Filled-system thermometers.
3. Liquid-in-glass thermometers.
4. Thermowells.
5. Dial-type pressure gages.
6. Gage attachments.
7. Test plugs.
8. Test-plug kits.

B. Related Sections:

1. Division 23 Section "Facility Natural-Gas Piping" for gas meters.

### 1.3 SUBMITTALS

A. Product Data: For each type of product indicated.

B. Product Certificates: For each type of meter and gage, from manufacturer.

C. Operation and Maintenance Data: For meters and gages to include in operation and maintenance manuals.

## PART 2 - PRODUCTS

### 2.1 BIMETALLIC-ACTUATED THERMOMETERS

A. Manufacturers: Subject to compliance with requirements, available manufacturers offering products that may be incorporated into the Work include, but are not limited to,

the following:

1. Trerice, H. O. Co.
2. Watts Regulator Co.; a div. of Watts Water Technologies, Inc.
3. Weiss Instruments, Inc.

B. Standard: ASME B40.200.

C. Case: Liquid-filled and sealed type(s); stainless steel with 3-inch nominal diameter.

D. Dial: Nonreflective aluminum with permanently etched scale markings and scales in deg F.

E. Connector Type(s): Union joint, adjustable angle, with unified-inch screw threads.

F. Connector Size: 1/2 inch, with ASME B1.1 screw threads.

G. Stem: 0.25 or 0.375 inch in diameter; stainless steel.

H. Window: Plain glass.

I. Ring: Stainless steel.

J. Element: Bimetal coil.

K. Pointer: Dark-colored metal.

L. Accuracy: Plus or minus 1 percent of scale range.

## 2.2 FILLED-SYSTEM THERMOMETERS

A. Direct-Mounted, Metal-Case, Vapor-Actuated Thermometers:

1. Manufacturers: Subject to compliance with requirements, available manufacturers offering products that may be incorporated into the Work include, but are not limited to, the following:

   a. Ashcroft Inc.
   b. Trerice, H. O. Co.
   c. Weiss Instruments, Inc.

2. Standard: ASME B40.200.
3. Case: Sealed type, cast aluminum or drawn steel; 5-inch nominal diameter.
4. Element: Bourdon tube or other type of pressure element.
5. Movement: Mechanical, dampening type, with link to pressure element and connection to pointer.
6. Dial: Nonreflective aluminum with permanently etched scale markings graduated in deg F.

7. Pointer: Dark-colored metal.
8. Window: Glass.
9. Ring: Stainless steel.
10. Connector Type(s): Union joint, adjustable, 180 degrees in vertical plane, 360 degrees in horizontal plane, with locking device; with ASME B1.1 screw threads.
11. Thermal System: Liquid-filled bulb in copper-plated steel, aluminum, or brass stem and of length to suit installation.

    a. Design for Thermowell Installation: Bare stem.

12. Accuracy: Plus or minus 1 percent of scale range.

## 2.3 LIQUID-IN-GLASS THERMOMETERS

A. Metal-Case, Industrial-Style, Liquid-in-Glass Thermometers:

1. Manufacturers: Subject to compliance with requirements, available manufacturers offering products that may be incorporated into the Work include, but are not limited to, the following:

    a. Flo Fab Inc.
    b. Trerice, H. O. Co.
    c. Weiss Instruments, Inc.

2. Standard: ASME B40.200.
3. Case: Cast aluminum; 9-inch nominal size unless otherwise indicated.
4. Case Form: Adjustable angle unless otherwise indicated.
5. Tube: Glass with magnifying lens and blue or red organic liquid.
6. Tube Background: Nonreflective aluminum with permanently etched scale markings graduated in deg F.
7. Window: Glass.
8. Stem: Aluminum and of length to suit installation.
    a. Design for Thermowell Installation: Bare stem.

9. Connector: 1-1/4 inches, with ASME B1.1 screw threads.
10. Accuracy: Plus or minus 1 percent of scale range or one scale division, to a maximum of 1.5 percent of scale range.

## 2.4 THERMOWELLS

A. Thermowells:

1. Standard: ASME B40.200.
2. Description: Pressure-tight, socket-type fitting made for insertion into piping tee fitting.
3. Material for Use with Copper Tubing: CNR or CUNI.
4. Material for Use with Steel Piping: CRES.

5. Type: Stepped shank unless straight or tapered shank is indicated.
6. External Threads: NPS 1/2, NPS 3/4, or NPS 1, ASME B1.20.1 pipe threads.
7. Internal Threads: 1/2, 3/4, and 1 inch, with ASME B1.1 screw threads.
8. Bore: Diameter required to match thermometer bulb or stem.
9. Insertion Length: Length required to match thermometer bulb or stem.
10. Lagging Extension: Include on thermowells for insulated piping and tubing.
11. Bushings: For converting size of thermowell's internal screw thread to size of thermometer connection.

B. Heat-Transfer Medium: Mixture of graphite and glycerin.

## 2.5 PRESSURE GAGES

A. Direct-Mounted, Metal-Case, Dial-Type Pressure Gages:

1. Manufacturers: Subject to compliance with requirements, available manufacturers offering products that may be incorporated into the Work include, but are not limited to, the following:

   a. Trerice, H. O. Co.
   b. Watts Regulator Co.; a div. of Watts Water Technologies, Inc.
   c. Weiss Instruments, Inc.

2. Standard: ASME B40.100.
3. Case: Liquid-filled type(s); cast aluminum or drawn steel; 6-inch nominal diameter.
4. Pressure-Element Assembly: Bourdon tube unless otherwise indicated.
5. Pressure Connection: Brass, with NPS 1/4, ASME B1.20.1 pipe threads and bottom-outlet type unless back-outlet type is indicated.
6. Movement: Mechanical, with link to pressure element and connection to pointer.
7. Dial: Nonreflective aluminum with permanently etched scale markings graduated in psi.
8. Pointer: Dark-colored metal.
9. Window: Glass.
10. Ring: Stainless steel.
11. Accuracy: Grade A, plus or minus 1 percent of middle half of scale range.

## 2.6 GAGE ATTACHMENTS

A. Snubbers: ASME B40.100, brass; with NPS 1/4, ASME B1.20.1 pipe threads and piston-type surge-dampening device. Include extension for use on insulated piping.

B. Siphons: Loop-shaped section of brass pipe with NPS 1/4 pipe threads.

C. Valves: Brass or stainless-steel needle, with NPS 1/4, ASME B1.20.1 pipe threads.

## 2.7 TEST PLUGS

A. Manufacturers: Subject to compliance with requirements, available manufacturers offering products that may be incorporated into the Work include, but are not limited to, the following:

1. Trerice, H. O. Co.
2. Watts Regulator Co.; a div. of Watts Water Technologies, Inc.
3. Weiss Instruments, Inc.

B. Description: Test-station fitting made for insertion into piping tee fitting.

C. Body: Brass or stainless steel with core inserts and gasketed and threaded cap. Include extended stem on units to be installed in insulated piping.

D. Thread Size: NPS 1/4, ASME B1.20.1 pipe thread.

E. Minimum Pressure and Temperature Rating: 500 psig at 200 deg F.

F. Core Inserts: EPDM self-sealing rubber.

## 2.8 TEST-PLUG KITS

A. Manufacturers: Subject to compliance with requirements, available manufacturers offering products that may be incorporated into the Work include, but are not limited to, the following:

1. Trerice, H. O. Co.
2. Watts Regulator Co.; a div. of Watts Water Technologies, Inc.
3. Weiss Instruments, Inc.

B. Furnish one test-plug kit(s) containing one thermometer(s), one pressure gage and adapter, and carrying case. Thermometer sensing elements, pressure gage, and adapter probes shall be of diameter to fit test plugs and of length to project into piping.

C. Low-Range Thermometer: Small, bimetallic insertion type with 1- to 2-inch- diameter dial and tapered-end sensing element. Dial range shall be at least 25 to 125 deg F.

D. High-Range Thermometer: Small, bimetallic insertion type with 1- to 2-inch- diameter dial and tapered-end sensing element. Dial range shall be at least 0 to 220 deg F.

E. Pressure Gage: Small, Bourdon-tube insertion type with 2- to 3-inch- diameter dial and probe. Dial range shall be at least 0 to 200 psig.

F. Carrying Case: Metal or plastic, with formed instrument padding.

PART 3 - EXECUTION

3.1 INSTALLATION

A. Install thermowells with socket extending to center of pipe and in vertical position in piping tees.

B. Install thermowells of sizes required to match thermometer connectors. Include bushings if required to match sizes.

C. Install thermowells with extension on insulated piping.

D. Fill thermowells with heat-transfer medium.

E. Install direct-mounted thermometers in thermowells and adjust vertical and tilted positions.

F. Install direct-mounted pressure gages in piping tees with pressure gage located on pipe at the most readable position.

G. Install valve and snubber in piping for each pressure gage for fluids (except steam).

H. Install test plugs in piping tees.

I. Install connection fittings in accessible locations for attachment to portable indicators.

J. Install thermometers in the following locations:

1. Inlet and outlet of each hydronic boiler.
2. Two inlets and two outlets of each hydronic heat exchanger.

K. Install pressure gages in the following locations:

1. Discharge of each pressure-reducing valve.
2. Suction and discharge of each pump.

3.2 CONNECTIONS

A. Install meters and gages adjacent to machines and equipment to allow service and maintenance of meters, gages, machines, and equipment.

3.3 ADJUSTING

A. After installation, calibrate meters according to manufacturer's written instructions.

B. Adjust faces of meters and gages to proper angle for best visibility.

## 3.4 THERMOMETER SCHEDULE

A. Thermometers at inlet and outlet of each hydronic boiler shall be the following:

1. Liquid-filled, bimetallic-actuated type.
2. Direct-mounted, metal-case, vapor-actuated type.
3. Industrial-style, liquid-in-glass type.
4. Direct-mounted, light-activated type.

5. Test plug with EPDM self-sealing rubber inserts.

B. Thermometers at inlets and outlets of each hydronic heat exchanger shall be the following:

1. Liquid-filled, bimetallic-actuated type.
2. Direct-mounted, metal-case, vapor-actuated type.
3. Industrial-style, liquid-in-glass type.
4. Direct-mounted, light-activated type.
5. Test plug with EPDM self-sealing rubber inserts.

C. Thermometer stems shall be of length to match thermowell insertion length.

## 3.5 THERMOMETER SCALE-RANGE SCHEDULE

A. Scale Range for Heating, Hot-Water Piping: 30 to 240 deg F.

## 3.6 PRESSURE-GAGE SCHEDULE

A. Pressure gages at discharge of each pressure-reducing valve shall be the following:

1. Liquid-filled, direct-mounted, metal case.
2. Sealed, direct-mounted, plastic case.
3. Test plug with EPDM self-sealing rubber inserts.

B. Pressure gages at suction and discharge of each pump shall be the following:

1. Liquid-filled, direct-mounted, metal case.
2. Sealed, direct-mounted, plastic case.
3. Test plug with EPDM self-sealing rubber inserts.

## 3.7 PRESSURE-GAGE SCALE-RANGE SCHEDULE

A. Scale Range for Heating, Hot-Water Piping: 0 to 100 psi.

**END OF SECTION**

# SECTION 230523
# GENERAL-DUTY VALVES FOR HVAC PIPING

## PART 1 - GENERAL

### 1.1 RELATED DOCUMENTS

A. Drawings and general provisions of the Contract, including General and Supplementary Conditions and Division 01 Specification Sections, apply to this Section.

### 1.2 SUMMARY

A. Section Includes:
   1. Bronze angle valves.
   2. Bronze ball valves.
   3. Iron, single-flange butterfly valves.
   4. Bronze swing check valves.
   5. Iron gate valves.

B. Related Sections:
   1. Division 23 HVAC piping Sections for specialty valves applicable to those Sections only.
   2. Division 23 Section "Identification for HVAC Piping and Equipment" for valve tags and schedules.

### 1.3 DEFINITIONS

A. CWP: Cold working pressure.

B. EPDM: Ethylene propylene copolymer rubber.

C. NBR: Acrylonitrile-butadiene, Buna-N, or nitrile rubber.

D. NRS: Nonrising stem.

E. OS&Y: Outside screw and yoke.

F. RS: Rising stem.

G. SWP: Steam working pressure.

1.4 SUBMITTALS

A. Product Data: For each type of valve indicated.

1.5 QUALITY ASSURANCE

A. Source Limitations for Valves: Obtain each type of valve from single source from single manufacturer.

B. ASME Compliance:
1. ASME B16.10 and ASME B16.34 for ferrous valve dimensions and design criteria.
2. ASME B31.1 for power piping valves.
3. ASME B31.9 for building services piping valves.

1.6 DELIVERY, STORAGE, AND HANDLING

A. Prepare valves for shipping as follows:
1. Protect internal parts against rust and corrosion.
2. Protect threads, flange faces, grooves, and weld ends.
3. Set angle, gate, and globe valves closed to prevent rattling.
4. Set ball and plug valves open to minimize exposure of functional surfaces.
5. Set butterfly valves closed or slightly open.
6. Block check valves in either closed or open position.

B. Use the following precautions during storage:
1. Maintain valve end protection.
2. Store valves indoors and maintain at higher than ambient dew point temperature. If outdoor storage is necessary, store valves off the ground in watertight enclosures.

C. Use sling to handle large valves; rig sling to avoid damage to exposed parts. Do not use handwheels or stems as lifting or rigging points.

PART 2 - PRODUCTS

2.1 GENERAL REQUIREMENTS FOR VALVES

A. Refer to HVAC valve schedule articles for applications of valves.

B. Valve Pressure and Temperature Ratings: Not less than indicated and as required for system pressures and temperatures.

C. Valve Sizes: Same as upstream piping unless otherwise indicated.

D. Valve Actuator Types:
   1. Gear Actuator: For quarter-turn valves NPS 8 and larger.
   2. Handwheel: For valves other than quarter-turn types.
   3. Handlever: For quarter-turn valves NPS 6 and smaller.
   4. Wrench: For plug valves with square heads. Furnish Owner with 1 wrench for every 5 plug valves, for each size square plug-valve head.
   5. Chainwheel: Device for attachment to valve handwheel, stem, or other actuator; of size and with chain for mounting height, as indicated in the "Valve Installation" Article.

E. Valves in Insulated Piping: With 2-inch stem extensions and the following features:
   1. Gate Valves: With rising stem.
   2. Ball Valves: With extended operating handle of non-thermal-conductive material, and protective sleeve that allows operation of valve without breaking the vapor seal or disturbing insulation.
   3. Butterfly Valves: With extended neck.

F. Valve-End Connections:
   1. Flanged: With flanges according to ASME B16.1 for iron valves.
   2. Grooved: With grooves according to AWWA C606.
   3. Solder Joint: With sockets according to ASME B16.18.
   4. Threaded: With threads according to ASME B1.20.1.

G. Valve Bypass and Drain Connections: MSS SP-45.

## 2.2 BRONZE ANGLE VALVES

A. Class 150, Bronze Angle Valves with Bronze Disc:
   1. Manufacturers: Subject to compliance with requirements, available manufacturers offering products that may be incorporated into the Work include, but are not limited to, the following:
      a. Crane Co.; Crane Valve Group; Stockham Division.
      b. Kitz Corporation.
   2. Description:
      a. Standard: MSS SP-80, Type 1.
      b. CWP Rating: 300 psig.
      c. Body Material: ASTM B 62, bronze with integral seat and union-ring bonnet.
      d. Ends: Threaded.
      e. Stem and Disc: Bronze.
         Packing: Asbestos free.
      f. Handwheel: Malleable iron.

B. Class 150, Bronze Angle Valves with Nonmetallic Disc:

1. Manufacturers: Subject to compliance with requirements, available manufacturers offering products that may be incorporated into the Work include, but are not limited to, the following:
   a. Crane Co.; Crane Valve Group; Crane Valves.
   b. Milwaukee Valve Company.
   c. NIBCO INC.
2. Description:
   a. Standard: MSS SP-80, Type 2.
   b. CWP Rating: 300 psig.
   c. Body Material: ASTM B 62, bronze with integral seat and union-ring bonnet.
   d. Ends: Threaded.
   e. Stem: Bronze.
   f. Disc: PTFE or TFE.
   g. Packing: Asbestos free.
   h. Handwheel: Malleable iron.

## 2.3 BRONZE BALL VALVES

A. Two-Piece, Full-Port, Bronze Ball Valves with Stainless-Steel Trim:
   1. Manufacturers: Subject to compliance with requirements, available manufacturers offering products that may be incorporated into the Work include, but are not limited to, the following:
      a. Crane Co.; Crane Valve Group; Crane Valves.
      b. Milwaukee Valve Company.
      c. NIBCO INC.
   2. Description:
      a. Standard: MSS SP-110.
      b. SWP Rating: 150 psig.
      c. CWP Rating: 600 psig.
      d. Body Design: Two piece.
      e. Body Material: Bronze.
      f. Ends: Threaded.
      g. Seats: PTFE or TFE.
      h. Stem: Stainless steel.
      i. Ball: Stainless steel, vented.
      j. Port: Full.

## 2.4 IRON, SINGLE-FLANGE BUTTERFLY VALVES

A. 150 CWP, Iron, Single-Flange Butterfly Valves with NBR Seat and Aluminum-Bronze Disc:

   1. Manufacturers: Subject to compliance with requirements, available manufacturers offering products that may be incorporated into the Work include, but are not limited to, the following:

a. Crane Co.; Crane Valve Group; Stockham Division.
b. Milwaukee Valve Company.
c. NIBCO INC.

2. Description:
   a. Standard: MSS SP-67, Type I.
   b. CWP Rating: 150 psig.
   c. Body Design: Lug type; suitable for bidirectional dead-end service at rated pressure without use of downstream flange.
   d. Body Material: ASTM A 126, cast iron or ASTM A 536, ductile iron.
   e. Seat: NBR.
   f. Stem: One- or two-piece stainless steel.
   g. Disc: Aluminum bronze.

## 2.5 BRONZE SWING CHECK VALVES

A. Class 125, Bronze Swing Check Valves with Bronze Disc:
   1. Manufacturers: Subject to compliance with requirements, available manufacturers offering products that may be incorporated into the Work include, but are not limited to, the following:
      a. Crane Co.; Crane Valve Group; Crane Valves.
      b. Milwaukee Valve Company.
      c. NIBCO INC.
   2. Description:
      a. Standard: MSS SP-80, Type 3.
      b. CWP Rating: 200 psig.
      c. Body Design: Horizontal flow.
      d. Body Material: ASTM B 62, bronze.
      e. Ends: Threaded.
      f. Disc: Bronze.

B. Class 150, Bronze Swing Check Valves with Bronze Disc:
   1. Manufacturers: Subject to compliance with requirements, available manufacturers offering products that may be incorporated into the Work include, but are not limited to, the following:
      a. Milwaukee Valve Company.
      b. NIBCO INC.
   2. Description:
      a. Standard: MSS SP-80, Type 3.
      b. CWP Rating: 300 psig.
      c. Body Design: Horizontal flow.
      d. Body Material: ASTM B 62, bronze.
      e. Ends: Threaded.
      f. Disc: Bronze.

PART 3 - EXECUTION

3.1 EXAMINATION

A. Examine valve interior for cleanliness, freedom from foreign matter, and corrosion. Remove special packing materials, such as blocks, used to prevent disc movement during shipping and handling.

B. Operate valves in positions from fully open to fully closed. Examine guides and seats made accessible by such operations.

C. Examine threads on valve and mating pipe for form and cleanliness.

D. Examine mating flange faces for conditions that might cause leakage. Check bolting for proper size, length, and material. Verify that gasket is of proper size, that its material composition is suitable for service, and that it is free from defects and damage.

E. Do not attempt to repair defective valves; replace with new valves.

3.2 VALVE INSTALLATION

A. Install valves with unions or flanges at each piece of equipment arranged to allow service, maintenance, and equipment removal without system shutdown.

B. Locate valves for easy access and provide separate support where necessary.

C. Install valves in horizontal piping with stem at or above center of pipe.

D. Install valves in position to allow full stem movement.

E. Install chainwheels on operators for ball butterfly gate globe and plug valves NPS 4 and larger and more than 96 inches above floor. Extend chains to 60 inches above finished floor.

F. Install check valves for proper direction of flow and as follows:
   1. Swing Check Valves: In horizontal position with hinge pin level.
   2. Center-Guided and Plate-Type Check Valves: In horizontal or vertical position, between flanges.
   3. Lift Check Valves: With stem upright and plumb.

3.3 ADJUSTING

A. Adjust or replace valve packing after piping systems have been tested and put into

service but before final adjusting and balancing. Replace valves if persistent leaking occurs.

## 3.4 GENERAL REQUIREMENTS FOR VALVE APPLICATIONS

A. If valve applications are not indicated, use the following:
   1. Shutoff Service: Ball, butterfly, or gate valves.
   2. Butterfly Valve Dead-End Service: Single-flange (lug) type.
   3. Throttling Service: Globe Globe or angle or butterfly valves.
   4. Pump-Discharge Check Valves:
      a. NPS 2 and Smaller: Bronze swing check valves with bronze disc.
      b. NPS 2-1/2 and Larger: Iron swing check valves with lever and weight or with spring or iron, center-guided, resilient-seat check valves.

B. If valves with specified SWP classes or CWP ratings are not available, the same types of valves with higher SWP classes or CWP ratings may be substituted.

C. Select valves, except wafer types, with the following end connections:
   1. For Copper Tubing, NPS 2 and Smaller: Threaded ends except where solder-joint valve-end option is indicated in valve schedules below.
   2. For Copper Tubing, NPS 2-1/2 to NPS 4: Flanged ends except where threaded valve-end option is indicated in valve schedules below.
   3. For Copper Tubing, NPS 5 and Larger: Flanged ends.
   4. For Steel Piping, NPS 2 and Smaller: Threaded ends.
   5. For Steel Piping, NPS 2-1/2 to NPS 4: Flanged ends except where threaded valve-end option is indicated in valve schedules below.
   6. For Steel Piping, NPS 5 and Larger: Flanged ends.

** END OF SECTION**

# SECTION 230529
# HANGERS AND SUPPORTS FOR HVAC PIPING AND EQUIPMENT

## PART 1 - GENERAL

### 1.1 RELATED DOCUMENTS

A. Drawings and general provisions of the Contract, including General and Supplementary Conditions and Division 01 Specification Sections, apply to this Section.

### 1.2 SUMMARY

A. Section Includes:

1. Metal pipe hangers and supports.
2. Trapeze pipe hangers.
3. Metal framing systems.
4. Thermal-hanger shield inserts.
5. Fastener systems.
6. Pipe stands.
7. Equipment supports.

B. Related Sections:

1. Division 05 Section "Metal Fabrications" for structural-steel shapes and plates for trapeze hangers for pipe and equipment supports.
2. Division 23 Section "Expansion Fittings and Loops for HVAC Piping" for pipe guides and anchors.
3. Division 23 Section "Vibration and Seismic Controls for HVAC Piping and Equipment" for vibration isolation devices.
4. Division 23 Section(s) "Metal Ducts" for duct hangers and supports.

### 1.3 DEFINITIONS

A. MSS: Manufacturers Standardization Society of The Valve and Fittings Industry Inc.

### 1.4 PERFORMANCE REQUIREMENTS

A. Delegated Design: Design trapeze pipe hangers and equipment supports, including

comprehensive engineering analysis by a qualified professional engineer, using performance requirements and design criteria indicated.

B. Structural Performance: Hangers and supports for HVAC piping and equipment shall withstand the effects of gravity loads and stresses within limits and under conditions indicated according to ASCE/SEI 7.

1. Design supports for multiple pipes, including pipe stands, capable of supporting combined weight of supported systems, system contents, and test water.
2. Design equipment supports capable of supporting combined operating weight of supported equipment and connected systems and components.
3. Design seismic-restraint hangers and supports for piping and equipment and obtain approval from authorities having jurisdiction.

## 1.5 SUBMITTALS

A. Product Data: For each type of product indicated.

B. Shop Drawings: Signed and sealed by a qualified professional engineer. Show fabrication and installation details and include calculations for the following; include Product Data for components:

1. Trapeze pipe hangers.
2. Metal framing systems.
3. Pipe stands.
4. Equipment supports.

C. Delegated-Design Submittal: For trapeze hangers indicated to comply with performance requirements and design criteria, including analysis data signed and sealed by the qualified professional engineer responsible for their preparation.

1. Detail fabrication and assembly of trapeze hangers.
2. Design Calculations: Calculate requirements for designing trapeze hangers.

D. Welding certificates.

## 1.6 QUALITY ASSURANCE

A. Structural Steel Welding Qualifications: Qualify procedures and personnel according to AWS D1.1/D1.1M, "Structural Welding Code - Steel."

B. Pipe Welding Qualifications: Qualify procedures and operators according to ASME Boiler and Pressure Vessel Code.

PART 2 - PRODUCTS

2.1 METAL PIPE HANGERS AND SUPPORTS

A. Carbon-Steel Pipe Hangers and Supports:

1. Description: MSS SP-58, Types 1 through 58, factory-fabricated components.
2. Galvanized Metallic Coatings: Pre-galvanized or hot dipped.
3. Padded Hangers: Hanger with fiberglass or other pipe insulation pad or cushion to support bearing surface of piping.

4. Hanger Rods: Continuous-thread rod, nuts, and washer made of carbon steel.

B. Stainless-Steel Pipe Hangers and Supports:

1. Description: MSS SP-58, Types 1 through 58, factory-fabricated components.
2. Padded Hangers: Hanger with fiberglass or other pipe insulation pad or cushion to support bearing surface of piping.
3. Hanger Rods: Continuous-thread rod, nuts, and washer made of stainless steel.

C. Copper Pipe Hangers:

1. Description: MSS SP-58, Types 1 through 58, copper-coated-steel, factory-fabricated components.
2. Hanger Rods: Continuous-thread rod, nuts, and washer made of copper-coated steel.

2.2 TRAPEZE PIPE HANGERS

A. Description: MSS SP-69, Type 59, shop- or field-fabricated pipe-support assembly made from structural carbon-steel shapes with MSS SP-58 carbon-steel hanger rods, nuts, saddles, and U-bolts.

2.3 METAL FRAMING SYSTEMS

A. MFMA Manufacturer Metal Framing Systems:

1. Manufacturers: Subject to compliance with requirements, available manufacturers offering products that may be incorporated into the Work include, but are not limited to, the following:
   a. Cooper B-Line, Inc.
   b. Flex-Strut Inc.
   c. Unistrut Corporation; Tyco International, Ltd.

2. Description: Shop- or field-fabricated pipe-support assembly for supporting multiple parallel pipes.
3. Standard: MFMA-4.
4. Channels: Continuous slotted steel channel with inturned lips.
5. Channel Nuts: Formed or stamped steel nuts or other devices designed to fit into channel slot and, when tightened, prevent slipping along channel.
6. Hanger Rods: Continuous-thread rod, nuts, and washer made of carbon steel.
7. Metallic Coating: Hot-dipped galvanized.

## 2.4 THERMAL-HANGER SHIELD INSERTS

A. Manufacturers: Subject to compliance with requirements, available manufacturers offering products that may be incorporated into the Work include, but are not limited to, the following:

1. Pipe Shields, Inc.; a subsidiary of Piping Technology & Products, Inc.
2. Rilco Manufacturing Co., Inc.
3. Value Engineered Products, Inc.

B. Insulation-Insert Material for Cold Piping: Water-repellent treated, ASTM C 533, Type I calcium silicate with loo-psig minimum compressive strength and vapor barrier.

C. Insulation-Insert Material for Hot Piping: Water-repellent treated, ASTM C 533, Type I calcium silicate with 100-psig minimum compressive strength.

D. For Trapeze or Clamped Systems: Insert and shield shall cover entire circumference of pipe.

E. For Clevis or Band Hangers: Insert and shield shall cover lower 180 degrees of pipe.

F. Insert Length: Extend 2 inches beyond sheet metal shield for piping operating below ambient air temperature.

## 2.5 FASTENER SYSTEMS

A. Powder-Actuated Fasteners: Threaded-steel stud, for use in hardened portland cement concrete with pull-out, tension, and shear capacities appropriate for supported loads and building materials where used.

B. Mechanical-Expansion Anchors: Insert-wedge-type, zinc-coated steel anchors, for use in hardened portland cement concrete; with pull-out, tension, and shear capacities appropriate for supported loads and building materials where used.

## 2.6 PIPE STANDS

A. General Requirements for Pipe Stands: Shop- or field-fabricated assemblies made of manufactured corrosion-resistant components to support roof-mounted piping.

B. Compact Pipe Stand: One-piece plastic unit with integral-rod roller, pipe clamps, or V-shaped cradle to support pipe, for roof installation without membrane penetration.

C. Low-Type, Single-Pipe Stand: One-piece stainless-steel base unit with plastic roller, for roof installation without membrane penetration.

D. High-Type, Single-Pipe Stand:

1. Description: Assembly of base, vertical and horizontal members, and pipe support, for roof installation without membrane penetration.
2. Base: Stainless steel.
3. Vertical Members: Two or more cadmium-plated-steel or stainless-steel, continuous-thread rods.
4. Horizontal Member: Cadmium-plated-steel or stainless-steel rod with plastic or stainless-steel, roller-type pipe support.

E. High-Type, Multiple-Pipe Stand:

1. Description: Assembly of bases, vertical and horizontal members, and pipe supports, for roof installation without membrane penetration.
2. Bases: One or more; plastic.
3. Vertical Members: Two or more protective-coated-steel channels.
4. Horizontal Member: Protective-coated-steel channel.
5. Pipe Supports: Galvanized-steel, clevis-type pipe hangers.

F. Curb-Mounted-Type Pipe Stands: Shop- or field-fabricated pipe supports made from structural-steel shapes, continuous-thread rods, and rollers, for mounting on permanent stationary roof curb.

## 2.7 EQUIPMENT SUPPORTS

A. Description: Welded, shop- or field-fabricated equipment support made from structural carbon-steel shapes.

## 2.8 MISCELLANEOUS MATERIALS

A. Structural Steel: ASTM A 36/A 36M, carbon-steel plates, shapes, and bars; black and galvanized.

B. Grout: ASTM C 1107, factory-mixed and -packaged, dry, hydraulic-cement, non-shrink and nonmetallic grout; suitable for interior and exterior applications.

1. Properties: Non-staining, noncorrosive, and nongaseous.
2. Design Mix: 5000-psi, 28-day compressive strength.

PART 3 - EXECUTION

3.1 HANGER AND SUPPORT INSTALLATION

A. Metal Pipe-Hanger Installation: Comply with MSS SP-69 and MSS SP-89. Install hangers, supports, clamps, and attachments as required to properly support piping from the building structure.

B. Metal Trapeze Pipe-Hanger Installation: Comply with MSS SP-69 and MSS SP-89. Arrange for grouping of parallel runs of horizontal piping, and support together on field-fabricated trapeze pipe hangers.

1. Pipes of Various Sizes: Support together and space trapezes for smallest pipe size or install intermediate supports for smaller diameter pipes as specified for individual pipe hangers.
2. Field fabricate from ASTM A 36/A 36M, carbon-steel shapes selected for loads being supported. Weld steel according to AWS D1.1/D1.1M.

C. Metal Framing System Installation: Arrange for grouping of parallel runs of piping, and support together on field-assembled metal framing systems.

D. Thermal-Hanger Shield Installation: Install in pipe hanger or shield for insulated piping.

E. Fastener System Installation:
1. Install mechanical-expansion anchors in concrete after concrete is placed and completely cured. Install fasteners according to manufacturer's written instructions.

F. Pipe Stand Installation:

1. Pipe Stand Types except Curb-Mounted Type: Assemble components and mount on smooth roof surface. Do not penetrate roof membrane.
2. Curb-Mounted-Type Pipe Stands: Assemble components or fabricate pipe stand and mount on permanent, stationary roof curb. See Division 07 Section "Roof Accessories" for curbs.

G. Install hangers and supports complete with necessary attachments, inserts, bolts, rods, nuts, washers, and other accessories.

H. Equipment Support Installation: Fabricate from welded-structural-steel shapes.

I. Install hangers and supports to allow controlled thermal and seismic movement of piping systems, to permit freedom of movement between pipe anchors, and to facilitate action of expansion joints, expansion loops, expansion bends, and similar units.

J. Install lateral bracing with pipe hangers and supports to prevent swaying.

K. Install building attachments within concrete slabs or attach to structural steel. Install additional attachments at concentrated loads, including valves, flanges, and strainers, NPS 2-1/2 and larger and at changes in direction of piping. Install concrete inserts before concrete is placed; fasten inserts to forms and install reinforcing bars through openings at top of inserts.

L. Load Distribution: Install hangers and supports so that piping live and dead loads and stresses from movement will not be transmitted to connected equipment.

M. Pipe Slopes: Install hangers and supports to provide indicated pipe slopes and to not exceed maximum pipe deflections allowed by ASME B31.9 for building services piping.

N. Insulated Piping:

1. Attach clamps and spacers to piping.

   a. Piping Operating above Ambient Air Temperature: Clamp may project through insulation.
   b. Piping Operating below Ambient Air Temperature: Use thermal-hanger shield insert with clamp sized to match OD of insert.

   c. Do not exceed pipe stress limits allowed by ASME B31.9 for building services piping.

2. Install MSS SP-58, Type 39, protection saddles if insulation without vapor barrier is indicated. Fill interior voids with insulation that matches adjoining insulation.

   a. Option: Thermal-hanger shield inserts may be used. Include steel weight-distribution plate for pipe NPS 4 and larger if pipe is installed on rollers.

3. Install MSS SP-58, Type 40, protective shields on cold piping with vapor barrier. Shields shall span an arc of 180 degrees.

   a. Option: Thermal-hanger shield inserts may be used. Include steel weight-distribution plate for pipe NPS 4 and larger if pipe is installed on rollers.

4. Shield Dimensions for Pipe: Not less than the following:

   a. NPS 1/4 to NPS 3-1/2: 12 inches long and 0.048 inch thick.
   b. NPS 4: 12 inches long and 0.06 inch thick.
   c. NPS 5 and NPS 6: 18 inches long and 0.06 inch thick.

d. NPS 8 to NPS 14: 24 inches long and 0.075 inch thick.
e. NPS 16 to NPS 24: 24 inches long and 0.105 inch thick.

5. Pipes NPS 8 and Larger: Include wood or reinforced calcium-silicate-insulation inserts of length at least as long as protective shield.
6. Thermal-Hanger Shields: Install with insulation same thickness as piping insulation.

## 3.2 EQUIPMENT SUPPORTS

A. Fabricate structural-steel stands to suspend equipment from structure overhead or to support equipment above floor.

B. Grouting: Place grout under supports for equipment and make bearing surface smooth.

C. Provide lateral bracing, to prevent swaying, for equipment supports.

## 3.3 METAL FABRICATIONS

A. Cut, drill, and fit miscellaneous metal fabrications for trapeze pipe hangers and equipment supports.

B. Fit exposed connections together to form hairline joints. Field weld connections that cannot be shop welded because of shipping size limitations.

C. Field Welding: Comply with AWS D1.1/D1.1M procedures for shielded, metal arc welding; appearance and quality of welds; and methods used in correcting welding work; and with the following:

1. Use materials and methods that minimize distortion and develop strength and corrosion resistance of base metals.
2. Obtain fusion without undercut or overlap.
3. Remove welding flux immediately.
4. Finish welds at exposed connections so no roughness shows after finishing and so contours of welded surfaces match adjacent contours.

## 3.4 ADJUSTING

A. Hanger Adjustments: Adjust hangers to distribute loads equally on attachments and to achieve indicated slope of pipe.

B. Trim excess length of continuous-thread hanger and support rods to 1-1/2 inches.

## 3.5 PAINTING

A. Touchup: Clean field welds and abraded areas of shop paint. Paint exposed areas immediately after erecting hangers and supports. Use same materials as used for shop painting. Comply with SSPC-PA 1 requirements for touching up field-painted surfaces.

   1. Apply paint by brush or spray to provide a minimum dry film thickness of 2.0 mils.

B. Touchup: Cleaning and touchup painting of field welds, bolted connections, and abraded areas of shop paint on miscellaneous metal are specified in Division 09 painting Sections. Section "High-Performance Coatings."

C. Galvanized Surfaces: Clean welds, bolted connections, and abraded areas and apply galvanizing-repair paint to comply with ASTM A 780.

## 3.6 HANGER AND SUPPORT SCHEDULE

A. Specific hanger and support requirements are in Sections specifying piping systems and equipment.

B. Comply with MSS SP-69 for pipe-hanger selections and applications that are not specified in piping system Sections.

C. Use hangers and supports with galvanized metallic coatings for piping and equipment that will not have field-applied finish.

D. Use nonmetallic coatings on attachments for electrolytic protection where attachments are in direct contact with copper tubing.

E. Use carbon-steel pipe hangers and supports, metal trapeze pipe hangers and metal framing systems and attachments for general service applications.

F. Use stainless-steel pipe hangers and stainless-steel attachments for hostile environment & exterior applications.

G. Use copper-plated pipe hangers and copper attachments for copper piping and tubing.

H. Use padded hangers for piping that is subject to scratching.

I. Use thermal-hanger shield inserts for insulated piping and tubing.

J. Horizontal-Piping Hangers and Supports: Unless otherwise indicated and except as specified in piping system Sections, install the following types:

1. Adjustable, Steel Clevis Hangers (MSS Type 1): For suspension of non-insulated or insulated, stationary pipes NPS 1/2 to NPS 30.
2. Yoke-Type Pipe Clamps (MSS Type 2): For suspension of up to 1050 deg F,pipes NPS 4 to NPS 24, requiring up to 4 inches of insulation.
3. Carbon- or Alloy-Steel, Double-Bolt Pipe Clamps (MSS Type 3): For suspension of pipes NPS 3/4 to NPS 36, requiring clamp flexibility and up to 4 inches of insulation.
4. Steel Pipe Clamps (MSS Type 4): For suspension of cold and hot pipes NPS 1/2 to NPS 24 if little or no insulation is required.
5. Pipe Hangers (MSS Type 5): For suspension of pipes NPS 1/2 to NPS 4, to allow off-center closure for hanger installation before pipe erection.
6. Adjustable, Swivel Split- or Solid-Ring Hangers (MSS Type 6): For suspension of noninsulated, stationary pipes NPS 3/4 to NPS 8.
7. Adjustable, Steel Band Hangers (MSS Type 7): For suspension of noninsulated, stationary pipes NPS 1/2 to NPS 8.
8. Adjustable Band Hangers (MSS Type 9): For suspension of noninsulated, stationary pipes NPS 1/2 to NPS 8.
9. Adjustable, Swivel-Ring Band Hangers (MSS Type 10): For suspension of noninsulated, stationary pipes NPS 1/2 to NPS 8.
10. Split Pipe Ring with or without Turnbuckle Hangers (MSS Type 11): For suspension of noninsulated, stationary pipes NPS 3/8 to NPS 8.
11. Extension Hinged or Two-Bolt Split Pipe Clamps (MSS Type 12): For suspension of noninsulated, stationary pipes NPS 3/8 to NPS 3.
12. U-Bolts (MSS Type 24): For support of heavy pipes NPS 1/2 to NPS 30.
13. Clips (MSS Type 26): For support of insulated pipes not subject to expansion or contraction.
14. Pipe Saddle Supports (MSS Type 36): For support of pipes NPS 4 to NPS 36, with steel-pipe base stanchion support and cast-iron floor flange or carbon-steel plate.
15. Pipe Stanchion Saddles (MSS Type 37): For support of pipes NPS 4 to NPS 36, with steel-pipe base stanchion support and cast-iron floor flange or carbon-steel plate, and with U-bolt to retain pipe.
16. Adjustable Pipe Saddle Supports (MSS Type 38): For stanchion-type support for pipes NPS 2-1/2 to NPS 36 if vertical adjustment is required, with steel-pipe base stanchion support and cast-iron floor flange.
17. Single-Pipe Rolls (MSS Type 41): For suspension of pipes NPS 1 to NPS 30, from two rods if longitudinal movement caused by expansion and contraction might occur.
18. Adjustable Roller Hangers (MSS Type 43): For suspension of pipes NPS 2-1/2 to NPS 24, from single rod if horizontal movement caused by expansion and contraction might occur.
19. Complete Pipe Rolls (MSS Type 44): For support of pipes NPS 2 to NPS 42 if longitudinal movement caused by expansion and contraction might occur but vertical adjustment is not necessary.

20. Pipe Roll and Plate Units (MSS Type 45): For support of pipes NPS 2 to NPS 24 if small horizontal movement caused by expansion and contraction might occur and vertical adjustment is not necessary.
21. Adjustable Pipe Roll and Base Units (MSS Type 46): For support of pipes NPS 2 to NPS 30 if vertical and lateral adjustment during installation might be required in addition to expansion and contraction.

K. Vertical-Piping Clamps: Unless otherwise indicated and except as specified in piping system Sections, install the following types:

1. Extension Pipe or Riser Clamps (MSS Type 8): For support of pipe risers NPS 3/4 to NPS 24.
2. Carbon- or Alloy-Steel Riser Clamps (MSS Type 42): For support of pipe risers NPS 3/4 to NPS 24 if longer ends are required for riser clamps.

L. Hanger-Rod Attachments: Unless otherwise indicated and except as specified in piping system Sections, install the following types:

1. Steel Turnbuckles (MSS Type 13): For adjustment up to 6 inches for heavy loads.
2. Steel Clevises (MSS Type 14): For 120 to 450 deg F piping installations.
3. Swivel Turnbuckles (MSS Type 15): For use with MSS Type 11, split pipe rings.
4. Malleable-Iron Sockets (MSS Type 16): For attaching hanger rods to various types of building attachments.
5. Steel Weldless Eye Nuts (MSS Type 17): For 120 to 450 deg F piping installations.

M. Building Attachments: Unless otherwise indicated and except as specified in piping system Sections, install the following types:

1. Steel or Malleable Concrete Inserts (MSS Type 18): For upper attachment to suspend pipe hangers from concrete ceiling.
2. Top-Beam C-Clamps (MSS Type 19): For use under roof installations with bar-joist construction, to attach to top flange of structural shape.
3. Side-Beam or Channel Clamps (MSS Type 20): For attaching to bottom flange of beams, channels, or angles.
4. Center-Beam Clamps (MSS Type 21): For attaching to center of bottom flange of beams.
5. Welded Beam Attachments (MSS Type 22): For attaching to bottom of beams if loads are considerable and rod sizes are large.
6. C-Clamps (MSS Type 23): For structural shapes.
7. Top-Beam Clamps (MSS Type 25): For top of beams if hanger rod is required tangent to flange edge.
8. Side-Beam Clamps (MSS Type 27): For bottom of steel I-beams.

9. Steel-Beam Clamps with Eye Nuts (MSS Type 28): For attaching to bottom of steel I-beams for heavy loads.
10. Linked-Steel Clamps with Eye Nuts (MSS Type 29): For attaching to bottom of steel I-beams for heavy loads, with link extensions.
11. Malleable-Beam Clamps with Extension Pieces (MSS Type 30): For attaching to structural steel.
12. Welded-Steel Brackets: For support of pipes from below or for suspending from above by using clip and rod. Use one of the following for indicated loads:

    a. Light (MSS Type 31): 750 lb.
    b. Medium (MSS Type 32): 1500 lb.
    c. Heavy (MSS Type 33): 3000 lb.

13. Side-Beam Brackets (MSS Type 34): For sides of steel or wooden beams.
14. Plate Lugs (MSS Type 57): For attaching to steel beams if flexibility at beam is required.
15. Horizontal Travelers (MSS Type 58): For supporting piping systems subject to linear horizontal movement where headroom is limited.

N. Saddles and Shields: Unless otherwise indicated and except as specified in piping system Sections, install the following types:

1. Steel-Pipe-Covering Protection Saddles (MSS Type 39): To fill interior voids with insulation that matches adjoining insulation.
2. Protection Shields (MSS Type 40): Of length recommended in writing by manufacturer to prevent crushing insulation.
3. Thermal-Hanger Shield Inserts: For supporting insulated pipe.

O. Spring Hangers and Supports: Unless otherwise indicated and except as specified in piping system Sections, install the following types:

1. Restraint-Control Devices (MSS Type 47): Where indicated to control piping movement.
2. Spring Cushions (MSS Type 48): For light loads if vertical movement does not exceed 1-1/4 inches.
3. Spring-Cushion Roll Hangers (MSS Type 49): For equipping Type 41, roll hanger with springs.
4. Spring Sway Braces (MSS Type 50): To retard sway, shock, vibration, or thermal expansion in piping systems.
5. Variable-Spring Hangers (MSS Type 51): Preset to indicated load and limit variability factor to 25 percent to allow expansion and contraction of piping system from hanger.
6. Variable-Spring Base Supports (MSS Type 52): Preset to indicated load and limit variability factor to 25 percent to allow expansion and contraction of piping system from base support.

7. Variable-Spring Trapeze Hangers (MSS Type 53): Preset to indicated load and limit variability factor to 25 percent to allow expansion and contraction of piping system from trapeze support.
8. Constant Supports: For critical piping stress and if necessary to avoid transfer of stress from one support to another support, critical terminal, or connected equipment. Include auxiliary stops for erection, hydrostatic test, and load-adjustment capability. These supports include the following types:

    a. Horizontal (MSS Type 54): Mounted horizontally.
    b. Vertical (MSS Type 55): Mounted vertically.
    c. Trapeze (MSS Type 56): Two vertical-type supports and one trapeze member.

P. Comply with MSS SP-69 for trapeze pipe-hanger selections and applications that are not specified in piping system Sections.

Q. Comply with MFMA-103 for metal framing system selections and applications that are not specified in piping system Sections.

R. Use mechanical-expansion anchors instead of building attachments where required in concrete construction.

**END OF SECTION**

# SECTION 230548
# VIBRATION CONTROLS FOR HVAC PIPING AND EQUIPMENT

## PART 1 - GENERAL

### 1.1 RELATED DOCUMENTS

A. Drawings and general provisions of the Contract, including General and Supplementary Conditions and Division 01 Specification Sections, apply to this Section.

### 1.2 SUSTAINABLE DESIGN OBJECTIVES

A. The City requires the contractor to implement practices and procedures to meet the project's environmental performance goals, which include;

1. Minimize the environmental impacts of the construction and operation of the project during the construction phase. The project shall implement the following procedures singly or in combination:

   a. Select products that minimize consumption of non-renewable resources, consume reduced amounts of energy, minimize environmental pollution, and to utilize recycled and/or recyclable materials.
   b. Reduce sources of potential Indoor Air Quality pollutants by controlled selection of materials and processes used in project construction. (015721)
   c. Minimize waste produced by construction through efficient construction practices and landfill diversion, as detailed in the Construction Waste Management Plan. (017419)

2. Products and processes that achieve the above objectives have been selected and included in the Construction Documents.

### 1.3 SUMMARY

A. This Section includes the following:

1. Isolation pads.
2. Isolation mounts.
3. Restrained elastomeric isolation mounts.

4. Freestanding and restrained spring isolators.
5. Housed spring mounts.
6. Elastomeric hangers.
7. Spring hangers.
8. Spring hangers with vertical-limit stops.
9. Pipe riser resilient supports.
10. Resilient pipe guides.
11. Seismic snubbers.
12. Restraining braces and cables.
13. Steel and inertia, vibration isolation equipment bases.

## 1.4 DEFINITIONS

A. IBC: International Building Code.

B. ICC-ES: ICC-Evaluation Service.

## 1.5 PERFORMANCE REQUIREMENTS

A. Wind-Restraint Loading:

1. Basic Wind Speed: 110 mps
2. Building Classification Category: II.
3. Minimum 10 lb/sq. ft. multiplied by the maximum area of the HVAC component projected on a vertical plane that is normal to the wind direction, and 45 degrees either side of normal.

## 1.6 ACTION SUBMITTALS

A. Product Data: For the following:

1. Include rated load, rated deflection, and overload capacity for each vibration isolation device.

2. Interlocking Snubbers: Include ratings for horizontal, vertical, and combined loads.

B. Delegated-Design Submittal: For vibration isolation details indicated to comply with performance requirements and design criteria, including analysis data signed and sealed by the licensed professional engineer responsible for their preparation.

1. Design Calculations: Calculate static and dynamic loading due to equipment weight and operation, and wind forces required to select vibration isolators, and wind restraints, and for designing vibration isolation bases.

a. Coordinate design calculations with wind load calculations required for equipment mounted outdoors. Comply with requirements in other Sections for equipment mounted outdoors.

2. Riser Supports: Include riser diagrams and calculations showing anticipated expansion and contraction at each support point, initial and final loads on building structure and, spring deflection changes. Include certification that riser system has been examined for excessive stress and that none will exist.
3. Vibration Isolation Base Details: Detail overall dimensions, including anchorages and attachments to structure and to supported equipment. Include auxiliary motor slides and rails, base weights, equipment static loads, power transmission, component misalignment, and cantilever loads.
4. Wind-Restraint Details:

   a. Design Analysis: To support selection and arrangement of wind restraints. Include calculations of combined tensile and shear loads.
   b. Details: Indicate fabrication and arrangement. Detail attachments of restraints to the restrained items and to the structure. Show attachment locations, methods, and spacings. Identify components, list their strengths, and indicate directions and values of forces transmitted to the structure. Indicate association with vibration isolation devices.
   c. Coordinate vibration isolation details with wind-restraint details required for equipment mounted outdoors. Comply with requirements in other Sections for equipment mounted outdoors.
   d. Preapproval and Evaluation Documentation: By an evaluation service member of ICC-ES or an agency acceptable to authorities having jurisdiction, showing maximum ratings of restraint items and the basis for approval (tests or calculations).

## 1.7 INFORMATIONAL SUBMITTALS

A. Coordination Drawings: Show coordination of seismic bracing for HVAC piping and equipment with other systems and equipment in the vicinity, including other supports and seismic restraints.

B. Qualification Data: For licensed professional engineer and testing agency.

C. Welding certificates.

## 1.8 CLOSEOUT SUBMITTALS

A. Operation and Maintenance Data: For air-mounting systems to include in operation and maintenance manuals.

1.9 QUALITY ASSURANCE

A. Testing Agency Qualifications: An independent agency, with the experience and capability to conduct the testing indicated, that is a nationally recognized testing laboratory (NRTL) as defined by OSHA in 29 CFR 1910.7, and that is acceptable to authorities having jurisdiction.

B. Welding: Qualify procedures and personnel according to AWS D1.1/D1.1M, "Structural Welding Code - Steel."

1.8 DELIVERY, STORAGE AND HANDLING

A. Comply with the requirements of the Construction Indoor Air Quality Management Plan and the Construction Waste Management Plan.

1.9 PROJECT CONDITIONS

A. Waste Management: Comply with the requirements of the Construction Waste Management Plan.

PART 2 - PRODUCTS

2.1 PRODUCT REQUIREMENTS FOR SUSTAINABLE DESIGN- GENERAL

A. All field applied paints, coatings, sealants, sealer, adhesives in this section shall meet the requirements of VOC limits in 016116- Indoor Finishes Performance Requirements.

B. All Products in this Section shall be free of Materials of Concern as noted in 015721- Indoor Air Quality Control (where achievable).

2.2 VIBRATION ISOLATORS

A. Available Manufacturers: Subject to compliance with requirements, manufacturers offering products that may be incorporated into the Work include, but are not limited to, the following or approved equal:
   1. Isolation Technology, Inc.
   2. Kinetics Noise Control.
   3. Mason Industries.
   4. Vibration Eliminator Co., Inc.
   5. Vibration Isolation.
   6. Vibration Mountings & Controls, Inc.

B. Pads: Arranged in single or multiple layers of sufficient stiffness for uniform loading over pad area, molded with a nonslip pattern and galvanized-steel baseplates, and factory cut to sizes that match requirements of supported equipment.

1. Resilient Material: Oil- and water-resistant neoprene or rubber.

C. Mounts: Double-deflection type, with molded, oil-resistant rubber, or neoprene isolator elements with factory-drilled, encapsulated top plate for bolting to equipment and with baseplate for bolting to structure. Color-code or otherwise identify to indicate capacity range.

1. Materials: Cast-ductile-iron or welded steel housing containing two separate and opposing, oil-resistant rubber or neoprene elements that prevent central threaded element and attachment hardware from contacting the housing during normal operation.
2. Neoprene: Shock-absorbing materials compounded according to the standard for bridge-bearing neoprene as defined by AASHTO.

D. Restrained Mounts: All-directional mountings with seismic restraint.

1. Materials: Cast-ductile-iron or welded steel housing containing two separate and opposing, oil-resistant rubber or neoprene elements that prevent central threaded element and attachment hardware from contacting the housing during normal operation.
2. Neoprene: Shock-absorbing materials compounded according to the standard for bridge-bearing neoprene as defined by AASHTO.

E. Spring Isolators: Freestanding, laterally stable, open-spring isolators.

1. Outside Spring Diameter: Not less than 80 percent of the compressed height of the spring at rated load.
2. Minimum Additional Travel: 50 percent of the required deflection at rated load.
3. Lateral Stiffness: More than 80 percent of rated vertical stiffness.
4. Overload Capacity: Support 200 percent of rated load, fully compressed, without deformation or failure.
5. Baseplates: Factory drilled for bolting to structure and bonded to 1/4-inch- thick, rubber isolator pad attached to baseplate underside. Baseplates shall limit floor load to 500 psig.
6. Top Plate and Adjustment Bolt: Threaded top plate with adjustment bolt and cap screw to fasten and level equipment.

F. Restrained Spring Isolators: Freestanding, steel, open-spring isolators with seismic or limit-stop restraint.

1. Housing: Steel with resilient vertical-limit stops to prevent spring extension due to weight being removed; factory-drilled baseplate bonded to 1/4-inch- thick,

neoprene or rubber isolator pad attached to baseplate underside; and adjustable equipment mounting and leveling bolt that acts as blocking during installation.

2. Restraint: Seismic or limit stop as required for equipment and authorities having jurisdiction.
3. Outside Spring Diameter: Not less than 80 percent of the compressed height of the spring at rated load.
4. Minimum Additional Travel: 50 percent of the required deflection at rated load.
5. Lateral Stiffness: More than 80 percent of rated vertical stiffness.
6. Overload Capacity: Support 200 percent of rated load, fully compressed, without deformation or failure.

G. Housed Spring Mounts: Housed spring isolator with integral seismic snubbers.

1. Housing: Ductile-iron or steel housing to provide all-directional seismic restraint.
2. Base: Factory drilled for bolting to structure.

3. Snubbers: Vertically adjustable to allow a maximum of 1/4-inch travel up or down before contacting a resilient collar.

H. Elastomeric Hangers: Single or double-deflection type, fitted with molded, oil-resistant elastomeric isolator elements bonded to steel housings with threaded connections for hanger rods. Color-code or otherwise identify to indicate capacity range.

I. Spring Hangers: Combination coil-spring and elastomeric-insert hanger with spring and insert in compression.

1. Frame: Steel, fabricated for connection to threaded hanger rods and to allow for a maximum of 30 degrees of angular hanger-rod misalignment without binding or reducing isolation efficiency.
2. Outside Spring Diameter: Not less than 80 percent of the compressed height of the spring at rated load.
3. Minimum Additional Travel: 50 percent of the required deflection at rated load.
4. Lateral Stiffness: More than 80 percent of rated vertical stiffness.
5. Overload Capacity: Support 200 percent of rated load, fully compressed, without deformation or failure.
6. Elastomeric Element: Molded, oil-resistant rubber or neoprene. Steel-washer-reinforced cup to support spring and bushing projecting through bottom of frame.
7. Self-centering hanger rod cap to ensure concentricity between hanger rod and support spring coil.

J. Spring Hangers with Vertical-Limit Stop: Combination coil-spring and elastomeric-insert hanger with spring and insert in compression and with a vertical-limit stop.

1. Frame: Steel, fabricated for connection to threaded hanger rods and to allow for a maximum of 30 degrees of angular hanger-rod misalignment without binding or reducing isolation efficiency.

2. Outside Spring Diameter: Not less than 80 percent of the compressed height of the spring at rated load.
3. Minimum Additional Travel: 50 percent of the required deflection at rated load.
4. Lateral Stiffness: More than 80 percent of rated vertical stiffness.
5. Overload Capacity: Support 200 percent of rated load, fully compressed, without deformation or failure.
6. Elastomeric Element: Molded, oil-resistant rubber or neoprene.
7. Adjustable Vertical Stop: Steel washer with neoprene washer "up-stop" on lower threaded rod.
8. Self-centering hanger rod cap to ensure concentricity between hanger rod and support spring coil.

K. Pipe Riser Resilient Support: All-directional, acoustical pipe anchor consisting of 2 steel tubes separated by a minimum of 1/2-inch- thick neoprene. Include steel and neoprene vertical-limit stops arranged to prevent vertical travel in both directions. Design support for a maximum load on the isolation material of 500 psig and for equal resistance in all directions.

L. Resilient Pipe Guides: Telescopic arrangement of 2 steel tubes or post and sleeve arrangement separated by a minimum of 1/2-inch- thick neoprene. Where clearances are not readily visible, a factory-set guide height with a shear pin to allow vertical motion due to pipe expansion and contraction shall be fitted. Shear pin shall be removable and reinsertable to allow for selection of pipe movement. Guides shall be capable of motion to meet location requirements.

## 2.3 VIBRATION ISOLATION EQUIPMENT BASES

A. Available Manufacturers: Subject to compliance with requirements, manufacturers offering products that may be incorporated into the Work include, but are not limited to, the following:
1. Isolation Technology, Inc.
2. Kinetics Noise Control.
3. Mason Industries.
4. Vibration Eliminator Co., Inc.
5. Vibration Isolation.
6. Vibration Mountings & Controls, Inc.

B. Steel Base: Factory-fabricated, welded, structural-steel bases and rails.

1. Design Requirements: Lowest possible mounting height with not less than 1-inch clearance above the floor. Include equipment anchor bolts and auxiliary motor slide bases or rails.

a. Include supports for suction and discharge elbows for pumps.

2. Structural Steel: Steel shapes, plates, and bars complying with ASTM A 36/A 36M. Bases shall have shape to accommodate supported equipment.
3. Support Brackets: Factory-welded steel brackets on frame for outrigger isolation mountings and to provide for anchor bolts and equipment support.

C. Inertia Base: Factory-fabricated, welded, structural-steel bases and rails ready for placement of cast-in-place concrete.

1. Design Requirements: Lowest possible mounting height with not less than 1-inch clearance above the floor. Include equipment anchor bolts and auxiliary motor slide bases or rails.

a. Include supports for suction and discharge elbows for pumps.

2. Structural Steel: Steel shapes, plates, and bars complying with ASTM A 36/A 36M. Bases shall have shape to accommodate supported equipment.
3. Support Brackets: Factory-welded steel brackets on frame for outrigger isolation mountings and to provide for anchor bolts and equipment support.
4. Fabrication: Fabricate steel templates to hold equipment anchor-bolt sleeves and anchors in place during placement of concrete. Obtain anchor-bolt templates from supported equipment manufacturer.

2.4 FACTORY FINISHES

A. Finish: Manufacturer's standard paint applied to factory-assembled and -tested equipment before shipping.

1. Powder coating on springs and housings.
2. All hardware shall be galvanized. Hot-dip galvanize metal components for exterior use.
3. Baked enamel or powder coat for metal components on isolators for interior use.
4. Color-code or otherwise mark vibration isolation and wind-control devices to indicate capacity range.

PART 3 - EXECUTION

3.1 EXAMINATION

A. Examine areas and equipment to receive vibration isolation and wind-control devices for compliance with requirements for installation tolerances and other conditions affecting performance.

B. Examine roughing-in of reinforcement and cast-in-place anchors to verify actual locations before installation.

C. Proceed with installation only after unsatisfactory conditions have been corrected.

## 3.2 APPLICATIONS

A. Multiple Pipe Supports: Secure pipes to trapeze member with clamps approved for application by an evaluation service member of ICC-ES or an agency acceptable to authorities having jurisdiction.

B. Strength of Support Assemblies: Where not indicated, select sizes of components so strength will be adequate to carry present and future static loads within specified loading limits.

## 3.3 VIBRATION-CONTROL DEVICE INSTALLATION

A. Equipment Restraints:
   1. Install resilient bolt isolation washers on equipment anchor bolts where clearance between anchor and adjacent surface exceeds 0.125 inch.

B. Install cables so they do not bend across edges of adjacent equipment or building structure.

C. Install bushing assemblies for anchor bolts for floor-mounted equipment, arranged to provide resilient media between anchor bolt and mounting hole in concrete base.

D. Install bushing assemblies for mounting bolts for wall-mounted equipment, arranged to provide resilient media where equipment or equipment-mounting channels are attached to wall.

E. Attachment to Structure: If specific attachment is not indicated, anchor bracing to structure at flanges of beams, at upper truss chords of bar joists, or at concrete members.

F. Drilled-in Anchors:

   1. Identify position of reinforcing steel and other embedded items prior to drilling holes for anchors. Do not damage existing reinforcing or embedded items during coring or drilling. Notify the Commissioner if reinforcing steel or other embedded items are encountered during drilling. Locate and avoid prestressed tendons, electrical and telecommunications conduit, and gas lines.
   2. Do not drill holes in concrete or masonry until concrete, mortar, or grout has achieved full design strength.
   3. Wedge Anchors: Protect threads from damage during anchor installation. Heavy-duty sleeve anchors shall be installed with sleeve fully engaged in the structural element to which anchor is to be fastened.

4. Adhesive Anchors: Clean holes to remove loose material and drilling dust prior to installation of adhesive. Place adhesive in holes proceeding from the bottom of the hole and progressing toward the surface in such a manner as to avoid introduction of air pockets in the adhesive.
5. Set anchors to manufacturer's recommended torque, using a torque wrench.
6. Install zinc-coated steel anchors for interior and stainless-steel anchors for exterior applications.

## 3.4 ADJUSTING

A. Adjust isolators after piping system is at operating weight.

B. Adjust limit stops on restrained spring isolators to mount equipment at normal operating height. After equipment installation is complete, adjust limit stops so they are out of contact during normal operation.

C. Adjust air-spring leveling mechanism.

D. Adjust active height of spring isolators.

E. Adjust restraints to permit free movement of equipment within normal mode of operation.

**END OF SECTION**

# SECTION 230553
# IDENTIFICATION FOR HVAC PIPING AND EQUIPMENT

## PART 1 - GENERAL

### 1.1 RELATED DOCUMENTS

A. Drawings and general provisions of the Contract, including General and Supplementary Conditions and Division 01 Specification Sections, apply to this Section.

### 1.2 SUMMARY

A. Section Includes:

1. Equipment labels.
2. Warning signs and labels.
3. Pipe labels.
4. Duct labels.
5. Stencils.
6. Valve tags.
7. Warning tags.

### 1.3 SUBMITTALS

A. Product Data: For each type of product indicated.

B. Samples: For color, letter style, and graphic representation required for each identification material and device.

C. Equipment Label Schedule: Include a listing of all equipment to be labeled with the proposed content for each label.

D. Valve numbering scheme.

E. Valve Schedules: For each piping system to include in maintenance manuals.

### 1.4 COORDINATION

A. Coordinate installation of identifying devices with completion of covering and painting of surfaces where devices are to be applied.

B. Coordinate installation of identifying devices with locations of access panels and doors.

C. Install identifying devices before installing acoustical ceilings and similar concealment.

PART 2 - PRODUCTS

2.1 EQUIPMENT LABELS

A. Metal Labels for Equipment:

1. Material and Thickness: [**Brass, 0.032-inch**] [**Stainless steel, 0.025-inch**] [**Aluminum, 0.032-inch**] [**or**] [**anodized aluminum, 0.032-inch**] minimum thickness, and having predrilled or stamped holes for attachment hardware.
2. Minimum Label Size: Length and width vary for required label content, but not less than 2-1/2 by 3/4 inch.
3. Minimum Letter Size: 1/4 inch for name of units if viewing distance is less than 24 inches, 1/2 inch for viewing distances up to 72 inches, and proportionately larger lettering for greater viewing distances. Include secondary lettering two-thirds to three-fourths the size of principal lettering.
4. Fasteners: Stainless-steel [**rivets**] [**rivets or self-tapping screws**] [**self-tapping screws**].
5. Adhesive: Contact-type permanent adhesive, compatible with label and with substrate.

B. Plastic Labels for Equipment:

1. Material and Thickness: Multilayer, multicolor, plastic labels for mechanical engraving, [**1/16 inch**] [**1/8 inch**] <**Insert dimension**> thick, and having predrilled holes for attachment hardware.
2. Letter Color: [**Black**] [**Blue**] [**Red**] [**White**] [**Yellow**] <**Insert color**>.
3. Background Color: [**Black**] [**Blue**] [**Red**] [**White**] [**Yellow**] <**Insert color**>.
4. Maximum Temperature: Able to withstand temperatures up to 160 deg F.
5. Minimum Label Size: Length and width vary for required label content, but not less than 2-1/2 by 3/4 inch.
6. Minimum Letter Size: 1/4 inch for name of units if viewing distance is less than 24 inches, 1/2 inch for viewing distances up to 72 inches, and proportionately larger lettering for greater viewing distances. Include secondary lettering two-thirds to three-fourths the size of principal lettering.
7. Fasteners: Stainless-steel [**rivets**] [**rivets or self-tapping screws**] [**self-tapping screws**].
8. Adhesive: Contact-type permanent adhesive, compatible with label and with substrate.

C. Label Content: Include equipment's Drawing designation or unique equipment number, Drawing numbers where equipment is indicated (plans, details, and schedules), plus the Specification Section number and title where equipment is specified.

D. Equipment Label Schedule: For each item of equipment to be labeled, on 8-1/2-by-11-inch bond paper. Tabulate equipment identification number and identify Drawing numbers where equipment is indicated (plans, details, and schedules), plus the Specification Section number and title where equipment is specified. Equipment schedule shall be included in operation and maintenance data.

## 2.2 WARNING SIGNS AND LABELS

A. Material and Thickness: Multilayer, multicolor, plastic labels for mechanical engraving, 1/8 inch thick, and having predrilled holes for attachment hardware.

B. Letter Color: White.

C. Background Color: Black.

D. Maximum Temperature: Able to withstand temperatures up to 160 deg F.

E. Minimum Label Size: Length and width vary for required label content, but not less than 2-1/2 by 3/4 inch.

F. Minimum Letter Size: 1/4 inch for name of units if viewing distance is less than 24 inches, 1/2 inch for viewing distances up to 72 inches, and proportionately larger lettering for greater viewing distances. Include secondary lettering two-thirds to three-fourths the size of principal lettering.

G. Fasteners: Stainless-steel rivets or self-tapping screws.

H. Adhesive: Contact-type permanent adhesive, compatible with label and with substrate.

I. Label Content: Include caution and warning information, plus emergency notification instructions.

## 2.3 PIPE LABELS

A. General Requirements for Manufactured Pipe Labels: Preprinted, color-coded, with lettering indicating service, and showing flow direction.

B. Pretensioned Pipe Labels: Precoiled, semirigid plastic formed to partially cover circumference of pipe and to attach to pipe without fasteners or adhesive.

C. Self-Adhesive Pipe Labels: Printed plastic with contact-type, permanent-adhesive backing.

D. Pipe Label Contents: Include identification of piping service using same designations or abbreviations as used on Drawings, pipe size, and an arrow indicating flow direction.

1. Flow-Direction Arrows: Integral with piping system service lettering to accommodate both directions, or as separate unit on each pipe label to indicate flow direction.
2. Lettering Size: At least 1-1/2 inches high.

## 2.4 DUCT LABELS

A. Material and Thickness: Multilayer, multicolor, plastic labels for mechanical engraving, 1/8 inch thick, and having predrilled holes for attachment hardware.

B. Letter Color: White.

C. Background Color: Black.

D. Maximum Temperature: Able to withstand temperatures up to 160 deg F.

E. Minimum Label Size: Length and width vary for required label content, but not less than 2-1/2 by 3/4 inch.

F. Minimum Letter Size: 1/4 inch for name of units if viewing distance is less than 24 inches, 1/2 inch for viewing distances up to 72 inches, and proportionately larger lettering for greater viewing distances. Include secondary lettering two-thirds to three-fourths the size of principal lettering.

G. Fasteners: Stainless-steel rivets or self-tapping screws.

H. Adhesive: Contact-type permanent adhesive, compatible with label and with substrate.

I. Duct Label Contents: Include identification of duct service using same designations or abbreviations as used on Drawings, duct size, and an arrow indicating flow direction.

1. Flow-Direction Arrows: Integral with duct system service lettering to accommodate both directions, or as separate unit on each duct label to indicate flow direction.
2. Lettering Size: At least 1-1/2 inches high.

## 2.5 STENCILS

A. Stencils: Prepared with letter sizes according to ASME A13.1 for piping; minimum letter height of 1-1/4 inches for ducts; and minimum letter height of 3/4 inch for access panel and door labels, equipment labels, and similar operational instructions.

1. Stencil Material: Aluminum.

2. Stencil Paint: Exterior, gloss, alkyd enamel black unless otherwise indicated. Paint may be in pressurized spray-can form.
3. Identification Paint: Exterior, alkyd enamel in colors according to ASME A13.1 unless otherwise indicated.

## 2.6 VALVE TAGS

A. Valve Tags: Stamped or engraved with 1/4-inch letters for piping system abbreviation and 1/2-inch numbers.

1. Tag Material: Brass, 0.032-inch minimum thickness, and having predrilled or stamped holes for attachment hardware.
2. Fasteners: Brass wire-link or beaded chain; or S-hook.

B. Valve Schedules: For each piping system, on 8-1/2-by-11-inch bond paper. Tabulate valve number, piping system, system abbreviation (as shown on valve tag), location of valve (room or space), normal-operating position (open, closed, or modulating), and variations for identification. Mark valves for emergency shutoff and similar special uses.

1. Valve-tag schedule shall be included in operation and maintenance data.

## 2.7 WARNING TAGS

A. Warning Tags: Preprinted or partially preprinted, accident-prevention tags, of plasticized card stock with matte finish suitable for writing.

1. Size: 3 by 5-1/4 inches minimum.
2. Fasteners: Brass grommet and wire.
3. Nomenclature: Large-size primary caption such as "DANGER," "CAUTION," or "DO NOT OPERATE."
4. Color: Yellow background with black lettering.

# PART 3 - EXECUTION

## 3.1 PREPARATION

A. Clean piping and equipment surfaces of substances that could impair bond of identification devices, including dirt, oil, grease, release agents, and incompatible primers, paints, and encapsulants.

## 3.2 EQUIPMENT LABEL INSTALLATION

A. Install or permanently fasten labels on each major item of mechanical equipment.

B. Locate equipment labels where accessible and visible.

## 3.3 PIPE LABEL INSTALLATION

A. Piping Color-Coding: Painting of piping is specified in Division 09 Section "Interior Painting."

B. Stenciled Pipe Label Option: Stenciled labels may be provided instead of manufactured pipe labels, at Installer's option. Install stenciled pipe labels with painted, color-coded bands or rectangles, complying with ASME A13.1, on each piping system.

1. Identification Paint: Use for contrasting background.
2. Stencil Paint: Use for pipe marking.

C. Locate pipe labels where piping is exposed or above accessible ceilings in finished spaces; machine rooms; accessible maintenance spaces such as shafts, tunnels, and plenums; and exterior exposed locations as follows:

1. Near each valve and control device.
2. Near each branch connection, excluding short takeoffs for fixtures and terminal units. Where flow pattern is not obvious, mark each pipe at branch.
3. Near penetrations through walls, floors, ceilings, and inaccessible enclosures.
4. At access doors, manholes, and similar access points that permit view of concealed piping.
5. Near major equipment items and other points of origination and termination.
6. Spaced at maximum intervals of 50 feet along each run. Reduce intervals to 25 feet in areas of congested piping and equipment.
7. On piping above removable acoustical ceilings. Omit intermediately spaced labels.

D. Pipe Label Color Schedule:

1. Heating Water Piping:

a. Background Color: Green.
b. Letter Color: White.

## 3.4 DUCT LABEL INSTALLATION

A. Install self-adhesive duct labels with permanent adhesive on air ducts in the following color codes:

1. Blue: For cold-air supply ducts.
2. Yellow: For hot-air supply ducts.
3. Green: For exhaust-, outside-, relief-, return-, and mixed-air ducts.
4. ASME A13.1 Colors and Designs: For hazardous material exhaust.

B. Stenciled Duct Label Option: Stenciled labels, showing service and flow direction, may be provided instead of plastic-laminated duct labels, at Installer's option, if lettering larger than 1 inch high is needed for proper identification because of distance from normal location of required identification.

C. Locate labels near points where ducts enter into concealed spaces and at maximum intervals of 50 feet in each space where ducts are exposed or concealed by removable ceiling system.

## 3.5 VALVE-TAG INSTALLATION

A. Install tags on valves and control devices in piping systems, except check valves; valves within factory-fabricated equipment units; shutoff valves; faucets; convenience and lawn-watering hose connections; and HVAC terminal devices and similar roughing-in connections of end-use fixtures and units. List tagged valves in a valve schedule.

B. Valve-Tag Application Schedule: Tag valves according to size, shape, and color scheme and with captions similar to those indicated in the following subparagraphs:

1. Valve-Tag Size and Shape:

   a. Hot Water: 1-1/2 inches, round.
   b. Gas: 1-1/2 inches, round.

2. Valve-Tag Color:

   a. Hot Water: Green.
   b. Gas: Yellow.

3. Letter Color:

   a. Hot Water: White.
   b. Gas: White.

## 3.6 WARNING-TAG INSTALLATION

A. Write required message on, and attach warning tags to, equipment and other items where required.

**END OF SECTION**

# SECTION 230555
# MOTOR CONTROLS/VFD's

## PART 1 - GENERAL

### 1.1 RELATED DOCUMENTS

A. Drawings and general provisions of the Contract, including General and Supplementary Conditions and Division 1 Specification Sections, apply to this Section.

### 1.2 SUMMARY

A. This Section includes basic requirements for motor starters and variable frequency drive motor controls.

### 1.3 SUBMITTALS

A. Product Data:

1. Motor Controllers: Catalog sheets, specifications, and installation instructions. Submit product data for motor controllers simultaneously with product data required for motors.

   a. Identify each controller for use with corresponding motor.
   b. Describe overload devices being supplied with each motor controller (include equipment manufacturer's recommendations).
   c. Enumerate and describe all accessories being supplied with each motor controller.any parts from the device when subjected to the seismic forces specified."

B. Qualification Data: For testing agency.

C. Source quality-control test reports.

D. Field quality-control test reports.

E. Operation and Maintenance Data: For field-installed motors to include in emergency, operation, and maintenance manuals.

F. Load-Current and Overload-Relay Heater List: Compile after motors have been installed and arrange to demonstrate that selection of heaters suits actual motor nameplate full-load currents.

G. Load-Current and List of Settings of Adjustable Overload Relays: Compile after motors have been installed and arrange to demonstrate that dip switch settings for motor running overload protection suit actual motor to be protected.

## 1.4 QUALITY ASSURANCE

A. Testing Agency Qualifications: An independent agency, with the experience and capability to conduct the testing indicated, that is a member company of the International Electrical Testing Association or is a nationally recognized testing laboratory (NRTL) as defined by OSHA in 29 CFR 1910.7, and that is acceptable to authorities having jurisdiction.

1. Testing Agency's Field Supervisor: Person currently certified by the International Electrical Testing Association or the National Institute for Certification in Engineering Technologies to supervise on-site testing specified in Part 3.

B. Source Limitations: Obtain field-installed motors through one source from a single manufacturer.

C. Product Options for Field-Installed Motors: Drawings indicate size, profiles, and dimensional requirements of motors and are based on the specific system indicated. Refer to Division 1 Section "Product Requirements."

D. Electrical Components, Devices, and Accessories: Listed and labeled as defined in NFPA 70, Article 100, by a testing agency acceptable to authorities having jurisdiction, and marked for intended use.

E. Comply with NFPA 70.

F. Motors shall be premium efficiency type; meeting or exceeding utility requirements for rebate programs.

## 1.5 COORDINATION

A. Coordinate features of motors & motor controllers/VFD’s, installed units, and accessory devices and features that comply with the following:

1. Compatible with the following:

a. Magnetic controllers.
b. Multispeed controllers.
c. Reduced-voltage controllers.
d. Variable Speed Drives

2. Designed and labeled for use with variable frequency controllers, and suitable for use throughout speed range without overheating.

3. Matched to torque and horsepower requirements of the load.
4. Matched to ratings and characteristics of supply circuit and required control sequence.

B. Electrical Service: All motors shall be 60 Hertz unless otherwise noted. Refer to Electrical Specifications for required electrical characteristics.

C. Visible Nameplate: Indicating manufacturer's name and model number, motor horsepower, RPM, frame size, voltage, phase, cycles, full load amps, insulation system class, service factor, maximum ambient temperature, temperature rise at rated horsepower, minimum efficiency, power factor.

D. Suitable starting and controlling equipment and devices shall be furnished and installed as specified hereinafter and as shown on the Drawings. The starting equipment shall be arranged, generally, in control groups, or in certain cases, as isolated combination starters as specified or indicated. The Heating Ventilating and Air Conditioning Sequences of Operation, drawings and specifications shall be referred to for the manner of control, operation and monitoring of motors and the electrically operated equipment.

E. A starter shall be provided for each motor and each electrically operated piece of equipment except where complete starters and controls are furnished by the manufacturer of the motor or piece of equipment. Starters shall be internally wired to provide the required control operation and monitoring. All control devices such as push buttons, break-glass stations, alternators, relays, pilot lights, etc., shall be provided as required for operation of mechanical equipment.

F. Starting equipment and devices furnished under this Section shall be installed by the Electrical Contractor. The Electrical Contractor shall also do all wiring necessary to supply power to the electric motors provided under this Section, including connections from the starters to the motors.

G. This Contractor shall furnish and install all wiring between control devices and controlled equipment furnished under this Section, including interlock control wiring between motor starters, and all automatic temperature control wiring. All wiring shall be installed in conformance with applicable codes and the requirements of the Electrical Division of the Specifications.

H. The Electrical Contractor shall furnish a 120 volt power source to temperature control panels and equipment requiring a separate 120 volt control power source. Power for control circuits for all devices connecting to motor starters shall be obtained from 120-volt control transformers provided in each starter operating at other than 120 volts. Provide transformers for all low voltage control systems as required.

I. Furnish detailed composite wiring diagrams and such other information necessary to assure the proper connection, operation and control of motorized equipment, including interlocks, automatic controls, safety controls and all auxiliary circuits.

J. All control units shall be furnished with a nameplate indicating which device or equipment it controls, the voltage. Additional nameplates on each push button, selector switch and pilot light indicating their functions shall be provided. Nameplates shall be laminated phenolic with white letters on black background.

PART 2 - PRODUCTS

2.6 STARTERS

A. General

1. Starters for motors operating at 120 volts shall be manual starters unless otherwise indicated. Starters for motors operating at other than 120 volts shall be magnetic starters.
2. All starters shall be enclosed. Enclosures shall be surface mounted NEMA 1 unless otherwise indicated.
3. Where weatherproof starters are required or indicated, the enclosure shall be NEMA 3R.
4. It shall be verified that the correct overload heaters have been furnished and installed in the starter before energizing any motor. Sizing shall be based on motor nameplate current and taking into account any reduction in current due to power factor correction.
5. Alternate Manufacturers –

- Allen-Bradley
- Crouse-Hinds Co.
- Cutler-Hammer, Inc.
- General Electric Co.
- Square D Co.
- Westinghouse Electric Corp.

B. Manual Starters

1. Two-pole, toggle operated, thermal overload device in each phase leg, handle guard for padlocking toggle handle and with indicated control and signal devices.
2. Where a motor is controlled automatically by an interlock or pilot device, a “HAND-OFF-AUTO” switch shall be provided in the starter cover. Where the rating of the interlock or pilot device is inadequate to control the motor currents directly, a properly rated contactor shall be provided between the controlling device and the motor.
3. An “ON” pilot light shall be provided in the starter cover.

C. Magnetic Starter

1. Starters shall be sized in accordance with NEMA standards and the following table except that starters shall not be smaller than NEMA size 0. Starters shall be provided with one N.O. electrical holding interlock, under voltage protection and two additional auxiliary contacts within the same enclosure. NEMA size starters shall be provided as follows:

| Starter Size | Maximum HP @ 460 Volts |
|---|---|
| 0 | 5 |
| 1 | 10 |
| 2 | 25 |
| 3 | 50 |

2. All starters shall be Type 2 coordination protected. Fuses shall be Bussman "Low Peak" type or equal sized at 125% of motor nameplate rating. Verify and coordinate requirements for fused disconnect switches with the Electrical Contractor prior to ordering starters.
1. 3. Provide S.S.P.B. or H-O-A switches and pilot light in covers as required to facilitate control operation sequences.

## 2.7 VARIABLE FREQUENCY CONTROLLERS (VFD'S)

A. Description: NEMA ICS 2, IGBT, PWM, VFC; listed and labeled as a complete unit and arranged to provide variable speed of an NEMA MG 1, Design B, 3-phase induction motor by adjusting output voltage and frequency.

1. Provide unit suitable for operation of premium-efficiency motor as defined by NEMA MG 1.

B. Design and Rating: Match load type such as fans, blowers, and pumps; and type of connection used between motor and load such as direct or through a power-transmission connection.

C. Output Rating: 3-phase; 6 to 60 Hz, with voltage proportional to frequency throughout voltage range.

D. Unit Operating Requirements:

1. Input ac voltage tolerance of 380 to 500 V, plus or minus 10 percent. Except noted on drawings.
2. Input frequency tolerance of 50/60 Hz, plus or minus 6 percent.
3. Minimum Efficiency: 96 percent at 60 Hz, full load.
4. Minimum Displacement Primary-Side Power Factor: 96 percent.
5. Overload Capability: 1.1 times the base load current for 60 seconds; 2.0 times the base load current for 3 seconds.
6. Starting Torque: 100 percent of rated torque or as indicated.
7. Speed Regulation: Plus or minus 1 percent.

E. Isolated control interface to allow controller to follow control signal over an 11:1 speed range.

1. Electrical Signal: 4 to 20 mA at 24 V.

F. Internal Adjustability Capabilities:

1. Minimum Speed: 5 to 25 percent of maximum rpm.
2. Maximum Speed: 80 to 100 percent of maximum rpm.
3. Acceleration: 2 to a minimum of 22 seconds.

4. Deceleration: 2 to a minimum of 22 seconds.
5. Current Limit: 50 to a minimum of 110 percent of maximum rating.

G. Self-Protection and Reliability Features:

1. Input transient protection by means of surge suppressors.
2. Under- and overvoltage trips; inverter overtemperature, overload, and overcurrent trips.
3. Motor Overload Relay: Adjustable and capable of NEMA ICS 2, Class 10 performance.
4. Notch filter to prevent operation of the controller-motor-load combination at a natural frequency of the combination.
5. Instantaneous line-to-line and line-to-ground overcurrent trips.
6. Loss-of-phase protection.
7. Reverse-phase protection.
8. Short-circuit protection.
9. Motor overtemperature fault.

H. Multiple-Motor Capability: Controller suitable for service to multiple motors and having a separate overload relay and protection for each controlled motor. Overload relay shall shut off controller and motors served by it when overload relay is tripped.

I. Automatic Reset/Restart: Attempts three restarts after controller fault or on return of power after an interruption and before shutting down for manual reset or fault correction. Bidirectional autospeed search shall be capable of starting into rotating loads spinning in either direction and returning motor to set speed in proper direction, without damage to controller, motor, or load.

J. Power-Interruption Protection: To prevent motor from re-energizing after a power interruption until motor has stopped.

K. Torque Boost: Automatically varies starting and continuous torque to at least 1.5 times the minimum torque to ensure high-starting torque and increased torque at slow speeds.

L. Motor Temperature Compensation at Slow Speeds: Adjustable current fall-back based on output frequency for temperature protection of self-cooled, fan-ventilated motors at slow speeds.

M. Status Lights: Door-mounted LED indicators shall indicate the following conditions:

1. Power on.
2. Run.
3. Overvoltage.
4. Line fault.
5. Overcurrent.
6. External fault.

N. Panel-Mounted Operator Station: Start-stop and auto-manual selector switches with manual speed control potentiometer and elapsed time meter.

O. Indicating Devices: Meters or digital readout devices and selector switch, mounted flush in controller door and connected to indicate the following controller parameters:

1. Output frequency (Hz).
2. Motor speed (rpm).
3. Motor status (running, stop, fault).
4. Motor current (amperes).
5. Motor torque (percent).
6. Fault or alarming status (code).
7. PID feedback signal (percent).
8. DC-link voltage (VDC).
9. Set-point frequency (Hz).
10. Motor output voltage (V).

P. Control Signal Interface:

1. Electric Input Signal Interface: A minimum of 2 analog inputs (0 to 10 V or 0/4-20 mA) and 6 programmable digital inputs.
2. Remote Signal Inputs: Capability to accept any of the following speed-setting input signals from the BMS or other control systems:

   a. 0 to 10-V dc.
   b. 0-20 or 4-20 mA.
   c. Potentiometer using up/down digital inputs.
   d. Fixed frequencies using digital inputs.
   e. RS485.
   f. Keypad display for local hand operation.

3. Output Signal Interface:

   a. A minimum of 1 analog output signal (0/4-20 mA), which can be programmed to any of the following:

      1) Output frequency (Hz).
      2) Output current (load).
      3) DC-link voltage (VDC).
      4) Motor torque (percent).
      5) Motor speed (rpm).
      6) Set-point frequency (Hz).

4. Remote Indication Interface: A minimum of 2 dry circuit relay outputs (120-V ac, 1 A) for remote indication of the following:

   a. Motor running.
   b. Set-point speed reached.

c. Fault and warning indication (overtemperature or overcurrent).
d. PID high- or low-speed limits reached.

Q. Communications: Provide an RS485 interface allowing VFC to be used with an external system within a multidrop LAN configuration. Interface shall allow all parameter settings of VFC to be programmed via BMS control. Provide capability for VFC to retain these settings within the nonvolatile memory.

R. Manual Bypass: Magnetic contactor arranged to safely transfer motor between controller output and bypass controller circuit when motor is at zero speed. Controller-off-bypass selector switch sets mode, and indicator lights give indication of mode selected. Unit shall be capable of stable operation (starting, stopping, and running), with motor completely disconnected from controller (no load).

S. Bypass Controller: NEMA ICS 2, full-voltage, non-reversing enclosed controller with across-the-line starting capability in manual-bypass mode. Provide motor overload protection under both modes of operation with control logic that allows common start-stop capability in either mode.

T. Integral Disconnecting Means: NEMA AB 1, instantaneous-trip circuit breaker with lockable handle.

U. Isolating Switch: Non-load-break switch arranged to isolate VFC and permit safe troubleshooting and testing, both energized and de-energized, while motor is operating in bypass mode.

V. Remote Indicating Circuit Terminals: Mode selection, controller status, and controller fault.

## 2.8 ENCLOSURES

A. Enclosures shall beNEMA-1 rated unless otherwise noted.

## 2.9 ACCESSORIES

A. Devices shall be factory installed in controller enclosure, unless otherwise indicated.

B. Push-Button Stations, Pilot Lights, and Selector Switches: NEMA ICS 2, heavy-duty type.

C. Stop and Lockout Push-Button Station: Momentary-break, push-button station with a factory-applied hasp arranged so padlock can be used to lock push button in depressed position with control circuit open.

D. Control Relays: Auxiliary and adjustable time-delay relays.

E. Standard Displays:

1. Output frequency (Hz).
2. Set-point frequency (Hz).
3. Motor current (amperes).
4. DC-link voltage (VDC).
5. Motor torque (percent).
6. Motor speed (rpm).
7. Motor output voltage (V).

F. Historical Logging Information and Displays:

1. Real-time clock with current time and date.
2. Running log of total power versus time.
3. Total run time.
4. Fault log, maintaining last four faults with time and date stamp for each.

G. Current-Sensing, Phase-Failure Relays for Bypass Controller: Solid-state sensing circuit with isolated output contacts for hard-wired connection; arranged to operate on phase failure, phase reversal, current unbalance of from 30 to 40 percent, or loss of supply voltage; with adjustable response delay.

## 2.2 FACTORY FINISHES

A. Finish: Manufacturer's standard paint applied to factory-assembled and -tested VFCs before shipping.

# PART 3 - EXECUTION

## 3.1 EXAMINATION

A. Examine areas to receive field-installed motors for compliance with requirements, installation tolerances and clearances from other equipment, access and other conditions affecting performance and maintenance.

B. Examine roughing-in for conduit systems to verify actual locations of conduit connections before motor installation.

C. Proceed with installation only after any and all unsatisfactory conditions have been corrected.

## 3.2 FIELD-INSTALLED MOTOR & CONTROLLER/VFD INSTALLATION

A. Anchor each motor assembly to base, adjustable rails, or other support, arranged and sized according to manufacturer's written instructions. Attach by bolting. Level and align with load transfer link.

B. Install motors and VFD's where applicable on concrete bases complying with Division 3.

C. Protect motors stored on site from weather and moisture by maintaining factory covers and suitable weatherproof covering. For extended outdoor storage, remove motors from equipment and store separately.

## 3.3 FIELD QUALITY CONTROL FOR FIELD-INSTALLED MOTORS

A. Prepare for acceptance tests.

1. Align motors, bases, shafts, pulleys, and belts. Tension belts according to manufacturer's written instructions.
2. Verify bearing lubrication.
3. Run each motor with its controller. Demonstrate correct rotation, alignment, and speed at motor design load.
4. Test interlocks and control and safety features for proper operation.
5. Verify that current and voltage for each phase comply with nameplate rating and NEMA MG 1 tolerances.

B. Manufacturer's Field Service: Engage a factory-authorized service representative to inspect, test, and adjust field-assembled components and equipment installation, including connections, and to assist in field testing. Report results in writing.

C. Testing Agency: Engage a qualified testing and inspecting agency to perform the following field tests and inspections and prepare test reports:

D. Perform the following field tests and inspections and prepare test reports:

1. Perform electrical tests and visual and mechanical inspections including optional tests and inspections stated in NETA ATS on factory- and field-installed motors. Certify compliance with test parameters.
2. Correct malfunctioning units on-site, where possible, and retest to demonstrate compliance; otherwise, replace with new units and retest.

3.4 FIELD-INSTALLED MOTOR DEMONSTRATION

A. Engage a factory-authorized service representative to train Owner's maintenance personnel to adjust, operate, and maintain field-installed motors & controlers/vfd's. Refer to Division 1 Section "Closeout Procedures Demonstration and Training."

**END OF SECTION**

# SECTION 230593
# TESTING, ADJUSTING, AND BALANCING FOR HVAC

## PART 1 - GENERAL

### 1.1 RELATED DOCUMENTS

A. Drawings and general provisions of the Contract, including General and Supplementary Conditions and Division 01 Specification Sections, apply to this Section.

### 1.2 SUMMARY

A. Section Includes:

1. Balancing Air Systems:

   a. Constant-volume air systems.

2. Balancing Hydronic Piping Systems:

   a. Constant-flow hydronic systems.
   b. Primary-secondary hydronic systems.

### 1.3 DEFINITIONS

A. AABC: Associated Air Balance Council.

B. NEBB: National Environmental Balancing Bureau.

C. TAB: Testing, adjusting, and balancing.

D. TABB: Testing, Adjusting, and Balancing Bureau.

E. TAB Specialist: An entity engaged to perform TAB Work.

### 1.4 SUBMITTALS

A. Qualification Data: Within 30 days of Contractor's Notice to Proceed, submit

documentation that the TAB contractor and this Project's TAB team members meet the qualifications specified in "Quality Assurance" Article.

B. Contract Documents Examination Report: Within 30 days of Contractor's Notice to Proceed, submit the Contract Documents review report as specified in Part 3.

C. Strategies and Procedures Plan: Within 60 days of Contractor's Notice to Proceed, submit TAB strategies and step-by-step procedures as specified in "Preparation" Article.

D. Certified TAB reports.

E. Sample report forms.

F. Instrument calibration reports, to include the following:

1. Instrument type and make.
2. Serial number.
3. Application.
4. Dates of use.
5. Dates of calibration.

1.5 QUALITY ASSURANCE

A. TAB Contractor Qualifications: Engage a TAB entity certified by AABC or TABB.

1. TAB Field Supervisor: Employee of the TAB contractor and certified by AABC or TABB.
2. TAB Technician: Employee of the TAB contractor and who is certified by AABC or TABB as a TAB technician.

B. TAB Conference: Meet with Owner on approval of the TAB strategies and procedures plan to develop a mutual understanding of the details. Require the participation of the TAB field supervisor and technicians. Provide seven days' advance notice of scheduled meeting time and location.

1. Agenda Items:

a. The Contract Documents examination report.
b. The TAB plan.
c. Coordination and cooperation of trades and subcontractors.
d. Coordination of documentation and communication flow.

C. Certify TAB field data reports and perform the following:

1. Review field data reports to validate accuracy of data and to prepare certified TAB reports.
2. Certify that the TAB team complied with the approved TAB plan and the procedures specified and referenced in this Specification.

D. TAB Report Forms: Use standard TAB contractor's forms approved by Owner.

E. Instrumentation Type, Quantity, Accuracy, and Calibration: As described in ASHRAE 111, Section 5, "Instrumentation."

1.6 PROJECT CONDITIONS

A. Partial Owner Occupancy: Owner may occupy completed areas of building before Substantial Completion. Cooperate with Owner during TAB operations to minimize conflicts with Owner's operations.

1.7 COORDINATION

A. Notice: Provide days' advance notice for each test. Include scheduled test dates and times.

B. Perform TAB after leakage and pressure tests on air and water distribution systems have been satisfactorily completed.

PART 2 - PRODUCTS (Not Applicable)

PART 3 - EXECUTION

3.1 EXAMINATION

A. Examine the Contract Documents to become familiar with Project requirements and to discover conditions in systems' designs that may preclude proper TAB of systems and equipment.

B. Examine systems for installed balancing devices, such as test ports, gage cocks, thermometer wells, flow-control devices, balancing valves and fittings, and manual volume dampers. Verify that locations of these balancing devices are accessible.

C. Examine the approved submittals for HVAC systems and equipment.

D. Examine design data including HVAC system descriptions, statements of design

assumptions for environmental conditions and systems' output, and statements of philosophies and assumptions about HVAC system and equipment controls.

E. Examine ceiling plenums and underfloor air plenums used for supply, return, or relief air to verify that they meet the leakage class of connected ducts as specified in Division 23 Section "Metal Ducts" and are properly separated from adjacent areas. Verify that penetrations in plenum walls are sealed and fire-stopped if required.

F. Examine equipment performance data including fan and pump curves.

1. Relate performance data to Project conditions and requirements, including system effects that can create undesired or unpredicted conditions that cause reduced capacities in all or part of a system.
2. Calculate system-effect factors to reduce performance ratings of HVAC equipment when installed under conditions different from the conditions used to rate equipment performance. To calculate system effects for air systems, use tables and charts found in AMCA 201, "Fans and Systems," or in SMACNA's "HVAC Systems - Duct Design." Compare results with the design data and installed conditions.

G. Examine system and equipment installations and verify that field quality-control testing, cleaning, and adjusting specified in individual Sections have been performed.

H. Examine test reports specified in individual system and equipment Sections.

I. Examine HVAC equipment and filters and verify that bearings are greased, belts are aligned and tight, and equipment with functioning controls is ready for operation.

J. Examine terminal units, such as variable-air-volume boxes, and verify that they are accessible and their controls are connected and functioning.

K. Examine strainers. Verify that startup screens are replaced by permanent screens with indicated perforations.

L. Examine three-way valves for proper installation for their intended function of diverting or mixing fluid flows.

M. Examine heat-transfer coils for correct piping connections and for clean and straight fins.

N. Examine system pumps to ensure absence of entrained air in the suction piping.

O. Examine operating safety interlocks and controls on HVAC equipment.

P. Report deficiencies discovered before and during performance of TAB procedures. Observe and record system reactions to changes in conditions. Record default set points if different from indicated values.

## 3.2 PREPARATION

A. Prepare a TAB plan that includes strategies and step-by-step procedures.

B. Complete system-readiness checks and prepare reports. Verify the following:

1. Permanent electrical-power wiring is complete.
2. Hydronic systems are filled, clean, and free of air.
3. Automatic temperature-control systems are operational.
4. Equipment and duct access doors are securely closed.
5. Balance, smoke, and fire dampers are open.
6. Isolating and balancing valves are open and control valves are operational.
7. Ceilings are installed in critical areas where air-pattern adjustments are required and access to balancing devices is provided.
8. Windows and doors can be closed so indicated conditions for system operations can be met.

## 3.3 GENERAL PROCEDURES FOR TESTING AND BALANCING

A. Perform testing and balancing procedures on each system according to the procedures contained in AABC's "National Standards for Total System Balance" and in this Section.

B. Cut insulation, ducts, pipes, and equipment cabinets for installation of test probes to the minimum extent necessary for TAB procedures.
1. After testing and balancing, install test ports and duct access doors that comply with requirements in Division 23 Section "Air Duct Accessories."
2. Install and join new insulation that matches removed materials. Restore insulation, coverings, vapor barrier, and finish according to Division 23 Section "HVAC Insulation."

C. Mark equipment and balancing devices, including damper-control positions, valve position indicators, fan-speed-control levers, and similar controls and devices, with paint or other suitable, permanent identification material to show final settings.

D. Take and report testing and balancing measurements in inch-pound (IP) units.

## 3.4 GENERAL PROCEDURES FOR BALANCING AIR SYSTEMS

A. Prepare test reports for both fans and outlets. Obtain manufacturer's outlet factors and recommended testing procedures. Crosscheck the summation of required outlet volumes with required fan volumes.

B. Prepare schematic diagrams of systems' "as-built" duct layouts.

C. For variable-air-volume systems, develop a plan to simulate diversity.

D. Determine the best locations in main and branch ducts for accurate duct-airflow measurements.

E. Check airflow patterns from the outdoor-air louvers and dampers and the return- and exhaust-air dampers through the supply-fan discharge and mixing dampers.

F. Locate start-stop and disconnect switches, electrical interlocks, and motor starters.

G. Verify that motor starters are equipped with properly sized thermal protection.

H. Check dampers for proper position to achieve desired airflow path.

I. Check for airflow blockages.

J. Check condensate drains for proper connections and functioning.

K. Check for proper sealing of air-handling-unit components.

L. Verify that air duct system is sealed as specified in Division 23 Section "Metal Ducts."

## 3.5 PROCEDURES FOR CONSTANT-VOLUME AIR SYSTEMS

A. Adjust fans to deliver total indicated airflows within the maximum allowable fan speed listed by fan manufacturer.

1. Measure total airflow.

   a. Where sufficient space in ducts is unavailable for Pitot-tube traverse measurements, measure airflow at terminal outlets and inlets and calculate the total airflow.

2. Measure fan static pressures as follows to determine actual static pressure:

   a. Measure outlet static pressure as far downstream from the fan as practical and upstream from restrictions in ducts such as elbows and transitions.
   b. Measure static pressure directly at the fan outlet or through the flexible connection.
   c. Measure inlet static pressure of single-inlet fans in the inlet duct as near the fan as possible, upstream from the flexible connection, and downstream from duct restrictions.
   d. Measure inlet static pressure of double-inlet fans through the wall of the plenum that houses the fan.

3. Measure static pressure across each component that makes up an air-handling unit, rooftop unit, and other air-handling and -treating equipment.

a. Report the cleanliness status of filters and the time static pressures are measured.

4. Measure static pressures entering and leaving other devices, such as sound traps, heat-recovery equipment, and air washers, under final balanced conditions.

5. Review Record Documents to determine variations in design static pressures versus actual static pressures. Calculate actual system-effect factors. Recommend adjustments to accommodate actual conditions.
6. Obtain approval from Owner for adjustment of fan speed higher or lower than indicated speed. Comply with requirements in Division 23 Sections for air-handling units for adjustment of fans, belts, and pulley sizes to achieve indicated air-handling-unit performance.
7. Do not make fan-speed adjustments that result in motor overload. Consult equipment manufacturers about fan-speed safety factors. Modulate dampers and measure fan-motor amperage to ensure that no overload will occur. Measure amperage in full-cooling, full-heating, economizer, and any other operating mode to determine the maximum required brake horsepower.

B. Adjust volume dampers for main duct, submain ducts, and major branch ducts to indicated airflows within specified tolerances.

1. Measure airflow of submain and branch ducts.

a. Where sufficient space in submain and branch ducts is unavailable for Pitot-tube traverse measurements, measure airflow at terminal outlets and inlets and calculate the total airflow for that zone.

2. Measure static pressure at a point downstream from the balancing damper, and adjust volume dampers until the proper static pressure is achieved.
3. Remeasure each submain and branch duct after all have been adjusted. Continue to adjust submain and branch ducts to indicated airflows within specified tolerances.

C. Measure air outlets and inlets without making adjustments.

1. Measure terminal outlets using a direct-reading hood or outlet manufacturer's written instructions and calculating factors.

D. Adjust air outlets and inlets for each space to indicated airflows within specified tolerances of indicated values. Make adjustments using branch volume dampers rather than extractors and the dampers at air terminals.

1. Adjust each outlet in same room or space to within specified tolerances of indicated quantities without generating noise levels above the limitations prescribed by the Contract Documents.

2. Adjust patterns of adjustable outlets for proper distribution without drafts.

## 3.6 GENERAL PROCEDURES FOR HYDRONIC SYSTEMS

A. Prepare test reports with pertinent design data, and number in sequence starting at pump to end of system. Check the sum of branch-circuit flows against the approved pump flow rate. Correct variations that exceed plus or minus 5 percent.

B. Prepare schematic diagrams of systems' "as-built" piping layouts.

C. Prepare hydronic systems for testing and balancing according to the following, in addition to the general preparation procedures specified above:

1. Open all manual valves for maximum flow.
2. Check liquid level in expansion tank.
3. Check makeup water-station pressure gage for adequate pressure for highest vent.
4. Check flow-control valves for specified sequence of operation, and set at indicated flow.
5. Set differential-pressure control valves at the specified differential pressure. Do not set at fully closed position when pump is positive-displacement type unless several terminal valves are kept open.
6. Set system controls so automatic valves are wide open to heat exchangers.
7. Check pump-motor load. If motor is overloaded, throttle main flow-balancing device so motor nameplate rating is not exceeded.
8. Check air vents for a forceful liquid flow exiting from vents when manually operated.

## 3.7 PROCEDURES FOR CONSTANT-FLOW HYDRONIC SYSTEMS

A. Measure water flow at pumps. Use the following procedures except for positive-displacement pumps:

1. Verify impeller size by operating the pump with the discharge valve closed. Read pressure differential across the pump. Convert pressure to head and correct for differences in gage heights. Note the point on manufacturer's pump curve at zero flow and verify that the pump has the intended impeller size.

   a. If impeller sizes must be adjusted to achieve pump performance, obtain approval from Owner and comply with requirements in Division 23 Section "Hydronic Pumps."

2. Check system resistance. With all valves open, read pressure differential across the pump and mark pump manufacturer's head-capacity curve. Adjust pump discharge valve until indicated water flow is achieved.

a. Monitor motor performance during procedures and do not operate motors in overload conditions.

3. Verify pump-motor brake horsepower. Calculate the intended brake horsepower for the system based on pump manufacturer's performance data. Compare calculated brake horsepower with nameplate data on the pump motor. Report conditions where actual amperage exceeds motor nameplate amperage.
4. Report flow rates that are not within plus or minus 10 percent of design.

B. Measure flow at all automatic flow control valves to verify that valves are functioning as designed.

C. Measure flow at all pressure-independent characterized control valves, with valves in fully open position, to verify that valves are functioning as designed.

D. Set calibrated balancing valves, if installed, at calculated pre-settings.

E. Measure flow at all stations and adjust, where necessary, to obtain first balance.

1. System components that have Cv rating or an accurately cataloged flow-pressure-drop relationship may be used as a flow-indicating device.

F. Measure flow at main balancing station and set main balancing device to achieve flow that is 5 percent greater than indicated flow.

G. Adjust balancing stations to within specified tolerances of indicated flow rate as follows:

1. Determine the balancing station with the highest percentage over indicated flow.
2. Adjust each station in turn, beginning with the station with the highest percentage over indicated flow and proceeding to the station with the lowest percentage over indicated flow.
3. Record settings and mark balancing devices.

H. Measure pump flow rate and make final measurements of pump amperage, voltage, rpm, pump heads, and systems' pressures and temperatures including outdoor-air temperature.

I. Measure the differential-pressure-control-valve settings existing at the conclusion of balancing.

J. Check settings and operation of each safety valve. Record settings.

## 3.8 PROCEDURES FOR PRIMARY-SECONDARY HYDRONIC SYSTEMS

A. Balance the primary circuit flow first and then balance the secondary circuits.

## 3.9 PROCEDURES FOR HEAT EXCHANGERS

A. Measure water flow through all circuits.

B. Adjust water flow to within specified tolerances.

C. Measure inlet and outlet water temperatures.

D. Measure inlet steam pressure.

E. Check settings and operation of safety and relief valves. Record settings.

## 3.10 PROCEDURES FOR MOTORS

A. Motors, 1/2 HP and Larger: Test at final balanced conditions and record the following data:

1. Manufacturer's name, model number, and serial number.
2. Motor horsepower rating.
3. Motor rpm.
4. Efficiency rating.
5. Nameplate and measured voltage, each phase.
6. Nameplate and measured amperage, each phase.
7. Starter thermal-protection-element rating.

B. Motors Driven by Variable-Frequency Controllers: Test for proper operation at speeds varying from minimum to maximum. Test the manual bypass of the controller to prove proper operation. Record observations including name of controller manufacturer, model number, serial number, and nameplate data.

## 3.11 PROCEDURES FOR BOILERS

A. Hydronic Boilers: Measure and record entering- and leaving-water temperatures and water flow.

## 3.12 PROCEDURES FOR TESTING, ADJUSTING, AND BALANCING EXISTING SYSTEMS

A. Perform a preconstruction inspection of existing equipment that is to remain and be reused.

1. Measure and record the operating speed, airflow, and static pressure of each fan.
2. Measure motor voltage and amperage. Compare the values to motor nameplate information.

3. Check the condition of filters.
4. Check the condition of coils.
5. Check the operation of the drain pan and condensate-drain trap.
6. Check bearings and other lubricated parts for proper lubrication.
7. Report on the operating condition of the equipment and the results of the measurements taken. Report deficiencies.

B. Before performing testing and balancing of existing systems, inspect existing equipment that is to remain and be reused to verify that existing equipment has been cleaned and refurbished. Verify the following:

1. New filters are installed.
2. Coils are clean and fins combed.
3. Drain pans are clean.
4. Fans are clean.
5. Bearings and other parts are properly lubricated.
6. Deficiencies noted in the preconstruction report are corrected.

C. Perform testing and balancing of existing systems to the extent that existing systems are affected by the renovation work.

1. Compare the indicated airflow of the renovated work to the measured fan airflows, and determine the new fan speed and the face velocity of filters and coils.
2. Verify that the indicated airflows of the renovated work result in filter and coil face velocities and fan speeds that are within the acceptable limits defined by equipment manufacturer.
3. If calculations increase or decrease the air flow rates and water flow rates by more than 5 percent, make equipment adjustments to achieve the calculated rates. If increase or decrease is 5 percent or less, equipment adjustments are not required.
4. Balance each air outlet.

## 3.13 TOLERANCES

A. Set HVAC system's air flow rates and water flow rates within the following tolerances:

1. Supply, Return, and Exhaust Fans and Equipment with Fans: Plus or minus 10 percent.
2. Air Outlets and Inlets: Plus or minus 10 percent.
3. Heating-Water Flow Rate: Plus or minus 10 percent.

## 3.14 FINAL REPORT

A. General: Prepare a certified written report; tabulate and divide the report into separate sections for tested systems and balanced systems.

1. Include a certification sheet at the front of the report's binder, signed and sealed by the certified testing and balancing engineer.

2. Include a list of instruments used for procedures, along with proof of calibration.

B. Final Report Contents: In addition to certified field-report data, include the following:

1. Pump curves.
2. Fan curves.
3. Manufacturers' test data.
4. Field test reports prepared by system and equipment installers.
5. Other information relative to equipment performance; do not include Shop Drawings and product data.

C. General Report Data: In addition to form titles and entries, include the following data:

1. Title page.
2. Name and address of the TAB contractor.
3. Project name.
4. Project location.
5. Architect's name and address.
6. Engineer's name and address.
7. Contractor's name and address.
8. Report date.
9. Signature of TAB supervisor who certifies the report.
10. Table of Contents with the total number of pages defined for each section of the report. Number each page in the report.
11. Summary of contents including the following:

    a. Indicated versus final performance.
    b. Notable characteristics of systems.
    c. Description of system operation sequence if it varies from the Contract Documents.

12. Nomenclature sheets for each item of equipment.
13. Data for terminal units, including manufacturer's name, type, size, and fittings.
14. Notes to explain why certain final data in the body of reports vary from indicated values.
15. Test conditions for fans and pump performance forms including the following:

    a. Settings for outdoor-, return-, and exhaust-air dampers.
    b. Conditions of filters.

c. Cooling coil, wet- and dry-bulb conditions.
d. Face and bypass damper settings at coils.
e. Fan drive settings including settings and percentage of maximum pitch diameter.
f. Inlet vane settings for variable-air-volume systems.
g. Settings for supply-air, static-pressure controller.
h. Other system operating conditions that affect performance.

D. System Diagrams: Include schematic layouts of air and hydronic distribution systems. Present each system with single-line diagram and include the following:

1. Quantities of outdoor, supply, return, and exhaust airflows.
2. Water and steam flow rates.
3. Duct, outlet, and inlet sizes.
4. Pipe and valve sizes and locations.
5. Terminal units.
6. Balancing stations.
7. Position of balancing devices.

E. Air-Handling-Unit Test Reports: For air-handling units with coils, include the following:

1. Unit Data:

a. Unit identification.
b. Location.
c. Make and type.
d. Model number and unit size.
e. Manufacturer's serial number.
f. Unit arrangement and class.
g. Discharge arrangement.
h. Sheave make, size in inches, and bore.
i. Center-to-center dimensions of sheave, and amount of adjustments in inches.
j. Number, make, and size of belts.
k. Number, type, and size of filters.

2. Motor Data:

a. Motor make, and frame type and size.
b. Horsepower and rpm.
c. Volts, phase, and hertz.
d. Full-load amperage and service factor.
e. Sheave make, size in inches, and bore.
f. Center-to-center dimensions of sheave, and amount of adjustments in inches.

3. Test Data (Indicated and Actual Values):

   a. Total air flow rate in cfm.
   b. Total system static pressure in inches wg.
   c. Fan rpm.
   d. Discharge static pressure in inches wg.
   e. Filter static-pressure differential in inches wg.
   f. Outdoor airflow in cfm.
   g. Return airflow in cfm.
   h. Outdoor-air damper position.
   i. Return-air damper position.

F. Apparatus-Coil Test Reports:

1. Coil Data:

   a. System identification.
   b. Location.
   c. Coil type.
   d. Number of rows.
   e. Fin spacing in fins per inch o.c.
   f. Make and model number.
   g. Face area in sq. ft..
   h. Tube size in NPS.
   i. Tube and fin materials.
   j. Circuiting arrangement.

2. Test Data (Indicated and Actual Values):

   a. Air flow rate in cfm.
   b. Average face velocity in fpm.
   c. Air pressure drop in inches wg.
   d. Outdoor-air, wet- and dry-bulb temperatures in deg F.
   e. Return-air, wet- and dry-bulb temperatures in deg F.
   f. Entering-air, wet- and dry-bulb temperatures in deg F.
   g. Leaving-air, wet- and dry-bulb temperatures in deg F.
   h. Water flow rate in gpm.
   i. Water pressure differential in feet of head or psig.
   j. Entering-water temperature in deg F.
   k. Leaving-water temperature in deg F.

G. Fan Test Reports: For supply, return, and exhaust fans, include the following:

1. Fan Data:

   a. System identification.
   b. Location.

c. Make and type.
d. Model number and size.
e. Manufacturer's serial number.
f. Arrangement and class.
g. Sheave make, size in inches, and bore.
h. Center-to-center dimensions of sheave, and amount of adjustments in inches.

2. Motor Data:

a. Motor make, and frame type and size.
b. Horsepower and rpm.
c. Volts, phase, and hertz.
d. Full-load amperage and service factor.
e. Sheave make, size in inches, and bore.
f. Center-to-center dimensions of sheave, and amount of adjustments in inches.
g. Number, make, and size of belts.

3. Test Data (Indicated and Actual Values):

a. Total airflow rate in cfm.
b. Total system static pressure in inches wg.
c. Fan rpm.
d. Discharge static pressure in inches wg.
e. Suction static pressure in inches wg.

H. Round, Flat-Oval, and Rectangular Duct Traverse Reports: Include a diagram with a grid representing the duct cross-section and record the following:

1. Report Data:

a. System and air-handling-unit number.
b. Location and zone.
c. Traverse air temperature in deg F.
d. Duct static pressure in inches wg.
e. Duct size in inches.
f. Duct area in sq. ft..
g. Indicated air flow rate in cfm.
h. Indicated velocity in fpm.
i. Actual air flow rate in cfm.
j. Actual average velocity in fpm.
k. Barometric pressure in psig.

I. Pump Test Reports: Calculate impeller size by plotting the shutoff head on pump curves and include the following:

1. Unit Data:

    a. Unit identification.
    b. Location.
    c. Service.
    d. Make and size.
    e. Model number and serial number.
    f. Water flow rate in gpm.
    g. Water pressure differential in feet of head or psig.
    h. Required net positive suction head in feet of head or psig.
    i. Pump rpm.
    j. Impeller diameter in inches.
    k. Motor make and frame size.
    l. Motor horsepower and rpm.
    m. Voltage at each connection.
    n. Amperage for each phase.
    o. Full-load amperage and service factor.
    p. Seal type.

2. Test Data (Indicated and Actual Values):

    a. Static head in feet of head or psig.
    b. Pump shutoff pressure in feet of head or psig.
    c. Actual impeller size in inches.
    d. Full-open flow rate in gpm.
    e. Full-open pressure in feet of head or psig.
    f. Final discharge pressure in feet of head or psig.
    g. Final suction pressure in feet of head or psig.
    h. Final total pressure in feet of head or psig.
    i. Final water flow rate in gpm.
    j. Voltage at each connection.
    k. Amperage for each phase.

J. Instrument Calibration Reports:

1. Report Data:

    a. Instrument type and make.
    b. Serial number.
    c. Application.
    d. Dates of use.
    e. Dates of calibration.

## 3.15 INSPECTIONS

A. Initial Inspection:

1. After testing and balancing are complete, operate each system and randomly check measurements to verify that the system is operating according to the final test and balance readings documented in the final report.

2. Check the following for each system:

   a. Measure airflow of at least 10 percent of air outlets.
   b. Measure water flow of at least 5 percent of terminals.
   c. Measure room temperature at each thermostat/temperature sensor. Compare the reading to the set point.
   d. Verify that balancing devices are marked with final balance position.
   e. Note deviations from the Contract Documents in the final report.

B. Final Inspection:

1. The TAB contractor's test and balance engineer shall conduct the inspection in the presence of Owner.
2. Engineer shall randomly select measurements, documented in the final report, to be rechecked. Rechecking shall be limited to either 10 percent of the total measurements recorded or the extent of measurements that can be accomplished in a normal 8-hour business day.
3. If rechecks yield measurements that differ from the measurements documented in the final report by more than the tolerances allowed, the measurements shall be noted as "FAILED."
4. If the number of "FAILED" measurements is greater than 10 percent of the total measurements checked during the final inspection, the testing and balancing shall be considered incomplete and shall be rejected.

C. TAB Work will be considered defective if it does not pass final inspections. If TAB Work fails, proceed as follows:

1. Recheck all measurements and make adjustments. Revise the final report and balancing device settings to include all changes; resubmit the final report and request a second final inspection.
2. If the second final inspection also fails, Owner may contract the services of another TAB contractor to complete TAB Work according to the Contract Documents and deduct the cost of the services from the original TAB contractor's final payment.

D. Prepare test and inspection reports.

## 3.16 ADDITIONAL TESTS

A. Within 90 days of completing TAB, perform additional TAB to verify that balanced conditions are being maintained throughout and to correct unusual conditions.

B. Seasonal Periods: If initial TAB procedures were not performed during near-peak summer and winter conditions, perform additional TAB during near-peak summer and winter conditions.

**END OF SECTION**

# SECTION 230713
# DUCT INSULATION

## PART 1 - GENERAL

### 1.1 RELATED DOCUMENTS

A. Drawings and general provisions of the Contract, including General and Supplementary Conditions and Division 01 Specification Sections, apply to this Section.

### 1.2 SUMMARY

A. Section includes insulating the following duct services:

1. Indoor, concealed supply and outdoor air.
2. Indoor, exposed supply and outdoor air.
3. Indoor, concealed return located in unconditioned space.
4. Indoor, exposed return located in unconditioned space.
5. Indoor, concealed exhaust between isolation damper and penetration of building exterior.
6. Indoor, exposed exhaust between isolation damper and penetration of building exterior.

B. Related Sections:

1. Section 230716 "HVAC Equipment Insulation."
2. Section 230719 "HVAC Piping Insulation."
3. Section 233113 "Metal Ducts" for duct liners.

### 1.3 ACTION SUBMITTALS

A. Product Data: For each type of product indicated. Include thermal conductivity, water-vapor permeance thickness, and jackets (both factory- and field-applied if any).

B. Shop Drawings: Include plans, elevations, sections, details, and attachments to other work.

1. Detail application of protective shields, saddles, and inserts at hangers for each type of insulation and hanger.
2. Detail insulation application at elbows, fittings, dampers, specialties and flanges for each type of insulation.
3. Detail application of field-applied jackets.
4. Detail application at linkages of control devices.

## 1.4 INFORMATIONAL SUBMITTALS

A. Qualification Data: For qualified Installer.

B. Field quality-control reports.

## 1.5 QUALITY ASSURANCE

A. Surface-Burning Characteristics: For insulation and related materials, as determined by testing identical products according to ASTM E 84, by a testing agency acceptable to authorities having jurisdiction. Factory label insulation and jacket materials and adhesive, mastic, tapes, and cement material containers, with appropriate markings of applicable testing agency.

1. Insulation Installed Indoors: Flame-spread index of 25 or less, and smoke-developed index of 50 or less.
2. Insulation Installed Outdoors: Flame-spread index of 75 or less, and smoke-developed index of 150 or less.

## 1.6 DELIVERY, STORAGE, AND HANDLING

A. Packaging: Insulation material containers shall be marked by manufacturer with appropriate ASTM standard designation, type and grade, and maximum use temperature.

## 1.7 COORDINATION

A. Coordinate sizes and locations of supports, hangers, and insulation shields specified in Section 230529 "Hangers and Supports for HVAC Piping and Equipment."

B. Coordinate clearance requirements with duct Installer for duct insulation application. Before preparing ductwork Shop Drawings, establish and maintain clearance requirements for installation of insulation and field-applied jackets and finishes and for space required for maintenance.

## 1.8 SCHEDULING

A. Schedule insulation application after pressure testing systems and, where required, after installing and testing heat tracing. Insulation application may begin on segments that have satisfactory test results.

B. Complete installation and concealment of plastic materials as rapidly as possible in each area of construction.

PART 2 - PRODUCTS

2.1 INSULATION MATERIALS

A. Comply with requirements in "Duct Insulation Schedule, General," "Indoor Duct and Plenum Insulation Schedule," and "Aboveground, Outdoor Duct and Plenum Insulation Schedule" articles for where insulating materials shall be applied.

B. Products shall not contain asbestos, lead, mercury, or mercury compounds.

C. Products that come in contact with stainless steel shall have a leachable chloride content of less than 50 ppm when tested according to ASTM C 871.

D. Insulation materials for use on austenitic stainless steel shall be qualified as acceptable according to ASTM C 795.

E. Foam insulation materials shall not use CFC or HCFC blowing agents in the manufacturing process.

F. Mineral-Fiber Blanket Insulation: Mineral or glass fibers bonded with a thermosetting resin. Comply with ASTM C 553, Type II and ASTM C 1290, Type III with factory-applied FSK jacket. Factory-applied jacket requirements are specified in "Factory-Applied Jackets" Article.

1. Manufacturers: Subject to compliance with requirements, available manufacturers offering products that may be incorporated into the Work include, but are not limited to the following:

a. CertainTeed Corporation.
b. Johns Manville; a Berkshire Hathaway company.
c. Knauf Insulation.

G. Mineral-Fiber Board Insulation: Mineral or glass fibers bonded with a thermosetting resin. Comply with ASTM C 612, Type IA or Type IB. For duct and plenum applications, provide insulation with factory-applied FSK jacket. Factory-applied jacket requirements are specified in "Factory-Applied Jackets" Article.

1. Manufacturers: Subject to compliance with requirements, available manufacturers offering products that may be incorporated into the Work include, but are not limited to the following:

a. CertainTeed Corporation.
b. Johns Manville; a Berkshire Hathaway company.
c. Knauf Insulation.

2.2 ADHESIVES

A. Materials shall be compatible with insulation materials, jackets, and substrates and for

bonding insulation to itself and to surfaces to be insulated unless otherwise indicated.

B. Mineral-Fiber Adhesive: Comply with MIL-A-3316C, Class 2, Grade A.

1. Manufacturers: Subject to compliance with requirements, available manufacturers offering products that may be incorporated into the Work include, but are not limited to the following:

a. Childers Brand; H. B. Fuller Construction Products.
b. Eagle Bridges - Marathon Industries.
c. Foster Brand; H. B. Fuller Construction Products.

C. ASJ Adhesive, and FSK Jacket Adhesive: Comply with MIL-A-3316C, Class 2, Grade A for bonding insulation jacket lap seams and joints.

1. Manufacturers: Subject to compliance with requirements, available manufacturers offering products that may be incorporated into the Work include, but are not limited to the following:

a. Childers Brand; H. B. Fuller Construction Products.
b. Eagle Bridges - Marathon Industries.
c. Foster Brand; H. B. Fuller Construction Products.

## 2.3 MASTICS

A. Materials shall be compatible with insulation materials, jackets, and substrates; comply with MIL-PRF-19565C, Type II.

B. Breather Mastic: Water based; suitable for indoor and outdoor use on above ambient services.

1. Manufacturers: Subject to compliance with requirements, available manufacturers offering products that may be incorporated into the Work include, but are not limited to the following:

a. Childers Brand; H. B. Fuller Construction Products.
b. Foster Brand; H. B. Fuller Construction Products.
c. Knauf Insulation.

2. Water-Vapor Permeance: ASTM F 1249, 1.8 perms at 0.0625-inch dry film thickness.
3. Service Temperature Range: Minus 20 to plus 180 deg F.
4. Solids Content: 60 percent by volume and 66 percent by weight.
5. Color: White.

## 2.4 LAGGING ADHESIVES

A. Description: Comply with MIL-A-3316C, Class I, Grade A and shall be compatible with

insulation materials, jackets, and substrates.

1. Manufacturers: Subject to compliance with requirements, available manufacturers offering products that may be incorporated into the Work include, but are not limited to the following:

   a. Childers Brand; H. B. Fuller Construction Products.
   b. Foster Brand; H. B. Fuller Construction Products.
   c. Vimasco Corporation.

2. Fire-resistant, water-based lagging adhesive and coating for use indoors to adhere fire-resistant lagging cloths over duct insulation.
3. Service Temperature Range: 0 to plus 180 deg F.
4. Color: White.

## 2.5 SEALANTS

A. FSK and Metal Jacket Flashing Sealants:

1. Manufacturers: Subject to compliance with requirements, available manufacturers offering products that may be incorporated into the Work include, but are not limited to the following:

   a. Childers Brand; H. B. Fuller Construction Products.
   b. Eagle Bridges - Marathon Industries.
   c. Foster Brand; H. B. Fuller Construction Products.

2. Materials shall be compatible with insulation materials, jackets, and substrates.
3. Fire- and water-resistant, flexible, elastomeric sealant.
4. Service Temperature Range: Minus 40 to plus 250 deg F.
5. Color: Aluminum.

## 2.6 FACTORY-APPLIED JACKETS

A. Insulation system schedules indicate factory-applied jackets on various applications. When factory-applied jackets are indicated, comply with the following:

1. FSK Jacket: Aluminum-foil, fiberglass-reinforced scrim with kraft-paper backing; complying with ASTM C 1136, Type II.

## 2.7 TAPES

A. FSK Tape: Foil-face, vapor-retarder tape matching factory-applied jacket with acrylic adhesive; complying with ASTM C 1136.

1. Manufacturers: Subject to compliance with requirements, available manufacturers offering products that may be incorporated into the Work include, but are not limited to the following:

   a. Avery Dennison Corporation, Specialty Tapes Division.
   b. Compac Corporation.
   c. Knauf Insulation.

2. Width: 3 inches.
3. Thickness: 6.5 mils.
4. Adhesion: 90 ounces force/inch in width.
5. Elongation: 2 percent.
6. Tensile Strength: 40 lbf/inch in width.
7. FSK Tape Disks and Squares: Precut disks or squares of FSK tape.

## 2.8 SECUREMENTS

A. Bands:

1. Manufacturers: Subject to compliance with requirements, available manufacturers offering products that may be incorporated into the Work include, but are not limited to the following:

   a. ITW Insulation Systems; Illinois Tool Works, Inc.
   b. RPR Products, Inc.

2. Stainless Steel: ASTM A 167 or ASTM A 240/A 240M, Type 304 or Type 316; 0.015 inch thick, 1/2 inch wide with wing seal or closed seal.
3. Aluminum: ASTM B 209, Alloy 3003, 3005, 3105, or 5005; Temper H-14, 0.020 inch thick, 1/2 inch wide with wing seal or closed seal.
4. Springs: Twin spring set constructed of stainless steel with ends flat and slotted to accept metal bands. Spring size determined by manufacturer for application.

B. Insulation Pins and Hangers:

1. Capacitor-Discharge-Weld Pins: Copper- or zinc-coated steel pin, fully annealed for capacitor-discharge welding, 0.106-inch- diameter shank, length to suit depth of insulation indicated.

   a. Manufacturers: Subject to compliance with requirements, available manufacturers offering products that may be incorporated into the Work include, but are not limited to the following:

      1) AGM Industries, Inc.
      2) Gemco.
      3) Hardcast, Inc.

2. Cupped-Head, Capacitor-Discharge-Weld Pins: Copper- or zinc-coated steel pin, fully annealed for capacitor-discharge welding, 0.106-inch- diameter shank, length to suit depth of insulation indicated with integral 1-1/2-inch galvanized carbon-steel washer.

   a. Manufacturers: Subject to compliance with requirements, available manufacturers offering products that may be incorporated into the Work include, but are not limited to the following:

      1) Gemco.
      2) Hardcast, Inc.
      3) Midwest Fasteners, Inc.

3. Metal, Adhesively Attached, Perforated-Base Insulation Hangers: Baseplate welded to projecting spindle that is capable of holding insulation, of thickness indicated, securely in position indicated when self-locking washer is in place. Comply with the following requirements:

   a. Manufacturers: Subject to compliance with requirements, available manufacturers offering products that may be incorporated into the Work include, but are not limited to the following:

      1) AGM Industries, Inc.
      2) Gemco.
      3) Midwest Fasteners, Inc.

   b. Baseplate: Perforated, galvanized carbon-steel sheet, 0.030 inch thick by 2 inches square.

   c. Spindle: Copper- or zinc-coated, low-carbon steel, fully annealed, 0.106-inch-diameter shank, length to suit depth of insulation indicated.

   d. Adhesive: Recommended by hanger manufacturer. Product with demonstrated capability to bond insulation hanger securely to substrates indicated without damaging insulation, hangers, and substrates.

4. Nonmetal, Adhesively Attached, Perforated-Base Insulation Hangers: Baseplate fastened to projecting spindle that is capable of holding insulation, of thickness indicated, securely in position indicated when self-locking washer is in place. Comply with the following requirements:

   a. Manufacturers: Subject to compliance with requirements, available manufacturers offering products that may be incorporated into the Work include, but are not limited to the following:

      1) Gemco.
      2) Midwest Fasteners, Inc.

   b. Baseplate: Perforated, nylon sheet, 0.030 inch thick by 1-1/2 inches in diameter.

c. Spindle: Nylon, 0.106-inch-diameter shank, length to suit depth of insulation indicated, up to 2-1/2 inches.
d. Adhesive: Recommended by hanger manufacturer. Product with demonstrated capability to bond insulation hanger securely to substrates indicated without damaging insulation, hangers, and substrates.

5. Self-Sticking-Base Insulation Hangers: Baseplate welded to projecting spindle that is capable of holding insulation, of thickness indicated, securely in position indicated when self-locking washer is in place. Comply with the following requirements:

a. Manufacturers: Subject to compliance with requirements, available manufacturers offering products that may be incorporated into the Work include, but are not limited to the following:

1) AGM Industries, Inc.
2) Gemco.
3) Hardcast, Inc.

b. Baseplate: Galvanized carbon-steel sheet, 0.030 inch thick by 2 inches square.
c. Spindle: Copper- or zinc-coated, low-carbon steel, fully annealed, 0.106-inch-diameter shank, length to suit depth of insulation indicated.
d. Adhesive-backed base with a peel-off protective cover.

6. Insulation-Retaining Washers: Self-locking washers formed from 0.016-inch-thick, galvanized-steel sheet, with beveled edge sized as required to hold insulation securely in place but not less than 1-1/2 inches in diameter.

a. Manufacturers: Subject to compliance with requirements, available manufacturers offering products that may be incorporated into the Work include, but are not limited to the following:

1) AGM Industries, Inc.
2) Gemco.
3) Hardcast, Inc.

b. Protect ends with capped self-locking washers incorporating a spring steel insert to ensure permanent retention of cap in exposed locations.

C. Staples: Outward-clinching insulation staples, nominal 3/4-inch-wide, stainless steel or Monel.

D. Wire: 0.062-inch soft-annealed, stainless steel.

1. Manufacturers: Subject to compliance with requirements, available manufacturers offering products that may be incorporated into the Work include, but are not limited to the following:

a. C & F Wire.

2.9 CORNER ANGLES

A. Aluminum Corner Angles: 0.040 inch thick, minimum 1 by 1 inch, aluminum according to ASTM B 209, Alloy 3003, 3005, 3105, or 5005; Temper H-14.

B. Stainless-Steel Corner Angles: 0.024 inch thick, minimum 1 by 1 inch, stainless steel according to ASTM A 167 or ASTM A 240/A 240M, Type 304 or Type 316.

PART 3 - EXECUTION

3.1 EXAMINATION

A. Examine substrates and conditions for compliance with requirements for installation tolerances and other conditions affecting performance of insulation application.

1. Verify that systems to be insulated have been tested and are free of defects.
2. Verify that surfaces to be insulated are clean and dry.

B. Proceed with installation only after unsatisfactory conditions have been corrected.

3.2 PREPARATION

A. Surface Preparation: Clean and dry surfaces to receive insulation. Remove materials that will adversely affect insulation application.

3.3 GENERAL INSTALLATION REQUIREMENTS

A. Install insulation materials, accessories, and finishes with smooth, straight, and even surfaces; free of voids throughout the length of ducts and fittings.

B. Install insulation materials, vapor barriers or retarders, jackets, and thicknesses required for each item of duct system as specified in insulation system schedules.

C. Install accessories compatible with insulation materials and suitable for the service. Install accessories that do not corrode, soften, or otherwise attack insulation or jacket in either wet or dry state.

D. Install insulation with longitudinal seams at top and bottom of horizontal runs.

E. Install multiple layers of insulation with longitudinal and end seams staggered.

F. Keep insulation materials dry during application and finishing.

G. Install insulation with tight longitudinal seams and end joints. Bond seams and joints with adhesive recommended by insulation material manufacturer.

H. Install insulation with least number of joints practical.

I. Where vapor barrier is indicated, seal joints, seams, and penetrations in insulation at hangers, supports, anchors, and other projections with vapor-barrier mastic.

1. Install insulation continuously through hangers and around anchor attachments.

2. For insulation application where vapor barriers are indicated, extend insulation on anchor legs from point of attachment to supported item to point of attachment to structure. Taper and seal ends at attachment to structure with vapor-barrier mastic.
3. Install insert materials and install insulation to tightly join the insert. Seal insulation to insulation inserts with adhesive or sealing compound recommended by insulation material manufacturer.

J. Apply adhesives, mastics, and sealants at manufacturer's recommended coverage rate and wet and dry film thicknesses.

K. Install insulation with factory-applied jackets as follows:

1. Draw jacket tight and smooth.
2. Cover circumferential joints with 3-inch-wide strips, of same material as insulation jacket. Secure strips with adhesive and outward clinching staples along both edges of strip, spaced 4 inches o.c.
3. Overlap jacket longitudinal seams at least 1-1/2 inches. Clean and dry surface to receive self-sealing lap. Staple laps with outward clinching staples along edge at 4 inches o.c.

   a. For below ambient services, apply vapor-barrier mastic over staples.

4. Cover joints and seams with tape, according to insulation material manufacturer's written instructions, to maintain vapor seal.
5. Where vapor barriers are indicated, apply vapor-barrier mastic on seams and joints and at ends adjacent to duct flanges and fittings.

L. Cut insulation in a manner to avoid compressing insulation more than 75 percent of its nominal thickness.

M. Finish installation with systems at operating conditions. Repair joint separations and cracking due to thermal movement.

N. Repair damaged insulation facings by applying same facing material over damaged areas. Extend patches at least 4 inches beyond damaged areas. Adhere, staple, and seal patches similar to butt joints.

## 3.4 PENETRATIONS

A. Insulation Installation at Interior Wall and Partition Penetrations (That Are Not Fire Rated): Install insulation continuously through walls and partitions.

B. Insulation Installation at Fire-Rated Wall and Partition Penetrations: Terminate insulation at fire damper sleeves for fire-rated wall and partition penetrations. Externally insulate damper sleeves to match adjacent insulation and overlap duct insulation at least 2 inches.

   1. Comply with requirements in Section 078413 "Penetration Firestopping."

C. Insulation Installation at Floor Penetrations:

   1. Duct: For penetrations through fire-rated assemblies, terminate insulation at fire damper sleeves and externally insulate damper sleeve beyond floor to match adjacent duct insulation. Overlap damper sleeve and duct insulation at least 2 inches.
   2. Seal penetrations through fire-rated assemblies. Comply with requirements in Section 078413 "Penetration Firestopping."

## 3.5 INSTALLATION OF MINERAL-FIBER INSULATION

A. Blanket Insulation Installation on Ducts and Plenums: Secure with adhesive and insulation pins.

   1. Apply adhesives according to manufacturer's recommended coverage rates per unit area.
   2. Apply adhesive to entire circumference of ducts and to all surfaces of fittings and transitions.
   3. Install either capacitor-discharge-weld pins and speed washers or cupped-head, capacitor-discharge-weld pins on sides and bottom of horizontal ducts and sides of vertical ducts as follows:

      a. On duct sides with dimensions 18 inches and smaller, place pins along longitudinal centerline of duct. Space 3 inches maximum from insulation end joints, and 16 inches o.c.
      b. On duct sides with dimensions larger than 18 inches, place pins 16 inches o.c. each way, and 3 inches maximum from insulation joints. Install additional pins to hold insulation tightly against surface at cross bracing.
      c. Pins may be omitted from top surface of horizontal, rectangular ducts and plenums.
      d. Do not overcompress insulation during installation.
      e. Impale insulation over pins and attach speed washers.
      f. Cut excess portion of pins extending beyond speed washers or bend parallel with insulation surface. Cover exposed pins and washers with tape matching insulation facing.

4. For ducts and plenums with surface temperatures below ambient, install a continuous unbroken vapor barrier. Create a facing lap for longitudinal seams and end joints with insulation by removing 2 inches from one edge and one end of insulation segment. Secure laps to adjacent insulation section with 1/2-inch outward-clinching staples, 1 inch o.c. Install vapor barrier consisting of factory- or field-applied jacket, adhesive, vapor-barrier mastic, and sealant at joints, seams, and protrusions.

    a. Repair punctures, tears, and penetrations with tape or mastic to maintain vapor-barrier seal.
    b. Install vapor stops for ductwork and plenums operating below 50 deg F at 18-foot intervals. Vapor stops shall consist of vapor-barrier mastic applied in a Z-shaped pattern over insulation face, along butt end of insulation, and over the surface. Cover insulation face and surface to be insulated a width equal to two times the insulation thickness, but not less than 3 inches.

5. Overlap unfaced blankets a minimum of 2 inches on longitudinal seams and end joints. At end joints, secure with steel bands spaced a maximum of 18 inches o.c.
6. Install insulation on rectangular duct elbows and transitions with a full insulation section for each surface. Install insulation on round and flat-oval duct elbows with individually mitered gores cut to fit the elbow.
7. Insulate duct stiffeners, hangers, and flanges that protrude beyond insulation surface with 6-inch-wide strips of same material used to insulate duct. Secure on alternating sides of stiffener, hanger, and flange with pins spaced 6 inches o.c.

B. Board Insulation Installation on Ducts and Plenums: Secure with adhesive and insulation pins.

1. Apply adhesives according to manufacturer's recommended coverage rates per unit area.
2. Apply adhesive to entire circumference of ducts and to all surfaces of fittings and transitions.
3. Install either capacitor-discharge-weld pins and speed washers or cupped-head, capacitor-discharge-weld pins on sides and bottom of horizontal ducts and sides of vertical ducts as follows:

    a. On duct sides with dimensions 18 inches and smaller, place pins along longitudinal centerline of duct. Space 3 inches maximum from insulation end joints, and 16 inches o.c.
    b. On duct sides with dimensions larger than 18 inches, space pins 16 inches o.c. each way, and 3 inches maximum from insulation joints. Install additional pins to hold insulation tightly against surface at cross bracing.
    c. Pins may be omitted from top surface of horizontal, rectangular ducts and plenums.
    d. Do not overcompress insulation during installation.
    e. Cut excess portion of pins extending beyond speed washers or bend parallel with insulation surface. Cover exposed pins and washers with tape matching insulation facing.

4. For ducts and plenums with surface temperatures below ambient, install a continuous unbroken vapor barrier. Create a facing lap for longitudinal seams and end joints with insulation by removing 2 inches from one edge and one end of insulation segment. Secure laps to adjacent insulation section with 1/2-inch outward-clinching staples, 1 inch o.c. Install vapor barrier consisting of factory- or field-applied jacket, adhesive, vapor-barrier mastic, and sealant at joints, seams, and protrusions.

    a. Repair punctures, tears, and penetrations with tape or mastic to maintain vapor-barrier seal.
    b. Install vapor stops for ductwork and plenums operating below 50 deg F at 18-foot intervals. Vapor stops shall consist of vapor-barrier mastic applied in a Z-shaped pattern over insulation face, along butt end of insulation, and over the surface. Cover insulation face and surface to be insulated a width equal to two times the insulation thickness, but not less than 3 inches.

5. Install insulation on rectangular duct elbows and transitions with a full insulation section for each surface. Groove and score insulation to fit as closely as possible to outside and inside radius of elbows. Install insulation on round and flat-oval duct elbows with individually mitered gores cut to fit the elbow.
6. Insulate duct stiffeners, hangers, and flanges that protrude beyond insulation surface with 6-inch-wide strips of same material used to insulate duct. Secure on alternating sides of stiffener, hanger, and flange with pins spaced 6 inches o.c.

## 3.6 DUCT INSULATION SCHEDULE, GENERAL

A. Plenums and Ducts Requiring Insulation:

1. Indoor, concealed supply, return, and relief air located in unconditioned space.
2. Indoor, exposed supply, return, and relief air located in unconditioned space.
3. Indoor, concealed outside air in conditioned or unconditioned space.
4. Indoor, exposed outside air in conditioned or unconditioned space.
5. Indoor, concealed outside and exhaust between isolation damper and penetration of building exterior.
6. Indoor, exposed outside and exhaust between isolation damper and penetration of building exterior.

B. Items Not Insulated:

1. Fibrous-glass ducts.
2. Metal ducts with duct liner of sufficient thickness to comply with energy code and ASHRAE/IESNA 90.1.
3. Factory-insulated flexible ducts.
4. Factory-insulated plenums and casings.
5. Flexible connectors.
6. Vibration-control devices.
7. Factory-insulated access panels and doors.

3.7 INDOOR DUCT AND PLENUM INSULATION SCHEDULE

A. Concealed, inside building envelope in unconditioned spaces, supply, return, and relief air duct and plenum insulation shall be the following (R-6 minimum):

1. Mineral-Fiber Blanket: 1-1/2 inches thick and 1.5-lb/cu. ft. nominal density.

B. Exposed, inside building envelope in unconditioned spaces, supply, return, and relief air duct and plenum insulation shall be the following (R-6 minimum):

1. Mineral-Fiber Board: 1-1/2 inches thick and 3-lb/cu. ft. nominal density.

C. Concealed, inside building envelope in conditioned and unconditioned spaces, outside air duct and plenum shall be the following (R-8 minimum):

1. Mineral-Fiber Blanket: 2 inches thick and 1.5-lb/cu. ft. nominal density.

D. Exposed, inside building envelope in conditioned and unconditioned spaces, outside air duct and plenum shall be the following (R-8 minimum):

1. Mineral-Fiber Board: 2 inches thick and 3-lb/cu. ft. nominal density.

E. Concealed, inside building envelope in conditioned and unconditioned spaces between isolation damper and louver, exhaust and outside air shall be the following (R-8 minimum);

1. Mineral-Fiber Blanket: 2 inches thick and 1.5-lb/cu. ft. nominal density.

F. Exposed, inside building envelope in conditioned and unconditioned spaces between isolation damper and louver, exhaust and outside air shall be the following (R-8 minimum);

1. Mineral-Fiber Board: 2 inches thick and 3-lb/cu. ft. nominal density.

**END OF SECTION**

# SECTION 23 07 16

# HVAC EQUIPMENT INSULATION

## PART 1 – GENERAL

### 1.1 RELATED DOCUMENTS

A. Drawings and general provisions of the Contract, including General and Supplementary Conditions and Division 01 Specification Sections, apply to this Section.

### 1.2 SUMMARY

A. Section includes insulating the following HVAC equipment that is not factory insulated:

1. Heat exchangers.
2. Heating, hot-water pumps.
3. Expansion/compression tanks.
4. Air separators.

B. Related Sections:

1. Section 230713 "Duct Insulation."
2. Section 230719 "HVAC Piping Insulation."

### 1.3 ACTION SUBMITTALS

A. Product Data: For each type of product indicated. Include thermal conductivity, water-vapor permeance thickness, and jackets (both factory- and field-applied if any).

B. Shop Drawings: Include plans, elevations, sections, details, and attachments to other work.

1. Detail application of protective shields, saddles, and inserts at hangers for each type of insulation and hanger.
2. Detail attachment and covering of heat tracing inside insulation.
3. Detail removable insulation at equipment connections.
4. Detail application of field-applied jackets.
5. Detail application at linkages of control devices.
6. Detail field application for each equipment type.

1.4 INFORMATIONAL SUBMITTALS

A. Qualification Data: For qualified Installer.

1.5 DELIVERY, STORAGE, AND HANDLING

A. Packaging: Insulation material containers shall be marked by manufacturer with appropriate ASTM standard designation, type and grade, and maximum use temperature.

1.6 COORDINATION

A. Coordinate sizes and locations of supports, hangers, and insulation shields specified in Section 230529 "Hangers and Supports for HVAC Piping and Equipment."

B. Coordinate clearance requirements with equipment Installer for equipment insulation application.

C. Coordinate installation and testing of heat tracing.

1.7 SCHEDULING

A. Schedule insulation application after pressure testing systems and, where required, after installing and testing heat tracing. Insulation application may begin on segments that have satisfactory test results.

B. Complete installation and concealment of plastic materials as rapidly as possible in each area of construction.

PART 2 - PRODUCTS

2.1 INSULATION MATERIALS

A. Products shall not contain asbestos, lead, mercury, or mercury compounds.

B. Products that come in contact with stainless steel shall have a leachable chloride content of less than 50 ppm when tested according to ASTM C 871.

C. Insulation materials for use on austenitic stainless steel shall be qualified as acceptable according to ASTM C 795.

D. Foam insulation materials shall not use CFC or HCFC blowing agents in the manufacturing process.

E. Mineral-Fiber, Preformed Pipe Insulation:
   1. Manufacturers: Subject to compliance with requirements, available manufacturers offering products that may be incorporated into the Work include, but are not limited to, the following:

      a. Johns Manville; Micro-Lok.
      b. Knauf Insulation; 1000-Degree Pipe Insulation.
      c. Manson Insulation Inc.; Alley-K.

   2. Type I, 850 Deg F Materials: Mineral or glass fibers bonded with a thermosetting resin. Comply with ASTM C 547, Type I, Grade A, with factory-applied ASJ-SSL. Factory-applied jacket requirements are specified in "Factory-Applied Jackets" Article.

F. Mineral-Fiber, Pipe and Tank Insulation: Mineral or glass fibers bonded with a thermosetting resin. Semirigid board material with factory-applied ASJ complying with ASTM C 1393, Type II or Type IIIA Category 2, or with properties similar to ASTM C 612, Type IB. Nominal density is 2.5 lb/cu. ft. or more. Thermal conductivity (k-value) at 100 deg F is 0.29 Btu x in./h x sq. ft. x deg F or less. Factory-applied jacket requirements are specified in "Factory-Applied Jackets" Article.

   1. Manufacturers: Subject to compliance with requirements, available manufacturers offering products that may be incorporated into the Work include, but are not limited to, the following:

      a. CertainTeed Corp.; CrimpWrap.
      b. Johns Manville; MicroFlex.
      c. Knauf Insulation; Pipe and Tank Insulation.
      d. Owens Corning; Fiberglas Pipe and Tank Insulation.

## 2.2 INSULATING CEMENTS

A. Mineral-Fiber Insulating Cement: Comply with ASTM C 195.

   1. Manufacturers: Subject to compliance with requirements, available manufacturers offering products that may be incorporated into the Work include, but are not limited to, the following:

      a. Ramco Insulation, Inc.; Super-Stik.

B. Mineral-Fiber, Hydraulic-Setting Insulating and Finishing Cement: Comply with ASTM C 449.

   1. Manufacturers: Subject to compliance with requirements, available manufacturers offering products that may be incorporated into the Work include, but are not limited to, the following:

a. Ramco Insulation, Inc.; Ramcote 1200 and Quik-Cote.

## 2.3 ADHESIVES

A. Materials shall be compatible with insulation materials, jackets, and substrates and for bonding insulation to itself and to surfaces to be insulated unless otherwise indicated.

B. Mineral-Fiber Adhesive: Comply with MIL-A-3316C, Class 2, Grade A.

1. Manufacturers: Subject to compliance with requirements, available manufacturers offering products that may be incorporated into the Work include, but are not limited to, the following:

   a. Childers Brand, Specialty Construction Brands, Inc., a business of H. B. Fuller Company; CP-127.
   b. - Marathon Industries; 225.
   c. Foster Brand, Specialty Construction Brands, Inc., a business of H. B. Fuller Company; 85-60/85-70.
   d. Mon-Eco Industries, Inc.; 22-25.

C. ASJ Adhesive, and FSK and PVDC Jacket Adhesive: Comply with MIL-A-3316C, Class 2, Grade A for bonding insulation jacket lap seams and joints.

1. Manufacturers: Subject to compliance with requirements, available manufacturers offering products that may be incorporated into the Work include, but are not limited to, the following:

   a. Childers Brand, Specialty Construction Brands, Inc., a business of H. B. Fuller Company; CP-82.
   b. - Marathon Industries; 225.
   c. Foster Brand, Specialty Construction Brands, Inc., a business of H. B. Fuller Company; 85-50.
   d. Mon-Eco Industries, Inc.; 22-25.

D. PVC Jacket Adhesive: Compatible with PVC jacket.

1. Manufacturers: Subject to compliance with requirements, available manufacturers offering products that may be incorporated into the Work include, but are not limited to, the following:

   a. Dow Corning Corporation; 739, Dow Silicone.
   b. Johns Manville; Zeston Perma-Weld, CEEL-TITE Solvent Welding Adhesive.
   c. P.I.C. Plastics, Inc.; Welding Adhesive.

## 2.4 MASTICS

A. Materials shall be compatible with insulation materials, jackets, and substrates; comply with MIL-PRF-19565C, Type II.

B. Vapor-Barrier Mastic: Water based; suitable for indoor and outdoor use on below ambient services.

1. Manufacturers: Subject to compliance with requirements, available manufacturers offering products that may be incorporated into the Work include, but are not limited to, the following:

   a. Foster Brand, Specialty Construction Brands, Inc., a business of H .B. Fuller Company; 30-80/30-90.
   b. Vimasco Corporation; 749.

2. Water-Vapor Permeance: ASTM E 96/E 96M, Procedure B, 0.013 perm at 43-mil dry film thickness.
3. Service Temperature Range: Minus 20 to plus 180 deg F.
4. Solids Content: ASTM D 1644, 58 percent by volume and 70 percent by weight.
5. Color: White.

C. Breather Mastic: Water based; suitable for indoor and outdoor use on above ambient services.

1. Manufacturers: Subject to compliance with requirements, available manufacturers offering products that may be incorporated into the Work include, but are not limited to, the following:

   a. Childers Brand, Specialty Construction Brands, Inc., a business of H. B. Fuller Company; CP-10.
   b. - Marathon Industries; 550.
   c. Foster Brand, Specialty Construction Brands, Inc., a business of H. B. Fuller Company; 46-50.
   d. Mon-Eco Industries, Inc.; 55-50.

2. Water-Vapor Permeance: ASTM F 1249, 1.8 perms at 0.0625-inch dry film thickness.
3. Service Temperature Range: Minus 20 to plus 180 deg F.
4. Solids Content: 60 percent by volume and 66 percent by weight.
5. Color: White.

## 2.5 LAGGING ADHESIVES

1. Manufacturers: Subject to compliance with requirements, available manufacturers offering products that may be incorporated into the Work include, but are not limited to, the following:

a. Childers Brand, Specialty Construction Brands, Inc., a business of H. B. Fuller Company; CP-50 AHV2.
b. Foster Brand, Specialty Construction Brands, Inc., a business of H. B. Fuller Company; 30-36.
c. Vimasco Corporation; 713 and 714.

2. Fire-resistant, water-based lagging adhesive and coating for use indoors to adhere fire-resistant lagging cloths over equipment insulation.
3. Service Temperature Range: 0 to plus 180 deg F.
4. Color: White.

## 2.6 SEALANTS

A. Joint Sealants:

B. Metal Jacket Flashing Sealants:

1. Manufacturers: Subject to compliance with requirements, available manufacturers offering products that may be incorporated into the Work include, but are not limited to, the following:

a. Childers Brand, Specialty Construction Brands, Inc., a business of H. B. Fuller Company; CP-76.
b. - Marathon Industries; 405.
c. Foster Brand, Specialty Construction Brands, Inc., a business of H. B. Fuller Company; 95-44.
d. Mon-Eco Industries, Inc.; 44-05.

2. Materials shall be compatible with insulation materials, jackets, and substrates.
3. Fire- and water-resistant, flexible, elastomeric sealant.
4. Service Temperature Range: Minus 40 to plus 250 deg F.
5. Color: Aluminum.

C. ASJ Flashing Sealants, and PVC Jacket Flashing Sealants:

1. Manufacturers: Subject to compliance with requirements, available manufacturers offering products that may be incorporated into the Work include, but are not limited to, the following:

a. Childers Brand, Specialty Construction Brands, Inc., a business of H. B. Fuller Company; CP-76.

2. Materials shall be compatible with insulation materials, jackets, and substrates.
3. Fire- and water-resistant, flexible, elastomeric sealant.
4. Service Temperature Range: Minus 40 to plus 250 deg F.
5. Color: White.

## 2.7 FACTORY-APPLIED JACKETS

A. Insulation system schedules indicate factory-applied jackets on various applications. When factory-applied jackets are indicated, comply with the following:

1. ASJ: White, kraft-paper, fiberglass-reinforced scrim with aluminum-foil backing; complying with ASTM C 1136, Type I.
2. ASJ-SSL: ASJ with self-sealing, pressure-sensitive, acrylic-based adhesive covered by a removable protective strip; complying with ASTM C 1136, Type I.

## 2.8 FIELD-APPLIED JACKETS

A. Field-applied jackets shall comply with ASTM C 921, Type I, unless otherwise indicated.

B. FSK Jacket: Aluminum-foil-face, fiberglass-reinforced scrim with kraft-paper backing.

C. PVC Jacket: High-impact-resistant, UV-resistant PVC complying with ASTM D 1784, Class 16354-C; thickness as scheduled; roll stock ready for shop or field cutting and forming. Thickness is indicated in field-applied jacket schedules.

1. Manufacturers: Subject to compliance with requirements, available manufacturers offering products that may be incorporated into the Work include, but are not limited to, the following:

   a. Johns Manville; Zeston.
   b. P.I.C. Plastics, Inc.; FG Series.
   c. Proto Corporation; LoSmoke.

2. Adhesive: As recommended by jacket material manufacturer.
3. Color: White.
4. Factory-fabricated tank heads and tank side panels.

## 2.9 TAPES

A. ASJ Tape: White vapor-retarder tape matching factory-applied jacket with acrylic adhesive, complying with ASTM C 1136.

1. Manufacturers: Subject to compliance with requirements, available manufacturers offering products that may be incorporated into the Work include, but are not limited to, the following:

   a. ABI, Ideal Tape Division; 428 AWF ASJ.
   b. Avery Dennison Corporation, Specialty Tapes Division; Fasson 0836.
   c. Venture Tape; 1540 CW Plus, 1542 CW Plus, and 1542 CW Plus/SQ.

2. Width: 3 inches.
3. Thickness: 11.5 mils.
4. Adhesion: 90 ounces force/inch in width.
5. Elongation: 2 percent.
6. Tensile Strength: 40 lbf/inch in width.
7. ASJ Tape Disks and Squares: Precut disks or squares of ASJ tape.

B. PVC Tape: White vapor-retarder tape matching field-applied PVC jacket with acrylic adhesive; suitable for indoor and outdoor applications.

1. Manufacturers: Subject to compliance with requirements, available manufacturers offering products that may be incorporated into the Work include, but are not limited to, the following:

a. ABI, Ideal Tape Division; 370 White PVC tape.
b. Compac Corporation; 130.
c. Venture Tape; 1506 CW NS.

2. Width: 2 inches.
3. Thickness: 6 mils.
4. Adhesion: 64 ounces force/inch in width.
5. Elongation: 500 percent.
6. Tensile Strength: 18 lbf/inch in width.

C. Aluminum-Foil Tape: Vapor-retarder tape with acrylic adhesive.

1. Manufacturers: Subject to compliance with requirements, available manufacturers offering products that may be incorporated into the Work include, but are not limited to, the following:

a. ABI, Ideal Tape Division; 488 AWF.
b. Avery Dennison Corporation, Specialty Tapes Division; Fasson 0800.
c. Venture Tape; 3520 CW.

2. Width: 2 inches.
3. Thickness: 3.7 mils.
4. Adhesion: 100 ounces force/inch in width.
5. Elongation: 5 percent.
6. Tensile Strength: 34 lbf/inch in width.

## 2.10 SECUREMENTS

A. Bands:

1. Manufacturers: Subject to compliance with requirements, available manufacturers offering products that may be incorporated into the Work include, but are not limited to, the following:

a. ITW Insulation Systems; Gerrard Strapping and Seals.

b. RPR Products, Inc.; Insul-Mate Strapping, Seals, and Springs.

2. Stainless Steel: ASTM A 167 or ASTM A 240/A 240M, Type 304 or Type 316; 0.015 inch thick, 1/2 inch wide with wing seal or closed seal.
3. Aluminum: ASTM B 209, Alloy 3003, 3005, 3105, or 5005; Temper H-14, 0.020 inch thick, 1/2 inch wide with wing seal or closed seal.
4. Springs: Twin spring set constructed of stainless steel with ends flat and slotted to accept metal bands. Spring size determined by manufacturer for application.

B. Wire: 0.062-inch soft-annealed, stainless steel.

1. Manufacturers: Subject to compliance with requirements, available manufacturers offering products that may be incorporated into the Work include, but are not limited to, the following:

a. C & F Wire.

## 2.11 CORNER ANGLES

A. PVC Corner Angles: 30 mils thick, minimum 1 by 1 inch, PVC according to ASTM D 1784, Class 16354-C. White or color-coded to match adjacent surface.

# PART 3 - EXECUTION

## 3.1 EXAMINATION

A. Examine substrates and conditions for compliance with requirements for installation tolerances and other conditions affecting performance of insulation application.

1. Verify that systems and equipment to be insulated have been tested and are free of defects.
2. Verify that surfaces to be insulated are clean and dry.

B. Proceed with installation only after unsatisfactory conditions have been corrected.

## 3.2 PREPARATION

A. Surface Preparation: Clean and dry surfaces to receive insulation. Remove materials that will adversely affect insulation application.

B. Coordinate insulation installation with the trade installing heat tracing. Comply with requirements for heat tracing that apply to insulation.

C. Mix insulating cements with clean potable water; if insulating cements are to be in contact with stainless-steel surfaces, use demineralized water.

## 3.3 GENERAL INSTALLATION REQUIREMENTS

A. Install insulation materials, accessories, and finishes with smooth, straight, and even surfaces; free of voids throughout the length of equipment.

B. Install insulation materials, forms, vapor barriers or retarders, jackets, and thicknesses required for each item of equipment as specified in insulation system schedules.

C. Install accessories compatible with insulation materials and suitable for the service. Install accessories that do not corrode, soften, or otherwise attack insulation or jacket in either wet or dry state.

D. Install insulation with longitudinal seams at top and bottom of horizontal runs.

E. Install multiple layers of insulation with longitudinal and end seams staggered.

F. Keep insulation materials dry during application and finishing.

G. Install insulation with tight longitudinal seams and end joints. Bond seams and joints with adhesive recommended by insulation material manufacturer.

H. Install insulation with least number of joints practical.

I. Where vapor barrier is indicated, seal joints, seams, and penetrations in insulation at hangers, supports, anchors, and other projections with vapor-barrier mastic.

1. Install insulation continuously through hangers and around anchor attachments.
2. For insulation application where vapor barriers are indicated, extend insulation on anchor legs from point of attachment to supported item to point of attachment to structure. Taper and seal ends at attachment to structure with vapor-barrier mastic.
3. Install insert materials and install insulation to tightly join the insert. Seal insulation to insulation inserts with adhesive or sealing compound recommended by insulation material manufacturer.
4. Cover inserts with jacket material matching adjacent insulation. Install shields over jacket, arranged to protect jacket from tear or puncture by hanger, support, and shield.

J. Apply adhesives, mastics, and sealants at manufacturer's recommended coverage rate and wet and dry film thicknesses.

K. Install insulation with factory-applied jackets as follows:

1. Draw jacket tight and smooth.
2. Cover circumferential joints with 3-inch-wide strips, of same material as insulation jacket. Secure strips with adhesive and outward clinching staples along both edges of strip, spaced 4 inches o.c.

3. Overlap jacket longitudinal seams at least 1-1/2 inches. Clean and dry surface to receive self-sealing lap. Staple laps with outward clinching staples along edge at 2 inches o.c.

    a. For below ambient services, apply vapor-barrier mastic over staples.

4. Cover joints and seams with tape, according to insulation material manufacturer's written instructions, to maintain vapor seal.
5. Where vapor barriers are indicated, apply vapor-barrier mastic on seams and joints.

L. Cut insulation in a manner to avoid compressing insulation more than 75 percent of its nominal thickness.

M. Finish installation with systems at operating conditions. Repair joint separations and cracking due to thermal movement.

N. Repair damaged insulation facings by applying same facing material over damaged areas. Extend patches at least 4 inches beyond damaged areas. Adhere, staple, and seal patches similar to butt joints.

O. For above ambient services, do not install insulation to the following:

1. Vibration-control devices.
2. Testing agency labels and stamps.
3. Nameplates and data plates.
4. Manholes.
5. Handholes.
6. Cleanouts.

## 3.4 INSTALLATION OF EQUIPMENT, TANK, AND VESSEL INSULATION

A. Mineral-Fiber, Pipe and Tank Insulation Installation for Tanks and Vessels: Secure insulation with adhesive and anchor pins and speed washers.

1. Apply adhesives according to manufacturer's recommended coverage rates per unit area for tank and vessel surfaces.
2. Groove and score insulation materials to fit as closely as possible to equipment, including contours. Bevel insulation edges for cylindrical surfaces for tight joints. Stagger end joints.
3. Protect exposed corners with secured corner angles.
4. Install adhesively attached or self-sticking insulation hangers and speed washers on sides of tanks and vessels as follows:

    a. Do not weld anchor pins to ASME-labeled pressure vessels.
    b. Select insulation hangers and adhesive that are compatible with service temperature and with substrate.

c. On tanks and vessels, maximum anchor-pin spacing is 3 inches from insulation end joints, and 16 inches o.c. in both directions.
d. Do not overcompress insulation during installation.
e. Cut and miter insulation segments to fit curved sides and domed heads of tanks and vessels.
f. Impale insulation over anchor pins and attach speed washers.
g. Cut excess portion of pins extending beyond speed washers or bend parallel with insulation surface. Cover exposed pins and washers with tape matching insulation facing.

5. Secure each layer of insulation with stainless-steel or aluminum bands. Select band material compatible with insulation materials.
6. Where insulation hangers on equipment and vessels are not permitted or practical and where insulation support rings are not provided, install a girdle network for securing insulation. Stretch prestressed aircraft cable around the diameter of vessel and make taut with clamps, turnbuckles, or breather springs. Place one circumferential girdle around equipment approximately 6 inches from each end. Install wire or cable between two circumferential girdles 12 inches o.c. Install a wire ring around each end and around outer periphery of center openings, and stretch prestressed aircraft cable radially from the wire ring to nearest circumferential girdle. Install additional circumferential girdles along the body of equipment or tank at a minimum spacing of 48 inches o.c. Use this network for securing insulation with tie wire or bands.
7. Stagger joints between insulation layers at least 3 inches.
8. Install insulation in removable segments on equipment access doors, manholes, handholes, and other elements that require frequent removal for service and inspection.
9. Bevel and seal insulation ends around manholes, handholes, ASME stamps, and nameplates.
10. For equipment with surface temperatures below ambient, apply mastic to open ends, joints, seams, breaks, and punctures in insulation.

B. Insulation Installation on Pumps:

1. Fabricate metal boxes lined with insulation. Fit boxes around pumps and coincide box joints with splits in pump casings. Fabricate joints with outward bolted flanges. Bolt flanges on 6-inch centers, starting at corners. Install 3/8-inch- diameter fasteners with wing nuts. Alternatively, secure the box sections together using a latching mechanism.
2. Fabricate boxes from aluminum, at least 0.050 inch thick.
3. For below ambient services, install a vapor barrier at seams, joints, and penetrations. Seal between flanges with replaceable gasket material to form a vapor barrier.

## 3.5 FIELD-APPLIED JACKET INSTALLATION

A. Where PVC jackets are indicated, install with 1-inch overlap at longitudinal seams and

end joints; for horizontal applications, install with longitudinal seams along top and bottom of tanks and vessels. Seal with manufacturer's recommended adhesive.

1. Apply two continuous beads of adhesive to seams and joints, one bead under lap and the finish bead along seam and joint edge.

## 3.6 EQUIPMENT INSULATION SCHEDULE

A. Insulation materials and thicknesses are identified below. If more than one material is listed for a type of equipment, selection from materials listed is Contractor's option.

B. Insulate indoor and outdoor equipment that is not factory insulated.

C. Heat exchanger insulation shall be the following:

1. Mineral-Fiber Board: 2 inches thick and 3-lb/cu. ft. nominal density.

D. Heating-hot-water pump insulation shall be the following:

1. Mineral-Fiber Board: 2 inches thick and 3-lb/cu. ft. nominal density.

E. Heating-hot-water expansion/compression tank insulation shall be the following:

1. Mineral-Fiber Pipe and Tank: 2 inches thick.

F. Heating-hot-water air-separator insulation shall be the following:

1. Mineral-Fiber Pipe and Tank: 2 inches thick.

## 3.7 INDOOR, FIELD-APPLIED JACKET SCHEDULE

A. Install jacket over insulation material. For insulation with factory-applied jacket, install the field-applied jacket over the factory-applied jacket.

B. If more than one material is listed, selection from materials listed is Contractor's option.

C. Equipment, Concealed:

1. PVC: 30 mils thick.

D. Equipment, Exposed, up to 48 Inches in Diameter or with Flat Surfaces up to 72 Inches:

1. PVC: 30 mils thick.

**END OF SECTION**

# SECTION 23 07 19

# HVAC PIPING INSULATION

## PART 1 - GENERAL

### 1.1 RELATED DOCUMENTS

A. Drawings and general provisions of the Contract, including General and Supplementary Conditions and Division 01 Specification Sections, apply to this Section.

### 1.2 SUMMARY

A. Section includes insulating the following HVAC piping systems:

1. Heating hot-water piping.

2. Condensate drain piping.

B. Related Sections:

1. Section 230713 "Duct Insulation."
2. Section 230716 "HVAC Equipment Insulation."

### 1.3 ACTION SUBMITTALS

A. Product Data: For each type of product indicated. Include thermal conductivity, water-vapor permeance thickness, and jackets (both factory and field applied if any).

B. Shop Drawings: Include plans, elevations, sections, details, and attachments to other work.

1. Detail application of protective shields, saddles, and inserts at hangers for each type of insulation and hanger.
2. Detail attachment and covering of heat tracing inside insulation.
3. Detail insulation application at pipe expansion joints for each type of insulation.
4. Detail insulation application at elbows, fittings, flanges, valves, and specialties for each type of insulation.
5. Detail removable insulation at piping specialties.
6. Detail application of field-applied jackets.
7. Detail application at linkages of control devices.

1.4 INFORMATIONAL SUBMITTALS

A. Qualification Data: For qualified Installer.

B. Field quality-control reports.

1.5 DELIVERY, STORAGE, AND HANDLING

A. Packaging: Insulation material containers shall be marked by manufacturer with appropriate ASTM standard designation, type and grade, and maximum use temperature.

1.6 COORDINATION

A. Coordinate sizes and locations of supports, hangers, and insulation shields specified in Section 230529 "Hangers and Supports for HVAC Piping and Equipment."

B. Coordinate clearance requirements with piping Installer for piping insulation application. Before preparing piping Shop Drawings, establish and maintain clearance requirements for installation of insulation and field-applied jackets and finishes and for space required for maintenance.

C. Coordinate installation and testing of heat tracing.

1.7 SCHEDULING

A. Schedule insulation application after pressure testing systems and, where required, after installing and testing heat tracing. Insulation application may begin on segments that have satisfactory test results.

B. Complete installation and concealment of plastic materials as rapidly as possible in each area of construction.

PART 2 - PRODUCTS

2.1 INSULATION MATERIALS

A. Comply with requirements in "Piping Insulation Schedule, General," "Indoor Piping Insulation Schedule," "Outdoor, Aboveground Piping Insulation Schedule," and "Outdoor, Underground Piping Insulation Schedule" articles for where insulating materials shall be applied.

B. Products shall not contain asbestos, lead, mercury, or mercury compounds.

C. Products that come in contact with stainless steel shall have a leachable chloride content of less than 50 ppm when tested according to ASTM C 871.

D. Insulation materials for use on austenitic stainless steel shall be qualified as acceptable according to ASTM C 795.

E. Foam insulation materials shall not use CFC or HCFC blowing agents in the manufacturing process.

F. Mineral-Fiber, Preformed Pipe Insulation:

1. Manufacturers: Subject to compliance with requirements, available manufacturers offering products that may be incorporated into the Work include, but are not limited to the following:

a. Johns Manville; a Berkshire Hathaway company.
b. Knauf Insulation.
c. Owens Corning.

2. Type I, 850 deg F Materials: Mineral or glass fibers bonded with a thermosetting resin. Comply with ASTM C 547, Type I, Grade A, with factory-applied ASJ. Thermal conductivity (k-value) at 125 deg F between 0.25 and 0.29 Btu x in./h x sq. ft. x deg F. Factory-applied jacket requirements are specified in "Factory-Applied Jackets" Article.

G. Mineral-Fiber, Pipe and Tank Insulation: Mineral or glass fibers bonded with a thermosetting resin. Semirigid board material with factory-applied ASJ complying with ASTM C 1393, Type II or Type IIIA Category 2, or with properties similar to ASTM C 612, Type IB. Nominal density is 2.5 lb/cu. ft. or more. Thermal conductivity (k-value) at 125 deg F between 0.25 and 0.29 Btu x in./h x sq. ft. x deg F. Factory-applied jacket requirements are specified in "Factory-Applied Jackets" Article.

1. Manufacturers: Subject to compliance with requirements, available manufacturers offering products that may be incorporated into the Work include, but are not limited to the following:

a. Johns Manville; a Berkshire Hathaway company.
b. Knauf Insulation.
c. Owens Corning.

## 2.2 INSULATING CEMENTS

A. Mineral-Fiber Insulating Cement: Comply with ASTM C 195.

1. Manufacturers: Subject to compliance with requirements, available manufacturers offering products that may be incorporated into the Work include, but are not limited to the following:

a. Ramco Insulation, Inc.

B. Expanded or Exfoliated Vermiculite Insulating Cement: Comply with ASTM C 196.

1. Manufacturers: Subject to compliance with requirements, available manufacturers offering products that may be incorporated into the Work include, but are not limited to the following:

a. Ramco Insulation, Inc.

C. Mineral-Fiber, Hydraulic-Setting Insulating and Finishing Cement: Comply with ASTM C 449.

1. Manufacturers: Subject to compliance with requirements, available manufacturers offering products that may be incorporated into the Work include, but are not limited to the following:

a. Ramco Insulation, Inc.

2.3 ADHESIVES

A. Materials shall be compatible with insulation materials, jackets, and substrates and for bonding insulation to itself and to surfaces to be insulated unless otherwise indicated.

B. Mineral-Fiber Adhesive: Comply with MIL-A-3316C, Class 2, Grade A.

1. Manufacturers: Subject to compliance with requirements, available manufacturers offering products that may be incorporated into the Work include, but are not limited to the following:

a. Childers Brand; H. B. Fuller Construction Products.
b. Eagle Bridges - Marathon Industries.
c. Foster Brand; H. B. Fuller Construction Products.

C. ASJ Adhesive, and FSK and PVDC Jacket Adhesive: Comply with MIL-A-3316C, Class 2, Grade A for bonding insulation jacket lap seams and joints.

1. Manufacturers: Subject to compliance with requirements, available manufacturers offering products that may be incorporated into the Work include, but are not limited to the following:

a. Childers Brand; H. B. Fuller Construction Products.
b. Eagle Bridges - Marathon Industries.
c. Foster Brand; H. B. Fuller Construction Products.

D. PVC Jacket Adhesive: Compatible with PVC jacket.

1. Manufacturers: Subject to compliance with requirements, available manufacturers offering products that may be incorporated into the Work include, but are not limited to the following:

    a. Dow Corning Corporation; 739, Dow Silicone.
    b. Johns Manville; Zeston Perma-Weld, CEEL-TITE Solvent Welding Adhesive.
    c. P.I.C. Plastics, Inc.; Welding Adhesive.

2. For indoor applications, adhesive shall have a VOC content of 50 g/L or less when calculated according to 40 CFR 59, Subpart D (EPA Method 24).

3. Adhesive shall comply with the testing and product requirements of the California Department of Health Services' "Standard Practice for the Testing of Volatile Organic Emissions from Various Sources Using Small-Scale Environmental Chambers."

## 2.4 MASTICS

A. Materials shall be compatible with insulation materials, jackets, and substrates; comply with MIL-PRF-19565C, Type II.

B. Vapor-Barrier Mastic: Water based; suitable for indoor use on below-ambient services.

1. Manufacturers: Subject to compliance with requirements, available manufacturers offering products that may be incorporated into the Work include, but are not limited to the following:

    a. Childers Brand; H. B. Fuller Construction Products.
    b. Foster Brand; H. B. Fuller Construction Products.
    c. Knauf Insulation.

2. Water-Vapor Permeance: ASTM E 96/E 96M, Procedure B, 0.013 perm at 43-mil dry film thickness.
3. Service Temperature Range: Minus 20 to plus 180 deg F.
4. Solids Content: ASTM D 1644, 58 percent by volume and 70 percent by weight.
5. Color: White.

C. Breather Mastic: Water based; suitable for indoor and outdoor use on above-ambient services.

1. Manufacturers: Subject to compliance with requirements, available manufacturers offering products that may be incorporated into the Work include, but are not limited to the following:

a. Eagle Bridges - Marathon Industries.
b. Foster Brand; H. B. Fuller Construction Products.
c. Knauf Insulation.

2. Water-Vapor Permeance: ASTM F 1249, 1.8 perms at 0.0625-inch dry film thickness.
3. Service Temperature Range: Minus 20 to plus 180 deg F.
4. Solids Content: 60 percent by volume and 66 percent by weight.
5. Color: White.

## 2.5 LAGGING ADHESIVES

A. Description: Comply with MIL-A-3316C, Class I, Grade A and shall be compatible with insulation materials, jackets, and substrates.

1. Manufacturers: Subject to compliance with requirements, available manufacturers offering products that may be incorporated into the Work include, but are not limited to the following:

a. Childers Brand; H. B. Fuller Construction Products.
b. Foster Brand; H. B. Fuller Construction Products.
c. Vimasco Corporation.

2. Fire-resistant, water-based lagging adhesive and coating for use indoors to adhere fire-resistant lagging cloths over pipe insulation.
3. Service Temperature Range: 0 to plus 180 deg F.
4. Color: White.

## 2.6 SEALANTS

A. Metal Jacket Flashing Sealants:

1. Manufacturers: Subject to compliance with requirements, available manufacturers offering products that may be incorporated into the Work include, but are not limited to the following:

a. Childers Brand; H. B. Fuller Construction Products.
b. Eagle Bridges - Marathon Industries.
c. Foster Brand; H. B. Fuller Construction Products.

2. Materials shall be compatible with insulation materials, jackets, and substrates.
3. Fire- and water-resistant, flexible, elastomeric sealant.
4. Service Temperature Range: Minus 40 to plus 250 deg F.
5. Color: Aluminum.

B. ASJ Flashing Sealants, and Vinyl, PVDC, and PVC Jacket Flashing Sealants:

1. Manufacturers: Subject to compliance with requirements, available manufacturers offering products that may be incorporated into the Work include, but are not limited to the following:

    a. Childers Brand; H. B. Fuller Construction Products.

2. Materials shall be compatible with insulation materials, jackets, and substrates.
3. Fire- and water-resistant, flexible, elastomeric sealant.
4. Service Temperature Range: Minus 40 to plus 250 deg F.
5. Color: White.

## 2.7 FACTORY-APPLIED JACKETS

A. Insulation system schedules indicate factory-applied jackets on various applications. When factory-applied jackets are indicated, comply with the following:

1. ASJ: White, kraft-paper, fiberglass-reinforced scrim with aluminum-foil backing; complying with ASTM C 1136, Type I.
2. ASJ-SSL: ASJ with self-sealing, pressure-sensitive, acrylic-based adhesive covered by a removable protective strip; complying with ASTM C 1136, Type I.

    a. Manufacturers: Subject to compliance with requirements, available manufacturers offering products that may be incorporated into the Work include, but are not limited to the following:

        1) ITW Insulation Systems; Illinois Tool Works, Inc.

3. Vinyl Jacket: White vinyl with a permeance of 1.3 perms when tested according to ASTM E 96/E 96M, Procedure A, and complying with NFPA 90A and NFPA 90B.

## 2.8 FIELD-APPLIED JACKETS

A. Field-applied jackets shall comply with ASTM C 921, Type I, unless otherwise indicated.

B. FSK Jacket: Aluminum-foil-face, fiberglass-reinforced scrim with kraft-paper backing.

C. PVC Jacket: High-impact-resistant, UV-resistant PVC complying with ASTM D 1784, Class 16354-C; thickness as scheduled; roll stock ready for shop or field cutting and forming. Thickness is indicated in field-applied jacket schedules.

1. Manufacturers: Subject to compliance with requirements, available manufacturers offering products that may be incorporated into the Work include, but are not limited to the following:

a. Johns Manville; a Berkshire Hathaway company.
b. P.I.C. Plastics, Inc.
c. Proto Corporation.

2. Adhesive: As recommended by jacket material manufacturer.
3. Color: White.
4. Factory-fabricated fitting covers to match jacket if available; otherwise, field fabricate.

a. Shapes: 45- and 90-degree, short- and long-radius elbows, tees, valves, flanges, unions, reducers, end caps, soil-pipe hubs, traps, mechanical joints, and P-trap and supply covers for lavatories.

## 2.9 TAPES

A. ASJ Tape: White vapor-retarder tape matching factory-applied jacket with acrylic adhesive, complying with ASTM C 1136.

1. Manufacturers: Subject to compliance with requirements, available manufacturers offering products that may be incorporated into the Work include, but are not limited to the following:

a. Compac Corporation.
b. Ideal Tape Co., Inc., an American Biltrite Company.
c. Knauf Insulation.

2. Width: 3 inches.
3. Thickness: 11.5 mils.
4. Adhesion: 90 ounces force/inch in width.
5. Elongation: 2 percent.
6. Tensile Strength: 40 lbf/inch in width.
7. ASJ Tape Disks and Squares: Precut disks or squares of ASJ tape.

B. PVC Tape: White vapor-retarder tape matching field-applied PVC jacket with acrylic adhesive; suitable for indoor and outdoor applications.

1. Manufacturers: Subject to compliance with requirements, available manufacturers offering products that may be incorporated into the Work include, but are not limited to the following:

a. ABI, Ideal Tape Division; 370 White PVC tape.
b. Compac Corporation; 130.
c. Venture Tape; 1506 CW NS.

2. Width: 2 inches.
3. Thickness: 6 mils.
4. Adhesion: 64 ounces force/inch in width.
5. Elongation: 500 percent.
6. Tensile Strength: 18 lbf/inch in width.

2.10 SECUREMENTS

A. Bands:

1. Manufacturers: Subject to compliance with requirements, available manufacturers offering products that may be incorporated into the Work include, but are not limited to the following:

   a. ITW Insulation Systems; Illinois Tool Works, Inc.
   b. RPR Products, Inc.

2. Stainless Steel: ASTM A 167 or ASTM A 240/A 240M, Type 304 or Type 316; 0.015 inch thick, 1/2 inch wide with wing seal or closed seal.

3. Aluminum: ASTM B 209, Alloy 3003, 3005, 3105, or 5005; Temper H-14, 0.020 inch thick, 1/2 inch wide with wing seal or closed seal.
4. Springs: Twin spring set constructed of stainless steel with ends flat and slotted to accept metal bands. Spring size determined by manufacturer for application.

B. Staples: Outward-clinching insulation staples, nominal 3/4-inch-wide, stainless steel or Monel.

C. Wire: 0.062-inch soft-annealed, stainless steel.

1. Manufacturers: Subject to compliance with requirements, available manufacturers offering products that may be incorporated into the Work include, but are not limited to the following:

   a. C & F Wire.

PART 3 - EXECUTION

3.1 EXAMINATION

A. Examine substrates and conditions for compliance with requirements for installation tolerances and other conditions affecting performance of insulation application.

1. Verify that systems to be insulated have been tested and are free of defects.
2. Verify that surfaces to be insulated are clean and dry.
3. Proceed with installation only after unsatisfactory conditions have been corrected.

## 3.2 PREPARATION

A. Surface Preparation: Clean and dry surfaces to receive insulation. Remove materials that will adversely affect insulation application.

B. Coordinate insulation installation with the trade installing heat tracing. Comply with requirements for heat tracing that apply to insulation.

C. Mix insulating cements with clean potable water; if insulating cements are to be in contact with stainless-steel surfaces, use demineralized water.

## 3.3 GENERAL INSTALLATION REQUIREMENTS

A. Install insulation materials, accessories, and finishes with smooth, straight, and even surfaces; free of voids throughout the length of piping including fittings, valves, and specialties.

B. Install insulation materials, forms, vapor barriers or retarders, jackets, and thicknesses required for each item of pipe system as specified in insulation system schedules.

C. Install accessories compatible with insulation materials and suitable for the service. Install accessories that do not corrode, soften, or otherwise attack insulation or jacket in either wet or dry state.

D. Install insulation with longitudinal seams at top and bottom of horizontal runs.

E. Install multiple layers of insulation with longitudinal and end seams staggered.

F. Do not weld brackets, clips, or other attachment devices to piping, fittings, and specialties.

G. Keep insulation materials dry during application and finishing.

H. Install insulation with tight longitudinal seams and end joints. Bond seams and joints with adhesive recommended by insulation material manufacturer.

I. Install insulation with least number of joints practical.

J. Where vapor barrier is indicated, seal joints, seams, and penetrations in insulation at hangers, supports, anchors, and other projections with vapor-barrier mastic.

1. Install insulation continuously through hangers and around anchor attachments.
2. For insulation application where vapor barriers are indicated, extend insulation on anchor legs from point of attachment to supported item to point of attachment to structure. Taper and seal ends at attachment to structure with vapor-barrier mastic.
3. Install insert materials and install insulation to tightly join the insert. Seal insulation to insulation inserts with adhesive or sealing compound recommended by insulation material manufacturer.
4. Cover inserts with jacket material matching adjacent pipe insulation. Install shields over jacket, arranged to protect jacket from tear or puncture by hanger, support, and shield.

K. Apply adhesives, mastics, and sealants at manufacturer's recommended coverage rate and wet and dry film thicknesses.

L. Install insulation with factory-applied jackets as follows:

1. Draw jacket tight and smooth.
2. Cover circumferential joints with 3-inch-wide strips, of same material as insulation jacket. Secure strips with adhesive and outward clinching staples along both edges of strip, spaced 4 inches o.c.
3. Overlap jacket longitudinal seams at least 1-1/2 inches. Install insulation with longitudinal seams at bottom of pipe. Clean and dry surface to receive self-sealing lap. Staple laps with outward clinching staples along edge at 2 inches o.c.

   a. For below-ambient services, apply vapor-barrier mastic over staples.
4. Cover joints and seams with tape, according to insulation material manufacturer's written instructions, to maintain vapor seal.
5. Where vapor barriers are indicated, apply vapor-barrier mastic on seams and joints and at ends adjacent to pipe flanges and fittings.

M. Cut insulation in a manner to avoid compressing insulation more than 75 percent of its nominal thickness.

N. Finish installation with systems at operating conditions. Repair joint separations and cracking due to thermal movement.

O. Repair damaged insulation facings by applying same facing material over damaged areas. Extend patches at least 4 inches beyond damaged areas. Adhere, staple, and seal patches similar to butt joints.

P. For above-ambient services, do not install insulation to the following:

1. Vibration-control devices.
2. Testing agency labels and stamps.
3. Nameplates and data plates.
4. Manholes.
5. Handholes.
6. Cleanouts.

## 3.4 PENETRATIONS

A. Insulation Installation at Roof Penetrations: Install insulation continuously through roof penetrations.

1. Seal penetrations with flashing sealant.
2. For applications requiring only indoor insulation, terminate insulation above roof surface and seal with joint sealant. For applications requiring indoor and outdoor insulation, install insulation for outdoor applications tightly joined to indoor insulation ends. Seal joint with joint sealant.
3. Extend jacket of outdoor insulation outside roof flashing at least 2 inches below top of roof flashing.
4. Seal jacket to roof flashing with flashing sealant.

B. Insulation Installation at Underground Exterior Wall Penetrations: Terminate insulation flush with sleeve seal. Seal terminations with flashing sealant.

C. Insulation Installation at Aboveground Exterior Wall Penetrations: Install insulation continuously through wall penetrations.

1. Seal penetrations with flashing sealant.
2. For applications requiring only indoor insulation, terminate insulation inside wall surface and seal with joint sealant. For applications requiring indoor and outdoor insulation, install insulation for outdoor applications tightly joined to indoor insulation ends. Seal joint with joint sealant.
3. Extend jacket of outdoor insulation outside wall flashing and overlap wall flashing at least 2 inches.
4. Seal jacket to wall flashing with flashing sealant.

D. Insulation Installation at Interior Wall and Partition Penetrations (That Are Not Fire Rated): Install insulation continuously through walls and partitions.

E. Insulation Installation at Fire-Rated Wall and Partition Penetrations: Install insulation continuously through penetrations of fire-rated walls and partitions.

1. Comply with requirements in Section 078413 "Penetration Firestopping" for firestopping and fire-resistive joint sealers.

F. Insulation Installation at Floor Penetrations:

1. Pipe: Install insulation continuously through floor penetrations.
2. Seal penetrations through fire-rated assemblies. Comply with requirements in Section 078413 "Penetration Firestopping."

## 3.5 GENERAL PIPE INSULATION INSTALLATION

A. Requirements in this article generally apply to all insulation materials except where more specific requirements are specified in various pipe insulation material installation articles.

B. Insulation Installation on Fittings, Valves, Strainers, Flanges, and Unions:

1. Install insulation over fittings, valves, strainers, flanges, unions, and other specialties with continuous thermal and vapor-retarder integrity unless otherwise indicated.
2. Insulate pipe elbows using preformed fitting insulation or mitered fittings made from same material and density as adjacent pipe insulation. Each piece shall be butted tightly against adjoining piece and bonded with adhesive. Fill joints, seams, voids, and irregular surfaces with insulating cement finished to a smooth, hard, and uniform contour that is uniform with adjoining pipe insulation.
3. Insulate tee fittings with preformed fitting insulation or sectional pipe insulation of same material and thickness as used for adjacent pipe. Cut sectional pipe insulation to fit. Butt each section closely to the next and hold in place with tie wire. Bond pieces with adhesive.
4. Insulate valves using preformed fitting insulation or sectional pipe insulation of same material, density, and thickness as used for adjacent pipe. Overlap adjoining pipe insulation by not less than two times the thickness of pipe insulation, or one pipe diameter, whichever is thicker. For valves, insulate up to and including the bonnets, valve stuffing-box studs, bolts, and nuts. Fill joints, seams, and irregular surfaces with insulating cement.
5. Insulate strainers using preformed fitting insulation or sectional pipe insulation of same material, density, and thickness as used for adjacent pipe. Overlap adjoining pipe insulation by not less than two times the thickness of pipe insulation, or one pipe diameter, whichever is thicker. Fill joints, seams, and irregular surfaces with insulating cement. Insulate strainers so strainer basket flange or plug can be easily removed and replaced without damaging the insulation and jacket. Provide a removable reusable insulation cover. For below-ambient services, provide a design that maintains vapor barrier.
6. Insulate flanges and unions using a section of oversized preformed pipe insulation. Overlap adjoining pipe insulation by not less than two times the thickness of pipe insulation, or one pipe diameter, whichever is thicker.
7. Cover segmented insulated surfaces with a layer of finishing cement and coat with a mastic. Install vapor-barrier mastic for below-ambient services and a breather mastic for above-ambient services. Reinforce the mastic with fabric-reinforcing mesh. Trowel the mastic to a smooth and well-shaped contour.

8. For services not specified to receive a field-applied jacket except for flexible elastomeric and polyolefin, install fitted PVC cover over elbows, tees, strainers, valves, flanges, and unions. Terminate ends with PVC end caps. Tape PVC covers to adjoining insulation facing using PVC tape.
9. Stencil or label the outside insulation jacket of each union with the word "union." Match size and color of pipe labels.

C. Insulate instrument connections for thermometers, pressure gages, pressure temperature taps, test connections, flow meters, sensors, switches, and transmitters on insulated pipes. Shape insulation at these connections by tapering it to and around the connection with insulating cement and finish with finishing cement, mastic, and flashing sealant.

D. Install removable insulation covers at locations indicated. Installation shall conform to the following:

1. Make removable flange and union insulation from sectional pipe insulation of same thickness as that on adjoining pipe. Install same insulation jacket as adjoining pipe insulation.
2. When flange and union covers are made from sectional pipe insulation, extend insulation from flanges or union long at least two times the insulation thickness over adjacent pipe insulation on each side of flange or union. Secure flange cover in place with stainless-steel or aluminum bands. Select band material compatible with insulation and jacket.
3. Construct removable valve insulation covers in same manner as for flanges, except divide the two-part section on the vertical center line of valve body.
4. When covers are made from block insulation, make two halves, each consisting of mitered blocks wired to stainless-steel fabric. Secure this wire frame, with its attached insulation, to flanges with tie wire. Extend insulation at least 2 inches over adjacent pipe insulation on each side of valve. Fill space between flange or union cover and pipe insulation with insulating cement. Finish cover assembly with insulating cement applied in two coats. After first coat is dry, apply and trowel second coat to a smooth finish.
5. Unless a PVC jacket is indicated in field-applied jacket schedules, finish exposed surfaces with a metal jacket.

## 3.6 INSTALLATION OF MINERAL-FIBER INSULATION

A. Insulation Installation on Straight Pipes and Tubes:

1. Secure each layer of preformed pipe insulation to pipe with wire or bands and tighten bands without deforming insulation materials.
2. Where vapor barriers are indicated, seal longitudinal seams, end joints, and protrusions with vapor-barrier mastic and joint sealant.
3. For insulation with factory-applied jackets on above-ambient surfaces, secure laps with outward-clinched staples at 6 inches o.c.

4. For insulation with factory-applied jackets on below-ambient surfaces, do not staple longitudinal tabs. Instead, secure tabs with additional adhesive as recommended by insulation material manufacturer and seal with vapor-barrier mastic and flashing sealant.

B. Insulation Installation on Pipe Flanges:

1. Install preformed pipe insulation to outer diameter of pipe flange.
2. Make width of insulation section same as overall width of flange and bolts, plus twice the thickness of pipe insulation.
3. Fill voids between inner circumference of flange insulation and outer circumference of adjacent straight pipe segments with mineral-fiber blanket insulation.
4. Install jacket material with manufacturer's recommended adhesive, overlap seams at least 1 inch, and seal joints with flashing sealant.

C. Insulation Installation on Pipe Fittings and Elbows:

1. Install preformed sections of same material as straight segments of pipe insulation when available.
2. When preformed insulation elbows and fittings are not available, install mitered sections of pipe insulation, to a thickness equal to adjoining pipe insulation. Secure insulation materials with wire or bands.

D. Insulation Installation on Valves and Pipe Specialties:

1. Install preformed sections of same material as straight segments of pipe insulation when available.
2. When preformed sections are not available, install mitered sections of pipe insulation to valve body.
3. Arrange insulation to permit access to packing and to allow valve operation without disturbing insulation.
4. Install insulation to flanges as specified for flange insulation application.

## 3.7 FIELD-APPLIED JACKET INSTALLATION

A. Where PVC jackets are indicated, install with 1-inch overlap at longitudinal seams and end joints; for horizontal applications. Seal with manufacturer's recommended adhesive.

1. Apply two continuous beads of adhesive to seams and joints, one bead under lap and the finish bead along seam and joint edge.

B. Where metal jackets are indicated, install with 2-inch overlap at longitudinal seams and end joints. Overlap longitudinal seams arranged to shed water. Seal end joints with weatherproof sealant recommended by insulation manufacturer. Secure jacket with stainless-steel bands 12 inches o.c. and at end joints.

## 3.8 PIPING INSULATION SCHEDULE, GENERAL

A. Acceptable preformed pipe and tubular insulation materials and thicknesses are identified for each piping system and pipe size range. If more than one material is listed for a piping system, selection from materials listed is Contractor's option.

B. Items Not Insulated: Unless otherwise indicated, do not install insulation on the following:

1. Drainage piping located in crawl spaces.
2. Underground piping.
3. Chrome-plated pipes and fittings unless there is a potential for personnel injury.

## 3.9 INDOOR PIPING INSULATION SCHEDULE

A. Condensate and Equipment Drain Water below 60 Deg F:

1. All Pipe Sizes: Insulation shall be one of the following:

a. Flexible Elastomeric: 3/4 inch thick.
b. Mineral-Fiber, Preformed Pipe Insulation, Type I: 1/2 inch thick.

B. Heating-Hot-Water Supply and Return, 200 Deg F and Below:

1. NPS 1.5” and Smaller: Insulation shall be the following:

a. Mineral-Fiber, Preformed Pipe, Type I: 1½ inches thick.

2. NPS 2” and Larger: Insulation shall be the following:

a. Mineral-Fiber, Preformed Pipe, Type I: 2 inches thick.

C. Refrigerant Suction and Hot-Gas Flexible Tubing:

1. All Pipe Sizes: Insulation shall be the following:

a. Flexible Elastomeric: 1½ inch thick.

3.10 OUTDOOR, ABOVEGROUND PIPING INSULATION SCHEDULE

A. Refrigerant Suction and Hot-Gas Flexible Tubing:

1. All Pipe Sizes: Insulation shall be the following:

a. Flexible Elastomeric: 1-1/2 inches thick.

3.11 INDOOR, FIELD-APPLIED JACKET SCHEDULE

A. Install jacket over insulation material. For insulation with factory-applied jacket, install the field-applied jacket over the factory-applied jacket.

B. If more than one material is listed, selection from materials listed is Contractor's option.

C. Piping, Concealed (Fittings only):

1. PVC: 20 mils thick.

D. Piping, Exposed (Fittings only):

1. PVC: 20 mils thick.

**END OF SECTION**

# SECTION 23 09 23

# CONTROL DAMPERS

## PART 1 - GENERAL

### 1.1 RELATED DOCUMENTS

A. Drawings and general provisions of the Contract, including General and Supplementary Conditions and Division 01 Specification Sections, apply to this Section.

### 1.2 SUMMARY

A. Section includes the following types of control dampers and actuators for DDC systems:

1. Rectangular control dampers.
2. General control-damper actuator requirements.
3. Pneumatic actuators.
4. Electric and electronic actuators.

### 1.3 DEFINITIONS

A. DDC: Direct-digital control.

B. RMS: Root-mean-square value of alternating voltage, which is the square root of the mean value of the square of the voltage values during a complete cycle.

### 1.4 ACTION SUBMITTALS

A. Product Data: For each type of product, including the following:

1. Construction details, material descriptions, dimensions of individual components and profiles, and finishes.
2. Operating characteristics, electrical characteristics, and furnished accessories indicating process operating range, accuracy over range, control signal over range, default control signal with loss of power, calibration data specific to each unique application, electrical power requirements, and limitations of ambient operating environment, including temperature and humidity.
3. Product description with complete technical data, performance curves, and product specification sheets.
4. Installation instructions, including factors affecting performance.

B. Shop Drawings:

1. Include plans, elevations, sections, and mounting details.
2. Include details of product assemblies. Indicate dimensions, weights, loads, required clearances, method of field assembly, components, and location and size of each field connection.
3. Include diagrams for power, signal, and control wiring.
4. Include diagrams for air and process signal tubing.
5. Include diagrams for pneumatic signal and main air tubing.

C. Delegated-Design Submittal:

1. Schedule and design calculations for control dampers and actuators, including the following.

a. Flow at project design and minimum flow conditions.
b. Face velocity at project design and minimum airflow conditions.
c. Pressure drop across damper at project design and minimum airflow conditions.
d. AMCA 500D damper installation arrangement used to calculate and schedule pressure drop, as applicable to installation.
e. Maximum close-off pressure.
f. Leakage airflow at maximum system pressure differential (fan close-off pressure).
g. Torque required at worst case condition for sizing actuator.
h. Actuator selection indicating torque provided.

## 1.5 INFORMATIONAL SUBMITTALS

A. Coordination Drawings: Plan drawings and corresponding product installation details, drawn to scale, on which the following items are shown and coordinated with each other, using input from installers of the items involved:

1. Product installation location shown in relationship to room, duct, and equipment.
2. Size and location of wall access panels for control dampers and actuators installed behind walls.
3. Size and location of ceiling access panels for control dampers and actuators installed above inaccessible ceilings.

## 1.6 CLOSEOUT SUBMITTALS

A. Operation and Maintenance Data: For control dampers to include in operation and maintenance manuals.

PART 2 - PRODUCTS

2.1 PERFORMANCE AND GENERAL REQUIREMENTS

A. Electrical Components, Devices, and Accessories: Listed and labeled as defined in NFPA 70, by a qualified testing agency, and marked for intended location and application.

B. ASME Compliance: Fabricate and label products to comply with ASME Boiler and Pressure Vessel Code where required by authorities having jurisdiction.

C. Ground Fault: Products shall not fail due to ground fault condition when suitably grounded.

D. Backup Power Source: Systems and equipment served by a backup power source shall have associated control damper actuators served from a backup power source.

E. All Automatic Control Dampers provided as a part of this Specification shall bear the AMCA Seal as an indication that they comply with all requirements of the AMCA Certified Ratings Programs.

F. Maximum leakage rate through any 48 inches by 48 inches closed damper in any application shall not exceed 10.0 cfm per sq. ft. of damper face area at 4 inches of water pressure differential and a maximum closing torque of 4 inch-lbs./sq. ft. of damper face area. Damper leakage ratings shall be certified in accordance with AMCA Standard 500-D.

G. Environmental Conditions:

1. Provide electric control-damper actuators, with protective enclosures satisfying the following minimum requirements unless more stringent requirements are indicated. Electric control-damper actuators not available with integral enclosures, complying with requirements indicated, shall be housed in protective secondary enclosures.

a. Hazardous Locations: Explosion-proof rating for condition.
b. All outdoor air damper components shall be suitable for applications operating in the temperature range of -40F to 167F.

H. Selection Criteria:

1. Fail positions unless otherwise indicated:

a. Supply Air: Open.
b. Return Air: Open.
c. Outdoor Air: Close.
d. Mixed Air: Open.

e. Exhaust Air: Close.

2. Dampers shall have stable operation throughout full range of operation, from design to minimum airflow over varying pressures and temperatures encountered.
3. Select modulating dampers for a pressure drop of 5 percent of fan total static pressure unless otherwise indicated.
4. Two-position dampers shall be full size of duct or equipment connection unless otherwise indicated.
5. Unless otherwise indicated, use parallel blade configuration for two-position control, equipment isolation service. Use opposed blade configuration for modulating, mixing and any application of upstream critical components.
6. Pneumatic, two-position control dampers shall provide a smooth opening and closing characteristic slow enough to avoid excessive pressure. Dampers with pneumatic actuators shall have an adjustable opening time (valve full closed to full open) and an adjustable closing time (valve full open to full closed) ranging from zero to 10 seconds. Opening and closing times shall be independently adjustable. (Not Used For This Project)
7. Control-damper, pneumatic-control signal shall not exceed 200 feet. For longer distances, provide an electric/electronic control signal to the damper and an electric solenoid valve or electro-pneumatic transducer at the damper to convert the control signal to pneumatic. (Not Used For This Project)

## 2.2 RECTANGULAR CONTROL DAMPERS

A. General Requirements:

1. Unless otherwise indicated, use parallel blade configuration for two-position control, equipment isolation service, and when mixing two airstreams. For other applications, use opposed blade configuration.
2. Factory assemble multiple damper sections to provide a single damper assembly of size required by the application.

B. Rectangular Dampers with Aluminum Airfoil Blades:

1. Manufacturers: Subject to compliance with requirements, available manufacturers offering products that may be incorporated into the Work include, but are not limited to the following:

   a. Ruskin Company.

   b. Arrow louver and Damper co.

   c. Nailer Hart

   d. Greenheck

2. Performance:

a. Leakage: AMCA 511, Class 1A. Leakage shall not exceed 3 cfm/sq. ft. against 1-in. wg differential static pressure.
b. Pressure Drop: 0.05-in. wg at 1500 fpm across a 24-by-24-inch damper when tested according to AMCA 500-D, figure 5.3.
c. Velocity: Up to 6000 fpm.
d. Temperature: Minus 40 to plus 185 deg F.
e. Pressure Rating: Damper close-off pressure equal to fan shutoff pressure with a maximum blade deflection of 1/200 of blade length.
f. Damper shall have AMCA seal for both air leakage and air performance.

3. Construction:

a. Frame:

1) Material: ASTM B 211, Alloy 6063 T5 extruded-aluminum profiles, 0.07 inch thick.
2) Hat-shaped channel with integral flange(s). Mating face shall be a minimum of 1 inch.
3) Width not less than 5 inches.

b. Blades:

1) Hollow, airfoil, extruded aluminum.
2) Parallel or opposed blade configuration as required by application.
3) Material: ASTM B 211, Alloy 6063 T5 aluminum, 0.07 inch thick.
4) Width not to exceed 6 inches.
5) Length as required by close-off pressure, not to exceed 48 inches.

c. Seals:

1) Blades: Replaceable, mechanically attached extruded silicone, vinyl, or plastic composite.
2) Jambs: Stainless steel, compression type.

d. Axles: 0.5-inch- diameter stainless steel, mechanically attached to blades.
e. Bearings:

1) Molded synthetic or stainless-steel sleeve mounted in frame.
2) Where blade axles are installed in vertical position, provide thrust bearings.

f. Linkage:

1) Concealed in frame.
2) Constructed of aluminum and galvanized plated or stainless steel.
3) Hardware: Stainless steel.

g. Transition:

1) For round and flat oval duct applications, provide damper assembly with integral transitions to mate to adjoining field connection.
2) Factory mount damper in a sleeve with a close transition to mate to field connection.
3) Damper size and sleeve shall be connection size plus 2 inches.
4) Sleeve length shall be not less than 12 inches for dampers without jackshafts and shall be not less than 16 inches for dampers with jackshafts.
5) Sleeve material shall match adjacent duct.

h. Additional Corrosion Protection for Corrosive Environments: **(Not Used)**

1) Provide anodized finish for aluminum surfaces in contact with airstream. Anodized finish shall be a minimum of 0.0007 inch thick.
2) Axles, damper linkage, and hardware shall be constructed of Type 316L stainless steel.

4. Airflow Measurement:

a. Manufacturers: Subject to compliance with requirements, available manufacturers offering products that may be incorporated into the Work include, but are not limited to the following:

1) Ruskin Company.

b. Where indicated, provide damper assembly with integral airflow monitoring.
c. Zero- to 10-V dc or 4- to 20-mA scaled output signal for remote monitoring of actual airflow.
d. Accuracy shall be within 5 percent of the actual flow rate between the range of minimum and design airflow. For applications with a large variation in range between the minimum and design airflow, configure the damper sections and flow measurement assembly as required to comply with the stated accuracy over the entire modulating range.
e. Provide a straightening device as part of the flow measurement assembly to achieve the specified accuracy with configuration indicated.
f. Suitable for operation in untreated and unfiltered air.
g. Provide temperature and altitude compensation and correction to maintain accuracy over temperature range encountered at site altitude.
h. Provide automatic zeroing feature.

5. Airflow Control:

a. Manufacturers: Subject to compliance with requirements, available manufacturers offering products that may be incorporated into the Work include, but are not limited to the following:

1) Ruskin Company.

b. Where indicated, provide damper assembly with integral airflow measurement and control.

c. A factory-furnished and -calibrated controller shall be programmed, in nonvolatile EPROM, with application-specific airflow set point and range.
d. The controller and actuator shall communicate to control the desired airflow.
e. The controller shall receive a zero- to 10-V dc input signal and report a zero- to 20-mA output signal that is proportional to the airflow.
f. Airflow measurement and control range shall be suitable for operation between 150 to 2000 fpm.
g. Ambient Operating Temperature Range: Minus 40 to plus 140 deg F.
h. Ambient Operating Humidity Range: 5 to 95 percent relative humidity, non-condensing.
i. Provide unit with control transformer rated for not less than 85 VA. Provide transformer with primary and secondary protection and primary disconnecting means. Coordinate requirements with field power connection.
j. Provide screw terminals for interface to field wiring.
k. Factory mount electronics within a NEMA 250, Type 1 painted steel enclosure.

C. Industrial-Duty Rectangular Dampers with Steel Airfoil Blades:

1. Manufacturers: Subject to compliance with requirements, provide products by the following:

a. Ruskin Company.

b. Arrow Louver and Damper Co.

c. Nailer Hart

d. Greenheck

2. Performance:

a. Leakage: Leakage shall not exceed 3 cfm/sq. ft. against 1-in. wg differential static pressure.
b. Pressure Drop: 0.06-in. wg at 2000 fpm across a 48-by-48-inch damper when tested according to AMCA 500-D, figure 5.3.
c. Velocity: Up to 4000 fpm.
d. Temperature: Minus 40 to plus 250 deg F.
e. Pressure Rating: Damper close-off pressure equal to fan shutoff pressure with a maximum blade deflection of 1/200 of blade length, minimum 10-in. wg.

3. Construction:

a. Frame:

1) Material: Galvanized or stainless steel, 0.11 inch thick.
2) C-shaped channel. Mating face shall be a minimum of 1 inch.

3) Width not less than 3 inches.

b. Blades:

1) Hollow, airfoil, galvanized or stainless steel.
2) Parallel or opposed blade configuration as required by application.
3) Material: Galvanized or stainless steel, 0.06 inch thick.
4) Width not to exceed 6 inches.
5) Length not to exceed 48 inches.

c. Seals:

1) Blades: Replaceable, mechanically attached EPDM or extruded silicone.
2) Jambs: Stainless steel, double compression type.

d. Axles: 0.5- or 0.75-inch- diameter stainless steel, mechanically attached to blades and continuous from end to end.

e. Bearings:

1) Stainless-steel sleeve type mounted in frame.
2) Where blade axles are installed in vertical position, provide thrust bearings.

f. Linkage:

1) Face linkage exposed to airstream.
2) Constructed of plated or stainless steel.
3) Hardware: Stainless steel.

D. Insulated Rectangular Dampers:

1. Performance:

a. Leakage: AMCA 511, Class 1A. Leakage shall not exceed 3 cfm/sq. ft. against 1-in. wg differential static pressure and shall not exceed 4.9 cfm/sq. ft. against 4-in. wg differential static pressure at minus 40 deg F.
b. Pressure Drop: 0.1-in. wg at 1500 fpm across a 24-by-24-inch damper when tested according to AMCA 500-D, figure 5.3.
c. Velocity: Up to 4000 fpm.
d. Temperature: Minus 100 to plus 185 deg F.
e. Pressure Rating: Damper close-off pressure equal to fan shutoff pressure with a maximum blade deflection of 1/200 of blade length.
f. Damper shall have AMCA seal for both air leakage and air performance.

2. Construction:

a. Frame:

1) Material: ASTM B 211, Alloy 6063 T5 extruded-aluminum profiles, 0.08 inch thick.
2) C-shaped channel with integral flange(s). Mating face shall be a minimum of 1 inch.
3) Width not less than 4 inches.
4) Entire frame shall be thermally broken by means of polyurethane resin pockets, complete with thermal cuts.
5) Damper frame shall be insulated with polystyrofoam on four sides.

b. Blades:

1) Hollow shaped, extruded aluminum.
2) Blades shall be internally insulated with expanded polyurethane foam and shall be thermally broken. Complete blade shall have an insulating factor of R-2.29 and a temperature index of 55.
3) Parallel or opposed blade configuration as required by application.
4) Material: ASTM B 211, Alloy 6063 T5 aluminum, 0.08 inch thick.
5) Width not to exceed 6 inches.
6) Length as required by close-off pressure, not to exceed 48 inches.

c. Seals: Blade and frame seals shall be of flexible silicone and secured in an integral slot within the aluminum extrusions.

d. Axles: 0.44-inch- diameter plated or stainless steel, mechanically attached to blades.

e. Bearings:

1) Bearings shall be composed of a Celcon inner bearing fixed to axle, rotating within a polycarbonate outer bearing inserted in the frame, resulting in no metal-to-metal or metal-to-plastic contact.
2) Where blade axles are installed in vertical position, provide thrust bearings.

f. Linkage:

1) Concealed in frame.
2) Constructed of aluminum and plated or stainless steel.
3) Hardware: Stainless steel.

g. Transition:

1) For round and flat oval duct applications, provide damper assembly with integral transitions to mate to adjoining field connection.
2) Factory mount damper in a sleeve with a close transition to mate to field connection.
3) Damper size and sleeve shall be connection size plus 2 inches.
4) Sleeve length shall be not less than 12 inches for dampers without jackshafts and shall be not less than 16 inches for dampers with jackshafts.

5) Sleeve material shall match adjacent duct.

h. Additional Corrosion Protection for Corrosive Environments:

1) Provide anodized finish for aluminum surfaces in contact with airstream. Anodized finish shall be a minimum of 0.0007 inch thick.
2) Axles, damper linkage, and hardware shall be constructed of Type 316L stainless steel.

## 2.3 GENERAL, OPERATING LINKAGES AND DAMPER ACCESSORIES

A. All operating linkages and/or damper accessories required for installation and application in accordance with specification design intent and manufacturer's installation procedures shall be provided

B. Operating linkages provided external to dampers (crank arms, connecting rods, shaft extensions, &c.) for transmitting motion from the actuator/operator to dampers shall be designed as to functionally operate a load equal to or in excess of 300% of the maximum required operating force for the damper.

C. Crank arms and connecting rods shall be adjustable. Linkages shall be brass, bronze, zinc-coated steel, or stainless steel.

D. Adjustments of Crank Arms shall control the position of the damper

E. Use of Operating Linkages external to damper drive shaft shall neither delay nor impede operation of the damper in a manner of performance less than a direct-coupled damper actuator. Operating linkages shall not under any circumstances be permitted to flex, warp, shift &c. under normal operation of connected damper sections.

## 2.4 GENERAL, CONTROL-DAMPER ACTUATORS REQUIREMENTS

A. A.Control damper actuators shall be electronic direct-coupled OR pneumatic pilot/positionedtype. Actuators shall have a means for reversing drive direction and a manual override accessible at the front cover

B. Actuators shall operate related damper(s) with sufficient reserve power to provide smooth modulating action or two-position action and proper speed of response at velocity and pressure conditions to which the damper is subjected.

C. Actuators shall produce sufficient power and torque to close off against the maximum system pressures encountered. Actuators shall be sized to close off against the fan shutoff pressure as a minimum requirement.

D. The total damper area operated by an actuator shall not exceed 80 percent of manufacturer's maximum area rating.

E. Provide one actuator for each damper assembly where possible. Multiple actuators required to drive a single damper assembly shall operate in unison.

F. Avoid the use of excessively oversized actuators which could overdrive and cause linkage failure when the damper blade has reached either its full open or closed position.

G. Use jackshafts and shaft couplings in lieu of blade-to-blade linkages when driving axially aligned damper sections.

H. Provide mounting hardware and linkages for connecting actuator to damper. Single bolt or setscrew type fasteners are not acceptable.

I. Select actuators to fail in desired position in the event of a power failure. For spring return fail-safe applications, an internal mechanical spring return mechanism shall be built into the actuator housing. Non-mechanical forms of fail-safe operation are not acceptable.

J. Actuator Fail Positions: As indicated below refer to sequence of operations for additional information regarding specific equipment:

1. Exhaust Air: Close.
2. Outdoor Air: Close.
3. Supply Air: Open.
4. Return Air: Open.

K. All non-spring return actuators shall have an external manual clutch/gear release to allow manual positioning of the damper when the actuator is not powered. Spring return actuators with more than 60 in-LB torque capacity shall have a manual crank for this purpose.

## 2.5 ELECTRIC AND ELECTRONIC ACTUATORS

A. Type: Motor operated, with or without gears, electric and electronic.

B. Voltage:

1. 24 V.
2. Actuator shall deliver torque required for continuous uniform movement of controlled device from limit to limit when operated at rated voltage.
3. Actuator shall function properly within a range of 85 to 120 percent of nameplate voltage.

C. Construction:

1. Less Than 100 W: Fiber or reinforced nylon gears with steel shaft, copper alloy or nylon bearings, and pressed steel enclosures.

2. 100 up to 400 W: Gears ground steel, oil immersed, shaft-hardened steel running in bronze, copper alloy, or ball bearings. Operator and gear trains shall be totally enclosed in dustproof cast-iron, cast-steel, or cast-aluminum housing.
3. Greater Than 400 W: Totally enclosed reversible induction motors with auxiliary hand crank and permanently lubricated bearings.

D. Field Adjustment:

1. Spring return actuators shall be easily switchable from fail open to fail closed in the field without replacement.
2. Provide gear-type actuators with an external manual adjustment mechanism to allow manual positioning of the damper when the actuator is not powered.

E. Two-Position Actuators: Single direction, spring return or reversing type.

F. Modulating Actuators:

1. Capable of stopping at all points across full range, and starting in either direction from any point in range.
2. Control Input Signal:

a. Three Point, Tristate, or Floating Point: Clockwise and counter-clockwise inputs. One input drives actuator to open position, and other input drives actuator to close position. No signal of either input remains in last position.
b. Proportional: Actuator drives proportional to input signal and modulates throughout its angle of rotation. Suitable for zero- to 10- or 2- to 10-V dc and 4- to 20-mA signals.
c. Pulse Width Modulation (PWM): Actuator drives to a specified position according to a pulse duration (length) of signal from a dry-contact closure, triac sink or source controller.
d. Programmable Multi-Function: (Not Used)

1) Control input, position feedback, and running time shall be factory or field programmable.
2) Diagnostic feedback of hunting or oscillation, mechanical overload, mechanical travel, and mechanical load limit.
3) Service data, including at a minimum, number of hours powered and number of hours in motion.

G. Position Feedback:

1. Equip where indicated, equip two-position actuators with limits switches or other positive means of a position indication signal for remote monitoring of open and close position.
2. Equip where indicated, equip modulating actuators with a position feedback through current or voltage signal for remote monitoring.
3. Provide a position indicator and graduated scale on each actuator indicating open and closed travel limits.

H. Fail-Safe:

1. Where indicated, provide actuator to fail to an end position.
2. Internal spring return mechanism to drive controlled device to an end position (open or close) on loss of power.
3. Batteries, capacitors, and other non-mechanical forms of fail-safe operation are acceptable only where uniquely indicated.

I. Integral Overload Protection:

1. Provide against overload throughout the entire operating range in both directions.
2. Electronic overload, digital rotation sensing circuitry, mechanical end switches, or magnetic clutches are acceptable methods of protection.

J. Damper Attachment:

1. Unless otherwise required for damper interface, provide actuator designed to be directly coupled to damper shaft without need for connecting linkages.
2. Attach actuator to damper drive shaft in a way that ensures maximum transfer of power and torque without slippage.
3. Bolt and set screw method of attachment is acceptable only if provided with at least two points of attachment.

K. Temperature and Humidity:

1. Temperature: Suitable for operating temperature range encountered by application with minimum operating temperature range of minus 20 to plus 120 deg F.
2. Humidity: Suitable for humidity range encountered by application; minimum operating range shall be from 5 to 95 percent relative humidity, non-condensing.

L. Enclosure:

1. Suitable for ambient conditions encountered by application.
2. NEMA 250, Type 2 for indoor and protected applications.
3. NEMA 250, Type 4 or Type 4X for outdoor and unprotected applications.
4. Provide actuator enclosure with a heater and controller where required by application.

M. Stroke Time:

1. Operate damper from fully closed to fully open within 60 75 90 150
2. Operate damper from fully open to fully closed within 60 75 90 150
3. Move damper to failed position within 15 30 seconds.
4. Select operating speed to be compatible with equipment and system operation.
5. Actuators operating in smoke control systems comply with governing code and NFPA requirements.

N. Sound:

1. Spring Return: 62 dBA.
2. Non-Spring Return: 45 dBA.

2.6 POWER SUPPLIES AND LINE FILTERING

A. Power Supplies & Control Transformers. Control transformers and power supplies shall be UL-Listed. Provide Class 2 current-limiting type or over-current protection in both primary and secondary circuits for Class 2 service not to exceed 100 VA in accordance with the applicable following requirements or as directed by the AHJ.
   1. NEC 2011 (NFPA 70) Chapter 7 Article 725 – Class 1, Class 2 and Class 3 Remote-Control, Signaling and Power-Limited Circuits.
   2. NEC 2011 (NFPA 70) Chapter 9 Table 11(A) and Table 11(B).
   3. Canadian Electrical Code, Part 1 (CSA C22.1-12) Rule 16-200.

B. DC Power Supplies. DC power supply output shall match output current and voltage requirements. Power supply shall be half-wave rectified type with the following minimum specifications:
   1. Output ripple: 5.0 mV maximum peak-to-peak.
   2. Regulation: 1.0% line and load combined.
   3. Response: 100 ms for 50% load changes.
   4. Built-in overvoltage and overcurrent protection and able to withstand a 150% current overload for a minimum of three (3) seconds without tripping or failure.

C. Power Line Filtering. Provide transient voltage and surge suppression for all workstations and controllers either internally or as an external component.

PART 3 - EXECUTION

3.1 EXAMINATION

A. Examine substrates and conditions for compliance with requirements for installation tolerances and other conditions affecting performance of the Work.

B. Examine roughing-in for dampers and instruments installed in duct systems to verify actual locations of connections before installation.

C. Prepare written report, endorsed by Installer, listing conditions detrimental to performance.

D. Proceed with installation only after unsatisfactory conditions have been corrected.

## 3.2 CONTROL-DAMPER APPLICATIONS

A. Control Dampers:
   a. Use opposed blade type dampers for all modulating damper applications
   b. Use parallel blade type damper for all open closed applications.
   c. Damper actuation stroke time shall be adjustable
   d. Damper position feedback is required for all dampers that are part of a smoke purge or smoke control system.

## 3.3 INSTALLATION, GENERAL

A. Furnish and install products required to satisfy most stringent requirements indicated.

B. Properly support dampers and actuators, tubing, wiring, and conduit to comply with requirements indicated. Brace all products to prevent lateral movement and sway or a break in attachment when subjected to a force.

C. Provide ceiling, floor, roof, and wall openings and sleeves required by installation. Before proceeding with drilling, punching, or cutting, check location first for concealed products that could potentially be damaged. Patch, flash, grout, seal, and refinish openings to match adjacent condition.

D. Seal penetrations made in fire-rated and acoustically rated assemblies.

E. Fastening Hardware:

   1. Stillson wrenches, pliers, or other tools that will cause injury to or mar surfaces of rods, nuts, and other parts are prohibited for assembling and tightening nuts.
   2. Tighten bolts and nuts firmly and uniformly. Do not overstress threads by excessive force or by oversized wrenches.
   3. Lubricate threads of bolts, nuts, and screws with graphite and oil before assembly.

F. Install products in locations that are accessible and that will permit calibration and maintenance from floor, equipment platforms, or catwalks. Where ladders are required for Owner's access, confirm unrestricted ladder placement is possible under occupied condition.

G. Corrosive Environments:

   1. Use products that are suitable for environment to which they will be subjected.
   2. If possible, avoid or limit use of materials in corrosive environments, including, but not limited to, the following:

      a. Laboratory exhaust airstreams.
      b. Process exhaust airstreams.

3. Use Type 316 stainless-steel tubing and fittings when in contact with a corrosive environment.
4. When conduit is in contact with a corrosive environment, use Type 316 stainless-steel conduit and fittings or conduit and fittings that are coated with a corrosive-resistant coating that is suitable for environment.
5. Where actuators are located in a corrosive environment and are not corrosive resistant from manufacturer, field install products in a NEMA 250, Type 4X enclosure constructed of Type 316L stainless steel.

## 3.4 ELECTRIC POWER

A. Furnish and install electrical power to products requiring electrical connections.

B. Furnish and install circuit breakers. Comply with requirements of the electrical specifications.

C. Furnish and install power wiring. Comply with requirements of the electrical specifications.

D. Furnish and install raceways. Comply with requirements of the electrical specifications.

E. Electrical subcontractor shall provide all required line voltage. The mechanical subcontractor shall provide all low voltage wiring and power supply transformers in coordination with the controls subcontractor and control actuator requirements.

## 3.5 CONTROL DAMPERS

A. Install smooth transitions, not exceeding 30 degrees, to dampers smaller than adjacent duct. Install transitions as close to damper as possible but at distance to avoid interference and impact to performance. Consult manufacturer for recommended clearance.

B. Clearance:

1. Locate dampers for easy access and provide separate support of dampers that cannot be handled by service personnel without hoisting mechanism.
2. Install dampers with at least 24 inches of clear space on sides of dampers requiring service access.

C. Service Access:

1. Dampers and actuators shall be accessible for visual inspection and service.
2. Install access door(s) in duct or equipment located upstream of damper to allow service personnel to hand clean any portion of damper, linkage, and actuator. Comply with requirements in Section 233300 "Air Duct Accessories."

D. Install dampers straight and true, level in all planes, and square in all dimensions. Install supplementary structural steel reinforcement for large multiple-section dampers if factory support alone cannot handle loading.

E. Attach actuator(s) to damper drive shaft.

F. For duct-mounted and equipment-mounted dampers installed outside of equipment, install a visible and accessible indication of damper position from outside.

## 3.6 CONNECTIONS

A. Connect electrical devices and components to electrical grounding system. Comply with requirements in Section 260526 "Grounding and Bonding for Electrical Systems."

## 3.7 IDENTIFICATION

A. Identify system components, wiring, cabling, and terminals. Each piece of wire, cable, and tubing shall have the same designation at each end for operators to determine continuity at points of connection. Comply with requirements for identification specified in Section 230553.

B. Install engraved phenolic nameplate with damper identification on damper.

## 3.8 CHECKOUT PROCEDURES

A. Control-Damper Checkout:

1. Check installed products before continuity tests, leak tests, and calibration.
2. Check dampers for proper location and accessibility.
3. Check instrument tubing for proper isolation, fittings, slope, dirt legs, drains, material, and support.
4. For pneumatic products, verify air supply for each product is properly installed.
5. For pneumatic dampers, verify that pressure gages are provided in each airline to damper actuator and positioner.
6. Verify that control dampers are installed correctly for flow direction.
7. Verify that proper blade alignment, either parallel or opposed, has been provided.
8. Verify that damper frame attachment is properly secured and sealed.
9. Verify that damper actuator and linkage attachment are secure.
10. Verify that actuator wiring is complete, enclosed, and connected to correct power source.
11. Verify that damper blade travel is unobstructed.

3.9 ADJUSTMENT, CALIBRATION, AND TESTING:

A. Stroke and adjust control dampers following manufacturer's recommended procedure, from 100 percent open to 100 percent closed back to 100 percent open.

B. Stroke control dampers with pilot positioners. Adjust damper and positioner following manufacturer's recommended procedure, so damper is 100 percent closed, 50 percent closed, and 100 percent open at proper air pressure.

C. Check and document open and close cycle times for applications with a cycle time of less than 30 seconds.

D. For control dampers equipped with positive position indication, check feedback signal at multiple positions to confirm proper position indication.

**END OF SECTION**

# SECTION 23 23 00

# REFRIGERANT PIPING

## PART 1 - GENERAL

### 1.1 RELATED DOCUMENTS

A. Drawings and general provisions of the Contract, including General and Supplementary Conditions and Division 01 Specification Sections, apply to this Section.

### 1.2 SUMMARY

A. Section Includes:

1. Refrigerant pipes and fittings.
2. Refrigerant piping valves and specialties.
3. Refrigerants.

### 1.3 ACTION SUBMITTALS

A. Product Data: For each type of valve, refrigerant piping, and piping specialty.

1. Include pressure drop, based on manufacturer's test data, for the following:

a. Thermostatic expansion valves.
b. Solenoid valves.
c. Hot-gas bypass valves.
d. Filter dryers.
e. Strainers.
f. Pressure-regulating valves.

B. Sustainable Design Submittals:

1. Product Data for EA Prerequisite "Fundamental Refrigerant Management": For refrigerants, indicating compliance with refrigerant management practices.

C. Shop Drawings:

1. Show piping size and piping layout, including oil traps, double risers, specialties, and pipe and tube sizes to accommodate, as a minimum, equipment provided, elevation difference between compressor and evaporator, and length of piping to ensure proper operation and compliance with warranties of connected equipment.

2. Show interface and spatial relationships between piping and equipment.
3. Shop Drawing Scale: 1/4 inch equals 1 foot.

1.4 INFORMATIONAL SUBMITTALS

A. Welding certificates.

B. Field quality-control reports.

1.5 CLOSEOUT SUBMITTALS

A. Operation and Maintenance Data: For refrigerant valves and piping specialties to include in maintenance manuals.

1.6 QUALITY ASSURANCE

A. Welding Qualifications: Qualify procedures and personnel according to 2010 ASME Boiler and Pressure Vessel Code: Section IX, "Welding and Brazing Qualifications."

B. Comply with ASHRAE 15, "Safety Code for Refrigeration Systems."

C. Comply with ASME B31.5, "Refrigeration Piping and Heat Transfer Components."

1.7 PRODUCT STORAGE AND HANDLING

A. Store piping with end caps in place to ensure that piping interior and exterior are clean when installed.

PART 2 - PRODUCTS

2.1 PERFORMANCE REQUIREMENTS

A. Line Test Pressure for Refrigerant R-134a:

1. Suction Lines for Air-Conditioning Applications: 115 psig.
2. Suction Lines for Heat-Pump Applications: 225 psig.
3. Hot-Gas and Liquid Lines: 225 psig.

B. Line Test Pressure for Refrigerant R-407C:

1. Suction Lines for Air-Conditioning Applications: 230 psig.
2. Suction Lines for Heat-Pump Applications: 380 psig.
3. Hot-Gas and Liquid Lines: 380 psig.

C. Line Test Pressure for Refrigerant R-410A:

1. Suction Lines for Air-Conditioning Applications: 300 psig.
2. Suction Lines for Heat-Pump Applications: 535 psig.
3. Hot-Gas and Liquid Lines: 535 psig.

## 2.2 COPPER TUBE AND FITTINGS

A. Copper Tube: ASTM B 88, Type L – Refer to section 3 for applications

B. ASTM B 280, Type ACR. – Refer to section 3 for applications

C. Wrought-Copper Fittings: ASME B16.22.

D. Wrought-Copper Unions: ASME B16.22.

E. Solder Filler Metals: ASTM B 32. Use 95-5 tin antimony or alloy HB solder to join copper socket fittings on copper pipe.

F. Brazing Filler Metals: AWS A5.8/A5.8M.

G. Flexible Connectors:

1. Body: Tin-bronze bellows with woven, flexible, tinned-bronze-wire-reinforced protective jacket.
2. End Connections: Socket ends.
3. Offset Performance: Capable of minimum 3/4-inch misalignment in minimum 7-inch-long assembly.
4. Working Pressure Rating: Factory test at minimum 500 psig.
5. Maximum Operating Temperature: 250 deg F.

H. Flexible Connectors:

1. Body: Stainless-steel bellows with woven, flexible, stainless-steel-wire-reinforced protective jacket.
2. End Connections:

   a. NPS 2 and Smaller: With threaded-end connections.
   b. NPS 2-1/2 and Larger: With flanged-end connections.

3. Offset Performance: Capable of minimum 3/4-inch misalignment in minimum 7-inch-long assembly.
4. Pressure Rating: Factory test at minimum 500 psig.
5. Maximum Operating Temperature: 250 deg F.

## 2.3 VALVES AND SPECIALTIES

A. Manufactures:

1. Manufacturers: Subject to compliance with requirements, provide products by one of the following:

   a. Danfoss Inc.
   b. Heldon Products; Henry Technologies.
   c. Paul Mueller Company.
   d. Danfoss Inc.
   e. Parker Hannifin Corp.
   f. Keep-Rite Co.

B. Diaphragm Packless Valves:

1. Body and Bonnet: Forged brass or cast bronze; globe design with straight-through or angle pattern.

2. Diaphragm: Phosphor bronze and stainless steel with stainless-steel spring.
3. Operator: Rising stem and hand wheel.
4. Seat: Nylon.
5. End Connections: Socket, union, or flanged.
6. Working Pressure Rating: 500 psig.
7. Maximum Operating Temperature: 275 deg F.

C. Packed-Angle Valves:
1. Body and Bonnet: Forged brass or cast bronze
2. Packing: Molded stem, back seating, and replaceable under pressure.
3. Operator: Rising stem.
4. Seat: Nonrotating, self-aligning polytetrafluoroethylene.
5. Seal Cap: Forged-brass or valox hex cap.
6. End Connections: Socket, union, threaded, or flanged.
7. Working Pressure Rating: 500 psig.
8. Maximum Operating Temperature: 275 deg F.

D. Check Valves:
1. Body: Ductile iron, forged brass, or cast bronze; globe pattern.
2. Bonnet: Bolted ductile iron, forged brass, or cast bronze; or brass hex plug.
3. Piston: Removable polytetrafluoroethylene seat.
4. Closing Spring: Stainless steel.
5. Manual Opening Stem: Seal cap, plated-steel stem, and graphite seal.
6. End Connections: Socket, union, threaded, or flanged.
7. Maximum Opening Pressure: 0.50 psig.
8. Working Pressure Rating: 500 psig.
9. Maximum Operating Temperature: 275 deg F.

E. Service Valves:

1. Body: Forged brass with brass cap including key end to remove core.
2. Core: Removable ball-type check valve with stainless-steel spring.
3. Seat: Polytetrafluoroethylene.
4. End Connections: Copper spring.
5. Working Pressure Rating: 500 psig.

F. Solenoid Valves: Comply with AHRI 760 and UL 429; listed and labeled by a National Recognized Testing Laboratory (NRTL).
1. Body and Bonnet: Plated steel.
2. Solenoid Tube, Plunger, Closing Spring, and Seat Orifice: Stainless steel.
3. Seat: Polytetrafluoroethylene.
4. End Connections: Threaded.
5. Electrical: Molded, watertight coil in NEMA 250 enclosure of type required by location with 1/2-inch conduit adapter, and 24-V ac coil.
6. Working Pressure Rating: 400 psig.
7. Maximum Operating Temperature: 240 deg F.

G. Safety Relief Valves: Comply with 2010 ASME Boiler and Pressure Vessel Code; listed and labeled by an NRTL.

1. Body and Bonnet: Ductile iron and steel, with neoprene O-ring seal.

2. Piston, Closing Spring, and Seat Insert: Stainless steel.
3. Seat: Polytetrafluoroethylene.
4. End Connections: Threaded.
5. Working Pressure Rating: 400 psig.
6. Maximum Operating Temperature: 240 deg F.

H. Thermostatic Expansion Valves: Comply with AHRI 750.
1. Body, Bonnet, and Seal Cap: Forged brass or steel.
2. Diaphragm, Piston, Closing Spring, and Seat Insert: Stainless steel.
3. Packing and Gaskets: Non-asbestos.
4. Capillary and Bulb: Copper tubing filled with refrigerant charge.
5. Suction Temperature: 40 deg F.
6. Superheat: Adjustable or Nonadjustable.
7. Reverse-flow option (for heat-pump applications).
8. End Connections: Socket, flare, or threaded union.
9. Working Pressure Rating: 700 psig.

I. Hot-Gas Bypass Valves: Comply with UL 429; listed and labeled by an NRTL.
1. Body, Bonnet, and Seal Cap: Ductile iron or steel.
2. Diaphragm, Piston, Closing Spring, and Seat Insert: Stainless steel.
3. Packing and Gaskets: Non-asbestos.
4. Solenoid Tube, Plunger, Closing Spring, and Seat Orifice: Stainless steel.
5. Seat: Polytetrafluoroethylene.
6. Equalizer: Internal or External.
7. Electrical: Molded, watertight coil in NEMA 250 enclosure of type required by location with 1/2-inch conduit adapter and 24-V ac coil.

8. End Connections: Socket.
9. Throttling Range: Maximum 5 psig.
10. Working Pressure Rating: 500 psig.
11. Maximum Operating Temperature: 240 deg F.

J. Straight-Type Strainers:
1. Body: Brass or welded steel with corrosion-resistant coating.
2. Screen: 100-mesh stainless steel.
3. End Connections: Socket or flare.
4. Working Pressure Rating: 500 psig.
5. Maximum Operating Temperature: 275 deg F.

K. Angle-Type Strainers:
1. Body: Forged brass or cast bronze.
2. Drain Plug: Brass hex plug.
3. Screen: 100-mesh monel.
4. End Connections: Socket or flare.
5. Working Pressure Rating: 500 psig.
6. Maximum Operating Temperature: 275 deg F.

L. Moisture/Liquid Indicators:
1. Body: Forged brass.
2. Window: Replaceable, clear, fused glass window with indicating element protected by filter screen.
3. Indicator: Color coded to show moisture content in parts per million (ppm).
4. Minimum Moisture Indicator Sensitivity: Indicate moisture above 60 ppm.
5. End Connections: Socket or flare.
6. Working Pressure Rating: 500 psig.
7. Maximum Operating Temperature: 240 deg F.

M. Replaceable-Core Filter Dryers: Comply with AHRI 730.
1. Body and Cover: Painted-steel shell with ductile-iron cover, stainless-steel screws, and neoprene gaskets.
2. Filter Media: 10 micron, pleated with integral end rings; stainless-steel support.
3. Desiccant Media: Activated alumina or charcoal.
4. Designed for reverse flow (for heat-pump applications).
5. End Connections: Socket.
6. Access Ports: NPS 1/4 connections at entering and leaving sides for pressure differential measurement.
7. Maximum Pressure Loss: 2 psig.
8. Rated Flow: .
9. Working Pressure Rating: 500 psig.
10. Maximum Operating Temperature: 240 deg F.

N. Permanent Filter Dryers: Comply with AHRI 730.
1. Body and Cover: Painted-steel shell.
2. Filter Media: 10 micron, pleated with integral end rings; stainless-steel support.
3. Desiccant Media: Activated alumina or charcoal.

4. Designed for reverse flow (for heat-pump applications).
5. End Connections: Socket.
6. Access Ports: NPS 1/4 connections at entering and leaving sides for pressure differential measurement.
7. Maximum Pressure Loss: 2 psig.
8. Rated Flow: .
9. Working Pressure Rating: 500 psig.
10. Maximum Operating Temperature: 240 deg F.

O. Mufflers:
1. Body: Welded steel with corrosion-resistant coating.
2. End Connections: Socket or flare.
3. Working Pressure Rating: 500 psig.
4. Maximum Operating Temperature: 275 deg F.

P. Receivers: Comply with AHRI 495.
1. Comply with 2010 ASME Boiler and Pressure Vessel Code; listed and labeled by an NRTL.
2. Comply with UL 207; listed and labeled by an NRTL.
3. Body: Welded steel with corrosion-resistant coating.
4. Tappings: Inlet, outlet, liquid level indicator, and safety relief valve.
5. End Connections: Socket or threaded.
6. Working Pressure Rating: 500 psig.
7. Maximum Operating Temperature: 275 deg F.

Q. Liquid Accumulators: Comply with AHRI 495.
1. Body: Welded steel with corrosion-resistant coating.
2. End Connections: Socket or threaded.
3. Working Pressure Rating: 500 psig.
4. Maximum Operating Temperature: 275 deg F.

R. FLEXIBLE CONNECTORS
1. Corrugated stainless steel bronze hose with single layer of stainless steel exterior braiding, minimum 6 inches long with copper tube ends; for maximum working pressure 500 psi.

## 2.4 REFRIGERANTS

A. ASHRAE 34, R-134a: Tetrafluoroethane.

B. ASHRAE 34, R-407C: Difluoromethane/Pentafluoroethane/1,1,1,2-Tetrafluoroethane.

C. ASHRAE 34, R-410A: Pentafluoroethane/Difluoromethane.

PART 3 - EXECUTION

3.1 PIPING APPLICATIONS FOR REFRIGERANT;

A. Suction Lines NPS 1-1/2 and Smaller for Conventional Air-Conditioning Applications: Copper, Type ACR, annealed-temper tubing and wrought-copper fittings with brazed or soldered joints.

B. Hot-Gas and Liquid Lines, and Suction Lines for Heat-Pump Applications: Copper, Type ACR, annealed-temper tubing and wrought-copper fittings with brazed or soldered joints.

C. Safety-Relief-Valve Discharge Piping: Schedule 40, black-steel and wrought-steel fittings with welded joints or Type K or Type L, drawn-temper tubing and wrought-copper fittings with soldered joints
   1. NPS 1-1/2 and Smaller: Copper, Type L, drawn-temper tubing and wrought-copper fittings with soldered joints.

3.2 VALVE AND SPECIALTY APPLICATIONS

A. Install diaphragm packless valves in suction and discharge lines of compressor.

B. Install service valves for gage taps at inlet and outlet of hot-gas bypass valves and strainers if they are not an integral part of valves and strainers.

C. Install a check valve at the compressor discharge and a liquid accumulator at the compressor suction connection.

D. Except as otherwise indicated, install diaphragm packless or packed-angle valves on inlet and outlet side of filter dryers.

E. Install a full-size, three-valve bypass around filter dryers.

F. Install solenoid valves upstream from each expansion valve and hot-gas bypass valve. Install solenoid valves in horizontal lines with coil at top.

G. Install thermostatic expansion valves as close as possible to distributors on evaporators.

   1. Install valve so diaphragm case is warmer than bulb.
   2. Secure bulb to clean, straight, horizontal section of suction line using two bulb straps. Do not mount bulb in a trap or at bottom of the line.
   3. If external equalizer lines are required, make connection where it will reflect suction-line pressure at bulb location.

H. Install safety relief valves where required by 2010 ASME Boiler and Pressure Vessel Code. Pipe safety-relief-valve discharge line to outside according to ASHRAE 15.

I. Install moisture/liquid indicators in liquid line at the inlet of the thermostatic expansion valve or at the inlet of the evaporator coil capillary tube.

J. Install strainers upstream from and adjacent to the following unless they are furnished as an integral assembly for the device being protected:

1. Solenoid valves.
2. Thermostatic expansion valves.
3. Hot-gas bypass valves.
4. Compressor.

K. Install filter dryers in liquid line between compressor and thermostatic expansion valve, and in the suction line at the compressor.

L. Install receivers sized to accommodate pump-down charge.

M. Install flexible connectors at compressors.

## 3.3 PIPING INSTALLATION

A. Drawing plans, schematics, and diagrams indicate general location and arrangement of piping systems; indicated locations and arrangements were used to size pipe and calculate friction loss, expansion, pump sizing, and other design considerations. Install piping as indicated unless deviations to layout are approved on Shop Drawings.

B. Install refrigerant piping according to ASHRAE 15 and in accordance the unit manufactures guidelines. Maintain refrigerant velocities within manufactures recommendations in order to keep oil entrained.

C. Install piping in concealed locations unless otherwise indicated and except in equipment rooms and service areas.

D. Install piping indicated to be exposed and piping in equipment rooms and service areas at right angles or parallel to building walls. Diagonal runs are prohibited unless specifically indicated otherwise.

E. Install piping above accessible ceilings to allow sufficient space for ceiling panel removal.

F. Install piping adjacent to machines to allow service and maintenance.

G. Install piping free of sags and bends.

H. Install fittings for changes in direction and branch connections.

I. Select system components with pressure rating equal to or greater than system operating pressure.

J. Refer to Section 230923 "Direct Digital Control (DDC) System for HVAC" and Section 230993.11 "Sequence of Operations for HVAC DDC" for solenoid valve controllers, control wiring, and sequence of operation.

K. Install piping as short and direct as possible, with a minimum number of joints, elbows, and fittings.

L. Arrange piping to allow inspection and service of refrigeration equipment. Install valves and specialties in accessible locations to allow for service and inspection. Install access doors or panels as specified in Section 083113 "Access Doors and Frames" if valves or equipment requiring maintenance is concealed behind finished surfaces.

M. Install refrigerant piping in protective conduit where installed belowground.

N. Install refrigerant piping in rigid or flexible conduit in locations where exposed to mechanical injury.

O. Slope refrigerant piping as follows:

1. Install horizontal hot-gas discharge piping with a uniform slope downward away from compressor.
2. Install horizontal suction lines with a uniform slope downward to compressor.
3. Install traps and double risers to entrain oil in vertical runs.
4. Liquid lines may be installed level.

P. When brazing or soldering, remove solenoid-valve coils and sight glasses; also remove valve stems, seats, and packing, and accessible internal parts of refrigerant specialties. Do not apply heat near expansion-valve bulb.

Q. Install piping with adequate clearance between pipe and adjacent walls and hangers or between pipes for insulation installation.

R. Identify refrigerant piping and valves according to Section 230553 "Identification for HVAC Piping and Equipment."

S. Install sleeves for piping penetrations of walls, ceilings, and floors. Comply with requirements for sleeves specified in Section 230517 "Sleeves and Sleeve Seals for HVAC Piping."

T. Install sleeve seals for piping penetrations of concrete walls and slabs. Comply with requirements for sleeve seals specified in Section 230517 "Sleeves and Sleeve Seals for HVAC Piping."

U. Install escutcheons for piping penetrations of walls, ceilings, and floors. Comply with requirements for escutcheons specified in Section 230518 "Escutcheons for HVAC Piping."

V. Install refrigerant pipping to allow expansion and contraction of piping without deformation or bending or sagging. Provide expansion fittings, bends or elbows to allow expansion in accordance with manufactures temperature operating range.

## 3.4 PIPE JOINT CONSTRUCTION

A. Ream ends of pipes and tubes and remove burrs. Bevel plain ends of steel pipe.

B. Remove scale, slag, dirt, and debris from inside and outside of pipe and fittings before assembly.

C. Fill pipe and fittings with an inert gas (nitrogen or carbon dioxide), during brazing or welding, to prevent scale formation.

D. Soldered Joints: Construct joints according to ASTM B 828 or CDA's "Copper Tube Handbook."

E. Brazed Joints: Construct joints according to AWS's "Brazing Handbook," Chapter "Pipe and Tube."

1. Use Type BCuP (copper-phosphorus) alloy for joining copper socket fittings with copper pipe.
2. Use Type BAg (cadmium-free silver) alloy for joining copper with bronze or steel.

F. Threaded Joints: Thread steel pipe with tapered pipe threads according to ASME B1.20.1. Cut threads full and clean using sharp dies. Ream threaded pipe ends to remove burrs and to restore full ID. Join pipe fittings and valves as follows:

1. Apply appropriate tape or thread compound to external pipe threads unless dry-seal threading is specified.
2. Damaged Threads: Do not use pipe or pipe fittings with threads that are corroded or damaged. Do not use pipe sections that have cracked or open welds.

G. Steel pipe can be threaded, but threaded joints must be seal brazed or seal welded.

H. Welded Joints: Construct joints according to AWS D10.12M/D10.12.

I. Flanged Joints: Select appropriate gasket material, size, type, and thickness for service application. Install gasket concentrically positioned. Use suitable lubricants on bolt threads.

## 3.5 HANGERS AND SUPPORTS

A. Comply with requirements for pipe hangers and supports specified in Section 230529 "Hangers and Supports for HVAC Piping and Equipment."

B. Install the following pipe attachments:

1. Adjustable steel clevis hangers for individual horizontal runs less than 20 feet long.
2. Roller hangers and spring hangers for individual horizontal runs 20 feet or longer.
3. Pipe Roller: MSS SP-58, Type 44 for multiple horizontal piping 20 feet or longer, supported on a trapeze.
4. Spring hangers to support vertical runs.
5. Copper-clad hangers and supports for hangers and supports in direct contact with copper pipe.

C. Install hangers for copper tubing with the following maximum spacing and minimum rod diameters:

1. NPS 1/2: Maximum span, 60 inches; minimum rod, 1/4 inch.
2. NPS 5/8: Maximum span, 60 inches; minimum rod, 1/4 inch.
3. NPS 1: Maximum span, 72 inches; minimum rod, 1/4 inch.
4. NPS 1-1/4: Maximum span, 96 inches; minimum rod, 3/8 inch.
5. NPS 1-1/2: Maximum span, 96 inches; minimum rod, 3/8 inch.
6. NPS 2: Maximum span, 96 inches; minimum rod, 3/8 inch.
7. NPS 2-1/2: Maximum span, 108 inches; minimum rod, 3/8 inch.
8. NPS 3: Maximum span, 10 feet; minimum rod, 3/8 inch.
9. NPS 4: Maximum span, 12 feet; minimum rod, 1/2 inch.

D. Install hangers for steel piping with the following maximum horizontal spacing and minimum rod diameters:

1. NPS 2: Maximum span, 10 feet; minimum rod, 3/8 inch.
2. NPS 2-1/2: Maximum span, 11 feet; minimum rod, 3/8 inch.
3. NPS 3: Maximum span, 12 feet; minimum rod, 3/8 inch.
4. NPS 4: Maximum span, 14 feet; minimum rod, 1/2 inch.

E. Support multifloor vertical runs at least at each floor.

## 3.6 FIELD QUALITY CONTROL

A. Perform the following tests and inspections:

1. Comply with ASME B31.5, Chapter VI.
2. Test refrigerant piping, specialties, and receivers. Isolate compressor, condenser, evaporator, and safety devices from test pressure if they are not rated above the test pressure.

3. Test high- and low-pressure side piping of each system separately at not less than the pressures indicated in "Performance Requirements" Article.

    a. Fill system with nitrogen to the required test pressure.
    b. System shall maintain test pressure at the manifold gage throughout duration of test.
    c. Test joints and fittings with electronic leak detector or by brushing a small amount of soap and glycerin solution over joints.
    d. Remake leaking joints using new materials, and retest until satisfactory results are achieved.

B. Prepare test and inspection reports.

## 3.7 SYSTEM CHARGING

A. Charge system using the following procedures:

1. Install core in filter dryers after leak test but before evacuation.
2. Evacuate entire refrigerant system with a vacuum pump to 500 micrometers. If vacuum holds for 12 hours, system is ready for charging.
3. Break vacuum with refrigerant gas, allowing pressure to build up to 2 psig.
4. Charge system with a new filter-dryer core in charging line.

## 3.8 ADJUSTING

A. Adjust thermostatic expansion valve to obtain proper evaporator superheat.

B. Adjust high- and low-pressure switch settings to avoid short cycling in response to fluctuating suction pressure.

C. Adjust set-point temperature of air-conditioning or chilled-water controllers to the system design temperature.

D. Perform the following adjustments before operating the refrigeration system, according to manufacturer's written instructions:

1. Open shutoff valves in condenser water circuit.
2. Verify that compressor oil level is correct.
3. Open compressor suction and discharge valves.
4. Open refrigerant valves except bypass valves that are used for other purposes.
5. Check open compressor-motor alignment and verify lubrication for motors and bearings.

E. Replace core of replaceable filter dryer after system has been adjusted and after design flow rates and pressures are established.

**END OF SECTION**

# SECTION 23 31 13

# METAL DUCTS

## PART 1 - GENERAL

### 1.1 RELATED DOCUMENTS

A. Drawings and general provisions of the Contract, including General and Supplementary Conditions and Division 01 Specification Sections, apply to this Section.

### 1.2 SUMMARY

A. Section Includes:

1. Single-wall rectangular ducts and fittings.
2. Single-wall round ducts and fittings.
3. Sheet metal materials.
4. Duct liner.
5. Sealants and gaskets.
6. Hangers and supports.

B. Related Sections:

1. Division 23 Section "Testing, Adjusting, and Balancing for HVAC" for testing, adjusting, and balancing requirements for metal ducts.
2. Division 23 Section "HVAC Casings" for factory- and field-fabricated casings for mechanical equipment.
3. Division 23 Section "Air Duct Accessories" for dampers, sound-control devices, duct-mounting access doors and panels, turning vanes, and flexible ducts.

### 1.3 SUBMITTALS

A. Product Data: For each type of the following products:

1. Liners and adhesives.
2. Sealants and gaskets.

B. Shop Drawings:

1. Fabrication, assembly, and installation, including plans, elevations, sections, components, and attachments to other work.
2. Factory- and shop-fabricated ducts and fittings.
3. Duct layout indicating sizes, configuration, liner material, and static-pressure classes.

4. Elevation of top of ducts.
5. Dimensions of main duct runs from building grid lines.

6. Fittings.
7. Reinforcement and spacing.
8. Seam and joint construction.
9. Penetrations through fire-rated and other partitions.
10. Equipment installation based on equipment being used on Project.
11. Locations for duct accessories, including dampers, turning vanes, and access doors and panels.
12. Hangers and supports, including methods for duct and building attachment and vibration isolation.

C. Coordination Drawings: Plans, drawn to scale, on which the following items are shown and coordinated with each other, using input from installers of the items involved:

1. Duct installation in congested spaces, indicating coordination with general construction, building components, and other building services. Indicate proposed changes to duct layout.
2. Suspended ceiling components.
3. Structural members to which duct will be attached.
4. Size and location of initial access modules for acoustical tile.
5. Penetrations of smoke barriers and fire-rated construction.
6. Items penetrating finished ceiling including the following:

   a. Lighting fixtures.
   b. Air outlets and inlets.
   c. Speakers.
   d. Access panels.
   e. Perimeter moldings.

D. Field quality-control reports.

## 1.4 QUALITY ASSURANCE

A. ASHRAE Compliance: Applicable requirements in ASHRAE 62.1-2004, Section 5 - "Systems and Equipment" and Section 7 - "Construction and System Start-Up."

B. ASHRAE/IESNA Compliance: Applicable requirements in ASHRAE/IESNA 90.1-2004, Section 6.4.4 - "HVAC System Construction and Insulation."

PART 2 - PRODUCTS

2.1 SINGLE-WALL RECTANGULAR DUCTS AND FITTINGS

A. General Fabrication Requirements: Comply with SMACNA's "HVAC Duct Construction Standards - Metal and Flexible" based on indicated static-pressure class unless otherwise indicated.

B. Transverse Joints: Select joint types and fabricate according to SMACNA's "HVAC Duct Construction Standards - Metal and Flexible," Figure 1-4, "Transverse (Girth) Joints," for static-pressure class, applicable sealing requirements, materials involved, duct-support intervals, and other provisions in SMACNA's "HVAC Duct Construction Standards - Metal and Flexible."

C. Longitudinal Seams: Select seam types and fabricate according to SMACNA's "HVAC Duct Construction Standards - Metal and Flexible," Figure 1-5, "Longitudinal Seams - Rectangular Ducts," for static-pressure class, applicable sealing requirements, materials involved, duct-support intervals, and other provisions in SMACNA's "HVAC Duct Construction Standards - Metal and Flexible."

D. Elbows, Transitions, Offsets, Branch Connections, and Other Duct Construction: Select types and fabricate according to SMACNA's "HVAC Duct Construction Standards - Metal and Flexible," Chapter 2, "Fittings and Other Construction," for static-pressure class, applicable sealing requirements, materials involved, duct-support intervals, and other provisions in SMACNA's "HVAC Duct Construction Standards - Metal and Flexible."

2.2 SINGLE-WALL ROUND DUCTS AND FITTINGS

A. General Fabrication Requirements: Comply with SMACNA's "HVAC Duct Construction Standards - Metal and Flexible," Chapter 3, "Round, Oval, and Flexible Duct," based on indicated static-pressure class unless otherwise indicated.

B. Transverse Joints: Select joint types and fabricate according to SMACNA's "HVAC Duct Construction Standards - Metal and Flexible," Figure 3-2, "Transverse Joints - Round Duct," for static-pressure class, applicable sealing requirements, materials involved, duct-support intervals, and other provisions in SMACNA's "HVAC Duct Construction Standards - Metal and Flexible."

1. Transverse Joints in Ducts Larger Than 60 Inches in Diameter: Flanged.

C. Longitudinal Seams: Select seam types and fabricate according to SMACNA's "HVAC Duct Construction Standards - Metal and Flexible," Figure 3-1, "Seams - Round Duct and Fittings," for static-pressure class, applicable sealing requirements, materials involved, duct-support intervals, and other provisions in SMACNA's "HVAC Duct Construction Standards - Metal and Flexible."

1. Fabricate round ducts larger than 90 inches in diameter with butt-welded longitudinal seams.
2. Fabricate flat-oval ducts larger than 72 inches in width (major dimension) with butt-welded longitudinal seams.

D. Tees and Laterals: Select types and fabricate according to SMACNA's "HVAC Duct Construction Standards - Metal and Flexible," Figure 3-4, "90 Degree Tees and Laterals," and Figure 3-5, "Conical Tees," for static-pressure class, applicable sealing requirements, materials involved, duct-support intervals, and other provisions in SMACNA's "HVAC Duct Construction Standards - Metal and Flexible."

## 2.3 SHEET METAL MATERIALS

A. General Material Requirements: Comply with SMACNA's "HVAC Duct Construction Standards - Metal and Flexible" for acceptable materials, material thicknesses, and duct construction methods unless otherwise indicated. Sheet metal materials shall be free of pitting, seam marks, roller marks, stains, discolorations, and other imperfections.

B. Galvanized Sheet Steel: Comply with ASTM A 653/A 653M.

1. Galvanized Coating Designation: G90.
2. Finishes for Surfaces Exposed to View: Mill phosphatized.

C. Carbon-Steel Sheets: Comply with ASTM A 1008/A 1008M, with oiled, matte finish for exposed ducts.

D. Stainless-Steel Sheets: Comply with ASTM A 480/A 480M, Type 304 or 316, as indicated in the "Duct Schedule" Article; cold rolled, annealed, sheet. Exposed surface finish shall be No. 2B, No. 2D, No. 3, or No. 4 as indicated in the "Duct Schedule" Article.

E. Aluminum Sheets: Comply with ASTM B 209 Alloy 3003, H14 temper; with mill finish for concealed ducts, and standard, one-side bright finish for duct surfaces exposed to view.

F. Factory- or Shop-Applied Antimicrobial Coating:

1. Apply to the surface of sheet metal that will form the interior surface of the duct. An untreated clear coating shall be applied to the exterior surface.
2. Antimicrobial compound shall be tested for efficacy by an NRTL and registered by the EPA for use in HVAC systems.
3. Coating containing the antimicrobial compound shall have a hardness of 2H, minimum, when tested according to ASTM D 3363.
4. Surface-Burning Characteristics: Maximum flame-spread index of 25 and maximum smoke-developed index of 50 when tested according to UL 723; certified by an NRTL.
5. Shop-Applied Coating Color: Black or White.

6. Antimicrobial coating on sheet metal is not required for duct containing liner treated with antimicrobial coating.

G. Reinforcement Shapes and Plates: ASTM A 36/A 36M, steel plates, shapes, and bars; black and galvanized.

1. Where black- and galvanized-steel shapes and plates are used to reinforce aluminum ducts, isolate the different metals with butyl rubber, neoprene, or EPDM gasket materials.

H. Tie Rods: Galvanized steel, 1/4-inch minimum diameter for lengths 36 inches or less; 3/8-inch minimum diameter for lengths longer than 36 inches.

## 2.4 DUCT LINER

A. Fibrous-Glass Duct Liner: Comply with ASTM C 1071, NFPA 90A, or NFPA 90B; and with NAIMA AH124, "Fibrous Glass Duct Liner Standard."

1. Manufacturers: Subject to compliance with requirements, provide products by one of the following:

a. CertainTeed Corporation; Insulation Group.
b. Johns Manville.
c. Knauf Insulation.
d. Owens Corning.

2. Maximum Thermal Conductivity:

a. Type I, Flexible: 0.27 Btu x in./h x sq. ft. x deg F at 75 deg F mean temperature.
b. Type II, Rigid: 0.23 Btu x in./h x sq. ft. x deg F at 75 deg F mean temperature.

3. Antimicrobial Erosion-Resistant Coating: Apply to the surface of the liner that will form the interior surface of the duct to act as a moisture repellent and erosion-resistant coating. Antimicrobial compound shall be tested for efficacy by an NRTL and registered by the EPA for use in HVAC systems.
4. Water-Based Liner Adhesive: Comply with NFPA 90A or NFPA 90B and with ASTM C 916.

a. For indoor applications, use adhesive that has a VOC content of 80 g/L or less when calculated according to 40 CFR 59, Subpart D (EPA Method 24).

B. Flexible Elastomeric Duct Liner: Preformed, cellular, closed-cell, sheet materials complying with ASTM C 534, Type II, Grade 1; and with NFPA 90A or NFPA 90B.

1. Manufacturers: Subject to compliance with requirements, provide products by one of the following:

    a. Aeroflex USA Inc.
    b. Armacell LLC.
    c. Rubatex International, LLC

2. Surface-Burning Characteristics: Maximum flame-spread index of 25 and maximum smoke-developed index of 50 when tested according to UL 723; certified by an NRTL.
3. Liner Adhesive: As recommended by insulation manufacturer and complying with NFPA 90A or NFPA 90B.

    a. For indoor applications, use adhesive that has a VOC content of 50 g/L or less when calculated according to 40 CFR 59, Subpart D (EPA Method 24).

C. Insulation Pins and Washers

1. Cupped-Head, Capacitor-Discharge-Weld Pins: Copper- or zinc-coated steel pin, fully annealed for capacitor-discharge welding, 0.135-inch- diameter shank, length to suit depth of insulation indicated with integral 1-1/2-inch galvanized carbon-steel washer.
2. Insulation-Retaining Washers: Self-locking washers formed from 0.016-inch-thick galvanized steel, aluminum or stainless steel; with beveled edge sized as required to hold insulation securely in place but not less than 1-1/2 inches in diameter.

D. Shop Application of Duct Liner: Comply with SMACNA's "HVAC Duct Construction Standards - Metal and Flexible," Figure 2-19, "Flexible Duct Liner Installation."

1. Adhere a single layer of indicated thickness of duct liner with at least 90 percent adhesive coverage at liner contact surface area. Attaining indicated thickness with multiple layers of duct liner is prohibited.
2. Apply adhesive to transverse edges of liner facing upstream that do not receive metal nosing.
3. Butt transverse joints without gaps, and coat joint with adhesive.
4. Fold and compress liner in corners of rectangular ducts or cut and fit to ensure butted-edge overlapping.
5. Do not apply liner in rectangular ducts with longitudinal joints, except at corners of ducts, unless duct size and dimensions of standard liner make longitudinal joints necessary.
6. Apply adhesive coating on longitudinal seams in ducts with air velocity of 2500 fpm.
7. Secure liner with mechanical fasteners 4 inches from corners and at intervals not exceeding 12 inches transversely; at 3 inches from transverse joints and at intervals not exceeding 18 inches longitudinally.

8. Secure transversely oriented liner edges facing the airstream with metal nosings that have either channel or "Z" profiles or are integrally formed from duct wall. Fabricate edge facings at the following locations:

    a. Fan discharges.
    b. Intervals of lined duct preceding unlined duct.
    c. Upstream edges of transverse joints in ducts where air velocities are higher than 2500 fpm or where indicated.

9. Secure insulation between perforated sheet metal inner duct of same thickness as specified for outer shell. Use mechanical fasteners that maintain inner duct at uniform distance from outer shell without compressing insulation.

    a. Sheet Metal Inner Duct Perforations: 3/32-inch diameter, with an overall open area of 23 percent.

10. Terminate inner ducts with buildouts attached to fire-damper sleeves, dampers, turning vane assemblies, or other devices. Fabricated buildouts (metal hat sections) or other buildout means are optional; when used, secure buildouts to duct walls with bolts, screws, rivets, or welds.

## 2.5 SEALANT AND GASKETS

A. General Sealant and Gasket Requirements: Surface-burning characteristics for sealants and gaskets shall be a maximum flame-spread index of 25 and a maximum smoke-developed index of 50 when tested according to UL 723; certified by an NRTL.

B. Two-Part Tape Sealing System:

    1. Tape: Woven cotton fiber impregnated with mineral gypsum and modified acrylic/silicone activator to react exothermically with tape to form hard, durable, airtight seal.
    2. Tape Width: 4 inches.
    3. Sealant: Modified styrene acrylic.
    4. Water resistant.
    5. Mold and mildew resistant.
    6. Maximum Static-Pressure Class: 10-inch wg, positive and negative.
    7. Service: Indoor and outdoor.
    8. Service Temperature: Minus 40 to plus 200 deg F.
    9. Substrate: Compatible with galvanized sheet steel (both PVC coated and bare), stainless steel, or aluminum.

C. Water-Based Joint and Seam Sealant:

    1. Application Method: Brush on.
    2. Solids Content: Minimum 65 percent.
    3. Shore A Hardness: Minimum 20.
    4. Water resistant.
    5. Mold and mildew resistant.

6. VOC: Maximum 75 g/L (less water).
7. Maximum Static-Pressure Class: 10-inch wg, positive and negative.
8. Service: Indoor or outdoor.
9. Substrate: Compatible with galvanized sheet steel (both PVC coated and bare), stainless steel, or aluminum sheets.

D. Flanged Joint Sealant: Comply with ASTM C 920.

1. General: Single-component, acid-curing, silicone, elastomeric.
2. Type: S.
3. Grade: NS.
4. Class: 25.
5. Use: O.

E. Flange Gaskets: Butyl rubber, neoprene, or EPDM polymer with polyisobutylene plasticizer.

F. Round Duct Joint O-Ring Seals:

1. Seal shall provide maximum leakage class of 3 cfm/100 sq. ft. at 1-inch wg and shall be rated for 10-inch wg static-pressure class, positive or negative.
2. EPDM O-ring to seal in concave bead in coupling or fitting spigot.

3. Double-lipped, EPDM O-ring seal, mechanically fastened to factory-fabricated couplings and fitting spigots.

## 2.6 HANGERS AND SUPPORTS

A. Hanger Rods for Noncorrosive Environments: Cadmium-plated steel rods and nuts.

B. Hanger Rods for Corrosive Environments: Electrogalvanized, all-thread rods or galvanized rods with threads painted with zinc-chromate primer after installation.

C. Strap and Rod Sizes: Comply with SMACNA's "HVAC Duct Construction Standards - Metal and Flexible," Table 4-1, "Rectangular Duct Hangers Minimum Size," and Table 4-2, "Minimum Hanger Sizes for Round Duct."

D. Steel Cables for Galvanized-Steel Ducts: Galvanized steel complying with ASTM A 603.

E. Steel Cables for Stainless-Steel Ducts: Stainless steel complying with ASTM A 492.

F. Steel Cable End Connections: Cadmium-plated steel assemblies with brackets, swivel, and bolts designed for duct hanger service; with an automatic-locking and clamping device.

G. Duct Attachments: Sheet metal screws, blind rivets, or self-tapping metal screws; compatible with duct materials.

H. Trapeze and Riser Supports:

1. Supports for Galvanized-Steel Ducts: Galvanized-steel shapes and plates.
2. Supports for Stainless-Steel Ducts: Stainless-steel shapes and plates.
3. Supports for Aluminum Ducts: Aluminum or galvanized steel coated with zinc chromate.

## PART 3 - EXECUTION

### 3.1 DUCT INSTALLATION

A. Drawing plans, schematics, and diagrams indicate general location and arrangement of duct system. Indicated duct locations, configurations, and arrangements were used to size ducts and calculate friction loss for air-handling equipment sizing and for other design considerations. Install duct systems as indicated unless deviations to layout are approved on Shop Drawings and Coordination Drawings.

B. Install ducts according to SMACNA's "HVAC Duct Construction Standards - Metal and Flexible" unless otherwise indicated.

C. Install round ducts in maximum practical lengths.

D. Install ducts with fewest possible joints.

E. Install factory- or shop-fabricated fittings for changes in direction, size, and shape and for branch connections.

F. Unless otherwise indicated, install ducts vertically and horizontally, and parallel and perpendicular to building lines.

G. Install ducts close to walls, overhead construction, columns, and other structural and permanent enclosure elements of building.

H. Install ducts with a clearance of 1 inch, plus allowance for insulation thickness.

I. Route ducts to avoid passing through transformer vaults and electrical equipment rooms and enclosures.

J. Where ducts pass through non-fire-rated interior partitions and exterior walls and are exposed to view, cover the opening between the partition and duct or duct insulation with sheet metal flanges of same metal thickness as the duct. Overlap openings on four sides by at least 1-1/2 inches.

K. Where ducts pass through fire-rated interior partitions and exterior walls, install fire dampers. Comply with requirements in Division 23 Section "Air Duct Accessories" for fire and smoke dampers.

L. Protect duct interiors from moisture, construction debris and dust, and other foreign materials. Comply with SMACNA's "Duct Cleanliness for New Construction Guidelines."

## 3.2 INSTALLATION OF EXPOSED DUCTWORK

A. Protect ducts exposed in finished spaces from being dented, scratched, or damaged.

B. Trim duct sealants flush with metal. Create a smooth and uniform exposed bead. Do not use two-part tape sealing system.

C. Grind welds to provide smooth surface free of burrs, sharp edges, and weld splatter. When welding stainless steel with a No. 3 or 4 finish, grind the welds flush, polish the exposed welds, and treat the welds to remove discoloration caused by welding.

D. Maintain consistency, symmetry, and uniformity in the arrangement and fabrication of fittings, hangers and supports, duct accessories, and air outlets.

E. Repair or replace damaged sections and finished work that does not comply with these requirements.

## 3.3 DUCT SEALING

A. Seal ducts for duct static-pressure, seal classes, and leakage classes specified in "Duct Schedule" Article according to SMACNA's "HVAC Duct Construction Standards - Metal and Flexible."

B. Seal ducts to the following seal classes according to SMACNA's "HVAC Duct Construction Standards - Metal and Flexible":

1. Comply with SMACNA's "HVAC Duct Construction Standards - Metal and Flexible."
2. Outdoor, Supply-Air Ducts: Seal Class A.
3. Outdoor, Exhaust Ducts: Seal Class C.
4. Outdoor, Return-Air Ducts: Seal Class C.
5. Unconditioned Space, Supply-Air Ducts in Pressure Classes 2-Inch wg and Lower: Seal Class B.
6. Unconditioned Space, Supply-Air Ducts in Pressure Classes Higher Than 2-Inch wg: Seal Class A.
7. Unconditioned Space, Exhaust Ducts: Seal Class C.
8. Unconditioned Space, Return-Air Ducts: Seal Class B.
9. Conditioned Space, Supply-Air Ducts in Pressure Classes 2-Inch wg and Lower: Seal Class C.

10. Conditioned Space, Supply-Air Ducts in Pressure Classes Higher Than 2-Inch wg: Seal Class B.
11. Conditioned Space, Exhaust Ducts: Seal Class B.
12. Conditioned Space, Return-Air Ducts: Seal Class C.

## 3.4 HANGER AND SUPPORT INSTALLATION

A. Comply with SMACNA's "HVAC Duct Construction Standards - Metal and Flexible," Chapter 4, "Hangers and Supports."

B. Building Attachments: Concrete inserts, powder-actuated fasteners, or structural-steel fasteners appropriate for construction materials to which hangers are being attached.

1. Where practical, install concrete inserts before placing concrete.
2. Install powder-actuated concrete fasteners after concrete is placed and completely cured.
3. Use powder-actuated concrete fasteners for standard-weight aggregate concretes or for slabs more than 4 inches thick.
4. Do not use powder-actuated concrete fasteners for lightweight-aggregate concretes or for slabs less than 4 inches thick.

C. Hanger Spacing: Comply with SMACNA's "HVAC Duct Construction Standards - Metal and Flexible," Table 4-1, "Rectangular Duct Hangers Minimum Size," and Table 4-2, "Minimum Hanger Sizes for Round Duct," for maximum hanger spacing; install hangers and supports within 24 inches of each elbow and within 48 inches of each branch intersection.

D. Hangers Exposed to View: Threaded rod and angle or channel supports.

E. Support vertical ducts with steel angles or channel secured to the sides of the duct with welds, bolts, sheet metal screws, or blind rivets; support at each floor and at a maximum intervals of 16 feet.

F. Install upper attachments to structures. Select and size upper attachments with pull-out, tension, and shear capacities appropriate for supported loads and building materials where used.

## 3.5 CONNECTIONS

A. Make connections to equipment with flexible connectors complying with Division 23 Section "Air Duct Accessories."

B. Comply with SMACNA's "HVAC Duct Construction Standards - Metal and Flexible" for branch, outlet and inlet, and terminal unit connections.

## 3.6 PAINTING

A. Paint interior of metal ducts that are visible through registers and grilles and that do not have duct liner. Apply one coat of flat, black, latex paint over a compatible galvanized-steel primer. Paint materials and application requirements are specified in Division 09 painting Sections.

## 3.7 FIELD QUALITY CONTROL

A. Perform tests and inspections.

B. Leakage Tests:

1. Comply with SMACNA's "HVAC Air Duct Leakage Test Manual." Submit a test report for each test.
2. Test the following systems:

   a. Ducts with a Pressure Class Higher Than 3-Inch wg: Test representative duct sections totaling no less than 25 percent of total installed duct area for each designated pressure class.

3. Disassemble, reassemble, and seal segments of systems to accommodate leakage testing and for compliance with test requirements.
4. Test for leaks before applying external insulation.

5. Conduct tests at static pressures equal to maximum design pressure of system or section being tested. If static-pressure classes are not indicated, test system at maximum system design pressure. Do not pressurize systems above maximum design operating pressure.
6. Give seven days' advance notice for testing.

C. Duct System Cleanliness Tests:

1. Visually inspect duct system to ensure that no visible contaminants are present.
2. Test sections of metal duct system, chosen randomly by Owner, for cleanliness according to "Vacuum Test" in NADCA ACR, "Assessment, Cleaning and Restoration of HVAC Systems."

   a. Acceptable Cleanliness Level: Net weight of debris collected on the filter media shall not exceed 0.75 mg/100 sq. cm.

D. Duct system will be considered defective if it does not pass tests and inspections.

E. Prepare test and inspection reports.

## 3.8 DUCT CLEANING

A. Clean new and existing duct system(s) before testing, adjusting, and balancing.

B. Use service openings for entry and inspection.

1. Create new openings and install access panels appropriate for duct static-pressure class if required for cleaning access. Provide insulated panels for insulated or lined duct. Patch insulation and liner as recommended by duct liner manufacturer. Comply with Division 23 Section "Air Duct Accessories" for access panels and doors.
2. Disconnect and reconnect flexible ducts as needed for cleaning and inspection.
3. Remove and reinstall ceiling to gain access during the cleaning process.

C. Particulate Collection and Odor Control:

1. When venting vacuuming system inside the building, use HEPA filtration with 99.97 percent collection efficiency for 0.3-micron-size (or larger) particles.
2. When venting vacuuming system to outdoors, use filter to collect debris removed from HVAC system, and locate exhaust downwind and away from air intakes and other points of entry into building.

D. Clean the following components by removing surface contaminants and deposits:

1. Air outlets and inlets (registers, grilles, and diffusers).
2. Supply, return, and exhaust fans including fan housings, plenums (except ceiling supply and return plenums), scrolls, blades or vanes, shafts, baffles, dampers, and drive assemblies.
3. Air-handling unit internal surfaces and components including mixing box, coil section, air wash systems, spray eliminators, condensate drain pans, humidifiers and dehumidifiers, filters and filter sections, and condensate collectors and drains.
4. Coils and related components.
5. Return-air ducts, dampers, actuators, and turning vanes except in ceiling plenums and mechanical equipment rooms
6. Supply-air ducts, dampers, actuators, and turning vanes.
7. Dedicated exhaust and ventilation components and makeup air systems.

E. Mechanical Cleaning Methodology:

1. Clean metal duct systems using mechanical cleaning methods that extract contaminants from within duct systems and remove contaminants from building.
2. Use vacuum-collection devices that are operated continuously during cleaning. Connect vacuum device to downstream end of duct sections so areas being cleaned are under negative pressure.

3. Use mechanical agitation to dislodge debris adhered to interior duct surfaces without damaging integrity of metal ducts, duct liner, or duct accessories.
4. Clean fibrous-glass duct liner with HEPA vacuuming equipment; do not permit duct liner to get wet. Replace fibrous-glass duct liner that is damaged, deteriorated, or delaminated or that has friable material, mold, or fungus growth.
5. Clean coils and coil drain pans according to NADCA 1992. Keep drain pan operational. Rinse coils with clean water to remove latent residues and cleaning materials; comb and straighten fins.
6. Provide drainage and cleanup for wash-down procedures.
7. Antimicrobial Agents and Coatings: Apply EPA-registered antimicrobial agents if fungus is present. Apply antimicrobial agents according to manufacturer's written instructions after removal of surface deposits and debris.

## 3.9 START UP

A. Air Balance: Comply with requirements in Division 23 Section "Testing, Adjusting, and Balancing for HVAC."

## 3.10 DUCT SCHEDULE

A. Fabricate ducts with galvanized sheet steel except as otherwise indicated and as follows:

B. Duct Pressure Class:

1. All duct systems shall be constructed to have a pressure classification based on the maximum static pressure (positive or negative) developed by the air handling apparatus connected to the ductwork system. Unless otherwise noted below, refer to the equipment schedules and equipment notes for the design operating pressure of each system. Systems with operating pressures between pressure classes shall be constructed to the next higher pressure class.

| Pressure Classification Table | | | | | | |
|---|---|---|---|---|---|---|
| | | | | | | |
| System operating pressure (OP) in wc | OP≤1" | 1"≥OP<2" | 2"≥OP<3" | 3"≥OP<4" | 4"≥OP<6" | 6"≥OP<10" |
| SMACNA Construction classification | 1" | 2" | 3" | 4" | 6" | 10" |

2. All ductwork shall be constructed in accordance with the leakage and seal classification. Note that the leakage and seal classification required by current code is more stringent than SMACNA requirements.

| leakage and Seal Classifcation Table | | | |
|---|---|---|---|
| | | | |
| System operating pressure in wc | ≤2" low | 2">med<3" | High≥3" |
| Seal Class | C | B | A |
| Sealing | Transverse joints | Transverse joints and seams | Transverse joints and seams and all wall penetrations |
| Leakage class CL factor | 24 | 12 | 4 |

C. Intermediate Reinforcement:

1. Galvanized-Steel Ducts: Galvanized steel.

2. Aluminum Ducts: Aluminum.

D. Liner:

1. Supply Air Ducts: Flexible elastomeric, 1 inch thick.
2. Return Air Ducts: Flexible elastomeric, 1 inch thick.
3. Exhaust Air Ducts: Flexible elastomeric, 1 inch thick.
4. Supply Fan Plenums: Flexible elastomeric, 1 inch thick.
5. Return- and Exhaust-Fan Plenums: Flexible elastomeric, 1 inch thick.
6. Transfer Ducts: Flexible elastomeric, 1 inch thick.

E. Elbow Configuration:

1. Rectangular Duct: Comply with SMACNA's "HVAC Duct Construction Standards - Metal and Flexible," Figure 2-2, "Rectangular Elbows."

   a. Velocity 1000 fpm or Lower:

      1) Radius Type RE 1 with minimum 0.5 radius-to-diameter ratio.
      2) Mitered Type RE 4 without vanes.

   b. Velocity 1000 to 1500 fpm:

      1) Radius Type RE 1 with minimum 1.0 radius-to-diameter ratio.
      2) Radius Type RE 3 with minimum 0.5 radius-to-diameter ratio and two vanes.
      3) Mitered Type RE 2 with vanes complying with SMACNA's "HVAC Duct Construction Standards - Metal and Flexible," Figure 2-3, "Vanes and Vane Runners," and Figure 2-4, "Vane Support in Elbows."

c. Velocity 1500 fpm or Higher:

1) Radius Type RE 1 with minimum 1.5 radius-to-diameter ratio.
2) Radius Type RE 3 with minimum 1.0 radius-to-diameter ratio and two vanes.
3) Mitered Type RE 2 with vanes complying with SMACNA's "HVAC Duct Construction Standards - Metal and Flexible," Figure 2-3, "Vanes and Vane Runners," and Figure 2-4, "Vane Support in Elbows."

2. Rectangular Duct: Comply with SMACNA's "HVAC Duct Construction Standards - Metal and Flexible," Figure 2-2, "Rectangular Elbows."

a. Radius Type RE 1 with minimum 1.5 radius-to-diameter ratio.
b. Radius Type RE 3 with minimum 1.0 radius-to-diameter ratio and two vanes.
c. Mitered Type RE 2 with vanes complying with SMACNA's "HVAC Duct Construction Standards - Metal and Flexible," Figure 2-3, "Vanes and Vane Runners," and Figure 2-4, "Vane Support in Elbows."

3. Round Duct: Comply with SMACNA's "HVAC Duct Construction Standards - Metal and Flexible," Figure 3-3, "Round Duct Elbows."

a. Minimum Radius-to-Diameter Ratio and Elbow Segments: Comply with SMACNA's "HVAC Duct Construction Standards - Metal and Flexible," Table 3-1, "Mitered Elbows." Elbows with less than 90-degree change of direction have proportionately fewer segments.

1) Velocity 1000 fpm or Lower: 0.5 radius-to-diameter ratio and three segments for 90-degree elbow.
2) Velocity 1000 to 1500 fpm: 1.0 radius-to-diameter ratio and four segments for 90-degree elbow.
3) Velocity 1500 fpm or Higher: 1.5 radius-to-diameter ratio and five segments for 90-degree elbow.
4) Radius-to Diameter Ratio: 1.5.

b. Round Elbows, 12 Inches and Smaller in Diameter: Stamped or pleated.
c. Round Elbows, 14 Inches and Larger in Diameter: Standing seam.

F. Branch Configuration:

1. Rectangular Duct: Comply with SMACNA's "HVAC Duct Construction Standards - Metal and Flexible," Figure 2-6, "Branch Connections."

a. Rectangular Main to Rectangular Branch: 45-degree entry.
b. Rectangular Main to Round Branch: Spin in.

2. Round and Flat Oval: Comply with SMACNA's "HVAC Duct Construction Standards - Metal and Flexible," Figure 3-4, "90 Degree Tees and Laterals," and Figure 3-5, "Conical Tees." Saddle taps are permitted in existing duct.

   a. Velocity 1000 fpm or Lower: 90-degree tap.
   b. Velocity 1000 to 1500 fpm: Conical tap.
   c. Velocity 1500 fpm or Higher: 45-degree lateral.

* * END OF SECTION**

# SECTION 23 33 00

# AIR DUCT ACCESSORIES

## PART 1 - GENERAL

### 1.1 RELATED DOCUMENTS

A. Drawings and general provisions of the Contract, including General and Supplementary Conditions and Division 01 Specification Sections, apply to this Section.

### 1.2 SUMMARY

A. Section Includes:

1. Manual volume dampers.
2. Control dampers.
3. Fire dampers.
4. Smoke dampers.
5. Combination fire and smoke dampers.
6. Flange connectors.
7. Turning vanes.
8. Remote damper operators.
9. Duct-mounted access doors.
10. Flexible connectors.
11. Flexible ducts.

B. Related Sections:

1. Division 23 Section "HVAC Gravity Ventilators" for roof-mounted ventilator caps.
2. Division 28 Section "Fire Detection and Alarm" for duct-mounted fire and smoke detectors.

### 1.3 SUBMITTALS

A. Product Data: For each type of product indicated.

1. For duct silencers, include pressure drop and dynamic insertion loss data. Include breakout noise calculations for high transmission loss casings.

B. Shop Drawings: For duct accessories. Include plans, elevations, sections, details and attachments to other work.

1. Detail duct accessories fabrication and installation in ducts and other construction. Include dimensions, weights, loads, and required clearances; and method of field assembly into duct systems and other construction. Include the following:

    a. Special fittings.
    b. Manual volume damper installations.
    c. Control damper installations.
    d. Fire-damper, smoke-damper, combination fire- and smoke-damper, ceiling, and corridor damper installations, including sleeves; and duct-mounted access doors and remote damper operators.
    e. Duct security bars.
    f. Wiring Diagrams: For power, signal, and control wiring.

C. Coordination Drawings: Reflected ceiling plans, drawn to scale, on which ceiling-mounted access panels and access doors required for access to duct accessories are shown and coordinated with each other, using input from Installers of the items involved.

D. Source quality-control reports.

E. Operation and Maintenance Data: For air duct accessories to include in operation and maintenance manuals.

1.4 QUALITY ASSURANCE

A. Comply with NFPA 90A, "Installation of Air Conditioning and Ventilating Systems," and with NFPA 90B, "Installation of Warm Air Heating and Air Conditioning Systems."

B. Comply with AMCA 500-D testing for damper rating.

1.5 EXTRA MATERIALS

A. Furnish extra materials that match products installed and that are packaged with protective covering for storage and identified with labels describing contents.

1. Fusible Links: Furnish quantity equal to 10 percent of amount installed.

PART 2 - PRODUCTS

2.1 MATERIALS

A. Comply with SMACNA's "HVAC Duct Construction Standards - Metal and Flexible" for acceptable materials, material thicknesses, and duct construction methods unless otherwise indicated. Sheet metal materials shall be free of pitting, seam marks, roller marks, stains, discolorations, and other imperfections.

B. Galvanized Sheet Steel: Comply with ASTM A 653/A 653M.

1. Galvanized Coating Designation: G90.
2. Exposed-Surface Finish: Mill phosphatized.

C. Stainless-Steel Sheets: Comply with ASTM A 480/A 480M, Type 304, and having a No. 2 finish for concealed ducts and for exposed ducts.

D. Aluminum Sheets: Comply with ASTM B 209, Alloy 3003, Temper H14; with mill finish for concealed ducts and standard, 1-side bright finish for exposed ducts.

E. Extruded Aluminum: Comply with ASTM B 221, Alloy 6063, Temper T6.

F. Reinforcement Shapes and Plates: Galvanized-steel reinforcement where installed on galvanized sheet metal ducts; compatible materials for aluminum and stainless-steel ducts.

G. Tie Rods: Galvanized steel, 1/4-inch minimum diameter for lengths 36 inches or less; 3/8-inch minimum diameter for lengths longer than 36 inches.

## 2.2 MANUAL VOLUME DAMPERS

A. Standard, Steel, Manual Volume Dampers:

1. Manufacturers: Subject to compliance with requirements, available manufacturers offering products that may be incorporated into the Work include, but are not limited to, the following:

   a. METALAIRE, Inc.
   b. Nailor Industries Inc.
   c. Pottorff; a division of PCI Industries, Inc.
   d. Ruskin Company.

2. Standard leakage rating, with linkage outside airstream.
3. Suitable for horizontal or vertical applications.
4. Frames:

   a. Hat-shaped, galvanized-steel channels, 0.064-inch minimum thickness.
   b. Mitered and welded corners.
   c. Flanges for attaching to walls and flangeless frames for installing in ducts.

5. Blades:

a. Multiple or single blade.
b. Parallel- or opposed-blade design.
c. Stiffen damper blades for stability.
d. Galvanized-steel, 0.064 inch thick.

6. Blade Axles: Stainless steel.
7. Bearings:

a. Oil-impregnated bronze.

b. Dampers in ducts with pressure classes of 3-inch wg or less shall have axles full length of damper blades and bearings at both ends of operating shaft.

8. Tie Bars and Brackets: Galvanized steel.

B. Standard, Aluminum, Manual Volume Dampers:

1. Manufacturers: Subject to compliance with requirements, available manufacturers offering products that may be incorporated into the Work include, but are not limited to, the following:

a. METALAIRE, Inc.
b. Nailor Industries Inc.
c. Pottorff; a division of PCI Industries, Inc.
d. Ruskin Company.

2. Standard leakage rating, with linkage outside airstream.
3. Suitable for horizontal or vertical applications.
4. Frames: Hat-shaped, 0.10-inch-thick, aluminum sheet channels; frames with flanges for attaching to walls and flangeless frames for installing in ducts.
5. Blades:

a. Multiple or single blade.
b. Parallel- or opposed-blade design.
c. Stiffen damper blades for stability.
d. Roll-Formed Aluminum Blades: 0.10-inch-thick aluminum sheet.

6. Blade Axles: Stainless steel.
7. Bearings:

a. Oil-impregnated bronze.
b. Dampers in ducts with pressure classes of 3-inch wg or less shall have axles full length of damper blades and bearings at both ends of operating shaft.

8. Tie Bars and Brackets: Aluminum.

C. Low-Leakage, Steel, Manual Volume Dampers:

1. Manufacturers: Subject to compliance with requirements, available manufacturers offering products that may be incorporated into the Work include, but are not limited to, the following:

    a. METALAIRE, Inc.
    b. Nailor Industries Inc.
    c. Pottorff; a division of PCI Industries, Inc.
    d. Ruskin Company.

2. Low-leakage rating, with linkage outside airstream, and bearing AMCA's Certified Ratings Seal for both air performance and air leakage.
3. Suitable for horizontal or vertical applications.
4. Frames:

    a. Hat shaped.
    b. Galvanized-steel channels, 0.064 inch thick.
    c. Mitered and welded corners.
    d. Flanges for attaching to walls and flangeless frames for installing in ducts.

5. Blades:

    a. Multiple or single blade.
    b. Parallel- or opposed-blade design.
    c. Stiffen damper blades for stability.
    d. Galvanized, roll-formed steel, 0.064 inch thick.

6. Blade Axles: Stainless steel.
7. Bearings:

    a. Oil-impregnated bronze.
    b. Dampers in ducts with pressure classes of 3-inch wg or less shall have axles full length of damper blades and bearings at both ends of operating shaft.

8. Blade Seals: Neoprene.
9. Jamb Seals: Cambered stainless steel.
10. Tie Bars and Brackets: Galvanized steel.
11. Accessories:

    a. Include locking device to hold single-blade dampers in a fixed position without vibration.

D. Low-Leakage, Aluminum, Manual Volume Dampers:

1. Manufacturers: Subject to compliance with requirements, available manufacturers offering products that may be incorporated into the Work include, but are not limited to, the following:

    a. METALAIRE, Inc.
    b. Nailor Industries Inc.
    c. Pottorff; a division of PCI Industries, Inc.
    d. Ruskin Company.

2. Low-leakage rating, with linkage outside airstream, and bearing AMCA's Certified Ratings Seal for both air performance and air leakage.
3. Suitable for horizontal or vertical applications.
4. Frames: Hat-shaped, 0.10-inch-thick, aluminum sheet channels; frames with flanges for attaching to walls and flangeless frames for installing in ducts.

5. Blades:

    a. Multiple or single blade.
    b. Parallel- or opposed-blade design.
    c. Roll-Formed Aluminum Blades: 0.10-inch-thick aluminum sheet.
    d. Extruded-Aluminum Blades: 0.050-inch-thick extruded aluminum.

6. Blade Axles: Stainless steel.
7. Bearings:

    a. Oil-impregnated bronze.
    b. Dampers in ducts with pressure classes of 3-inch wg or less shall have axles full length of damper blades and bearings at both ends of operating shaft.

8. Blade Seals: Neoprene.
9. Jamb Seals: Cambered stainless steel.
10. Tie Bars and Brackets: Aluminum.
11. Accessories:

    a. Include locking device to hold single-blade dampers in a fixed position without vibration.

E. Jackshaft:

1. Size: 1-inch diameter.
2. Material: Galvanized-steel pipe rotating within pipe-bearing assembly mounted on supports at each mullion and at each end of multiple-damper assemblies.
3. Length and Number of Mountings: As required to connect linkage of each damper in multiple-damper assembly.

F. Damper Hardware:

1. Zinc-plated, die-cast core with dial and handle made of 3/32-inch-thick zinc-plated steel, and a 3/4-inch hexagon locking nut.
2. Include center hole to suit damper operating-rod size.
3. Include elevated platform for insulated duct mounting.

## 2.3 CONTROL DAMPERS

A. Manufacturers: Subject to compliance with requirements, available manufacturers offering products that may be incorporated into the Work include, but are not limited to, the following:

a. METALAIRE, Inc.
b. Nailor Industries Inc.
c. Pottorff; a division of PCI Industries, Inc.
d. Ruskin Company.

B. Low-leakage rating, with linkage outside airstream, and bearing AMCA's Certified Ratings Seal for both air performance and air leakage.

C. Frames:

1. Hat shaped.
2. Galvanized-steel channels, 0.064 inch thick.
3. Mitered and welded corners.

D. Blades:

1. Multiple blade with maximum blade width of 8 inches.
2. Opposed-blade design.
3. Galvanized steel.
4. 0.064 inch thick.
5. Blade Edging: Closed-cell neoprene edging.

E. Blade Axles: 1/2-inch-diameter; stainless steel; blade-linkage hardware of zinc-plated steel and brass; ends sealed against blade bearings.

1. Operating Temperature Range: From minus 40 to plus 200 deg F.

F. Bearings:

1. Oil-impregnated bronze.
2. Dampers in ducts with pressure classes of 3-inch wg or less shall have axles full length of damper blades and bearings at both ends of operating shaft.

3. Thrust bearings at each end of every blade.

## 2.4 FIRE DAMPERS

A. Manufacturers: Subject to compliance with requirements, available manufacturers offering products that may be incorporated into the Work include, but are not limited to, the following:

   a. METALAIRE, Inc.
   b. Nailor Industries Inc.
   c. Pottorff; a division of PCI Industries, Inc.
   d. Ruskin Company.

B. Type: Static and dynamic; rated and labeled according to UL 555 by an NRTL.

C. Closing rating in ducts up to 4-inch wg static pressure class and minimum 4000-fpm velocity.

D. Fire Rating: 1-1/2 hours.

E. Frame: Curtain type with blades outside airstream except when located behind grille where blades may be inside airstream; fabricated with roll-formed, 0.034-inch-thick galvanized steel; with mitered and interlocking corners.

F. Mounting Sleeve: Factory- or field-installed, galvanized sheet steel.

   1. Minimum Thickness: 0.052 or 0.138 inch thick, as indicated, and of length to suit application.
   2. Exception: Omit sleeve where damper-frame width permits direct attachment of perimeter mounting angles on each side of wall or floor; thickness of damper frame must comply with sleeve requirements.

G. Mounting Orientation: Vertical or horizontal as indicated.

H. Blades: Roll-formed, interlocking, 0.034-inch-thick, galvanized sheet steel. In place of interlocking blades, use full-length, 0.034-inch-thick, galvanized-steel blade connectors.

I. Horizontal Dampers: Include blade lock and stainless-steel closure spring.

J. Heat-Responsive Device: Replaceable, 165 deg F rated, fusible links.

## 2.5 SMOKE DAMPERS

A. Manufacturers: Subject to compliance with requirements, available manufacturers offering products that may be incorporated into the Work include, but are not limited to, the following:

1. Greenheck Fan Corporation.
2. Nailor Industries Inc.
3. Ruskin Company.

B. General Requirements: Label according to UL 555S by an NRTL.

C. Smoke Detector: Integral, factory wired for single-point connection.

D. Frame: Curtain type with blades outside airstream except when located behind grille where blades may be inside airstream; fabricated with roll-formed, 0.034-inch-thick galvanized steel; with mitered and interlocking corners.

E. Blades: Roll-formed, horizontal, interlocking, 0.034-inch-thick, galvanized sheet steel. In place of interlocking blades, use full-length, 0.034-inch-thick, galvanized-steel blade connectors.

F. Leakage: Class I .

G. Rated pressure and velocity to exceed design airflow conditions.

H. Mounting Sleeve: Factory-installed, 0.052-inch-thick, galvanized sheet steel; length to suit wall or floor application with factory-furnished silicone calking.

I. Damper Motors: two-position action.

J. Comply with NEMA designation, temperature rating, service factor, enclosure type, and efficiency requirements for motors specified in Division 23 Section "Common Motor Requirements for HVAC Equipment."

1. Motor Sizes: Minimum size as indicated. If not indicated, large enough so driven load will not require motor to operate in service factor range above 1.0.
2. Controllers, Electrical Devices, and Wiring: Comply with requirements for electrical devices and connections specified in Division 23 Section "Instrumentation and Control for HVAC."
3. Permanent-Split-Capacitor or Shaded-Pole Motors: With oil-immersed and sealed gear trains.
4. Spring-Return Motors: Equip with an integral spiral-spring mechanism where indicated. Enclose entire spring mechanism in a removable housing designed for service or adjustments. Size for running torque rating of 150 in. x lbf and breakaway torque rating of 150 in. x lbf.
5. Outdoor Motors and Motors in Outdoor-Air Intakes: Equip with O-ring gaskets designed to make motors weatherproof. Equip motors with internal heaters to permit normal operation at minus 40 deg F.

6. Nonspring-Return Motors: For dampers larger than 25 sq. ft., size motor for running torque rating of 150 in. x lbf and breakaway torque rating of 300 in. x lbf.
7. Electrical Connection: 115 V, single phase, 60 Hz.

K. Accessories:

1. Auxiliary switches for signaling or position indication.
2. Test and reset switches, remote mounted.

2.6 COMBINATION FIRE AND SMOKE DAMPERS

A. Manufacturers: Subject to compliance with requirements, available manufacturers offering products that may be incorporated into the Work include, but are not limited to, the following:

1. Greenheck Fan Corporation.
2. Nailor Industries Inc.
3. Ruskin Company.

B. Type: Dynamic; rated and labeled according to UL 555 and UL 555S by an NRTL.

C. Closing rating in ducts up to 4-inch wg static pressure class and minimum 4000-fpm velocity.

D. Fire Rating: 1-1/2 hours.

E. Frame: Curtain type with blades outside airstream except when located behind grille where blades may be inside airstream; fabricated with roll-formed, 0.034-inch-thick galvanized steel; with mitered and interlocking corners.

F. Heat-Responsive Device: Replaceable, 165 deg F rated, fusible links.

G. Smoke Detector: Integral, factory wired for single-point connection.

H. Frame: Curtain type with blades outside airstream except when located behind grille where blades may be inside airstream; fabricated with roll-formed, 0.034-inch-thick galvanized steel; with mitered and interlocking corners.

I. Blades: Roll-formed, horizontal, interlocking, 0.034-inch-thick, galvanized sheet steel. In place of interlocking blades, use full-length, 0.034-inch-thick, galvanized-steel blade connectors.

J. Leakage: Class I.

K. Rated pressure and velocity to exceed design airflow conditions.

L. Mounting Sleeve: Factory-installed, 0.052-inch-thick, galvanized sheet steel; length to suit wall or floor application with factory-furnished silicone calking.

M. Master control panel for use in dynamic smoke-management systems.

N. Damper Motors: Modulating or two-position action.

O. Comply with NEMA designation, temperature rating, service factor, enclosure type, and efficiency requirements for motors specified in Division 23 Section "Common Motor Requirements for HVAC Equipment."

1. Motor Sizes: Minimum size as indicated. If not indicated, large enough so driven load will not require motor to operate in service factor range above 1.0.
2. Controllers, Electrical Devices, and Wiring: Comply with requirements for electrical devices and connections specified in Division 23 Section "Instrumentation and Control for HVAC."
3. Permanent-Split-Capacitor or Shaded-Pole Motors: With oil-immersed and sealed gear trains.
4. Spring-Return Motors: Equip with an integral spiral-spring mechanism where indicated. Enclose entire spring mechanism in a removable housing designed for service or adjustments. Size for running torque rating of 150 in. x lbf and breakaway torque rating of 150 in. x lbf.
5. Outdoor Motors and Motors in Outdoor-Air Intakes: Equip with O-ring gaskets designed to make motors weatherproof. Equip motors with internal heaters to permit normal operation at minus 40 deg F.
6. Nonspring-Return Motors: For dampers larger than 25 sq. ft., size motor for running torque rating of 150 in. x lbf and breakaway torque rating of 300 in. x lbf.
7. Electrical Connection: 115 V, single phase, 60 Hz.

P. Accessories:

1. Auxiliary switches for signaling or position indication.
2. Test and reset switches, remote mounted.

## 2.7 FLANGE CONNECTORS

A. Manufacturers: Subject to compliance with requirements, available manufacturers offering products that may be incorporated into the Work include, but are not limited to, the following:

1. Ductmate Industries, Inc.
2. Nexus PDQ; Division of Shilco Holdings Inc.
3. Ward Industries, Inc.; a division of Hart & Cooley, Inc.

B. Description: Add-on or roll-formed, factory-fabricated, slide-on transverse flange

connectors, gaskets, and components.

C. Material: Galvanized steel.

D. Gage and Shape: Match connecting ductwork.

## 2.8 TURNING VANES

A. Manufacturers: Subject to compliance with requirements, available manufacturers offering products that may be incorporated into the Work include, but are not limited to, the following:

1. Ductmate Industries, Inc.
2. Duro Dyne Inc.
3. METALAIRE, Inc.

B. Manufactured Turning Vanes for Metal Ducts: Curved blades of galvanized sheet steel; support with bars perpendicular to blades set; set into vane runners suitable for duct mounting.

1. Acoustic Turning Vanes: Fabricate airfoil-shaped aluminum extrusions with perforated faces and fibrous-glass fill.

C. Manufactured Turning Vanes for Nonmetal Ducts: Fabricate curved blades of resin-bonded fiberglass with acrylic polymer coating; support with bars perpendicular to blades set; set into vane runners suitable for duct mounting.

D. General Requirements: Comply with SMACNA's "HVAC Duct Construction Standards - Metal and Flexible"; Figures 2-3, "Vanes and Vane Runners," and 2-4, "Vane Support in Elbows."

E. Vane Construction: Double wall.

F. Vane Construction: Single wall for ducts up to 48 inches wide and double wall for larger dimensions.

## 2.9 REMOTE DAMPER OPERATORS

A. Manufacturers: Subject to compliance with requirements, available manufacturers offering products that may be incorporated into the Work include, but are not limited to, the following:

1. Pottorff; a division of PCI Industries, Inc.
2. Ventfabrics, Inc.
3. Young Regulator Company.

B. Description: Cable system designed for remote manual damper adjustment.

C. Tubing: Brass.

D. Cable: Stainless steel.

E. Wall-Box Mounting: Recessed, 2 inches deep.

F. Wall-Box Cover-Plate Material: Stainless steel.

## 2.10 DUCT-MOUNTED ACCESS DOORS

A. Manufacturers: Subject to compliance with requirements, available manufacturers offering products that may be incorporated into the Work include, but are not limited to, the following:

1. Ductmate Industries, Inc.
2. Greenheck Fan Corporation.
3. McGill AirFlow LLC.
4. Nailor Industries Inc.
5. Pottorff; a division of PCI Industries, Inc.

B. Duct-Mounted Access Doors: Fabricate access panels according to SMACNA's "HVAC Duct Construction Standards - Metal and Flexible"; Figures 2-10, "Duct Access Doors and Panels," and 2-11, "Access Panels - Round Duct."

1. Door:

a. Double wall, rectangular.
b. Galvanized sheet metal with insulation fill and thickness as indicated for duct pressure class.
c. Vision panel.
d. Hinges and Latches: 1-by-1-inch butt or piano hinge and cam latches.
e. Fabricate doors airtight and suitable for duct pressure class.

2. Frame: Galvanized sheet steel, with bend-over tabs and foam gaskets.
3. Number of Hinges and Locks:

a. Access Doors Less Than 12 Inches Square: No hinges and two sash locks.
b. Access Doors up to 18 Inches Square: Two hinges and two sash locks.
c. Access Doors up to 24 by 48 Inches: Three hinges and two compression latches with outside and inside handles.
d. Access Doors Larger Than 24 by 48 Inches: Four hinges and two compression latches with outside and inside handles.

C. Pressure Relief Access Door:

1. Door and Frame Material: Galvanized sheet steel.
2. Door: Double wall with insulation fill with metal thickness applicable for duct pressure class.

3. Operation: Open outward for positive-pressure ducts and inward for negative-pressure ducts.
4. Factory set at 10-inch wg.
5. Doors close when pressures are within set-point range.
6. Hinge: Continuous piano.
7. Latches: Cam.
8. Seal: Neoprene or foam rubber.
9. Insulation Fill: 1-inch-thick, fibrous-glass or polystyrene-foam board.

## 2.11 DUCT ACCESS PANEL ASSEMBLIES

A. Manufacturers: Subject to compliance with requirements, available manufacturers offering products that may be incorporated into the Work include, but are not limited to, the following:

1. Ductmate Industries, Inc.
2. Flame Gard, Inc.
3. 3M.

B. Labeled according to UL 1978 by an NRTL.

C. Panel and Frame: Minimum thickness 0.0528-inch carbon steel.

D. Fasteners: Carbon steel. Panel fasteners shall not penetrate duct wall.

E. Gasket: Comply with NFPA 96; grease-tight, high-temperature ceramic fiber, rated for minimum 2000 deg F.

F. Minimum Pressure Rating: 10-inch wg, positive or negative.

## 2.12 FLEXIBLE CONNECTORS

A. Manufacturers: Subject to compliance with requirements, available manufacturers offering products that may be incorporated into the Work include, but are not limited to, the following:

1. Ductmate Industries, Inc.

2. Duro Dyne Inc.
3. Ventfabrics, Inc.

B. Materials: Flame-retardant or noncombustible fabrics.

C. Coatings and Adhesives: Comply with UL 181, Class 1.

D. Metal-Edged Connectors: Factory fabricated with a fabric strip 3-1/2 inches wide attached to 2 strips of 2-3/4-inch-wide, 0.028-inch-thick, galvanized sheet steel or 0.032-inch-thick aluminum sheets. Provide metal compatible with connected ducts.

E. Indoor System, Flexible Connector Fabric: Glass fabric double coated with neoprene.

1. Minimum Weight: 26 oz./sq. yd..
2. Tensile Strength: 480 lbf/inch in the warp and 360 lbf/inch in the filling.
3. Service Temperature: Minus 40 to plus 200 deg F.

F. Outdoor System, Flexible Connector Fabric: Glass fabric double coated with weatherproof, synthetic rubber resistant to UV rays and ozone.

1. Minimum Weight: 24 oz./sq. yd..
2. Minimum Tensile Strength: 500 lbf/inch in the warp and 440 lbf/inch in the filling.
3. Service Temperature: Minus 50 to plus 250 deg F.

G. High-Temperature System, Flexible Connectors: Glass fabric coated with silicone rubber.

1. Minimum Weight: 16 oz./sq. yd..
2. Tensile Strength: 285 lbf/inch in the warp and 185 lbf/inch in the filling.
3. Service Temperature: Minus 67 to plus 500 deg F.

H. High-Corrosive-Environment System, Flexible Connectors: Glass fabric with chemical-resistant coating.

1. Minimum Weight: 14 oz./sq. yd..
2. Tensile Strength: 450 lbf/inch in the warp and 340 lbf/inch in the filling.
3. Service Temperature: Minus 67 to plus 500 deg F.

I. Thrust Limits: Combination coil spring and elastomeric insert with spring and insert in compression, and with a load stop. Include rod and angle-iron brackets for attaching to fan discharge and duct.

1. Frame: Steel, fabricated for connection to threaded rods and to allow for a maximum of 30 degrees of angular rod misalignment without binding or reducing isolation efficiency.
2. Outdoor Spring Diameter: Not less than 80 percent of the compressed height of the spring at rated load.
3. Minimum Additional Travel: 50 percent of the required deflection at rated load.
4. Lateral Stiffness: More than 80 percent of rated vertical stiffness.

5. Overload Capacity: Support 200 percent of rated load, fully compressed, without deformation or failure.
6. Elastomeric Element: Molded, oil-resistant rubber or neoprene.

7. Coil Spring: Factory set and field adjustable for a maximum of 1/4-inch movement at start and stop.

## 2.13 FLEXIBLE DUCTS

A. Manufacturers: Subject to compliance with requirements, available manufacturers offering products that may be incorporated into the Work include, but are not limited to, the following:

1. Flexmaster U.S.A., Inc.
2. McGill AirFlow LLC.
3. Ward Industries, Inc.; a division of Hart & Cooley, Inc.

B. Insulated, Flexible Duct: UL 181, Class 1, multiple layers of aluminum laminate supported by helically wound, spring-steel wire; fibrous-glass insulation; aluminized vapor-barrier film.

1. Pressure Rating: 10-inch wg positive and 1.0-inch wg negative.
2. Maximum Air Velocity: 4000 fpm.
3. Temperature Range: Minus 20 to plus 210 deg F.
4. Insulation R-value: R-6.

C. Flexible Duct Connectors:

1. Clamps: Stainless-steel band with cadmium-plated hex screw to tighten band with a worm-gear action in sizes 3 through 18 inches, to suit duct size.
2. Non-Clamp Connectors: Adhesive plus sheet metal screws.

## 2.14 DUCT ACCESSORY HARDWARE

A. Instrument Test Holes: Cast iron or cast aluminum to suit duct material, including screw cap and gasket. Size to allow insertion of pitot tube and other testing instruments and of length to suit duct-insulation thickness.

B. Adhesives: High strength, quick setting, neoprene based, waterproof, and resistant to gasoline and grease.

## PART 3 - EXECUTION

### 3.1 INSTALLATION

A. Install duct accessories according to applicable details in SMACNA's "HVAC Duct Construction Standards - Metal and Flexible" for metal ducts and in NAIMA AH116, "Fibrous Glass Duct Construction Standards," for fibrous-glass ducts.

B. Install duct accessories of materials suited to duct materials; use galvanized-steel accessories in galvanized-steel and fibrous-glass ducts, stainless-steel accessories in stainless-steel ducts, and aluminum accessories in aluminum ducts.

C. Install control dampers at inlet of exhaust fans or exhaust ducts as close as possible to exhaust fan unless otherwise indicated.

D. Install volume dampers at points on supply, return, and exhaust systems where branches extend from larger ducts. Where dampers are installed in ducts having duct liner, install dampers with hat channels of same depth as liner, and terminate liner with nosing at hat channel.

1. Install steel volume dampers in steel ducts.
2. Install aluminum volume dampers in aluminum ducts.

E. Set dampers to fully open position before testing, adjusting, and balancing.

F. Install test holes at fan inlets and outlets and elsewhere as indicated.

G. Install fire and smoke dampers according to UL listing.

H. Install access doors with swing against duct static pressure.

I. Access Door Sizes:

1. One-Hand or Inspection Access: 8 by 5 inches.
2. Two-Hand Access: 12 by 6 inches.
3. Head and Hand Access: 18 by 10 inches.
4. Head and Shoulders Access: 21 by 14 inches.
5. Body Access: 25 by 14 inches.
6. Body plus Ladder Access: 25 by 17 inches.

J. Label access doors according to Division 23 Section "Identification for HVAC Piping and Equipment" to indicate the purpose of access door.

K. Install flexible connectors to connect ducts to equipment.

L. For fans developing static pressures of 5-inch wg and more, cover flexible connectors with loaded vinyl sheet held in place with metal straps.

M. Connect diffusers or light troffer boots to ducts directly or with maximum 60-inch lengths of flexible duct clamped or strapped in place.

N. Connect flexible ducts to metal ducts with draw bands.

O. Install duct test holes where required for testing and balancing purposes.

P. Install thrust limits at centerline of thrust, symmetrical on both sides of equipment. Attach thrust limits at centerline of thrust and adjust to a maximum of 1/4-inch movement during start and stop of fans.

## 3.2 FIELD QUALITY CONTROL

A. Tests and Inspections:

1. Operate dampers to verify full range of movement.
2. Inspect locations of access doors and verify that purpose of access door can be performed.
3. Operate fire, smoke, and combination fire and smoke dampers to verify full range of movement and verify that proper heat-response device is installed.
4. Inspect turning vanes for proper and secure installation.
5. Operate remote damper operators to verify full range of movement of operator and damper.

**END OF SECTION**

# SECTION 23 34 13

# AXIAL HVAC FANS

## PART 1 - GENERAL

### 1.1 RELATED DOCUMENTS

A. Drawings and general provisions of the Contract, including General and Supplementary Conditions and Division 01 Specification Sections, apply to this Section.

### 1.2 SUMMARY

A. This Section includes the following:

1. Mixed-flow fans.

### 1.3 PERFORMANCE REQUIREMENTS

A. Operating Limits: Classify according to AMCA 99.

### 1.4 SUBMITTALS

A. Product Data: Include rated capacities, furnished specialties, and accessories for each type of product indicated and include the following:

1. Certified fan performance curves with system operating conditions indicated.
2. Certified fan sound-power ratings.
3. Motor ratings and electrical characteristics, plus motor and electrical accessories.
4. Material thickness and finishes, including color charts.
5. Dampers, including housings, linkages, and operators.
6. Fan speed controllers.

B. Shop Drawings: Detail equipment assemblies and indicate dimensions, weights, loads, required clearances, method of field assembly, components, and location and size of each field connection.

1. Wiring Diagrams: Power, signal, and control wiring.
2. Vibration Isolation Base Details: Detail fabrication, including anchorages and attachments to structure and to supported equipment. Include auxiliary motor slides and rails, and base weights.

C. Field quality-control test reports.

D. Operation and Maintenance Data: For axial fans to include in emergency, operation, and maintenance manuals.

1.5 QUALITY ASSURANCE

A. Electrical Components, Devices, and Accessories: Listed and labeled as defined in NFPA 70, Article 100, by a testing agency acceptable to authorities having jurisdiction, and marked for intended use.

B. AMCA Compliance: Products shall comply with performance requirements and shall be licensed to use the AMCA-Certified Ratings Seal.

C. NEMA Compliance: Motors and electrical accessories shall comply with NEMA standards.

1.6 DELIVERY, STORAGE, AND HANDLING

A. Deliver fans as factory-assembled units, to the extent allowable by shipping limitations, with protective crating and covering.

B. Disassemble and reassemble units, as required for moving to final locations, according to manufacturer's written instructions.

C. Lift and support units with manufacturer's designated lifting or supporting points.

1.7 COORDINATION

A. Coordinate size and location of structural-steel support members.

1.8 EXTRA MATERIALS

A. Furnish extra materials described below that match products installed and that are packaged with protective covering for storage and identified with labels describing contents.

1. Belts: One set(s) for each belt-driven unit.

PART 2 - PRODUCTS

2.1 MIXED-FLOW FANS

A. Basis-of-Design Product: Subject to compliance with requirements, provide the product indicated on Drawings or a comparable product by one of the following:

1. Loren Cook Company.
2. Greenheck.
3. Chicago Blower Corporation.

B. Description: Fan wheel and housing, factory-mounted motor with belt drive, and accessories.

C. Housings: Steel.

1. Inlet and Outlet Connections: Outer mounting frame and companion flanges.
2. Guide Vane Section: Integral guide vanes downstream from fan wheel designed to straighten airflow.

D. Wheel Assemblies: Cast aluminum with airfoil-shaped blades mounted on cast-iron wheel plate keyed to shaft with solid-steel key.

E. Drives: Factory mounted, with final alignment and belt adjustment made after installation.

1. Service Factor Based on Fan Motor Size: 1.15.
2. Fan Shaft: Turned, ground, and polished steel designed to operate at no more than 70 percent of first critical speed at top of fan's speed range.
3. Fan Pulleys: Cast iron with split, tapered bushing; dynamically balanced at factory.
4. Motor Pulleys: Adjustable pitch for use with motors through 5 hp; fixed pitch for use with larger motors. Select pulley so pitch adjustment is at the middle of adjustment range at fan design conditions.
5. Belts: Oil resistant, nonsparking, and nonstatic; matched sets for multiple belt drives.
6. Motor Mount: Adjustable base.
7. Shaft Bearings: Radial, self-aligning ball or roller bearings.

    a. Roller-Bearing Rating Life: ABMA 11, L10 of 80,000 hours.
    b. Extend lubrication lines to outside of casing and terminate with grease fittings.

F. Accessories:

1. Mounting Clips: Horizontal ceiling or vertical mounting clips welded to fan housing, of same material as housing.
2. Inlet and Outlet Screens: Wire-mesh screen on fans not connected to ductwork of same material as housing.

3. Backdraft Dampers: Butterfly style, for mounting with flexible connection to the discharge of fan or direct mounted to the discharge diffuser section of same material as housing.

4. Motor Cover: Cover with side vents to dissipate motor heat, of same material as housing.

5. Inlet Bell: Curved inlet for when fan is not attached to duct, of same material as housing.
6. Inlet Cones: Round-to-round transition of same material as housing.

7. Outlet Cones: Round-to-round transition of same material as housing.
8. Stack Cap: Vertical discharge assembly with backdraft dampers, of same material as housing.

G. Motors: Comply with requirements in Division 23 Section "Common Motor Requirements for HVAC Equipment."

1. Enclosure Type: Open drip proof.
2. Direct-Driven Units: Encase motor in housing outside of airstream, factory wired to disconnect switch located on outside of fan housing.

H. Factory Finishes:

1. Sheet Metal Parts: Prime coat before final assembly.
2. Exterior Surfaces: Baked-enamel finish coat after assembly.

I. Capacities and Characteristics: As indicated on drawings.

## 2.2 SOURCE QUALITY CONTROL

A. Sound-Power Level Ratings: Comply with AMCA 301, "Methods for Calculating Fan Sound Ratings from Laboratory Test Data." Factory test fans according to AMCA 300, "Reverberant Room Method for Sound Testing of Fans." Label fans with the AMCA-Certified Ratings Seal.

B. Fan Performance Ratings: Establish flow rate, pressure, power, air density, speed of rotation, and efficiency by factory tests and ratings according to AMCA 210, "Laboratory Methods of Testing Fans for Rating."

## PART 3 - EXECUTION

### 3.1 INSTALLATION

A. Install axial fans level and plumb.

B. Support suspended units from structure using threaded steel rods and spring hangers with vertical-limit stops having a static deflection of 1 inch. Vibration-control devices are specified in Division 23 Section "Vibration and Seismic Controls for HVAC Piping and Equipment."

C. Install units with clearances for service and maintenance.

D. Label fans according to requirements specified in Division 23 Section "Identification for HVAC Piping and Equipment."

### 3.2 CONNECTIONS

A. Duct installation and connection requirements are specified in other Division 23 Sections. Drawings indicate general arrangement of ducts and duct accessories. Make final duct connections with flexible connectors. Flexible connectors are specified in Division 23 Section "Air Duct Accessories."

B. Ground equipment according to Division 26 Section "Grounding and Bonding for Electrical Systems."

C. Connect wiring according to Division 26 Section "Low-Voltage Electrical Power Conductors and Cables."

### 3.3 FIELD QUALITY CONTROL

A. Perform the following field tests and inspections and prepare test reports:

1. Verify that shipping, blocking, and bracing are removed.
2. Verify that unit is secure on mountings and supporting devices and that connections to ducts and electrical components are complete. Verify that proper thermal-overload protection is installed in motors, starters, and disconnect switches.
3. Verify that cleaning and adjusting are complete.
4. Disconnect fan drive from motor, verify proper motor rotation direction, and verify fan wheel free rotation and smooth bearing operation. Reconnect fan drive system, align and adjust belts, and install belt guards.
5. Adjust belt tension.

6. Adjust damper linkages for proper damper operation.
7. Verify lubrication for bearings and other moving parts.
8. Verify that manual and automatic volume control and fire and smoke dampers in connected ductwork systems are in fully open position.
9. Disable automatic temperature-control operators, energize motor and confirm proper motor rotation and unit operation, adjust fan to indicated rpm, and measure and record motor voltage and amperage.
10. Shut unit down and reconnect automatic temperature-control operators.
11. Remove and replace malfunctioning units and retest as specified above.

B. Test and adjust controls and safeties. Replace damaged and malfunctioning controls and equipment.

3.4 ADJUSTING

A. Adjust damper linkages for proper damper operation.

B. Adjust belt tension.

C. Lubricate bearings.

**END OF SECTION**

# SECTION 233416
# CENTRIFUGAL HVAC FANS

## PART 1 - GENERAL

### 1.1 RELATED DOCUMENTS

A. Drawings and general provisions of the Contract, including General and Supplementary Conditions and Division 01 Specification Sections, apply to this Section.

### 1.2 SUMMARY

A. This Section includes the following:

1. Backward-inclined centrifugal fans.
2. Forward-curved centrifugal fans.

### 1.3 PERFORMANCE REQUIREMENTS

A. Operating Limits: Classify according to AMCA 99.

### 1.4 SUBMITTALS

A. Product Data: Include rated capacities, furnished specialties, and accessories for each type of product indicated and include the following:

1. Certified fan performance curves with system operating conditions indicated.
2. Certified fan sound-power ratings.
3. Motor ratings and electrical characteristics, plus motor and electrical accessories.
4. Material thickness and finishes, including color charts.
5. Dampers, including housings, linkages, and operators.

B. Shop Drawings: Detail equipment assemblies and indicate dimensions, weights, loads, required clearances, method of field assembly, components, and location and size of each field connection.

1. Wiring Diagrams: Power, signal, and control wiring.

C. Coordination Drawings: Show fan room layout and relationships between components and adjacent structural and mechanical elements. Show support locations, type of support, and weight on each support. Indicate and certify field measurements.

D. Field quality-control test reports.

E. Operation and Maintenance Data: For centrifugal fans to include in emergency, operation, and maintenance manuals.

1.5 QUALITY ASSURANCE

A. Electrical Components, Devices, and Accessories: Listed and labeled as defined in NFPA 70, Article 100, by a testing agency acceptable to authorities having jurisdiction, and marked for intended use.

B. AMCA Compliance: Products shall comply with performance requirements and shall be licensed to use the AMCA-Certified Ratings Seal.

C. NEMA Compliance: Motors and electrical accessories shall comply with NEMA 1.

1.6 DELIVERY, STORAGE, AND HANDLING

A. Deliver fans as factory-assembled units, to the extent allowable by shipping limitations, with protective crating and covering.

B. Disassemble and reassemble units, as required for moving to the final location, according to manufacturer's written instructions.

C. Lift and support units with manufacturer's designated lifting or supporting points.

1.7 COORDINATION

A. Coordinate size and location of structural-steel support members.

B. Coordinate size and location of concrete bases. Cast anchor-bolt inserts into bases. Concrete, reinforcement, and formwork requirements are specified in Division 03.

C. Coordinate installation of roof curbs, equipment supports, and roof penetrations. These items are specified in Division 07 Section "Roof Accessories."

PART 2 - PRODUCTS

2.1 BACKWARD-INCLINED CENTRIFUGAL FANS

A. Basis-of-Design Product: Subject to compliance with requirements, provide the product indicated on Drawings or a comparable product by one of the following:

1. Chicago Blower Corporation.
2. Loren Cook Company.
3. New York Blower Company (The).

B. Description: Factory-fabricated,-assembled,-tested, and-finished, belt-driven centrifugal fans consisting of housing, wheel, fan shaft, bearings, motor and disconnect switch, drive assembly, and support structure.

C. Housings: Formed panels to make curved-scroll housings with shaped cutoff; with doors or panels to allow access to internal parts and components.

1. Panel Bracing: Steel angle- or channel-iron member supports for mounting and supporting fan scroll, wheel, motor, and accessories.
2. Horizontally split, bolted-flange housing.
3. Spun inlet cone with flange.
4. Outlet flange.

D. Backward-Inclined Wheels: Single-width-single-inlet and double-width-double-inlet construction with curved inlet flange, backplate, backward-inclined blades welded or riveted to flange and backplate; cast-iron or cast-steel hub riveted to backplate and fastened to shaft with set screws.

E. Shafts: Statically and dynamically balanced and selected for continuous operation at maximum rated fan speed and motor horsepower, with final alignment and belt adjustment made after installation.

1. Turned, ground, and polished hot-rolled steel with keyway. Ship with a protective coating of lubricating oil.
2. Designed to operate at no more than 70 percent of first critical speed at top of fan's speed range.

F. Grease-Lubricated Shaft Bearings: Self-aligning, pillow-block-type, tapered roller bearings with double-locking collars and two-piece, cast-iron housing.

1. Roller-Bearing Rating Life: ABMA 11, Ll0 at 100,000 hours.

G. Belt Drives: Factory mounted, with final alignment and belt adjustment made after installation.

1. Service Factor Based on Fan Motor Size: 1.15.
2. Fan Pulleys: Cast iron or cast steel with split, tapered bushing; dynamically balanced at factory.
3. Motor Pulleys: Adjustable pitch for use with motors through 5 hp; fixed pitch for use with larger motors. Select pulley so pitch adjustment is at the middle of adjustment range at fan design conditions.
4. Belts: Oil resistant, nonsparking, and nonstatic; matched sets for multiple belt drives.
5. Belt Guards: Fabricate to comply with OSHA and SMACNA requirements of diamond-mesh wire screen welded to steel angle frame or equivalent, prime coated. Secure to fan or fan supports without short circuiting vibration isolation. Include provisions for adjustment of belt tension, lubrication, and use of tachometer with guard in place.
6. Motor Mount: Adjustable for belt tensioning.

H. Accessories:

1. Companion Flanges: Rolled flanges for duct connections of same material as housing.
2. Inlet Screens: Grid screen of same material as housing.
3. Shaft Seals: Airtight seals installed around shaft on drive side of single-width fans.

I. Motors: Comply with requirements in Division 23 Section "Common Motor Requirements for HVAC Equipment."

J. Capacities and Characteristics: As indicated on drawings.

## 2.2 FORWARD-CURVED CENTRIFUGAL FANS

A. Basis-of-Design Product: Subject to compliance with requirements, provide the product indicated on Drawings or a comparable product by one of the following:

1. Chicago Blower Corporation.
2. Loren Cook Company.
3. New York Blower Company (The).

B. Description:

1. Factory-fabricated, -assembled, -tested, and -finished, belt-driven centrifugal fans consisting of housing, wheel, fan shaft, bearings, motor, drive assembly, and support structure.
2. Deliver fans as factory-assembled units, to the extent allowable by shipping limitations.
3. Factory-installed and -wired disconnect switch.

C. Housings:

1. Formed panels to make curved-scroll housings with shaped cutoff.
2. Panel Bracing: Steel angle- or channel-iron member supports for mounting and supporting fan scroll, wheel, motor, and accessories.
3. Spun inlet cone with flange.
4. Outlet flange.

D. Forward-Curved Wheels:

1. Black-enameled or galvanized-steel construction with inlet flange, backplate, shallow blades with inlet and tip curved forward in direction of airflow.
2. Mechanically secured to flange and backplate; cast-steel hub swaged to backplate and fastened to shaft with set screws.

E. Shafts:

1. Statically and dynamically balanced and selected for continuous operation at maximum rated fan speed and motor horsepower, with adjustable alignment and belt tensioning.
2. Turned, ground, and polished hot-rolled steel with keyway. Ship with protective coating of lubricating oil.
3. Designed to operate at no more than 70 percent of first critical speed at top of fan's speed range.

F. Grease-Lubricated Shaft Bearings:

1. Self-aligning, pillow-block-type, tapered roller bearings with double-locking collars and two-piece, cast-iron housing.
2. Roller-Bearing Rating Life: ABMA 11, Ll0 at 100,000 hours.

G. Belt Drives:

1. Factory mounted, with adjustable alignment and belt tensioning.
2. Service Factor Based on Fan Motor Size: 1.15.
3. Fan Pulleys: Cast iron or cast steel with split, tapered bushing; dynamically balanced at factory.
4. Motor Pulleys: Adjustable pitch for use with motors through 5 hp; fixed pitch for use with larger motors. Select pulley so pitch adjustment is at the middle of adjustment range at fan design conditions.
5. Belts: Oil resistant, nonsparking, and nonstatic; matched sets for multiple belt drives.
6. Belt Guards: Fabricate to comply with OSHA and SMACNA requirements of diamond-mesh wire screen welded to steel angle frame or equivalent, prime coated. Secure to fan or fan supports without short circuiting vibration isolation. Include provisions for adjustment of belt tension, lubrication, and use of tachometer with guard in place.
7. Motor Mount: Adjustable for belt tensioning.

H. Accessories:

1. Companion Flanges: Rolled flanges for duct connections of same material as housing.
2. Discharge Dampers: Assembly with opposed blades constructed of two plates formed around and to shaft, channel frame, and sealed ball bearings; with blades linked outside of airstream to single control lever of same material as housing.
3. Inlet Screens: Grid screen of same material as housing.
4. Shaft Cooler: Metal disk between bearings and fan wheel, designed to dissipate heat from shaft.
5. Shaft Seals: Airtight seals installed around shaft on drive side of single-width fans.

## 2.3 SOURCE QUALITY CONTROL

A. Sound-Power Level Ratings: Comply with AMCA 301, "Methods for Calculating Fan Sound Ratings from Laboratory Test Data." Factory test fans according to AMCA 300, "Reverberant Room Method for Sound Testing of Fans." Label fans with the AMCA-Certified Ratings Seal.

B. Fan Performance Ratings: Establish flow rate, pressure, power, air density, speed of rotation, and efficiency by factory tests and ratings according to AMCA 210, "Laboratory Methods of Testing Fans for Rating."

# PART 3 - EXECUTION

## 3.1 INSTALLATION

A. Install centrifugal fans level and plumb.

B. Support suspended units from structure using threaded steel rods and spring hangers with vertical-limit stops having a static deflection of 1 inch. Vibration-control devices are specified in Division 23 Section "Vibration and Seismic Controls for HVAC Piping and Equipment."

C. Install units with clearances for service and maintenance.

D. Label fans according to requirements specified in Division 23 Section "Identification for HVAC Piping and Equipment."

## 3.2 CONNECTIONS

A. Duct installation and connection requirements are specified in other Division 23 Sections. Drawings indicate general arrangement of ducts and duct accessories. Make final duct connections with flexible connectors. Flexible connectors are specified in Division 23 Section "Air Duct Accessories."

B. Install ducts adjacent to fans to allow service and maintenance.

C. Install line-sized piping from scroll drain connection, with trap with seal equal to 1.5 times specified static pressure, to nearest floor drain.

D. Ground equipment according to Division 26 Section "Grounding and Bonding for Electrical Systems."

E. Connect wiring according to Division 26 Section "Low-Voltage Electrical Power Conductors and Cables."

## 3.3 FIELD QUALITY CONTROL

A. Perform the following field tests and inspections and prepare test reports:

1. Verify that shipping, blocking, and bracing are removed.

2. Verify that unit is secure on mountings and supporting devices and that connections to ducts and electrical components are complete. Verify that proper thermal-overload protection is installed in motors, starters, and disconnect switches.
3. Verify that cleaning and adjusting are complete.
4. Disconnect fan drive from motor, verify proper motor rotation direction, and verify fan wheel free rotation and smooth bearing operation. Reconnect fan drive system, align and adjust belts, and install belt guards.
5. Adjust belt tension.
6. Adjust damper linkages for proper damper operation.
7. Verify lubrication for bearings and other moving parts.
8. Verify that manual and automatic volume control and fire and smoke dampers in connected ductwork systems are in fully open position.
9. Refer to Division 23 Section "Testing, Adjusting, and Balancing for HVAC" for testing, adjusting, and balancing procedures.
10. Remove and replace malfunctioning units and retest as specified above.

B. Test and adjust controls and safeties. Replace damaged and malfunctioning controls and equipment.

## 3.4 DEMONSTRATION

A. Train Owner's maintenance personnel to adjust, operate, and maintain centrifugal fans. Refer to Division 01 Section "Demonstration and Training."

**END OF SECTION**

# SECTION 233423
# HVAC POWER VENTILATORS

## PART 1 - GENERAL

### 1.1 RELATED DOCUMENTS

A. Drawings and general provisions of the Contract, including General and Supplementary Conditions and Division 01 Specification Sections, apply to this Section.

### 1.2 SUSTAINABLE DESIGN OBJECTIVES

A. The City requires the contractor to implement practices and procedures to meet the project's environmental performance goals, which include;

1. Minimize the environmental impacts of the construction and operation of the project during the construction phase. The project shall implement the following procedures singly or in combination:

   a. Select products that minimize consumption of non-renewable resources, consume reduced amounts of energy, minimize environmental pollution, and to utilize recycled and/or recyclable materials.
   b. Reduce sources of potential Indoor Air Quality pollutants by controlled selection of materials and processes used in project construction. (015721)
   c. Minimize waste produced by construction through efficient construction practices and landfill diversion, as detailed in the Construction Waste Management Plan. (017419)

2. Products and processes that achieve the above objectives have been selected and included in the Construction Documents.

### 1.3 SUMMARY

A. Section Includes:
   1. Ceiling-mounted ventilators.
   2. In-line centrifugal fans.

### 1.4 PERFORMANCE REQUIREMENTS

A. Project Altitude: Base fan-performance ratings on sea level.

B. Operating Limits: Classify according to AMCA 99.

## 1.5 ACTION SUBMITTALS

A. Product Data: For each type of product indicated. Include rated capacities, operating characteristics, and furnished specialties and accessories. Also include the following:

1. Certified fan performance curves with system operating conditions indicated.
2. Certified fan sound-power ratings.
3. Motor ratings and electrical characteristics, plus motor and electrical accessories.
4. Material thickness and finishes, including color charts.
5. Dampers, including housings, linkages, and operators.

B. Shop Drawings: Include plans, elevations, sections, details, and attachments to other work.

1. Detail equipment assemblies and indicate dimensions, weights, loads, required clearances, method of field assembly, components, and location and size of each field connection.
2. Wiring Diagrams: For power, signal, and control wiring.

## 1.6 INFORMATIONAL SUBMITTALS

A. Coordination Drawings: Reflected ceiling plans and other details, drawn to scale, on which the following items are shown and coordinated with each other, using input from Installers of the items involved:
1. Ceiling suspension assembly members.
2. Size and location of initial access modules for acoustical tile.
3. Ceiling-mounted items including light fixtures, diffusers, grilles, speakers, sprinklers, access panels, and special moldings.

B. Field quality-control reports.

## 1.7 CLOSEOUT SUBMITTALS

A. Operation and Maintenance Data: For power ventilators to include in emergency, operation, and maintenance manuals.

## 1.8 MAINTENANCE MATERIAL SUBMITTALS

A. Furnish extra materials that match products installed and that are packaged with protective covering for storage and identified with labels describing contents.

1. Belts: One set(s) for each belt-driven unit.

1.9 QUALITY ASSURANCE

A. Electrical Components, Devices, and Accessories: Listed and labeled as defined in NFPA 70, by a qualified testing agency, and marked for intended location and application.

B. AMCA Compliance: Fans shall have AMCA-Certified performance ratings and shall bear the AMCA-Certified Ratings Seal.

C. UL Standards: Power ventilators shall comply with UL 705. Power ventilators for use for restaurant kitchen exhaust shall also comply with UL 762.

1.10 DELIVERY, STORAGE AND HANDLING

A. Comply with the requirements of the Construction Indoor Air Quality Management Plan and the Construction Waste Management Plan.

1.11 PROJECT CONDITIONS

A. Waste Management: Comply with the requirements of the Construction Waste Management Plan.

PART 2 - PRODUCTS

2.1 PRODUCT REQUIREMENTS FOR SUSTAINABLE DESIGN- GENERAL

A. All field applied paints, coatings, sealants, sealer, adhesives in this section shall meet the requirements of VOC limits in 016116- Indoor Finishes Performance Requirements.

B. All Products in this Section shall be free of Materials of Concern as noted in 015721- Indoor Air Quality Control (where achievable).

2.2 CEILING-MOUNTED VENTILATORS

A. Manufacturers: Subject to compliance with requirements, available manufacturers offering products that may be incorporated into the Work include, but are not limited to, the following or approved equal:

1. Carnes Company.
2. Greenheck Fan Corporation.
3. JencoFan.
4. Loren Cook Company.
5. PennBarry.

B. Housing: 22 Gauge Galvanized Steel.

C. Fan Wheel: Centrifugal forward curved injection molded polypropylene resin wheels directly mounted on motor shaft.

D. Grille: White, non-yellowing, high-impact styrene injection molded louvered grille with flange on intake and thumbscrew attachment to fan housing.

E. Electrical Requirements: Field wiring compartment with disconnect receptacle.

F. Motor: Open drip proof type with permanently lubricated sealed bearings.

G. Accessories:

1. Lockable NEMA 1 disconnect switch.
2. Outlet Flexible duct connector.
3. Hanging isolator kit.

H. Capacities and Characteristics: Refer To Schedule on Drawings

## 2.3 IN-LINE CENTRIFUGAL FANS

A. Manufacturers: Subject to compliance with requirements, available manufacturers offering products that may be incorporated into the Work include, but are not limited to, the following or approved equal:
1. Carnes Company.
2. Greenheck Fan Corporation.
3. Loren Cook Company.
4. PennBarry.

B. Housing: Bolted 18 gauge galvanized steel with corrosion resistant fasteners, inlet and outlet duct collars, and pre-drilled adaptable to floor, side wall, or ceiling mounting. Bolted access doors on three sides with closed cell neoprene gaskets.

C. Belt-Driven Units: Motor mounted on adjustable base, with adjustable sheaves.

D. Fan Wheels: 100% aluminum centrifugal backward inclined with precision machined cast aluminum hub. Wheel shall be balanced in accordance with AMCA standard 204-96.

E. Accessories:

1. Inlet/outlet flexible duct connectors.

2. Premium efficiency motors.
3. Lockable NEMA 1 disconnect switch.
4. Spring type vibration isolators.
5. Motorized backdraft damper.
6. Belt Guards.

## 2.4 MOTORS

A. Comply with NEMA designation, temperature rating, service factor, enclosure type, and efficiency requirements for motors specified in Section 230513 "Common Motor Requirements for HVAC Equipment."

1. Motor Sizes: Minimum size as indicated. If not indicated, large enough so driven load will not require motor to operate in service factor range above 1.0.

## 2.5 SOURCE QUALITY CONTROL

A. Certify sound-power level ratings according to AMCA 301, "Methods for Calculating Fan Sound Ratings from Laboratory Test Data." Factory test fans according to AMCA 300, "Reverberant Room Method for Sound Testing of Fans." Label fans with the AMCA-Certified Ratings Seal.

B. Certify fan performance ratings, including flow rate, pressure, power, air density, speed of rotation, and efficiency by factory tests according to AMCA 210, "Laboratory Methods of Testing Fans for Aerodynamic Performance Rating." Label fans with the AMCA-Certified Ratings Seal.

# PART 3 - EXECUTION

## 3.1 INSTALLATION

A. Install power ventilators level and plumb.

B. Equipment Mounting:
1. Comply with requirements for vibration isolation and seismic control devices specified in Section 230548 "Vibration and Seismic Controls for HVAC."

C. Ceiling Units: Suspend units from structure; use steel wire or metal straps.

D. Support suspended units from structure using threaded steel rods and spring hangers having a static deflection of 1 inch. Vibration-control devices are specified in Section 230548 "Vibration Controls for HVAC."

E. Install units with clearances for service and maintenance.

F. Label units according to requirements specified in Section 230553 "Identification for HVAC Piping and Equipment."

## 3.2 CONNECTIONS

A. Drawings indicate general arrangement of ducts and duct accessories. Make final duct connections with flexible connectors. Flexible connectors are specified in Section 233300 "Air Duct Accessories."

B. Install ducts adjacent to power ventilators to allow service and maintenance.

C. Ground equipment according to Section 260526 "Grounding and Bonding for Electrical Systems."

D. Connect wiring according to Section 260519 "Low-Voltage Electrical Power Conductors and Cables."

## 3.3 FIELD QUALITY CONTROL

A. Perform tests and inspections.

B. Tests and Inspections:

1. Verify that shipping, blocking, and bracing are removed.
2. Verify that unit is secure on mountings and supporting devices and that connections to ducts and electrical components are complete. Verify that proper thermal-overload protection is installed in motors, starters, and disconnect switches.
3. Verify that cleaning and adjusting are complete.
4. Disconnect fan drive from motor, verify proper motor rotation direction, and verify fan wheel free rotation and smooth bearing operation. Reconnect fan drive system, align and adjust belts, and install belt guards.
5. Adjust belt tension.
6. Adjust damper linkages for proper damper operation.
7. Verify lubrication for bearings and other moving parts.
8. Verify that manual and automatic volume control and fire and smoke dampers in connected ductwork systems are in fully open position.
9. Disable automatic temperature-control operators, energize motor and adjust fan to indicated rpm, and measure and record motor voltage and amperage.
10. Shut unit down and reconnect automatic temperature-control operators.
11. Remove and replace malfunctioning units and retest as specified above.

C. Test and adjust controls and safeties. Replace damaged and malfunctioning controls and equipment.

D. Prepare test and inspection reports.

3.4 ADJUSTING

A. Adjust damper linkages for proper damper operation.

B. Adjust belt tension.

C. Comply with requirements in Section 230593 "Testing, Adjusting, and Balancing for HVAC" for testing, adjusting, and balancing procedures.

D. Replace fan and motor pulleys as required to achieve design airflow.

E. Lubricate bearings.

**END OF SECTION**

# SECTION 233713
# DIFFUSERS, REGISTERS, AND GRILLES

## PART 1 - GENERAL

### 1.1 RELATED DOCUMENTS

A. Drawings and general provisions of the Contract, including General and Supplementary Conditions and Division 01 Specification Sections, apply to this Section.

### 1.2 SUMMARY

A. Section Includes:

1. Rectangular and square ceiling diffusers.
2. Modular core supply grilles.

B. Related Sections:

1. Division 08 Section "Louvers and Vents" for fixed and adjustable louvers and wall vents, whether or not they are connected to ducts.
2. Division 23 Section "Air Duct Accessories" for fire and smoke dampers and volume-control dampers not integral to diffusers, registers, and grilles.

### 1.3 SUBMITTALS

A. Product Data: For each type of product indicated, include the following:

1. Data Sheet: Indicate materials of construction, finish, and mounting details; and performance data including throw and drop, static-pressure drop, and noise ratings.
2. Diffuser, Register, and Grille Schedule: Indicate drawing designation, room location, quantity, model number, size, and accessories furnished.

B. Coordination Drawings: Reflected ceiling plans, drawn to scale, on which the following items are shown and coordinated with each other, using input from Installers of the items involved:

1. Ceiling suspension assembly members.
2. Method of attaching hangers to building structure.
3. Size and location of initial access modules for acoustical tile.
4. Ceiling-mounted items including lighting fixtures, diffusers, grilles, speakers, sprinklers, access panels, and special moldings.
5. Duct access panels.

C. Source quality-control reports.

PART 2 - PRODUCTS

2.1 CEILING DIFFUSERS

A. Rectangular and Square Ceiling Diffusers:
1. Basis-of-Design Product: Subject to compliance with requirements, provide product indicated on Drawings or comparable product by one of the following:

a. METALAIRE, Inc.
b. Nailor Industries Inc.
c. Price Industries.
d. Tuttle & Bailey.

2. Devices shall be specifically designed for variable-air-volume flows.
3. Material: As indicated on drawings.
4. Finish: Baked enamel, color selected by Architect.

2.2 REGISTERS AND GRILLES

A. Adjustable Bar Register:
1. Basis-of-Design Product: Subject to compliance with requirements, provide product indicated on Drawings or comparable product by one of the following:

a. METALAIRE, Inc.
b. Nailor Industries Inc.
c. Price Industries.
d. Tuttle & Bailey.

2. Material: As indicated on drawings.
3. Finish: Baked enamel, color selected by Architect.

2.3 SOURCE QUALITY CONTROL

A. Verification of Performance: Rate diffusers, registers, and grilles according to ASHRAE 70, "Method of Testing for Rating the Performance of Air Outlets and Inlets."

PART 3 - EXECUTION

3.1 EXAMINATION

A. Examine areas where diffusers, registers, and grilles are to be installed for compliance with requirements for installation tolerances and other conditions affecting performance of equipment.

B. Proceed with installation only after unsatisfactory conditions have been corrected.

## 3.2 INSTALLATION

A. Install diffusers, registers, and grilles level and plumb.

B. Ceiling-Mounted Outlets and Inlets: Drawings indicate general arrangement of ducts, fittings, and accessories. Air outlet and inlet locations have been indicated to achieve design requirements for air volume, noise criteria, airflow pattern, throw, and pressure drop. Make final locations where indicated, as much as practical. For units installed in lay-in ceiling panels, locate units in the center of panel. Where architectural features or other items conflict with installation, notify Architect for a determination of final location.

C. Install diffusers, registers, and grilles with airtight connections to ducts and to allow service and maintenance of dampers, air extractors, and fire dampers.

## 3.3 ADJUSTING

A. After installation, adjust diffusers, registers, and grilles to air patterns indicated, or as directed, before starting air balancing.

**END OF SECTION**

# SECTION 234100
# PARTICULATE AIR FILTRATION

## PART 1 - GENERAL

### 1.1 RELATED DOCUMENTS

A. Drawings and general provisions of the Contract, including General and Supplementary Conditions and Division 01 Specification Sections, apply to this Section.

### 1.2 SUMMARY

A. Section Includes:
   1. Flat panel filters.
   2. Pleated panel filters.

### 1.3 SUBMITTALS

A. Product Data: For each type of product indicated. Include dimensions; operating characteristics; required clearances and access; rated flow capacity, including initial and final pressure drop at rated airflow; efficiency and test method; fire classification; furnished specialties; and accessories for each model indicated.

B. Shop Drawings: For air filters. Include plans, elevations, sections, details, and attachments to other work.

   1. Show filter rack assembly, dimensions, materials, and methods of assembly of components.
   2. Include setting drawings, templates, and requirements for installing anchor bolts and anchorages.
   3. Wiring Diagrams: For power, signal, and control wiring.

C. Operation and Maintenance Data: For each type of filter and rack to include in emergency, operation, and maintenance manuals.

### 1.4 QUALITY ASSURANCE

A. Electrical Components, Devices, and Accessories: Listed and labeled as defined in NFPA 70, by a qualified testing agency, and marked for intended location and application.

B. ASHRAE Compliance:

1. Comply with applicable requirements in ASHRAE 62.1, Section 4 - "Outdoor Air Quality"; Section 5 - "Systems and Equipment"; and Section 7 - "Construction and Startup."
2. Comply with ASHRAE 52.1 for arrestance and ASHRAE 52.2 for MERV for methods of testing and rating air-filter units.

C. Comply with NFPA 90A and NFPA 90B.

1.5 COORDINATION

A. Coordinate sizes and locations of concrete bases. Cast anchor-bolt inserts into bases.

1.6 EXTRA MATERIALS

A. Furnish extra materials that match products installed and that are packaged with protective covering for storage and identified with labels describing contents.

1. Provide one complete set of filters for each filter bank.

PART 2 - PRODUCTS

2.1 PLEATED PANEL FILTERS

A. Description: Factory-fabricated, self-supported, extended-surface, pleated, panel-type, disposable air filters with holding frames.
1. Basis-of-Design Product: Subject to compliance with requirements, provide product indicated on Drawings or comparable product by one of the following:
a. Airguard.
b. Filtration Group.
c. 3M Filtration (Filtrete)

B. Filter Unit Class: UL 900, Class 1.

C. Media: Interlaced glass or synthetic fibers coated with nonflammable adhesive.

D. Filter-Media Frame: Synthetic media, moisture resistant.

E. Mounting Frames: Welded galvanized steel, with gaskets and fasteners; suitable for bolting together into built-up filter banks.

F. Capacities and Characteristics:
1. Thickness or Depth: 2 inches.

2. Average Dust Spot Efficiency per ASHRAE 52.1: 90-95
3. Initial Resistance: 0.37 “WC at 500 fpm.
4. Recommended Final Resistance: 1.4 “WC
5. MERV Rating: 11 when tested according to ASHRAE 52.2. (Unless otherwise noted).

## 2.2 FILTER GAGES

A. Diaphragm-type gage with dial and pointer in metal case, vent valves, black figures on white background, and front recalibration adjustment.

1. Manufacturers: Subject to compliance with requirements, provide products by one of the following:

   a. Airguard.
   b. Dwyer Instruments, Inc.

2. Diameter: 4-1/2 inches.
3. Scale Range for Filter Media Having a Recommended Final Resistance of 0.5-Inch wg or Less: 0- to 0.5-inch wg.
4. Scale Range for Filter Media Having a Recommended Final Resistance of 0.5- to 1.0-Inch wg or Less: 0- to 1.0-inch wg.
5. Scale Range for Filter Media Having a Recommended Final Resistance of 1.0- to 2.0-Inch wg or Less: 0- to 2.0-inch wg.

B. Manometer-Type Filter Gage: Molded plastic, with epoxy-coated aluminum scale and logarithmic-curve tube gage with integral leveling gage, graduated to read from 0- to 3.0-inch wg, and accurate within 3 percent of the full scale range.

C. Accessories: Static-pressure tips, tubing, gage connections, and mounting bracket.

# PART 3 - EXECUTION

## 3.1 INSTALLATION

A. Provide filter rack for each fan system upstream (prior) to fan assembly within return air ductwork.

B. Position each filter unit with clearance for normal service and maintenance. Anchor filter holding frames to substrate.

C. Install filters in position to prevent passage of unfiltered air.

D. Install filter gage for each filter bank.

E. Do not operate fan system until filters (temporary or permanent) are in place. Replace temporary filters used during construction and testing with new, clean filters.

F. Install filter-gage, static-pressure taps upstream and downstream from filters. Install filter gages on filter banks with separate static-pressure taps upstream and downstream from filters. Mount filter gages on outside of filter housing or filter plenum in an accessible position. Adjust and level inclined gages.

G. Coordinate filter installations with duct and air-handling-unit installations.

## 3.2 FIELD QUALITY CONTROL

A. Manufacturer's Field Service: Engage a factory-authorized service representative to inspect, test, and adjust components, assemblies, and equipment installations, including connections.

B. Perform tests and inspections.

1. Manufacturer's Field Service: Engage a factory-authorized service representative to inspect components, assemblies, and equipment installations, including connections, and to assist in testing.

C. Tests and Inspections:

1. Operate automatic roll filters to demonstrate compliance with requirements.
2. Test for leakage of unfiltered air while system is operating.

D. Air filter will be considered defective if it does not pass tests and inspections.

E. Prepare test and inspection reports.

## 3.3 CLEANING

A. After completing system installation and testing, adjusting, and balancing of air-handling and air-distribution systems, clean filter housings and install new filter media.

**END OF SECTION**

# SECTION 23 81 27
# DUCTLESS SPLIT-SYSTEM AIR-CONDITIONERS

## PART 1 - GENERAL

### 1.1 SUMMARY

A. Section Includes:

1. Fan Coil Unit.
2. Condensing unit.
3. For units/systems up to five tons maximum.

B. This applies to units less than 5 tons.

### 1.2 REFERENCES

A. Air-Conditioning and Refrigeration Institute:

1. ARI 210/240 - Unitary Air-Conditioning and Air-Source Heat Pump Equipment.
2. ARI 270 - Sound Rating of Outdoor Unitary Equipment.
3. ARI 340/360 - Commercial and Industrial Unitary Air-Conditioning and Heat Pump Equipment.
4. ARI 365 - Commercial and Industrial Unitary Air-Conditioning Condensing Units.

B. American Society of Heating, Refrigerating and Air-Conditioning Engineers:

1. ASHRAE 52.1 - Gravimetric and Dust-Spot Procedures for Testing Air-Cleaning Devices Used in General Ventilation for Removing Particulate Matter.
2. ASHRAE 90.1 - Energy Standard for Buildings Except Low-Rise Residential Buildings.

C. ASTM International:

1. ASTM B117 - Standard Practice for Operating Salt Spray (Fog) Apparatus.

D. National Electrical Manufacturers Association:

1. NEMA MG 1 - Motors and Generators.

E. National Fire Protection Association:

1. NFPA 90A - Standard for the Installation of Air Conditioning and Ventilating Systems.

1.3 SUBMITTALS

A. Product Data: Submit data indicating:

1. Cooling and heating capacities.
2. Dimensions.
3. Weights.
4. Rough-in connections and connection requirements.
5. Electrical requirements with electrical characteristics and connection requirements.
6. Controls.
7. Accessories.

B. Manufacturer's Installation Instructions: Submit assembly, support details, connection requirements, and include start-up instructions.

1.4 QUALITY ASSURANCE

A. Performance Requirements: Energy Efficiency Rating (EER) and Coefficient of Performance (COP) not less than prescribed by ASHRAE 90.1 when used in combination with compressors and evaporator coils when tested in accordance with ARI Standards.

PART 2 - PRODUCTS

**2.1** SPLIT SYSTEM AIR CONDITIONING UNITS

A. Product Description: Split system consisting of fan coil unit and condensing unit including cabinet, evaporator fan, refrigerant cooling coil, compressor, refrigeration circuit, condenser, air filters, controls, air handling unit accessories, condensing unit accessories, and refrigeration specialties.

B. Manufacturers:

1. Daikin.
2. Toshiba.

3. Carrier.

C. Refrigerants R-410A.

D. Unit shall be wall mounted, ceiling mounted, or ceiling cassette type (integral with grid).

**2.2** CONDENSING UNIT

A. General: Factory assembled and tested air cooled condensing units, consisting of casing, compressors, condensers, coils, condenser fans and motors, and unit controls.

B. Unit Casings: Exposed casing surfaces constructed of galvanized steel with manufacturer's standard baked enamel finish. Designed for outdoor installation and complete with weather protection for components and controls, and complete with removable panels for required access to compressors, controls, condenser fans, motors, and drives.

1. Mounting feet shall be provided and shall be welded to the base of the cabinet and be of sufficient size to afford reliable equipment mount and stability.
2. The fan grill shall be of ABS plastic.
3. Cabinet mounting and construction shall be sufficient to withstand 155 MPH wind speed conditions for use in Hurricane condition areas. Mounting, base support, and other installation to meet Hurricane Code Conditions shall be by others

C. Compressor: DC twin-rotor rotary compressor with Variable Speed Inverter Drive Technology Or compressor shall be a Frame Compliant Scroll compressor with Variable Speed Inverter Drive Technology. Compressor shall five (5) year warranty.

1 The compressor shall be driven by inverter circuit to control compressor speed. The compressor speed shall dynamically vary to match the room load for significantly increasing the efficiency of the system which shall result in significant energy savings.
2 To prevent liquid from accumulating in the compressor during the off cycle, a minimal amount of current shall be automatically, intermittently applied to the compressor motor windings to maintain sufficient heat to vaporize any refrigerant. No crankcase heater is to be used.
3 The outdoor unit shall have an accumulator and high pressure safety switch. The compressor shall be mounted to avoid the transmission of vibration

A. Condenser Coil: Constructed of copper tubing mechanically bonded to copper fins, factory leak and pressure tested. Coil shall be coated with minimum 1.0 mil. aluminum impregnated polyurethane coating by Blygold PoluAl XT or approved equal. Coating shall withstand 4,000 hours in both salt spray test per ASTM B117 and acid salt spray test per ASTM D5339.

1. Refrigerant flow from the condenser shall be controlled by means of an electronic linear expansion valve (LEV) metering device. The LEV shall be control by a microprocessor controlled step motor.
2. All refrigerant lines between outdoor and indoor units shall be of annealed, refrigeration grade copper tubing, ARC Type, meeting ASTM B280 requirements, individually insulated in twin-tube, flexible, closed-cell, CFC-free elastomeric material for the insulation of refrigerant pipes and tubes with thermal conductivity equal to or better than 0.27 BTU-inch/hour per Sq Ft / °F, a water vapor transmission equal to or better than 0.08 Perm-inch and superior fire ratings such that insulation will not contribute significantly to fire and up to 1” thick insulation shall have a - Flame-Spread Index of less than 25 and a Smoke-development Index of less than 50 as tested by ASTM E 84 and CAN / ULC S-102.
3. Refrigerant shall be R407C or R410A.

B. Controls: Furnish operating and safety controls including high and low pressure cutouts. Control transformer. Furnish magnetic contactors for compressor and condenser fan motors.

C. Condenser Fans and Drives: Direct drive propeller fans statically and dynamically balanced. Wired to operate with compressor. Permanently lubricated ball bearing type motors with built-in thermal overload protection. Furnish high efficiency fan motors.

1. The fan blade(s) shall be of aerodynamic design for quiet operation, and the fan motor bearings shall be permanently lubricated.
2. The outdoor unit shall have horizontal or vertical discharge airflow. The fan shall be mounted in front of the coil, pulling air across it from the rear and dispelling it through the front. The fan shall be provided with a raised guard to prevent external contact with moving parts.

D. The outdoor unit shall be able to operate with a maximum height difference of 100 feet (30 meters) between indoor and outdoor units. System shall operate at up to a maximum refrigerant tubing length of 100 feet for the 18,000 BTU/h and 165 feet for the 24,000, 30,000, 36,000, and 42,000 BTU/h units between indoor and outdoor units without the need for line size changes, traps or additional oil. Units shall be pre-charged for a maximum of 1000 feet of refrigerant tubing.

E. Condensing Unit Accessories: Furnish the following accessories:

1. The outdoor unit shall be capable of cooling operation down to 0°F ambient temperature without additional low ambient controls (optional wind baffle shall be required).
2. Time delay relay.
3. Anti-short cycle timer.
4. Disconnect switch.
5. Vibration isolators.
6. Hot gas bypass kit.
7. Coil with corrosion resistant coating capable of withstanding salt spray test of 1000 hours in accordance with ASTM B117.
8. Condenser Coil Guard: Condenser fan openings furnished with PVC coated steel wire safety guards.
9. Suction and discharge pressure gauges.

F. Refrigeration specialties: Furnish the following for each circuit:

1. Charge of compressor oil.
2. Holding charge of refrigerant.
3. Replaceable core type filter drier.
4. Liquid line sight glass and moisture indicator.
5. Shut-off valves on suction and liquid piping.
6. Liquid line solenoid valve.
7. Charging valve.
8. Oil level sight glass.
9. Crankcase heater.
10. Hot gas muffler.
11. Pressure relief device.

G. Electrical

1 The electrical power of the unit shall be 208volts or 230 volts, single phase, 60 hertz. The unit shall be capable of satisfactory operation within voltage limits of 187 volts to 253 volts.

2 Power for the indoor unit shall be supplied from the outdoor unit via Mitsubishi Electric A-Control using three (3) fourteen (14) gauge AWG conductors plus ground wire connecting the units.

3 The outdoor unit shall be controlled by the microprocessor located in the indoor unit.

4 The control signal between the indoor unit and the outdoor unit shall be pulse signal 24 volts DC.

5 The unit shall have Pulse Amplitude Modulation circuit to utilize 98% of input power supply.

**2.3** Indoor Units;

A. General All Units

1. Filter: Return air shall be filtered by means of an easily removable, washable filter or disposable. An optional MERV 8 filter shall be furnished. Efficiency based on ASHRAE 52.1

2. Coil: The evaporator coil shall be of nonferrous construction with pre-coated aluminum strake fins on copper tubing. The multi-angled heat exchanger shall have a modified fin shape that reduces air resistance for a smoother, quieter airflow. All tube joints shall be brazed with PhosCopper or silver alloy. The coils shall be pressure tested at the factory. A condensate pan and drain shall be provided under the coil. Provide an optional drain pan level switch designed to connect to the control board, shall be provided if required, and installed on the condensate pan to prevent condensate from overflowing. Provide An optional drain lift mechanism, capable of lifting condensate 23-5/8" above the drain pan, shall be provided

3. Electrical: The electrical power of the unit shall be 208 volts or 230 volts, 1 phase, 60 hertz. The system shall be capable of satisfactory operation within voltage limits of 187 volts to 253 volts. The power to the indoor unit shall be supplied from the outdoor unit using a three (3) conductor AWG-14 wire with ground shall provide power feed and bi-directional control transmission between the outdoor and indoor units.

4. Control: The control system shall consist of a minimum of two (2) microprocessors, one on each indoor and outdoor unit, interconnected by a single non-polar two-wire cable. The microprocessor located in the indoor unit shall have the capability of monitoring return air temperature and indoor coil temperature, receiving and processing commands from a wireless or wired controller, providing emergency operation and controlling the outdoor unit. The control signal between the indoor and outdoor unit shall be pulse signal 24 volts DC. Indoor units shall have the ability to control supplemental heat via connector CN24 and a 12 VDC output.

5. The system shall be capable of automatic restart when power is restored after power

interruption. The system shall have self-diagnostics ability, including total hours of compressor run time. Diagnostics codes for indoor and outdoor units shall be displayed on the wired controller panel.

6. The Wired Remote Controller shall be approximately 5” x 5” in size and white in color with a light-green LCD display. There shall be a built-in weekly timer with up to 8 pattern settings per day. The controller shall consist of an On/Off button, Increase/Decrease Set Temperature buttons, a Cool/Auto/Fan/Dry mode selector, a Timer Menu button, a Timer On/Off button, Set Time buttons, a Fan Speed selector, a Ventilation button, a Test Run button, and a Check Mode button. The controller shall have a built-in temperature sensor. Temperature shall be displayed in either Fahrenheit (°F) or Celsius (°C), and Temperature changes shall be by increments of 1°F (0.5°C). Shall have the capability of controlling up to a maximum of 16 systems, as a group with the same mode and set-point for all, at a maximum developed control cable distance of 1,500 feet

7. The control voltage from the wired controller to the indoor unit shall be 12/24 volts, DC. Field wiring shall run directly from the indoor unit to the wall mounted controller with no splices. Up to two wired controllers shall be able to be used to control one unit.

B. Ceiling Suspended Type

1. The Ceiling Suspended type indoor unit shall be factory assembled, wired and tested. Contained within the unit shall be all factory wiring and internal piping, control circuit board and fan motor. The unit, in conjunction with the remote controller, shall have a self-diagnostic function, 3-minute time delay mechanism, an auto restart function, and a test run switch. Indoor unit and refrigerant pipes shall be purged with dry air before shipment from the factory.

2. The casing shall be ABS plastic and have a Munsell 6.4Y 8.9/0.4 white finish. Cabinet shall be designed for suspension mounting from above and horizontal operation. Indoor unit shall have removable mounting brackets. A mounting template with suspension bolt locations shall be furnished with indoor unit. Mounting bolts or threaded rod of 3/8” diameter shall be used to suspend unit and unit shall not require direct contact with ceiling or panel for proper operation. Mounting support shall be of sufficient strength and design to support full weight of indoor unit. The rear cabinet panel shall have knock-out provisions for a field installed filtered 4-5/16 diameter ventilation air intake connection.

3. The indoor unit fan shall have multiple high performance, double inlet, forward curve sirocco fans driven by a single motor. The fans shall be statically and dynamically balanced and run on a motor with permanently lubricated bearings. The indoor fan shall consist of four (4) speeds: Low, M1, M2, and Hi plus AUTO fan setting. The fan shall have a selectable Auto fan setting that will adjust the fan speed based on the difference between controller set-point and sensed space temperature.

4. Vane: There shall be a motorized horizontal vane to automatically direct air flow in a horizontal and downward direction for uniform air distribution. The horizontal vane shall provide a choice of five (5) vertical airflow patterns selected by remote control: 100% horizontal flow, 80% horizontal flow (plus 20% downward airflow), 60% horizontal airflow (plus 40% downward airflow), 40% horizontal airflow (plus 60% downward airflow), and swing. The horizontal vane shall significantly decrease downward air resistance for lower sound levels, and shall close the outlet port when operation is stopped. There shall also be a set of vertical vanes to provide horizontal swing airflow movement selected by remote control.

C. Ducted Type

1. The Ducted type indoor unit shall be factory assembled, wired and tested. Contained within the unit shall be all factory wiring and internal piping, control circuit board and fan motor. The unit, in conjunction with the wired or wireless wall-mounted controller, shall have a self-diagnostic function, 3-minute time delay mechanism, an auto restart function, and a test run switch. Indoor unit and refrigerant pipes shall be purged with dry air before shipment from the factory.

2. The cabinet shall be space saving, low profile, horizontal, ducted type. Formed cabinet shall be constructed of G-60 galvanized steel with factory applied foam surface insulation to prevent condensation on outer surfaces. The cabinet shall be provided with four mounting brackets to accommodate suspension from threaded rod or structural support located on the side panels in all four corners. Brackets shall be suitable for supporting the weight of the indoor unit. The indoor unit cabinet shall be equipped with a ducted air outlet and ducted rear return air connection. units shall support an optional Bottom Return Adaptor. units shall have selectable rear or bottom return as a standard feature. The units shall be equipped with a 3-15/16” diameter ventilation air intake knock-out.

3. The indoor unit fan unit shall be an assembly with two (2) or four (4) Sirocco fans direct driven by a single motor. Fan shall develop airflow to deliver up to 0.20 - 0.60 inches wg of external static pressure. The indoor fans shall be statically and dynamically balanced to run on a motor with permanently lubricated bearings. The indoor fans shall operate on any of three (3) speeds, High, Mid, Low and Auto. The fan shall have a selectable Auto fan setting that will adjust the fan speed based on the difference between controller set-point and space temperature.

D. Wall Mounted Type

1. The indoor unit shall be factory assembled, wired and tested. Contained within the unit shall be all factory wiring and internal piping, control circuit board and fan motor. The unit, in conjunction with the wired wall-mounted, wireless wall-mounted or wireless handheld controller, shall have a self-diagnostic function, 3-minute time delay mechanism, an auto restart function, and a test run switch. Indoor unit and refrigerant pipes shall be purged

with dry air before shipment from the factory.

2. Unit Cabinet: The cabinet shall be formed from high strength molded plastic with smooth finish, flat front panel design with access for filter. Cabinet color shall be white – Munsell 1.0Y 9.2/0.2. The unit shall be wall mounted by means of a factory supplied, pre-drilled, mounting plate.

3. The indoor unit fan shall be high performance, double inlet, forward curve, direct drive sirocco fan with a single motor. The fans shall be statically and dynamically balanced and run on a motor with permanently lubricated bearings. The indoor fan shall consist of three (3) speeds: Low, Mid, and Hi and Auto. The fan shall have a selectable Auto fan setting that will adjust the fan speed based on the difference between controller set-point and space temperature.

4. There shall be a motorized horizontal vane to automatically direct air flow in a horizontal and downward direction for uniform air distribution. The horizontal vane shall significantly decrease downward air resistance for lower sound levels, and shall close the outlet port when operation is stopped. There shall also be a set of vertical vanes to provide horizontal swing airflow movement.

E. Ceiling Recessed

1. The indoor unit shall be a space-saving ceiling-recessed cassette type, factory assembled, wired and tested. Contained within the unit shall be all factory wiring and internal piping, drain left mechanism, control circuit board, fan, and fan motor. The unit, in conjunction with the remote controller, shall have a self-diagnostic function, 3-minute time delay mechanism, an auto restart function, and a test run switch. Indoor unit and refrigerant pipes shall be purged with dry air before shipment from the factory.

2. The cabinet shall be formed from galvanized sheet metal coated with high-density foam insulation. Cabinet shall be for recessed mounting and provided with four (4) corner mounting supports behind removable corner pockets in Grille assembly allowing adjustment of mounting height from front of unit. The cabinet panel shall have provisions for a field installed filtered outside air intake. There shall be a knock-out to provide a branch air duct for conditioning a secondary space. There shall be an optional multi-function casement which will mount between the unit cabinet and the Grille assembly to provide a second field installed filtered outside air intake and provide a mount for a high-efficiency filter element.

3. A separate grill assembly shall be attached to the front of the cabinet to provide supply air vanes in four directions and a center mounted return air section. The four-way grill shall be fixed to bottom of cabinet allowing two, three or four-way blow. The grill vane angles shall be individually adjustable from the wired remote controller to customize the airflow pattern for the conditioned space. Grill assembly color shall be white

4. The indoor fan shall be an assembly with a turbo fan propeller, direct driven by a single motor and shall be statically and dynamically balanced to run on a motor with permanently lubricated bearings. The indoor fan shall consist of four (4) speed settings, Low, Med1, Med2, High and Auto. The fan shall have a selectable Auto fan setting that will adjust the fan speed based on the difference between controller set-point and space temperature.

5. The indoor unit shall have an adjustable air outlet system offering 4-way airflow, 3-way airflow, or 2-way airflow with switches that can be set to provide optimum airflow based on ceiling height and number of outlets used. The indoor unit vanes shall have 5 fixed positions and a swing feature that shall be capable of automatically swinging the vanes up and down for uniform air distribution. The vanes shall have an Auto-Wave selectable option in the heating mode that shall randomly cycle the vanes up and down to evenly heat the space. If specified, the grill shall have an optional sensor kit installed – sensor function described in System Control Section.

PART 3 - EXECUTION

**3.1** INSTALLATION – FAN COIL UNIT

A. Install per manufacturer's recommendations. Where appropriate, provide 2" deflection spring vibration isolators and seismic restraints.

B. Install condensate piping with trap and route from drain pan to approved receptor with indirect connection.

**END OF SECTION**

# SECTION 238239
# UNIT HEATERS

## PART 1 - GENERAL

### 1.1 RELATED DOCUMENTS

A. Drawings and general provisions of the Contract, including General and Supplementary Conditions and Division 01 Specification Sections, apply to this Section.

### 1.2 SUMMARY

A. Section Includes:

1. Propeller unit heaters with hot-water coils.

### 1.3 DEFINITIONS

A. BAS: Building automation system.

B. CWP: Cold working pressure.

C. PTFE: Polytetrafluoroethylene plastic.

D. TFE: Tetrafluoroethylene plastic.

### 1.4 SUBMITTALS

A. Product Data: Include rated capacities, operating characteristics, furnished specialties, and accessories for each product indicated.

B. Shop Drawings: Detail equipment assemblies and indicate dimensions, weights, loads, required clearances, method of field assembly, components, and location and size of each field connection.

1. Plans, elevations, sections, and details.
2. Location and size of each field connection.
3. Details of anchorages and attachments to structure and to supported equipment.
4. Equipment schedules to include rated capacities, operating characteristics, furnished specialties, and accessories.

5. Location and arrangement of piping valves and specialties.
6. Wiring Diagrams: Power, signal, and control wiring.

C. Coordination Drawings: Floor plans, reflected ceiling plans, and other details, drawn to scale, on which the following items are shown and coordinated with each other, based on input from installers of the items involved:

1. Suspended ceiling components.
2. Structural members to which unit heaters will be attached.
3. Method of attaching hangers to building structure.
4. Size and location of initial access modules for acoustical tile.
5. Items penetrating finished ceiling, including the following:

   a. Lighting fixtures.
   b. Air outlets and inlets.
   c. Speakers.
   d. Sprinklers.
   e. Access panels.

6. Perimeter moldings for exposed or partially exposed cabinets.

D. Operation and Maintenance Data: For cabinet unit heaters to include in emergency, operation, and maintenance manuals.

## 1.5 QUALITY ASSURANCE

A. Electrical Components, Devices, and Accessories: Listed and labeled as defined in NFPA 70, Article 100, by a testing agency acceptable to authorities having jurisdiction, and marked for intended use.

# PART 2 - PRODUCTS

## 2.1 PROPELLER UNIT HEATERS

A. Available Manufacturers: Subject to compliance with requirements, manufacturers offering products that may be incorporated into the Work include, but are not limited to, the following:

B. Manufacturers: Subject to compliance with requirements, provide products by one of the following:

1. Airtherm; a Mestek Company.
2. McQuay International.
3. Trane.

C. Description: An assembly including casing, coil, fan, and motor in horizontal discharge configuration with adjustable discharge louvers.

D. Cabinet: Removable panels for maintenance access to controls.

E. Cabinet Finish: Manufacturer's standard baked enamel applied to factory-assembled and -tested propeller unit heater before shipping.

F. Discharge Louver: Adjustable fin diffuser for horizontal units and conical diffuser for vertical units.

G. General Coil Requirements: Test and rate hot-water propeller unit heater coils according to ASHRAE 33.

H. Hot-Water Coil: Copper tube, minimum 0.025-inch wall thickness, with mechanically bonded aluminum fins spaced no closer than 0.1 inch and rated for a minimum working pressure of 200 psig and a maximum entering-water temperature of 325 deg F, with manual air vent. Test for leaks to 350 psig underwater.

I. Fan: Propeller type with aluminum wheel directly mounted on motor shaft in the fan venturi.

J. Fan Motors: Comply with requirements in Division 23 Section "Common Motor Requirements for HVAC Equipment."

K. Capacities and Characteristics: As indicated on drawings.

## PART 3 - EXECUTION

### 3.1 EXAMINATION

A. Examine areas to receive unit heaters for compliance with requirements for installation tolerances and other conditions affecting performance.

B. Examine roughing-in for piping and electrical connections to verify actual locations before unit heater installation.

C. Proceed with installation only after unsatisfactory conditions have been corrected.

### 3.2 INSTALLATION

A. Install wall boxes in finished wall assembly; seal and weatherproof. Joint-sealant materials and applications are specified in Division 07 Section "Joint Sealants."

B. Install cabinet unit heaters to comply with NFPA 90A.

C. Install propeller unit heaters level and plumb.

D. Suspend propeller unit heaters from structure with all-thread hanger rods and elastomeric hangers. Hanger rods and attachments to structure are specified in Division 23 Section "Hangers and Supports for HVAC Piping and Equipment." Vibration hangers are specified in Division 23 Section "Vibration and Seismic Controls for HVAC Piping and Equipment."

## 3.3 CONNECTIONS

A. Piping installation requirements are specified in other Division 23 Sections. Drawings indicate general arrangement of piping, fittings, and specialties.

B. Install piping adjacent to machine to allow service and maintenance.

C. Connect piping to cabinet unit heater's factory, hot-water piping package. Install the piping package if shipped loose.

D. Comply with safety requirements in UL 1995.

E. Unless otherwise indicated, install union and gate or ball valve on supply-water connection and union and calibrated balancing valve on return-water connection of unit heater. Hydronic specialties are specified in Division 23 Section "Hydronic Piping."

F. Ground equipment according to Division 26 Section "Grounding and Bonding for Electrical Systems."

G. Connect wiring according to Division 26 Section "Low-Voltage Electrical Power Conductors and Cables."

## 3.4 FIELD QUALITY CONTROL

A. Perform the following field tests and inspections and prepare test reports:

1. Operational Test: After electrical circuitry has been energized, start units to confirm proper motor rotation and unit operation.
2. Test and adjust controls and safety devices. Replace damaged and malfunctioning controls and equipment.

B. Remove and replace malfunctioning units and retest as specified above.

## 3.5 ADJUSTING

A. Adjust initial temperature set points.

## 3.6 DEMONSTRATION

A. Engage a factory-authorized service representative to train Owner's maintenance

personnel to adjust, operate, and maintain cabinet unit heaters. Refer to Division 01 Section "Demonstration and Training."

**END OF SECTION**

# SECTION 260519

# LOW-VOLTAGE ELECTRICAL POWER CONDUCTORS AND CABLES

## PART 1 - GENERAL

### 1.1 RELATED DOCUMENTS

A. Drawings and general provisions of the Contract, including General and Supplementary Conditions and Division 01 Specification Sections, apply to this Section.

### 1.2 SUMMARY

A. Section Includes:

1. Building wires and cables rated 600 V and less.
2. Connectors, splices, and terminations rated 600 V and less.

### 1.3 DEFINITIONS

A. VFC: Variable frequency controller.

### 1.4 ACTION SUBMITTALS

A. Product Data: For each type of product.

### 1.5 INFORMATIONAL SUBMITTALS

A. Field quality-control reports.

## PART 2 - PRODUCTS

### 2.1 CONDUCTORS AND CABLES

A. Manufacturers: Subject to compliance with requirements, available manufacturers offering products that may be incorporated into the Work include, but are not limited to the following:

1. Alpha Wire Company.
2. Belden Inc.
3. Cerro Wire LLC.
4. Encore Wire Corporation.
5. General Cable Technologies Corporation.
6. General Cable; General Cable Corporation.
7. Senator Wire & Cable Company.
8. Southwire Company.

B. Copper Conductors: Comply with NEMA WC 70/ICEA S-95-658.

C. Conductor Insulation: Comply with NEMA WC 70/ICEA S-95-658 for Type THHN/THWN-2, Type XHHW-2 and Type SO.

D. Multiconductor Cable: Comply with NEMA WC 70/ICEA S-95-658 for metal-clad cable, Type MC mineral-insulated, metal-sheathed cable, Type MI and Type SO with ground wire.

E. VFC Cable:

1. Comply with UL 1277, UL 1685, and NFPA 70 for Type TC-ER cable.
2. Type TC-ER with oversized crosslinked polyethylene insulation, spiral-wrapped foil plus 85 percent coverage braided shields and insulated full-size ground wire, and sunlight- and oil-resistant outer PVC jacket.

## 2.2 CONNECTORS AND SPLICES

A. Manufacturers: Subject to compliance with requirements, available manufacturers offering products that may be incorporated into the Work include, but are not limited to the following:

1. 3M.
2. AFC Cable Systems, Inc.
3. Gardner Bender.
4. Hubbell Power Systems, Inc.
5. Ideal Industries, Inc.
6. ILSCO.
7. NSi Industries LLC.
8. O-Z/Gedney; an EGS Electrical Group brand; an Emerson Industrial Automation business.
9. Tyco Electronics Corp.

B. Description: Factory-fabricated connectors and splices of size, ampacity rating, material, type, and class for application and service indicated.

2.3 SYSTEM DESCRIPTION

A. Electrical Components, Devices, and Accessories: Listed and labeled as defined in NFPA 70, by a qualified testing agency, and marked for intended location and application.

B. Comply with NFPA 70.

PART 3 - EXECUTION

3.1 CONDUCTOR MATERIAL APPLICATIONS

A. Feeders: Copper. Solid for No. 10 AWG and smaller; stranded for No. 8 AWG and larger.

B. Branch Circuits: Copper. Solid for No. 10 AWG and smaller; stranded for No. 8 AWG and larger, except VFC cable, which shall be extra flexible stranded.

3.2 CONDUCTOR INSULATION AND MULTICONDUCTOR CABLE APPLICATIONS AND WIRING METHODS

A. Service Entrance: Type XHHW-2, single conductors in raceway.

B. Exposed Feeders: Type THHN/THWN-2, single conductors in raceway or Mineral-insulated, metal-sheathed cable, Type MI.

C. Feeders Concealed in Ceilings, Walls, Partitions, and Crawlspaces: Type THHN/THWN-2, single conductors in raceway, Metal-clad cable, Type MC or Mineral-insulated, metal-sheathed cable, Type MI.

D. Feeders Concealed in Concrete, below Slabs-on-Grade, and Underground: Type XHHW-2, single conductors in raceway.

E. Exposed Branch Circuits, Including in Crawlspaces: Type THHN/THWN-2, single conductors in raceway.

F. Branch Circuits Concealed in Ceilings, Walls, and Partitions: Type THHN/THWN-2, single conductors in raceway or Metal-clad cable, Type MC.

G. Branch Circuits Concealed in Concrete, below Slabs-on-Grade, and Underground: Type THHN/THWN-2, single conductors in raceway or Type XHHW-2, single conductors in raceway.

H. Cord Drops and Portable Appliance Connections: Type SO, hard service cord with stainless-steel, wire-mesh, strain relief device at terminations to suit application.

I. VFC Output Circuits: Type TC-ER cable with braided shield.

## 3.3 INSTALLATION OF CONDUCTORS AND CABLES

A. Conceal cables in finished walls, ceilings, and floors unless otherwise indicated.

B. Complete raceway installation between conductor and cable termination points according to Section 260533 "Raceways and Boxes for Electrical Systems" prior to pulling conductors and cables.

C. Use manufacturer-approved pulling compound or lubricant where necessary; compound used must not deteriorate conductor or insulation. Do not exceed manufacturer's recommended maximum pulling tensions and sidewall pressure values.

D. Use pulling means, including fish tape, cable, rope, and basket-weave wire/cable grips, that will not damage cables or raceway.

E. Install exposed cables parallel and perpendicular to surfaces of exposed structural members, and follow surface contours where possible.

F. Support cables according to Section 260529 "Hangers and Supports for Electrical Systems."

## 3.4 CONNECTIONS

A. Tighten electrical connectors and terminals according to manufacturer's published torque-tightening values. If manufacturer's torque values are not indicated, use those specified in UL 486A-486B.

B. Make splices, terminations, and taps that are compatible with conductor material and that possess equivalent or better mechanical strength and insulation ratings than unspliced conductors.

C. Wiring at Outlets: Install conductor at each outlet, with at least 6 inches of slack.

## 3.5 IDENTIFICATION

A. Identify and color-code conductors and cables according to Section 260553 "Identification for Electrical Systems."

B. Identify each spare conductor at each end with identity number and location of other end of conductor, and identify as spare conductor.

## 3.6 SLEEVE AND SLEEVE-SEAL INSTALLATION FOR ELECTRICAL PENETRATIONS

A. Install sleeves and sleeve seals at penetrations of exterior floor and wall assemblies. Comply with requirements in Section 260544 "Sleeves and Sleeve Seals for Electrical Raceways and Cabling."

## 3.7 FIRESTOPPING

A. Apply firestopping to electrical penetrations of fire-rated floor and wall assemblies to restore original fire-resistance rating of assembly according to Section 078413 "Penetration Firestopping."

## 3.8 FIELD QUALITY CONTROL

A. Perform the following tests and inspections:

1. After installing conductors and cables and before electrical circuitry has been energized, test service entrance and feeder conductors for compliance with requirements.

2. Perform each visual and mechanical inspection and electrical test stated in NETA Acceptance Testing Specification. Certify compliance with test parameters.
3. Infrared Scanning: After Substantial Completion, but not more than 60 days after Final Acceptance, perform an infrared scan of each splice in conductors No. 3 AWG and larger. Remove box and equipment covers so splices are accessible to portable scanner. Correct deficiencies determined during the scan.

    a. Instrument: Use an infrared scanning device designed to measure temperature or to detect significant deviations from normal values. Provide calibration record for device.
    b. Record of Infrared Scanning: Prepare a certified report that identifies splices checked and that describes scanning results. Include notation of deficiencies detected, remedial action taken, and observations after remedial action.

B. Test and Inspection Reports: Prepare a written report to record the following:

1. Procedures used.
2. Results that comply with requirements.

3. Results that do not comply with requirements and corrective action taken to achieve compliance with requirements.

C. Cables will be considered defective if they do not pass tests and inspections.

**END OF SECTION**

# SECTION 260526

# GROUNDING AND BONDING FOR ELECTRICAL SYSTEMS

## PART 1 - GENERAL

### 1.1 RELATED DOCUMENTS

A. Drawings and general provisions of the Contract, including General and Supplementary Conditions and Division 01 Specification Sections, apply to this Section.

### 1.2 SUMMARY

A. Section includes grounding and bonding systems and equipment, plus the following special applications:

1. Underground distribution grounding.
2. Foundation steel electrodes.

### 1.3 ACTION SUBMITTALS

A. Product Data: For each type of product indicated.

### 1.4 INFORMATIONAL SUBMITTALS

A. Qualification Data: For testing agency and testing agency's field supervisor.

B. Field quality-control reports.

### 1.5 QUALITY ASSURANCE

A. Testing Agency Qualifications: Member company of NETA or an NRTL.

1. Testing Agency's Field Supervisor: Certified by NETA to supervise on-site testing.

B. Electrical Components, Devices, and Accessories: Listed and labeled as defined in NFPA 70, by a qualified testing agency, and marked for intended location and application.

C. Comply with UL 467 for grounding and bonding materials and equipment.

PART 2 - PRODUCTS

2.1 MANUFACTURERS

A. Manufacturers: Subject to compliance with requirements, available manufacturers offering products that may be incorporated into the Work include, but are not limited to the following:

1. Burndy; Part of Hubbell Electrical Systems.
2. ERICO International Corporation.
3. Galvan Industries, Inc.; Electrical Products Division, LLC.
4. Harger Lightning & Grounding.
5. ILSCO.
6. O-Z/Gedney; an EGS Electrical Group brand; an Emerson Industrial Automation business.
7. Siemens Power Transmission & Distribution, Inc.

2.2 SYSTEM DESCRIPTION

A. Electrical Components, Devices, and Accessories: Listed and labeled as defined in NFPA 70, by a qualified testing agency, and marked for intended location and application.

B. Comply with UL 467 for grounding and bonding materials and equipment.

2.3 CONDUCTORS

A. Insulated Conductors: Copper wire or cable insulated for 600 V unless otherwise required by applicable Code or authorities having jurisdiction.

B. Bare Copper Conductors:

1. Solid Conductors: ASTM B 3.
2. Stranded Conductors: ASTM B 8.
3. Tinned Conductors: ASTM B 33.
4. Bonding Cable: 28 kcmil, 14 strands of No. 17 AWG conductor, 1/4 inch in diameter.
5. Bonding Conductor: No. 4 or No. 6 AWG, stranded conductor.
6. Bonding Jumper: Copper tape, braided conductors terminated with copper ferrules; 1-5/8 inches wide and 1/16 inch thick.
7. Tinned Bonding Jumper: Tinned-copper tape, braided conductors terminated with copper ferrules; 1-5/8 inches wide and 1/16 inch thick.

C. Grounding Bus: Predrilled rectangular bars of annealed copper, 1/4 by 4 inches in cross section, with 9/32-inch holes spaced 1-1/8 inches apart. Stand-off insulators for mounting shall comply with UL 891 for use in switchboards, 600 V and shall be Lexan or PVC, impulse tested at 5000 V.

2.4 CONNECTORS

A. Listed and labeled by an NRTL acceptable to authorities having jurisdiction for applications in which used and for specific types, sizes, and combinations of conductors and other items connected.

B. Bolted Connectors for Conductors and Pipes: Copper or copper alloy.

C. Welded Connectors: Exothermic-welding kits of types recommended by kit manufacturer for materials being joined and installation conditions.

D. Bus-Bar Connectors: Mechanical type, cast silicon bronze, solderless compression-type wire terminals, and long-barrel, two-bolt connection to ground bus bar.

2.5 GROUNDING ELECTRODES

A. Ground Rods: Copper-clad steel; 5/8 by 96 inches.

PART 3 - EXECUTION

3.1 APPLICATIONS

A. Conductors: Install solid conductor for No. 8 AWG and smaller, and stranded conductors for No. 6 AWG and larger unless otherwise indicated.

B. Underground Grounding Conductors: Install bare tinned-copper conductor, No. 2/0 AWG minimum.

1. Bury at least 24 inches below grade.

C. Grounding Bus: Install in electrical equipment rooms, in rooms housing service equipment, and elsewhere as indicated.

1. Install bus horizontally, on insulated spacers 2 inches minimum from wall, 6 inches above finished floor unless otherwise indicated.
2. Where indicated on both sides of doorways, route bus up to top of door frame, across top of doorway, and down; connect to horizontal bus.

D. Conductor Terminations and Connections:

1. Pipe and Equipment Grounding Conductor Terminations: Bolted connectors.
2. Underground Connections: Welded connectors except at test wells and as otherwise indicated.
3. Connections to Structural Steel: Welded connectors.

## 3.2 GROUNDING AT THE SERVICE

A. Equipment grounding conductors and grounding electrode conductors shall be connected to the ground bus. Install a main bonding jumper between the neutral and ground buses.

## 3.3 GROUNDING UNDERGROUND DISTRIBUTION SYSTEM COMPONENTS

A. Comply with IEEE C2 grounding requirements.

B. Grounding Manholes and Handholes: Install a driven ground rod through manhole or handhole floor, close to wall, and set rod depth so 4 inches will extend above finished floor. If necessary, install ground rod before manhole is placed and provide No. 1/0 AWG bare, tinned-copper conductor from ground rod into manhole through a waterproof sleeve in manhole wall. Protect ground rods passing through concrete floor with a double wrapping of pressure-sensitive insulating tape or heat-shrunk insulating sleeve from 2 inches above to 6 inches below concrete. Seal floor opening with waterproof, nonshrink grout.

C. Grounding Connections to Manhole Components: Bond exposed-metal parts such as inserts, cable racks, pulling irons, ladders, and cable shields within each manhole or handhole, to ground rod or grounding conductor. Make connections with No. 4 AWG minimum, stranded, hard-drawn copper bonding conductor. Train conductors level or plumb around corners and fasten to manhole walls. Connect to cable armor and cable shields according to written instructions by manufacturer of splicing and termination kits.

D. Pad-Mounted Transformers and Switches: Install two ground rods and ground ring around the pad. Ground pad-mounted equipment and noncurrent-carrying metal items associated with substations by connecting them to underground cable and grounding electrodes. Install tinned-copper conductor not less than No. 2 AWG for ground ring and for taps to equipment grounding terminals. Bury ground ring not less than 6 inches from the foundation.

## 3.4 EQUIPMENT GROUNDING

A. Install insulated equipment grounding conductors with all feeders and branch circuits.

B. Air-Duct Equipment Circuits: Install insulated equipment grounding conductor to duct-mounted electrical devices operating at 120 V and more, including air cleaners, heaters, dampers, humidifiers, and other duct electrical equipment. Bond conductor to each unit and to air duct and connected metallic piping.

C. Water Heater, Heat-Tracing, and Antifrost Heating Cables: Install a separate insulated equipment grounding conductor to each electric water heater and heat-tracing cable. Bond conductor to heater units, piping, connected equipment, and components.

D. Poles Supporting Outdoor Lighting Fixtures: Install grounding electrode and a separate insulated equipment grounding conductor in addition to grounding conductor installed with branch-circuit conductors.

E. Metallic Fences: Comply with requirements of IEEE C2.

1. Grounding Conductor: Bare, tinned copper, not less than No. 8 AWG.
2. Gates: Shall be bonded to the grounding conductor with a flexible bonding jumper.
3. Barbed Wire: Strands shall be bonded to the grounding conductor.

## 3.5 INSTALLATION

A. Grounding Conductors: Route along shortest and straightest paths possible unless otherwise indicated or required by Code. Avoid obstructing access or placing conductors where they may be subjected to strain, impact, or damage.

B. Ground Rods: Drive rods until tops are 2 inches below finished floor or final grade unless otherwise indicated.

1. Interconnect ground rods with grounding electrode conductor below grade and as otherwise indicated. Make connections without exposing steel or damaging coating if any.
2. For grounding electrode system, install at least two rods spaced at least one-rod length from each other and located at least the same distance from other grounding electrodes, and connect to the service grounding electrode conductor.

C. Bonding Straps and Jumpers: Install in locations accessible for inspection and maintenance except where routed through short lengths of conduit.

1. Bonding to Structure: Bond straps directly to basic structure, taking care not to penetrate any adjacent parts.
2. Bonding to Equipment Mounted on Vibration Isolation Hangers and Supports: Install bonding so vibration is not transmitted to rigidly mounted equipment.
3. Use exothermic-welded connectors for outdoor locations; if a disconnect-type connection is required, use a bolted clamp.

D. Grounding and Bonding for Piping:

1. Metal Water Service Pipe: Install insulated copper grounding conductors, in conduit, from building's main service equipment, or grounding bus, to main metal water service entrances to building. Connect grounding conductors to main metal water service pipes; use a bolted clamp connector or bolt a lug-type connector to a pipe flange by using one of the lug bolts of the flange. Where a dielectric main water fitting is installed, connect grounding conductor on street side of fitting. Bond metal grounding conductor conduit or sleeve to conductor at each end.
2. Water Meter Piping: Use braided-type bonding jumpers to electrically bypass water meters. Connect to pipe with a bolted connector.

3. Bond each aboveground portion of gas piping system downstream from equipment shutoff valve.

E. Bonding Interior Metal Ducts: Bond metal air ducts to equipment grounding conductors of associated fans, blowers, electric heaters, and air cleaners. Install tinned bonding jumper to bond across flexible duct connections to achieve continuity.

F. Grounding for Steel Building Structure: Install a driven ground rod at base of each corner column and at intermediate exterior columns at distances not more than 60 feet apart.

G. Concrete-Encased Grounding Electrode (Ufer Ground): Fabricate according to NFPA 70; use a minimum of 20 feet of bare copper conductor not smaller than No. 4 AWG.

1. If concrete foundation is less than 20 feet long, coil excess conductor within base of foundation.
2. Bond grounding conductor to reinforcing steel in at least four locations and to anchor bolts. Extend grounding conductor below grade and connect to building's grounding grid or to grounding electrode external to concrete.

## 3.6 FIELD QUALITY CONTROL

A. Testing Agency: Engage a qualified testing agency to perform tests and inspections.

B. Tests and Inspections:

1. After installing grounding system but before permanent electrical circuits have been energized, test for compliance with requirements.
2. Inspect physical and mechanical condition. Verify tightness of accessible, bolted, electrical connections with a calibrated torque wrench according to manufacturer's written instructions.
3. Test completed grounding system at each location where a maximum ground-resistance level is specified, at service disconnect enclosure grounding terminal, and at individual ground rods. Make tests at ground rods before any conductors are connected.

   a. Measure ground resistance no fewer than two full days after last trace of precipitation and without soil being moistened by any means other than natural drainage or seepage and without chemical treatment or other artificial means of reducing natural ground resistance.
   b. Perform tests by fall-of-potential method according to IEEE 81.

C. Grounding system will be considered defective if it does not pass tests and inspections.

D. Prepare test and inspection reports.

E. Report measured ground resistances that exceed the following values:

1. Power and Lighting Equipment or System with Capacity of 500 kVA and Less: 10 ohms.
2. Power and Lighting Equipment or System with Capacity of 500 to 1000 kVA: 5 ohms.
3. Power and Lighting Equipment or System with Capacity More Than 1000 kVA: 3 ohms.
4. Manhole Grounds: 10 ohms.

F. Excessive Ground Resistance: If resistance to ground exceeds specified values, notify Architect promptly and include recommendations to reduce ground resistance.

**END OF SECTION**

# SECTION 260529

# HANGERS AND SUPPORTS FOR ELECTRICAL SYSTEMS

## PART 1 - GENERAL

### 1.1 RELATED DOCUMENTS

A. Drawings and general provisions of the Contract, including General and Supplementary Conditions and Division 01 Specification Sections, apply to this Section.

### 1.2 SUMMARY

A. Section Includes:

1. Hangers and supports for electrical equipment and systems.
2. Construction requirements for concrete bases.

### 1.3 ACTION SUBMITTALS

A. Product Data: For each type of product.

1. Include construction details, material descriptions, dimensions of individual components and profiles, and finishes for the following:

a. Hangers.
b. Steel slotted support systems.
c. Trapeze hangers.
d. Clamps.
e. Turnbuckles.
f. Sockets.
g. Eye nuts.
h. Saddles.
i. Brackets.

2. Include rated capacities and furnished specialties and accessories.

B. Delegated-Design Submittal: For hangers and supports for electrical systems.

1. Include design calculations and details of trapeze hangers.

### 1.4 INFORMATIONAL SUBMITTALS

A. Welding certificates.

1.5 QUALITY ASSURANCE

A. Welding Qualifications: Qualify procedures and personnel according to the following:

1. AWS D1.1/D1.1M.
2. AWS D1.2/D1.2M.

PART 2 - PRODUCTS

2.1 PERFORMANCE REQUIREMENTS

A. Delegated Design: Engage a qualified professional engineer, as defined in Section 014000 "Quality Requirements," to design hanger and support system.

2.2 SUPPORT, ANCHORAGE, AND ATTACHMENT COMPONENTS

A. Steel Slotted Support Systems: Comply with MFMA-4 factory-fabricated components for field assembly.

1. Manufacturers: Subject to compliance with requirements, available manufacturers offering products that may be incorporated into the Work include, but are not limited to the following:

a. Allied Tube & Conduit.
b. Cooper B-Line, Inc.; a division of Cooper Industries.
c. ERICO International Corporation.
d. GS Metals Corp.
e. Thomas & Betts Corporation, A Member of the ABB Group.
f. Unistrut; an Atkore International company.

2. Material: Galvanized steel.
3. Channel Width: 1-5/8 inches.
4. Metallic Coatings: Hot-dip galvanized after fabrication and applied according to MFMA-4.
5. Channel Dimensions: Selected for applicable load criteria.

B. Conduit and Cable Support Devices: Steel and malleable-iron hangers, clamps, and associated fittings, designed for types and sizes of raceway or cable to be supported.

C. Support for Conductors in Vertical Conduit: Factory-fabricated assembly consisting of threaded body and insulating wedging plug or plugs for nonarmored electrical conductors or cables in riser conduits. Plugs shall have number, size, and shape of conductor gripping pieces as required to suit individual conductors or cables supported. Body shall be made of malleable iron.

D. Structural Steel for Fabricated Supports and Restraints: ASTM A 36/A 36M steel plates, shapes, and bars; black and galvanized.

E. Mounting, Anchoring, and Attachment Components: Items for fastening electrical items or their supports to building surfaces include the following:

1. Powder-Actuated Fasteners: Threaded-steel stud, for use in hardened portland cement concrete, steel, or wood, with tension, shear, and pullout capacities appropriate for supported loads and building materials where used.

   a. Manufacturers: Subject to compliance with requirements, available manufacturers offering products that may be incorporated into the Work include, but are not limited to the following:

      1) Hilti, Inc.
      2) ITW Ramset/Red Head; Illinois Tool Works, Inc.
      3) MKT Fastening, LLC.
      4) Simpson Strong-Tie Co., Inc.

2. Mechanical-Expansion Anchors: Insert-wedge-type, zinc-coated steel, for use in hardened portland cement concrete, with tension, shear, and pullout capacities appropriate for supported loads and building materials where used.

   a. Manufacturers: Subject to compliance with requirements, available manufacturers offering products that may be incorporated into the Work include, but are not limited to the following:

      1) Cooper B-Line, Inc.; a division of Cooper Industries.
      2) Empire Tool and Manufacturing Co., Inc.
      3) Hilti, Inc.
      4) ITW Ramset/Red Head; Illinois Tool Works, Inc.
      5) MKT Fastening, LLC.

3. Concrete Inserts: Steel or malleable-iron, slotted support system units are similar to MSS Type 18 units and comply with MFMA-4 or MSS SP-58.
4. Clamps for Attachment to Steel Structural Elements: MSS SP-58 units are suitable for attached structural element.
5. Through Bolts: Structural type, hex head, and high strength. Comply with ASTM A 325.
6. Toggle Bolts: All-steel springhead type.
7. Hanger Rods: Threaded steel.

## 2.3 FABRICATED METAL EQUIPMENT SUPPORT ASSEMBLIES

A. Description: Welded or bolted structural-steel shapes, shop or field fabricated to fit dimensions of supported equipment.

B. Materials: Comply with requirements in Section 055000 "Metal Fabrications" for steel shapes and plates.

PART 3 - EXECUTION

3.1 APPLICATION

A. Comply with NECA 1 and NECA 101 for application of hangers and supports for electrical equipment and systems unless requirements in this Section are stricter.

B. Comply with requirements for raceways and boxes specified in Section 260533 "Raceways and Boxes for Electrical Systems."

C. Maximum Support Spacing and Minimum Hanger Rod Size for Raceway: Space supports for EMTs, IMCs, and RMCs as required by NFPA 70. Minimum rod size shall be 1/4 inch in diameter.

D. Multiple Raceways or Cables: Install trapeze-type supports fabricated with steel slotted or other support system, sized so capacity can be increased by at least 25 percent in future without exceeding specified design load limits.

1. Secure raceways and cables to these supports with two-bolt conduit clamps.

E. Spring-steel clamps designed for supporting single conduits without bolts may be used for 1-1/2-inch and smaller raceways serving branch circuits and communication systems above suspended ceilings and for fastening raceways to trapeze supports.

3.2 SUPPORT INSTALLATION

A. Comply with NECA 1 and NECA 101 for installation requirements except as specified in this article.

B. Raceway Support Methods: In addition to methods described in NECA 1, EMTs, IMCs, and RMCs may be supported by openings through structure members, according to NFPA 70.

C. Strength of Support Assemblies: Where not indicated, select sizes of components so strength will be adequate to carry present and future static loads within specified loading limits. Minimum static design load used for strength determination shall be weight of supported components plus 200 lb.

D. Mounting and Anchorage of Surface-Mounted Equipment and Components: Anchor and fasten electrical items and their supports to building structural elements by the following methods unless otherwise indicated by code:

1. To Wood: Fasten with lag screws or through bolts.
2. To New Concrete: Bolt to concrete inserts.
3. To Masonry: Approved toggle-type bolts on hollow masonry units and expansion anchor fasteners on solid masonry units.
4. To Existing Concrete: Expansion anchor fasteners.

5. Instead of expansion anchors, powder-actuated driven threaded studs provided with lock washers and nuts may be used in existing standard-weight concrete 4 inches thick or greater. Do not use for anchorage to lightweight-aggregate concrete or for slabs less than 4 inches thick.
6. To Steel: Beam clamps (MSS SP-58, Type 19, 21, 23, 25, or 27), complying with MSS SP-69.
7. To Light Steel: Sheet metal screws.
8. Items Mounted on Hollow Walls and Nonstructural Building Surfaces: Mount cabinets, panelboards, disconnect switches, control enclosures, pull and junction boxes, transformers, and other devices on slotted-channel racks attached to substrate.

E. Drill holes for expansion anchors in concrete at locations and to depths that avoid the need for reinforcing bars.

## 3.3 INSTALLATION OF FABRICATED METAL SUPPORTS

A. Comply with installation requirements in Section 055000 "Metal Fabrications" for site-fabricated metal supports.

B. Cut, fit, and place miscellaneous metal supports accurately in location, alignment, and elevation to support and anchor electrical materials and equipment.

C. Field Welding: Comply with AWS D1.1/D1.1M.

## 3.4 CONCRETE BASES

A. Construct concrete bases of dimensions indicated but not less than 4 inches larger in both directions than supported unit, and so anchors will be a minimum of 10 bolt diameters from edge of the base.

B. Use 3000-psi, 28-day compressive-strength concrete. Concrete materials, reinforcement, and placement requirements are specified in Section 033000 "Cast-in-Place Concrete."

C. Anchor equipment to concrete base as follows:

1. Place and secure anchorage devices. Use supported equipment manufacturer's setting drawings, templates, diagrams, instructions, and directions furnished with items to be embedded.
2. Install anchor bolts to elevations required for proper attachment to supported equipment.
3. Install anchor bolts according to anchor-bolt manufacturer's written instructions.

3.5 PAINTING

A. Touchup: Clean field welds and abraded areas of shop paint. Paint exposed areas immediately after erecting hangers and supports. Use same materials as used for shop painting. Comply with SSPC-PA 1 requirements for touching up field-painted surfaces.

1. Apply paint by brush or spray to provide minimum dry film thickness of 2.0 mils.

B. Galvanized Surfaces: Clean welds, bolted connections, and abraded areas and apply galvanizing-repair paint to comply with ASTM A 780.

**END OF SECTION**

# SECTION 260533

# RACEWAYS AND BOXES FOR ELECTRICAL SYSTEMS

## PART 1 - GENERAL

### 1.1 RELATED DOCUMENTS

A. Drawings and general provisions of the Contract, including General and Supplementary Conditions and Division 01 Specification Sections, apply to this Section.

### 1.2 SUMMARY

A. Section Includes:

1. Metal conduits, tubing, and fittings.
2. Nonmetal conduits, tubing, and fittings.
3. Metal wireways and auxiliary gutters.
4. Boxes, enclosures, and cabinets.
5. Handholes and boxes for exterior underground cabling.

### 1.3 DEFINITIONS

A. GRC: Galvanized rigid steel conduit.

B. IMC: Intermediate metal conduit.

### 1.4 ACTION SUBMITTALS

A. Product Data: For surface raceways, wireways and fittings, floor boxes, hinged-cover enclosures, and cabinets.

B. Shop Drawings: For custom enclosures and cabinets. Include plans, elevations, sections, and attachment details.

### 1.5 INFORMATIONAL SUBMITTALS

A. Source quality-control reports.

PART 2 - PRODUCTS

2.1 METAL CONDUITS, TUBING, AND FITTINGS

A. Manufacturers: Subject to compliance with requirements, available manufacturers offering products that may be incorporated into the Work include, but are not limited to the following:

1. AFC Cable Systems, Inc.
2. Allied Tube & Conduit.
3. O-Z/Gedney; an EGS Electrical Group brand; an Emerson Industrial Automation business.
4. Republic Conduit.
5. Southwire Company.
6. Thomas & Betts Corporation, A Member of the ABB Group.
7. Western Tube and Conduit Corporation.
8. Wheatland Tube Company.

B. Listing and Labeling: Metal conduits, tubing, and fittings shall be listed and labeled as defined in NFPA 70, by a qualified testing agency, and marked for intended location and application.

C. GRC: Comply with ANSI C80.1 and UL 6.

D. IMC: Comply with ANSI C80.6 and UL 1242.

E. EMT: Comply with ANSI C80.3 and UL 797.

F. FMC: Comply with UL 1; zinc-coated steel.

G. LFMC: Flexible steel conduit with PVC jacket and complying with UL 360.

H. Fittings for Metal Conduit: Comply with NEMA FB 1 and UL 514B.

1. Conduit Fittings for Hazardous (Classified) Locations: Comply with UL 886 and NFPA 70.
2. Fittings for EMT:

a. Material: Steel or die cast.
b. Type: Compression.

3. Expansion Fittings: PVC or steel to match conduit type, complying with UL 651, rated for environmental conditions where installed, and including flexible external bonding jumper.

I. Joint Compound for IMC or GRC: Approved, as defined in NFPA 70, by authorities having jurisdiction for use in conduit assemblies, and compounded for use to lubricate and protect threaded conduit joints from corrosion and to enhance their conductivity.

## 2.2 NONMETALLIC CONDUITS, TUBING, AND FITTINGS

A. Manufacturers: Subject to compliance with requirements, available manufacturers offering products that may be incorporated into the Work include, but are not limited to the following:

1. AFC Cable Systems, Inc.
2. Arnco Corporation.
3. CANTEX INC.
4. CertainTeed Corporation.
5. Kraloy.
6. RACO; Hubbell.
7. Thomas & Betts Corporation, A Member of the ABB Group.

B. Listing and Labeling: Nonmetallic conduits, tubing, and fittings shall be listed and labeled as defined in NFPA 70, by a qualified testing agency, and marked for intended location and application.

C. RNC: Type EPC-40-PVC, complying with NEMA TC 2 and UL 651 unless otherwise indicated.

D. Fittings for RNC: Comply with NEMA TC 3; match to conduit or tubing type and material.

## 2.3 METAL WIREWAYS AND AUXILIARY GUTTERS

A. Manufacturers: Subject to compliance with requirements, available manufacturers offering products that may be incorporated into the Work include, but are not limited to the following:

1. Cooper B-Line, Inc.; a division of Cooper Industries.
2. Hoffman; a brand of Pentair Equipment Protection.
3. MonoSystems, Inc.
4. Square D.

B. Description: Sheet metal, complying with UL 870 and NEMA 250, Type 1 unless otherwise indicated, and sized according to NFPA 70.

1. Metal wireways installed outdoors shall be listed and labeled as defined in NFPA 70, by a qualified testing agency, and marked for intended location and application.

C. Fittings and Accessories: Include covers, couplings, offsets, elbows, expansion joints, adapters, hold-down straps, end caps, and other fittings to match and mate with wireways as required for complete system.

D. Wireway Covers: Hinged type unless otherwise indicated.

E. Finish: Manufacturer's standard enamel finish.

## 2.4 BOXES, ENCLOSURES, AND CABINETS

A. Manufacturers: Subject to compliance with requirements, available manufacturers offering products that may be incorporated into the Work include, but are not limited to the following:

1. Cooper Technologies Company.
2. EGS/Appleton Electric.
3. Erickson Electrical Equipment Company.
4. Hoffman; a brand of Pentair Equipment Protection.
5. Hubbell Incorporated.
6. MonoSystems, Inc.
7. O-Z/Gedney; an EGS Electrical Group brand; an Emerson Industrial Automation business.
8. RACO; Hubbell.
9. Thomas & Betts Corporation, A Member of the ABB Group.
10. Wiremold / Legrand.

B. General Requirements for Boxes, Enclosures, and Cabinets: Boxes, enclosures, and cabinets installed in wet locations shall be listed for use in wet locations.

C. Sheet Metal Outlet and Device Boxes: Comply with NEMA OS 1 and UL 514A.

D. Cast-Metal Outlet and Device Boxes: Comply with NEMA FB 1, ferrous alloy, Type FD, with gasketed cover.

E. Metal Floor Boxes:

1. Material: Cast metal or sheet metal.
2. Type: Fully adjustable.
3. Shape: Rectangular.
4. Listing and Labeling: Metal floor boxes shall be listed and labeled as defined in NFPA 70, by a qualified testing agency, and marked for intended location and application.

F. Luminaire Outlet Boxes: Nonadjustable, designed for attachment of luminaire weighing 50 lb. Outlet boxes designed for attachment of luminaires weighing more than 50 lb shall be listed and marked for the maximum allowable weight.

G. Small Sheet Metal Pull and Junction Boxes: NEMA OS 1.

H. Cast-Metal Access, Pull, and Junction Boxes: Comply with NEMA FB 1 and UL 1773, galvanized, cast iron with gasketed cover.

I. Box extensions used to accommodate new building finishes shall be of same material as recessed box.

J. Device Box Dimensions: 4 inches square by 2-1/8 inches deep.

K. Gangable boxes are allowed.

L. Hinged-Cover Enclosures: Comply with UL 50 and NEMA 250, Type 1 with continuous-hinge cover with flush latch unless otherwise indicated.

1. Metal Enclosures: Steel, finished inside and out with manufacturer's standard enamel.
2. Interior Panels: Steel; all sides finished with manufacturer's standard enamel.

M. Cabinets:

1. NEMA 250, Type 1 galvanized-steel box with removable interior panel and removable front, finished inside and out with manufacturer's standard enamel.
2. Hinged door in front cover with flush latch and concealed hinge.
3. Key latch to match panelboards.
4. Metal barriers to separate wiring of different systems and voltage.
5. Accessory feet where required for freestanding equipment.
6. Nonmetallic cabinets shall be listed and labeled as defined in NFPA 70, by a qualified testing agency, and marked for intended location and application.

## 2.5 HANDHOLES AND BOXES FOR EXTERIOR UNDERGROUND WIRING

A. General Requirements for Handholes and Boxes:

1. Boxes and handholes for use in underground systems shall be designed and identified as defined in NFPA 70, for intended location and application.
2. Boxes installed in wet areas shall be listed and labeled as defined in NFPA 70, by a qualified testing agency, and marked for intended location and application.

B. Polymer-Concrete Handholes and Boxes with Polymer-Concrete Cover: Molded of sand and aggregate, bound together with polymer resin, and reinforced with steel, fiberglass, or a combination of the two.

1. Manufacturers: Subject to compliance with requirements, available manufacturers offering products that may be incorporated into the Work include, but are not limited to the following:

a. Armorcast Products Company.
b. Carson Industries LLC.
c. NewBasis.
d. Oldcastle Precast, Inc.
e. Quazite: Hubbell Power Systems, Inc.
f. Synertech Moulded Products.

2. Standard: Comply with SCTE 77.

3. Configuration: Designed for flush burial with open bottom unless otherwise indicated.
4. Cover: Weatherproof, secured by tamper-resistant locking devices and having structural load rating consistent with enclosure and handhole location.
5. Cover Finish: Nonskid finish shall have a minimum coefficient of friction of 0.50.
6. Cover Legend: Molded lettering, "ELECTRIC.".
7. Conduit Entrance Provisions: Conduit-terminating fittings shall mate with entering ducts for secure, fixed installation in enclosure wall.
8. Handholes 12 Inches Wide by 24 Inches Long and Larger: Have inserts for cable racks and pulling-in irons installed before concrete is poured.

## 2.6 SOURCE QUALITY CONTROL FOR UNDERGROUND ENCLOSURES

A. Handhole and Pull-Box Prototype Test: Test prototypes of handholes and boxes for compliance with SCTE 77. Strength tests shall be for specified tier ratings of products supplied.

1. Tests of materials shall be performed by an independent testing agency.
2. Strength tests of complete boxes and covers shall be by either an independent testing agency or manufacturer. A qualified registered professional engineer shall certify tests by manufacturer.
3. Testing machine pressure gages shall have current calibration certification complying with ISO 9000 and ISO 10012 and traceable to NIST standards.

# PART 3 - EXECUTION

## 3.1 RACEWAY APPLICATION

A. Outdoors: Apply raceway products as specified below unless otherwise indicated:

1. Exposed Conduit: GRC or IMC.
2. Concealed Conduit, Aboveground: GRC or IMC.
3. Underground Conduit: RNC, Type EPC-40-PVC or Type EPC-80-PVC.
4. Connection to Vibrating Equipment (Including Transformers and Hydraulic, Pneumatic, Electric Solenoid, or Motor-Driven Equipment): LFMC.
5. Boxes and Enclosures, Aboveground: NEMA 250, Type 3R.

B. Indoors: Apply raceway products as specified below unless otherwise indicated:

1. Exposed, Not Subject to Physical Damage: EMT.
2. Exposed, Not Subject to Severe Physical Damage: EMT.
3. Exposed and Subject to Severe Physical Damage: GRC or IMC. Raceway locations include the following:

   a. Loading dock.
   b. Mechanical rooms.

4. Concealed in Ceilings and Interior Walls and Partitions: EMT.
5. Connection to Vibrating Equipment (Including Transformers and Hydraulic, Pneumatic, Electric Solenoid, or Motor-Driven Equipment): FMC, except use LFMC in damp or wet locations.
6. Damp or Wet Locations: GRC or IMC.
7. Boxes and Enclosures: NEMA 250, Type 1, except use NEMA 250, Type 4 stainless steel in damp or wet locations.

C. Minimum Raceway Size: 3/4-inch trade size.

D. Raceway Fittings: Compatible with raceways and suitable for use and location.

1. Rigid and Intermediate Steel Conduit: Use threaded rigid steel conduit fittings unless otherwise indicated. Comply with NEMA FB 2.10.
2. EMT: Use compression, steel or cast-metal fittings. Comply with NEMA FB 2.10.
3. Flexible Conduit: Use only fittings listed for use with flexible conduit. Comply with NEMA FB 2.20.

E. Do not install aluminum conduits, boxes, or fittings.

F. Install surface raceways only where indicated on Drawings.

G. Do not install nonmetallic conduit where ambient temperature exceeds 120 deg F.

## 3.2 INSTALLATION

A. Comply with NECA 1 and NECA 101 for installation requirements except where requirements on Drawings or in this article are stricter. Comply with NFPA 70 limitations for types of raceways allowed in specific occupancies and number of floors.

B. Keep raceways at least 6 inches away from parallel runs of flues and steam or hot-water pipes. Install horizontal raceway runs above water and steam piping.

C. Complete raceway installation before starting conductor installation.

D. Comply with requirements in Section 260529 "Hangers and Supports for Electrical Systems" for hangers and supports.

E. Arrange stub-ups so curved portions of bends are not visible above finished slab.

F. Install no more than the equivalent of three 90-degree bends in any conduit run except for control wiring conduits, for which fewer bends are allowed. Support within 12 inches of changes in direction.

G. Conceal conduit and EMT within finished walls, ceilings, and floors unless otherwise indicated. Install conduits parallel or perpendicular to building lines.

H. Support conduit within 12 inchesof enclosures to which attached.

I. Raceways Embedded in Slabs:

1. Run conduit larger than 1-inch trade size, parallel or at right angles to main reinforcement. Where at right angles to reinforcement, place conduit close to slab support. Secure raceways to reinforcement at maximum 10-footintervals.
2. Arrange raceways to cross building expansion joints at right angles with expansion fittings.
3. Arrange raceways to keep a minimum of 2 inches of concrete cover in all directions.
4. Do not embed threadless fittings in concrete unless specifically approved by Architect for each specific location.
5. Change from RNC, Type EPC-40-PVC to GRC or IMC before rising above floor.

J. Stub-ups to Above Recessed Ceilings:

1. Use EMT, IMC, or RMC for raceways.
2. Use a conduit bushing or insulated fitting to terminate stub-ups not terminated in hubs or in an enclosure.

K. Threaded Conduit Joints, Exposed to Wet, Damp, Corrosive, or Outdoor Conditions: Apply listed compound to threads of raceway and fittings before making up joints. Follow compound manufacturer's written instructions.

L. Terminate threaded conduits into threaded hubs or with locknuts on inside and outside of boxes or cabinets. Install bushings on conduits up to 1-1/4-inch trade size and insulated throat metal bushings on 1-1/2-inch trade size and larger conduits terminated with locknuts. Install insulated throat metal grounding bushings on service conduits.

M. Install raceways square to the enclosure and terminate at enclosures with locknuts. Install locknuts hand tight plus 1/4 turn more.

N. Do not rely on locknuts to penetrate nonconductive coatings on enclosures. Remove coatings in the locknut area prior to assembling conduit to enclosure to assure a continuous ground path.

O. Cut conduit perpendicular to the length. For conduits 2-inch trade size and larger, use roll cutter or a guide to make cut straight and perpendicular to the length.

P. Install pull wires in empty raceways. Use polypropylene or monofilament plastic line with not less than 200-lb tensile strength. Leave at least 12 inches of slack at each end of pull wire. Cap underground raceways designated as spare above grade alongside raceways in use.

Q. Surface Raceways:

1. Install surface raceway with a minimum 2-inch radius control at bend points.
2. Secure surface raceway with screws or other anchor-type devices at intervals not exceeding 48 inches and with no less than two supports per straight raceway

section. Support surface raceway according to manufacturer's written instructions. Tape and glue are not acceptable support methods.

R. Install raceway sealing fittings at accessible locations according to NFPA 70 and fill them with listed sealing compound. For concealed raceways, install each fitting in a flush steel box with a blank cover plate having a finish similar to that of adjacent plates or surfaces. Install raceway sealing fittings according to NFPA 70.

S. Install devices to seal raceway interiors at accessible locations. Locate seals so no fittings or boxes are between the seal and the following changes of environments. Seal the interior of all raceways at the following points:

1. Where conduits pass from warm to cold locations, such as boundaries of refrigerated spaces.
2. Where an underground service raceway enters a building or structure.
3. Where otherwise required by NFPA 70.

T. Comply with manufacturer's written instructions for solvent welding RNC and fittings.

U. Expansion-Joint Fittings:

1. Install in each run of aboveground RNC that is located where environmental temperature change may exceed 30 deg F and that has straight-run length that exceeds 25 feet. Install in each run of aboveground RMC and EMT conduit that is located where environmental temperature change may exceed 100 deg F and that has straight-run length that exceeds 100 feet.
2. Install type and quantity of fittings that accommodate temperature change listed for each of the following locations:

    a. Outdoor Locations Not Exposed to Direct Sunlight: 125 deg F temperature change.
    b. Outdoor Locations Exposed to Direct Sunlight: 155 deg F temperature change.
    c. Indoor Spaces Connected with Outdoors without Physical Separation: 125 deg F temperature change.
    d. Attics: 135 deg F temperature change.

3. Install fitting(s) that provide expansion and contraction for at least 0.00041 inch per foot of length of straight run per deg F of temperature change for PVC conduits. Install fitting(s) that provide expansion and contraction for at least 0.000078 inch per foot of length of straight run per deg F of temperature change for metal conduits.
4. Install expansion fittings at all locations where conduits cross building or structure expansion joints.
5. Install each expansion-joint fitting with position, mounting, and piston setting selected according to manufacturer's written instructions for conditions at specific location at time of installation. Install conduit supports to allow for expansion movement.

V. Flexible Conduit Connections: Comply with NEMA RV 3. Use a maximum of 72 inches of flexible conduit for recessed and semirecessed luminaires, equipment subject to vibration, noise transmission, or movement; and for transformers and motors.

1. Use LFMC in damp or wet locations subject to severe physical damage.
2. Use LFMC in damp or wet locations not subject to severe physical damage.

W. Mount boxes at heights indicated on Drawings. If mounting heights of boxes are not individually indicated, give priority to ADA requirements. Install boxes with height measured to bottom of box unless otherwise indicated.

X. Recessed Boxes in Masonry Walls: Saw-cut opening for box in center of cell of masonry block, and install box flush with surface of wall. Prepare block surfaces to provide a flat surface for a raintight connection between box and cover plate or supported equipment and box.

Y. Horizontally separate boxes mounted on opposite sides of walls so they are not in the same vertical channel.

Z. Locate boxes so that cover or plate will not span different building finishes.

AA. Support boxes of three gangs or more from more than one side by spanning two framing members or mounting on brackets specifically designed for the purpose.

BB. Fasten junction and pull boxes to or support from building structure. Do not support boxes by conduits.

CC. Set metal floor boxes level and flush with finished floor surface.

## 3.3 INSTALLATION OF UNDERGROUND CONDUIT

A. Direct-Buried Conduit:

1. Excavate trench bottom to provide firm and uniform support for conduit. Prepare trench bottom as specified in Section 312000 "Earth Moving" for pipe less than 6 inches in nominal diameter.
2. Install backfill as specified in Section 312000 "Earth Moving."
3. After installing conduit, backfill and compact. Start at tie-in point, and work toward end of conduit run, leaving conduit at end of run free to move with expansion and contraction as temperature changes during this process. Firmly hand tamp backfill around conduit to provide maximum supporting strength. After placing controlled backfill to within 12 inches of finished grade, make final conduit connection at end of run and complete backfilling with normal compaction as specified in Section 312000 "Earth Moving."
4. Install manufactured rigid steel conduit elbows for stub-ups at poles and equipment and at building entrances through floor.

a. Couple steel conduits to ducts with adapters designed for this purpose, and encase coupling with 3 inches of concrete for a minimum of 12 inches on each side of the coupling.
b. For stub-ups at equipment mounted on outdoor concrete bases and where conduits penetrate building foundations, extend steel conduit horizontally a minimum of 60 inches from edge of foundation or equipment base. Install insulated grounding bushings on terminations at equipment.

5. Warning Planks: Bury warning planks approximately 12 inches above direct-buried conduits but a minimum of 6 inches below grade. Align planks along centerline of conduit.
6. Underground Warning Tape: Comply with requirements in Section 260553 "Identification for Electrical Systems."

## 3.4 INSTALLATION OF UNDERGROUND HANDHOLES AND BOXES

A. Install handholes and boxes level and plumb and with orientation and depth coordinated with connecting conduits to minimize bends and deflections required for proper entrances.

B. Unless otherwise indicated, support units on a level bed of crushed stone or gravel, graded from 1/2-inch sieve to No. 4 sieve and compacted to same density as adjacent undisturbed earth.

C. Elevation: In paved areas, set so cover surface will be flush with finished grade. Set covers of other enclosures 1 inch above finished grade.

D. Install handholes with bottom below frost line, below grade.

E. Install removable hardware, including pulling eyes, cable stanchions, cable arms, and insulators, as required for installation and support of cables and conductors and as indicated. Select arm lengths to be long enough to provide spare space for future cables but short enough to preserve adequate working clearances in enclosure.

F. Field-cut openings for conduits according to enclosure manufacturer's written instructions. Cut wall of enclosure with a tool designed for material to be cut. Size holes for terminating fittings to be used, and seal around penetrations after fittings are installed.

## 3.5 SLEEVE AND SLEEVE-SEAL INSTALLATION FOR ELECTRICAL PENETRATIONS

A. Install sleeves and sleeve seals at penetrations of exterior floor and wall assemblies. Comply with requirements in Section 260544 "Sleeves and Sleeve Seals for Electrical Raceways and Cabling."

## 3.6 FIRESTOPPING

A. Install firestopping at penetrations of fire-rated floor and wall assemblies. Comply with requirements in Section 078413 "Penetration Firestopping."

## 3.7 PROTECTION

A. Protect coatings, finishes, and cabinets from damage and deterioration.

1. Repair damage to galvanized finishes with zinc-rich paint recommended by manufacturer.
2. Repair damage to PVC coatings or paint finishes with matching touchup coating recommended by manufacturer.

**END OF SECTION**

# SECTION 26 05 43

# UNDERGROUND DUCTS AND RACEWAYS FOR ELECTRICAL SYSTEMS

## PART 1 - GENERAL

### 1.1 RELATED DOCUMENTS

A. Drawings and general provisions of the Contract, including General and Supplementary Conditions and Division 01 Specification Sections, apply to this Section.

### 1.2 SUMMARY

A. Section Includes:

1. Direct-buried conduit, ducts, and duct accessories.
2. Handholes and boxes.

### 1.3 DEFINITIONS

A. Trafficways: Locations where vehicular or pedestrian traffic is a normal course of events.

### 1.4 ACTION SUBMITTALS

A. Product Data: For each type of product.

1. Include duct-bank materials, including separators and miscellaneous components.
2. Include ducts and conduits and their accessories, including elbows, end bells, bends, fittings, and solvent cement.
3. Include accessories for handholes, boxes.
4. Include warning tape.
5. Include warning planks.

B. Shop Drawings:

1. Factory-Fabricated Handholes and Boxes Other Than Precast Concrete:

a. Include dimensioned plans, sections, and elevations, and fabrication and installation details.
b. Include duct entry provisions, including locations and duct sizes.
c. Include cover design.
d. Include grounding details.

e. Include dimensioned locations of cable rack inserts, and pulling-in and lifting irons.

## 1.5 INFORMATIONAL SUBMITTALS

A. Duct-Bank Coordination Drawings: Show duct profiles and coordination with other utilities and underground structures.

1. Include plans and sections, drawn to scale, and show bends and locations of expansion fittings.
2. Drawings shall be signed and sealed by a qualified professional engineer.

B. Product Certificates: For concrete and steel used in precast concrete handholes, as required by ASTM C 858.

C. Qualification Data: For professional engineer and testing agency responsible for testing nonconcrete handholes and boxes.

D. Source quality-control reports.

E. Field quality-control reports.

## 1.6 MAINTENANCE MATERIALS SUBMITTALS

A. Furnish extra materials that match products installed and that are packaged with protective covering for storage and identified with labels describing contents.

## 1.7 QUALITY ASSURANCE

A. Testing Agency Qualifications: Qualified according to ASTM E 329 for testing indicated.

## 1.8 FIELD CONDITIONS

A. Interruption of Existing Electrical Service: Do not interrupt electrical service to facilities occupied by Owner or others unless permitted under the following conditions, and then only after arranging to provide temporary electrical service according to requirements indicated:

1. Notify Construction Manager Owner no fewer than fourteen days in advance of proposed interruption of electrical service.
2. Do not proceed with interruption of electrical service without Owner's written permission.

B. Ground Water: Assume ground-water level is at grade level unless a lower water table is noted on Drawings.

C. Ground Water: Assume ground-water level is 36 inches below ground surface unless a higher water table is noted on Drawings.

PART 2 - PRODUCTS

2.1 GENERAL REQUIREMENTS FOR DUCTS AND RACEWAYS

A. Comply with ANSI C2.

2.2 CONDUIT

A. Rigid Steel Conduit: Galvanized. Comply with ANSI C80.1.

B. RNC: NEMA TC 2, Type EPC-40-PVC, UL 651, with matching fittings by same manufacturer as the conduit, complying with NEMA TC 3 and UL 514B.

2.3 NONMETALLIC DUCTS AND DUCT ACCESSORIES

A. Manufacturers: Subject to compliance with requirements, available manufacturers offering products that may be incorporated into the Work include, but are not limited to, the following:

1. ARNCO Corp.
2. Beck Manufacturing.
3. Cantex, Inc.
4. CertainTeed Corporation.
5. Condux International, Inc.
6. ElecSys, Inc.
7. Electri-Flex Company.
8. IPEX Inc.
9. Lamson & Sessions; Carlon Electrical Products.
10. Spiraduct/AFC Cable Systems, Inc.

B. Underground Plastic Utilities Duct: NEMA TC 6 & 8, ASTM F 512, UL 651A, Type HDPE, with matching fittings complying with NEMA TC 9 by same manufacturer as the duct.

C. Duct Accessories:

1. Duct Separators: Factory-fabricated rigid PVC interlocking spacers, sized for type and size of ducts with which used, and selected to provide minimum duct spacing indicated while supporting ducts during concreting or backfilling.
2. Warning Tape: Underground-line warning tape specified in Section 260553 "Identification for Electrical Systems."
3. Concrete Warning Planks: Nominal 12 by 24 by 3 inches in size, manufactured from 6000-psi concrete.

a. Color: Red dye added to concrete during batching.
b. Mark each plank with "ELECTRIC" in 2-inch- high, 3/8-inch- deep letters.

## 2.4 HANDHOLES AND BOXES OTHER THAN PRECAST CONCRETE

A. General Requirements for Handholes and Boxes: Comply with SCTE 77. Comply with tier requirements in "Underground Enclosure Application" Article.

1. Color: Gray.
2. Configuration: Units shall be designed for flush burial and have open bottom unless otherwise indicated.
3. Cover: Weatherproof, secured by tamper-resistant locking devices and having structural load rating consistent with enclosure.
4. Cover Finish: Nonskid finish shall have a minimum coefficient of friction of 0.50.
5. Cover Legend: Molded lettering, As indicated for each service.
6. Direct-Buried Wiring Entrance Provisions: Knockouts equipped with insulated bushings or end-bell fittings, selected to suit box material, sized for wiring indicated, and arranged for secure, fixed installation in enclosure wall.
7. Duct Entrance Provisions: Duct-terminating fittings shall mate with entering ducts for secure, fixed installation in enclosure wall.
8. Handholes 12 inches wide by 24 inches long and larger shall have factory-installed inserts for cable racks and pulling-in irons.

B. Polymer Concrete Handholes and Boxes with Polymer Concrete Cover: Molded of sand and aggregate, bound together with a polymer resin, and reinforced with steel or fiberglass or a combination of the two.

1. Manufacturers: Subject to compliance with requirements, available manufacturers offering products that may be incorporated into the Work include, but are not limited to, the following:

a. Armorcast Products Company.
b. Carson Industries LLC.
c. NewBasis.
d. Quazite: Hubbell Power System, Inc.

## 2.5 SOURCE QUALITY CONTROL

A. Test and inspect precast concrete utility structures according to ASTM C 1037.

B. Nonconcrete Handhole and Pull-Box Prototype Test: Test prototypes of manholes and boxes for compliance with SCTE 77. Strength tests shall be for specified tier ratings of products supplied.

1. Tests of materials shall be performed by an independent testing agency.
2. Strength tests of complete boxes and covers shall be by either an independent testing agency or manufacturer. A qualified registered professional engineer shall certify tests by manufacturer.

3. Testing machine pressure gages shall have current calibration certification, complying with ISO 9000 and ISO 10012, and traceable to NIST standards.

PART 3 - EXECUTION

3.1 PREPARATION

A. Coordinate layout and installation of ducts, handholes, and boxes with final arrangement of other utilities, site grading, and surface features as determined in the field. Notify Architect if there is a conflict between areas of excavation and existing structures or archaeological sites to remain.

B. Coordinate elevations of ducts and duct-bank entrances into handholes, and boxes with final locations and profiles of ducts and duct banks, as determined by coordination with other utilities, underground obstructions, and surface features. Revise locations and elevations as required to suit field conditions and to ensure that duct runs drain to handholes, and as approved by Architect.

C. Clear and grub vegetation to be removed, and protect vegetation to remain according to Section 311000 "Site Clearing." Remove and stockpile topsoil for reapplication according to Section 311000 "Site Clearing."

3.2 UNDERGROUND DUCT APPLICATION

A. Ducts for Electrical Feeders 600 V and Less: RNC, NEMA Type HDPE, in direct-buried duct bank unless otherwise indicated.

3.3 UNDERGROUND ENCLOSURE APPLICATION

A. Handholes and Boxes for 600 V and Less:

1. Units in Roadways and Other Deliberate Traffic Paths: Precast concrete. AASHTO HB 17, H-20 structural load rating.
2. Units in Driveway, Parking Lot, and Off-Roadway Locations, Subject to Occasional, Nondeliberate Loading by Heavy Vehicles: Precast concrete, AASHTO HB 17, H-20 structural load rating.
3. Units in Sidewalk and Similar Applications with a Safety Factor for Nondeliberate Loading by Vehicles: Precast concrete, AASHTO HB 17, H-10 structural load rating.
4. Units Subject to Light-Duty Pedestrian Traffic Only: Fiberglass-reinforced polyester resin, structurally tested according to SCTE 77 with 3000-lbf vertical loading.
5. Cover design load shall not exceed the design load of the handhole or box.

## 3.4 EARTHWORK

A. Excavation and Backfill: Comply with Section 312000 "Earth Moving," but do not use heavy-duty, hydraulic-operated, compaction equipment.

B. Restore surface features at areas disturbed by excavation, and re-establish original grades unless otherwise indicated. Replace removed sod immediately after backfilling is completed.

C. Restore areas disturbed by trenching, storing of dirt, cable laying, and other work. Restore vegetation and include necessary topsoiling, fertilizing, liming, seeding, sodding, sprigging, and mulching. Comply with Section 329200 "Turf and Grasses" and Section 329300 "Plants."

D. Cut and patch existing pavement in the path of underground ducts and utility structures according to the "Cutting and Patching" Article in Section 017300 "Execution."

## 3.5 DUCT INSTALLATION

A. Install ducts according to NEMA TCB 2.

B. Slope: Pitch ducts a minimum slope of 1:300 down toward manholes and handholes and away from buildings and equipment. Slope ducts from a high point in runs between two manholes, to drain in both directions.

C. Curves and Bends: Use 5-degree angle couplings for small changes in direction. Use manufactured long sweep bends with a minimum radius of [48 inches] [12.5 feet] [25 feet], both horizontally and vertically, at other locations unless otherwise indicated.

D. Joints: Use solvent-cemented joints in ducts and fittings and make watertight according to manufacturer's written instructions. Stagger couplings so those of adjacent ducts do not lie in same plane.

E. Installation Adjacent to High-Temperature Steam Lines: Where duct banks are installed parallel to underground steam lines, perform calculations showing the duct bank will not be subject to environmental temperatures above 40 deg C. Where environmental temperatures are calculated to rise above 40 deg C, and anywhere the duct bank crosses above an underground steam line, install insulation blankets listed for direct burial to isolate the duct bank from the steam line.

F. Duct Entrances to Concrete and Polymer Concrete Handholes: Use end bells, spaced approximately 10 inches o.c. for 5-inch ducts, and vary proportionately for other duct sizes.

   1. Begin change from regular spacing to end-bell spacing 10 feet from the end bell without reducing duct line slope and without forming a trap in the line.
   2. Direct-Buried Duct Banks: Install an expansion and deflection fitting in each conduit in the area of disturbed earth adjacent to manhole or handhole. Install an

expansion fitting near the center of all straight line direct-buried duct banks with calculated expansion of more than 3/4 inch.

3. Grout end bells into structure walls from both sides to provide watertight entrances.

G. Building Wall Penetrations: Make a transition from underground duct to rigid steel conduit at least 10 feet outside the building wall, without reducing duct line slope away from the building, and without forming a trap in the line. Use fittings manufactured for duct-to-conduit transition. Install conduit penetrations of building walls as specified in Section 260544 "Sleeves and Sleeve Seals for Electrical Raceways and Cabling."

H. Sealing: Provide temporary closure at terminations of ducts that have cables pulled. Seal spare ducts at terminations. Use sealing compound and plugs to withstand at least 15-psig hydrostatic pressure.

I. Pulling Cord: Install 100-lbf- test nylon cord in empty ducts.

J. Warning Planks: Bury warning planks approximately 12 inches above direct-buried ducts and duct banks, placing them 24 inches o.c. Align planks along the width and along the centerline of duct bank. Provide an additional plank for each 12-inch increment of duct-bank width over a nominal 18 inches. Space additional planks 12 inches apart, horizontally.

K. Warning Tape: Bury warning tape approximately 12 inches above all concrete-encased ducts and duct banks. Align tape parallel to and within 3 inches of centerline of duct bank. Provide an additional warning tape for each 12-inch increment of duct-bank width over a nominal 18 inches. Space additional tapes 12 inches apart, horizontally.

## 3.6 INSTALLATION OF CONCRETE HANDHOLES, AND BOXES

A. Precast Concrete Handhole Installation:

1. Comply with ASTM C 891 unless otherwise indicated.
2. Install units level and plumb and with orientation and depth coordinated with connecting ducts, to minimize bends and deflections required for proper entrances.
3. Unless otherwise indicated, support units on a level bed of crushed stone or gravel, graded from 1-inch sieve to No. 4 sieve and compacted to same density as adjacent undisturbed earth.

B. Elevations:

1. Manhole Roof: Install with rooftop at least 15 inches below finished grade.
2. Manhole Frame: In paved areas and trafficways, set frames flush with finished grade. Set other manhole frames 1 inch above finished grade.
3. Handhole Covers: In paved areas and trafficways, set surface flush with finished grade. Set covers of other handholes 1 inch above finished grade.
4. Where indicated, cast handhole cover frame integrally with handhole structure.

C. Drainage: Install drains in bottom of manholes where indicated. Coordinate with drainage provisions indicated.

## 3.7 INSTALLATION OF HANDHOLES AND BOXES OTHER THAN PRECAST CONCRETE

A. Install handholes and boxes level and plumb and with orientation and depth coordinated with connecting ducts, to minimize bends and deflections required for proper entrances. Use box extension if required to match depths of ducts, and seal joint between box and extension as recommended by manufacturer.

B. Unless otherwise indicated, support units on a level bed of crushed stone or gravel, graded from 1/2-inch sieve to No. 4 sieve and compacted to same density as adjacent undisturbed earth.

C. Elevation: In paved areas and trafficways, set cover flush with finished grade. Set covers of other handholes 1 inch above finished grade.

D. Install removable hardware, including pulling eyes, cable stanchions, cable arms, and insulators, as required for installation and support of cables and conductors and as indicated. Select arm lengths to be long enough to provide spare space for future cables, but short enough to preserve adequate working clearances in enclosure.

E. Field cut openings for ducts and conduits according to enclosure manufacturer's written instructions. Cut wall of enclosure with a tool designed for material to be cut. Size holes for terminating fittings to be used, and seal around penetrations after fittings are installed.

F. For enclosures installed in asphalt paving and subject to occasional, nondeliberate, heavy-vehicle loading, form and pour a concrete ring encircling, and in contact with, enclosure and with top surface screeded to top of box cover frame. Bottom of ring shall rest on compacted earth.

1. Concrete: 3000 psi, 28-day strength, complying with Section 033000 "Cast-in-Place Concrete," with a troweled finish.
2. Dimensions: 10 inches wide by 12 inches deep.

## 3.8 GROUNDING

A. Ground underground ducts and utility structures according to Section 260526 "Grounding and Bonding for Electrical Systems."

## 3.9 FIELD QUALITY CONTROL

A. Perform the following tests and inspections and prepare test reports:

1. Demonstrate capability and compliance with requirements on completion of installation of underground ducts and utility structures.
2. Pull solid aluminum or wood test mandrel through duct to prove joint integrity and adequate bend radii, and test for out-of-round duct. Provide a minimum 6-inch-long mandrel equal to 80 percent fill of duct. If obstructions are indicated, remove obstructions and retest.
3. Test handhole grounding to ensure electrical continuity of grounding and bonding connections. Measure and report ground resistance as specified in Section 260526 "Grounding and Bonding for Electrical Systems."

B. Correct deficiencies and retest as specified above to demonstrate compliance.

## 3.10 CLEANING

A. Pull leather-washer-type duct cleaner, with graduated washer sizes, through full length of ducts. Follow with rubber duct swab for final cleaning and to assist in spreading lubricant throughout ducts.

B. Clean internal surfaces of handholes. Remove foreign material.

**END OF SECTION**

# SECTION 260553

# IDENTIFICATION FOR ELECTRICAL SYSTEMS

## PART 1 - GENERAL

### 1.1 RELATED DOCUMENTS

A. Drawings and general provisions of the Contract, including General and Supplementary Conditions and Division 01 Specification Sections, apply to this Section.

### 1.2 SUMMARY

A. Section Includes:

1. Identification for raceways.
2. Identification of power and control cables.
3. Identification for conductors.
4. Underground-line warning tape.
5. Warning labels and signs.
6. Instruction signs.
7. Equipment identification labels.
8. Miscellaneous identification products.

### 1.3 ACTION SUBMITTALS

A. Product Data: For each type of product.

1. Include construction details, material descriptions, dimensions of individual components and profiles, and finishes for electrical identification products.

B. Identification Schedule: For each piece of electrical equipment and electrical system components to be an index of nomenclature for electrical equipment and system components used in identification signs and labels. Use same designations indicated on Drawings.

## PART 2 - PRODUCTS

### 2.1 PERFORMANCE REQUIREMENTS

A. Comply with ASME A13.1 and IEEE C2.

B. Comply with NFPA 70.

C. Comply with 29 CFR 1910.144 and 29 CFR 1910.145.

D. Comply with ANSI Z535.4 for safety signs and labels.

E. Adhesive-attached labeling materials, including label stocks, laminating adhesives, and inks used by label printers, shall comply with UL 969.

F. Thermal Movements: Allow for thermal movements from ambient and surface temperature changes.

1. Temperature Change: 120 deg F, ambient; 180 deg F, material surfaces.

## 2.2 COLOR AND LEGEND REQUIREMENTS

A. Raceways and Cables Carrying Circuits at 600 V or Less:

1. Black letters on an orange field.
2. Legend: Indicate voltage and system or service type.

B. Raceways and Cables Carrying Circuits at More Than 600 V:

1. Black letters on an orange field.
2. Legend: "DANGER - CONCEALED HIGH VOLTAGE WIRING."

C. Warning labels and signs shall include, but are not limited to, the following legends:

1. Multiple Power Source Warning: "DANGER - ELECTRICAL SHOCK HAZARD - EQUIPMENT HAS MULTIPLE POWER SOURCES."
2. Workspace Clearance Warning: "WARNING - OSHA REGULATION - AREA IN FRONT OF ELECTRICAL EQUIPMENT MUST BE KEPT CLEAR FOR 36 INCHES."

## 2.3 LABELS

A. Vinyl Labels for Raceways Carrying Circuits at 600 V or Less: Preprinted, flexible labels laminated with a clear, weather- and chemical-resistant coating and matching wraparound clear adhesive tape for securing label ends.

1. Manufacturers: Subject to compliance with requirements, available manufacturers offering products that may be incorporated into the Work include, but are not limited to the following:

a. Brady Corporation.
b. Champion America.
c. emedco.
d. Grafoplast Wire Markers.
e. LEM Products Inc.
f. Marking Services, Inc.

g. Panduit Corp.
h. Seton Identification Products.

B. Snap-Around Labels for Raceways and Cables Carrying Circuits at 600 V or Less: Slit, pretensioned, flexible, preprinted, color-coded acrylic sleeves, with diameters sized to suit diameters of raceways they identify, and that stay in place by gripping action.

1. Manufacturers: Subject to compliance with requirements, available manufacturers offering products that may be incorporated into the Work include, but are not limited to the following:

a. Brady Corporation.
b. Marking Services, Inc.
c. Panduit Corp.
d. Seton Identification Products.

C. Self-Adhesive Labels:

1. Manufacturers: Subject to compliance with requirements, available manufacturers offering products that may be incorporated into the Work include, but are not limited to the following:

a. A'n D Cable Products.
b. Brady Corporation.
c. Brother International Corporation.
d. emedco.
e. Grafoplast Wire Markers.
f. Ideal Industries, Inc.
g. LEM Products Inc.
h. Marking Services, Inc.
i. Panduit Corp.
j. Seton Identification Products.

2. Preprinted, 3-mil-thick, polyester or vinyl flexible label with acrylic pressure-sensitive adhesive.

a. Self-Lamination: Clear; UV-, weather- and chemical-resistant; self-laminating, protective shield over the legend. Labels sized to fit the cable or raceway diameter, such that the clear shield overlaps the entire printed legend.

3. Polyester or Vinyl, thermal, transfer-printed, 3-mil-thick, multicolor, weather- and UV-resistant, pressure-sensitive adhesive labels, configured for display on front cover, door, or other access to equipment unless otherwise indicated.

a. Nominal Size: 3.5-by-5-inch.

4. Marker for Tags: Permanent, waterproof, black ink marker recommended by tag manufacturer.
5. Marker for Tags: Machine-printed, permanent, waterproof, black ink recommended by printer manufacturer.

2.4 BANDS AND TUBES:

A. Snap-Around, Color-Coding Bands for Raceways and Cables: Slit, pretensioned, flexible, solid-colored acrylic sleeves, 2 inches long, with diameters sized to suit diameters of raceways or cables they identify, and that stay in place by gripping action.

1. Manufacturers: Subject to compliance with requirements, available manufacturers offering products that may be incorporated into the Work include, but are not limited to the following:

a. Brady Corporation.
b. Marking Services, Inc.
c. Panduit Corp.

B. Heat-Shrink Preprinted Tubes: Flame-retardant polyolefin tubes with machine-printed identification labels, sized to suit diameters of and shrunk to fit firmly around cables they identify. Full shrink recovery occurs at a maximum of 200 deg F. Comply with UL 224.

1. Manufacturers: Subject to compliance with requirements, available manufacturers offering products that may be incorporated into the Work include, but are not limited to the following:

a. Brady Corporation.
b. Panduit Corp.

2.5 TAPES AND STENCILS:

A. Marker Tapes: Vinyl or vinyl-cloth, self-adhesive wraparound type, with circuit identification legend machine printed by thermal transfer or equivalent process.

1. Manufacturers: Subject to compliance with requirements, available manufacturers offering products that may be incorporated into the Work include, but are not limited to the following:

a. Carlton Industries, LP.
b. Champion America.
c. Ideal Industries, Inc.
d. Marking Services, Inc.
e. Panduit Corp.

B. Self-Adhesive Vinyl Tape: Colored, heavy duty, waterproof, fade resistant; not less than 3 mils thick by 1 to 2 inches wide; compounded for outdoor use.

1. Manufacturers: Subject to compliance with requirements, available manufacturers offering products that may be incorporated into the Work include, but are not limited to the following:

a. Brady Corporation.

b. Carlton Industries, LP.
c. emedco.
d. Marking Services, Inc.

C. Tape and Stencil for Raceways Carrying Circuits 600 V or Less: 4-inch-wide black stripes on 10-inch centers placed diagonally over orange background that extends full length of raceway or duct and is 12 inches wide. Stop stripes at legends.

1. Manufacturers: Subject to compliance with requirements, available manufacturers offering products that may be incorporated into the Work include, but are not limited to the following:

a. LEM Products Inc.
b. Marking Services, Inc.
c. Seton Identification Products.

D. Floor Marking Tape: 2-inch-wide, 5-mil pressure-sensitive vinyl tape, with yellow and black stripes and clear vinyl overlay.

1. Manufacturers: Subject to compliance with requirements, available manufacturers offering products that may be incorporated into the Work include, but are not limited to the following:

a. Carlton Industries, LP.
b. Seton Identification Products.

E. Underground-Line Warning Tape

1. Manufacturers: Subject to compliance with requirements, available manufacturers offering products that may be incorporated into the Work include, but are not limited to the following:

a. Brady Corporation.
b. Ideal Industries, Inc.
c. LEM Products Inc.
d. Marking Services, Inc.
e. Reef Industries, Inc.
f. Seton Identification Products.

2. Tape:

a. Recommended by manufacturer for the method of installation and suitable to identify and locate underground electrical and communications utility lines.
b. Printing on tape shall be permanent and shall not be damaged by burial operations.
c. Tape material and ink shall be chemically inert and not subject to degradation when exposed to acids, alkalis, and other destructive substances commonly found in soils.

3. Color and Printing:

a. Comply with ANSI Z535.1, ANSI Z535.2, ANSI Z535.3, ANSI Z535.4, and ANSI Z535.5.
b. Inscriptions for Red-Colored Tapes: "ELECTRIC LINE, HIGH VOLTAGE".
c. Inscriptions for Orange-Colored Tapes: "TELEPHONE CABLE, CATV CABLE, COMMUNICATIONS CABLE, OPTICAL FIBER CABLE".

4. Tag:

a. Detectable three-layer laminate, consisting of a printed pigmented polyolefin film, a solid aluminum-foil core, and a clear protective film that allows inspection of the continuity of the conductive core; bright colored, continuous-printed on one side with the inscription of the utility, compounded for direct-burial service.
b. Width: 3 inches.
c. Overall Thickness: 5 mils.
d. Foil Core Thickness: 0.35 mil.
e. Weight: 28 lb/1000 sq. ft..
f. Tensile according to ASTM D 882: 70 lbf and 4600 psi.

F. Stenciled Legend: In nonfading, waterproof, black ink or paint. Minimum letter height shall be 1 inch.

2.6 Tags

A. Metal Tags: Brass or aluminum, 2 by 2 by 0.05 inch, with stamped legend, punched for use with self-locking cable tie fastener.

1. Manufacturers: Subject to compliance with requirements, available manufacturers offering products that may be incorporated into the Work include, but are not limited to the following:

a. Brady Corporation.
b. Carlton Industries, LP.
c. emedco.
d. Marking Services, Inc.
e. Seton Identification Products.

B. Nonmetallic Preprinted Tags: Polyethylene tags, 0.015 inch thick, color-coded for phase and voltage level, with factory printed permanent designations; punched for use with self-locking cable tie fastener.

1. Manufacturers: Subject to compliance with requirements, available manufacturers offering products that may be incorporated into the Work include, but are not limited to the following:

a. Brady Corporation.
b. Carlton Industries, LP.
c. emedco.
d. Grafoplast Wire Markers.

e. LEM Products Inc.
f. Marking Services, Inc.
g. Panduit Corp.
h. Seton Identification Products.

C. Write-On Tags:

1. Manufacturers: Subject to compliance with requirements, available manufacturers offering products that may be incorporated into the Work include, but are not limited to the following:

   a. Carlton Industries, LP.
   b. LEM Products Inc.
   c. Seton Identification Products.
2. Polyester Tags: 0.010 inch thick, with corrosion-resistant grommet and cable tie for attachment to raceway, conductor, or cable.
3. Marker for Tags: Machine-printed, permanent, waterproof, black ink marker recommended by printer manufacturer.

2.7 Signs

A. Baked-Enamel Signs:

1. Preprinted aluminum signs, punched or drilled for fasteners, with colors, legend, and size required for application.
2. 1/4-inch grommets in corners for mounting.
3. Nominal Size: 7 by 10 inches.

4. Manufacturers: Subject to compliance with requirements, available manufacturers offering products that may be incorporated into the Work include, but are not limited to the following:

   a. Carlton Industries, LP.
   b. Champion America.
   c. emedco.
   d. Marking Services, Inc.

B. Metal-Backed Butyrate Signs:

1. Weather-resistant, nonfading, preprinted, cellulose-acetate butyrate signs, with 0.0396-inch galvanized-steel backing and with colors, legend, and size required for application.
2. 1/4-inch grommets in corners for mounting.
3. Nominal Size: 10 by 14 inches.

4. Manufacturers: Subject to compliance with requirements, available manufacturers offering products that may be incorporated into the Work include, but are not limited to the following:

a. Brady Corporation.
b. Champion America.
c. emedco.
d. Marking Services, Inc.

C. Laminated Acrylic or Melamine Plastic Signs:

1. Engraved legend.
2. Thickness:

a. For signs up to 20 sq. inches, minimum 1/16-inch-
b. For signs larger than 20 sq. inches, 1/8 inch thick.
c. Engraved legend with black letters on white face.
d. Punched or drilled for mechanical fasteners.
e. Framed with mitered acrylic molding and arranged for attachment at applicable equipment.

3. Manufacturers: Subject to compliance with requirements, available manufacturers offering products that may be incorporated into the Work include, but are not limited to the following:

a. Brady Corporation.
b. Carlton Industries, LP.
c. emedco.
d. Marking Services, Inc.

2.8 CABLE TIES

A. Manufacturers: Subject to compliance with requirements, available manufacturers offering products that may be incorporated into the Work include, but are not limited to the following:

1. Ideal Industries, Inc.
2. Marking Services, Inc.
3. Panduit Corp.

B. General-Purpose Cable Ties: Fungus inert, self-extinguishing, one piece, self-locking, Type 6/6 nylon.

1. Minimum Width: 3/16 inch.
2. Tensile Strength at 73 deg F according to ASTM D 638: 12,000 psi.
3. Temperature Range: Minus 40 to plus 185 deg F.
4. Color: Black, except where used for color-coding.

C. UV-Stabilized Cable Ties: Fungus inert, designed for continuous exposure to exterior sunlight, self-extinguishing, one piece, self-locking, Type 6/6 nylon.

1. Minimum Width: 3/16 inch.
2. Tensile Strength at 73 deg F according to ASTM D 638: 12,000 psi.

3. Temperature Range: Minus 40 to plus 185 deg F.
4. Color: Black.

D. Plenum-Rated Cable Ties: Self-extinguishing, UV stabilized, one piece, self-locking.

1. Minimum Width: 3/16 inch.
2. Tensile Strength at 73 deg F according to ASTM D 638: 7000 psi.
3. UL 94 Flame Rating: 94V-0.
4. Temperature Range: Minus 50 to plus 284 deg F.
5. Color: Black.

## 2.9 MISCELLANEOUS IDENTIFICATION PRODUCTS

A. Paint: Comply with requirements in painting Sections for paint materials and application requirements. Retain paint system applicable for surface material and location (exterior or interior).

B. Fasteners for Labels and Signs: Self-tapping, stainless-steel screws or stainless-steel machine screws with nuts and flat and lock washers.

# PART 3 - EXECUTION

## 3.1 PREPARATION

A. Self-Adhesive Identification Products: Before applying electrical identification products, clean substrates of substances that could impair bond, using materials and methods recommended by manufacturer of identification product.

## 3.2 INSTALLATION

A. Verify and coordinate identification names, abbreviations, colors, and other features with requirements in other Sections requiring identification applications, Drawings, Shop Drawings, manufacturer's wiring diagrams, and operation and maintenance manual. Use consistent designations throughout Project.

B. Install identifying devices before installing acoustical ceilings and similar concealment.

C. Verify identity of each item before installing identification products.

D. Install identification materials and devices at locations for most convenient viewing without interference with operation and maintenance of equipment. Install access doors or panels to provide view of identifying devices.

E. Apply identification devices to surfaces that require finish after completing finish work.

F. Attach signs and plastic labels that are not self-adhesive type with mechanical fasteners appropriate to the location and substrate.

G. Attach plastic raceway and cable labels that are not self-adhesive type with clear vinyl tape, with adhesive appropriate to the location and substrate.

H. Cable Ties: For attaching tags. Use general-purpose type, except as listed below:

1. Outdoors: UV-stabilized nylon.
2. In Spaces Handling Environmental Air: Plenum rated.

I. Painted Identification: Comply with requirements in painting Sections for surface preparation and paint application.

J. Aluminum Wraparound Marker Labels and Metal Tags: Secure tight to surface of conductor or cable at a location with high visibility and accessibility.

K. System Identification Color-Coding Bands for Raceways and Cables: Each color-coding band shall completely encircle cable or conduit. Place adjacent bands of two-color markings in contact, side by side. Locate bands at changes in direction, at penetrations of walls and floors, at 50-foot maximum intervals in straight runs, and at 25-foot maximum intervals in congested areas.

L. During backfilling of trenches, install continuous underground-line warning tape directly above cable or raceway at 6 to 8 inches below finished grade. Use multiple tapes where width of multiple lines installed in a common trench or concrete envelope exceeds 16 inches overall.

## 3.3 IDENTIFICATION SCHEDULE

A. Accessible Raceways, Armored and Metal-Clad Cables, More Than 600 V: Snap-around labels. Install labels at 10-foot maximum intervals.

B. Accessible Raceways and Metal-Clad Cables, 600 V or Less, for Service, Feeder, and Branch Circuits, More Than 30 A and 120 V to Ground: Identify with self-adhesive vinyl label. Install labels at 30-foot maximum intervals.

C. Accessible Raceways and Cables within Buildings: Identify the covers of each junction and pull box of the following systems with self-adhesive vinyl labels containing the wiring system legend and system voltage. System legends shall be as follows:

1. "STANDBY POWER."
2. "POWER."
3. "UPS."

D. Power-Circuit Conductor Identification, 600 V or Less: For conductors in vaults, pull and junction boxes, manholes, and handholes, use color-coding conductor tape to identify the phase.

1. Color-Coding for Phase- and Voltage-Level Identification, 600 V or Less: Use colors listed below for ungrounded service, feeder and branch-circuit conductors.

a. Color shall be factory applied or field applied for sizes larger than No. 8 AWG if authorities having jurisdiction permit.
b. Colors for 208/120-V Circuits:

   1) Phase A: Black.
   2) Phase B: Red.
   3) Phase C: Blue.

c. Colors for 480/277-V Circuits:

   1) Phase A: Brown.
   2) Phase B: Orange.
   3) Phase C: Yellow.

d. Field-Applied, Color-Coding Conductor Tape: Apply in half-lapped turns for a minimum distance of 6 inches from terminal points and in boxes where splices or taps are made. Apply last two turns of tape with no tension to prevent possible unwinding. Locate bands to avoid obscuring factory cable markings.

E. Power-Circuit Conductor Identification, More Than 600 V: For conductors in vaults, pull and junction boxes, manholes, and handholes, use nonmetallic preprinted tags colored and marked to indicate phase, and a separate tag with the circuit designation.

F. Install instructional sign, including the color code for grounded and ungrounded conductors using adhesive-film-type labels.

G. Control-Circuit Conductor Identification: For conductors and cables in pull and junction boxes, manholes, and handholes, use self-adhesive, self-laminating polyester labels with the conductor or cable designation, origin, and destination.

H. Control-Circuit Conductor Termination Identification: For identification at terminations, provide self-adhesive, self-laminating polyester labels with the conductor designation.

I. Conductors To Be Extended in the Future: Attach marker tape to conductors and list source.

J. Auxiliary Electrical Systems Conductor Identification: Identify field-installed alarm, control, and signal connections.

   1. Identify conductors, cables, and terminals in enclosures and at junctions, terminals, and pull points. Identify by system and circuit designation.
   2. Use system of marker-tape designations that is uniform and consistent with system used by manufacturer for factory-installed connections.
   3. Coordinate identification with Project Drawings, manufacturer's wiring diagrams, and operation and maintenance manual.

K. Locations of Underground Lines: Identify with underground-line warning tape for power, lighting, communication, and control wiring and optical-fiber cable.

1. Limit use of underground-line warning tape to direct-buried cables.
2. Install underground-line warning tape for direct-buried cables and cables in raceways.

L. Workspace Indication: Install floor marking tape to show working clearances in the direction of access to live parts. Workspace shall comply with NFPA 70 and 29 CFR 1926.403 unless otherwise indicated. Do not install at flush-mounted panelboards and similar equipment in finished spaces.

M. Warning Labels for Indoor Cabinets, Boxes, and Enclosures for Power and Lighting: Metal-backed, butyrate warning signs.

1. Comply with 29 CFR 1910.145.
2. Identify system voltage with black letters on an orange background.
3. Apply to exterior of door, cover, or other access.
4. For equipment with multiple power or control sources, apply to door or cover of equipment, including, but not limited to, the following:

   a. Power-transfer switches.
   b. Controls with external control power connections.

N. Operating Instruction Signs: Install instruction signs to facilitate proper operation and maintenance of electrical systems and items to which they connect. Install instruction signs with approved legend where instructions are needed for system or equipment operation.

O. Emergency Operating Instruction Signs: Install instruction signs with white legend on a red background with minimum 3/8-inch-high letters for emergency instructions at equipment used for power transfer.

P. Equipment Identification Labels: On each unit of equipment, install unique designation label that is consistent with wiring diagrams, schedules, and operation and maintenance manual. Apply labels to disconnect switches and protection equipment, central or master units, control panels, control stations, terminal cabinets, and racks of each system. Systems include power, lighting, control, communication, signal, monitoring, and alarm unless equipment is provided with its own identification.

1. Labeling Instructions:

   a. Indoor Equipment: Engraved, laminated acrylic or melamine plastic label, punched or drilled for mechanical fasteners. Unless otherwise indicated, provide a single line of text with 1/2-inch-high letters on 1-1/2-inch-high label; where two lines of text are required, use labels 2 inches high.
   b. Outdoor Equipment: Engraved, laminated acrylic or melamine label.
   c. Elevated Components: Increase sizes of labels and letters to those appropriate for viewing from the floor.
   d. Unless labels are provided with self-adhesive means of attachment, fasten them with appropriate mechanical fasteners that do not change the NEMA or NRTL rating of the enclosure.

2. Equipment To Be Labeled:

   a. Panelboards: Typewritten directory of circuits in the location provided by panelboard manufacturer. Panelboard identification shall be in the form of a engraved, laminated acrylic or melamine label.
   b. Enclosures and electrical cabinets.
   c. Access doors and panels for concealed electrical items.
   d. Switchboards.
   e. Transformers: Label that includes tag designation shown on Drawings for the transformer, feeder, and panelboards or equipment supplied by the secondary.
   f. Emergency system boxes and enclosures.
   g. Enclosed switches.
   h. Enclosed circuit breakers.
   i. Enclosed controllers.
   j. Variable-speed controllers.
   k. Push-button stations.
   l. Power-transfer equipment.
   m. Contactors.
   n. Remote-controlled switches, dimmer modules, and control devices.
   o. Battery-inverter units.
   p. Power-generating units.
   q. Monitoring and control equipment.
   r. UPS equipment.

**END OF SECTION**

# SECTION 260923

# LIGHTING CONTROL DEVICES

## PART 1 - GENERAL

### 1.1 RELATED DOCUMENTS

A. Drawings and general provisions of the Contract, including General and Supplementary Conditions and Division 01 Specification Sections, apply to this Section.

### 1.2 SUMMARY

A. Section Includes:

1. Time switches.
2. Photoelectric switches.
3. Standalone daylight-harvesting switching and dimming controls.
4. Indoor occupancy and vacancy sensors.
5. Switchbox-mounted occupancy sensors.
6. Digital timer light switches.
7. High-bay occupancy sensors.
8. Extreme temperature occupancy sensors.
9. Outdoor motion sensors.
10. Lighting contactors.
11. Emergency shunt relays.

B. Related Requirements:

1. Section 262726 "Wiring Devices" for wall-box dimmers, non-networkable wall-switch occupancy sensors, and manual light switches.

### 1.3 ACTION SUBMITTALS

A. Product Data: For each type of product.

B. Shop Drawings:

1. Show installation details for the following:

   a. Occupancy sensors.
   b. Vacancy sensors.

2. Interconnection diagrams showing field-installed wiring.

3. Include diagrams for power, signal, and control wiring.

1.4 INFORMATIONAL SUBMITTALS

A. Field quality-control reports.

B. Sample Warranty: For manufacturer's warranties.

1.5 CLOSEOUT SUBMITTALS

A. Operation and Maintenance Data: For each type of lighting control device to include in operation and maintenance manuals.

B. Software and Firmware Operational Documentation:

1. Software operating and upgrade manuals.
2. Program Software Backup: On USB media. Provide names, versions, and website addresses for locations of installed software.
3. Device address list.
4. Printout of software application and graphic screens.

1.6 WARRANTY

A. Manufacturer's Warranty: Manufacturer and Installer agree to repair or replace lighting control devices that fail(s) in materials or workmanship within specified warranty period.

1. Failures include, but are not limited to, the following:

a. Faulty operation of lighting control software.
b. Faulty operation of lighting control devices.

2. Warranty Period: Two year(s) from date of Substantial Completion.

PART 2 - PRODUCTS

2.1 INDOOR OCCUPANCYAND VACANCY SENSORS

A. Manufacturers: Subject to compliance with requirements, available manufacturers offering products that may be incorporated into the Work include, but are not limited to the following:

1. Acuity Brands.
2. Cooper Industries, Inc.
3. Leviton Manufacturing Co., Inc.

B. General Requirements for Sensors:

1. Wall or Ceiling-mounted, solid-state indoor occupancy and vacancy sensors.
2. Dual technology.
3. Integrated power pack.
4. Hardwired connection to switch ; and BAS and lighting control system.
5. Listed and labeled as defined in NFPA 70, by a qualified testing agency, and marked for intended location and application.
6. Operation:
   a. Vacancy Sensor: Unless otherwise indicated, lights are manually turned on and sensor turns lights off when the room is unoccupied; with a time delay for turning lights off, adjustable over a minimum range of 1 to 15 minutes.

7. Sensor Output: Contacts rated to operate the connected relay, complying with UL 773A Sensor is powered from the power pack Wireless.
8. Power: Line voltage.
9. Power Pack: Dry contacts rated for 20-A LED load at 120- and 277-V ac, for 13-A tungsten at 120-V ac, and for 1 hp at 120-V ac. Sensor has 24-V dc, 150-mA, Class 2 power source, as defined by NFPA 70.
10. Mounting:

    a. Sensor: Suitable for mounting in any position on a standard outlet box.
    b. Relay: Externally mounted through a 1/2-inch knockout in a standard electrical enclosure.
    c. Time-Delay and Sensitivity Adjustments: Recessed and concealed behind hinged door.

11. Indicator: Digital display, to show when motion is detected during testing and normal operation of sensor.
12. Bypass Switch: Override the "on" function in case of sensor failure.
13. Automatic Light-Level Sensor: Adjustable from 2 to 200 fc; turn lights off when selected lighting level is present.

C. Dual-Technology Type: Wall or Ceiling mounted; detect occupants in coverage area using PIR and ultrasonic detection methods. The particular technology or combination of technologies that control on-off functions is selectable in the field by operating controls on unit.

1. Sensitivity Adjustment: Separate for each sensing technology.
2. Detector Sensitivity: Detect occurrences of 6-inch- minimum movement of any portion of a human body that presents a target of not less than 36 sq. in., and detect a person of average size and weight moving not less than 12 inches in either a horizontal or a vertical manner at an approximate speed of 12 inches/s.
3. Detection Coverage (Standard Room): Detect occupancy anywhere within a circular area of 1000 sq. ft. when mounted on a 96-inch- high ceiling.
4. Detection Coverage (Room, Wall Mounted): Detect occupancy anywhere within a 180-degree pattern centered on the sensor over an area of 2000 square feet when mounted48 inches above finished floor.

## 2.2 SWITCHBOX-MOUNTED OCCUPANCY SENSORS

A. Manufacturers: Subject to compliance with requirements, available manufacturers offering products that may be incorporated into the Work include, but are not limited to the following:

1. Acuity Brands.
2. Cooper Industries, Inc.
3. Leviton Manufacturing Co., Inc.

B. General Requirements for Sensors: Automatic-wall-switch occupancy sensor with manual on-off switch, suitable for mounting in a single gang switchbox, with provisions for connection to BAS using hardwired connection.

1. Listed and labeled as defined in NFPA 70, by a qualified testing agency, and marked for intended location and application.
2. Occupancy Sensor Operation: Unless otherwise indicated, turn lights on when coverage area is occupied, and turn lights off when unoccupied; with a time delay for turning lights off, adjustable over a minimum range of 1 to 15 minutes.
3. Operating Ambient Conditions: Dry interior conditions, 32 to 120 deg F.
4. Switch Rating: Not less than 800-VA LED load at 120 V, 1200-VA LED load at 277 V, and 800-W incandescent.

C. Wall-Switch Sensor Tag WS1:

1. Standard Range: 180-degree field of view, field adjustable from 180 to 40 degrees; with a minimum coverage area of 2100 sq. ft.
2. Sensing Technology: Dual technology - PIR and ultrasonic.
3. Switch Type: SP, manual "on," automatic "off" or SP, field-selectable automatic "on," or manual "on," automatic "off."
4. Capable of controlling load in three-way application.
5. Voltage: Match the circuit voltage.
6. Ambient-Light Override: Concealed, field-adjustable, light-level sensor from 10 to 150 fc. The switch prevents the lights from turning on when the light level is higher than the set point of the sensor.
7. Concealed, field, "off" time-delay selector at up to 30 minutes.
8. Concealed, "off" time-delay selector at 30 seconds and 5, 10, and 20 minutes.
9. Adaptive Technology: Self-adjusting circuitry detects and memorizes usage patterns of the space and helps eliminate false "off" switching.
10. Color: as specified by architect.
11. Faceplate: Color matched to switch.

## 2.3 LIGHTING CONTACTORS

A. Manufacturers: Subject to compliance with requirements, available manufacturers offering products that may be incorporated into the Work include, but are not limited to the following:

1. ASCO Power Technologies, LP; a business of Emerson Network Power.
2. Eaton.
3. General Electric Company.
4. Square D.

B. Description: Electrically operated and electrically held, combination-type lighting contactors with nonfused disconnect, complying with NEMA ICS 2 and UL 508.

1. Current Rating for Switching: Listing or rating consistent with type of load served, including tungsten filament, inductive, and high-inrush ballast (ballast with 15 percent or less THD of normal load current).
2. Fault Current Withstand Rating: Equal to or exceeding the available fault current at the point of installation.
3. Enclosure: Comply with NEMA 250.
4. Provide with control and pilot devices as indicated on Drawings, matching the NEMA type specified for the enclosure.

## 2.4 EMERGENCY SHUNT RELAY

A. Manufacturers: Subject to compliance with requirements, available manufacturers offering products that may be incorporated into the Work include, but are not limited to the following:

1. Lighting Control and Design.
2. WattStopper; a Legrand® Group brand.

B. Description: NC, electrically held relay, arranged for wiring in parallel with manual or automatic switching contacts; complying with UL 924.

1. Coil Rating: as specified on drawings.

## 2.5 CONDUCTORS AND CABLES

A. Power Wiring to Supply Side of Remote-Control Power Sources: Not smaller than No. 12 AWG. Comply with requirements in Section 260519 "Low-Voltage Electrical Power Conductors and Cables."

B. Classes 2 and 3 Control Cable: Multiconductor cable with stranded-copper conductors not smaller than No. 18 AWG. Comply with requirements in Section 260519 "Low-Voltage Electrical Power Conductors and Cables."

C. Class 1 Control Cable: Multiconductor cable with stranded-copper conductors not smaller than No. 14 AWG. Comply with requirements in Section 260519 "Low-Voltage Electrical Power Conductors and Cables."

PART 3 - EXECUTION

3.1 EXAMINATION

A. Examine lighting control devices before installation. Reject lighting control devices that are wet, moisture damaged, or mold damaged.

B. Examine walls and ceilings for suitable conditions where lighting control devices will be installed.

C. Proceed with installation only after unsatisfactory conditions have been corrected.

3.2 SENSOR INSTALLATION

A. Comply with NECA 1.

B. Coordinate layout and installation of ceiling-mounted devices with other construction that penetrates ceilings or is supported by them, including light fixtures, HVAC equipment, smoke detectors, fire-suppression systems, and partition assemblies.

C. Install and aim sensors in locations to achieve not less than 90-percent coverage of areas indicated. Do not exceed coverage limits specified in manufacturer's written instructions.

3.3 CONTACTOR INSTALLATION

A. Comply with NECA 1.

B. Mount electrically held lighting contactors with elastomeric isolator pads to eliminate structure-borne vibration unless contactors are installed in an enclosure with factory-installed vibration isolators.

3.4 WIRING INSTALLATION

A. Comply with NECA 1.

B. Wiring Method: Comply with Section 260519 "Low-Voltage Electrical Power Conductors and Cables." Minimum conduit size is 3/4 inch.

C. Wiring within Enclosures: Comply with NECA 1. Separate power-limited and nonpower-limited conductors according to conductor manufacturer's written instructions.

D. Size conductors according to lighting control device manufacturer's written instructions unless otherwise indicated.

E. Splices, Taps, and Terminations: Make connections only on numbered terminal strips in junction, pull, and outlet boxes; terminal cabinets; and equipment enclosures.

## 3.5 IDENTIFICATION

A. Identify components and power and control wiring according to Section 260553 "Identification for Electrical Systems."

1. Identify controlled circuits in lighting contactors.
2. Identify circuits or luminaires controlled by photoelectric and occupancy sensors at each sensor.

B. Label time switches and contactors with a unique designation.

## 3.6 FIELD QUALITY CONTROL

A. Perform the following tests and inspections with the assistance of a factory-authorized service representative:

1. Operational Test: After installing time switches and sensors, and after electrical circuitry has been energized, start units to confirm proper unit operation.
2. Test and adjust controls and safeties. Replace damaged and malfunctioning controls and equipment.

B. Lighting control devices will be considered defective if they do not pass tests and inspections.

C. Prepare test and inspection reports.

## 3.7 ADJUSTING

A. Occupancy Adjustments: When requested within 12 months from date of Substantial Completion, provide on-site assistance in adjusting lighting control devices to suit actual occupied conditions. Provide up to two visits to Project during other-than-normal occupancy hours for this purpose.

1. For occupancy and motion sensors, verify operation at outer limits of detector range. Set time delay to suit Owner's operations.
2. For daylighting controls, adjust set points and deadband controls to suit Owner's operations.
3. Align high-bay occupancy sensors using manufacturer's laser aiming tool.

## 3.8 SOFTWARE SERVICE AGREEMENT

A. Technical Support: Beginning at Substantial Completion, service agreement shall include software support for two years.

B. Upgrade Service: At Substantial Completion, update software to latest version. Install and program software upgrades that become available within two years from date of Substantial Completion. Upgrading software shall include operating system and new or revised licenses for using software.

1. Upgrade Notice: At least 30 days to allow Owner to schedule and access the system and to upgrade computer equipment if necessary.

## 3.9 DEMONSTRATION

A. Coordinate demonstration of products specified in this Section with demonstration requirements for low-voltage, programmable lighting control systems specified in Section 260943.16 "Addressable-Luminaire Lighting Controls" and Section 260943.23 "Relay-Based Lighting Controls."

B. Train Owner's maintenance personnel to adjust, operate, and maintain lighting control devices.

**END OF SECTION**

# SECTION 262413

# SWITCHBOARDS

## PART 1 - GENERAL

### 1.1 RELATED DOCUMENTS

A. Drawings and general provisions of the Contract, including General and Supplementary Conditions and Division 01 Specification Sections, apply to this Section.

### 1.2 SUMMARY

A. Section Includes:

1. Service and distribution switchboards rated 600 V and less.
2. Surge protection devices.
3. Disconnecting and overcurrent protective devices.
4. Instrumentation.
5. Control power.
6. Accessory components and features.
7. Identification.

### 1.3 ACTION SUBMITTALS

A. Product Data: For each switchboard, overcurrent protective device, surge protection device, ground-fault protector, accessory, and component.

1. Include dimensions and manufacturers' technical data on features, performance, electrical characteristics, ratings, accessories, and finishes.

B. Shop Drawings: For each switchboard and related equipment.

1. Include dimensioned plans, elevations, sections, and details, including required clearances and service space around equipment. Show tabulations of installed devices, equipment features, and ratings.
2. Detail enclosure types for types other than NEMA 250, Type 1.
3. Detail bus configuration, current, and voltage ratings.
4. Detail short-circuit current rating of switchboards and overcurrent protective devices.
5. Include descriptive documentation of optional barriers specified for electrical insulation and isolation.

6. Detail utility company's metering provisions with indication of approval by utility company.
7. Include evidence of NRTL listing for series rating of installed devices.
8. Detail features, characteristics, ratings, and factory settings of individual overcurrent protective devices and auxiliary components.
9. Include diagram and details of proposed mimic bus.
10. Include schematic and wiring diagrams for power, signal, and control wiring.

C. Samples: Representative portion of mimic bus with specified material and finish, for color selection.

## 1.4 INFORMATIONAL SUBMITTALS

A. Qualification Data: For Installer.

B. Field Quality-Control Reports:

1. Test procedures used.
2. Test results that comply with requirements.
3. Results of failed tests and corrective action taken to achieve test results that comply with requirements.

## 1.5 CLOSEOUT SUBMITTALS

A. Operation and Maintenance Data: For switchboards and components to include in emergency, operation, and maintenance manuals.

1. In addition to items specified in Section 017823 "Operation and Maintenance Data," include the following:

a. Routine maintenance requirements for switchboards and all installed components.
b. Manufacturer's written instructions for testing and adjusting overcurrent protective devices.
c. Time-current coordination curves for each type and rating of overcurrent protective device included in switchboards. Submit on translucent log-log graft paper; include selectable ranges for each type of overcurrent protective device.

## 1.6 MAINTENANCE MATERIAL SUBMITTALS

A. Furnish extra materials that match products installed and that are packaged with protective covering for storage and identified with labels describing contents.

1. Potential Transformer Fuses: Equal to 10 percent of quantity installed for each size and type but no fewer than two of each size and type.

2. Control-Power Fuses: Equal to 10 percent of quantity installed for each size and type, but no fewer than two of each size and type.
3. Fuses for Fused Switches: Equal to 10 percent of quantity installed for each size and type but no fewer than three of each size and type.
4. Fuses for Fused Power-Circuit Devices: Equal to 10 percent of quantity installed for each size and type but no fewer than three of each size and type.
5. Indicating Lights: Equal to 10 percent of quantity installed for each size and type but no less than one of each size and type.

## 1.7 QUALITY ASSURANCE

A. Installer Qualifications: An employer of workers qualified as defined in NEMA PB 2.1 and trained in electrical safety as required by NFPA 70E.

## 1.8 DELIVERY, STORAGE, AND HANDLING

A. Deliver switchboards in sections or lengths that can be moved past obstructions in delivery path.

B. Remove loose packing and flammable materials from inside switchboards and install temporary electric heating (250 W per section) to prevent condensation.

C. Handle and prepare switchboards for installation according to NEMA PB 2.1.

## 1.9 FIELD CONDITIONS

A. Installation Pathway: Remove and replace access fencing, doors, lift-out panels, and structures to provide pathway for moving switchboards into place.

B. Environmental Limitations:

1. Do not deliver or install switchboards until spaces are enclosed and weathertight, wet work in spaces is complete and dry, work above switchboards is complete, and HVAC system is operating and maintaining ambient temperature and humidity conditions at occupancy levels during the remainder of the construction period.
2. Rate equipment for continuous operation under the following conditions unless otherwise indicated:

    a. Ambient Temperature: Not exceeding 104 deg F (40 deg C).
    b. Altitude: Not exceeding 6600 feet (2000 m).

C. Interruption of Existing Electric Service: Do not interrupt electric service to facilities occupied by Owner or others unless permitted under the following conditions and then only after arranging to provide temporary electric service according to requirements indicated:

1. Notify Owner no fewer than seven days in advance of proposed interruption of electric service.
2. Indicate method of providing temporary electric service.
3. Do not proceed with interruption of electric service without Owner's written permission.
4. Comply with NFPA 70E.

## 1.10 COORDINATION

A. Coordinate layout and installation of switchboards and components with other construction that penetrates walls or is supported by them, including electrical and other types of equipment, raceways, piping, encumbrances to workspace clearance requirements, and adjacent surfaces. Maintain required workspace clearances and required clearances for equipment access doors and panels.

B. Coordinate sizes and locations of concrete bases with actual equipment provided. Cast anchor-bolt inserts into bases. Concrete, reinforcement, and formwork requirements are specified with concrete.

## 1.11 WARRANTY

A. Manufacturer's Warranty: Manufacturer agrees to repair or replace switchboard enclosures, buswork, overcurrent protective devices, accessories, and factory installed interconnection wiring that fail in materials or workmanship within specified warranty period.

1. Warranty Period: Three years from date of Substantial Completion.

B. Manufacturer's Warranty: Manufacturer's agrees to repair or replace surge protection devices that fail in materials or workmanship within specified warranty period.

1. Warranty Period: Five years from date of Substantial Completion.

# PART 2 - PRODUCTS

## 2.1 SWITCHBOARDS

A. Manufacturers: Subject to compliance with requirements, available manufacturers offering products that may be incorporated into the Work include, but are not limited to the following:

1. Eaton.
2. General Electric Company.
3. Siemens Power Transmission & Distribution, Inc.
4. Square D; by Schneider Electric.

B. Source Limitations: Obtain switchboards, overcurrent protective devices, components, and accessories from single source from single manufacturer.

C. Product Selection for Restricted Space: Drawings indicate maximum dimensions for switchboards including clearances between switchboards and adjacent surfaces and other items. Comply with indicated maximum dimensions.

D. Electrical Components, Devices, and Accessories: Listed and labeled as defined in NFPA 70, by a qualified testing agency, and marked for intended location and application.

E. Comply with NEMA PB 2.

F. Comply with NFPA 70.

G. Comply with UL 891.

H. Front-Connected, Front-Accessible Switchboards:

1. Main Devices: Fixed, individually mounted.
2. Branch Devices: Panel mounted.
3. Sections front and rear aligned.

I. Nominal System Voltage: 208Y/120 V.

J. Main-Bus Continuous: See drawings for ampere rating.

K. Indoor Enclosures: Steel, NEMA 250, Type 1.

L. Enclosure Finish for Indoor Units: Factory-applied finish in manufacturer's standard gray finish over a rust-inhibiting primer on treated metal surface.

M. Barriers: Between adjacent switchboard sections.

N. Insulation and isolation for main bus of main section and main and vertical buses of feeder sections.

O. Service Entrance Rating: Switchboards intended for use as service entrance equipment shall contain from one to six service disconnecting means with overcurrent protection, a neutral bus with disconnecting link, a grounding electrode conductor terminal, and a main bonding jumper.

P. Utility Metering Compartment: Barrier compartment and section complying with utility company's requirements; hinged sealable door; buses provisioned for mounting utility company's current transformers and potential transformers or potential taps as required by utility company. If separate vertical section is required for utility metering, match and align with basic switchboard. Provide service entrance label and necessary applicable service entrance features.

Q. Customer Metering Compartment: A separate customer metering compartment and section with front hinged door, for indicated metering, and current transformers for each meter. Current transformer secondary wiring shall be terminated on shorting-type terminal blocks.

R. Bus Transition and Incoming Pull Sections: Matched and aligned with basic switchboard.

S. Hinged Front Panels: Allow access to switch, metering, accessory, and blank compartments.

T. Buses and Connections: Three phase, four wire unless otherwise indicated.

1. Provide phase bus arrangement A, B, C from front to back, top to bottom, and left to right when viewed from the front of the switchboard.
2. Phase- and Neutral-Bus Material: Hard-drawn copper of 98 percent conductivity, silver-plated.
3. Copper feeder switch line connections.
4. Ground Bus: 1/4-by-2-inch- (6-by-50-mm-) hard-drawn copper of 98 percent conductivity, equipped with mechanical connectors for feeder and branch-circuit ground conductors.
5. Main-Phase Buses and Equipment-Ground Buses: Uniform capacity for entire length of switchboard's main and distribution sections. Provide for future extensions from both ends.
6. Disconnect Links:

    a. Isolate neutral bus from incoming neutral conductors.
    b. Bond neutral bus to equipment-ground bus for switchboards utilized as service equipment or separately derived systems.
7. Neutral Buses: 100 percent of the ampacity of phase buses unless otherwise indicated, equipped with mechanical connectors for outgoing circuit neutral cables. Brace bus extensions for busway feeder neutral bus.
8. Isolation Barrier Access Provisions: Permit checking of bus-bolt tightness.

U. Future Devices: Equip compartments with mounting brackets, supports, bus connections, and appurtenances at full rating of switch compartment.

## 2.2 SURGE PROTECTION DEVICES

A. Manufacturers: Subject to compliance with requirements, available manufacturers offering products that may be incorporated into the Work include, but are not limited to the following:

1. Advanced Protection Technologies Inc. (APT).
2. Eaton.
3. General Electric Company.
4. Siemens Power Transmission & Distribution, Inc.
5. Square D; by Schneider Electric.

B. SPDs: Comply with UL 1449, Type 2.

C. Features and Accessories:
   1. Internal thermal protection that disconnects the SPD before damaging internal suppressor components.
   2. Indicator light display for protection status.
   3. Form-C contacts rated at 5 A and 250-V ac, one normally open and one normally closed, for remote monitoring of protection status. Contacts shall reverse on failure of any surge diversion module or on opening of any current-limiting device. Coordinate with building power monitoring and control system.
   4. Surge counter.

D. Peak Surge Current Rating: The minimum single-pulse surge current withstand rating per phase shall not be less than 300 kA. The peak surge current rating shall be the arithmetic sum of the ratings of the individual MOVs in a given mode.

E. Protection modes and UL 1449 VPR for grounded wye circuits with 208Y/120 V, three-phase, four-wire circuits shall not exceed the following:

   1. Line to Neutral: 700 V for 208Y/120 V.
   2. Line to Ground: 1200 V for 208Y/120 V.
   3. Line to Line: 1000 V for 208Y/120 V.

F. SCCR: Equal or exceed 100 kA.

G. Nominal Rating: 20 kA.

## 2.3 DISCONNECTING AND OVERCURRENT PROTECTIVE DEVICES

A. Main Service Switch - Bolted-Pressure Contact Switch: Operating mechanism uses rotary-mechanical-bolting action to produce and maintain high clamping pressure on the switch blade after it engages the stationary contacts.

   1. Manufacturers: Subject to compliance with requirements, available manufacturers offering products that may be incorporated into the Work include, but are not limited to the following:

      a. Boltswitch, Inc.
      b. Eaton.
      c. Siemens Industry, Inc.
      d. Square D.

   2. Main-Contact Interrupting Capability: Minimum of 12 times the switch current rating.

   3. Operating Mechanism: Manual handle operation to close switch; stores energy in mechanism for opening and closing.

a. Mechanical Trip: Operation of mechanical lever, push button, or other device causes switch to open.

4. Auxiliary Switches: Factory installed, SPDT, with leads connected to terminal block, and including one set more than quantity required for functional performance indicated.
5. Service-Rated Switches: Labeled for use as service equipment.

6. Open-Fuse Trip Device: Arranged to trip switch open if a phase fuse opens.

B. Branch Devices - Molded-Case Circuit Breaker (MCCB): Comply with UL 489, with interrupting capacity to meet available fault currents.

1. Thermal-Magnetic Circuit Breakers: Inverse time-current element for low-level overloads and instantaneous magnetic trip element for short circuits. Adjustable magnetic trip setting for circuit-breaker frame sizes 250 A and larger.
2. GFCI Circuit Breakers: Single- and double-pole configurations with Class A ground-fault protection (6-mA trip).
3. Ground-Fault Equipment Protection (GFEP) Circuit Breakers: Class B ground-fault protection (30-mA trip).
4. MCCB Features and Accessories:

a. Standard frame sizes, trip ratings, and number of poles.
b. Lugs: Mechanical style, suitable for number, size, trip ratings, and conductor material.
c. Application Listing: Appropriate for application; Type SWD for switching fluorescent lighting loads; Type HID for feeding fluorescent and high-intensity discharge (HID) lighting circuits.
d. Ground-Fault Protection: Integrally mounted relay and trip unit with adjustable pickup and time-delay settings, push-to-test feature, and ground-fault indicator.
e. Zone-Selective Interlocking: Integral with electronic trip unit; for interlocking ground-fault protection function.
f. Shunt Trip: 120-V trip coil energized from separate circuit, set to trip at 55 percent of rated voltage.
g. Undervoltage Trip: Set to operate at 35 to 75 percent of rated voltage without intentional time delay.
h. Auxiliary Contacts: Two SPDT switches with "a" and "b" contacts; "a" contacts mimic circuit-breaker contacts, "b" contacts operate in reverse of circuit-breaker contacts.
i. Key Interlock Kit: Externally mounted to prohibit circuit-breaker operation; key shall be removable only when circuit breaker is in off position

C. Fused Switch: NEMA KS 1, Type HD; clips to accommodate specified fuses; lockable handle.

D. Fuses are specified in Section 262813 "Fuses."

## 2.4 INSTRUMENTATION

A. Instrument Transformers: NEMA EI 21.1, and the following:

1. Potential Transformers: NEMA EI 21.1; 120 V, 60 Hz, single secondary; disconnecting type with integral fuse mountings. Burden and accuracy shall be consistent with connected metering and relay devices.
2. Current Transformers: NEMA EI 21.1; 5 A, 60 Hz, secondary; wound type; single secondary winding and secondary shorting device. Burden and accuracy shall be consistent with connected metering and relay devices.
3. Control-Power Transformers: Dry type, mounted in separate compartments for units larger than 3 kVA.

B. Multifunction Digital-Metering Monitor: Microprocessor-based unit suitable for three- or four-wire systems and with the following features:

1. Switch-selectable digital display of the following values with maximum accuracy tolerances as indicated:

   a. Phase Currents, Each Phase: Plus or minus 0.5 percent.
   b. Phase-to-Phase Voltages, Three Phase: Plus or minus 0.5 percent.
   c. Phase-to-Neutral Voltages, Three Phase: Plus or minus 0.5 percent.
   d. Megawatts: Plus or minus 1 percent.
   e. Megavars: Plus or minus 1 percent.
   f. Power Factor: Plus or minus 1 percent.
   g. Frequency: Plus or minus 0.1 percent.
   h. Accumulated Energy, Megawatt Hours: Plus or minus 1 percent; accumulated values unaffected by power outages up to 72 hours.
   i. Megawatt Demand: Plus or minus 1 percent; demand interval programmable from five to 60 minutes.

2. Mounting: Display and control unit flush or semiflush mounted in instrument compartment door.

## 2.5 CONTROL POWER

A. Control Circuits: 120-V ac, supplied through secondary disconnecting devices from control-power transformer.

## 2.6 IDENTIFICATION

A. Service Equipment Label: NRTL labeled for use as service equipment for switchboards with one or more service disconnecting and overcurrent protective devices.

PART 3 - EXECUTION

3.1 EXAMINATION

A. Receive, inspect, handle, and store switchboards according to NEMA PB 2.1.

1. Lift or move panelboards with spreader bars and manufacturer-supplied lifting straps following manufacturer's instructions.
2. Use rollers, slings, or other manufacturer-approved methods if lifting straps are not furnished.
3. Protect from moisture, dust, dirt, and debris during storage and installation.
4. Install temporary heating during storage per manufacturer's instructions.

B. Examine switchboards before installation. Reject switchboards that are moisture damaged or physically damaged.

C. Examine elements and surfaces to receive switchboards for compliance with installation tolerances and other conditions affecting performance of the Work or that affect the performance of the equipment.

D. Proceed with installation only after unsatisfactory conditions have been corrected.

3.2 INSTALLATION

A. Install switchboards and accessories according to NEMA PB 2.1.

B. Equipment Mounting: Install switchboards on concrete base, 4-inch (100-mm) nominal thickness. Comply with requirements for concrete base specified in Section 033000 "Cast-in-Place Concrete."

1. Install conduits entering underneath the switchboard, entering under the vertical section where the conductors will terminate. Install with couplings flush with the concrete base. Extend 2 inches (50-mm) above concrete base after switchboard is anchored in place.
2. Install dowel rods to connect concrete base to concrete floor. Unless otherwise indicated, install dowel rods on 18-inch (450-mm) centers around the full perimeter of concrete base.
3. For supported equipment, install epoxy-coated anchor bolts that extend through concrete base and anchor into structural concrete floor.
4. Place and secure anchorage devices. Use setting drawings, templates, diagrams, instructions, and directions furnished with items to be embedded.
5. Install anchor bolts to elevations required for proper attachment to switchboards.
6. Anchor switchboard to building structure at the top of the switchboard if required or recommended by the manufacturer.

C. Temporary Lifting Provisions: Remove temporary lifting eyes, channels, straps and brackets, and temporary blocking of moving parts from switchboard units and components.

D. Install filler plates in unused spaces of panel-mounted sections.

E. Install overcurrent protective devices, surge protection devices, and instrumentation.

F. Comply with NECA 1.

## 3.3 CONNECTIONS

A. Bond conduits entering underneath the switchboard to the equipment ground bus with a bonding conductor sized per NFPA 70.

B. Support and secure conductors within the switchboard according to NFPA 70.

C. Extend insulated equipment grounding cable to busway ground connection and support cable at intervals in vertical run.

## 3.4 IDENTIFICATION

A. Identify field-installed conductors, interconnecting wiring, and components; provide warning signs complying with requirements for identification specified in Section 260553 "Identification for Electrical Systems."

B. Switchboard Nameplates: Label each switchboard compartment with a nameplate complying with requirements for identification specified in Section 260553 "Identification for Electrical Systems."

C. Device Nameplates: Label each disconnecting and overcurrent protective device and each meter and control device mounted in compartment doors with a nameplate complying with requirements for identification specified in Section 260553 "Identification for Electrical Systems."

## 3.5 FIELD QUALITY CONTROL

A. Manufacturer's Field Service: Engage a factory-authorized service representative to inspect, test, and adjust components, assemblies, and equipment installations, including connections.

1. Acceptance Testing:

a. Test insulation resistance for each switchboard bus, component, connecting supply, feeder, and control circuit. Open control and metering circuits within the switchboard, and remove neutral connection to surge

protection and other electronic devices prior to insulation test. Reconnect after test.

b. Test continuity of each circuit.

2. Test ground-fault protection of equipment for service equipment per NFPA 70.
3. Perform each visual and mechanical inspection and electrical test stated in NETA Acceptance Testing Specification. Certify compliance with test parameters.
4. Correct malfunctioning units on-site where possible, and retest to demonstrate compliance; otherwise, replace with new units and retest.
5. Perform the following infrared scan tests and inspections, and prepare reports:

   a. Initial Infrared Scanning: After Substantial Completion, but not more than 60 days after Final Acceptance, perform an infrared scan of each switchboard. Remove front panels so joints and connections are accessible to portable scanner.
   b. Instruments and Equipment:

      1) Use an infrared scanning device designed to measure temperature or to detect significant deviations from normal values. Provide calibration record for device.

6. Test and adjust controls, remote monitoring, and safeties. Replace damaged and malfunctioning controls and equipment.

B. Switchboard will be considered defective if it does not pass tests and inspections.

C. Prepare test and inspection reports, including a certified report that identifies switchboards included and that describes scanning results. Include notation of deficiencies detected, remedial action taken, and observations after remedial action.

## 3.6 ADJUSTING

A. Adjust moving parts and operable components to function smoothly, and lubricate as recommended by manufacturer.

## 3.7 PROTECTION

A. Temporary Heating: Apply temporary heat, to maintain temperature according to manufacturer's written instructions, until switchboard is ready to be energized and placed into service.

3.8 DEMONSTRATION

A. Engage a factory-authorized service representative to train Owner's maintenance personnel to adjust, operate, and maintain switchboards, overcurrent protective devices, instrumentation, and accessories.

**END OF SECTION**

# SECTION 262416

# PANELBOARDS

## PART 1 - GENERAL

### 1.1 RELATED DOCUMENTS

A. Drawings and general provisions of the Contract, including General and Supplementary Conditions and Division 01 Specification Sections, apply to this Section.

### 1.2 SUMMARY

A. Section Includes:

1. Distribution panelboards.
2. Lighting and appliance branch-circuit panelboards.

### 1.3 DEFINITIONS

A. ATS: Acceptance testing specification.

B. GFCI: Ground-fault circuit interrupter.

C. GFEP: Ground-fault equipment protection.

D. HID: High-intensity discharge.

E. MCCB: Molded-case circuit breaker.

F. VPR: Voltage protection rating.

### 1.4 ACTION SUBMITTALS

A. Product Data: For each type of panelboard.

1. Include materials, switching and overcurrent protective devices, accessories, and components indicated.
2. Include dimensions and manufacturers' technical data on features, performance, electrical characteristics, ratings, and finishes.

B. Shop Drawings: For each panelboard and related equipment.

1. Include dimensioned plans, elevations, sections, and details.
2. Show tabulations of installed devices with nameplates, conductor termination sizes, equipment features, and ratings.
3. Detail enclosure types including mounting and anchorage, environmental protection, knockouts, corner treatments, covers and doors, gaskets, hinges, and locks.
4. Detail bus configuration, current, and voltage ratings.
5. Short-circuit current rating of panelboards and overcurrent protective devices.
6. Detail features, characteristics, ratings, and factory settings of individual overcurrent protective devices and auxiliary components.
7. Include wiring diagrams for power, signal, and control wiring.

## 1.5 INFORMATIONAL SUBMITTALS

A. Panelboard Schedules: For installation in panelboards. Submit final versions after load balancing.

## 1.6 CLOSEOUT SUBMITTALS

A. Operation and Maintenance Data: For panelboards and components to include in emergency, operation, and maintenance manuals. In addition to items specified in Section 017823 "Operation and Maintenance Data," include the following:

1. Manufacturer's written instructions for testing and adjusting overcurrent protective devices.
2. Time-current curves, including selectable ranges for each type of overcurrent protective device that allows adjustments.

## 1.7 MAINTENANCE MATERIAL SUBMITTALS

A. Furnish extra materials that match products installed and that are packaged with protective covering for storage and identified with labels describing contents.

1. Keys: Two spares for each type of panelboard cabinet lock.
2. Circuit Breakers Including GFCI and GFEP Types: Two spares for each panelboard.

## 1.8 QUALITY ASSURANCE

A. Manufacturer Qualifications: ISO 9001 or 9002 certified.

## 1.9 DELIVERY, STORAGE, AND HANDLING

A. Remove loose packing and flammable materials from inside panelboards; install temporary electric heating (250 W per panelboard) to prevent condensation.

B. Handle and prepare panelboards for installation according to NEMA PB 1.

## 1.10 FIELD CONDITIONS

A. Environmental Limitations:

1. Do not deliver or install panelboards until spaces are enclosed and weathertight, wet work in spaces is complete and dry, work above panelboards is complete, and temporary HVAC system is operating and maintaining ambient temperature and humidity conditions at occupancy levels during the remainder of the construction period.
2. Rate equipment for continuous operation under the following conditions unless otherwise indicated:

   a. Ambient Temperature: Not exceeding 23 deg F to plus 104 deg F.
   b. Altitude: Not exceeding 6600 feet.

B. Interruption of Existing Electric Service: Do not interrupt electric service to facilities occupied by Owner or others unless permitted under the following conditions and then only after arranging to provide temporary electric service according to requirements indicated:

1. Notify Owner no fewer than seven days in advance of proposed interruption of electric service.
2. Do not proceed with interruption of electric service without Owner's written permission.
3. Comply with NFPA 70E.

## 1.11 WARRANTY

A. Manufacturer's Warranty: Manufacturer agrees to repair or replace panelboards that fail in materials or workmanship within specified warranty period.

1. Panelboard Warranty Period: 18 months from date of Substantial Completion.

PART 2 - PRODUCTS

2.1 PANELBOARDS COMMON REQUIREMENTS

A. Product Selection for Restricted Space: Drawings indicate maximum dimensions for panelboards including clearances between panelboards and adjacent surfaces and other items. Comply with indicated maximum dimensions.

B. Electrical Components, Devices, and Accessories: Listed and labeled as defined in NFPA 70, by a qualified testing agency, and marked for intended location and application.

C. Comply with NEMA PB 1.

D. Comply with NFPA 70.

E. Enclosures: Flush and Surface-mounted, dead-front cabinets.

1. Rated for environmental conditions at installed location.

a. Indoor Dry and Clean Locations: NEMA 250, Type 1.
b. Outdoor Locations: NEMA 250, Type 4.
c. Other Wet or Damp Indoor Locations: NEMA 250, Type 4.

2. Height: 84 inches maximum.
3. Hinged Front Cover: Entire front trim hinged to box and with standard door within hinged trim cover. Trims shall cover all live parts and shall have no exposed hardware.
4. Finishes:

a. Panels and Trim: Steel, factory finished immediately after cleaning and pretreating with manufacturer's standard two-coat, baked-on finish consisting of prime coat and thermosetting topcoat.
b. Back Boxes: Galvanized steel.

F. Incoming Mains:

1. Location: Convertible between top and bottom.
2. Main Breaker: Main lug interiors up to 400 amperes shall be field convertible to main breaker.

G. Phase, Neutral, and Ground Buses:

1. Material: Hard-drawn copper, 98 percent conductivity.

a. Plating shall run entire length of bus.
b. Bus shall be fully rated the entire length.

2. Interiors shall be factory assembled into a unit. Replacing switching and protective devices shall not disturb adjacent units or require removing the main bus connectors.
3. Equipment Ground Bus: Adequate for feeder and branch-circuit equipment grounding conductors; bonded to box.
4. Full-Sized Neutral: Equipped with full-capacity bonding strap for service entrance applications. Mount electrically isolated from enclosure. Do not mount neutral bus in gutter.

H. Conductor Connectors: Suitable for use with conductor material and sizes.

1. Material: Hard-drawn copper, 98 percent conductivity.
2. Terminations shall allow use of 75 deg C rated conductors without derating.
3. Size: Lugs suitable for indicated conductor sizes, with additional gutter space, if required, for larger conductors.
4. Main and Neutral Lugs: Mechanical type, with a lug on the neutral bar for each pole in the panelboard.
5. Ground Lugs and Bus-Configured Terminators: Mechanical type, with a lug on the bar for each pole in the panelboard.
6. Feed-Through Lugs: Mechanical type, suitable for use with conductor material. Locate at opposite end of bus from incoming lugs or main device.
7. Subfeed (Double) Lugs: Mechanical type suitable for use with conductor material. Locate at same end of bus as incoming lugs or main device.

I. Future Devices: Panelboards shall have mounting brackets, bus connections, filler plates, and necessary appurtenances required for future installation of devices.

1. Percentage of Future Space Capacity: 20 percent.

J. Panelboard Short-Circuit Current Rating: Fully rated to interrupt symmetrical short-circuit current available at terminals. Assembly listed by an NRTL for 100 percent interrupting capacity.

1. Panelboards and overcurrent protective devices rated 240 V or less shall have short-circuit ratings as shown on Drawings, but not less than 10,000 A rms symmetrical.
2. Panelboards and overcurrent protective devices rated above 240 V and less than 600 V shall have short-circuit ratings as shown on Drawings, but not less than 14,000 A rms symmetrical.

## 2.2 POWER PANELBOARDS

A. Manufacturers: Subject to compliance with requirements, provide products by one of the following:

1. Eaton Electrical Sector; Eaton Corporation.
2. General Electric Company; GE Energy Management - Electrical Distribution.
3. Siemens Energy.

4. Square D; by Schneider Electric.

B. Panelboards: NEMA PB 1, distribution type.

C. Doors: Secured with vault-type latch with tumbler lock; keyed alike.

1. For doors more than 36 inches high, provide two latches, keyed alike.

D. Mains: Circuit breaker or Lugs only.

E. Branch Overcurrent Protective Devices for Circuit-Breaker Frame Sizes 125 A and Smaller: Bolt-on circuit breakers.

F. Branch Overcurrent Protective Devices for Circuit-Breaker Frame Sizes Larger Than 125 A: Bolt-on circuit breakers.

## 2.3 LIGHTING AND APPLIANCE BRANCH-CIRCUIT PANELBOARDS

A. Manufacturers: Subject to compliance with requirements, provide products by one of the following:

1. Eaton Electrical Sector; Eaton Corporation.
2. General Electric Company; GE Energy Management - Electrical Distribution.
3. Siemens Energy.
4. Square D; by Schneider Electric.

B. Panelboards: NEMA PB 1, lighting and appliance branch-circuit type.

C. Mains: Circuit breaker or lugs only.

D. Branch Overcurrent Protective Devices: Bolt-on circuit breakers, replaceable without disturbing adjacent units.

E. Doors: Door-in-door construction with concealed hinges; secured with multipoint latch with tumbler lock; keyed alike. Outer door shall permit full access to the panel interior. Inner door shall permit access to breaker operating handles and labeling, but current carrying terminals and bus shall remain concealed.

## 2.4 DISCONNECTING AND OVERCURRENT PROTECTIVE DEVICES

A. Manufacturers: Subject to compliance with requirements, provide products by one of the following:

1. Eaton Electrical Sector; Eaton Corporation.
2. General Electric Company; GE Energy Management - Electrical Distribution.
3. Siemens Energy.
4. Square D; by Schneider Electric.

B. MCCB: Comply with UL 489, with interrupting capacity to meet available fault currents.

1. Thermal-Magnetic Circuit Breakers:

   a. Inverse time-current element for low-level overloads.
   b. Instantaneous magnetic trip element for short circuits.
   c. Adjustable magnetic trip setting for circuit-breaker frame sizes 250 A and larger.
2. GFCI Circuit Breakers: Single- and double-pole configurations with Class A ground-fault protection (6-mA trip).
3. GFEP Circuit Breakers: Class B ground-fault protection (30-mA trip).
4. Subfeed Circuit Breakers: Vertically mounted.
5. MCCB Features and Accessories:

   a. Standard frame sizes, trip ratings, and number of poles.
   b. Breaker handle indicates tripped status.
   c. UL listed for reverse connection without restrictive line or load ratings.
   d. Lugs: Mechanical style, suitable for number, size, trip ratings, and conductor materials.
   e. Application Listing: Appropriate for application; Type SWD for switching fluorescent lighting loads; Type HID for feeding fluorescent and HID lighting circuits.
   f. Ground-Fault Protection: Integrally mounted relay and trip unit with adjustable pickup and time-delay settings, push-to-test feature, and ground-fault indicator.
   g. Shunt Trip: 120-V trip coil energized from separate circuit, set to trip at 75 percent of rated voltage.
   h. Rating Plugs: Three-pole breakers with ampere ratings greater than 150 amperes shall have interchangeable rating plugs or electronic adjustable trip units.
   i. Multipole units enclosed in a single housing with a single handle.
   j. Handle Padlocking Device: Fixed attachment, for locking circuit-breaker handle in on or off position.

## 2.5 IDENTIFICATION

A. Panelboard Label: Manufacturer's name and trademark, voltage, amperage, number of phases, and number of poles shall be located on the interior of the panelboard door.

B. Breaker Labels: Faceplate shall list current rating, UL and IEC certification standards, and AIC rating.

C. Circuit Directory: Directory card inside panelboard door, mounted in metal frame with transparent protective cover.

1. Circuit directory shall identify specific purpose with detail sufficient to distinguish it from all other circuits.

## 2.6 ACCESSORY COMPONENTS AND FEATURES

A. Accessory Set: Include tools and miscellaneous items required for overcurrent protective device test, inspection, maintenance, and operation.

# PART 3 - EXECUTION

## 3.1 EXAMINATION

A. Verify actual conditions with field measurements prior to ordering panelboards to verify that equipment fits in allocated space in, and comply with, minimum required clearances specified in NFPA 70.

B. Receive, inspect, handle, and store panelboards according to NEMA PB 1.1.

C. Examine panelboards before installation. Reject panelboards that are damaged, rusted, or have been subjected to water saturation.

D. Examine elements and surfaces to receive panelboards for compliance with installation tolerances and other conditions affecting performance of the Work.

E. Proceed with installation only after unsatisfactory conditions have been corrected.

## 3.2 INSTALLATION

A. Coordinate layout and installation of panelboards and components with other construction that penetrates walls or is supported by them, including electrical and other types of equipment, raceways, piping, encumbrances to workspace clearance requirements, and adjacent surfaces. Maintain required workspace clearances and required clearances for equipment access doors and panels.

B. Comply with NECA 1.

C. Install panelboards and accessories according to NEMA PB 1.1.

D. Equipment Mounting:
   1. Attach panelboard to the vertical finished or structural surface behind the panelboard.

E. Temporary Lifting Provisions: Remove temporary lifting eyes, channels, and brackets and temporary blocking of moving parts from panelboards.

F. Mount top of trim 90 inches above finished floor unless otherwise indicated.

G. Mount panelboard cabinet plumb and rigid without distortion of box.

H. Mount recessed panelboards with fronts uniformly flush with wall finish and mating with back box.

I. Mounting panelboards with space behind is recommended for damp, wet, or dirty locations. The steel slotted supports in the following paragraph provide an even mounting surface and the recommended space behind to prevent moisture or dirt collection.

J. Mount surface-mounted panelboards to steel slotted supports 1 1/4 inch in depth. Orient steel slotted supports vertically.

K. Install overcurrent protective devices and controllers not already factory installed.

1. Set field-adjustable, circuit-breaker trip ranges.
2. Tighten bolted connections and circuit breaker connections using calibrated torque wrench or torque screwdriver per manufacturer's written instructions.

L. Make grounding connections and bond neutral for services and separately derived systems to ground. Make connections to grounding electrodes, separate grounds for isolated ground bars, and connections to separate ground bars.

M. Install filler plates in unused spaces.

N. Stub four 1-inch empty conduits from panelboard into accessible ceiling space or space designated to be ceiling space in the future. Stub four 1-inch empty conduits into raised floor space or below slab not on grade.

O. Arrange conductors in gutters into groups and bundle and wrap with wire ties after completing load balancing.

## 3.3 IDENTIFICATION

A. Identify field-installed conductors, interconnecting wiring, and components; install warning signs complying with requirements in Section 260553 "Identification for Electrical Systems."

B. Create a directory to indicate installed circuit loads after balancing panelboard loads; incorporate Owner's final room designations. Obtain approval before installing. Handwritten directories are not acceptable. Install directory inside panelboard door.

C. Panelboard Nameplates: Label each panelboard with a nameplate complying with requirements for identification specified in Section 260553 "Identification for Electrical Systems."

D. Device Nameplates: Label each branch circuit device in power panelboards with a nameplate complying with requirements for identification specified in Section 260553 "Identification for Electrical Systems."

E. Install warning signs complying with requirements in Section 260553 "Identification for Electrical Systems" identifying source of remote circuit.

## 3.4 FIELD QUALITY CONTROL

A. Perform tests and inspections.

B. Acceptance Testing Preparation:

1. Test insulation resistance for each panelboard bus, component, connecting supply, feeder, and control circuit.
2. Test continuity of each circuit.

C. Tests and Inspections:

1. Perform each visual and mechanical inspection and electrical test for low-voltage air circuit breakers stated in NETA ATS, Paragraph 7.6 Circuit Breakers. Perform optional tests. Certify compliance with test parameters.
2. Correct malfunctioning units on-site, where possible, and retest to demonstrate compliance; otherwise, replace with new units and retest.
3. Perform the following infrared scan tests and inspections and prepare reports:

   a. Initial Infrared Scanning: After Substantial Completion, but not more than 60 days after Final Acceptance, perform an infrared scan of each panelboard. Remove front panels so joints and connections are accessible to portable scanner.
   b. Instruments and Equipment:

      1) Use an infrared scanning device designed to measure temperature or to detect significant deviations from normal values. Provide calibration record for device.

D. Panelboards will be considered defective if they do not pass tests and inspections.

E. Prepare test and inspection reports, including a certified report that identifies panelboards included and that describes scanning results, with comparisons of the two scans. Include notation of deficiencies detected, remedial action taken, and observations after remedial action.

## 3.5 ADJUSTING

A. Adjust moving parts and operable components to function smoothly, and lubricate as recommended by manufacturer.

B. Set field-adjustable circuit-breaker trip ranges.

C. Load Balancing: After Substantial Completion, but not more than 60 days after Final Acceptance, measure load balancing and make circuit changes. Prior to making circuit changes to achieve load balancing, inform Architect of effect on phase color coding.

1. Measure loads during period of normal facility operations.
2. Perform circuit changes to achieve load balancing outside normal facility operation schedule or at times directed by the Architect. Avoid disrupting services such as fax machines and on-line data processing, computing, transmitting, and receiving equipment.
3. After changing circuits to achieve load balancing, recheck loads during normal facility operations. Record load readings before and after changing circuits to achieve load balancing.
4. Tolerance: Maximum difference between phase loads, within a panelboard, shall not exceed 20 percent.

## 3.6 PROTECTION

A. Temporary Heating: Prior to energizing panelboards, apply temporary heat to maintain temperature according to manufacturer's written instructions.

**END OF SECTION**

# SECTION 262713

# ELECTRICITY METERING

## PART 1 - GENERAL

### 1.1 RELATED DOCUMENTS

A. Drawings and general provisions of the Contract, including General and Supplementary Conditions and Division 01 Specification Sections, apply to this Section.

### 1.2 SUMMARY

A. Section includes equipment for electricity metering by utility company.

### 1.3 DEFINITIONS

A. KY Pulse: Term used by the metering industry to describe a method of measuring consumption of electricity that is based on a relay opening and closing in response to the rotation of the disk in the meter.

### 1.4 ACTION SUBMITTALS

A. Product Data: For each type of product indicated.

B. Shop Drawings: For electricity-metering equipment.

1. Dimensioned plans and sections or elevation layouts.
2. Wiring Diagrams: For power, signal, and control wiring. Identify terminals and wiring designations and color-codes to facilitate installation, operation, and maintenance. Indicate recommended types, wire sizes, and circuiting arrangements for field-installed wiring, and show circuit protection features.

### 1.5 INFORMATIONAL SUBMITTALS

A. Field quality-control reports.

### 1.6 CLOSEOUT SUBMITTALS

A. Operation and Maintenance Data. In addition to items specified in Section 017823 "Operation and Maintenance Data," include the following:

1. Hard copies of manufacturer's operating specifications.

## 1.7 QUALITY ASSURANCE

A. Electrical Components, Devices, and Accessories: Listed and labeled as defined in NFPA 70, by a qualified testing agency, and marked for intended location and application.

## 1.8 DELIVERY, STORAGE, AND HANDLING

A. Receive, store, and handle modular meter center according to NECA 400.

## 1.9 PROJECT CONDITIONS

A. Interruption of Existing Electrical Service: Do not interrupt electrical service to facilities occupied by Owner or others unless permitted under the following conditions and then only after arranging to provide temporary electrical service according to requirements indicated:

1. Notify Construction Manager no fewer than fourteen days in advance of proposed interruption of electrical service.
2. Do not proceed with interruption of electrical service without Construction Manager's and Owner's written permission.

## 1.10 COORDINATION

A. Electrical Service Connections: Coordinate with utility companies and components they furnish as follows:

1. Comply with requirements of utilities providing electrical power services.
2. Coordinate installation and connection of utilities and services, including provision for electricity-metering components.

# PART 2 - PRODUCTS

## 2.1 EQUIPMENT FOR ELECTRICITY METERING BY UTILITY COMPANY

A. Meters will be furnished by utility company.

B. Current-Transformer Cabinets: Comply with requirements of electrical-power utility company.

C. Meter Sockets: Comply with requirements of electrical-power utility company.

D. Meter Sockets: Steady-state and short-circuit current ratings shall meet indicated circuit ratings.

E. Modular Meter Center: Factory-coordinated assembly of a main service terminal box with lugs only, wireways, tenant meter socket modules, and tenant feeder circuit breakers arranged in adjacent vertical sections. Assembly shall be complete with interconnecting buses and other features as specified below.

1. Manufacturers: Subject to compliance with requirements, available manufacturers offering products that may be incorporated into the Work include, but are not limited to, the following:

   a. Eaton Electrical Inc.; Cutler-Hammer Business Unit.
   b. General Electric Company; GE Consumer & Industrial - Electrical Distribution.
   c. Siemens Energy & Automation, Inc.
   d. Square D; a brand of Schneider Electric.

2. Comply with requirements of utility company for meter center.
3. Housing: NEMA 250, Type 1 enclosure.
4. Minimum Short-Circuit Rating: 100,000 A symmetrical at rated voltage.
5. Main Disconnect Device: Circuit breaker, series-combination rated for use with downstream feeder and branch circuit breakers.
6. Tenant Feeder Circuit Breakers: Series-combination-rated molded-case units, rated to protect circuit breakers in downstream tenant and to house loadcenters and panelboards that have 10,000-A interrupting capacity.

   a. Identification: Complying with requirements in Section 260553 "Identification for Electrical Systems" with legend identifying tenant's address.
   b. Physical Protection: Tamper resistant, with hasp for padlock.

7. Meter Socket: Rating coordinated with indicated tenant feeder circuit rating.
8. Surge Protection: For main disconnect device, comply with requirements in Section 264313 "Surge Protection for Low-Voltage Electrical Power Circuits."

## PART 3 - EXECUTION

### 3.1 INSTALLATION

A. Comply with equipment installation requirements in NECA 1.

B. Install meters furnished by utility company. Install raceways and equipment according to utility company's written requirements. Provide empty conduits for metering leads and extend grounding connections as required by utility company.

C. Install modular meter center according to NECA 400 switchboard installation requirements.

## 3.2 IDENTIFICATION

A. Comply with requirements for identification specified in Section 260553 "Identification for Electrical Systems."

1. Series Combination Warning Label: Self-adhesive type, with text as required by NFPA 70.
2. Equipment Identification Labels: Adhesive film labels with clear protective overlay. For residential meters, provide an additional card holder suitable for typewritten card with occupant's name.

## 3.3 FIELD QUALITY CONTROL

A. Perform tests and inspections.

1. Manufacturer's Field Service: Engage a factory-authorized service representative to inspect components, assemblies, and equipment installations, including connections, and to assist in testing.

B. Tests and Inspections:

1. Connect a load of known kilowatt rating, 1.5 kW minimum, to a circuit supplied by metered feeder.
2. Turn off circuits supplied by metered feeder and secure them in off condition.
3. Run test load continuously for eight hours minimum, or longer, to obtain a measurable meter indication. Use test-load placement and setting that ensures continuous, safe operation.
4. Check and record meter reading at end of test period and compare with actual electricity used, based on test-load rating, duration of test, and sample measurements of supply voltage at test-load connection. Record test results.

C. Electricity metering will be considered defective if it does not pass tests and inspections.

D. Prepare test and inspection reports.

**END OF SECTION**

# SECTION 262726

# WIRING DEVICES

## PART 1 - GENERAL

### 1.1 RELATED DOCUMENTS

A. Drawings and general provisions of the Contract, including General and Supplementary Conditions and Division 01 Specification Sections, apply to this Section.

### 1.2 SUMMARY

A. Section Includes:
   1. Twist-locking receptacles.
   2. Toggle switches and receptacles.
   3. Wall plates.

### 1.3 DEFINITIONS

A. GFCI: Ground-fault circuit interrupter.

B. Pigtail: Short lead used to connect a device to a branch-circuit conductor.

C. UTP: Unshielded twisted pair.

### 1.4 ADMINISTRATIVE REQUIREMENTS

A. Coordination:

   1. Receptacles for Owner-Furnished Equipment: Match plug configurations.
   2. Cord and Plug Sets: Match equipment requirements.

### 1.5 ACTION SUBMITTALS

A. Product Data: For each type of product.

B. Shop Drawings: List of legends and description of materials and process used for premarking wall plates.

1.6 INFORMATIONAL SUBMITTALS

A. Field quality-control reports.

1.7 CLOSEOUT SUBMITTALS

A. Operation and Maintenance Data: For wiring devices to include in all manufacturers' packing-label warnings and instruction manuals that include labeling conditions.

1.8 MAINTENANCE MATERIAL SUBMITTALS

A. Furnish extra materials that match products installed and that are packaged with protective covering for storage and identified with labels describing contents.

1. Floor Service-Outlet Assemblies: One for every 10, but no fewer than one.
2. Poke-Through, Fire-Rated Closure Plugs: One for every five floor service outlets installed, but no fewer than two.

PART 2 - PRODUCTS

2.1 MANUFACTURERS

A. Manufacturers: Subject to compliance with requirements, available manufacturers offering products that may be incorporated into the Work include, but are not limited to the following:

1. Cooper Wiring Devices, Inc.; Division of Cooper Industries, Inc.
2. Hubbell Incorporated; Wiring Device-Kellems.
3. Leviton Manufacturing Co., Inc.
4. Pass & Seymour/Legrand (Pass & Seymour).

B. Source Limitations: Obtain each type of wiring device and associated wall plate from single source from single manufacturer.

2.2 GENERAL WIRING-DEVICE REQUIREMENTS

A. Wiring Devices, Components, and Accessories: Listed and labeled as defined in NFPA 70, by a qualified testing agency, and marked for intended location and application.

B. Comply with NFPA 70.

## 2.3 TWIST-LOCKING RECEPTACLES

A. Single Convenience Receptacles, 125 V, 20 A: Comply with NEMA WD 1, NEMA WD 6 Configuration as indicated on drawings, and UL 498.

1. Manufacturers: Subject to compliance with requirements, available manufacturers offering products that may be incorporated into the Work include, but are not limited to the following:

   a. Cooper Wiring Devices, Inc.; Division of Cooper Industries, Inc.
   b. Hubbell Incorporated; Wiring Device-Kellems.
   c. Leviton Manufacturing Co., Inc.
   d. Pass & Seymour/Legrand (Pass & Seymour).

## 2.4 TOGGLE SWITCHES AND RECEPTACLE

A. Convenience Receptacles: 125 V, 20 A; comply with NEMA WD 1, NEMA WD 6 Configuration 5-20R, and UL 498.

1. Manufacturers: Subject to compliance with requirements, available manufacturers offering products that may be incorporated into the Work include, but are not limited to the following:

   a. Cooper Wiring Devices, Inc.; Division of Cooper Industries, Inc.
   b. Hubbell Incorporated; Wiring Device-Kellems.
   c. Leviton Manufacturing Co., Inc.
   d. Pass & Seymour/Legrand (Pass & Seymour).

B. GFCI, Feed-Through Type, Convenience Receptacles: 125 V, 20 A; comply with NEMA WD 1, NEMA WD 6 Configuration 5-20R, UL 498, and UL 943 Class A.

1. Manufacturers: Subject to compliance with requirements, available manufacturers offering products that may be incorporated into the Work include, but are not limited to the following:

   a. Cooper Wiring Devices, Inc.; Division of Cooper Industries, Inc.
   b. Hubbell Incorporated; Wiring Device-Kellems.
   c. Leviton Manufacturing Co., Inc.
   d. Pass & Seymour/Legrand (Pass & Seymour).

C. GFCI, Weather-Resistant Convenience Receptacles: 125 V, 20 A; comply with NEMA WD 1, NEMA WD 6 Configuration 5-20R, UL 498, and UL 943 Class A.

1. Manufacturers: Subject to compliance with requirements, available manufacturers offering products that may be incorporated into the Work include, but are not limited to the following:

   a. Cooper Wiring Devices, Inc.; Division of Cooper Industries, Inc.

b. Hubbell Incorporated; Wiring Device-Kellems.
c. Pass & Seymour/Legrand (Pass & Seymour).

D. Toggle Switches, 120/277 V, 20 A: Comply with NEMA WD 1, UL 20, and FS W-S-896.

1. Manufacturers: Subject to compliance with requirements, available manufacturers offering products that may be incorporated into the Work include, but are not limited to the following:

a. Cooper Wiring Devices, Inc.; Division of Cooper Industries, Inc.
b. Hubbell Incorporated; Wiring Device-Kellems.
c. Leviton Manufacturing Co., Inc.
d. Pass & Seymour/Legrand (Pass & Seymour).

E. Lighted Toggle Switches, 120 V, 20 A: Comply with NEMA WD 1 and UL 20.

1. Manufacturers: Subject to compliance with requirements, available manufacturers offering products that may be incorporated into the Work include, but are not limited to the following:

a. Cooper Wiring Devices, Inc.; Division of Cooper Industries, Inc.
b. Hubbell Incorporated; Wiring Device-Kellems.
c. Leviton Manufacturing Co., Inc.
d. Pass & Seymour/Legrand (Pass & Seymour).

2. Description: With neon-lighted handle, illuminated when switch is "off."

F. All dedicated branch circuits rated at 15 amperes shall only have receptacles rated at 15 amperes connected to it.

## 2.5 WALL PLATES

A. Single and combination types shall match corresponding wiring devices.

1. Plate-Securing Screws: Metal with head color to match plate finish.
2. Material for Finished Spaces: Steel with white baked enamel, suitable for field painting.
3. Material for Unfinished Spaces: Galvanized steel.
4. Material for Damp Locations: Thermoplastic with spring-loaded lift cover, and listed and labeled for use in wet and damp locations.

B. Wet-Location, Weatherproof Cover Plates: NEMA 250, complying with Type 3R, weather-resistant, die-cast aluminum with lockable cover.

## 2.6 FINISHES

A. Device Color:

1. Wiring Devices Connected to Normal Power System: As selected by Architect unless otherwise indicated or required by NFPA 70 or device listing.

B. Wall Plate Color: For plastic covers, match device color.

PART 3 - EXECUTION

3.1 INSTALLATION

A. Comply with NECA 1, including mounting heights listed in that standard, unless otherwise indicated.

B. Coordination with Other Trades:

1. Protect installed devices and their boxes. Do not place wall finish materials over device boxes and do not cut holes for boxes with routers that are guided by riding against outside of boxes.
2. Keep outlet boxes free of plaster, drywall joint compound, mortar, cement, concrete, dust, paint, and other material that may contaminate the raceway system, conductors, and cables.
3. Install device boxes in brick or block walls so that the cover plate does not cross a joint unless the joint is troweled flush with the face of the wall.
4. Install wiring devices after all wall preparation, including painting, is complete.

C. Conductors:

1. Do not strip insulation from conductors until right before they are spliced or terminated on devices.
2. Strip insulation evenly around the conductor using tools designed for the purpose. Avoid scoring or nicking of solid wire or cutting strands from stranded wire.
3. The length of free conductors at outlets for devices shall meet provisions of NFPA 70, Article 300, without pigtails.
4. Existing Conductors:

   a. Cut back and pigtail, or replace all damaged conductors.
   b. Straighten conductors that remain and remove corrosion and foreign matter.
   c. Pigtailing existing conductors is permitted, provided the outlet box is large enough.

D. Device Installation:

1. Replace devices that have been in temporary use during construction and that were installed before building finishing operations were complete.
2. Keep each wiring device in its package or otherwise protected until it is time to connect conductors.

3. Do not remove surface protection, such as plastic film and smudge covers, until the last possible moment.
4. Connect devices to branch circuits using pigtails that are not less than 6 inches in length.
5. When there is a choice, use side wiring with binding-head screw terminals. Wrap solid conductor tightly clockwise, two-thirds to three-fourths of the way around terminal screw.
6. Use a torque screwdriver when a torque is recommended or required by manufacturer.
7. When conductors larger than No. 12 AWG are installed on 15- or 20-A circuits, splice No. 12 AWG pigtails for device connections.
8. Tighten unused terminal screws on the device.
9. When mounting into metal boxes, remove the fiber or plastic washers used to hold device-mounting screws in yokes, allowing metal-to-metal contact.

E. Receptacle Orientation:

1. Install ground pin of vertically mounted receptacles down, and on horizontally mounted receptacles to the right.

F. Device Plates: Do not use oversized or extra-deep plates. Repair wall finishes and remount outlet boxes when standard device plates do not fit flush or do not cover rough wall opening.

G. Dimmers:

1. Install dimmers within terms of their listing.
2. Verify that dimmers used for fan speed control are listed for that application.
3. Install unshared neutral conductors on line and load side of dimmers according to manufacturers' device listing conditions in the written instructions.

H. Arrangement of Devices: Unless otherwise indicated, mount flush, with long dimension vertical and with grounding terminal of receptacles on top. Group adjacent switches under single, multigang wall plates.

I. Adjust locations of floor service outlets and service poles to suit arrangement of partitions and furnishings.

## 3.2 GFCI RECEPTACLES

A. Install non-feed-through-type GFCI receptacles where protection of downstream receptacles is not required.

## 3.3 IDENTIFICATION

A. Comply with Section 260553 "Identification for Electrical Systems."

## 3.4 FIELD QUALITY CONTROL

A. Perform the following tests and inspections:

1. Test Instruments: Use instruments that comply with UL 1436.
2. Test Instrument for Convenience Receptacles: Digital wiring analyzer with digital readout or illuminated digital-display indicators of measurement.

B. Tests for Convenience Receptacles:

1. Line Voltage: Acceptable range is 105 to 132 V.
2. Percent Voltage Drop under 15-A Load: A value of 6 percent or higher is unacceptable.
3. Ground Impedance: Values of up to 2 ohms are acceptable.
4. GFCI Trip: Test for tripping values specified in UL 1436 and UL 943.
5. Using the test plug, verify that the device and its outlet box are securely mounted.
6. Tests shall be diagnostic, indicating damaged conductors, high resistance at the circuit breaker, poor connections, inadequate fault current path, defective devices, or similar problems. Correct circuit conditions, remove malfunctioning units and replace with new ones, and retest as specified above.

C. Wiring device will be considered defective if it does not pass tests and inspections.

D. Prepare test and inspection reports.

**END OF SECTION **

# SECTION 262813

# FUSES

## PART 1 - GENERAL

### 1.1 RELATED DOCUMENTS

A. Drawings and general provisions of the Contract, including General and Supplementary Conditions and Division 01 Specification Sections, apply to this Section.

### 1.2 SUMMARY

A. Section Includes:

1. Cartridge fuses rated 600 V ac and less for use in the following:

   a. Control circuits.
   b. Switchboards.
   c. Enclosed controllers.
   d. Enclosed switches.

### 1.3 ACTION SUBMITTALS

A. Product Data: For each type of product. Include construction details, material descriptions, dimensions of individual components and profiles. Include the following for each fuse type indicated:

1. Dimensions and manufacturer's technical data on features, performance, electrical characteristics, and ratings.
2. Coordination charts and tables and related data.
3. Fuse sizes for elevator feeders and elevator disconnect switches.

### 1.4 CLOSEOUT SUBMITTALS

A. Operation and Maintenance Data: For fuses to include in emergency, operation, and maintenance manuals. In addition to items specified in Section 017700 "Closeout Procedures," include the following:

1. Ambient temperature adjustment information.
2. Current-limitation curves for fuses with current-limiting characteristics.
3. Coordination charts and tables and related data.

1.5 MAINTENANCE MATERIAL SUBMITTALS

A. Furnish extra materials that match products installed and that are packaged with protective covering for storage and identified with labels describing contents.

1. Fuses: Equal to 10 percent of quantity installed for each size and type, but no fewer than three of each size and type.

1.6 FIELD CONDITIONS

A. Where ambient temperature to which fuses are directly exposed is less than 40 deg F or more than 100 deg F, apply manufacturer's ambient temperature adjustment factors to fuse ratings.

PART 2 - PRODUCTS

2.1 MANUFACTURERS

A. Manufacturers: Subject to compliance with requirements, provide products by one of the following:

1. Cooper Bussmann; a division of Cooper Industries.
2. Edison; a brand of Cooper Bussmann; a division of Cooper Industries.
3. Littelfuse, Inc.
4. Mersen USA.

B. Source Limitations: Obtain fuses, for use within a specific product or circuit, from single source from single manufacturer.

2.2 CARTRIDGE FUSES

A. Characteristics: NEMA FU 1, current-limiting, nonrenewable cartridge fuses with voltage ratings consistent with circuit voltages.

1. Type RK-1: 600-V, zero- to 600-A rating, 200 kAIC, time delay.
2. Type CC: 600-V, zero- to 30-A rating, 200 kAIC, fast acting.
3. Type J: 600-V, zero- to 600-A rating, 200 kAIC.
4. Type L: 600-V, 601- to 6000-A rating, 200 kAIC, time delay.

B. Electrical Components, Devices, and Accessories: Listed and labeled as defined in NFPA 70, by a qualified testing agency, and marked for intended location and application.

C. Comply with NEMA FU 1 for cartridge fuses.

D. Comply with NFPA 70.

E. Coordinate fuse ratings with utilization equipment nameplate limitations of maximum fuse size and with system short-circuit current levels.

## PART 3 - EXECUTION

### 3.1 EXAMINATION

A. Examine fuses before installation. Reject fuses that are moisture damaged or physically damaged.

B. Examine holders to receive fuses for compliance with installation tolerances and other conditions affecting performance, such as rejection features.

C. Examine utilization equipment nameplates and installation instructions. Install fuses of sizes and with characteristics appropriate for each piece of equipment.

D. Evaluate ambient temperatures to determine if fuse rating adjustment factors must be applied to fuse ratings.

E. Proceed with installation only after unsatisfactory conditions have been corrected.

### 3.2 FUSE APPLICATIONS

A. Cartridge Fuses:

1. Service Entrance: Class L, time delay.
2. Feeders: Class RK1, time delay.
3. Motor Branch Circuits: Class RK1, time delay.
4. Power Electronics Circuits: Class J, high speed.
5. Other Branch Circuits: Class J, fast acting.
6. Control Transformer Circuits: Class CC, time delay, control transformer duty.
7. Provide open-fuse indicator fuses or fuse covers with open fuse indication.

### 3.3 INSTALLATION

A. Install fuses in fusible devices. Arrange fuses so rating information is readable without removing fuse.

### 3.4 IDENTIFICATION

A. Install labels complying with requirements for identification specified in Section 260553 "Identification for Electrical Systems" and indicating fuse replacement information inside of door of each fused switch and adjacent to each fuse block, socket, and holder.

**END OF SECTION**

# SECTION 263213

# ENGINE GENERATORS

## PART 1 - GENERAL

### 1.1 RELATED DOCUMENTS

A. Drawings and general provisions of the Contract, including General and Supplementary Conditions and Division 01 Specification Sections, apply to this Section.

### 1.2 SUMMARY

A. Section includes packaged engine-generator sets for emergency power supply with the following features:

1. Diesel engine.
2. Unit-mounted Remote-mounted cooling system.
3. Unit-mounted and remote-mounted control and monitoring.
4. Performance requirements for sensitive loads.
5. Fuel system.

B. Related Requirements:

1. Section 263600 "Transfer Switches" for transfer switches including sensors and relays to initiate automatic-starting and -stopping signals for engine-generator sets.

### 1.3 DEFINITIONS

A. Operational Bandwidth: The total variation from the lowest to highest value of a parameter over the range of conditions indicated, expressed as a percentage of the nominal value of the parameter.

B. LP: Liquid petroleum.

C. EPS: Emergency power supply.

D. EPSS: Emergency power supply system.

### 1.4 ACTION SUBMITTALS

A. Product Data: For each type of product.

1. Include rated capacities, operating characteristics, electrical characteristics, and furnished specialties and accessories.
2. Include thermal damage curve for generator.
3. Include time-current characteristic curves for generator protective device.
4. Include fuel consumption in gallons per hour at 0.8 power factor at 0.5, 0.75 and 1.0 times generator capacity.
5. Include generator efficiency at 0.8 power factor at 0.5, 0.75 and 1.0 times generator capacity.
6. Include air flow requirements for cooling and combustion air in cfm at 0.8 power factor, with air supply temperature of 95, 80, 70, and 50 deg F. Provide drawings showing requirements and limitations for location of air intake and exhausts.
7. Include generator characteristics, including, but not limited to kw rating, efficiency, reactances, and short-circuit current capability.

B. Shop Drawings:

1. Include plans and elevations for engine-generator set and other components specified. Indicate access requirements affected by height of subbase fuel tank.
2. Include details of equipment assemblies. Indicate dimensions, weights, loads, required clearances, method of field assembly, components, and location and size of each field connection.
3. Identify fluid drain ports and clearance requirements for proper fluid drain.
4. Design calculations for selecting vibration isolators and seismic restraints and for designing vibration isolation bases.
5. Vibration Isolation Base Details: Detail fabrication including anchorages and attachments to structure and to supported equipment. Include base weights.
6. Include diagrams for power, signal, and control wiring. Complete schematic, wiring, and interconnection diagrams showing terminal markings for EPS equipment and functional relationship between all electrical components.

## 1.5 INFORMATIONAL SUBMITTALS

A. Qualification Data: For Installer and manufacturer.

B. Seismic Qualification Certificates: For engine-generator set, accessories, and components, from manufacturer.

1. Basis for Certification: Indicate whether withstand certification is based on actual test of assembled components or on calculation.
2. Dimensioned Outline Drawings of Equipment Unit: With engine and generator mounted on rails identify center of gravity and total weight including full fuel tank, supplied enclosure, external silencer, subbase-mounted fuel tank**,** skid-mounted load bank and each piece of equipment not integral to the engine-generator set, and locate and describe mounting and anchorage provisions.
3. Detailed description of equipment anchorage devices on which the certification is based and their installation requirements.

C. Source quality-control reports, including, but not limited to the following:

1. Certified summary of prototype-unit test report.
2. Certified Test Reports: For components and accessories that are equivalent, but not identical, to those tested on prototype unit.
3. Certified Summary of Performance Tests: Certify compliance with specified requirement to meet performance criteria for sensitive loads.
4. Report of factory test on units to be shipped for this Project, showing evidence of compliance with specified requirements.
5. Report of sound generation.
6. Report of exhaust emissions showing compliance with applicable regulations.
7. Certified Torsional Vibration Compatibility: Comply with NFPA 110.

D. Field quality-control reports.

E. Warranty: For special warranty.

## 1.6 CLOSEOUT SUBMITTALS

A. Operation and Maintenance Data: For packaged engine generators to include in emergency, operation, and maintenance manuals.

1. Include the following:

a. List of tools and replacement items recommended to be stored at Project for ready access. Include part and drawing numbers, current unit prices, and source of supply.
b. Operating instructions laminated and mounted adjacent to generator location.
c. Training plan.

## 1.7 MAINTENANCE MATERIAL SUBMITTALS

A. Furnish extra materials that match products installed and that are packaged with protective covering for storage and identified with labels describing contents.

1. Fuses: One for every 10 of each type and rating but no fewer than one of each.
2. Indicator Lamps: Two for every six of each type used, but no fewer than two of each.
3. Filters: One set each of lubricating oil, fuel, and combustion-air filters.
4. Tools: Each tool listed by part number in operations and maintenance manual.

## 1.8 QUALITY ASSURANCE

A. Installer Qualifications: Manufacturer's authorized representative who is trained and approved by manufacturer.

B. Testing Agency Qualifications: Member company of NETA or an NRTL.

1. Testing Agency's Field Supervisor: Certified by NETA to supervise on-site testing.

## 1.9 WARRANTY

A. Manufacturer's Warranty: Manufacturer agrees to repair or replace components of packaged engine generators and associated auxiliary components that fail in materials or workmanship within specified warranty period.

1. Warranty Period: < 5 > years from date of Substantial Completion.

# PART 2 - PRODUCTS

## 2.1 MANUFACTURERS

A. Manufacturers: Subject to compliance with requirements, provide products by one of the following:

1. Generac Power Systems, Inc..
2. Caterpillar; Engine Div
3. Kohler Power Systems.
4. Onan/Cummins Power Generation; Industrial Business Group.

B. Source Limitations: Obtain packaged generator sets and auxiliary components through one source from a single manufacturer.

## 2.2 PERFORMANCE REQUIREMENTS

A. Seismic Performance: Engine-generator set housing, day tank**,** engine-generator set, batteries, battery racks, silencers, load banks and sound attenuating equipment, accessories, and components shall withstand the effects of earthquake motions determined according to ASCE/SEI 7 .

1. The term "withstand" means "the unit will remain in place without separation of any parts when subjected to the seismic forces specified and the unit will be fully operational after the seismic event."
2. Shake-table testing shall comply with ICC-ES AC156. Testing shall be performed with all fluids at worst case normal levels.
3. Component Importance Factor: 1.5.

B. ASME Compliance: Comply with ASME B15.1.

C. NFPA Compliance:

1. Comply with NFPA 37.

2. Comply with NFPA 70.
3. Comply with NFPA 110 requirements for Level 1 emergency power supply system.

D. UL Compliance: Comply with UL 2200.

E. Engine Exhaust Emissions: Comply with EPA Tier 2 requirements and applicable state and local government requirements.

F. Noise Emission: Comply with applicable state and local government requirements for maximum noise level at adjacent property boundaries due to sound emitted by generator set including engine, engine exhaust, engine cooling-air intake and discharge, and other components of installation.

G. Environmental Conditions: Engine-generator system shall withstand the following environmental conditions without mechanical or electrical damage or degradation of performance capability:

1. Ambient Temperature: Minus 15 to plus 40 deg C.
2. Relative Humidity: Zero to 95 percent.
3. Altitude: Sea level to 1000 feet.

## 2.3 ASSEMBLY DESCRIPTION

A. Factory-assembled and -tested, water-cooled engine, with brushless generator and accessories.

B. Electrical Components, Devices, and Accessories: Listed and labeled as defined in NFPA 70, by a testing agency acceptable to authorities having jurisdiction, and marked for intended location and application.

C. EPSS Class: Engine-generator set shall be classified as a Class 6 in accordance with NFPA 110.

D. Induction Method: Naturally aspirated.

E. Governor: Adjustable isochronous, with speed sensing.

F. Emissions: Comply with EPA Tier 2 requirements.

G. Mounting Frame: Structural steel framework to maintain alignment of mounted components without depending on concrete foundation. Provide lifting attachments sized and spaced to prevent deflection of base during lifting and moving.

1. Rigging Diagram: Inscribed on metal plate permanently attached to mounting frame to indicate location and lifting capacity of each lifting attachment and generator-set center of gravity.

H. Capacities and Characteristics:

1. Power Output Ratings: Nominal ratings as indicated at 0.8 power factor excluding power required for the continued and repeated operation of the unit and auxiliaries with capacity as required to operate as a unit as evidenced by records of prototype testing.
2. Output Connections: Three-phase, four wire.
3. Nameplates: For each major system component to identify manufacturer's name and address, and model and serial number of component.

I. Generator-Set Performance:

1. Steady-State Voltage Operational Bandwidth: 3 percent of rated output voltage from no load to full load.
2. Transient Voltage Performance: Not more than 20 percent variation for 50 percent step-load increase or decrease. Voltage shall recover and remain within the steady-state operating band within three seconds.
3. Steady-State Frequency Operational Bandwidth: 0.5 percent of rated frequency from no load to full load.
4. Steady-State Frequency Stability: When system is operating at any constant load within the rated load, there shall be no random speed variations outside the steady-state operational band and no hunting or surging of speed.
5. Transient Frequency Performance: Less than 5 percent variation for 50 percent step-load increase or decrease. Frequency shall recover and remain within the steady-state operating band within five seconds.
6. Output Waveform: At no load, harmonic content measured line to line or line to neutral shall not exceed 5 percent total and 3 percent for single harmonics. Telephone influence factor, determined according to NEMA MG 1, shall not exceed 50 percent.
7. Sustained Short-Circuit Current: For a three-phase, bolted short circuit at system output terminals, system shall supply a minimum of 250 percent of rated full-load current for not less than 10 seconds and then clear the fault automatically, without damage to generator system components.
8. Start Time: Comply with NFPA 110, Type 10, system requirements.

J. Generator-Set Performance for Sensitive Loads:

1. Oversizing generator compared with the rated power output of the engine is permissible to meet specified performance.

    a. Nameplate Data for Oversized Generator: Show ratings required by the Contract Documents rather than ratings that would normally be applied to generator size installed.

2. Steady-State Voltage Operational Bandwidth: 1 percent of rated output voltage from no load to full load.
3. Transient Voltage Performance: Not more than 10 percent variation for 50 percent step-load increase or decrease. Voltage shall recover and remain within the steady-state operating band within 0.5 second.

4. Steady-State Frequency Operational Bandwidth: Plus or minus 0.25 percent of rated frequency from no load to full load.
5. Steady-State Frequency Stability: When system is operating at any constant load within the rated load, there shall be no random speed variations outside the steady-state operational band and no hunting or surging of speed.
6. Transient Frequency Performance: Less than 2-Hz variation for 50 percent step-load increase or decrease. Frequency shall recover and remain within the steady-state operating band within three seconds.
7. Output Waveform: At no load, harmonic content measured line to neutral shall not exceed 2 percent total with no slot ripple. Telephone influence factor, determined according to NEMA MG 1, shall not exceed 50 percent.
8. Sustained Short-Circuit Current: For a three-phase, bolted short circuit at system output terminals, system shall supply a minimum of 300 percent of rated full-load current for not less than 10 seconds and then clear the fault automatically, without damage to winding insulation or other generator system components.
9. Excitation System: Performance shall be unaffected by voltage distortion caused by nonlinear load.

    a. Provide permanent magnet excitation for power source to voltage regulator.

10. Start Time: Comply with NFPA 110, Type 10, system requirements.

K. Parallel Engine Generators:

1. Automatic reactive output power control and load sharing between generator sets operated in parallel.
2. Automatic regulation, automatic connection to a common bus, and automatic synchronization, with manual controls and instruments to monitor and control paralleling functions.
3. Protective relays required for equipment and personnel safety.
4. Paralleling suppressors to protect excitation systems.
5. Reverse power protection.
6. Loss of field protection.

## 2.4 ENGINE

A. Fuel: Fuel oil, Grade DF-2.

B. Rated Engine Speed: 1800 rpm.

C. Maximum Piston Speed for Four-Cycle Engines: 2250 fpm (11.4 m/s).

D. Lubrication System: The following items are mounted on engine or skid:

1. Filter and Strainer: Rated to remove 90 percent of particles 5 micrometers and smaller while passing full flow.

2. Thermostatic Control Valve: Control flow in system to maintain optimum oil temperature. Unit shall be capable of full flow and is designed to be fail-safe.
3. Crankcase Drain: Arranged for complete gravity drainage to an easily removable container with no disassembly and without use of pumps, siphons, special tools, or appliances.

E. Jacket Coolant Heater: Electric-immersion type, factory installed in coolant jacket system. Comply with NFPA 110 requirements for Level 2 equipment for heater capacity.

F. Cooling System: Closed loop, liquid cooled, with radiator factory mounted on engine-generator-set mounting frame and integral engine-driven coolant pump.

1. Coolant: Solution of 50 percent ethylene-glycol-based antifreeze and 50 percent water, with anticorrosion additives as recommended by engine manufacturer.
2. Size of Radiator: Adequate to contain expansion of total system coolant from cold start to 110 percent load condition.
3. Expansion Tank: Constructed of welded steel plate and rated to withstand maximum closed-loop coolant system pressure for engine used. Equip with gage glass and petcock.
4. Temperature Control: Self-contained, thermostatic-control valve modulates coolant flow automatically to maintain optimum constant coolant temperature as recommended by engine manufacturer.
5. Coolant Hose: Flexible assembly with inside surface of nonporous rubber and outer covering of aging-, ultraviolet-, and abrasion-resistant fabric.

    a. Rating: 50-psig (345-kPa) maximum working pressure with coolant at 180 deg F (82 deg C), and noncollapsible under vacuum.
    b. End Fittings: Flanges or steel pipe nipples with clamps to suit piping and equipment connections.

G. Cooling System: Closed loop, liquid cooled, with remote radiator and integral engine-driven coolant pump. Comply with requirements in Section 232113 "Hydronic Piping" for coolant piping.

1. Configuration: Vertical air discharge.
2. Radiator Core Tubes: Aluminum**.**
3. Size of Radiator: Adequate to contain expansion of total system coolant from cold start to 110 percent load condition.
4. Expansion Tank: Constructed of welded steel plate and rated to withstand maximum closed-loop coolant system pressure for engine used. Equip with gage glass and petcock.
5. Fan: Driven by multiple belts from engine shaft totally enclosed electric motor with sealed bearings.
6. Coolant: Solution of 50 percent ethylene-glycol-based antifreeze and 50 percent water, with anticorrosion additives as recommended by engine manufacturer.
7. Temperature Control: Self-contained, thermostatic-control valve modulates coolant flow automatically to maintain optimum constant coolant temperature as recommended by engine manufacturer.

H. Muffler/Silencer: Critical type, sized as recommended by engine manufacturer and selected with exhaust piping system to not exceed engine manufacturer's engine backpressure requirements.

1. Minimum sound attenuation of 25 dB at 500 Hz.
2. Sound level measured at a distance of 25 feet (8 m) from exhaust discharge after installation is complete shall be 78 dBA or less.

I. Muffler/Silencer: Semicritical type, sized as recommended by engine manufacturer and selected with exhaust piping system to not exceed engine manufacturer's engine backpressure requirements.

1. Minimum sound attenuation of 18 dB at 500 Hz.
2. Sound level measured at a distance of 25 feet (8 m) from exhaust discharge after installation is complete shall be 85 dBA or less.

J. Muffler/Silencer: Commercial type, sized as recommended by engine manufacturer and selected with exhaust piping system to not exceed engine manufacturer's engine backpressure requirements.

1. Minimum sound attenuation of 12 dB at 500 Hz.
2. Sound level measured at a distance of 25 feet (8 m) from exhaust discharge after installation is complete shall be 90 dBA or less.

K. Air-Intake Filter: Standard-duty, engine-mounted air cleaner with replaceable dry-filter element and "blocked filter" indicator.

L. Starting System: 12 V electric, with negative ground.

1. Components: Sized so they are not damaged during a full engine-cranking cycle with ambient temperature at maximum specified in "Performance Requirements" Article.
2. Cranking Motor: Heavy-duty unit that automatically engages and releases from engine flywheel without binding.
3. Cranking Cycle: As required by NFPA 110 for system level specified.
4. Battery: Lead acid with capacity within ambient temperature range specified in "Performance Requirements" Article to provide specified cranking cycle at least twice times without recharging.
5. Battery Cable: Size as recommended by engine manufacturer for cable length indicated. Include required interconnecting conductors and connection accessories.
6. Battery Compartment: Factory fabricated of metal with acid-resistant finish and thermal insulation. Thermostatically controlled heater shall be arranged to maintain battery above 10 deg C regardless of external ambient temperature within range specified in "Performance Requirements" Article. Include accessories required to support and fasten batteries in place. Provide ventilation to exhaust battery gases.

7. Battery Stand: Factory-fabricated, two-tier metal with acid-resistant finish designed to hold the quantity of battery cells required and to maintain the arrangement to minimize lengths of battery interconnections.
8. Battery-Charging Alternator: Factory mounted on engine with solid-state voltage regulation and 35 A minimum continuous rating.
9. Battery Charger: Current-limiting, automatic-equalizing and float-charging type designed for lead-acid Nicad batteries. Unit shall comply with UL 1236 and include the following features:

    a. Operation: Equalizing-charging rate of 10 A shall be initiated automatically after battery has lost charge until an adjustable equalizing voltage is achieved at battery terminals. Unit shall then be automatically switched to a lower float-charging mode and shall continue to operate in that mode until battery is discharged again.
    b. Automatic Temperature Compensation: Adjust float and equalize voltages for variations in ambient temperature from minus 40 deg F (minus 40 deg C) to 140 deg F (plus 60 deg C) to prevent overcharging at high temperatures and undercharging at low temperatures.
    c. Automatic Voltage Regulation: Maintain constant output voltage regardless of input voltage variations up to plus or minus 10 percent.
    d. Ammeter and Voltmeter: Flush mounted in door. Meters shall indicate charging rates.
    e. Safety Functions: Sense abnormally low battery voltage and close contacts providing low battery voltage indication on control and monitoring panel. Sense high battery voltage and loss of ac input or dc output of battery charger. Either condition shall close contacts that provide a battery-charger malfunction indication at system control and monitoring panel.
    f. Enclosure and Mounting: NEMA 250, Type 1, wall-mounted cabinet.

## 2.5 DIESEL FUEL-OIL SYSTEM

A. Comply with NFPA 30.

B. Piping: Fuel-oil piping shall be Schedule 40 black steel, complying with requirements in Section 231113 "Facility Fuel-Oil Piping." Cast iron, aluminum, copper, and galvanizing shall not be used in the fuel-oil system.

C. Main Fuel Pump: Mounted on engine to provide primary fuel flow under starting and load conditions.

D. Fuel Filtering: Remove water and contaminants larger than 1 micron.

E. Relief-Bypass Valve: Automatically regulates pressure in fuel line and returns excess fuel to source.

F. Fuel-Oil Storage Tank.

1. Fuel Tank Capacity: Minimum 133 percent of total fuel required for periodic maintenance operations between fuel refills plus fuel for the hours of continuous operation required for the indicated EPSS Class.

G. Day Tank: Comply with UL 142, freestanding, factory-fabricated fuel tank assembly, with integral, float-controlled transfer pump and the following features:

1. Containment: Integral rupture basin with a capacity of 150 percent of nominal capacity of day tank.

   a. Leak Detector: Locate in rupture basin and connect to provide audible and visual alarm in the event of day-tank leak.

2. Tank Capacity: As recommended by engine manufacturer for an uninterrupted period of 4 hours' operation at 100 percent of rated power output of engine-generator system without being refilled.
3. Pump Capacity: Exceeds maximum flow of fuel drawn by engine-mounted fuel supply pump at 110 percent of rated capacity, including fuel returned from engine.
4. Low-Level Alarm Sensor: Liquid-level device operates alarm contacts at 25 percent of normal fuel level.
5. High-Level Alarm Sensor: Liquid-level device operates alarm and redundant fuel shutoff contacts at midpoint between overflow level and 100 percent of normal fuel level.
6. Piping Connections: Factory-installed fuel supply and return lines from tank to engine; local fuel fill, vent line, overflow line; and tank drain line with shutoff valve.
7. Redundant High-Level Fuel Shutoff: Actuated by high-level alarm sensor in day tank to operate a separate motor control device that disconnects day-tank pump motor. Sensor shall signal solenoid valve, located in fuel suction line between fuel storage tank and day tank, to close. Both actions shall remain in shutoff state until manually reset. Shutoff action shall initiate an alarm signal to control panel but shall not shut down engine-generator set.

H. Subbase-Mounted, Double-Wall, Fuel-Oil Tank: Factory installed and piped, complying with UL 142 fuel-oil tank. Features include the following:

1. Tank level indicator.
2. Fuel-Tank Capacity: Minimum 133 percent of total fuel required for periodic maintenance operations between fuel refills, plus fuel for the hours of continuous operation for indicated EPSS class.
3. Leak detection in interstitial space.
4. Vandal-resistant fill cap.
5. Containment Provisions: Comply with requirements of authorities having jurisdiction.

## 2.6 CONTROL AND MONITORING

A. Automatic Starting System Sequence of Operation: When mode-selector switch on the control and monitoring panel is in the automatic position, remote-control contacts in one or more separate automatic transfer switches initiate starting and stopping of generator set. When mode-selector switch is switched to the on position, generator set starts. The off position of same switch initiates generator-set shutdown. When generator set is running, specified system or equipment failures or derangements automatically shut down generator set and initiate alarms.

B. Manual Starting System Sequence of Operation: Switching on-off switch on the generator control panel to the on position starts generator set. The off position of same switch initiates generator-set shutdown. When generator set is running, specified system or equipment failures or derangements automatically shut down generator set and initiate alarms.

C. Provide minimum run time control set for 30 minutes with override only by operation of a remote emergency-stop switch.

D. Comply with UL 508A.

E. Configuration: Operating and safety indications, protective devices, basic system controls, and engine gages shall be grouped in a common control and monitoring panel mounted on the generator set. Mounting method shall isolate the control panel from generator-set vibration. Panel shall be powered from the engine-generator set battery.

F. Configuration: Operating and safety indications, protective devices, basic system controls, and engine gages shall be grouped in a common wall-mounted control and monitoring panel. Panel shall be powered from the engine-generator set battery.

G. Configuration: Operating and safety indications, protective devices, basic system controls, engine gages, instrument transformers, generator disconnect switch or circuit breaker, and other indicated components shall be grouped in a combination control and power panel. Control and monitoring section of panel shall be isolated from power sections by steel barriers. Panel shall be powered from the engine-generator set battery. Panel features shall include the following:

1. Wall-Mounting Cabinet Construction: Rigid, self-supporting steel unit complying with NEMA ICS 6. Power bus shall be copper. Bus, bus supports, control wiring, and temperature rise shall comply with UL 891.
2. Switchboard Construction: Freestanding unit complying with Section 262413 "Switchboards."
3. Switchgear Construction: Freestanding unit complying with Section 262300 "Low-Voltage Switchgear."

H. Indicating Devices : As required by NFPA 110 for Level 2 system, including the following:

1. AC voltmeter.

2. AC ammeter.
3. AC frequency meter.
4. EPS supplying load indicator.
5. Ammeter and voltmeter phase-selector switches.
6. DC voltmeter (alternator battery charging).
7. Engine-coolant temperature gage.
8. Engine lubricating-oil pressure gage.
9. Running-time meter.
10. Current and Potential Transformers: Instrument accuracy class.

I. Protective Devices and Controls in Local Control Panel: Shutdown devices and common visual alarm indication as required by NFPA 110 for Level 2 system, including the following:

1. Start-stop switch.
2. Overcrank shutdown device.
3. Overspeed shutdown device.
4. Coolant high-temperature shutdown device.
5. Coolant low-level shutdown device.
6. Low lube oil pressure shutdown device.
7. Air shutdown damper shutdown device when used.
8. Overcrank alarm.
9. Overspeed alarm.
10. Coolant high-temperature alarm.
11. Coolant low-temperature alarm.
12. Coolant low-level alarm.
13. Low lube oil pressure alarm.
14. Air shutdown damper alarm when used.
15. Lamp test.
16. Contacts for local and remote common alarm.
17. Coolant high-temperature prealarm.
18. Generator-voltage adjusting rheostat.
19. Main fuel tank low-level alarm.

    a. Low fuel level alarm shall be initiated when the level falls below that required for operation for the duration required in "Fuel Tank Capacity" Paragraph in "Diesel Fuel-Oil System" Article.

20. Run-Off-Auto switch.
21. Control switch not in automatic position alarm.
22. Low-starting air pressure alarm.
23. Low-starting hydraulic pressure alarm.
24. Low cranking voltage alarm.
25. Battery-charger malfunction alarm.
26. Battery low-voltage alarm.
27. Battery high-voltage alarm.
28. Generator overcurrent protective device not closed alarm.

J. Supporting Items: Include sensors, transducers, terminals, relays, and other devices and include wiring required to support specified items. Locate sensors and other supporting items on engine or generator, unless otherwise indicated.

K. Common Remote Panel with Common Audible Alarm: Comply with NFPA 110 requirements for Level 2 systems. Include necessary contacts and terminals in control and monitoring panel. Remote panel shall be powered from the engine-generator set battery.

L. Remote Alarm Annunciator: Comply with NFPA 99. An LED labeled with proper alarm conditions shall identify each alarm event, and a common audible signal shall sound for each alarm condition. Silencing switch in face of panel shall silence signal without altering visual indication. Connect so that after an alarm is silenced, clearing of initiating condition will reactivate alarm until silencing switch is reset. Cabinet and faceplate are surface- or flush-mounting type to suit mounting conditions indicated.

1. Overcrank alarm.
2. Coolant low-temperature alarm.
3. High engine temperature prealarm.
4. High engine temperature alarm.
5. Low lube oil pressure alarm.
6. Overspeed alarm.
7. Low fuel main tank alarm.
8. Low coolant level alarm.
9. Low cranking voltage alarm.
10. Contacts for local and remote common alarm.
11. Audible-alarm silencing switch.
12. Air shutdown damper when used.
13. Run-Off-Auto switch.
14. Control switch not in automatic position alarm.
15. Fuel tank derangement alarm.
16. Fuel tank high-level shutdown of fuel supply alarm.
17. Lamp test.
18. Low cranking voltage alarm.
19. Generator overcurrent protective device not closed.

M. Supporting Items: Include sensors, transducers, terminals, relays, and other devices and include wiring required to support specified items. Locate sensors and other supporting items on engine or generator, unless otherwise indicated.

N. Remote Emergency-Stop Switch: Flush; wall mounted, unless otherwise indicated; and labeled. Push button shall be protected from accidental operation.

## 2.7 GENERATOR OVERCURRENT AND FAULT PROTECTION

A. Overcurrent protective devices for the entire EPSS shall be coordinated to optimize selective tripping when a short circuit occurs. Coordination of protective devices shall consider both utility and EPSS as the voltage source.

1. Overcurrent protective devices for the EPSS shall be accessible only to authorized personnel.

B. Generator Circuit Breaker: Molded-case, thermal-magnetic type; 100 percent rated; complying with UL 489.

1. Tripping Characteristic: Designed specifically for generator protection.
2. Trip Rating: Matched to generator output rating.
3. Shunt Trip: Connected to trip breaker when generator set is shut down by other protective devices.
4. Mounting: Adjacent to or integrated with control and monitoring panel.

C. Generator Circuit Breaker: Molded-case, electronic-trip type; 100 percent rated; complying with UL 489.

1. Tripping Characteristics: Adjustable long-time and short-time delay and instantaneous.
2. Trip Settings: Selected to coordinate with generator thermal damage curve.
3. Shunt Trip: Connected to trip breaker when generator set is shut down by other protective devices.
4. Mounting: Adjacent to or integrated with control and monitoring panel.

D. Generator Circuit Breaker: Insulated-case, electronic-trip type; 100 percent rated; complying with UL 489.

1. Tripping Characteristics: Adjustable long-time and short-time delay and instantaneous.
2. Trip Settings: Selected to coordinate with generator thermal damage curve.
3. Shunt Trip: Connected to trip breaker when generator set is shut down by other protective devices.
4. Mounting: Adjacent to or integrated with control and monitoring panel.

E. Generator Disconnect Switch: Molded-case type, 100 percent rated.

1. Trip Rating: Matched to generator output rating.
2. Shunt Trip: Connected to trip switch when signaled by generator protector or by other protective devices.

F. Generator Protector: Microprocessor-based unit shall continuously monitor current level in each phase of generator output, integrate generator heating effect over time, and predict when thermal damage of alternator will occur. When signaled by generator protector or other generator-set protective devices, a shunt-trip device in the generator disconnect switch shall open the switch to disconnect the generator from load circuits. Protector performs the following functions:

1. Initiates a generator overload alarm when generator has operated at an overload equivalent to 110 percent of full-rated load for 60 seconds. Indication for this alarm is integrated with other generator-set malfunction alarms. Contacts shall be available for load shed functions.

2. Under single or three-phase fault conditions, regulates generator to 300 percent of rated full-load current for up to 10 seconds.
3. As overcurrent heating effect on the generator approaches the thermal damage point of the unit, protector switches the excitation system off, opens the generator disconnect device, and shuts down the generator set.
4. Senses clearing of a fault by other overcurrent devices and controls recovery of rated voltage to avoid overshoot.

G. Ground-Fault Indication: Comply with NFPA 70, "Emergency System" signals for ground fault.

1. Indicate ground fault with other generator-set alarm indications.
2. Trip generator protective device on ground fault.

## 2.8 GENERATOR, EXCITER, AND VOLTAGE REGULATOR

A. Comply with NEMA MG 1.

B. Drive: Generator shaft shall be directly connected to engine shaft. Exciter shall be rotated integrally with generator rotor.

C. Electrical Insulation: Class H or Class F.

D. Stator-Winding Leads: Brought out to terminal box to permit future reconnection for other voltages if required. Provide six lead alternator.

E. Range: Provide extended range of output voltage by adjusting the excitation level.

F. Construction shall prevent mechanical, electrical, and thermal damage due to vibration, overspeed up to 125 percent of rating, and heat during operation at 110 percent of rated capacity.

G. Enclosure: Dripproof.

H. Instrument Transformers: Mounted within generator enclosure.

I. Voltage Regulator: Solid-state type, separate from exciter, providing performance as specified and as required by NFPA 110.

1. Adjusting Rheostat on Control and Monitoring Panel: Provide plus or minus 5 percent adjustment of output-voltage operating band.
2. Maintain voltage within 15 percent on one step, full load.
3. Provide anti-hunt provision to stabilize voltage.
4. Maintain frequency within 5 percent and stabilize at rated frequency within 2 seconds.

J. Strip Heater: Thermostatically controlled unit arranged to maintain stator windings above dew point.

K. Windings: Two-thirds pitch stator winding and fully linked amortisseur winding.

L. Subtransient Reactance: 12 percent, maximum.

## 2.9 MOTORS

A. Description: NEMA MG 1, Design B, medium induction random-wound, squirrel cage motor.

B. Efficiency: Energy efficient, as defined in NEMA MG 1.

C. Service Factor: 1.15.

D. Bearings: Regreasable, shielded, antifriction ball bearings suitable for radial and thrust loading.

E. Motor Sizes: Minimum size as indicated. If not indicated, large enough so driven load will not require motor to operate in service factor range above 1.0.

F. Temperature Rise: Match insulation rating.

G. Code Letter Designation:

1. Motors 15 HP and Larger: NEMA starting Code F or Code G.
2. Motors Smaller than 15 HP: Manufacturer's standard starting characteristic.

H. Enclosure Material: Cast iron for motor frame sizes 324T and larger; rolled steel for motor frame sizes smaller than 324T.

I. Controllers, Electrical Devices, and Wiring: Electrical devices and connections are specified in electrical Sections.

## 2.10 VIBRATION ISOLATION DEVICES

A. Elastomeric Isolator Pads: Oil- and water-resistant elastomer or natural rubber, arranged in single or multiple layers, molded with a nonslip pattern and galvanized-steel baseplates of sufficient stiffness for uniform loading over pad area, and factory cut to sizes that match requirements of supported equipment.

1. Material: Standard neoprene, complying with AASHTO M 251 separated by steel shims.
2. Shore "A" Scale Durometer Rating: 30.
3. Number of Layers: Two.
4. Minimum Deflection: 1 inch (25 mm).

B. Restrained Spring Isolators: Freestanding, steel, open-spring isolators with seismic restraint.

1. Housing: Steel with resilient vertical-limit stops to prevent spring extension due to wind loads or if weight is removed; factory-drilled baseplate bonded to 1/4-inch-(6-mm-) thick, elastomeric isolator pad attached to baseplate underside; and adjustable equipment mounting and leveling bolt that acts as blocking during installation.
2. Outside Spring Diameter: Not less than 80 percent of compressed height of the spring at rated load.
3. Minimum Additional Travel: 50 percent of required deflection at rated load.
4. Lateral Stiffness: More than 80 percent of rated vertical stiffness.
5. Overload Capacity: Support 200 percent of rated load, fully compressed, without deformation or failure.
6. Minimum Deflection: 1 inch (25 mm).

C. Vibration isolation devices shall not be used to accommodate misalignments or to make bends.

## 2.11 FINISHES

A. Indoor and Outdoor Enclosures and Components: Manufacturer's standard finish over corrosion-resistant pretreatment and compatible primer.

## 2.12 SOURCE QUALITY CONTROL

A. Prototype Testing: Factory test engine-generator set using same engine model, constructed of identical or equivalent components and equipped with identical or equivalent accessories.

1. Tests: Comply with NFPA 110, Level 2 Energy Converters and with IEEE 115.

B. Project-Specific Equipment Tests: Before shipment, factory test engine-generator set and other system components and accessories manufactured specifically for this Project. Perform tests at rated load and power factor. Include the following tests:

1. Test components and accessories furnished with installed unit that are not identical to those on tested prototype to demonstrate compatibility and reliability.
2. Test generator, exciter, and voltage regulator as a unit.
3. Full load run.
4. Maximum power.
5. Voltage regulation.
6. Transient and steady-state governing.
7. Single-step load pickup.
8. Safety shutdown.
9. Provide 14 days' advance notice of tests and opportunity for observation of tests by Owner's representative.
10. Report factory test results within 10 days of completion of test.

PART 3 - EXECUTION

3.1 EXAMINATION

A. Examine areas, equipment bases, and conditions, with Installer present, for compliance with requirements for installation and other conditions affecting packaged engine-generator performance.

B. Examine roughing-in for piping systems and electrical connections. Verify actual locations of connections before packaged engine-generator installation.

C. Proceed with installation only after unsatisfactory conditions have been corrected.

3.2 PREPARATION

A. Interruption of Existing Electrical Service: Do not interrupt electrical service to facilities occupied by Owner or others unless permitted under the following conditions and then only after arranging to provide temporary electrical service according to requirements indicated:

1. Notify Construction Manager and Owner no fewer than fourteen [14] working days in advance of proposed interruption of electrical service.
2. Do not proceed with interruption of electrical service without Construction Manager's] and Owner's written permission.

3.3 INSTALLATION

A. Comply with packaged engine-generator manufacturers' written installation and alignment instructions and with NFPA 110.

B. Equipment Mounting:

1. Install packaged engine generators on cast-in-place concrete equipment bases.
2. Coordinate size and location of concrete bases for packaged engine generators and remote radiators mounted on grade. Cast anchor-bolt inserts into bases. Concrete, reinforcement, and formwork requirements are specified with concrete.
3. Coordinate size and location of roof curbs, equipment supports, and roof penetrations for remote radiators.

C. Install packaged engine-generator to provide access, without removing connections or accessories, for periodic maintenance.

D. Install packaged engine-generator with restrained spring isolators having a minimum deflection of 1 inch (25 mm) on 4-inch- (100-mm-) high concrete base. Secure sets to anchor bolts installed in concrete bases.

E. Install remote radiator with restrained spring isolators on concrete base on grade.

F. Install Schedule 40, black steel piping with welded joints for cooling water piping between engine-generator set and remote radiator**.** Piping materials and installation requirements are specified in Section 232113 "Hydronic Piping."

1. Install isolating thimbles where exhaust piping penetrates combustible surfaces. Provide a minimum of 9 inches (225 mm) clearance from combustibles.
2. Insulate cooling system piping and components according to requirements in Section 230719 "HVAC Piping Insulation."

G. Install Schedule 40, black steel piping with welded joints and connect to engine muffler. Install thimble at wall. Piping shall be same diameter as muffler outlet.

1. Install flexible connectors and steel piping materials.
2. Insulate muffler/silencer and exhaust system components.
3. Install isolating thimbles where exhaust piping penetrates combustible surfaces with a minimum of 9 inches (225 mm) clearance from combustibles.

H. Install condensate drain piping to muffler drain outlet full size of drain connection with a shutoff valve, stainless-steel flexible connector, and Schedule 40, black steel pipe with welded joints.

I. Copper and galvanized steel shall not be used in the fuel-oil piping system.

J. Electrical Wiring: Install electrical devices furnished by equipment manufacturers but not specified to be factory mounted.

## 3.4 CONNECTIONS

A. Piping installation requirements are specified in other Sections. Drawings indicate general arrangement of piping and specialties.

B. Connect fuel, cooling-system, and exhaust-system piping adjacent to packaged engine-generator to allow service and maintenance.

C. Connect cooling-system water piping to engine-generator set and remote radiator with flexible connectors.

D. Connect engine exhaust pipe to engine with flexible connector.

E. Connect fuel piping to engines with a gate valve and union and flexible connector.

F. Ground equipment according to Section 260526 "Grounding and Bonding for Electrical Systems."

G. Balance single-phase loads to obtain a maximum of 10 percent unbalance between any two phases.

## 3.5 IDENTIFICATION

A. Install a sign indicating the generator neutral is bonded to the main service neutral at the main service location.

## 3.6 FIELD QUALITY CONTROL

A. Testing Agency: Engage a qualified testing agency to perform tests and inspections.

B. Manufacturer's Field Service: Engage a factory-authorized service representative to inspect, test, and adjust components, assemblies, and equipment installations, including connections.

C. Perform tests and inspections.

1. Manufacturer's Field Service: Engage a factory-authorized service representative to inspect components, assemblies, and equipment installations, including connections.

D. Tests and Inspections:

1. Perform tests recommended by manufacturer and each visual and mechanical inspection and electrical and mechanical test listed in the first two subparagraphs as specified in NETA Acceptance Testing Specification. Certify compliance with test parameters.

a. Visual and Mechanical Inspection

1) Compare equipment nameplate data with drawings and specifications.
2) Inspect physical and mechanical condition.
3) Inspect anchorage, alignment, and grounding.
4) Verify the unit is clean.

b. Electrical and Mechanical Tests

1) Perform insulation-resistance tests in accordance with IEEE 43.

a) Machines larger than 200 horsepower (150 kilowatts). Test duration shall be 10 minutes. Calculate polarization index.
b) Machines 200 horsepower (150 kilowatts) or less. Test duration shall be one minute. Calculate the dielectric-absorption ratio.

2) Test protective relay devices.
3) Verify phase rotation, phasing, and synchronized operation as required by the application.

4) Functionally test engine shutdown for low oil pressure, overtemperature, overspeed, and other protection features as applicable.
5) Conduct performance test in accordance with NFPA 110.
6) Verify correct functioning of the governor and regulator.

2. NFPA 110 Acceptance Tests: Perform tests required by NFPA 110 that are additional to those specified here including, but not limited to, single-step full-load pickup test.
3. Battery Tests: Equalize charging of battery cells according to manufacturer's written instructions. Record individual cell voltages.

   a. Measure charging voltage and voltages between available battery terminals for full-charging and float-charging conditions. Check electrolyte level and specific gravity under both conditions.
   b. Test for contact integrity of all connectors. Perform an integrity load test and a capacity load test for the battery.
   c. Verify acceptance of charge for each element of the battery after discharge.
   d. Verify that measurements are within manufacturer's specifications.

4. Battery-Charger Tests: Verify specified rates of charge for both equalizing and float-charging conditions.
5. System Integrity Tests: Methodically verify proper installation, connection, and integrity of each element of engine-generator system before and during system operation. Check for air, exhaust, and fluid leaks.
6. Exhaust-System Back-Pressure Test: Use a manometer with a scale exceeding 40-inch wg (120 kPa). Connect to exhaust line close to engine exhaust manifold. Verify that back pressure at full-rated load is within manufacturer's written allowable limits for the engine.
7. Exhaust Emissions Test: Comply with applicable government test criteria.
8. Voltage and Frequency Transient Stability Tests: Use recording oscilloscope to measure voltage and frequency transients for 50 and 100 percent step-load increases and decreases, and verify that performance is as specified.
9. Harmonic-Content Tests: Measure harmonic content of output voltage at 25 percent and 100 percent of rated linear load. Verify that harmonic content is within specified limits.
10. Noise Level Tests: Measure A-weighted level of noise emanating from generator-set installation, including engine exhaust and cooling-air intake and discharge, at four locations 25 feet (7.6 m) from edge of the generator enclosure on the property line, and compare measured levels with required values.

E. Coordinate tests with tests for transfer switches and run them concurrently.

F. Test instruments shall have been calibrated within the last 12 months, traceable to NIST Calibration Services, and adequate for making positive observation of test results. Make calibration records available for examination on request.

G. Leak Test: After installation, charge exhaust, coolant, and fuel systems and test for leaks. Repair leaks and retest until no leaks exist.

H. Operational Test: After electrical circuitry has been energized, start units to confirm proper motor rotation and unit operation for generator and associated equipment.

I. Test and adjust controls and safeties. Replace damaged and malfunctioning controls and equipment.

J. Remove and replace malfunctioning units and retest as specified above.

K. Retest: Correct deficiencies identified by tests and observations and retest until specified requirements are met.

L. Report results of tests and inspections in writing. Record adjustable relay settings and measured insulation resistances, time delays, and other values and observations. Attach a label or tag to each tested component indicating satisfactory completion of tests.

M. Infrared Scanning: After Substantial Completion, but not more than 60 days after final acceptance, perform an infrared scan of each power wiring termination and each bus connection while running with maximum load. Remove all access panels so terminations and connections are accessible to portable scanner.

1. Follow-up Infrared Scanning: Perform an additional follow-up infrared scan 11 months after date of Substantial Completion.
2. Instrument: Use an infrared scanning device designed to measure temperature or to detect significant deviations from normal values. Provide calibration record for device.
3. Record of Infrared Scanning: Prepare a certified report that identifies terminations and connections checked and that describes scanning results. Include notation of deficiencies detected, remedial action taken, and observations after remedial action.

## 3.7 MAINTENANCE SERVICE

A. Initial Maintenance Service: Beginning at Substantial Completion, provide 12 months' full maintenance by skilled employees of manufacturer's designated service organization. Include quarterly exercising to check for proper starting, load transfer, and running under load. Include routine preventive maintenance as recommended by manufacturer and adjusting as required for proper operation. Provide parts and supplies same as those used in the manufacture and installation of original equipment.

## 3.8 DEMONSTRATION

A. Engage a factory-authorized service representative to train Owner's maintenance personnel to adjust, operate, and maintain packaged engine generators.

**END OF SECTION**

# SECTION 26 36 00

# TRANSFER SWITCHES

## PART 1 - GENERAL

### 1.1 RELATED DOCUMENTS

A. Drawings and general provisions of the Contract, including General and Supplementary Conditions and Division 01 Specification Sections, apply to this Section.

### 1.2 SUMMARY

A. Section includes transfer switches rated 600 V and less, including the following:

1. Automatic transfer switches.
2. Remote annunciation and control systems.

### 1.3 ACTION SUBMITTALS

A. Product Data: For each type of product indicated. Include rated capacities, weights, operating characteristics, furnished specialties, and accessories.

B. Shop Drawings: Dimensioned plans, elevations, sections, and details showing minimum clearances, conductor entry provisions, gutter space, installed features and devices, and material lists for each switch specified.

1. Single-Line Diagram: Show connections between transfer switch, power sources, and load; and show interlocking provisions for each combined transfer switch.

### 1.4 INFORMATIONAL SUBMITTALS

A. Qualification Data: For manufacturer.

B. Manufacturer Seismic Qualification Certification: Submit certification that transfer switches accessories, and components will withstand seismic forces.

1. Basis for Certification: Indicate whether withstand certification is based on actual test of assembled components or on calculation.

a. The term "withstand" means "the unit will remain in place without separation of any parts from the device when subjected to the seismic forces specified."

2. Dimensioned Outline Drawings of Equipment Unit: Identify center of gravity and locate and describe mounting and anchorage provisions.
3. Detailed description of equipment anchorage devices on which the certification is based and their installation requirements.

C. Field quality-control reports.

## 1.5 CLOSEOUT SUBMITTALS

A. Operation and Maintenance Data: For each type of product to include in emergency, operation, and maintenance manuals. In addition to items specified in Section 017823 "Operation and Maintenance Data," include the following:

1. Features and operating sequences, both automatic and manual.
2. List of all factory settings of relays; provide relay-setting and calibration instructions, including software, where applicable.

## 1.6 QUALITY ASSURANCE

A. Manufacturer Qualifications: Maintain a service center capable of providing training, parts, and emergency maintenance repairs within a response period of less than eight hours from time of notification.

B. Source Limitations: Obtain automatic transfer switches bypass/isolation switches remote annunciator and control panels through one source from a single manufacturer.

C. Electrical Components, Devices, and Accessories: Listed and labeled as defined in NFPA 70, by a qualified testing agency, and marked for intended location and application.

D. Comply with NEMA ICS 1.

E. Comply with NFPA 70.

F. Comply with NFPA 110.

G. Comply with UL 1008 unless requirements of these Specifications are stricter.

## 1.7 COORDINATION

A. Coordinate size and location of concrete bases. Cast anchor-bolt inserts into bases. Concrete, reinforcement, and formwork requirements are specified in Section 033000 "Cast-in-Place Concrete."

# PART 2 - PRODUCTS

## 2.1 MANUFACTURED UNITS

A. Contactor Transfer Switches:

1. Manufacturers: Subject to compliance with requirements, available manufacturers offering products that may be incorporated into the Work include, but are not limited to, the following:

   a. Generac.
   b. Emerson; ASCO Power Technologies, LP.
   c. Kohler Power Systems; Generator Division.
   d. Onan/Cummins Power Generation; Industrial Business Group.

## 2.2 GENERAL TRANSFER-SWITCH PRODUCT REQUIREMENTS

A. Indicated Current Ratings: Apply as defined in UL 1008 for continuous loading and total system transfer, including tungsten filament lamp loads not exceeding 30 percent of switch ampere rating, unless otherwise indicated.

B. Tested Fault-Current Closing and Withstand Ratings: Adequate for duty imposed by protective devices at installation locations in Project under the fault conditions indicated, based on testing according to UL 1008.

1. Where transfer switch includes internal fault-current protection, rating of switch and trip unit combination shall exceed indicated fault-current value at installation location.

C. Solid-State Controls: Repetitive accuracy of all settings shall be plus or minus 2 percent or better over an operating temperature range of minus 20 to plus 70 deg C.

D. Resistance to Damage by Voltage Transients: Components shall meet or exceed voltage-surge withstand capability requirements when tested according to IEEE C62.41. Components shall meet or exceed voltage-impulse withstand test of NEMA ICS 1.

E. Electrical Operation: Accomplish by a nonfused, momentarily energized solenoid or electric-motor-operated mechanism, mechanically and electrically interlocked in both directions.

F. Switch Characteristics: Designed for continuous-duty repetitive transfer of full-rated current between active power sources.

1. Switch Action: Double throw; mechanically held in both directions.
2. Contacts: Silver composition or silver alloy for load-current switching. Conventional automatic transfer-switch units, rated 225 A and higher, shall have separate arcing contacts.

G. Neutral Terminal: Solid and fully rated, unless otherwise indicated.

H. Oversize Neutral: Ampacity and switch rating of neutral path through units indicated for oversize neutral shall be double the nominal rating of circuit in which switch is installed.

I. Battery Charger: For generator starting batteries.

1. Float type rated 2 A.
2. Ammeter to display charging current.
3. Fused ac inputs and dc outputs.

J. Annunciation, Control, and Programming Interface Components: Devices at transfer switches for communicating with remote programming devices, annunciators, or annunciator and control panels shall have communication capability matched with remote device.

K. Factory Wiring: Train and bundle factory wiring and label, consistent with Shop Drawings, either by color-code or by numbered or lettered wire and cable tape markers at terminations. Color-coding and wire and cable tape markers are specified in Section 260553 "Identification for Electrical Systems."

1. Designated Terminals: Pressure type, suitable for types and sizes of field wiring indicated.
2. Power-Terminal Arrangement and Field-Wiring Space: Suitable for top, side, or bottom entrance of feeder conductors as indicated.
3. Control Wiring: Equipped with lugs suitable for connection to terminal strips.

L. Enclosures: General-purpose NEMA 250, Type 1, complying with NEMA ICS 6 and UL 508, unless otherwise indicated.

## 2.3 AUTOMATIC TRANSFER SWITCHES

A. Comply with Level 1 equipment according to NFPA 110.

B. Switching Arrangement: Double-throw type, incapable of pauses or intermediate position stops during normal functioning, unless otherwise indicated.

C. Manual Switch Operation: Under load, with door closed and with either or both sources energized. Transfer time is same as for electrical operation. Control circuit automatically disconnects from electrical operator during manual operation.

D. Signal-Before-Transfer Contacts: A set of normally open/normally closed dry contacts operates in advance of retransfer to normal source. Interval is adjustable from 1 to 30 seconds.

E. Digital Communication Interface: Matched to capability of remote annunciator or annunciator and control panel.

F. Automatic Open-Transition Transfer Switches: Include the following functions and characteristics:

1. Fully automatic break-before-make operation.
2. Load transfer with interruption. There shall be no momentary interconnection of both power sources.

G. Automatic Transfer-Switch Features:

1. Undervoltage Sensing for Each Phase of Normal Source: Sense low phase-to-ground voltage on each phase. Pickup voltage shall be adjustable from 85 to 100 percent of nominal, and dropout voltage is adjustable from 75 to 98 percent of pickup value. Factory set for pickup at 90 percent and dropout at 85 percent.
2. Adjustable Time Delay: For override of normal-source voltage sensing to delay transfer and engine start signals. Adjustable from zero to six seconds, and factory set for one second.
3. Voltage/Frequency Lockout Relay: Prevent premature transfer to generator. Pickup voltage shall be adjustable from 85 to 100 percent of nominal. Factory set for pickup at 90 percent. Pickup frequency shall be adjustable from 90 to 100 percent of nominal. Factory set for pickup at 95 percent.
4. Time Delay for Retransfer to Normal Source: Adjustable from 0 to 30 minutes, and factory set for 10 minutes to automatically defeat delay on loss of voltage or sustained undervoltage of emergency source, provided normal supply has been restored.
5. Test Switch: Simulate normal-source failure.
6. Switch-Position Pilot Lights: Indicate source to which load is connected.
7. Source-Available Indicating Lights: Supervise sources via transfer-switch normal- and emergency-source sensing circuits.

    a. Normal Power Supervision: Green light with nameplate engraved "Normal Source Available."
    b. Emergency Power Supervision: Red light with nameplate engraved "Emergency Source Available."

8. Unassigned Auxiliary Contacts: Two normally open, single-pole, double-throw contacts for each switch position, rated 10 A at 240-V ac.
9. Transfer Override Switch: Overrides automatic retransfer control so automatic transfer switch will remain connected to emergency power source regardless of condition of normal source. Pilot light indicates override status.
10. Engine Starting Contacts: One isolated and normally closed, and one isolated and normally open; rated 10 A at 32-V dc minimum.
11. Engine Shutdown Contacts: Time delay adjustable from zero to five minutes, and factory set for five minutes. Contacts shall initiate shutdown at remote engine-generator controls after retransfer of load to normal source.
12. Engine-Generator Exerciser: Solid-state, programmable-time switch starts engine generator and transfers load to it from normal source for a preset time, then retransfers and shuts down engine after a preset cool-down period. Initiates exercise cycle at preset intervals adjustable from 7 to 30 days. Running periods are adjustable from 10 to 30 minutes. Factory settings are for 7-day exercise cycle, 20-minute running period, and 5-minute cool-down period. Exerciser features include the following:

    a. Exerciser Transfer Selector Switch: Permits selection of exercise with and without load transfer.
    b. Push-button programming control with digital display of settings.
    c. Integral battery operation of time switch when normal control power is not available.

## 2.4 REMOTE ANNUNCIATOR AND CONTROL SYSTEM

A. Functional Description: Include the following functions for indicated transfer switches:

1. Indication of sources available, as defined by actual pickup and dropout settings of transfer-switch controls.
2. Indication of switch position.
3. Indication of switch in test mode.
4. Indication of failure of digital communication link.
5. Key-switch or user-code access to control functions of panel.
6. Control of switch-test initiation.
7. Control of switch operation in either direction.

B. Malfunction of annunciator, annunciation and control panel, or communication link shall not affect functions of automatic transfer switch. In the event of failure of communication link, automatic transfer switch automatically reverts to stand-alone, self-contained operation. Automatic transfer-switch sensing, controlling, or operating function shall not depend on remote panel for proper operation.

C. Remote Annunciation and Control Panel: Solid-state components. Include the following features:

1. Controls and indicating lights grouped together for each transfer switch.

2. Label each indicating light control group. Indicate transfer switch it controls, location of switch, and load it serves.
3. Digital Communication Capability: Matched to that of transfer switches supervised.
4. Mounting: Flush, modular, steel cabinet, unless otherwise indicated.

## 2.5 SOURCE QUALITY CONTROL

A. Factory test and inspect components, assembled switches, and associated equipment. Ensure proper operation. Check transfer time and voltage, frequency, and time-delay settings for compliance with specified requirements. Perform dielectric strength test complying with NEMA ICS 1.

# PART 3 - EXECUTION

## 3.1 INSTALLATION

A. Design each fastener and support to carry load indicated by seismic requirements and according to seismic-restraint details.

B. Floor-Mounting Switch: Anchor to floor by bolting.

1. Concrete Bases: 4 inches high, reinforced, with chamfered edges. Extend base no more than 4 inches in all directions beyond the maximum dimensions of switch, unless otherwise indicated or unless required for seismic support.

C. Annunciator and Control Panel Mounting: Flush in wall, unless otherwise indicated.

D. Set field-adjustable intervals and delays, relays, and engine exerciser clock.

## 3.2 CONNECTIONS

A. Wiring to Remote Components: Match type and number of cables and conductors to control and communication requirements of transfer switches as recommended by manufacturer. Increase raceway sizes at no additional cost to Owner if necessary to accommodate required wiring.

## 3.3 FIELD QUALITY CONTROL

A. Manufacturer's Field Service: Engage a factory-authorized service representative to test and inspect components, assemblies, and equipment installations, including connections.

B. Perform the following tests and inspections with the assistance of a factory-authorized service representative:

1. After installing equipment and after electrical circuitry has been energized, test for compliance with requirements.
2. Perform each visual and mechanical inspection and electrical test stated in NETA Acceptance Testing Specification. Certify compliance with test parameters.
3. Measure insulation resistance phase-to-phase and phase-to-ground with insulation-resistance tester. Include external annunciation and control circuits. Use test voltages and procedure recommended by manufacturer. Comply with manufacturer's specified minimum resistance.

    a. Check for electrical continuity of circuits and for short circuits.
    b. Inspect for physical damage, proper installation and connection, and integrity of barriers, covers, and safety features.
    c. Verify that manual transfer warnings are properly placed.
    d. Perform manual transfer operation.

4. After energizing circuits, demonstrate interlocking sequence and operational function for each switch at least three times.

    a. Simulate power failures of normal source to automatic transfer switches and of emergency source with normal source available.
    b. Simulate loss of phase-to-ground voltage for each phase of normal source.
    c. Verify time-delay settings.
    d. Verify pickup and dropout voltages by data readout or inspection of control settings.
    e. Test bypass/isolation unit functional modes and related automatic transfer-switch operations.
    f. Verify proper sequence and correct timing of automatic engine starting, transfer time delay, retransfer time delay on restoration of normal power, and engine cool-down and shutdown.

C. Coordinate tests with tests of generator and run them concurrently.

D. Report results of tests and inspections in writing. Record adjustable relay settings and measured insulation and contact resistances and time delays. Attach a label or tag to each tested component indicating satisfactory completion of tests.

E. Remove and replace malfunctioning units and retest as specified above.

F. Prepare test and inspection reports.

G. Infrared Scanning: After Substantial Completion, but not more than 60 days after Final Acceptance, perform an infrared scan of each switch. Remove all access panels so joints and connections are accessible to portable scanner.

1. Follow-up Infrared Scanning: Perform an additional follow-up infrared scan of each switch 11 months after date of Substantial Completion.
2. Instrument: Use an infrared scanning device designed to measure temperature or to detect significant deviations from normal values. Provide calibration record for device.
3. Record of Infrared Scanning: Prepare a certified report that identifies switches checked and that describes scanning results. Include notation of deficiencies detected, remedial action taken, and observations after remedial action.

## 3.4 DEMONSTRATION

A. Engage a factory-authorized service representative to train Owner's maintenance personnel to adjust, operate, and maintain transfer switches and related equipment as specified below.

B. Coordinate this training with that for generator equipment.

**END OF SECTION**

# SECTION 264113

# LIGHTNING PROTECTION FOR STRUCTURES

## PART 1 - GENERAL

### 1.1 RELATED DOCUMENTS

A. Drawings and general provisions of the Contract, including General and Supplementary Conditions and Division 01 Specification Sections, apply to this Section.

### 1.2 SUMMARY

A. Section includes lightning protection system for ordinary structures.

### 1.3 ACTION SUBMITTALS

A. Product Data: For each type of product.

B. Shop Drawings:

1. Include layouts of the lightning protection system, with details of the components to be used in the installation.
2. Include raceway locations needed for the installation of conductors.
3. Details of air terminals, ground rods, ground rings, conductor supports, splices, and terminations, including concealment requirements.
4. Include roof attachment details, coordinated with roof installation.
5. Calculations required by NFPA 780 for bonding of metal bodies.

### 1.4 INFORMATIONAL SUBMITTALS

A. Qualification Data: For Installer.

B. Product Certificates: For each type of roof adhesive for attaching the roof-mounted air terminal assemblies, approved by the roofing-material manufacturer.

C. Field quality-control reports.

### 1.5 CLOSEOUT SUBMITTALS

A. Maintenance Data: For lightning protection system to include in maintenance manuals.

1. In addition to items specified in Section 017823 "Operation and Maintenance Data," include the following:

   a. Dimensioned site plan showing dimensioned route of the ground loop conductor and the ground rod locations. Comply with requirements of Section 017839 "Project Record Documents."
   b. A system testing and inspection record, listing the results of inspections and ground resistance tests, as recommended by NFPA 780, Annex D.

B. Completion Certificate:

   1. UL Master Label Certificate.

## 1.6 QUALITY ASSURANCE

A. Installer Qualifications: UL-listed installer, category OWAY.

# PART 2 - PRODUCTS

## 2.1 MANUFACTURERS

A. Manufacturers: Subject to compliance with requirements, available manufacturers offering products that may be incorporated into the Work include, but are not limited to the following:

   1. Advanced Lightning Technology, LTD.
   2. East Coast Lightning Equipment Inc.
   3. ERICO International Corporation.
   4. Harger Lightning & Grounding.

## 2.2 PERFORMANCE REQUIREMENTS

A. UL Lightning Protection Standard: Comply with UL 96A requirements for Class I buildings.

B. Lightning Protection Components, Devices, and Accessories: Listed and labeled by a qualified testing agency as complying with UL 96, and marked for intended location and application.

## 2.3 MATERIALS

A. Air Terminals:

   1. Aluminum unless otherwise indicated.

B. Air Terminal Bracing:

1. Aluminum.
2. 1/4-inch diameter rod.

C. Class 1 Main Conductors:

1. Aluminum: 98,600 circular mils in diameter.

D. Secondary Conductors:

1. Aluminum: 41,400 circular mils in diameter.

E. Ground Loop Conductor: Tinned copper**.**

F. Ground Rods:

1. Material: Copper-clad steel.
2. Diameter: 3/4 inch.
3. Rods shall be not less than 120 inches long.

G. Conductor Splices and Connectors: Compression fittings that are installed with hydraulically operated tools, or exothermic welds, approved for use with the class type.

PART 3 - EXECUTION

3.1 INSTALLATION

A. Install lightning protection components and systems according to UL 96A.

B. Install conductors with direct paths from air terminals to ground connections. Avoid bends less than 90 degrees and 8 inches in radius and narrow loops.

C. Conceal conductors within normal view from exterior locations at grade within 200 feet of building. Comply with requirements for concealed installations in UL 96A.

1. Roof penetrations required for down conductors and connections to structural-steel framework shall be made using listed through-roof fitting and connector assemblies with solid rods and appropriate roof flashings. Use materials approved by the roofing manufacturer for the purpose. Conform to the methods and materials required at roofing penetrations of the lightning protection components to ensure compatibility with the roofing specifications and warranty.
2. Install conduit where necessary to comply with conductor concealment requirements.
3. Air Terminals on Single-Ply Membrane Roofing: Comply with adhesive manufacturer's written instructions.

D. Ground Ring Electrode: The conductor shall be not less than the main-size lightning conductor.

## 3.2 CONNECTIONS

A. Aboveground concealed connections, and connections in earth or concrete, shall be done by exothermic welds or by high-compression fittings listed for the purpose.

B. Aboveground exposed connections shall be done using the following types of connectors, listed and labeled for the purpose: exothermic weld or high compression crimp.

C. Bonding Straps and Jumpers: Install in locations accessible for inspection and maintenance, except where routed through short lengths of conduit.

1. Bonding to Structure: Bond straps directly to basic structure, taking care not to penetrate any adjacent parts.
2. Bonding to Equipment Mounted on Vibration Isolation Hangers and Supports: Install bonding so vibration is not transmitted to rigidly mounted equipment.

## 3.3 CORROSION PROTECTION

A. Do not combine materials that can form an electrolytic couple that will accelerate corrosion in the presence of moisture unless moisture is permanently excluded from junction of such materials.

B. Use conductors with protective coatings where conditions would cause deterioration or corrosion of conductors.

## 3.4 FIELD QUALITY CONTROL

A. Special Inspections: Engage a qualified special inspector to perform the following special inspections:

1. Perform inspections as required to obtain a UL Master Label for system.

B. Prepare test and inspection reports and certificates.

**END OF SECTION**

# SECTION 264313

# SURGE PROTECTION FOR LOW-VOLTAGE ELECTRICAL POWER CIRCUITS

## PART 1 - GENERAL

### 1.1 RELATED DOCUMENTS

A. Drawings and general provisions of the Contract, including General and Supplementary Conditions and Division 01 Specification Sections, apply to this Section.

### 1.2 SUMMARY

A. Section includes field-mounted SPDs for low-voltage (120 to 600 V) power distribution and control equipment.

### 1.3 DEFINITIONS

A. Inominal: Nominal discharge current.

B. MCOV: Maximum continuous operating voltage.

C. Mode(s), also Modes of Protection: The pair of electrical connections where the VPR applies.

D. MOV: Metal-oxide varistor; an electronic component with a significant non-ohmic current-voltage characteristic.

E. OCPD: Overcurrent protective device.

F. SCCR: Short-circuit current rating.

G. SPD: Surge protective device.

H. VPR: Voltage protection rating.

### 1.4 ACTION SUBMITTALS

A. Product Data: For each type of product.

1. Include rated capacities, operating characteristics, electrical characteristics, and furnished specialties and accessories.

2. Copy of UL Category Code VZCA certification, as a minimum, listing the tested values for VPRs, Inominal ratings, MCOVs, type designations, OCPD requirements, model numbers, system voltages, and modes of protection.

1.5 INFORMATIONAL SUBMITTALS

A. Field quality-control reports.

B. Sample Warranty: For manufacturer's special warranty.

1.6 CLOSEOUT SUBMITTALS

A. Maintenance Data: For SPDs to include in maintenance manuals.

1.7 WARRANTY

A. Manufacturer's Warranty: Manufacturer agrees to replace or replace SPDs that fail in materials or workmanship within specified warranty period.

1. Warranty Period: Five years from date of Substantial Completion.

PART 2 - PRODUCTS

2.1 GENERAL SPD REQUIREMENTS

A. SPD with Accessories: Listed and labeled as defined in NFPA 70, by a qualified testing agency, and marked for intended location and application.

B. Comply with NFPA 70.

C. Comply with UL 1449.

D. MCOV of the SPD shall be the nominal system voltage.

2.2 SERVICE ENTRANCE SUPPRESSOR

A. Manufacturers: Subject to compliance with requirements, provide products by one of the following:

1. Current Technology Inc.
2. Eaton.
3. General Electric Company.
4. Liebert; a brand of Emerson Electric Co.
5. Square D; by Schneider Electric.

B. SPDs: Comply with UL 1449, Type 2.

1. SPDs with the following features and accessories:

a. Integral disconnect switch.
b. Internal thermal protection that disconnects the SPD before damaging internal suppressor components.
c. Indicator light display for protection status.
d. Form-C contacts rated at 5 A and 250-V ac, one normally open and one normally closed, for remote monitoring of protection status. Contacts shall reverse on failure of any surge diversion module or on opening of any current-limiting device. Coordinate with building power monitoring and control system.
e. Six digit surge counter, with reset button.
f. Audible alarm, with silencing button, to indicate when protection has failed.

C. Comply with UL 1283.

D. Peak Surge Current Rating: The minimum single-pulse surge current withstand rating per phase shall not be less than 200 kA. The peak surge current rating shall be the arithmetic sum of the ratings of the individual MOVs in a given mode.

E. Protection modes and UL 1449 VPR for grounded wye circuits with 208Y/120 V, three-phase, four-wire circuits shall not exceed the following:

1. Line to Neutral: 700 V for 208Y/120 V.
2. Line to Ground: 1200 V for 208Y/120 V.
3. Line to Line: 1000 V for 208Y/120 V.

F. SCCR: Equal or exceed 100 kA.

G. Inominal Rating: 20 kA.

## 2.3 ENCLOSURES

A. Indoor Enclosures: NEMA 250, Type 1.

## 2.4 CONDUCTORS AND CABLES

A. Power Wiring: Same size as SPD leads, complying with Section 260519 "Low-Voltage Electrical Power Conductors and Cables."

B. Class 2 Control Cables: Multiconductor cable with copper conductors not smaller than No. 18 AWG, complying with Section 260519 "Low-Voltage Electrical Power Conductors and Cables."

C. Class 1 Control Cables: Multiconductor cable with copper conductors not smaller than No. 14 AWG, complying with Section 260519 "Low-Voltage Electrical Power Conductors and Cables."

## PART 3 - EXECUTION

### 3.1 INSTALLATION

A. Comply with NECA 1.

B. Install an OCPD or disconnect as required to comply with the UL listing of the SPD.

C. Install SPDs with conductors between suppressor and points of attachment as short and straight as possible, and adjust circuit-breaker positions to achieve shortest and straightest leads. Do not splice and extend SPD leads unless specifically permitted by manufacturer. Do not exceed manufacturer's recommended lead length. Do not bond neutral and ground.

D. Use crimped connectors and splices only. Wire nuts are unacceptable.

E. Wiring:

1. Power Wiring: Comply with wiring methods in Section 260519 "Low-Voltage Electrical Power Conductors and Cables."
2. Controls: Comply with wiring methods in Section 260519 "Low-Voltage Electrical Power Conductors and Cables."

### 3.2 FIELD QUALITY CONTROL

A. Perform the following tests and inspections with the assistance of a factory-authorized service representative.

1. Compare equipment nameplate data for compliance with Drawings and Specifications.
2. Inspect anchorage, alignment, grounding, and clearances.
3. Verify that electrical wiring installation complies with manufacturer's written installation requirements.

B. An SPD will be considered defective if it does not pass tests and inspections.

C. Prepare test and inspection reports.

### 3.3 STARTUP SERVICE

A. Complete startup checks according to manufacturer's written instructions.

B. Do not perform insulation-resistance tests of the distribution wiring equipment with SPDs installed. Disconnect SPDs before conducting insulation-resistance tests, and reconnect them immediately after the testing is over.

C. Energize SPDs after power system has been energized, stabilized, and tested.

## 3.4 DEMONSTRATION

A. Train Owner's maintenance personnel to operate and maintain SPDs.

**END OF SECTION**

# SECTION 26 51 19
# LED INTERIOR LIGHTING

## PART 1 - GENERAL

### 1.1 RELATED DOCUMENTS

A. Drawings and general provisions of the Contract, including General and Supplementary Conditions and Division 01 Specification Sections, apply to this Section.

### 1.2 SUMMARY

A. Section Includes:

1. Interior solid-state luminaires that use LED technology.
2. Lighting fixture supports.

B. Related Requirements:

1. Section 260943.23 "Relay-Based Lighting Controls" for manual or programmable control systems with low-voltage control wiring or data communication circuits.

### 1.3 DEFINITIONS

A. CCT: Correlated color temperature.

B. CRI: Color Rendering Index.

C. Fixture: See "Luminaire."

D. IP: International Protection or Ingress Protection Rating.

E. LED: Light-emitting diode.

F. Lumen: Measured output of lamp and luminaire, or both.

G. Luminaire: Complete lighting unit, including lamp, reflector, and housing.

### 1.4 ACTION SUBMITTALS

A. Product Data: For each type of product.

1. Arrange in order of luminaire designation.
2. Include data on features, accessories, and finishes.

3. Include physical description and dimensions of luminaires.
4. Include emergency lighting units, including batteries and chargers.
5. Include life, output (lumens, CCT, and CRI), and energy efficiency data.
6. Photometric data and adjustment factors based on laboratory tests, complying with IESNA Lighting Measurements Testing and Calculation Guides, of each lighting fixture type. The adjustment factors shall be for lamps and accessories identical to those indicated for the lighting fixture as applied in this Project IES LM-79 and IES LM-80.

    a. Testing Agency Certified Data: For indicated luminaires, photometric data certified by a qualified independent testing agency. Photometric data for remaining luminaires shall be certified by manufacturer.

B. Shop Drawings: For nonstandard or custom luminaires.

1. Include plans, elevations, sections, and mounting and attachment details.
2. Include details of luminaire assemblies. Indicate dimensions, weights, loads, required clearances, method of field assembly, components, and location and size of each field connection.
3. Include diagrams for power, signal, and control wiring.

C. LEED Submittals:

1. Product Data for Credit IEQ 4.2: For paints and coatings, documentation including printed statement of VOC content.
2. Laboratory Test Reports for Credit IEQ 4.2: For paints and coatings, documentation indicating that products comply with the testing and product requirements of the California Department of Public Health's "Standard Method for the Testing and Evaluation of Volatile Organic Chemical Emissions from Indoor Sources Using Environmental Chambers."

D. Samples: For each luminaire and for each color and texture with standard factory-applied finish.

E. Samples for Initial Selection: For each type of luminaire with custom factory-applied finishes.

1. Include Samples of luminaires and accessories involving color and finish selection.

F. Samples for Verification: For each type of luminaire.

1. Include Samples of luminaires and accessories to verify finish selection.

G. Product Schedule: For luminaires and lamps. See schedule on contract drawings.

## 1.5 INFORMATIONAL SUBMITTALS

A. Coordination Drawings: Reflected ceiling plan(s) and other details, drawn to scale, on which the following items are shown and coordinated with each other, using input from installers of the items involved:

1. Lighting luminaires.
2. Suspended ceiling components.
3. Partitions and millwork that penetrate the ceiling or extend to within 12 inches of the plane of the luminaires.
4. Structural members to which luminaires will be attached.
5. Initial access modules for acoustical tile, including size and locations.
6. Items penetrating finished ceiling, including the following:

    a. Other luminaires.
    b. Air outlets and inlets.
    c. Speakers.
    d. Sprinklers.
    e. Access panels.

7. Moldings.

B. Qualification Data: For testing laboratory providing photometric data for luminaires.

C. Detailed description of equipment anchorage devices on which the certification is based and their installation requirements.

D. Product Certificates: For each type of luminaire.

E. Product Test Reports: For each luminaire, for tests performed by manufacturer and witnessed by a qualified testing agency.

F. Sample warranty.

## 1.6 CLOSEOUT SUBMITTALS

A. Operation and Maintenance Data: For luminaires and lighting systems to include in operation and maintenance manuals.

1. Provide a list of all lamp types used on Project; use ANSI and manufacturers' codes.

## 1.7 MAINTENANCE MATERIAL SUBMITTALS

A. Furnish extra materials that match products installed and that are packaged with protective covering for storage and identified with labels describing contents.

1. Lamps: Ten for every 100 of each type and rating installed. Furnish at least one of each type.
2. Diffusers and Lenses: Two for every 100 of each type and rating installed. Furnish at least one of each type.
3. Globes and Guards: One for every 20 of each type and rating installed. Furnish at least one of each type.

## 1.8 QUALITY ASSURANCE

A. Luminaire Photometric Data Testing Laboratory Qualifications: Provided by an independent agency, with the experience and capability to conduct the testing indicated, that is an NRTL as defined by OSHA in 29 CFR 1910.7, accredited under the NVLAP for Energy Efficient Lighting Products, and complying with the applicable IES testing standards.

B. Provide luminaires from a single manufacturer for each luminaire type.

C. Each luminaire type shall be binned within a three-step MacAdam Ellipse to ensure color consistency among luminaires.

D. Mockups: For interior lighting luminaires in room or module mockups, complete with power and control connections.

1. Obtain Architect's approval of luminaires in mockups before starting installations.
2. Maintain mockups during construction in an undisturbed condition as a standard for judging the completed Work.
3. Approval of mockups does not constitute approval of deviations from the Contract Documents contained in mockups unless Architect specifically approves such deviations in writing.
4. Subject to compliance with requirements, approved mockups may become part of the completed Work if undisturbed at time of Substantial Completion.

## 1.9 DELIVERY, STORAGE, AND HANDLING

A. Protect finishes of exposed surfaces by applying a strippable, temporary protective covering before shipping.

## 1.10 WARRANTY

A. Warranty: Manufacturer and Installer agree to repair or replace components of luminaires that fail in materials or workmanship within specified warranty period.

B. Warranty Period: Five year(s) from date of Substantial Completion.

PART 2 - PRODUCTS

2.1 LUMINAIRE REQUIREMENTS

A. Electrical Components, Devices, and Accessories: Listed and labeled as defined in NFPA 70, by a qualified testing agency, and marked for intended location and application.

B. NRTL Compliance: Luminaires for hazardous locations shall be listed and labeled for indicated class and division of hazard by an NRTL.

C. FM Global Compliance: Luminaires for hazardous locations shall be listed and labeled for indicated class and division of hazard by FM Global.

D. Recessed Fixtures: Comply with NEMA LE 4.

E. Bulb shape complying with ANSI C79.1.

F. Lamp base complying with ANSI C81.61.

G. CRI of minimum 80. CCT of 3000 K unless otherwise noted on drawings.

H. Rated lamp life of 50,000 hours.

I. Lamps dimmable from 100 percent to 0 percent of maximum light output.

J. Internal driver.

K. Nominal Operating Voltage: 20 V ac.

1. Lens Thickness: At least 0.125 inch minimum unless otherwise indicated.

L. Housings:

1. Extruded-aluminum housing and heat sink.
2. Anodized finish or as noted on the drawings.

2.2 MATERIALS

A. Metal Parts:

1. Free of burrs and sharp corners and edges.
2. Sheet metal components shall be steel unless otherwise indicated.
3. Form and support to prevent warping and sagging.

B. Doors, Frames, and Other Internal Access: Smooth operating, free of light leakage under operating conditions, and designed to permit relamping without use of tools.

Designed to prevent doors, frames, lenses, diffusers, and other components from falling accidentally during relamping and when secured in operating position.

C. Diffusers and Globes:

1. Acrylic Diffusers: One hundred percent virgin acrylic plastic, with high resistance to yellowing and other changes due to aging, exposure to heat, and UV radiation.
2. Retain "Glass" Subparagraph below if first, second, third, or fourth option in "Diffusers and Globes" Paragraph above is retained.
3. Glass: Annealed crystal glass unless otherwise indicated on the drawings.
4. Lens Thickness: At least 0.125 inch minimum unless otherwise indicated.

D. Housings:

1. Extruded-aluminum housing and heat sink.
2. Anodized finish.

E. Factory-Applied Labels: Comply with UL 1598. Include recommended lamps. Locate labels where they will be readily visible to service personnel, but not seen from normal viewing angles when lamps are in place.

1. Label shall include the following lamp characteristics:

a. "USE ONLY" and include specific lamp type.
b. Lamp diameter, shape, size, wattage, and coating.
c. CCT and CRI for all luminaires.

## 2.3 METAL FINISHES

A. Variations in finishes are unacceptable in the same piece. Variations in finishes of adjoining components are acceptable if they are within the range of approved Samples and if they can be and are assembled or installed to minimize contrast.

## 2.4 LUMINAIRE FIXTURE SUPPORT COMPONENTS

A. Comply with requirements in Section 260529 "Hangers and Supports for Electrical Systems" for channel and angle iron supports and nonmetallic channel and angle supports.

B. Single-Stem Hangers: 1/2-inch steel tubing with swivel ball fittings and ceiling canopy. Finish same as luminaire.

C. Wires: ASTM A 641/A 641 M, Class 3, soft temper, zinc-coated steel, 12 gage.

D. Rod Hangers: 3/16-inch minimum diameter, cadmium-plated, threaded steel rod.

E. Hook Hangers: Integrated assembly matched to luminaire, line voltage, and equipment with threaded attachment, cord, and locking-type plug.

## PART 3 - EXECUTION

### 3.1 EXAMINATION

A. Examine substrates, areas, and conditions, with Installer present, for compliance with requirements for installation tolerances and other conditions affecting performance of the Work.

B. Examine roughing-in for luminaire to verify actual locations of luminaire and electrical connections before fixture installation. Proceed with installation only after unsatisfactory conditions have been corrected.

### 3.2 TEMPORARY LIGHTING

A. If approved by the Architect, use selected permanent luminaires for temporary lighting. When construction is sufficiently complete, clean luminaires used for temporary lighting and install new lamps.

### 3.3 INSTALLATION

A. Comply with NECA 1.

B. Install luminaires level, plumb, and square with ceilings and walls unless otherwise indicated.

C. Install lamps in each luminaire.

D. Supports:

1. Sized and rated for luminaire weight.
2. Able to maintain luminaire position after cleaning and relamping.
3. Provide support for luminaire without causing deflection of ceiling or wall.
4. Luminaire mounting devices shall be capable of supporting a horizontal force of 100 percent of luminaire weight and vertical force of 400 percent of luminaire weight.

E. Flush-Mounted Luminaire Support:

1. Secured to outlet box.
2. Attached to ceiling structural members at four points equally spaced around circumference of luminaire.
3. Trim ring flush with finished surface.

F. Wall-Mounted Luminaire Support:

1. Attached to a minimum 20 gauge backing plate attached to wall structural members.
2. Do not attach luminaires directly to gypsum board.

G. Ceiling-Mounted Luminaire Support:

1. Ceiling mount with pendant mount with 5/32-inch- diameter aircraft cable supports adjustable to 120 inches in length.

H. Suspended Luminaire Support:

1. Pendants and Rods: Where longer than 48 inches, brace to limit swinging.
2. Stem-Mounted, Single-Unit Luminaires: Suspend with twin-stem hangers. Support with approved outlet box and accessories that hold stem and provide damping of luminaire oscillations. Support outlet box vertically to building structure using approved devices.
3. Continuous Rows of Luminaires: Use tubing or stem for wiring at one point and tubing or rod wire support for suspension for each unit length of luminaire chassis, including one at each end.
4. Do not use ceiling grid as support for pendant luminaires. Connect support wires or rods to building structure.

I. Ceiling-Grid-Mounted Luminaires:

1. Secure to any required outlet box.
2. Secure luminaire to the luminaire opening using approved fasteners in a minimum of four locations, spaced near corners of luminaire.
3. Use approved devices and support components to connect luminaire to ceiling grid and building structure in a minimum of four locations, spaced near corners of luminaire.

J. Comply with requirements in Section 260519 "Low-Voltage Electrical Power Conductors and Cables" for wiring connections.

## 3.4 IDENTIFICATION

A. Identify system components, wiring, cabling, and terminals. Comply with requirements for identification specified in Section 260553 "Identification for Electrical Systems."

## 3.5 FIELD QUALITY CONTROL

A. Perform the following tests and inspections:

1. Operational Test: After installing luminaires, switches, and accessories, and after electrical circuitry has been energized, test units to confirm proper operation.
2. Test for Emergency Lighting: Interrupt power supply to demonstrate proper operation. Verify transfer from normal power to battery power and retransfer to normal.

B. Luminaire will be considered defective if it does not pass operation tests and inspections.

C. Prepare test and inspection reports.

## 3.6 STARTUP SERVICE

A. Comply with requirements for startup specified in Section 260943.16 "Addressable-Fixture Lighting Controls."

B. Comply with requirements for startup specified in Section 260943.23 "Relay-Based Lighting Controls."

## 3.7 ADJUSTING

A. Occupancy Adjustments: When requested within 12 months of date of Substantial Completion, provide on-site assistance in adjusting the direction of aim of luminaires to suit occupied conditions. Make up to two visits to Project during other-than-normal hours for this purpose. Some of this work may be required during hours of darkness.

1. During adjustment visits, inspect all luminaires. Replace lamps or luminaires that are defective.
2. Parts and supplies shall be manufacturer's authorized replacement parts and supplies.
3. Adjust the aim of luminaires in the presence of the Architect.

**END OF SECTION**

# SECTION 265219

# EMERGENCY AND EXIT LIGHTING

## PART 1 - GENERAL

### 1.1 RELATED DOCUMENTS

A. Drawings and general provisions of the Contract, including General and Supplementary Conditions and Division 01 Specification Sections, apply to this Section.

### 1.2 SUMMARY

A. Section Includes:

1. Emergency lighting units.
2. Exit signs.
3. Luminaire supports.

### 1.3 DEFINITIONS

A. CCT: Correlated color temperature.

B. CRI: Color Rendering Index.

C. Emergency Lighting Unit: A lighting unit with internal or external emergency battery powered supply and the means for controlling and charging the battery and unit operation.

D. Fixture: See "Luminaire" Paragraph.

E. Lumen: Measured output of lamp and luminaire, or both.

F. Luminaire: Complete lighting unit, including lamp, reflector, and housing.

### 1.4 ACTION SUBMITTALS

A. Product Data: For each type of emergency lighting unit, exit sign, and emergency lighting support.

1. Include data on features, accessories, and finishes.
2. Include physical description of the unit and dimensions.
3. Battery and charger for light units.

4. Include life, output of luminaire (lumens, CCT, and CRI), and energy-efficiency data.
5. Include photometric data and adjustment factors based on laboratory tests, complying with IES LM-45, for each luminaire type.

    a. Testing Agency Certified Data: For indicated [luminaires] [and] [signs], photometric data certified by a qualified independent testing agency. Photometric data for remaining [luminaires] [and] [signs] shall be certified by manufacturer.

B. Shop Drawings: For nonstandard or custom luminaires.

1. Include plans, elevations, sections, and mounting and attachment details.
2. Include details of equipment assemblies. Indicate dimensions, weights, loads, required clearances, method of field assembly, components, and location and size of each field connection.
3. Include diagrams for power, signal, and control wiring.

C. Samples: For each product and for each color and texture specified.

D. Samples for Initial Selection: For each type of luminaire with factory-applied finishes.

E. Samples for Verification: For each type of luminaire.

1. Include Samples of luminaires and accessories to verify finish selection.

F. Product Schedule:

1. For emergency lighting units. [See schedule on contract drawings.]
2. For exit signs. [See schedule on contract drawings].

## 1.5 INFORMATIONAL SUBMITTALS

A. Coordination Drawings: Reflected ceiling plan(s) and other details, drawn to scale, on which the following items are shown and coordinated with each other, using input from installers of the items involved:

1. Luminaires.
2. Suspended ceiling components.
3. Partitions and millwork that penetrate the ceiling or extend to within 12 inches of the plane of the luminaires.
4. Structural members to which equipment will be attached.
5. Size and location of initial access modules for acoustical tile.
6. Items penetrating finished ceiling including the following:

    a. Other luminaires.
    b. Air outlets and inlets.
    c. Speakers.

d. Ceiling-mounted projectors.
e. Sprinklers.
f. Access panels.

7. Moldings.

B. Qualification Data: For testing laboratory providing photometric data for luminaires.

C. Product Certificates: For each type of luminaire.

D. Seismic Qualification Certificates: For luminaires, accessories, and components, from manufacturer.

1. Basis for Certification: Indicate whether withstand certification is based on actual test of assembled components or on calculation.
2. Dimensioned Outline Drawings of Equipment Unit: Identify center of gravity and locate and describe mounting and anchorage provisions.
3. Detailed description of equipment anchorage devices on which the certification is based and their installation requirements.

E. Product Test Reports: For each luminaire for tests performed [a qualified testing agency].

F. Sample Warranty: For manufacturer's [special] warranty.

## 1.6 CLOSEOUT SUBMITTALS

A. Operation and Maintenance Data: For luminaires and lighting systems to include in emergency, operation, and maintenance manuals.

1. Provide a list of all lamp types used on Project; use ANSI and manufacturers' codes.

## 1.7 MAINTENANCE MATERIAL SUBMITTALS

A. Furnish extra materials that match products installed and that are packaged with protective covering for storage and identified with labels describing contents.

1. Lamps: [10 for every 100] of each type and rating installed. Furnish at least one of each type.
2. Luminaire-mounted, emergency battery pack: One for every [20] emergency lighting units. Furnish at least one of each type.
3. Diffusers and Lenses: [Two for every 100] of each type and rating installed. Furnish at least one of each type.
4. Globes and Guards: [One for every 20] of each type and rating installed. Furnish at least one of each type.

## 1.8 QUALITY ASSURANCE

A. Luminaire Photometric Data Testing Laboratory Qualifications: Luminaire manufacturer's laboratory that is accredited under the National Volunteer Laboratory Accreditation Program for Energy Efficient Lighting Products.

B. Luminaire Photometric Data Testing Laboratory Qualifications: Provided by an independent agency, with the experience and capability to conduct the testing indicated, that is an NRTL as defined by OSHA in 29 CFR 1910.7, accredited under the National Volunteer Laboratory Accreditation Program for Energy Efficient Lighting Products, and complying with the applicable IES testing standards.

C. FM Global Compliance: Luminaires for hazardous locations shall be listed and labeled for indicated class and division of hazard by FM Global.

D. Mockups: For interior luminaires in room or module mockups, complete with power and control connections.

1. Obtain Architect's approval of luminaires and signs in mockups before starting installations.
2. Maintain mockups during construction in an undisturbed condition as a standard for judging the completed Work.
3. Approval of mockups does not constitute approval of deviations from the Contract Documents contained in mockups unless Architect specifically approves such deviations in writing.
4. Subject to compliance with requirements, approved mockups may become part of the completed Work if undisturbed at time of Substantial Completion.

## 1.9 DELIVERY, STORAGE, AND HANDLING

A. Protect finishes of exposed surfaces by applying a strippable, temporary protective covering before shipping.

## 1.10 WARRANTY

A. Warranty: Manufacturer and Installer agree to repair or replace components of luminaires that fail in materials or workmanship within specified warranty period.

1. Warranty Period: [Two] year(s) from date of Substantial Completion.

B. Special Warranty for Emergency Lighting Batteries: Manufacturer's standard form in which manufacturer of battery-powered emergency lighting unit agrees to repair or replace components of rechargeable batteries that fail in materials or workmanship within specified warranty period.

1. Warranty Period for Emergency Power Unit Batteries: [5] years from date of Substantial Completion. Full warranty shall apply for [the entire warranty period].

2. Warranty Period for [Emergency Fluorescent Ballast] [and] [Self-Powered Exit Sign] Batteries: [Seven] years from date of Substantial Completion. Full warranty shall apply for [the entire warranty period].

PART 2 - PRODUCTS

2.1 GENERAL REQUIREMENTS FOR EMERGENCY LIGHTING

A. Electrical Components, Devices, and Accessories: Listed and labeled as defined in NFPA 70, by a qualified testing agency, and marked for intended location and application.

B. NRTL Compliance: Fabricate and label emergency lighting units, exit signs, and batteries to comply with UL 924.

C. Comply with NFPA 70 and NFPA 101.

D. Comply with NEMA LE 4 for recessed luminaires.

E. Comply with UL 1598 for fluorescent luminaires.

F. Lamp Base: Comply with [ANSI C81.61] [or] [IEC 60061-1].

G. Bulb Shape: Complying with ANSI C79.1.

H. Internal Type Emergency Power Unit: Self-contained, modular, battery-inverter unit, factory mounted within luminaire body [and compatible with ballast].

1. Emergency Connection: Operate [one] lamp(s) continuously at an output of [1100] lumens each upon loss of normal power. Connect unswitched circuit to battery-inverter unit and switched circuit to luminaire ballast.
2. Operation: Relay automatically turns lamp on when power-supply circuit voltage drops to 80 percent of nominal voltage or below. Lamp automatically disconnects from battery when voltage approaches deep-discharge level. When normal voltage is restored, relay disconnects lamps from battery, and battery is automatically recharged and floated on charger.
3. Environmental Limitations: Rate equipment for continuous operation under the following conditions unless otherwise indicated:

   a. Ambient Temperature: Less than 0 deg F or exceeding 104 deg F, with an average value exceeding 95 deg F over a 24-hour period.
   b. Ambient Storage Temperature: Not less than minus 4 deg F and not exceeding 140 deg F.
   c. Humidity: More than 95 percent (condensing).
   d. Altitude: Exceeding 3300 feet.
4. Test Push-Button and Indicator Light: Visible and accessible without opening luminaire or entering ceiling space.

a. Push Button: Push-to-test type, in unit housing, simulates loss of normal power and demonstrates unit operability.
b. Indicator Light: LED indicates normal power on. Normal glow indicates trickle charge; bright glow indicates charging at end of discharge cycle.

5. Battery: Sealed, maintenance-free, [nickel-cadmium] [lead-acid] type.
6. Charger: Fully automatic, solid-state, constant-current type with sealed power transfer relay.
7. Remote Test: Switch in handheld remote device aimed in direction of tested unit initiates coded infrared signal. Signal reception by factory-installed infrared receiver in tested unit triggers simulation of loss of its normal power supply, providing visual confirmation of either proper or failed emergency response.
8. Integral Self-Test: Factory-installed electronic device automatically initiates code-required test of unit emergency operation at required intervals. Test failure is annunciated by an integral audible alarm and a flashing red LED.

I. External Type: Self-contained, modular, battery-inverter unit, suitable for powering one or more lamps, remote mounted from luminaire.

1. Emergency Connection: Operate [one] [fluorescent] [LED] lamp continuously. Connect unswitched circuit to battery-inverter unit and switched circuit to luminaire [ballast].
2. Operation: Relay automatically turns lamp on when power-supply circuit voltage drops to 80 percent of nominal voltage or below. Lamp automatically disconnects from battery when voltage approaches deep-discharge level. When normal voltage is restored, relay disconnects lamps from battery, and battery is automatically recharged and floated on charger.
3. Nightlight Connection: Operate lamp in a remote luminaire continuously.
4. Battery: Sealed, maintenance-free, [nickel-cadmium] type.
5. Charger: Fully automatic, solid-state, constant-current type.
6. Housing: NEMA 250, Type 1 enclosure listed for installation inside, on top of, or remote from luminaire. Remote assembly shall be located no less than half the distance recommended by the [ballast] manufacturer, whichever is less.
7. Test Push Button: Push-to-test type, in unit housing, simulates loss of normal power and demonstrates unit operability.
8. LED Indicator Light: Indicates normal power on. Normal glow indicates trickle charge; bright glow indicates charging at end of discharge cycle.
9. Remote Test: Switch in handheld remote device aimed in direction of tested unit initiates coded infrared signal. Signal reception by factory-installed infrared receiver in tested unit triggers simulation of loss of its normal power supply, providing visual confirmation of either proper or failed emergency response.
10. Integral Self-Test: Factory-installed electronic device automatically initiates code-required test of unit emergency operation at required intervals. Test failure is annunciated by an integral audible alarm and a flashing red LED.

## 2.2 EMERGENCY LIGHTING

A. General Requirements for Emergency Lighting Units: Self-contained units.

B. Emergency Luminaires:
   1. See schedule on contract drawings.

## 2.3 EXIT SIGNS

A. General Requirements for Exit Signs: Comply with UL 924; for sign colors, visibility, luminance, and lettering size, comply with authorities having jurisdiction.

B. Internally Lighted Signs:

   1. See schedule on contract drawings.
   2. Operating at nominal voltage of [120 V ac].
   3. Lamps for AC Operation: Fluorescent, two for each luminaire; 20,000 hours of rated lamp life.
   4. Lamps for AC Operation: LEDs; 50,000 hours minimum rated lamp life.
   5. Self-Powered Exit Signs (Battery Type): Internal emergency power unit.
   6. Master/Remote Sign Configurations:

      a. Master Unit: Comply with requirements above for self-powered exit signs, and provide additional capacity in [battery] for power connection to remote unit.
      b. Remote Unit: Comply with requirements above for self-powered exit signs, except omit power supply, battery, and test features. Arrange to receive full power requirements from master unit. Connect for testing concurrently with master unit as a unified system.

## 2.4 MATERIALS

A. Metal Parts:

   1. Free of burrs and sharp corners and edges.
   2. Sheet metal components shall be steel unless otherwise indicated.
   3. Form and support to prevent warping and sagging.

B. Doors, Frames, and Other Internal Access:

   1. Smooth operating, free of light leakage under operating conditions.
   2. Designed to permit relamping without use of tools.
   3. Designed to prevent doors, frames, lenses, diffusers, and other components from falling accidentally during relamping and when secured in operating position.

C. Diffusers and Globes:

   1. Glass: Annealed crystal glass unless otherwise indicated.
   2. Acrylic: 100 percent virgin acrylic plastic, with high resistance to yellowing and other changes due to aging, exposure to heat, and UV radiation.
   3. Lens Thickness: At least 0.125 inch minimum unless otherwise indicated.

D. Housings:

1. [Extruded aluminum] housing [and heat sink].
2. [Anodized] [painted] finish.

E. Conduit: [Rigid galvanized steel], minimum 3/4 inch in diameter.

## 2.5 METAL FINISHES

A. Appearance of Finished Work: Noticeable variations in same piece are not acceptable. Variations in appearance of adjoining components are acceptable if they are within the range of approved Samples and are assembled or installed to minimize contrast.

## 2.6 LUMINAIRE SUPPORT COMPONENTS

A. Comply with requirements in Section 260529 "Hangers and Supports for Electrical Systems" for channel and angle iron supports and nonmetallic channel and angle supports.

B. Support Wires: ASTM A 641/A 641M, Class 3, soft temper, zinc-coated steel, [12 gage].

# PART 3 - EXECUTION

## 3.1 EXAMINATION

A. Examine substrates, areas, and conditions, with Installer present, for compliance with requirements for conditions affecting performance of luminaires.

B. Examine roughing-in for luminaire to verify actual locations of luminaire and electrical connections before luminaire installation.

C. Examine walls, floors, roofs, and ceilings for suitable conditions where emergency lighting luminaires will be installed.

D. Proceed with installation only after unsatisfactory conditions have been corrected.

## 3.2 INSTALLATION

A. Comply with NECA 1.

B. Install luminaires level, plumb, and square with ceilings and walls unless otherwise indicated.

C. Install lamps in each luminaire.

D. Supports:

1. Sized and rated for luminaire [and emergency power unit] weight.
2. Able to maintain luminaire position when testing emergency power unit.
3. Provide support for luminaire and emergency power unit without causing deflection of ceiling or wall.
4. Luminaire-mounting devices shall be capable of supporting a horizontal force of 100 percent of luminaire and emergency power unit weight and vertical force of 400 percent of luminaire weight.

E. Wall-Mounted Luminaire Support:

1. [Attached to structural members in walls].
2. Do not attach luminaires directly to gypsum board.

F. Suspended Luminaire Support:

1. Pendants and Rods: Where longer than 48 inches, brace to limit swinging.
2. Stem-Mounted, Single-Unit Luminaires: Suspend with twin-stem hangers. Support with approved outlet box and accessories that hold stem and provide damping of luminaire oscillations. Support outlet box vertically to building structure using approved devices.
3. Continuous Rows of Luminaires: Use tubing or stem for wiring at one point and [wire support] for suspension for each unit length of luminaire chassis, including one at each end.
4. Do not use ceiling grid as support for pendant luminaires. Connect support wires or rods to building structure.

G. Ceiling Grid Mounted Luminaires:

1. Secure to any required outlet box.
2. Secure emergency power unit using approved fasteners in a minimum of four locations, spaced near corners of emergency power unit.
3. Use approved devices and support components to connect luminaire to ceiling grid and building structure in a minimum of four locations, spaced near corners of luminaire.

## 3.3 IDENTIFICATION

A. Identify system components, wiring, cabling, and terminals. Comply with requirements for identification specified in Section 260553 "Identification for Electrical Systems."

## 3.4 FIELD QUALITY CONTROL

A. Perform the following tests and inspections:

1. Test for Emergency Lighting: Interrupt power supply to demonstrate proper operation. Verify transfer from normal power to battery power and retransfer to normal.

B. Luminaire will be considered defective if it does not pass operation tests and inspections.

C. Prepare test and inspection reports.

## 3.5 STARTUP SERVICE

A. Perform startup service:

1. Charge [emergency power units] [and] [batteries] minimum of one hour and depress switch to conduct short-duration test.
2. Charge [emergency power units] [and] [batteries] minimum of 24 hours and conduct one-hour discharge test.

## 3.6 ADJUSTING

A. Adjustments: Within [12] months of date of Substantial Completion, provide on-site visit to do the following:

1. Inspect all luminaires. Replace lamps, [emergency power units] [, batteries,] [signs,] or luminaires that are defective.

   a. Parts and supplies shall be manufacturer's authorized replacement parts and supplies.

2. Conduct short-duration tests on all emergency lighting.

**END OF SECTION**

# SECTION 265619

# EXTERIOR LIGHTING

## PART 1 - GENERAL

### 1.1 RELATED DOCUMENTS

A. Drawings and general provisions of the Contract, including General and Supplementary Conditions and Division 01 Specification Sections, apply to this Section.

### 1.2 SUMMARY

A. Section Includes:

1. Exterior solid-state luminaires that are designed for and exclusively use LED lamp technology.
2. Luminaire supports.
3. Luminaire-mounted photoelectric relays.

B. Related Requirements:

1. Section 260943.23 "Relay-Based Lighting Controls" for manual or programmable control systems with low-voltage control wiring or data communication circuits.

### 1.3 DEFINITIONS

A. CCT: Correlated color temperature.

B. CRI: Color rendering index.

C. Fixture: See "Luminaire."

D. IP: International Protection or Ingress Protection Rating.

E. Lumen: Measured output of lamp and luminaire, or both.

F. Luminaire: Complete lighting unit, including lamp, reflector, and housing.

### 1.4 ACTION SUBMITTALS

A. Product Data: For each type of luminaire.

1. Arrange in order of luminaire designation.

2. Include data on features, accessories, and finishes.
3. Include physical description and dimensions of luminaire.
4. Lamps, include life, output (lumens, CCT, and CRI), and energy-efficiency data.
5. Photometric data and adjustment factors based on laboratory tests, complying with IES Lighting Measurements Testing and Calculation Guides, of each luminaire type. The adjustment factors shall be for lamps and accessories identical to those indicated for the luminaire as applied in this Project IES LM-79 IES LM-80.

    a. Testing Agency Certified Data: For indicated luminaires, photometric data certified by a qualified independent testing agency. Photometric data for remaining luminaires shall be certified by manufacturer.

6. Wiring diagrams for power, control, and signal wiring.
7. Photoelectric relays.
8. Means of attaching luminaires to supports and indication that the attachment is suitable for components involved.

B. Shop Drawings: For nonstandard or custom luminaires.

1. Include plans, elevations, sections, and mounting and attachment details.
2. Include details of luminaire assemblies. Indicate dimensions, weights, loads, required clearances, method of field assembly, components, and location and size of each field connection.
3. Include diagrams for power, signal, and control wiring.

C. Samples: For each luminaire and for each color and texture indicated with factory-applied finish.

D. Product Schedule: For luminaires and lamps see schedule on contract drawings.

E. Delegated-Design Submittal: For luminaire supports.

1. Include design calculations for luminaire supports.

## 1.5 INFORMATIONAL SUBMITTALS

A. Coordination Drawings: Plans, drawn to scale, on which the following items are shown and coordinated with each other, using input from installers of the items involved:

1. Luminaires.
2. Structural members to which luminaires will be attached.
3. Underground utilities and structures.
4. Existing underground utilities and structures.
5. Above-grade utilities and structures.
6. Existing above-grade utilities and structures.
7. Building features.

8. Vertical and horizontal information.

B. Qualification Data: For testing laboratory providing photometric data for luminaires.

C. Product Certificates: For each type of the following:

1. Luminaire.
2. Photoelectric relay.

D. Product Test Reports: For each luminaire, for tests performed by a qualified testing agency.

E. Source quality-control reports.

F. Sample warranty.

## 1.6 CLOSEOUT SUBMITTALS

A. Operation and Maintenance Data: For luminaires and photoelectric relays to include in operation and maintenance manuals.

1. Provide a list of all lamp types used on Project. Use ANSI and manufacturers' codes.
2. Provide a list of all photoelectric relay types used on Project; use manufacturers' codes.

## 1.7 MAINTENANCE MATERIAL SUBMITTALS

A. Furnish extra materials that match products installed and that are packaged with protective covering for storage and identified with labels describing contents.

1. Lamps: Ten for every 100 of each type and rating installed. Furnish at least one of each type.
2. Glass, Acrylic, and Plastic Lenses, Covers, and Other Optical Parts: Two for every 100 of each type and rating installed. Furnish at least one of each type.
3. Diffusers and Lenses: Two for every 100 of each type and rating installed. Furnish at least one of each type.
4. Globes and Guards: Two for every 20 of each type and rating installed. Furnish at least one of each type.

## 1.8 QUALITY ASSURANCE

A. Luminaire Photometric Data Testing Laboratory Qualifications: Provided by an independent agency, with the experience and capability to conduct the testing indicated, that is an NRTL as defined by OSHA in 29 CFR 1910.7, accredited under

the NVLAP for Energy Efficient Lighting Products and complying with applicable IES testing standards.

B. Provide luminaires from a single manufacturer for each luminaire type.

C. Each luminaire type shall be binned within a three-step MacAdam Ellipse to ensure color consistency among luminaires.

D. Installer Qualifications: An authorized representative who is trained and approved by manufacturer.

E. Mockups: For exterior luminaires, complete with power and control connections.

1. Obtain Architect's approval of luminaires in mockups before starting installations.
2. Maintain mockups during construction in an undisturbed condition as a standard for judging the completed work.
3. Approval of mockups does not constitute approval of deviations from the Contract Documents contained in mockups unless Architect specifically approves such deviations in writing.
4. Subject to compliance with requirements, approved mockups may become part of the completed Work if undisturbed at time of Substantial Completion.

## 1.9 DELIVERY, STORAGE, AND HANDLING

A. Protect finishes of exposed surfaces by applying a strippable, temporary protective covering prior to shipping.

## 1.10 FIELD CONDITIONS

A. Verify existing and proposed utility structures prior to the start of work associated with luminaire installation.

B. Mark locations of exterior luminaires for approval by Architect prior to the start of luminaire installation.

## 1.11 WARRANTY

A. Warranty: Manufacturer and Installer agree to repair or replace components of luminaires that fail in materials or workmanship within specified warranty period.

1. Failures include, but are not limited to, the following:

a. Structural failures, including luminaire support components.
b. Faulty operation of luminaires and accessories.
c. Deterioration of metals, metal finishes, and other materials beyond normal weathering.

2. Warranty Period: 2 year(s) from date of Substantial Completion.

PART 2 - PRODUCTS

2.1 LUMINAIRE REQUIREMENTS

A. Electrical Components, Devices, and Accessories: Listed and labeled as defined in NFPA 70, by a qualified testing agency, and marked for intended location and application.

B. NRTL Compliance: Luminaires shall be listed and labeled for indicated class and division of hazard by an NRTL.

C. FM Global Compliance: Luminaires for hazardous locations shall be listed and labeled for indicated class and division of hazard by FM Global.

D. UL Compliance: Comply with UL 1598 and listed for wet location.

E. Lamp base complying with ANSI C81.61 or IEC 60061-1.

F. Bulb shape complying with ANSI C79.1.

G. CRI of minimum 80. CCT of 3000 K unless otherwise noted on the contract drawing.

H. L70 lamp life of 50,000 hours.

I. Lamps dimmable from 100 percent to 0 percent of maximum light output.

J. Internal driver.

K. Nominal Operating Voltage: 120 V ac.

L. Lamp Rating: Lamp marked for outdoor use.

M. Source Limitations: Obtain luminaires from single source from a single manufacturer.

N. Source Limitations: For luminaires, obtain each color, grade, finish, type, and variety of luminaire from single source with resources to provide products of consistent quality in appearance and physical properties.

2.2 LUMINAIRE TYPES

A. See schedule on contract drawings.

2.3 MATERIALS

A. Metal Parts: Free of burrs and sharp corners and edges.

B. Sheet Metal Components: Corrosion-resistant aluminum. Form and support to prevent warping and sagging.

C. Doors, Frames, and Other Internal Access: Smooth operating, free of light leakage under operating conditions, and designed to permit relamping without use of tools. Designed to prevent doors, frames, lenses, diffusers, and other components from falling accidentally during relamping and when secured in operating position. Doors shall be removable for cleaning or replacing lenses.

D. Diffusers and Globes:

1. Acrylic Diffusers: 100 percent virgin acrylic plastic, with high resistance to yellowing and other changes due to aging, exposure to heat, and UV radiation.
2. Glass: Annealed crystal glass unless otherwise indicated.
3. Lens Thickness: At least 0.125 inch minimum unless otherwise indicated on the contract drawings.

E. Lens and Refractor Gaskets: Use heat- and aging-resistant resilient gaskets to seal and cushion lenses and refractors in luminaire doors.

F. Reflecting surfaces shall have minimum reflectance as follows unless otherwise indicated:

1. White Surfaces: 85 percent.
2. Specular Surfaces: 83 percent.
3. Diffusing Specular Surfaces: 75 percent.

G. Housings:

1. Rigidly formed, weather- and light-tight enclosure that will not warp, sag, or deform in use.
2. Provide filter/breather for enclosed luminaires.

H. Factory-Applied Labels: Comply with UL 1598. Include recommended lamps. Labels shall be located where they will be readily visible to service personnel, but not seen from normal viewing angles when lamps are in place.

1. Label shall include the following lamp characteristics:

a. "USE ONLY" and include specific lamp type.
b. Lamp diameter, shape, size, wattage and coating.
c. CCT and CRI for all luminaires.

## 2.4 FINISHES

A. Variations in Finishes: Noticeable variations in same piece are unacceptable. Variations in appearance of adjoining components are acceptable if they are within the range of approved Samples and are assembled or installed to minimize contrast.

B. Luminaire Finish: Manufacturer's standard paint applied to factory-assembled and - tested luminaire before shipping. Where indicated, match finish process and color of pole or support materials.

C. Factory-Applied Finish for Aluminum Luminaires: Comply with NAAMM's "Metal Finishes Manual for Architectural and Metal Products" for recommendations for applying and designating finishes.

1. Finish designations prefixed by AA comply with the system established by the Aluminum Association for designating aluminum finishes.
2. Natural Satin Finish: Provide fine, directional, medium satin polish (AA-M32); buff complying with AA-M20 requirements; and seal aluminum surfaces with clear, hard-coat wax.
3. Class I, Clear-Anodic Finish: AA-M32C22A41 (Mechanical Finish: Medium satin; Chemical Finish: Etched, medium matte; Anodic Coating: Architectural Class I, clear coating 0.018 mm or thicker) complying with AAMA 611.
4. Class I, Color-Anodic Finish: AA-M32C22A42/A44 (Mechanical Finish: Medium satin; Chemical Finish: Etched, medium matte; Anodic Coating: Architectural Class I, integrally colored or electrolytically deposited color coating 0.018 mm or thicker), complying with AAMA 611.

    a. Color: as noted on the schedule on the contract drawings and approved by the architect.

D. Factory-Applied Finish for Steel Luminaires: Comply with NAAMM's "Metal Finishes Manual for Architectural and Metal Products" for recommendations for applying and designating finishes.

1. Surface Preparation: Clean surfaces to comply with SSPC-SP 1, to remove dirt, oil, grease, and other contaminants that could impair paint bond. Grind welds and polish surfaces to a smooth, even finish. Remove mill scale and rust, if present, from uncoated steel, complying with SSPC-SP 5/NACE No. 1 or SSPC-SP 8.
2. Exterior Surfaces: Manufacturer's standard finish consisting of one or more coats of primer and two finish coats of high-gloss, high-build polyurethane enamel.

    a. Color: As selected from manufacturer's standard catalog of colors.
    b. Color: Match Architect's sample of [manufacturer's standard] color.
    c. Color: As selected by Architect from manufacturer's full range.

## 2.5 LUMINAIRE SUPPORT COMPONENTS

A. Comply with requirements in Section 260529 "Hangers and Supports for Electrical Systems" for channel and angle iron supports and nonmetallic channel and angle supports.

# PART 3 - EXECUTION

## 3.1 EXAMINATION

A. Examine substrates, areas, and conditions, with Installer present, for compliance with requirements for installation tolerances and other conditions affecting performance of the Work.

B. Examine roughing-in for luminaire electrical conduit to verify actual locations of conduit connections before luminaire installation.

C. Examine walls, roofs, and canopy ceilings and overhang ceilings for suitable conditions where luminaires will be installed.

D. Proceed with installation only after unsatisfactory conditions have been corrected.

## 3.2 TEMPORARY LIGHTING

A. If approved by the Architect, use selected permanent luminaires for temporary lighting. When construction is substantially complete, clean luminaires used for temporary lighting and install new lamps.

## 3.3 GENERAL INSTALLATION REQUIREMENTS

A. Comply with NECA 1.

B. Use fastening methods and materials selected to resist seismic forces defined for the application and approved by manufacturer.

C. Install lamps in each luminaire.

D. Fasten luminaire to structural support.

E. Supports:

1. Sized and rated for luminaire weight.
2. Able to maintain luminaire position after cleaning and relamping.
3. Support luminaires without causing deflection of finished surface.

4. Luminaire-mounting devices shall be capable of supporting a horizontal force of 100 percent of luminaire weight and a vertical force of 400 percent of luminaire weight.

F. Wall-Mounted Luminaire Support:

1. [Attached to structural members in walls].

G. Wiring Method: Install cables in raceways. Conceal raceways and cables.

H. Install luminaires level, plumb, and square with finished grade unless otherwise indicated. Install luminaires at height and aiming angle as indicated on Drawings.

I. Coordinate layout and installation of luminaires with other construction.

J. Adjust luminaires that require field adjustment or aiming. Include adjustment of photoelectric device to prevent false operation of relay by artificial light sources, favoring a north orientation.

K. Comply with requirements in Section 260519 "Low-Voltage Electrical Power Conductors and Cables" and 260533 "Raceways and Boxes for Electrical Systems" for wiring connections and wiring methods.

## 3.4 BOLLARD LUMINAIRE INSTALLATION:

A. Align units for optimum directional alignment of light distribution.

1. Install on concrete base with top 4 inches above finished grade or surface at luminaire location. Cast conduit into base, and shape base to match shape of bollard base. Finish by troweling and rubbing smooth. Concrete materials, installation, and finishing are specified in Section 033000 "Cast-in-Place Concrete."

## 3.5 INSTALLATION OF INDIVIDUAL GROUND-MOUNTED LUMINAIRES

A. Aim as indicated on Drawings.

B. Install on concrete base with top 4 inches above finished grade or surface at luminaire location. Cast conduit into base, and finish by troweling and rubbing smooth. Concrete materials, installation, and finishing are specified in Section 033000 "Cast-in-Place Concrete."

## 3.6 CORROSION PREVENTION

A. Aluminum: Do not use in contact with earth or concrete. When in direct contact with a dissimilar metal, protect aluminum by insulating fittings or treatment.

B. Steel Conduits: Comply with Section 260533 "Raceways and Boxes for Electrical Systems." In concrete foundations, wrap conduit with 0.010-inch- thick, pipe-wrapping plastic tape applied with a 50 percent overlap.

## 3.7 IDENTIFICATION

A. Identify system components, wiring, cabling, and terminals. Comply with requirements for identification specified in Section 260553 "Identification for Electrical Systems."

## 3.8 FIELD QUALITY CONTROL

A. Inspect each installed luminaire for damage. Replace damaged luminaires and components.

B. Perform the following tests and inspections:

1. Operational Test: After installing luminaires, switches, and accessories, and after electrical circuitry has been energized, test units to confirm proper operation.
2. Verify operation of photoelectric controls.

C. Illumination Tests:

1. Measure light intensities at night. Use photometers with calibration referenced to NIST standards. Comply with the following IES testing guide(s):

   a. IES LM-5.
   b. IES LM-50.
   c. IES LM-52.
   d. IES LM-64.
   e. IES LM-72.

2. Operational Test: After installing luminaires, switches, and accessories, and after electrical circuitry has been energized, test units to confirm proper operation.

D. Luminaire will be considered defective if it does not pass tests and inspections.

E. Prepare a written report of tests, inspections, observations, and verifications indicating and interpreting results. If adjustments are made to lighting system, retest to demonstrate compliance with standards.

## 3.9 DEMONSTRATION

A. [Engage a factory-authorized service representative to train]Owner's maintenance personnel to adjust, operate, and maintain luminaires and photocell relays.

3.10 ADJUSTING

A. Occupancy Adjustments: When requested within 12 months of date of Substantial Completion, provide on-site assistance in adjusting the direction of aim of luminaires to suit occupied conditions. Make up to two visits to Project during other-than-normal hours for this purpose. Some of this work may be required during hours of darkness.

1. During adjustment visits, inspect all luminaires. Replace lamps or luminaires that are defective.
2. Parts and supplies shall be manufacturer's authorized replacement parts and supplies.
3. Adjust the aim of luminaires in the presence of the Architect.

**END OF SECTION**

# SECTION 270528

# PATHWAYS FOR COMMUNICATIONS SYSTEMS

## PART 1 - GENERAL

### 1.1 RELATED DOCUMENTS

A. Drawings and general provisions of the Contract, including General and Supplementary Conditions and Division 01 Specification Sections, apply to this Section.

### 1.2 SUSTAINABLE DESIGN OBJECTIVES

A. The City requires the contractor to implement practices and procedures to meet the project's environmental performance goals, which include;

1. Minimize the environmental impacts of the construction and operation of the project during the construction phase. The project shall implement the following procedures singly or in combination:

   a. Select products that minimize consumption of non-renewable resources, consume reduced amounts of energy, minimize environmental pollution, and to utilize recycled and/or recyclable materials.
   b. Reduce sources of potential Indoor Air Quality pollutants by controlled selection of materials and processes used in project construction. (015721)
   c. Minimize waste produced by construction through efficient construction practices and landfill diversion, as detailed in the Construction Waste Management Plan. (017419)

2. Products and processes that achieve the above objectives have been selected and included in the Construction Documents.

### 1.3 SUMMARY

A. Section Includes:

1. Metal conduits and fittings.
2. Metal wireways and auxiliary gutters.
3. Boxes, enclosures, and cabinets.

B. Related Requirements:

1. Section 260533 "Raceways and Boxes for Electrical Systems" for conduits, wireways, surface raceways, boxes, enclosures, cabinets, handholes, and faceplate adapters serving electrical systems.

## 1.4 DEFINITIONS

A. ARC: Aluminum rigid conduit.

B. GRC: Galvanized rigid steel conduit.

C. IMC: Intermediate metal conduit.

## 1.5 ACTION SUBMITTALS

A. Product Data: For surface pathways, wireways and fittings, floor boxes, hinged-cover enclosures, and cabinets.

B. LEED Submittals:

1. Product Data for Credit IEQ 4.1: For solvent cements and adhesive primers, documentation including printed statement of VOC content.
2. Laboratory Test Reports for Credit IEQ 4: For solvent cements and adhesive primers, documentation indicating that products comply with the testing and product requirements of the California Department of Health Services' "Standard Practice for the Testing of Volatile Organic Emissions from Various Sources Using Small-Scale Environmental Chambers."

C. Shop Drawings: For custom enclosures and cabinets. Include plans, elevations, sections, and attachment details.

## 1.6 INFORMATIONAL SUBMITTALS

A. Qualification Data: For licensed professional engineer.

B. Source quality-control reports.

## 1.7 DELIVERY, STORAGE AND HANDLING

A. Comply with the requirements of the Construction Indoor Air Quality Management Plan and the Construction Waste Management Plan.

1.8 PROJECT CONDITIONS

A. Waste Management: Comply with the requirements of the Construction Waste Management Plan.

PART 2 - PRODUCTS

2.1 PRODUCT REQUIREMENTS FOR SUSTAINABLE DESIGN- GENERAL

A. All field applied paints, coatings, sealants, sealer, adhesives in this section shall meet the requirements of VOC limits in 016116- Indoor Finishes Performance Requirements.

B. All Products in this Section shall be free of Materials of Concern as noted in 015721- Indoor Air Quality Control (where achievable).

2.2 METAL CONDUITS AND FITTINGS

A. Manufacturers: Subject to compliance with requirements, available manufacturers offering products that may be incorporated into the Work include, but are not limited to, the following or approved equal:

1. AFC Cable Systems, Inc.
2. Allied Tube & Conduit.
3. Alpha Wire Company.
4. Anamet Electrical, Inc.
5. Electri-Flex Company.
6. O-Z/Gedney.
7. Picoma Industries.
8. Republic Conduit.
9. Robroy Industries.
10. Southwire Company.
11. Thomas & Betts Corporation.
12. Western Tube and Conduit Corporation.
13. Wheatland Tube Company.

B. General Requirements for Metal Conduits and Fittings:

1. Listed and labeled as defined in NFPA 70, by a qualified testing agency, and marked for intended location and application.
2. Comply with TIA-569-B.

C. GRC: Comply with ANSI C80.1 and UL 6.

D. ARC: Comply with ANSI C80.5 and UL 6A.

E. IMC: Comply with ANSI C80.6 and UL 1242.

F. PVC-Coated Steel Conduit: PVC-coated rigid steel conduit.

1. Comply with NEMA RN 1.
2. Coating Thickness: 0.040 inch, minimum.

G. EMT: Comply with ANSI C80.3 and UL 797.

H. Fittings for Metal Conduit: Comply with NEMA FB 1 and UL 514B.

1. Conduit Fittings for Hazardous (Classified) Locations: Comply with UL 886 and NFPA 70.
2. Fittings for EMT:

a. Material: Steel.
b. Type: Setscrew.

3. Expansion Fittings: PVC or steel to match conduit type, complying with UL-467, rated for environmental conditions where installed, and including flexible external bonding jumper.
4. Coating for Fittings for PVC-Coated Conduit: Minimum thickness of 0.040 inch, with overlapping sleeves protecting threaded joints.

## 2.3 METAL WIREWAYS AND AUXILIARY GUTTERS

A. Manufacturers: Subject to compliance with requirements, available manufacturers offering products that may be incorporated into the Work include, but are not limited to, the following or approved equal:

1. Cooper B-Line, Inc.
2. Hoffman.
3. Mono-Systems, Inc.
4. Square D.

B. Description: Sheet metal, complying with UL 870 and NEMA 250, Type 1 unless otherwise indicated, and sized according to NFPA 70.

1. Metal wireways installed outdoors shall be listed and labeled as defined in NFPA 70, by a qualified testing agency, and marked for intended location and application.
2. Comply with TIA-569-B.

C. Fittings and Accessories: Include covers, couplings, offsets, elbows, expansion joints, adapters, hold-down straps, end caps, and other fittings to match and mate with wireways as required for complete system.

D. Wireway Covers: Hinged type unless otherwise indicated.

E. Finish: Manufacturer's standard enamel finish.

## 2.4 BOXES, ENCLOSURES, AND CABINETS

A. Manufacturers: Subject to compliance with requirements, available manufacturers offering products that may be incorporated into the Work include, but are not limited to, the following or approved equal:

1. Adalet.
2. Cooper Technologies Company; Cooper Crouse-Hinds.
3. EGS/Appleton Electric.
4. Hoffman.
5. Mono-Systems, Inc.
6. O-Z/Gedney.
7. RACO; Hubbell.
8. Robroy Industries.
9. Spring City Electrical Manufacturing Company.
10. Thomas & Betts Corporation.
11. Wiremold / Legrand.

B. General Requirements for Boxes, Enclosures, and Cabinets:

1. Comply with TIA-569-B.
2. Boxes, enclosures and cabinets installed in wet locations shall be listed for use in wet locations.

C. Sheet-Metal Outlet and Device Boxes: Comply with NEMA OS 1 and UL 514A.

D. Cast-Metal Outlet and Device Boxes: Comply with NEMA FB 1, ferrous alloy, Type FD, with gasketed cover.

E. Box extensions used to accommodate new building finishes shall be of same material as recessed box.

F. Metal Floor Boxes:

1. Material: Cast metal.
2. Type: Fully adjustable.
3. Shape: Rectangular.
4. Listing and Labeling: Metal floor boxes shall be listed and labeled as defined in NFPA 70, by a qualified testing agency, and marked for intended location and application.

G. Small Sheet Metal Pull and Junction Boxes: NEMA OS 1.

H. Cast-Metal Access, Pull, and Junction Boxes: Comply with NEMA FB 1 and UL 1773, galvanized, cast iron with gasketed cover.

I. Device Box Dimensions: 4 inches square by 2-1/8 inches deep.

J. Gangable boxes are prohibited.

K. Nonmetallic Outlet and Device Boxes: Comply with NEMA OS 2 and UL 514C.

L. Hinged-Cover Enclosures: Comply with UL 50 and NEMA 250, Type 1 with continuous-hinge cover with flush latch unless otherwise indicated.

1. Metal Enclosures: Steel, finished inside and out with manufacturer's standard enamel.

M. Cabinets:

1. NEMA 250, Type 1, galvanized-steel box with removable interior panel and removable front, finished inside and out with manufacturer's standard enamel.
2. Hinged door in front cover with flush latch and concealed hinge.
3. Key latch to match panelboards.
4. Metal barriers to separate wiring of different systems and voltage.
5. Accessory feet where required for freestanding equipment.
6. Nonmetallic cabinets shall be listed and labeled as defined in NFPA 70, by a qualified testing agency, and marked for intended location and application.

## PART 3 - EXECUTION

### 3.1 PATHWAY APPLICATION

A. Indoors: Apply pathway products as specified below unless otherwise indicated:

1. Exposed, Not Subject to Physical Damage: RGS.
2. Exposed, Not Subject to Severe Physical Damage: RGS.
3. Concealed in Ceilings and Interior Walls and Partitions: EMT.
4. Boxes and Enclosures: NEMA 250 Type 1.

B. Minimum Pathway Size: 3/4-inch trade size. Minimum size for optical-fiber cables is 1 inch.

C. Pathway Fittings: Compatible with pathways and suitable for use and location.

1. Rigid and Intermediate Steel Conduit: Use threaded rigid steel conduit fittings unless otherwise indicated. Comply with NEMA FB 2.10.

2. PVC Externally Coated, Rigid Steel Conduits: Use only fittings listed for use with this type of conduit. Patch and seal all joints, nicks, and scrapes in PVC coating after installing conduits and fittings. Use sealant recommended by fitting manufacturer and apply in thickness and number of coats recommended by manufacturer.
3. EMT: Use setscrew, steel fittings. Comply with NEMA FB 2.10.

D. Do not install aluminum conduits, boxes, or fittings in contact with concrete or earth.

## 3.2 INSTALLATION

A. Comply with NECA 1, NECA 101, and TIA-569-B for installation requirements except where requirements on Drawings or in this article are stricter. Comply with NECA 102 for aluminum pathways. Comply with NFPA 70 limitations for types of pathways allowed in specific occupancies and number of floors.

B. Keep pathways at least 6 inches away from parallel runs of flues and steam or hot-water pipes. Install horizontal pathway runs above water and steam piping.

C. Complete pathway installation before starting conductor installation.

D. Comply with requirements in Section 260529 "Hangers and Supports for Electrical Systems" for hangers and supports.

E. Arrange stub-ups so curved portions of bends are not visible above finished slab.

F. Install no more than the equivalent of two 90-degree bends in any pathway run. Support within 12 inches of changes in direction. Utilize long radius ells for all optical-fiber cables.

G. Conceal conduit and EMT within finished walls, ceilings, and floors unless otherwise indicated. Install conduits parallel or perpendicular to building lines.

H. Support conduit within 12 inches of enclosures to which attached.

I. Stub-ups to Above Recessed Ceilings:

1. Use EMT, IMC, or RMC for pathways.
2. Use a conduit bushing or insulated fitting to terminate stub-ups not terminated in hubs or in an enclosure.

J. Threaded Conduit Joints, Exposed to Wet, Damp, Corrosive, or Outdoor Conditions: Apply listed compound to threads of pathway and fittings before making up joints. Follow compound manufacturer's written instructions.

K. Coat field-cut threads on PVC-coated pathway with a corrosion-preventing conductive compound prior to assembly.

L. Terminate threaded conduits into threaded hubs or with locknuts on inside and outside of boxes or cabinets. Install insulated bushings on conduits terminated with locknuts.

M. Install pathways square to the enclosure and terminate at enclosures with locknuts. Install locknuts hand tight plus 1/4 turn more.

N. Do not rely on locknuts to penetrate nonconductive coatings on enclosures. Remove coatings in the locknut area prior to assembling conduit to enclosure to assure a continuous ground path.

O. Cut conduit perpendicular to the length. For conduits of 2-inch trade size and larger, use roll cutter or a guide to ensure cut is straight and perpendicular to the length.

P. Install pull wires in empty pathways. Use polypropylene or monofilament plastic line with not less than 200-lbtensile strength. Leave at least 12 inchesof slack at each end of pull wire. Cap underground pathways designated as spare above grade alongside pathways in use.

Q. Pathways for Optical-Fiber and Communications Cable: Install pathways, metal and nonmetallic, rigid and flexible, as follows:

1. 3/4-Inch Trade Size and Smaller: Install pathways in maximum lengths of 50 feet.
2. 1-Inch Trade Size and Larger: Install pathways in maximum lengths of 75 feet.
3. Install with a maximum of two 90-degree bends or equivalent for each length of pathway unless Drawings show stricter requirements. Separate lengths with pull or junction boxes or terminations at distribution frames or cabinets where necessary to comply with these requirements.

R. Install pathway sealing fittings at accessible locations according to NFPA 70 and fill them with listed sealing compound. For concealed pathways, install each fitting in a flush steel box with a blank cover plate having a finish similar to that of adjacent plates or surfaces. Install pathway sealing fittings according to NFPA 70.

S. Install devices to seal pathway interiors at accessible locations. Locate seals so no fittings or boxes are between the seal and the following changes of environments. Seal the interior of all pathways at the following points:

1. Where conduits pass from warm to cold locations, such as boundaries of refrigerated spaces.
2. Where an underground service pathway enters a building or structure.
3. Where otherwise required by NFPA 70.

T. Comply with manufacturer's written instructions for solvent welding PVC conduit and fittings.

U. Expansion-Joint Fittings:

1. Install in each run of aboveground RNC that is located where environmental temperature change may exceed 30 deg F, and that has straight-run length that exceeds 25 feet. Install in each run of aboveground RMC and EMT conduit that is located where environmental temperature change may exceed 100 deg F and that has straight-run length that exceeds 100 feet.

2. Install fitting(s) that provide expansion and contraction for at least 0.00041 inch per foot of length of straight run per deg F of temperature change for PVC conduits. Install fitting(s) that provide expansion and contraction for at least 0.000078 inch per foot of length of straight run per deg F of temperature change for metal conduits.
3. Install expansion fittings at all locations where conduits cross building or structure expansion joints.
4. Install each expansion-joint fitting with position, mounting, and piston setting selected according to manufacturer's written instructions for conditions at specific location at time of installation. Install conduit supports to allow for expansion movement.

V. Recessed Boxes in Masonry Walls: Saw-cut opening for box in center of cell of masonry block, and install box flush with surface of wall. Prepare block surface to provide a flat surface for a raintight connection between box and cover plate or supported equipment and box.

W. Horizontally separate boxes mounted on opposite sides of walls so they are not in the same vertical channel.

X. Support boxes of three gangs or more from more than one side by spanning two framing members or mounting on brackets specifically designed for the purpose.

Y. Fasten junction and pull boxes to or support from building structure. Do not support boxes by conduits.

Z. Set metal floor boxes level and flush with finished floor surface.

AA. Set nonmetallic floor boxes level. Trim after installation to fit flush with finished floor surface.

## 3.3 SLEEVE AND SLEEVE-SEAL INSTALLATION FOR COMMUNICATIONS PENETRATIONS

A. Install sleeves and sleeve seals at penetrations of exterior floor and wall assemblies. Comply with requirements in Section 270544 "Sleeves and Sleeve Seals for Communications Pathways and Cabling."

3.4 FIRESTOPPING

A. Install firestopping at penetrations of fire-rated floor and wall assemblies. Comply with requirements in Section 078413 "Penetration Firestopping."

3.5 PROTECTION

A. Protect coatings, finishes, and cabinets from damage or deterioration.

1. Repair damage to galvanized finishes with zinc-rich paint recommended by manufacturer.
2. Repair damage to PVC coatings or paint finishes with matching touchup coating recommended by manufacturer.

**END OF SECTION**

# SECTION 270553

# IDENTIFICATION FOR COMMUNICATIONS SYSTEMS

## PART 1 - GENERAL

### 1.1 RELATED DOCUMENTS

A. Drawings and general provisions of the Contract, including General and Supplementary Conditions and Division 01 Specification Sections, apply to this Section.

### 1.2 SUMMARY

A. Section Includes:

1. Color and legend requirements for labels and signs.
2. Labels.
3. Bands and tubes.
4. Tapes.
5. Signs.
6. Cable ties.
7. Fasteners for labels and signs.

### 1.3 ACTION SUBMITTALS

A. Product Data: For each type of product.

1. Include construction details, material descriptions, dimensions of individual components and profiles, and finishes for communications identification products.

B. Samples: For each type of label and sign to illustrate composition, size, colors, lettering style, mounting provisions, and graphic features of identification products.

C. Identification Schedule:

1. Outlets: Scaled drawings indicating location and proposed designation.
2. Backbone Cabling: Riser diagram showing each communications room, backbone cable, and proposed backbone cable designation.
3. Racks: Scaled drawings indicating location and proposed designation.
4. Patch Panels: Enlarged scaled drawings showing rack row, number, and proposed designations.

PART 2 - PRODUCTS

2.1 PERFORMANCE REQUIREMENTS

A. Comply with NFPA 70 and TIA 606-B.

B. Comply with ANSI Z535.4 for safety signs and labels.

C. Adhesive-attached labeling materials, including label stocks, laminating adhesives, and inks used by label printers, shall comply with UL 969.

D. Thermal Movements: Allow for thermal movements from ambient and surface temperature changes.

1. Temperature Change: 120 deg F, ambient; 180 deg F, material surfaces.

2.2 COLOR AND LEGEND REQUIREMENTS

A. Equipment Identification Labels:

1. Black letters on a white field.
2. Patch Panels.

2.3 LABELS

A. Vinyl Wraparound Labels: Preprinted, flexible labels laminated with a clear, weather- and chemical-resistant coating and matching wraparound clear adhesive tape for securing label ends.

1. Manufacturers: Subject to compliance with requirements, provide products by one of the following:

a. Champion America.
b. HellermannTyton.
c. Marking Services, Inc.

B. Snap-Around Labels: Slit, pretensioned, flexible, preprinted, color-coded acrylic sleeves, with diameters sized to suit diameters of raceway or cable they identify, that stay in place by gripping action.

1. Manufacturers: Subject to compliance with requirements, provide products by one of the following:

a. Brady Corporation.
b. HellermannTyton.
c. Marking Services, Inc.

C. Self-Adhesive Wraparound Labels: Preprinted, 3-mil-thick, polyester or vinyl flexible labels with acrylic pressure-sensitive adhesive.

1. Manufacturers: Subject to compliance with requirements, provide products by one of the following:

a. Brady Corporation.
b. LEM Products Inc.
c. Marking Services, Inc.

2. Self-Lamination: Clear; UV-, weather- and chemical-resistant; self-laminating protective shields over the legend. Labels sized such that the clear shield overlaps the entire printed legend.
3. Marker for Labels: Permanent, waterproof black ink marker recommended by tag manufacturer.
4. Marker for Labels: Machine-printed, permanent, waterproof black ink recommended by printer manufacturer.

D. Self-Adhesive Labels: Polyester or Vinyl, thermal, transfer-printed, 3-mil-thick, multicolor, weather- and UV-resistant, pressure-sensitive adhesive labels, configured for intended use and location.

1. Manufacturers: Subject to compliance with requirements, provide products by one of the following:

a. Brady Corporation.
b. HellermannTyton.
c. Marking Services, Inc.

2. Minimum Nominal Size:

a. 1-1/2 by 6 inches for raceway and conductors.
b. 3-1/2 by 5 inches for equipment.
c. As required by authorities having jurisdiction.

## 2.4 BANDS AND TUBES

A. Snap-Around, Color-Coding Bands: Slit, pretensioned, flexible, solid-colored acrylic sleeves, 2 inches long, with diameters sized to suit diameters of raceway or cable they identify, that stay in place by gripping action.

1. Manufacturers: Subject to compliance with requirements, provide products by one of the following:

a. Brady Corporation.
b. HellermannTyton.
c. Marking Services, Inc.

## 2.5 CABLE TIES

A. Manufacturers: Subject to compliance with requirements, provide products by one of the following:

1. HellermannTyton.
2. Ideal Industries, Inc.
3. Marking Services, Inc.

B. General-Purpose Cable Ties: Fungus inert, self-extinguishing, one piece, self-locking, and Type 6/6 nylon.

1. Minimum Width: 3/16 inch.
2. Tensile Strength at 73 deg F according to ASTM D 638: 12,000 psi.
3. Temperature Range: Minus 40 to plus 185 deg F.
4. Color: Black, except where used for color-coding.

C. UV-Stabilized Cable Ties: Fungus inert, designed for continuous exposure to exterior sunlight, self-extinguishing, one piece, self-locking, and Type 6/6 nylon.

1. Minimum Width: 3/16 inch.
2. Tensile Strength at 73 deg F according to ASTM D 638: 12,000 psi.
3. Temperature Range: Minus 40 to plus 185 deg F.
4. Color: Black.

D. Plenum-Rated Cable Ties: Self-extinguishing, UV stabilized, one piece, and self-locking.

1. Minimum Width: 3/16 inch.
2. Tensile Strength at 73 deg F according to ASTM D 638: 7000 psi.
3. UL 94 Flame Rating: 94V-0.
4. Temperature Range: Minus 50 to plus 284 deg F.
5. Color: Black.

## 2.6 MISCELLANEOUS IDENTIFICATION PRODUCTS

A. Paint: Comply with requirements in painting Sections for paint materials and application requirements. Retain paint system applicable for surface material and location (exterior or interior).

B. Fasteners for Labels and Signs: Self-tapping, stainless-steel screws or stainless-steel machine screws with nuts and flat and lock washers.

PART 3 - EXECUTION

3.1 PREPARATION

A. Self-Adhesive Identification Products: Before applying communications identification products, clean substrates of substances that could impair bond, using materials and methods recommended by manufacturer of identification product.

3.2 INSTALLATION

A. Verify and coordinate identification names, abbreviations, colors, and other features with requirements in other Sections requiring identification applications, Drawings, Shop Drawings, manufacturer's wiring diagrams, and operation and maintenance manual. Use consistent designations throughout Project.

B. Install identifying devices before installing acoustical ceilings and similar concealment.

C. Verify identity of each item before installing identification products.

D. Coordinate identification with Project Drawings, manufacturer's wiring diagrams, and operation and maintenance manual.

E. Apply identification devices to surfaces that require finish after completing finish work.

F. Install signs with approved legend to facilitate proper identification, operation, and maintenance of communications systems and connected items.

G. Elevated Components: Increase sizes of labels, signs, and letters to those appropriate for viewing from the floor.

H. Vinyl Wraparound Labels:

1. Secure tight to surface of raceway or cable at a location with high visibility and accessibility.
2. Attach labels that are not self-adhesive type with clear vinyl tape, with adhesive appropriate to the location and substrate.
3. Provide label 6 inches from cable end.

I. Snap-Around Labels:

1. Secure tight to surface at a location with high visibility and accessibility.
2. Provide label 6 inches from cable end.

J. Self-Adhesive Wraparound Labels:

1. Secure tight to surface at a location with high visibility and accessibility.
2. Provide label 6 inches from cable end.

K. Self-Adhesive Labels:

1. On each item, install unique designation label that is consistent with wiring diagrams, schedules, and operation and maintenance manual.
2. Unless otherwise indicated, provide a single line of text with 1/2-inch-high letters on 1-1/2-inch-high label; where two lines of text are required, use labels 2 inches high.

L. Snap-Around, Color-Coding Bands: Secure tight to surface at a location with high visibility and accessibility.

M. Underground-Line Warning Tape:

1. During backfilling of trenches, install continuous underground-line warning tape directly above cable or raceway at 6 to 8 inches below finished grade. Use multiple tapes where width of multiple lines installed in a common trench [**or concrete envelope** ]exceeds 16 inches overall.
2. Limit use of underground-line warning tape to direct-buried cables.
3. Install underground-line warning tape for direct-buried cables and cables in raceways.

N. Cable Ties: General purpose, except as listed below:

1. Outdoors: UV-stabilized nylon.
2. In Spaces Handling Environmental Air: Plenum rated.

## 3.3 IDENTIFICATION SCHEDULE

A. Install identification materials and devices at locations for most convenient viewing without interference with operation and maintenance of equipment. Install access doors or panels to provide view of identifying devices.

B. Identify conductors, cables, and terminals in enclosures and at junctions, terminals, pull points, and locations with high visibility. Identify by system and circuit designation.

C. Accessible Fittings for Raceways and Cables within Buildings: Identify covers of each junction and pull box with self-adhesive labels containing wiring system legend.

1. System legends shall be as follows:

a. Telecommunications.

D. Faceplates: Label individual faceplates with self-adhesive labels. Place label at top of faceplate. Each faceplate shall be labeled with its individual, sequential designation, numbered clockwise when entering room from primary egress, composed of the following, in the order listed:

1. Wiring closet designation.

2. Colon.
3. Faceplate number.

E. Equipment Room Labeling:

1. Racks, Frames, and Enclosures: Identify front and rear of each with self-adhesive labels containing equipment designation.
2. Patch Panels: Label individual rows and outlets, starting at to left and working down, with self-adhesive labels.
3. Data Outlets: Label each outlet with a self-adhesive label indicating the following, in the order listed:

    a. Room number being served.
    b. Colon.
    c. Faceplate number.

F. Backbone Cables: Label each cable with a self-adhesive wraparound label indicating the location of the far or other end of the backbone cable. Patch panel or punch down block where cable is terminated should be labeled identically.

G. Horizontal Cables: Label each cable with a self-adhesive wraparound label indicating the following, in the order listed:

1. Room number.
2. Colon.
3. Faceplate number.

H. Locations of Underground Lines: Underground-line warning tape for copper, coaxial, hybrid copper/fiber, and optical-fiber cable.

I. Instructional Signs: Self-adhesive labels.

J. Warning Labels for Indoor Cabinets, Boxes, and Enclosures: Baked-enamel warning signs.

1. Apply to exterior of door, cover, or other access.

K. Equipment Identification Labels:

1. Indoor Equipment: Self-adhesive label.
2. Equipment to Be Labeled:

    a. Communications cabinets.
    b. Uninterruptible power supplies.
    c. Computer room air conditioners.
    d. Fire-alarm and suppression equipment.
    e. Egress points.
    f. Power distribution components.

**END OF SECTION**

# SECTION 271513

# COMMUNICATIONS COPPER HORIZONTAL CABLING

## PART 1 - GENERAL

### 1.1 RELATED DOCUMENTS

A. Drawings and general provisions of the Contract, including General and Supplementary Conditions and Division 01 Specification Sections, apply to this Section.

### 1.2 SUMMARY

A. Section Includes:

1. Category 6 twisted pair cable.
2. Twisted pair cable hardware, including plugs and jacks.
3. Cabling identification products.
4. Grounding provisions for twisted pair cable.
5. Source quality control requirements for twisted pair cable.

### 1.3 DEFINITIONS

A. EMI: Electromagnetic interference.

B. FTP: Shielded twisted pair.

C. F/FTP: Overall foil screened cable with foil screened twisted pair.

D. F/UTP: Overall foil screened cable with unscreened twisted pair.

E. IDC: Insulation displacement connector.

F. LAN: Local area network.

G. Jack: Also commonly called an "outlet," it is the fixed, female connector.

H. Plug: Also commonly called a "connector," it is the removable, male telecommunications connector.

I. RCDD: Registered Communications Distribution Designer.

J. Screen: A metallic layer, either a foil or braid, placed around a pair or group of conductors.

K. Shield: A metallic layer, either a foil or braid, placed around a pair or group of conductors.

L. S/FTP: Overall braid screened cable with foil screened twisted pair.

M. S/UTP: Overall braid screened cable with unscreened twisted pairs.

N. UTP: Unscreened (unshielded) twisted pair.

## 1.4 COPPER HORIZONTAL CABLING DESCRIPTION

A. Horizontal cable cabling system shall provide interconnections between Distributor A, Distributor B, or Distributor C, and the equipment outlet, otherwise known as "Cabling Subsystem 1," in the telecommunications cabling system structure. Cabling system consists of horizontal cables, intermediate and main cross-connects, mechanical terminations, and patch cords or jumpers used for horizontal-to-horizontal cross-connection.

1. TIA-568-C.1 requires that a minimum of two equipment outlets be installed for each work area.
2. Horizontal cabling shall contain no more than one transition point or consolidation point between the horizontal cross-connect and the telecommunications equipment outlet.
3. Bridged taps and splices shall not be installed in the horizontal cabling.

B. A work area is approximately 100 sq. ft., and includes the components that extend from the equipment outlets to the station equipment.

C. The maximum allowable horizontal cable length is 295 feet. This maximum allowable length does not include an allowance for the length of 16 feet to the workstation equipment or in the horizontal cross-connect.

## 1.5 ACTION SUBMITTALS

A. Product Data: For each type of product.

B. Shop Drawings: Reviewed and stamped by RCDD.
1. Cabling administration Drawings and printouts.
2. Wiring diagrams and installation details of telecommunications equipment, to show location and layout of telecommunications equipment, including the following:

a. Telecommunications rooms plans and elevations.
b. Telecommunications pathways.
c. Telecommunications system access points.
d. Telecommunications grounding system.
e. Telecommunications conductor drop locations.

f. Typical telecommunications details.
g. Mechanical, electrical, and plumbing systems.

C. Twisted pair cable testing plan.

1.6 INFORMATIONAL SUBMITTALS

A. Qualification Data: For installer, installation supervisor, and field inspector.

B. Product Certificates: For each type of product.

C. Source quality-control reports.

D. Field quality-control reports.

1.7 CLOSEOUT SUBMITTALS

A. Maintenance Data: For splices and connectors to include in maintenance manuals.

1.8 MAINTENANCE MATERIAL SUBMITTALS

A. Furnish extra materials that match products installed and that are packaged with protective covering for storage and identified with labels describing contents.

1. Faceplates: One of each type per school.
2. Jacks: 5 of each type per school.

1.9 QUALITY ASSURANCE

A. Installer Qualifications: Cabling Installer must have personnel certified by BICSI on staff.

1. Layout Responsibility: Preparation of Shop Drawings and cabling administration Drawings by an RCDD.
2. Installation Supervision: Installation shall be under the direct supervision of Level 2 Installer, who shall be present at all times when Work of this Section is performed at Project site.
3. Testing Supervisor: Currently certified by BICSI as an RCDD to supervise on-site testing.

1.10 DELIVERY, STORAGE, AND HANDLING

A. Test cables upon receipt at Project site.

1. Test each pair of twisted pair cable for open and short circuits.

1.11 PROJECT CONDITIONS

A. Environmental Limitations: Do not deliver or install cables and connecting materials until wet work in spaces is complete and dry, and temporary HVAC system is operating and maintaining ambient temperature and humidity conditions at occupancy levels during the remainder of the construction period.

1.12 COORDINATION

A. Coordinate layout and installation of telecommunications pathways and cabling with Owner's telecommunications and LAN equipment and service suppliers.

PART 2 - PRODUCTS

2.1 PERFORMANCE REQUIREMENTS

A. General Performance: Horizontal cabling system shall comply with transmission standards in TIA-568-C.1, when tested according to test procedures of this standard.

B. Telecommunications Pathways and Spaces: Comply with TIA-569-D.

C. Grounding: Comply with TIA-607-B.

2.2 GENERAL CABLE CHARACTERISTICS

A. Listed and labeled by an NRTL acceptable to authorities having jurisdiction as complying with the applicable standard and NFPA 70 for the following types:

1. Communications, Plenum Rated: Type CMP complying with UL 1685.
2. Communications, Non-plenum: Type CMP or Type CMR in metallic conduit installed according to NFPA 70, Article 300.22, "Wiring in Ducts, Plenums, and Other Air-Handling Spaces."

B. Surface-Burning Characteristics: Comply with ASTM E 84; testing by a qualified testing agency. Identify products with appropriate markings of applicable testing agency.

1. Flame-Spread Index: 25 or less.
2. Smoke-Developed Index: 50 or less.

C. RoHS compliant.

2.3 CATEGORY 6 TWISTED PAIR CABLE

A. Description: Four-pair, balanced-twisted pair cable, with internal spline, certified to meet transmission characteristics of Category 6 cable at frequencies up to 250MHz.

B. Manufacturers: Subject to compliance with requirements, provide products by one of the following:

1. AMP NETCONNECT; a TE Connectivity Ltd. company.
2. Belden CDT Networking Division/NORDX.
3. Draka USA.

C. Standard: Comply with NEMA WC 66/ICEA S-116-732 and TIA-568-C.2 for Category 6 cables.

D. Conductors: 100-ohm, 23 AWG solid copper.

E. Shielding/Screening: Unshielded twisted pairs (UTP).

F. Cable Rating: Plenum.

G. Jacket: Blue thermoplastic.

## 2.4 TWISTED PAIR CABLE HARDWARE

A. Description: Hardware designed to connect, splice, and terminate twisted pair copper communications cable.

B. Manufacturers: Subject to compliance with requirements, provide products by one of the following:

1. AMP NETCONNECT; a TE Connectivity Ltd. company.
2. Belden CDT Networking Division/NORDX.
3. Draka USA.

C. General Requirements for Twisted Pair Cable Hardware:

1. Comply with the performance requirements of Category 6.
2. Comply with TIA-568-C.2, IDC type, with modules designed for punch-down caps or tools.
3. Cables shall be terminated with connecting hardware of same category or higher.

D. Source Limitations: Obtain twisted pair cable hardware from single source from single manufacturer.

E. Connecting Blocks:

1. 110-style IDC for Category 6.
2. Provide blocks for the number of cables terminated on the block, plus 25 percent spare, integral with connector bodies, including plugs and jacks where indicated.

F. Patch Panel: Modular panels housing numbered jack units with IDC-type connectors at each jack location for permanent termination of pair groups of installed cables.

1. Features:

    a. Universal T568A and T568B wiring labels.
    b. Labeling areas adjacent to conductors.
    c. Replaceable connectors.
    d. 24 or 48 ports.

2. Construction: 16-gauge steel and mountable on 19-inch equipment racks.
3. Number of Jacks per Field: One for each four-pair cable indicated.

G. Jacks and Jack Assemblies:

1. Female; eight position; modular; fixed telecommunications connector designed for termination of a single four-pair, 100-ohm, unshielded or shielded twisted pair cable.
2. Designed to snap-in to a patch panel or faceplate.
3. Standard: Comply with TIA-568-C.2.

H. Faceplate:

1. Two and Four port, vertical single gang faceplates designed to mount to single gang wall boxes.
2. Plastic Faceplate: High-impact plastic. Coordinate color with architect.
3. For use with snap-in jacks accommodating any combination of twisted pair, optical fiber, and coaxial work area cords.

    a. Flush mounting jacks, positioning the cord at a 45-degree angle.

I. Legend:

1. Machine printed, in the field, using adhesive-tape label.
2. Snap-in, clear-label covers and machine-printed paper inserts.

## 2.5 IDENTIFICATION PRODUCTS

A. Comply with TIA-606-B and UL 969 for a system of labeling materials, including label stocks, laminating adhesives, and inks used by label printers.

## 2.6 GROUNDING

A. Comply with requirements in Section 260526 "Grounding and Bonding for Electrical Systems” for grounding conductors and connectors.

B. Comply with TIA-607-B.

## 2.7 SOURCE QUALITY CONTROL

A. Factory test twisted pair cables according to TIA-568-C.2.

B. Cable will be considered defective if it does not pass tests and inspections.

C. Prepare test and inspection reports.

# PART 3 - EXECUTION

## 3.1 WIRING METHODS

A. Wiring Method: Install cables in raceways and cable trays, except within consoles, cabinets, desks, and counters and except in accessible ceiling spaces, attics, and gypsum board partitions where unenclosed wiring method may be used. Conceal raceway and cables, except in unfinished spaces.

1. Install plenum cable in environmental air spaces, including plenum ceilings.
2. Comply with requirements for raceways and boxes specified in Section 260533 "Raceways and Boxes for Electrical Systems."

B. Wiring Method: Conceal conductors and cables in accessible ceilings, walls, and floors where possible.

C. Wiring within Enclosures: Bundle, lace, and train cables within enclosures. Connect to terminal points with no excess and without exceeding manufacturer's limitations on bending radii. Provide and use lacing bars and distribution spools. Install conductors parallel with or at right angles to sides and back of enclosure.

## 3.2 INSTALLATION OF PATHWAYS

A. Comply with Section 260533 "Raceways and Boxes for Electrical Systems."

B. Comply with Section 260529 "Hangers and Supports for Electrical Systems."

C. Drawings indicate general arrangement of pathways and fittings.

## 3.3 INSTALLATION OF TWISTED-PAIR HORIZONTAL CABLES

A. Comply with NECA 1 and NECA/BICSI 568.

B. General Requirements for Cabling:

1. Comply with TIA-568-C.0, TIA-568-C.1, and TIA-568-C.2.

2. Comply with BICSI's "Information Transport Systems Installation Methods Manual (ITSIMM), Ch. 5, "Copper Structured Cabling Systems," "Cable Termination Practices" Section.
3. Install 110-style IDC termination hardware unless otherwise indicated.
4. Do not untwist twisted pair cables more than 1/2 inch from the point of termination to maintain cable geometry.
5. Terminate all conductors; no cable shall contain unterminated elements. Make terminations only at indicated outlets, terminals, cross-connects, and patch panels.

6. Cables may not be spliced. Secure and support cables at intervals not exceeding 30 inches and not more than 6 inches from cabinets, boxes, fittings, outlets, racks, frames, and terminals.
7. Install lacing bars to restrain cables, prevent straining connections, and prevent bending cables to smaller radii than minimums recommended by manufacturer.
8. Bundle, lace, and train conductors to terminal points without exceeding manufacturer's limitations on bending radii, but not less than radii specified in BICSI Information Transport Systems Installation Methods Manual , Ch. 5, "Copper Structured Cabling Systems," "Cable Termination Practices" Section. Use lacing bars and distribution spools.
9. Do not install bruised, kinked, scored, deformed, or abraded cable. Do not splice cable between termination, tap, or junction points. Remove and discard cable if damaged during installation, and replace it with new cable.
10. Cold-Weather Installation: Bring cable to room temperature before dereeling. Heat lamps shall not be used for heating.
11. In the communications equipment room, install a 10-foot-long service loop on each end of cable.
12. Pulling Cable: Comply with BICSI Information Transport Systems Installation Methods Manual, Ch. 5, "Copper Structured Cabling Systems," "Pulling and Installing Cable" Section. Monitor cable pull tensions.

C. Open-Cable Installation:

1. Install cabling with horizontal and vertical cable guides in telecommunications spaces with terminating hardware and interconnection equipment.
2. Suspend twisted pair cabling, not in a wireway or pathway, a minimum of 8 inches above ceilings by cable supports not more than 36 inches apart.
3. Cable shall not be run through structural members or in contact with pipes, ducts, or other potentially damaging items.

D. Group connecting hardware for cables into separate logical fields.

E. Separation from EMI Sources:

1. Comply with recommendations from BICSI's "Telecommunications Distribution Methods Manual" and TIA-569-D for separating unshielded copper communication cable from potential EMI sources, including electrical power lines and equipment.

2. Separation between open communications cables or cables in nonmetallic raceways and unshielded power conductors and electrical equipment shall be as follows:

    a. Electrical Equipment Rating Less Than 2 kVA: A minimum of 5 inches.
    b. Electrical Equipment Rating between 2 and 5 kVA: A minimum of 12 inches.
    c. Electrical Equipment Rating More Than 5 kVA: A minimum of 24 inches.

3. Separation between communications cables in grounded metallic raceways and unshielded power lines or electrical equipment shall be as follows:

    a. Electrical Equipment Rating Less Than 2 kVA: A minimum of 2-1/2 inches.
    b. Electrical Equipment Rating between 2 and 5 kVA: A minimum of 6 inches.
    c. Electrical Equipment Rating More Than 5 kVA: A minimum of 12 inches.

4. Separation between communications cables in grounded metallic raceways, power lines, and electrical equipment located in grounded metallic conduits or enclosures shall be as follows:

    a. Electrical Equipment Rating Less Than 2 kVA: No requirement.
    b. Electrical Equipment Rating between 2 and 5 kVA: A minimum of 3 inches.
    c. Electrical Equipment Rating More Than 5 kVA: A minimum of 6 inches.

5. Separation between Communications Cables and Electrical Motors and Transformers, 5 kVA or HP and Larger: A minimum of 48 inches.
6. Separation between Communications Cables and Fluorescent Fixtures: A minimum of 5 inches.

## 3.4 FIRESTOPPING

A. Comply with requirements in Section 078413 "Penetration Firestopping."

B. Comply with TIA-569-D, Annex A, "Firestopping."

C. Comply with "Firestopping Systems" Article in BISCI's "Telecommunications Distribution Methods Manual."

## 3.5 GROUNDING

A. Install grounding according to the "Grounding, Bonding, and Electrical Protection" chapter in BICSI's "Telecommunications Distribution Methods Manual."

B. Comply with TIA-607-B and NECA/BICSI-607.

C. Locate grounding bus bar to minimize the length of bonding conductors. Fasten to wall, allowing at least a 2-inch clearance behind the grounding bus bar. Connect grounding

bus bar to suitable electrical building ground, using a minimum No. 4 AWG grounding electrode conductor.

D. Bond metallic equipment to the grounding bus bar, using not smaller than a No. 6 AWG equipment grounding conductor.

## 3.6 IDENTIFICATION

A. Identify system components, wiring, and cabling complying with TIA-606-B. Comply with requirements for identification specified in Section 270553 "Identification for Communications Systems."

B. Cable Schedule: Install in a prominent location in each equipment room and wiring closet. List incoming and outgoing cables and their designations, origins, and destinations. Protect with rigid frame and clear plastic cover. Furnish an electronic copy of final comprehensive schedules for Project.

C. Cabling Administration Drawings: Show building floor plans with cabling administration-point labeling. Identify labeling convention and show labels for telecommunications closets, terminal hardware and positions, horizontal cables, work areas and workstation terminal positions, grounding buses and pathways, and equipment grounding conductors.

D. Cable and Wire Identification:

1. Label each cable within 4 inches of each termination and tap, where it is accessible in a cabinet or junction or outlet box, and elsewhere as indicated.
2. Each wire connected to building-mounted devices is not required to be numbered at the device if wire color is consistent with associated wire connected and numbered within panel or cabinet.
3. Exposed Cables and Cables in Cable Trays and Wire Troughs: Label each cable at intervals not exceeding 15 feet.
4. Label each terminal strip, and screw terminal in each cabinet, rack, or panel.

    a. Individually number wiring conductors connected to terminal strips, and identify each cable or wiring group, extended from a panel or cabinet to a building-mounted device, with the name and number of a particular device.
    b. Label each unit and field within distribution racks and frames.

5. Identification within Connector Fields in Equipment Rooms and Wiring Closets: Label each connector and each discrete unit of cable-terminating and -connecting hardware. Where similar jacks and plugs are used for both voice and data communication cabling, use a different color for jacks and plugs of each service.

E. Labels shall be preprinted or computer-printed type, with a printing area and font color that contrast with cable jacket color but still comply with TIA-606-B requirements for the following:

1. Cables use flexible vinyl or polyester that flexes as cables are bent.

## 3.7 FIELD QUALITY CONTROL

A. Perform tests and inspections.

B. Tests and Inspections:

1. Visually inspect jacket materials for NRTL certification markings. Inspect cabling terminations in communications equipment rooms for compliance with color-coding for pin assignments, and inspect cabling connections for compliance with TIA-568-C.1.
2. Visually inspect cable placement, cable termination, grounding and bonding, equipment and patch cords, and labeling of all components.
3. Test twisted pair cabling for DC loop resistance, shorts, opens, intermittent faults, and polarity between conductors. Test operation of shorting bars in connection blocks. Test cables after termination.

    a. Test instruments shall meet or exceed applicable requirements in TIA-568-C.2. Perform tests with a tester that complies with performance requirements in "Test Instruments (Normative)" Annex, complying with measurement accuracy specified in "Measurement Accuracy (Informative)" Annex. Use only test cords and adapters that are qualified by test equipment manufacturer for channel or link test configuration.

C. Data for each measurement shall be documented. Data for submittals shall be printed in a summary report that is formatted similarly to Table 10.1 in BICSI's "Telecommunications Distribution Methods Manual," or shall be transferred from the instrument to the computer, saved as text files, printed, and submitted.

D. Remove and replace cabling where test results indicate that they do not comply with specified requirements.

E. End-to-end cabling will be considered defective if it does not pass tests and inspections.

F. Prepare test and inspection reports.

**END OF SECTION**

# SECTION 28 05 13

# CONDUCTORS AND CABLES FOR ELECTRONIC SAFETY AND SECURITY

## PART 1 - GENERAL

### 1.1 RELATED DOCUMENTS

A. Drawings and general provisions of the Contract, including General and Supplementary Conditions and Division 01 Specification Sections, apply to this Section.

### 1.2 SUMMARY

A. Section Includes:

1. Fire alarm wire and cable.
2. Identification products.

### 1.3 DEFINITIONS

A. BICSI: Building Industry Consulting Service International.

B. EMI: Electromagnetic interference.

C. IDC: Insulation displacement connector.

D. Low Voltage: As defined in NFPA 70 for circuits and equipment operating at less than 50 V or for remote-control and signaling power-limited circuits.

E. Open Cabling: Passing telecommunications cabling through open space (e.g., between the studs of a wall cavity).

F. RCDD: Registered Communications Distribution Designer.

### 1.4 ACTION SUBMITTALS

A. Product Data: For each type of product.

## 1.5 INFORMATIONAL SUBMITTALS

A. Qualification Data: For qualified layout technician, installation supervisor, and field inspector.

B. Source quality-control reports.

C. Field quality-control reports.

## 1.6 QUALITY ASSURANCE

A. Testing Agency Qualifications: An NRTL.

1. Testing Agency's Field Supervisor: Currently certified by BICSI as an RCDD to supervise on-site testing.

## 1.7 DELIVERY, STORAGE, AND HANDLING

A. Test cables upon receipt at Project site.

B. Comply with the requirements of the Construction Indoor Air Quality Management Plan and the Construction Waste Management Plan.

## 1.8 PROJECT CONDITIONS

A. Do not install conductors and cables that are wet, moisture damaged, or mold damaged.

1. Indications that wire and cables are wet or moisture damaged include, but are not limited to, discoloration and sagging of factory packing materials.

B. Environmental Limitations: Do not deliver or install UTP, optical fiber, and coaxial cables and connecting materials until wet work in spaces is complete and dry, and temporary HVAC system is operating and maintaining ambient temperature and humidity conditions at occupancy levels during the remainder of the construction period.

C. Waste Management: Comply with the requirements of the Construction Waste Management Plan.

PART 2 - PRODUCTS

2.1 PERFORMANCE REQUIREMENTS

A. Surface-Burning Characteristics: Comply with ASTM E 84; testing by a qualified testing agency. Identify products with appropriate markings of applicable testing agency.

1. Flame-Spread Index: 25 or less.
2. Smoke-Developed Index: 50 or less.

B. Electrical Components, Devices, and Accessories: Listed and labeled as defined in NFPA 70, by a qualified testing agency, and marked for intended location and application.

2.2 BACKBOARDS

A. Backboards: Plywood, fire-retardant treated, 3/4 by 48 by 96 inches. Comply with requirements for plywood backing panels in Section 061000 "Rough Carpentry."

2.3 FIRE ALARM WIRE AND CABLE

A. Manufacturers: Subject to compliance with requirements, available manufacturers offering products that may be incorporated into the Work include, but are not limited to, the following or approved equal:

1. Comtran Corporation.
2. Draka Cableteq USA.
3. Genesis Cable Products; Honeywell International, Inc.
4. Rockbestos-Suprenant Cable Corp.
5. West Penn Wire.

B. General Wire and Cable Requirements: NRTL listed and labeled as complying with NFPA 70, Article 760.

C. Signaling Line Circuits: Twisted, shielded pair, not less than No. 16 AWG.

1. Circuit Integrity Cable: Twisted shielded pair, NFPA 70, Article 760, Classification CI, for power-limited fire alarm signal service Type FPL. NRTL listed and labeled as complying with UL 1424 and UL 2196 for a 2-hour rating.

D. Non-Power-Limited Circuits: Solid-copper conductors with 600-V rated, 75 deg C, color-coded insulation.

1. Low-Voltage Circuits: No. 16 AWG, minimum.

2. Line-Voltage Circuits: No. 12 AWG, minimum.
3. Multiconductor Armored Cable: NFPA 70, Type MC, copper conductors, Type TFN/THHN conductor insulation, copper drain wire, copper armor with outer jacket with red identifier stripe, NTRL listed for fire alarm and cable tray installation, plenum rated, and complying with requirements in UL 2196 for a 2-hour rating.

## 2.4 IDENTIFICATION PRODUCTS

A. Manufacturers: Subject to compliance with requirements, available manufacturers offering products that may be incorporated into the Work include, but are not limited to, the following or approved equal:

1. Brady Worldwide, Inc.
2. HellermannTyton North America.
3. Kroy LLC.
4. Panduit Corp.

B. Comply with UL 969 for a system of labeling materials, including label stocks, laminating adhesives, and inks used by label printers.

C. Comply with requirements in Section 260553 "Identification for Electrical Systems."

## 2.5 SOURCE QUALITY CONTROL

A. Testing Agency: Engage a qualified testing agency to evaluate cables.

B. Factory test UTP and optical fiber cables on reels according to TIA/EIA-568-B.1.

C. Factory test UTP cables according to TIA/EIA-568-B.2.

D. Factory test multimode optical fiber cables according to TIA-526-14-A and TIA/EIA-568-B.3.

E. Factory sweep test coaxial cables at frequencies from 5 MHz to 1 GHz. Sweep test shall test the frequency response, or attenuation over frequency, of a cable by generating a voltage whose frequency is varied through the specified frequency range and graphing the results.

F. Cable will be considered defective if it does not pass tests and inspections.

G. Prepare test and inspection reports.

PART 3 - EXECUTION

3.1 INSTALLATION OF HANGERS AND SUPPORTS

A. Comply with requirements in Section 260529 "Hangers and Supports for Electrical Systems" for installation of supports for cables.

3.2 WIRING METHOD

A. Install wiring in metal pathways and wireways.

1. Minimum conduit size shall be 3/4 inch. Control and data transmission wiring shall not share conduit with other building wiring systems.

B. Install cable, concealed in accessible ceilings, walls, and floors when possible.

C. Wiring within Enclosures:

1. Bundle, lace, and train conductors to terminal points with no excess and without exceeding manufacturer's limitations on bending radii.
2. Install lacing bars and distribution spools.
3. Separate power-limited and non-power-limited conductors as recommended in writing by manufacturer.
4. Install conductors parallel with or at right angles to sides and back of enclosure.
5. Connect conductors that are terminated, spliced, or interrupted in any enclosure associated with intrusion system to terminal blocks.
6. Mark each terminal according to system's wiring diagrams.
7. Make all connections with approved crimp-on terminal spade lugs, pressure-type terminal blocks, or plug connectors.

3.3 INSTALLATION OF CONDUCTORS AND CABLES

A. Comply with NECA 1.

B. Conductors: Size according to system manufacturer's written instructions unless otherwise indicated.

C. General Requirements for Cabling:

1. Comply with TIA/EIA-568-B.1.
2. Comply with BICSI ITSIM, Ch. 6, "Cable Termination Practices."
3. Terminate all conductors; no cable shall contain unterminated elements. Make terminations only at indicated outlets, terminals, and cross-connect and patch panels.

4. Cables may not be spliced. Secure and support cables at intervals not exceeding 30 inches and not more than 6 inches from cabinets, boxes, fittings, outlets, racks, frames, and terminals.
5. Bundle, lace, and train conductors to terminal points without exceeding manufacturer's limitations on bending radii, but not less than radii specified in BICSI ITSIM, "Cabling Termination Practices" Chapter. Install lacing bars and distribution spools.
6. Do not install bruised, kinked, scored, deformed, or abraded cable. Do not splice cable between termination, tap, or junction points. Remove and discard cable if damaged during installation and replace it with new cable.
7. Cold-Weather Installation: Bring cable to room temperature before dereeling. Heat lamps shall not be used for heating.
8. Pulling Cable: Comply with BICSI ITSIM, Ch. 4, "Pulling Cable." Monitor cable pull tensions.

D. Open-Cable Installation:

1. Install cabling with horizontal and vertical cable guides in telecommunications spaces with terminating hardware and interconnection equipment.
2. Suspend copper cable not in a wireway or pathway a minimum of 8 inches above ceilings by cable supports not more than 60 inches apart.
3. Cable shall not be run through structural members or in contact with pipes, ducts, or other potentially damaging items.

E. Separation from EMI Sources:

1. Comply with BICSI TDMM and TIA-569-B recommendations for separating unshielded copper voice and data communication cable from potential EMI sources, including electrical power lines and equipment.
2. Separation between open communications cables or cables in nonmetallic raceways and unshielded power conductors and electrical equipment shall be as follows:

   a. Electrical Equipment Rating Less Than 2 kVA: A minimum of 5 inches.
   b. Electrical Equipment Rating between 2 and 5 kVA: A minimum of 12 inches.
   c. Electrical Equipment Rating More Than 5 kVA: A minimum of 24 inches.

3. Separation between communications cables in grounded metallic raceways and unshielded power lines or electrical equipment shall be as follows:

   a. Electrical Equipment Rating Less Than 2 kVA: A minimum of 2-1/2 inches.
   b. Electrical Equipment Rating between 2 and 5 kVA: A minimum of 6 inches.
   c. Electrical Equipment Rating More Than 5 kVA: A minimum of 12 inches.

4. Separation between cables in grounded metallic raceways and power lines and electrical equipment located in grounded metallic conduits or enclosures shall be as follows:

a. Electrical Equipment Rating Less Than 2 kVA: No requirement.
b. Electrical Equipment Rating between 2 and 5 kVA: A minimum of 3 inches.
c. Electrical Equipment Rating More Than 5 kVA: A minimum of 6 inches.

5. Separation between Cables and Electrical Motors and Transformers, 5 kVA or HP and Larger: A minimum of 48 inches.
6. Separation between Cables and Fluorescent Fixtures: A minimum of 5 inches.

## 3.4 FIRE ALARM WIRING INSTALLATION

A. Comply with NECA 1 and NFPA 72.

B. Wiring Method: Install wiring in metal raceway according to Section 260533 "Raceways and Boxes for Electrical Systems."

1. Install plenum cable in environmental air spaces, including plenum ceilings.
2. Fire alarm circuits and equipment control wiring associated with the fire alarm system shall be installed in a dedicated raceway system. This system shall not be used for any other wire or cable.

C. Wiring Method:

1. Cables and raceways used for fire alarm circuits, and equipment control wiring associated with the fire alarm system, may not contain any other wire or cable.
2. Fire-Rated Cables: Use of 2-hour, fire-rated fire alarm cables, NFPA 70, Types MI and CI, is not permitted.
3. Signaling Line Circuits: Power-limited fire alarm cables shall not be installed in the same cable or raceway as signaling line circuits.

D. Wiring within Enclosures: Separate power-limited and non-power-limited conductors as recommended by manufacturer. Install conductors parallel with or at right angles to sides and back of the enclosure. Bundle, lace, and train conductors to terminal points with no excess. Connect conductors that are terminated, spliced, or interrupted in any enclosure associated with the fire alarm system to terminal blocks. Mark each terminal according to the system's wiring diagrams. Make all connections with approved crimp-on terminal spade lugs, pressure-type terminal blocks, or plug connectors.

E. Cable Taps: Use numbered terminal strips in junction, pull, and outlet boxes, cabinets, or equipment enclosures where circuit connections are made.

F. Color-Coding: Color-code fire alarm conductors differently from the normal building power wiring. Use one color-code for alarm circuit wiring and another for supervisory circuits. Color-code audible alarm-indicating circuits differently from alarm-initiating circuits. Use different colors for visible alarm-indicating devices. Paint fire alarm system junction boxes and covers red.

G. Risers: Install at least two vertical cable risers to serve the fire alarm system. Separate risers in close proximity to each other with a minimum one-hour-rated wall, so the loss of one riser does not prevent the receipt or transmission of signals from other floors or zones.

H. Wiring to Remote Alarm Transmitting Device: 1-inch conduit between the fire alarm control panel and the transmitter. Install number of conductors and electrical supervision for connecting wiring as needed to suit monitoring function.

## 3.5 POWER AND CONTROL-CIRCUIT CONDUCTORS

A. 120-V Power Wiring: Install according to Section 260519 "Low-Voltage Electrical Power Conductors and Cables" unless otherwise indicated.

B. Minimum Conductor Sizes:

1. Class 1 remote-control and signal circuits, No. 14 AWG.
2. Class 2 low-energy, remote-control and signal circuits, No. 16 AWG.
3. Class 3 low-energy, remote-control, alarm and signal circuits, No. 12 AWG.

## 3.6 CONNECTIONS

A. Comply with requirements in Section 283111 "Digital, Addressable Fire-Alarm System for connecting, terminating, and identifying wires and cables.

## 3.7 FIRESTOPPING

A. Comply with requirements in Section 078413 "Penetration Firestopping."

B. Comply with TIA-569-B, "Firestopping" Annex A.

C. Comply with BICSI TDMM, "Firestopping Systems" Article.

## 3.8 GROUNDING

A. For communications wiring, comply with J-STD-607-A and with BICSI TDMM, "Grounding, Bonding, and Electrical Protection" Chapter.

B. For low-voltage wiring and cabling, comply with requirements in Section 260526 "Grounding and Bonding for Electrical Systems."

## 3.9 IDENTIFICATION

A. Identify system components, wiring, and cabling complying with TIA/EIA-606-A. Comply with requirements for identification specified in Section 260553 "Identification for Electrical Systems."

## 3.10 FIELD QUALITY CONTROL

A. Manufacturer's Field Service: Engage a factory-authorized service representative to test and inspect components, assemblies, and equipment installations, including connections.

B. Document data for each measurement. Print data for submittals in a summary report that is formatted using Table 10.1 in BICSI TDMM as a guide, or transfer the data from the instrument to the computer, save as text files, print, and submit.

C. End-to-end cabling will be considered defective if it does not pass tests and inspections.

D. Prepare test and inspection reports.

**END OF SECTION**

# SECTION 28 05 26

# GROUNDING AND BONDING FOR ELECTRONIC SAFETY AND SECURITY

## PART 1 - GENERAL

### 1.1 RELATED DOCUMENTS

A. Drawings and general provisions of the Contract, including General and Supplementary Conditions and Division 01 Specification Sections, apply to this Section.

### 1.2 SUMMARY

A. Section Includes:

1. Grounding conductors.
2. Grounding connectors.
3. Grounding busbars.

### 1.3 DEFINITIONS

A. Signal Ground: The ground reference point designated by manufacturer of the system that is considered to have zero voltage.

### 1.4 ACTION SUBMITTALS

A. Product Data: For each type of product.

## PART 2 - PRODUCTS

### 2.1 CONDUCTORS

A. Manufacturers: Subject to compliance with requirements, available manufacturers offering products that may be incorporated into the Work include, but are not limited to, the following:

1. Harger Lightning and Grounding.
2. Panduit Corp.
3. Tyco Electronics Corp.

B. Comply with UL 486A-486B.

C. Insulated Conductors: Stranded copper wire, green or green with yellow stripe insulation, insulated for 600 V, and complying with UL 83.

1. Ground wire for custom-length equipment ground jumpers shall be No. 6 AWG, 19-strand, UL-listed, Type THHN wire.

D. Bare Copper Conductors:

1. Solid Conductors: ASTM B 3.
2. Stranded Conductors: ASTM B 8.
3. Tinned Conductors: ASTM B 33.
4. Bonding Cable: 28 kcmils (14.2 sq. mm), 14 strands of No. 17 AWG conductor, and 1/4 inch (6.3 mm) in diameter.
5. Bonding Conductor: No. 4 or No. 6 AWG, stranded conductor.
6. Bonding Jumper: Tinned-copper tape, braided conductors terminated with two-hole copper ferrules; 1-5/8 inches (41 mm) wide and 1/16 inch (1.6 mm) thick.

## 2.2 CONNECTORS

A. Irreversible connectors listed for the purpose. Listed by an NRTL as complying with NFPA 70 for specific types, sizes, and combinations of conductors and other items connected. Comply with UL 486A-486B.

B. Manufacturers: Subject to compliance with requirements, available manufacturers offering products that may be incorporated into the Work include, but are not limited to, the following:

1. Burndy; Part of Hubbell Electrical Systems.
2. Chatsworth Products, Inc.
3. Harger Lightning and Grounding.
4. Panduit Corp.
5. Tyco Electronics Corp.

C. Compression Wire Connectors: Crimp-and-compress connectors that bond to the conductor when the connector is compressed around the conductor. Comply with UL 467.

1. Electroplated tinned copper, C and H shaped.

D. Busbar Connectors: Cast silicon bronze, solderless compression-type mechanical connector; with a long barrel and two holes spaced on 5/8- or 1-inch (15.8- or 25.4-mm) centers for a two-bolt connection to the busbar.

E. Welded Connectors: Exothermic-welding kits of types recommended by kit manufacturer for materials being joined and installation conditions.

## 2.3 GROUNDING BUSBARS

A. Manufacturers: Subject to compliance with requirements, available manufacturers offering products that may be incorporated into the Work include, but are not limited to, the following:

1. Chatsworth Products, Inc.
2. Harger Lightning and Grounding.
3. Panduit Corp.

B. Grounding Busbars: Predrilled rectangular bars of hard-drawn solid copper, 1/4 by 2 inches (6.3 by 50 mm) in cross section, length as indicated on Drawings. The busbar shall be for wall mounting, shall be NRTL listed as complying with UL 467, and shall comply with J-STD-607-A.

1. Predrilling shall be with holes for use with lugs specified in this Section.
2. Mounting Hardware: Stand-off brackets that provide at least a 2-inch (50-mm clearance to access the rear of the busbar. Brackets and bolts shall be stainless steel.)
3. Stand-off insulators for mounting shall be Lexan or PVC. Comply with UL 891 for use in 600 V switchboards, impulse tested at 5000 V.

# PART 3 - EXECUTION

## 3.1 INSTALLATION

A. Comply with IEEE 1100, "Recommended Practice for Power and Grounding Electronic Equipment."

1. Ground cable shields, drain conductors, and equipment to eliminate shock hazard and to minimize ground loops, common-mode returns, noise pickup, cross talk, and other impairments.
2. Bond shields and drain conductors to ground at only one point in each circuit.

B. Signal Ground:

1. For each system, establish the signal ground and label that location as such.
2. Bond the signal ground to the alternating-current (ac) power system service by connecting to one of the following listed locations, using insulated No. 6 AWG, stranded, Type THHN wire:

a. Grounding bar in an electrical power panelboard if located in the same room or space as the signal ground.
b. Telecommunications grounding busbar.

C. Comply with NECA 1.

## 3.2 APPLICATION

A. Conductors: Install solid conductor for No. 8 AWG and smaller and stranded conductors for No. 6 AWG and larger unless otherwise indicated.

B. Grounding and Bonding Conductors:

1. Install in the straightest and shortest route between the origination and termination point, and no longer than required. The bend radius shall not be smaller than eight times the diameter of the conductor. No one bend may exceed 90 degrees.
2. Install without splices.
3. Support at not more than 36-inch (900-mm) intervals.

## 3.3 CONNECTIONS

A. Stacking of conductors under a single bolt is not permitted when connecting to busbars.

B. Assemble the wire connector to the conductor, complying with manufacturer's written instructions and as follows:

1. Use crimping tool and the die specific to the connector.
2. Pretwist the conductor.
3. Apply an antioxidant compound to all bolted and compression connections.

C. Shielded Cable: Bond the shield of shielded cable to the signal ground. Comply with TIA/EIA-568-B.1 and TIA/EIA-568-B.2 when grounding screened, balanced, twisted-pair cables.

D. Rack- and Cabinet-Mounted Equipment: Bond powered equipment chassis to the cabinet or rack grounding bar. Power connection shall comply with NFPA 70; the equipment grounding conductor in the power cord of cord- and plug-connected equipment shall be considered as a supplement to bonding requirements in this Section.

## 3.4 FIELD QUALITY CONTROL

A. Perform tests and inspections.

B. Tests and Inspections:

1. Inspect physical and mechanical condition. Verify tightness of accessible, bolted, electrical connections with a calibrated torque wrench according to manufacturer's written instructions.

C. Grounding system will be considered defective if it does not pass tests and inspections.

D. Prepare test and inspection reports.

**END OF SECTION**

# SECTION 284621.11

# ADDRESSABLE FIRE-ALARM SYSTEMS

## PART 1 - GENERAL

### 1.1 RELATED DOCUMENTS

A. Drawings and general provisions of the Contract, including General and Supplementary Conditions and Division 01 Specification Sections, apply to this Section.

### 1.2 SUMMARY

A. Section Includes:

1. Fire-alarm control unit.
2. Manual fire-alarm boxes.
3. System smoke detectors.
4. Air-sampling smoke detectors.
5. Heat detectors.
6. Notification appliances.
7. Device guards.
8. Magnetic door holders.
9. Remote annunciator.
10. Addressable interface device.
11. Digital alarm communicator transmitter.
12. Radio alarm transmitter.
13. Network communications.

B. Related Requirements:

1. Section 271513 "Communications Copper Horizontal Cabling" for cables and conductors for fire-alarm systems.

### 1.3 DEFINITIONS

A. EMT: Electrical Metallic Tubing.

B. FACP: Fire Alarm Control Panel.

C. HLI: High Level Interface.

D. NICET: National Institute for Certification in Engineering Technologies.

E. PC: Personal computer.

1.4 ACTION SUBMITTALS

A. Product Data: For each type of product, including furnished options and accessories.

1. Include construction details, material descriptions, dimensions, profiles, and finishes.
2. Include rated capacities, operating characteristics, and electrical characteristics.

B. Shop Drawings: For fire-alarm system.

1. Comply with recommendations and requirements in the "Documentation" section of the "Fundamentals" chapter in NFPA 72.
2. Include plans, elevations, sections, details, and attachments to other work.
3. Include details of equipment assemblies. Indicate dimensions, weights, loads, required clearances, method of field assembly, components, and locations. Indicate conductor sizes, indicate termination locations and requirements, and distinguish between factory and field wiring.
4. Detail assembly and support requirements.
5. Include voltage drop calculations for notification-appliance circuits.
6. Include battery-size calculations.
7. Include input/output matrix.
8. Include statement from manufacturer that all equipment and components have been tested as a system and meet all requirements in this Specification and in NFPA 72.
9. Include performance parameters and installation details for each detector.
10. Verify that each duct detector is listed for complete range of air velocity, temperature, and humidity possible when air-handling system is operating.
11. Provide program report showing that air-sampling detector pipe layout balances pneumatically within the airflow range of the air-sampling detector.
12. Include plans, sections, and elevations of heating, ventilating, and air-conditioning ducts, drawn to scale; coordinate location of duct smoke detectors and access to them.

    a. Show critical dimensions that relate to placement and support of sampling tubes, detector housing, and remote status and alarm indicators.
    b. Show field wiring required for HVAC unit shutdown on alarm.
    c. Locate detectors according to manufacturer's written recommendations.

13. Include voice/alarm signaling-service equipment rack or console layout, grounding schematic, amplifier power calculation, and single-line connection diagram.

C. General Submittal Requirements:

1. Submittals shall be approved by authorities having jurisdiction prior to submitting them to Architect.

2. Shop Drawings shall be prepared by persons with the following qualifications:

    a. Trained and certified by manufacturer in fire-alarm system design.
    b. NICET-certified, fire-alarm technician; Level III minimum.
    c. Licensed or certified by authorities having jurisdiction.

D. Delegated-Design Submittal: For notification appliances and smoke and heat detectors, in addition to submittals listed above, indicate compliance with performance requirements and design criteria, including analysis data signed and sealed by the qualified professional engineer responsible for their preparation.

1. Drawings showing the location of each notification appliance and smoke and heat detector, ratings of each, and installation details as needed to comply with listing conditions of the device.
2. Design Calculations: Calculate requirements for selecting the spacing and sensitivity of detection, complying with NFPA 72. Calculate spacing and intensities for strobe signals and sound-pressure levels for audible appliances.
3. Indicate audible appliances required to produce square wave signal per NFPA 72.

1.5 INFORMATIONAL SUBMITTALS

A. Qualification Data: For Installer.

B. Field quality-control reports.

1.6 Sample Warranty: For special warranty.

1.7 CLOSEOUT SUBMITTALS

A. Operation and Maintenance Data: For fire-alarm systems and components to include in emergency, operation, and maintenance manuals.

1. In addition to items specified in Section 017823 "Operation and Maintenance Data," include the following and deliver copies to authorities having jurisdiction:

    a. Comply with the "Records" section of the "Inspection, Testing and Maintenance" chapter in NFPA 72.
    b. Provide "Fire Alarm and Emergency Communications System Record of Completion Documents" according to the "Completion Documents" Article in the "Documentation" section of the "Fundamentals" chapter in NFPA 72.
    c. Complete wiring diagrams showing connections between all devices and equipment. Each conductor shall be numbered at every junction point with indication of origination and termination points.
    d. Riser diagram.
    e. Device addresses.

f. Record copy of site-specific software.
g. Provide "Inspection and Testing Form" according to the "Inspection, Testing and Maintenance" chapter in NFPA 72, and include the following:

   1) Equipment tested.
   2) Frequency of testing of installed components.
   3) Frequency of inspection of installed components.
   4) Requirements and recommendations related to results of maintenance.
   5) Manufacturer's user training manuals.

h. Manufacturer's required maintenance related to system warranty requirements.
i. Abbreviated operating instructions for mounting at fire-alarm control unit and each annunciator unit.

B. Software and Firmware Operational Documentation:

1. Software operating and upgrade manuals.
2. Program Software Backup: On magnetic media or compact disk, complete with data files.
3. Device address list.
4. Printout of software application and graphic screens.

1.8 MAINTENANCE MATERIAL SUBMITTALS

A. Furnish extra materials that match products installed and that are packaged with protective covering for storage and identified with labels describing contents.

1. Lamps for Remote Indicating Lamp Units: Quantity equal to 10 percent of amount installed, but no fewer than one unit.
2. Lamps for Strobe Units: Quantity equal to 10 percent of amount installed, but no fewer than one unit.
3. Smoke Detectors, Heat Detectors, and Carbon Monoxide Detectors: Quantity equal to 10 percent of amount of each type installed, but no fewer than one unit of each type.
4. Detector Bases: Quantity equal to two percent of amount of each type installed, but no fewer than one unit of each type.
5. Keys and Tools: One extra set for access to locked or tamperproofed components.
6. Audible and Visual Notification Appliances: One of each type installed.
7. Fuses: Two of each type installed in the system. Provide in a box or cabinet with compartments marked with fuse types and sizes.
8. Provide all necessary hardware and programming to provide the client with 20% spare capacity on all initiating and indicating circuits.
9. Provide as part of the base contract all labor and materials to install twenty (20) additional fire alarm devices during construction. The twenty (20) fire alarm device can be but not limited to smoke detector, heat detector, door holder, duct

detector, fan shutdown, tamper switches, flow switches, etc. Include all labor and materials including wire, boxes, conduit, terminations, hardware, software, programming and testing.

1.9 QUALITY ASSURANCE

A. Installer Qualifications: Personnel shall be trained and certified by manufacturer for installation of units required for this Project.

B. Installer Qualifications: Installation shall be by personnel certified by NICET as fire-alarm Level III technician.

C. NFPA Certification: Obtain certification according to NFPA 72 by a UL-listed alarm company.

1.10 PROJECT CONDITIONS

A. Use of Devices during Construction: Protect devices during construction unless devices are placed in service to protect the facility during construction.

1.11 WARRANTY

A. Special Warranty: Manufacturer agrees to repair or replace fire-alarm system equipment and components that fail in materials or workmanship within specified warranty period.

1. Warranty Extent: All equipment and components not covered in the Maintenance Service Agreement.
2. Warranty Period: Five years from date of Substantial Completion.

PART 2 - PRODUCTS

2.1 SYSTEM DESCRIPTION

A. Source Limitations for Fire-Alarm System and Components: Components shall be compatible with, and operate as an extension of, existing system. Provide system manufacturer's certification that all components provided have been tested as, and will operate as, a system.

B. Noncoded, UL-certified addressable system, with multiplexed signal transmission and voice/strobe evacuation.

C. Automatic sensitivity control of certain smoke detectors.

D. All components provided shall be listed for use with the selected system.

E. Electrical Components, Devices, and Accessories: Listed and labeled as defined in NFPA 70, by a qualified testing agency, and marked for intended location and application.

## 2.2 SYSTEMS OPERATIONAL DESCRIPTION

A. Fire-alarm signal initiation shall be by one or more of the following devices:

1. Manual stations.
2. Heat detectors.
3. Smoke detectors.
4. Duct smoke detectors.
5. Carbon monoxide detectors.
6. Automatic sprinkler system water flow.

B. Fire-alarm signal shall initiate the following actions:

1. Continuously operate alarm notification appliances including voice evacuation notices.
2. Identify alarm and specific initiating device at fire-alarm control unit, connected network control panels, off-premises network control panels, and remote annunciators.
3. Transmit an alarm signal to the remote alarm receiving station.
4. Unlock electric door locks in designated egress paths.
5. Release fire and smoke doors held open by magnetic door holders.
6. Activate voice/alarm communication system.
7. Switch heating, ventilating, and air-conditioning equipment controls to fire-alarm mode.
8. Close smoke dampers in air ducts of designated air-conditioning duct systems.
9. Recall elevators to primary or alternate recall floors.
10. Activate elevator power shunt trip.
11. Record events in the system memory.
12. Override Cafeteria PA Sound System.
13. Override Gym PA Sound System.

C. Supervisory signal initiation shall be by one or more of the following devices and actions:

1. Valve supervisory switch.
2. Elevator shunt-trip supervision.
3. User disabling of zones or individual devices.
4. Loss of communication with any panel on the network.

D. System trouble signal initiation shall be by one or more of the following devices and actions:

1. Open circuits, shorts, and grounds in designated circuits.
2. Opening, tampering with, or removing alarm-initiating and supervisory signal-initiating devices.
3. Loss of communication with any addressable sensor, input module, relay, control module, remote annunciator, printer interface, or Ethernet module.
4. Loss of primary power at fire-alarm control unit.
5. Ground or a single break in internal circuits of fire-alarm control unit.
6. Abnormal ac voltage at fire-alarm control unit.
7. Break in standby battery circuitry.
8. Failure of battery charging.
9. Abnormal position of any switch at fire-alarm control unit or annunciator.
10. Voice signal amplifier failure.

E. System Supervisory Signal Actions:

1. Initiate notification appliances.
2. Identify specific device initiating the event at fire-alarm control unit, connected network control panels, off-premises network control panels, and remote annunciators.
3. After a time delay of 200 seconds, transmit a trouble or supervisory signal to the remote alarm receiving station.
4. Transmit system status to building management system.

## 2.3 FIRE-ALARM CONTROL UNIT

A. Manufacturers: Subject to compliance with requirements, provide products by one of the following:

1. GE UTC Fire & Security; A United Technologies Company.
2. Notifier.
3. Siemens Industry, Inc.; Fire Safety Division.
4. SimplexGrinnell LP.

B. General Requirements for Fire-Alarm Control Unit:

1. Field-programmable, microprocessor-based, modular, power-limited design with electronic modules, complying with UL 864.

   a. System software and programs shall be held in nonvolatile flash, electrically erasable, programmable, read-only memory, retaining the information through failure of primary and secondary power supplies.
   b. Include a real-time clock for time annotation of events on the event recorder and printer.
   c. Provide communication between the FACP and remote circuit interface panels, annunciators, and displays.
   d. The FACP shall be listed for connection to a central-station signaling system service.

e. Provide nonvolatile memory for system database, logic, and operating system and event history. The system shall require no manual input to initialize in the event of a complete power down condition. The FACP shall provide a minimum 500-event history log.

2. Addressable Initiation Device Circuits: The FACP shall indicate which communication zones have been silenced and shall provide selective silencing of alarm notification appliance by building communication zone.
3. Addressable Control Circuits for Operation of Notification Appliances and Mechanical Equipment: The FACP shall be listed for releasing service.

C. Alphanumeric Display and System Controls: Arranged for interface between human operator at fire-alarm control unit and addressable system components including annunciation and supervision. Display alarm, supervisory, and component status messages and the programming and control menu.

1. Annunciator and Display: Liquid-crystal type, 80 characters, minimum.
2. Keypad: Arranged to permit entry and execution of programming, display, and control commands.

D. Alphanumeric Display and System Controls: Arranged for interface between human operator at fire-alarm control unit and addressable system components including annunciation and supervision. Display alarm, supervisory, and component status messages and the programming and control menu.

1. Annunciator and Display: Liquid-crystal type, three line(s) of 80 characters, minimum.
2. Keypad: Arranged to permit entry and execution of programming, display, and control commands and to indicate control commands to be entered into the system for control of smoke-detector sensitivity and other parameters.

E. Initiating-Device, Notification-Appliance, and Signaling-Line Circuits:

1. Pathway Class Designations: NFPA 72, Class B.
2. Pathway Survivability: Level 1.
3. Install no more than 100 addressable devices on each signaling-line circuit.
4. Serial Interfaces:

a. One dedicated RS 485 port for central-station operation using point ID DACT.
b. One RS 485 port for remote annunciators, Ethernet module, or multi-interface module (printer port).
c. One USB port for PC configuration.
d. One RS 232 port for voice evacuation interface.

F. Notification-Appliance Circuit:

1. Fire Alarm Audible appliances shall sound in a three-pulse temporal pattern, as defined in NFPA 72. Carbon Monoxide Alarm Audible appliances shall sound in a

four pulse temporal pattern or a constant tone. Carbon monoxide Alarm tone shall be different than the Fire Alarm tone.

2. Where notification appliances provide signals to sleeping areas, the alarm signal shall be a 520-Hz square wave with an intensity 15 dB above the average ambient sound level or 5 dB above the maximum sound level, or at least 75 dBA, whichever is greater, measured at the pillow.
3. Visual alarm appliances shall flash in synchronization where multiple appliances are in the same field of view, as defined in NFPA 72.

G. Elevator Recall:

1. Elevator recall shall be initiated only by one of the following alarm-initiating devices:

   a. Elevator lobby detectors except the lobby detector on the designated floor.
   b. Smoke detector in elevator machine room.
   c. Smoke detectors in elevator hoistway.

2. Elevator controller shall be programmed to move the cars to the alternate recall floor if lobby detectors located on the designated recall floors are activated.
3. Heat Detectors in an elevator shaft and elevator machine room shall shut down elevators associated with the location without time delay.

H. Door Controls: Door hold-open devices that are controlled by smoke detectors at doors in smoke-barrier walls shall be connected to fire-alarm system.

I. Remote Smoke-Detector Sensitivity Adjustment: Controls shall select specific addressable smoke detectors for adjustment, display their current status and sensitivity settings, and change those settings. Allow controls to be used to program repetitive, time-scheduled, and automated changes in sensitivity of specific detector groups. Record sensitivity adjustments and sensitivity-adjustment schedule changes in system memory, and print out the final adjusted values.

J. Transmission to Remote Alarm Receiving Station: Automatically transmit alarm, supervisory, and trouble signals to a remote alarm station.

K. Primary Power: 24-V dc obtained from 120-V ac service and a power-supply module. Initiating devices, notification appliances, signaling lines, trouble signals, supervisory signals and supervisory and digital alarm communicator transmitters shall be powered by 24-V dc source.

1. Alarm current draw of entire fire-alarm system shall not exceed 80 percent of the power-supply module rating.

L. Secondary Power: 24-V dc supply system with batteries, automatic battery charger, and automatic transfer switch.

1. Batteries: Sealed lead calcium Sealed, recombinant lead acid] Vented, wet-cell pocket, plate nickel cadmium.

M. Instructions: Computer printout or typewritten instruction card mounted behind a plastic or glass cover in a stainless-steel or aluminum frame. Include interpretation and describe appropriate response for displays and signals. Briefly describe the functional operation of the system under normal, alarm, and trouble conditions.

## 2.4 MANUAL FIRE-ALARM BOXES

A. Manufacturers: Subject to compliance with requirements, available manufacturers offering products that may be incorporated into the Work include, but are not limited to the following:

1. GE UTC Fire & Security; A United Technologies Company.
2. Notifier.
3. Siemens Industry, Inc.; Fire Safety Division.
4. SimplexGrinnell LP.

B. General Requirements for Manual Fire-Alarm Boxes: Comply with UL 38. Boxes shall be finished in red with molded, raised-letter operating instructions in contrasting color; shall show visible indication of operation; and shall be mounted on recessed outlet box. If indicated as surface mounted, provide manufacturer's surface back box.
1. Double-action mechanism requiring two actions to initiate an alarm, pull-lever type; with integral attached addressable module arranged to communicate manual-station status (normal, alarm, or trouble) to fire-alarm control unit.
2. Station Reset: Key- or wrench-operated switch.

## 2.5 SYSTEM SMOKE DETECTORS

A. Manufacturers: Subject to compliance with requirements, provide products by one of the following:

1. GE UTC Fire & Security; A United Technologies Company.
2. Notifier.
3. Siemens Industry, Inc.; Fire Safety Division.
4. SimplexGrinnell LP.

B. General Requirements for System Smoke Detectors:

1. Comply with UL 268; operating at 24-V dc, nominal.
2. Detectors shall be two-wire type.
3. Integral Addressable Module: Arranged to communicate detector status (normal, alarm, or trouble) to fire-alarm control unit.
4. Base Mounting: Detector and associated electronic components shall be mounted in a twist-lock module that connects to a fixed base. Provide terminals in the fixed base for connection to building wiring.
5. Self-Restoring: Detectors do not require resetting or readjustment after actuation to restore them to normal operation.

6. Integral Visual-Indicating Light: LED type, indicating detector has operated and power-on status.
7. Remote Control: Unless otherwise indicated, detectors shall be digital-addressable type, individually monitored at fire-alarm control unit for calibration, sensitivity, and alarm condition and individually adjustable for sensitivity by fire-alarm control unit.
   a. Multiple levels of detection sensitivity for each sensor.
   b. Sensitivity levels based on time of day.

C. Photoelectric Smoke Detectors:

1. Detector address shall be accessible from fire-alarm control unit and shall be able to identify the detector's location within the system and its sensitivity setting.
2. An operator at fire-alarm control unit, having the designated access level, shall be able to manually access the following for each detector:

   a. Primary status.
   b. Device type.
   c. Present average value.
   d. Present sensitivity selected.
   e. Sensor range (normal, dirty, etc.).

D. Duct Smoke Detectors: Photoelectric type complying with UL 268A.

1. Detector address shall be accessible from fire-alarm control unit and shall be able to identify the detector's location within the system and its sensitivity setting.
2. An operator at fire-alarm control unit, having the designated access level, shall be able to manually access the following for each detector:

   a. Primary status.
   b. Device type.
   c. Present average value.
   d. Present sensitivity selected.
   e. Sensor range (normal, dirty, etc.).
3. Each sensor shall have multiple levels of detection sensitivity.
4. Sampling Tubes: Design and dimensions as recommended by manufacturer for specific duct size, air velocity, and installation conditions where applied.
5. Relay Fan Shutdown: Fully programmable relay rated to interrupt fan motor-control circuit.

## 2.6 PROJECTED BEAM SMOKE DETECTORS

A. Projected Beam Light Source and Receiver: Designed to accommodate small angular movements and continue to operate and not cause nuisance alarms.

B. Detector Address: Accessible from fire-alarm control unit and able to identify the detector's location within the system and its sensitivity setting.

C. An operator at fire-alarm control unit, having the designated access level, shall be able to manually access the following for each detector:

1. Primary status.
2. Device type.
3. Present average value.
4. Present sensitivity selected.
5. Sensor range (normal, dirty, etc.).

## 2.7 CARBON MONOXIDE DETECTORS

A. General: Carbon monoxide detector listed for connection to fire-alarm system.

1. Mounting: Adapter plate for outlet box mounting.
2. Testable by introducing test carbon monoxide into the sensing cell.
3. Detector shall provide alarm contacts and trouble contacts.
4. Detector shall send trouble alarm when nearing end-of-life, power supply problems, or internal faults.
5. Comply with UL 2075.
6. Locate, mount, and wire according to manufacturer's written instructions.
7. Provide means for addressable connection to fire-alarm system.
8. Test button simulates an alarm condition.
9. Provide with sounder bases for local audio annunciator.

## 2.8 MULTICRITERIA DETECTORS

A. Mounting: Twist-lock base interchangeable with smoke-detector bases.

B. Integral Addressable Module: Arranged to communicate detector status (normal, alarm, or trouble) to fire-alarm control unit.

C. Automatically adjusts its sensitivity by means of drift compensation and smoothing algorithms. The detector shall send trouble alarm if it is incapable of compensating for existing conditions.

D. Test button tests all sensors in the detector.

E. An operator at fire-alarm control unit, having the designated access level, shall be able to manually access the following for each detector:

1. Primary status.
2. Device type.
3. Present sensitivity selected.
4. Sensor range (normal, dirty, etc.).

F. Sensors: The detector shall be comprised of four sensing elements including a smoke sensor, a carbon monoxide sensor, an infrared sensor, and a heat sensor.

1. Smoke sensor shall be photoelectric type as described in "System Smoke Detectors" Article.
2. Carbon monoxide sensor shall be as described in "Carbon Monoxide Detectors" Article.
3. Heat sensor shall be as described in "Heat Detectors" Article.
4. Each sensor shall be separately listed according to requirements for its detector type.

## 2.9 HEAT DETECTORS

A. Manufacturers: Subject to compliance with requirements, provide products by one of the following:

1. GE UTC Fire & Security; A United Technologies Company.
2. Notifier.
3. Siemens Industry, Inc.; Fire Safety Division.
4. SimplexGrinnell LP.

B. General Requirements for Heat Detectors: Comply with UL 521.

1. Temperature sensors shall test for and communicate the sensitivity range of the device.

C. Heat Detector, Combination Type: Actuated by either a fixed temperature of 135 deg F (57 deg C) or a rate of rise that exceeds 15 deg F (8 deg C) per minute unless otherwise indicated.

1. Mounting: Twist-lock base interchangeable with smoke-detector bases.
2. Integral Addressable Module: Arranged to communicate detector status (normal, alarm, or trouble) to fire-alarm control unit.

## 2.10 AIR-SAMPLING SMOKE DETECTOR

A. Manufacturers: Subject to compliance with requirements, provide products by one of the following:

1. Ansul by Johnson Controls Company.
2. Fenwal Protection Systems; A UTC Fire & Security Company.
3. Fike Corporation.
4. Notifier.

B. General Description:

1. Air-sampling smoke detector shall be laser based using a piping system and a fan to transport the particles of combustion to the detector.
2. Provide two levels of alarm from each zone covered by the detector and two supervisory levels of alarm from each detector.

3. The air being sampled shall pass through filters to remove dust particulates greater than 20 microns before entering the detection chamber.
4. Detectors shall have the capability via RS 485 to connect up to 100 detectors in a network.
5. Detectors shall communicate with the fire-alarm control unit via addressable, monitored dry contact closures, RS 485, and interface modules. Provide a minimum of six relays, individually programmable remotely for any function.
6. Pipe airflow balancing calculations shall be performed using approved calculation software.

C. Detector:

1. Detector, Filter, Aspirator, and Relays: Housed in a mounting box and arranged in such a way that air is drawn from the detection area and a sample passed through the dual-stage filter and detector by the aspirator.
2. Obscuration Sensitivity Range: 0.005 - 6 percent obs/ft.
3. Four independent, field-programmable, smoke-alarm thresholds per sensor pipe and a programmable scan time delay. The threshold set points shall be programmable.

    a. The four alarm thresholds may be used as follows:

        1) Alarm Level 1 (Alert): Activate a visual and an audible supervisory alarm.
        2) Alarm Level 2 (Action): Activate shutdown of electrical/HVAC equipment and activate a visual and an audible supervisory alarm.
        3) Alarm Level 3 (Fire 1): Activate building alarm systems and initiate call to fire response unit.
        4) Alarm Level 4 (Fire 2): Activate suppression system or other countermeasures.

    b. Final Detection System Settings: Approved by Architect.
    c. Initial Detection Alarm Settings:

        1) Alarm Level 1 (Alert): 0.08 percent obs/ft.
        2) Alarm Level 2 (Action): 1.0 percent obs/ft.
        3) Alarm Level 3 (Fire 1): 2.0 percent obs/ft.
        4) Alarm Level 4 (Fire 2): 4.0 percent obs/ft.

4. Power Supply:

    a. Regulated 24-V dc, monitored by the fire-alarm control unit, with battery backup.
    b. Battery backup shall provide 24 hours' standby, followed by 30 minutes at maximum connected load.

5. Detector shall also transmit the following faults:

    a. Detector.

b. Airflow.
c. Filter.
d. System.
e. Zone.
f. Network.
g. Power.

6. Provide four in-line sample pipe inlets that shall contain a flow sensor for each pipe inlet. The detector shall be capable of identifying the pipe from which smoke was detected.
7. Aspirator: Air pump capable of allowing for multiple sampling pipe runs up to 650 feet (200 m) in total, (four pipe runs per detector) with a transport time of less than 120 seconds from the farthest sample port.
8. Air-Sampling Flow Rates Outside Manufacturer's Specified Range: Result in a trouble alarm.
9. Provide software-programmable relays rated at 2 A at 30-V dc for alarm and fault conditions.
10. Provide built-in event and smoke logging; store smoke levels, alarm conditions, operator actions, and faults with date and time of each event. Each detector (zone) shall be capable of storing up to 18,000 events.
11. Urgent and Minor Faults. Minor faults shall be designated as trouble alarms. Urgent faults, which indicate the unit may not be able to detect smoke, shall be designated as supervisory alarms.

D. Displays:

1. Include display module within each detector.
2. Each display shall provide the following features at a minimum:

a. A bar-graph display.
b. Four independent, high-intensity alarm indicators (Alert, Action, Fire 1, and Fire 2), corresponding to the four alarm thresholds of the indicated sector.
c. Alarm threshold indicators for Alert, Action, and Fire 1.
d. LED indication that the first alarm sector is established.
e. Detector fault and airflow fault indicators.
f. LED indicators shall be provided for faults originating in the particular zone (Zone Fault), faults produced by the overall smoke-detection system, and faults resulting from network wiring errors (Network Fault).
g. Minor and urgent LED fault indicators.

E. Sampling Tubes:

1. Smooth bore with a nominal 1-inch (25-mm) OD and a 7/8-inch (21-mm) ID. Sampling pipe with between 5/8- and 1-inch (15- and 25-mm) ID can be used in specifically approved locations when recommended by manufacturer.
2. Pipe Material: CPVC and complying with UL 1887, "Safety Fire Test of Plastic Sprinkler Pipe for Visible Flame and Smoke Characteristics."
3. Joints in the sampling pipe shall be airtight. Use solvent cement approved by the pipe manufacturer on all joints except at entry to the detector.

4. Identify piping with labels reading: "Aspirating Smoke Detector Pipe - Do Not Paint or Disturb" along its entire length at regular intervals according to NFPA 72.
5. Support pipes at not more than 60-inch (1520-mm) centers.
6. Fit end of each trunk or branch pipe with an end cap and drilled with a hole appropriately sized to achieve the performance as specified and as calculated by the system design.

F. Sampling Holes:

1. Sampling holes of 5/64 inch (2 mm), or other sized holes per manufacturer's written instructions, shall be separated by not more than the maximum distance allowable for conventional smoke detectors. Intervals may vary according to calculations.
2. Follow manufacturer's written recommendations to determine the number and spacing of sampling points and the distance from sampling points to ceiling or roof structure and to forced ventilation systems.
3. Each sampling point shall be identified by an applied decal.

## 2.11 NOTIFICATION APPLIANCES

A. Manufacturers: Subject to compliance with requirements, provide products by one of the following:

1. GE UTC Fire & Security; A United Technologies Company.
2. Siemens Industry, Inc.; Fire Safety Division.
3. SimplexGrinnell LP.
4. System Sensor.

B. General Requirements for Notification Appliances: Connected to notification-appliance signal circuits, zoned as indicated, equipped for mounting as indicated, and with screw terminals for system connections.

1. Combination Devices: Factory-integrated audible and visible devices in a single-mounting assembly, equipped for mounting as indicated, and with screw terminals for system connections.

C. Visible Notification Appliances: Xenon strobe lights complying with UL 1971, with clear or nominal white polycarbonate lens mounted on an aluminum faceplate. The word "FIRE" is engraved in minimum 1-inch- (25-mm-) high letters on the lens.

1. Rated Light Output:

a. 15 30 75 110 177cd.
b. 15/30/75/110 cd, selectable in the field.

2. Mounting: Wall mounted unless otherwise indicated.
3. For units with guards to prevent physical damage, light output ratings shall be determined with guards in place.

4. Flashing shall be in a temporal pattern, synchronized with other units.
5. Strobe Leads: Factory connected to screw terminals.
6. Mounting Faceplate: Factory finished, red.

D. Voice/Tone Notification Appliances:

1. Comply with UL 1480.
2. Speakers for Voice Notification: Locate speakers for voice notification to provide the intelligibility requirements of the "Notification Appliances" and "Emergency Communications Systems" chapters in NFPA 72.
3. High-Range Units: Rated 2 to 15 W.
4. Low-Range Units: Rated 1 to 2 W.
5. Mounting: surface mounted and bidirectional.
6. Matching Transformers: Tap range matched to acoustical environment of speaker location.

E. Exit Marking Audible Notification Appliance:

1. Exit marking audible notification appliances shall meet the audibility requirements in NFPA 72.
2. Provide exit marking audible notification appliances at the entrance to all building exits.
3. Provide exit marking audible notification appliances at the entrance to areas of refuge with audible signals distinct from those used for building exit marking.

## 2.12 MAGNETIC DOOR HOLDERS

A. Description: Units are equipped for wall or floor mounting as indicated and are complete with matching doorplate.

1. Electromagnets: Require no more than 3 W to develop 25-lbf (111-N) holding force.
2. Wall-Mounted Units: Flush mounted unless otherwise indicated.
3. Rating: 24-V ac or dc.
4. Rating: 120-V ac.

B. Material and Finish: Match door hardware.

## 2.13 REMOTE ANNUNCIATOR

A. Description: Annunciator functions shall match those of fire-alarm control unit for alarm, supervisory, and trouble indications. Manual switching functions shall match those of fire-alarm control unit, including acknowledging, silencing, resetting, and testing.

1. Mounting: Flush cabinet, NEMA 250, Type 1.

B. Display Type and Functional Performance: Alphanumeric display and LED indicating lights shall match those of fire-alarm control unit. Provide controls to acknowledge, silence, reset, and test functions for alarm, supervisory, and trouble signals.

## 2.14 ADDRESSABLE INTERFACE DEVICE

A. General:

1. Include address-setting means on the module.
2. Store an internal identifying code for control panel use to identify the module type.
3. Listed for controlling HVAC fan motor controllers.

B. Monitor Module: Microelectronic module providing a system address for alarm-initiating devices for wired applications with normally open contacts.

C. Integral Relay: Capable of providing a direct signal to elevator controller to initiate elevator recall and to circuit-breaker shunt trip for power shutdown.

1. Allow the control panel to switch the relay contacts on command.
2. Have a minimum of two normally open and two normally closed contacts available for field wiring.

D. Control Module:

1. Operate notification devices.
2. Operate solenoids for use in sprinkler service.

## 2.15 DIGITAL ALARM COMMUNICATOR TRANSMITTER

A. Digital alarm communicator transmitter shall be acceptable to the remote central station and shall comply with UL 632.

B. Functional Performance: Unit shall receive an alarm, supervisory, or trouble signal from fire-alarm control unit and automatically capture two telephone line(s) and dial a preset number for a remote central station. When contact is made with central station(s), signals shall be transmitted. If service on either line is interrupted for longer than 45 seconds, transmitter shall initiate a local trouble signal and transmit the signal indicating loss of telephone line to the remote alarm receiving station over the remaining line. Transmitter shall automatically report telephone service restoration to the central station. If service is lost on both telephone lines, transmitter shall initiate the local trouble signal.

C. Local functions and display at the digital alarm communicator transmitter shall include the following:

1. Verification that both telephone lines are available.

2. Programming device.
3. LED display.
4. Manual test report function and manual transmission clear indication.
5. Communications failure with the central station or fire-alarm control unit.

D. Digital data transmission shall include the following:

1. Address of the alarm-initiating device.
2. Address of the supervisory signal.
3. Address of the trouble-initiating device.
4. Loss of ac supply.
5. Loss of power.
6. Low battery.
7. Abnormal test signal.
8. Communication bus failure.

E. Secondary Power: Integral rechargeable battery and automatic charger.

F. Self-Test: Conducted automatically every 24 hours with report transmitted to central station.

## 2.16 RADIO ALARM TRANSMITTER

A. Transmitter shall comply with NFPA 1221 and 47 CFR 90.

B. Description: Manufacturer's standard commercial product; factory assembled, wired, and tested; ready for installation and operation.

1. Packaging: A single, modular, NEMA 250, Type 1 metal enclosure with a tamper-resistant flush tumbler lock.
2. Signal Transmission Mode and Frequency: VHF or UHF 2-W power output, coordinated with operating characteristics of the established remote alarm receiving station designated by Owner.
3. Normal Power Input: 120-V ac.
4. Secondary Power: Integral-sealed, rechargeable, 12-V battery and charger. Comply with NFPA 72 requirements for battery capacity; submit calculations.
5. Antenna: Omnidirectional, coaxial half-wave, dipole type with driving point impedance matched to transmitter and antenna cable output impedance. Wind-load strength of antenna and mounting hardware and supports shall withstand 100 mph (160 km/h) with a gust factor of 1.3 without failure.
6. Antenna Cable: Coaxial cable with impedance matched to the transmitter output impedance.
7. Antenna-Cable Connectors: Weatherproof.
8. Alarm Interface Devices: Circuit boards, modules, and other auxiliary devices, integral to the transmitter, matching fire-alarm and other system outputs to message-generating inputs of the transmitter that produce required message transmissions.

C. Functional Performance: Unit shall receive alarm, supervisory, or trouble signal from fire-alarm control unit or from its own internal sensors or controls and shall automatically transmit signal along with a unique code that identifies the transmitting station to the remote alarm receiving station. Transmitted messages shall correspond to standard designations for fire-reporting system to which the signal is being transmitted and shall include separately designated messages in response to the following events or conditions:

1. Transmitter Low-Battery Condition: Sent when battery voltage is below 85 percent of rated value.
2. System Test Message: Initiated manually by a test switch within the transmitter cabinet, or automatically at an optionally preselected time, once every 24 hours, with transmission time controlled by a programmed timing device integral to transmitter controls.
3. Transmitter Trouble Message: Actuated by failure, in excess of one-minute duration, of the transmitter normal power source, derangement of the wiring of the transmitter, or any alarm input interface circuit or device connected to it.
4. Local Fire-Alarm-System Trouble Message: Initiated by events or conditions that cause a trouble signal to be indicated on the building system.
5. Local Fire-Alarm-System Alarm Message: Actuated when the building system goes into an alarm state. Identifies device that initiated the alarm.
6. Local Fire-Alarm-System, Supervisory-Alarm Message:

## 2.17 NETWORK COMMUNICATIONS

A. Provide network communications for fire-alarm system according to fire-alarm manufacturer's written requirements.

B. Provide network communications pathway per manufacturer's written requirements and requirements in NFPA 72 and NFPA 70.

C. Provide integration gateway using Modbus for connection to building automation system.

## 2.18 DEVICE GUARDS

A. Description: Welded wire mesh of size and shape for the manual station, smoke detector, gong, or other device requiring protection.

1. Factory fabricated and furnished by device manufacturer.
2. Finish: Paint of color to match the protected device.

PART 3 - EXECUTION

3.1 EXAMINATION

A. Examine areas and conditions for compliance with requirements for ventilation, temperature, humidity, and other conditions affecting performance of the Work.

1. Verify that manufacturer's written instructions for environmental conditions have been permanently established in spaces where equipment and wiring are installed, before installation begins.

B. Examine roughing-in for electrical connections to verify actual locations of connections before installation.

C. Proceed with installation only after unsatisfactory conditions have been corrected.

3.2 EQUIPMENT INSTALLATION

A. Comply with NFPA 72, NFPA 101, and requirements of authorities having jurisdiction for installation and testing of fire-alarm equipment. Install all electrical wiring to comply with requirements in NFPA 70 including, but not limited to, Article 760, "Fire Alarm Systems."

1. Devices placed in service before all other trades have completed cleanup shall be replaced.
2. Devices installed but not yet placed in service shall be protected from construction dust, debris, dirt, moisture, and damage according to manufacturer's written storage instructions.

B. Manual Fire-Alarm Boxes:

1. Install manual fire-alarm box in the normal path of egress within 60 inches (1520 mm) of the exit doorway.
2. Mount manual fire-alarm box on a background of a contrasting color.
3. The operable part of manual fire-alarm box shall be between 42 inches (1060 mm) and 48 inches (1220 mm) above floor level. All devices shall be mounted at the same height unless otherwise indicated.

C. Smoke- or Heat-Detector Spacing:

1. Comply with the "Smoke-Sensing Fire Detectors" section in the "Initiating Devices" chapter in NFPA 72, for smoke-detector spacing.
2. Comply with the "Heat-Sensing Fire Detectors" section in the "Initiating Devices" chapter in NFPA 72, for heat-detector spacing.
3. Smooth ceiling spacing shall not exceed 30 feet (9 m).

4. Spacing of detectors for irregular areas, for irregular ceiling construction, and for high ceiling areas shall be determined according to Annex A or Annex B in NFPA 72.
5. HVAC: Locate detectors not closer than 60 inches (1520 mm) from air-supply diffuser or return-air opening.
6. Lighting Fixtures: Locate detectors not closer than 12 inches (300 mm) from any part of a lighting fixture and not directly above pendant mounted or indirect lighting.

D. Install a cover on each smoke detector that is not placed in service during construction. Cover shall remain in place except during system testing. Remove cover prior to system turnover.

E. Duct Smoke Detectors: Comply with NFPA 72 and NFPA 90A. Install sampling tubes so they extend the full width of duct. Tubes more than 36 inches (9100 mm) long shall be supported at both ends.

1. Do not install smoke detector in duct smoke-detector housing during construction. Install detector only during system testing and prior to system turnover.

F. Air-Sampling Smoke Detectors: If using multiple pipe runs, the runs shall be pneumatically balanced.

G. Elevator Shafts: Coordinate temperature rating and location with sprinkler rating and location. Do not install smoke detectors in sprinklered elevator shafts.

H. Remote Status and Alarm Indicators: Install in a visible location near each smoke detector, sprinkler water-flow switch, and valve-tamper switch that is not readily visible from normal viewing position.

I. Audible Alarm-Indicating Devices: Install not less than 6 inches (150 mm) below the ceiling. Install bells and horns on flush-mounted back boxes with the device-operating mechanism concealed behind a grille. Install all devices at the same height unless otherwise indicated.

J. Visible Alarm-Indicating Devices: Install adjacent to each alarm bell or alarm horn and at least 6 inches (150 mm) below the ceiling. Install all devices at the same height unless otherwise indicated.

K. Device Location-Indicating Lights: Locate in public space near the device they monitor.

L. Antenna for Radio Alarm Transmitter: Mount to building structure where indicated. Use mounting arrangement and substrate connection that resists 100-mph (160-km/h) wind load with a gust factor of 1.3 without damage.

## 3.3 PATHWAYS

A. Pathways above recessed ceilings and in nonaccessible locations may be routed exposed.

   1. Exposed pathways located less than 96 inches (2440 mm) above the floor shall be installed in EMT.

B. Pathways shall be installed in EMT.

C. Exposed EMT shall be painted red enamel.

## 3.4 CONNECTIONS

A. For fire-protection systems related to doors in fire-rated walls and partitions and to doors in smoke partitions, comply with requirements in Section 087100 "Door Hardware." Connect hardware and devices to fire-alarm system.

   1. Verify that hardware and devices are listed for use with installed fire-alarm system before making connections.

B. Make addressable connections with a supervised interface device to the following devices and systems. Install the interface device less than 36 inches (910 mm) from the device controlled. Make an addressable confirmation connection when such feedback is available at the device or system being controlled.
   1. Smoke dampers in air ducts of designated HVAC duct systems.
   2. Magnetically held-open doors.
   3. Electronically locked doors and access gates.
   4. Alarm-initiating connection to elevator recall system and components.
   5. Supervisory connections at valve supervisory switches.
   6. Supervisory connections at elevator shunt-trip breaker.

## 3.5 IDENTIFICATION

A. Identify system components, wiring, cabling, and terminals. Comply with requirements for identification specified in Section 270553 "Identification for Communications Systems."

B. Install framed instructions in a location visible from fire-alarm control unit.

## 3.6 GROUNDING

A. Ground fire-alarm control unit and associated circuits; comply with IEEE 1100. Install a ground wire from main service ground to fire-alarm control unit.

B. Ground shielded cables at the control panel location only. Insulate shield at device location.

## 3.7 FIELD QUALITY CONTROL

A. Field tests shall be witnessed by authorities having jurisdiction.

B. Manufacturer's Field Service: Engage a factory-authorized service representative to test and inspect components, assemblies, and equipment installations, including connections.

C. Perform tests and inspections.

D. Perform the following tests and inspections with the assistance of a factory-authorized service representative:

1. Visual Inspection: Conduct visual inspection prior to testing.

    a. Inspection shall be based on completed record Drawings and system documentation that is required by the "Completion Documents, Preparation" table in the "Documentation" section of the "Fundamentals" chapter in NFPA 72.
    b. Comply with the "Visual Inspection Frequencies" table in the "Inspection" section of the "Inspection, Testing and Maintenance" chapter in NFPA 72; retain the "Initial/Reacceptance" column and list only the installed components.

2. System Testing: Comply with the "Test Methods" table in the "Testing" section of the "Inspection, Testing and Maintenance" chapter in NFPA 72.
3. Test audible appliances for the public operating mode according to manufacturer's written instructions. Perform the test using a portable sound-level meter complying with Type 2 requirements in ANSI S1.4.
4. Test audible appliances for the private operating mode according to manufacturer's written instructions.
5. Test visible appliances for the public operating mode according to manufacturer's written instructions.
6. Factory-authorized service representative shall prepare the "Fire Alarm System Record of Completion" in the "Documentation" section of the "Fundamentals" chapter in NFPA 72 and the "Inspection and Testing Form" in the "Records" section of the "Inspection, Testing and Maintenance" chapter in NFPA 72.

E. Reacceptance Testing: Perform reacceptance testing to verify the proper operation of added or replaced devices and appliances.

F. Fire-alarm system will be considered defective if it does not pass tests and inspections.

G. Prepare test and inspection reports.

H. Maintenance Test and Inspection: Perform tests and inspections listed for weekly, monthly, quarterly, and semiannual periods. Use forms developed for initial tests and inspections.

I. Annual Test and Inspection: One year after date of Substantial Completion, test fire-alarm system complying with visual and testing inspection requirements in NFPA 72. Use forms developed for initial tests and inspections.

## 3.8 MAINTENANCE SERVICE

A. Initial Maintenance Service: Beginning at Substantial Completion, maintenance service shall include 12 months' full maintenance by skilled employees of manufacturer's designated service organization. Include preventive maintenance, repair or replacement of worn or defective components, lubrication, cleaning, and adjusting as required for proper operation. Parts and supplies shall be manufacturer's authorized replacement parts and supplies.

1. Include visual inspections according to the "Visual Inspection Frequencies" table in the "Testing" paragraph of the "Inspection, Testing and Maintenance" chapter in NFPA 72.
2. Perform tests in the "Test Methods" table in the "Testing" paragraph of the "Inspection, Testing and Maintenance" chapter in NFPA 72.
3. Perform tests per the "Testing Frequencies" table in the "Testing" paragraph of the "Inspection, Testing and Maintenance" chapter in NFPA 72.

## 3.9 DEMONSTRATION

A. Engage a factory-authorized service representative to train Owner's maintenance personnel to adjust, operate, and maintain fire-alarm system.

**END OF SECTION**

# SECTION 31 10 00

# SITE CLEARING

## PART 1 - GENERAL

### 1.1 RELATED DOCUMENTS

A. Drawings and general provisions of the Contract, including General and Supplementary Conditions and Division 01 Specification Sections, apply to this Section.

### 1.2 SUMMARY

A. Section Includes:

1. Protecting existing vegetation to remain.
2. Removing existing vegetation.
3. Clearing and grubbing.
4. Stripping and stockpiling topsoil.
5. Stripping and stockpiling rock.
6. Removing above- and below-grade site improvements.
7. Disconnecting, capping or sealing, removing site utilities and abandoning site utilities in place.
8. Temporary erosion and sedimentation control.

B. Related Requirements:

1. Section 015000 "Temporary Facilities and Controls" for temporary erosion- and sedimentation-control measures.

### 1.3 DEFINITIONS

A. Subsoil: Soil beneath the level of subgrade; soil beneath the topsoil layers of a naturally occurring soil profile, typified by less than 1 percent organic matter and few soil organisms.

B. Surface Soil: Soil that is present at the top layer of the existing soil profile. In undisturbed areas, surface soil is typically called "topsoil," but in disturbed areas such as urban environments, the surface soil can be subsoil.

C. Topsoil: Top layer of the soil profile consisting of existing native surface topsoil or existing in-place surface soil; the zone where plant roots grow.

D. Topsoil: Top layer of the soil profile consisting of existing native surface topsoil or existing in-place surface soil; the zone where plant roots grow. Its appearance is generally friable, pervious, and black or a darker shade of brown, gray, or red than underlying subsoil; reasonably free of subsoil, clay lumps, gravel, and other objects larger than 2 inches in diameter; and free of weeds, roots, toxic materials, or other nonsoil materials.

E. Plant-Protection Zone: Area surrounding individual trees, groups of trees, shrubs, or other vegetation to be protected during construction and indicated on Drawings.

F. Tree-Protection Zone: Area surrounding individual trees or groups of trees to be protected during construction and indicated on Drawings and according to requirements in Section 015639 "Temporary Tree and Plant Protection."

G. Vegetation: Trees, shrubs, groundcovers, grass, and other plants.

## 1.4 PREINSTALLATION MEETINGS

A. Preinstallation Conference: Conduct conference prior to site clearing at 10 Hillside Road, Greenwich, CT 06830

## 1.5 MATERIAL OWNERSHIP

A. Except for materials indicated to be stockpiled or otherwise remain Owner's property, cleared materials shall become Contractor's property and shall be removed from Project site.

## 1.6 INFORMATIONAL SUBMITTALS

A. Existing Conditions: Documentation of existing trees and plantings, adjoining construction, and site improvements that establishes preconstruction conditions that might be misconstrued as damage caused by site clearing.

1. Use sufficiently detailed photographs or video recordings.
2. Include plans and notations to indicate specific wounds and damage conditions of each tree or other plant designated to remain.

B. Topsoil stripping and stockpiling program.

C. Rock stockpiling program.

D. Record Drawings: Identifying and accurately showing locations of capped utilities and other subsurface structural, electrical, and mechanical conditions.

E. Burning: Documentation of compliance with burning requirements and permitting of authorities having jurisdiction. Identify location(s) and conditions under which burning will be performed.

## 1.7 QUALITY ASSURANCE

A. Topsoil Stripping and Stockpiling Program: Prepare a written program to systematically demonstrate the ability of personnel to properly follow procedures and handle materials and equipment during the Work. Include dimensioned diagrams for placement and protection of stockpiles.

B. Rock Stockpiling Program: Prepare a written program to systematically demonstrate the ability of personnel to properly follow procedures and handle materials and equipment during the Work. Include dimensioned diagrams for placement and protection of stockpiles.

1.8 FIELD CONDITIONS

A. Traffic: Minimize interference with adjoining roads, streets, walks, and other adjacent occupied or used facilities during site-clearing operations.

1. Do not close or obstruct streets, walks, or other adjacent occupied or used facilities without permission from Owner and authorities having jurisdiction.
2. Provide alternate routes around closed or obstructed trafficways if required by Owner or authorities having jurisdiction.

B. Improvements on Adjoining Property: Authority for performing site clearing indicated on property adjoining Owner's property will be obtained by Owner before award of Contract.

1. Do not proceed with work on adjoining property until directed by Architect.

C. Salvageable Improvements: Carefully remove items indicated to be salvaged and store on premises as directed by Owner.

D. Utility Locator Service: Notify Call Before You Dig for area where Project is located before site clearing.

E. Do not commence site clearing operations until temporary erosion and sedimentation-control and plant-protection measures are in place.

F. Tree and Plant-Protection Zones: Protect according to requirements in Section 015639 "Temporary Tree and Plant Protection."

G. Soil Stripping, Handling, and Stockpiling: Perform only when the soil is dry or slightly moist.

PART 2 - PRODUCTS

2.1 MATERIALS

A. Satisfactory Soil Material: Requirements for satisfactory soil material are specified in Section 312000 "Earth Moving."

1. Obtain approved borrow soil material off-site when satisfactory soil material is not available on-site.

B. Antirust Coating: Fast-curing, lead- and chromate-free, self-curing, universal modified-alkyd primer complying with MPI #23 (surface-tolerant, anticorrosive metal primer) or SSPC-Paint 20 or SSPC-Paint 29 zinc-rich coating.

PART 3 - EXECUTION

3.1 PREPARATION

A. Protect and maintain benchmarks and survey control points from disturbance during construction.

B. Verify that trees, shrubs, and other vegetation to remain or to be relocated have been flagged and that protection zones have been identified and enclosed according to requirements in Section 015639 "Temporary Tree and Plant Protection."

C. Protect existing site improvements to remain from damage during construction.

1. Restore damaged improvements to their original condition, as acceptable to Owner.

## 3.2 TEMPORARY EROSION AND SEDIMENTATION CONTROL

A. Provide temporary erosion- and sedimentation-control measures to prevent soil erosion and discharge of soil-bearing water runoff or airborne dust to adjacent properties and walkways, according to erosion- and sedimentation-control Drawings and requirements of authorities having jurisdiction.

B. Verify that flows of water redirected from construction areas or generated by construction activity do not enter or cross protection zones.

C. Inspect, maintain, and repair erosion- and sedimentation-control measures during construction until permanent vegetation has been established.

D. Remove erosion and sedimentation controls and restore and stabilize areas disturbed during removal.

## 3.3 TREE AND PLANT PROTECTION

A. Protect trees and plants remaining on-site according to requirements in Section 015639 "Temporary Tree and Plant Protection."

B. Repair or replace trees, shrubs, and other vegetation indicated to remain or be relocated that are damaged by construction operations according to requirements in Section 015639 "Temporary Tree and Plant Protection."

## 3.4 EXISTING UTILITIES

A. Owner will arrange for disconnecting and sealing indicated utilities that serve existing structures before site clearing, when requested by Contractor.

1. Verify that utilities have been disconnected and capped before proceeding with site clearing.

B. Locate, identify, disconnect, and seal or cap utilities indicated to be removed or abandoned in place.

1. Arrange with utility companies to shut off indicated utilities.
2. Owner will arrange to shut off indicated utilities when requested by Contractor.

C. Locate, identify, and disconnect utilities indicated to be abandoned in place.

D. Interrupting Existing Utilities: Do not interrupt utilities serving facilities occupied by Owner or others, unless permitted under the following conditions and then only after arranging to provide temporary utility services according to requirements indicated:

1. Notify Owner not less than three days in advance of proposed utility interruptions.
2. Do not proceed with utility interruptions without Owner's written permission.

E. Excavate for and remove underground utilities indicated to be removed.

F. Removal of underground utilities is included in earthwork sections; in applicable fire suppression, plumbing, HVAC, electrical, communications, electronic safety and security, and utilities sections; and in Section 024116 "Structure Demolition" and Section 024119 "Selective Demolition."

## 3.5 CLEARING AND GRUBBING

A. Remove obstructions, trees, shrubs, and other vegetation to permit installation of new construction.

1. Do not remove trees, shrubs, and other vegetation indicated to remain or to be relocated.
2. Grind down stumps and remove roots larger than 2 to 3 inches in diameter, obstructions, and debris to a depth of 18 inches below exposed subgrade.
3. Use only hand methods or air spade for grubbing within protection zones.
4. Chip removed tree branches and dispose of off-site.

B. Fill depressions caused by clearing and grubbing operations with satisfactory soil material unless further excavation or earthwork is indicated.

1. Place fill material in horizontal layers not exceeding a loose depth of 8 inches, and compact each layer to a density equal to adjacent original ground.

## 3.6 TOPSOIL STRIPPING

A. Remove sod and grass before stripping topsoil.

B. Strip topsoil to depth of 6 inches in a manner to prevent intermingling with underlying subsoil or other waste materials.

1. Remove subsoil and nonsoil materials from topsoil, including clay lumps, gravel, and other objects larger than 2 inches in diameter; trash, debris, weeds, roots, and other waste materials.

C. Stockpile topsoil away from edge of excavations without intermixing with subsoil or other materials. Grade and shape stockpiles to drain surface water. Cover to prevent windblown dust and erosion by water.

1. Limit height of topsoil stockpiles to 72 inches.
2. Do not stockpile topsoil within protection zones.
3. Dispose of surplus topsoil. Surplus topsoil is that which exceeds quantity indicated to be stockpiled or reused.
4. Stockpile surplus topsoil to allow for respreading deeper topsoil.

3.7 STOCKPILING ROCK

A. Remove from area indicated on Drawings naturally formed rocks that measure more than 1 foot across in least dimension. Do not include excavated or crushed rock.

1. Separate or wash off non-rock materials from rocks, including soil, clay lumps, gravel, and other objects larger than 2 inches in diameter; trash, debris, weeds, roots, and other waste materials.

B. Stockpile rock where indicated on Drawings without intermixing with other materials. Cover to prevent windblown debris from accumulating among rocks.

1. Limit height of rock stockpiles to 36 inches.
2. Do not stockpile rock within protection zones.
3. Dispose of surplus rock. Surplus rock is that which exceeds quantity indicated to be stockpiled or reused.
4. Stockpile surplus rock to allow later use by the Owner.

3.8 SITE IMPROVEMENTS

A. Remove existing above- and below-grade improvements as indicated and necessary to facilitate new construction.

B. Remove slabs, paving, curbs, gutters, and aggregate base as indicated.

1. Unless existing full-depth joints coincide with line of demolition, neatly saw-cut along line of existing pavement to remain before removing adjacent existing pavement. Saw-cut faces vertically.
2. Paint cut ends of steel reinforcement in concrete to remain with two coats of antirust coating, following coating manufacturer's written instructions. Keep paint off surfaces that will remain exposed.

3.9 DISPOSAL OF SURPLUS AND WASTE MATERIALS

A. Remove surplus soil material, unsuitable topsoil, obstructions, demolished materials, and waste materials including trash and debris, and legally dispose of them off Owner's property.

B. Burning tree, shrub, and other vegetation waste is permitted according to burning requirements and permitting of authorities having jurisdiction. Control such burning to produce the least smoke or air pollutants and minimum annoyance to surrounding properties. Burning of other waste and debris is prohibited.

C. Separate recyclable materials produced during site clearing from other nonrecyclable materials. Store or stockpile without intermixing with other materials, and transport them to recycling facilities. Do not interfere with other Project work.

**END OF SECTION 31 10 00**

**SECTION 32 14 00**

**UNIT PAVING**

PART 1 GENERAL

1.1. SUMMARY

A. Section Includes:
1. Permeable clay brick pavers
2. Standard clay brick pavers
3. Stone jointing material
4. Stone bedding material
5. Open-graded base material
6. Open-graded sub-base material

1.2. REFERENCES

A. American Society for Testing and Materials
1. ASTM C67 Standard Test Methods for Sampling and Testing Brick and Structural Clay Tile
2. ASTM C136 Standard Test Method for Sieve Analysis of Fine and Coarse Aggregates
3. ASTM C448 Standard Classification for Sizes of Aggregate for Road and Bridge Construction
4. ASTM C902 Standard Specification for Pedestrian and Light Traffic Paving Brick

1.3. PREINSTALLATION MEETING

A. Preinstallation Conference: Conduct conference at Conduct conference prior to unit paving installation at 10 Hillside Road, Greenwich, CT 06830

1.4 SUBMITTALS

A. In accordance with General Conditions of the Contract and Division 1 Submittal Procedures Section
B. Permeable Brick Pavers
1. Submit manufacturer's product literature and material safety data sheets.
2. Submit sample units of each paver type representative of size, shape, color and finish, indicating color variation expected in finished installation. Color or blend of colors will be selected by Landscape Architect from manufacturer's standard color palette.
a. Colors within a given shipment of clay pavers will vary slightly due to clay composition and kiln firing temperatures. Such color variations are a natural desirable feature that gives the pavement greater character and depth.

3. Submit test results from approved independent testing laboratory indicating ASTM C902 compliance.
4. Submit manufacturer's certification of compliance to appropriate ASTM standard.

C. Bedding material, Open-graded Base and Sub Base material
1. Submit sieve analysis results in accordance with ASTM C136 for jointing, bedding, base and sub-base material.
2. Provide supplier name, source and types of material used for jointing, bedding, base and sub base.

D. Paving Installer
1. Job references from projects similar in size and design to this project. Provide Client and/or General Contractor names, postal address, phone, fax and email address.

1.04 QUALITY ASSURANCE

A. Paving Installer Qualifications
1. Three years' experience with at least 25,000 feet of segmental permeable pavers installed.
2. Successful completion of five permeable paver installations similar in design, material and extent indicated on this project. Installer shall have experience setting clay/brick pavers.
3. Successful completion of a School for Advanced Segmental Paving or Interlocking Concrete Paver Institute permeable paving installation certificate course.

B. Regulatory Requirements
1. Installer shall be able to provide bonds required for the work.

C. Mock-Ups
1. Install a 5 ft by 5 ft area of pavers on a prepared substrate including detail to illustrate component application including pattern and edge details.
2. When required, provide a separate mock-up for each paver type and bonding pattern.
3. Use mock-up to determine pre-compaction setting bed level, joint sizes, lines, laying patterns and product color.
4. Do not start work until mock-up has been approved by Landscape Architect.
5. Approved mock-up is the standard by which appearance, workmanship, substrate preparation and material application will be judged.
6. Approved field sample may be retained as part of finished work. Remove mock-up and dispose of materials when directed by Landscape Architect.

D. Pre-Installation Meetings
1. Conduct pre-installation meeting one week prior to commencing work of this section to verify project requirements, substrate condition and coordination with other trades, installation instructions and warranty requirements.

1.05 DELIVERY, STORAGE AND HANDLING

A. Procurement
1. Allow adequate time for the production and delivery of specified paver. Consult local distributor for lead-time and delivery options.

B. Delivery

1. Deliver materials in Whitacre Greer's original, unopened, undamaged packaging with identification labels intact. Unload pavers with proper equipment so no damage occurs to pavers.

C. Storage
1. Store materials so they are protected from contamination by foreign substances and excessive moisture.
2. Store pavers to prevent damage and staining.

1.06 PROJECT CONDITIONS

A. Environmental Requirements
1. Do not install in rain or snow.
2. Do not install frozen bedding material.

1.07 MAINTENANCE

A. Extra Materials
1. Furnish additional pavers to owner for future maintenance and repair.
2. Pavers shall be from the same production run as the installed materials.

PART 2 PRODUCTS

2.01 DESIGN NOTE

A. Consult an engineer for hydrology and load-bearing design considerations.
B. Use pavement slopes of not more than 5% for optimum results.
C. Consider under drains for overflow or water harvesting.
1. Consult an engineer for placement of drains.

2.02 PERMEABLE CLAY BRICK PAVERS

A. Permeable Paver Type
1. 2¼x9x3 Boardwalk Permeable Paver
a. Manufactured by The Whitacre Greer Company, 1400 South Mahoning Ave, Alliance, OH 44601 Telephone: (800) 947-2837 Fax: (330) 823-5502 Email: info@wgpaver.com
b. Distributed by Homer C. Godfrey Co., 1360 Central Avenue, Bridgeport, CT 06610, contact Todd Peterson, tel:203.224.8244, or equal approved by client and L.A. See detail for further information and plans for layout and locations. Contractor shall submit sample for approval.
2. Material standard in accordance with ASTM C902.
3. Classification: Specify weathering, traffic, and application classifications.
a. Specify Class: SX
b. Specify Type: I
c. Specify Application: PS

2.03 PERMEABLE CLAY BRICK PAVERS

A. Standard Clay Paver Type

1. 2¼x9x3 Boardwalk Standard Clay Paver
    a. Manufactured by The Whitacre Greer Company, 1400 South Mahoning Ave, Alliance, OH 44601 Telephone: (800) 947-2837 Fax: (330) 823-5502 Email: info@wgpaver.com
    b. Distributed by Homer C. Godfrey Co., 1360 Central Avenue, Bridgeport, CT 06610, contact Todd Peterson, tel:203.224.8244, or equal approved by client and L.A. See detail for further information and plans for layout and locations. Contractor shall submit sample for approval.
    2. Material standard in accordance with ASTM C902.
    3. Classification: Specify weathering, traffic, and application classifications.
        a. Specify Class: SX
        b. Specify Type: I
        c. Specify Application: PS

2.04 AGGREGATE MATERIALS

A. Bedding Course and Joint Filler
1. #8 Crushed stone conforming to ASTM D448
2. Washed with less than 1% passing through the No. 200 sieve.

| ASTM No. 9 | | ASTM No. 89 | |
|---|---|---|---|
| Sieve Size | Percent Passing | Seive Size | Percent Passing |
| 9.5 mm (3/8 in.) | 100 | 12.5 mm (1/2 in.) | 100 |
| 4.75 mm (No. 4) | 85 to 100 | 9.5 mm (3/8 in.) | 90 to 100 |
| 2.36 mm (No. 8) | 10 to 40 | 4.75 mm (No. 4) | 20 to 55 |
| 1.18 mm (No. 16) | 0 to 10 | 2.36 mm (No. 8) | 5 to 30 |
| 300 µm (No. 50) | 0 to 5 | 1.18 mm (No. 16) | 0 to 10 |
| | | 300 µm (No. 50) | 0 to 5 |

B. Base Course
1. #57 Crushed stone conforming to ASTM D448
2. Washed with less than 1% passing through the No. 200 sieve.

ASTM No. 57

| Sieve Size | Percent Passing |
|---|---|

| | |
|---|---|
| 37.5 mm (1-1/2 in.) | 100 |
| 25.0 mm (1 in.) | 95 to 100 |
| 19.0 mm (3/4 in.) | |
| 12.5 mm (1/2 in.) | 25 to 60 |
| 9.5 mm (3/8 in.) | |
| 4.75 mm (No. 4) | 0 to 10 |
| 2.36 mm (No. 8) | 0 to 5 |

C. Sub-Base Course
1. #2 Crushed stone conforming to ASTM D448
2. Washed with less than 1% passing through the No. 200 sieve.

ASTM No. 2

| Sieve Size | Percent Passing |
|---|---|
| 75 mm (3 in.) | 100 |
| 63 mm (2-1/2 in.) | 90 to 100 |
| 50 mm (2 in.) | 35 to 70 |
| 37.5 mm (1-1/2 in.) | 0 to 15 |
| 25.0 mm (1 in.) | |
| 19.0 mm (3/4 in.) | 0 to 5 |

2.04 ACCESSORIES

A. Edge Restraints (As Noted on Details)
B. Geotextiles (As Noted on Details)

PART 3 EXECUTION

3.01 EXAMINATION

A. Verify Site Conditions
1. General contractor shall inspect and certify in writing to installer that site conditions meet the following prior to installation of permeable clay pavers.
   a. Remove organic, unstable, or unconsolidated material from the site.
   b. Verify conformance of sub grade preparation and elevations to specified requirements. If CBR (California Bearing Ratio) is less than 5%, typically with clay soils, compaction of sub grade and geotextile may be required.

c. Verify sub base and base conformance to specified requirements. Do not use setting bed material to correct deficiencies in base course surface.
d. Verify written density test results for soil sub grade and sub base course.
e. Verify type, location and elevations of edge restraints, utility structures and drainage inlets.
f. Verify that the sub base and/or base course is ready to support bedding material, permeable pavers and imposed loads.

2. Do not proceed with bedding course or paver installation until satisfactory sub base and/or base are verified by contractor.
3. Verify that the area is free from standing water and certified by general contractor as meeting material, installation, and grade specifications.
4. Field measurements
   a. Determine actual paver dimensions (including tolerances) and coordinate with dimensions for pavement areas indicated on contract drawings prior to any pavement installation. Adjust pavement area dimensions to eliminate unnecessary paver cutting.

## 3.02 PREPARATION

A. Edge Restraint Preparation
   1. Install as per drawings [at indicated elevations].

B. Aggregate Material
   1. Stockpile joint filler material, base and sub base material such that they are free from standing water, uniformly graded, free of organic mater or sediment, debris, and ready for placement.

## 3.03 INSTALLATION

A. General
   1. Keep area where pavement is to be constructed free from sediment during entire job. Contaminated sub base, base or bedding material shall be removed and replaced with clean material.
   2. Do not damage drainpipes, overflow pipes, observation wells or any inlets and other drainage elements during installation. Report damage to project engineer.

B. Geotextiles (if applicable)
   1. May be required if CBR is less than 5%.
   2. Place on bottom and sides of soil sub grade. Secure in place to prevent wrinkling from vehicle tires and tracks.
   3. Overlap a minimum of 12 inches to 24 inches in the direction of drainage.

   Sub Base Aggregate

   1. Spread and compact moistened No. 2 sub base in 4 to 6 inch lifts.
      a. Typical sub base thickness is 6 to 18 inches.
      b. Reduce the depth of each lift if plate tamper is used for compaction.
   2. Make at least two passes in the vibratory mode then at least two in the static mode for each lift. A minimum 10-ton vibratory roller should be used. Compact until there is no visible movement of the No. 2 stone.
      a. A plate tamper with 13,500 Lbf may be used for smaller installations.

3. Surface tolerance of No. 2 sub base shale be +/-3/4 inches over a 10-foot straightedge.

D. Base Aggregate
1. Spread and compact moistened No. 57 base in one 4-inch lift.
    a. Spread in multiple reduced-depth lifts if plate tamper is used for compaction.
2. Make at least two passes in the vibratory mode then at least two in the static mode for each list. A minimum 10-ton vibratory roller should be used. Compact until there is no visible movement of the No. 57 stone.
    a. A plate tamper with 13,500 Lbf may be used for smaller installations.
3. Surface tolerance of No. 57 base shale be +/-1/2 inch over a 10-foot straightedge.

E. Bedding Course Aggregate
1. Spread and screed moistened No. 9 89/9 stone bedding material.
2. Fill voids left by removing screed rails with No. 9 89/9 stone.
3. Surface tolerance of No. 9 89/9 bedding course shall be +/-1/8 inch over a 10-foot straightedge.
4. Do not compact bedding course.
5. Keep pedestrian and vehicular traffic off screeded bedding course until paver installation begins.

F. Permeable Clay Pavers
1. Install paving units in pattern(s) indicated on drawings. Maintain straight pattern lines using string and/or chalk lines.
    a. Maximum bond line variation shall be +/-3/8 inch over a 50-foot string line.
2. Fill gaps at the edges of the paved area with cut unites. Cut pavers subject to vehicular traffic shall be no smaller than 1/3 of a whole unit.

G. Joint Material
1. Fill openings and joints between paver units with No. [9][89] stone.
2. Sweep excess joint material from paved area.
3. Compact pavers into bedding course using low-amplitude plate compactor capable of at least 5,000 lbs centrifugal compaction force. Make at least two passes with the plate compactor.
    a. Protect paver surface with mat attached to tamper or other approved method.
4. Do not compact within 6 feet of an unrestrained edge.
5. Apply additional No. 9 89/9 stone to joints as required to fill them completely.
6. Pavers within 6 feet of the laying face shall be left fully compacted at the completion of each day.
7. Surface tolerance of finished pavement shall be not more than +/-3/8 inch over a 10-foot straight edge.
8. Surface elevation of finished pavement shall be 1/8 to 1/4 inches above adjacent drainage inlets.

## 3.04 FIELD QUALITY CONTROL

A. Sweep surface clean and verify conformance with drawings.
B. Verify that adjacent pavers have not more than 1/8 inch difference in height.
C. Verify final elevation of pavement to adjacent drainage inlets.
D. Verify straightness of bond lines.

3.05 PROTECTION

A. After work in this section is complete, General Contractor shall protect work from damage due to subsequent construction activity on site.

**END OF SECTION 32 14 00**

# SECTION 32 91 13

# SOIL PREPARATION

## PART 1 - GENERAL

### 1.1 RELATED DOCUMENTS

A. Drawings and general provisions of the Contract, including General and Supplementary Conditions and Division 01 Specification Sections, apply to this Section.

### 1.2 SUMMARY

A. Section includes planting soils and layered soil assemblies specified by composition of the mixes.

B. Related Requirements:

1. Section 311000 "Site Clearing" for topsoil stripping and stockpiling.
2. Section 329200 "Turf and Grasses" for placing planting soil for turf and grasses.
3. Section 329300 "Plants" for placing planting soil for plantings.
4. Section 329600 "Transplanting" for placing planting soil in tree planting pits.

### 1.3 DEFINITIONS

A. AAPFCO: Association of American Plant Food Control Officials.

B. Backfill: The earth used to replace or the act of replacing earth in an excavation. This can be amended or unamended soil as indicated.

C. CEC: Cation exchange capacity.

D. Compost: The product resulting from the controlled biological decomposition of organic material that has been sanitized through the generation of heat and stabilized to the point that it is beneficial to plant growth.

E. Duff Layer: A surface layer of soil, typical of forested areas, that is composed of mostly decayed leaves, twigs, and detritus.

F. Imported Soil: Soil that is transported to Project site for use.

G. Layered Soil Assembly: A designed series of planting soils, layered on each other, that together produce an environment for plant growth.

H. Manufactured Soil: Soil produced by blending soils, sand, stabilized organic soil amendments, and other materials to produce planting soil.

I. NAPT: North American Proficiency Testing Program. An SSSA program to assist soil-, plant-, and water-testing laboratories through interlaboratory sample exchanges and statistical evaluation of analytical data.

J. Organic Matter: The total of organic materials in soil exclusive of undecayed plant and animal tissues, their partial decomposition products, and the soil biomass; also called "humus" or "soil organic matter."

K. Planting Soil: Existing, on-site soil; imported soil; or manufactured soil that has been modified as specified with soil amendments and perhaps fertilizers to produce a soil mixture best for plant growth.

L. RCRA Metals: Hazardous metals identified by the EPA under the Resource Conservation and Recovery Act.

M. SSSA: Soil Science Society of America.

N. Subgrade: Surface or elevation of subsoil remaining after excavation is complete, or the top surface of a fill or backfill before planting soil is placed.

O. Subsoil: Soil beneath the level of subgrade; soil beneath the topsoil layers of a naturally occurring soil profile, typified by less than 1 percent organic matter and few soil organisms.

P. Surface Soil: Soil that is present at the top layer of the existing soil profile. In undisturbed areas, surface soil is typically called "topsoil"; but in disturbed areas such as urban environments, the surface soil can be subsoil.

Q. USCC: U.S. Composting Council.

## 1.4 PREINSTALLATION MEETINGS

A. Preinstallation Conference: Conduct conference with Landscape Architect prior to planting installation at 10 Hillside Road, Greenwich, CT 06830

## 1.5 ACTION SUBMITTALS

A. Product Data: For each type of product.

1. Include recommendations for application and use.
2. Include test data substantiating that products comply with requirements.
3. Include sieve analyses for aggregate materials.
4. Material Certificates: For each type of imported soil, soil amendment and fertilizer before delivery to the site, according to the following:

    a. Manufacturer's qualified testing agency's certified analysis of standard products.
    b. Analysis of fertilizers, by a qualified testing agency, made according to AAPFCO methods for testing and labeling and according to AAPFCO's SUIP #25.
    c. Analysis of nonstandard materials, by a qualified testing agency, made according to SSSA methods, where applicable.

B. Samples: For each bulk-supplied material, 1-quart volume of each in sealed containers labeled with content, source, and date obtained. Each Sample shall be typical of the lot of material to be furnished; provide an accurate representation of composition, color, and texture.

## 1.6 INFORMATIONAL SUBMITTALS

A. Qualification Data: For each testing agency.

B. Preconstruction Test Reports: For preconstruction soil analyses specified in "Preconstruction Testing" Article.

C. Field quality-control reports.

## 1.7 QUALITY ASSURANCE

A. Testing Agency Qualifications: An independent, state-operated, or university-operated laboratory; experienced in soil science, soil testing, and plant nutrition; with the experience and capability to conduct the testing indicated; and that specializes in types of tests to be performed.

1. Laboratories: Subject to compliance with requirements and provide testing.

2. Multiple Laboratories: At Contractor's option, work may be divided among qualified testing laboratories specializing in physical testing, chemical testing, and fertility testing.

## 1.8 PRECONSTRUCTION TESTING

A. Preconstruction Testing Service: Owner will engage a qualified testing agency to perform preconstruction soil analyses on existing, on-site soil and imported soil.

1. Notify Architect seven days in advance of the dates and times when laboratory samples will be taken.

B. Preconstruction Soil Analyses: For each unamended soil type, perform testing on soil samples and furnish soil analysis and a written report containing soil-amendment and fertilizer recommendations by a qualified testing agency performing the testing according to "Soil-Sampling Requirements" and "Testing Requirements" articles.

1. Have testing agency identify and label samples and test reports according to sample collection and labeling requirements.

## 1.9 SOIL-SAMPLING REQUIREMENTS

A. General: Extract soil samples according to requirements in this article.

B. Sample Collection and Labeling: Have samples taken and labeled by state-certified, licensed, or registered soil scientist. under the direction of the testing agency.

1. Number and Location of Samples: Minimum of three to eight representative soil samples from varied locations as directed by Architect for each soil to be used or amended for landscaping purposes.
2. Procedures and Depth of Samples: According to USDA-NRCS's "Field Book for Describing and Sampling Soils."
3. Division of Samples: Split each sample into two, equal parts. Send half to the testing agency and half to Owner for its records.
4. Labeling: Label each sample with the date, location keyed to a site plan or other location system, visible soil condition, and sampling depth.

1.10 TESTING REQUIREMENTS

A. General: Perform tests on soil samples according to requirements in this article.

B. Physical Testing:

1. Soil Texture: Soil-particle, size-distribution analysis by one of the following methods according to SSSA's "Methods of Soil Analysis - Part 1-Physical and Mineralogical Methods":

   a. Sieving Method: Report sand-gradation percentages for very coarse, coarse, medium, fine, and very fine sand; and fragment-gradation (gravel) percentages for fine, medium, and coarse fragments; according to USDA sand and fragment sizes.
   b. Hydrometer Method: Report percentages of sand, silt, and clay.

2. Total Porosity: Calculate using particle density and bulk density according to SSSA's "Methods of Soil Analysis - Part 1-Physical and Mineralogical Methods."
3. Water Retention: According to SSSA's "Methods of Soil Analysis - Part 1-Physical and Mineralogical Methods."
4. Saturated Hydraulic Conductivity: According to SSSA's "Methods of Soil Analysis - Part 1-Physical and Mineralogical Methods"; at 85% compaction according to ASTM D698 (Standard Proctor).

C. Chemical Testing:

1. CEC: Analysis by sodium saturation at pH 7 according to SSSA's "Methods of Soil Analysis - Part 3- Chemical Methods."
2. Clay Mineralogy: Analysis and estimated percentage of expandable clay minerals using CEC by ammonium saturation at pH 7 according to SSSA's "Methods of Soil Analysis - Part 1- Physical and Mineralogical Methods."
3. Metals Hazardous to Human Health: Test for presence and quantities of RCRA metals including aluminum, arsenic, barium, copper, cadmium, chromium, cobalt, lead, lithium, and vanadium. If RCRA metals are present, include recommendations for corrective action.
4. Phytotoxicity: Test for plant-available concentrations of phytotoxic minerals including aluminum, arsenic, barium, cadmium, chlorides, chromium, cobalt, copper, lead, lithium, mercury, nickel, selenium, silver, sodium, strontium, tin, titanium, vanadium, and zinc.

D. Fertility Testing: Soil-fertility analysis according to standard laboratory protocol of SSSA NAPT NCR-13, SSSA NAPT NEC-67, SSSA NAPT SERA-6, SSSA NAPT WERA-103, including the following:

1. Percentage of organic matter.
2. CEC, calcium percent of CEC, and magnesium percent of CEC.
3. Soil reaction (acidity/alkalinity pH value).
4. Buffered acidity or alkalinity.
5. Nitrogen ppm.
6. Phosphorous ppm.
7. Potassium ppm.
8. Manganese ppm.
9. Manganese-availability ppm.
10. Zinc ppm.
11. Zinc availability ppm.
12. Copper ppm.
13. Sodium ppm and sodium absorption ratio.
14. Soluble-salts ppm.
15. Presence and quantities of problem materials including salts and metals cited in the Standard protocol. If such problem materials are present, provide additional recommendations for corrective action.
16. Other deleterious materials, including their characteristics and content of each.

E. Organic-Matter Content: Analysis using loss-by-ignition method according to SSSA's "Methods of Soil Analysis - Part 3- Chemical Methods."

F. Recommendations: Based on the test results, state recommendations for soil treatments and soil amendments to be incorporated to produce satisfactory planting soil suitable for healthy, viable plants indicated. Include, at a minimum, recommendations for nitrogen, phosphorous, and potassium fertilization, and for micronutrients.

1. Fertilizers and Soil Amendment Rates: State recommendations in weight per 1000 sq. ft. for 6-inch depth of soil.
2. Soil Reaction: State the recommended liming rates for raising pH or sulfur for lowering pH according to the buffered acidity or buffered alkalinity in weight per 1000 sq. ft. for 6-inch depth of soil.

## 1.11 DELIVERY, STORAGE, AND HANDLING

A. Packaged Materials: Deliver packaged materials in original, unopened containers showing weight, certified analysis, name and address of manufacturer, and compliance with state and Federal laws if applicable.

B. Bulk Materials:

1. Do not dump or store bulk materials near structures, utilities, walkways and pavements, or on existing turf areas or plants.
2. Provide erosion-control measures to prevent erosion or displacement of bulk materials, discharge of soil-bearing water runoff, and airborne dust reaching adjacent properties, water conveyance systems, or walkways.
3. Do not move or handle materials when they are wet or frozen.
4. Accompany each delivery of bulk fertilizers and soil amendments with appropriate certificates.

PART 2 - PRODUCTS

2.1 PLANTING SOILS SPECIFIED BY COMPOSITION

A. General: Soil amendments, fertilizers, and rates of application specified in this article are guidelines that may need revision based on testing laboratory's recommendations after preconstruction soil analyses are performed.

B. Planting-Soil Type: Existing, on-site surface soil, with the duff layer, if any, retained; and stockpiled on-site; modified to produce viable planting soil. Blend existing, on-site surface soil with the following soil amendments and fertilizers in the following quantities to produce planting soil:

1. Ratio of Loose Compost to Soil: 1:4 by volume.
2. Ratio of Loose Peat to Soil: by volume.
3. Ratio of Loose Wood Derivatives Soil: Industry standard ratio by volume.
4. Weight of Lime: per 1000 sq. ft. (100 sq. m) per 6 inches (150 mm) of soil depth.
5. Weight of Sulfur, Iron Sulfate: per 1000 sq. ft. (100 sq. m) per 6 inches (150 mm) of soil depth.
6. Weight of Agricultural Gypsum: per 1000 sq. ft. (100 sq. m) per 6 inches (150 mm) of soil depth.
7. Weight of Superphosphate: per 1000 sq. ft. (100 sq. m) per 6 inches (150 mm) of soil depth.
8. Weight of Commercial Fertilizer: per 1000 sq. ft. (100 sq. m) per 6 inches (150 mm) of soil depth.
9. Weight of Slow-Release Fertilizer: per 1000 sq. ft. (100 sq. m) per 6 inches (150 mm) of soil depth.

C. Planting-Soil Type: Imported, naturally formed soil from off-site sources and consisting of sandy loam, loam, silt loam, loamy sand or sand soil according to USDA textures; and modified to produce viable planting soil.

1. Sources: Take imported, unamended soil from sources that are naturally well-drained sites where topsoil occurs at least 4 inches deep, not from agricultural land, bogs, or marshes; and that do not contain undesirable organisms; disease-causing plant pathogens; or obnoxious weeds and invasive plants including, but not limited to, quackgrass, Johnsongrass, poison ivy, nutsedge, nimblewill, Canada thistle, bindweed, bentgrass, wild garlic, ground ivy, perennial sorrel, and bromegrass.
2. Additional Properties of Imported Soil before Amending: Soil reaction of pH 6 to 7 and minimum of 4 percent organic-matter content, friable, and with sufficient structure to give good tilth and aeration.
3. Unacceptable Properties: Clean soil of the following:

a. Unacceptable Materials: Concrete slurry, concrete layers or chunks, cement, plaster, building debris, oils, gasoline, diesel fuel, paint thinner, turpentine, tar, roofing compound, acid, and other extraneous materials that are harmful to plant growth.
b. Unsuitable Materials: Stones, roots, plants, sod, clay lumps, and pockets of coarse sand that exceed a combined maximum of 8 percent by dry weight of the imported soil.
c. Large Materials: Stones, clods, roots, clay lumps, and pockets of coarse sand exceeding 2 inches in any dimension.

4. Amended Soil Composition: Blend imported, unamended soil with the following soil amendments and fertilizers in the following quantities to produce planting soil:

    a. Ratio of Loose Compost to Soil: 1:3 by volume.
    b. Ratio of Loose Sphagnum, Muck Peat to Soil: 1:3 by volume.
    c. Ratio of Loose Wood Derivatives to Soil: Industry standard by volume.
    d. Weight of Lime: <Industry standard per 1000 sq. ft. (100 sq. m) per 6 inches (150 mm) of soil depth.
    e. Weight of [Sulfur, Iron Sulfate: Industry standard per 1000 sq. ft. (100 sq. m) per 6 inches (150 mm) of soil depth.
    f. Weight of Agricultural Gypsum: Industry standard per 1000 sq. ft. (100 sq. m) per 6 inches (150 mm) of soil depth.
    g. Weight of Superphosphate: Industry standard per 1000 sq. ft. (100 sq. m) per 6 inches (150 mm) of soil depth.
    h. Weight of Commercial Fertilizer: Industry standard per 1000 sq. ft. (100 sq. m) per 6 inches (150 mm) of soil depth.
    i. Weight of Slow-Release Fertilizer: Industry standard per 1000 sq. ft. (100 sq. m) per 6 inches (150 mm) of soil depth.

D. Planting-Soil Type: Manufactured soil consisting of manufacturer's basic topsoil, sandy loam according to USDA textures, blended in a manufacturing facility with sand, stabilized organic soil amendments, and other materials to produce viable planting soil.

1. Additional Properties of Manufacturer's Basic Soil before Amending: Soil reaction of pH 6 to 7 and minimum of 6 percent organic-matter content, friable, and with sufficient structure to give good tilth and aeration.
2. Unacceptable Properties: Manufactured soil shall not contain the following:

    a. Unacceptable Materials: Concrete slurry, concrete layers or chunks, cement, plaster, building debris, oils, gasoline, diesel fuel, paint thinner, turpentine, tar, roofing compound, acid, and other extraneous materials that are harmful to plant growth.
    b. Unsuitable Materials: Stones, roots, plants, sod, clay lumps, and pockets of coarse sand that exceed a combined maximum of 5 percent by dry weight of the manufactured soil.
    c. Large Materials: Stones, clods, roots, clay lumps, and pockets of coarse sand exceeding 1-1/2 inches (38 mm) in any dimension.

## 2.2 INORGANIC SOIL AMENDMENTS

A. Lime: ASTM C602, agricultural liming material containing a minimum of 80 percent calcium carbonate equivalent and as follows:

1. Class: T, with a minimum of 99 percent passing through a No. 8 sieve and a minimum of 75 percent passing through a No. 60 sieve.
2. Class: O, with a minimum of 95 percent passing through a No. 8 sieve and a minimum of 55 percent passing through a No. 60 sieve.
3. Form: Provide lime in form of ground dolomitic limestone.

B. Sulfur: Granular, biodegradable, and containing a minimum of 90 percent elemental sulfur, with a minimum of 99 percent passing through a No. 6 sieve and a maximum of 10 percent passing through a No. 40 sieve.

C. Iron Sulfate: Granulated ferrous sulfate containing a minimum of 20 percent iron and 10 percent sulfur.

D. Perlite: Horticultural perlite, soil amendment grade.

E. Agricultural Gypsum: Minimum 90 percent calcium sulfate, finely ground with 90 percent passing through a No. 50 sieve.

F. Sand: Clean, washed, natural or manufactured, free of toxic materials, and according to ASTM C33/C33M.

## 2.3 ORGANIC SOIL AMENDMENTS

A. Compost: Well-composted, stable, and weed-free organic matter produced by composting feedstock, and bearing USCC's "Seal of Testing Assurance," and as follows:

1. Feedstock: May include animal waste.
2. Reaction: pH of 5.5 to 8.
3. Soluble-Salt Concentration: Less than 4 dS/m.
4. Moisture Content: 35 to 55 percent by weight.
5. Organic-Matter Content: 50 to 60 percent of dry weight.
6. Particle Size: Minimum of 98 percent passing through a 2-inch sieve.

## 2.4 FERTILIZERS

A. Superphosphate: Commercial, phosphate mixture, soluble; a minimum of 33 percent available phosphoric acid.

B. Commercial Fertilizer: Commercial-grade complete fertilizer of neutral character, consisting of fast- and slow-release nitrogen, 50 percent derived from natural organic sources of urea formaldehyde, phosphorous, and potassium in the following composition:

1. Composition: 1 lb/1000 sq. ft. of actual nitrogen, 4 percent phosphorous, and 2 percent potassium, by weight.
2. Composition: Nitrogen, phosphorous, and potassium in amounts recommended in soil reports from a qualified testing agency.

C. Slow-Release Fertilizer: Granular or pelleted fertilizer consisting of 50 percent water-insoluble nitrogen, phosphorus, and potassium in the following composition:

1. Composition: 20 percent nitrogen, 10 percent phosphorous, and 10 percent potassium, by weight.
2. Composition: Nitrogen, phosphorous, and potassium in amounts recommended in soil reports from a qualified testing agency.

D. Chelated Iron: Commercial-grade FeEDDHA for dicots and woody plants, and commercial-grade FeDTPA for ornamental grasses and monocots.

## PART 3 - EXECUTION

### 3.1 GENERAL

A. Place planting soil and fertilizers according to requirements in other Specification Sections.

B. Verify that no foreign or deleterious material or liquid such as paint, paint washout, concrete slurry, concrete layers or chunks, cement, plaster, oils, gasoline, diesel fuel, paint thinner, turpentine, tar, roofing compound, or acid has been deposited in planting soil.

C. Proceed with placement only after unsatisfactory conditions have been corrected.

### 3.2 PREPARATION OF UNAMENDED, ON-SITE SOIL BEFORE AMENDING

A. Excavation: Excavate soil from designated area(s) to a depth of 6 inches and stockpile until amended.

B. Unacceptable Materials: Clean soil of concrete slurry, concrete layers or chunks, cement, plaster, building debris, oils, gasoline, diesel fuel, paint thinner, turpentine, tar, roofing compound, acid, and other extraneous materials that are harmful to plant growth.

C. Unsuitable Materials: Clean soil to contain a maximum of 8 percent by dry weight of stones, roots, plants, sod, clay lumps, and pockets of coarse sand.

D. Screening: Pass unamended soil through a 2-inch sieve to remove large materials.

### 3.3 PLACING AND MIXING PLANTING SOIL OVER EXPOSED SUBGRADE

A. General: Apply and mix unamended soil with amendments on-site to produce required planting soil. Do not apply materials or till if existing soil or subgrade is frozen, muddy, or excessively wet.

B. Subgrade Preparation: Till subgrade to a minimum depth of 6 inches. Remove stones larger than 2 inches in any dimension and sticks, roots, rubbish, and other extraneous matter and legally dispose of them off Owner's property.

1. Apply, add soil amendments, and mix approximately half the thickness of unamended soil over prepared, loosened subgrade according to "Mixing" Paragraph below. Mix thoroughly into top 2 to 4 inches of subgrade. Spread remainder of planting soil.

C. Mixing: Spread unamended soil to total depth as indicated on Drawings, but not less than required to meet finish grades after mixing with amendments and natural settlement. Do not spread if soil or subgrade is frozen, muddy, or excessively wet.

1. Amendments: Apply soil amendments[, except compost, and fertilizer, if required, evenly on surface, and thoroughly blend them with unamended soil to produce planting soil.

    a. Mix lime and sulfur, if required, with dry soil before mixing fertilizer.
    b. Mix fertilizer with planting soil no more than seven days before planting.

2. Lifts: Apply and mix unamended soil and amendments in lifts not exceeding 8 inches in loose depth for material compacted by compaction equipment, and not more than 6 inches in loose depth for material compacted by hand-operated tampers.

D. Compaction: Compact each blended lift of planting soil to 75 to 82 percent of maximum Standard Proctor density according to ASTM D698 and tested in-place.

E. Finish Grading: Grade planting soil to a smooth, uniform surface plane with loose, uniformly fine texture. Roll and rake, remove ridges, and fill depressions to meet finish grades.

## 3.4 PLACING MANUFACTURED PLANTING SOIL OVER EXPOSED SUBGRADE

A. General: Apply manufactured soil on-site in its final, blended condition. Do not apply materials or till if existing soil or subgrade is frozen, muddy, or excessively wet.

B. Subgrade Preparation: Till subgrade to a minimum depth of 6 inches. Remove stones larger than 2 inches in any dimension and sticks, roots, rubbish, and other extraneous matter and legally dispose of them off Owner's property.

1. Apply approximately half the thickness of planting soil over prepared, loosened subgrade. Mix thoroughly into top 2 to 4 inches of subgrade. Spread remainder of planting soil.

C. Application: Spread planting soil to total depth as indicated on Drawings, but not less than required to meet finish grades after natural settlement. Do not spread if soil or subgrade is frozen, muddy, or excessively wet.

1. Lifts: Apply planting soil in lifts not exceeding 8 inches to 12 inches in loose depth for material compacted by compaction equipment, and not more than 6 inches in loose depth for material compacted by hand-operated tampers.

D. Compaction: Compact each lift of planting soil to 75 to 82 percent of maximum Standard Proctor density according to ASTM D698.

E. Finish Grading: Grade planting soil to a smooth, uniform surface plane with loose, uniformly fine texture. Roll and rake, remove ridges, and fill depressions to meet finish grades.

## 3.5 BLENDING PLANTING SOIL IN PLACE

A. General: Mix amendments with in-place, unamended soil to produce required planting soil. Do not apply materials or till if existing soil or subgrade is frozen, muddy, or excessively wet.

B. Preparation: Till unamended, existing soil in planting areas to a minimum depth of 6 inches. Remove stones larger than 2 inches in any dimension and sticks, roots, rubbish, and other extraneous matter and legally dispose of them off Owner's property.

C. Mixing: Apply soil amendments, except compost, and fertilizer, if required, evenly on surface, and thoroughly blend them into full depth of unamended, in-place soil to produce planting soil.

1. Mix lime and sulfur, if required, with dry soil before mixing fertilizer.
2. Mix fertilizer with planting soil no more than seven days before planting.

D. Compaction: Compact blended planting soil to 75 to 82 percent of maximum Standard Proctor density according to ASTM D698.

E. Finish Grading: Grade planting soil to a smooth, uniform surface plane with loose, uniformly fine texture. Roll and rake, remove ridges, and fill depressions to meet finish grades.

## 3.6 LAYERED SOIL ASSEMBLIES

A. Layered Soil Assembly:

1. As indicated on drawings, see sheet L-3.2 for planting details and soil profiles.

## 3.7 FIELD QUALITY CONTROL

A. Testing Agency: Owner will engage a qualified testing agency to perform tests and inspections.

B. Perform the following tests and inspections:

1. Compaction: Test planting-soil compaction after placing each lift and at completion using a densitometer or soil-compaction meter calibrated to a reference test value based on laboratory testing according to ASTM D698. Space tests at no less than one for each 1000 sq. ft. of in-place soil or part thereof.

C. Soil will be considered defective if it does not pass tests and inspections.

D. Prepare test and inspection reports.

E. Label each sample and test report with the date, location keyed to a site plan or other location system, visible conditions when and where sample was taken, and sampling depth.

## 3.8 PROTECTION

A. Protection Zone: Identify protection zones according to Section 015639 "Temporary Tree and Plant Protection."

B. Protect areas of in-place soil from additional compaction, disturbance, and contamination. Prohibit the following practices within these areas except as required to perform planting operations:

1. Storage of construction materials, debris, or excavated material.
2. Parking vehicles or equipment.
3. Vehicle traffic.
4. Foot traffic.
5. Erection of sheds or structures.
6. Impoundment of water.
7. Excavation or other digging unless otherwise indicated.

C. If planting soil or subgrade is overcompacted, disturbed, or contaminated by foreign or deleterious materials or liquids, remove the planting soil and contamination; restore the subgrade as directed by Architect and replace contaminated planting soil with new planting soil.

3.9 CLEANING

A. Protect areas adjacent to planting-soil preparation and placement areas from contamination. Keep adjacent paving and construction clean and work area in an orderly condition.

B. Remove surplus soil and waste material including excess subsoil, unsuitable materials, trash, and debris and legally dispose of them off Owner's property unless otherwise indicated.

1. Dispose of excess subsoil and unsuitable materials on-site where directed by Owner.

**END OF SECTION 32 91 13**

# SECTION 32 92 00

# TURF AND GRASSES

## PART 1 - GENERAL

### 1.1 RELATED DOCUMENTS

A. Drawings and general provisions of the Contract, including General and Supplementary Conditions and Division 01 Specification Sections, apply to this Section.

### 1.2 SUMMARY

A. Section Includes:
   1. Hydroseeding.
   2. Sodding.
   3. Turf renovation.
   4. Erosion-control materials.
   5. Grass-paving materials.

B. Related Requirements:

   1. Section 329300 "Plants" for trees, shrubs, ground covers, and other plants as well as border edgings and mow strips.

### 1.3 DEFINITIONS

A. Finish Grade: Elevation of finished surface of planting soil.

B. Pesticide: A substance or mixture intended for preventing, destroying, repelling, or mitigating a pest. Pesticides include insecticides, miticides, herbicides, fungicides, rodenticides, and molluscicides. They also include substances or mixtures intended for use as a plant regulator, defoliant, or desiccant.

C. Pests: Living organisms that occur where they are not desired or that cause damage to plants, animals, or people. Pests include insects, mites, grubs, mollusks (snails and slugs), rodents (gophers, moles, and mice), unwanted plants (weeds), fungi, bacteria, and viruses.

D. Planting Soil: Existing, on-site soil; imported soil; or manufactured soil that has been modified with soil amendments and perhaps fertilizers to produce a soil mixture best for plant growth. See Section 329113 "Soil Preparation" and drawing designations for planting soils.

E. Subgrade: The surface or elevation of subsoil remaining after excavation is complete, or the top surface of a fill or backfill before planting soil is placed.

### 1.4 PREINSTALLATION MEETINGS

A. Preinstallation Conference: Conduct conference with Landscape Architect prior to turf installation at 10 Hillside Road, Greenwich, CT 06830

B. Qualification Data: For landscape Installer.

C. Certification of Grass Seed: From seed vendor for each grass-seed monostand or mixture, stating the botanical and common name, percentage by weight of each species and variety, and percentage of purity, germination, and weed seed. Include the year of production and date of packaging.

1. Certification of each seed mixture for turfgrass sod. Include identification of source and name and telephone number of supplier.

D. Product Certificates: For fertilizers, from manufacturer.

E. Pesticides and Herbicides: Product label and manufacturer's application instructions specific to Project.

## 1.5 CLOSEOUT SUBMITTALS

A. Maintenance Data: Recommended procedures to be established by Owner for maintenance of turf during a calendar year. Submit before expiration of required maintenance periods.

## 1.6 QUALITY ASSURANCE

A. Installer Qualifications: A qualified landscape installer whose work has resulted in successful turf establishment.

1. Professional Membership: Installer shall be a member in good standing of either the National Association of Landscape Professionals or AmericanHort.
2. Experience: Five years experience in turf installation in addition to requirements in Section 014000 "Quality Requirements."
3. Installer's Field Supervision: Require Installer to maintain an experienced full-time supervisor on Project site when work is in progress.
4. Personnel Certifications: Installer's shall have certification in the following categories from the National Association of Landscape Professionals:

   a. Landscape Industry Certified Technician - Exterior.
   b. Landscape Industry Certified Lawn Care Manager.
   c. Landscape Industry Certified Lawn Care Technician.

5. Pesticide Applicator: State licensed, commercial.

## 1.7 DELIVERY, STORAGE, AND HANDLING

A. Seed and Other Packaged Materials: Deliver packaged materials in original, unopened containers showing weight, certified analysis, name and address of manufacturer, and indication of compliance with state and Federal laws, as applicable.

B. Sod: Harvest, deliver, store, and handle sod according to requirements in "Specifications for Turfgrass Sod Materials" and "Specifications for Turfgrass Sod Transplanting and Installation" sections in TPI's "Guideline Specifications to Turfgrass Sodding." Deliver sod within 24 hours of harvesting and in time for planting promptly. Protect sod from breakage and drying.

C. Bulk Materials:

1. Do not dump or store bulk materials near structures, utilities, walkways and pavements, or on existing turf areas or plants.
2. Provide erosion-control measures to prevent erosion or displacement of bulk materials; discharge of soil-bearing water runoff; and airborne dust reaching adjacent properties, water conveyance systems, or walkways.
3. Accompany each delivery of bulk materials with appropriate certificates.

## 1.8 FIELD CONDITIONS

A. Planting Restrictions: Plant during one of the following periods. Coordinate planting periods with initial maintenance periods to provide required maintenance from date of projects completion.

1. Spring Planting: 3/15-6/15 (seed) and 4/15 to 7/1 (sod).
2. Fall Planting: 8/15-10/15 (seed) and 8/20-10/15 (sod).

B. Weather Limitations: Proceed with planting only when existing and forecasted weather conditions permit planting to be performed when beneficial and optimum results may be obtained. Apply products during favorable weather conditions according to manufacturer's written instructions.

# PART 2 - PRODUCTS

## 2.1 SEED

A. Grass Seed: Fresh, clean, dry, new-crop seed complying with AOSA's "Rules for Testing Seeds" for purity and germination tolerances.

B. Seed Species:

1. Quality, State Certified: State-certified seed of grass species as listed below for solar exposure.
2. Quality, Non-State Certified: Seed of grass species as listed below for solar exposure, with not less than 85 percent germination, not less than 95 percent pure seed, and not more than 0.5 percent weed seed:
3. Full Sun, Warm-Season Grass: Bermudagrass (Cynodon dactylon).
4. Full Sun, Cool-Season Grass: Kentucky bluegrass (Poa pratensis), a minimum of three cultivars.
5. Sun and Partial Shade, Cool-Season Grass: Proportioned by weight as follows:

   a. 50 percent Kentucky bluegrass (Poa pratensis).
   b. 30 percent chewings red fescue (Festuca rubra variety).
   c. 10 percent perennial ryegrass (Lolium perenne).
   d. 10 percent redtop (Agrostis alba).

6. Shade, Cool-Season Grass: Proportioned by weight as follows:

   a. 50 percent chewings red fescue (Festuca rubra variety).
   b. 35 percent rough bluegrass (Poa trivialis).
   c. 15 percent redtop (Agrostis alba).

## 2.2 TURFGRASS SOD

A. Turfgrass Sod: Complying with "Specifications for Turfgrass Sod Materials" in TPI's "Guideline Specifications to Turfgrass Sodding." Furnish viable sod of uniform density, color, and texture that is strongly rooted and capable of vigorous growth and development when planted.

## 2.3 FERTILIZERS

A. Commercial Fertilizer: Commercial-grade complete fertilizer of neutral character, consisting of fast- and slow-release nitrogen, 50 percent derived from natural organic sources of urea formaldehyde, phosphorous, and potassium in the following composition:

1. Composition:

a. 1 lb/1000 sq. ft. of actual nitrogen, 4 percent phosphorous, and 2 percent potassium, by weight.
b. Nitrogen, phosphorous, and potassium in amounts recommended in soil reports from a qualified soil-testing laboratory.

B. Slow-Release Fertilizer: Granular or pelleted fertilizer consisting of 50 percent water-insoluble nitrogen, phosphorus, and potassium in the following composition:

1. Composition:

a. 20 percent nitrogen, 10 percent phosphorous, and 10 percent potassium, by weight.
b. Nitrogen, phosphorous, and potassium in amounts recommended in soil reports from a qualified soil-testing laboratory.

## 2.4 MULCHES

A. Straw Mulch: Provide air-dry, clean, mildew- and seed-free, salt hay or threshed straw of wheat, rye, oats, or barley.

B. Sphagnum Peat Mulch: Partially decomposed sphagnum peat moss, finely divided or of granular texture, and with a pH range of 3.4 to 4.8.

C. Muck Peat Mulch: Partially decomposed moss peat, native peat, or reed-sedge peat, finely divided or of granular texture, with a pH range of 6 to 7.5, and having a water-absorbing capacity of 1100 to 2000 percent, and containing no sand.

D. Compost Mulch: Well-composted, stable, and weed-free organic matter, pH range of 5.5 to 8; moisture content 35 to 55 percent by weight; 100 percent passing through 1-inch sieve; soluble salt content of 2 to 5 decisiemens/m; not exceeding 0.5 percent inert contaminants and free of substances toxic to plantings; and as follows:

1. Organic Matter Content: 50 to 60 percent of dry weight.
2. Feedstock: Agricultural, food, or industrial residuals; biosolids; yard trimmings; or source-separated or compostable mixed solid waste.

E. Fiber Mulch: Biodegradable, dyed-wood, cellulose-fiber mulch; nontoxic and free of plant-growth or germination inhibitors; with a maximum moisture content of 15 percent and a pH range of 4.5 to 6.5.

F. Nonasphaltic Tackifier: Colloidal tackifier recommended by fiber-mulch manufacturer for slurry application; nontoxic and free of plant-growth or germination inhibitors.

G. Asphalt Emulsion: ASTM D977, Grade SS-1; nontoxic and free of plant-growth or germination inhibitors.

## 2.5 PESTICIDES

A. General: Pesticide, registered and approved by the EPA, acceptable to authorities having jurisdiction, and of type recommended by manufacturer for each specific problem and as required for Project conditions and application. Do not use restricted pesticides unless authorized in writing by authorities having jurisdiction.

B. Pre-Emergent Herbicide (Selective and Nonselective): Effective for controlling the germination or growth of weeds within planted areas at the soil level directly below the mulch layer.

C. Post-Emergent Herbicide (Selective and Nonselective): Effective for controlling weed growth that has already germinated.

## 2.6 EROSION-CONTROL MATERIALS

A. Erosion-Control Blankets: Biodegradable wood excelsior, straw, or coconut-fiber mat enclosed in a photodegradable plastic mesh. Include manufacturer's recommended steel wire staples, 6 inches long.

B. Erosion-Control Fiber Mesh: Biodegradable burlap or spun-coir mesh, a minimum of 0.92 lb/sq. yd., with 50 to 65 percent open area. Include manufacturer's recommended steel wire staples, 6 inches long.

C. Erosion-Control Mats: Cellular, nonbiodegradable slope-stabilization mats designed to isolate and contain small areas of soil over steeply sloped surface, of 6-inch nominal mat thickness. Include manufacturer's recommended anchorage system for slope conditions.

## 2.7 GRASS-PAVING MATERIALS

A. Grass Paving: Cellular, nonbiodegradable plastic mats, designed to contain small areas of soil and enhance the ability of turf to support vehicular and pedestrian traffic, of manufacturer's standard nominal mat thickness. Include manufacturer's recommended anchorage system for slope conditions.

B. Base Course: Sound crushed stone or gravel complying with ASTM D448 for Size No. 8, Section 312000 "Earth Moving" for base-course material.

C. Sand: Sound, sharp, washed, natural sand or crushed stone complying with gradation requirements in ASTM C33/C33M for fine aggregate.

D. Proprietary Growing Mix: As submitted and acceptable to Architect.

E. Sandy Loam Soil Mix: Sound, sharp, washed, natural sand or crushed stone complying with gradation requirements in ASTM C33/C33M for fine aggregate blended with planting soil. Use blend consisting of 1/2 sand and 1/2 planting soil.

F. Soil for Paving Fill: Planting soil.

## PART 3 - EXECUTION

### 3.1 EXAMINATION

A. Examine areas to be planted for compliance with requirements and other conditions affecting installation and performance of the Work.

1. Verify that no foreign or deleterious material or liquid such as paint, paint washout, concrete slurry, concrete layers or chunks, cement, plaster, oils, gasoline, diesel fuel, paint thinner, turpentine, tar, roofing compound, or acid has been deposited in soil within a planting area.
2. Suspend planting operations during periods of excessive soil moisture until the moisture content reaches acceptable levels to attain the required results.
3. Uniformly moisten excessively dry soil that is not workable or which is dusty.

B. Proceed with installation only after unsatisfactory conditions have been corrected.

C. If contamination by foreign or deleterious material or liquid is present in soil within a planting area, remove the soil and contamination as directed by Architect and replace with new planting soil.

### 3.2 PREPARATION

A. Protect structures; utilities; sidewalks; pavements; and other facilities, trees, shrubs, and plantings from damage caused by planting operations.

1. Protect adjacent and adjoining areas from hydroseeding and hydromulching overspray.
2. Protect grade stakes set by others until directed to remove them.

B. Install erosion-control measures to prevent erosion or displacement of soils and discharge of soil-bearing water runoff or airborne dust to adjacent properties and walkways.

### 3.3 TURF AREA PREPARATION

A. General: Prepare planting area for soil placement and mix planting soil according to Section 329113 "Soil Preparation."

B. Placing Planting Soil: Place and mix planting soil in place over exposed subgrade.

1. Reduce elevation of planting soil to allow for soil thickness of sod.

C. Moisten prepared area before planting if soil is dry. Water thoroughly and allow surface to dry before planting. Do not create muddy soil.

D. Before planting, obtain Architect's acceptance of finish grading; restore planting areas if eroded or otherwise disturbed after finish grading.

3.4 PREPARATION FOR EROSION-CONTROL MATERIALS

A. Prepare area as specified in "Turf Area Preparation" Article.

B. For erosion-control mats, install planting soil in two lifts, with second lift equal to thickness of erosion-control mats. Install erosion-control mat and fasten as recommended by material manufacturer.

C. Fill cells of erosion-control mat with planting soil and compact before planting.

D. For erosion-control blanket or mesh, install from top of slope, working downward, and as recommended by material manufacturer for site conditions. Fasten as recommended by material manufacturer.

E. Moisten prepared area before planting if surface is dry. Water thoroughly and allow surface to dry before planting. Do not create muddy soil.

3.5 PREPARATION FOR GRASS-PAVING MATERIALS

A. Reduce subgrade elevation soil to allow for thickness of grass-paving system. Grade planting areas to a smooth, uniform surface plane with loose, uniformly fine texture. Grade so that installed paving is within plus or minus 1/2 inch (13 mm) of finish elevation. Roll and rake, remove ridges, and fill depressions.

B. Install base course and sand course and proprietary growing mix as recommended by paving-material manufacturer for site conditions and according to details indicated on Drawings. Compact according to paving-material manufacturer's written instructions.

C. Install paving mat and fasten according to paving-material manufacturer's written instructions.

D. Before planting, fill cells of paving mat with proprietary growing mix and compact according to manufacturer's written instructions.

E. Moisten prepared area before planting if surface is dry. Water thoroughly and allow surface to dry before planting. Do not create muddy soil.

3.6 SEEDING

A. Sow seed with spreader or seeding machine. Do not broadcast or drop seed when wind velocity exceeds 5 mph.

1. Evenly distribute seed by sowing equal quantities in two directions at right angles to each other.
2. Do not use wet seed or seed that is moldy or otherwise damaged.
3. Do not seed against existing trees. Limit extent of seed to outside edge of planting saucer.

B. Sow seed at a total rate of 3 to 4 lb/1000 sq. ft.

C. Rake seed lightly into top 1/8 inch of soil, roll lightly, and water with fine spray.

D. Protect seeded areas with slopes exceeding 1:4 with erosion-control blankets and 1:6 with erosion-control fiber mesh installed and stapled according to manufacturer's written instructions.

E. Protect seeded areas with erosion-control mats where indicated on Drawings; install and anchor according to manufacturer's written instructions.

F. Protect seeded areas with slopes not exceeding 1:6 by spreading straw mulch. Spread uniformly at a minimum rate of 2 tons/acre to form a continuous blanket 1-1/2 inches loose thickness over seeded areas. Spread by hand, blower, or other suitable equipment.

1. Anchor straw mulch by crimping into soil with suitable mechanical equipment.
2. Bond straw mulch by spraying with asphalt emulsion at a rate of 10 to 13 gal./1000 sq. ft. Take precautions to prevent damage or staining of structures or other plantings adjacent to mulched areas. Immediately clean damaged or stained areas.

G. Protect seeded areas from hot, dry weather or drying winds by applying planting soil within 24 hours after completing seeding operations. Soak areas, scatter mulch uniformly to a thickness of 3/16 inch, and roll surface smooth.

## 3.7 HYDROSEEDING

A. Hydroseeding: Mix specified seed, slow-release fertilizer, and fiber mulch in water, using equipment specifically designed for hydroseed application. Continue mixing until uniformly blended into homogeneous slurry suitable for hydraulic application.

1. Mix slurry with fiber-mulch manufacturer's recommended tackifier.
2. Spray-apply slurry uniformly to all areas to be seeded in a one-step process. Apply slurry at a rate so that mulch component is deposited at not less than 1500-lb/acre dry weight, and seed component is deposited at not less than the specified seed-sowing rate.
3. Spray-apply slurry uniformly to all areas to be seeded in a two-step process. Apply first slurry coat at a rate so that mulch component is deposited at not less than 500-lb/acre dry weight, and seed component is deposited at not less than the specified seed-sowing rate. Apply slurry cover coat of fiber mulch (hydromulching) at a rate of 1000 lb/acre.

## 3.8 SODDING

A. Lay sod within 24 hours of harvesting unless a suitable preservation method is accepted by Architect prior to delivery time. Do not lay sod if dormant or if ground is frozen or muddy.

B. Lay sod to form a solid mass with tightly fitted joints. Butt ends and sides of sod; do not stretch or overlap. Stagger sod strips or pads to offset joints in adjacent courses. Avoid damage to soil or sod during installation. Tamp and roll lightly to ensure contact with soil, eliminate air pockets, and form a smooth surface. Work sifted soil or fine sand into minor cracks between pieces of sod; remove excess to avoid smothering sod and adjacent grass.

1. Lay sod across slopes exceeding 1:3.
2. Anchor sod on slopes exceeding 1:6 with wood pegs or steel staples spaced as recommended by sod manufacturer but not less than two anchors per sod strip to prevent slippage.

C. Saturate sod with fine water spray within two hours of planting. During first week after planting, water daily or more frequently as necessary to maintain moist soil to a minimum depth of 1-1/2 inches below sod.

3.9 TURF RENOVATION

A. Renovate existing turf where indicated.

B. Renovate turf damaged by Contractor's operations, such as storage of materials or equipment and movement of vehicles.

1. Reestablish turf where settlement or washouts occur or where minor regrading is required.
2. Install new planting soil as required.

C. Remove sod and vegetation from diseased or unsatisfactory turf areas; do not bury in soil.

D. Remove topsoil containing foreign materials, such as oil drippings, fuel spills, stones, gravel, and other construction materials resulting from Contractor's operations, and replace with new planting soil.

E. Mow, dethatch, core aerate, and rake existing turf.

F. Remove weeds before seeding. Where weeds are extensive, apply selective herbicides as required. Do not use pre-emergence herbicides.

G. Remove waste and foreign materials, including weeds, soil cores, grass, vegetation, and turf, and legally dispose of them off Owner's property.

H. Till stripped, bare, and compacted areas thoroughly to a soil depth of 6 inches.

I. Apply soil amendments and initial fertilizer required for establishing new turf and mix thoroughly into top 4 inches of existing soil. Install new planting soil to fill low spots and meet finish grades.

1. Soil Amendment(s): Add soil amendment(s) according to requirements of Section 329113 "Soil Preparation."
2. Initial Fertilizer: Slow-release fertilizer applied according to manufacturer's recommendations.

J. Apply seed and protect with straw mulch as required for new turf.

K. Water newly planted areas and keep moist until new turf is established.

3.10 TURF MAINTENANCE

A. General: Maintain and establish turf by watering, fertilizing, weeding, mowing, trimming, replanting, and performing other operations as required to establish healthy, viable turf. Roll, regrade, and replant bare or eroded areas and remulch to produce a uniformly smooth turf. Provide materials and installation the same as those used in the original installation.

1. Fill in as necessary soil subsidence that may occur because of settling or other processes. Replace materials and turf damaged or lost in areas of subsidence.
2. In areas where mulch has been disturbed by wind or maintenance operations, add new mulch and anchor as required to prevent displacement.
3. Apply treatments as required to keep turf and soil free of pests and pathogens or disease. Use integrated pest management practices whenever possible to minimize the use of pesticides and reduce hazards.

B. Watering: Install and maintain temporary piping, hoses, and turf-watering equipment to convey water from sources and to keep turf uniformly moist to a depth of 4 inches.

1. Schedule watering to prevent wilting, puddling, erosion, and displacement of seed or mulch. Lay out temporary watering system to avoid walking over muddy or newly planted areas.
2. Water turf with fine spray at a minimum rate of 1 inch per week unless rainfall precipitation is adequate.

C. Mow turf as soon as top growth is tall enough to cut. Repeat mowing to maintain specified height without cutting more than one-third of grass height. Remove no more than one-third of grass-leaf growth in initial or subsequent mowings. Do not delay mowing until grass blades bend over and become matted. Do not mow when grass is wet. Schedule initial and subsequent mowings to maintain the following grass height:

D. Turf Postfertilization: Apply slow-release fertilizer after initial mowing and when grass is dry.

1. Use fertilizer that provides actual nitrogen of at least 1 lb/1000 sq. ft. to turf area.

## 3.11 SATISFACTORY TURF

A. Turf installations shall meet the following criteria as determined by Architect:

1. Satisfactory Seeded Turf: At end of maintenance period, a healthy, uniform, close stand of grass has been established, free of weeds and surface irregularities, with coverage exceeding 90 percent over any 10 sq. ft. and bare spots not exceeding 5 by 5 inches.
2. Satisfactory Sodded Turf: At end of maintenance period, a healthy, well-rooted, even-colored, viable turf has been established, free of weeds, open joints, bare areas, and surface irregularities.
3. Satisfactory Plugged Turf: At end of maintenance period, the required number of plugs has been established as well-rooted, viable patches of grass, and areas between plugs are free of weeds and other undesirable vegetation.
4. Satisfactory Sprigged Turf: At end of maintenance period, the required number of sprigs has been established as well-rooted, viable plants, and areas between sprigs are free of weeds and other undesirable vegetation.

B. Use specified materials to reestablish turf that does not comply with requirements, and continue maintenance until turf is satisfactory.

## 3.12 PESTICIDE APPLICATION

A. Apply pesticides and other chemical products and biological control agents according to requirements of authorities having jurisdiction and manufacturer's written recommendations. Coordinate applications with Owner's operations and others in proximity to the Work. Notify Owner before each application is performed.

B. Post-Emergent Herbicides (Selective and Nonselective): Apply only as necessary to treat already-germinated weeds and according to manufacturer's written recommendations.

3.13 CLEANUP AND PROTECTION

A. Promptly remove soil and debris created by turf work from paved areas. Clean wheels of vehicles before leaving site to avoid tracking soil onto roads, walks, or other paved areas.

B. Remove surplus soil and waste material, including excess subsoil, unsuitable soil, trash, and debris, and legally dispose of them off Owner's property.

C. Erect temporary fencing or barricades and warning signs as required to protect newly planted areas from traffic. Maintain fencing and barricades throughout initial maintenance period and remove after plantings are established.

D. Remove nondegradable erosion-control measures after grass establishment period.

3.14 MAINTENANCE SERVICE

A. Turf Maintenance Service: Provide full maintenance by skilled employees of landscape Installer. Maintain as required in "Turf Maintenance" Article. Begin maintenance immediately after each area is planted and continue until acceptable turf is established, but for not less than the following periods:

1. Seeded Turf: 60 days from date of projects completion.

a. When initial maintenance period has not elapsed before end of planting season, or if turf is not fully established, continue maintenance during next planting season.

2. Sodded Turf: 30 days from date of projects completion.

**END OF SECTION 32 92 00**

# SECTION 32 93 00

# PLANTS

## PART 1 - GENERAL

### 1.1 RELATED DOCUMENTS

A. Drawings and general provisions of the Contract, including General and Supplementary Conditions and Division 01 Specification Sections, apply to this Section.

### 1.2 SUMMARY

A. Section Includes:

1. Plants.
2. Tree stabilization.
3. Tree-watering devices.
4. Landscape edgings.

B. Related Requirements:

1. Section 015639 "Temporary Tree and Plant Protection" for protecting, trimming, pruning, repairing, and replacing existing trees to remain that interfere with, or are affected by, execution of the Work.
2. Section 329200 "Turf and Grasses" for turf (lawn) and meadow planting, hydroseeding, and erosion-control materials.
3. Section 329600 "Transplanting" for transplanting non-nursery-grown trees.

### 1.3 DEFINITIONS

A. Backfill: The earth used to replace or the act of replacing earth in an excavation.

B. Balled and Burlapped Stock: Plants dug with firm, natural balls of earth in which they were grown, with a ball size not less than diameter and depth recommended by ANSI Z60.1 for type and size of plant required; wrapped with burlap, tied, rigidly supported, and drum laced with twine with the root flare visible at the surface of the ball as recommended by ANSI Z60.1.

C. Balled and Potted Stock: Plants dug with firm, natural balls of earth in which they are grown and placed, unbroken, in a container. Ball size is not less than diameter and depth recommended by ANSI Z60.1 for type and size of plant required.

D. Bare-Root Stock: Plants with a well-branched, fibrous-root system developed by transplanting or root pruning, with soil or growing medium removed, and with not less than the minimum root spread according to ANSI Z60.1 for type and size of plant required.

E. Container-Grown Stock: Healthy, vigorous, well-rooted plants grown in a container, with a well-established root system reaching sides of container and maintaining a firm ball when removed from container. Container shall be rigid enough to hold ball shape and protect root mass during shipping and be sized according to ANSI Z60.1 for type and size of plant required.

F. Fabric Bag-Grown Stock: Healthy, vigorous, well-rooted plants established and grown in-ground in a porous fabric bag with well-established root system reaching sides of fabric bag. Fabric bag size is not less than diameter, depth, and volume required by ANSI Z60.1 for type and size of plant.

G. Finish Grade: Elevation of finished surface of planting soil.

H. Pesticide: A substance or mixture intended for preventing, destroying, repelling, or mitigating a pest. Pesticides include insecticides, miticides, herbicides, fungicides, rodenticides, and molluscicides. They also include substances or mixtures intended for use as a plant regulator, defoliant, or desiccant. Some sources classify herbicides separately from pesticides.

I. Pests: Living organisms that occur where they are not desired or that cause damage to plants, animals, or people. Pests include insects, mites, grubs, mollusks (snails and slugs), rodents (gophers, moles, and mice), unwanted plants (weeds), fungi, bacteria, and viruses.

J. Planting Area: Areas to be planted.

K. Planting Soil: Existing, on-site soil; imported soil; or manufactured soil that has been modified with soil amendments and perhaps fertilizers to produce a soil mixture best for plant growth. See Section 329113 "Soil Preparation" for drawing designations for planting soils.

L. Plant; Plants; Plant Material: These terms refer to vegetation in general, including trees, shrubs, vines, ground covers, ornamental grasses, bulbs, corms, tubers, or herbaceous vegetation.

M. Root Flare: Also called "trunk flare." The area at the base of the plant's stem or trunk where the stem or trunk broadens to form roots; the area of transition between the root system and the stem or trunk.

N. Stem Girdling Roots: Roots that encircle the stems (trunks) of trees below the soil surface.

O. Subgrade: The surface or elevation of subsoil remaining after excavation is complete, or the top surface of a fill or backfill before planting soil is placed.

## 1.4 COORDINATION

A. Coordination with Turf Areas (Lawns): Plant trees, shrubs, and other plants after finish grades are established and before planting turf areas unless otherwise indicated.

1. When planting trees, shrubs, and other plants after planting turf areas, protect turf areas, and promptly repair damage caused by planting operations.

## 1.5 PREINSTALLATION MEETINGS

A. Preinstallation Conference: Conduct conference prior to planting installation at 10 Hillside Road, Greenwich, CT 06830

## 1.6 ACTION SUBMITTALS

A. Product Data: For each type of product.

1. Plant Materials: Include quantities, sizes, quality, and sources for plant materials.

2. Plant Photographs: Include color photographs in digital format of each required species and size of plant material as it will be furnished to Project. Take photographs from an angle depicting true size and condition of the typical plant to be furnished. Include a scale rod or other measuring device in each photograph. For species where more than 10 plants are required, include a minimum of three photographs showing the average plant, the best quality plant, and the worst quality plant to be furnished. Identify each photograph with the full scientific name of the plant, plant size, and name of the growing nursery.

B. Samples for Verification: For each of the following:

1. Trees and Shrubs: Samples of each variety and size delivered to site for review. Maintain approved Samples on-site as a standard for comparison.
2. Mulch: 1-quart volume of each organic mulch required; in sealed plastic bags labeled with composition of materials by percentage of weight and source of mulch. Each Sample shall be typical of the lot of material to be furnished; provide an accurate representation of color, texture, and organic makeup.
3. Weed Control Barrier: 12 by 12 inches.
4. Slow-Release, Tree-Watering Device: One unit of each size required.
5. Edging Materials and Accessories: Manufacturer's standard size, to verify color selected.
6. Root Barrier: Width of panel by 12 inches.

## 1.7 INFORMATIONAL SUBMITTALS

A. Qualification Data: For landscape Installer. Include list of similar projects completed by Installer demonstrating Installer's capabilities and experience. Include project names, addresses, and year completed, and include names and addresses of owners' contact persons.

B. Product Certificates: For each type of manufactured product, from manufacturer, and complying with the following:

1. Manufacturer's certified analysis of standard products.
2. Analysis of other materials by a recognized laboratory made according to methods established by the Association of Official Analytical Chemists, where applicable.

C. Pesticides and Herbicides: Product label and manufacturer's application instructions specific to Project.

D. Sample Warranty: For special warranty.

## 1.8 CLOSEOUT SUBMITTALS

A. Maintenance Data: Recommended procedures to be established by Owner for maintenance of plants during a calendar year. Submit before expiration of required maintenance periods.

## 1.9 QUALITY ASSURANCE

A. Installer Qualifications: A qualified landscape installer whose work has resulted in successful establishment of plants.

1. Professional Membership: Installer shall be a member in good standing of either the National Association of Landscape Professionals or AmericanHort.

2. Experience: Five years experience in landscape installation in addition to requirements in Section 014000 "Quality Requirements."
3. Installer's Field Supervision: Require Installer to maintain an experienced full-time supervisor on Project site when work is in progress.
4. Personnel Certifications: Installer's shall have certification in the following categories from the National Association of Landscape Professionals:

    a. Landscape Industry Certified Technician - Exterior.
    b. Landscape Industry Certified Horticultural Technician.

5. Pesticide Applicator: State licensed, commercial.

B. Provide quality, size, genus, species, and variety of plants indicated, complying with applicable requirements in ANSI Z60.1.

1. Landscape Architect may require personal tagging of plants at their place of growth before they are prepared for transplanting.

C. Measurements: Measure according to ANSI Z60.1. Do not prune to obtain required sizes.

1. Trees and Shrubs: Measure with branches and trunks or canes in their normal position. Take height measurements from or near the top of the root flare for field-grown stock and container-grown stock. Measure main body of tree or shrub for height and spread; do not measure branches or roots tip to tip. Take caliper measurements 6 inches above the root flare for trees up to 4-inch caliper size, and 12 inches above the root flare for larger sizes.
2. Other Plants: Measure with stems, petioles, and foliage in their normal position.

D. Plant Material Observation: Architect may observe plant material either at place of growth or at site before planting for compliance with requirements for genus, species, variety, cultivar, size, and quality. Architect may also observe trees and shrubs further for size and condition of balls and root systems, pests, disease symptoms, injuries, and latent defects and may reject unsatisfactory or defective material at any time during progress of work. Remove rejected trees or shrubs immediately from Project site.

1. Notify Architect of sources of planting materials seven days in advance of delivery to site.

## 1.10 DELIVERY, STORAGE, AND HANDLING

A. Packaged Materials: Deliver packaged materials in original, unopened containers showing weight, certified analysis, name and address of manufacturer, and indication of compliance with state and Federal laws if applicable.

B. Bulk Materials:

1. Do not dump or store bulk materials near structures, utilities, walkways and pavements, or on existing turf areas or plants.
2. Provide erosion-control measures to prevent erosion or displacement of bulk materials; discharge of soil-bearing water runoff; and airborne dust reaching adjacent properties, water conveyance systems, or walkways.
3. Accompany each delivery of bulk materials with appropriate certificates.

C. Deliver bare-root stock plants within 24 hours of digging. Immediately after digging up bare-root stock, pack root system in wet straw, hay, or other suitable material to keep root system moist

until planting. Transport in covered, temperature-controlled vehicles, and keep plants cool and protected from sun and wind at all times.

D. Do not prune trees and shrubs before delivery. Protect bark, branches, and root systems from sun scald, drying, wind burn, sweating, whipping, and other handling and tying damage. Do not bend or bind-tie trees or shrubs in such a manner as to destroy their natural shape. Provide protective covering of plants during shipping and delivery. Do not drop plants during delivery and handling.

E. Handle planting stock by root ball.

F. Store bulbs, corms, and tubers in a dry place at 60 to 65 deg F until planting.

G. Apply antidesiccant to trees and shrubs using power spray to provide an adequate film over trunks (before wrapping), branches, stems, twigs, and foliage to protect during digging, handling, and transportation.

1. If deciduous trees or shrubs are moved in full leaf, spray with antidesiccant at nursery before moving and again two weeks after planting.

H. Wrap trees and shrubs with burlap fabric over trunks, branches, stems, twigs, and foliage to protect from wind and other damage during digging, handling, and transportation.

I. Deliver plants after preparations for planting have been completed, and install immediately. If planting is delayed more than six hours after delivery, set plants and trees in their appropriate aspect (sun, filtered sun, or shade), protect from weather and mechanical damage, and keep roots moist.

1. Heel-in bare-root stock. Soak roots that are in less than moist condition in water for two hours. Reject plants with dry roots.
2. Set balled stock on ground and cover ball with soil, peat moss, sawdust, or other acceptable material.
3. Do not remove container-grown stock from containers before time of planting.
4. Water root systems of plants stored on-site deeply and thoroughly with a fine-mist spray. Water as often as necessary to maintain root systems in a moist, but not overly wet condition.

## 1.11 FIELD CONDITIONS

A. Field Measurements: Verify actual grade elevations, service and utility locations, irrigation system components, and dimensions of plantings and construction contiguous with new plantings by field measurements before proceeding with planting work.

B. Planting Restrictions: Plant during one of the following periods. Coordinate planting periods with maintenance periods to provide required maintenance from date of Substantial Completion.

1. Spring Planting: 3/15-6/15.
2. Fall Planting: 8/25-11/15.

C. Weather Limitations: Proceed with planting only when existing and forecasted weather conditions permit planting to be performed when beneficial and optimum results may be obtained. Apply products during favorable weather conditions according to manufacturer's written instructions and warranty requirements.

1.12 WARRANTY

A. Special Warranty: Installer agrees to repair or replace plantings and accessories that fail in materials, workmanship, or growth within specified warranty period.

1. Failures include, but are not limited to, the following:

a. Death and unsatisfactory growth, except for defects resulting from abuse, lack of adequate maintenance, or neglect by Owner.
b. Structural failures including plantings falling or blowing over.
c. Deterioration of metals, metal finishes, and other materials beyond normal weathering.

2. Warranty Periods: From date of projects completion.

a. Trees, Shrubs, Vines, and Ornamental Grasses: 12 months.
b. Ground Covers, Biennials, Perennials, and Other Plants: 12 months.

3. Include the following remedial actions as a minimum:

a. Immediately remove dead plants and replace unless required to plant in the succeeding planting season.
b. Replace plants that are more than 25 percent dead or in an unhealthy condition at end of warranty period.
c. A limit of one replacement of each plant is required except for losses or replacements due to failure to comply with requirements.
d. Provide extended warranty for period equal to original warranty period, for replaced plant material.

PART 2 - PRODUCTS

2.1 PLANT MATERIAL

A. General: Furnish nursery-grown plants true to genus, species, variety, cultivar, stem form, shearing, and other features indicated in Plant List, Plant Schedule, or Plant Legend indicated on Drawings and complying with ANSI Z60.1; and with healthy root systems developed by transplanting or root pruning. Provide well-shaped, fully branched, healthy, vigorous stock, densely foliated when in leaf and free of disease, pests, eggs, larvae, and defects such as knots, sun scald, injuries, abrasions, and disfigurement.

1. Trees with damaged, crooked, or multiple leaders; tight vertical branches where bark is squeezed between two branches or between branch and trunk ("included bark"); crossing trunks; cut-off limbs more than 3/4 inch in diameter; or with stem girdling roots are unacceptable.
2. Collected Stock: Do not use plants harvested from the wild, from native stands, from an established landscape planting, or not grown in a nursery unless otherwise indicated.

B. Provide plants of sizes, grades, and ball or container sizes complying with ANSI Z60.1 for types and form of plants required. Plants of a larger size may be used if acceptable to Architect, with a proportionate increase in size of roots or balls.

C. Root-Ball Depth: Furnish trees and shrubs with root balls measured from top of root ball, which begins at root flare according to ANSI Z60.1. Root flare shall be visible before planting.

D. Labeling: Label each plant of each variety, size, and caliper with a securely attached, waterproof tag bearing legible designation of common name and full scientific name, including genus and species. Include nomenclature for hybrid, variety, or cultivar, if applicable for the plant.

E. If formal arrangements or consecutive order of plants is indicated on Drawings, select stock for uniform height and spread, and number the labels to assure symmetry in planting.

## 2.2 MULCHES

A. Organic Mulch: Free from deleterious materials and suitable as a top dressing of trees and shrubs, consisting of one of the following:

1. Type: 100% fine-shredded pine bark.
2. Size Range: 3 inches maximum, 1/2 inch minimum, uniform in size.
3. Color: Natural.

B. Compost Mulch: Well-composted, stable, and weed-free organic matter, pH of 5.5 to 8; moisture content 35 to 55 percent by weight; 100 percent passing through a 1-inch sieve; soluble-salt content of 2 to 5 dS/m; not exceeding 0.5 percent inert contaminants and free of substances toxic to plantings; and as follows:

1. Organic Matter Content: 50 to 60 percent of dry weight.
2. Feedstock: Agricultural, food, or industrial residuals; biosolids; yard trimmings; or source-separated or compostable mixed solid waste.

## 2.3 WEED-CONTROL BARRIERS

A. Nonwoven Geotextile Filter Fabric: Polypropylene or polyester fabric, 3 oz./sq. yd. minimum, composed of fibers formed into a stable network so that fibers retain their relative position. Fabric shall be inert to biological degradation and resist naturally encountered chemicals, alkalis, and acids.

## 2.4 PESTICIDES

A. General: Pesticide registered and approved by the EPA, acceptable to authorities having jurisdiction, and of type recommended by manufacturer for each specific problem and as required for Project conditions and application. Do not use restricted pesticides unless authorized in writing by authorities having jurisdiction.

B. Pre-Emergent Herbicide (Selective and Nonselective): Effective for controlling the germination or growth of weeds within planted areas at the soil level directly below the mulch layer.

C. Post-Emergent Herbicide (Selective and Nonselective): Effective for controlling weed growth that has already germinated.

## 2.5 TREE-STABILIZATION MATERIALS

A. Trunk-Stabilization Materials:

1. Upright and Guy Stakes: Rough-sawn, sound, new hardwood, free of knots, holes, cross grain, and other defects, 2-by-2-inch nominal by length indicated, pointed at one end.
2. Wood Deadmen: Timbers measuring 8 inches in diameter and 48 inches long, treated with specified wood pressure-preservative treatment.
3. Flexible Ties: Wide rubber or elastic bands or straps of length required to reach stakes or turnbuckles.
4. Guys and Tie Wires: ASTM A641/A641M, Class 1, galvanized-steel wire, two-strand, twisted, 0.106 inch in diameter.
5. Tree-Tie Webbing: UV-resistant polypropylene or nylon webbing with brass grommets.
6. Guy Cables: Five-strand, 3/16-inch-diameter, galvanized-steel cable, with zinc-coated turnbuckles or compression springs, a minimum of 3 inches long, with two 3/8-inch galvanized eyebolts.
7. Flags: Standard surveyor's plastic flagging tape, white, 6 inches long.
8. Proprietary Staking-and-Guying Devices: Proprietary stake or anchor and adjustable tie systems to secure each new planting by plant stem; sized as indicated and according to manufacturer's written recommendations.

## 2.6 LANDSCAPE EDGINGS

A. Steel Edging: Standard commercial-steel edging, fabricated in sections of standard lengths, with loops stamped from or welded to face of sections to receive stakes.

1. Steel Landscaping Edger (Duraedge), as manufactured by J D Russell Company, website: www.jdrussellco.com, tel: (586) 254-8500, or equal approved by L.A.
2. Edging Size: 1/4 inch (6.4 mm) thick by 5 inches (125 mm) deep.
3. Stakes: Tapered steel, a minimum of 15 inches (380 mm) long.
4. Accessories: Standard tapered ends, corners, and splicers.
5. Finish: Manufacturer's standard paint.

    a. Paint Color: Black.

## 2.7 TREE-WATERING DEVICES

A. Slow-Release Watering Device: Standard product manufactured for drip irrigation of plants and emptying its water contents over an extended time period; manufactured from UV-light-stabilized nylon-reinforced polyethylene sheet, PVC, or HDPE plastic.
1. Color: As selected by Architect from manufacturer's full range.

## 2.8 MISCELLANEOUS PRODUCTS

A. Wood Pressure-Preservative Treatment: AWPA U1, Use Category UC4a; acceptable to authorities having jurisdiction, and containing no arsenic or chromium.

B. Root Barrier: Black, molded, modular panels 18 inches to 24 inches high (deep), 85 mils thick, and with vertical root deflecting ribs protruding 3/4 inch out from panel surface; manufactured with minimum 50 percent recycled polyethylene plastic with UV inhibitors.

C. Antidesiccant: Water-insoluble emulsion, permeable moisture retarder, film forming, for trees and shrubs. Deliver in original, sealed, and fully labeled containers and mix according to manufacturer's written instructions.

D. Burlap: Non-synthetic, biodegradable.

E. Planter Drainage Gravel: Washed, sound crushed stone or gravel complying with ASTM D448 for Size No. 8.

F. Planter Filter Fabric: Nonwoven geotextile manufactured for separation applications and made of polypropylene, polyolefin, or polyester fibers or combination of them.

G. Mycorrhizal Fungi: Dry, granular inoculant containing at least 5300 spores per lb of vesicular-arbuscular mycorrhizal fungi and 95 million spores per lb of ectomycorrhizal fungi, 33 percent hydrogel, and a maximum of 5.5 percent inert material.

## PART 3 - EXECUTION

### 3.1 EXAMINATION

A. Examine areas to receive plants, with Installer present, for compliance with requirements and conditions affecting installation and performance of the Work.

1. Verify that no foreign or deleterious material or liquid such as paint, paint washout, concrete slurry, concrete layers or chunks, cement, plaster, oils, gasoline, diesel fuel, paint thinner, turpentine, tar, roofing compound, or acid has been deposited in soil within a planting area.
2. Verify that plants and vehicles loaded with plants can travel to planting locations with adequate overhead clearance.
3. Suspend planting operations during periods of excessive soil moisture until the moisture content reaches acceptable levels to attain the required results.
4. Uniformly moisten excessively dry soil that is not workable or which is dusty.

B. If contamination by foreign or deleterious material or liquid is present in soil within a planting area, remove the soil and contamination as directed by Architect and replace with new planting soil.

C. Proceed with installation only after unsatisfactory conditions have been corrected.

### 3.2 PREPARATION

A. Protect structures, utilities, sidewalks, pavements, and other facilities and turf areas and existing plants from damage caused by planting operations.

B. Install erosion-control measures to prevent erosion or displacement of soils and discharge of soil-bearing water runoff or airborne dust to adjacent properties and walkways.

C. Lay out individual tree and shrub locations and areas for multiple plantings. Stake locations, outline areas, adjust locations when requested, and obtain Architect's acceptance of layout before excavating or planting. Make minor adjustments as required.

D. Lay out plants at locations directed by Architect. Stake locations of individual trees and shrubs and outline areas for multiple plantings.

## 3.3 PLANTING AREA ESTABLISHMENT

A. General: Prepare planting area for soil placement and mix planting soil according to Section 329113 "Soil Preparation."

B. Placing Planting Soil: Place and mix planting soil in-place over exposed subgrade.

C. Before planting, obtain Architect's acceptance of finish grading; restore planting areas if eroded or otherwise disturbed after finish grading.

D. Application of Mycorrhizal Fungi: At time directed by Architect, broadcast dry product uniformly over prepared soil at application rate according to manufacturer's written recommendations.

## 3.4 EXCAVATION FOR TREES AND SHRUBS

A. Planting Pits and Trenches: Excavate circular planting pits.

1. Excavate planting pits with sides sloping inward at a 45-degree angle. Excavations with vertical sides are unacceptable. Trim perimeter of bottom leaving center area of bottom raised slightly to support root ball and assist in drainage away from center. Do not further disturb base. Ensure that root ball will sit on undisturbed base soil to prevent settling. Scarify sides of planting pit smeared or smoothed during excavation.
2. Excavate approximately three times as wide as ball diameter for balled and burlapped stock.
3. Excavate at least 12 inches wider than root spread and deep enough to accommodate vertical roots for bare-root stock.
4. Do not excavate deeper than depth of the root ball, measured from the root flare to the bottom of the root ball.
5. If area under the plant was initially dug too deep, add soil to raise it to the correct level and thoroughly tamp the added soil to prevent settling.
6. Maintain angles of repose of adjacent materials to ensure stability. Do not excavate subgrades of adjacent paving, structures, hardscapes, or other new or existing improvements.
7. Maintain supervision of excavations during working hours.
8. Keep excavations covered or otherwise protected when unattended by Installer's personnel.
9. If drain tile is indicated on Drawings or required under planting areas, excavate to top of porous backfill over tile.

B. Backfill Soil: Subsoil and topsoil removed from excavations may be used as backfill soil unless otherwise indicated.

C. Obstructions: Notify Architect if unexpected rock or obstructions detrimental to trees or shrubs are encountered in excavations.

1. Hardpan Layer: Drill 6-inch-diameter holes, 24 inches apart, into free-draining strata or to a depth of 10 feet, whichever is less, and backfill with free-draining material.

D. Drainage: Notify Architect if subsoil conditions evidence unexpected water seepage or retention in tree or shrub planting pits.

E. Fill excavations with water and allow to percolate away before positioning trees and shrubs.

3.5 TREE, SHRUB, AND VINE PLANTING

A. Inspection: At time of planting, verify that root flare is visible at top of root ball according to ANSI Z60.1. If root flare is not visible, remove soil in a level manner from the root ball to where the top-most root emerges from the trunk. After soil removal to expose the root flare, verify that root ball still meets size requirements.

B. Roots: Remove stem girdling roots and kinked roots. Remove injured roots by cutting cleanly; do not break.

C. Balled and Burlapped Stock: Set each plant plumb and in center of planting pit or trench with root flare 2 inches minimum above adjacent finish grades.

1. Backfill: Planting soil. For trees, use excavated soil for backfill.
2. After placing some backfill around root ball to stabilize plant, carefully cut and remove burlap, rope, and wire baskets from tops of root balls and from sides, but do not remove from under root balls. Remove pallets, if any, before setting. Do not use planting stock if root ball is cracked or broken before or during planting operation.
3. Backfill around root ball in layers, tamping to settle soil and eliminate voids and air pockets. When planting pit is approximately one-half filled, water thoroughly before placing remainder of backfill. Repeat watering until no more water is absorbed.
4. Place planting tablets equally distributed around each planting pit when pit is approximately one-half filled. Place tablets beside the root ball about 1 inch from root tips; do not place tablets in bottom of the hole.

    a. Quantity: According to manufacturer's written instructions.

5. Continue backfilling process. Water again after placing and tamping final layer of soil.

D. Potted and Container-Grown Stock: Set each plant plumb and in center of planting pit or trench with root flare 1 to 2 inches minimum above adjacent finish grades.

1. Backfill: Planting soil.
2. Carefully remove root ball from container without damaging root ball or plant.
3. Backfill around root ball in layers, tamping to settle soil and eliminate voids and air pockets. When planting pit is approximately one-half filled, water thoroughly before placing remainder of backfill. Repeat watering until no more water is absorbed.
4. Place planting tablets equally distributed around each planting pit when pit is approximately one-half filled. Place tablets beside the root ball about 1 inch from root tips; do not place tablets in bottom of the hole.

    a. Quantity: According to manufacturer's written instructions.

5. Continue backfilling process. Water again after placing and tamping final layer of soil.

E. Fabric Bag-Grown Stock: Set each plant plumb and in center of planting pit or trench with root flare 1 to 2 inches minimum above adjacent finish grades.

1. Backfill: Planting soil. For trees, use excavated soil for backfill.
2. Carefully remove root ball from fabric bag without damaging root ball or plant. Do not use planting stock if root ball is cracked or broken before or during planting operation.
3. Backfill around root ball in layers, tamping to settle soil and eliminate voids and air pockets. When planting pit is approximately one-half filled, water thoroughly before placing remainder of backfill. Repeat watering until no more water is absorbed.

4. Place planting tablets equally distributed around each planting pit when pit is approximately one-half filled. Place tablets beside the root ball about 1 inch from root tips; do not place tablets in bottom of the hole.

    a. Quantity: According to manufacturer's written instructions.

5. Continue backfilling process. Water again after placing and tamping final layer of soil.

F. Bare-Root Stock: Set and support each plant in center of planting pit or trench with root flare 1 to 2 inches minimum above adjacent finish grade.

1. Backfill: Planting soil.
2. Spread roots without tangling or turning toward surface. Plumb before backfilling, and maintain plumb while working.
3. Carefully work backfill in layers around roots by hand. Bring roots into close contact with the soil.
4. When planting pit is approximately one-half filled, water thoroughly before placing remainder of backfill. Repeat watering until no more water is absorbed.
5. Place planting tablets equally distributed around each planting pit when pit is approximately one-half filled. Place tablets beside soil-covered roots about 1 inch from root tips; do not place tablets in bottom of the hole or touching the roots.

    a. Quantity: According to manufacturer's written instructions.

6. Continue backfilling process. Water again after placing and tamping final layer of soil.

G. Slopes: When planting on slopes, set the plant so the root flare on the uphill side is flush with the surrounding soil on the slope; the edge of the root ball on the downhill side will be above the surrounding soil. Apply enough soil to cover the downhill side of the root ball.

## 3.6 MECHANIZED TREE-SPADE PLANTING

A. Transplanted tree(s) shall be planted with an approved mechanized tree spade at the designated locations. Do not use tree spade to move trees larger than the maximum size allowed for a similar field-grown, balled-and-burlapped root-ball diameter according to ANSI Z60.1, or larger than manufacturer's maximum size recommendation for the tree spade being used, whichever is smaller.

B. Use the same tree spade to excavate the planting hole as will be used to extract and transport the tree.

C. When extracting the tree, center the trunk within the tree spade and move tree with a solid ball of earth.

D. Cut exposed roots cleanly during transplanting operations.

E. Plant trees following procedures in "Tree, Shrub, and Vine Planting" Article.

F. Where possible, orient the tree in the same direction as in its original location.

## 3.7 TREE, SHRUB, AND VINE PRUNING

A. Remove only dead, dying, or broken branches. Do not prune for shape.

B. Prune, thin, and shape trees, shrubs, and vines as directed by Architect.

C. Prune, thin, and shape trees, shrubs, and vines according to standard professional horticultural and arboricultural practices. Unless otherwise indicated by Architect, do not cut tree leaders; remove only injured, dying, or dead branches from trees and shrubs; and prune to retain natural character.

D. Do not apply pruning paint to wounds.

## 3.8 TREE STABILIZATION

A. Trunk Stabilization by Upright Staking and Tying: Install trunk stabilization as follows unless otherwise indicated:

1. Upright Staking and Tying:

   a. Stake trees of 2- through 5-inch (50- through 125-mm) caliper. Stake trees of less than 2-inch (50-mm) caliper only as required to prevent wind tip out. Use a minimum of two stakes of length required to penetrate at least 18 inches (450 mm) below bottom of backfilled excavation and to extend one-third of trunk height above grade. Set vertical stakes and space to avoid penetrating root balls or root masses.
   b. Stake trees with two stakes for trees up to 12 feet (3.6 m) high and 2-1/2 inches (63 mm) or less in caliper; three stakes for trees less than 14 feet (4.2 m) high and up to 4 inches (100 mm) in caliper. Space stakes equally around trees.

2. Support trees with bands of flexible ties at contact points with tree trunk. Allow enough slack to avoid rigid restraint of tree.
3. Support trees with two strands of tie wire, connected to the brass grommets of tree-tie webbing at contact points with tree trunk. Allow enough slack to avoid rigid restraint of tree.

B. Trunk Stabilization by Staking and Guying: Install trunk stabilization as follows unless otherwise indicated on Drawings. Stake and guy trees more than 14 feet (4.2 m) in height and more than 3 inches (75 mm) in caliper unless otherwise indicated.

1. Site-Fabricated, Staking-and-Guying Method: Install no fewer than three guys spaced equally around tree.

   a. Securely attach guys to stakes 30 inches (760 mm) long, driven to grade. Adjust spacing to avoid penetrating root balls or root masses. Provide turnbuckle or compression spring for each guy wire and tighten securely.
   b. For trees more than 6 inches (150 mm) in caliper, anchor guys to wood deadmen buried at least 36 inches (900 mm) below grade. Provide turnbuckle or compression spring for each guy wire and tighten securely.
   c. Support trees with bands of flexible ties at contact points with tree trunk and reaching to turnbuckle or compression spring. Allow enough slack to avoid rigid restraint of tree.
   d. Support trees with guy cable or multiple strands of tie wire, connected to the brass grommets of tree-tie webbing at contact points with tree trunk and reaching to turnbuckle or compression spring. Allow enough slack to avoid rigid restraint of tree.
   e. Attach flags to each guy wire, 30 inches (760 mm) above finish grade.
   f. Paint turnbuckles or compression springs with luminescent white paint.

2. Proprietary Staking and Guying Device: Install staking and guying system sized and positioned as recommended by manufacturer unless otherwise indicated and according to manufacturer's written instructions.

C. Root-Ball Stabilization: Install at- or below-grade stabilization system to secure each new planting by the root ball unless otherwise indicated.

1. Wood Hold-Down Method: Place vertical stakes against side of root ball and drive them into subsoil; place horizontal wood hold-down stake across top of root ball and screw at each end to one of the vertical stakes.

a. Install stakes of length required to penetrate at least 18 inches (450 mm) below bottom of backfilled excavation. Saw stakes off at horizontal stake.
b. Install screws through horizontal hold-down and penetrating at least 1 inch (25 mm) into stakes. Predrill holes if necessary to prevent splitting wood.
c. Install second set of stakes on other side of root trunk for larger trees.

2. Proprietary Root-Ball Stabilization Device: Install root-ball stabilization system sized and positioned as recommended by manufacturer unless otherwise indicated and according to manufacturer's written instructions.

D. Palm Bracing: Install bracing system at three or more places equally spaced around perimeter of trunk to secure each palm until established unless otherwise indicated.

1. Site-Fabricated Palm-Bracing Method:

a. Place battens over padding and secure battens in place around trunk perimeter with at least two straps, tightened to prevent displacement. Ensure that straps do not contact trunk.
b. Place diagonal braces and cut to length. Secure upper ends of diagonal braces with galvanized nails into battens or into nail-attached blocks on battens. Do not drive nails, screws, or other securing devices into palm trunk; do not penetrate palm trunk in any fashion. Secure lower ends of diagonal braces with stakes driven into ground to prevent outward slippage of braces.

2. Proprietary Palm-Bracing Device: Install palm-bracing system sized and positioned as recommended by manufacturer unless otherwise indicated and according to manufacturer's written instructions.

## 3.9 INSTALLATION OF ROOT BARRIER

A. Install root barrier where trees are planted within 48 inches of paving or other hardscape elements, such as walls, curbs, and walkways, unless otherwise indicated on Drawings.

B. Align root barrier with bottom edge angled at 20 degrees away from the paving or other hardscape element, and run it linearly along and adjacent to the paving or other hardscape elements to be protected from invasive roots.

C. Install root barrier continuously for a distance of 60 inches in each direction from the tree trunk, for a total distance of 10 feet per tree. If trees are spaced closer, use a single continuous piece of root barrier.

1. Position top of root barrier according to manufacturer's written recommendations.
2. Overlap root barrier a minimum of 12 inches at joints.

3. Do not distort or bend root barrier during construction activities.
4. Do not install root barrier surrounding the root ball of tree.

## 3.10 GROUND COVER AND PLANT PLANTING

A. Set out and space ground cover and plants other than trees, shrubs, and vines as indicated on Drawings in even rows with triangular spacing.

B. Use planting soil for backfill.

C. Dig holes large enough to allow spreading of roots.

D. For rooted cutting plants supplied in flats, plant each in a manner that minimally disturbs the root system but to a depth not less than two nodes.

E. Work soil around roots to eliminate air pockets and leave a slight saucer indentation around plants to hold water.

F. Water thoroughly after planting, taking care not to cover plant crowns with wet soil.

G. Protect plants from hot sun and wind; remove protection if plants show evidence of recovery from transplanting shock.

## 3.11 PLANTING AREA MULCHING

A. Install weed-control barriers before mulching according to manufacturer's written instructions. Completely cover area to be mulched, overlapping edges a minimum of 6 inches and secure seams with galvanized pins.

B. Mulch backfilled surfaces of planting areas and other areas indicated.

1. Trees in Turf Areas: Apply organic mulch ring of 3-inch average thickness, with 36-inch radius around trunks or stems. Do not place mulch within 3 inches of trunks or stems.
2. Organic Mulch in Planting Areas: Apply 3-inch average thickness of organic mulch over whole surface of planting area, and finish level with adjacent finish grades. Do not place mulch within 3 inches of trunks or stems.

## 3.12 INSTALLATION OF EDGING

A. Steel Edging: Install steel edging where indicated according to manufacturer's written instructions. Anchor with steel stakes spaced approximately 30 inches (760 mm) apart, driven below top elevation of edging.

## 3.13 INSTALLATION OF SLOW-RELEASE WATERING DEVICE

A. Provide one device for each tree.

B. Place device on top of the mulch at base of tree stem and fill with water according to manufacturer's written instructions.

## 3.14 PLANT MAINTENANCE

A. Maintain plantings by pruning, cultivating, watering, weeding, fertilizing, mulching, restoring planting saucers, adjusting and repairing tree-stabilization devices, resetting to proper grades or vertical position, and performing other operations as required to establish healthy, viable plantings.

B. Fill in, as necessary, soil subsidence that may occur because of settling or other processes. Replace mulch materials damaged or lost in areas of subsidence.

C. Apply treatments as required to keep plant materials, planted areas, and soils free of pests and pathogens or disease. Use integrated pest management practices when possible to minimize use of pesticides and reduce hazards. Treatments include physical controls such as hosing off foliage, mechanical controls such as traps, and biological control agents.

## 3.15 PESTICIDE APPLICATION

A. Apply pesticides and other chemical products and biological control agents according to authorities having jurisdiction and manufacturer's written recommendations. Coordinate applications with Owner's operations and others in proximity to the Work. Notify Owner before each application is performed.

B. Pre-Emergent Herbicides (Selective and Nonselective): Apply to tree, shrub, and ground-cover areas according to manufacturer's written recommendations. Do not apply to seeded areas.

C. Post-Emergent Herbicides (Selective and Nonselective): Apply only as necessary to treat already-germinated weeds and according to manufacturer's written recommendations.

## 3.16 REPAIR AND REPLACEMENT

A. General: Repair or replace existing or new trees and other plants that are damaged by construction operations, in a manner approved by Architect.

1. Submit details of proposed pruning and repairs.
2. Perform repairs of damaged trunks, branches, and roots within 24 hours, if approved.
3. Replace trees and other plants that cannot be repaired and restored to full-growth status, as determined by Architect.

B. Remove and replace trees that are more than 25 percent dead or in an unhealthy condition before the end of the corrections period or are damaged during construction operations that Architect determines are incapable of restoring to normal growth pattern.
1. Provide new tree(s) of equal or greater caliper size for each tree being replaced.
2. Species of Replacement Trees: Same species or approved equal by Architect.

## 3.17 CLEANING AND PROTECTION

A. During planting, keep adjacent paving and construction clean and work area in an orderly condition. Clean wheels of vehicles before leaving site to avoid tracking soil onto roads, walks, or other paved areas.

B. Remove surplus soil and waste material including excess subsoil, unsuitable soil, trash, and debris and legally dispose of them off Owner's property.

C. Protect plants from damage due to landscape operations and operations of other contractors and trades. Maintain protection during installation and maintenance periods. Treat, repair, or replace damaged plantings.

D. After installation and before Substantial Completion, remove nursery tags, nursery stakes, tie tape, labels, wire, burlap, and other debris from plant material, planting areas, and Project site.

E. At time of Substantial Completion, verify that tree-watering devices are in good working order and leave them in place. Replace improperly functioning devices.

3.18 MAINTENANCE SERVICE

A. Maintenance Service for Trees and Shrubs: Provide maintenance by skilled employees of landscape Installer. Maintain as required in "Plant Maintenance" Article. Begin maintenance immediately after plants are installed and continue until plantings are acceptably healthy and well established, but for not less than maintenance period below:

1. Maintenance Period: 12 months from date of projects completion.

B. Maintenance Service for Ground Cover and Other Plants: Provide maintenance by skilled employees of landscape Installer. Maintain as required in "Plant Maintenance" Article. Begin maintenance immediately after plants are installed and continue until plantings are acceptably healthy and well established, but for not less than maintenance period below:

1. Maintenance Period: 12 months from date of projects completion.

**END OF SECTION 32 93 00**

# SECTION 32 96 00

# TRANSPLANTING

## PART 1 - GENERAL

### 1.1 RELATED DOCUMENTS

A. Drawings and general provisions of the Contract, including General and Supplementary Conditions and Division 01 Specification Sections, apply to this Section.

### 1.2 SUMMARY

A. Section includes transplanting non-nursery-grown trees, by tree spade or digging and boxing.

B. Related Requirements:

1. Section 015639 "Temporary Tree and Plant Protection" for protecting, trimming, pruning, repairing, and replacing existing trees to remain that interfere with, or are affected by, execution of the Work.
2. Section 329300 "Plants" for new trees from nursery-grown sources.

### 1.3 DEFINITIONS

A. General: See definitions in ANSI A300 (Part 6) and in ANSI Z60.1 pertaining to field-grown trees, except as otherwise defined in this Section.

B. Caliper: Diameter of a trunk as measured by a diameter tape a height 6 inches above the root flair for trees up to, and including, 4-inch size at this height; and as measured at a height of 12 inches above the root flair for trees larger than 4-inch size.

C. Caliper (DBH): Diameter breast height; diameter of a trunk as measured by a diameter tape at a height 54 inches above the ground line for trees with caliper of 8 inches.

D. Root-Ball Depth: Measured from bottom of trunk flare to the bottom of root ball.

E. Root-Ball Width: Measured horizontally across the root ball with an approximately circular form or the least dimension for non-round root balls, not necessarily centered on the tree trunk, but within tolerance according to ANSI Z60.1.

F. Root Flare: Also called "trunk flare." The area at the base of the tree's stem or trunk where the stem or trunk broadens to form roots; the area of transition between the root system and the stem or trunk.

### 1.4 PREINSTALLATION MEETINGS

A. Preinstallation Conference: Conduct conference with Landscape Architect prior to transplanting trees at 10 Hillside Road, Greenwich, CT 06830

1. Review methods and procedures related to transplanting work include, but are not limited to, the following:

    a. Construction schedule. Verify availability of materials, personnel, equipment, and unimpeded access needed to make progress and avoid delays.
    b. Tree and plant protection.
    c. Tree maintenance.
    d. Arborist's responsibilities.

## 1.5 ACTION SUBMITTALS

A. Product Data: For each type of product.

B. Samples for Verification: For each of the following:

1. Weed-control barriers.
2. Proprietary Root-Ball-Stabilization Device: One unit.
3. Slow-Release Watering Device: One unit of each size required.

C. Pruning Schedule: Written schedule prepared by arborist detailing scope and extent of pruning each tree in preparation for and subsequent to transplanting.

1. Species and size of plant.
2. Location on site plan. Include unique identifier for each.
3. Reason for pruning.
4. Seasonal limitations on pruning.
5. Preparatory Pruning: Time schedule and description of preparatory pruning to be performed.

    a. Indicate time in months preceding the extraction of the tree.
    b. Indicate diameter of root ball and depth of root pruning for each tree.

6. Description of root and crown pruning during and subsequent to transplanting.
7. Description of maintenance following pruning.

## 1.6 INFORMATIONAL SUBMITTALS

A. Qualification Data: For qualified tree-service firm and arborist.

B. Certification: From arborist, certifying that transplanted trees have been protected during construction and that trees were promptly and properly treated and repaired when damaged.

C. Maintenance Recommendations: From arborist, recommended procedures to be established by Owner for care and protection of trees after completing the Work.

1. Submit before completing the Work.

D. Existing Conditions: Documentation of existing trees indicated to be transplanted, which establishes preconstruction conditions that might be misconstrued as damage caused by construction activities.

1. Use sufficiently detailed color photographs or video recordings. Color shall accurately depict hue condition of foliage and bark.

2. Include drawings and notations to indicate specific wounds and damage conditions of each tree designated to be transplanted.

E. Tree-Transplanting Program: Submit before work begins.

F. Sample Warranties: For special warranties.

G. Tree-maintenance reports.

## 1.7 QUALITY ASSURANCE

A. Tree-Service Firm Qualifications: An experienced landscaping contractor or tree-moving firm that has successfully completed transplanting work similar to that required for this Project and that will assign an experienced, qualified arborist to Project site during execution of the Work.

1. Arborist Qualifications: Certified Arborist shall be Licensed in jurisdiction where Project is located.

B. Tree-Transplanting Program: Prepare a written plan by arborist for transplanting trees for the whole Project, including each phase or process, tree maintenance, and protection of surrounding materials during operations. Describe in detail the materials, methods, and equipment to be used for each phase of the transplanting work.

1. Include transplanting times appropriate for each species at the Project location unless otherwise directed by arborist.
2. Include a transplanting schedule for each species to be transplanted, coordinated with the Project schedule.
3. Include site plans clearly marked to show tree-moving routes from extraction to planting locations. Indicate proposed equipment, weight, and turning radii.
4. Show details of temporary protective barriers where needed.
5. Include diagrams showing clearances to utility lines and other encumbrances along route.
6. Include care and maintenance provisions and eventual removal of tree stabilization.

## 1.8 DELIVERY, STORAGE, AND HANDLING

A. Packaged Materials: Deliver packaged materials in original, unopened containers showing weight, certified analysis, name and address of manufacturer, and indication of conformance with state and federal laws if applicable.

B. Bulk Materials:

1. Do not dump or store bulk materials near structures, utilities, walkways and pavements, or on existing turf areas or trees.
2. Provide erosion-control measures to prevent erosion or displacement of bulk materials, discharge of soil-bearing water runoff, and airborne dust reaching adjacent properties, water conveyance systems, or walkways.
3. Accompany each delivery with appropriate certificates.

C. Protect bark, branches, and root systems from sun scald, drying, wind burn, sweating, whipping, and other handling and tying damage. Do not bend or bind-tie trees in such a manner as to destroy their natural shape.

D. Completely cover foliage when transporting trees while they are in foliage.

E. Handle trees by root ball. Do not drop trees.

F. Move trees after preparations for planting have been completed, and install immediately. If planting is delayed more than six hours after moving, set trees in their appropriate aspect (sun, filtered sun, or shade), protect from weather and mechanical damage, and keep roots moist.

## 1.9 FIELD CONDITIONS

A. Field Measurements: Verify final grade elevations and final locations of trees and construction contiguous with trees by field measurements before proceeding with transplanting work. Perform transplanting only after finish grades are established.

B. Seasonal Restrictions: Transplant trees during seasonal periods as recommended by Certified Arborist.

C. Weather Limitations: Proceed with transplanting only when existing and forecasted weather conditions permit planting to be performed when beneficial and optimum results may be obtained. Do not transplant during excessively wet or frozen conditions. Apply products during favorable weather conditions according to manufacturer's written instructions and warranty requirements.

D. Coordination with Turf Areas (Lawns): Perform transplanting before planting turf areas unless otherwise indicated.

1. When transplanting after planting turf areas, protect turf areas, and promptly repair damage caused by transplanting operations.

E. Coordination with Planting Beds: Perform transplanting before planting bedded areas unless otherwise indicated.

1. When transplanting after planting bedded areas, protect bedding plants, and promptly repair damage caused by transplanting operations.

## 1.10 WARRANTY

A. Installer's Special Warranty: Tree-service firm agrees to repair or replace trees and related materials that fail within specified warranty period.

1. Failures include, but are not limited to, the following:

a. Death and unsatisfactory growth except for defects resulting from abuse, lack of adequate maintenance, or neglect by Owner, or incidents that are beyond Contractor's control.
b. Death and unsatisfactory growth is defined as more than 25 percent dead or in an unhealthy condition or failure to meet general performance requirements at end of warranty period.
c. Structural failures including trees falling or blowing over.
d. Faulty performance of materials and devices related to tree plantings including tree stabilization and watering devices.

2. Warranty Periods from Date of Transplanting Completion:

a. Trees: 12 months.

3. Include the following remedial actions as a minimum:

   a. Remove dead trees and trees with unsatisfactory growth at end of warranty period; replace when directed.
   b. A limit of one replacement of each tree will be required except for losses or replacements due to failure to comply with requirements.
   c. Replace materials and devices related to tree plantings.
   d. Provide extended warranty for period equal to original warranty period, for replaced trees.

1.11 MAINTENANCE SERVICE

A. Initial Maintenance Service: Provide tree maintenance by skilled employees of tree-service firm and as required in Part 3. Begin maintenance immediately after trees are installed and continue until plantings are healthy and well established but for not less than maintenance period below.

   1. Maintenance Period: 12 months from date of transplanting completion.

B. Continuing Maintenance Proposal: From tree-service firm to Owner, in the form of a standard yearly (or other period) maintenance agreement, starting on date initial maintenance service is concluded. State services, obligations, conditions, and terms for agreement period and for future renewal options.

PART 2 - PRODUCTS

2.1 PERFORMANCE REQUIREMENTS

A. General Performance: Transplanted trees shall be healthy and resume vigorous growth within two years of transplanting without dieback due to defective extracting, handling, planting, maintenance, or other defects in the Work.

2.2 PLANTING MATERIALS

A. Backfill Soil: Planting soil of suitable moisture content and granular texture for placing and compacting in planting pit around tree, and free of stones, roots, plants, sod, clods, clay lumps, pockets of coarse sand, concrete slurry, concrete layers or chunks, cement, plaster, building debris, and other extraneous materials harmful to plant growth.
   1. Planting Soil: Planting soil as specified in Section 329113 "Soil Preparation."

2.3 TREE-STABILIZATION MATERIALS

A. Trunk-Stabilization Materials:

   1. Upright and Guy Stakes: Rough-sawn, sound, new hardwood, free of knots, holes, cross grain, and other defects, 2-by-2-inch nominal by length indicated, pointed at one end.
   2. Wood Deadmen: Timbers measuring 8 inches in diameter and 48 inches long, treated with specified wood preservative treatment by pressure process.
   3. Flexible Ties: Wide rubber or elastic bands or straps.
   4. Guys and Tie Wires: ASTM A641/A641M, Class 1, galvanized-steel wire, two-strand, twisted, 0.106 inch in diameter.

5. Tree-Tie Webbing: UV-resistant polypropylene or nylon webbing with brass grommets.
6. Guy Cable: Five-strand, 3/16-inch-diameter, galvanized-steel cable, fitted with zinc-coated 3/8-inch galvanized eyebolts at ends.
7. Flags: Standard surveyor's plastic flagging tape, white, 6 inches long.

## 2.4 WATERING DEVICES

A. Slow-Release Watering Device: Standard product manufactured for drip-irrigation of plants and emptying its water contents over a period of 2 to 9 hours; manufactured from UV-light stabilized nylon-reinforced polyethylene sheet, PVC, or HDPE plastic.

## 2.5 MISCELLANEOUS PRODUCTS

A. Organic Mulch: 100% fine-shredded pine bark as specified in Section 329300 "Plants."

B. Antidesiccant: Water-insoluble emulsion, permeable moisture retarder, film forming, for trees. Deliver in original, sealed, and fully labeled containers and mix according to manufacturer's written instructions.

C. Burlap: Non-synthetic, biodegradable.

D. Pesticides: Pesticide registered and approved by EPA, acceptable to authorities having jurisdiction, and of type recommended in writing by manufacturer for each specific problem and as required for Project conditions and application. Do not use restricted pesticides unless authorized in writing by authorities having jurisdiction.

1. Pre-Emergent Herbicide (Selective and Non-Selective): Effective for controlling the germination or growth of weeds within planted areas at the soil level directly below the mulch layer.
2. Post-Emergent Herbicide (Selective and Non-Selective): Effective for controlling weed growth that has already germinated.

E. Planting Tablets: Tightly compressed chip type, long-lasting, slow-release, commercial-grade planting fertilizer in tablet form. Tablets shall break down with soil bacteria, converting nutrients into a form that can be absorbed by plant roots.

1. Size: According to manufacturer's written instructions.
2. Nutrient Composition: 20 percent nitrogen, 10 percent phosphorous, and 5 percent potassium, by weight plus micronutrients.

F. Weed-Control Barriers:

1. Nonwoven Geotextile Filter Fabric: Polypropylene or polyester fabric, 3 oz./sq. yd. minimum, composed of fibers formed into a stable network so that fibers retain their relative position. Fabric shall be inert to biological degradation and resist naturally encountered chemicals, alkalis, and acids.
2. Composite Fabric: Woven, needle-punched polypropylene substrate bonded to a nonwoven polypropylene fabric, 4.8 oz./sq. yd.

G. Wood Preservative Treatment by Pressure Process: AWPA U1; Use Category UC4a, using preservative chemicals acceptable to authorities having jurisdiction and containing no arsenic or chromium.

PART 3 - EXECUTION

3.1 TREE-TRANSPLANTING SPECIALIST

3.2 EXAMINATION

A. Erosion and Sedimentation Control: Examine the site to verify that temporary erosion- and sedimentation-control measures are in place. Verify that flows of water redirected from construction areas or generated by construction activity do not enter or cross transplanting areas.

B. For the record, prepare written report, endorsed by arborist, listing conditions detrimental to transplanting work and tree protection and health.

C. Proceed with transplanting only after unsatisfactory conditions have been corrected.

3.3 PREPARATION

A. Protect structures, utilities, sidewalks, pavements, other facilities, turf areas, and other plants and planting areas from damage caused by transplanting operations.

B. Utility Locator Service: Notify "Call Before You Dig" for area where Project is located before beginning excavation.

C. Locate and clearly identify trees for transplanting. Flag a 1-inch blue-vinyl tape around each tree at 54 inches above the ground.

D. Lay out individual transplant locations and areas for multiple plantings. Stake locations, outline areas, adjust locations when requested, and obtain Architect's acceptance of layout before transplanting. Make minor adjustments as required.

E. Apply antidesiccant to trees uniformly, using power spray to provide an adequate film over trunks (before wrapping), branches, stems, twigs, and foliage to protect during extracting, handling, and transportation.

1. If deciduous trees are moved in full leaf, spray with antidesiccant before extracting and again two weeks after transplanting.

F. Wrap trees with burlap fabric over trunks, branches, stems, twigs, and foliage to protect from wind and other damage during extracting, handling, and transporting.

3.4 PREPARATORY PRUNING

A. Root Pruning: Perform preparatory root pruning under direction of arborist as far in advance of extracting each tree as the Project Schedule allows.

1. Dig exploratory pits or trench by hand or with air spade around perimeter of tree at indicated root-ball width to determine locations of main lateral roots.
2. Dig trench by hand or with tree spade around perimeter of tree at indicated root-ball width to the depth of the root system. Do not use a backhoe or other equipment that rips, tears, or pulls roots.

3. Root-Ball Width: Minimum 9 inches of root-ball diameter, or least dimension for non-round root balls, for each inch of tree caliper being transplanted.
4. If encountering large, main lateral roots, expose roots beyond excavation limits as required to bend and redirect them without breaking.
5. Use narrow-tine spading forks to comb soil to expose roots with minimal damage to root system.
6. Cut exposed roots manually with sharp pruning instruments; do not break, tear, chop, or slant the cuts. Do not use a backhoe or other equipment that rips, tears, or pulls roots.
7. Do not paint or apply sealants on cut root ends.
8. Backfill trench with excavated soil.

B. Crown Pruning (Tip Pruning):

1. Do not perform preparatory crown pruning (tip pruning).
2. Perform preparatory crown pruning as directed by arborist. Follow procedures as specified in "Crown Pruning" Article.

## 3.5 EXCAVATION AND PLANTING EQUIPMENT

A. Tree Spade: Track-mounted mechanized tree mover; sized according to manufacturer's size recommendation for each tree being transplanted.

## 3.6 EXCAVATING PLANTING PITS

A. General: Excavate under supervision of the arborist.

1. Excavate planting pits or trenches with sides sloping. Trim perimeter of bottom leaving center area of bottom raised slightly to support root ball and assist in drainage away from center. Do not further disturb base. Ensure that root ball will sit on undisturbed base soil. Scarify sides of planting pit smeared or smoothed during excavation.
2. Excavate approximately three times as wide as root ball.
3. Keep excavations covered or otherwise protected until replanting trees.

B. Subsoil and topsoil removed from excavations may be used as planting soil.

C. Obstructions: Notify Architect if unexpected rock or obstructions detrimental to trees are encountered in excavations.

1. Hardpan Layer: Drill 6-inch-diameter holes, 24 inches apart, into free-draining strata or to a depth of 10 feet, whichever is less, and backfill with free-draining material.

D. Seepage: Notify Architect if subsoil conditions evidence unexpected water seepage into tree-planting pits.

E. Drainage: Fill planting pit or trench with 6 inches of water and time the infiltration rate of the soil. If the drainage rate is less than 0.25 inch per hour, notify Architect to determine need for subsurface drainage.

F. Saline or Sodic Soils: Completely fill excavations with water and allow to percolate away before positioning trees.

## 3.7 EXTRACTING TREES

A. General: Extract trees under supervision of the arborist.

B. Orientation Marking: Mark the north side of each tree with non-permanent paint before extracting.

C. Root-Ball Width: Minimum 10 inches of root-ball diameter, or least dimension for non-round root balls, for each inch of tree caliper being transplanted.

1. Out-of-Season Planting: If planting before or after the in-season period for tree, provide a minimum root-ball diameter of 12 inches for each inch of tree caliper being transplanted.

D. Root-Ball Depth: As determined by the arborist for each species and size of tree and for site conditions at original and planting locations.

E. Digging:

1. Dig and clear a pit by hand or with tree spade to the depth of the root system. Do not use a backhoe or other equipment that rips, tears, or pulls roots.
2. Use narrow-tine spading forks to comb soil to expose roots with minimal damage to root system.
3. If encountering large, main lateral roots, expose roots beyond excavation limits as required to bend and redirect them without breaking.
4. Cut exposed roots manually with sharp pruning instruments; do not break, tear, chop, or slant the cuts. Do not paint or apply sealants on cut root ends.
5. Construct box tight against root system sides and bottom as pit is dug. Brace and support box to prevent breaking of root ball.
6. Temporarily support and protect exposed roots from damage until they are permanently redirected and covered with soil. Cover roots with burlap and keep them moist until planted.

F. Extracting with Tree Spade: Use the same tree spade to extract the tree as will be used to transport and plant the tree.

1. Do not use tree spade to move trees larger than the manufacturer's maximum size recommendation for the tree spade being used.
2. When extracting the tree, center the trunk within the tree spade and move tree with a solid ball of earth.

## 3.8 PLANTING

A. Planting Standard: Perform planting according to ANSI A300 (Part 6) unless otherwise indicated.

B. Before planting, verify that root flare is visible at top of root ball. If root flare is not visible, remove soil in a level manner from the root ball to where the top-most root emerges from the trunk. After soil removal to expose the root flare, verify that root ball still meets size requirements.

C. Ensure that root flare is visible after planting.

D. Remove injured roots by cutting cleanly; do not break. Do not paint or apply sealants on cut root ends.

E. Orientation: Position the tree so that its north side, marked before extracting, is facing north in its new location.

F. Set tree plumb and in center of planting pit with top of root flare 1 to 2 inches above adjacent finish grades.

1. Use specified backfill soil for backfill.
2. If area under the tree was initially dug too deep, add backfill to raise it to the correct level and thoroughly tamp the added soil to prevent settling.
3. After placing some backfill around root ball to stabilize plant, begin backfilling.
4. Backfill around root ball in layers, tamping to settle soil and eliminate voids and air pockets. When planting pit is approximately one-half filled, water thoroughly before placing remainder of backfill. Repeat watering until no more water is absorbed.
5. Redirect exposed root ends downward in backfill areas where possible. Hand-expose roots as required to bend and redirect them without breaking. If encountered immediately adjacent to location of new construction and redirection is not practical, cut roots approximately 3 inches back from new construction and as required for root pruning.
6. Place planting tablets in each planting pit when pit is approximately one-half filled; in amounts recommended by arborist. Place tablets beside the root ball about 1 inch (25 mm) from root tips; do not place tablets in bottom of the hole.
7. Continue backfilling process. Water again after placing and tamping final layer of soil.

G. Planting with Tree Spade: Use the same tree spade for planting as was used to extract and transport the tree. Do not use tree spade for trees larger than the manufacturer's maximum size recommendation for the tree spade being used.

H. Slopes: When planting on slopes, set the tree so the root flare on the uphill side is flush with the surrounding soil on the slope; the edge of the root ball on the downhill side will be above the surrounding soil. Apply enough soil to cover the downhill side of the root ball.

## 3.9 CROWN PRUNING

A. Prune branches as directed by arborist.

1. Prune to remove only injured, broken, dying, or dead branches. Do not prune for shape.
2. Do not remove or reduce living branches to compensate for root loss caused by cutting root system or to improve natural tree form.
3. Pruning Standards: Perform pruning according to ANSI A300 (Part 1).

B. Unless otherwise directed by arborist and acceptable to Architect, do not cut tree leaders.

C. Cut branches with sharp pruning instruments; do not break or chop.

D. Do not paint or apply sealants to wounds.

E. Provide subsequent maintenance during Contract period as recommended by arborist.

F. Chip removed branches and dispose of off-site.

## 3.10 TREE STABILIZATION

A. Trunk Stabilization by Upright Staking and Tying: Install trunk stabilization as follows unless otherwise directed by arborist.

1. Upright Staking and Tying: Stake only as required to prevent wind tip out. Use a minimum of two stakes of length required to penetrate at least 18 inches below bottom of backfilled excavation and to extend one-third of trunk height above grade. Set stakes vertical and space to avoid penetrating root balls or root masses.
2. Support trees with bands of flexible ties at contact points with tree trunk. Allow enough slack to avoid rigid restraint of tree.
3. Support trees with two strands of tie wire, connected to the brass grommets of tree-tie webbing at contact points with tree trunk. Allow enough slack to avoid rigid restraint of tree.

B. Trunk Stabilization by Staking and Guying: Install trunk stabilization as follows unless otherwise directed by arborist.

1. Site-Fabricated Staking-and-Guying Method: Install no fewer than three guys spaced equally around tree.

   a. Securely attach guys to stakes 30 inches long, driven to grade. Adjust spacing to avoid penetrating root balls or root masses. Provide turnbuckle for each guy wire and tighten securely.
   b. For trees more than 6 inches in caliper, anchor guys to wood deadmen buried at least 36 inches below grade. Provide turnbuckle for each guy wire and tighten securely.
   c. Support trees with bands of flexible ties at contact points with tree trunk and reaching to a turnbuckle. Allow enough slack to avoid rigid restraint of tree.
   d. Support trees with guy cable, connected to the brass grommets of tree-tie webbing at contact points with tree trunk and reaching to a turnbuckle. Allow enough slack to avoid rigid restraint of tree.
   e. Attach flags to each guy wire, 30 inches above finish grade.
   f. Paint turnbuckles with luminescent white paint.

2. Proprietary Staking and Guying Device: Install staking and guying system sized and positioned as recommended by manufacturer unless otherwise indicated and according to manufacturer's written instructions.

## 3.11 MULCHING

A. Install weed-control barriers before mulching according to manufacturer's written instructions. Completely cover area to be mulched, overlapping edges a minimum of 6 inches and secure seams with galvanized pins.

B. Organic Mulch: Apply 3-inch average thickness of organic mulch over whole surface of planting area, and finish level with adjacent finish grades. Do not place mulch within 3 inches of trunks or stems.

## 3.12 INSTALLING SLOW-RELEASE WATERING DEVICE

A. Provide one device for each tree.

B. Place device on top of the mulch at base of tree and fill with water according to manufacturer's written instructions.

## 3.13 TREE MAINTENANCE

A. Perform tree maintenance as recommended by arborist. Maintain arborist observation of transplanting work.

B. Maintain trees by pruning, cultivating, watering, weeding, fertilizing, mulching, restoring planting saucers, adjusting and repairing tree-stabilization devices, resetting to proper grades or vertical position, and performing other operations as required to establish healthy, viable plantings. Treat as required to keep trees free of insects and disease.

C. From time of tree extraction measure soil moisture adjacent to edge of each root ball bi-weekly. Record findings and weather conditions.

D. Fill areas of soil subsidence with backfill soil. Replenish mulch materials damaged or lost in areas of subsidence.

E. Apply treatments as required to keep tree materials, planted areas, and soils free of pests and pathogens or disease. Use integrated pest management practices whenever possible to minimize the use of pesticides and reduce hazards. Treatments include physical controls such as hosing off foliage, mechanical controls such as traps, and biological control agents.

F. Pesticide Application: Apply pesticides and other chemical products and biological control agents in accordance with authorities having jurisdiction and manufacturer's written instructions. Coordinate applications with Owner's operations and others in proximity to the Work. Notify Owner before each application is performed.

   1. Pre-Emergent Herbicides (Selective and Non-Selective): Apply in accordance with manufacturer's written instructions. Do not apply to seeded areas.
   2. Post-Emergent Herbicides (Selective and Non-Selective): Apply only as necessary to treat already-germinated weeds and in accordance with manufacturer's written instructions.

G. Reports: Have arborist prepare monthly inspection reports.

## 3.14 REPAIR AND REPLACEMENT

A. General: Repair or replace transplanted trees and other plants indicated to remain or be relocated that are damaged by construction operations, in a manner recommended by the arborist and approved by Architect.

   1. Submit details of proposed pruning and repairs.
   2. Perform repairs of damaged trunks, branches, and roots within 24 hours according to arborist's written instructions.
   3. Replace trees and other plants that cannot be repaired and restored to full-growth status, as determined by Architect.

B. Remove and replace trees that are more than 25 percent dead or in an unhealthy condition before the end of the corrections period or are damaged during construction operations that Architect determines are incapable of restoring to normal growth pattern.
   1. Provide one new tree(s) for each tree being replaced.
   2. Species of Replacement Trees: Same species shall be replaced unless otherwise approved by Architect.

3.15 CLEANUP AND PROTECTION

A. During transplanting, keep adjacent paving and construction clean and work area in an orderly condition.

B. Protect trees from damage due to transplanting operations and operations of other contractors and trades. Maintain protection during transplanting and maintenance periods. Treat, repair, or replace damaged plantings.

C. After planting and before Substantial Completion, remove tags, markings, tie tape, labels, wire, burlap, and other debris from transplanted trees, planting areas, and Project site.

3.16 DISPOSAL OF SURPLUS AND WASTE MATERIALS

A. Except for materials indicated to be recycled, remove surplus soil, excess excavated material, waste materials, displaced plants, trash, and debris, and legally dispose of them off Owner's property.

B. Transport surplus satisfactory soil to designated storage areas on Owner's property. Stockpile or spread soil as directed by Architect.

1. Except for materials indicated to be retained on Owner's property or recycled, remove excess excavated material, waste materials, displaced plants, trash, and debris, and legally dispose of them off Owner's property.

**END OF SECTION 32 96 00**

# GREENWICH PUBLIC SCHOOLS

# GREENWICH HS CARDINAL STADIUM PHASE 1

*10 HILLSIDE ROAD*
*GREENWICH CT 06830*

*CONSTRUCTION DOCUMENTS*

## LIST OF DRAWINGS


01 GENERAL
G001 GENERAL INFORMATION & CODE COMPLIANCE
G002 ACCESIBILITY DIAGRAMS

02 PHASING
PH001 PHASING

03 CIVIL
GI-001 GENERAL NOTES & LEGEND
EC-001 EXISTING CONDITIONS PLAN
CS-101 SITE LAYOUT PLAN
CP-101 SITE DEMOLITION / SITE PREPARATION PLAN
CE-101 EROSION & SEDIMENTATION CONTROL PLAN
CG-101 SITE GRADING PLAN
CG-102 SITE DRAINAGE PLAN
CU-101 SITE UTILITY PLAN
CE-501 EROSION & SEDIMENT CONTROL DETAILS
CD-501 CONSTRUCTION DETAILS
CD-502 CONSTRUCTION DETAILS
CD-503 CONSTRUCTION DETAILS
CD-504 CONSTRUCTION DETAILS
CD-505 CONSTRUCTION DETAILS (AQUARION DETAILS)
CD-506 CONSTRUCTION DETAILS (AQUARION DETAILS)

04 LANDSCAPE
L-1.0 PHASE 1 OVERALL LANDSCAPE LAYOUT & TREE REMOVAL PLAN
L-1.1 PHASE 1B PLANTING PLAN ENLARGEMENT
L-1.2 PHASE 1 PLAZA PAVING ENLARGEMENT
L-2.0 PHASE 1 SITE DETAILS
L-2.1 PHASE 1 RAIN GARDEN BOULDER LAYOUT

05 STRUCTURE
S100 GENERAL NOTES AND MATERIAL SPECIFICATIONS
S101 FIRST FLOOR SLAB-ON-GRADE AND FOUNDATION PLAN
S102 PRESS BOX AND ROOF FRAMING PLANS
S103 KIOSK FDN & S.O.G. PLAN AND FRAMING PLANS
S201 FOUNDATION SCHEDULES AND TYPICAL DETAILS
S202 FOUNDATION TYPICAL DETAILS AND SECTIONS
S210 FOUNDATION AND FRAMING SECTIONS
S211 FRAMING SECTIONS
S212 KIOSK FOUNDATION AND FRAMING SECTIONS
S401 MASONRY SCHEDULE AND TYPICAL DETAILS

06 ARCHITECTURE
A201 NEW CONSTRUCTION PLANS
A202 KIOSK DRAWINGS (ADD ALT 2)
A301 EXTERIOR ELEVATIONS
A302 BUILDING SECTIONS
A401 ENLARGED PLANS & INTERIOR ELEVATIONS
A402 ENLARGED PLANS & INTERIOR ELEVATIONS
A501 SIGNAGE AND FINISH SCHEDULE
A601 REFLECTED CEILING PLANS
A701 ENLARGED ELEVATOR DRAWINGS
A702 UTILITY YARD
A801 WALL SECTIONS
A802 WALL SECTIONS AND DETAILS (ADD ALT 2)
A900 ROOF DETAILS
A901 WINDOW, DOOR & WALL SCHEDULES & DETAILS

07 PLUMBING
P001 PLUMBING SYMBOLS, ABBREVIATIONS, & NOTES
P201 PLUMBING NEW WORK PLAN
P501 PLUMBING RISER DIAGRAMS
P701 PLUMBING DETAILS

08 MECHANICAL
M001 MECHANICAL SYMBOLS, ABBREVIATIONS, & NOTES
M201 MECHANICAL NEW WORK PLAN
M601 MECHANICAL EQUIPMENT NOTES & SCEDULES
M701 MECHANICAL DETAILS

09 ELECTRICAL
E001 ELECTRICAL NOTES, SYMBOLS & ABBREVIATIONS
E100 ELECTRICAL DEMOLITION SITE PLAN
E200 ELECTRICAL SITE LIGHTING PLAN
E201 ELECTRICAL 1ST FLOOR AND PRESSBOX LIGHTING PLAN
E300 ELECTRICAL SITE PLAN
E301 ELECTRICAL 1ST FLOOR & PRESSBOX POWER PLAN
E302 ELECTRICAL KIOSK POWER & LIGHTING PLANS
E401 FIRE ALARM 1ST FLOOR & PRESSBOX PLAN
E501 ELECTRICAL ONE-LINE DIAGRAMS
E601 ELECTRICAL SCHEDULES
E701 ELECTRICAL DETAILS
E702 ELECTRICAL DETAILS
E703 ELECTRICAL DETAILS
Grand total: 68


BLEACHER SHOP DRAWINGS 18 PAGES BY SOUTHERN BLEACHER COMPANY
BLEACHER PROVIDED AND INSTALLED BY OTHERS
DRAWINGS PROVIDED FOR REFERENCE ONLY

**GREENWICH HS CARDINAL STADIUM PHASE 1**

KG&D Project No.
**2018-1035**

***DESIGN TEAM***


**ARCHITECT**
**KG+D ARCHITECTS**
285 MAIN STREET
MT. KISCO, N. Y. 10549
phone: 914.666.5900

**MECHANICAL ENGINEER**
**OLA CONSULTING ENGINEERS**
50 BROADWAY
HAWTHORNE, N. Y. 10532
phone: 914. 747.2800

**STRUCTURAL ENGINEER**
**DiSALVO ENGINEERING GROUP**
83 WOOSTER HEIGHTS ROAD
DANBURY, CT. 06810
phone: 203.490.4140

**CIVIL ENGINEER**
**FUSS & O'NEILL, INC.**
56 QUARRY ROAD
TRUMBULL, CT 06611
phone: 203.374.3748

**LANDSCAPE ARCHITECT**
**WESLEY STOUT ASSOCIATES**
96 MAIN STREET
NEW CANAAN, CT 06840
phone: 203.966.3100


COVER

T1

# SHEET IDENTIFICATION LEGEND

A101

DISCIPLINE DESIGNATOR
SHEET TYPE DESIGNATOR
SEQUENCE NUMBER

| DISCIPLINE DESIGNATORS | |
|---|---|
| G | GENERAL |
| CC | CODE COMPLIANCE |
| PH | PHASING |
| C | CIVIL |
| L | LANDSCAPE |
| S | STRUCTURAL |
| A | ARCHITECTURAL |
| FP | FIRE PROTECTION |
| P | PLUMBING |
| M | MECHANICAL |
| E | ELECTRICAL |

| SHEET TYPE DESIGNATOR | |
|---|---|
| G | GENERAL |
| 1 | DEMOLITION |
| 2 | PLANS |
| 3 | EXTERIOR ELEVATIONS & BUILDING SECTIONS |
| 4 | ENLARGED PLANS & INTERIOR ELEVATIONS |
| 5 | FINISHES |
| 6 | REFLECTED CEILING PLANS |
| 7 | VERTICAL CIRCULATION |
| 8 | WALL SECTIONS & ENLARGED DETAILS |
| 9 | TYPICAL DETAILS |

# SYMBOLS LEGEND

| | |
|---|---|
| ROOM NAME 101 150 SF | ROOM TAG (NAME, NUMBER, & AREA) |
| | WALL TYPE & FIRE RATING TAG |
| 1A | WINDOW TYPE TAG |
| 101 | DOOR DESIGNATION TAG |
| 1 | COLUMN LINE |
| 1 A101 | EXTERIOR ELEVATION |
| 1 A101 1 1 1 | INTERIOR ELEVATION |
| SIM 1 A101 | WALL OR BUILDING SECTION |
| C J | CONTROL JOINT |
| | DENOTES EXISTING AREA OF THE BUILDING TO REMAIN (NO MAJOR GENERAL CONSTRUCTION). |
| | DENOTES EXISTING WALL TO REMAIN |
| | DENOTES EXISTING WALL TO BE DEMOLISHED |
| | DENOTES 1hr OR NON-RATED WALL |
| | DENOTES 2hr RATED WALL |
| M4 2HR | DENOTES WALL TYPE & FIRE RATING |
| | DENOTES HOLLOW METAL FRAME w/ SIDELITE OR TRANSOM |
| 101 | DENOTES NEW DOOR AND OR FRAME. SEE DOOR SCHEDULE |

# MATERIAL LEGEND

| | |
|---|---|
| CMU WALL | CAULK w/ BACKER ROD |
| CMU WALL | WATERPROOFING MEMBRANE, OR ROOFING MEMBRANE OR FLASHING |
| GWB WALL | RIGID INSULATION |
| MASONRY VENEER | BATT INSULATION |
| GWB - "TYPE X" UNO (SEE SPECS) | POROUS FILL |
| EXPOSED TO WEATHER OR MOISTURE) | SUITABLE COMPACTED BACKFILL (SEE SPEC) |
| WOOD BLOCKING (PRESSURE TREATED ALL AREAS EXPOSED TO WEATHER OR MOISTURE) | UNDISTURBED SOIL |
| | CAST-IN-PLACE CONCRETE OR CAST STONE |
| | GLASS SURFACE |

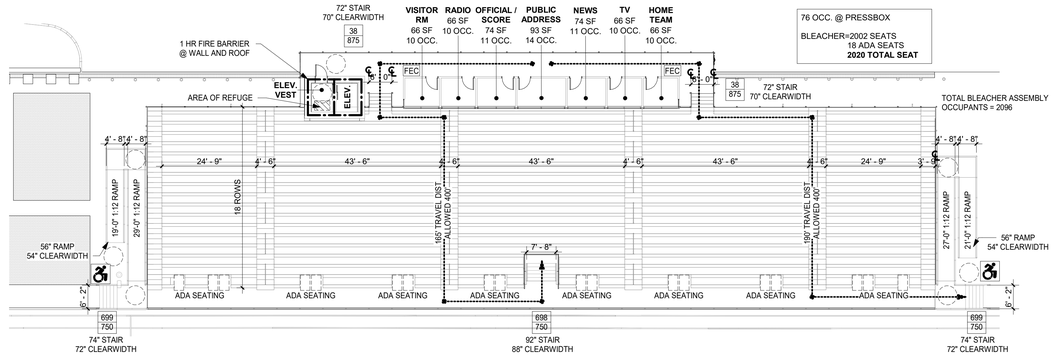


2 CODE COMPLIANCE PLAN - 2ND FLOOR
1/16" = 1'-0"

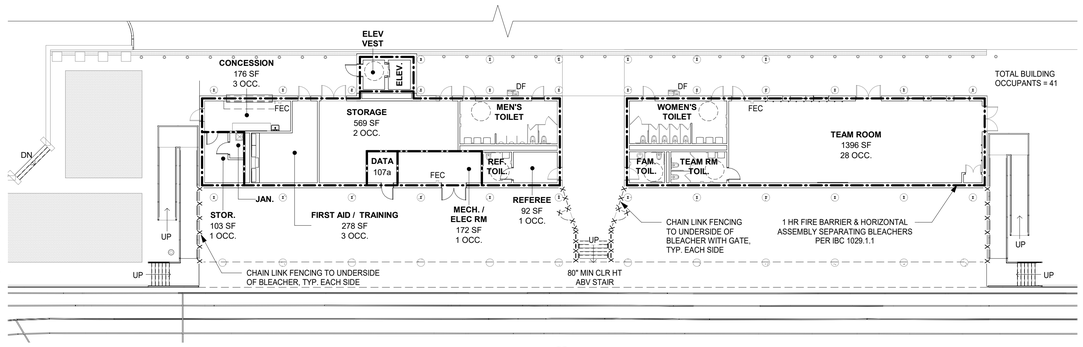


1 CODE COMPLIANCE PLAN - 1ST FLOOR
1/16" = 1'-0"

N

| LIFE SAFETY LEGEND | |
|---|---|
| 1 HR FIRE BARRIER | ADA ACCESSIBLE EXIT |
| MEANS OF EGRESS PATHWAY | DF DRINKING FOUNTAIN |
| FEC FIRE EXTINGUISHER CABINET | |
| X / Y ACTUAL EGRESS OCCUPANCY LOAD / MAXIMUM ALLOWABLE EGRESS OCCUPANCY LOAD | |

# ABBREVIATIONS

| | | | | | |
|---|---|---|---|---|---|
| ABV | ABOVE | FLUOR | FLUORESCENT | QT | QUARRY TILE |
| AFF | ABOVE FINISH FLOOR | FL MTD | FLUSH MOUNTED | QTB | QUARRY TILE BASE |
| ACM | ASBESTOS CONTAINING MATERIAL | FT | FOOT/FEET | QTY | QUANTITY |
| ACPL | ACOUSTIC PANEL | FDN | FOUNDATION | | |
| ACT | ACOUSTIC CEILING TILE | | | RCP | REFLECTED CEILING PLAN |
| ADJ | ADJUSTABLE | GALV | GALVANIZED | REFL | REFLECTED |
| AC | AIR CONDITIONING | GFB | GROUND FACE BLOCK | REQD | REQUIRED |
| AESS | ARCHITECTURAL EXPOSED STRUCTURAL STEEL | GFRG | GLASS FIBER REINFORCED GYPSUM | RB | RUBBER BASE |
| AHAP | AS HIGH AS POSSIBLE | GL | GLASS | RTN | RETURN |
| ALUM | ALUMINUM | GWB | GYPSUM WALLBOARD | RA | RETURN AIR |
| AMP | ACRYLIC MODIFIED POLYESTER | | | REV | REVISED/REVISION |
| APPROX | APPROXIMATE | H | HEIGHT AFF | RFI | REQUEST FOR INFORMATION |
| | | HDW | HARDWARE | RO | ROUGH OPENING |
| BEPO | BROADCAST EPOXY | HDWD | HARDWOOD | RT | RUBBER TREATD/TILE |
| BTW | BETWEEN | HD | HEAD | RTB | RUBBER TREAD BASE |
| BLKG | BLOCKING | HDR | HEADER | RTT | RESILIENT TERRAZZO TILE |
| BOT | BOTTOM | HVAC | HEATING, VENTILATING, AIR CONDITIONING | RW | RESCUE WINDOW |
| BLDG | BUILDING | HR | HOUR | | |
| BL | BUILDING LINE | HT | HEIGHT | SCHED | SCHEDULE/SCHEDULED |
| | | HM | HOLLOW METAL | SECT | SECTION |
| CAB | CABINET | HMFR | HOLLOW METAL FRAME | SF | SQUARE FEET |
| CB | CEMENT BOARD | HORIZ | HORIZONTAL | SFB | SPLIT FACE BLOCK |
| CC | CODE COMPLIANCE | HC | HANDICAP | SH | SHELVING/SHELF/SHELVES |
| CI | CAST IRON | | | SIM | SIMILAR |
| CLG/CLNG | CEILING | IF | INSIDE FACE | SL | SLATE |
| CL | CENTER LINE | IN | INCH/INCHES | STC | SOUND TRANSMISSION CLASS |
| CMU | CONCRETE MASONRY UNIT | INCL | INCLUDE/INCLUSIVE | SPEC | SPECIFICATION |
| COL | COLUMN | INFO | INFORMATION | SQFT | SQUARE FOOT |
| CONC | CONCRETE | INSUL | INSULATION | ST | SAND, STAIN & SEAL |
| CONF | CONFERENCE | INT | INTERIOR | ST/STOR | STORAGE |
| CONST | CONSTRUCTION | | | STSTL | STAINLESS STEEL |
| CONTR | CONTRACTOR | JAN | JANITOR'S CLOSET | STL | STEEL |
| CONT | CONTINUOUS | JT | JOINT | STR | STRUCTURAL/STRUCTURE |
| CPT | CARPET | | | SUSP | SUSPENDED/SUSPENSION |
| CT | CERAMIC TILE | KPL | KICK PLATE | | |
| CTB | CERAMIC TILE BASE | | | T | TOP |
| | | LAM | LAMINATED | TB | TACKBOARD |
| DA | DEVICE ARRANGEMENT | LAMGL | LAMINATED GLASS | TBD | TO BE DETERMINED |
| DET | DETAIL | LT | LIGHT | TEMP | TEMPORARY |
| DF | DRINKING FOUNTAIN | LTG | LIGHTING | TERR | TERRAZZO |
| DIM | DIMENSION | LWC | LIGHT WEIGHT CONCRETE | TFF | TOP FINISHED FLOOR |
| DR | DOOR | LIN | LINOLEUM | TMP GL | TEMPERED GLASS |
| DN | DOWN | | | THERMO | THERMOSTAT |
| DWG | DRAWING | MAINT | MAINTAIN/MAINTENANCE | T&B | TOP AND BOTTOM |
| | | MAX | MAXIMUM | TO | TOP OF |
| EE | EACH END | MFG | MANUFACTURER | TOS | TOP OF STEEL |
| EIFS | EXTERIOR INSULATION FINISH SYSTEM | MSNRY | MASONRY | TOSS | TOP OF STRUCTURAL SLAB |
| EJ | EXPANSION JOINT | MO | MASONRY OPENING | TYP | TYPICAL |
| ELEC | ELECTRIC/ELECTRICAL | MATL | MATERIAL | | |
| EL/ELEV | ELEVATION | MECH | MECHANICAL | UNFIN | UNFINISHED |
| ELEV | ELEVATOR | MTL | METAL | UNO | UNLESS NOTED OTHERWISE |
| ENCL | ENCLOSURE | MCP | METAL COMPOSITE PANEL | UR | UNRINAL |
| EOD | EDGE OF DECK | MS | METAL STUD | UTIL | UTILITY |
| EOS | EDGE OF SLAB | MLWK | MILL WORK | | |
| EPO | EPOXY | MIN | MINIMUM | VCT | VINYL COMPOSITE TILE |
| EPS | EDGE OF POUR STOP | MISC | MISCELLANEOUS | VEN | VENEER |
| EQ | EQUAL | MLDG | MOLDING | VERT | VERTICAL |
| ES | EACH SIDE | MTG | MOUNTING | VET | VINYL ENHANCED TILE |
| EXST | EXISTING | | | VIF | VERIFY IN FIELD |
| ETR | EXISTING TO REMAIN | NIC | NOT IN CONTRACT | VT | VINYL TILE |
| ETRE | EXISTING TO BE RELOCATED | NTS | NOT TO SCALE | | |
| EXP JT | EXPANSION JOINT | NO | NUMBER | WB | WHITEBOARD |
| EXT | EXTERIOR | | | WC | WATER CLOSET |
| EW | EACH WAY | OC | ON CENTER | WF | WATER FOUNTAIN |
| | | OPNG | OPENING | WGL | WIRE GLASS |
| FAB | FABRIC | OPP | OPPOSITE | W/ | WITH |
| FTF | FACE TO FACE | OTS | OPEN TO STRUCTURE | W/C | WHEEL CHAIR |
| FIN | FINISHED | OUT | OUTLET | W/O | WITHOUT |
| FA | FIRE ALARM | OD | OUTSIDE DIAMETER | WOM | WALK OFF MAT |
| FD | FLOOR DRAIN | OF | OUTSIDE FACE | WD | WOOD |
| FDMPR | FIRE DAMPER | | | WD BLKG | WOOD BLOCKING |
| FE | FIRE EXTINGUISHER | P/PTD | PAINTED | WD DR | WOOD DOOR |
| FEC | FIRE EXTINGUISHER CABINET | PT | PORCELAIN TILE | WP | WATERPROOFING |
| FF | FACTORY FINISH | PTB | PORCELAIN TILE BASE | WR | WARDROBE |
| FHC | FIRE HOSE CABINET | PR | PAIR | WW | WINDOW WALL |
| FHVC | FIRE HOSE VALVE CABINET | PNL | PANEL | | |
| FR | FIRE RATED | PTN | PARTITION | YD | YARD |
| FRD | FRENCH DRAIN | PL | PROPERTY LINE | YCO | YARD CLEANOUT |
| FFSC | FIRE RATED ASSEMBLY (DOORS) | PLAM | PLASTIC LAMINATE | | |
| FRTD | FIRE RETARDANT | PLMB | PLUMBING | ZCC | ZINC COATED COPPER |
| FIX | FIXTURE | PLYWD | PLYWOOD | | |
| FL/FLR | FLOOR | PTWD | PRESERVATIVE TREATED WOOD | | |

# 10 - ROOF CODE REQUIREMENTS

1. INSTALL NEW ROOFING TO MEET THE FOLLOWING MINIMUM REQUIREMENTS:
   A. 2018 CONNECTICUT STATE BUILDING CODE AND 2015 ICC ENERGY CODE
   B. UNDERWRITERS LABORATORIES INC. CLASS A EXTERNAL FIRE RATING FOR ROOFING ASSEMBLIES TESTED IN ACCORDANCE WITH ASTM E 108 OR UL 790
   C. UNDERWRITERS LABORATORIES INC. STANDARD 1256 FOR ROOF ASSEMBLIES WITH FOAM INSULATION.
2. INSTALL ROOFING TO COMPLY WITH THE WIND UPLIFT REQUIREMENTS OF THE CONNECTICUT STATE BUILDING CODE:
   - RISK CATEGORY
     III
   - BASIC WIND SPEED
     130 MPH
   - EXPOSURE CATEGORY
     B
3. INSTALL ROOFING AS INDICATED TO RESIST THE FOLLOWING UPLIFTS, CALCULATED IN ACCORDANCE WITH ASCE 7 USING SAFETY FACTOR OF 2:
   - FIELD ZONE
     60PSF
   - PERIMETER ZONE
     100 PSF
   - CORNER ZONE
     150 PSF
4. FABRICATE AND INSTALL ROOF PERIMETER FLASHING THAT COMPLY WITH THE 2018 CONNECTICUT STATE BUILDING CODE ANSI/SPRI ES-1 "WIND STANDARD FOR EDGE SYSTEMS USED WITH LOW SLOPE ROOFING SYSTEMS".

# 11 - INTERIOR FINISHES

IBC TABLE 803.11

| | | |
|---|---|---|
| USE & OCCUPANCY CLASSIFICATION: | ASSEMBLY (A-5) | |
| CONSTRUCTION TYPE: | TYPE IIB | |
| SPRINKLER SYSTEM: | NONSPRINKLERED | |
| INTERIOR EXIT STAIRWAYS, RAMPS, & EXIT PASSAGEWAYS | | = CLASS A |
| CORRIDORS&ENCLOSURE FOR EXIT ACCESS STAIRWAYS&RAMPS | | = CLASS A |
| ROOMS AND ENCLOSED SPACES | | = CLASS C |

| | | |
|---|---|---|
| USE & OCCUPANCY CLASSIFICATION: | UTILITY & MISCELLANEOUS GROUP ( U ) | |
| CONSTRUCTION TYPE: | TYPE VB | |
| SPRINKLER SYSTEM: | NONSPRINKLERED | |
| INTERIOR EXIT STAIRWAYS, RAMPS, & EXIT PASSAGEWAYS | | = NO RESTRICTIONS |
| CORRIDORS&ENCLOSURE FOR EXIT ACCESS STAIRWAYS&RAMPS | | = NO RESTRICTIONS |
| ROOMS AND ENCLOSED SPACES | | = NO RESTRICTIONS |

# 7 - PLUMBING FIXTURES

| TYPE | REQ. FIXTURES | | PROVIDED | | |
|---|---|---|---|---|---|
| | MALE | FEMALE | MALE | FEMALE | UNISEX |
| TOILET | 15 | 27 | 2 | 5 | 4 |
| URINAL | - | - | 3 | - | - |
| LAVATORY | 6 | 8 | 3 | 3 | 4 |
| FOUNTAIN | 3 | | 4 | | |
| SERVICE SINK | 1 | | 1 | | |

2902.1 OCCUPANCY = 2096 HOME BLEACHERS + 41 BUILDING OCC. = 2137 (ASSUME 1069 MEN, 1069 WOMEN)

1 WATER CLOSET PER 75 MALE / 40 FEMALE
1 LAVATORY PER 200 MALE / 150 FEMALE
1 DRINKING FOUNTAIN PER 1000 OCCUPANTS

**NO EXISTING PLUMBING FIXTURES - PROPOSED DESIGN IMPROVES ON EXISTING NON-CONFORMING CONDITION**

# 8 - MEANS OF EGRESS

| EXIT TRAVEL DIST: | ICC 300 | IBC 2015 |
|---|---|---|
| | 400' | 200' |

| OCCUPANCY LOADS (SF/PERSON): | IBC TABLE 1004.1.2 |
|---|---|
| MERCANTILE | 30 GROSS |
| LOCKER ROOMS | 50 GROSS |
| BUSINESS / OFFICE AREAS | 100 GROSS |
| ACCESSORY STORAGE & MECHANICAL | 300 GROSS |
| PRESSBOX ROOMS (ASSEMBLY CONCENTRATED) | 7 NET |

| EGRESS WIDTH: | ICC 300 | IBC 2015 |
|---|---|---|
| STAIR | .08/OCC. | .03/OCC. |
| RAMP | .06/OCC. | .02/OCC. |

ASSEMBLY SPACE EXIT WIDTH CALCULATIONS (RAMPS NOT INCLUDED):

| SPACE | OCC. LOAD | REQ'D # EXITS | REQ'D EXIT WIDTH | PROVIDED # EXITS | PROVIDED EXIT WIDTH |
|---|---|---|---|---|---|
| HOME BLEACHERS | 2096 | 3 | 168" (2096 * .08) | 3 | 180" |

# 9 - FIRE PROTECTION SYSTEMS

| FIRE PROTECTION SYSTEMS | REQUIRED | PROVIDED |
|---|---|---|
| AUTOMATIC SPRINKLER | NO | NO |
| ALTERNATE AUTO-FIRE EXTINGUISHING | NO | NO |
| STANDPIPE | NO | NO |
| FIRE ALARM & DETECTION | YES | YES |
| SMOKE CONTROL | NO | NO |
| SMOKE AND HEAT VENTS | NO | NO |
| EMERGENCY VOICE/ALARM | YES | YES |
| PUBLIC ADDRESS | YES | YES |

# 1 - PROJECT INFORMATION

| | |
|---|---|
| DISTRICT NAME: | GREENWICH PUBLIC SCHOOLS<br>290 GREENWICH AVENUE<br>GREENWICH, CT 06830 TELEPHONE: 203.625.7400 |
| BUILDING NAME: | GREENWICH HIGH SCHOOL : CARDINAL STADIUM |
| PROJECT LOCATION: | 10 HILLSIDE ROAD, GREENWICH, CT 06830 |
| TYPE OF PROJECT: | NEW CONSTRUCTION |
| PROJECT COMMENCEMENT: | JANUARY 2021 |
| PROJECT SUBSTANTIAL COMPLETION: | AUGUST 2021 |
| APPLICABLE CODES: | 2018 CONNECTICUT STATE BUILDING CODE<br>2017 ICC 300 STANDARD ON BLEACHERS, FOLDING AND TELESCOPING SEATING, AND GRANDSTANDS |

# 2 - USE, CLASSIFICATION, & BUILDING HEIGHTS & AREAS

BLEACHER -NON-SPRINKLERED

| | | |
|---|---|---|
| USE & OCCUPANCY CLASSIFICATION: | ASSEMBLY (A-5) | |
| CONSTRUCTION TYPE: | TYPE IIB (NON-COMBUSTIBLE, NON-PROTECTED) | |
| BUILDING HEIGHT & AREA: | PERMITTED | ACTUAL |
| HEIGHT | 55'-0" | 42'-0" +/- |
| STORIES | UL | 2 |
| FLOOR AREA | UL | 13,200 GROSS SF |

TEAM BUILDING - NON-SPRINKLERED

| | | |
|---|---|---|
| USE & OCCUPANCY CLASSIFICATION: | ASSEMBLY (A-5) | |
| CONSTRUCTION TYPE: | TYPE IIB (NON-COMBUSTIBLE, NON-PROTECTED) | |
| BUILDING HEIGHT & AREA: | PERMITTED | ACTUAL |
| HEIGHT | 55'-0" | 47' +/- |
| STORIES | UL | 2 |
| FLOOR AREA | UL | 4,715 GROSS SF |

ADD ALTERNATE 2 : KIOSK BUILDING - NON-SPRINKLERED

| | | |
|---|---|---|
| USE & OCCUPANCY CLASSIFICATION: | UTILITY & MISCELLANEOUS GROUP ( U ) | |
| CONSTRUCTION TYPE: | TYPE VB (NON-COMBUSTIBLE, NON-PROTECTED) | |
| BUILDING HEIGHT & AREA: | PERMITTED | ACTUAL |
| HEIGHT | 40'-0" | 17' +/- |
| STORIES | 2 | 1 |
| FLOOR AREA | 16,500 SF | 158 GROSS SF |

# 3 - FIRE-RESISTANCE-RATED CONSTRUCTION

IBC TABLES 508.4 / 509 / 601 / 706.4 / 707.3.10 / 1020.1

CONSTRUCTION TYPE IIA FIRE RATINGS:

*REFER TO CC PLANS FOR LOCATIONS OF FIRE-RESISTANCE-RATED CONSTRUCTION*

| | |
|---|---|
| PRIMARY STRUCTURAL FRAME | 1 HR |
| BEARING WALLS | 1 HR |
| NON-BEARING WALLS | 0 HR |
| FLOORS & SECONDARY MEMBERS | 1 HR |
| ROOFS & SECONDARY MEMBERS | 1 HR |

| ASSEMBLY | FIRE-RESISTANCE | RATING LOCATION |
|---|---|---|
| FIRE BARRIER | 1 HOUR | SPACES UNDER BLEACHERS |
| ROOF | 1 HOUR | ELEVATOR SHAFT & LOBBIES<br>ELEVATOR MACHINE ROOM<br>STORAGE ROOMS >100SF |
| HORIZONTAL ASSEMBLY | 1 HOUR | SPACES UNDER BLEACHERS |

# 4 - ACCESSIBILITY

| ACCESSIBILITY INFORMATION: | DWG SHOWN |
|---|---|
| ACCESSIBLE ROUTE | G001, SITE PLAN |
| ACCESSIBLE EXITS / ENTRANCES | G001 |
| TOILET FACILITIES | G001, FLOOR PLANS |
| SIGNAGE | A501, SPECIFICATIONS |
| VERTICAL ACCESS / ELEVATOR | G001 |
| DOOR APPROACH CLEARANCES | G002 |
| DOOR HARDWARE | SPECIFICATIONS |

# 5 - ENERGY CODE COMPLIANCE (IECC 2015)

| | |
|---|---|
| COUNTY: | FAIRFIELD |
| CLIMATE ZONE: | 5A |
| GLAZED AREAS (≤ 40" OF ABOVE GRADE ENVELOPE) | 4% (425 SF / 10220 SF) |

| OPAQUE THERMAL ENVELOPE REQUIREMENTS | TABLE C402.1.3 |
|---|---|
| ROOF: INSULATION ENTIRELY ABOVE DECK | R-30ci MIN |
| WALLS - ABOVE GRADE: MASS | R-11.4ci MIN |
| WALLS - ABOVE GRADE: METAL FRAMED | R-13 + R-7.5ci MIN |
| WALLS - ABOVE GRADE: WOOD FRAMED | R-13+ R-3.8ci MIN OR R-20 |
| WALLS - BELOW GRADE: MASS | R-7.5ci MIN |
| FLOORS: MASS | R-10ci MIN |
| SLAB ON GRADE FLOORS | R-10 MIN FOR 24" |
| OPAQUE DOORS: SWINGING | U-0.37 MAX |

| VERTICAL FENESTRATION | TABLE C402.4 |
|---|---|
| FIXED FENESTRATION | U-0.38 MAX |
| OPERABLE FENETRATION | U-0.45 MAX |
| ENTRANCE DOORS | U-0.77 MAX |
| SHGC | U-0.40 MAX |

# 6 - EMERGENCY GENERATOR

| ITEM | |
|---|---|
| BACKUP ENTIRE FACILITY | NO |
| BACKUP ELEVATOR | YES |
| BACKUP FIRE ALARM | YES |
| BACKUP EMERGENCY LIGHTING | YES |

GREENWICH HS CARDINAL STADIUM PHASE 1

GREENWICH PUBLIC SCHOOLS
10 HILLSIDE ROAD
GREENWICH CT 06830


KG+D listen imagine build
KG+D . ARCHITECTS PC
285 MAIN STREET MOUNT KISCO . NEW YORK . 10549
P:914.666.5900 KGDARCHITECTS.COM


CONSTRUCTION DOCUMENTS


NOTE: ALL IDEAS, DESIGNS, ARRANGEMENTS AND PLANS INDICATED OR REPRESENTED BY THIS DRAWING ARE OWNED BY AND ARE THE PROPERTY OF KAEYER, GARMENT, & DAVIDSON ARCHITECTS, PC (KG&D), AND WERE CREATED FOR USE ON THIS PROJECT. NONE OF SUCH IDEAS, DESIGNS, ARRANGEMENTS OR PLANS SHALL BE USED BY OR DISCLOSED TO ANY PURPOSE WHATSOEVER WITHOUT THE WRITTEN PERMISSION OF (KG&D).

WRITTEN DIMENSIONS ON THIS DRAWING SHALL HAVE PRECEDENCE OVER SCALED DIMENSIONS. CONTRACTOR SHALL VERIFY ALL ACTUAL DIMENSIONS AND CONDITIONS ON THE JOB AND THE ARCHITECT MUST BE NOTIFIED OF ANY VARIATIONS FROM DIMENSIONS AND CONDITIONS SHOWN. SHOP DETAILS MUST BE SUBMITTED TO THIS OFFICE FOR APPROVAL BEFORE PROCEEDING WITH FABRICATION.

ALTERATIONS BY ANY PERSON, IN ANY WAY, OF ANY ITEM CONTAINED ON THIS DOCUMENT, UNLESS ACTING UNDER THE DIRECTION OF THE LICENSED ARCHITECT WHOSE PROFESSIONAL SEAL IS AFFIXED HERETO, IS A VIOLATION OF TITLE VII, SECT. 7209 OF NEW YORK STATE LAW.
COPYRIGHT KAEYER, GARMENT + DAVIDSON ARCHITECTS & ENGINEERS, PC
ALL RIGHTS RESERVED.


Professional Seal

| No. | Date | Issue |
|---|---|---|
| 4 | 11/10/20 | PHASE 1 CON. DOCS. |
| 2 | 08/12/20 | ISSUE FOR PERMIT |
| 1 | 08/29/19 | DESIGN DEVELOPMENT |

Sheet Title
GENERAL INFORMATION & CODE COMPLIANCE

| Job No. | Date |
|---|---|
| 2018-1035 | 07/08/19 |
| Scale: AS NOTED | Drawn / Checked: - |

Sheet Number
G001

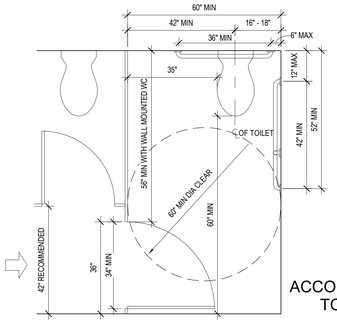


MULTI ACCOMMODATION TOILET RM

REF:
ADA: 604.8
ANSI: 604.5.1

G100-1010H

## 11 ACCESSIBLE TOILET STALL
1/2" = 1'-0"

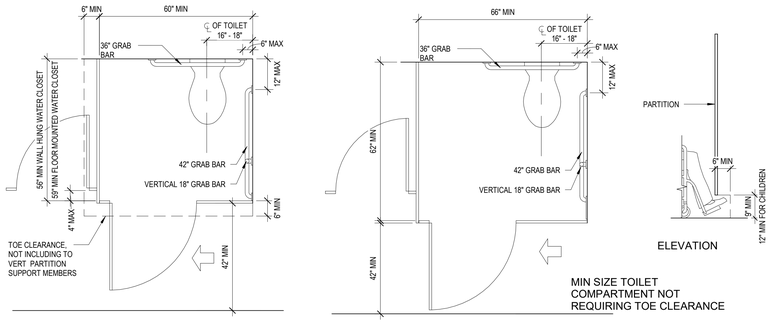


MULTI ACCOMMODATION TOILET RM TOE CLEARANCE

REF:
ADA:
604.8.1.4
ANSI: 604.5.1

G100-1011D

## 10 STANDARD ACCESSIBLE TOILET STALL
1/2" = 1'-0"

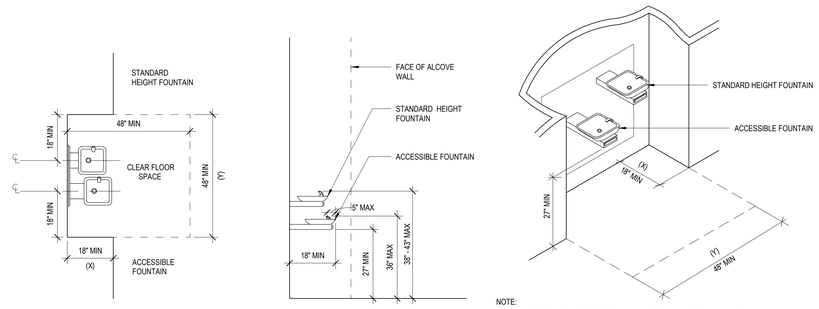


A. PLAN

B. SIDE ELEVATION

NOTE:
IF ALCOVE DEPTH (X) IS GREATER THAN 24", THEN (Y) MUST BE 54" MIN ON AN ACCESSIBLE FOUNTAIN WITH A ROUND OR OVAL BOWL, THE SPOUT MUST BE POSITIONED SO THE FLOW OF WATER IS WITHIN 3" OF THE FRONT EDGE OF THE FOUNTAIN

REF:
ADA: 602.7

G113-1601

## 9 DRINKING FOUNTAIN HI-LOW
1/2" = 1'-0"

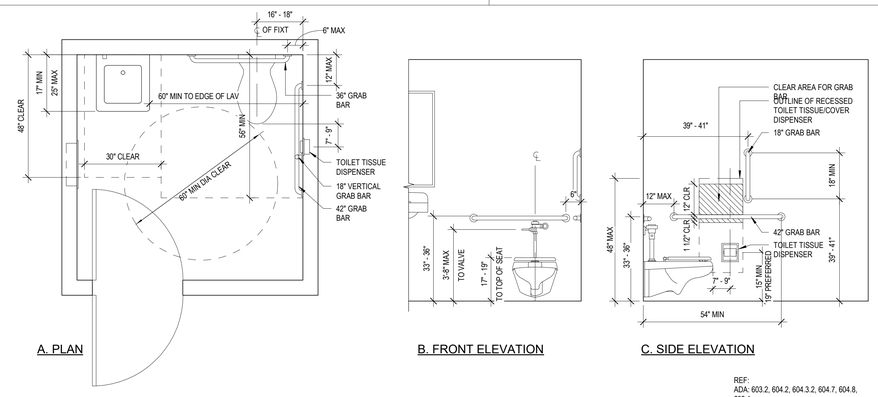


A. PLAN

B. FRONT ELEVATION

C. SIDE ELEVATION

REF:
ADA: 603.2, 604.2, 604.3.2, 604.7, 604.8, 609.1
ANSI: 604.4

G100-1010F

## 8 ACCESSIBLE TOILET STALL
1/2" = 1'-0"

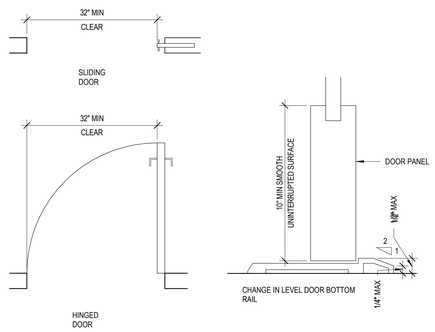


REF:
ADA: 404.2, 303.3
ANSI: 404.2.2, 404.2.9

G100-1007D

## 7 DOOR OPENING
6" = 1'-0"

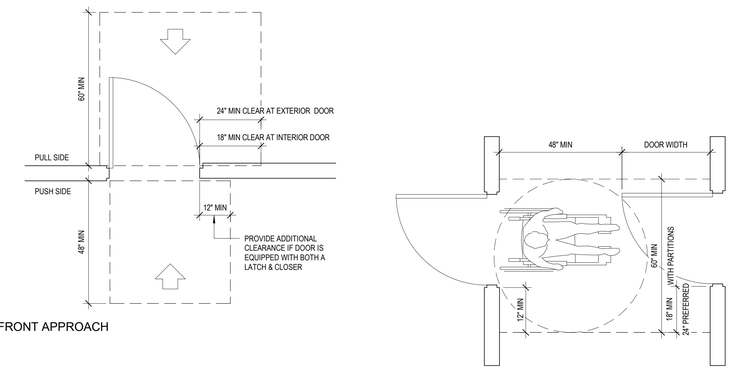


A. FRONT APPROACH

A

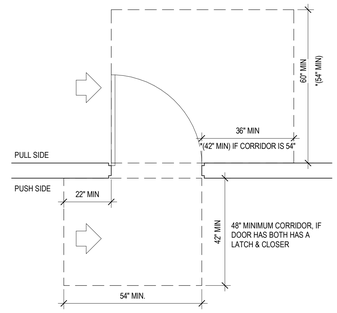


B. HINGE APPROACH

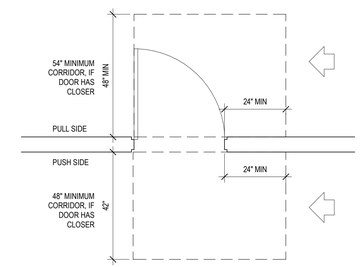


C. LATCH SIDE APPROACH

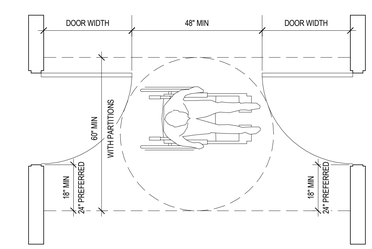


B

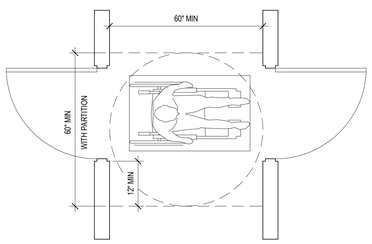


C

REF:
ADA: 404.2.4
IANSI: 404.2.3.1

G100-1007A

REF:
ADA: 404.2.6
ANSI: 404.2.5

G100-1007C

## 2 WINGING DOOR APPROACH
1/2" = 1'-0"

## 1 TWO HINGED DOORS IN SERIES
1/2" = 1'-0"

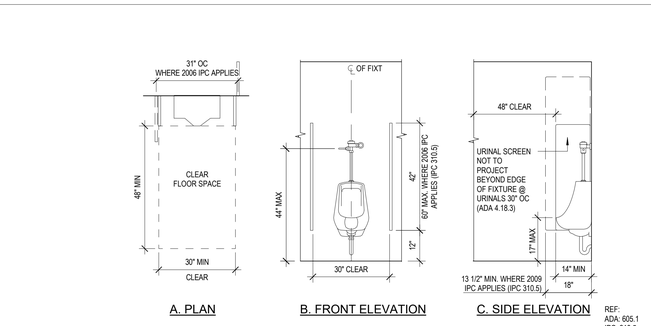


A. PLAN

B. FRONT ELEVATION

C. SIDE ELEVATION

REF:
ADA: 605.1
IPC: 310.5
ANSI: 605.1

G100-1010D

## 6 ACCESSIBLE URINAL
1/2" = 1'-0"

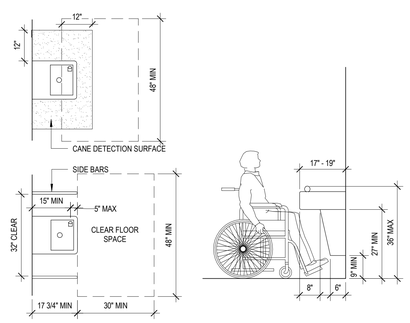


A. PLAN

B. SIDE ELEVATION

REF:
ADA: 306.2, 306.3, 602
ANSI: 602.1

G100-1009C

## 5 DRINKING FOUNTAIN-NON ALCOVE
1/2" = 1'-0"

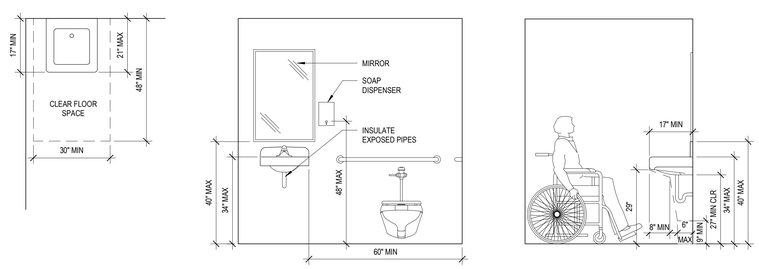


A. PLAN

B. FRONT ELEVATION

C. SIDE ELEVATION

REF:
ADA: 603.3, 604.3.2, 606.1, 606.5
ANSI: 606.1

G100-1010E

## 4 ACCESSIBLE LAVATORY
1/2" = 1'-0"

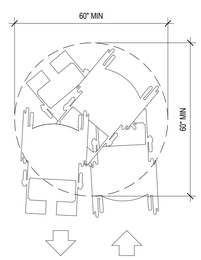


SPACE NEEDED TO TURN A WHEELCHAIR

REF:
ADA: 304.3
IANSI: 304.3

G100-1006E

## 3 WHEELCHAIR TURNING RADIUS
1/2" = 1'-0"

GREENWICH HS CARDINAL STADIUM PHASE 1

GREENWICH PUBLIC SCHOOLS
10 HILLSIDE ROAD
GREENWICH CT 06830

KG+D listen imagine build
KG+D . ARCHITECTS PC
285 MAIN STREET MOUNT KISCO . NEW YORK . 10549
P:914.666.5900 KGDARCHITECTS.COM

CONSTRUCTION DOCUMENTS

NOTE: ALL IDEAS, DESIGNS, ARRANGEMENTS AND PLANS INDICATED OR REPRESENTED BY THIS DRAWING ARE OWNED BY AND ARE THE PROPERTY OF KAEYER, GARMENT, & DAVIDSON ARCHITECTS, PC (KG&D), AND WERE CREATED FOR USE ON THIS PROJECT. NONE OF SUCH IDEAS, DESIGNS, ARRANGEMENTS OR PLANS SHALL BE USED BY OR DISCLOSED TO ANY PURPOSE WHATSOEVER WITHOUT THE WRITTEN PERMISSION OF (KG&D).

WRITTEN DIMENSIONS ON THIS DRAWING SHALL HAVE PRECEDENCE OVER SCALED DIMENSIONS. CONTRACTOR SHALL VERIFY ALL ACTUAL DIMENSIONS AND CONDITIONS ON THE JOB AND THE ARCHITECT MUST BE NOTIFIED OF ANY VARIATIONS FROM DIMENSIONS AND CONDITIONS SHOWN. SHOP DETAILS MUST BE SUBMITTED TO THIS OFFICE FOR APPROVAL BEFORE PROCEEDING WITH FABRICATION.

ALTERATIONS BY ANY PERSON, IN ANY WAY, OF ANY ITEM CONTAINED ON THIS DOCUMENT, UNLESS ACTING UNDER THE DIRECTION OF THE LICENCED ARCHITECT WHOSE PROFESSIONAL SEAL IS AFFIXED HERETO, IS A VIOLATION OF TITLE VII, SECT. 69.0 (b) OF NEW YORK STATE LAW.
COPYRIGHT KAEYER, GARMENT • DAVIDSON ARCHITECTS & ENGINEERS, PC
ALL RIGHTS RESERVED

Professional Seal

| No. | Date | Issue |
|---|---|---|
| 4 | 11/10/20 | PHASE 1 CON. DOCS. |
| 2 | 08/12/20 | ISSUE FOR PERMIT |

Sheet Title

ACCESIBILITY DIAGRAMS

| Job No. | Date |
|---|---|
| 2018-1035 | 02/12/20 |
| Scale | Drawn / Checked |
| AS NOTED | - |

Sheet Number

G002

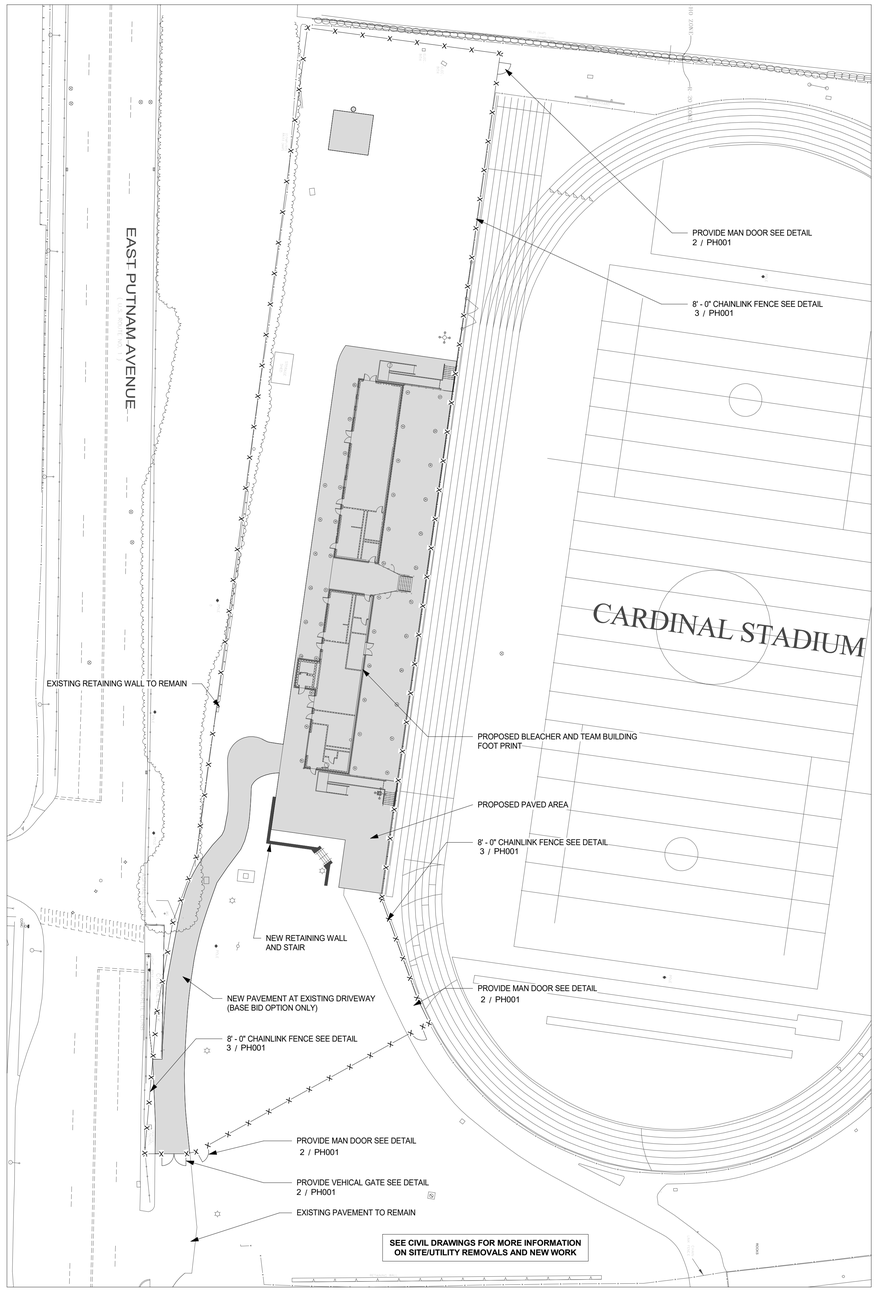


4 PHASING PLAN - BASE BID

1/32" = 1'-0"  NOTE : GRAY HATCH INDICATES AREA OF BASE BID CONSTRUCTION

NOTE:
ALL TERMINAL & GATE POSTS ARE APPROX. 3'-6" LONGER THAN FABRIC HEIGHT TO ALLOW FOR 3'-0" DIRECT EMBEDMENT INTO EXISTING GRADE.

ALL LINE POSTS ARE 2-½"O.D. STEEL PIPE WALL REQ'D. FITTINGS

ALL TERMINAL POSTS ARE 3" O.D. STEEL PIPE W/ ALL REQ'D. FITTINGS.

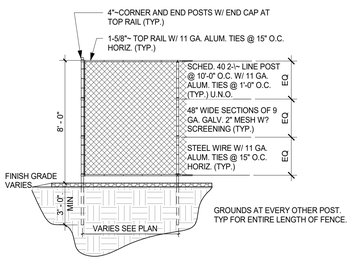


3 CHAINLINK FENCE

1/4" = 1'-0"

NOTE:
ALL POSTS ARE DRIVEN INTO GROUND A MINIMUM OF 3'-0" BELOW EXISTING FINISHED GRADE.

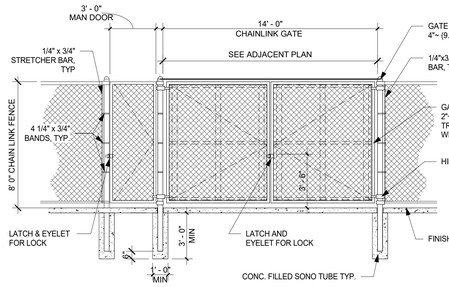


2 FENCE GATE

1/4" = 1'-0"

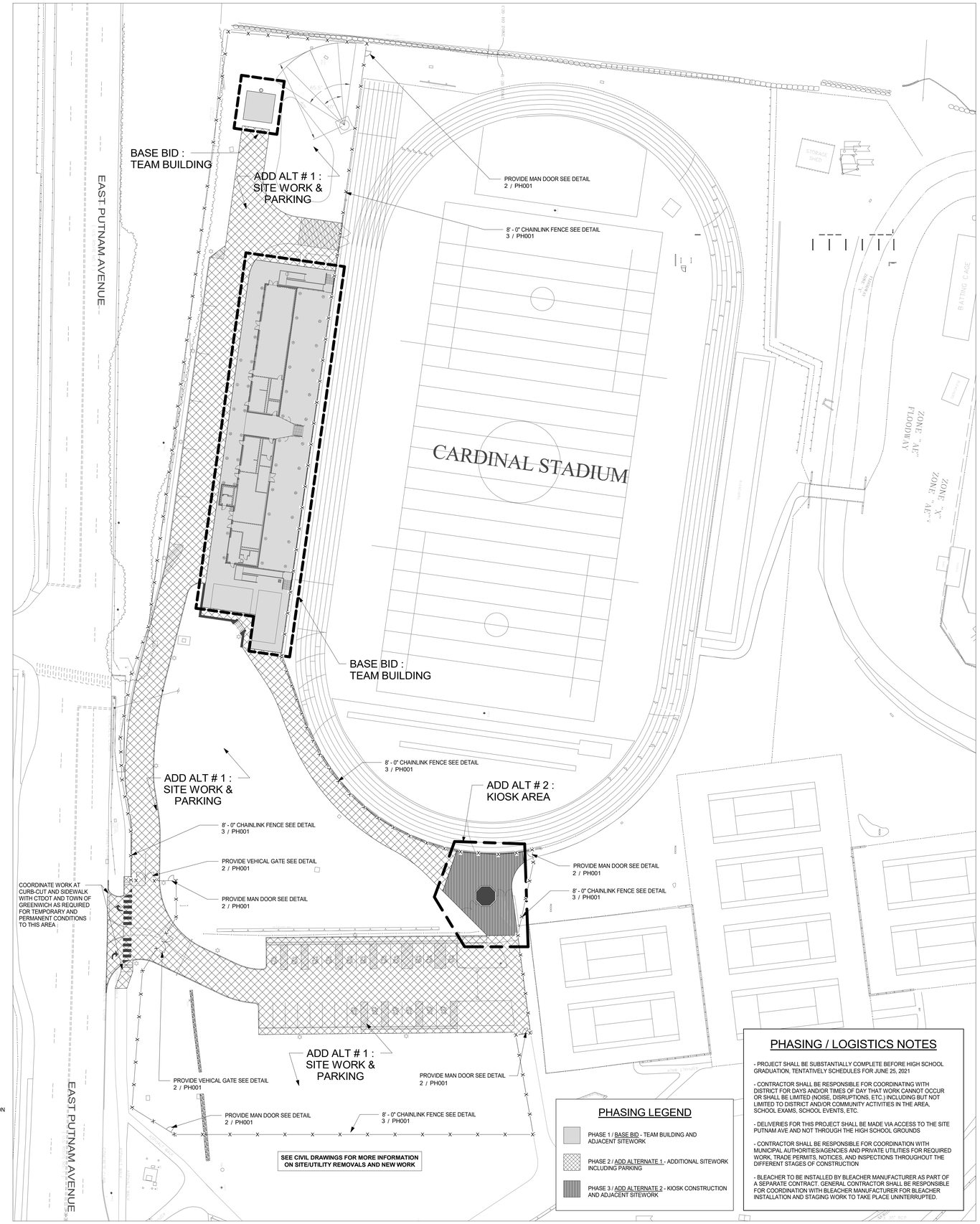


1 PHASING PLAN WITH ADD ALTERNATES

1/32" = 1'-0"

## PHASING LEGEND

- PHASE 1 / BASE BID - TEAM BUILDING AND ADJACENT SITEWORK
- PHASE 2 / ADD ALTERNATE 1 - ADDITIONAL SITEWORK INCLUDING PARKING
- PHASE 3 / ADD ALTERNATE 2 - KIOSK CONSTRUCTION AND ADJACENT SITEWORK

## PHASING / LOGISTICS NOTES

- PROJECT SHALL BE SUBSTANTIALLY COMPLETE BEFORE HIGH SCHOOL GRADUATION, TENTATIVELY SCHEDULES FOR JUNE 25, 2021

- CONTRACTOR SHALL BE RESPONSIBLE FOR COORDINATING WITH DISTRICT FOR DAYS AND/OR TIMES OF DAY THAT WORK CANNOT OCCUR OR SHALL BE LIMITED (NOISE, DISRUPTIONS, ETC.) INCLUDING BUT NOT LIMITED TO DISTRICT AND/OR COMMUNITY ACTIVITIES IN THE AREA, SCHOOL EXAMS, SCHOOL EVENTS, ETC.

- DELIVERIES FOR THIS PROJECT SHALL BE MADE VIA ACCESS TO THE SITE PUTNAM AVE AND NOT THROUGH THE HIGH SCHOOL GROUNDS

- CONTRACTOR SHALL BE RESPONSIBLE FOR COORDINATION WITH MUNICIPAL AUTHORITIES/AGENCIES AND PRIVATE UTILITIES FOR REQUIRED WORK, TRADE PERMITS, NOTICES, AND INSPECTIONS THROUGHOUT THE DIFFERENT STAGES OF CONSTRUCTION

- BLEACHER TO BE INSTALLED BY BLEACHER MANUFACTURER AS PART OF A SEPARATE CONTRACT. GENERAL CONTRACTOR SHALL BE RESPONSIBLE FOR COORDINATION WITH BLEACHER MANUFACTURER FOR BLEACHER INSTALLATION AND STAGING WORK TO TAKE PLACE UNINTERRUPTED.

# GREENWICH HS CARDINAL STADIUM PHASE 1

GREENWICH PUBLIC SCHOOLS
10 HILLSIDE ROAD
GREENWICH CT 06830

KG+D listen imagine build
KG+D . ARCHITECTS PC
285 MAIN STREET MOUNT KISCO . NEW YORK . 10549
P:914.666.5900  KGDARCHITECTS.COM

CONSTRUCTION DOCUMENTS

## MILESTONE SCHEDULE

**JANUARY 18, 2021 :**
BEGIN CONSTRUCTION
NOTE : SUBSTANTIAL COMPLETION FOR DEMOLITION OF THE EXISTING BLEACHERS IS JANUARY 15, 2021, WHICH IS A SEPARATE PROJECT/CONTRACT

**JANUARY 18, 2021 - JANUARY 29, 2021 :**
CONCRETE SHOP DRAWINGS AND MOBILIZATION

**FEBRUARY 1, 2021 - MARCH 5, 2021 :**
FOUNDATIONS FOR BLEACHER AND TEAM BUILDING

**MARCH 8, 2021 - APRIL 30, 2021**
BLEACHER INSTALLATION BY OTHERS

**JANUARY 18, 2021 - JUNE 24, 2021**
WORK ONGOING FOR SITE IMPROVEMENTS, UTILITIES, STORM WATER MANAGEMENT, SITE LIGHTING, DRIVEWAYS, WALKWAYS, LANDSCAPING, AND CONSTRUCTION OF TEAM BUILDING AND KIOSK BUILDING.

N

NOTE: ALL IDEAS, DESIGNS, ARRANGEMENTS AND PLANS INDICATED OR REPRESENTED BY THIS DRAWING ARE OWNED BY AND ARE THE PROPERTY OF KAEYER, GARMENT + DAVIDSON ARCHITECTS, PC (KG&D), AND WERE CREATED FOR USE ON THIS PROJECT. NONE OF SUCH IDEAS, DESIGNS, ARRANGEMENTS OR PLANS SHALL BE USED BY OR DISCLOSED TO ANY PURPOSE WHATSOEVER WITHOUT THE WRITTEN PERMISSION OF (KG&D).

WRITTEN DIMENSIONS ON THIS DRAWING SHALL HAVE PRECEDENCE OVER SCALED DIMENSIONS. CONTRACTOR SHALL VERIFY ALL ACTUAL DIMENSIONS AND CONDITIONS ON THE JOB AND THE ARCHITECT MUST BE NOTIFIED OF ANY VARIATIONS FROM DIMENSIONS AND CONDITIONS SHOWN. SHOP DETAILS MUST BE SUBMITTED TO THIS OFFICE FOR APPROVAL BEFORE PROCEEDING WITH FABRICATION.

ALTERATIONS BY ANY PERSON, IN ANY WAY, OF ANY ITEM CONTAINED ON THIS DOCUMENT, UNLESS ACTING UNDER THE DIRECTION OF THE LICENSED ARCHITECT WHOSE PROFESSIONAL SEAL IS AFFIXED HERETO, IS A VIOLATION OF TITLE VII, SECT. 69.5 (b) OF NEW YORK STATE LAW.
COPYRIGHT KAEYER, GARMENT + DAVIDSON ARCHITECTS & ENGINEERS, PC
ALL RIGHTS RESERVED

Professional Seal

| No. | Date | Issue |
|---|---|---|
| 4 | 11/10/20 | PHASE 1 CON. DOCS. |
| 2 | 08/12/20 | ISSUE FOR PERMIT |

Sheet Title

PHASING

| Job No. | Date |
|---|---|
| 2018-1035 | 09/10/19 |
| Scale | Drawn / Checked |
| AS NOTED | - |

Sheet Number

PH001

## LEGEND

- 200 — PROPOSED CONTOURS
- + 201.0 — PROPOSED SPOT ELEVATION
- PROPOSED CLEARING LIMIT (APPROX.)
- PROPERTY LINE
- R — PROPOSED ROOF DRAIN
- C — PROPOSED CABLE LINE
- S — PROPOSED SANITARY SEWER LINE
- PROPOSED STORM DRAINAGE LINE
- T — PROPOSED TELEPHONE LINE
- W — PROPOSED WATER MAIN
- G — PROPOSED GAS MAIN
- E — PROPOSED ELECTRICAL SERVICE
- PROPOSED GUIDE RAIL
- PROPOSED HYDRANT AND GATE VALVE
- PROPOSED REINFORCED CONCRETE CULVERT END
- PROPOSED YARD DRAIN
- PROPOSED TYPE "C-L" CATCH BASIN
- PROPOSED TYPE "C" CATCH BASIN
- PROPOSED STORM MANHOLE
- PROPOSED STORM DRAIN
- PROPOSED SANITARY MANHOLE
- PROPOSED SIGN
- PROPOSED LIGHT POLE
- PROPOSED CURB
- PROPOSED RETAINING WALL
- TOWN WETLANDS LINE
- PROPOSED EROSION CONTROL MAT
- PROPOSED CONCRETE WALK
- PROPOSED CHAIN LINK FENCE
- PROPOSED GUARD RAIL
- PROPOSED SILT FENCE
- HB — PROPOSED HAY BALES
- PROPOSED HAYBALE CHECK DAM
- 200 — EXISTING CONTOURS
- EXISTING TREE LINE
- EXISTING DECIDUOUS TREE
- EXISTING EVERGREEN TREE
- EXISTING UTILITY POLE
- WG — EXISTING WATER GATE VALVE
- EXISTING TELEPHONE MANHOLE
- EXISTING HYDRANT
- EXISTING CATCH BASIN
- EXISTING SANITARY MANHOLE
- EXISTING STORM MANHOLE
- S — EXISTING SANITARY SEWER LINE
- T — EXISTING TELEPHONE LINE
- W — EXISTING WATER MAIN
- G — EXISTING GAS MAIN
- E — EXISTING ELECTRICAL SERVICE

## TOWN OF GREENWICH STANDARD CONSTRUCTION NOTES

1. A HIGHWAY PERMIT IS REQUIRED FOR ALL WORK WITHIN THE TOWN OF GREENWICH –RIGHT OF WAY.

2. ALL WORK WITHIN THE TOWN OF GREENWICH –RIGHT OF WAY SHALL BE CONSTRUCTED TO TOWN OF GREENWICH STANDARDS.

3. CATCH BASINS FOR PRIVATE DRIVEWAYS SHALL HAVE A MINIMUM GRATE OF TWO FEET BY TWO FEET. IF THE DRIVEWAY IS CURBED THE CATCH BASIN SHALL HAVE A MINIMUM CURB INLET OF SIX INCHES. EACH DRIVEWAY CATCH BASIN SHALL ALSO HAVE A MINIMUM TWO –FOOT SUMP AND BELL TRAP.

4. ALL DRAINAGE CONNECTIONS TO THE TOWN DRAINAGE SYSTEM SHALL BE GRAVITY LINES. IF A DISCHARGE FROM A SUMP PUMP IS CONNECTED TO THE TOWN DRAINAGE SYSTEM IT MUST DISCHARGE TO A DRAINAGE STRUCTURE ON PRIVATE PROPERTY AND THEN BE CONNECTED TO THE TOWN DRAINAGE SYSTEM. ALL SUMP PUMPS REQUIRE A BACKFLOW PREVENTER (CHECK VALVE) BETWEEN THE PUMP AND THE DRAINAGE STRUCTURE. A DRAIN CONNECTION PERMIT FROM THE HIGHWAY DIVISION IS REQUIRED FOR ALL CONNECTIONS TO THE TOWN DRAINAGE SYSTEM.

5. IN ROADWAY CUTS, SUBDRAINS SHALL BE REQUIRED IF SEEPAGE OCCURS DURING CONSTRUCTION OR WITHIN ONE YEAR AFTER ROAD CONSTRUCTION IS COMPLETED AND ACCEPTED, EVEN THOUGH PLANS MAY HAVE BEEN APPROVED WITHOUT SUBDRAINS AND/OR ROADWAY CONSTRUCTION HAS BEEN COMPLETED.

6. ALL RETAINING WALLS GREATER THAN THREE FEET ARE REQUIRED TO BE DESIGNED, AND INSPECTED DURING CONSTRUCTION BY A PROFESSIONAL ENGINEER REGISTERED IN THE STATE OF CONNECTICUT.

7. ALL DETENTION/RETENTION SYSTEMS SHALL BE INSTALLED PER MANUFACTURER'S SPECIFICATIONS. ALL SYSTEMS SHALL USE A MANIFOLD SYSTEM TO DISTRIBUTE RUNOFF EVENLY INTO EACH ROW OF INFILTRATORS. DETENTION SYSTEMS WILL HAVE A MANIFOLD SYSTEM THAT CREATES THE LONGEST TRAVEL TIME TO THE CONTROL STRUCTURE. ALL DETENTION/RETENTION SYSTEMS MUST USE A STRUCTURE SUCH AS A MANHOLE FOR THE CONTROL STRUCTURE SO ALL FLOW CONTROL DEVICES CAN BE ACCESSED FOR MAINTENANCE.

8. ALL INFILTRATION SYSTEMS MUST MEET THE STORMWATER INFILTRATION/RECHARGE DESIGN REQUIREMENTS IN APPENDIX B OF THE TOWN OF GREENWICH DRAINAGE MANUAL. THERE MUST BE AT LEAST A 2–FOOT SEPARATION DISTANCE FROM THE BOTTOM OF STONE BELOW THE INFILTRATION STRUCTURE TO THE SEASONAL HIGH GROUNDWATER OR BEDROCK/LEDGE (THIS SEPARATION REQUIREMENT MAY BE WAIVED OR REDUCED BY THE APPROVING AUTHORITY ON A CASE–BY–CASE BASIS). A 3–FOOT SEPARATION DISTANCE IS REQUIRED FROM THE BOTTOM OF STONE BELOW THE INFILTRATION STRUCTURE TO SEASONAL HIGH GROUNDWATER FOR LAND USES WITH HIGHER POTENTIAL POLLUTANT LOADS (HIGH LOAD AREAS). PRIOR TO THE INSTALLATION OF THE INFILTRATORS THE ENGINEER SHALL VERIFY THE INFILTRATION STRUCTURE IS BEING INSTALLED IN THE APPROVED LOCATION AND IF
THE LOCATION HAS BEEN CHANGED ADDITIONAL SOIL TESTING SHALL BE PERFORMED AND THE ENGINEER SHALL APPROVE THE REVISED LOCATION. A REVIEW BY THE APPROVING AUTHORITY WILL BE REQUIRED.

9. EACH BMP TO BE INSTALLED SHALL HAVE THE SOILS BENEATH THE BMP SCARIFIED OR TILLED TO IMPROVE INFILTRATION.

10. THE CONTRACTOR MUST CONSTRUCT THE BIORETENTION AREA FOLLOWING THE SPECIFICATIONS IN APPENDIX G OF THE TOWN OF GREENWICH DRAINAGE MANUAL FEBRUARY 2012 AS AMENDED.

11. ALL AREAS THAT ARE USED BY CONSTRUCTION EQUIPMENT AND USED FOR CONTRACTOR PARKING MUST HAVE THE SOIL TILLED 12 TO 16 INCHES AND AMENDED WITH SMALL AMOUNTS OF ORGANIC MATERIAL IF NEEDED. THE AREA TO BE RESTORED SHALL BE DETERMINED BY THE SITE ENGINEER.

12. COMPOST–AMENDED SOILS MUST FOLLOW THE REQUIREMENTS AS STATED IN THE TOWN OF GREENWICH DRAINAGE MANUAL FEBRUARY 2012 AS AMENDED.

13. TO OBTAIN A CERTIFICATE OF OCCUPANCY THE SUBMITTAL MUST INCLUDE THE FOLLOWING:
    - ITEMS ON CHECKLIST FOR CERTIFICATE OF OCCUPANCY –FORM CL–105
    - IMPROVEMENT LOCATION SURVEY (ITEMS ON CHECKLIST FOR IMPROVEMENT LOCATION SURVEY DEPICTING 'AS–BUILT' CONDITIONS –FORM CL–106)

## CIVIL GENERAL NOTES

### GENERAL

1. SYMBOLS AND LEGENDS OF PROJECT FEATURES ARE GRAPHIC REPRESENTATIONS AND ARE NOT NECESSARILY SHOWN ON THE DRAWINGS TO SCALE OR TO THEIR ACTUAL DIMENSION OR LOCATION. COORDINATE DETAIL SHEET DIMENSIONS, MANUFACTURERS' LITERATURE, SHOP DRAWINGS AND FIELD MEASUREMENTS OF SUPPLIED PRODUCTS FOR LAYOUT OF THE PROJECT FEATURES.
2. DO NOT RELY SOLELY ON ELECTRONIC VERSIONS OF DRAWINGS, SPECIFICATIONS, AND DATA FILES THAT ARE PROVIDED BY THE ENGINEER. FIELD VERIFY LOCATION OF PROJECT FEATURES.
3. PERFORM NECESSARY CONSTRUCTION NOTIFICATIONS, APPLY FOR AND OBTAIN NECESSARY PERMITS, PAY FEES, AND POST BONDS ASSOCIATED WITH THE WORK AS REQUIRED BY THE CONTRACT DOCUMENTS.
4. SEE ARCHITECTURAL DRAWINGS FOR DIMENSIONS OF BUILDINGS AND ADJACENT SITE ELEMENTS INCLUDING SIDEWALKS, RAMPS, BUILDING ENTRANCES, STAIRWAYS, UTILITY PENETRATIONS, CONCRETE DOOR PADS, COMPACTOR PAD, LOADING DOCKS, BOLLARDS, ETC.
5. BASE PLAN: THE EXISTING PROPERTY LINES, TOPOGRAPHY, AND PHYSICAL FEATURES SHOWN WERE DETERMINED BY AN ACTUAL FIELD SURVEY PROVIDED TO FUSS & O'NEILL, AND FROM PLANS OF RECORD.
6. TOPOGRAPHIC ELEVATIONS ARE BASED ON NAVD88 DATUM.

### WORK RESTRICTIONS

1. DO NOT CLOSE OR OBSTRUCT ROADWAYS, SIDEWALKS, FIRE HYDRANTS, AND UTILITIES WITHOUT APPROPRIATE PERMITS.
2. WORK IS RESTRICTED TO THE TOWN OF GREENWICH STANDARD HOURS OF OPERATION.

### REGULATORY REQUIREMENTS

1. WITHIN LOCAL RIGHTS–OF–WAY, PERFORM THE WORK IN ACCORDANCE WITH LOCAL MUNICIPAL STANDARDS.
2. WITHIN STATE RIGHTS–OF–WAY, PERFORM THE WORK IN ACCORDANCE WITH THE LATEST EDITION OF THE DEPARTMENT OF TRANSPORTATION'S STANDARD SPECIFICATIONS AND ISSUED REVISIONS/SUPPLEMENTS.
3. PROVIDE TRAFFIC SIGNAGE AND PAVEMENT MARKINGS IN CONFORMANCE WITH THE LATEST EDITION OF THE MANUAL OF UNIFORM TRAFFIC CONTROL DEVICES.
4. BE RESPONSIBLE FOR SITE SECURITY AND JOB SAFETY. PERFORM CONSTRUCTION ACTIVITIES IN ACCORDANCE WITH OSHA STANDARDS AND LOCAL REQUIREMENTS.
5. DISPOSE OF DEMOLITION DEBRIS IN ACCORDANCE WITH APPLICABLE FEDERAL, STATE AND LOCAL REGULATIONS, ORDINANCES AND STATUTES.

### EROSION AND SEDIMENT CONTROL

1. INSTALL EROSION CONTROL MEASURES PRIOR TO STARTING ANY WORK ON THE SITE. REFER TO THE EROSION AND SEDIMENT CONTROL DRAWINGS.
2. IMPLEMENT ALL NECESSARY MEASURES REQUIRED TO CONTROL STORMWATER RUNOFF, DUST, SEDIMENT, AND DEBRIS FROM EXITING THE SITE. PERFORM CORRECTIVE ACTION AS NEEDED FOR EROSION CLEANUP AND REPAIRS TO OFF SITE AREAS, IF ANY, AT NO COST TO OWNER.
3. INSPECT AND MAINTAIN EROSION CONTROL MEASURES PER THE SCHEDULE IN THE EROSION AND SEDIMENT CONTROL DRAWINGS. DISPOSE OF SEDIMENT IN AN UPLAND AREA. DO NOT ENCUMBER OTHER DRAINAGE STRUCTURES AND PROTECTED AREAS.
4. PERFORM CONSTRUCTION SEQUENCING IN SUCH A MANNER TO CONTROL EROSION AND TO MINIMIZE THE TIME THAT EARTH MATERIALS ARE EXPOSED BEFORE THEY ARE COVERED, SEEDED, OR OTHERWISE STABILIZED.
5. UPON COMPLETION OF CONSTRUCTION AND ESTABLISHMENT OF PERMANENT GROUND COVER, REMOVE AND DISPOSE OF TEMPORARY EROSION CONTROL MEASURES. CLEAN SEDIMENT AND DEBRIS FROM TEMPORARY MEASURES AND FROM PERMANENT STORM DRAIN AND SANITARY SEWER SYSTEMS.

### DEMOLITION

1. REMOVE AND DISPOSE OF EXISTING SITE FEATURES AND UTILITIES AS REQUIRED TO ACCOMMODATE PROPOSED SITE FEATURES.
2. LIMIT DEMOLITION ACTIVITIES TO THE LIMITS OF WORK IDENTIFIED ON THE DRAWINGS. ANY DAMAGE THAT OCCURS TO EXISTING SITE FEATURES OUTSIDE OF THE INDICATED WORK LIMITS SHALL BE REPAIRED BY THE CONTRACTOR AT NO ADDITIONAL COST TO THE OWNER.

### CONSTRUCTION LAYOUT

1. PROVIDE PROPER TRANSITIONS BETWEEN EXISTING AND PROPOSED SITE IMPROVEMENTS. FIELD VERIFY EXISTING PAVEMENT AND GROUND ELEVATIONS AT THE INTERFACE WITH PROPOSED PAVEMENTS AND DRAINAGE STRUCTURES BEFORE START OF CONSTRUCTION.
2. PRIOR TO ORDERING MATERIALS AND BEGINNING CONSTRUCTION, FIELD VERIFY PROPOSED UTILITY ROUTES AND IDENTIFY ANY INTERFERENCES OR OBSTRUCTIONS WITH EXISTING UTILITIES OR PUBLIC RIGHTS–OF–WAY.
3. IMMEDIATELY INFORM THE ENGINEER IN WRITING IF EXISTING UTILITY CONDITIONS CONFLICT OR DIFFER FROM THAT INDICATED AND IF THE WORK CANNOT BE COMPLETED AS INDICATED.
4. DIMENSIONS ARE FROM FACE OF CURB, FACE OF BUILDING, FACE OF WALL, AND CENTER LINE OF PAVEMENT MARKINGS, UNLESS NOTED OTHERWISE.
5. BOUNDS OR MONUMENTATION DISTURBED DURING CONSTRUCTION SHALL BE SET OR RESET BY A PROFESSIONAL LICENSED SURVEYOR.

### EARTHWORK

1. NOTIFY UTILITY LOCATOR SERVICE AT LEAST 72 HOURS BEFORE STARTING EXCAVATION. "CALL BEFORE YOU DIG" AT 1–800–922–4455.
2. STOP WORK IN THE VICINITY OF SUSPECTED CONTAMINATED SOIL, GROUNDWATER OR OTHER MEDIA. IMMEDIATELY NOTIFY THE OWNER SO THAT APPROPRIATE TESTING AND SUBSEQUENT ACTION CAN BE TAKEN. RESUME WORK IN THE IMMEDIATE VICINITY ONLY UPON DIRECTION BY THE OWNER.

### UTILITIES

1. TERMINATE EXISTING UTILITIES IN CONFORMANCE WITH LOCAL, STATE AND INDIVIDUAL UTILITY COMPANY STANDARD SPECIFICATIONS AND DETAILS. COORDINATE UTILITY SERVICE DISCONNECTS WITH UTILITY REPRESENTATIVES.
2. THE TYPE, SIZE AND LOCATION OF DEPICTED UNDERGROUND UTILITIES ARE APPROXIMATE REPRESENTATIONS OF INFORMATION OBTAINED FROM FIELD LOCATIONS OF VISIBLE FEATURES, EXISTING MAPS AND PLANS OF RECORD, UTILITY MAPPING, AND OTHER SOURCES OF INFORMATION OBTAINED BY THE ENGINEER. ASSUME NO GUARANTEE AS TO THE COMPLETENESS, SERVICEABILITY, EXISTENCE, OR ACCURACY OF UNDERGROUND FACILITIES. FIELD VERIFY THE EXACT LOCATIONS, SIZES, AND ELEVATIONS OF THE POINTS OF CONNECTIONS TO EXISTING UTILITIES.
3. PAY ALL FEES AND COSTS ASSOCIATED WITH UTILITY MODIFICATIONS AND CONNECTIONS, REGARDLESS OF THE ENTITY THAT PERFORMS THE WORK.
4. COORDINATE THE WORK AND WORK SCHEDULE WITH UTILITY COMPANIES. PROVIDE ADEQUATE NOTICE TO UTILITIES TO PREVENT DELAYS IN CONSTRUCTION.
5. INTERIOR DIAMETERS OF STORM DRAIN AND SANITARY SEWER STRUCTURES SHALL BE DETERMINED BY THE PRECAST MANUFACTURER, BASED ON THE INDICATED PIPE SYSTEM LAYOUT AND LOCAL MUNICIPAL STANDARDS.

   MINIMUM INTERIOR DIAMETERS:
   0 TO 20 FEET DEEP; 4 FEET.
   20 FEET OR GREATER; 5 FEET.
6. RIM ELEVATIONS FOR MANHOLES, VALVE COVERS, GATE AND PULL BOXES, AND OTHER STRUCTURES ARE APPROXIMATE. SET OR RESET RIM ELEVATIONS AS FOLLOWS:

   IN PAVEMENTS AND CONCRETE SURFACES: FLUSH
   IN SURFACES ALONG ACCESSIBLE ROUTES: FLUSH
   IN LANDSCAPE, SEEDED, AND OTHER EARTH SURFACE AREAS:
   1 INCH ABOVE SURROUNDING AREA; TAPER EARTH TO RIM ELEVATION.
7. INSTALL PROPOSED PRIVATE UTILITY SERVICES ACCORDING TO THE REQUIREMENTS PROVIDED BY, AND APPROVED BY THE AUTHORITY HAVING JURISDICTION (WATER, SEWER, GAS, TELEPHONE, ELECTRIC, FIRE ALARM, ETC.). COORDINATE FINAL DESIGN LOADS AND LOCATIONS WITH OWNER AND ARCHITECT.

### PAVEMENT

1. AT A MINIMUM, CONSTRUCT ACCESSIBLE ROUTES, PARKING SPACES, RAMPS, SIDEWALKS AND WALKWAYS IN CONFORMANCE WITH THE FEDERAL AMERICANS WITH DISABILITIES ACT AND WITH STATE AND LOCAL LAWS AND REGULATIONS (WHICHEVER ARE MORE STRINGENT).

### SITE RESTORATION

1. PROVIDE 6 INCHES OF TOPSOIL (OUTSIDE OF CAP) AND SEED TO AREAS DISTURBED DURING CONSTRUCTION AND NOT DESIGNATED TO BE RESTORED WITH IMPERVIOUS SURFACES (BUILDINGS, PAVEMENTS, WALKS, ETC.) UNLESS OTHERWISE NOTED.
2. REPAIR DAMAGES RESULTING FROM CONSTRUCTION LOADS, AT NO ADDITIONAL COST TO OWNER.
3. RESTORE AREAS DISTURBED BY CONSTRUCTION OPERATIONS TO THEIR ORIGINAL CONDITION OR BETTER, AT NO ADDITIONAL COST TO OWNER.

CALL before you DIG
Call Toll Free in Conn.
1–800–922–4455

CALL–BEFORE–YOU–DIG: THE CONTRACTOR SHALL BE RESPONSIBLE FOR NOTIFYING "CALL BEFORE YOU DIG" AT 1–800–922–4455 TO ARRANGE FOR MARKING OUT EXISTING UNDERGROUND UTILITIES AT LEAST TWO WORKING DAYS PRIOR TO EXCAVATION.

### SURVEY MAP REFERENCE

TOPOGRAPHIC SURVEY OF GREENWICH HIGH SCHOOL, 10 HILLSIDE ROAD, GREENWICH, CONNECTICUT, PREPARED FOR THE TOWN OF GREENWICH BOARD OF EDUCATION, PREPARED BY D'ANDREA SURVEYING & ENGINEERING, P.C., DATED 12/18/18, REVISED THROUGH 8/29/2019, SHEETS 1–10, SCALE: 1"=20'.

### OPERATIONS AND MAINTENANCE PLAN

1. CATCH BASIN SUMPS MUST BE INSPECTED AT REGULAR INTERVALS AND CLEANED WHEN NECESSARY. AT A MINIMUM, INSPECTIONS SHOULD BE CONDUCTED TWICE PER YEAR, ONCE IN THE SPRING AND AGAIN IN THE FALL. MORE INSPECTIONS MAY BE REQUIRED DURING WINTER MONTHS WHERE HEAVY SANDING OPERATIONS MAY LEAD TO RAPID SEDIMENT ACCUMULATION WITHIN THE STRUCTURES. CLEANING OPERATIONS ARE TYPICALLY DONE USING A VACUUM TRUCK.

2. LANDSCAPED AREAS, GRAVEL PARKING AREAS, AND PARKING LOTS ARE TO BE PROPERLY MAINTAINED AND KEPT FREE OF LITTER. LITTER ON THE SITE IS TO BE PICKED UP AND PROPERLY DISPOSED OF.

3. PAVED SURFACES WILL BE SWEPT A MINIMUM OF TWO TIMES PER YEAR.

4. ALL STORMWATER FACILITIES/ RAIN GARDENS/ OUTFALLS ARE TO BE INSPECTED FOLLOWING HEAVY RAINS. ANY EROSION IS TO BE STABILIZED AS SOON AS POSSIBLE, AND ANY CLOGGED STRUCTURES ARE TO BE UNCLOGGED.

5. RAIN GARDENS, AND RIPRAP ENERGY DISSIPATERS ASSOCIATED WITH THE OUTFALLS ARE TO BE INSPECTED AND CLEANED TWICE A YEAR. EXCESS ACCUMULATED SEDIMENT AND DEBRIS SHALL BE REMOVED BY HAND AND DISPOSED OF EITHER ON SITE IN NON–WETLAND AREAS, OR OFF–SITE.


File Path: J:\DWG\P20110944S10\Civil\Plan\20110944S10_DET-01.dwg Layout: GI-001 Plotted: Mon, November 09, 2020 - 11:49 AM User: vchiaravalloti
MS VIEW: LAYER STATE: Plotter: AUTOCAD PDF (GENERAL DOCUMENTATION).PC3 CTB File: FO.STB


| No. | DATE | DESCRIPTION | DESIGNER | REVIEWER |
|---|---|---|---|---|

SEAL

SEAL

SCALE:
HORZ.: N.T.S.
VERT.:
DATUM:
HORZ.:
VERT.:
0
GRAPHIC SCALE


FUSS & O'NEILL
56 QUARRY ROAD
TRUMBULL, CONNECTICUT 06611
203.374.3748
www.fando.com


GREENWICH PUBLIC SCHOOLS

GENERAL NOTES & LEGEND

GHS CARDINAL STADIUM
PHASE 1 CONSTRUCTION DOCUMENTS

GREENWICH CONNECTICUT

PROJ. No.: 20110944.S10
DATE: 11/10/2020

GI-001

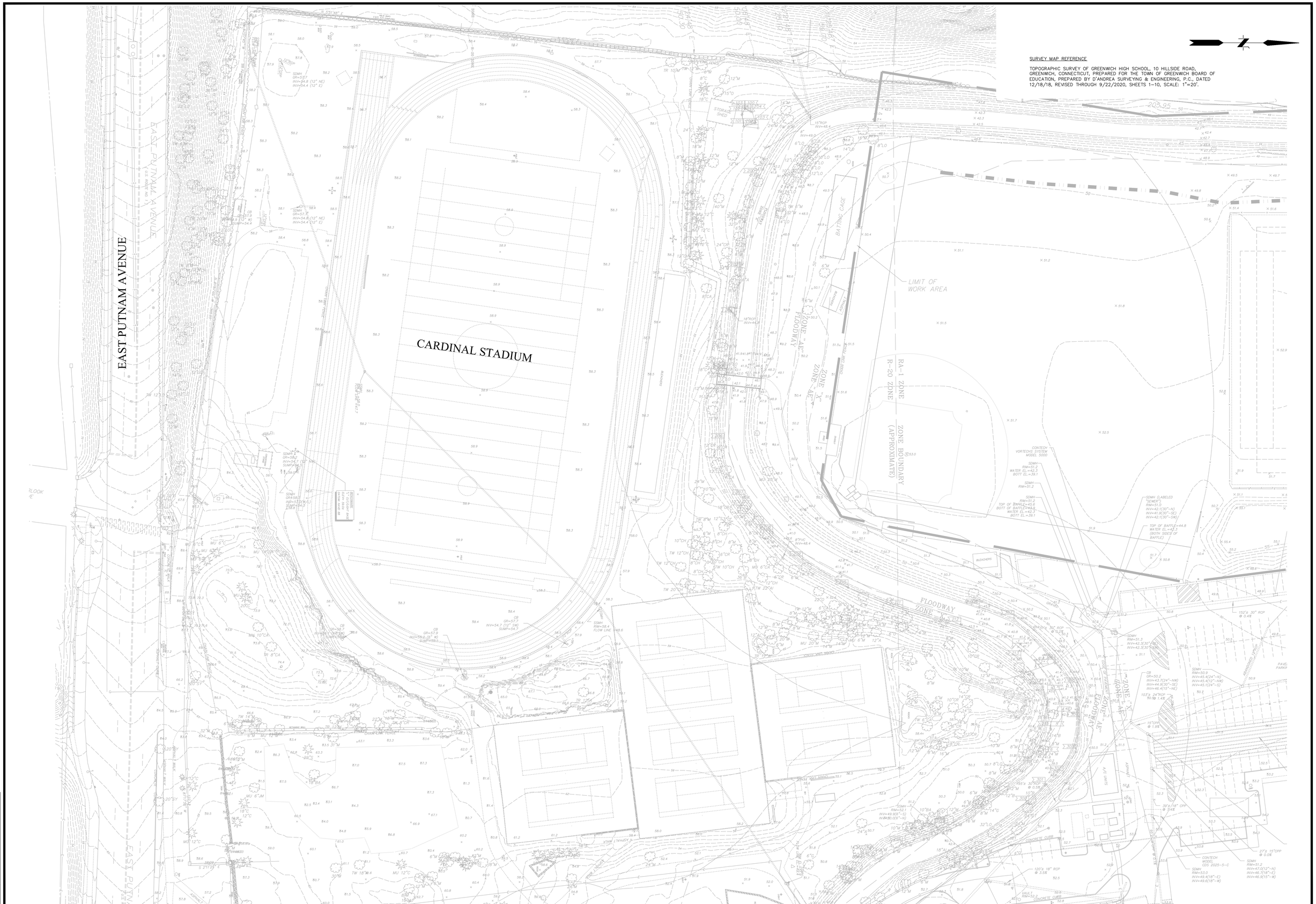


SURVEY MAP REFERENCE

TOPOGRAPHIC SURVEY OF GREENWICH HIGH SCHOOL, 10 HILLSIDE ROAD, GREENWICH, CONNECTICUT, PREPARED FOR THE TOWN OF GREENWICH BOARD OF EDUCATION, PREPARED BY D'ANDREA SURVEYING & ENGINEERING, P.C., DATED 12/18/18, REVISED THROUGH 9/22/2020, SHEETS 1–10, SCALE: 1"=20'.

| No. | DATE | DESCRIPTION | DESIGNER | REVIEWER |
|---|---|---|---|---|
| | | | | |

SEAL

SEAL

SCALE:
HORZ.: 1" = 30'
VERT.:
DATUM:
HORZ.:
VERT.:
30 15 0 30
GRAPHIC SCALE

FUSS & O'NEILL
56 QUARRY ROAD
TRUMBULL, CONNECTICUT 06611
203.374.3748
www.fando.com

GREENWICH PUBLIC SCHOOLS

EXISTING CONDITIONS PLAN

GHS CARDINAL STADIUM
PHASE 1 CONSTRUCTION DOCUMENTS

GREENWICH CONNECTICUT

PROJ. No.: 20110944.S10
DATE: 11/10/2020

EC-001

File Path: J:\DWG\P\20110944\S10\Civil\Plan\20110944S10_STP01.dwg Layout: EC-001 Plotted: Mon, November 09, 2020 - 11:45 AM User: tgriffing
MS VIEW: LAYER STATE: Plotter: AUTOCAD PDF (GENERAL DOCUMENTATION).PC3 CTB File: FO.STB

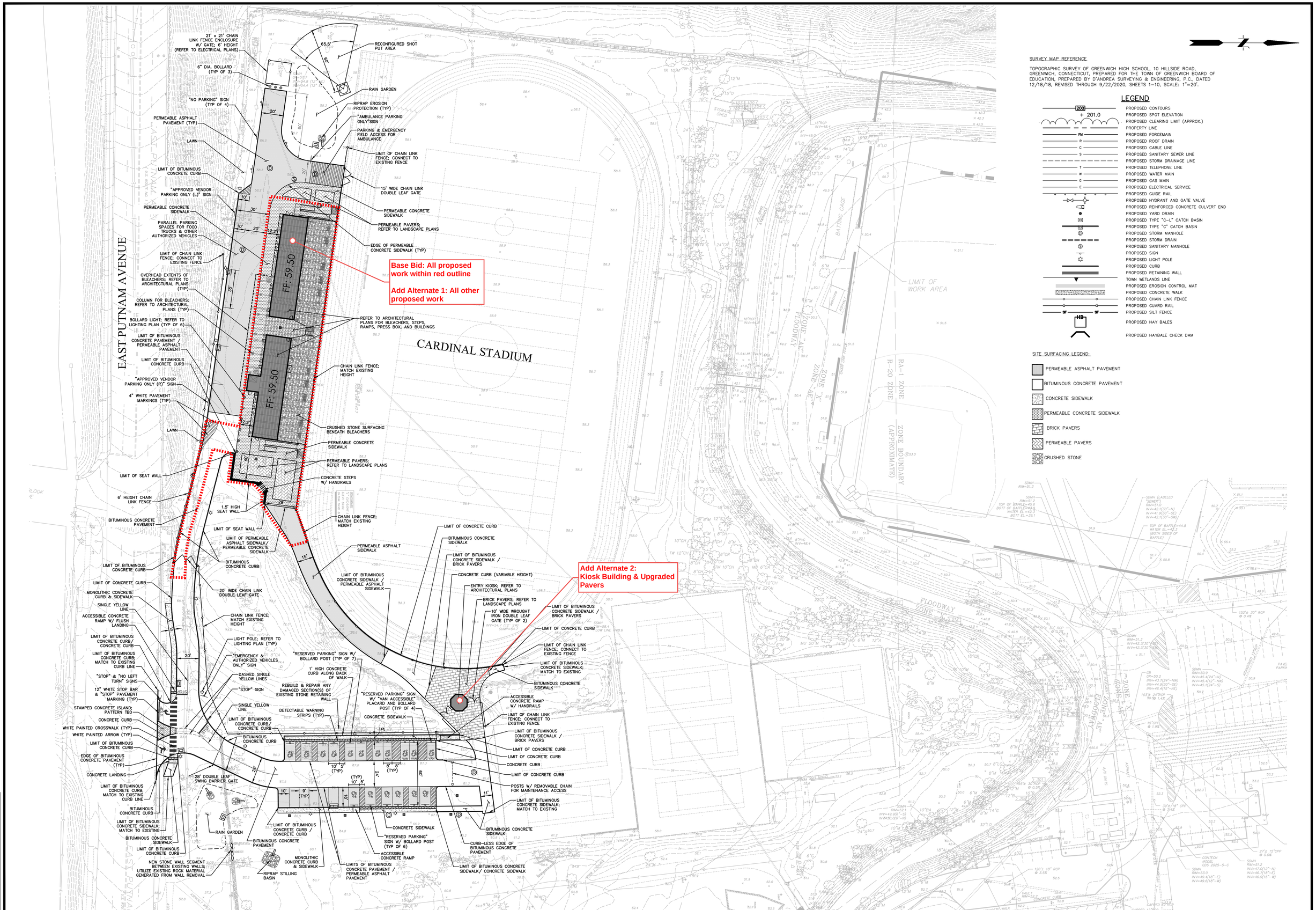


SURVEY MAP REFERENCE

TOPOGRAPHIC SURVEY OF GREENWICH HIGH SCHOOL, 10 HILLSIDE ROAD, GREENWICH, CONNECTICUT, PREPARED FOR THE TOWN OF GREENWICH BOARD OF EDUCATION, PREPARED BY D'ANDREA SURVEYING & ENGINEERING, P.C., DATED 12/18/18, REVISED THROUGH 9/22/2020, SHEETS 1–10, SCALE: 1"=20'.

## LEGEND

- 200 — PROPOSED CONTOURS
- + 201.0 — PROPOSED SPOT ELEVATION
- PROPOSED CLEARING LIMIT (APPROX.)
- PROPERTY LINE
- FM — PROPOSED FORCEMAIN
- R — PROPOSED ROOF DRAIN
- C — PROPOSED CABLE LINE
- S — PROPOSED SANITARY SEWER LINE
- PROPOSED STORM DRAINAGE LINE
- T — PROPOSED TELEPHONE LINE
- W — PROPOSED WATER MAIN
- G — PROPOSED GAS MAIN
- E — PROPOSED ELECTRICAL SERVICE
- PROPOSED GUIDE RAIL
- PROPOSED HYDRANT AND GATE VALVE
- PROPOSED REINFORCED CONCRETE CULVERT END
- PROPOSED YARD DRAIN
- PROPOSED TYPE "C–L" CATCH BASIN
- PROPOSED TYPE "C" CATCH BASIN
- PROPOSED STORM MANHOLE
- PROPOSED STORM DRAIN
- PROPOSED SANITARY MANHOLE
- PROPOSED SIGN
- PROPOSED LIGHT POLE
- PROPOSED CURB
- PROPOSED RETAINING WALL
- TOWN WETLANDS LINE
- PROPOSED EROSION CONTROL MAT
- PROPOSED CONCRETE WALK
- PROPOSED CHAIN LINK FENCE
- PROPOSED GUARD RAIL
- PROPOSED SILT FENCE
- HB — PROPOSED HAY BALES
- PROPOSED HAYBALE CHECK DAM

SITE SURFACING LEGEND:

- PERMEABLE ASPHALT PAVEMENT
- BITUMINOUS CONCRETE PAVEMENT
- CONCRETE SIDEWALK
- PERMEABLE CONCRETE SIDEWALK
- BRICK PAVERS
- PERMEABLE PAVERS
- CRUSHED STONE

| No. | DATE | DESCRIPTION | DESIGNER | REVIEWER |
|---|---|---|---|---|

SEAL

SEAL

SCALE:
HORZ.: 1" = 30'
VERT.:
DATUM:
HORZ.:
VERT.:
30 15 0 30
GRAPHIC SCALE

FUSS & O'NEILL
56 QUARRY ROAD
TRUMBULL, CONNECTICUT 06611
203.374.3748
www.fando.com

GREENWICH PUBLIC SCHOOLS

# SITE LAYOUT PLAN

GHS CARDINAL STADIUM
PHASE 1 CONSTRUCTION DOCUMENTS

GREENWICH CONNECTICUT

PROJ. No.: 20110944.S10
DATE: 11/10/2020

CS-101

File Path: J:\DWG\P20110944S10\Civil\Plan\20110944S10_STP01.dwg Layout: CS-101 Plotted: Mon, November 09, 2020 - 11:46 AM User: tgriffing
Plotter: AUTOCAD PDF (GENERAL DOCUMENTATION).PC3 CTB File: FO.STB
MS VIEW:
LAYER STATE:

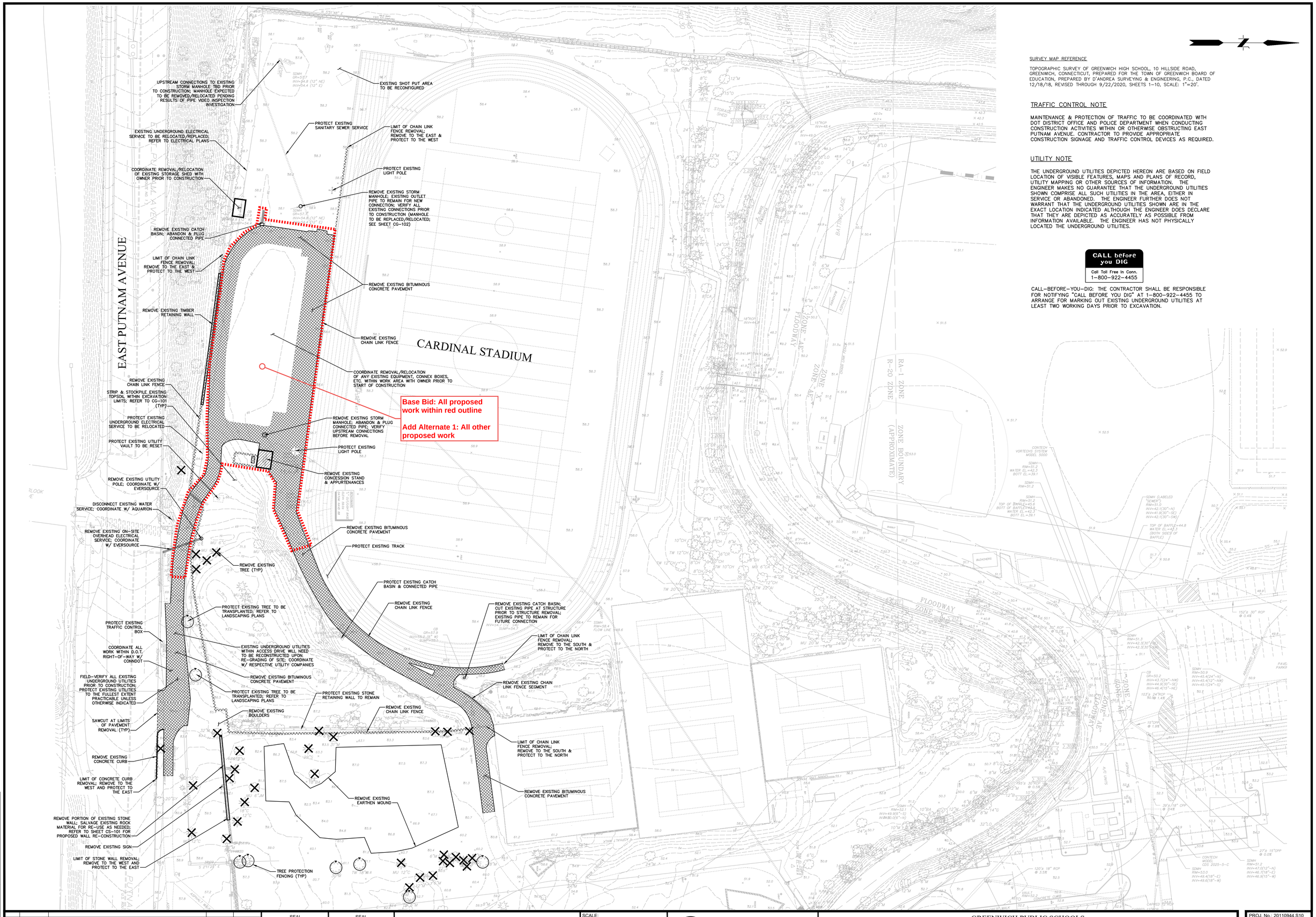


SURVEY MAP REFERENCE

TOPOGRAPHIC SURVEY OF GREENWICH HIGH SCHOOL, 10 HILLSIDE ROAD, GREENWICH, CONNECTICUT, PREPARED FOR THE TOWN OF GREENWICH BOARD OF EDUCATION, PREPARED BY D'ANDREA SURVEYING & ENGINEERING, P.C., DATED 12/18/18, REVISED THROUGH 9/22/2020, SHEETS 1-10, SCALE: 1"=20'.

## TRAFFIC CONTROL NOTE

MAINTENANCE & PROTECTION OF TRAFFIC TO BE COORDINATED WITH DOT DISTRICT OFFICE AND POLICE DEPARTMENT WHEN CONDUCTING CONSTRUCTION ACTIVITIES WITHIN OR OTHERWISE OBSTRUCTING EAST PUTNAM AVENUE. CONTRACTOR TO PROVIDE APPROPRIATE CONSTRUCTION SIGNAGE AND TRAFFIC CONTROL DEVICES AS REQUIRED.

## UTILITY NOTE

THE UNDERGROUND UTILITIES DEPICTED HEREON ARE BASED ON FIELD LOCATION OF VISIBLE FEATURES, MAPS AND PLANS OF RECORD, UTILITY MAPPING OR OTHER SOURCES OF INFORMATION. THE ENGINEER MAKES NO GUARANTEE THAT THE UNDERGROUND UTILITIES SHOWN COMPRISE ALL SUCH UTILITIES IN THE AREA, EITHER IN SERVICE OR ABANDONED. THE ENGINEER FURTHER DOES NOT WARRANT THAT THE UNDERGROUND UTILITIES SHOWN ARE IN THE EXACT LOCATION INDICATED ALTHOUGH THE ENGINEER DOES DECLARE THAT THEY ARE DEPICTED AS ACCURATELY AS POSSIBLE FROM INFORMATION AVAILABLE. THE ENGINEER HAS NOT PHYSICALLY LOCATED THE UNDERGROUND UTILITIES.

**CALL before you DIG**
Call Toll Free In Conn.
1-800-922-4455

CALL-BEFORE-YOU-DIG: THE CONTRACTOR SHALL BE RESPONSIBLE FOR NOTIFYING "CALL BEFORE YOU DIG" AT 1-800-922-4455 TO ARRANGE FOR MARKING OUT EXISTING UNDERGROUND UTILITIES AT LEAST TWO WORKING DAYS PRIOR TO EXCAVATION.

File Path: J:\DWG\P\20110944S10\Civil\Plans\20110944S10_STP01.dwg Layout: CP-101 Plotted: Mon, November 09, 2020 - 11:45 AM User: tgriffing
MS VIEW: LAYER STATE: Plotter: AUTOCAD PDF (GENERAL DOCUMENTATION).PC3 CTB File: FO.STB

| No. | DATE | DESCRIPTION | DESIGNER | REVIEWER |
|---|---|---|---|---|

SEAL

SEAL

SCALE:
HORZ.: 1" = 30'
VERT.:
DATUM:
HORZ.:
VERT.:
30 15 0 30
GRAPHIC SCALE

FUSS & O'NEILL
56 QUARRY ROAD
TRUMBULL, CONNECTICUT 06611
203.374.3748
www.fando.com

GREENWICH PUBLIC SCHOOLS

SITE DEMOLITION / SITE PREPARATION PLAN

GHS CARDINAL STADIUM
PHASE 1 CONSTRUCTION DOCUMENTS

GREENWICH CONNECTICUT

PROJ. No.: 20110944.S10
DATE: 11/10/2020

CP-101

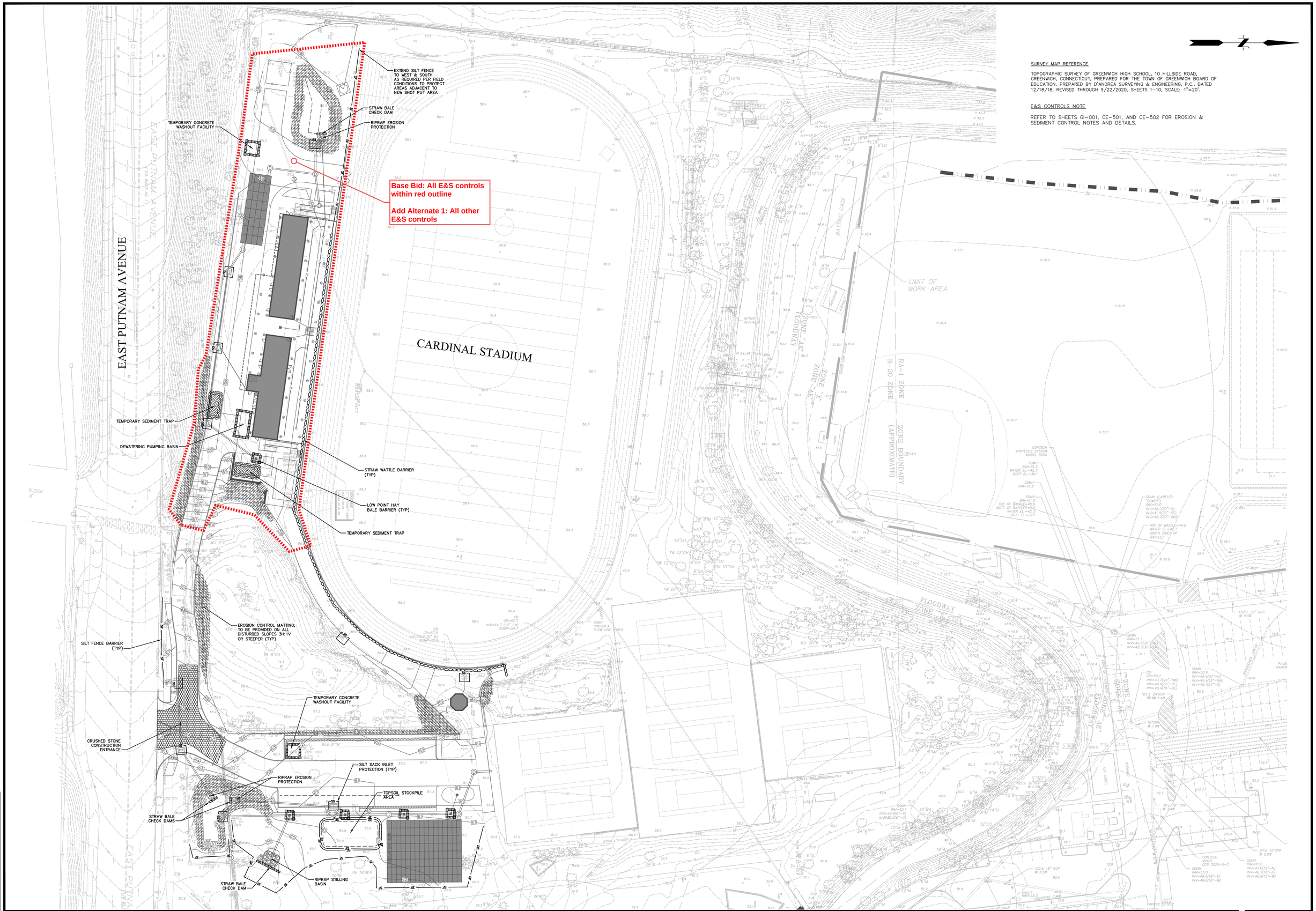


SURVEY MAP REFERENCE

TOPOGRAPHIC SURVEY OF GREENWICH HIGH SCHOOL, 10 HILLSIDE ROAD, GREENWICH, CONNECTICUT, PREPARED FOR THE TOWN OF GREENWICH BOARD OF EDUCATION, PREPARED BY D'ANDREA SURVEYING & ENGINEERING, P.C., DATED 12/18/18, REVISED THROUGH 9/22/2020, SHEETS 1–10, SCALE: 1"=20'.

E&S CONTROLS NOTE

REFER TO SHEETS CI–001, CE–501, AND CE–502 FOR EROSION & SEDIMENT CONTROL NOTES AND DETAILS.

| No. | DATE | DESCRIPTION | DESIGNER | REVIEWER |
|---|---|---|---|---|

SEAL

SEAL

SCALE:
HORZ.: 1" = 30'
VERT.:
DATUM:
HORZ.:
VERT.:
30 15 0 30
GRAPHIC SCALE

FUSS & O'NEILL
56 QUARRY ROAD
TRUMBULL, CONNECTICUT 06611
203.374.3748
www.fando.com

GREENWICH PUBLIC SCHOOLS

EROSION & SEDIMENTATION CONTROL PLAN

GHS CARDINAL STADIUM
PHASE 1 CONSTRUCTION DOCUMENTS

GREENWICH CONNECTICUT

PROJ. No.: 20110944.S10
DATE: 11/10/2020

CE-101

File Path: J:\DWG\P2011\10944\S10\Civil\Plan\20110944S10_STP01.dwg Layout: CE-101 Plotted: Mon, November 09, 2020 - 11:46 AM User: tgriffing
Plotter: AUTOCAD PDF (GENERAL DOCUMENTATION).PC3 CTB File: FO.STB
MS VIEW:
LAYER STATE:

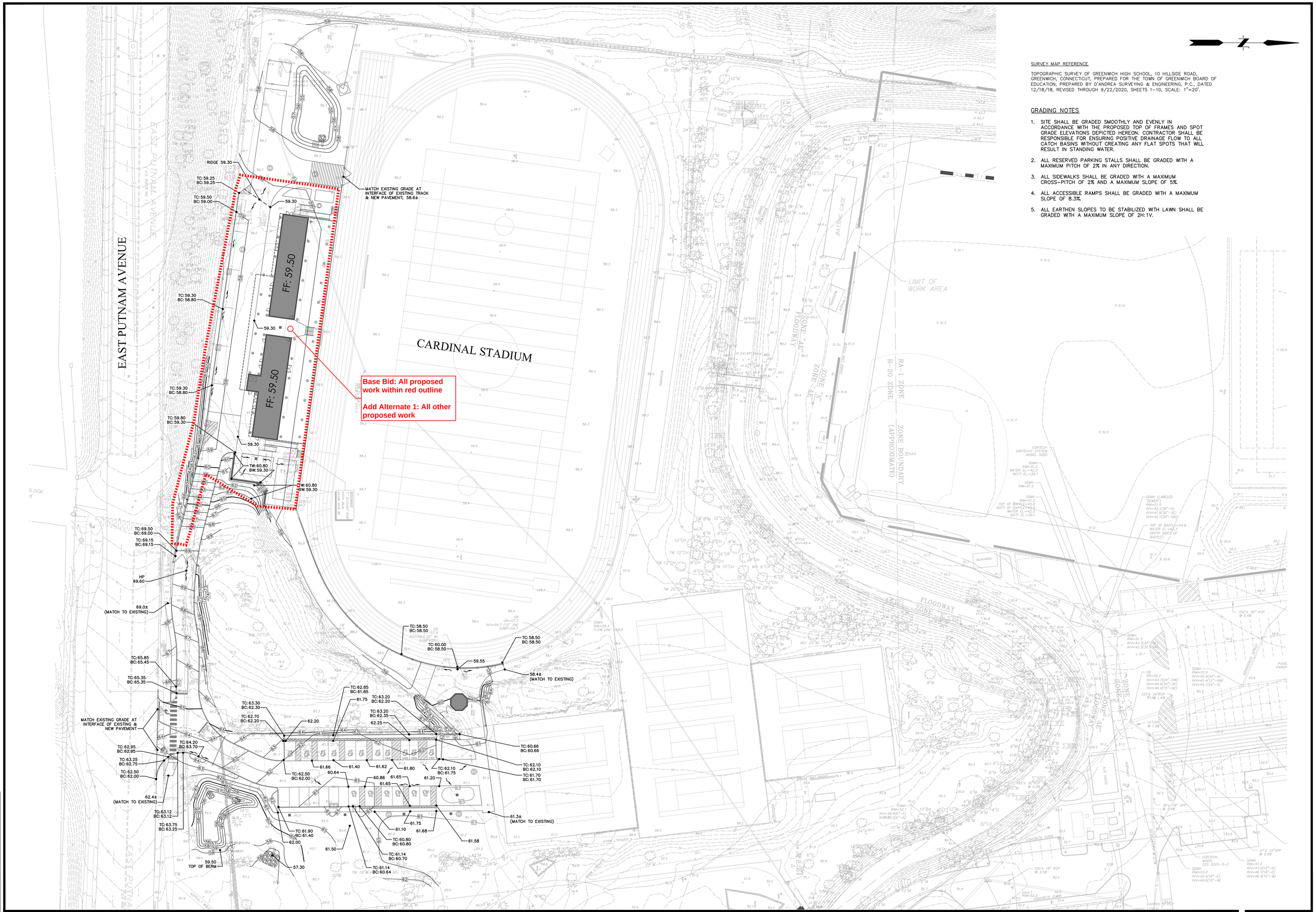


SURVEY MAP REFERENCE

TOPOGRAPHIC SURVEY OF GREENWICH HIGH SCHOOL, 10 HILLSIDE ROAD, GREENWICH, CONNECTICUT, PREPARED FOR THE TOWN OF GREENWICH BOARD OF EDUCATION, PREPARED BY D'ANDREA SURVEYING & ENGINEERING, P.C., DATED 12/18/18, REVISED THROUGH 9/22/2020, SHEETS 1–10, SCALE: 1"=20'.

## GRADING NOTES

1. SITE SHALL BE GRADED SMOOTHLY AND EVENLY IN ACCORDANCE WITH THE PROPOSED TOP OF FRAMES AND SPOT GRADE ELEVATIONS DEPICTED HEREON. CONTRACTOR SHALL BE RESPONSIBLE FOR ENSURING POSITIVE DRAINAGE FLOW TO ALL CATCH BASINS WITHOUT CREATING ANY FLAT SPOTS THAT WILL RESULT IN STANDING WATER.
2. ALL RESERVED PARKING STALLS SHALL BE GRADED WITH A MAXIMUM PITCH OF 2% IN ANY DIRECTION.
3. ALL SIDEWALKS SHALL BE GRADED WITH A MAXIMUM CROSS–PITCH OF 2% AND A MAXIMUM SLOPE OF 5%.
4. ALL ACCESSIBLE RAMPS SHALL BE GRADED WITH A MAXIMUM SLOPE OF 8.3%.
5. ALL EARTHEN SLOPES TO BE STABILIZED WITH LAWN SHALL BE GRADED WITH A MAXIMUM SLOPE OF 2H:1V.

| No. | DATE | DESCRIPTION | DESIGNER | REVIEWER |
|---|---|---|---|---|

SEAL

SEAL

SCALE: HORZ.: 1" = 30'; VERT.:
DATUM: HORZ.: VERT.:
30 15 0 30
GRAPHIC SCALE

FUSS & O'NEILL
56 QUARRY ROAD
TRUMBULL, CONNECTICUT 06611
203.374.3748
www.fando.com

GREENWICH PUBLIC SCHOOLS

SITE GRADING PLAN

GHS CARDINAL STADIUM
PHASE 1 CONSTRUCTION DOCUMENTS

GREENWICH CONNECTICUT

PROJ. No.: 20110944.S10
DATE: 11/10/2020

CG-101

File Path: J:\DWG\P\20110944\S10\Civil\Plan\20110944S10_STP01.dwg Layout: CG-101 Plotted: Mon, November 09, 2020 - 11:46 AM User: tgriffing
Plotter: AUTOCAD PDF (GENERAL DOCUMENTATION).PC3 CTB File: FO.STB
MS VIEW: LAYER STATE:

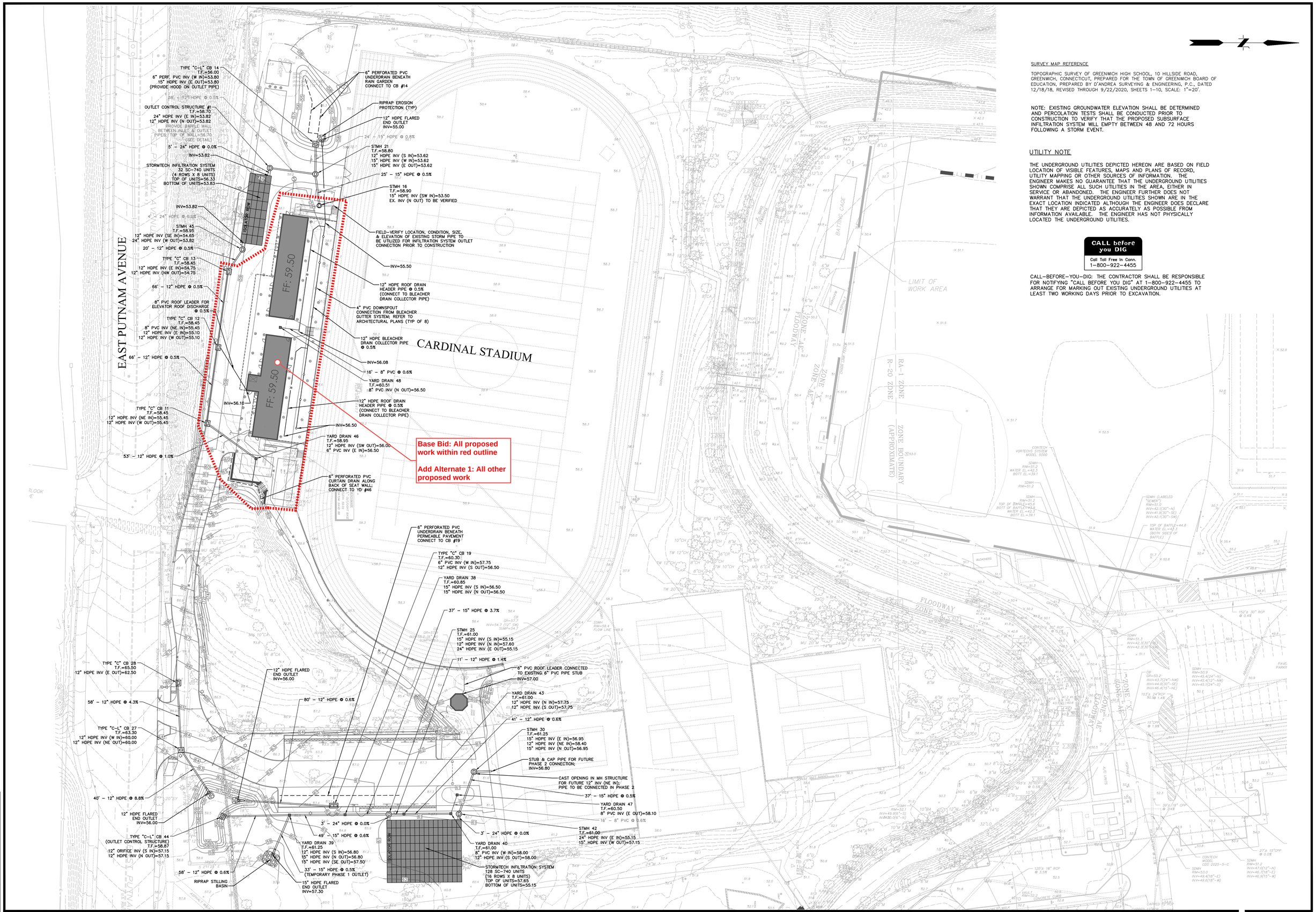


SURVEY MAP REFERENCE

TOPOGRAPHIC SURVEY OF GREENWICH HIGH SCHOOL, 10 HILLSIDE ROAD, GREENWICH, CONNECTICUT, PREPARED FOR THE TOWN OF GREENWICH BOARD OF EDUCATION, PREPARED BY D'ANDREA SURVEYING & ENGINEERING, P.C., DATED 12/18/18, REVISED THROUGH 9/22/2020, SHEETS 1–10, SCALE: 1"=20'.

NOTE: EXISTING GROUNDWATER ELEVATION SHALL BE DETERMINED AND PERCOLATION TESTS SHALL BE CONDUCTED PRIOR TO CONSTRUCTION TO VERIFY THAT THE PROPOSED SUBSURFACE INFILTRATION SYSTEM WILL EMPTY BETWEEN 48 AND 72 HOURS FOLLOWING A STORM EVENT.

UTILITY NOTE

THE UNDERGROUND UTILITIES DEPICTED HEREON ARE BASED ON FIELD LOCATION OF VISIBLE FEATURES, MAPS AND PLANS OF RECORD, UTILITY MAPPING OR OTHER SOURCES OF INFORMATION. THE ENGINEER MAKES NO GUARANTEE THAT THE UNDERGROUND UTILITIES SHOWN COMPRISE ALL SUCH UTILITIES IN THE AREA, EITHER IN SERVICE OR ABANDONED. THE ENGINEER FURTHER DOES NOT WARRANT THAT THE UNDERGROUND UTILITIES SHOWN ARE IN THE EXACT LOCATION INDICATED ALTHOUGH THE ENGINEER DOES DECLARE THAT THEY ARE DEPICTED AS ACCURATELY AS POSSIBLE FROM INFORMATION AVAILABLE. THE ENGINEER HAS NOT PHYSICALLY LOCATED THE UNDERGROUND UTILITIES.

CALL before you DIG
Call Toll Free In Conn.
1–800–922–4455

CALL–BEFORE–YOU–DIG: THE CONTRACTOR SHALL BE RESPONSIBLE FOR NOTIFYING "CALL BEFORE YOU DIG" AT 1–800–922–4455 TO ARRANGE FOR MARKING OUT EXISTING UNDERGROUND UTILITIES AT LEAST TWO WORKING DAYS PRIOR TO EXCAVATION.

| No. | DATE | DESCRIPTION | DESIGNER | REVIEWER |
|---|---|---|---|---|

SEAL

SEAL

SCALE:
HORZ.: 1" = 30'
VERT.:
DATUM:
HORZ.:
VERT.:
30 15 0 30
GRAPHIC SCALE

FUSS & O'NEILL
56 QUARRY ROAD
TRUMBULL, CONNECTICUT 06611
203.374.3748
www.fando.com

GREENWICH PUBLIC SCHOOLS

SITE DRAINAGE PLAN

GHS CARDINAL STADIUM
PHASE 1 CONSTRUCTION DOCUMENTS

GREENWICH CONNECTICUT

PROJ. No.: 20110944.S10
DATE: 11/10/2020

CG-102

File Path: J:\DWG\P2011\0944\S10\Civil\Plan\20110944S10_STP01.dwg Layout: CG-102 Plotted: Mon, November 09, 2020 - 11:46 AM User: tgriffing
Plotter: AUTOCAD PDF (GENERAL DOCUMENTATION).PC3 CTB File: FO.STB
MS VIEW:
LAYER STATE:

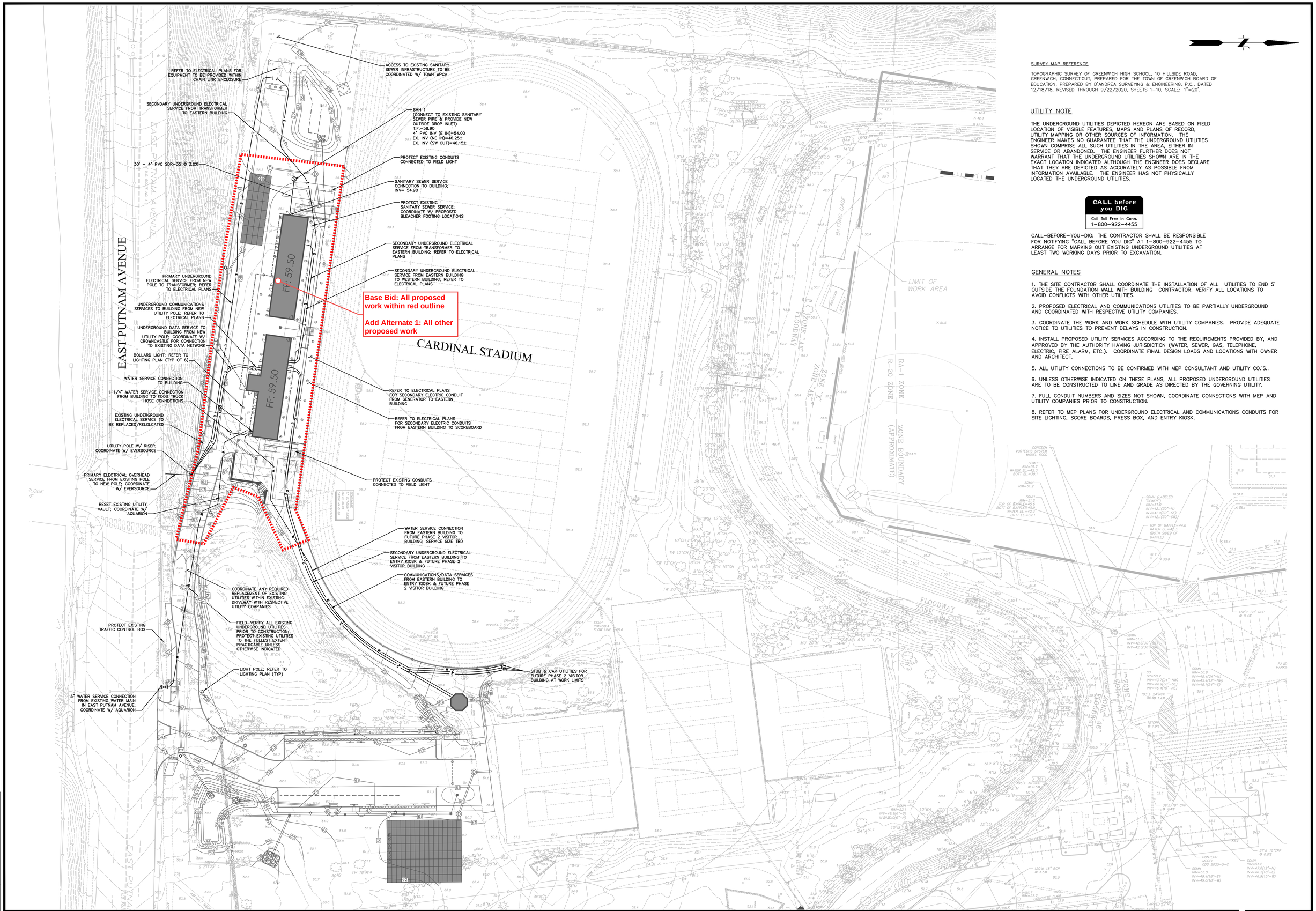


SURVEY MAP REFERENCE

TOPOGRAPHIC SURVEY OF GREENWICH HIGH SCHOOL, 10 HILLSIDE ROAD, GREENWICH, CONNECTICUT, PREPARED FOR THE TOWN OF GREENWICH BOARD OF EDUCATION, PREPARED BY D'ANDREA SURVEYING & ENGINEERING, P.C., DATED 12/18/18, REVISED THROUGH 9/22/2020, SHEETS 1–10, SCALE: 1"=20'.

## UTILITY NOTE

THE UNDERGROUND UTILITIES DEPICTED HEREON ARE BASED ON FIELD LOCATION OF VISIBLE FEATURES, MAPS AND PLANS OF RECORD, UTILITY MAPPING OR OTHER SOURCES OF INFORMATION. THE ENGINEER MAKES NO GUARANTEE THAT THE UNDERGROUND UTILITIES SHOWN COMPRISE ALL SUCH UTILITIES IN THE AREA, EITHER IN SERVICE OR ABANDONED. THE ENGINEER FURTHER DOES NOT WARRANT THAT THE UNDERGROUND UTILITIES SHOWN ARE IN THE EXACT LOCATION INDICATED ALTHOUGH THE ENGINEER DOES DECLARE THAT THEY ARE DEPICTED AS ACCURATELY AS POSSIBLE FROM INFORMATION AVAILABLE. THE ENGINEER HAS NOT PHYSICALLY LOCATED THE UNDERGROUND UTILITIES.

CALL before you DIG
Call Toll Free In Conn.
1–800–922–4455

CALL–BEFORE–YOU–DIG: THE CONTRACTOR SHALL BE RESPONSIBLE FOR NOTIFYING "CALL BEFORE YOU DIG" AT 1–800–922–4455 TO ARRANGE FOR MARKING OUT EXISTING UNDERGROUND UTILITIES AT LEAST TWO WORKING DAYS PRIOR TO EXCAVATION.

## GENERAL NOTES

1. THE SITE CONTRACTOR SHALL COORDINATE THE INSTALLATION OF ALL UTILITIES TO END 5' OUTSIDE THE FOUNDATION WALL WITH BUILDING CONTRACTOR. VERIFY ALL LOCATIONS TO AVOID CONFLICTS WITH OTHER UTILITIES.

2. PROPOSED ELECTRICAL AND COMMUNICATIONS UTILITIES TO BE PARTIALLY UNDERGROUND AND COORDINATED WITH RESPECTIVE UTILITY COMPANIES.

3. COORDINATE THE WORK AND WORK SCHEDULE WITH UTILITY COMPANIES. PROVIDE ADEQUATE NOTICE TO UTILITIES TO PREVENT DELAYS IN CONSTRUCTION.

4. INSTALL PROPOSED UTILITY SERVICES ACCORDING TO THE REQUIREMENTS PROVIDED BY, AND APPROVED BY THE AUTHORITY HAVING JURISDICTION (WATER, SEWER, GAS, TELEPHONE, ELECTRIC, FIRE ALARM, ETC.). COORDINATE FINAL DESIGN LOADS AND LOCATIONS WITH OWNER AND ARCHITECT.

5. ALL UTILITY CONNECTIONS TO BE CONFIRMED WITH MEP CONSULTANT AND UTILITY CO.'S..

6. UNLESS OTHERWISE INDICATED ON THESE PLANS, ALL PROPOSED UNDERGROUND UTILITIES ARE TO BE CONSTRUCTED TO LINE AND GRADE AS DIRECTED BY THE GOVERNING UTILITY.

7. FULL CONDUIT NUMBERS AND SIZES NOT SHOWN, COORDINATE CONNECTIONS WITH MEP AND UTILITY COMPANIES PRIOR TO CONSTRUCTION.

8. REFER TO MEP PLANS FOR UNDERGROUND ELECTRICAL AND COMMUNICATIONS CONDUITS FOR SITE LIGHTING, SCORE BOARDS, PRESS BOX, AND ENTRY KIOSK.

| No. | DATE | DESCRIPTION | DESIGNER | REVIEWER |
|---|---|---|---|---|

SEAL

SEAL

SCALE:
HORZ.: 1" = 30'
VERT.:
DATUM:
HORZ.:
VERT.:
30 15 0 30
GRAPHIC SCALE

FUSS & O'NEILL
56 QUARRY ROAD
TRUMBULL, CONNECTICUT 06611
203.374.3748
www.fando.com

GREENWICH PUBLIC SCHOOLS

SITE UTILITY PLAN

GHS CARDINAL STADIUM
PHASE 1 CONSTRUCTION DOCUMENTS

GREENWICH CONNECTICUT

PROJ. No.: 20110944.S10
DATE: 11/10/2020

CU-101

File Path: J:\DWG\P\20110944\S10\Civil\Plan\20110944S10_STP01.dwg Layout: CU-101 Plotted: Mon, November 09, 2020 - 11:47 AM User: tgriffing
MS VIEW: LAYER STATE:
Plotter: AUTOCAD PDF (GENERAL DOCUMENTATION).PC3 CTB File: FO.STB

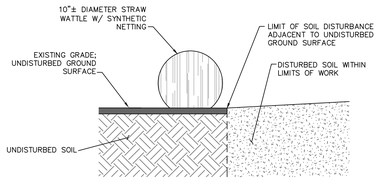


NOTE: WATTLES TO BE WEIGHED DOWN WITH SANDBAGS (WITHIN PAVED SURFACES) OR STAKED (WITHIN NON-PAVED SURFACES) AS NECESSARY AT AREAS WITH STEEP SLOPES AND/OR SIGNIFICANT SEDIMENT TRANSPORT POTENTIAL.

## STRAW WATTLE BARRIER

NOT TO SCALE

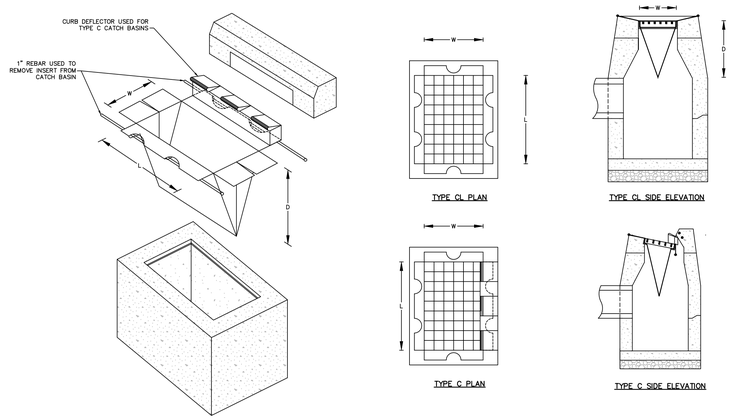


## SILT SACK CATCH BASIN INSERT

NOT TO SCALE

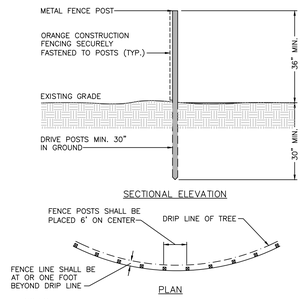


NOTES:
SEE LANDSCAPING PLAN FOR ADDITIONAL TREE PROTECTION NOTES.

## TREE PROTECTION FENCING

NOT TO SCALE

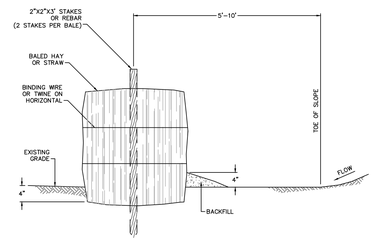


## TOE OF SLOPE HAY BALE BARRIER

NOT TO SCALE

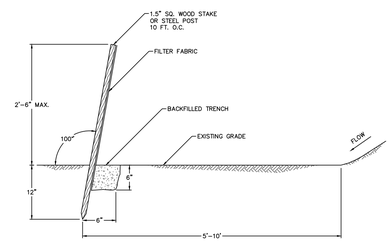


## SILT FENCE

NOT TO SCALE

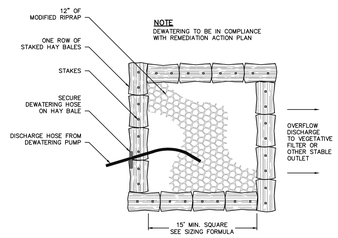


NOTE
DEWATERING TO BE IN COMPLIANCE WITH REMEDIATION ACTION PLAN

SIZING FORMULA:
CUBIC FT. OF REQUIRED STORAGE = PUMP DISCHARGE RATE (GPM) x 16

PLAN

## PUMPING SETTLING BASIN TYPE I

NOT TO SCALE

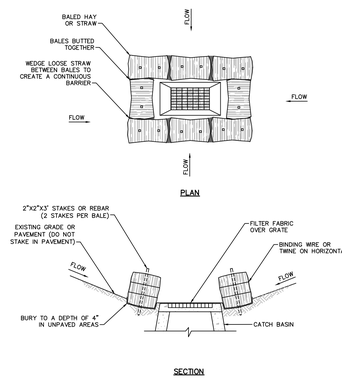


## LOW POINT HAY BALE BARRIER

NOT TO SCALE

EROSION & SEDIMENT CONTROL NOTES

**1. CONSTRUCTION STANDARDS** – CONSTRUCT ALL EROSION AND SEDIMENT CONTROL MEASURES IN ACCORDANCE WITH THE STANDARDS AND SPECIFICATIONS OF THE MOST RECENT EDITION OF THE "CONNECTICUT GUIDELINES FOR SOIL EROSION AND SEDIMENT CONTROL" (CT DEP BULLETIN 34). ALL MEASURES SHALL BE MAINTAINED AND UPGRADED TO ACHIEVE PROPER SEDIMENT CONTROL DURING CONSTRUCTION.

**2. PLAN IMPLEMENTATION** – IMPLEMENT THIS EROSION AND SEDIMENT CONTROL PLAN. THIS IMPLEMENTATION INCLUDES THE INSTALLATION AND MAINTENANCE OF CONTROL MEASURES UNTIL PERMANENT STABILIZATION IS ACHIEVED, INFORMING ALL SUBCONTRACTORS OF THE REQUIREMENTS AND OBJECTIVES OF THE PLAN, AND NOTIFYING THE PROPER MUNICIPAL AGENCY OF ANY TRANSFER OF THIS RESPONSIBILITY. THE OWNER SHALL BE RESPONSIBLE FOR CONVEYING A COPY OF THE EROSION AND SEDIMENT CONTROL PLAN TO THE NEW OWNER IF THE TITLE OF THE LAND IS TRANSFERRED PRIOR TO ACHIEVING PERMANENT STABILIZATION.

**3. INSTALLATION SCHEDULE** – INSTALL THE CONSTRUCTION ENTRANCE BEFORE CONSTRUCTION TRAFFIC INTO AND OUT OF THE PROJECT AREA BEGINS. INSTALL EROSION AND SEDIMENT CONTROL MEASURES PRIOR TO STUMP REMOVAL AND CONSTRUCTION. INSTALL ADDITIONAL CONTROL MEASURES DURING THE CONSTRUCTION PERIOD, IF DEEMED NECESSARY BY THE OWNER, HIS AGENTS OR AGENTS OF THE MUNICIPALITY.

**4. FUGITIVE DUST** – CONTROL FUGITIVE DUST USING WATER SPRAYS OR CALCIUM CHLORIDE ON SOIL SURFACES, SWEEPING PAVED AREAS, TEMPORARY WINDBREAKS OR NON-ASPHALTIC SOIL TACKIFIERS.

**5. HAY BALE LIFE SPAN** – INSTALL HAY BALES WHERE PROTECTION AND EFFECTIVENESS IS REQUIRED FOR LESS THAN 90 DAYS. OTHERWISE, INSTALL SILT FENCE.

**6. CATCH BASINS** – PROTECT CATCH BASINS WITH PROPER CONTROLS THROUGHOUT THE CONSTRUCTION PERIOD UNTIL ALL DISTURBED AREAS ARE PERMANENTLY STABILIZED.

**7. STOCKPILES** – ENCIRCLE STOCKPILES OF ERODIBLE SOIL WITH A HAY BALE OR SILT FENCE BARRIER. THE SIDE SLOPES OF ERODIBLE STOCKPILED MATERIAL SHALL BE NO STEEPER THAN 2:1. STOCKPILES THAT ARE NOT TO BE USED WITHIN 30 DAYS SHALL BE SEEDED AND MULCHED IMMEDIATELY AFTER THEY ARE FORMED.

**8. TOE OF SLOPE** – ESTABLISH AN EROSION CONTROL BARRIER (SILT FENCE OR HAY BALE BARRIER) APPROXIMATELY 5 TO 10 FEET FROM THE PROPOSED TOE OF THE CUT OR FILL AREA PRIOR TO BEGINNING EARTHWORK.

**9. SEDIMENT REMOVAL** – SEDIMENT REACHING ½ THE HEIGHT OF THE EROSION CONTROL BARRIER SHALL BE REMOVED. REMOVE AND DISPOSE OF SEDIMENT IN A MANNER CONSISTENT WITH THE INTENT OF THE PLAN.

**10. SOIL STABILIZATION SCHEDULE** – APPLY PERMANENT SOIL STABILIZATION MEASURES TO ALL GRADED AREAS WITHIN 7 DAYS OF ESTABLISHING FINAL GRADE. APPLY TEMPORARY SOIL STABILIZATION MEASURES IF FINAL GRADING IS TO BE DELAYED MORE THAN 30 DAYS.

**11. TEMPORARY SEEDING** – TEMPORARILY SEED ERODIBLE SOILS THAT WILL BE EXPOSED GREATER THAN 1 BUT LESS THAN 12 MONTHS WITHIN THE FIRST 7 DAYS OF SUSPENDING GRADING OPERATIONS. APPLY LIME AT A RATE OF 90 LBS/1000 SQ. FT. APPLY 10-10-10 FERTILIZER AT A RATE OF 7 ½ LBS/1000 SQ. FT. APPLY PERENNIAL RYE GRASS AT A RATE OF 2 LBS/1000 SQ. FT. TO A DEPTH OF ½ INCH. OPTIMUM SEEDING DATES ARE MARCH 15 TO JULY 1 AND AUGUST 1 TO OCTOBER 15. MULCH FOR SEED APPLIED WITHIN THE OPTIMUM SEEDING DATES SHALL BE APPLIED EVENLY SUCH THAT IT PROVIDES 80%-95% SOIL COVERAGE. MULCH FOR SEED APPLIED OUTSIDE OF THE OPTIMUM SEEDING DATES SHALL BE APPLIED EVENLY SUCH THAT IT PROVIDES 95%-100% COVERAGE.

**12. PERMANENT SEEDING** – SEED PERMANENT LAWN AREAS IN ACCORDANCE WITH THE SPECIFICATIONS.

**13. INSPECTION** – THE OWNER SHALL SECURE THE SERVICES OF A SOIL SCIENTIST OR PROFESSIONAL ENGINEER TO VERIFY IN THE FIELD THAT THE CONTROLS REQUIRED BY THIS PLAN ARE PROPERLY INSTALLED AND MAINTAINED. THESE INSPECTIONS SHALL BE NOT LESS FREQUENTLY THAN WEEKLY AND WITHIN 24 HOURS OF THE END OF A STORM HAVING A RAINFALL AMOUNT OF 0.1 INCH OR GREATER. FOLLOWING THESE INSPECTIONS, A WRITTEN REPORT SHALL BE PREPARED, INFORMING THE OWNER OR HIS AGENT NOT LESS FREQUENTLY THAN WEEKLY AND THE MUNICIPALITY NOT LESS FREQUENTLY THAN MONTHLY OF OBSERVATIONS, MAINTENANCE, AND CORRECTIVE ACTIVITIES UNDERTAKEN.

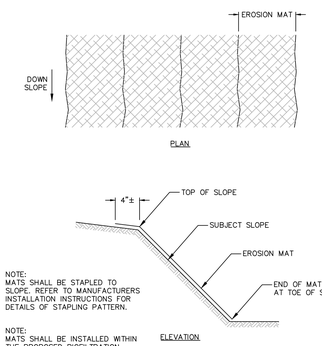


NOTE:
MATS SHALL BE STAPLED TO SLOPE. REFER TO MANUFACTURERS INSTALLATION INSTRUCTIONS FOR DETAILS OF STAPLING PATTERN.

NOTE:
MATS SHALL BE INSTALLED WITHIN THE PROPOSED BIOFILTRATION BASINS UPON THE COMPLETION OF CONSTRUCTION/RESTORATION ACTIVITIES AS INDICATED IN THE PLANS.

## EROSION CONTROL MATTING

NOT TO SCALE

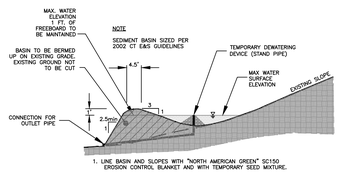


NOTE
SEDIMENT BASIN SIZED PER 2002 CT E&S GUIDELINES

1. LINE BASIN AND SLOPES WITH "NORTH AMERICAN GREEN" SC150 EROSION CONTROL BLANKET AND WITH TEMPORARY SEED MIXTURE.
2. COMPACTION REQUIREMENT FOR BERM CONSTRUCTION
   - AREA TO BE SCARIFIED PRIOR TO PLACEMENT OF FILL
   - ENSURE AT LEAST 90-95% STANDARD PROCTOR COMPACTION
   - FILL MATERIAL PLACED 9-INCH CONTINUOUS LIFT OVER ENTIRE LENGTH OF FILL
   - COMPACTION SHALL BE OBTAINED BY ROUTING THE HAULING EQUIPMENT OVER THE FILL SO THAT THE ENTIRE SURFACE OF THE HILL IS TRAVERSED BY AT LEAST ONE WHEEL OR TREAD TRACK OF THE EQUIPMENT, OR BY USING A COMPACTOR.

## TEMPORARY SEDIMENT TRAP TYPICAL CROSS SECTION

NOT TO SCALE

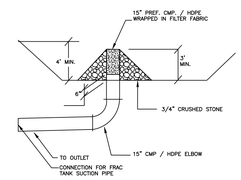


TEMPORARY SEDIMENT TRAP OUTLET DEVICE

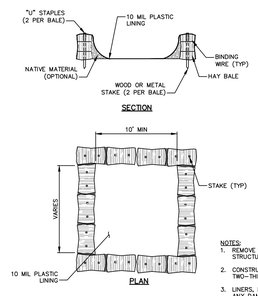


NOTES:
1. REMOVE HARDEN CONCRETE WHEN WITHIN 4" FROM TOP OF STRUCTURE.
2. CONSTRUCT NEW FACILITIES ONCE CURRENT FACILITIES ARE TWO-THIRDS FULL.
3. LINERS, HAYBALES, ETC. SHALL BE INSPECTED FOR DAMAGE ANY DAMAGE SHALL BE REPAIR PROMPTLY.

## ABOVE GROUND TEMPORARY CONCRETE WASHOUT FACILITY

NOT TO SCALE

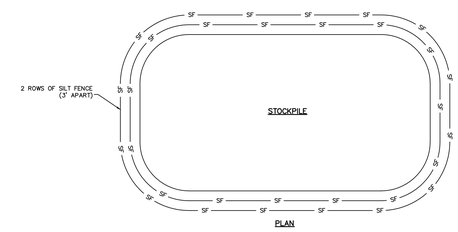


## STOCKPILE CONTAINMENT

NOT TO SCALE

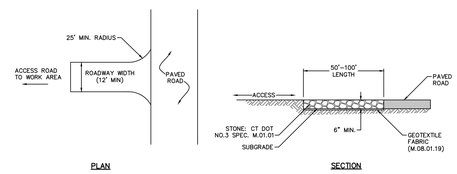


## CONSTRUCTION ENTRANCE

NOT TO SCALE

| No. | DATE | DESCRIPTION | DESIGNER | REVIEWER |
|---|---|---|---|---|
| | | | | |

SEAL

SEAL

SCALE:
HORZ.: N.T.S.
VERT.:
DATUM:
HORZ.:
VERT.:
0
GRAPHIC SCALE

FUSS & O'NEILL
56 QUARRY ROAD
TRUMBULL, CONNECTICUT 06611
203.374.3748
www.fando.com

GREENWICH PUBLIC SCHOOLS

EROSION & SEDIMENT CONTROL DETAILS

GHS CARDINAL STADIUM
PHASE 1 CONSTRUCTION DOCUMENTS

GREENWICH CONNECTICUT

PROJ. No.: 20110944.S10
DATE: 11/10/2020

CE-501

File Path: J:\DWG\P2011\0944\S10\Civil\Plan\20110944S10_DET-01.dwg Layout: CE-501 Plotted: Mon, November 09, 2020 - 11:49 AM User: vchiaravalloti
Plotter: AUTOCAD PDF (GENERAL DOCUMENTATION).PC3 CTB File: FO.STB
MS VIEW:
LAYER STATE:

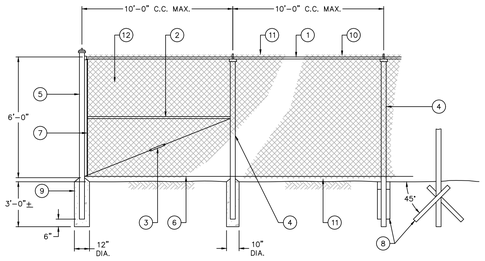


ELEVATION

NOTES

1. FOOTING DESIGN TO BE CHECKED BY AN ENGINEER FOR WIND LOADS IF SLATS ARE USED OR IF POOR SOIL CONDITIONS EXIST.
2. STRAIGHT RUNS BETWEEN BRACED POSTS SHALL NOT EXCEED 500 FT.
3. FENCE DETAILS ARE INTENDED AS A GUIDE ONLY. ALL FENCE MATERIALS AND CONSTRUCTION METHODS SHALL BE APPROVED BY THE ENGINEER AND FENCE MANUFACTURER.

CHAIN LINK FENCE LEGEND

1. 1 5/8" O.D. TOP RAIL ATTACH FABRIC WITH 9 GUAGE WIRE CLIP EVERY 24"
2. 1 5/8" O.D. BRACE FOR RAIL FENCES OVER 6 FEET HIGH AND ALL FENCES WITHOUT TOP RAIL
3. 5/16" TRUSS ROD AND TURNBUCKLE
4. INTERMEDIATE POST

| FENCE HEIGHT | SQUARE POST | ROUND POST |
|---|---|---|
| 6 FEET AND LESS | 1 7/8" | 2" |
| OVER 6 FEET | 2 1/4" | 2 1/2" |

ATTACH TO C.L. FABRIC WITH CLIPS EVERY 15"

5. END OR CORNER POST

| FENCE HEIGHT | SQUARE POST | ROUND POST |
|---|---|---|
| 6 FEET AND LESS | 2" | 2 1/2" |
| OVER 6 FEET | 2 1/2" | 3" |

6. 6 GAUGE BOTTOM TENSION WIRE ATTACH TO FABRIC WITH HOG RING AT 24" C.C.
7. TENSION ROD ATTACHED TO END OR CORNER POST
8. 2 30" MIN. LENGTH DRIVE ANCHORS DRIVEN THROUGH FITTINGS AT 90° TO FENCE LINE INTO EARTH AT 45° (TO BE USED IN PLACE OF CONCRETE FOOTING. SEE FOOTING DESIGN NOTE NO. 1)
9. CONCRETE FOOTING 36" DEEP WITH 12" DIA. AT END POST AND 10" DIA. AT INTERMEDIATE POST. HOLE CORE IN UNDISTURBED OR COMPACTED SOIL. (SEE NOTE NO. 1)
10. 6 GAUGE TENSION WIRE WHEN TOP RAIL IS NOT USED.
11. FABRIC SELVAGE: UNDER 6 FEET SHALL BE KNUCKLED TOP AND BOTTOM 6 FEET AND OVER SHALL BE KNUCKLED BOTTOM AND TWISTED ON THE TOP RECREATIONAL FENCING, REGARDLESS OF HEIGHT, SHALL BE KNUCKLED TOP AND BOTTOM
12. 9 GAUGE 2" WIRE MESH FABRIC (COMMERCIAL) BLACK VINYL COATED.

## CHAIN LINK FENCE

SCALE: N.T.S.

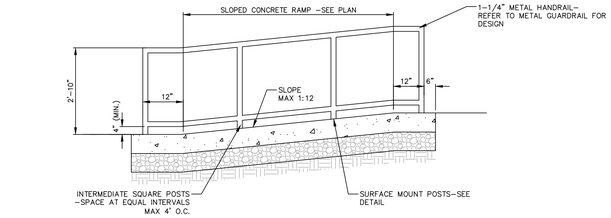


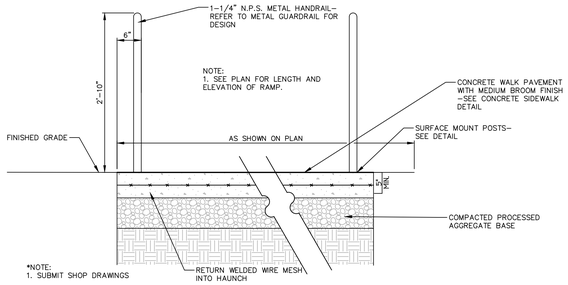


## ADA ACCESSIBLE SLOPE CONCRETE RAMP WITH METAL GUARDRAIL

SCALE: N.T.S.

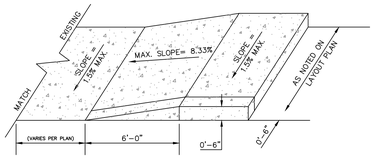


## ACCESSIBLE RAMP SLOPE

NOT TO SCALE

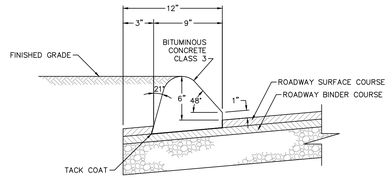


## BITUMINOUS CONCRETE CURB

NOT TO SCALE

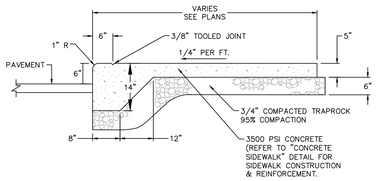


NOTE: DETAIL HAS BEEN MODIFIED TO MATCH THE TOWN OF GREENWICH STANDARD SIDEWALK SECTION.

## MONOLITHIC CONCRETE CURB AND WALK

NOT TO SCALE

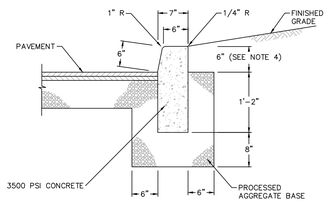


NOTES

1. 1 INCH DEEP BEVELED JOINT AT TOP AND FACE OF CURB EVERY 10 FEET.
2. 1/2 INCH EXPANSION JOINT AND FILLER EVERY 30 FEET.
3. 1/2 INCH EXPANSION JOINT AND FILLER WHEN CURB IS ADJACENT TO CONCRETE SIDEWALK.
4. CURB REVEAL VARIES. SEE PLANS.

## CONCRETE CURB

NOT TO SCALE

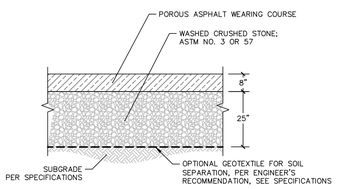


## PERVIOUS ASPHALT PAVEMENT

NOT TO SCALE

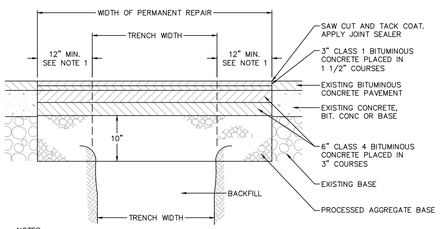


NOTES

1. 12" MIN. OR TO TRANSVERSE JOINT IF JOINT IS VISIBLE WITHIN 6'-6" OF SAWCUT
2. APPLY TACK COAT TO ALL BITUMINOUS CONCRETE SURFACES THAT HAVE BEEN IN PLACE LONGER THAN FIVE CALENDAR DAYS

## STATE ROAD PERMANENT PAVEMENT REPAIR

SCALE: N.T.S.

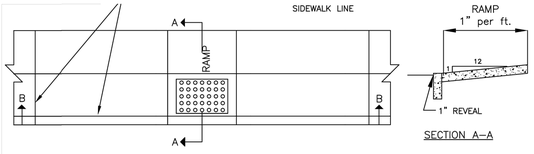


PLAN




SECTION A-A

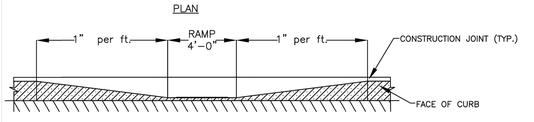


SECTION B-B

NOTES:

1. SIDEWALK RAMPS SHALL BE CONSTRUCTED AT ALL PEDESTRIAN CROSSWALKS IN ALL NEW DESIGNS AND AT PEDESTRIAN CROSSWALK LOCATIONS WHERE AN EXISTING CURB OR WALK IS TO BE DISTURBED BY CONSTRUCTION.
2. DRAINAGE DESIGN IN THE VICINITY OF SIDEWALK RAMPS SHALL BE CONSIDERED AN INTEGRAL PART OF THE DESIGN OF THOSE RAMPS. NO DRAINAGE STRUCTURES SHALL BE PLACED WITHIN THE LIMITS OF A SIDEWALK RAMP ON THE DESIGNS.
3. REGARDLESS OF THE TYPE OF PAVEMENT OF ADJACENT SIDEWALK, ALL SIDEWALK RAMPS SHALL BE CONSTRUCTED OF CLASS "C" CONCRETE IN ACCORDANCE WITH CONNECTICUT STANDARD SPECIFICATIONS ARTICLE M.03.01.
4. ALL SIDEWALK RAMPS SHALL BE CONSTRUCTED IN ACCORDANCE WITH THE DETAILS FOR SIDEWALKS, EXCEPT THE FINAL TEXTURE OF THE CONCRETE SURFACE SHALL HAVE A COARSE BROOM FINISH TRANSVERSE TO THE SLOPE OF THE RAMP.
5. CARE SHALL BE TAKEN TO ASSURE A UNIFORM GRADE ON THE RAMP, FREE OF SAGS AND SHORT GRADE CHANGES.
6. MINIMUM WIDTH OF SIDEWALK RAMPS SHALL BE 4 FEET.
7. THE BOTTOM OF THE RAMP SHALL MEET THE GUTTER LINE AT THE BACK OF CURB.
8. ARMORCAST DETECTABLE WARNING PANEL 24"X36"X1" WET SET REPLACEABLE WARNING PANEL-BRICK RED. OTHER SIZES MAY BE POSSIBLE WITH THE APPROVAL FROM THE HIGHWAY DIVISION.

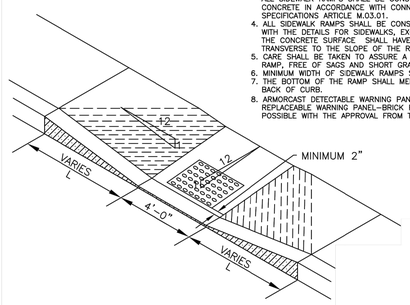


## PEDESTRIAN RAMP TYPE 1 (TOWN DETAIL)

NOT TO SCALE

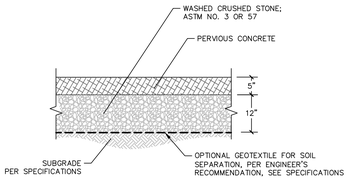


## PERVIOUS CONCRETE SIDEWALK

NOT TO SCALE

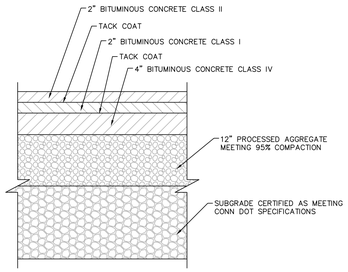


NOTE: DETAIL HAS BEEN MODIFIED TO MATCH THE TOWN OF GREENWICH STANDARD PARKING LOT SECTION.

## BITUMINOUS CONCRETE PAVEMENT

NOT TO SCALE

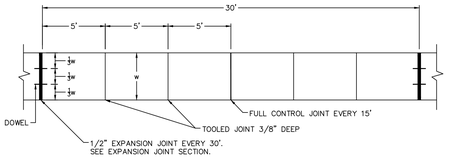


PLAN

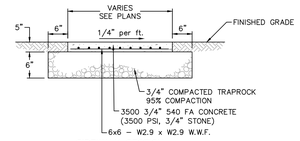


SIDEWALK SECTION

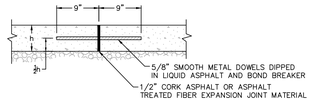


EXPANSION JOINT SECTION

NOTE: DETAIL HAS BEEN MODIFIED TO MATCH THE TOWN OF GREENWICH STANDARD SIDEWALK SECTION.

## CONCRETE SIDEWALK

NOT TO SCALE

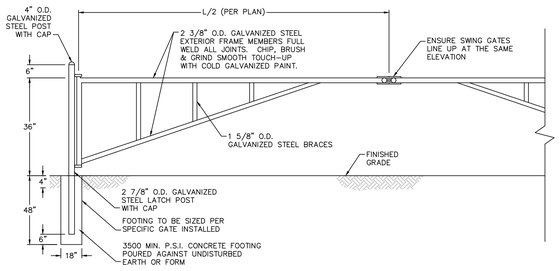


## DOUBLE LEAF SWING GATE (OR APPROVED EQUAL)

SCALE: N.T.S.

| No. | DATE | DESCRIPTION | DESIGNER | REVIEWER |
|---|---|---|---|---|

SEAL

SEAL

SCALE:
HORZ.: N.T.S.
VERT.:
DATUM:
HORZ.:
VERT.:
0
GRAPHIC SCALE

FUSS & O'NEILL
56 QUARRY ROAD
TRUMBULL, CONNECTICUT 06611
203.374.3748
www.fando.com

GREENWICH PUBLIC SCHOOLS

CONSTRUCTION DETAILS

GHS CARDINAL STADIUM
PHASE 1 CONSTRUCTION DOCUMENTS

GREENWICH CONNECTICUT

PROJ. No.: 20110944.S10
DATE: 11/10/2020

CD-501

File Path: J:\DWG\P2011\0944\S10\Civil\Plan\20110944S10_DET-01.dwg Layout: CD-501 Plotted: Mon, November 09, 2020 - 11:49 AM User: vchiaravalloti
Plotter: AUTOCAD PDF (GENERAL DOCUMENTATION).PC3 CTB File: FO.STB
MS VIEW:
LAYER STATE:

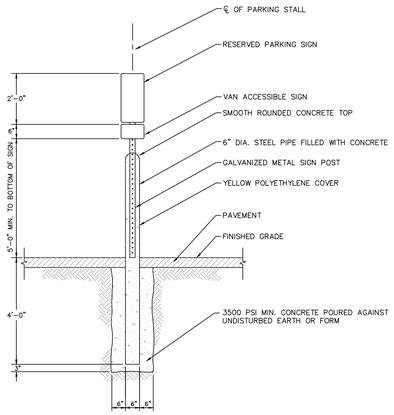


ACCESSIBLE PARKING SIGN POST
NOT TO SCALE

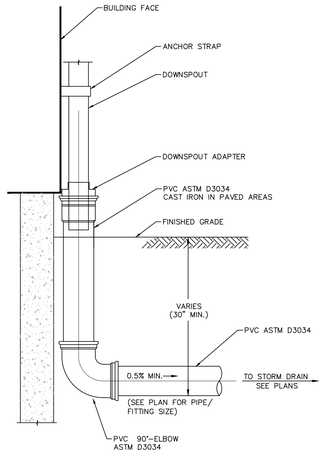


ROOF LEADER DRAIN CONNECTION
NOT TO SCALE

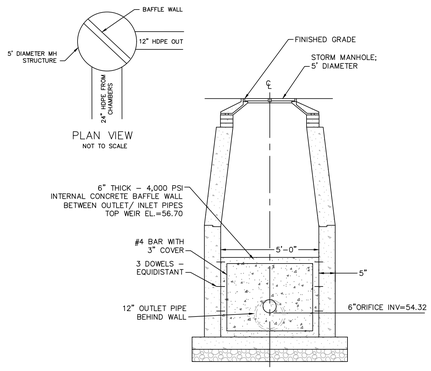


OUTLET CONTROL STRUCTURE #1
NOT TO SCALE

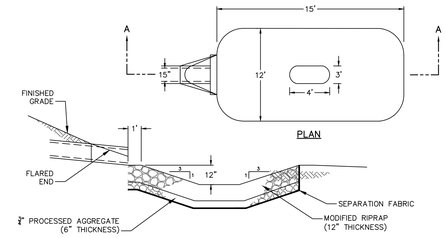


RIPRAP STILLING BASIN
NOT TO SCALE

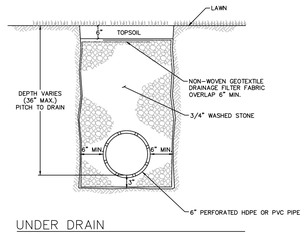


UNDER DRAIN
NOT TO SCALE

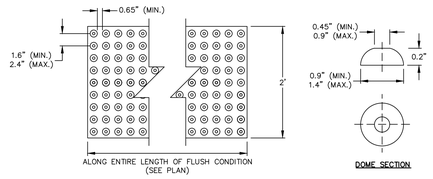


DETECTABLE WARNING STRIP
NOT TO SCALE

NOTE: SYMBOL DIMENSIONS TO CONFORM TO APPLICABLE REQUIREMENTS.

RESERVED SYMBOL
NOT TO SCALE

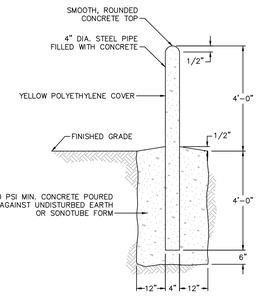


BOLLARD
NOT TO SCALE

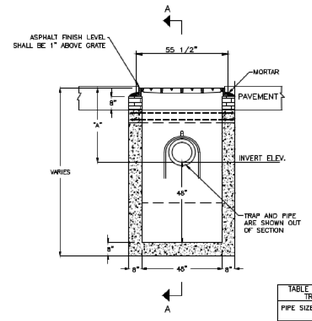


SECTIONAL ELEVATION B-B

| TABLE FOR CATCH BASIN TRAP ASSEMBLY | |
|---|---|
| PIPE SIZE | CAMPBELL FOUNDRY PATTERN NUMBER |
| 10" | 2563 |
| 12" | 2563 |
| 15" | 2564 |
| 18" | 2565 |

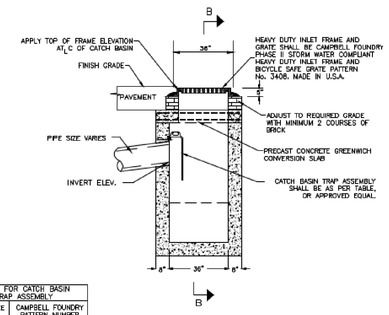


SECTIONAL ELEVATION A-A

NOTES:

1. DIMENSION "A" SHALL BE CONSISTENT WITH THE INVERT ELEVATION SHOWN ON CONTRACT DRAWINGS. WHEN NO INVERT ELEVATION IS SPECIFIED, DIMENSION "A" SHALL BE ADEQUATE TO PROVIDE A MINIMUM OF 2'-0" OF COVER OVER PIPE.

TYPE "C-1" CURBLESS PRECAST CATCH BASIN (TOWN DETAIL)
NOT TO SCALE




NOTES:

1) "STOP" TEXT SHALL BE CENTERED IN TRAVEL LANE.

2) "STOP" TEXT SHALL BE WHITE IN COLOR AND PAINTED WITH APPROPRIATE LETTER STENCILS.

"STOP" PAVEMENT MARKING
NOT TO SCALE

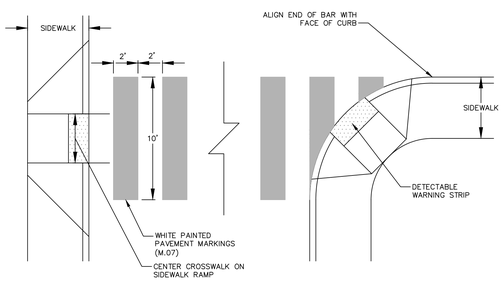


PAINTED CROSS WALK
NOT TO SCALE

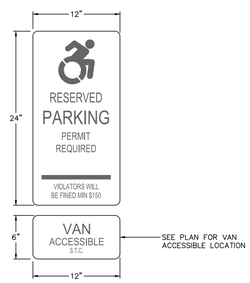


NOTES

CDOT NUMBER: 31-0629
ALUMINUM THICKNESS: .080"
BACKGROUND: BLUE (REF.)
LEGEND: WHITE (REF.)
POSTS: SEE "ACCESSIBLE PARKING SIGN AND POST" DETAIL

RESERVED PARKING SIGN
NOT TO SCALE

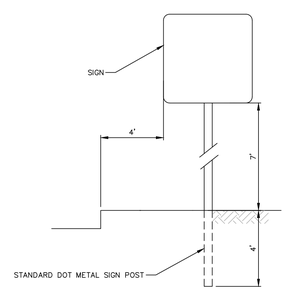


NOTE:
TYPICAL SIGN DETAIL; REFER TO CTDOT STANDARD SHEET - METAL SIGN POST AND SIGN MOUNTING DETAILS TR-1208_02

SIGN
NOT TO SCALE

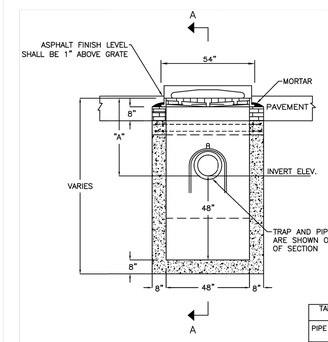


SECTIONAL ELEVATION B-B

| TABLE FOR CATCH BASIN TRAP ASSEMBLY | |
|---|---|
| PIPE SIZE | CAMPBELL FOUNDRY PATTERN NUMBER |
| 10" | 2563 |
| 12" | 2563 |
| 15" | 2564 |
| 18" | 2565 |

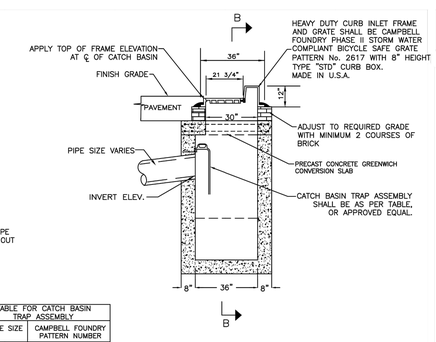


SECTIONAL ELEVATION A-A

NOTES:

1. DIMENSION "A" SHALL BE CONSISTENT WITH THE INVERT ELEVATION SHOWN ON CONTRACT DRAWINGS. WHEN NO INVERT ELEVATION IS SPECIFIED, DIMENSION "A" SHALL BE ADEQUATE TO PROVIDE A MINIMUM OF 2'-0" OF COVER OVER PIPE.

TYPE "C-1" PRECAST CATCH BASIN (TOWN DETAIL)
NOT TO SCALE

| No. | DATE | DESCRIPTION | DESIGNER | REVIEWER |
|---|---|---|---|---|

SEAL

SEAL

SCALE:
HORZ.: N.T.S.
VERT.:
DATUM:
HORZ.:
VERT.:
0
GRAPHIC SCALE

FUSS & O'NEILL
56 QUARRY ROAD
TRUMBULL, CONNECTICUT 06611
203.374.3748
www.fando.com

GREENWICH PUBLIC SCHOOLS

CONSTRUCTION DETAILS

GHS CARDINAL STADIUM
PHASE 1 CONSTRUCTION DOCUMENTS

GREENWICH CONNECTICUT

PROJ. No.: 20110944.S10
DATE: 11/10/2020

CD-502

File Path: J:\DWG\P2011\0944\S10\Civil\Plan\20110944S10_DET-01.dwg Layout: CD-502 Plotted: Mon, November 09, 2020 - 11:49 AM User: vchiaravalloti
Plotter: AUTOCAD PDF (GENERAL DOCUMENTATION).PC3 CTB File: FO.STB
MS VIEW:
LAYER STATE:

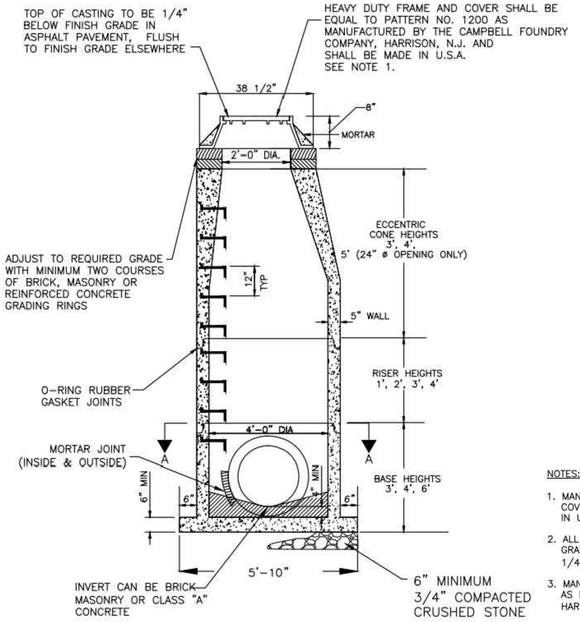


4' DIA. STORM DRAIN PRECAST CONCRETE MANHOLE WITH CONE (TOWN DETAIL)

NOT TO SCALE

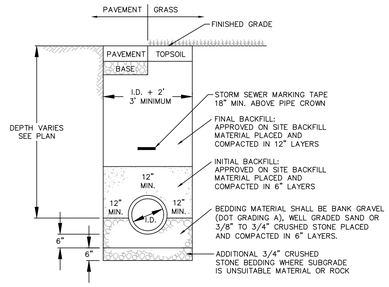


STORM SEWER TRENCH

NOT TO SCALE

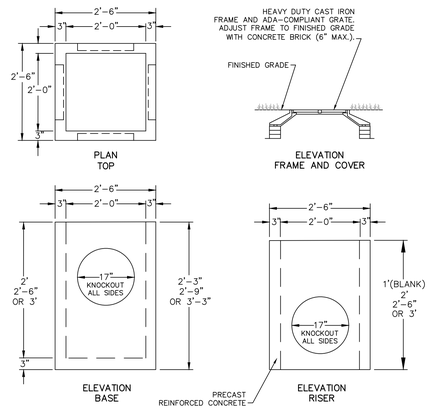


YARD DRAIN (HEAVY DUTY)

NOT TO SCALE

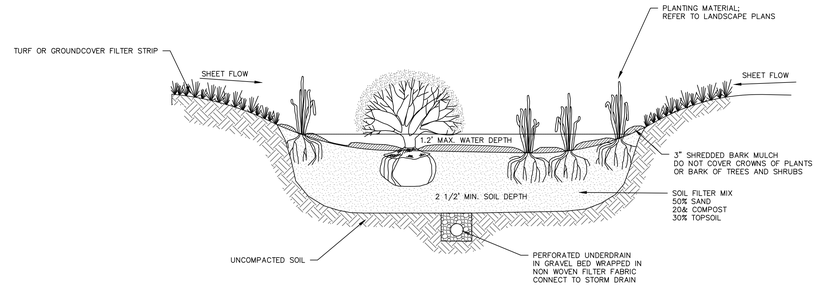


RAIN GARDEN TYPICAL CROSS SECTION

NOT TO SCALE

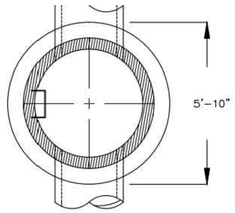


SECTION A–A

NOTES:

1. MANHOLES SHALL HAVE LETTERS "DRAIN" CAST ON THE COVERS AND FRAME AND THE COVER SHALL BE MADE IN U.S.A.
2. ALL INTERIOR AND EXTERIOR SURFACES OF MANHOLE GRADE ADJUSTMENT COURSES SHALL BE COVERED WITH 1/4" TO 3/8" MASONRY CEMENT PLASTER.
3. MANHOLE STEPS SHALL BE EQUAL TO PATTERN NO. 2593 AS MANUFACTURED BY THE CAMPBELL FOUNDRY COMPANY, HARRISON, N.J. (ALIGN VERTICALLY)

**ACCEPTABLE FILL MATERIALS: STORMTECH SC-740 AND SC-310 CHAMBER SYSTEMS**

| MATERIAL LOCATION | DESCRIPTION | AASHTO M43 DESIGNATION(1) | COMPACTION/DENSITY REQUIREMENT |
|---|---|---|---|
| (D) FILL MATERIAL FOR LAYER D STARTS FROM THE TOP OF THE C LAYER TO THE BOTTOM OF FLEXIBLE PAVEMENT OR UNPAVED FINISH GRADE ABOVE. NOTE THAT PAVEMENT SUB-BASE MAY BE PART OF THIS LAYER. | ANY SOIL/ROCK MATERIALS, NATIVE SOILS, OR PER ENGINEER'S PLANS. CHECK PLANS FOR PAVEMENT SUBGRADE REQUIREMENTS. | N/A | PREPARE PER ENGINEER'S PLANS. PAVED INSTALLATIONS MAY HAVE STRINGENT MATERIAL AND PREPARATION REQUIREMENTS. |
| (C) FILL MATERIAL FOR LAYER C STARTS FROM THE TOP OF THE EMBEDMENT STONE (B LAYER) TO 18" [457 mm] ABOVE THE TOP OF THE CHAMBER. NOTE THAT PAVEMENT SUB-BASE MAY BE A PART OF THIS LAYER. | GRANULAR WELL-GRADED SOIL/AGGREGATE MIXTURES, < 35% FINES. MOST PAVEMENT SUB-BASE MATERIALS CAN BE USED IN LIEU OF THIS LAYER. | 3, 357, 4, 467, 5, 56, 57, 6, 67, 68, 7, 78, 8, 89, 9, 10 | BEGIN COMPACTION AFTER 12" [305 mm] OF MATERIAL OVER THE CHAMBERS IS REACHED. COMPACT ADDITIONAL LAYERS IN 6" [152 mm] LIFTS TO A MIN. 95% STANDARD PROCTOR DENSITY (2). ROLLER GROSS VEHICLE WEIGHT NOT TO EXCEED 12,000 lbs [53 kN]. DYNAMIC FORCE NOT TO EXCEED 20,000 lbs [89 kN]. |
| (B) EMBEDMENT STONE SURROUNDING THE CHAMBERS FROM THE FOUNDATION STONE (A LAYER) TO THE C LAYER ABOVE. | CLEAN, CRUSHED, ANGULAR STONE, NOMINAL SIZE DISTRIBUTION BETWEEN 3/4 - 2 INCH [19 - 51 mm] | 3, 357, 4, 467, 5, 56, 57 | NO COMPACTION REQUIRED. |
| (A) FOUNDATION STONE BELOW CHAMBERS FROM THE SUBGRADE UP TO THE FOOT (BOTTOM) OF THE CHAMBER. | CLEAN, CRUSHED, ANGULAR STONE, NOMINAL SIZE DISTRIBUTION BETWEEN 3/4 - 2 INCH [19 - 51 mm] | 3, 35, 4, 467, 5, 56, 57 | PLATE COMPACT OR ROLL TO ACHIEVE A 95% STANDARD PROCTOR DENSITY(2). |

PLEASE NOTE:

1. THE LISTED AASHTO DESIGNATIONS ARE FOR GRADATIONS ONLY. THE STONE MUST ALSO BE CLEAN, CRUSHED, ANGULAR. FOR EXAMPLE, A SPECIFICATION FOR #4 STONE WOULD STATE: "CLEAN, CRUSHED, ANGULAR NO. 4 (AASHTO M43) STONE".

2. AS AN ALTERNATE TO PROCTOR TESTING AND FIELD DENSITY MEASUREMENTS ON OPEN GRADED STONE, STORMTECH COMPACTION REQUIREMENTS ARE MET FOR 'A' LOCATION MATERIALS WHEN PLACED AND COMPACTED IN 9" [229 mm] (MAX) LIFTS USING TWO FULL COVERAGES WITH AN APPROPRIATE COMPACTOR.

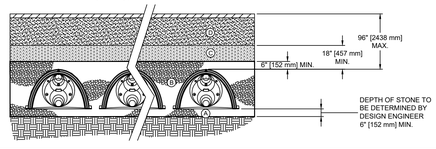


THE DESIGN ENGINEER SHALL REVIEW THIS DRAWING PRIOR TO CONSTRUCTION. IT IS THE ULTIMATE RESPONSIBILITY OF THE DESIGN ENGINEER TO ENSURE THAT THE PRODUCT(S) DEPICTED AND ALL ASSOCIATED DETAILS MEET ALL APPLICABLE LAWS, REGULATIONS, AND PROJECT REQUIREMENTS.

70 INWOOD ROAD, SUITE 3 | ROCKY HILL, CT 06067
PHONE: 888-892-2694 | FAX: 866-328-8401
WWW.STORMTECH.COM

| STORMTECH ACCEPTABLE FILL | |
|---|---|
| SCALE: | NTS |
| DATE: | 3/30/10 |
| DRAWN BY: | KLJ |
| CHECKED: | |

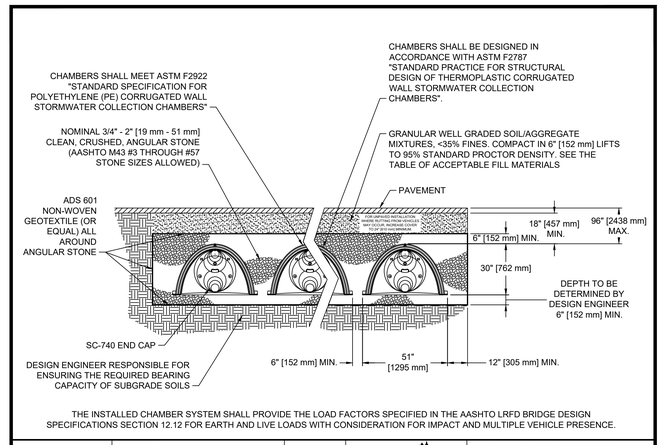


THE INSTALLED CHAMBER SYSTEM SHALL PROVIDE THE LOAD FACTORS SPECIFIED IN THE AASHTO LRFD BRIDGE DESIGN SPECIFICATIONS SECTION 12.12 FOR EARTH AND LIVE LOADS WITH CONSIDERATION FOR IMPACT AND MULTIPLE VEHICLE PRESENCE.

THE DESIGN ENGINEER SHALL REVIEW THIS DRAWING PRIOR TO CONSTRUCTION. IT IS THE ULTIMATE RESPONSIBILITY OF THE DESIGN ENGINEER TO ENSURE THAT THE PRODUCT(S) DEPICTED AND ALL ASSOCIATED DETAILS MEET ALL APPLICABLE LAWS, REGULATIONS, AND PROJECT REQUIREMENTS.

70 INWOOD ROAD, SUITE 3 | ROCKY HILL, CT 06067
PHONE: 888-892-2694 | FAX: 866-328-8401
WWW.STORMTECH.COM

| SC-740 TYPICAL CROSS-SECTION | |
|---|---|
| SCALE: | NTS |
| DATE: | 08-22-12 |
| DRAWN BY: | JLM |
| CHECKED: | |

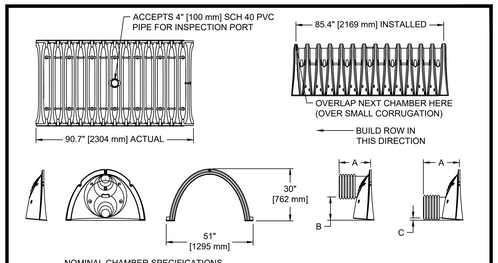


NOMINAL CHAMBER SPECIFICATIONS

| | |
|---|---|
| SIZE (W x H x INSTALLED LENGTH) | 51.0" x 30.0" x 85.4" [1295 mm x 762 mm x 2169 mm] |
| CHAMBER STORAGE | 45.9 CUBIC FEET [1.30 m³] |
| MINIMUM INSTALLED STORAGE | 74.9 CUBIC FEET [2.12 m³] |
| WEIGHT | 75 lbs. [33.6 kg] |

STUBS AT BOTTOM OF END CAP FOR PART NUMBERS ENDING WITH "B"
STUBS AT TOP OF END CAP FOR PART NUMBERS ENDING WITH "T"

| PART# | STUB | A | B | C |
|---|---|---|---|---|
| SC740EPE06T | 6" [150 mm] | 10.90" [277 mm] | 18.50" [470 mm] | N/A |
| SC740EPE06B | 6" [150 mm] | 10.90" [277 mm] | N/A | 0.50" [13 mm] |
| SC740EPE08T | 8" [200 mm] | 12.20" [310 mm] | 16.50" [419 mm] | N/A |
| SC740EPE08B | 8" [200 mm] | 12.20" [310 mm] | N/A | 0.60" [15 mm] |
| SC740EPE10T | 10" [250 mm] | 13.40" [340 mm] | 14.50" [368 mm] | N/A |
| SC740EPE10B | 10" [250 mm] | 13.40" [340 mm] | N/A | 0.70" [18 mm] |
| SC740EPE12T | 12" [300 mm] | 14.70" [373 mm] | 12.50" [318 mm] | N/A |
| SC740EPE12B | 12" [300 mm] | 14.70" [373 mm] | N/A | 1.20" [30 mm] |
| SC740EPE15T | 15" [375 mm] | 18.40" [467 mm] | 9.00" [229 mm] | N/A |
| SC740EPE15B | 15" [375 mm] | 18.40" [467 mm] | N/A | 1.30" [33 mm] |
| SC740EPE18T | 18" [450 mm] | 19.70" [500 mm] | 5.00" [127 mm] | N/A |
| SC740EPE18B | 18" [450 mm] | 19.70" [500 mm] | N/A | 1.60" [41 mm] |
| *SC740EPE24B | 24" [600 mm] | 18.50" [470 mm] | N/A | 0.10" [3 mm] |

ALL STUBS, EXCEPT FOR THE SC740EPE24B ARE PLACED AT BOTTOM OF END CAP SUCH THAT THE OUTSIDE DIAMETER OF THE STUB IS FLUSH WITH THE BOTTOM OF THE END CAP. FOR ADDITIONAL INFORMATION CONTACT STORMTECH AT 1-888-892-2694.

*FOR THE SC740EPE24B THE 24" [600 mm] STUB LIES BELOW THE BOTTOM OF THE END CAP APPROXIMATELY 1.75" [44 mm]. BACKFILL MATERIAL SHOULD BE REMOVED FROM BELOW THE N-12 STUB SO THAT THE FITTING SITS LEVEL.

NOTE: ALL DIMENSIONS ARE NOMINAL

THE DESIGN ENGINEER SHALL REVIEW THIS DRAWING PRIOR TO CONSTRUCTION. IT IS THE ULTIMATE RESPONSIBILITY OF THE DESIGN ENGINEER TO ENSURE THAT THE PRODUCT(S) DEPICTED AND ALL ASSOCIATED DETAILS MEET ALL APPLICABLE LAWS, REGULATIONS, AND PROJECT REQUIREMENTS.

70 INWOOD ROAD, SUITE 3 | ROCKY HILL, CT 06067
PHONE: 888-892-2694 | FAX: 866-328-8401
WWW.STORMTECH.COM

| SC-740 TECHNICAL SPECIFICATIONS | |
|---|---|
| SCALE: | NTS |
| DATE: | 3/30/10 |
| DRAWN BY: | KLJ |
| CHECKED: | |

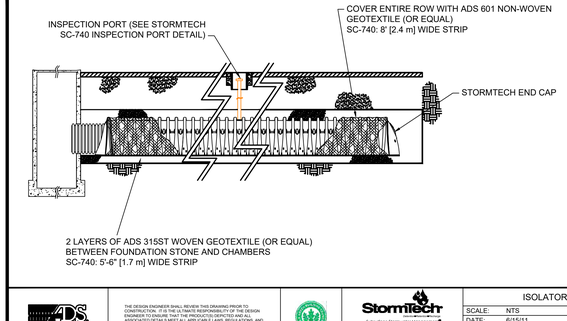


THE DESIGN ENGINEER SHALL REVIEW THIS DRAWING PRIOR TO CONSTRUCTION. IT IS THE ULTIMATE RESPONSIBILITY OF THE DESIGN ENGINEER TO ENSURE THAT THE PRODUCT(S) DEPICTED AND ALL ASSOCIATED DETAILS MEET ALL APPLICABLE LAWS, REGULATIONS, AND PROJECT REQUIREMENTS.

70 INWOOD ROAD, SUITE 3 | ROCKY HILL, CT 06067
PHONE: 888-892-2694 | FAX: 866-328-8401
WWW.STORMTECH.COM

| ISOLATOR ROW | |
|---|---|
| SCALE: | NTS |
| DATE: | 6/15/11 |
| DRAWN BY: | KLJ |
| CHECKED: | |

NOTES:

1. INSPECTION PORT MUST BE CONNECTED THROUGH KNOCK-OUT LOCATED AT CENTER OF CHAMBER.
2. ALL SCHEDULE 40 FITTINGS TO BE SOLVENT CEMENTED.

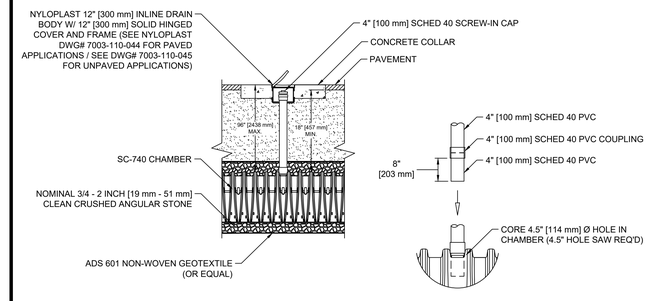


CONNECTION DETAIL

NTS

THE DESIGN ENGINEER SHALL REVIEW THIS DRAWING PRIOR TO CONSTRUCTION. IT IS THE ULTIMATE RESPONSIBILITY OF THE DESIGN ENGINEER TO ENSURE THAT THE PRODUCT(S) DEPICTED AND ALL ASSOCIATED DETAILS MEET ALL APPLICABLE LAWS, REGULATIONS, AND PROJECT REQUIREMENTS.

70 INWOOD ROAD, SUITE 3 | ROCKY HILL, CT 06067
PHONE: 888-892-2694 | FAX: 866-328-8401
WWW.STORMTECH.COM

| SC-740 INSPECTION PORT DETAIL | |
|---|---|
| SCALE: | NTS |
| DATE: | 6/15/11 |
| DRAWN BY: | KLJ |
| CHECKED: | |

File Path: J:\DWG\P20110944S10\Civil\Plan\20110944S10_DET-01.dwg Layout: CD-503 Plotted: Mon, November 09, 2020 - 11:49 AM User: vchiaravalloti
Plotter: AUTOCAD PDF (GENERAL DOCUMENTATION).PC3 CTB File: FO.STB
MS VIEW:
LAYER STATE:

| No. | DATE | DESCRIPTION | DESIGNER | REVIEWER |
|---|---|---|---|---|

SEAL

SEAL

SCALE:
HORZ.: N.T.S.
VERT.:
DATUM:
HORZ.:
VERT.:
0
GRAPHIC SCALE

FUSS & O'NEILL
56 QUARRY ROAD
TRUMBULL, CONNECTICUT 06611
203.374.3748
www.fando.com

GREENWICH

GREENWICH PUBLIC SCHOOLS

CONSTRUCTION DETAILS

GHS CARDINAL STADIUM
PHASE 1 CONSTRUCTION DOCUMENTS

CONNECTICUT

PROJ. No.: 20110944.S10
DATE: 11/10/2020

CD-503

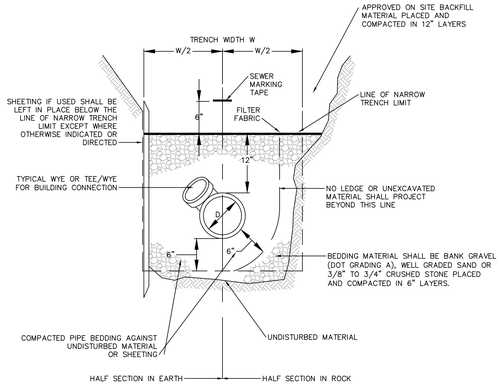


TYPICAL SEWER TRENCH

NOT TO SCALE

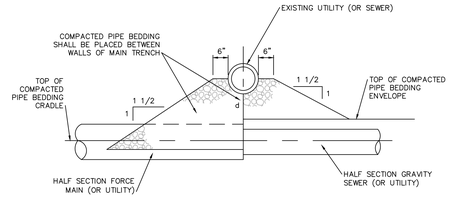


TYPE A (d > 12")

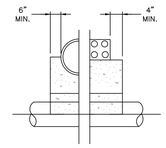


HALF SECTION

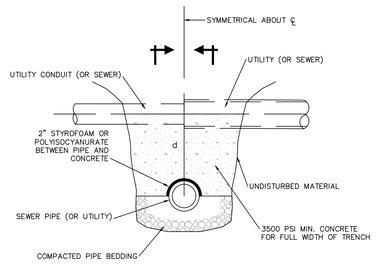


TYPE B (d < 12")

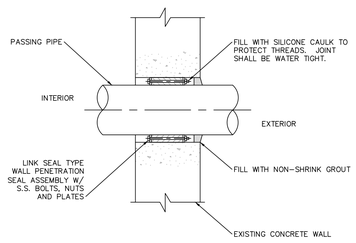


CORE DRILL & LINK SEAL DETAIL

NOT TO SCALE

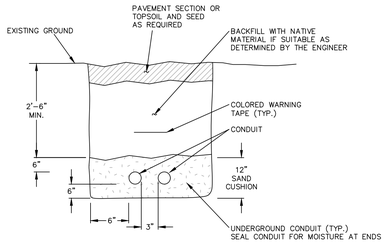


UNDERGROUND CONDUIT TRENCH NOTES

1. INSTALL COLORED MARKING TAPE ABOVE CONDUITS AND BURIED WIRING. RED TAPE IS TO BE USED ABOVE ELECTRICAL CONDUITS AND ORANGE TAPE IS TO BE USED ABOVE COMMUNICATION CONDUITS.

2. CONDUIT SIZE AND MATERIAL TO BE DETERMINED BASED ON REQUIREMENTS SET FORTH BY THE RELEVANT UTILITY COMPANIES.

UNDERGROUND CONDUIT TRENCH DETAIL

NOT TO SCALE

UTILITY SUPPORT NOTES

1. d=DISTANCE FROM TOP OF SEWER PIPE TO THE BOTTOM OF THE UTILITY PIPE
2. SUPPORTS TO BE LOCATED AS SHOWN ON THE DRAWINGS OR AS DIRECTED BY THE ENGINEER

TYPICAL SUPPORT FOR UTILITIES

NOT TO SCALE

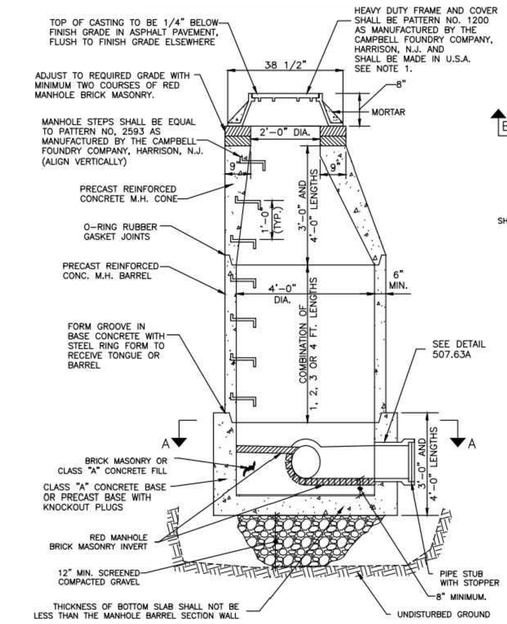


SECTIONAL ELEVATION

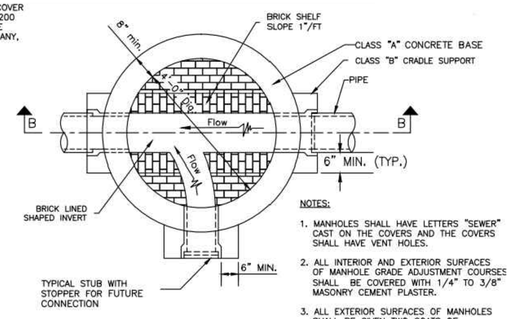


SECTION A-A

NOTES:

1. MANHOLES SHALL HAVE LETTERS "SEWER" CAST ON THE COVERS AND THE COVERS SHALL HAVE VENT HOLES.
2. ALL INTERIOR AND EXTERIOR SURFACES OF MANHOLE GRADE ADJUSTMENT COURSES SHALL BE COVERED WITH 1/4" TO 3/8" MASONRY CEMENT PLASTER.
3. ALL EXTERIOR SURFACES OF MANHOLES SHALL BE GIVEN TWO COATS OF BITUMINOUS WATER-PROOFING.
4. MANHOLE FRAME AND COVER SHALL BE MADE IN U.S.A.

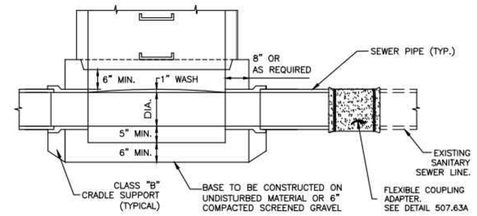


SECTION B-B

SANITARY SEWER PRECAST CONCRETE MANHOLE (TOWN DETAIL)

NOT TO SCALE

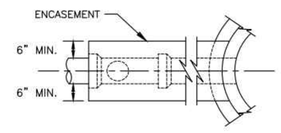


SECTIONAL PLAN H

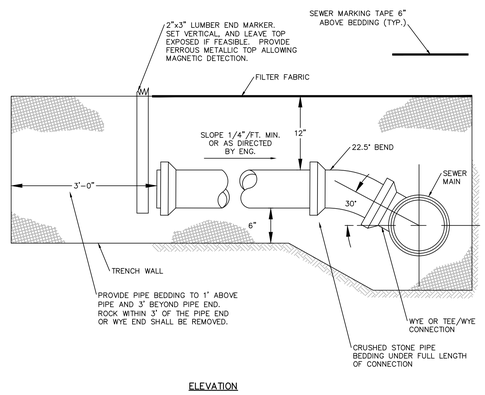


ELEVATION

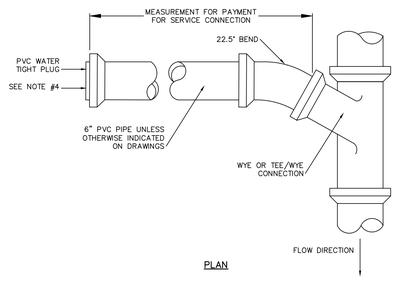


PLAN

SERVICE CONNECTION NOTES

1. NO LEDGE OR UNEXCAVATED MATERIAL SHALL PROJECT WITHIN 6" OF THE PIPE IN ANY DIRECTION
2. EXACT LOCATION AND ELEVATION OF SERVICE CONNECTIONS TO BE DETERMINED AND SET IN THE FIELD DURING CONSTRUCTION
3. EXACT LOCATION OF WYES/TEES, WHERE DIRECTED TO BE INSTALLED, SHALL BE SET IN THE FIELD DURING CONSTRUCTION
4. PROVIDE DI TO PVC TRANSITION COUPLING AT END OF DI SERVICE CONNECTION

SERVICE CONNECTIONS

NOT TO SCALE

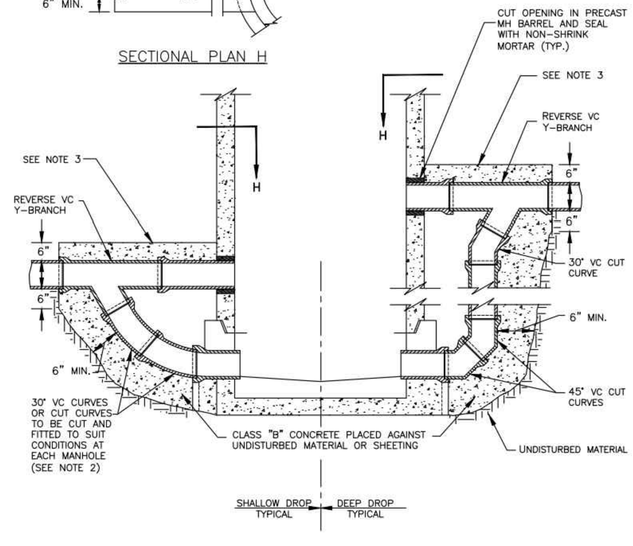


NOTES:

1. DROP PIPE TO BE SAME DIAMETER AS SEWER DISCHARGING INTO MANHOLE FOR SEWERS UP TO AND INCLUDING 12" SIZE.
2. DEEPER DROP MAY BE CONSTRUCTED WITH STRAIGHT PIPE BETWEEN Y-BRANCH AND CURVE.
3. EXTEND ENCASEMENT TO FIRST JOINT BEYOND EXCAVATION FOR DROP CONNECTION.
4. DIMENSIONS AND CONSTRUCTION OF DROP MANHOLE TO BE SIMILAR TO TYPICAL MANHOLE EXCEPT AS SHOWN.

SANITARY SEWER DROP INLET (TOWN DETAIL)

NOT TO SCALE

| No. | DATE | DESCRIPTION | DESIGNER | REVIEWER |
|---|---|---|---|---|

SEAL

SEAL

SCALE: HORZ.: N.T.S. VERT.:
DATUM: HORZ.: VERT.:
0
GRAPHIC SCALE

FUSS & O'NEILL
56 QUARRY ROAD
TRUMBULL, CONNECTICUT 06611
203.374.3748
www.fando.com

GREENWICH PUBLIC SCHOOLS

CONSTRUCTION DETAILS

GHS CARDINAL STADIUM
PHASE 1 CONSTRUCTION DOCUMENTS

GREENWICH CONNECTICUT

PROJ. No.: 20110944.S10
DATE: 11/10/2020

CD-504

File Path: J:\DWG\P2011\0944\S10\Civil\Plan\20110944S10_DET-01.dwg Layout: CD-504 Plotted: Mon, November 09, 2020 - 11:50 AM User: vchiaravalloti
Plotter: AUTOCAD PDF (GENERAL DOCUMENTATION).PC3 CTB File: FO.STB
MS VIEW: LAYER STATE:

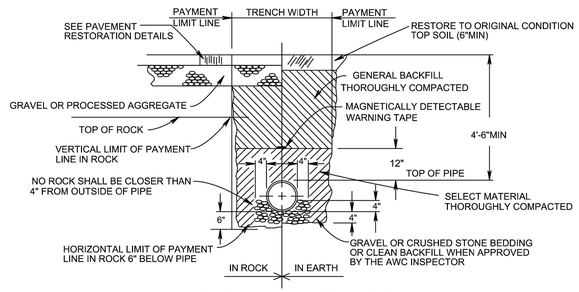


NOTE: TRENCH NOT TO EXCEED A WIDTH EQUAL TO THE OUTSIDE PIPE DIA. + 3'-4"

## TYPICAL TRENCH DETAIL

NOT TO SCALE

REFER TO PAVEMENT RESTORATION PLANS FOR TEMPORARY AND PERMANENT PAVEMENT REPAIR DETAILS

| TEMPORARY PAVEMENT REPAIR LIMITS | |
|---|---|
| PIPE SIZE | TRENCH WIDTH* |
| 6" | 4'-0" |
| 8" | 4'-0" |
| 12" | 4'-0" |
| 16" | 4'-0" |
| 20" | 5'-0" |
| 24" | 5'-0" |
| 30" | 6'-0" |
| 36" | 6'-0" |

* IF TRENCH BOXES ARE USED ADD 2' TO ALL TRENCH WIDTHS

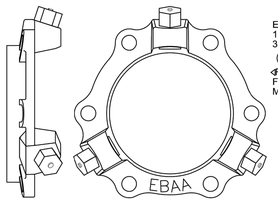


EBAA IRON
1106 MEALUG
350 PSI RATING
UL
FM RATED 175 PSI
FOR USE ON DUCTILE IRON PIPE
MADE IN THE USA

6" DIP RESTRAINT

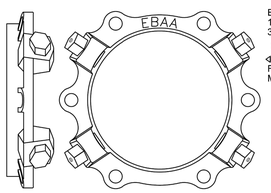


EBAA IRON
1108 MEGALUG
350 PSI RATING
UL
FM RATED 175 PSI
FOR USE ON DUCTILE IRON PIPE
MADE IN THE USA

8" DIP RESTRAINT

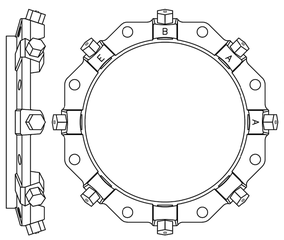


EBAA IRON
1112 MEGALUG
350 PSI RATING
UL
FM RATED 175 PSI
FOR USE ON DUCTILE IRON PIPE
MADE IN THE USA

12" DIP RESTRAINT

## "MEGALUG" D.I. PIPE RESTRAINTS

NOT TO SCALE

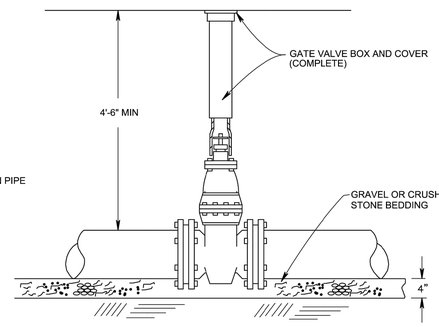


## TYPICAL MJ GATE VALVE INSTALLATION

NOT TO SCALE

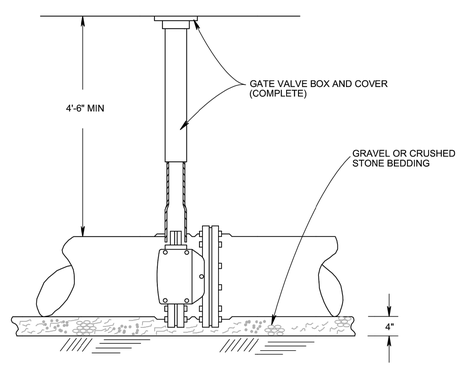


NOTE: ONLY INSTALLED ON MAINS 12" AND LARGER

## TYPICAL MJ BUTTERFLY VALVE INSTALLATION

NOT TO SCALE

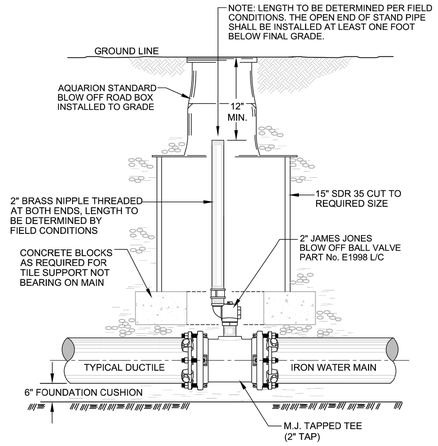


## TYPICAL BLOW-OFF & AIR VENT INSTALLATION DETAIL

NOT TO SCALE

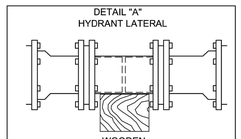


DETAIL "A"
HYDRANT LATERAL

RESTRAINED MECHANICAL JOINT, SOLID SLEEVE OR FLEXIBLE BOLTED RESTRAINING COUPLER FOR REPLACEMENT OR EXTENSIONS TO EXISTING LATERALS
NOTE: USE ONLY WHERE PIPE DIAMETER PERMITS

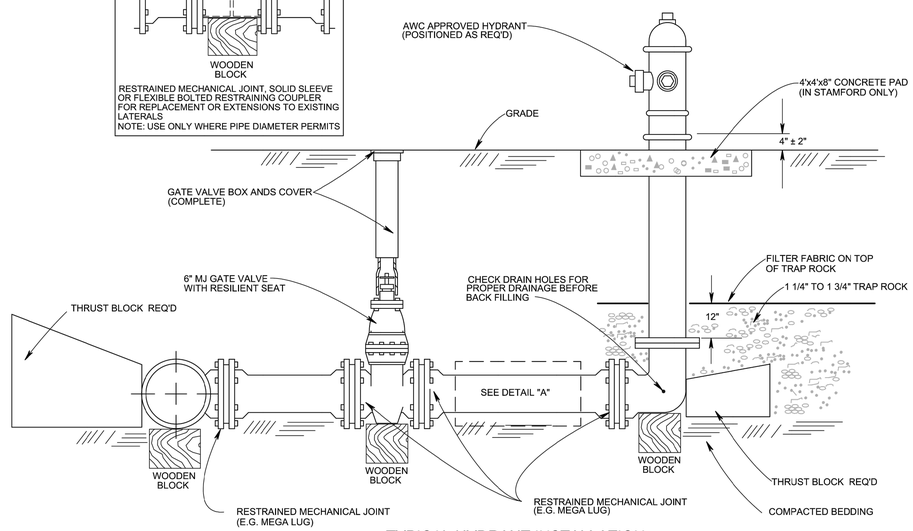


## TYPICAL HYDRANT INSTALLATION

NOT TO SCALE

| No. | DATE | DESCRIPTION | DESIGNER | REVIEWER |
|---|---|---|---|---|

SEAL

SEAL

SCALE:
HORZ.: N.T.S.
VERT.:
DATUM:
HORZ.:
VERT.:
0
GRAPHIC SCALE

FUSS & O'NEILL
56 QUARRY ROAD
TRUMBULL, CONNECTICUT 06611
203.374.3748
www.fando.com

GREENWICH PUBLIC SCHOOLS
CONSTRUCTION DETAILS
(AQUARION DETAILS)
GHS CARDINAL STADIUM
PHASE 1 CONSTRUCTION DOCUMENTS

GREENWICH

CONNECTICUT

PROJ. No.: 20110944.S10
DATE: 11/10/2020

CD-505

File Path: J:\DWG\P2011\0944\S10\Civil\Plan\20110944S10_DET-01.dwg Layout: CD-505 (AQUARION) Plotted: Mon, November 09, 2020 - 11:50 AM User: vchiaravalloti
MS VIEW:
LAYER STATE:
Plotter: AUTOCAD PDF (GENERAL DOCUMENTATION).PC3 CTB File: FO.STB

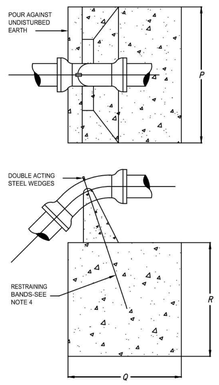


ELEVATION

| PIPE DIAM. IN | BLOCK DIMENSIONS BEND DEG | P IN. | Q IN. | R IN. | CONCRETE VOLUME CU YD. |
|---|---|---|---|---|---|
| 16 | 45 | 72 | 60 | 56 | 52 |
| | 22 1/2 | 60 | 48 | 44 | 27 |
| | 11 1/4 | 60 | 36 | 36 | 14 |
| 14 | 45 | 60 | 48 | 48 | 3.0 |
| | 22 1/2 | 42 | 42 | 40 | 1.5 |
| | 11 1/4 | 34 | 34 | 34 | 0.84 |
| 10 | 45 | 54 | 42 | 42 | 2.0 |
| | 22 1/2 | 36 | 36 | 36 | 1.0 |
| | 11 1/4 | 30 | 30 | 30 | 0.58 |
| 8 | 45 | 48 | 36 | 30 | 1.3 |
| | 22 1/2 | 32 | 32 | 32 | 0.71 |
| | 11 1/4 | 26 | 26 | 26 | 0.38 |
| 6 | 45 | 42 | 30 | 28 | 0.76 |
| | 22 1/2 | 26 | 26 | 26 | 0.38 |
| | 11 1/4 | 24 | 24 | 24 | 0.30 |

NOTES:
1. 2500 psi CONCRETE TO BE USED
2. BLOCK DIMENSIONS ARE BASED UPON SOIL BEARING PRESSURE OF 2000 psi AND WATER PRESSURE OF 150 psi. WHERE SOIL BEARING IS LESS OR WATER PRESSURE IS GREATER, A SPECIAL DESIGN WILL BE REQUIRED.
3. WHERE 90° CREST VERTICAL BEND IS REQUIRED APPROVAL MUST FIRST BE OBTAINED FROM THE ENGINEER. A SPECIAL DESIGN WILL BE REQUIRED.
4. 2-#6 REINFORCING RODS REQUIRED FOR 16" 45° BEND; 1#6 REINFORCING ROD REQUIRED FOR ALL OTHER BENDS. EXPOSED BARS TO BE PROVIDED WITH PROTECTIVE COATING.

NOTE:
IN ADDITION TO THE CONCRETE THRUST BLOCKS, ALL FITTINGS TO BE TIED TOGETHER WITH 3/4" GALVANIZED THREADED RODS, AND ANY OTHER SPECIALS AS DIRECTED BY THE WATER COMPANY.

## CREST VERTICAL BENDS
NOT TO SCALE

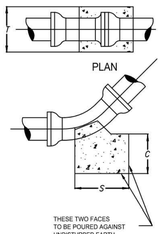


| PIPE DIAM. IN | BLOCK DIMENSIONS BEND DEG | S IN. | T IN. | U IN. | CONCRETE VOLUME CU.FT. |
|---|---|---|---|---|---|
| 16 | 90 | 48 | 48 | 48 | 640 |
| | 45 | 48 | 34 | 20 | 189 |
| | 22 1/2 | 42 | 20 | 18 | 88 |
| | 11 1/4 | | | | (3) |
| 12 | 90 | 36 | 36 | 36 | 270 |
| | 45 | 36 | 24 | 18 | 90 |
| | 22 1/2 | 28 | 18 | 12 | 35 |
| | 11 1/4 | | | | (3) |
| 10 | 90 | 30 | 30 | 30 | 156 |
| | 45 | 30 | 20 | 18 | 63 |
| | 22 1/2 | 22 | 16 | 12 | 24 |
| | 11 1/4 | | | | (3) |
| 8 | 90 | 24 | 24 | 24 | 80 |
| | 45 | 24 | 16 | 12 | 27 |
| | 22 1/2 | 18 | 12 | 12 | 15 |
| | 11 1/4 | | | | (3) |
| 6 | 90 | 18 | 18 | 18 | 34 |
| | 45 | 18 | 12 | 12 | 15 |
| | 22 1/2 | 12 | 12 | 12 | 10 |
| | 11 1/4 | | | | (3) |

NOTES:
1. 2500 psi CONCRETE TO BE USED
2. BLOCK DIMENSIONS ARE BASED UPON SOIL BEARING PRESSURE OF 2000 psi AND WATER PRESSURE OF 150 psi. WHERE SOIL BEARING IS LESS OR WATER PRESSURE IS GREATER, A SPECIAL DESIGN WILL BE REQUIRED.
3. BEND TO BE SET AGAINST UNDISTURBED EARTH, BACKFILL TO BE FIRMLY TAMPED, OR BLOCK TO BE FURNISHED AS DIRECTED BY THE ENGINEER.

## SAG VERTICAL BENDS
NOT TO SCALE

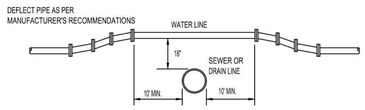


NOTE:
FOR ANY CONDITIONS OTHER THAN SHOWN ABOVE THE FOLLOWING REQUIREMENTS SHALL BE MET. THE JOINTS OF THE SANITARY SEWER OR STORM DRAIN SHALL BE A MINIMUM OF 10' FROM THE POINT OF CROSSING AND THE SANITARY SEWER SHALL BE CLASS 100 PRESSURE PIPE & THE STORM DRAIN SHALL BE DUCTILE IRON.

## CROSSING OF WATER LINE OVER SANITARY SEWER OR STORM DRAIN
NOT TO SCALE

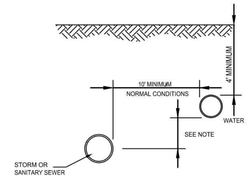


NOTE:
WHERE A 10' HORIZONTAL SEPARATION CANNOT BE OBTAINED DUE TO FIELD CONDITIONS, THE VERTICAL CLEAR DISTANCE SHALL BE A MINIMUM OF 18" HOWEVER, AN EXCEPTION TO THE 10' MINIMUM HORIZONTAL SEPARATION REQUIRES SEPARATE APPROVAL OF THE APPROPRIATE COUNTY HEALTH DEPT.

## SEPARATION OF WATER MAINS AND SEWERS - PARALLEL INSTALLATION
NOT TO SCALE

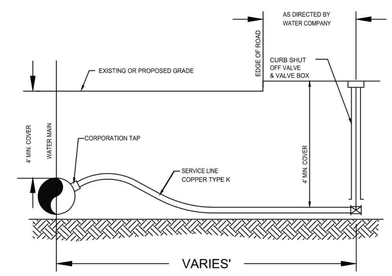


NOTES:
1. CONTRACTOR TO FURNISH AND INSTALL CORPORATION TAP, SERVICE LINE, AND CURB SHUT OFF VALVE AND VALVE BOX.
2. CONTRACTOR TO EXCAVATE, MAINTAIN, BACKFILL, AND RESTORE TRENCH FOR THE TAP, SERVICE LINE, AND CURB SHUT OFF VALVE.
3. CONTRACTOR TO TAKE OUT PERMIT, PAY FEE, AND TO FOLLOW ALL RULES AND REGULATIONS OF THE LOCAL UTILITY AGENCY.

## WATER SERVICE LINE LATERAL
NOT TO SCALE

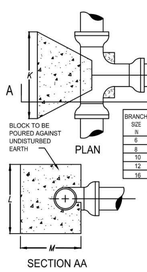


| BRANCH SIZE IN | BLOCK DIMENSIONS K IN | L IN | M IN | CONCRETE VOLUME CU.FT. |
|---|---|---|---|---|
| 6 | 18 | 16 | 12 | 24 |
| 8 | 30 | 18 | 12 | 40 |
| 10 | 42 | 20 | 12 | 63 |
| 12 | 50 | 24 | 16 | 113 |
| 16 | 60 | 36 | 24 | 300 |

NOTES:
1. 2500 psi CONCRETE TO BE USED
2. BLOCK DIMENSIONS ARE BASED UPON SOIL BEARING PRESSURE OF 2000 psi AND WATER PRESSURE OF 150 psi. WHERE SOIL BEARING IS LESS OR WATER PRESSURE IS GREATER, A SPECIAL DESIGN WILL BE REQUIRED.

## TEES
NOT TO SCALE

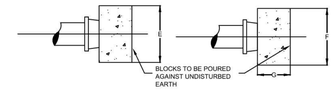


NOTES:
1. 2500 psi CONCRETE TO BE USED
2. BLOCK DIMENSIONS ARE BASED UPON SOIL BEARING PRESSURE OF 2000 psi AND WATER PRESSURE OF 150 psi. WHERE SOIL BEARING IS LESS OR WATER PRESSURE IS GREATER, A SPECIAL DESIGN WILL BE REQUIRED.
3. FOR USE ON ABANDONED LINES AND DEAD ENDS WHERE NO EXTENSION IS CONTEMPLATED.

| PIPE DIAM. IN | BLOCK DIMENSIONS E IN | F IN | G IN | CONCRETE VOLUME FT. |
|---|---|---|---|---|
| 6 | 20 | 16 | 12 | 22 |
| 8 | 28 | 20 | 12 | 39 |
| 10 | 30 | 24 | 12 | 50 |
| 12 | 42 | 30 | 14 | 102 |
| 16 | 52 | 42 | 18 | 227 |

## CAPS, PLUGS AND VALVES
NOT TO SCALE

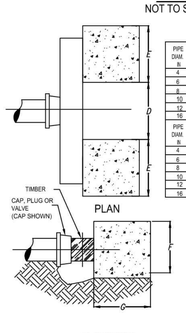


| PIPE DIAM. IN | BLOCK DIMENSIONS E IN | F IN | G IN | CONCRETE VOLUME FT. |
|---|---|---|---|---|
| 4 | NONE REQUIRED | | | |
| 6 | 12 | 12 | 12 | 20 |
| 8 | 16 | 16 | 16 | 46 |
| 10 | 20 | 20 | 20 | 93 |
| 12 | 24 | 24 | 24 | 160 |
| 16 | 32 | 32 | 32 | 380 |

| PIPE DIAM. IN | TIMBER NO. BEAMS | NOM. SIZE | LENGTH IN | CLEARANCE D IN |
|---|---|---|---|---|
| 4 | NONE REQUIRED | | | |
| 6 | 1 | 8"x8" | 34 | 18 |
| 8 | 1 | 8"x8" | 42 | 20 |
| 10 | 1 | 10"x10" | 48 | 22 |
| 12 | 1 | 12"x12" | 56 | 24 |
| 16 | 2 | 10"x10" | 72 | 30 |

NOTES:
1. 2500 psi CONCRETE TO BE USED
2. BLOCK DIMENSIONS ARE BASED UPON SOIL BEARING PRESSURE OF 2000 psi AND WATER PRESSURE OF 150 psi. WHERE SOIL BEARING IS LESS OR WATER PRESSURE IS GREATER, A SPECIAL DESIGN WILL BE REQUIRED.
3. TIMBER TO BE DOUGLAS FIR CONSTRUCTION GRADE OR BETTER HORIZONTAL SHEAR 120 psi.
4. PROVIDE TAMPED BACKFILL AND/OR BLOCKING TO SUPPORT TIMBER.

## DEAD ENDS
NOT TO SCALE

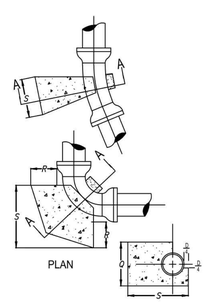


| PIPE DIAM. IN | BLOCK DIMENSIONS BEND DEG | S IN. | Q IN. | R IN. | CONCRETE VOLUME CU.FT. |
|---|---|---|---|---|---|
| 16 | 90 | 48 | 48 | 48 | 640 |
| | 45 | 48 | 34 | 20 | 189 |
| | 22 1/2 | 42 | 20 | 18 | 88 |
| | 11 1/4 | | | | (3) |
| 12 | 90 | 36 | 36 | 36 | 270 |
| | 45 | 36 | 24 | 18 | 90 |
| | 22 1/2 | 28 | 18 | 12 | 35 |
| | 11 1/4 | | | | (3) |
| 10 | 90 | 30 | 30 | 30 | 156 |
| | 45 | 30 | 20 | 18 | 63 |
| | 22 1/2 | 22 | 16 | 12 | 24 |
| | 11 1/4 | | | | (3) |
| 8 | 90 | 24 | 24 | 24 | 80 |
| | 45 | 24 | 16 | 12 | 27 |
| | 22 1/2 | 18 | 12 | 12 | 15 |
| | 11 1/4 | | | | (3) |
| 6 | 90 | 18 | 18 | 18 | 34 |
| | 45 | 18 | 12 | 12 | 15 |
| | 22 1/2 | 12 | 12 | 12 | 10 |
| | 11 1/4 | | | | (3) |

NOTES:
1. 2500 psi CONCRETE TO BE USED
2. BLOCK DIMENSIONS ARE BASED UPON SOIL BEARING PRESSURE OF 2000 psi AND WATER PRESSURE OF 150 psi. WHERE SOIL BEARING IS LESS OR WATER PRESSURE IS GREATER, A SPECIAL DESIGN WILL BE REQUIRED.

## HORIZONTAL BENDS
NOT TO SCALE

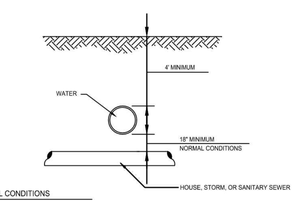


UNUSUAL CONDITIONS

WATER MAINS PASSING UNDER SEWERS SHALL HAVE A VERTICAL CLEARANCE OF 18" MIN. BETWEEN THE SEWER AND WATER MAIN AND THE SEWER SHALL BE SUPPORTED AS DIRECTED BY THE ENGINEER. TO THE EXTENT FEASIBLE, JOINTS IN THE WATER MAIN SHALL BE KEPT AS FAR AS POSSIBLE FROM THE SEWER. WHERE AN 18" SEPARATION CANNOT BE OBTAINED DUE TO FIELD CONDITIONS, SEPARATE APPROVAL OF THE HEALTH DEPARTMENT SHALL BE REQUIRED.

## SEPARATION OF WATER MAINS AND SEWER CROSSINGS
NOT TO SCALE

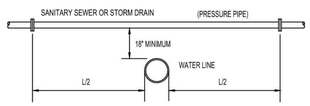


NOTE:
WHERE WATER LINE PASSES BENEATH SEWER LINE OR STORM DRAIN, THE JOINTS OF THE PIPE SHALL BE A MIN. OF 10' FROM THE POINT OF CROSSING AND THE SANITARY SEWER SHALL BE CLASS 100 PRESSURE PIPE & THE STORM DRAIN SHALL BE DUCTILE IRON PIPE.

## CROSSING OF WATER LINE UNDER SANITARY SEWER OR STORM DRAIN
NOT TO SCALE

(DETAIL EDITED PER MARK-UPS BY AQUARION ON JANUARY 30, 2015)

SEWER AND WATER CROSSING NOTES

1. SEWER JOINTS SHALL BE EQUIDISTANT FROM AND LOCATED AS FAR AS POSSIBLE AWAY FROM THE WATER LINE

2. IF THE VERTICAL SEPARATION BETWEEN THE BOTTOM OF THE WATER MAIN AND THE TOP OF THE SEWER IS LESS THAN 18 INCHES (WATER MAIN IS ABOVE SEWER), USE ONE OF THE FOLLOWING PROCEDURES: A) THE WATER MAIN SHALL BE RECONSTRUCTED FOR A DISTANCE OF 10 FEET ON EACH SIDE OF SEWER WITH RUBBER-GASKETED MECHANICAL JOINT PIPE ONE FULL LENGTH WATER MAIN SHOULD BE CENTERED OVER SEWER, B) CONSTRUCT BOTH THE WATER & SEWER PIPE OF RUBBER-GASKETED, CEMENT-LINED DUCTILE IRON PIPE OR EQUIVALENT AND PRESSURE TEST BOTH PIPES, OR C) ENCASE THE SEWER PIPE IN CONCRETE FOR A DISTANCE OF 10 FEET ON EACH SIDE OF THE WATER LINE CROSSING.

| No. | DATE | DESCRIPTION | DESIGNER | REVIEWER |
|---|---|---|---|---|

SEAL

SEAL

SCALE:
HORZ.: N.T.S.
VERT.:
DATUM:
HORZ.:
VERT.:
0
GRAPHIC SCALE

FUSS & O'NEILL
56 QUARRY ROAD
TRUMBULL, CONNECTICUT 06611
203.374.3748
www.fando.com

GREENWICH PUBLIC SCHOOLS
CONSTRUCTION DETAILS
(AQUARION DETAILS)
GHS CARDINAL STADIUM
PHASE 1 CONSTRUCTION DOCUMENTS
GREENWICH CONNECTICUT

PROJ. No.: 20110944.S10
DATE: 11/10/2020

CD-506

File Path: J:\DWG\P2011\0944\S10\Civil\Plan\20110944S10_DET-01.dwg Layout: CD-506 (AQUARION) Plotted: Mon, November 09, 2020 - 11:50 AM User: vchiaravalloti
MS VIEW: LAYER STATE: Plotter: AUTOCAD PDF (GENERAL DOCUMENTATION).PC3 CTB File: FO.STB

# GREENWICH CARDINAL STADIUM

PHASE 1

10 HILLSIDE ROAD
GREENWICH, CT 06830

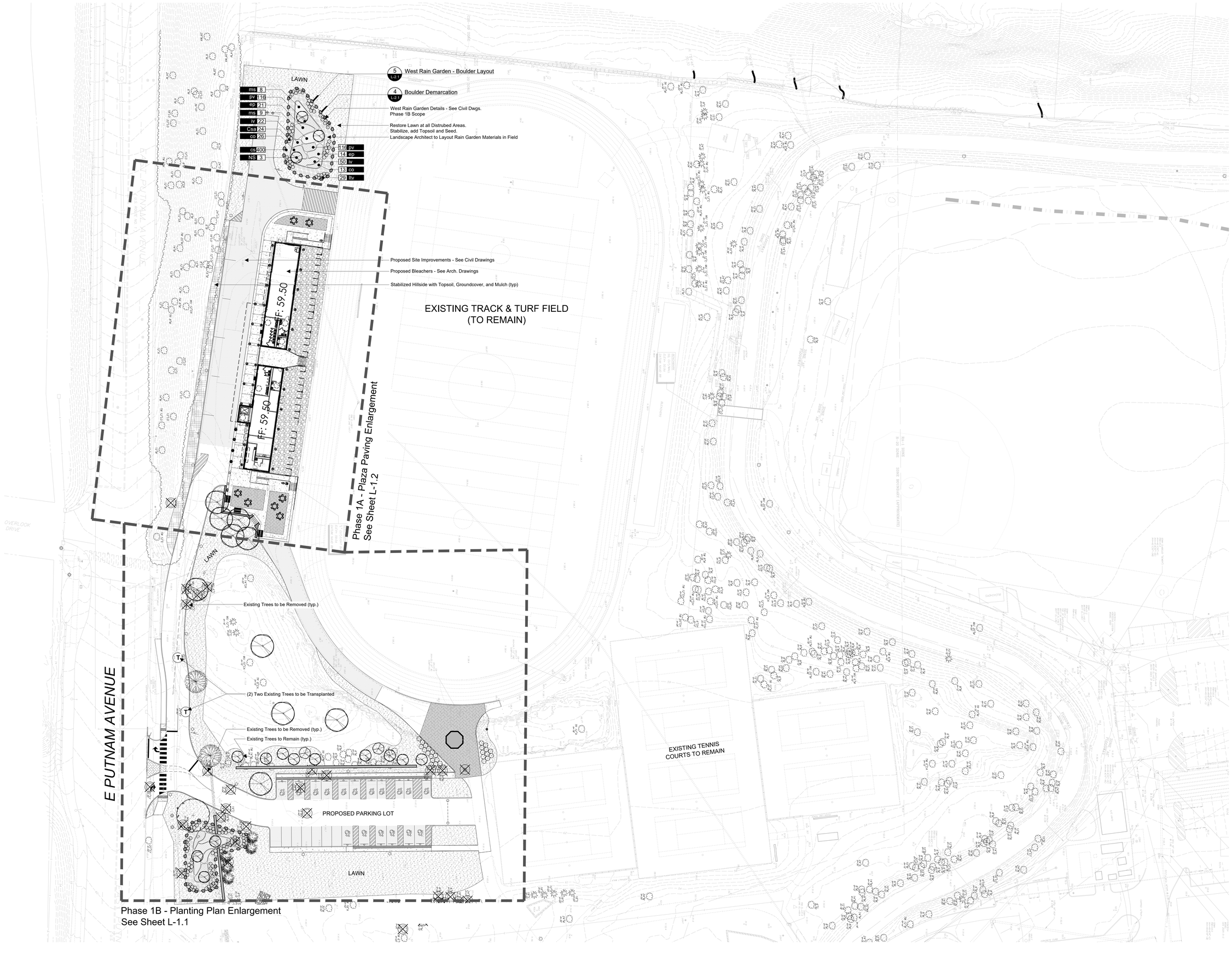


## Symbol Legend

- Note Call-off
- Building
- Proposed Deciduous Trees
- Proposed Evergreen Trees
- Proposed Transplanted Trees
- Restored Lawn Areas
- Stabilized Hillside
- Existing Trees to Remain
- Existing Trees to be Removed
- Existing Trees to be Transplanted
- Boulder Demarcation

## ADD ALTERNATE #1

1. Remaining Driveways, Walkways, ADA parkinglot
2. Storm Water Management Systems, Retention Pond, etc.
3. Additional Fencing and Retaining Walls
4. Curb Cut at Road
5. Site Lighting
6. Utilities to the Area of the Kiosk. Kiosk Area as Just Asphalt.

## ADD ALTERNATE #2

1. Kiosk Building and Additional (nicer) Pavers Around Area of Kiosk.

## PHASE 1 NOTE

See Civil Drawings for Grading & Construction Limits of Phase 1A and 1B Site Improvements.

Professional Seal:

| No: | Revision: | Date: |
|---|---|---|
| 1 | Issue for Permit | 8/12/2020 |
| 2 | Zoning Permit Sign-Off | 10/8/2020 |
| 3 | Phase 1B Site Plan Application | 10/30/2020 |
| 4 | Construction Documents | 11/10/2020 |

0 15 30 60


WESLEY STOUT ASSOCIATES
36 Main Street, New Canaan, CT 06840
203 966-3100 FAX 203 966-3131
www.wesleystout.com


## PHASE 1: OVERALL LANDSCAPE LAYOUT & TREE REMOVAL PLAN

Date: 08/12/2020
Scale: 1" = 30'
Sheet:

L-1.0

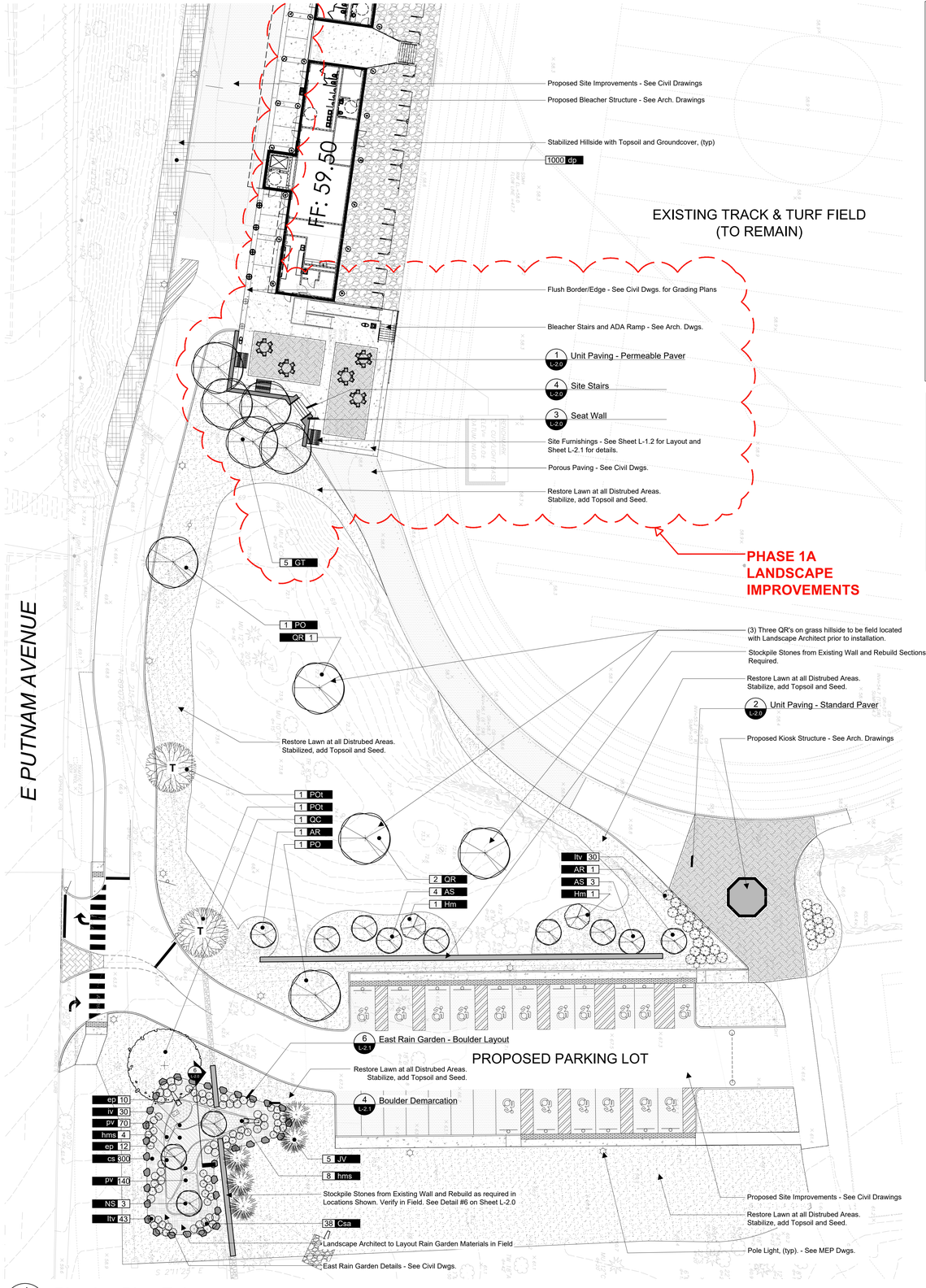


1 L-1.1 Planting Plan Enlargement
Phase 1B

Scale: As noted

## Proposed Planting Schedule

### Trees

| Qty. | Symbol | Botanical Name | Common Name | Size | Cond | Remarks |
|---|---|---|---|---|---|---|
| 2 | AR | *Acer rubrum* | Red Maple | 3"-3.5" CAL. | B&B | Full, nicely shaped, matching specimen |
| 7 | AS | *Acer saccharum* | Sugar Maple | 2.5"-3" CAL. | B&B | Full, nicely shaped, natural character |
| 5 | GT | *Gleditsia triacanthos* 'Christie' | Halka Honey Locust | 3" - 3.5" CAL. | B&B | Full, nicely shaped, matching specimen |
| 5 | JV | *Juniperus virginiana* | Eastern Red Cedar | 8'-10' HT. | B&B | Full, nicely shaped, natural character (not sheared) |
| 6 | NS | *Nyssa slyvatica* | Sour Gum | 2.5"-3" CAL. | B&B | Full, nicely shaped, matching specimen |
| 2 | PO | *Platanus occidentalis* | Sycamore | 4"-4.5" CAL. | B&B | Full, nicely shaped, matching specimen |
| 2 | POt | *Platanus occidentalis* | Transplanted Sycamore | N/A | TRANS. | On-site transplant with truck mounted 90" tree spade, see additional transplant notes below |
| 1 | QC | *Quercus coccinea* | Scarlet Oak | 5"-6" CAL. | B&B | Full, nicely shaped, specimen |
| 3 | QR | *Quercus rubra* | Red Oak | 3"-3.5" CAL. | B&B | Full, nicely shaped, matching specimen |

### Shrubs

| Qty. | Symbol | Botanical Name | Common Name | Size | Cond | Remarks |
|---|---|---|---|---|---|---|
| 62 | Csa | *Cornus alba* | Redtwig Dogwood | 5 Gal. | CONT. | Full, heavy foliage, nicely shaped |
| 2 | Hm | *Hamamelis virginiana* | Witchazel | 5'-6' HT. | B&B | Full, nicely shaped, natural character |
| 102 | Itv | *Itea virginica* | Virginia Sweetspire | 5 Gal. | CONT. | Full, heavy flowers, nicely shaped |

### Rain Garden Planting

| Qty. | Symbol | Botanical Name | Common Name | Size | Cond | Remarks |
|---|---|---|---|---|---|---|
| 700 | cs | *Carex stricta* | Tussock Sedge | 2 QT. | CONT. | Full, well-rooted, planted 12" o.c. |
| 39 | co | *Chelone obliqua* | Red Turtlehead | 1 Gal. | CONT. | Full, well-rooted, planted 18" o.c. |
| 57 | ep | *Eutrochium purpreum* | Joe-Pye Weed | 1 Gal. | CONT. | Full, well-rooted, planted 24" o.c. |
| 12 | hms | *Hibiscus moscheutos* | Swamp Mallow | 2 Gal. | CONT. | Full, well-rooted, planted 48" o.c. |
| 102 | iv | *Iris versicolor* | Northern Blueflag Iris | 1 Gal. | CONT. | Full, well-rooted, planted 24" o.c. |
| 17 | ms | *Matteuccia struthiopteris* | Ostrich Fern | 1 Gal. | CONT. | Full, well-rooted, planted 56" o.c. |
| 442 | pv | *Panicum virgatum* | Switchgrass | 2 Gal. | CONT. | Full, well-rooted, planted 24" o.c. |

### Ground Cover

| Qty. | Symbol | Botanical Name | Common Name | Size | Cond | Remarks |
|---|---|---|---|---|---|---|
| 1,000 | dp | *Dennstaedtia punctilobua* | Hay-scented Fern | 4" Pots | CONT. | Full, well rooted, nicely shaped, planted @ 20" O.C. |

## Soil Chart

| Post construction soil condition | Type of preparation |
|---|---|
| Good soil | Loosen existing soil |
| Compacted soil | Loosen existing soil, add composted organic matter to bring organic content to 5% dry weight |
| Clay content 5-35% | Loosen existing soil, add composted organic matter to bring organic content to 5% dry weight |
| Poor quality, heavy clay soil | Remove existing soil, add loam topsoil |

## Tree Planting Note

All proposed tree locations on this plan are approximate and may require the contractor to adjust in the field due to existing conditions.

## Transplanting Note

Design intent is to transplant two existing Sycamore trees. If timing of construction is not suitable for transplanting, contractor shall remove existing trees and replace with two new Sycamore trees that match the proposed planting schedule.

Contact Gossett Brothers Nursery @ 203-943-9945 or other approved large tree transplanting contractor.

## Planting Notes

1. Be aware of all underground utilities prior to any planting operations. Contact "CALL BEFORE YOU DIG" prior to excavation.
2. All plantings are to be installed by a qualified landscape contractor.
3. The contractor shall be required to carry workmen's compensation insurance and comprehensive general liability insurance. Certificates will be required prior to signing contracts.
4. Notify owner or landscape architect 72 hours minimum in advance of starting planting operations. Receive approval for layout of all bed lines and material locations prior to installation.
5. The landscape architect reserves the right to reject inferior plant materials and substitutions. The landscape architect is willing to make two trips to suppliers to review and approve materials. Previously unapproved materials may be rejected at the site. Minimally, all materials will conform to the "American Standard for Nursery Stock" (ANSI Z60.1 - 2004) of the american association of nurserymen.
6. When there is a discrepancy between plant quantities shown on the plant list & the plan, use the quantities from the plant list.
7. Test soil for ph and nutrients, adjust as required and receive approval prior to planting.
8. Pit to be 2 times wider than root ball or widest spread of container or bare roots.
9. Set crown of root ball 2" above finished grade.
10. Do not add fertilizer to planting soil for fall plantings.
11. All plant material shall be guaranteed by the contractor to be in good, healthy and flourishing condition for a period of one year from the date of acceptance. The contractor shall replace, as soon as weather and seasonal conditions permit, all dead plants and all plants not in a vigorous, thriving condition, as determined by the landscape architect during, and at the end of the guarantee period. Warranty replacement will be provided at no cost to the owner and include materials and labor. Contractor is responsible for repair of any damage incurred during replacement of warranty materials. Warranty period to begin at the final approval of plantings by Landscape Architect and client. Contractor is responsible for maintaining the plant material until final approval is given. This will include watering the plants.

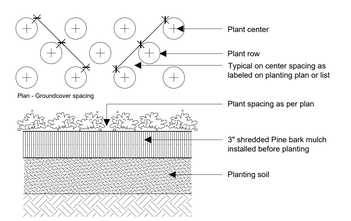


2 L-1.1 Groundcover Planting

Not to Scale

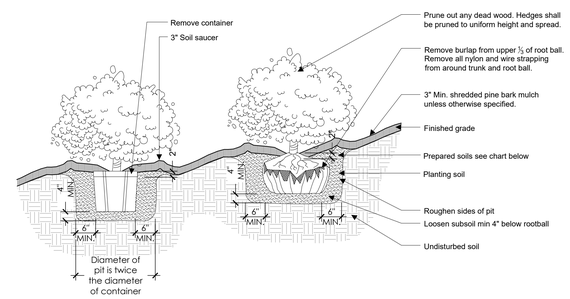


3 L-1.1 Shrub Planting

Not to Scale

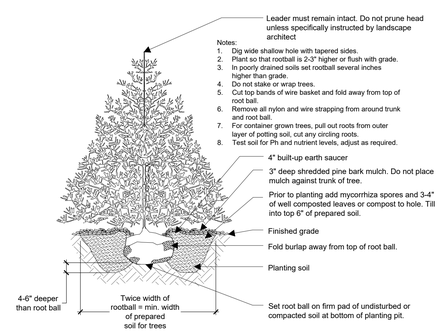


4 L-1.1 Evergreen Tree Planting

Not to Scale

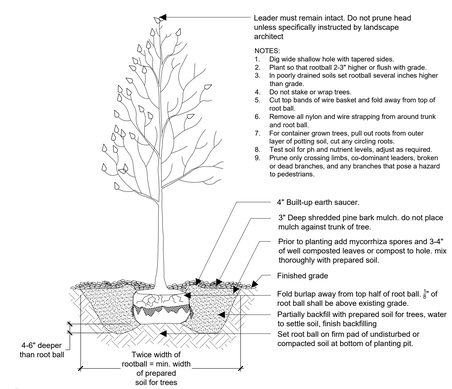


5 L-1.1 Deciduous Tree Planting

Not to Scale

GREENWICH
CARDINAL STADIUM
PHASE 1
10 HILLSIDE ROAD
GREENWICH, CT 06830

## Symbol Legend

- Note Call-off
- Building
- Proposed Deciduous Trees
- Proposed Evergreen Trees
- Proposed Transplanted Trees
- Restored Lawn Areas
- Stabilized Hillside
- Existing Trees to Remain
- Existing Trees to be Removed
- Existing Trees to be Transplanted
- Boulder Demarcation

## ADD ALTERNATE #1

1. Remaining Driveways, Walkways, ADA parkinglot
2. Storm Water Management Systems, Retention Pond, etc.
3. Additional Fencing and Retaining Walls
4. Curb Cut at Road
5. Site Lighting
6. Utilities to the Area of the Kiosk. Kiosk Area as Just Asphalt.

## ADD ALTERNATE #2

1. Kiosk Building and Additional (nicer) Pavers Around Area of Kiosk.

## PHASE 1 NOTE

See Civil Drawings for Grading & Construction Limits of Phase 1A and 1B Site Improvements.

Professional Seal:

| No: | Revision: | Date: |
|---|---|---|
| 1 | Issue for Permit | 8/12/2020 |
| 2 | Zoning Permit Sign-Off | 10/8/2020 |
| 3 | Phase 1B Site Plan Application | 10/30/2020 |
| 4 | Construction Documents | 11/10/2020 |

0 10 20 40

WESLEY STOUT ASSOCIATES
96 Main Street, New Canaan, CT 06840
203 966-3100 FAX 203 966-3131
www.wesleystout.com

PHASE 1B: PLANTING PLAN ENLARGEMENT

Date: 08/12/2020
Scale: 1" = 20'
Sheet:

L-1.1

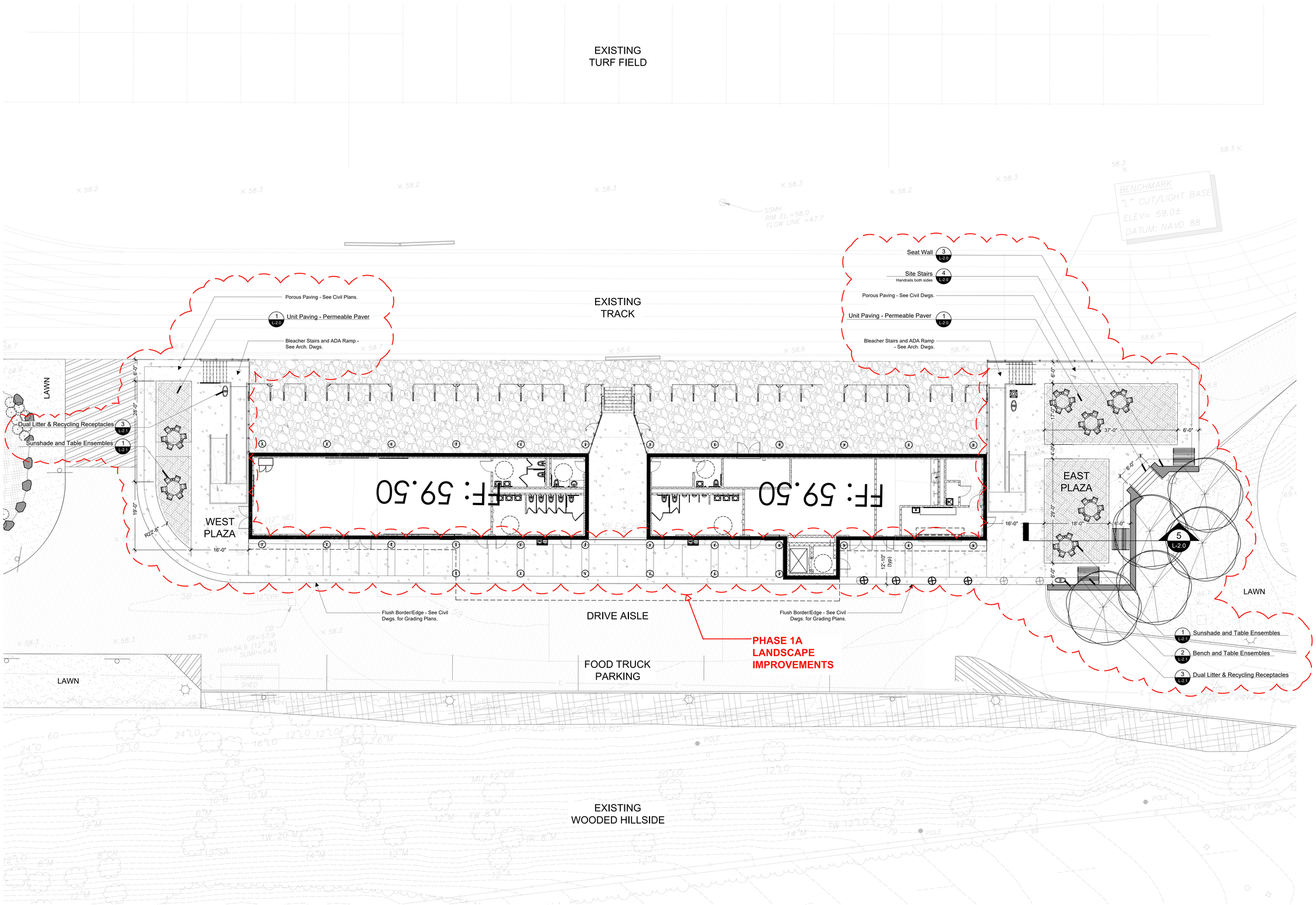


1 L-1.2 Plaza Paving Enlargement
Phase 1A

Scale: As noted

# GREENWICH CARDINAL STADIUM

PHASE 1

10 HILLSIDE ROAD
GREENWICH, CT 06830

## Symbol Legend

- Note Call-off
- Building
- Proposed Deciduous Trees
- Proposed Evergreen Trees
- Proposed Transplanted Trees
- Restored Lawn Areas
- Stabilized Hillside
- Existing Trees to Remain
- Existing Trees to be Removed
- Existing Trees to be Transplanted
- Boulder Demarcation

## ADD ALTERNATE #1

1. Remaining Driveways, Walkways, ADA parkinglot
2. Storm Water Management Systems, Retention Pond, etc.
3. Additional Fencing and Retaining Walls
4. Curb Cut at Road
5. Site Lighting
6. Utilities to the Area of the Kiosk. Kiosk Area as Just Asphalt.

## ADD ALTERNATE #2

1. Kiosk Building and Additional (nicer) Pavers Around Area of Kiosk.

## PHASE 1 NOTE

See Civil Drawings for Grading & Construction Limits of Phase 1A and 1B Site Improvements.

Professional Seal:

| No: | Revision: | Date: |
|---|---|---|
| 1 | Issue for Permit | 8/12/2020 |
| 2 | Zoning Permit Sign-Off | 10/8/2020 |
| 3 | Phase 1B Site Plan Application | 10/30/2020 |
| 4 | Construction Documents | 11/10/2020 |

0 5 10 20

WESLEY STOUT ASSOCIATES
96 Main Street, New Canaan, CT 06840
203 966-3100 FAX 203 966-3131
www.wesleystout.com

PHASE 1A: PLAZA PAVING ENLARGEMENT

Date: 08/12/2020
Scale: 1" = 10'
Sheet:

L-1.2

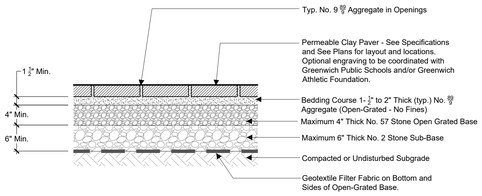


## 1 L-2.0 Unit Paving -Permeable Paver

Not to Scale

CLAY PAVERS - CHARACTER IMAGE

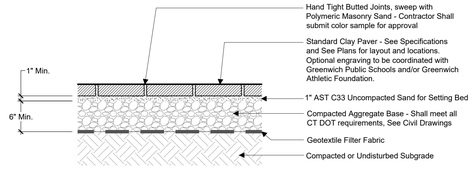


## 2 L-2.0 Unit Paving - Standard Paver

Not to Scale

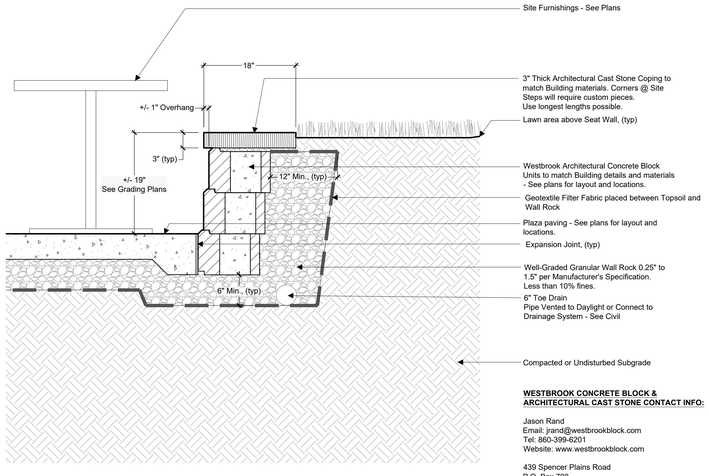


**WESTBROOK CONCRETE BLOCK & ARCHITECTURAL CAST STONE CONTACT INFO:**

Jason Rand
Email: jrand@westbrookblock.com
Tel: 860-399-6201
Website: www.westbrookblock.com

439 Spencer Plains Road
P.O. Box 700
Westbrook, CT 06498

## 3 L-2.0 Seat Wall

Scale: 1" = 1'

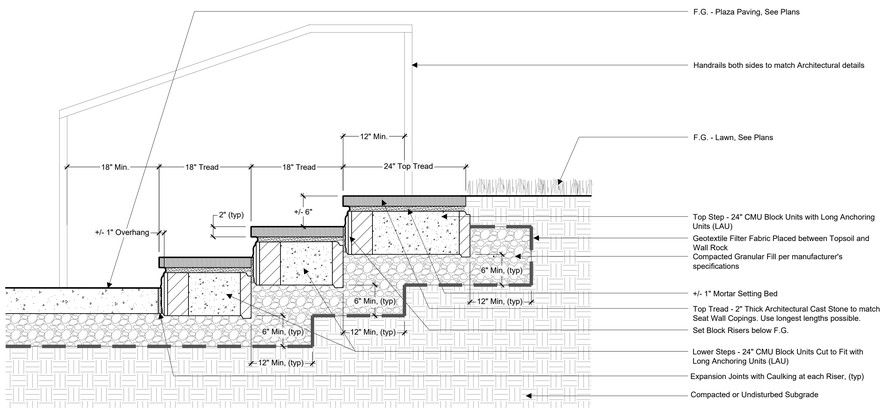


**WESTBROOK CONCRETE BLOCK & ARCHITECTURAL CAST STONE CONTACT INFO:**

Jason Rand
Email: jrand@westbrookblock.com
Tel: 860-399-6201
Website: www.westbrookblock.com

439 Spencer Plains Road
P.O. Box 700
Westbrook, CT 06498

## 4 L-2.0 Site Stairs

Not to Scale

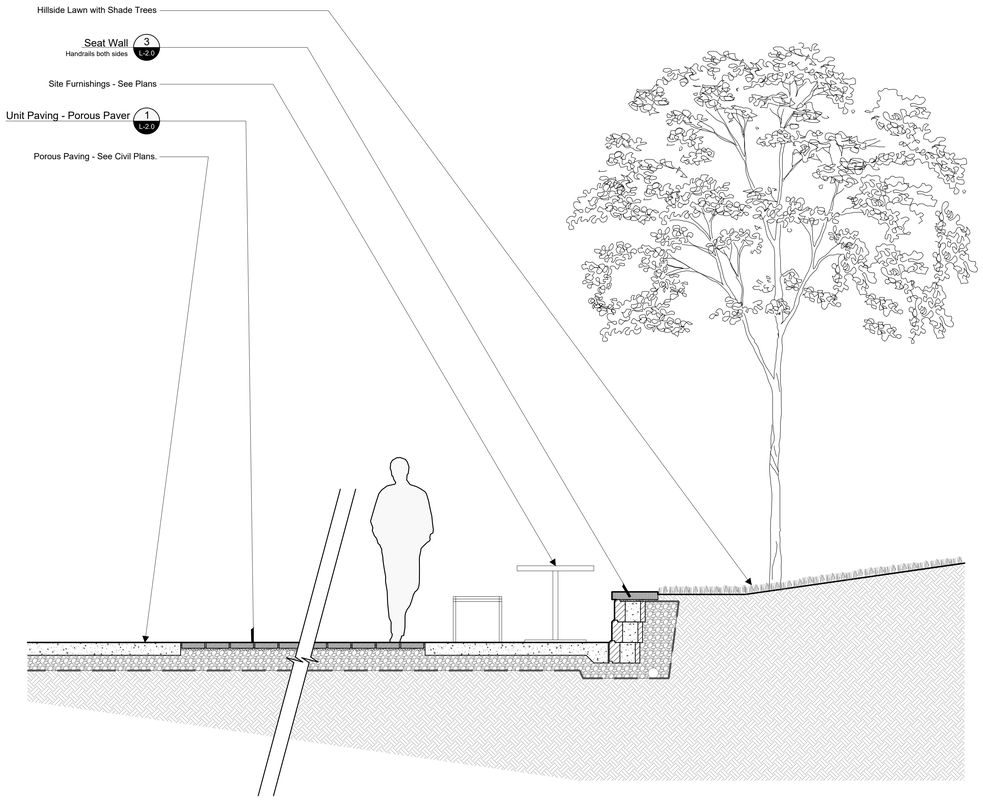


## 5 L-2.0 Plaza + Seat Wall Section

Not to Scale

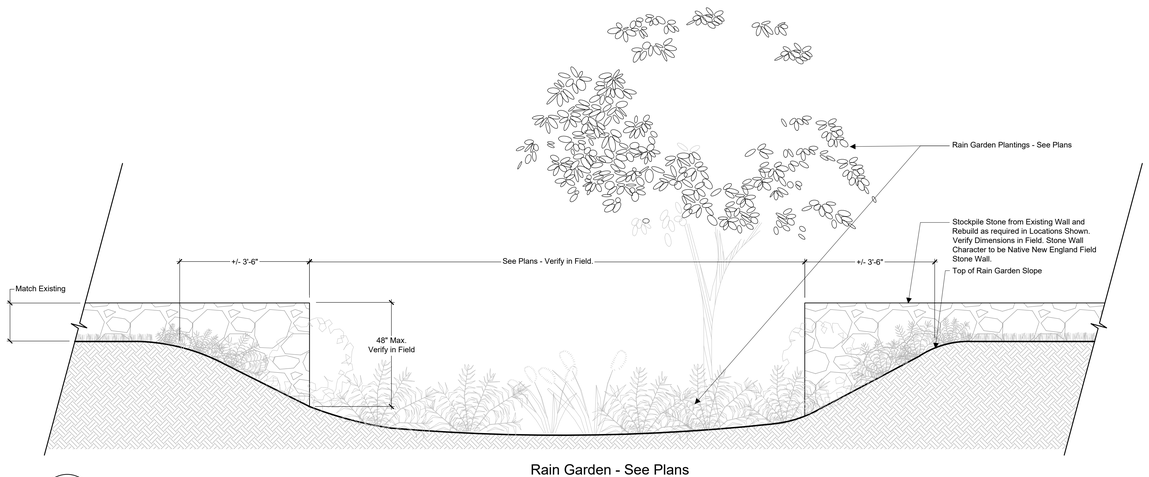


## 6 L-2.0 Stone Walls @ Rain Garden

Not to Scale

GREENWICH CARDINAL STADIUM

PHASE 1

10 HILLSIDE ROAD
GREENWICH, CT 06830

### ADD ALTERNATE #1

1. Remaining Driveways, Walkways, ADA parkinglot
2. Storm Water Management Systems, Retention Pond, etc.
3. Additional Fencing and Retaining Walls
4. Curb Cut at Road
5. Site Lighting
6. Utilities to the Area of the Kiosk. Kiosk Area as Just Asphalt.

### ADD ALTERNATE #2

1. Kiosk Building and Additional (nicer) Pavers Around Area of Kiosk.

### PHASE 1 NOTE

See Civil Drawings for Grading & Construction Limits of Phase 1A and 1B Site Improvements.

Professional Seal:

| No: | Revision: | Date: |
|---|---|---|
| 1 | Issue for Permit | 8/12/2020 |
| 2 | Zoning Permit Sign-Off | 10/8/2020 |
| 3 | Phase 1B Site Plan Application | 10/30/2020 |
| 4 | Construction Documents | 11/10/2020 |

0 1/2 1 2

WESLEY STOUT ASSOCIATES
96 Main Street, New Canaan, CT 06840
203 966-3100 FAX 203 966-3131
www.wesleystout.com

PHASE 1: SITE DETAILS

Date: 08/12/2020
Scale: As noted
Sheet:

L-2.0

**'Soleris' Sunshade with 'Tangent' Table Ensembles** as manufactured and supplied by Forms + Surfaces. Contractor shall include 'Soleris' sunshades with 'Slat' perforation details, shade panels and frame color & finishes to be selected by L.A. Contractor shall include 6-seat backless 'Tangent' Table ensembles with aluminum slats, one table shall be ADA compliant and permit unhindered wheelchair access, tables shall include a center hole to receive sunshade, table top, frame and slat color & finishes to be selected by L.A., sunshade and table ensemble shall be freestanding and surface mounted to the concrete or pavers per manufacturer's installation guide. Contractor shall submit product cut sheets and manufactured shop drawings for approval by L.A. See plans for locations and layouts.

**Quantity** - 6 Standard Sunshade and Table Ensembles / 1 Sunshade and ADA Table Ensembles

Model Numbers / Description:
SUSOL-APT / Soleris Sunshade, for use with Forms + Surfaces ensembles, perforation detail
SETAN-6LA / Tangent Table ensemble, 6 backless seats, aluminum slats, umbrella hole and sleeve, one ADA compliant

1 L-2.1 Sunshade and Table Ensembles

NOT TO SCALE

**'Knight' Table Ensembles** as manufactured and supplied by Forms + Surfaces. Contractor shall include 'Knight' backless Benches and Table ensembles with aluminum slats, frame and slat color & finishes to be selected by L.A., table and bench ensemble shall be freestanding and surface mounted to the concrete or pavers per manufacturer's installation guide, table and bench ensembles shall be field located with L.A. so East Plaza Seat Wall acts as an additional seating option. Contractor shall submit product cut sheets and manufactured shop drawings for approval by L.A. See plans for locations and layouts.

**Quantity** - 3 Tables / 3 Standard Benches

Model Numbers / Description:
STKNI-72NA / Knight table ensemble with Backless benches, aluminum slats

2 L-2.1 Bench and Table Ensembles

NOT TO SCALE

**'Axis' Dual Litter & Recycling Receptacles** with 32 gallon liners as manufactured and supplied by Forms + Surfaces. Contractor shall include dual configuration receptacles with lid & base for both litter & recycling uses, Standard lid to be dark grey and recycling lid to be blue, include litter & recycling instructional graphics and text for each use, receptacles to be freestanding and surface mounted to concrete or pavers per manufacturer's installation guide, body color and finish to be selected by L.A. Contractor shall submit product cut sheets and manufactured shop drawings for approval by L.A. See plans for locations and layouts.

**Quantity** - 3 Litter Receptacles / 3 Recycling Receptacles

Model Numbers / Description:
SLAXIS-132 / Axis Receptacle, stainless steel, 32-gallon liner

3 L-2.1 Dual Litter & Recycling Receptacles

NOT TO SCALE

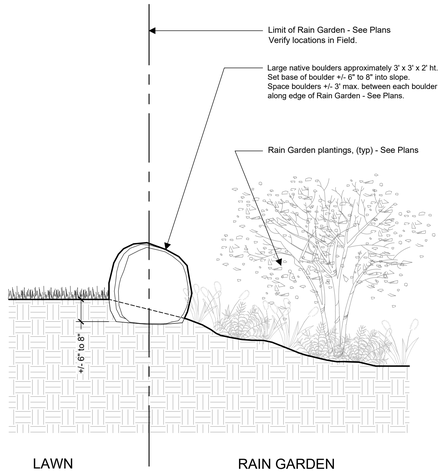


4 L-2.1 Boulder Demarcation

NOT TO SCALE

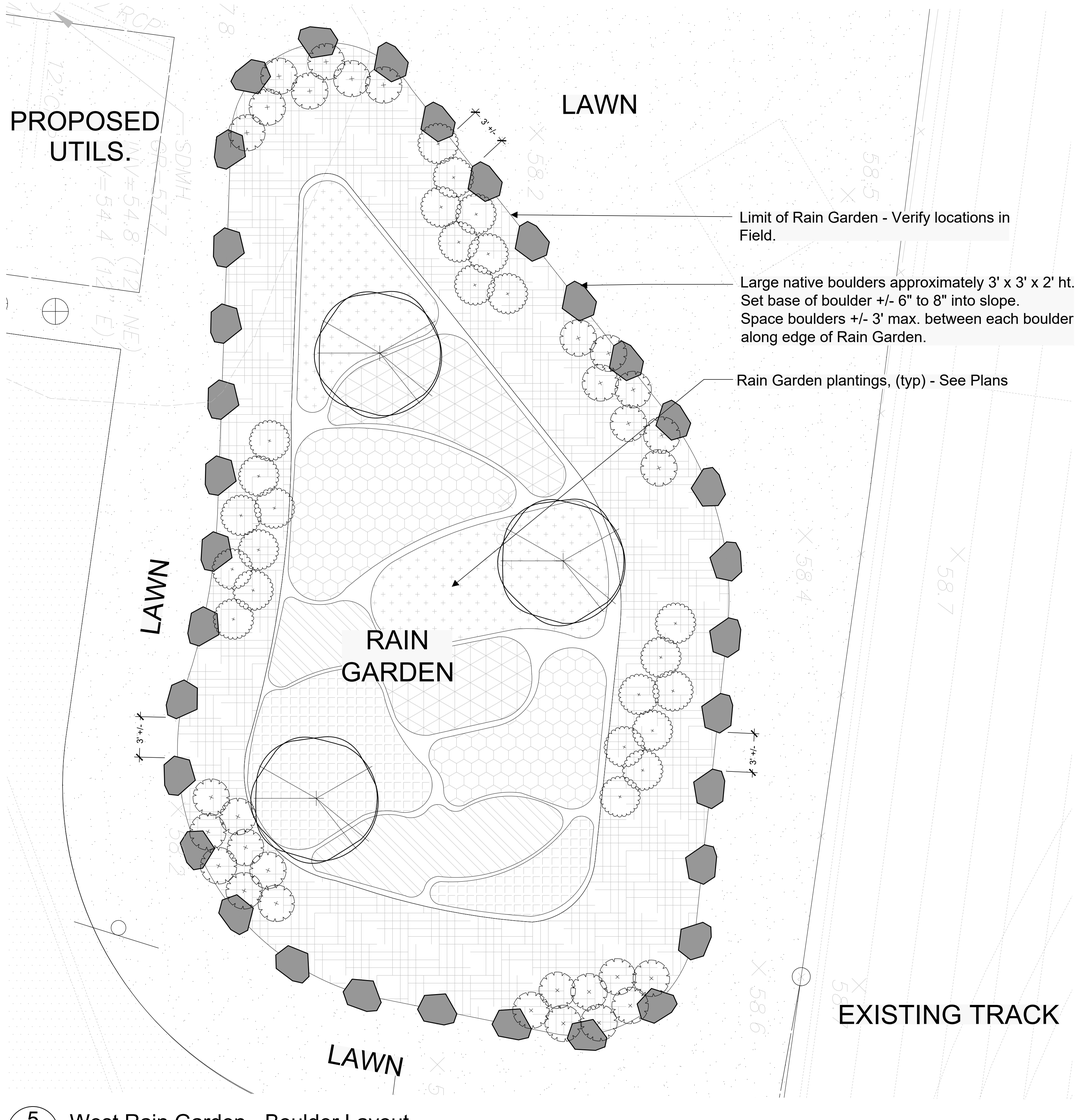


5 L-2.1 West Rain Garden - Boulder Layout

SCALE: 1" = 5'

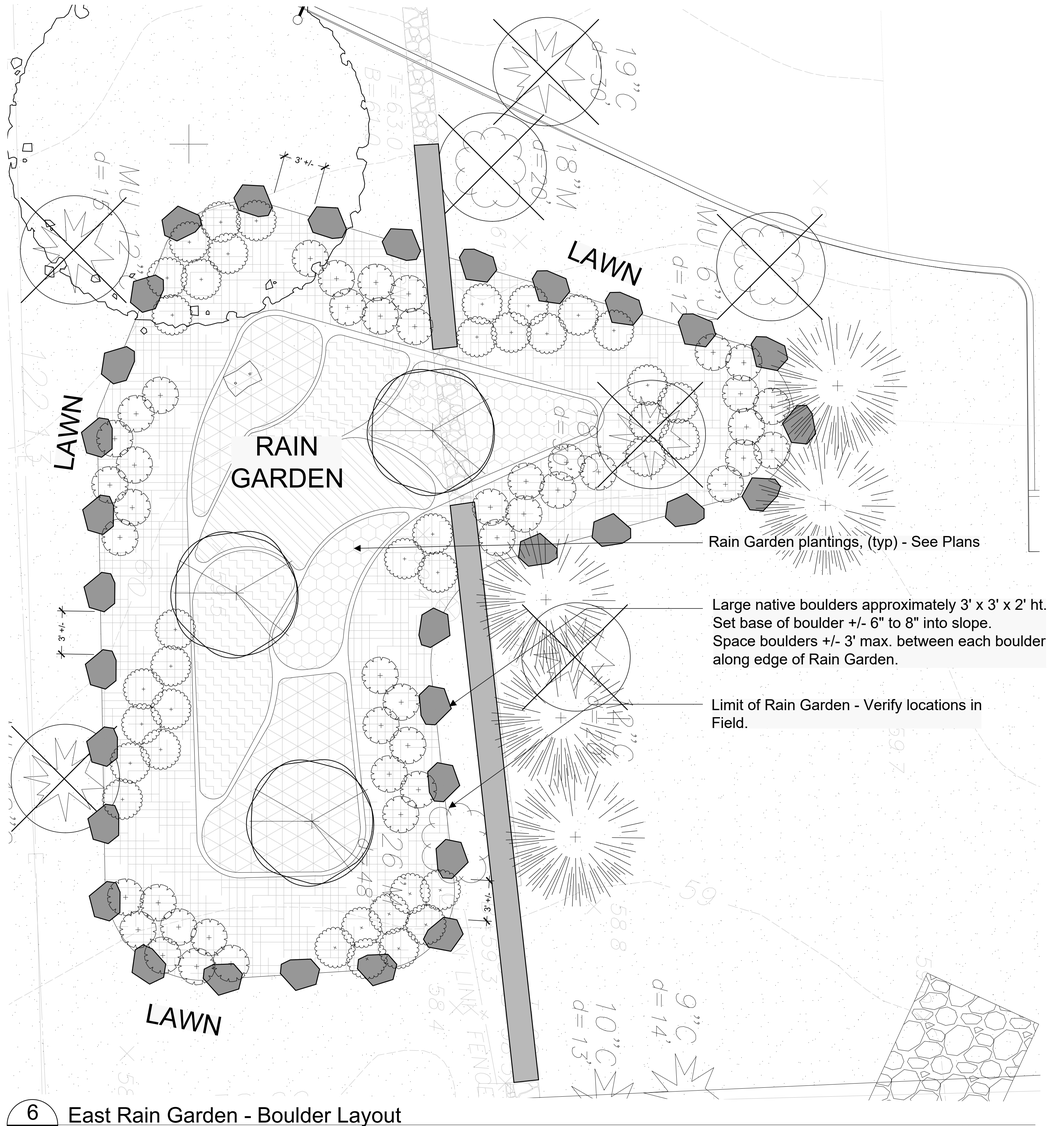


6 L-2.1 East Rain Garden - Boulder Layout

SCALE: 1" = 5'

GREENWICH
CARDINAL STADIUM

PHASE 1

10 HILLSIDE ROAD
GREENWICH, CT 06830

ADD ALTERNATE #1

1. Remaining Driveways, Walkways, ADA parkinglot
2. Storm Water Management Systems, Retention Pond, etc.
3. Additional Fencing and Retaining Walls
4. Curb Cut at Road
5. Site Lighting
6. Utilities to the Area of the Kiosk. Kiosk Area as Just Asphalt.

ADD ALTERNATE #2

1. Kiosk. Building and Addititonal (nicer) Pavers Around Area of Kiosk.

PHASE 1 NOTE

See Civil Drawings for Grading & Construction Limits of Phase 1A and 1B Site Improvements.

Professional Seal:

| No: | Revision: | Date: |
|---|---|---|
| 1 | Issue for Permit | 8/12/2020 |
| 2 | Zoning Permit Sign-Off | 10/8/2020 |
| 3 | Phase 1B Site Plan Application | 10/30/2020 |
| 4 | Construction Documents | 11/10/2020 |

0 1/2 1 2

WESLEY STOUT ASSOCIATES
96 Main Street, New Canaan, CT 06840
203 966-3100 FAX 203 966-3131
www.wesleystout.com

PHASE 1: SITE DETAILS

Date: 08/12/2020
Scale: As noted
Sheet:

L-2.1

General Notes:

1 The purpose of these drawings is to show the structural work associated with the Greenwich High School Stadium (Phase 1) project, in Greenwich, Connecticut.
2 The work shown on these drawings has been designed in accordance with the structural requirements of the 2018 Connecticut State Building Code which is the 2015 International Building Code as amended, altered or deleted by the provisions of the 2018 Connecticut amendments.
3 The structural components have been designed for the following loads:

A. Uniform live load:

| | |
|---|---|
| Assembly areas | |
| Other assembly areas | 100 psf |
| Recreational uses | |
| Reviewing stands, grandstands and bleachers | 100 psf |
| Stairs and exits | |
| All other | 100 psf |

Live load has been reduced on girders, columns and footings in accordance with the building code

B. Roof loads:

| | |
|---|---|
| Snow: | |
| Ground snow load, $p_g$ | 30 psf |
| Flat roof snow load, $p_f$ | 20 psf* |
| Exposure factor, $C_e$ | 1.0 |
| Importance factor, $I_s$ | 1.1 |
| Thermal factor, $C_t$ | 1.0 |
| Drift surcharge load, $p_d$ | See plan |
| Width of snow drift, W | See plan |
| Rain loads: in accordance with Section 1611 | |
| Roof live load: | 20 psf min |

*Note: the flat roof snow load shall be no less than 30 psf.

C. Wind design data:

Wind loads have been determined based on
Section 1609.1.1 in accordance with ASCE 7-10, Chapters 26, 27, 29 and 30, Directional Procedure

| | |
|---|---|
| Risk category | III |
| Basic wind speed (3-second gust): | |
| Ultimate design wind speed, Vult | 130 mph |
| Nominal design wind speed, Vasd | 101 mph |
| Exposure | C |
| Internal pressure coefficient | 0.18 |
| "a" dimension for use with components and cladding | 3.0 ft |

Design wind pressure (Nominal design wind pressures) for components and cladding on building walls (use Zone 4 generally; use Zone 5 within "a" of building wall corners):

Surface pressure (psf)

| Area | 10 sq.ft | 20 sq. ft | 50 sq. ft | 100 sq. ft |
|---|---|---|---|---|
| Negative Zone 4 | -21.9 | -21.0 | -19.8 | -18.9 |
| Negative Zone 5 | -27.0 | -25.2 | -22.8 | -21.0 |
| Positive Zones 4 & 5 | 20.2 | 19.3 | 18.1 | 17.3 |

Design wind pressure (Nominal design wind pressures) for components and cladding on building roofs (for locations of zones 1, 2 and 3, refer to building code):

Surface pressure (psf)

| Area | 10 sq.ft | 20 sq. ft | 50 sq. ft | 100 sq. ft |
|---|---|---|---|---|
| Negative Zone 1 | -24.0 | -24.0 | -24.0 | -24.0 |
| Negative Zone 2 | -27.7 | -27.2 | -26.4 | -25.8 |
| Negative Zone 3 | -37.1 | -33.7 | -29.2 | -25.8 |
| Positive all zones | 10.0 | 10.0 | 10.0 | 10.0 |
| Negative Zone 2' | -33.3 | -32.8 | -32.0 | -31.5 |
| Negative Zone 3' | -52.1 | -46.4 | -39.0 | -33.3 |

Earthquake design data:

| | |
|---|---|
| Risk category | III |
| Seismic importance factor, $I_e$: | 1.25 |
| Mapped short period spectral response accelerations, $S_s$: | 0.256g |
| Mapped 1 second period spectral response accelerations, $S_1$: | 0.070g |
| Site class: | D |
| Design short period spectral response accelerations, $S_{DS}$: | 0.275g |
| Design 1 second period spectral response accelerations, $S_{D1}$: | 0.112g |
| Seismic design category: | B |
| Seismic force resisting system: intermediate reinforced masonry shear walls | |
| Design base shear: | 30 KIPS |
| Seismic response coefficient, $C_s$: | 0.098 |
| Response modification factor, R: | 3.50 |
| Deflection amplification factor, $C_d$: | 2.25 |
| Analysis procedure: Equivalent Lateral Force | |

Other loads:

| | |
|---|---|
| Concentrated loads: | |
| All floors except as noted (on 2-1/2 feet square) | 0 lbs |
| Stair treads and catwalks (on 4 inches square) | 300 lb |
| Elevator machine room grating (on 4 inches square) | 300 lbs |
| Roof surfaces subject to maintenance workers | 300 lbs |
| All other roof members | 300 lbs] |
| Impact loads | |
| Loads increased as follows: | |
| Elevator machinery | 100% |
| Hangers for floors or balconies | 33% |
| Vehicle and wheel loads | 30% |

4 This structure has been designed to be self-supporting and stable after the work shown on these drawings has been completed. The stability of the structure prior to completion is solely the responsibility of the contractor. This responsibility extends to all related aspects of the construction activity including, but not limited to, erection methods, erection sequence, temporary bracing, forms, shoring, use of equipment, and similar construction procedures. Review of the construction by the engineer is for conformance with design aspects only, not to review the contractor's construction procedures. Lack of comment on the part of the engineer with regard to construction procedures is not to be interpreted as approval of those procedures.
5 This structure utilizes masonry shear walls to provide lateral stability. Therefore, temporary bracing, guys, etc., must be maintained until all masonry shear walls have been erected and attached to the steel framing and bracing has been erected.
6 Jobsite safety and construction procedures are solely the responsibility of the contractor. Review of the construction by the engineer is for conformance with design aspects only, not to review the contractor's provisions for job site safety. Lack of comment by the engineer is not to be interpreted as approval of those aspects of work.
7 PDF digital files of all erection and detail shop drawings for steel reinforcing bars (concrete and concrete -masonry construction), structural steel, steel joists, and steel deck, indicating the fabricator, manufacturer, finish, layout, and all accessories, must be submitted to and be checked by the contractor and subcontractor and bear the checker's initials before submission to the architect for review prior to fabrication. Fabrication and/or delivery to the site of components prior to receiving approved shop drawings shall be at the fabricator's own risk.
8 Testing and inspection of concrete, steel reinforcing bars (concrete and concrete masonry construction), concrete masonry, structural steel, steel joists, steel deck, wood framing, wood sheathing, and other work are described in the project "Statement of Special Inspections". The contractor shall review the "Statement of Special Inspections" and coordinate the scheduling of inspections with the special inspector. Uninspected work that required inspections may be rejected solely on that basis.
9 If faulty construction procedures, or material, result in defective work that requires additional engineering time to devise corrective measures, professional fees may be charged to the contractor at the standard hourly rate of additional services. Such fees may be withheld from the general contractor's payment.
10 Loads, openings and structure in any way related to requirements of other (non-structural) disciplines are shown for bidding purposes only. However, these plans do not show the full scope of openings, in roofs, floors and walls. For size and location of all openings, see architectural and mechanical drawings. Do not scale openings. The contractor shall obtain from the heating and ventilating, electrical, plumbing and other trades the final approved size and location of all openings, equipment and work to be provided for their trade for roofs, floors and walls, whether shown or not shown on structural drawings. Excess cost related to variation in requirements or equipment are not to be borne by the owner.
11 For any mechanical equipment weights used in design of supporting elements that are indicated on the drawings. Contractor shall notify the architect prior to installation of equipment if actual weight exceeds weight shown on drawings.
12 The contractor shall verify all dimensions, elevations and angles with architectural drawings and existing conditions before proceeding with any work.
13 The contractor shall field verify existing conditions before proceeding with any work. The contractor shall field verify all dimensions noted "±" that are indicated on the drawings.
14 The contractor and subcontractors shall obtain the latest copies of approved plans and surveys and they shall familiarize themselves thoroughly with these plans before commencing any work.
15 These drawings are supplemented by a detailed technical specification. The notes shown under certain categories of work are intended to summarize basic requirements.
16 Work shown as "Typical Details" apply throughout the project as required. Work shown as "Sections" shall be considered to apply for the same and similar conditions in the building.
17 Some details of the work are shown on the architectural drawings. A careful review and study of these details are necessary before the full scope of the work can be comprehended.
18 Do not scale drawings.

Codes and Standards References

1 Concrete:
Concrete work shall conform to all the requirements of:
ACI 301-10, "Specifications for Structural Concrete in Buildings" and
ACI 318-14, "Building Code Requirements for Structural Concrete".
2 Concrete masonry:
Concrete masonry work shall conform to the requirements of "Building Code Requirements for Masonry Structures (ACI 530-13/ ASCE 5-13/ TMS 402-13)" and "Specifications for Masonry Structures (ACI 530.1-13/ ASCE 6-13/ TMS 602-13)".
3 Structural steel:
Design, fabrication and erection of structural steel shall conform to the "Specification for Structural Steel for Buildings" as adopted on June 22, 2010, by the American Institute of Steel Construction (AISC) and the 14th Edition of the AISC Steel Construction Manual.
4 Wood:
Wood construction shall conform to the ANSI/AWC NDS-2015, "National Design Specification for Wood Construction" with the 2015 supplement.

Foundation notes:

1 Recommendations for the site preparation and earthwork within the perimeter of the proposed new structure, preparation of soil bearing surfaces, material specification and placement of structural backfill for support of foundations and slabs-on-grade, and drainage are stated in the geotechnical engineering report prepared for this project by Skylands Engineering, LLC, and dated March 25, 2020. The geotechnical report is a reference document, not a contract document, and the design team is not responsible or liable for the accuracy of the information contained in the report.
2 The foundations have been designed to rest on inorganic, undisturbed soil or compacted granular fill having a bearing value of 4000 psf as recommended in the geotechnical engineering report referenced above. Such bearing strata are anticipated at the bottom of footing elevations noted on the foundation plan. All bearing strata shall be reviewed by the geotechnical engineer prior to placing concrete in order to verify the bearing value.
3 The slab-on-grade sub-base shall be a crusher run stone free from soft disintegrated pieces, mud, dirt, or other injurious material. The material shall have no stone greater than 2 inches in any one dimension and with less than 10 percent by weight passing a No. 100 sieve.
4 The bottom of exterior footings not on solid rock shall be at least 3 - 6" below frost line.
5 All soil surrounding and under footings shall be protected from freezing and frost action during the course of construction.
6 Step footings where elevations change at a maximum slope of one vertical on two horizontal and place lower footings first.
7 Foundation walls shall be backfilled by placing fill on both sides simultaneously and to the same level.
8 Keep foundation excavations free of water at all times.
9 Use lean concrete (f'c=1500 psi) or controlled compacted fill for over-excavation of footings.
10 Existing utilities: locate existing underground utilities in areas of excavation work. Provide adequate means of support and protection during earthwork operations.
11 Where footings are in close proximity of sub-surface piping, bottom of footings shall be at least 8" below elevation of piping, unless otherwise shown on the drawings.
12 Filter fabrics/geotextile fabrics: where indicated on the drawings, provide a filtration type geotextile between crushed stone and the surrounding soil. Fabric shall be TenCate Mirafi 140N or Propex Geotex 401.
13 Submittals to the engineer are required for structural fill, and slab sub-base.

Concrete Notes:

1 All concrete work shall conform to all the requirements of ACI 301, "Specifications for Structural Concrete in Buildings" and ACI 318 "Building Code Requirements for Structural Concrete", as specified in the code reference section of these general notes.
2 Concrete shall be the specified weight and develop a minimum strength in 28 days as follows:
<For non-residential structures>

| Location | Minimum Weight | Strength | Maximum Water/Cementitious Ratio (or slump where indicated) |
|---|---|---|---|
| Footings | Normal | 3,000 psi | Slump: 4" +/- 1" |
| Walls and piers: | | | |
| Interior | Normal | 3,000 psi | 0.50 |
| Exterior wall with no exposed faces | Normal | 3,000 psi | 0.48 |
| Exterior walls with exposed faces | Normal | 5,000 psi | 0.40 |
| Slabs-on-grade -interior | Normal | 4,000 psi | 0.45 |
| Slabs-on-metal-deck | Normal | 3,500 psi | Slump: 4" +/- 1" |

3 All detailing fabrication, and erection of reinforcing bars, unless otherwise noted, must follow the latest ACI code and the latest ACI "Manual of Standard Practice for Detailing Reinforced Concrete Structures".
4 Concrete design mix will be submitted to the engineer for review, together with laboratory reports attesting that the mixes can attain the minimum strength required in accordance with ACI 301 indicated above.
5 Portland cement shall be Type I or Type II and conform to ASTM C 150.
6 Other cementitious material such as flyash or ground granulated blast- furnace slag may be blended with cement for use in the concrete mix. Flyash shall conform to ASTM C 618 and may be used if the following ranges for the 2 classes of flyash; Class C, 20 to 35%; Class F, 15 to 25%. Ground granulated blast- furnace slag shall conform to ASTM C 989 and may not exceed 50% of total weight of cementitious materials.
7 For normal weight concrete: coarse aggregate shall be 3/4" and conform to ASTM C 33. Fine aggregate shall be manufactured or natural sand from the same source for the entire project and shall conform to ASTM C 33.
8 No admixtures are permitted without the engineer's written permission other than entrained air. Concrete exposed to the weather, such as that used in foundation walls, shall contain 5% +/- 1 1/2% entrained air. Concrete exposed to the weather and exposed to de-icing compounds shall contain 6% +/- 1 1/2% entrained air. Do not use air entrainment admixture for interior normal weight concrete slabs.
9 Limit water-soluble, chloride-ion content in hardened concrete to 0.30 percent by weight of cement.
10 Reinforcing steel shall conform to ASTM A 615, Grade 60.
11 Welded wire fabric shall conform to ASTM A 1064 with a minimum yield strength of 65 ksi. Lap one mesh size at sides and ends, and wire together.
12 Vapor retarder shall be Stego Wrap (15 mil) vapor retarder by Stego Industries LLC and shall have a water vapor permeance after conditioning (ASTM E 1745, Paragraphs 7.1.2 – 7.1.5) that is less than 0.01 perms and meets the requirements of Class A. Place as per ASTM E 1643 and manufacturer's written instructions.
13 The following concrete cover shall be provided for reinforcement:

| Location | Cover (inches) |
|---|---|
| Concrete cast against and Permanently exposed to earth | 3 |
| Concrete exposed to earth or weather: | |
| #6 through #18 bars | 2 |
| #5 bar and smaller | 1 1/2 |
| Concrete not exposed to weather or in contact with ground: | |
| Slabs, walls, joists: | |
| #14 and #18 bars | 1 1/2 |
| #11 bar and smaller | 3/4 |
| Beams, columns | |
| Primary reinforcement, ties, stirrups, spirals | 1 1/2 |

14 The conveyance, placement and protection of the concrete shall conform to the requirements of ACI 318, indicated above, and ACI 304R, "Guide for Measuring, Mixing, Transporting and Placing Concrete". Mechanical vibrators are to be used to consolidate the freshly cast concrete around the reinforcing and against form surfaces and to prevent the formation of air or stone pockets, honeycombing, pitting or planes of weakness. However, care must be used to avoid over vibration that can lead to aggregate segregation.
15 No welding of reinforcing will be permitted.
16 All lap splices shall be Class B, in accordance with ACI 318 indicated above.
17 Concrete piers. Place concrete piers and walls together. Set pier reinforcing and wait well reinforcing through pier vertical bars. Provide dowels with standard hook from footing at all piers. Size and quantity of dowels to match vertical pier reinforcing (Class "B" splice).
18 The contractor shall be responsible for limiting pours to minimize shrinkage cracking. In general, walls shall not be poured in continuous lengths exceeding 30 feet without providing construction joints or control joints. The location and configuration of joints exposed to view shall be coordinated with the architect.
19 Finish elevated floor slabs flat and level within a tolerance of +/- 1/4 inches to the elevation indicated on the drawings. Provide additional concrete required due to formwork and floor framing deflection to achieve this finished top of slab elevation. The anticipated deflection for both beams and girders is 1 1/4". Design of floor framing members includes the additional concrete for this anticipated deflection.
20 The installation of slabs shall conform to the requirements of ACI 302.1R, "Guide to Concrete Floor and Slab Construction". Interior finish slab surfaces are to have a steel trowel finish. Surfaces of slabs forming the substrate for mud jobs are to have a clean textured (scratched) surface. Exterior slab surfaces are to have a broom finish unless specified on the architectural drawings.
21 Expansion and isolation-joints:
Filler strips: ASTM D 1751, asphalt-saturated cellulosic fiber or ASTM D 1752, cork or self-expanding cork
Sealant at top of joint: Sika's Sikaflex 2c SL poly urethane elastomeric sealant. Provide cap to separate sealant from filler.
22 Waterstops: Flexible polyvinyl chloride (PVC) waterstop conforming to Corp of Engineers Specification CRD-C 572, with flat dumbbell and center bulb.
23 The curing and protection of concrete shall conform to the requirements of ACI 318 and ACI 308R, "Guide to Curing Concrete". Concrete slabs shall be protected from loss of surface moisture for not less than 7 days using a curing compound conforming to ASTM C 309 or constantly wetted burlap. Curing compounds shall be compatible with any intended flooring overlay. Do not install finish flooring until slab has adequately dried per the flooring manufacturer's specifications.
24 Concrete sidewalks shall be treated with a clear water repellant penetrating sealer such as MasterProtect H 400 (formerly Hydrozo Enviroseal 40) after the concrete has been allowed to cure for a minimum of 28 days but before the first winter season and/or the application of de-icing chemicals, whichever comes first.
25 Cold weather concrete placement: If cold weather concreting conditions exist as defined by a period of more than three days when the average outdoor temperature, (high + low)/2, is less than 40 deg. F, the procedures outlined in ACI 306.1, "Standard Specification for Cold Weather Concreting" and ACI 306R, "Guide to Cold Weather Concreting" shall be utilized.
26 Hot weather concrete placement: Maintain concrete temperature below 90 deg. F. at time of placement and comply with ACI 301 and ACI 305R, "Guide to Hot Weather Concreting".
27 Accurately position, support, and secure reinforcement against displacement. Locate and support reinforcement with bar supports to maintain minimum concrete cover. Do not tack weld crossing reinforcing bars. Provide bar supports as follows:
A. Bolsters, chairs, spacers, and other devices for spacing, supporting, and fastening reinforcing bars and welded wire reinforcement in place. Manufacture bar supports from steel wire, plastic, or precast concrete according to CRSI's "Manual of Standard Practice," of greater compressive strength than concrete.
28 Sizes and locations of all required embedded items, such as anchor bolts, piping sleeves, etc., for all trades shall be coordinated by the general contractor with other trades.
29 Submittals to the engineer are required for concrete mix designs, cement, reinforcing bars, admixtures, and aggregates.

Concrete Masonry Notes:

1 All concrete masonry work shall conform to the requirements of the "Building Code Requirements for Masonry Structures (ACI 530/ ASCE 5/ TMS 402)" and the "Specifications for Masonry Structures (ACI 530. 1/ASCE 6/ TMS 602, as specified in the code reference section of these general notes.
2 The compressive masonry strength, f'm, shall be 1900 psi minimum. System components have been selected based on the unit strength method.
3 Concrete block shall be lightweight hollow load bearing masonry units conforming to ASTM C 90, with a minimum ultimate compressive strength of 1,900 psi on the net area of the units. Units shall be protected from moisture absorption.
4 Portland cement used in the mortar and grout shall conform to ASTM C 150. Masonry cement or mortar cement shall not be used.
5 Mortar shall be Type S conforming to the volumetric proportions set forth in ASTM C 270. Use 1 part Portland cement, 0.25 to 0.5 parts hydrated lime or lime putty, and aggregate proportioned to 2.25 to 3 times the sum of the separate volumes of cementitious materials (i.e. Portland cement plus lime). Provide aggregate in loose, damp condition. Add water to produce a workable mix.
6 Coarse grout used in pilasters and walls shall conform to the volumetric proportions set forth in ASTM C 476. Use one part Portland cement, 2.25 to 3 parts damp, loose sand, 1 to 2 parts 3/8" pea gravel. Add water to produce a flowable mix with an 8 to 11 inch slump.
Alternatively, fine grout may be used that conforms to the volumetric proportions set forth in ASTM C 476 using one part Portland cement, 2.25 to 3 parts damp loose sand and adding water to produce a flowable mix with an 8 to 11 inch slump.
7 Steel reinforcing bars shall conform to ASTM A 615, Grade 60. Reinforcing bars to be lapped 48 bar diameters at splices. Reinforcement to be secured against displacement and spacing not exceeding 200 bar diameters.
8 Joint (horizontal) reinforcement shall be hot-dipped galvanized W1.7 (9 gage) steel wire, ASTM A 951 with ASTM A 153 Class B-2 coating. Ladder type, by Hohmann & Barnard, Inc., or an approved equal. Place joint reinforcing in every second course (16"o.c.). Joint reinforcement shall be lapped 6 inches at splices.
9 Place units while mortar is soft and plastic. Remove and relay in fresh mortar any unit disturbed to the extent that initial bond is broken after initial positioning.
10 Fully bed units in all shearwalls including cross webs.
11 All cells with reinforcing bars or bolts shall be grouted solid.
12 Vertical cells to be grouted solid shall have a minimum clear opening of 3"x2-1/2". The entire perimeter of the cell shall be fully bedded with mortar.
13 Consolidate grout pours exceeding 12 inches in height by mechanical vibration and reconsolidate by mechanical vibration after initial water absorption and settlement has occurred. Grout pours exceeding 5.33 feet are high lift pours and shall require cleanouts. High lift grouting shall not be used unless high lift grout procedures are submitted to the engineer for review and approved by the engineer.
14 Cover the tops of all masonry construction to protect against precipitation.
15 Masonry shall not be constructed in temperatures below 40 F. Provide a heat source and protection as required to maintain temperature above 40 F in accordance with ACI 530.1.
16 Hot weather construction techniques shall be in accordance with ACI 530.1 and shall be implemented when the ambient air temperature exceeds 100 F, or 90 F if the wind speed exceeds 8 mph.
17 Unless otherwise shown on architectural or structural drawings provide vertical control joints through concrete masonry unit walls for full wall height as follows:
A Distance between joints should not exceed the lesser of length to height ratio of 1.5, or 25 feet
B At changes in wall height
C At changes in wall thickness – including pipe and duct chases and pilasters
D At all structural expansion joints in foundations and footings
E At and below expansion joints in roofs and floors that bear on the wall
F For openings, do not locate control joints within 32 inches of openings
G Adjacent to corners of walls or at wall intersections within a distance equal to half the control joint spacing.
18 Submittals to the engineer are required for certificates of compliance for block grade and strength, grout, mortar, and reinforcing bars prior to delivery to the site.

Connections to Existing Masonry or Hardened Concrete:

1 All proprietary anchoring systems (expansion, adhesive anchoring systems, etc.) to be installed into hardened concrete and masonry elements are to be installed in strict accordance with the manufacturer's instructions for drilling and preparation of holes, for spacing and edge distance requirements, and for the utilization of supplemental components for the anchoring systems such as screen tubes, doweling adhesives, etc.
2 Connections to hardened concrete shall be made with anchors conforming to ACI 318, as specified in the code reference section of these general notes, for cracked concrete, and Chapter 19 of the state building code indicated at the beginning of these general notes.
A. Mechanical anchors shall be either:
i. Hilti "Kwik Bolt TZ" expansion anchor.
ii. Hilti "Kwik HUS-EZ" screw anchor (use only in permanently dry, interior non-corrosive environments)
iii. Simpson "Strong-Bolt 2" expansion anchor
iv. Simpson "Titen HD" screw anchor, zinc-plated or galvanized (use only in permanently dry, interior non-corrosive environments)
v. Dewalt "Power-Stud + SD2" expansion anchor.
vi. Dewalt "Power-Stud+ SD4/SD6", Type 304/316 SS expansion anchor
vii. Dewalt "Screw-Bolt+" screw anchor, zinc-plated or galvanized (use only in permanently dry, interior non-corrosive environments)

Size, embedment, spacing and edge distance of anchors shall be as indicated on the drawings.
B. Adhesive anchor rods or reinforcing bars shall be installed in rotary hammered drilled holes with carbide drill bits using one of the following adhesive anchoring systems:
i. Hilti "HIT-HY 200 adhesive anchoring system with Hilti "HAS" ASTM F 1554, Grade 36 anchor rods.
ii. Simpson "AT-XP" adhesive anchoring system for base material temperatures between 14 degrees and 80 degrees or Simpson "Set-3G" adhesive anchoring system for temperatures above 40 degrees, with Simpson "RFB" ASTM F 1554 Grade 36 anchor rods.
iii. Dewalt "AC200+" two part adhesive, cold temperature cure with ASTM F 1554 Grade 36 anchor rods.
iv. Reinforcing bars shall conform to the requirements of the Concrete General Notes.

Adhesive for reinforcing bars and anchors shall have been tested in accordance with ACI 355.4 "Qualification of Post-Installed Adhesive Anchors in Concrete" and ICC-ES (ICC Evaluation Service) "Acceptance Criteria for Post-Installed Adhesive Anchors in Concrete Elements" (AC308) for cracked concrete and seismic applications.

Adhesive bond design strength is based upon concrete that has cured at least 21 days with a minimum compressive strength of 2,500 psi and an in-service temperature in accordance with ACI 355.4 Temperature Category B.

Installation method shall be in accordance with the Manufacturer's Printed Installation Instructions (MPII
Installation of adhesive anchors horizontally or upwardly inclined to support sustained tension loads shall be performed by personnel certified by the ACI/CRSI Adhesive Anchor Installer Certification program or equal.

Unless otherwise noted on the drawings, embed anchor rods and reinforcing bars into drilled holes a minimum of 9 anchor diameters, with a minimum edge distance of 4 inches, measured from the edge of the concrete to the centerline of the anchor/reinforcing bar. Increased embedment depths or edge distances may be required at certain locations, see plans and details.
3 Connections to grout filled concrete masonry shall be made with either 1) Hilti standard "HAS-E" ISO 898 Class 5.8 anchor rods (minimum yield strength = 58 ksi and minimum ultimate strength = 72.5 ksi) using Hilti "HIT HY270" masonry adhesive anchoring systems or 2) Simpson "RFB" ASTM F 1554 Grade 36 anchor rods using Dewalt AC100+ Gold masonry adhesive anchoring system or 3) ASTM F1554 Grade 36 or ASTM A 193 Grade B7 high strength anchor rods using Dewalt AC100+ Gold masonry adhesive anchoring system with composite screen tubes.
A. Unless otherwise noted on the drawings, embed anchor rods into drilled holes a minimum of 9 anchor diameters, with a minimum edge distance of 4 measured from the edge of the masonry to the centerline of the anchor. Increased embedment depths or edge distances may be required at certain locations, see plans and details.
4 Connections to hollow concrete or clay brick masonry shall be made with either 1) Hilti standard "HAS-E" ISO 898 Class 5.8 anchor rods (minimum yield strength = 58 ksi and minimum ultimate strength = 72.5 ksi) using Hilti "HIT HY270" masonry adhesive anchoring system with "HIT-SC" composite screen tubes or 2) Simpson "RFB" ASTM F 1554 Grade 36 anchor rods using Simpson "SET-XP" masonry adhesive anchoring system with Simpson "Opti-mesh" plastic screen tubes or 3) ASTM F1554 Grade 36 or ASTM A 193 Grade B7 high strength anchor rods using Dewalt AC100+ Gold masonry adhesive anchoring system with composite screen tubes.
A. For anchors in hollow concrete masonry, embed anchor rods into drilled holes a minimum of 2 inches, with a minimum edge distance of 4 inches, unless otherwise noted, measured from the edge of the masonry to the centerline of the anchor. Increased embedment depths or edge distances may be required at certain locations, see plans and details.
B. For anchors in hollow clay brick masonry, embed anchor rods into drilled holes a minimum of 3 1/2 inches, with a minimum edge distance of 4 inches, unless otherwise noted, measured from the edge of the masonry to the centerline of the anchor. Increased embedment depths or edge distances may be required at certain locations, see plans and details.

Structural Steel Notes:

1 Design fabrication and erection of structural steel shall conform to the American Institute of Steel Construction's "Specification for Structural Steel for Buildings", as specified in the code reference section of these general notes.
2 Materials:

| | |
|---|---|
| Wide flange shapes: | ASTM A 992 Grade 50 |
| American standard shapes, angles, Plates and bars: | ASTM A 36 |
| Structural steel tubing, | |
| Round: | ASTM A500, Grade C (Fy=46 ksi) |
| Bolts | ASTM F3125, Grade A 325 |
| Anchor rods | ASTM F 1554, Grade 36 |
| Welding electrode | ASTM E 70xx, low hydrogen |

3 All welding shall conform to American Welding Society's AWS D1.1 "Structural Welding Code-Steel" code for arc and gas welding and be performed by a certified welder in accordance with A.W.S. standards.
4 High strength bolts: install high-strength bolts according to Research Council on Structural Connections' (RCSC's) "Specification for Structural Joints Using High-Strength Bolts" for type of bolt and type of joint specified.
Joint type: Snug tightened unless otherwise noted.
5 Beam shear reactions are indicated on the plans, refer to the typical beam legend for reaction designations. Beams with reactions not shown, shall be designed for a 12 kip reaction (service loads for allowable stress design).
6 The fabricator is responsible for designing shear connections for the reactions shown on these plans and submitting these design calculations, signed and sealed by a qualified professional engineer registered in the state of jurisdiction who is responsible for their preparation, for review by the structural engineer of record through the architect. The reactions shown are "service" loads for "Allowable Stress Design" (ASD). Connections may be designed for these values using the conventional "Allowable Stress Design" method, as specified in the AISC Steel Construction Manual indicated in the code reference section of these general notes.
7 Where slotted hole connections are shown, nuts shall be fastened snug tight, then untightened by one-half turn. Peen threads to prevent further loosening of the nut.
8 All bolted connections that will be exposed to view shall have bolts for the full depth of the connected member, whether required to support the reactions shown or not.
9 Grout shall be non-metallic, shrinkage-resistant grout conforming to ASTM C 1107, Grade B or C, factory-packaged, non-metallic aggregate grout, non-corrosive, non-staining, mixed with water to consistency suitable for application and a 30-minute working time.
10 Structural steel shall be cleaned in accordance with the Steel Structures Painting Council Specification SP 3 for Power Tool Cleaning (except for steel exposed to weather) and painted to a minimum dry film thickness of 2 mils with a shop coat of Tremec #10-99 alkyd rust inhibitive primer as manufactured by Tremec Company, Inc. of Kansas City, MO, or an approved equal, and painted with the specified primer.
11 All steel members and bolting exposed to weather shall be cleaned in accordance with the Steel Structures Painting Council Specification SP 6 for Commercial Blast Cleaned and hot-dipped galvanized in accordance with ASTM A 123 and ASTM A 153. Minimum acceptable zinc coating weight shall be 2 oz./sq. Ft. See architectural specifications for finished paint if required. Clean areas where galvanizing is damaged or missing and repair galvanizing to comply with ASTM A 780.
12 Provide bitumastic protection coating for all structural steel below grade.
13 Continuous members, where indicated on the drawings, shall require either 1) the member to be furnished as one piece, or 2) if individual pieces are to be provided, then they shall be connected by either welding or bolting to develop the full strength of the continuous member.
14 Split cantilevers for steel beams shall be designed for the full moment capacity of the beam unless otherwise noted.
15 For miscellaneous steel, see architectural drawings.
16 Submittals to the engineer are required for certificates of compliance for structural steel, bolts, nuts, washers, and weld filler material prior to the fabrication of any steel
17 At the completion of fabrication, the fabricator shall submit a certificate of compliance stating that the work was performed in accordance with the approved contract documents, as required by Section 1704.2 of the building code indicated at the beginning of these General Notes.

Steel Joist Notes:

1 Open web steel joists shall be designed, fabricated, and erected in accordance with the current specification of the Steel Joist Institute.
2 Joists shall be supplied with all attachment devices, bridging, and similar accessories required for strict conformance with the Steel Joist Institute's specifications. Joist erection shall be in strict conformance with the Occupational Safety and Health Administration (OSHA) requirements. All of the above information shall be shown on the shop drawings.
3 Joists shall be field welded to their supporting members by a certified welder as defined by the American Welding Society.
4 Extend joists 1 inch past centerline of supporting member where possible. On masonry walls 12 inches or more in thickness, the minimum bearing length shall be 6 inches, unless otherwise noted.
5 Design of joists and joist bridging shall account for a net uplift load (combined wind and dead loads – service loads for allowable stress design of 20 psf within 6'-0" of roof edge and 12 psf for the remainder of the roof.
6 Joists shall be cleaned in accordance with the Steel Structures Painting Council Specification SP 2 or SP 3 and painted as per SSPC Paint No. 15 or manufacturer's standard shop primer complying with the performance requirements in SSPC Paint No. 15.
7 Bridging shall be as shown and not less than called for by the SJI specification, as noted in Note 1.
8 Mechanical, electrical and plumbing systems shall be coordinated with joist bridging by the contractor. Any modifications required to bridging shall be the responsibility of the joist manufacturer.
9 Adjacent joists of the same depth shall have web members in line to permit passage of mechanical ducts.
10 Joist manufacturer shall design special joists, designated "SP", for load and deflection criteria shown on the drawings, joist manufacturer shall coordinate and verify weight, size and location of mechanical equipment and any other attached equipment/appurtenance with the general and mechanical contractors.
11 "K" series joists:
A Weld all joists to supporting steel with 1 1/2" of 3/16" fillet weld each side of bearing, unless otherwise shown.

Steel Deck Notes:

1 Steel deck shall be designed, fabricated, and erected in accordance with the current specification of the Steel Deck Institute.
2 Composite formed steel floor deck to be 2" deep, 20 gage (uncoated steel thickness = 0.0358"), galvanized (G60 coating), United Steel Deck Type Lok-Floor, composite floor deck as manufactured by Canam Steel Corporation, or an approved equal.
3 Formed steel roof deck to be 1-1/2" deep, 20 gage (uncoated steel thickness = 0.0358"), galvanized (G60 coating), wide rib, United Steel Deck "B" Deck profile, as manufactured by Canam Steel Deck, Incorporated or an approved equal.
4 The steel deck shall be supplied in minimum lengths as required to provide a "3-span" condition. End closures, roof sumps, closures at penetrations, and all other accessories necessary for a complete installation are required.
5 Composite formed steel floor deck shall be welded to supporting steel with 5/8" diameter puddle welds at 12" on center. Intermediate side connections shall be made with #10 self-tapping screws at a maximum spacing of 3'-0" on center.

In lieu of puddle welds, powder actuated fasteners having the same capacity as the specified puddle welds, may be used. Fasteners shall be manufactured by Hilti, Inc. or an approved equal. Shop drawings shall be submitted for approval to the engineer indicating fastener data including size vs. steel substrate material, spacings, capacities, including diaphragm shear capacities, method of installation and program for quality assurance of installation.
6 Formed steel roof deck shall be welded to supporting steel with 5/8" diameter puddle welds at all edge ribs plus a sufficient number of interior ribs to limit the spacing between adjacent points of attachment to 6" on center. Intermediate side connections shall be made with No. 10 self-tapping screws at mid-span or 3'-0" on center, whichever is smaller. End laps of sheets shall be a minimum of 2" and shall occur over supports.

In lieu of puddle welds, pneumatically applied fasteners having the same capacity as the specified puddle welds, may be used. Fasteners shall be manufactured by Pneutek, Inc. or an approved equal. Shop drawings shall be submitted for approval to the engineer indicating fastener data including size vs. steel substrate material, spacings, capacities, including diaphragm shear capacities, method of installation and program for quality assurance of installation.
7 Steel deck must be protected before and after erection and all debris cleaned from its surface where concrete will be poured or roofing is to be placed.

Lintel Notes:

1 All lintels shall be steel lintels unless otherwise noted.
2 Unless otherwise noted, for lintels over doors, windows, ducts, and miscellaneous openings in non-bearing 4", 8" and 12" cmu and for brick walls, use for each 4" of masonry:

| Angle size | Max. M.O. | Bearing each end |
|---|---|---|
| 3 1/2" x 3/8" flat plate | 2'-0" | 6" |
| 3 1/2" x 4" x 5/16" (LLV) | 3'-6" | 6" |
| 3 1/2" x 5" x 5/16" (LLV) | 6'-0" | 6" |
| 3 1/2" x 6" x 5/16" (LLV) | 6'-0" | 8" |
| 3 1/2" x 6" x 3/8" (LLV) | 8'-0" | 8" |

3 Openings in non-bearing walls (block or block and brick) where no specific lintels or lintel sizes are indicated shall have 8" bearing at each end and shall have the following sizes:

| Max. M.O. | Wall thickness | Lintel size |
|---|---|---|
| 9'-0" | 8" | W8x24 |
| 9'-0" | 9"-13" | W8x31 + 5/16" plate |
| 12'-0" | 8" | W8x28 |
| 12'-0" | 9"-13" | W8x35 + 5/16" plate |

Plates indicated in above lintels shall have a width 1" less than the wall thickness.
4 For 6" partitions use WT 7x13 for spans up to 7'-0" with 6" bearing each end.
5 For 10" partitions use WT 7x21.5 for spans up to 7'-0" with 8" bearing each end
6 Fill the first two courses directly under bearing with grout for 16" length.
7 See architectural and mechanical drawings for size and location of openings.
8 When openings occur in bearing walls or the height of masonry above the lintel is less than the opening width or when a control joint is located directly above or within 16" of the jamb opening and drawings do not otherwise indicate a specific lintel design, consult with the architect to confirm lintel requirements.
9 Lintels over adjacent openings with piers between less than 2'-8" wide shall be continuous over piers. Masonry units of such piers shall be filled with grout for full story height.
10 Connect lintel to structural steel columns when there is less than 16" of masonry between the masonry opening and the outermost face of column.
11 See architectural drawings for any precast concrete lintels that are required.
12 Lintels supporting exterior masonry shall be hot-dipped galvanized. See structural steel notes.
13 Lintels for openings in walls: These plans do not show the full scope of steel lintels required for new wall openings for doors, windows, ducts, louvers, etc. For masonry wall openings, see architectural and mechanical drawings. Do not scale openings. For steel lintel size for corresponding masonry opening size, see notes, above, unless otherwise noted on plans.
14 Shop drawing submittals for precast concrete lintels shall be designed and certified by a professional engineer licensed in the jurisdiction of the project. The lintels shall be designed to carry the code required gravity and lateral loads.

Wood Fasteners Notes:

1 Wood components are to be fastened together as indicated in the following schedule unless specifically indicated otherwise on the plans.
Nailing schedule

| Connection location | Nail size/type | Quantity or spacing and |
|---|---|---|
| Floor construction | | |
| Built up girder/beam | 10d common for 1.50" plies | 2 horiz. rows (top & bot) |
| (3 plies or less): | 16d common for 1.75" plies | 12" o.c. direct |
|

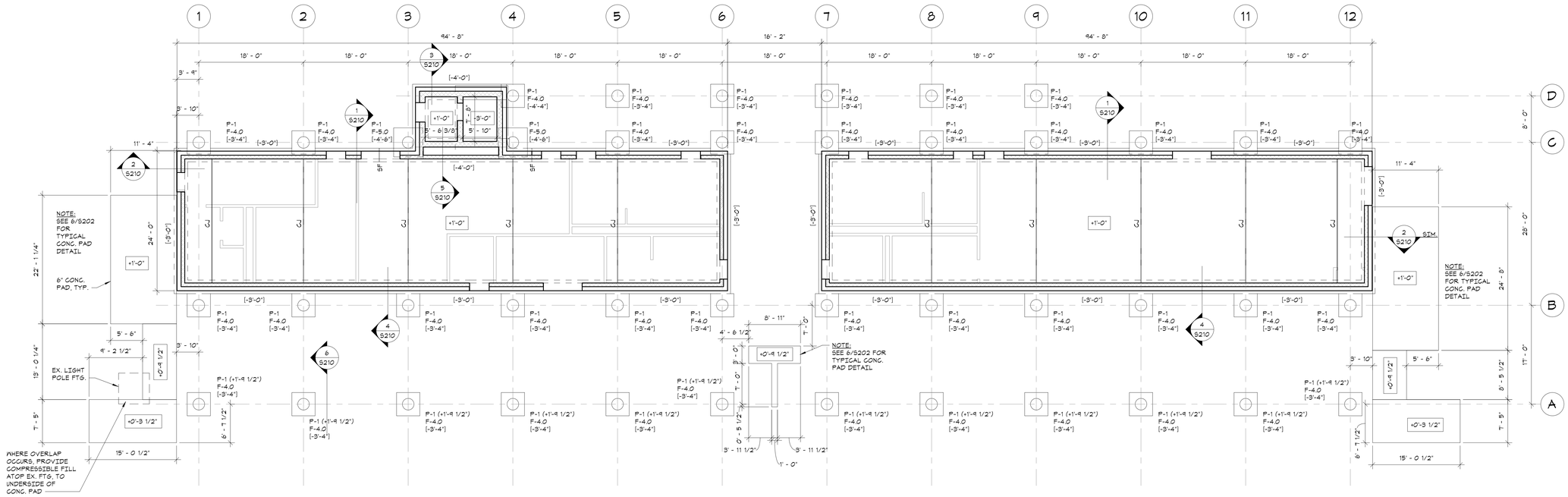


## FOUNDATION AND FIRST FLOOR SLAB-ON-GRADE PLAN

1/8"=1'-0"

NORTH:

- TOP OF GRADE ELEVATION = 58'-6" = DATUM ELEVATION 0'-0".
- FLOOR CONSTRUCTION: 5" CONCRETE SLAB ON GRADE, REINFORCED WITH 6x6 - W1.4xW1.4 WELDED WIRE FABRIC, UNLESS OTHERWISE NOTED. FOR DETAILS, SEE "TYPICAL SLAB ON GRADE DETAILS".
- FOR FOUNDATION CONDITION AT EXTERIOR DOORS, SEE "TYPICAL DETAIL AT EXTERIOR DOORS".
- COORDINATE ALL PITS, TRENCHES, POCKETS, BRICK SHELVES, SLEEVES, PENETRATIONS AND INSERTS IN CONCRETE WALLS AND SLABS WITH ARCHITECTURAL AND MECHANICAL DRAWINGS.
- FOR MASONRY SHEAR WALL FOUNDATION INFORMATION, INCLUDING DOWELS BETWEEN FOUNDATIONS AND MASONRY WALLS, SEE "TYPICAL CONCRETE MASONRY WALL REINFORCEMENT DETAIL". PROVIDE DOWELS BETWEEN FOUNDATIONS AND MASONRY WALLS EQUAL TO SIZE AND SPACING OF MASONRY WALL VERTICAL REINFORCEMENT.
- CONTRACTOR SHALL FIELD VERIFY EXISTING CONDITIONS BEFORE PROCEEDING WITH ANY WORK.
- SEE GENERAL NOTES, FOR ADDITIONAL INFORMATION.

LEGEND:

- [+/- ....] INDICATES BOTTOM OF FOOTING ELEVATION FROM DATUM ELEVATION.
- (+/-...) INDICATES TOP OF PIER ELEVATION FROM DATUM ELEVATION.
- |+/-....| INDICATES TOP OF CONCRETE SLAB ELEVATION FROM DATUM ELEVATION. MAINTAIN FULL SLAB THICKNESS AT SLOPED AND DEPRESSED AREAS. SEE ARCHITECTURAL DRAWINGS FOR LOCATION AND EXTENT.
- "SF" INDICATES APPROXIMATE LOCATION OF STEPS IN FOOTINGS ON PLAN. COORDINATE LOCATION AND ELEVATION WITH SITE GRADING AND MECHANICAL, ELECTRICAL AND PLUMBING DRAWINGS. FOR DETAILS, SEE "TYPICAL STEPPED FOOTING DETAIL".
- "CJ" INDICATES APPROXIMATE LOCATION OF CONTROL/CONSTRUCTION JOINTS IN SLABS ON GRADE. FOR DETAILS, SEE "TYPICAL SLAB ON GRADE DETAILS".
- F-## INDICATES FOOTING TYPE. SEE "FOOTING SCHEDULE AND FOOTING DETAIL".
- P-# INDICATES PIER TYPE. SEE "PIER SCHEDULE AND PIER DETAILS". TOP OF PIER TO BE AT ELEVATION +1'-0" FROM DATUM, UNLESS OTHERWISE NOTED.

# GREENWICH HS CARDINAL STADIUM PHASE 1

GREENWICH PUBLIC SCHOOLS
10 HILLSIDE ROAD
GREENWICH CT 06830

KG+D listen imagine build
KG+D . ARCHITECTS PC
285 MAIN STREET MOUNT KISCO . NEW YORK . 10549
P:914.666.5900 KGDARCHITECTS.COM

The DiSalvo Engineering Group
Structural Engineers
83 Wooster Heights Road | Suite 200
Lee Farm Corporate Park | Danbury, CT 06810
(203) 490-4140 | www.tdeg.com

PHASE 1 CONSTRUCTION DOCUMENTS

GENERAL NOTE :
ALL KIOSK RELATED CONSTRUCTION IS CONSIDERED ADD ALTERNATE #2

OWNERSHIP, USE AND ALTERATION OF DOCUMENTS:
The Client acknowledges that the documents, drawings, specifications including electronic media files are instruments of The DiSalvo Engineering Group's services and shall remain the property of The DiSalvo Engineering Group. The Client or any person or entity that acquires or obtains the drawings and specifications from or through The Client shall not use them on any other project, shall not modify, alter or change the drawings and specifications without written authorization from The DiSalvo Engineering Group. Furthermore, The Client agrees to the fullest extent permitted by law to indemnify and hold harmless The DiSalvo Engineering Group, its officers, directors and employees from any and all claims, suits, liability, demands or costs, including attorney fees arising out of or resulting therefrom.

Professional Seal

| No. | Date | Issue |
|---|---|---|
| 3 | 11/10/20 | PHASE 1 CONSTRUCTION DOCUMENTS |
| 2 | 08/12/20 | ISSUE FOR PERMIT |
| 1 | 08/29/19 | DESIGN DEVELOPMENT |

Sheet Title
FIRST FLOOR SLAB-ON-GRADE AND FOUNDATION PLAN

| Job No. | Date |
|---|---|
| 18144.00 | 11-01-2018 |
| Scale: AS NOTED | Drawn / Checked: JM EM |

Sheet Number
S101

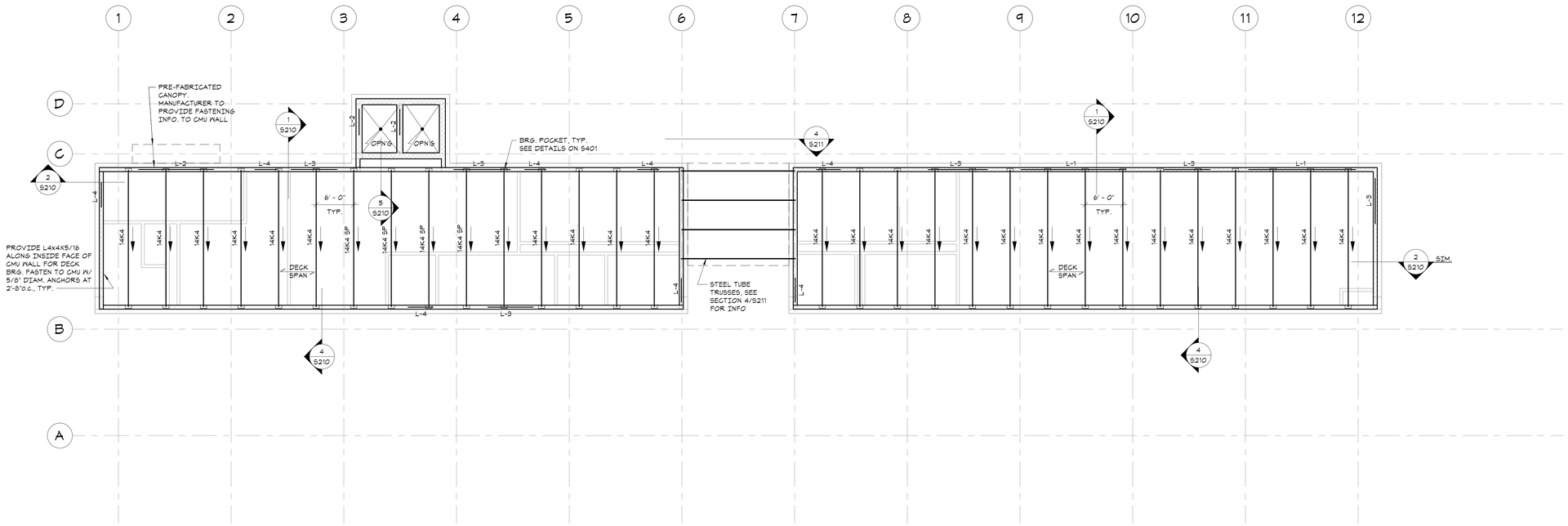


## ROOF FRAMING PLAN

1/8"=1'-0"

NORTH:

- ROOF DECK CONSTRUCTION: SEE GENERAL NOTES, DRAWING S100.
- STEEL JOIST ROOF FRAMING SLOPES, SEE ARCHITECTURAL DRAWINGS FOR ELEVATIONS.
- ALL FRAMING SHALL BE EQUALLY SPACED BETWEEN COLUMN LINES, UNLESS OTHERWISE INDICATED.
- COORDINATE SIZE AND LOCATION OF ALL ROOF PENETRATIONS WITH ARCHITECTURAL, MECHANICAL, AND ELECTRICAL DRAWINGS. ALL ROOF PENETRATIONS SHALL BE REVIEWED BY THE ENGINEER PRIOR TO FABRICATION AND INSTALLATION OF PENETRATION FRAMING ELEMENTS.
- REINFORCE STEEL JOISTS AT SUPPORT OF PIPES/CONDUITS AND ANY CONCENTRATED LOADS AT TOP OR BOTTOM CHORDS, AS PER "TYPICAL JOIST REINFORCING DETAIL".
- JOISTS DESIGNATED "SP" ARE TO BE DESIGNED FOR THE STANDARD SJI LOADING, PLUS SNOW DRIFT LOADING AS INDICATED ON THE ROOF SNOW DRIFT PLAN.
- "L-1" INDICATES W14X38 STEEL LINTEL WITH 5/16" STEEL PLATE.
- "L-2" INDICATES W8X24 STEEL LINTEL WITH 5/16" STEEL PLATE.
- "L-3" INDICATES 2L6X3 1/2X3/8 STEEL LINTEL.
- "L-4" INDICATES 2L4X3 1/2X5/16 STEEL LINTEL.
- FOR MASONRY SHEARWALL INFORMATION, SEE "TYPICAL CONCRETE MASONRY DETAILS" DRAWING.
- SEE GENERAL NOTES FOR ADDITIONAL INFORMATION.

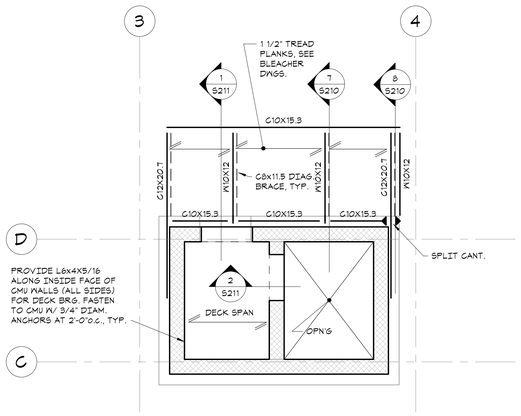


## PRESS BOX FLOOR FRAMING PLAN

1/4"=1'-0"

NORTH:

- TOP OF PRESS BOX FLOOR ELEVATION = 30'-3 3/4".
- TOP OF STEEL ELEVATION (UNDERSIDE OF PLANK) = 30'-2 1/4" UNLESS OTHERWISE NOTED THUS [+/-X'-XX"] FROM ELEVATION 30'-3 3/4".
- TYPICAL FLOOR CONSTRUCTION: 4 1/2" COMPOSITE CONCRETE SLAB = 2 1/2" NORMAL WEIGHT CONCRETE ON 2" COMPOSITE DECK REINFORCED WITH 6x6-W2.0xW2.0 WWF AS PER "TYPICAL COMPOSITE BEAM FLOOR CONSTRUCTION DETAIL" AND GENERAL NOTES.
- FOR MASONRY SHEARWALL INFORMATION, SEE "TYPICAL CONCRETE MASONRY DETAILS" DRAWING.
- SEE GENERAL NOTES FOR ADDITIONAL INFORMATION.

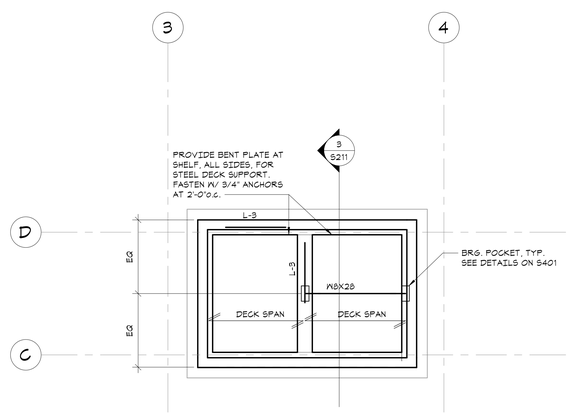


## ELEVATOR SHAFT ROOF FRAMING PLAN

1/4"=1'-0"

NORTH:

- ROOF DECK CONSTRUCTION: SEE GENERAL NOTES, DRAWING S100.
- FOR MASONRY SHEARWALL INFORMATION, SEE "TYPICAL CONCRETE MASONRY DETAILS" DRAWING.
- "L-3" INDICATES 2L6X3 1/2X3/8 STEEL LINTEL.
- SEE GENERAL NOTES FOR ADDITIONAL INFORMATION.

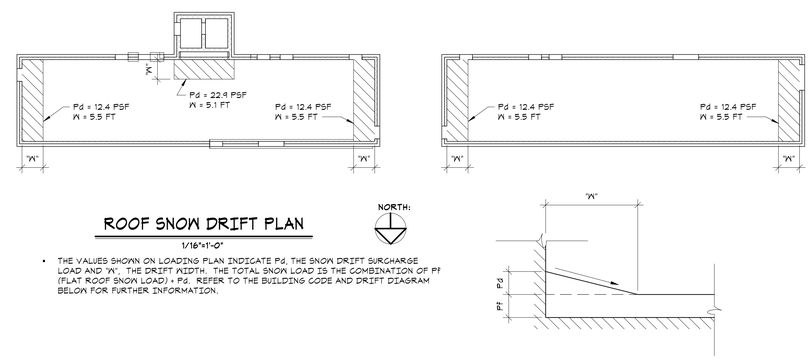


## ROOF SNOW DRIFT PLAN

1/16"=1'-0"

NORTH:

- THE VALUES SHOWN ON LOADING PLAN INDICATE Pd, THE SNOW DRIFT SURCHARGE LOAD AND "W". THE DRIFT WIDTH. THE TOTAL SNOW LOAD IS THE COMBINATION OF Pf (FLAT ROOF SNOW LOAD) + Pd. REFER TO THE BUILDING CODE AND DRIFT DIAGRAM BELOW FOR FURTHER INFORMATION.




BEAM AND GIRDER

GREENWICH HS CARDINAL STADIUM PHASE 1

GREENWICH PUBLIC SCHOOLS
10 HILLSIDE ROAD
GREENWICH CT 06830

KG+D listen imagine build
KG+D . ARCHITECTS PC
285 MAIN STREET MOUNT KISCO . NEW YORK . 10549
P:914.666.5900 KGDARCHITECTS.COM

The DiSalvo Engineering Group
Structural Engineers
83 Wooster Heights Road | Suite 200
Lee Farm Corporate Park | Danbury, CT 06810
(203) 490-4140 | www.tdeg.com

PHASE 1 CONSTRUCTION DOCUMENTS

GENERAL NOTE :
ALL KIOSK RELATED CONSTRUCTION IS CONSIDERED ADD ALTERNATE #2

**OWNERSHIP, USE AND ALTERATION OF DOCUMENTS:**
The Client acknowledges that the documents, drawings, specifications including electronic media files are instruments of The DiSalvo Engineering Group's services and shall remain the property of The DiSalvo Engineering Group. The Client or any person or entity that acquires or obtains the drawings and specifications from or through The Client shall not use them on any other project, shall not modify, alter or change the drawings and specifications without written authorization from The DiSalvo Engineering Group. Furthermore, The Client agrees to the fullest extent permitted by law to indemnify and hold harmless The DiSalvo Engineering Group, its officers, directors and employees from any and all claims, suits, liability, demands or costs, including attorney fees arising out of or resulting therefrom.

Professional Seal

| No. | Date | Issue |
|---|---|---|
| 3 | 11/10/20 | PHASE 1 CONSTRUCTION DOCUMENTS |
| 2 | 08/12/20 | ISSUE FOR PERMIT |
| 1 | 08/29/19 | DESIGN DEVELOPMENT |

Sheet Title

# PRESS BOX AND ROOF FRAMING PLANS

| Job No. | Date |
|---|---|
| 18144.00 | 11-01-2018 |
| Scale: AS NOTED | Drawn / Checked: JM EM |

Sheet Number

S102

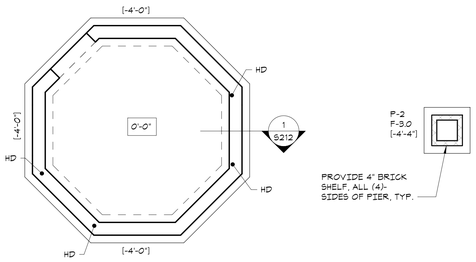


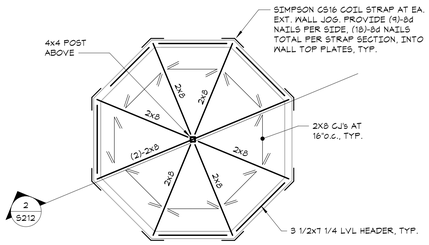


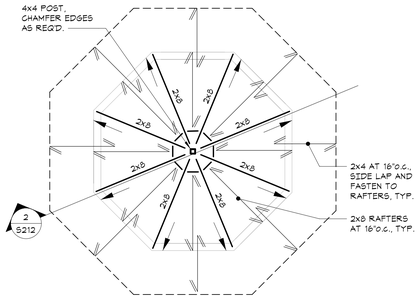

## KIOSK FOUNDATION AND FIRST FLOOR SLAB-ON-GRADE PLAN

NORTH:

1/4"=1'-0"

- TOP OF KIOSK FIRST FLOOR SLAB ELEVATION = DATUM ELEVATION 0'-0".
- FLOOR CONSTRUCTION: 5" CONCRETE SLAB ON GRADE, REINFORCED WITH 6x6 - W1.4xW1.4 WELDED WIRE FABRIC, UNLESS OTHERWISE NOTED. FOR DETAILS, SEE "TYPICAL SLAB ON GRADE DETAILS".
- FOR FOUNDATION CONDITION AT EXTERIOR DOORS, SEE "TYPICAL DETAIL AT EXTERIOR DOORS".
- COORDINATE ALL PITS, TRENCHES, POCKETS, BRICK SHELVES, SLEEVES, PENETRATIONS AND INSERTS IN CONCRETE WALLS AND SLABS WITH ARCHITECTURAL AND MECHANICAL DRAWINGS.
- SEE GENERAL NOTES, FOR ADDITIONAL INFORMATION.

LEGEND:

- (+/- ...) INDICATES BOTTOM OF FOOTING ELEVATION FROM DATUM ELEVATION.
- +/-... INDICATES TOP OF CONCRETE SLAB ELEVATION FROM DATUM ELEVATION. MAINTAIN FULL SLAB THICKNESS AT SLOPED AND DEPRESSED AREAS. SEE ARCHITECTURAL DRAWINGS FOR LOCATION AND EXTENT.
- F-## INDICATES FOOTING TYPE. SEE "FOOTING SCHEDULE AND FOOTING DETAIL".
- P-# INDICATES PIER TYPE. SEE "PIER SCHEDULE AND PIER DETAILS".
- "HD" INDICATES APPROXIMATE LOCATION OF SIMPSON HDU4-SDS2.5 HOLDOWN. PROVIDE (2)-STUD AT EACH HOLDOWN LOCATION.

## KIOSK CEILING FRAMING PLAN

NORTH:

1/4"=1'-0"

- ROOF CONSTRUCTION: SEE GENERAL NOTES, DRAWING S100.
- ALL EXTERIOR WALLS TO BE FRAMED AS LOAD BEARING SHEARWALLS. WOOD SHEATHING PANELS SHALL BE 1/2" THICK, WITH EDGE NAILING TO BE 8d COMMON NAILS AT 4"o.c. PROVIDE BLOCKING AT SHEARWALL PANEL EDGES.
- SEE GENERAL NOTES FOR ADDITIONAL INFORMATION.

## KIOSK ROOF FRAMING PLAN

NORTH:

1/4"=1'-0"

- ROOF IS SLOPED, SEE ARCHITECTURAL DRAWINGS FOR ELEVATIONS AND PITCH.
- ROOF SHEATHING SHALL BE 5/8" THICK WOOD SHEATHING PANELS. SEE GENERAL NOTES.
- SEE GENERAL NOTES FOR ADDITIONAL INFORMATION.

GREENWICH HS
CARDINAL
STADIUM
PHASE 1

GREENWICH PUBLIC SCHOOLS
10 HILLSIDE ROAD
GREENWICH CT 06830

KG+D listen imagine build
KG+D . ARCHITECTS PC
285 MAIN STREET MOUNT KISCO . NEW YORK . 10549
P:914.666.5900 KGDARCHITECTS.COM

The Di Salvo Engineering Group
Structural Engineers
83 Wooster Heights Road | Suite 200
Lee Farm Corporate Park | Danbury, CT 06810
(203) 490-4140 | www.tdeg.com

PHASE 1 CONSTRUCTION DOCUMENTS

GENERAL NOTE :
ALL KIOSK RELATED CONSTRUCTION IS CONSIDERED ADD ALTERNATE #2

OWNERSHIP, USE AND ALTERATION OF DOCUMENTS:
The Client acknowledges that the documents, drawings, specifications including electronic media files are instruments of The DiSalvo Engineering Group's services and shall remain the property of The DiSalvo Engineering Group. The Client or any person or entity that acquires or obtains the drawings and specifications from or through The Client shall not use them on any other project, shall not modify, alter or change the drawings and specifications without written authorization from The DiSalvo Engineering Group. Furthermore, The Client agrees to the fullest extent permitted by law to indemnify and hold harmless The DiSalvo Engineering Group, its officers, directors and employees from any and all claims, suits, liability, demands or costs, including attorney fees arising out of or resulting therefrom.

Professional Seal

| No. | Date | Issue |
|---|---|---|
| 1 | 11/10/20 | PHASE 1 CONSTRUCTION DOCUMENTS |

Sheet Title

KIOSK FDN & S.O.G. PLAN AND FRAMING PLANS

| Job No. | Date |
|---|---|
| 18144.00 | 11-01-2018 |
| Scale | Drawn / Checked |
| AS NOTED | CGB / EM |

Sheet Number

S103

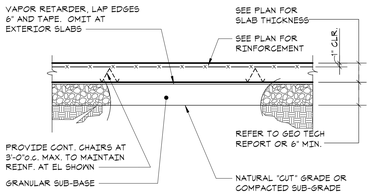


SLAB ON GRADE DETAIL

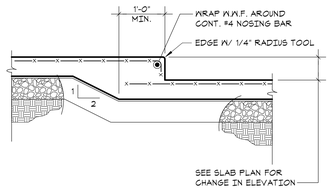


STEPPED SLAB DETAIL

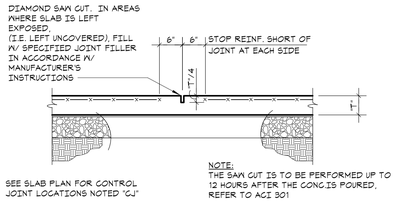


CONTROL JOINT DETAIL

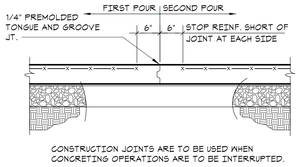


SLAB ON GRADE CONSTRUCTION JOINT DETAIL

## 1 TYPICAL SLAB ON GRADE DETAIL

NO SCALE

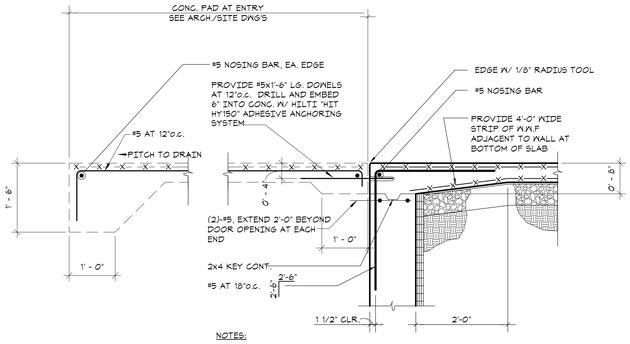


NOTES:

- SEE APPROPRIATE SECTION FOR REMAINDER OF FOUNDATION INFORMATION NOT REPEATED HERE.
- SEE ARCHITECTURAL DRAWINGS FOR LOCATION AND EXTENT OF EXTERIOR DOORS.

## 2 TYPICAL FOUNDATION WALL DETAIL AT EXTERIOR DOORS

NO SCALE

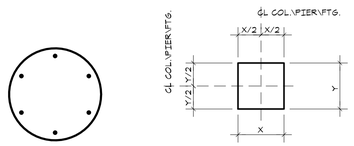


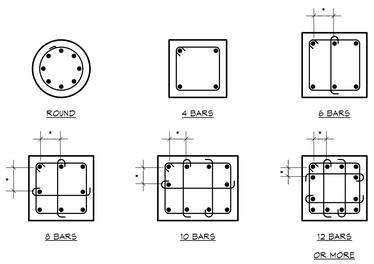


## TYPICAL TIE ARRANGEMENT

"*" INDICATES WHEN 6" OR LESS OMIT INTERIOR TIE.

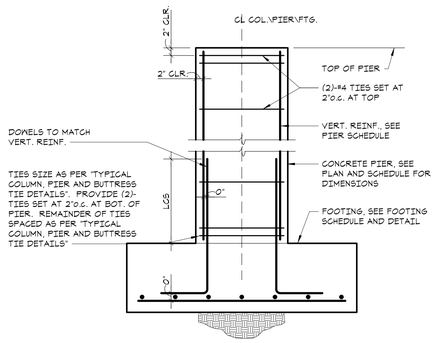


### PIER SCHEDULE

| MARK | TYPE | "X" E-W DIR. | "Y" N-S DIR. | VERTICAL REINF. | REMARKS |
|---|---|---|---|---|---|
| P-1 | A | 24" | 2'-0" | (6)-#6 | 24" DIAMETER, ROUND PIER |
| P-2 | B | 24" | 2'-0" | (8)-#6 | PROVIDE 4" SHELF, (4)-SIDES. SEE ARCH DWG'S FOR SHELF AND STEM ELEVATIONS |
| | | | | | |
| | | | | | |
| | | | | | |

## 3 TYPICAL PIER SCHEDULE AND PIER DETAILS

NO SCALE

### MAXIMUM SPACING OF TIES

| VERTICAL BAR SIZE | SIZE AND SPACING OF TIES | | |
|---|---|---|---|
| | #3 | #4 | #5 |
| #5 | 10" | - | - |
| #6 | 12" | - | - |
| #7 | 14" | - | - |
| #8 | 16" | 16" | - |
| #9 | 18" | 18" | - |
| #10 | 18" | 20" | - |
| #11 | † | 22" | 22" |
| #14 | † | 24" | 27" |
| #18 | † | 24" | 30" |

"*" INDICATES MAX. SPACING NOT TO EXCEED LEAST DIMENSION OF COMPRESSION MEMBER.

†INDICATES #3 TIES NOT PERMITTED.

NOTES:

1. THE VERTICAL BARS SHALL BE SPACED AROUND THE PERIMETER SO AS TO ACHIEVE APPROXIMATELY EQUAL SPACING.
2. SEE ARCHITECTURAL DRAWINGS FOR LOCATION AND EXTENT OF EXTERIOR DOORS.
3. TIES SHALL BE ARRANGED SUCH THAT EVERY CORNER AND ALTERNATE VERTICAL BAR SHALL HAVE LATERAL SUPPORT PROVIDED BY THE CORNER OF A TIE WITH AN INCLUDED ANGLE OF NOT MORE THAN 135 DEGREES AND NO BAR SHALL BE FURTHER THAN 6" CLEAR ON EACH SIDE ALONG THE TIE FROM SUCH A LATERALLY SUPPORTED BAR.
4. TIES SHALL BE LOCATED VERTICALLY NOT MORE THAN ONE-HALF A TIE SPACING ABOVE THE TOP OF FOOTING OR SLAB IN ANY STORY, AND SHALL BE SPACED AS PROVIDED HEREIN TO NOT MORE THAN ONE-HALF A TIE SPACING BELOW THE LOWEST HORIZONTAL REINFORCEMENT IN SLAB OR DROP PANEL ABOVE.
5. WHERE BEAMS OR BRACKETS FRAME FROM FOUR DIRECTIONS INTO A COLUMN, PIER OR BUTRESS, TERMINATION OF TIES NOT MORE THAN 3" BELOW REINFORCEMENT IN SHALLOWEST OF SUCH BEAMS OR BRACKETS SHALL NOT BE PERMITTED.
6. SEE THE GENERAL NOTES ON DRAWING S1 FOR THE MINIMUM CONCRETE COVER REQUIREMENTS FOR REINFORCEMENT.
7. WHERE PIERS ARE ADJACENT TO FOUNDATION WALLS, PIERS ARE TO BE POURED MONOLITHIGALLY WITH WALLS, PIER REINFORCING SHALL EXTEND WITHIN 2" OF OPPOSITE FACE WALL.

## 4 TYPICAL COLUMN, PIER AND BUTTRESS TIE DETAILS

NO SCALE

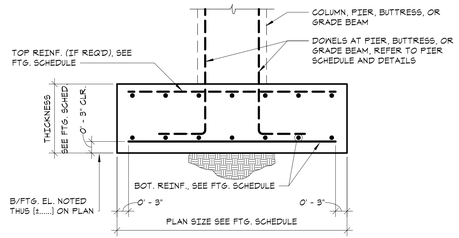


### FOOTING SCHEDULE

(ALLOWABLE BEARING PRESSURE: 4000 PSF)

| MARK | PLAN SIZE | | THICKNESS | BOTTOM REINF. | | REMARKS |
|---|---|---|---|---|---|---|
| | N-S | E-W | | N-S | E-W | |
| F-3.0 | 3'-0" | 3'-0" | 1'-4" | (4)-#5 | (4)-#5 | |
| F-4.0 | 4'-0" | 4'-0" | 1'-4" | (5)-#5 | (5)-#5 | |
| F-5.0 | 5'-0" | 5'-0" | 1'-6" | (7)-#5 | (7)-#5 | |
| | | | | | | |
| | | | | | | |
| | | | | | | |
| | | | | | | |
| | | | | | | |
| | | | | | | |
| | | | | | | |

NOTES:

1. REFER TO FOOTING DETAILS AND FOUNDATION NOTES IN USING THIS SCHEDULE.
2. "*" PROVIDE TOP REINFORCING IN ADDITION TO BOTTOM REINFORCING. TOP REINFORCING SHALL BE PLACED 2" CLEAR FROM TOP OF FOOTING AND SHALL BE EQUAL TO SIZE AND SPACING OF BOTTOM REINFORCING.
3. CENTERLINE OF SHEAR WALL FOOTINGS SHALL BE LOCATED ON CENTERLINE OF SHEAR WALL AND 1'-0" IN FROM END OF SHEAR WALL. PROVIDE DOWELS FROM FOOTINGS INTO SHEAR WALL CMU OR CONCRETE FOUNDATION WALLS AS PER NOTE **"A" ON DETAIL 12/S202.**
4. WHERE SHEAR WALL FOOTINGS OVERLAP WITH COLUMN FOOTINGS, COMBINE THE TWO FOOTINGS INCLUDING THE FULL AMOUNT OF REINFORCEMENT. ALIGN TOPS OF FOTTINGS.

## 7 4000 PSF FOOTING SCHEDULE AND DETAIL

NO SCALE

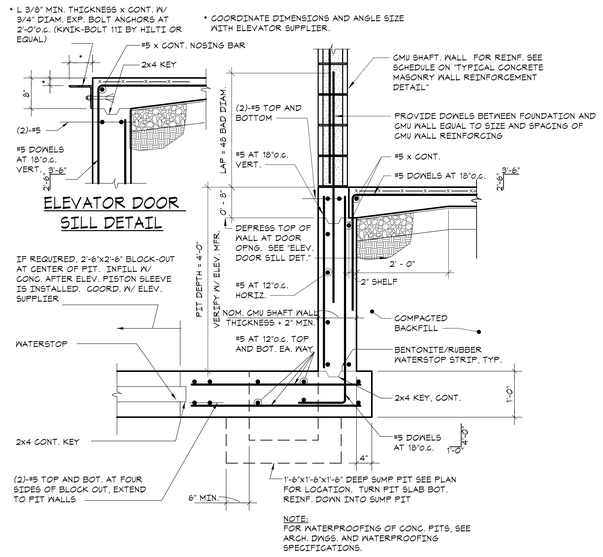


## 6 TYPICAL ELEVATOR PIT DETAIL

NO SCALE

GREENWICH HS CARDINAL STADIUM PHASE 1

GREENWICH PUBLIC SCHOOLS
10 HILLSIDE ROAD
GREENWICH CT 06830

KG+D listen imagine build
KG+D . ARCHITECTS PC
285 MAIN STREET MOUNT KISCO . NEW YORK . 10549
P:914.666.5900 KGDARCHITECTS.COM

The Di Salvo Engineering Group
Structural Engineers
83 Wooster Heights Road | Suite 200
Lee Farm Corporate Park | Danbury, CT 06810
(203) 490-4140 | www.tdeg.com

PHASE 1 CONSTRUCTION DOCUMENTS

GENERAL NOTE :
ALL KIOSK RELATED CONSTRUCTION IS CONSIDERED ADD ALTERNATE #2

OWNERSHIP, USE AND ALTERATION OF DOCUMENTS:
The Client acknowledges that the documents, drawings, specifications including electronic media files are instruments of The DiSalvo Engineering Group's services and shall remain the property of The DiSalvo Engineering Group. The Client or any person or entity that acquires or obtains the drawings and specifications from or through The Client shall not use them on any other project, shall not modify, alter or change the drawings and specifications without written authorization from The DiSalvo Engineering Group. Furthermore, The Client agrees to the fullest extent permitted by law to indemnify and hold harmless The DiSalvo Engineering Group, its officers, directors and employees from any and all claims, suits, liability, demands or costs, including attorney fees arising out of or resulting therefrom.

Professional Seal

| No. | Date | Issue |
|---|---|---|
| 3 | 11/10/20 | PHASE 1 CONSTRUCTION DOCUMENTS |
| 2 | 08/12/20 | ISSUE FOR PERMIT |
| 1 | 08/29/19 | DESIGN DEVELOPMENT |

Sheet Title

FOUNDATION SCHEDULES AND TYPICAL DETAILS

| Job No. | Date |
|---|---|
| 18144.00 | 11-01-2018 |
| Scale: AS NOTED | Drawn / Checked: CGB TBH |

Sheet Number

S201

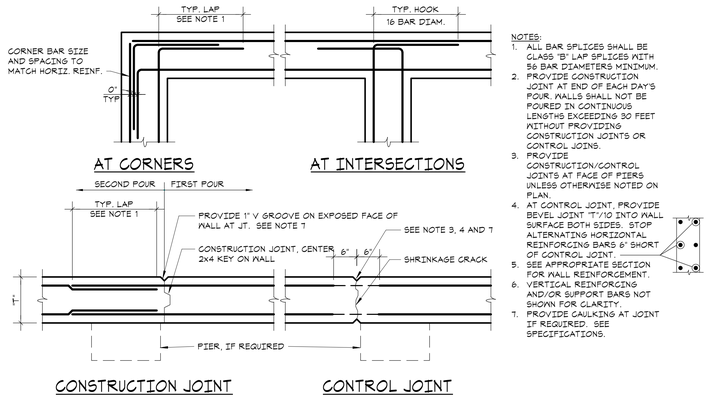


NOTES:

1. ALL BAR SPLICES SHALL BE CLASS "B" LAP SPLICES WITH 56 BAR DIAMETERS MINIMUM.
2. PROVIDE CONSTRUCTION JOINT AT END OF EACH DAY'S POUR. WALLS SHALL NOT BE POURED IN CONTINUOUS LENGTHS EXCEEDING 30 FEET WITHOUT PROVIDING CONSTRUCTION JOINTS OR CONTROL JOINS.
3. PROVIDE CONSTRUCTION/CONTROL JOINTS AT FACE OF PIERS UNLESS OTHERWISE NOTED ON PLAN.
4. AT CONTROL JOINT, PROVIDE BEVEL JOINT T"/10 INTO WALL SURFACE BOTH SIDES. STOP ALTERNATING HORIZONTAL REINFORCING BARS 6" SHORT OF CONTROL JOINT.
5. SEE APPROPRIATE SECTION FOR WALL REINFORCEMENT.
6. VERTICAL REINFORCING AND/OR SUPPORT BARS NOT SHOWN FOR CLARITY.
7. PROVIDE CAULKING AT JOINT IF REQUIRED. SEE SPECIFICATIONS.

① TYPICAL CONCRETE WALL CONSTRUCTION DETAIL
NO SCALE

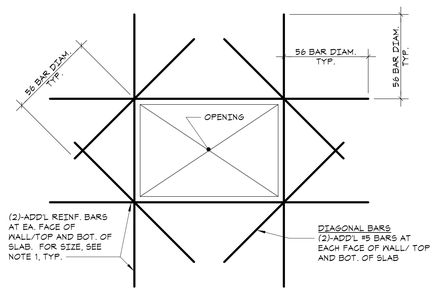


NOTES:

1. AT WALLS, ADDITIONAL REINFORCING SIZE SHALL MATCH HORIZONTAL AND VERTICAL REINFORCING. AT SLABS USE #5 BARS.
2. THIS DETAIL APPLIES AT ALL OPENINGS 12"x12" AND LARGER. DETAIL IS SIMILAR AT ALL CIRCULAR OPENINGS 12" AND LARGER.
3. COORDINATE ALL OPENING SIZES AND LOCATIONS WITH ARCHITECTURAL AND MECHANICAL DRAWINGS.

② TYPICAL SLAB/WALL PENETRATION REINFORCING DETAIL
NO SCALE

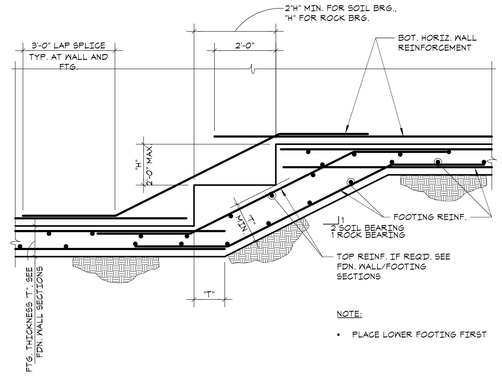


NOTE:

- PLACE LOWER FOOTING FIRST

③ TYPICAL STEPPED FOOTING DETAIL
NO SCALE

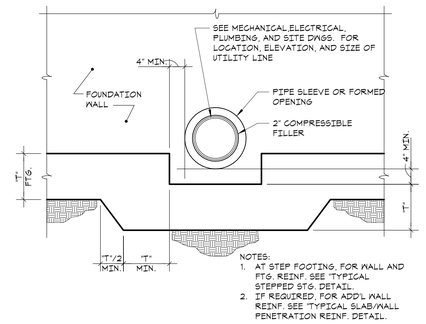


NOTES:

1. AT STEP FOOTING, FOR WALL AND FTG. REINF. SEE "TYPICAL STEPPED STG. DETAIL.
2. IF REQUIRED, FOR ADD'L WALL REINF. SEE "TYPICAL SLAB/WALL PENETRATION REINF. DETAIL.

④ TYPICAL STEP FOOTING DETAIL AT WALL PIPE PENETRATION
NO SCALE

## SCHEDULE OF EMBEDMENT AND SPLICE LENGTH

| BAR SIZE | COMPRESSION | | TENSION (f'c = 3000 psi) | | | | | | | | TENSION (f'c = 4000 psi) | | | | | | | |
|---|---|---|---|---|---|---|---|---|---|---|---|---|---|---|---|---|---|---|
| | EMBED. LENGTH | LAP SPLICE LENGTH | EMBEDMENT LENGTH | | | | LAP SPLICE LENGTH | | | | EMBEDMENT LENGTH | | | | LAP SPLICE LENGTH | | | |
| | | | TOP BARS | | OTHER BARS | | TOP BARS | | OTHER BARS | | TOP BARS | | OTHER BARS | | TOP BARS | | OTHER BARS | |
| | | | CATEGORY SEE NOTE 1 | | CATEGORY SEE NOTE 1 | | CATEGORY SEE NOTE 1 | | CATEGORY SEE NOTE 1 | | CATEGORY SEE NOTE 1 | | CATEGORY SEE NOTE 1 | | CATEGORY SEE NOTE 1 | | CATEGORY SEE NOTE 1 | |
| | | | I | II | I | II | I | II | I | II | I | II | I | II | I | II | I | II |
| #3 | 9" | 12" | 22" | 33" | 17" | 25" | 24" | 43" | 23" | 33" | 19" | 28" | 15" | 22" | 25" | 37" | 20" | 29" |
| #4 | 11" | 15" | 29" | 43" | 22" | 33" | 38" | 56" | 29" | 43" | 25" | 37" | 19" | 29" | 33" | 49" | 25" | 38" |
| #5 | 14" | 19" | 36" | 54" | 28" | 42" | 47" | 71" | 37" | 55" | 31" | 47" | 24" | 36" | 41" | 62" | 32" | 47" |
| #6 | 17" | 23" | 43" | 65" | 33" | 50" | 56" | 85" | 43" | 65" | 37" | 56" | 29" | 43" | 49" | 73" | 38" | 56" |
| #7 | 20" | 27" | 63" | 94" | 48" | 72" | 82" | 123" | 63" | 94" | 54" | 81" | 42" | 63" | 71" | 106" | 55" | 82" |
| #8 | 22" | 30" | 72" | 107" | 55" | 83" | 94" | 140" | 72" | 108" | 62" | 93" | 48" | 72" | 81" | 121" | 63" | 94" |
| #9 | 25" | 34" | 81" | 121" | 62" | 93" | 106" | 158" | 81" | 121" | 70" | 105" | 54" | 81" | 91" | 137" | 71" | 106" |
| #10 | 28" | 38" | 91" | 136" | 70" | 105" | 119" | 177" | 91" | 137" | 79" | 118" | 61" | 91" | 103" | 154" | 80" | 119" |
| #11 | 31" | 43" | 101" | 151" | 78" | 116" | 132" | 197" | 102" | 151" | 87" | 131" | 67" | 101" | 114" | 171" | 88" | 132" |
| #14 | 38" | NP | 121" | 181" | 93" | 140" | NP | NP | NP | NP | 105" | 157" | 81" | 121" | NP | NP | NP | NP |
| #18 | 50" | NP | 161" | 242" | 124" | 186" | NP | NP | NP | NP | 140" | 209" | 108" | 161" | NP | NP | NP | NP |
| SEE NOTE 2 | LCE | LCS | LTE | | | | LTS | | | | LTE | | | | LTS | | | |

NOTES:

1. THIS SCHEDULE INCLUDES EMBEDMENT AND SPLICE LENGTHS AS PER ACI 318-02 AND SATISFY THE PROJECT REQUIREMENTS AND THE FOLLOWING CRITERIA. SPECIFIED YIELD STRENGTH OF REINFORCEMENT, $f_y$ = 60,000 psi NORMAL WEIGHT CONCRETE, $w$ = 150 pcf, TENSION EMBEDMENT AND LAP SPLICE LENGTHS ARE DIVIDED INTO TWO CATEGORIES WHICH SHALL BE APPLIED AS FOLLOWS: CATEGORY 1: CLEAR SPACING OF BARS BEING DEVELOPED OR SPLICED NOT LESS THAN THE BAR DIAMETER, CLEAR COVER NOT LESS THAN THE BAR DIAMETER, AND STIRRUPS OR TIES THROUGHOUT THE DEVELOPMENT NOT LESS THAN THE CODE MINIMUM; OR, CLEAR SPACING OF BARS BEING DEVELOPED OR SPLICED, NOT LESS THAN 2x THE BAR DIAMETER AND CLEAR COVER NOT LESS THAN THE BAR DIAMETER. CATEGORY 2: ALL OTHER CASES.
2. NOTATION USED IN SECTION AND DETAILS FOR VARIOUS EMBEDMENT AND SPLICE LENGTH REREQUIREMENTS.
3. USE COMPRESSION LAP SPLICE LENGTH (LCS) AT ALL COMPRESSION MEMBER SPLICE LOCATIONS NOT SPECIFICALLY DETAILED AND UNLESS INDICATED OTHERWISE ON PLANS OR DETAILS. USE TENSION SPLICE FOR ALL OTHER SPLICES (UNLESS OTHERWISE NOTED ON DWGS).
4. THE STANDARD COMPRESSION LAP SPLICE IS (0.0005 x REINFORCED YIELD STRENGTH x THE BAR DIAMETER). THE STANDARD TENSION LAP SPLICE CLASS B IS 1.3 x THE DEVELOPMENT LENGTH. THE CONTRACTOR MAY SUBMIT LESSER SPLICE LENGTHS FOR REVIEW AND APPROVAL AT THE SAME TIME PROVIDING THE FOLLOWING INFORMATION.
   - A DETAILS PREPARED AND SUBMITTED BY THE CONTRACTOR INDICATING LOCATION AND PROPOSED LAYOUT OF REBARS AND LENGTH OF SPLICES.
   - B WHERE THE SIZE AND NUMBER OF TIES OR SPIRALS PERMITS THE REDUCTION OF LAP LENGTH, THOSE BARS SHALL BE INDICATED ON THE DETAILS.
   - C WHERE COMPUTED STRESS VALUES PERMIT THE REDUCTION OF LAP LENGTH, COMPUTATIONS SHALL BE SUBMITTED FOR REVIEW
   - D THE APPLICABLE SECTION OF THE ACI 318-95 CODE PERMITTING THE LESSER SPLICE LENGTH SHALL BE INDICATED ON THE SUBMITTED MATERIAL.
5. TOP BARS ARE HORIZONTAL BARS PLACED SO THAT MORE THAN 12" OF CONCRETE IS CAST ON THE MEMBER BELOW THE BAR.
6. WHERE BARS OF DIFFERENT SIZE ARE TO BE SPLICED, THE SPLICE LENGTH FOR ALL BARS SHALL BE THAT REQUIRED FOR THE LARGEST.
7. "NP" INDICATES NOT PERMITTED. BARS LARGER THAN NO. 11 SHALL NOT BE SPLICED EXCEPT AS FOLLOWS: TO #11 BARS IN COMPRESSION. USE LARGER OF THE DEVELOPMENT LENGTH OF THE LARGER BAR OR THE SPLICE LENGTH OF THE SMALLER BAR (51" FOR #14 AND 68" FOR #18).

⑤ SCHEDULE OF EMBEDMENT AND SPLICE LENGTH
NO SCALE

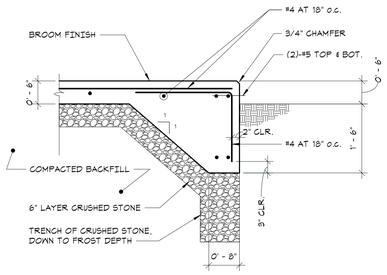


⑥ TYPICAL CONCRET PAD DETAIL
NO SCALE

GREENWICH HS
CARDINAL
STADIUM
PHASE 1

GREENWICH PUBLIC SCHOOLS
10 HILLSIDE ROAD
GREENWICH CT 06830

KG+D listen imagine build
KG+D . ARCHITECTS PC
285 MAIN STREET MOUNT KISCO . NEW YORK . 10549
P:914.666.5900 KGDARCHITECTS.COM

The DiSalvo Engineering Group
Structural Engineers
83 Wooster Heights Road | Suite 200
Lee Farm Corporate Park | Danbury, CT 06810
(203) 490-4140 | www.tdeg.com

PHASE 1 CONSTRUCTION DOCUMENTS

GENERAL NOTE :
ALL KIOSK RELATED CONSTRUCTION IS CONSIDERED ADD ALTERNATE #2

OWNERSHIP, USE AND ALTERATION OF DOCUMENTS:
The Client acknowledges that the documents, drawings, specifications including electronic media files are instruments of The DiSalvo Engineering Group's services and shall remain the property of The DiSalvo Engineering Group. The Client or any person or entity that acquires or obtains the drawings and specifications from or through The Client shall not use them on any other project, shall not modify, alter or change the drawings and specifications without written authorization from The DiSalvo Engineering Group. Furthermore, The Client agrees to the fullest extent permitted by law to indemnify and hold harmless The DiSalvo Engineering Group, its officers, directors and employees from any and all claims, suits, liability, demands or costs, including attorney fees arising out of or resulting therefrom.

Professional Seal

| No. | Date | Issue |
|---|---|---|
| 3 | 11/10/20 | PHASE 1 CONSTRUCTION DOCUMENTS |
| 2 | 08/12/20 | ISSUE FOR PERMIT |
| 1 | 08/29/19 | DESIGN DEVELOPMENT |

Sheet Title

FOUNDATION TYPICAL DETAILS AND SECTIONS

| | |
|---|---|
| Job No. 18144.00 | Date 08/29/19 |
| Scale AS NOTED | Drawn / Checked Author Checker |

Sheet Number

S202

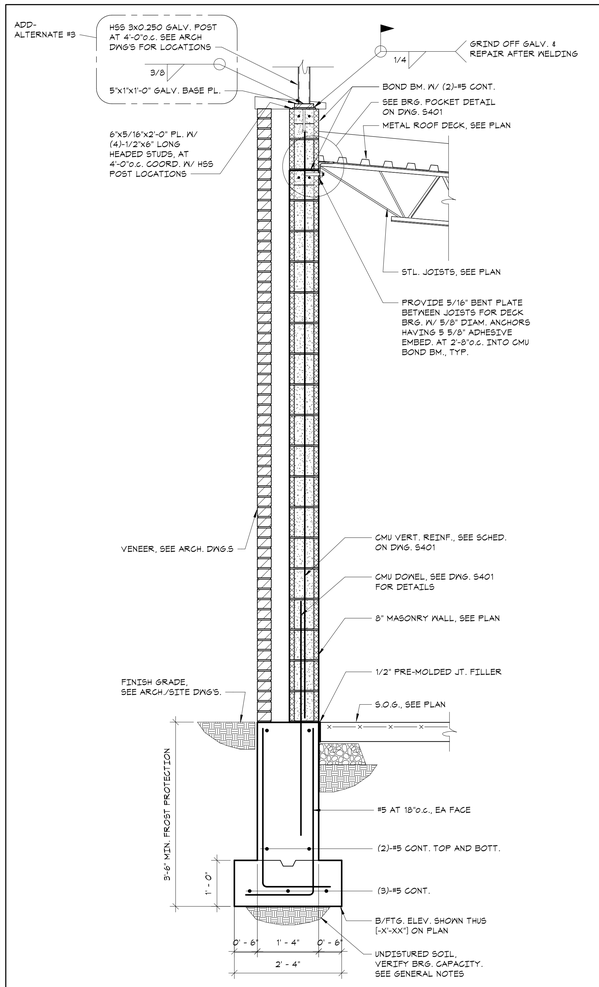


1 SECTION
3/4" = 1'-0"

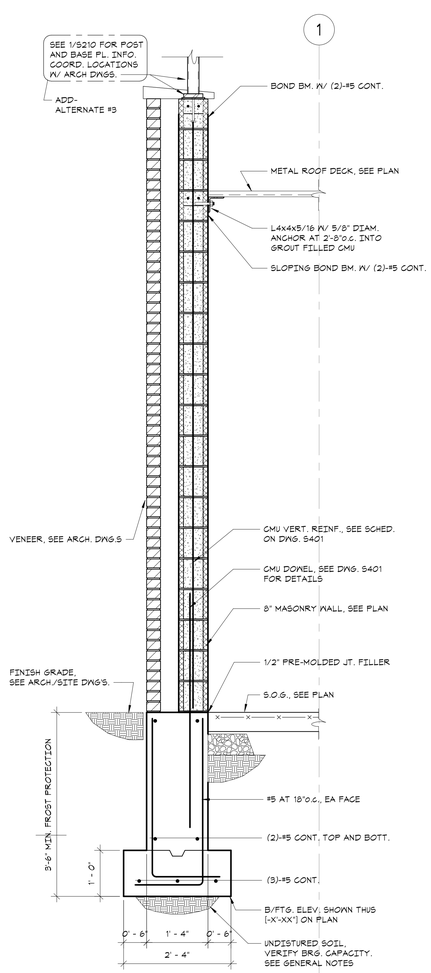


2 SECTION
3/4" = 1'-0"

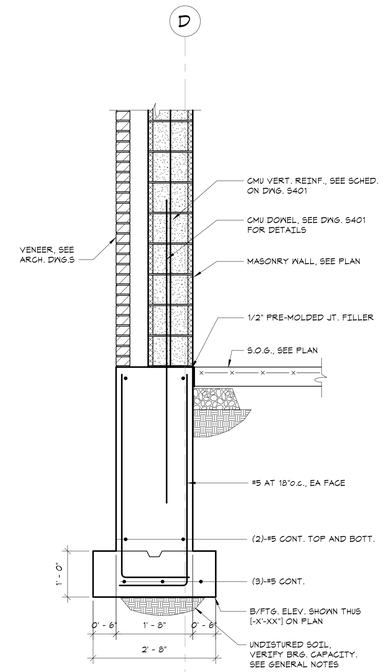


3 SECTION
3/4" = 1'-0"

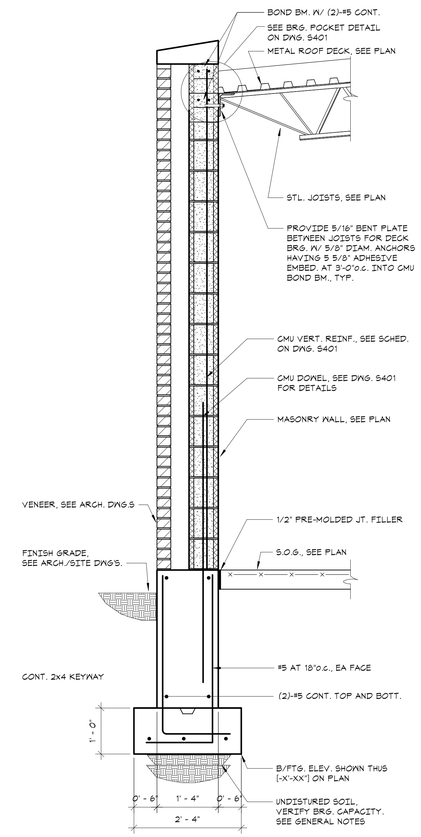


4 SECTION
3/4" = 1'-0"

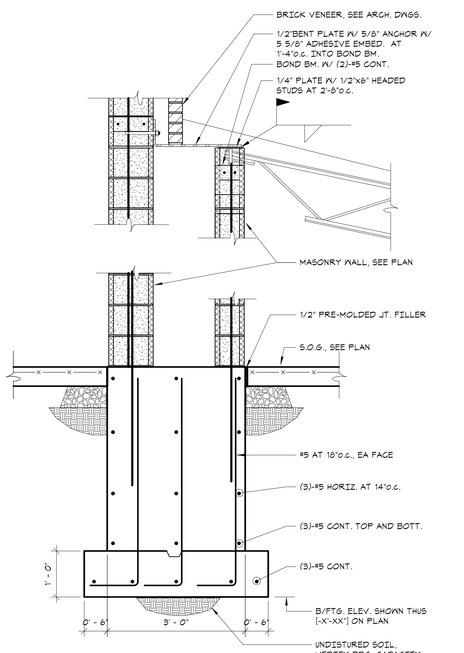


5 SECTION
3/4" = 1'-0"

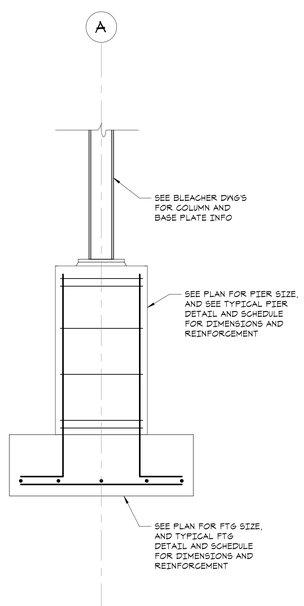


6 SECTION
3/4" = 1'-0"

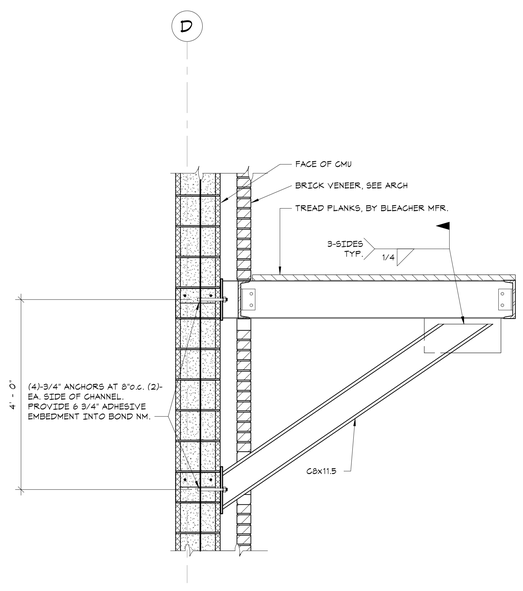


7 SECTION
3/4" = 1'-0"

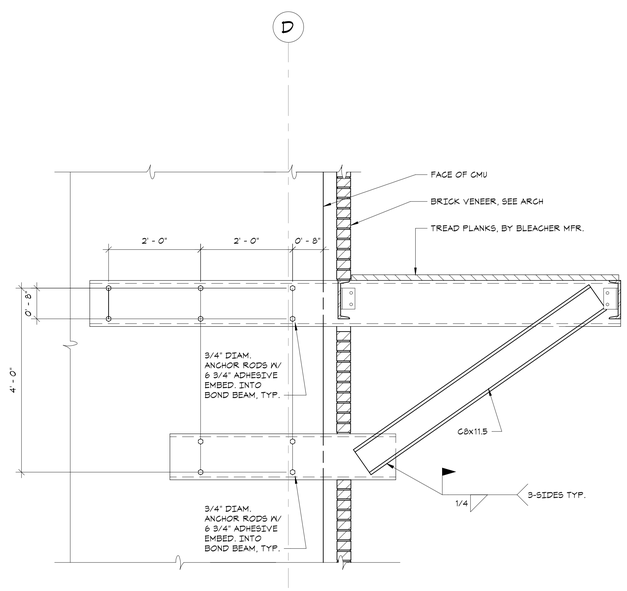


8 SECTION
3/4" = 1'-0"

# GREENWICH HS CARDINAL STADIUM PHASE 1

GREENWICH PUBLIC SCHOOLS
10 HILLSIDE ROAD
GREENWICH CT 06830

KG+D listen imagine build
KG+D . ARCHITECTS PC
285 MAIN STREET MOUNT KISCO . NEW YORK . 10549
P:914.666.5900 KGDARCHITECTS.COM

The Di Salvo Engineering Group
Structural Engineers
83 Wooster Heights Road | Suite 200
Lee Farm Corporate Park | Danbury, CT 06810
(203) 490-4140 | www.tdeg.com

PHASE 1 CONSTRUCTION DOCUMENTS

GENERAL NOTE :
ALL KIOSK RELATED CONSTRUCTION IS CONSIDERED ADD ALTERNATE #2

**OWNERSHIP, USE AND ALTERATION OF DOCUMENTS:**
The Client acknowledges that the documents, drawings, specifications including electronic media files are instruments of The DiSalvo Engineering Group's services and shall remain the property of The DiSalvo Engineering Group. The Client or any person or entity that acquires or obtains the drawings and specifications from or through The Client shall not use them on any other project, shall not modify, alter or change the drawings and specifications without written authorization from The DiSalvo Engineering Group. Furthermore, The Client agrees to the fullest extent permitted by law to indemnify and hold harmless The DiSalvo Engineering Group, its officers, directors and employees from any and all claims, suits, liability, demands or costs, including attorney fees arising out of or resulting therefrom.

Professional Seal

| No. | Date | Issue |
|---|---|---|
| 3 | 11/10/20 | PHASE 1 CONSTRUCTION DOCUMENTS |
| 2 | 08/12/20 | ISSUE FOR PERMIT |
| 1 | 08/29/19 | DESIGN DEVELOPMENT |

Sheet Title
FOUNDATION AND FRAMING SECTIONS

| | |
|---|---|
| Job No. 18144.00 | Date 08/28/19 |
| Scale AS NOTED | Drawn / Checked CGB / TBH |

Sheet Number
S210

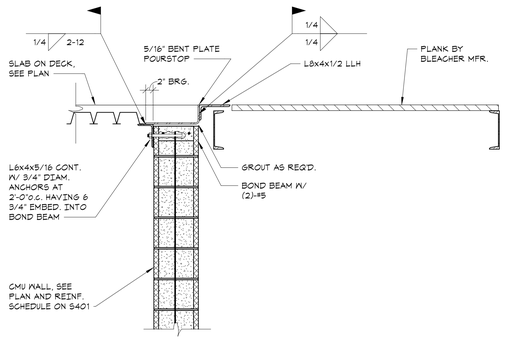


1 SECTION
3/4" = 1'-0"

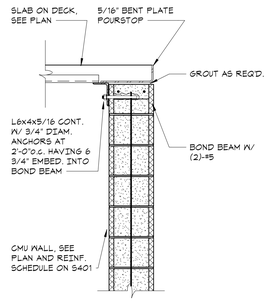


2 SECTION
3/4" = 1'-0"

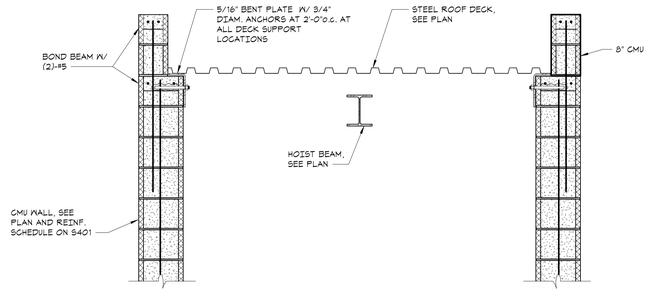


3 SECTION
3/4" = 1'-0"

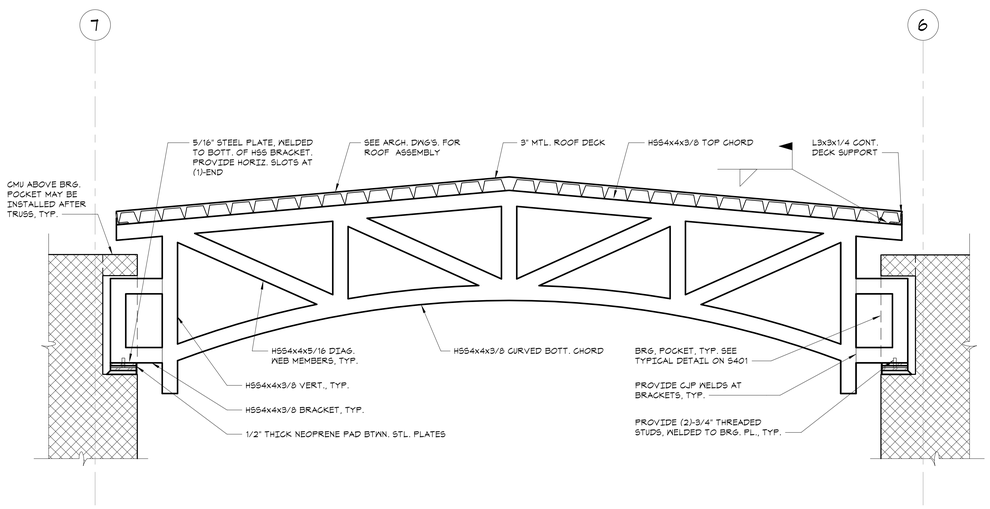


4 SECTION
3/4" = 1'-0"

# GREENWICH HS CARDINAL STADIUM PHASE 1

GREENWICH PUBLIC SCHOOLS
10 HILLSIDE ROAD
GREENWICH CT 06830

KG+D listen imagine build
KG+D . ARCHITECTS PC
285 MAIN STREET MOUNT KISCO . NEW YORK . 10549
P:914.666.5900 KGDARCHITECTS.COM

The Di Salvo Engineering Group
Structural Engineers
83 Wooster Heights Road | Suite 200
Lee Farm Corporate Park | Danbury, CT 06810
(203) 490-4140 | www.tdeg.com

PHASE 1 CONSTRUCTION DOCUMENTS

GENERAL NOTE :
ALL KIOSK RELATED CONSTRUCTION IS CONSIDERED ADD ALTERNATE #2

**OWNERSHIP, USE AND ALTERATION OF DOCUMENTS:**
The Client acknowledges that the documents, drawings, specifications including electronic media files are instruments of The DiSalvo Engineering Group's services and shall remain the property of The DiSalvo Engineering Group. The Client or any person or entity that acquires or obtains the drawings and specifications from or through The Client shall not use them on any other project, shall not modify, alter or change the drawings and specifications without written authorization from The DiSalvo Engineering Group. Furthermore, The Client agrees to the fullest extent permitted by law to indemnify and hold harmless The DiSalvo Engineering Group, its officers, directors and employees from any and all claims, suits, liability, demands or costs, including attorney fees arising out of or resulting therefrom.

Professional Seal

| No. | Date | Issue |
|---|---|---|
| 3 | 11/10/20 | PHASE 1 CONSTRUCTION DOCUMENTS |
| 2 | 08/12/20 | ISSUE FOR PERMIT |

Sheet Title

## FRAMING SECTIONS

| Job No. | Date |
|---|---|
| 18144.00 | 08/10/20 |
| Scale | Drawn / Checked |
| AS NOTED | CGB / TBH |

Sheet Number

S211

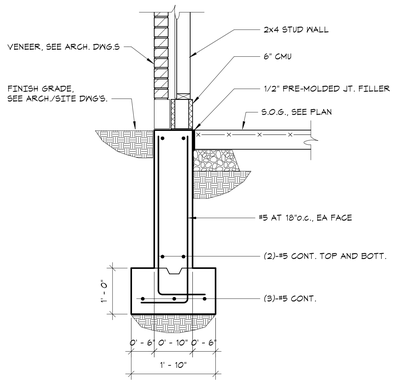


1 SECTION
3/4" = 1'-0"

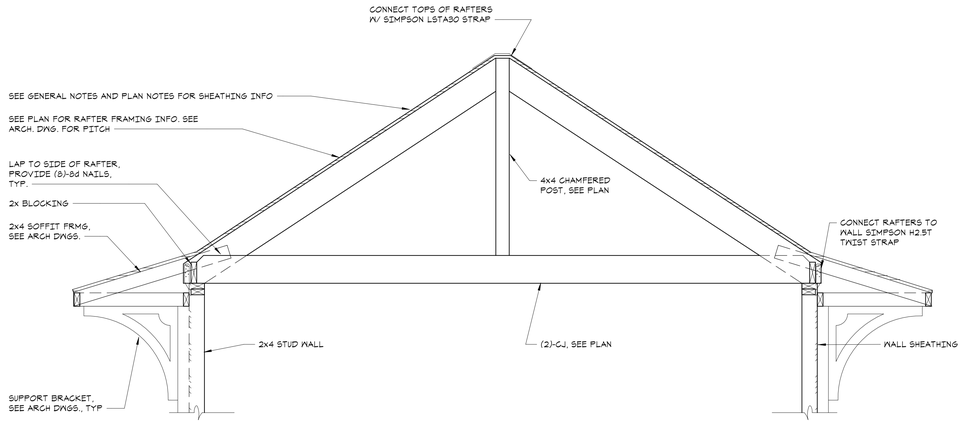


2 SECTION
3/4" = 1'-0"

# GREENWICH HS CARDINAL STADIUM PHASE 1

GREENWICH PUBLIC SCHOOLS
10 HILLSIDE ROAD
GREENWICH CT 06830

KG+D listen imagine build
KG+D . ARCHITECTS PC
285 MAIN STREET MOUNT KISCO . NEW YORK . 10549
P:914.666.5900 KGDARCHITECTS.COM

The DiSalvo Engineering Group
Structural Engineers
83 Wooster Heights Road | Suite 200
Lee Farm Corporate Park | Danbury, CT 06810
(203) 490-4140 | www.tdeg.com

PHASE 1 CONSTRUCTION DOCUMENTS

GENERAL NOTE :
ALL KIOSK RELATED CONSTRUCTION IS CONSIDERED ADD ALTERNATE #2

OWNERSHIP, USE AND ALTERATION OF DOCUMENTS:
The Client acknowledges that the documents, drawings, specifications including electronic media files are instruments of The DiSalvo Engineering Group's services and shall remain the property of The DiSalvo Engineering Group. The Client or any person or entity that acquires or obtains the drawings and specifications from or through The Client shall not use them on any other project, shall not modify, alter or change the drawings and specifications without written authorization from The DiSalvo Engineering Group. Furthermore, The Client agrees to the fullest extent permitted by law to indemnify and hold harmless The DiSalvo Engineering Group, its officers, directors and employees from any and all claims, suits, liability, demands or costs, including attorney fees arising out of or resulting therefrom.

Professional Seal

| No. | Date | Issue |
|---|---|---|
| 1 | 11/10/20 | PHASE 1 CONSTRUCTION DOCUMENTS |

Sheet Title
KIOSK FOUNDATION AND FRAMING SECTIONS

| Job No. | Date |
|---|---|
| 18144.00 | 11-04-2020 |
| Scale | Drawn / Checked |
| AS NOTED | CGB / EM |

Sheet Number
S212

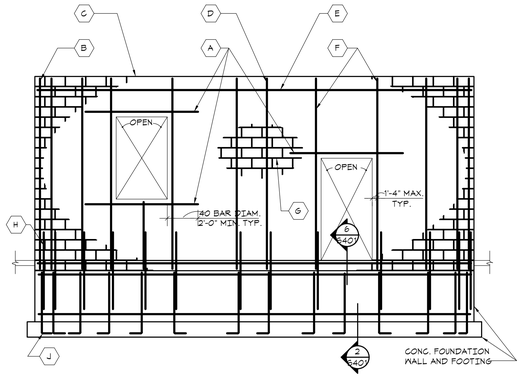


## ELEVATION AT SHEAR WALLS AND EXTERIOR WALLS (A)

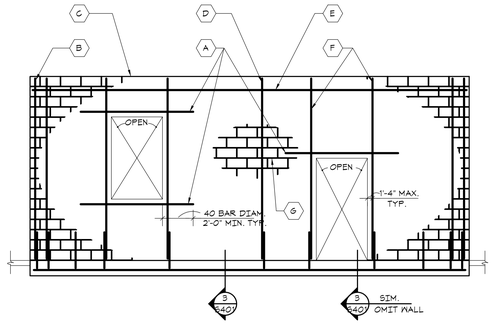


## ELEVATION AT PARTITION WALLS (B)

- PARTITIONS ARE WALLS OTHER THAN SHEAR WALLS, EXTERIOR WALLS, AND BEARING WALLS

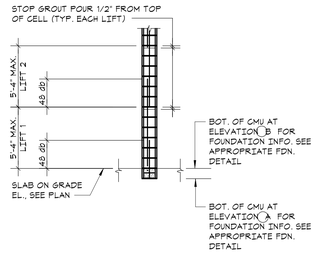


## SECTION - LOW LIFT WALL GROUTING DETAIL (C)

- FOR ADDITIONAL GROUTING REQUIREMENTS, SEE NOTE 4 AND GENERAL NOTES.

## KEYNOTES

| | |
|---|---|
| A | (2)-#5 HORIZ. REINF. GROUTED SOLID IN BOND BEAMCOURSE TYP. ABOVE AND BELOW ALL OPENINGS. FOR HORIZONTAL REINFORCING IN MASONRY LINTELS SEE TYPICAL MASONRY LINTEL IN NON-LOAD BEARING WALL DETAIL." |
| B | VERT. FULL HEIGHT REINF. IN SOLID GROUT, TYP. AT WALL ENDS, CORNERS, AND EACH SIDE OF CJ'S.SEE REINFORCEMENT SCHEDULE |
| C | CMU WALL. FOR SIZE, SEE PLANS AND REINFORCEMENT SCHEDULE. |
| D | TYP. VERTICAL REINF., SEE REINFORCEMENT SCHEDULE (U.O.N. BY SECTION). FILL CELLS CONTAINING REINF. SOLID W/ GROUT . |
| E | (2)-#5 HORIZ. REINF. AT TOP OF WALL GROUTED SOLID IN BOND BEAM COURSE. PLACE REINF. ONE COURSE LOWER WHERE WALL ABUTS FLOOR ABOVE. |
| F | VERT. FULL HEIGHT REINF. IN SOLID GROUT, TYP. AT BOTH SIDES OF ALL WALL OPENINGS, SEE REINFORCEMENT SCHEDULE. |
| G | HORIZ. JOINT REINFORCING, SEE GENERAL NOTES. |
| H | PROVIDE REINFORCING DOWELS BETWEEN FDN. AND MASONRY WALL EQUAL TO SIZE AND SPACING OF MASONRY VERT. WALL REINFORCING (MAX. SPACING = 4'-0"o.c.). REINFORCING DOWELS SHALL EXTEND INTO MASONRY WALLS AND SHALL BE LAPPED 48 BAR DIAM. |
| J | PROVIDE REINFORCING DOWELS BETWEEN FTG. AND FDN. WALL EQUAL TO SIZE AND SPACING OF MASONRY VERT. WALL REINFORCING (MAX. SPACING = 4'-0"O.C.). REINFORCING DOWELS SHALL EXTEND INTO MASONRY WALLS AND SHALL BE LAPPED 48 BAR DIAM. |

## REINFORCEMENT SCHEDULE

| WALL DESCRIPTION | WALL ELEVATION TYPE | VERTICAL REINFORCEMENT |
|---|---|---|
| 8" CMU SHEARWALLS, BRG. WALLS AND EXTERIOR WALLS | A | (D) #5 AT 48"O.C.<br>(B) (3)-#5's<br>(F) (1)-#5 |
| 12" CMU ELEVATOR SHAFT WALLS | A | (D) #5 AT 48" O.C.<br>(E) (2) - #5's<br>(F) (1)-#5 |
| 6", 8" CMU PARTITIONS | B | (D) #4 AT 48"O.C.<br>(B) (1)-#4<br>(F) (1)-#4<br>NOTE: ALL CMU PARTITIONS MUST BE BRACED AT EACH FLOOR LEVEL. |
| | | |
| | | |

- SEE WALL ELEVATIONS (A) AND (B) FOR PLACEMENT OF REINFORCEMENT AND ADDITIONAL REQUIREMENTS.
- ALL WALLS SHALL HAVE HORIZ. JOINT REINFORCEMENT AS PER GENERAL NOTES. AT SHEAR WALLS PROVIDE ADDITIONAL HORIZ. JOINT REINFORCEMENT AS PER "TYP. REINF. ARRANGEMENTS AT CMU SHEAR WALL ENDS, CORNERS, AND INTERSECTIONS."

NOTES:
1. FOR SHEAR WALL LOCATIONS AND EXTENT, SEE FRAMING AND FDN. PLANS.
2. FOR CMU WALL LOCATIONS AND EXTENT, SEE ARCH. DWGS.
3. SEE ARCH. DWGS. FOR LOCATIONS OF CONTROL JOINTS. DO NOT LOCATE CONTROL JOINTS WITHIN 32" OF MASONRY OPENINGS.
4. ALL CMU CELLS CONTAINING VERTICAL REINFORCEMENT SHALL BE GROUTED SOLID.
5. ALL GROUTED CELLS SHALL BE MECHANICALLY VIBRATED IN ACCORDANCE WITH ACI 530. IN ADDITION, AFTER 10 MINUTES, MECHANICALLY VIBRATE GROUTED CELLS A SECOND TIME.
6. BOND BEAM AT SLOPING STEEL BEAMS/ROOFS/CEILINGS: ELEVATION OF CONTINUOUS BOND BEAM MUST VARY W/ SLOPING STL. BM./ROOF/CEILING. WHERE CHANGES COURSE, RUN BOND BEAM IN BOTH COURSES FOR A MINIMUM OF 8'-0"

## (1) TYPICAL CONCRETE MASONRY WALL REINFORCEMENT DETAIL
NO SCALE

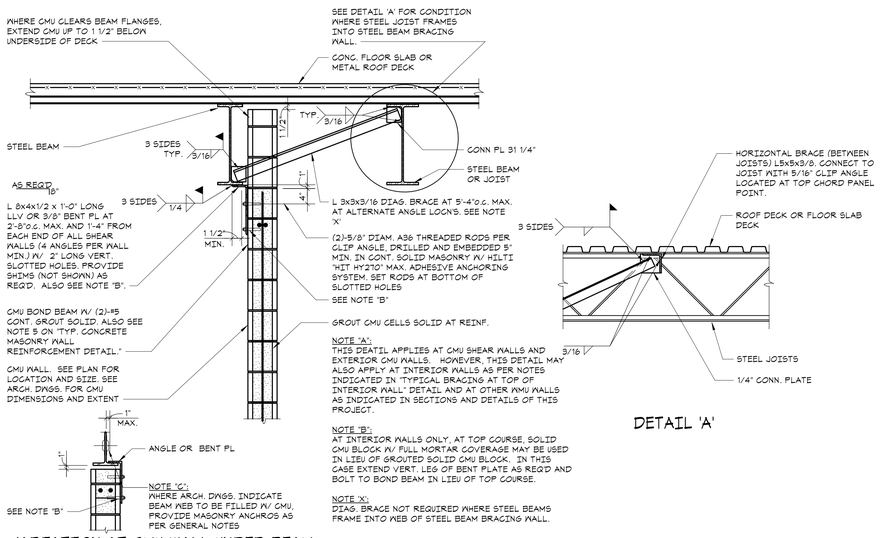


## (2) TYPICAL CONNECTION DETAIL AT TOP OF SHEAR/EXTERIOR WALLS
NO SCALE

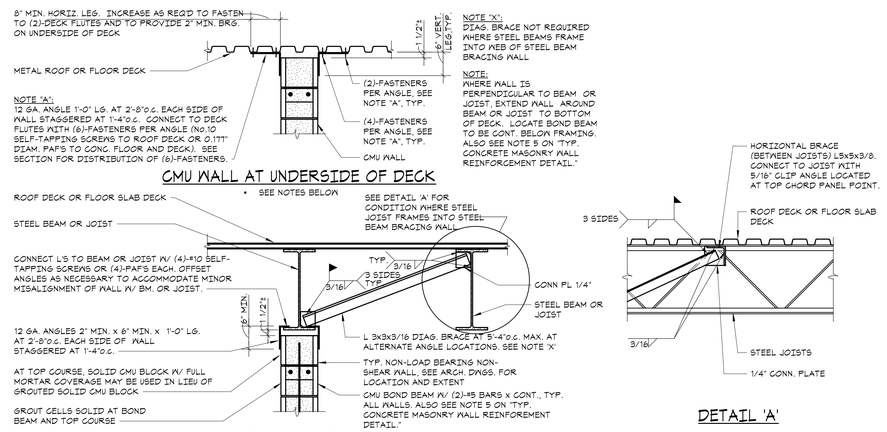


## (3) TYPICAL BRACING DETAIL AT TOP OF PARTITION WALL
NO SCALE

NOTES:
1. THESE DETAILS APPLY AT INTERIOR CMU WALLS WHICH ARE NOT SHEAR WALLS AND ARE NON-LOAD BEARING. SEE ARCHITECTURAL DRAWINGS FOR SIZE, LENGTH, AND LOCATION OF INTERIOR CMU WALLS.
2. BRACING AT TOP OF WALL IS NOT REQURIED BETWEEN INTERSECTING CMU WALLS SPACED LESS THAN 10 FEET FOR 4" WALLS, 14 FEET FOR 6" WALLS, 17 FEET FOR 8" WALLS, AND 21 FEET FOR 12" WALLS.
3. WHERE LOCATION OF CMU WALL FACE IS OFF BEAM/JOIST CENTERLINE SUCH THAT ABOVE GAGE ANGLES AT STEEL BEAM OR STEEL DECK CAN NOT SANDWICH CMU WALL FROM BOTH SIDES, BRACE CMU WALL WITH STEEL ANGLES/BENT PLATES AND THREADED RODS SIMILAR TO SECTION "TYPICAL CONNECTION DETAIL AT TOP OF SHEAR/EXTERIOR WALLS", EXCEPT IN LIEU OF WELDING ANGLE/BENT PLATE TO BOTTOM FLAGE OF BEAM, BOLT TO BOTTOM FLANGE OF BEAM WITH (2) 3/4" DIAM. A325 BOLTS IN 1 7/8" LONG HORIZONTAL SLOTTED HOLES (SLOTS PARALLEL TO SPAN OF BEAM).

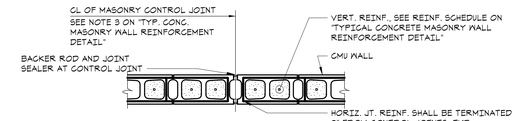


## PLAN DETAIL AT WALL ENDS AND CONTROL JOINTS

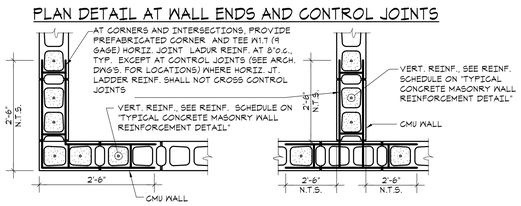


## PLAN DETAIL AT CORNERS AND INTERSECTIONS

- TYPICAL HORIZONTAL JOINT REINFORCING (NOT SHOWN FOR CLARITY).

## (4) TYPICAL MASONRY WALL PLAN DETAILS
NO SCALE

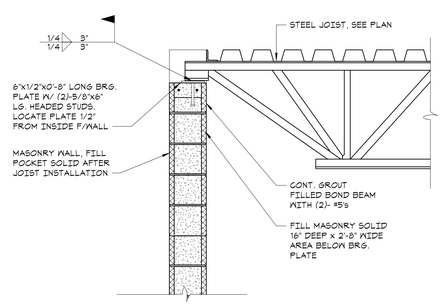


## (5) TYPICAL STL. JOIST BRG POCKET DETAIL
NO SCALE

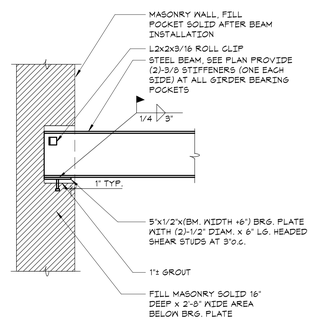


## (6) TYPICAL BEAM BRG. POCKET DETAIL
NO SCALE

# GREENWICH HS CARDINAL STADIUM PHASE 1

GREENWICH PUBLIC SCHOOLS
10 HILLSIDE ROAD
GREENWICH CT 06830


KG+D listen imagine build
KG+D . ARCHITECTS PC
285 MAIN STREET MOUNT KISCO . NEW YORK . 10549
P:914.666.5900 KGDARCHITECTS.COM

The DiSalvo Engineering Group
Structural Engineers
83 Wooster Heights Road | Suite 200
Lee Farm Corporate Park | Danbury, CT 06810
(203) 490-4140 | www.tdeg.com


PHASE 1 CONSTRUCTION DOCUMENTS

GENERAL NOTE :
ALL KIOSK RELATED CONSTRUCTION IS CONSIDERED ADD ALTERNATE #2


OWNERSHIP, USE AND ALTERATION OF DOCUMENTS:
The Client acknowledges that the documents, drawings, specifications including electronic media files are instruments of The DiSalvo Engineering Group's services and shall remain the property of The DiSalvo Engineering Group. The Client or any person or entity that acquires or obtains the drawings and specifications from or through The Client shall not use them on any other project, shall not modify, alter or change the drawings and specifications without written authorization from The DiSalvo Engineering Group. Furthermore, The Client agrees to the fullest extent permitted by law to indemnify and hold harmless The DiSalvo Engineering Group, its officers, directors and employees from any and all claims, suits, liability, demands or costs, including attorney fees arising out of or resulting therefrom.


Professional Seal

| No. | Date | Issue |
|---|---|---|
| 3 | 11/10/20 | PHASE 1 CONSTRUCTION DOCUMENTS |
| 2 | 08/12/20 | ISSUE FOR PERMIT |
| 1 | 08/29/19 | DESIGN DEVELOPMENT |

Sheet Title
MASONRY SCHEDULE AND TYPICAL DETAILS

| Job No. | Date |
|---|---|
| 18144.00 | 11-01-2018 |
| Scale: AS NOTED | Drawn / Checked: JM EM |

Sheet Number
S401

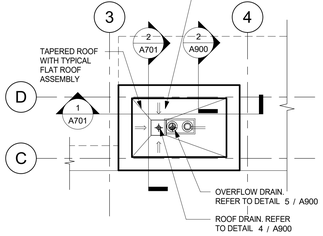


4 ELEVATOR ROOF PLAN
1/8" = 1'-0"

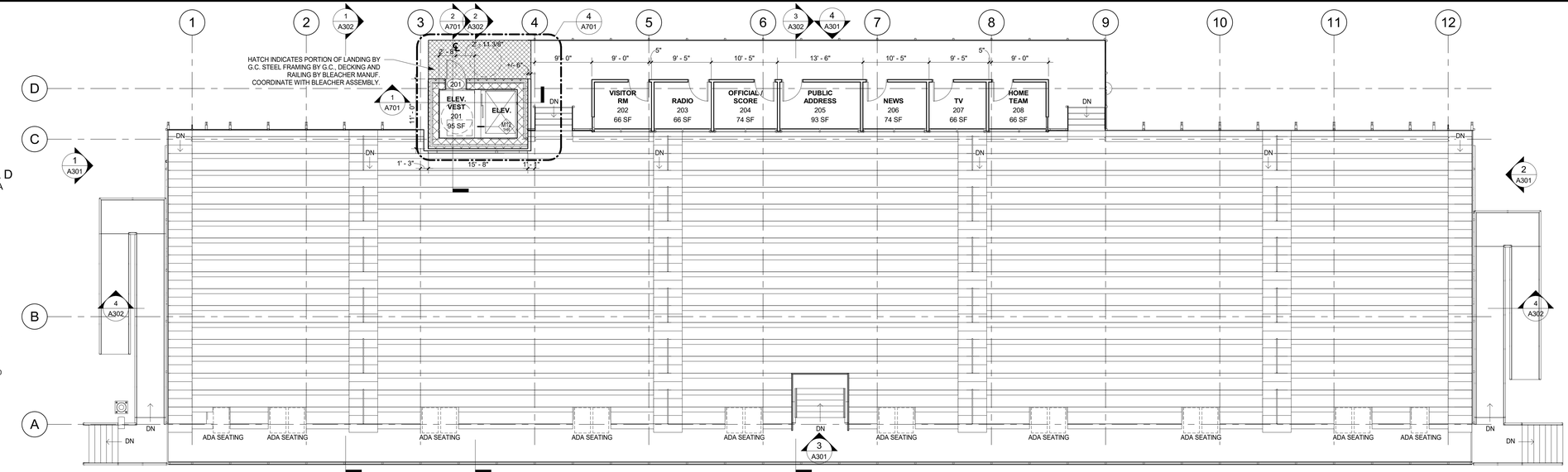


3 PRESSBOX FLOOR PLAN
1/8" = 1'-0"

## ROOF NOTES

1. DIMENSIONS AND CONDITIONS ON THE ROOF PLAN AND DETAILS ARE APPROXIMATE AND SHALL BE CONFIRMED BY THE CONTRACTOR. ONLY CERTAIN FASTENERS ARE SHOWN ON THE DWGS.. REFER TO THE SPECIFICATIONS FOR ADDITIONAL FASTNERE REQUIREMENTS.
2. PERFORM WHATEVER WORK IS REQUIRED SO THE DRAIN LINES ARE CLEAN, CLEAR AND FREE FLOWING CONDITION AT THE COMPLETION OF THE PROJECT.
3. SET CONDUIT AND PIPES ON 1x1 FOOT x 2 INCH THICK CONCRETE PAVERS SET ON WALKWAY PADS SPACES 5 FEET ON CENTER. SECURE CONDUITS AND PIPES TO THE PAVERS WITH GALVANIZED CLIPS AND STAINLESS STEEL NAIL-INS.
4. SEE MECHANICAL DRAWINGS FOR ADDITIONAL INFORMATION.
5. R-VALUE REQUIRED TO MEET 2018 STATE BUILDING CODE ICC ENERGY CONSERVATION CODE TABLE C402.2, CLIMATE ZONE 5A CONTINUOUS INSULATION ENTIRELY ABOVE DECK, R=30.
6. TAPERED POLYISO INSULATION SHALL SLOPE 1/4" PER FOOT ON NEW ROOFS, MINIMUM STARTING THICKNESS SHALL BE 5" UNLESS OTHERWWISE SHOWN.
7. INSTALL 1/4" THICK COVER BOARD OVER ALL POLYISO INSULATION.

## ROOF PROTECTION NOTES

1. DO NOT STORE MATERIAL OR EQUIPMENT, AND DO NOT PILE DEBRIS ON ROOF AREAS.
2. INSTALL 1 INCH THICK EXTRUDED POLYSTYRENE INSULATION OVER 6 MIL FIRE RETARDANT POLYETHLENE, COVERED WITH 2X10 WOOD PLANKS TO PROTECT ROOFING WHERE CONSTRUCTION WORK AND TRAFFIC WILL OCCUR.
3. NEATLY CUT AND POSITION ROOF PROTECTION COMPONENTS TO FIT WITHIN 1/2 INCH OF ROOF PENETRATIONS, EAVES AND CHANGE IN ELEVATIONS.
4. DO NOT COVER THE ROOF DRAINS. MAINTAIN THE ROOF STRAINERS VISIBLE AND CLEAR AT ALL TIMES.

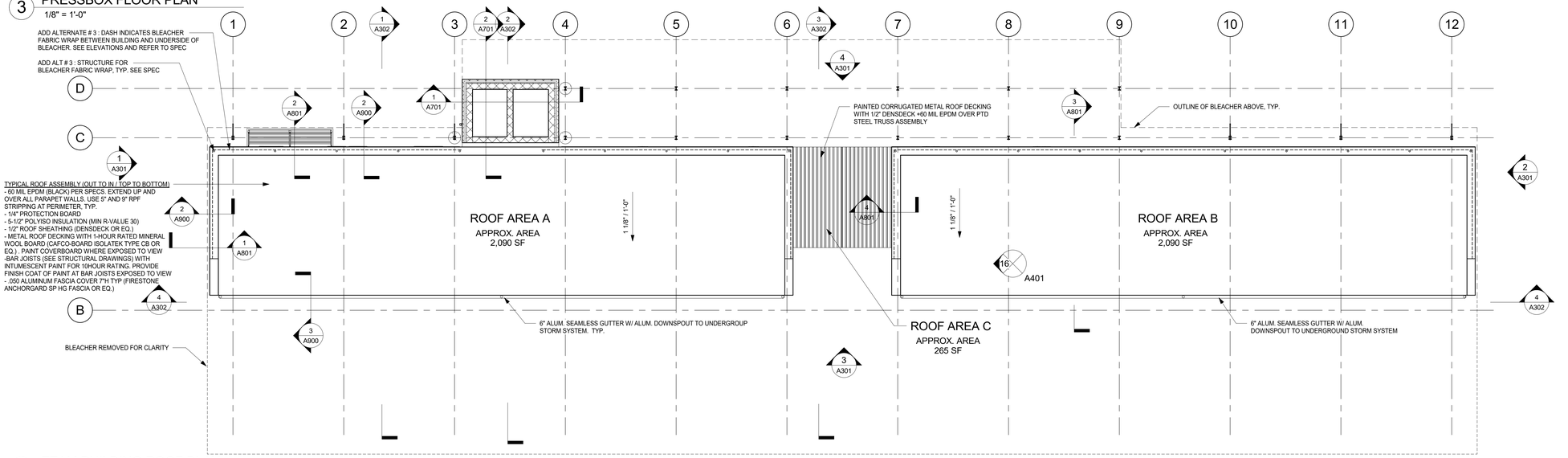


2 TEAM BUILDING ROOF PLAN
1/8" = 1'-0"

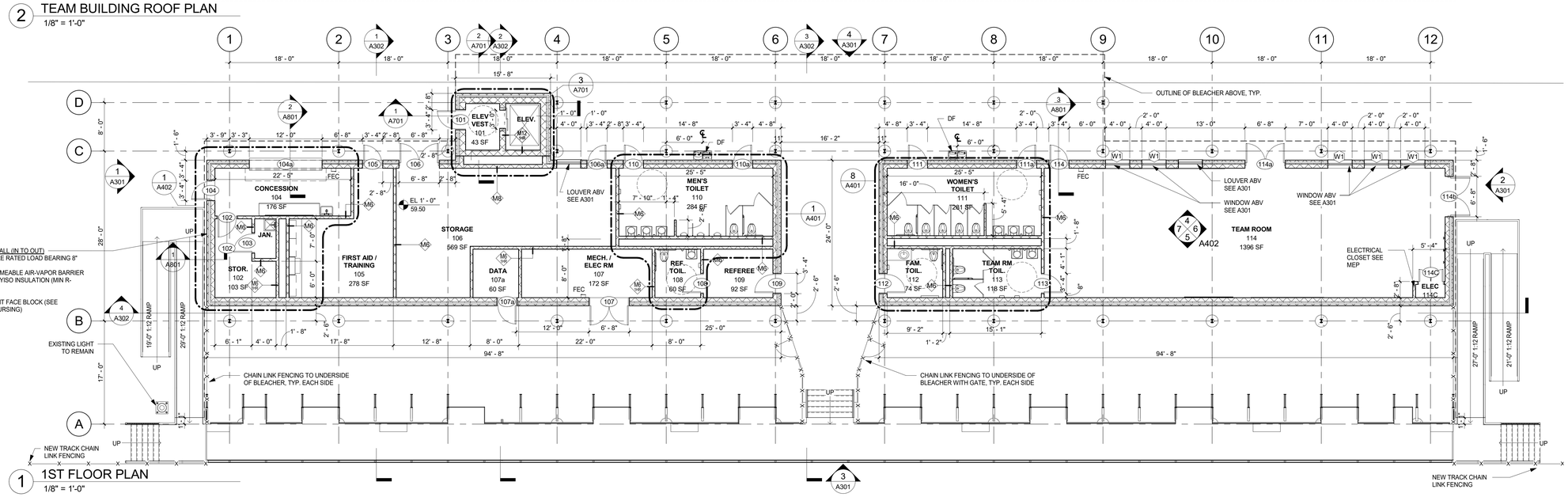


1 1ST FLOOR PLAN
1/8" = 1'-0"

# GREENWICH HS CARDINAL STADIUM PHASE 1

GREENWICH PUBLIC SCHOOLS
10 HILLSIDE ROAD
GREENWICH CT 06830

KG+D listen imagine build
KG+D . ARCHITECTS PC
285 MAIN STREET MOUNT KISCO . NEW YORK . 10549
P:914.666.5900 KGDARCHITECTS.COM

CONSTRUCTION DOCUMENTS

TRUE NORTH PROJECT NORTH

NOTE: ALL IDEAS, DESIGNS, ARRANGEMENTS AND PLANS INDICATED OR REPRESENTED BY THIS DRAWING ARE OWNED BY AND ARE THE PROPERTY OF KAEYER, GARBINET, & DAVIDSON ARCHITECTS, PC (KG&D), AND WERE CREATED FOR USE ON THIS PROJECT. NONE OF SUCH IDEAS, DESIGNS, ARRANGEMENTS OR PLANS SHALL BE USED BY OR DISCLOSED TO ANY PURPOSE WHATSOEVER WITHOUT THE WRITTEN PERMISSION OF (KG&D).

WRITTEN DIMENSIONS ON THIS DRAWING SHALL HAVE PRECEDENCE OVER SCALED DIMENSIONS. CONTRACTOR SHALL VERIFY ALL ACTUAL DIMENSIONS AND CONDITIONS ON THE JOB AND THE ARCHITECT MUST BE NOTIFIED OF ANY VARIATIONS FROM DIMENSIONS AND CONDITIONS SHOWN. SHOP DETAILS MUST BE SUBMITTED TO THIS OFFICE FOR APPROVAL BEFORE PROCEEDING WITH FABRICATION.

ALTERATIONS BY ANY PERSON, IN ANY WAY, OF ANY ITEM CONTAINED ON THIS DOCUMENT, UNLESS ACTING UNDER THE DIRECTION OF THE LICENCED ARCHITECT WHOSE PROFESSIONAL SEAL IS AFFIXED HERETO, IS A VIOLATION OF TITLE VII, SECT. 69.5 (s) OF NEW YORK STATE LAW.
COPYRIGHT KAEYER, GARBINET + DAVIDSON ARCHITECTS & ENGINEERS, PC
ALL RIGHTS RESERVED.

Professional Seal

| No. | Date | Issue |
|---|---|---|
| 4 | 11/10/20 | PHASE 1 CON. DOCS. |
| 3 | 10/30/20 | PHASE 1B SITE PLAN APP. |
| 2 | 08/12/20 | ISSUE FOR PERMIT |
| 1 | 08/29/19 | DESIGN DEVELOPMENT |

Sheet Title

NEW CONSTRUCTION PLANS

| Job No. | Date |
|---|---|
| 2018-1035 | 07/08/19 |
| Scale: AS NOTED | Drawn / Checked: - |

Sheet Number

A201

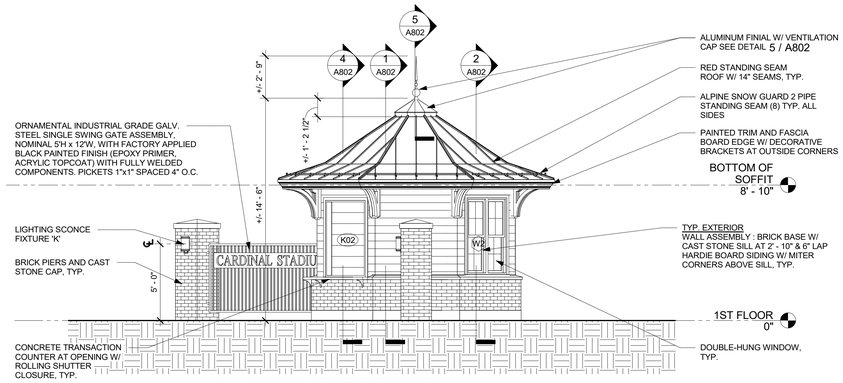


11 KIOSK WEST ELEVATION
1/4" = 1'-0"

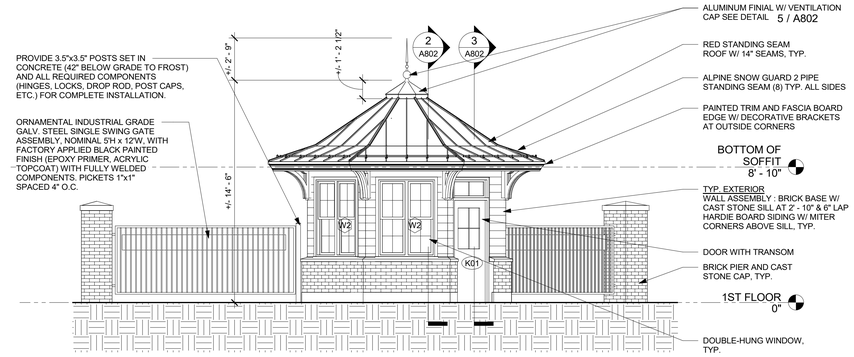


10 KIOSK SOUTH ELEVATION
1/4" = 1'-0"

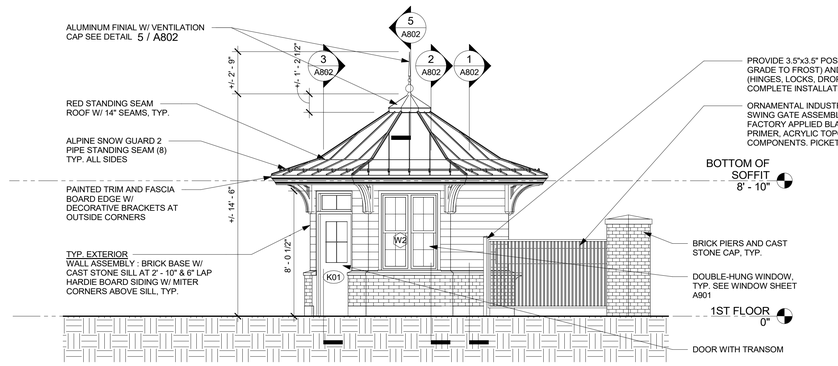


9 KIOSK EAST ELEVATION
1/4" = 1'-0"

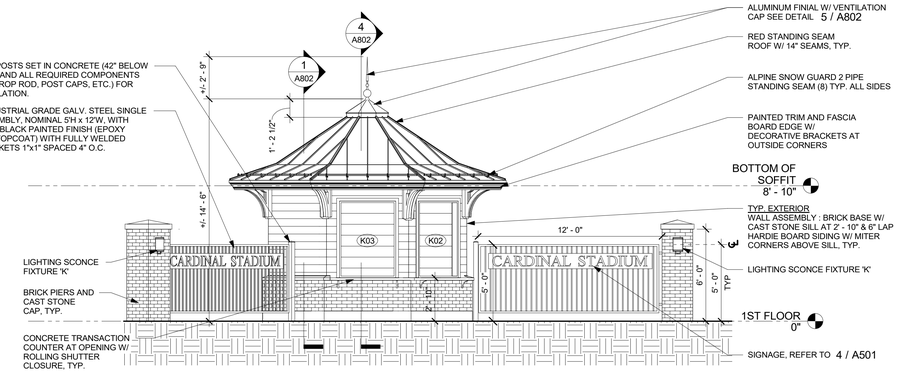


8 KIOSK NORTH ELEVATION
1/4" = 1'-0"

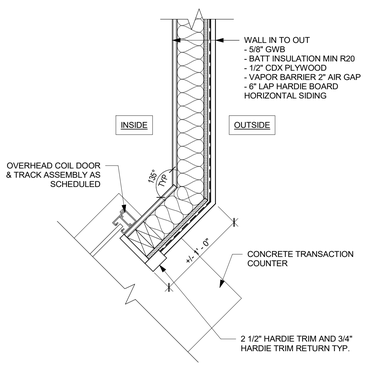


7 WOOD STUD WALL DETAIL @ COIL DOOR
1 1/2" = 1'-0"

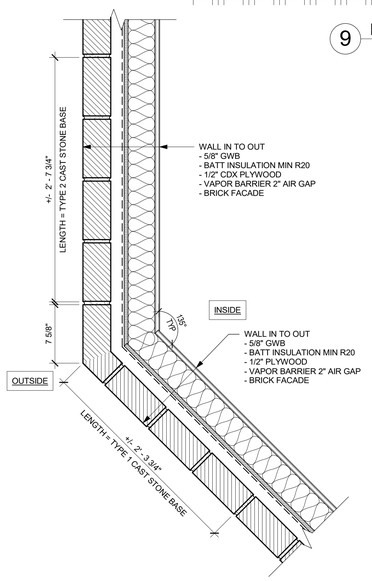


6 WOOD STUD WALL DETAIL @ CORNER
1 1/2" = 1'-0"

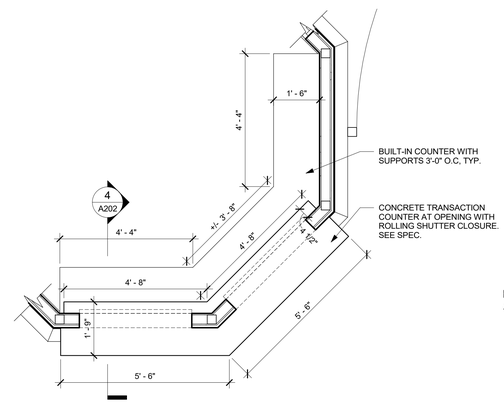


3 KIOSK COUNTER ENLARGED PLAN
1/2" = 1'-0"

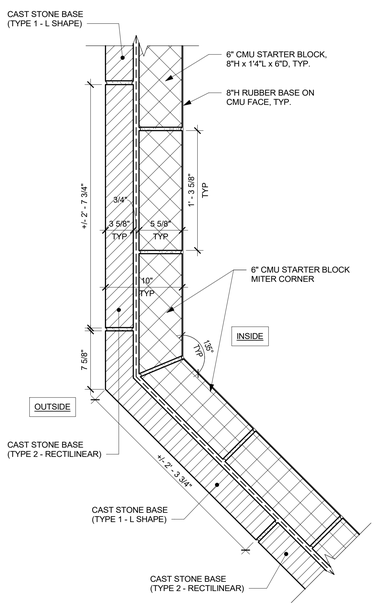


5 CMU BASE COURSE DETAIL @ CORNER
1 1/2" = 1'-0"

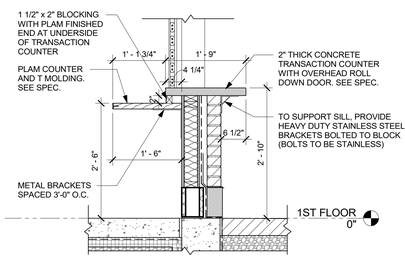


4 TRANSACTION DESK DETAIL
3/4" = 1'-0"

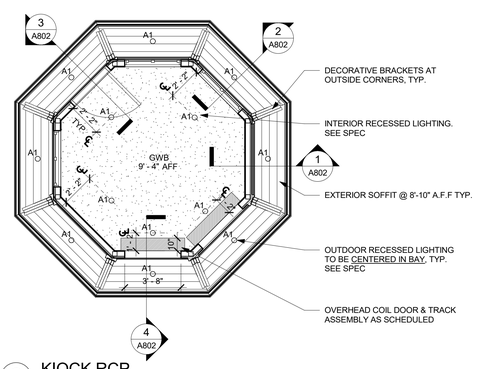


2 KIOCK RCP
1/4" = 1'-0"

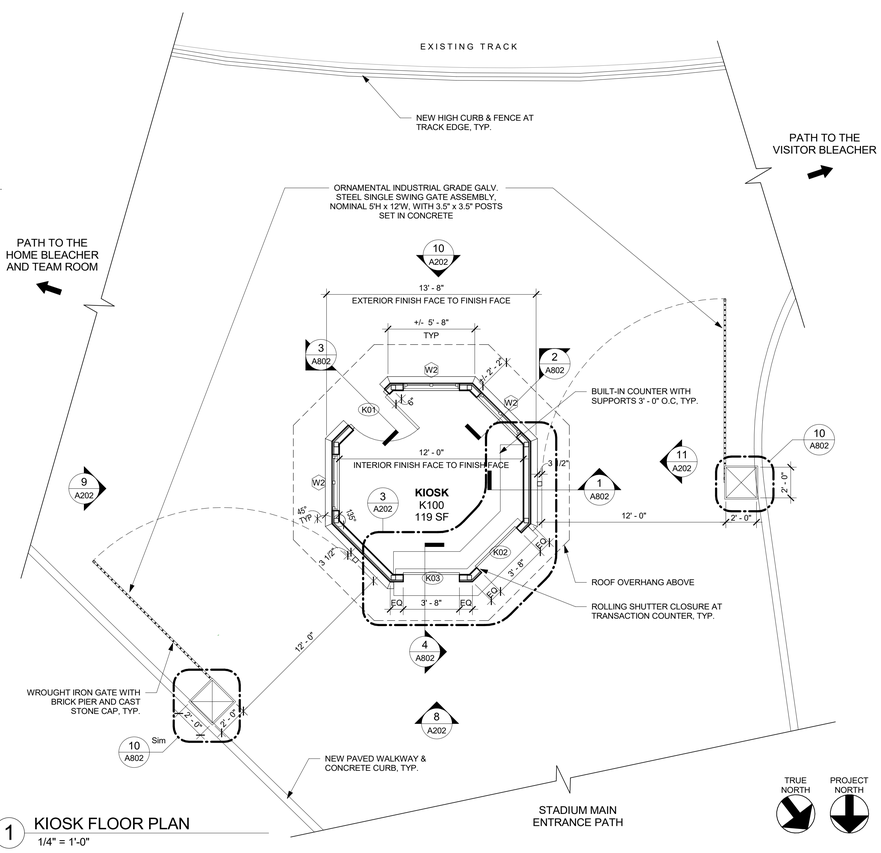


1 KIOSK FLOOR PLAN
1/4" = 1'-0"

# GREENWICH HS CARDINAL STADIUM PHASE 1

GREENWICH PUBLIC SCHOOLS
10 HILLSIDE ROAD
GREENWICH, CT 06830

KG+D listen imagine build
KG+D . ARCHITECTS PC
285 MAIN STREET MOUNT KISCO . NEW YORK . 10549
P:914.666.5900 KGDARCHITECTS.COM

CONSTRUCTION DOCUMENTS

GENERAL NOTE :
ALL KIOSK RELATED CONSTRUCTION IS CONSIDERED ADD ALTERNATE #2

NOTE: ALL IDEAS, DESIGNS, ARRANGEMENTS AND PLANS INDICATED OR REPRESENTED BY THIS DRAWING ARE OWNED BY AND ARE THE PROPERTY OF KAEYER, GARMENT, & DAVIDSON ARCHITECTS, PC (KG&D), AND WERE CREATED FOR USE ON THIS PROJECT. NONE OF SUCH IDEAS, DESIGNS, ARRANGEMENTS OR PLANS SHALL BE USED BY OR DISCLOSED TO ANY PURPOSE WHATSOEVER WITHOUT THE WRITTEN PERMISSION OF (KG&D).

WRITTEN DIMENSIONS ON THIS DRAWING SHALL HAVE PRECEDENCE OVER SCALED DIMENSIONS. CONTRACTOR SHALL VERIFY ALL ACTUAL DIMENSIONS AND CONDITIONS ON THE JOB AND THE ARCHITECT MUST BE NOTIFIED OF ANY VARIATIONS FROM DIMENSIONS AND CONDITIONS SHOWN. SHOP DETAILS MUST BE SUBMITTED TO THIS OFFICE FOR APPROVAL BEFORE PROCEEDING WITH FABRICATION.

ALTERATIONS BY ANY PERSON, IN ANY WAY, OF ANY ITEM CONTAINED ON THIS DOCUMENT, UNLESS ACTING UNDER THE DIRECTION OF THE LICENSED ARCHITECT WHOSE PROFESSIONAL SEAL IS AFFIXED HERETO, IS A VIOLATION OF TITLE VII, SECT. 7209 OF NEW YORK STATE LAW.
COPYRIGHT KAEYER, GARMENT + DAVIDSON ARCHITECTS & ENGINEERS, PC
ALL RIGHTS RESERVED.

Professional Seal

| No. | Date | Issue |
|---|---|---|
| 4 | 11/10/20 | PHASE 1 CON. DOCS. |
| 3 | 10/30/20 | PHASE 1B SITE PLAN APP. |
| 2 | 04/02/20 | SITE PLAN SUBMISSION |

Sheet Title

## KIOSK DRAWINGS (ADD ALT 2)

| | |
|---|---|
| Job No. Project Number | Date 03/31/20 |
| Scale AS NOTED | Drawn / Checked - |

Sheet Number

# A202

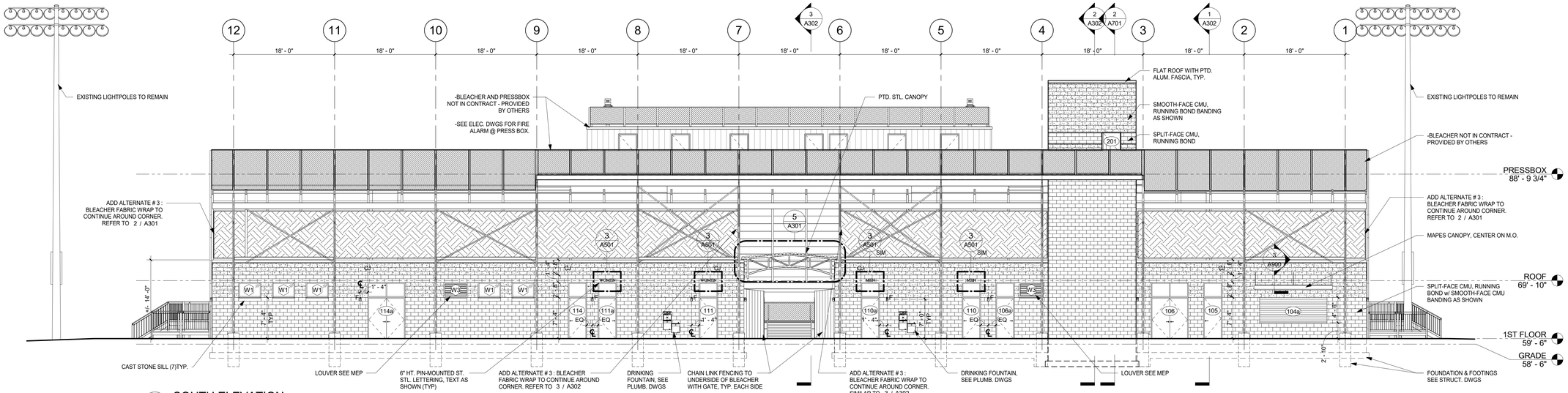


4 SOUTH ELEVATION
1/8" = 1'-0"

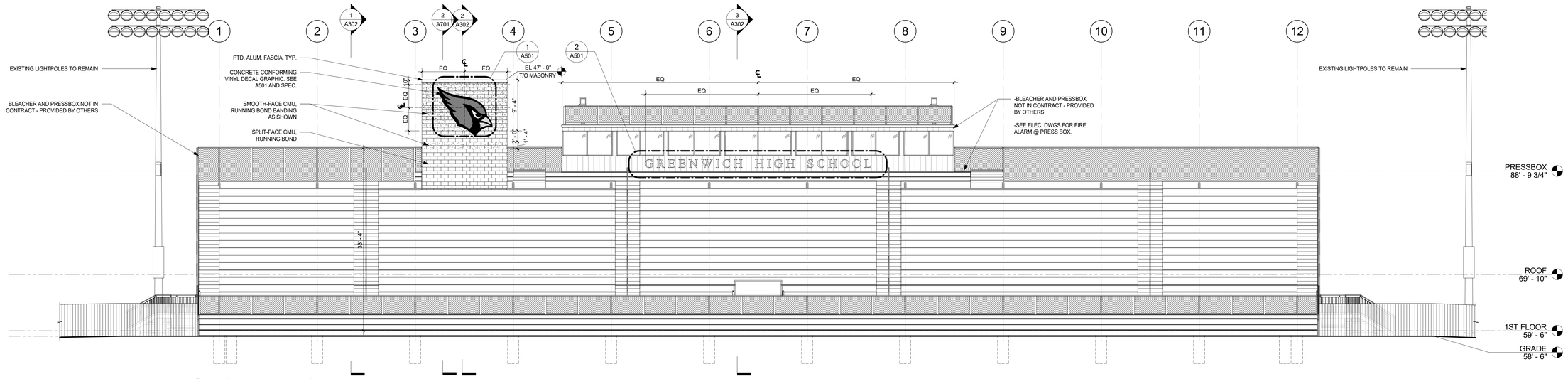


3 NORTH ELEVATION
1/8" = 1'-0"

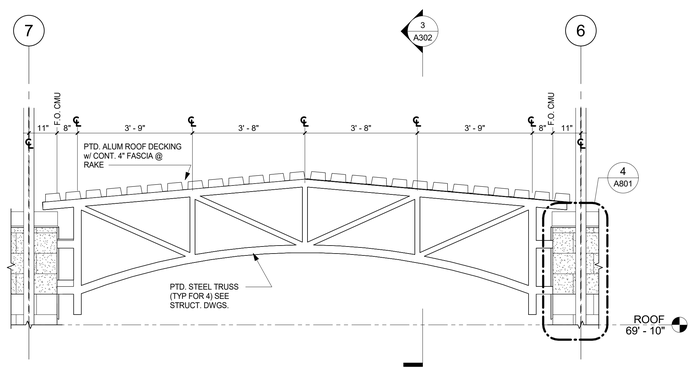


5 SOUTH ELEVATION - CANOPY
1/2" = 1'-0"

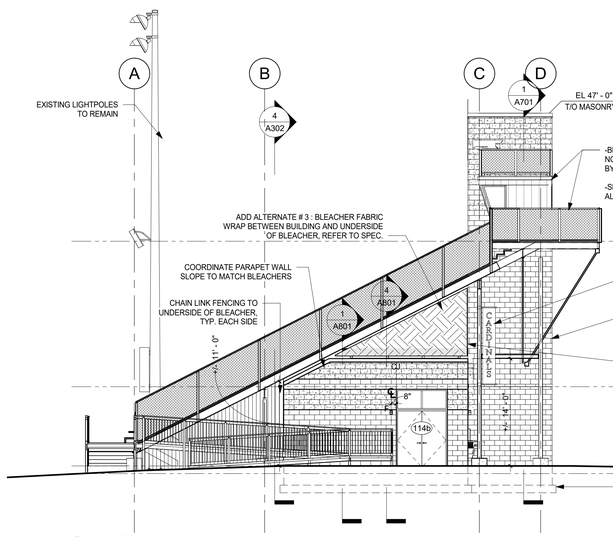


2 WEST ELEVATION
1/8" = 1'-0"

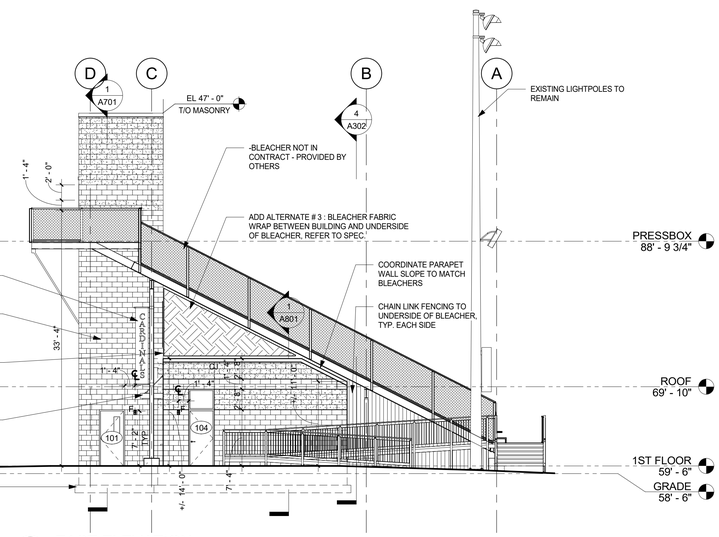


1 EAST ELEVATION
1/8" = 1'-0"

# GREENWICH HS CARDINAL STADIUM PHASE 1

GREENWICH PUBLIC SCHOOLS
10 HILLSIDE ROAD
GREENWICH CT 06830

KG+D . ARCHITECTS PC
285 MAIN STREET MOUNT KISCO . NEW YORK . 10549
P:914.666.5900 KGDARCHITECTS.COM

CONSTRUCTION DOCUMENTS

NOTE: ALL IDEAS, DESIGNS, ARRANGEMENTS AND PLANS INDICATED OR REPRESENTED BY THIS DRAWING ARE OWNED BY AND ARE THE PROPERTY OF KAEYER, GARBINT, & DAVIDSON ARCHITECTS, PC (KG&D), AND WERE CREATED FOR USE ON THIS PROJECT. NONE OF SUCH IDEAS, DESIGNS, ARRANGEMENTS OR PLANS SHALL BE USED BY OR DISCLOSED TO ANY PURPOSE WHATSOEVER WITHOUT THE WRITTEN PERMISSION OF (KG&D).

WRITTEN DIMENSIONS ON THIS DRAWING SHALL HAVE PRECEDENCE OVER SCALED DIMENSIONS. CONTRACTOR SHALL VERIFY ALL ACTUAL DIMENSIONS AND CONDITIONS ON THE JOB AND THE ARCHITECT MUST BE NOTIFIED OF ANY VARIATIONS FROM DIMENSIONS AND CONDITIONS SHOWN. SHOP DETAILS MUST BE SUBMITTED TO THIS OFFICE FOR APPROVAL BEFORE PROCEEDING WITH FABRICATION.

ALTERATIONS BY ANY PERSON, IN ANY WAY, OF ANY ITEM CONTAINED ON THIS DOCUMENT, UNLESS ACTING UNDER THE DIRECTION OF THE LICENSED ARCHITECT WHOSE PROFESSIONAL SEAL IS AFFIXED HERETO, IS A VIOLATION OF TITLE VII, SECT. 7209 (b) OF NEW YORK STATE LAW.
COPYRIGHT KAEYER, GARBINT • DAVIDSON ARCHITECTS & ENGINEERS, PC
ALL RIGHTS RESERVED

Professional Seal

| No. | Date | Issue |
|---|---|---|
| 4 | 11/10/20 | PHASE 1 CON. DOCS. |
| 3 | 10/30/20 | PHASE 1B SITE PLAN APP. |
| 2 | 08/12/20 | ISSUE FOR PERMIT |
| 1 | 08/29/19 | DESIGN DEVELOPMENT |

Sheet Title

## EXTERIOR ELEVATIONS

| Job No. | Date |
|---|---|
| 2018-1035 | 07/08/19 |
| Scale: AS NOTED | Drawn / Checked: - |

Sheet Number

A301

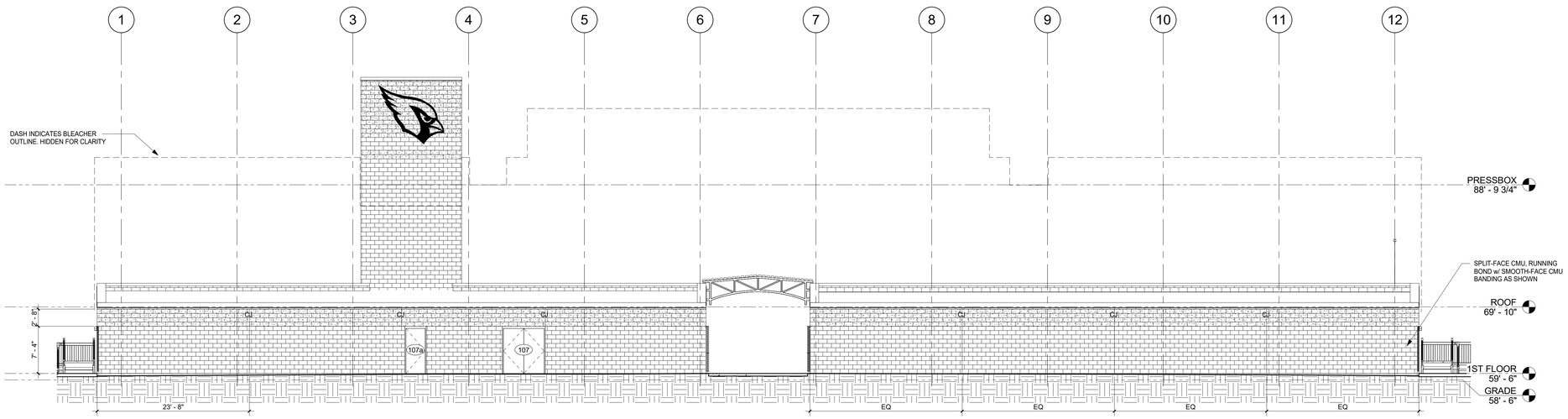


4 SECTION @ NORTH WALL
1/8" = 1'-0"

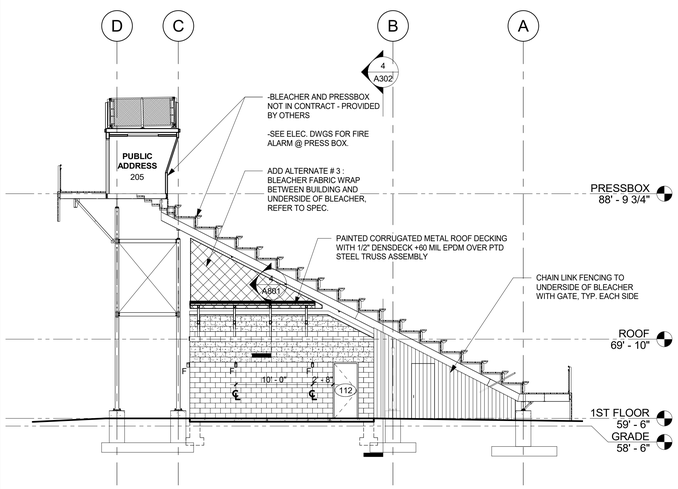


3 BUILDING AND BLEACHER SECTION 3
1/8" = 1'-0"

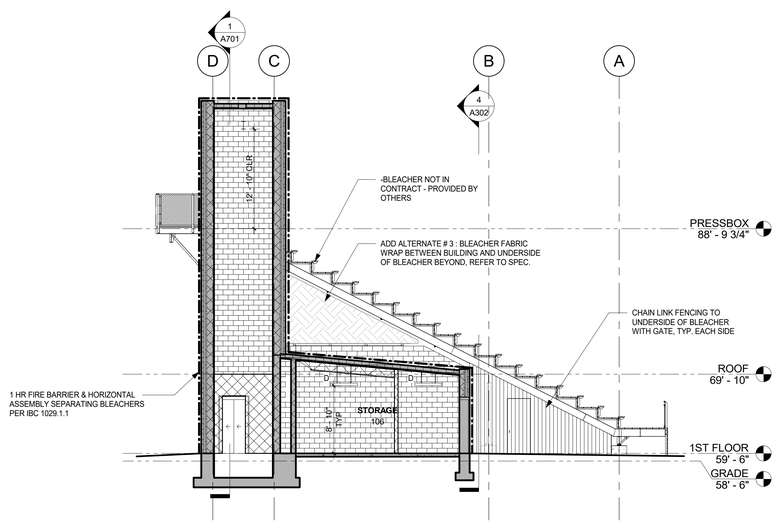


2 BUILDING AND BLEACHER SECTION 2
1/8" = 1'-0"

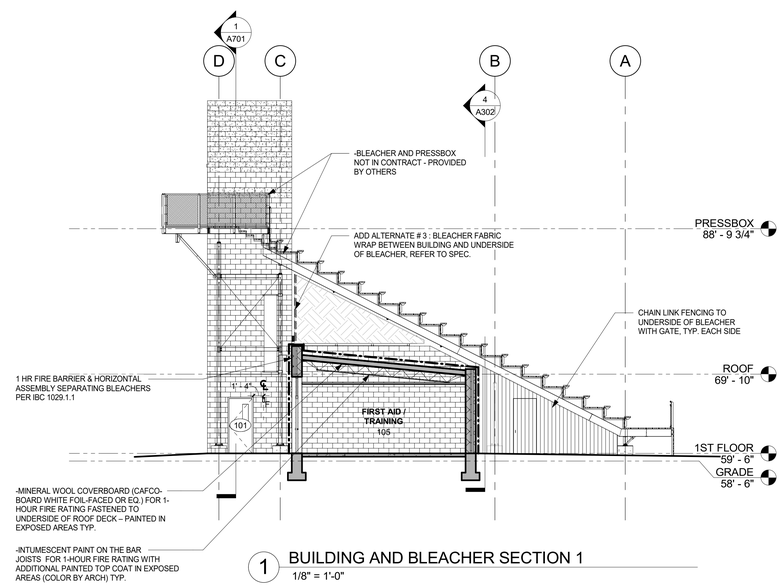


1 BUILDING AND BLEACHER SECTION 1
1/8" = 1'-0"

# GREENWICH HS CARDINAL STADIUM PHASE 1

GREENWICH PUBLIC SCHOOLS
10 HILLSIDE ROAD
GREENWICH CT 06830

KG+D listen imagine build
KG+D . ARCHITECTS PC
285 MAIN STREET MOUNT KISCO . NEW YORK . 10549
P:914.666.5900 KGDARCHITECTS.COM

CONSTRUCTION DOCUMENTS

NOTE: ALL IDEAS, DESIGNS, ARRANGEMENTS AND PLANS INDICATED OR REPRESENTED BY THIS DRAWING ARE OWNED BY AND ARE THE PROPERTY OF KAEYER, GARMENT + DAVIDSON ARCHITECTS, PC (KG&D), AND WERE CREATED FOR USE ON THIS PROJECT. NONE OF SUCH IDEAS, DESIGNS, ARRANGEMENTS OR PLANS SHALL BE USED BY OR DISCLOSED TO ANY PURPOSE WHATSOEVER WITHOUT THE WRITTEN PERMISSION OF (KG&D).

WRITTEN DIMENSIONS ON THIS DRAWING SHALL HAVE PRECEDENCE OVER SCALED DIMENSIONS. CONTRACTOR SHALL VERIFY ALL ACTUAL DIMENSIONS AND CONDITIONS ON THE JOB AND THE ARCHITECT MUST BE NOTIFIED OF ANY VARIATIONS FROM DIMENSIONS AND CONDITIONS SHOWN. SHOP DETAILS MUST BE SUBMITTED TO THIS OFFICE FOR APPROVAL BEFORE PROCEEDING WITH FABRICATION.

ALTERATIONS BY ANY PERSON, IN ANY WAY, OF ANY ITEM CONTAINED ON THIS DOCUMENT, UNLESS ACTING UNDER THE DIRECTION OF THE LICENSED ARCHITECT WHOSE PROFESSIONAL SEAL IS AFFIXED HERETO, IS A VIOLATION OF TITLE VII, SECT. 69.5 (b) OF NEW YORK STATE LAW.
COPYRIGHT KAEYER, GARMENT + DAVIDSON ARCHITECTS & ENGINEERS, PC
ALL RIGHTS RESERVED

Professional Seal

| No. | Date | Issue |
|---|---|---|
| 4 | 11/10/20 | PHASE 1 CON. DOCS. |
| 3 | 10/30/20 | PHASE 1B SITE PLAN APP. |
| 2 | 08/12/20 | ISSUE FOR PERMIT |

Sheet Title

## BUILDING SECTIONS

| Job No. | Date |
|---|---|
| 2018-1035 | 09/10/19 |
| Scale: AS NOTED | Drawn / Checked: - |

Sheet Number

A302

| | |
|---|---|
| A | ADA WALL- HUNG TOILET |
| B | STANDARD WALL-HUNG TOILET |
| C | STANDARD WALL-HUNG URINAL |
| D | ADA WALL-HUNG URINAL |
| E | URINAL SCREEN |
| F | WALL MIRROR w/ FRAME |
| G | LAVATORY |
| H | REAR TOILET GRAB BAR |
| J | SIDE TOILET GRAB BAR |
| K | SIDE TOILET VERTICAL GRAB BAR |
| L | TOILET PAPER ROLL DISPENSER |
| M | SANITARY DISPOSAL |
| N | LIQUID SOAP DISPENSER |
| P | ELECTRIC HAND DRYER |
| R | FLOOR MOUNTED OVERHEAD BRACED TOILET PARTITION |
| S | COAT HOOK |
| T | WALL-HUNG DRINKING FOUNTAIN |
| V | BABY CHANGING STATION |

NOTE:
ACCESSORIES L, M, N ARE SUPPLIED BY OWNER, INSTALLED BY GC.

ALL MIRRORS SHALL USE TEMPERED GLASS. PROVIDE ADDITIONAL FINISHED BLOCKING/SHIM AS REQ'D FOR MIRRORS HUNG PARTIALLY ON GYP AND TILE.

NOTE: ALL BABY CHANGING STATIONS NEED ADDITIONAL BLOCKING

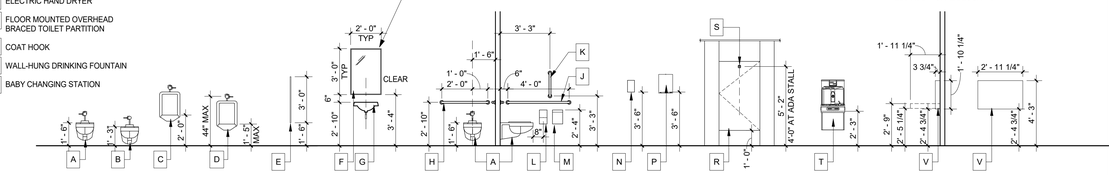


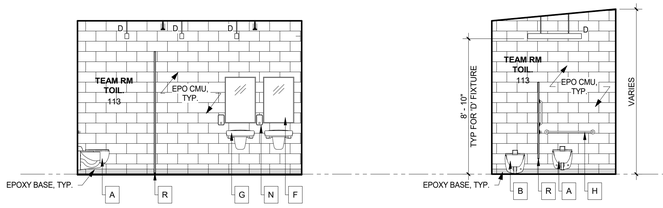


17 TEAM TOILET ELEVATION - SOUTH
1/4" = 1'-0"

16 TEAM TOILET ELEVATION - EAST
1/4" = 1'-0"

15 TEAM TOILET ELEVATION - NORTH
1/4" = 1'-0"

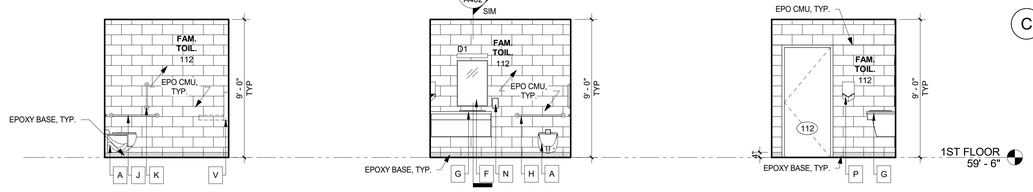


14 FAM. TOILET ELEVATION - WEST
1/4" = 1'-0"

13 FAM. TOILET ELEVATION - SOUTH
1/4" = 1'-0"

12 FAM. TOILET ELEVATION - EAST
1/4" = 1'-0"

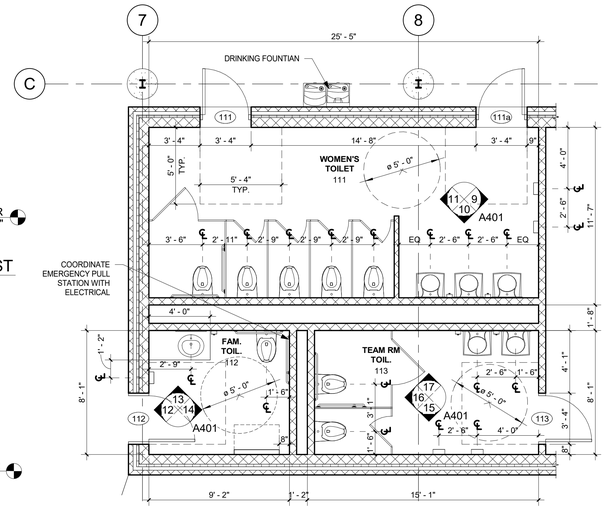


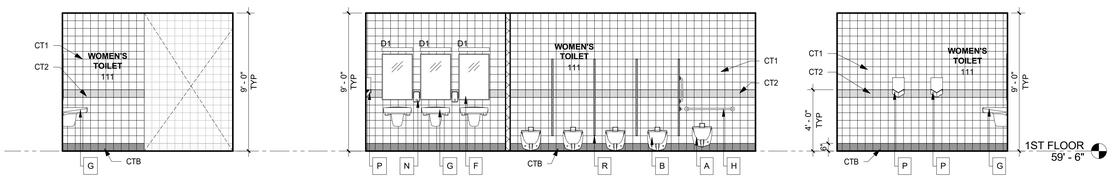


11 WOMENS TOILET ELEVATION - EAST
1/4" = 1'-0"

10 WOMENS TOILET ELEVATION - NORTH
1/4" = 1'-0"

9 WOMENS TOILET ELEVATION - WEST
1/4" = 1'-0"

8 WOMENS TOILET ROOM / FAM. TOIL / TEAM RM TOIL
1/4" = 1'-0"

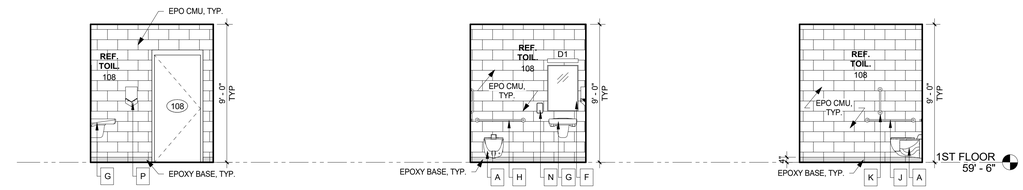


7 REF TOILET ELEVATION - WEST
1/4" = 1'-0"

6 REF TOILET ELEVATION - SOUTH
1/4" = 1'-0"

5 REF TOILET ELEVATION - EAST
1/4" = 1'-0"

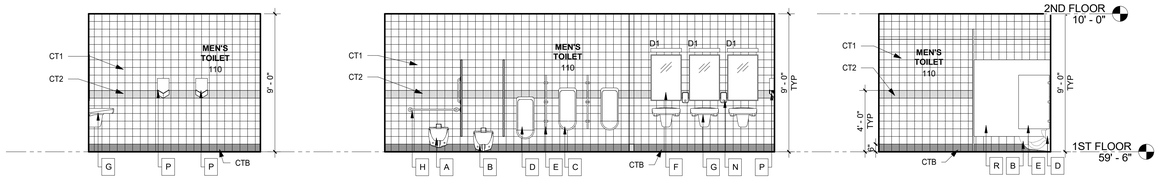


4 MENS TOILET ELEVATION- EAST
1/4" = 1'-0"

3 MENS TOILET ELEVATION- NORTH
1/4" = 1'-0"

2 MENS TOILET ELEVATION- WEST
1/4" = 1'-0"

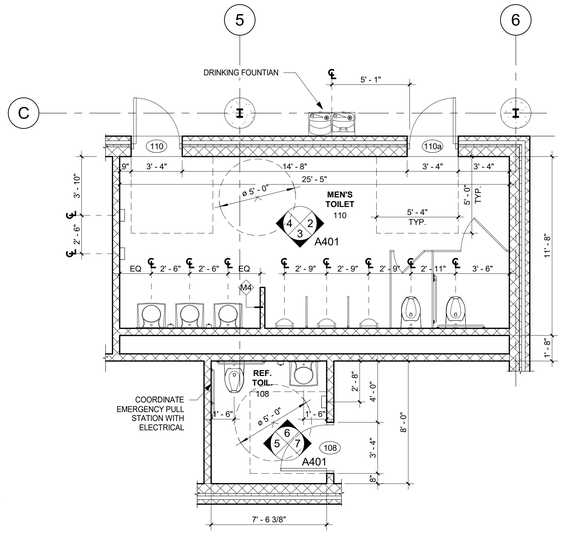


1 MEN TOILET ROOM & REF TOILET
1/4" = 1'-0"

# GREENWICH HS CARDINAL STADIUM PHASE 1

GREENWICH PUBLIC SCHOOLS
10 HILLSIDE ROAD
GREENWICH CT 06830


KG+D listen imagine build
KG+D . ARCHITECTS PC
285 MAIN STREET MOUNT KISCO . NEW YORK . 10549
P:914.666.5900 KGDARCHITECTS.COM


CONSTRUCTION DOCUMENTS


NOTE: ALL IDEAS, DESIGNS, ARRANGEMENTS AND PLANS INDICATED OR REPRESENTED BY THIS DRAWING ARE OWNED BY AND ARE THE PROPERTY OF KAEYER, GARMENT, & DAVIDSON ARCHITECTS, PC (KG&D), AND WERE CREATED FOR USE ON THIS PROJECT. NONE OF SUCH IDEAS, DESIGNS, ARRANGEMENTS OR PLANS SHALL BE USED BY OR DISCLOSED TO ANY PURPOSE WHATSOEVER WITHOUT THE WRITTEN PERMISSION OF (KG&D).

WRITTEN DIMENSIONS ON THIS DRAWING SHALL HAVE PRECEDENCE OVER SCALED DIMENSIONS. CONTRACTOR SHALL VERIFY ALL ACTUAL DIMENSIONS AND CONDITIONS ON THE JOB AND THE ARCHITECT MUST BE NOTIFIED OF ANY VARIATIONS FROM DIMENSIONS AND CONDITIONS SHOWN. SHOP DETAILS MUST BE SUBMITTED TO THIS OFFICE FOR APPROVAL BEFORE PROCEEDING WITH FABRICATION.

ALTERATIONS BY ANY PERSON, IN ANY WAY, OF ANY ITEM CONTAINED ON THIS DOCUMENT, UNLESS ACTING UNDER THE DIRECTION OF THE LICENSED ARCHITECT WHOSE PROFESSIONAL SEAL IS AFFIXED HERETO, IS A VIOLATION OF TITLE VII, SECT. 7209 OF NEW YORK STATE LAW.
COPYRIGHT KAEYER, GARMENT + DAVIDSON ARCHITECTS & ENGINEERS, PC ALL RIGHTS RESERVED.


Professional Seal

| No. | Date | Issue |
|---|---|---|
| 4 | 11/10/20 | PHASE 1 CON. DOCS. |
| 2 | 08/12/20 | ISSUE FOR PERMIT |
| 1 | 08/29/19 | DESIGN DEVELOPMENT |

Sheet Title
ENLARGED PLANS & INTERIOR ELEVATIONS

| Job No. | Date |
|---|---|
| 2018-1035 | 07/08/19 |
| Scale: AS NOTED | Drawn / Checked: - |

Sheet Number
A401

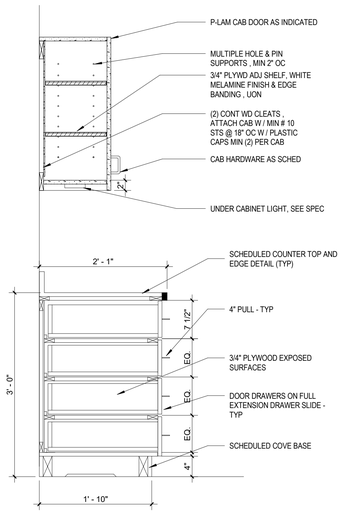


13 SECTION @ CABINET W/ DRAWERS & TOP CABINET
1" = 1'-0"

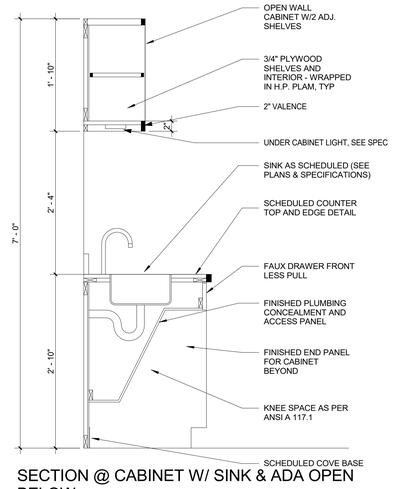


11 SECTION @ CABINET W/ SINK & ADA OPEN BELOW
1" = 1'-0"

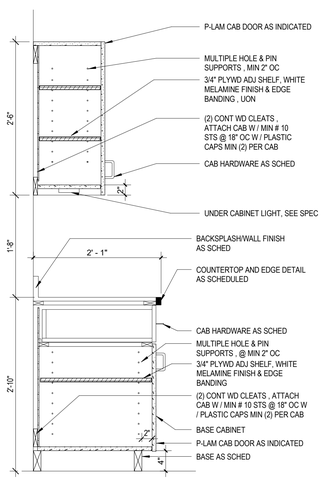


12 BASE CAB DOOR 34 WITH UPPER
1" = 1'-0"

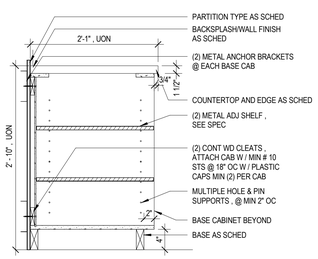


10 BASE CAB OPEN
1" = 1'-0"

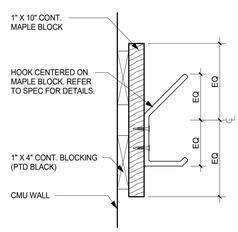


9 HOOK MOUNT DETAIL
3" = 1'-0"

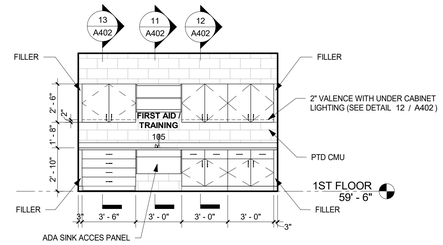


8 EAST ELEVATION @ FIRST AID/ TRAINING
1/4" = 1'-0"

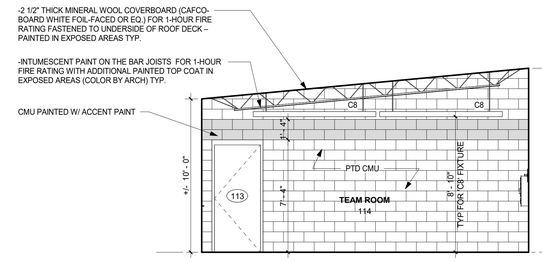


7 TEAM ROOM ELEVATIONS - EAST
1/4" = 1'-0"

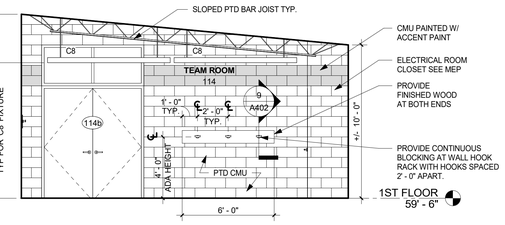


6 TEAM ROOM ELEVATIONS - WEST
1/4" = 1'-0"

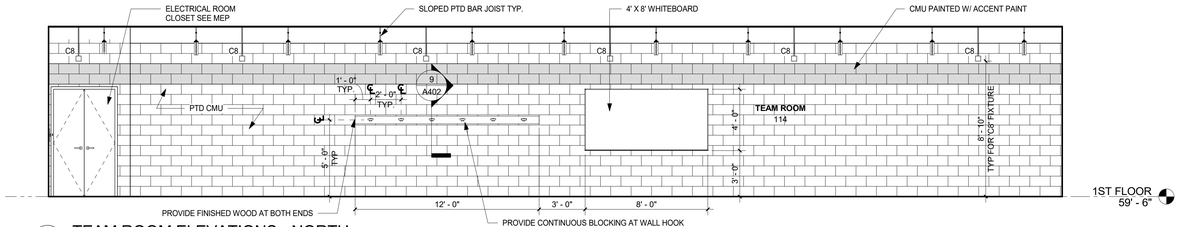


5 TEAM ROOM ELEVATIONS - NORTH
1/4" = 1'-0"

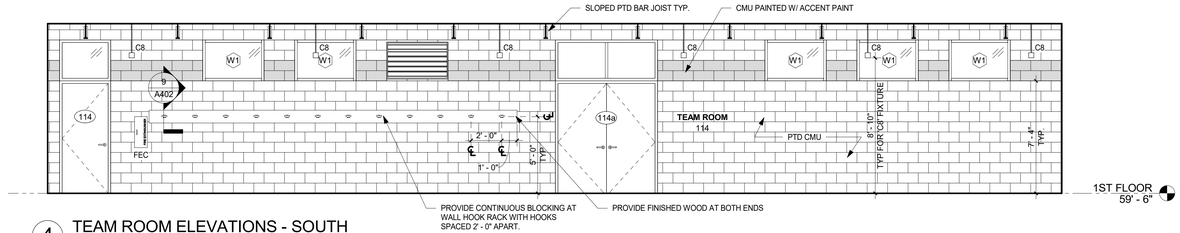


4 TEAM ROOM ELEVATIONS - SOUTH
1/4" = 1'-0"

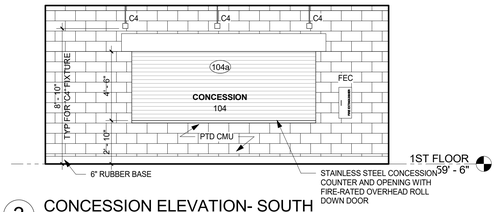


3 CONCESSION ELEVATION- SOUTH
1/4" = 1'-0"

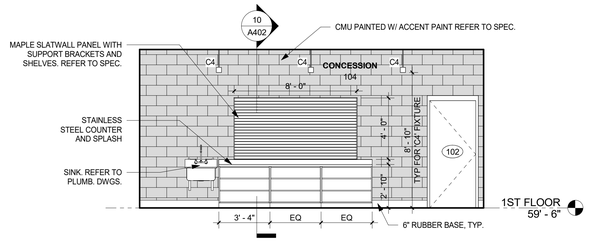


2 CONCESSION ELEVATION- NORTH
1/4" = 1'-0"

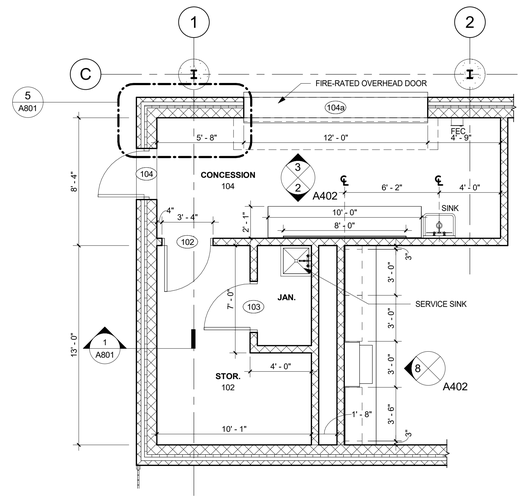


1 CONCESSION & STORAGE
1/4" = 1'-0"

# GREENWICH HS CARDINAL STADIUM PHASE 1

GREENWICH PUBLIC SCHOOLS
10 HILLSIDE ROAD
GREENWICH CT 06830


KG+D listen imagine build
KG+D . ARCHITECTS PC
285 MAIN STREET MOUNT KISCO . NEW YORK . 10549
P:914.666.5900 KGDARCHITECTS.COM


CONSTRUCTION DOCUMENTS


NOTE: ALL IDEAS, DESIGNS, ARRANGEMENTS AND PLANS INDICATED OR REPRESENTED BY THIS DRAWING ARE OWNED BY AND ARE THE PROPERTY OF KAEYER, GARMENT, & DAVIDSON ARCHITECTS, PC (KG&D), AND WERE CREATED FOR USE ON THIS PROJECT. NONE OF SUCH IDEAS, DESIGNS, ARRANGEMENTS OR PLANS SHALL BE USED BY OR DISCLOSED TO ANY PURPOSE WHATSOEVER WITHOUT THE WRITTEN PERMISSION OF (KG&D).

WRITTEN DIMENSIONS ON THIS DRAWING SHALL HAVE PRECEDENCE OVER SCALED DIMENSIONS. CONTRACTOR SHALL VERIFY ALL ACTUAL DIMENSIONS AND CONDITIONS ON THE JOB AND THE ARCHITECT MUST BE NOTIFIED OF ANY VARIATIONS FROM DIMENSIONS AND CONDITIONS SHOWN. SHOP DETAILS MUST BE SUBMITTED TO THIS OFFICE FOR APPROVAL BEFORE PROCEEDING WITH FABRICATION.

ALTERATIONS BY ANY PERSON, IN ANY WAY, OF ANY ITEM CONTAINED ON THIS DOCUMENT, UNLESS ACTING UNDER THE DIRECTION OF THE LICENCED ARCHITECT WHOSE PROFESSIONAL SEAL IS AFFIXED HERETO, IS A VIOLATION OF TITLE VII, SECT. 89.5 (b) OF NEW YORK STATE LAW.
COPYRIGHT KAEYER, GARMENT + DAVIDSON ARCHITECTS & ENGINEERS, PC
ALL RIGHTS RESERVED.


Professional Seal

| No. | Date | Issue |
|---|---|---|
| 4 | 11/10/20 | PHASE 1 CON. DOCS. |
| 2 | 08/12/20 | ISSUE FOR PERMIT |
| 1 | 08/29/19 | DESIGN DEVELOPMENT |

Sheet Title
ENLARGED PLANS & INTERIOR ELEVATIONS

| Job No. | Date |
|---|---|
| 2018-1035 | 07/08/19 |
| Scale | Drawn / Checked |
| AS NOTED | - |

Sheet Number
A402

GENERAL NOTE:
PROVIE MECHANICAL SIGNAGE MOUNTING. MOUNTING LOCATION TO COMPLY WITH 2010 ADA STANDARDS FOR ACCESSIBLE DESIGN SECTION 703.4 .

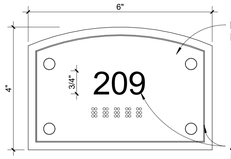


**TYPE A - TYPICAL ROOM IDENTIFICATION**

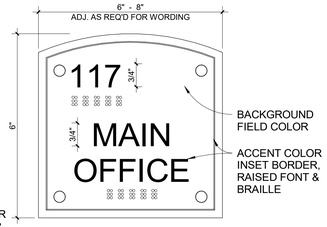


**TYPE B - ROOM IDENTIFICATION SIGN**

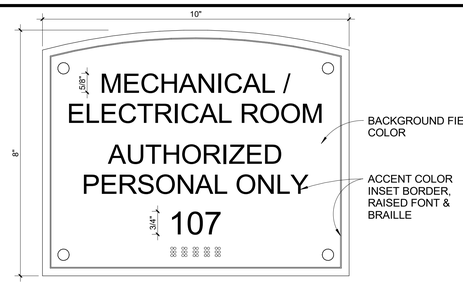


**TYPE C - ROOM IDENTIFICATION SIGN**

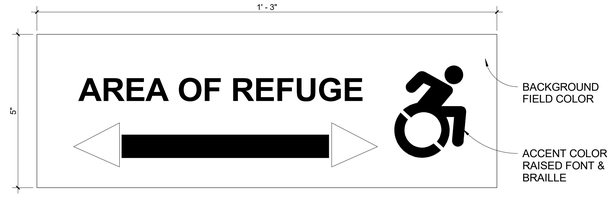


**TYPE V - LEFT OR RIGHT DIRECTIONAL SIGNAGE**

MOUNTED 60" A.F.F. TO CENTERLINE OF SIGN - LOCATED ALONG THE PATH OF EGREES - COORD W/ ARCHITECT FOR FINAL LOCATIONS

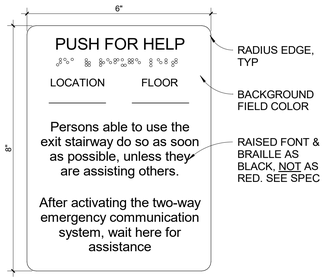


**TYPE T - "DIRECTIONS FOR CALL BOXES" WALL SIGN WITH BRAILLE**

MOUNTED 48" A.F.F. TO CENTERLINE OF SIGN - LOCATED IMMEDIATELY ADJACENT TO TWO-WAY COMMUNICATION SYSTEM IN AREA OF EGRESS

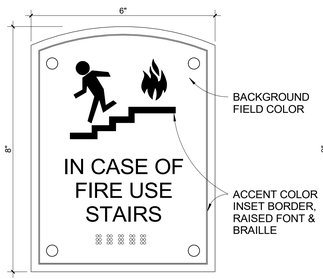


**TYPE D - ELEVATOR SIGN**

**TYPE E - TOILET IDENTIFICATION SIGN**

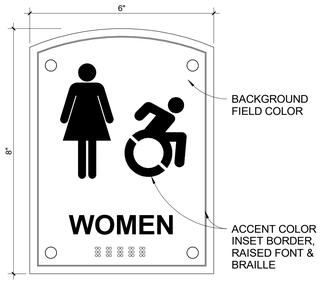


**TYPE F - TOILET IDENTIFICATION SIGN**

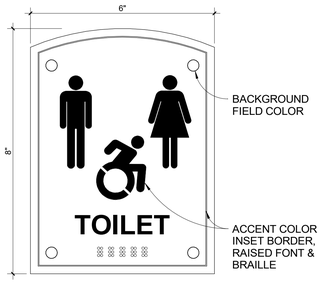


**TYPE G - TOILET IDENTIFICATION SIGN**

**TYPE H - TOILET IDENTIFICATION SIGN**

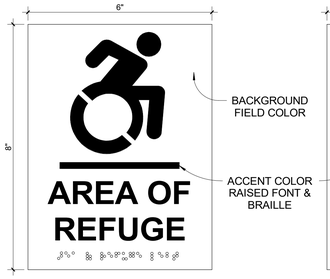


**TYPE R - DOOR/ENTRY WAY SIGN WITH BRAILLE**

MOUNTED 60" A.F.F. TO CENTER OF SIGN - LOCATED @ EACH DOOR PROVIDING ACCESS TO AREA OF REFUGE - SEE ARCHITECT FOR FINAL LOCATIONS

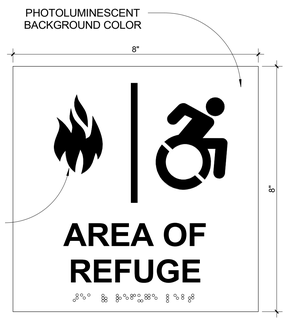


**TYPE U - PHOTOLUMINESCENT WALL SIGN WITH BRAILLE**

MOUNTED 60"-80" A.F.F. TO TOP OF SIGN - LOCATED AT DOOR ADJACENT TO AREA OF REFUGE - SEE ARCHITECT FOR FINAL LOCATION

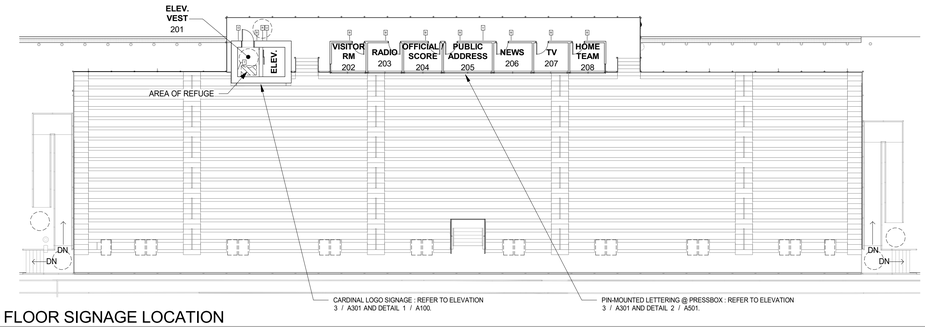


6 2ND FLOOR SIGNAGE LOCATION
1/16" = 1'-0"

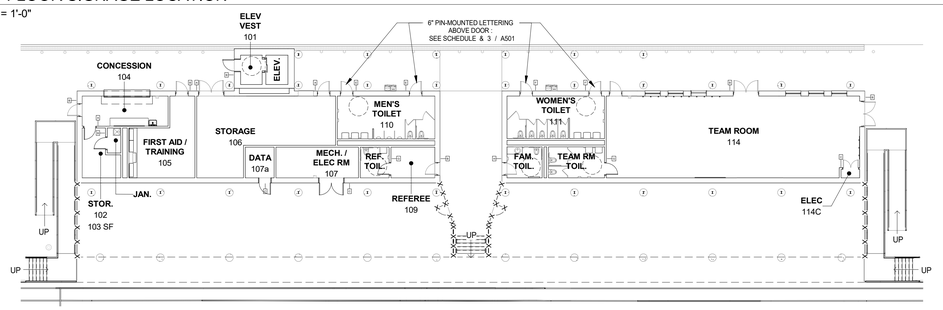


5 1ST FLOOR SIGNAGE LOCATION
1/16" = 1'-0"

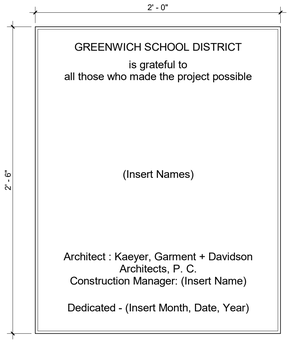


INTERIOR DEDICATION SIGN

N.T.S CAST BRONZE PLAQUE - PROVIDE ONE SIGN, LOCATION TO BE DETERMINED. SEE SPECIFICATION FOR DETAILS

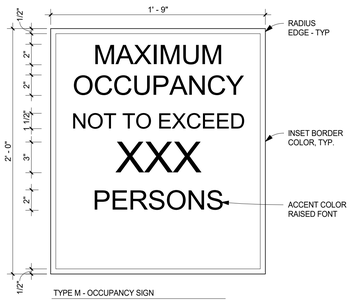


TYPE M - OCCUPANCY SIGN

N.T.S SEE SPECIFICATIONS FOR DETAILS

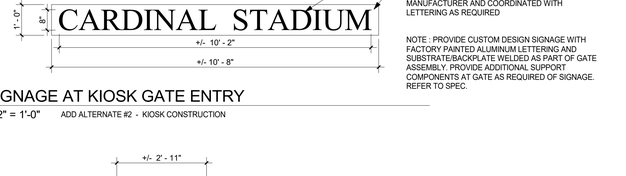


4 SIGNAGE AT KIOSK GATE ENTRY
1/2" = 1'-0" ADD ALTERNATE #2 - KIOSK CONSTRUCTION

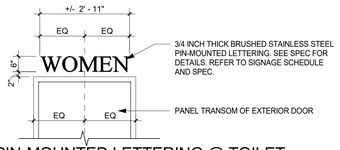


3 EXTERIOR PIN-MOUNTED LETTERING @ TOILET ROOMS
1/2" = 1'-0"

2 EXTERIOR PIN-MOUNTED LETTERING @ PRESSBOX
1/4" = 1'-0"

ADD ALTERNATE #2 - KIOSK CONSTRUCTION

## Kiosk Finish Schedule

| ROOM # | ROOM NAME | FLOOR FIN | FLOOR BASE | NORTH WALL MAT | NORTH WALL FIN | EAST WALL MAT | EAST WALL FIN | SOUTH WALL MAT | SOUTH WALL FIN | WEST WALL MAT | WEST WALL FIN | CEILING MAT | CEILING FIN | CEILING HT | Comments |
|---|---|---|---|---|---|---|---|---|---|---|---|---|---|---|---|
| K100 | KIOSK | POL. CONC. | RB8 | GWB | PTD | GWB | PTD | GWB | PTD | GWB | PTD | GWB | PTD | 9' - 4" | ALL WALLS W/ PAINT & 8" RUBBER BASE |

BASE BID

## Finish Schedule

| ROOM # | ROOM NAME | FLOOR FIN | FLOOR BASE | NORTH WALL MAT | NORTH WALL FIN | EAST WALL MAT | EAST WALL FIN | SOUTH WALL MAT | SOUTH WALL FIN | WEST WALL MAT | WEST WALL FIN | CEILING MAT | CEILING FIN | CEILING HT | Comments |
|---|---|---|---|---|---|---|---|---|---|---|---|---|---|---|---|
| 100 | ELEV. | PT | - | N/A | N/A | N/A | N/A | N/A | N/A | N/A | N/A | N/A | N/A | N/A | WALLS AND CEILING BY MANUF. |
| 101 | ELEV VEST | PT | PTB | CMU | PTD | CMU | PTD | CMU | PTD | CMU | PTD | GWB | PTD | 9' - 0" | |
| 102 | STOR. | CONC | RB | CMU | PTD | CMU | PTD | CMU | PTD | CMU | PTD | OTS | PTD | MIN 9' - 2" | |
| 103 | JAN. | EPO | EPO | CMU | PTD | CMU | PTD | CMU | PTD | CMU | PTD | OTS | PTD | MIN 9' - 2" | |
| 104 | CONCESSION | POL CONC | RB | CMU | PTD2 | CMU | PTD | CMU | PTD | CMU | PTD | OTS | PTD | MIN 9' - 2" | |
| 105 | FIRST AID / TRAINING | POL CONC | RB | CMU | PTD | CMU | PTD | CMU | PTD | CMU | PTD | GWB | PTD | 9' - 0" | |
| 106 | STORAGE | CONC | RB | CMU | PTD | CMU | PTD | CMU | PTD | CMU | PTD | OTS | PTD | MIN 9' - 2" | |
| 107 | MECH. / ELEC RM | CONC | RB | CMU | PTD | CMU | PTD | CMU | PTD | CMU | PTD | OTS | PTD | MIN 9' - 2" | |
| 107a | DATA | CONC | RB | CMU | PTD | CMU | PTD | CMU | PTD | CMU | PTD | OTS | PTD | MIN 9' - 2" | |
| 108 | REF. TOIL. | EPO | EPO | CMU | EPO | CMU | EPO | CMU | EPO | CMU | EPO | GWB | EPO | 9' - 0" | |
| 109 | REFEREE | POL CONC | RB | CMU | PTD | CMU | PTD | CMU | PTD | CMU | PTD | OTS | PTD | MIN 9' - 2" | |
| 110 | MEN'S TOILET | EPO | CTB | CMU | CT1, CT2 | CMU | CT1, CT2 | CMU | CT1, CT2 | CMU | CT1, CT2 | GWB | EPO | 9' - 0" | |
| 111 | WOMEN'S TOILET | EPO | CTB | CMU | CT1, CT2 | CMU | CT1, CT2 | CMU | CT1, CT2 | CMU | CT1, CT2 | GWB | EPO | 9' - 0" | |
| 112 | FAM. TOIL. | EPO | EPO | CMU | EPO | CMU | EPO | CMU | EPO | CMU | EPO | GWB | EPO | 9' - 0" | |
| 113 | TEAM RM TOIL. | EPO | EPO | CMU | EPO | CMU | EPO | CMU | EPO | CMU | EPO | OTS | EPO | MIN 9' - 2" | |
| 114 | TEAM ROOM | POL CONC | RB | CMU | PTD/PTD2 | CMU | PTD/PTD2 | CMU | PTD/PTD2 | CMU | PTD/PTD2 | OTS | PTD | MIN 9' - 2" | |
| 114C | ELEC. | POL CONC | RB | CMU | PTD | CMU | PTD | CMU | PTD | CMU | PTD | OTS | PTD | MIN 9' - 2" | |
| 201 | ELEV. VEST | PT | RB | CMU | PTD | CMU | PTD | CMU | PTD | CMU | PTD | GWB | PTD | 9' - 0" | |

ROOMS IN THE PRESS BOX (202, 203, 204, 205, 206, 207, AND 208) ARE BY BLEACHER MANUFACTURER.

ABBREVIATIONS:

| | |
|---|---|
| CMU | CONCRETE MASONRY UNIT |
| CT | CERAMIC TILE |
| CTB | CERAMIC TILE BASE |
| CONC | CONCRETE |
| EPO | EPOXY |
| GWB | GYPBOARD |
| OTS | OPEN TO STRUCTURE, |
| POLCONC | POLISHED CONCRETE |
| PTD | PAINTED |
| RB | RUBBER BASE |

## Signage Schedule

| ROOM # | LOCATION | SIGN TYPE | SIGN TEXT (TEXT TO BE CONFIRMED WITH OWNER) | QTY | COMMENTS |
|---|---|---|---|---|---|
| 101 | ELEV VEST (LOWER) | B | 101 ELEVATOR | 1 | |
| 102 | STOR. | A | 102 | 1 | |
| 103 | JAN. | B | 103 JANITOR | 1 | |
| 104 | CONCESSION | B | 104 CONCESSION | 1 | |
| 105 | FIRST AID / TRAINING | B | 105 FIRST AID / TRAINING | 1 | |
| 106 | STORAGE | A | 106 | 2 | |
| 107 | MECH. / ELEC RM | C | 107 MECHANICAL / ELECTRICAL AUTHORIZED PERSONAL ONLY | 1 | |
| 107a | DATA | C | 107A DATA CLOSET AUTHORIZED PERSONAL ONLY | 1 | |
| 108 | REF. TOIL. | G | TOILET | 1 | |
| 109 | REFEREE | B | 109 REFEREE | 1 | |
| 110 | MEN'S TOILET | E<br>PIN-MOUNTED | MEN<br>MEN | 2<br>2 | ...<br>6" LETTERING (MOUNTED ABOVE ENTRY DOORS) |
| 111 | WOMEN'S TOILET | F<br>PIN-MOUNTED | WOMEN<br>WOMEN | 2<br>2 | ...<br>6" LETTERING (MOUNTED ABOVE ENTRY DOORS) |
| 112 | FAM. TOIL. | H | FAMILY RESTROOM | 1 | |
| 113 | TEAM RM TOIL. | G | TOILET | 1 | |
| 114 | TEAM ROOM | B | 114 TEAM ROOM | 2 | SIGNAGE PLACED AT DOUBLE DOORS ONLY |
| 114C | ELEC. | C | 114C ELECTRICAL CLOSET AUTHORIZED PERSONAL ONLY | 1 | |
| 201 | ELEV. VEST (UPPER) | B<br>D | 201 ELEVATOR<br>IN CASE OF FIRE USE STAIRS | 1<br>1 | |
| 202 | VISITOR RM | B | 202 VISITOR ROOM | 1 | |
| 203 | RADIO | B | 203 RADIO | 1 | |
| 204 | OFFICIAL / SCORE | B | 204 OFFICIAL / SCORE | 1 | |
| 205 | PUBLIC ADDRESS | B | 205 PUBLIC ADDRESS | 1 | |
| 206 | NEWS | B | 206 NEWS | 1 | |
| 207 | TV | B | 207 TV | 1 | |
| 208 | HOME TEAM | B | 208 HOME TEAM | 1 | |

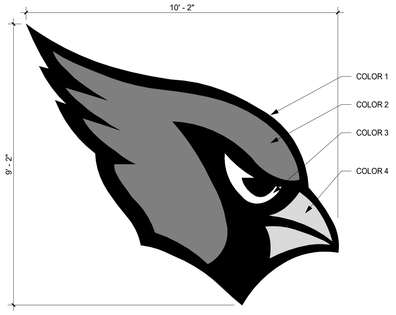


1 EXTERIOR CARDINALS LOGO
1/2" = 1'-0" REFER TO SPEC FOR COLORS

# GREENWICH HS CARDINAL STADIUM PHASE 1

GREENWICH PUBLIC SCHOOLS
10 HILLSIDE ROAD
GREENWICH CT 06830


KG+D listen imagine build
KG+D . ARCHITECTS PC
285 MAIN STREET MOUNT KISCO . NEW YORK . 10549
P:914.666.5900 KGDARCHITECTS.COM


CONSTRUCTION DOCUMENTS

SIGNAGE COLOR DETAILS :

COLORS ARE THE FOLLOWING, UNLESS OTHER WISE NOTED IN DETAILS ON A501 OR IN SPEC...

BACKGROUND FIELD COLOR :
***BRUSHED ALUMINIUM***
RAISED FONT & BRAILLE COLOR :
***RED***
INSET BORDER COLOR :
***BLACK***

EXACT COLORS TO BE SELECTED BY ARCHITECT.


NOTE: ALL IDEAS, DESIGNS, ARRANGEMENTS AND PLANS INDICATED OR REPRESENTED BY THIS DRAWING ARE OWNED BY AND ARE THE PROPERTY OF KAEYER, GARMENT, & DAVIDSON ARCHITECTS, PC (KG&D), AND WERE CREATED FOR USE ON THIS PROJECT. NONE OF SUCH IDEAS, DESIGNS, ARRANGEMENTS OR PLANS SHALL BE USED BY OR DISCLOSED TO ANY PURPOSE WHATSOEVER WITHOUT THE WRITTEN PERMISSION OF (KG&D).

WRITTEN DIMENSIONS ON THIS DRAWING SHALL HAVE PRECEDENCE OVER SCALED DIMENSIONS. CONTRACTOR SHALL VERIFY ALL ACTUAL DIMENSIONS AND CONDITIONS ON THE JOB AND THE ARCHITECT MUST BE NOTIFIED OF ANY VARIATIONS FROM DIMENSIONS AND CONDITIONS SHOWN. SHOP DETAILS MUST BE SUBMITTED TO THIS OFFICE FOR APPROVAL BEFORE PROCEEDING WITH FABRICATION.

ALTERATIONS BY ANY PERSON, IN ANY WAY, OF ANY ITEM CONTAINED ON THIS DOCUMENT, UNLESS ACTING UNDER THE DIRECTION OF THE LICENSED ARCHITECT WHOSE PROFESSIONAL SEAL IS AFFIXED HERETO, IS A VIOLATION OF TITLE VII, SECT. 7209 (2) OF NEW YORK STATE LAW.
COPYRIGHT KAEYER, GARMENT + DAVIDSON ARCHITECTS & ENGINEERS, PC
ALL RIGHTS RESERVED.


Professional Seal

| No. | Date | Issue |
|---|---|---|
| 4 | 11/10/20 | PHASE 1 CON. DOCS. |
| 3 | 10/30/20 | PHASE 1B SITE PLAN APP. |
| 2 | 08/12/20 | ISSUE FOR PERMIT |

Sheet Title

SIGNAGE AND FINISH SCHEDULE

| Job No. | Date |
|---|---|
| 2018-1035 | 02/12/20 |
| Scale: AS NOTED | Drawn / Checked: - |

Sheet Number

A501

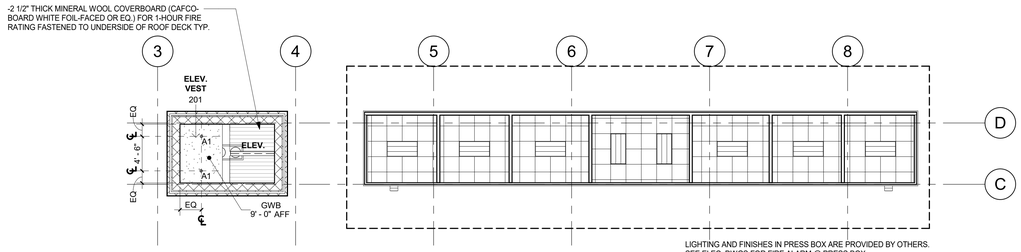


2 PRESSBOX RCP
1/8" = 1'-0"

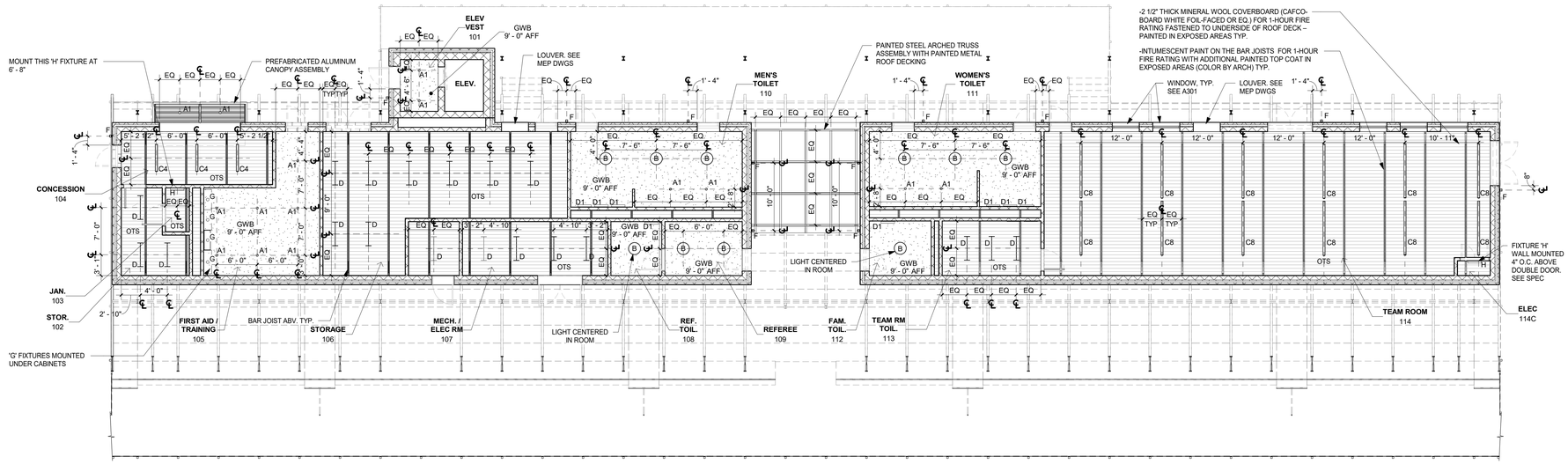


**LIGHTING FIXTURE HEIGHTS**

NOTE : FOR SUSPENDED FIXTURES HEIGHTS ARE A.F.F AND TO BOTTOM OF FIXTURE. FOR WALL MOUNTED FIXTURES HEIGHTS ARE A.F.F AND TO CENTER OF FIXTURE

| FIXTURE | HEIGHT |
|---|---|
| C4 | 8' - 10" (SUSPENDED FROM CEILING) |
| C8 | 8' - 10" (SUSPENDED FROM CEILING) |
| D | 8' - 10" (SUSPENDED FROM CEILING) |
| F | 7' - 0" (WALL MOUNTED) |
| D1 | 6' - 8" (WALL MOUNTED) |
| H | 7' - 8" @ ELEC CLOSET (WALL MOUNTED) |
| | 6' - 8" @ JAN CLOSET (WALL MOUNTED) |

KIOSK FIXTURES (ADD ALTERNATE 2)
K 5' - 0"

1 TEAM BUILDING RCP
1/8" = 1'-0"

# GREENWICH HS CARDINAL STADIUM PHASE 1

GREENWICH PUBLIC SCHOOLS
10 HILLSIDE ROAD
GREENWICH CT 06830

KG+D listen imagine build
KG+D . ARCHITECTS PC
285 MAIN STREET MOUNT KISCO . NEW YORK . 10549
P:914.666.5900 KGDARCHITECTS.COM

CONSTRUCTION DOCUMENTS

TRUE NORTH PROJECT NORTH

NOTE: ALL IDEAS, DESIGNS, ARRANGEMENTS AND PLANS INDICATED OR REPRESENTED BY THIS DRAWING ARE OWNED BY AND ARE THE PROPERTY OF KAEYER, GARMENT, & DAVIDSON ARCHITECTS, PC (KG&D), AND WERE CREATED FOR USE ON THIS PROJECT. NONE OF SUCH IDEAS, DESIGNS, ARRANGEMENTS OR PLANS SHALL BE USED BY OR DISCLOSED TO ANY PURPOSE WHATSOEVER WITHOUT THE WRITTEN PERMISSION OF (KG&D).

WRITTEN DIMENSIONS ON THIS DRAWING SHALL HAVE PRECEDENCE OVER SCALED DIMENSIONS. CONTRACTOR SHALL VERIFY ALL ACTUAL DIMENSIONS AND CONDITIONS ON THE JOB AND THE ARCHITECT MUST BE NOTIFIED OF ANY VARIATIONS FROM DIMENSIONS AND CONDITIONS SHOWN. SHOP DETAILS MUST BE SUBMITTED TO THIS OFFICE FOR APPROVAL BEFORE PROCEEDING WITH FABRICATION.

ALTERATIONS BY ANY PERSON, IN ANY WAY, OF ANY ITEM CONTAINED ON THIS DOCUMENT, UNLESS ACTING UNDER THE DIRECTION OF THE LICENSED ARCHITECT WHOSE PROFESSIONAL SEAL IS AFFIXED HERETO, IS A VIOLATION OF TITLE VII, SECT. 7209 (2) OF NEW YORK STATE LAW.
COPYRIGHT KAEYER, GARMENT + DAVIDSON ARCHITECTS & ENGINEERS, PC
ALL RIGHTS RESERVED

Professional Seal

| No. | Date | Issue |
|---|---|---|
| 4 | 11/10/20 | PHASE 1 CON. DOCS. |
| 2 | 08/12/20 | ISSUE FOR PERMIT |

Sheet Title

## REFLECTED CEILING PLANS

| Job No. | Date |
|---|---|
| 2018-1035 | 02/12/20 |
| Scale | Drawn / Checked |
| AS NOTED | - |

Sheet Number

A601

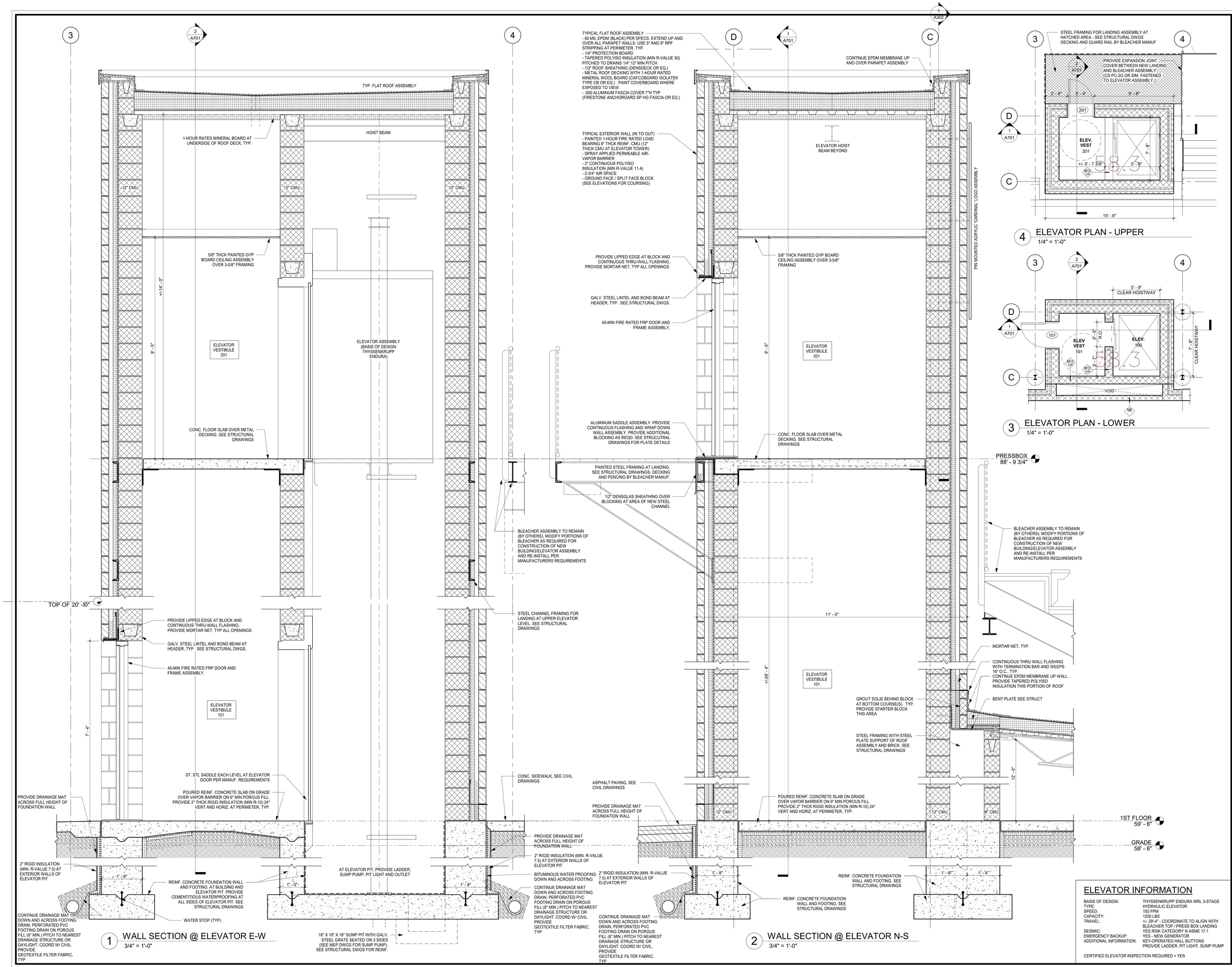


## ELEVATOR INFORMATION

| | |
|---|---|
| BASIS OF DESIGN: | THYSSENKRUPP ENDURA MRL 3-STAGE |
| TYPE: | HYDRAULIC ELEVATOR |
| SPEED: | 150 FPM |
| CAPACITY: | 1200 LBS |
| TRAVEL: | +/- 29'-4" - COORDINATE TO ALIGN WITH BLEACHER TOP / PRESS BOX LANDING |
| SEISMIC: | YES RISK CATEGORY III ASME 17.1 |
| EMERGENCY BACKUP: | YES - NEW GENERATOR |
| ADDITIONAL INFORMATION: | KEY-OPERATED HALL BUTTONS PROVIDE LADDER, PIT LIGHT, SUMP PUMP |

CERTIFIED ELEVATOR INSPECTION REQUIRED = YES

# GREENWICH HS CARDINAL STADIUM PHASE 1

GREENWICH PUBLIC SCHOOLS
10 HILLSIDE ROAD
GREENWICH CT 06830

KG+D listen imagine build
KG+D . ARCHITECTS PC
285 MAIN STREET MOUNT KISCO . NEW YORK . 10549
P:914.666.5900 KGDARCHITECTS.COM

CONSTRUCTION DOCUMENTS

NOTE: ALL IDEAS, DESIGNS, ARRANGEMENTS AND PLANS INDICATED OR REPRESENTED BY THIS DRAWING ARE OWNED BY AND ARE THE PROPERTY OF KAETER, GARMENT, & DAVIDSON ARCHITECTS, PC (KG&D), AND WERE CREATED FOR USE ON THIS PROJECT. NONE OF SUCH IDEAS, DESIGNS, ARRANGEMENTS OR PLANS SHALL BE USED BY OR DISCLOSED TO ANY PURPOSE WHATSOEVER WITHOUT THE WRITTEN PERMISSION OF (KG&D).

WRITTEN DIMENSIONS ON THIS DRAWING SHALL HAVE PRECEDENCE OVER SCALED DIMENSIONS. CONTRACTOR SHALL VERIFY ALL ACTUAL DIMENSIONS AND CONDITIONS ON THE JOB AND THE ARCHITECT MUST BE NOTIFIED OF ANY VARIATIONS FROM DIMENSIONS AND CONDITIONS SHOWN. SHOP DETAILS MUST BE SUBMITTED TO THIS OFFICE FOR APPROVAL BEFORE PROCEEDING WITH FABRICATION.

ALTERATIONS BY ANY PERSON, IN ANY WAY, OF ANY ITEM CONTAINED ON THIS DOCUMENT, UNLESS ACTING UNDER THE DIRECTION OF THE LICENCED ARCHITECT WHOSE PROFESSIONAL SEAL IS AFFIXED HERETO, IS A VIOLATION OF TITLE VII, SECT. 65.5 (b) OF NEW YORK STATE LAW.
COPYRIGHT KAETER, GARMENT + DAVIDSON ARCHITECTS & ENGINEERS, PC
ALL RIGHTS RESERVED

Professional Seal

| No. | Date | Issue |
|---|---|---|
| 4 | 11/10/20 | PHASE 1 CON. DOCS. |
| 3 | 10/30/20 | PHASE 1B SITE PLAN APP. |
| 2 | 08/12/20 | ISSUE FOR PERMIT |

Sheet Title

# ENLARGED ELEVATOR DRAWINGS

| Job No. | Date |
|---|---|
| 2018-1035 | 05/19/20 |
| Scale: AS NOTED | Drawn / Checked: - |

Sheet Number

A701

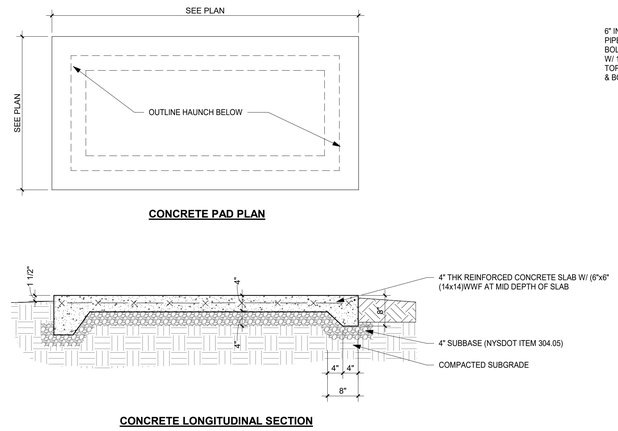


5 CONCRETE PAD DETAILS
3/4" = 1'-0"

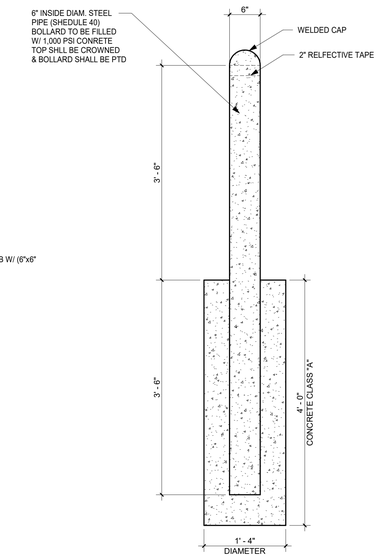


4 BOLLARD
1" = 1'-0"

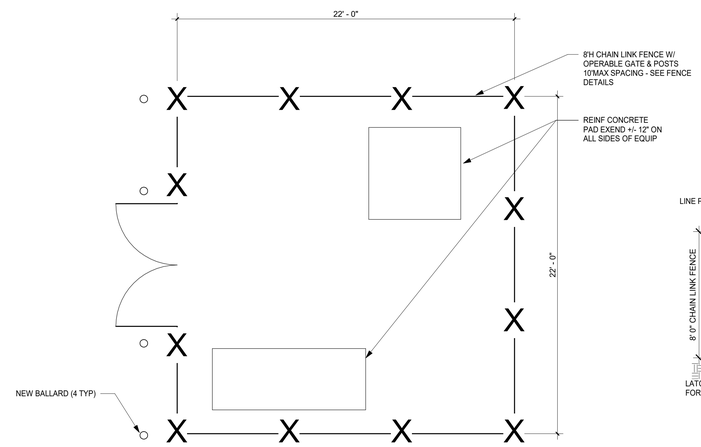


3 UTILITY YARD -PLAN
1/4" = 1'-0"

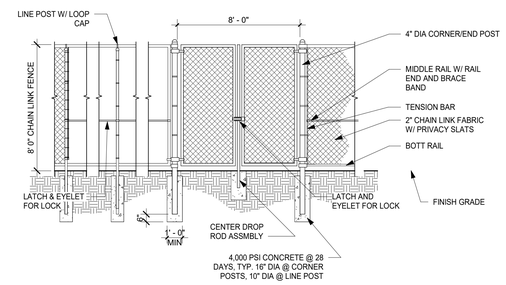


2 UTILITY FENCE / GATE
1/4" = 1'-0"

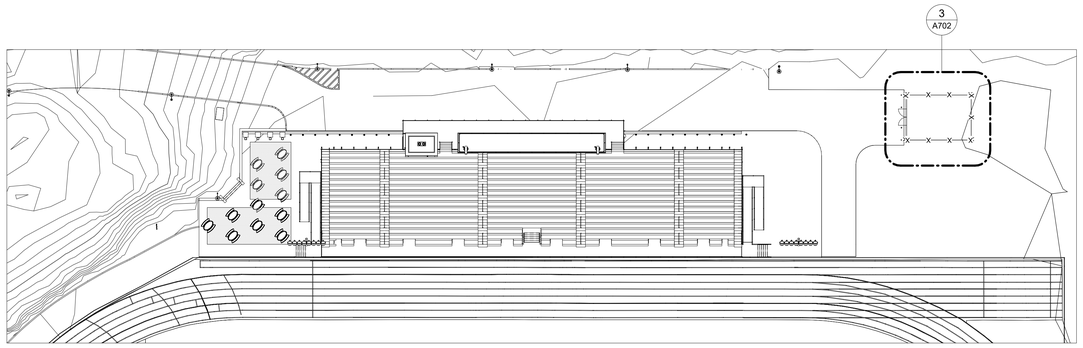


1 SITE PLAN KEY
1" = 30'-0"

# GREENWICH HS CARDINAL STADIUM PHASE 1

GREENWICH PUBLIC SCHOOLS
10 HILLSIDE ROAD
GREENWICH CT 06830

KG+D listen imagine build
KG+D . ARCHITECTS PC
285 MAIN STREET MOUNT KISCO . NEW YORK . 10549
P:914.666.5900 KGDARCHITECTS.COM

CONSTRUCTION DOCUMENTS

NOTE: ALL IDEAS, DESIGNS, ARRANGEMENTS AND PLANS INDICATED OR REPRESENTED BY THIS DRAWING ARE OWNED BY AND ARE THE PROPERTY OF KAEYER, GARMENT, & DAVIDSON ARCHITECTS, PC (KG&D), AND WERE CREATED FOR USE ON THIS PROJECT. NONE OF SUCH IDEAS, DESIGNS, ARRANGEMENTS OR PLANS SHALL BE USED BY OR DISCLOSED TO ANY PURPOSE WHATSOEVER WITHOUT THE WRITTEN PERMISSION OF (KG&D).

WRITTEN DIMENSIONS ON THIS DRAWING SHALL HAVE PRECEDENCE OVER SCALED DIMENSIONS. CONTRACTOR SHALL VERIFY ALL ACTUAL DIMENSIONS AND CONDITIONS ON THE JOB AND THE ARCHITECT MUST BE NOTIFIED OF ANY VARIATIONS FROM DIMENSIONS AND CONDITIONS SHOWN. SHOP DETAILS MUST BE SUBMITTED TO THIS OFFICE FOR APPROVAL BEFORE PROCEEDING WITH FABRICATION.

ALTERATIONS BY ANY PERSON, IN ANY WAY, OF ANY ITEM CONTAINED ON THIS DOCUMENT, UNLESS ACTING UNDER THE DIRECTION OF THE LICENCED ARCHITECT WHOSE PROFESSIONAL SEAL IS AFFIXED HERETO, IS A VIOLATION OF TITLE VII, SECT. 6B.5 (b) OF NEW YORK STATE LAW.
COPYRIGHT KAEYER, GARMENT + DAVIDSON ARCHITECTS & ENGINEERS, PC
ALL RIGHTS RESERVED

Professional Seal

| No. | Date | Issue |
|---|---|---|
| 4 | 11/10/20 | PHASE 1 CON. DOCS. |

Sheet Title

UTILITY YARD

| Job No. | Date |
|---|---|
| 2018-1035 | 11/06/20 |
| Scale: AS NOTED | Drawn / Checked: Author Checker |

Sheet Number

A702

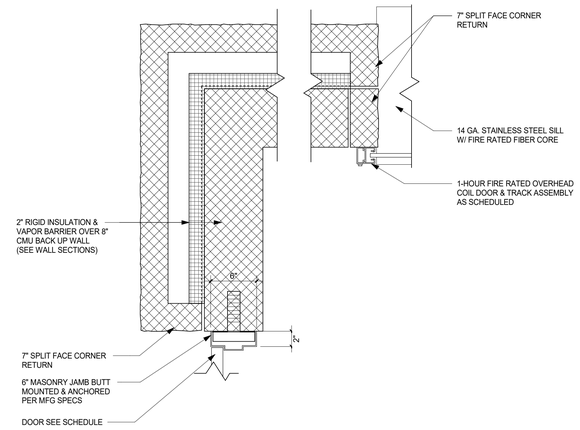


5 PLAN DETAIL @ CORNER
1 1/2" = 1'-0"

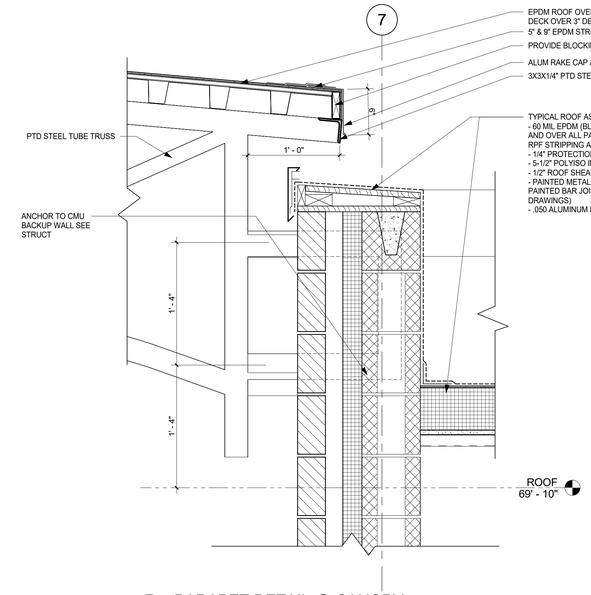


4 PARAPET DETAIL @ CANOPY
1 1/2" = 1'-0"

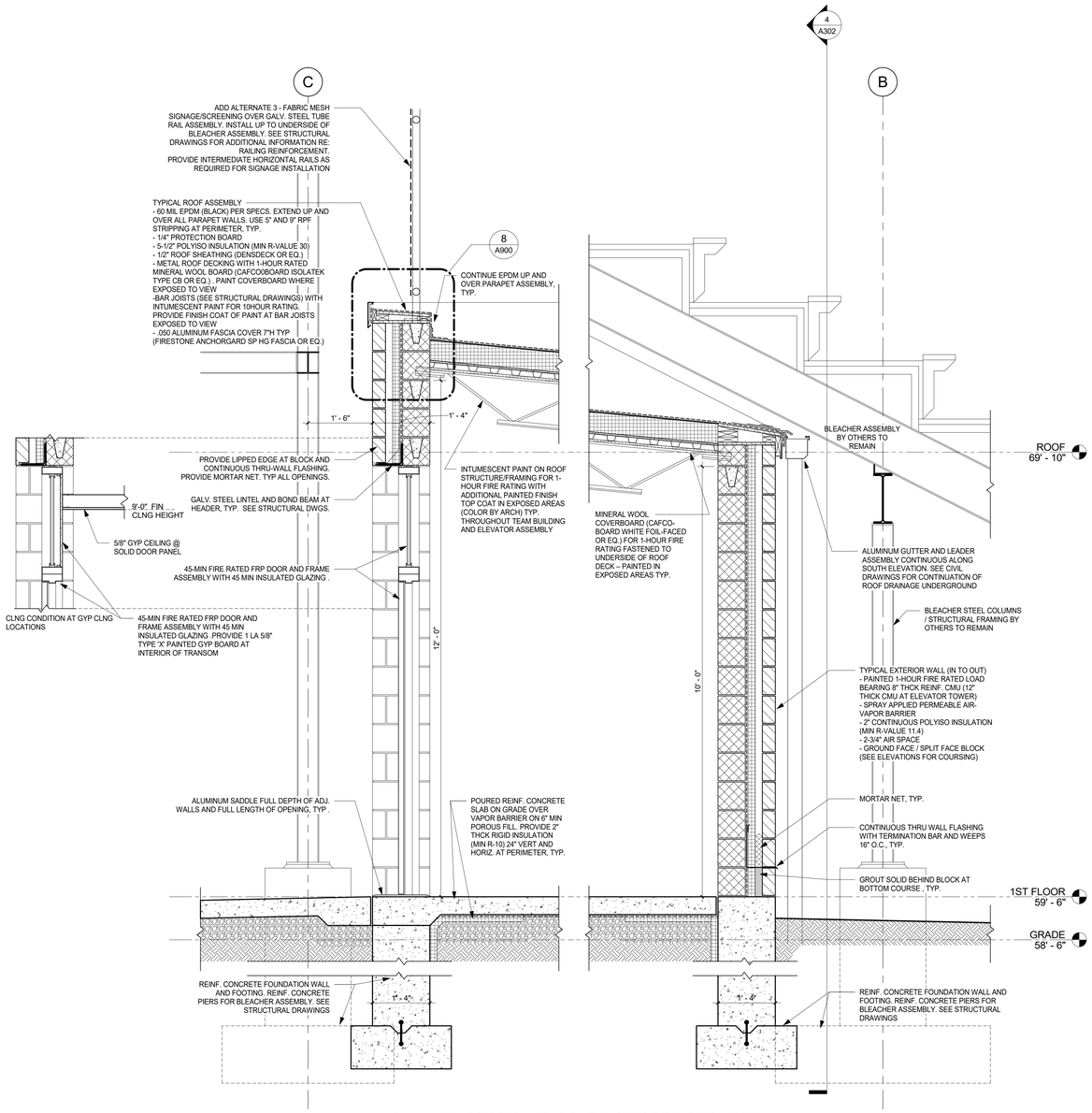


3 WALL SECTION @ SOUTH & NORTH EXT. WALL
3/4" = 1'-0"

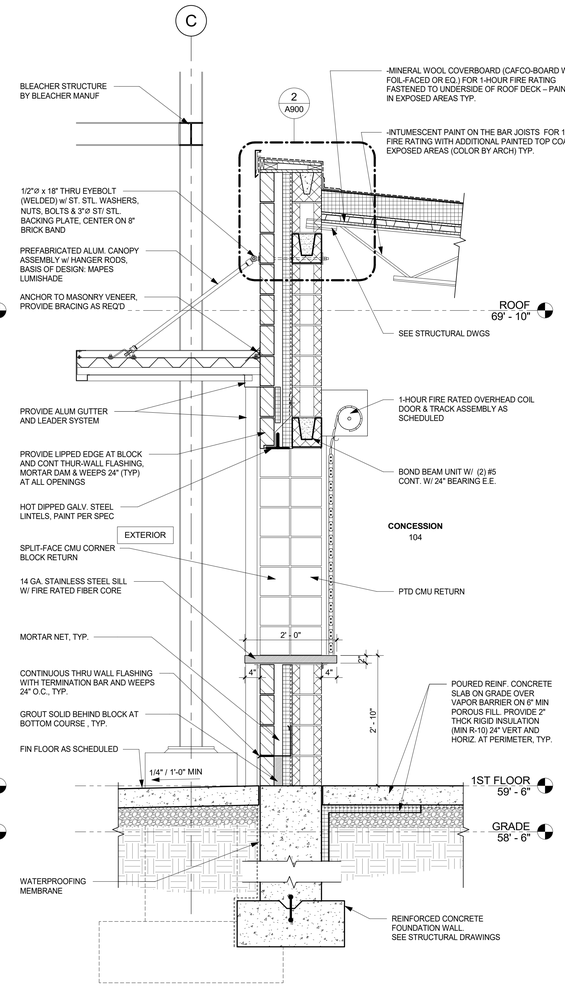


2 WALL SECTION @ OVERHEAD DOOR
3/4" = 1'-0"

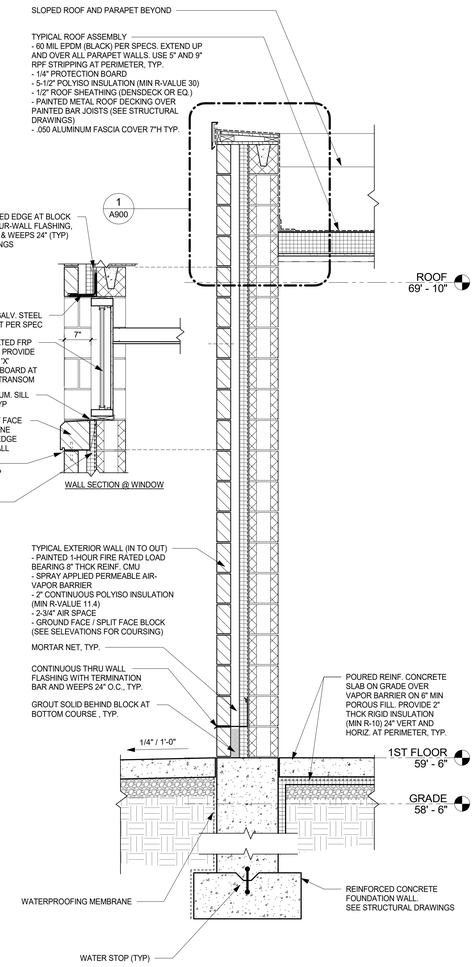


1 TYPICAL WALL SECTION
3/4" = 1'-0"

# GREENWICH HS CARDINAL STADIUM PHASE 1

GREENWICH PUBLIC SCHOOLS
10 HILLSIDE ROAD
GREENWICH CT 06830

KG+D listen imagine build
KG+D . ARCHITECTS PC
285 MAIN STREET MOUNT KISCO . NEW YORK . 10549
P:914.666.5900 KGDARCHITECTS.COM

CONSTRUCTION DOCUMENTS

NOTE: ALL IDEAS, DESIGNS, ARRANGEMENTS AND PLANS INDICATED OR REPRESENTED BY THIS DRAWING ARE OWNED BY AND ARE THE PROPERTY OF KAEYER, GARMENT, & DIVIDSON ARCHITECTS, PC (KG&D), AND WERE CREATED FOR USE ON THIS PROJECT. NONE OF SUCH IDEAS, DESIGNS, ARRANGEMENTS OR PLANS SHALL BE USED BY OR DISCLOSED TO ANY PURPOSE WHATSOEVER WITHOUT THE WRITTEN PERMISSION OF (KG&D).

WRITTEN DIMENSIONS ON THIS DRAWING SHALL HAVE PRECEDENCE OVER SCALED DIMENSIONS. CONTRACTOR SHALL VERIFY ALL ACTUAL DIMENSIONS AND CONDITIONS ON THE JOB AND THE ARCHITECT MUST BE NOTIFIED OF ANY VARIATIONS FROM DIMENSIONS AND CONDITIONS SHOWN. SHOP DETAILS MUST BE SUBMITTED TO THIS OFFICE FOR APPROVAL BEFORE PROCEEDING WITH FABRICATION.

ALTERATIONS BY ANY PERSON, IN ANY WAY, OF ANY ITEM CONTAINED ON THIS DOCUMENT, UNLESS ACTING UNDER THE DIRECTION OF THE LICENCED ARCHITECT WHOSE PROFESSIONAL SEAL IS AFFIXED HERETO, IS A VIOLATION OF TITLE VI, SECT. 89.5 (5) OF NEW YORK STATE LAW.
COPYRIGHT KAEYER, GARMENT + DAVIDSON ARCHITECTS & ENGINEERS, PC
ALL RIGHTS RESERVED

Professional Seal

| No. | Date | Issue |
|---|---|---|
| 4 | 11/10/20 | PHASE 1 CON. DOCS. |
| 3 | 10/30/20 | PHASE 1B SITE PLAN APP. |
| 2 | 08/12/20 | ISSUE FOR PERMIT |

Sheet Title

## WALL SECTIONS

| Job No. | Date |
|---|---|
| 2018-1035 | 07/08/19 |
| Scale | Drawn / Checked |
| AS NOTED | - |

Sheet Number

A801

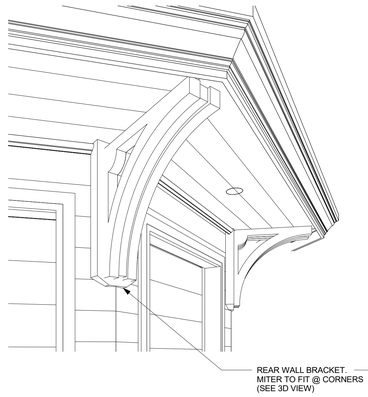


9 3D VIEW OF CORBEL

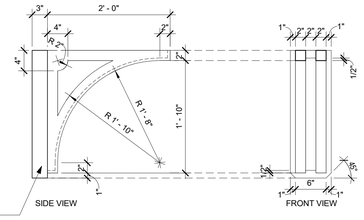


8 ROOF CORBEL
1" = 1'-0"

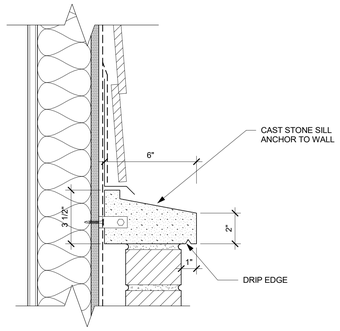


7 CAST STONE DETAIL
3" = 1'-0"

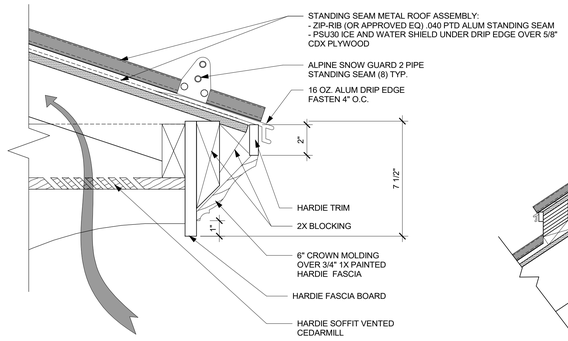


6 VENTED SOFFIT DETAIL
3" = 1'-0"

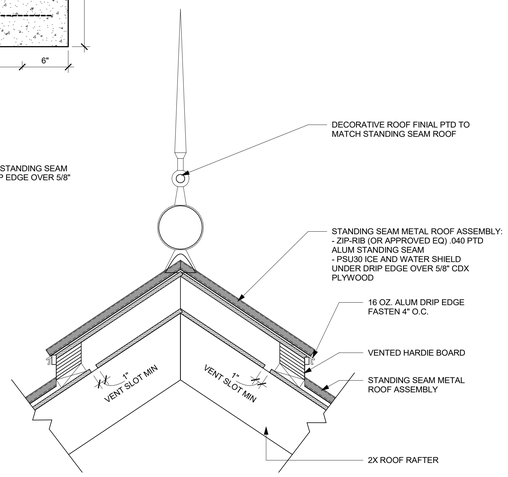


5 ROOF RIDGE VENT DETAIL
1 1/2" = 1'-0"

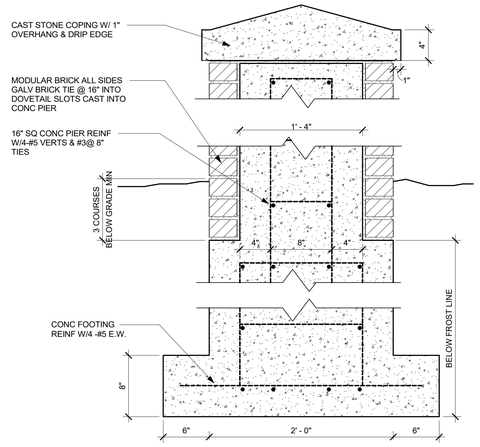


11 BRICK PIER SECTION
1 1/2" = 1'-0"

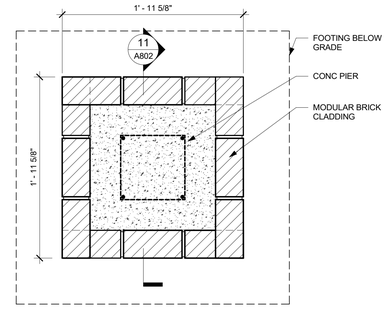


10 BRICK PIER PLAN DETAIL
1 1/2" = 1'-0"

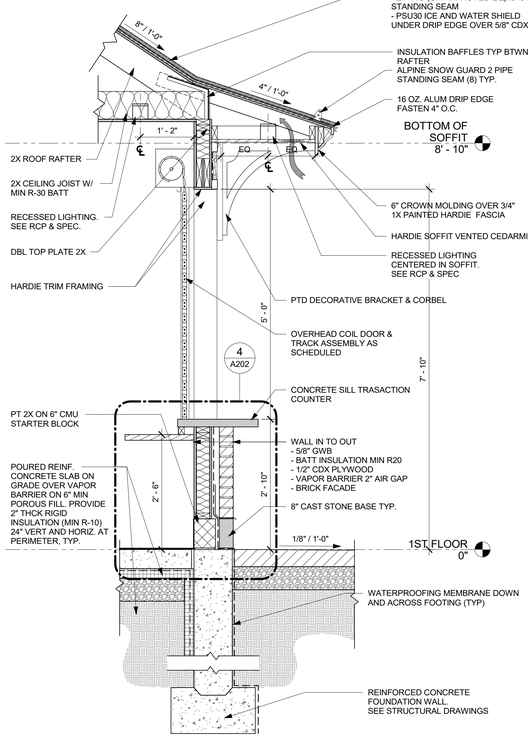


4 WALL SECTION @ ROLL-UP WINDOW
3/4" = 1'-0"

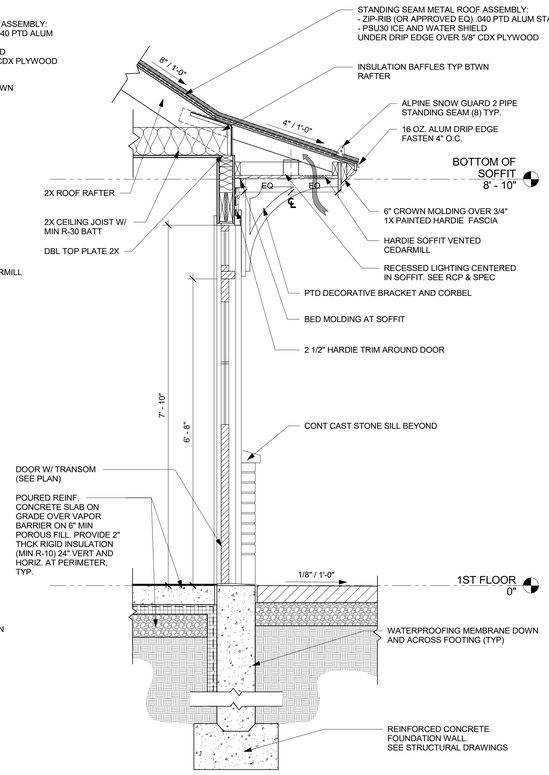


3 WALL SECTION @ DOOR
3/4" = 1'-0"

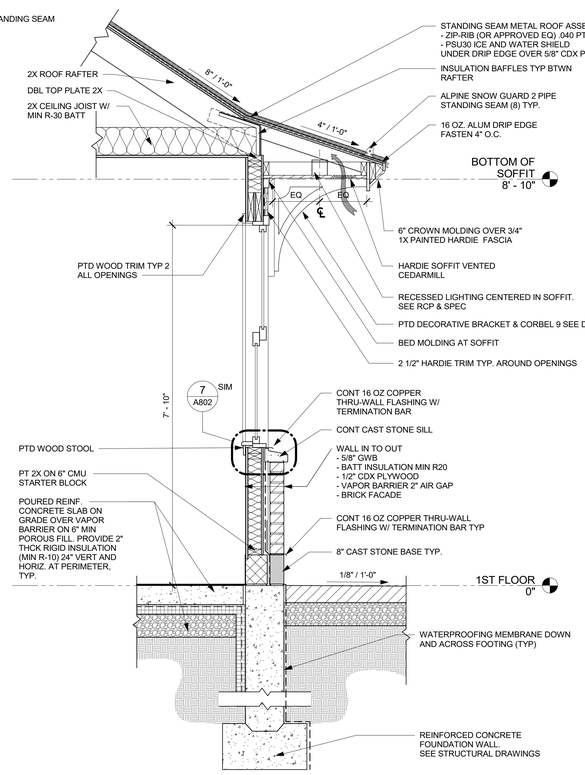


2 WALL SECTION @ WINDOW
3/4" = 1'-0"

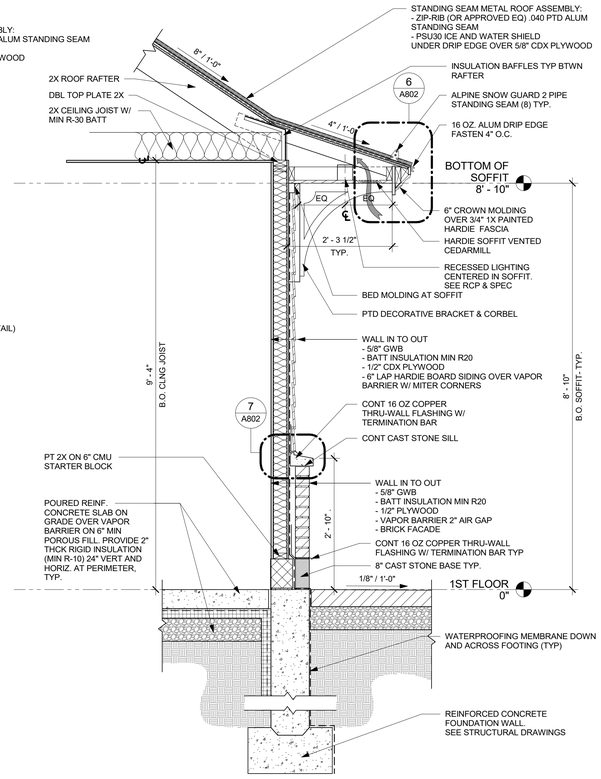


1 WALL SECTION- TYP.
3/4" = 1'-0"

# GREENWICH HS CARDINAL STADIUM PHASE 1

GREENWICH PUBLIC SCHOOLS
10 HILLSIDE ROAD
GREENWICH, CT 06830

KG+D listen imagine build
KG+D . ARCHITECTS PC
285 MAIN STREET MOUNT KISCO . NEW YORK . 10549
P:914.666.5900 KGDARCHITECTS.COM

CONSTRUCTION DOCUMENTS

GENERAL NOTE :
ALL KIOSK RELATED CONSTRUCTION IS CONSIDERED ADD ALTERNATE #2

NOTE: ALL IDEAS, DESIGNS, ARRANGEMENTS AND PLANS INDICATED OR REPRESENTED BY THIS DRAWING ARE OWNED BY, AND ARE THE PROPERTY OF KAEYER, GARBERT, & DAVIDSON ARCHITECTS, PC (KG&D), AND WERE CREATED FOR USE ON THIS PROJECT. NONE OF SUCH IDEAS, DESIGNS, ARRANGEMENTS OR PLANS SHALL BE USED BY OR DISCLOSED TO ANY PURPOSE WHATSOEVER WITHOUT THE WRITTEN PERMISSION OF (KG&D).

WRITTEN DIMENSIONS ON THIS DRAWING SHALL HAVE PRECEDENCE OVER SCALED DIMENSIONS. CONTRACTOR SHALL VERIFY ALL ACTUAL DIMENSIONS AND CONDITIONS ON THE JOB AND THE ARCHITECT MUST BE NOTIFIED OF ANY VARIATIONS FROM DIMENSIONS AND CONDITIONS SHOWN. SHOP DETAILS MUST BE SUBMITTED TO THIS OFFICE FOR APPROVAL BEFORE PROCEEDING WITH FABRICATION.

ALTERATIONS BY ANY PERSON, IN ANY WAY, OF ANY ITEM CONTAINED ON THIS DOCUMENT, UNLESS ACTING UNDER THE DIRECTION OF THE LICENCED ARCHITECT WHOSE PROFESSIONAL SEAL IS AFFIXED HERETO, IS A VIOLATION OF TITLE VII, SECT. 69.0 (b) OF NEW YORK STATE LAW.
COPYRIGHT KAEYER, GARBERT • DAVIDSON ARCHITECTS & ENGINEERS, PC
ALL RIGHTS RESERVED

Professional Seal

| No. | Date | Issue |
|---|---|---|
| 4 | 11/10/20 | PHASE 1 CON. DOCS. |
| 3 | 10/30/20 | PHASE 1B SITE PLAN APP. |

Sheet Title

## WALL SECTIONS AND DETAILS (ADD ALT 2)

| Job No. | Date |
|---|---|
| Project Number | 06/15/20 |
| Scale | Drawn / Checked |
| AS NOTED | - - |

Sheet Number

A802

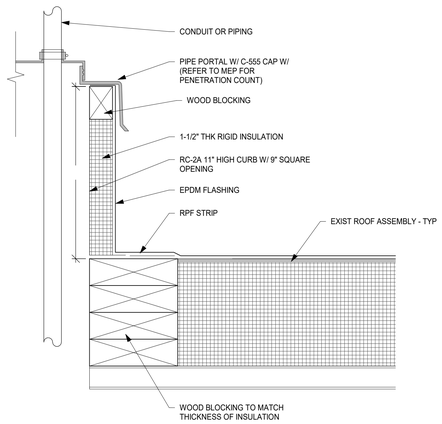


NOTE:
AT EXIST EPDM ROOFS REMOVE PORTION OF EXIST ROOFING TO INSTALL NEW WOOD BLOCKING & CURB. EXTEND NEW EPDM 12" ONTO EXIST EPDM. ALL WORK MUST BE PERFORMED BY AN AUTHORIZED APPLICATOR TO MAINTAIN THE EXIST WARRANTY.

7 TYP. PIPE PORTAL PLUS CURB
3" = 1'-0"

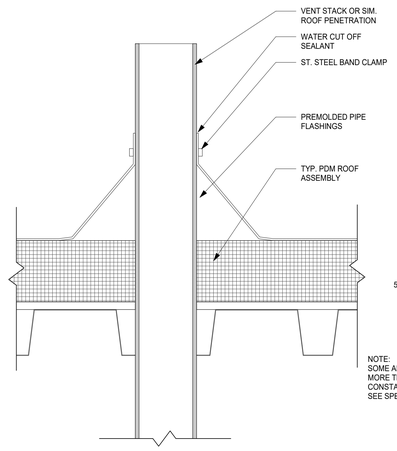


6 TYP. VENT PIPE
3" = 1'-0"

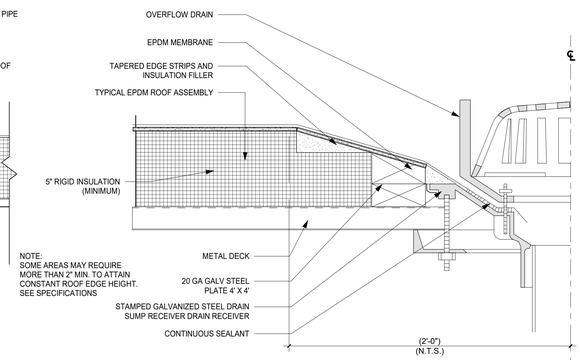


NOTE:
SOME AREAS MAY REQUIRE MORE THAN 2" MIN. TO ATTAIN CONSTANT ROOF EDGE HEIGHT. SEE SPECIFICATIONS

5 TYP. OVERFLOW DRAIN
3" = 1'-0"

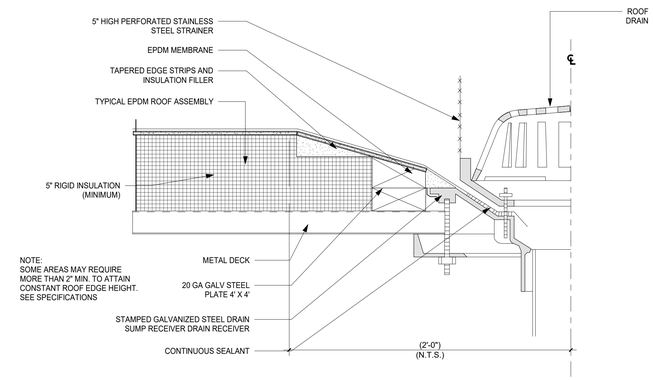


NOTE:
SOME AREAS MAY REQUIRE MORE THAN 2" MIN. TO ATTAIN CONSTANT ROOF EDGE HEIGHT. SEE SPECIFICATIONS

4 TYP. ROOF DRAIN
3" = 1'-0"

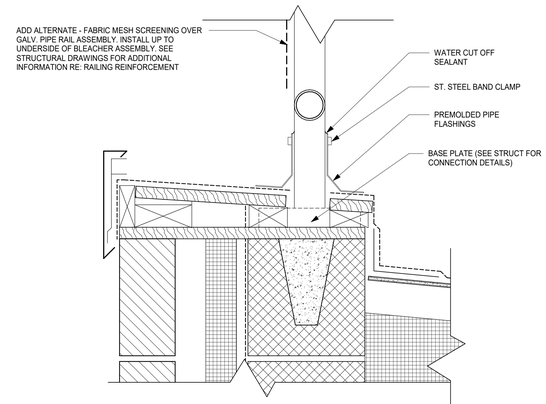


8 PIPE FLASHING DETAIL
3" = 1'-0"

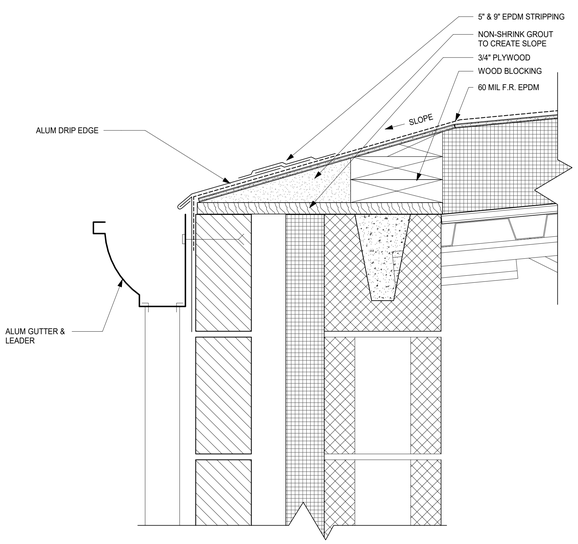


3 GUTTER WITH MASONRY WALL
3" = 1'-0"

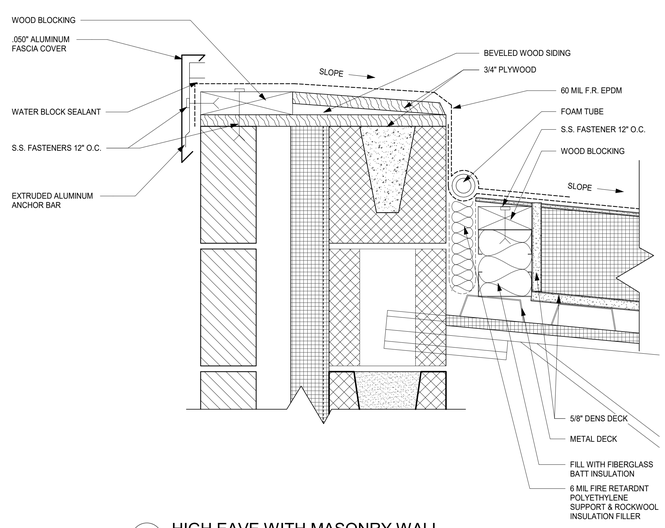


2 HIGH EAVE WITH MASONRY WALL
3" = 1'-0"

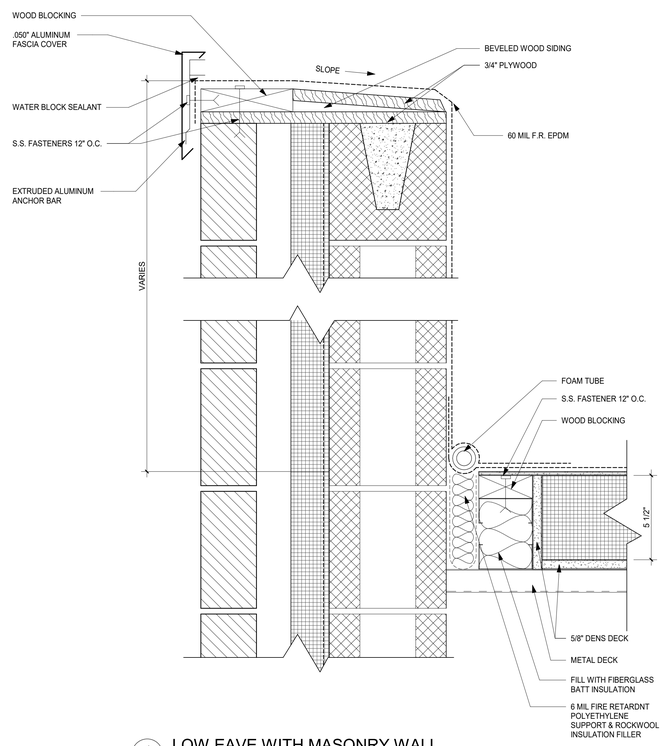


1 LOW EAVE WITH MASONRY WALL
3" = 1'-0"

# GREENWICH HS CARDINAL STADIUM PHASE 1

GREENWICH PUBLIC SCHOOLS
10 HILLSIDE ROAD
GREENWICH CT 06830

KG+D listen imagine build
KG+D . ARCHITECTS PC
285 MAIN STREET MOUNT KISCO . NEW YORK . 10549
P:914.666.5900 KGDARCHITECTS.COM

CONSTRUCTION DOCUMENTS

NOTE: ALL IDEAS, DESIGNS, ARRANGEMENTS AND PLANS INDICATED OR REPRESENTED BY THIS DRAWING ARE OWNED BY AND ARE THE PROPERTY OF KAEYER, GARMENT, & DAVIDSON ARCHITECTS, PC (KG&D), AND WERE CREATED FOR USE ON THIS PROJECT. NONE OF SUCH IDEAS, DESIGNS, ARRANGEMENTS OR PLANS SHALL BE USED BY OR DISCLOSED TO ANY PURPOSE WHATSOEVER WITHOUT THE WRITTEN PERMISSION OF (KG&D).

WRITTEN DIMENSIONS ON THIS DRAWING SHALL HAVE PRECEDENCE OVER SCALED DIMENSIONS. CONTRACTOR SHALL VERIFY ALL ACTUAL DIMENSIONS AND CONDITIONS ON THE JOB AND THE ARCHITECT MUST BE NOTIFIED OF ANY VARIATIONS FROM DIMENSIONS AND CONDITIONS SHOWN. SHOP DETAILS MUST BE SUBMITTED TO THIS OFFICE FOR APPROVAL BEFORE PROCEEDING WITH FABRICATION.

ALTERATIONS BY ANY PERSON, IN ANY WAY, OF ANY ITEM CONTAINED ON THIS DOCUMENT, UNLESS ACTING UNDER THE DIRECTION OF THE LICENCED ARCHITECT WHOSE PROFESSIONAL SEAL IS AFFIXED HERETO, IS A VIOLATION OF TITLE VII, SECT. 69.5 (b) OF NEW YORK STATE LAW.
COPYRIGHT KAEYER, GARMENT + DAVIDSON ARCHITECTS & ENGINEERS, PC
ALL RIGHTS RESERVED

Professional Seal

| No. | Date | Issue |
|---|---|---|
| 4 | 11/10/20 | PHASE 1 CON. DOCS. |

Sheet Title

## ROOF DETAILS

| Job No. | Date |
|---|---|
| 2018-1035 | 10/23/20 |
| Scale | Drawn / Checked |
| AS NOTED | Author Checker |

Sheet Number

A900

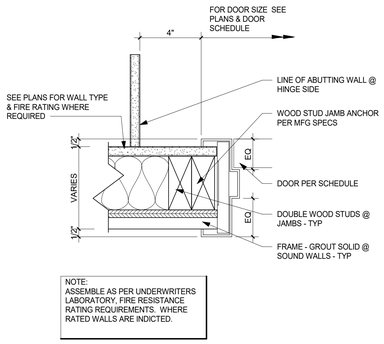


B DOOR JAMB AT GYP BD WALL

SCALE 3"= 1'-0"

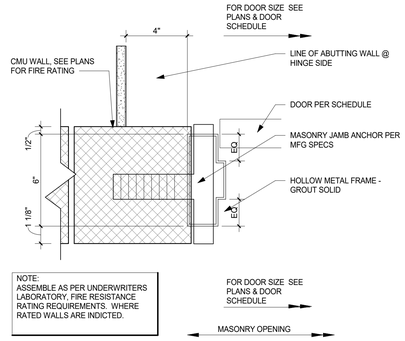


A DOOR JAMB AT CMU WALL

SCALE 3"= 1'-0"

**DOOR FINISH SCHEDULE ABBREV.**

| | |
|---|---|
| AL | ALUMINUM |
| ALCW | ALUMINUM CLAD WOOD |
| CL | CLASSROOM |
| CS | CORRIDOR, SMOKE, & FIRE DOORS (RATED) |
| EA | EXTERIOR, ALUMINUM |
| F | FLUSH FLOOR |
| FF | FACTORY FINISH |
| FG1 | FLUSH DOOR GLASS |
| FLNG | FLUSH LONG NARROW |
| GL | GLASS |
| FNG | FLUSH NARROW GLASS |
| HM | HOLLOW METAL |
| MBL | MARBLE |
| OF | OUTSIDE FACE |
| PTD | PAINTED |
| SA | SECURE ACCESS |
| SE | SECURE (STORAGE/JANITOR/MECH./ETC.) |
| SS | STAINLESS STEEL |
| ST | STAIN & SEAL |
| SW | STAIRWAY DOOR |
| TM | TOLIET, MULTIUSER |
| TS | TOLIET, SINGLE USER |
| WD | WOOD |
| WSI | WIDE STILE |

ADD ALTERNATE #2 - KIOSK CONSTRUCTION

**KIOSK DOOR SCHEDULE**

| Mark | Leaf # | Wl | HT | Elev | Door Mat | Door Fin | Frame Type | Frame Mat | Frame Fin | Fire Label | Saddle | Comments |
|---|---|---|---|---|---|---|---|---|---|---|---|---|
| K01 | 1 | 3' - 0" | 6' - 8" | FG1 | ALCW | FF | 1T | AL | FF | | AL | EXTERIOR : HARDWARE SET EF |
| K02 | - | 3' - 8" | 5' - 0" | CD | GLVST | FF | - | HM | PTD | | - | EXTERIOR : FACTORY APPLIED PAINT, COLOR BY ARCH |
| K03 | - | 3' - 8" | 5' - 0" | CD | GLVST | FF | - | HM | PTD | | - | EXTERIOR : FACTORY APPLIED PAINT, COLOR BY ARCH |

BASE BID

**Door Schedule**

| Mark | LEAF # | Wl | HT | Elev | Door Mat | Door Fin | Frame Type | Frame Mat | Frame Fin | Fire Label | Saddle | Comments |
|---|---|---|---|---|---|---|---|---|---|---|---|---|
| 101 | 1 | 3' - 0" | 7' - 2" | FNG | FRP | FF | 3 | FRP | FF | 45 | AL | EXTERIOR |
| 102 | 1 | 3' - 0" | 7' - 0" | F | HM | PTD | 1 | HM | PTD | 45 | SLATE | |
| 103 | 1 | 3' - 0" | 7' - 0" | F | HM | PTD | 1 | HM | P | | SLATE | |
| 104 | 1 | 3' - 0" | 7' - 2" | F | FRP | FF | 1P | FRP | FF | 45 | AL | EXTERIOR |
| 104a | - | 12' - 0" | 4' - 8" | CD | GLVST | FF | - | HM | PTD | 45 | - | EXTERIOR : FACTORY APPLIED PAINT, COLOR BY ARCH : DOOR TIED TO FIRE ALARM SYSTEM |
| 105 | 1 | 3' - 0" | 7' - 2" | F | FRP | FF | 1P | FRP | FF | 45 | AL | EXTERIOR |
| 106 | 2 | 3' - 2" | 7' - 2" | F | FRP | FF | 2P | FRP | FF | 45 | AL | EXTERIOR |
| 106a | 1 | 3' - 0" | 7' - 2" | F | FRP | FF | 1P | FRP | FF | 45 | AL | EXTERIOR |
| 107 | 2 | 6' - 4" | 7' - 0" | F | FRP | FF | 2 | FRP | FF | 45 | AL | EXTERIOR |
| 107a | 1 | 3' - 0" | 7' - 0" | F | FRP | FF | 1 | FRP | FF | 45 | AL | EXTERIOR |
| 108 | 1 | 3' - 0" | 7' - 0" | F | HM | PTD | 1 | HM | PTD | | SLATE | |
| 109 | 1 | 3' - 0" | 7' - 2" | F | FRP | FF | 3 | FRP | FF | 45 | AL | EXTERIOR |
| 110 | 1 | 3' - 0" | 7' - 2" | F | FRP | FF | 1P | FRP | FF | 45 | AL | EXTERIOR |
| 110a | 1 | 3' - 0" | 7' - 2" | F | FRP | FF | 1P | FRP | FF | 45 | AL | EXTERIOR |
| 111 | 1 | 3' - 0" | 7' - 2" | F | FRP | FF | 1P | FRP | FF | 45 | AL | EXTERIOR |
| 111a | 1 | 3' - 0" | 7' - 2" | F | FRP | FF | 1P | FRP | FF | 45 | AL | EXTERIOR |
| 112 | 1 | 3' - 0" | 7' - 2" | F | FRP | FF | 3 | FRP | FF | 45 | AL | EXTERIOR |
| 113 | 1 | 3' - 0" | 7' - 0" | F | HM | PTD | 1 | HM | PTD | | SLATE | |
| 114 | 1 | 3' - 0" | 7' - 2" | F | FRP | FF | 1P | FRP | FF | 45 | AL | EXTERIOR |
| 114a | 2 | 3' - 2" | 7' - 2" | F | FRP | FF | 2P | FRP | FF | 45 | AL | EXTERIOR |
| 114b | 2 | 3' - 2" | 7' - 2" | F | FRP | FF | 2P | FRP | FF | 45 | AL | EXTERIOR |
| 114C | | 2' - 0" | 7' - 0" | F | HM | PTD | 1 | HM | PTD | 45 | SLATE | |
| 201 | 1 | 3' - 0" | 7' - 2" | FNG | FRP | FF | 3 | FRP | FF | 45 | AL | EXTERIOR |

DOOR GLAZING= D-H-45 FIRE RATED IGU.

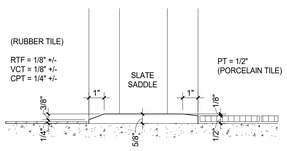


2B SADDLE DETAIL

SCALE 3"= 1'-0"

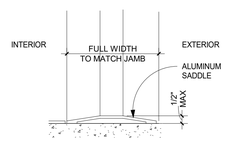


2A TYPICAL EXTERIOR SADDLE

SCALE 3"= 1'-0"

SADDLE NOTES:

1. COORDINATE DOOR UNDERCUT WITH SADDLE & OTHER UNDERCUTTING REQ. SEE DOOR SCHEDULE & SADDLE DETAILS ON THIS SHEET.

2. SADDLES ARE TO BE FULL WIDTH OF DOOR FRAME

3. SADDLES MAY BE OMITTED WHERE MATERIALS OF SIMILAR THICKNESS MEET WITH THE WRITTEN APPROVAL OF THE ARCHITECT. DOOR UNDERCUTS MUST BE COORDINATED.

4. SLATE SADDLES, WHEN USED OR CALLED FOR SHALL BE SELECTED FROM FULL COLOR RANGE TO MATCH ADJACENT FLOORING.

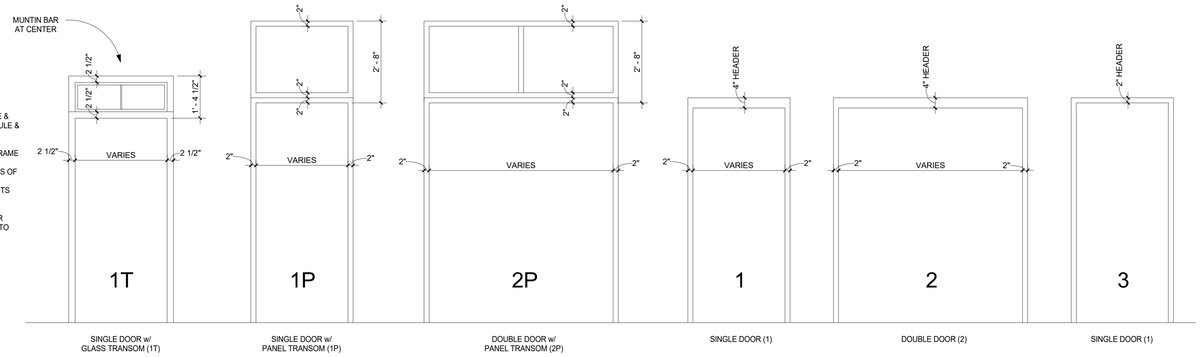


ADD ALTERNATE #2 - KIOSK CONSTRUCTION

W2

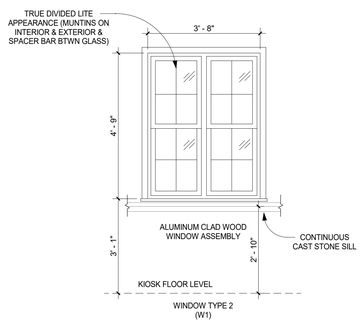


WINDOW TYPE 2 (W1)

ADD ALTERNATE #2 - KIOSK CONSTRUCTION

W3

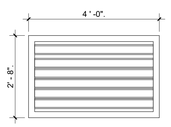


PTD FIRE RATED FRP WINDOW FRAME WITH FIRE RATED INSULATED GLASS ASSEMBLY O-H-45 MINUTE FIRE RATING.

W1

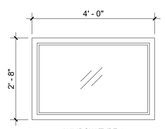


WINDOW TYPE 1 (W1)

FG1

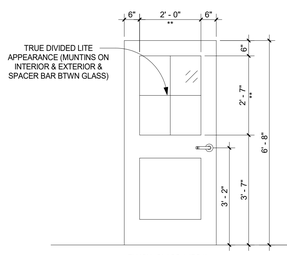


FLUSH GLASS 1 (FG1)

** DIMENSION INCREASES AT DOORS > 7'-0" H AT DOORS > 3'-0" W

ADD ALTERNATE #2 - KIOSK CONSTRUCTION

FNG

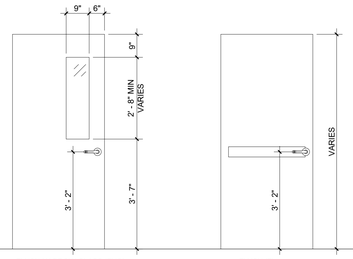


FLUSH NARROW GLASS (FNG)

MAXIMUM GLAZING 288 SQ. IN

F




FLUSH (F)

CD

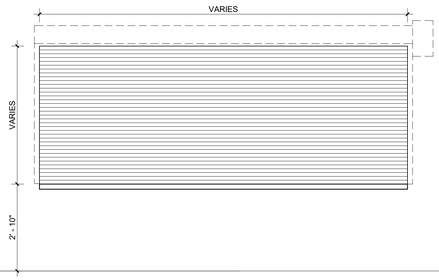


COILING COUNTER DOOR (CD)

FINISHED OPENING - WIDTH & HEIGHT VARIES
INSULATED 60 MIN FIRE-RATED
ALL STAINLESS STEEL CONSTRUCTION
FINAL UNIT WIDTH & HEIGHT BY MFG

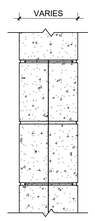


REINFORCE ALL MASONRY WALLS W/ #4 REBAR @ 16" VERTS W/ MATCHING DOWELS TO MATCH EXTENDED 18" REBAR FROM SLAB OR WALL. FULLY GROUT REINFORCED CELLS. SEE SPECS & STRUCTURAL DWGS FOR OTHER REQUIREMENTS

| | |
|---|---|
| M4 | DENOTES 4" CMU |
| M6 | DENOTES 6" CMU |
| M8 | DENOTES 8" CMU |
| M10 | DENOTES 10" CMU |
| M12 | DENOTES 12" CMU |

REFER TO DETAILS MT & MB FOR REQUIREMENTS WHERE MASONRY WALLS CONNECT TO FLOORS AND DECKS

M4 CONCRETE MASONRY UNIT WALL

M6 M8 M10 M12

MASONRY UNITS MUST ACHIEVE INTENDED FIRE RATING SHOWN IN PLANS & PER UL U906 (2hr RATING) - SEE SPECS FOR MORE INFO

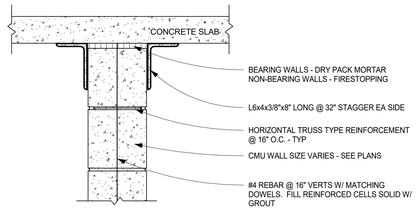


MT TYPICAL CONCRETE MASONRY UNIT WALL / SLAB ATTACHMENT

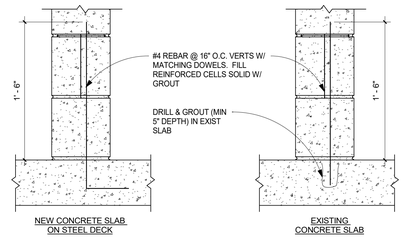


MB TYPICAL CONCRETE MASONRY UNIT WALL & SLAB ATTACHMENT

GREENWICH HS CARDINAL STADIUM PHASE 1

GREENWICH PUBLIC SCHOOLS
10 HILLSIDE ROAD
GREENWICH CT 06830

KG+D listen imagine build
KG+D . ARCHITECTS PC
285 MAIN STREET MOUNT KISCO . NEW YORK . 10549
P:914.666.5900 KGDARCHITECTS.COM

CONSTRUCTION DOCUMENTS

NOTE: ALL IDEAS, DESIGNS, ARRANGEMENTS AND PLANS INDICATED OR REPRESENTED BY THIS DRAWING ARE OWNED BY AND ARE THE PROPERTY OF KAETER, GARMENT, & DAVIDSON ARCHITECTS, P.C. (KG&D), AND WERE CREATED FOR USE ON THIS PROJECT. NONE OF SUCH IDEAS, DESIGNS, ARRANGEMENTS OR PLANS SHALL BE USED BY OR DISCLOSED TO ANY PURPOSE WHATSOEVER WITHOUT THE WRITTEN PERMISSION OF (KG&D).

WRITTEN DIMENSIONS ON THIS DRAWING SHALL HAVE PRECEDENCE OVER SCALED DIMENSIONS. CONTRACTOR SHALL VERIFY ALL ACTUAL DIMENSIONS AND CONDITIONS ON THE JOB AND THE ARCHITECT MUST BE NOTIFIED OF ANY VARIATIONS FROM DIMENSIONS AND CONDITIONS SHOWN. SHOP DETAILS MUST BE SUBMITTED TO THIS OFFICE FOR APPROVAL BEFORE PROCEEDING WITH FABRICATION.

ALTERATIONS BY ANY PERSON, IN ANY WAY, OF ANY ITEM CONTAINED ON THIS DOCUMENT, UNLESS ACTING UNDER THE DIRECTION OF THE LICENSED ARCHITECT WHOSE PROFESSIONAL SEAL IS AFFIXED HERETO, IS A VIOLATION OF TITLE VII, SECT 69.5 (b) OF NEW YORK STATE LAW.
COPYRIGHT KAETER, GARMENT + DAVIDSON ARCHITECTS & ENGINEERS, PC
ALL RIGHTS RESERVED

Professional Seal

| No. | Date | Issue |
|---|---|---|
| 4 | 11/10/20 | PHASE 1 CON. DOCS. |
| 3 | 10/30/20 | PHASE 1B SITE PLAN APP. |
| 2 | 08/12/20 | ISSUE FOR PERMIT |
| 1 | 08/29/19 | DESIGN DEVELOPMENT |

Sheet Title
WINDOW, DOOR & WALL SCHEDULES & DETAILS

| | |
|---|---|
| Job No. 2018-1035 | Date 07/08/19 |
| Scale AS NOTED | Drawn / Checked - |

Sheet Number
A901

## PLUMBING FIXTURE SCHEDULE

| TAG | SYMBOLS PLAN | SYMBOLS ELEVATION | FIXTURES | PLUMBING CONNECTIONS WASTE | VENT | COLD WATER | HOT WATER | |
|---|---|---|---|---|---|---|---|---|
| P-1 | | | STANDARD WATER CLOSET WALL-MOUNT | 4" | 2" | 1¼" | – | TOILET:<br>AMERICAN STANDARD #2257.511 AFWALL MILLENIUM FLOWISE, WALL MOUNTED, HIGH EFFICIENCY 1.1 GPF, ELONGATED BOWL, VITREOUS CHINA WITH EVERCLEAN, CONDENSATION CHANNEL, ADA COMPLIANT, PROVIDE CARRIERS.<br>FLUSHOMETER:<br>AMERICAN STANDARD SELECTRONIC FLUSH VALVE MODEL 6065.111, BATTERY POWERED, ADA COMPLIANT HANDS FREE OPERATION. |
| P-2A | | | LAVATORY WALL HUNG (BATHROOMS) | 1½" | 1½" | ½" | ½" | SINK:<br>KOHLER MODEL K-2084 SOHO WALL-MOUNT BATHROOM SINK, ADA COMPLIANT. COLOR/FINISH: WHITE, VITREOUS CHINA, WITH OVERFLOW, SINGLE CENTER HOLE, CONCEALED ARM SUPPORT, KOHLER K-8998 P-TRAP. PROVIDE TRUE BRO LAV GUARDS EZ SERIES PIPING COVERS, ADA COMPLIANT.<br>FAUCET:<br>DELTA MODEL 559LF-1.0-PP CONTEMPORARY ROUND SINGLE HANDLE DECK MOUNT. POLISHED CHROME, SOLID BRASS BODY, CERAMIC DISC CARTRIDGE WITH TEMPERATURE LIMITER CONTROL MECHANISM, RED/BLUE INDICATOR MARKINGS, MAXIMUM 1.0 GPM @ 60 PSI, 3/8" COMPRESSION FITTINGS WITH FLEXIBLE SUPPLY HOSES, 50/50 POP UP TYPE FITTING WITH PLATED FLANGE AND STOPPER. ADA COMPLIANT, EPA WATERSENSE. |
| P-2B | | | LAVATORY (FAMILY TOILET) | 1½" | 1½" | ½" | ½" | SINK:<br>BRADLEY OMNI MODEL LD-3010-HS-TR1 RECTANGULAR MULTIPURPOSE BASIN BATHROOM SINK, ADA COMPLIANT. COLOR/FINISH: TERREON COLOR, CHARCOAL GRAY, SINGLE CENTER HOLE.<br>FAUCET:<br>VERGE FAUCET CRESTT SERIES MODEL S53-3100. FINISH TO BE COORDINATED WITH ARCHITECT. CERAMIC DISC CARTRIDGE WITH TEMPERATURE LIMITER CONTROL MECHANISM, RED/BLUE INDICATOR MARKINGS, MAXIMUM 1.0 GPM @ 60 PSI, 3/8" COMPRESSION FITTINGS WITH FLEXIBLE SUPPLY HOSES, 50/50 POP UP TYPE FITTING WITH PLATED FLANGE AND STOPPER. ADA COMPLIANT, EPA WATERSENSE. |
| P-3 | | | SINK (CONCESSION) | 1½" | 1½" | ½" | ½" | SINK:<br>ELKAY MODEL ECTSRAD25226TBG CROSSTOWN STAINLESS STEEL 25"x22-"x6" SINGLE BOWL, DUAL MOUNT, ADA COMPLIANT. CENTER 3-1/2" DRAIN OPENING. PROVIDE ALL REQUIRED MOUNTING HARDWARE FOR UNDERMOUNT INSTALLATION.<br>FAUCET:<br>ELKAY FAUCET MODEL LKD2439C, ARC SPOUT * 2-5/8" LEVER HANDLES, ADA COMPLIANT, 1.5 GPM MAX FLOW RATE, CERAMIC DISC VALVES. COLOR/FINISH TO BE COORDINATED WITH ARCHITECT. |
| P-4 | | | URINAL | 2" | 2" | 1" | – | URINAL; MAKE: KOHLER<br>MODEL: K-4991-ETSS<br><br>VITREOUS CHINA, ANTIMICROBIAL FINISH, 14" EXTENDED RIM, 0.125 GPF TO 1.0 GPF<br><br>FLUSHOMETER; MAKE: KOHLER<br>MODEL: K-7537, BATTERY OPERATED<br><br>BRASS CONSTRUCTION, POLISHED CHROME FINISH, ELECTRONIC INFRARED SENSOR, 80 PSI MAX, 25 PSI MIN, 10GPM MIN |
| P-5 | | | DRINKING FOUNTAIN | 1¼" | 1¼" | ⅜" | – | ELKAY EZH20 BOTTLE FILLING STATION WITH SINGLE LZ COOLER, STAINLESS STEEL BASIN WITH INTEGRAL DRAIN, FLEXI-GUARD SAFETY BUBBLER, 8 GPH FLOW RATE. MODEL VRCGRN8WSK, 115V/1ø/60HZ, 8.0 GPH CHILLING CAPACITY BASED ON 80 DEG F INLET WATER & 90 DEG F AMBIENT AIR TEMP FOR 50 DEG F CHILLED DRINKING WATER, 5.5 FLA, 260 WATTS, ADA COMPLIANT |
| P-6 | | | JANITOR MOP BASIN | 2" | 2" | 3/4" | 3/4" | SINK:<br>FIAT MODEL TSBC3000 WITH 12" DEEP SINK WITH 6" DROP FACE<br>FAUCET:<br>SPEAKMAN COMMANDER SC-5811 WITH HOSE, PAIL HOOK & WALL BRACE, NO EYEWASH. PROVIDE JAY R. SMITH ADJUSTABLE, CAST-IRON TRAP, MODEL 9110, 2"OUTLET, WITH CHROME PLATED STRAINER AND CLEANOUT PLUG. |

## PLUMBING DRAINAGE SPECIALTIES SCHEDULE

| TAG | SYMBOLS PLAN | SYMBOLS ELEVATION | FIXTURES | DESCRIPTION |
|---|---|---|---|---|
| CO | | | CLEANOUT | WALL CLEANOUT WITH CLEANOUT TEE AND CHROME PLATED BRONZE SQUARE ACCESS COVER AND FRAME. WADE #W-8480 OR APPROVED EQUAL |
| WCO | | | WALL CLEANOUT | WALL CLEANOUT WITH CLEANOUT TEE AND CHROME PLATED BRONZE SQUARE ACCESS COVER AND FRAME. WADE #W-8480 OR APPROVED EQUAL |
| CODP | | | CLEANOUT DECKPLATE | FLOOR CLEANOUT WITH ADJUSTABLE HEAD, ANCHOR FLANGE, CUT-OFF SECTIONS AND ROUND SCORIATED NICKEL-BRONZE TOP: WADE #W-6000 OR APPROVED EQUAL. PROVIDE HEAVY DUTY CAST IRON TOP FOR MECHANICAL ROOMS. |
| FD | | | FLOOR DRAIN | FOR TOILET ROOMS AND GENERAL USE AREAS: WADE #W-1100-STD6-1-6-27 WITH 6" ROUND NICKEL-BRASS STAINER, SEDIMENT BUCKET, CAST IRON BODY, CAST IRON DRAINAGE FLANGE, FLASHING CLAMP, TRAP PRIMER TAP OR APPROVED EQUAL. |

## PLUMBING WATER SPECIALTIES SCHEDULE

| TAG | SYMBOLS PLAN | SYMBOLS ELEVATION | FIXTURES | DESCRIPTION |
|---|---|---|---|---|
| WHA | | – | WATER HAMMER ARRESTOR | TYPE SA: WADE "SHOCKSTOP" BELLOWS TYPE, WITH ALL STAINLESS STEEL CONSTRUCTION, CHARGED WITH NITROGEN. PROVIDE ON ALL CW LINES TO ALL HORIZONTAL BRANCH LINES. RE: RISER. |
| HB-1 | | | HOSE BIB | WATTS DRAINAGE PRODUCTS HY-330 CONCEALED MODERATE CLIMATE KEY OPERATED WALL HYDRANT WITH NICKEL BRONZE (STANDARD) BOX AND DOOR, CHROME PLATED HYDRANT FACE, INTEGRAL VACUUM BREAKER, 3/4"(19) HOSE CONNECTION, ALL BRONZE HEAD, SEAT CASTING AND INTERNAL WORKING PARTS, GALVANIZED WALL CASING, AND HYDRANT KEY. |
| NFWH-1 | | | NON-FREEZE WALL HYDRANT | CAST BRASS, THREADED, NON_FREEZE, HEAVY-DUTY HYDRANT WITH NIKALOY BOX AND LOCKING COVER, BRASS OPERATING PARTS, 3/4"HPT HOSE OUTLET, 3/4" IPS OUTSIDE, ELBOW ADAPTER, "T" HANDLE KEY, AND INTEGRAL VACUUM BREAKER/BACKFLOW PREVENTER: WADE #8600. PIPING SERVING WH-1 TO BE ROUTED DN IN INTERIOR WALLS. |

## SYMBOLS AND ABBREVIATIONS

| SYMBOL | ABBREVIATION | DESCRIPTION |
|---|---|---|
| – | AFF | ABOVE FINISHED FLOOR |
| – | AHC | ABOVE HUNG CEILING |
| – | BFP | BACK FLOW PREVENTOR |
| | – | BALL VALVE |
| | – | BASKET STRAINER |
| | – | BUTTERFLY VALVE |
| | – | CHECK VALVE |
| | – | CIRCUIT SETTER |
| | CODP | CLEAN OUT DECK PLATE |
| – | CW | COLD WATER |
| | – | CONCENTRIC REDUCER |
| – | DCV | DOUBLE CHECK VALVE – BFP |
| | – | ECCENTRIC REDUCER |
| | – | ELBOW DOWN |
| | – | ELBOW UP |
| – | EX. | EXISTING TO REMAIN |
| | – | FLEXIBLE CONNECTION |
| – | FCO | FLOOR CLEAN OUT |
| – | FS | FLOOR SINK |
| | – | FLOW ARROW |
| – | FAI | FRESH AIR INTAKE |
| —— G —— | G | GAS |
| | – | GATE VALVE |
| | – | GLOBE VALVE |
| HT | – | HEAT TRACE PIPING TAG |
| HTC | – | HEAT TRACE CONTROLLER TAG |
| | HW | HOT WATER |
| | HWC | HOT WATER RECIRCULATION |
| | CW | COLD WATER |
| | – | MANUAL AIR VENT |
| – | NEW | NEW WORK |
| | – | OS&Y GATE VALVE |
| | OD | OVERFLOW STORM DRAIN |
| P 1 | | PLUMBING RISER TAG |
| | – | PLUG VALVE |
| | – | PIPE CAP |
| | – | PRESSURE GAGE |
| | – | PRESSURE REDUCING VALVE |
| | – | PUMP |
| – | PD | PUMP DISCHARGE |
| – | RPZ | REDUCED PRESSURE ZONE – BFP |
| – | REL. | REMOVE AND RELOCATE |
| – | S | SANITARY |
| —— —— | S | SANITARY UNDER SLAB |
| S | – | SOLENOID VALVE |
| | – | STRAINER |
| – | SD | STORM DRAINAGE |
| —— | SD | STORM DRAINAGE UNDER SLAB |
| | – | TEE DOWN |
| | – | TEE UP |
| | – | THERMOMETER |
| – | TYP. | TYPICAL |
| | – | T&P RELIEF VALVE |
| | – | UNION |
| – – – | V | VENT |
| – | VTR | VENT THROUGH ROOF |
| – | W | WASTE LINE |
| | – | 2-WAY VALVE |
| | – | 3-WAY VALVE |

## GENERAL NOTES

1. THE CONTRACT DRAWINGS INDICATE THE EXTENT AND GENERAL ARRANGEMENTS OF THE PLUMBING SYSTEMS. IF ANY DEPARTURES FROM THE DRAWINGS ARE DEEMED NECESSARY BY THE PLUMBING CONTRACTOR, DETAILS OF SUCH DEPARTURES AND THE REASONS THEREFORE SHALL BE SUBMITTED TO THE OWNER AND ENGINEER FOR APPROVAL. NO SUCH DEPARTURES SHALL BE MADE WITHOUT PRIOR WRITTEN APPROVAL OF THE OWNER AND ENGINEER. EQUIPMENT AND PIPING ARRANGEMENTS SHALL PROVIDE ADEQUATE AND ACCEPTABLE CLEARANCES FOR ENTRY, SERVICING, AND MAINTENANCE. ANY CHANGES TO PIPING AND EQUIPMENT LOCATIONS NECESSARY TO AVOID INTERFERENCE WITH OTHER TRADES SHALL BE MADE AT NO EXTRA COST.
2. THE PLUMBING WORK SHALL BE PERFORMED IN STRICT ACCORDANCE WITH THE LATEST EDITION OF THE PREVAILING CONNECTICUT PLUMBING AND BUILDING CODES. IN CASE OF CONFLICT BETWEEN THE CONTRACT DOCUMENTS AND A GOVERNING CODE OR ORDINANCE, THE MORE STRINGENT STANDARD SHALL APPLY.
3. THE PLUMBING CONTRACTOR SHALL BE RESPONSIBLE FOR OBTAINING ALL NECESSARY PERMITS AND FOR PAYING RELATED FEES.
4. CONNECTIONS TO UTILITIES AND SERVICES ARE SHOWN ACCORDING TO THE BEST INFORMATION AVAILABLE. THE CONTRACTOR SHALL VERIFY THE EXACT LOCATIONS, INVERT ELEVATIONS, AND SIZES OF EXISTING PLUMBING SERVICES IN FIELD, AND SHALL CONNECT NEW PLUMBING SERVICES AS INDICATED ON DRAWINGS.
5. PRIOR TO FABRICATION, THIS CONTRACTOR SHALL VERIFY ALL MEASUREMENTS AND CONDITIONS ON JOB SITE, AND COORDINATE THIS WORK WITH THE WORK OF ALL OTHER TRADES.
6. ALL ACCESS PANELS SHALL BE BY GENERAL CONTRACTOR. THE PLUMBING CONTRACTOR SHALL BE RESPONSIBLE FOR COORDINATING THEIR LOCATION.
7. PROVIDE ALL PLUMBING FIXTURES, PIPING, VALVES AND ACCESSORY ITEMS AS SPECIFIED AND AS REQUIRED FOR A COMPLETE INSTALLATION. ROUGHING DIMENSIONS OF FIXTURES MUST BE COORDINATED WITH THE GENERAL CONTRACTOR.
8. PITCH ALL WASTE, SANITARY, AND STORM DRAIN PIPING AT MAXIMUM SLOPE POSSIBLE, BUT NOT LESS THAN 1/8" PER FOOT FOR PIPING ≥3" AND 1/4" PER FOOT FOR PIPING ≤ 2½".
9. NO PIPING SHALL RUN EXPOSED IN FINISHED AREAS.
10. PROVIDE DIELECTRIC FITTINGS OR COUPLINGS WHEREVER DISSIMILAR METALS ARE JOINED.
11. PROVIDE SHUTOFF VALVES AT ALL FIXTURES AND EQUIPMENT ON COLD WATER, HOT WATER, AND GAS PIPES.
12. ALL WORK SHALL BE PROPERLY TESTED, BALANCED, AND CLEANED AND DISINFECTED. PROVIDE A ONE YEAR WARRANTY FROM DATE OF FINAL INSPECTION ON ALL PARTS AND LABOR.
13. PROVIDE ALL PIPE OPENINGS THROUGH PARTITIONS WITH PIPE SLEEVES. FOR PIPES PENETRATING FIRE RATED PARTITIONS, THE SPACE BETWEEN THE PIPE AND THE SLEEVE SHALL BE SEALED WITH FIRE STOPPING MATERIAL. PENETRATIONS FOR PIPING SHALL BE MADE BY CORE DRILLING WHENEVER POSSIBLE.
14. PROVIDE TRAP SEAL PRIMERS FOR FLOOR DRAINS WHERE INDICATED. INSTALL THE PRIMER VALVE IN THE COLD WATER SERVICE, WITH THE TRAP CONNECTION PIPED TO THE FLOOR DRAIN TRAP. LOCATE THE VALVE IN AN ACCESSIBLE LOCATION.
15. THE PLUMBING CONTRACTOR SHALL PROVIDE ALL CUTTING, PATCHING, CORE DRILLING, PAINTING, ACCESS PANELS, AND FINAL RESTORATION REQUIRED TO FACILITATE THE INSTALLATION OF PLUMBING PIPING, INCLUDING ABOVE CEILINGS AND IN SHAFTS.
16. ALL MOTOR STARTERS AND DISCONNECT SWITCHES FOR PLUMBING EQUIPMENT SHALL BE FURNISHED BY THE PLUMBING CONTRACTOR AND INSTALLED BY THE ELECTRICAL CONTRACTOR, UNLESS OTHERWISE NOTED. DISCONNECT SWITCHES FURNISHED BY THE PLUMBING CONTRACTOR FOR PLUMBING EQUIPMENT SHALL BE HEAVY DUTY TYPE.
17. THE CONTRACTOR SHALL BE RESPONSIBLE FOR PROVIDING TEMPORARY VENTILATION AND EXHAUST AIR WHEN WELDING OR SOLDERING OPERATIONS ARE PERFORMED, AS REQUIRED BY OSHA.
18. THE OWNER'S PERMANENT EQUIPMENT SHALL NOT BE USED FOR VENTILATION DURING CONSTRUCTION.

## EQUIPMENT NOTES

1. ELECTRIC HOT WATER HEATER, EWH-1 SHALL BE RHEEM MODEL EGSP6, 6 KW, 6-GALLON STORAGE CAPACITY. 208V/1ø/60. PROVIDE FACTORY INSTALLED ASME T&P RELIEF VALVE.
2. ELEVATOR SUMP PUMP: TO BE BASED ON STANCOR MODEL SE40 PUMP, 0.5 HP, 115V-1 PHASE-60 HERTZ, 5 FLA, 64 GPM @ 22 FEET HEAD AND 3600 RPM. PROVIDE STANCOR CHECK VALVE WITH EACH PUMP. PROVIDE OIL MINDER CONTROL SYSTEM FOR EACH PUMP WITH BUILT IN AUDIBLE AND VISUAL ALARM WHEN PUMP DOES NOT RUN DUE TO OIL IN PIT OR HIGH LIQUID ALARM. PROVIDE SILENCING BUTTON FOR AUDIBLE ALARM BUILT INTO PANEL. PANEL SHALL HAVE ADDITIONAL CONTACT FOR A REMOTE ALARM LOCATION. PROVIDE JUNCTION BOX WITH MULTI PIN CONNECTOR AND CORD LENGTHS AS REQUIRED. PANEL TO HAVE INDICATOR LIGHTS FOR OIL SPILL, HIGH LIQUID LEVEL, OVERLOAD AND PUMP RUN. CONTROL PANEL ENCLOSURE TO BE NEMA4X WATERTIGHT CORROSION RESISTANT FIBERGLASS. PROVIDE DISCONNECT SWITCH.
3. HEAT TRACING: SHALL BE BASED ON RAYCHEM 5XL-1-CR TRACE SYSTEM, STANDARD JACKET AMC-1B LINE SENSING TYPE. RATED AT 120v/1ø/60Hz, 5.0 WATTS/LF, 15 AMP PER CIRCUIT. LOCATE SENSING BULBS ON AN EXTERIOR SECTION OF PIPING.

   A.) PROVIDE HEAT TRACING ON ALL CW MAKE-UP AND DRAIN LINES LOCATED OUTDOORS.

   B.) HEAT TRACING SHALL EXTEND 5' INTO THE BUILDING AND ALONG THE ENTIRE LENGTH OF OUTDOOR PIPE. THE HEAT TRACING SHALL TERMINATE IN A JUNCTION BOX ABOVE GRADE AT THE END OF THE PIPING RUN INSIDE THE BUILDING. THE CONTRACTOR SHALL PROVIDE THE NUMBER OF CIRCUITS REQUIRED FOR EACH RUN OF PIPE AS REQUIRED TO PROPERLY TRACE EACH SEGMENT OF PIPE. LIMIT LENGTH TO 165'.

   C.) PROVIDE THE FOLLOWING SPECIALTIES FOR A SYSTEM:
   - ADJUSTABLE OUTSIDE AIR TEMPERATURE SENSOR, ARRANGED TO ENERGIZE HEAT TRACING @ 40°F.
   - GROUND FAULT PROTECTION EQUIPMENT
   - POWER AND END SEAL KIT(S) AS REQUIRED.
   - SPLICE AND "TEE" KIT(S) AS REQUIRED.
   - "ELECTRONIC TRACED" LABEL INSTALLED EVERY 15' O.C.
   - GLASS CLOTH ADHESIVE – FOR METAL PIPE.
   - ALUMINUM TAPE – FOR PLASTIC PIPE.
   - ALL MOUNTING BRACKETS AND HARDWARE.
   - SYSTEM CONTROLER – CONTROLLED THROUGH REMOTE THERMOSTAT WITH VARIABLE SET POINT.
   - CONTROL PANEL.

   D.) THE SYSTEM SHALL BE UL LISTED AND FM APPROVED.

# GREENWICH HS CARDINAL STADIUM PHASE 1A

GREENWICH PUBLIC SCHOOLS
10 HILLSIDE ROAD
GREENWICH CT 06830


KG+D listen imagine build

KG+D . ARCHITECTS PC
285 MAIN STREET MOUNT KISCO . NEW YORK . 10549
P:914.666.5900 KGDARCHITECTS.COM

OLA Consulting Engineers
50 Broadway,
Hawthorne, NY 10532
914.747.2800
8 West 38th Street,
Suite 501
New York, NY 10018
646.849.4110
olace.com


CONSTRUCTION DOCUMENTS


NOTE: ALL IDEAS, DESIGNS, ARRANGEMENTS AND PLANS INDICATED OR REPRESENTED BY THIS DRAWING ARE OWNED BY AND ARE THE PROPERTY OF KAEYER, GARMENT, & DAVIDSON ARCHITECTS, PC (KG&D), AND WERE CREATED FOR USE ON THIS PROJECT. NONE OF SUCH IDEAS, DESIGNS, ARRANGEMENTS OR PLANS SHALL BE USED BY OR DISCLOSED TO ANY PURPOSE WHATSOEVER WITHOUT THE WRITTEN PERMISSION OF (KG&D).

WRITTEN DIMENSIONS ON THIS DRAWING SHALL HAVE PRECEDENCE OVER SCALED DIMENSIONS. CONTRACTOR SHALL VERIFY ALL ACTUAL DIMENSIONS AND CONDITIONS ON THE JOB AND THE ARCHITECT MUST BE NOTIFIED OF ANY VARIATIONS FROM DIMENSIONS AND CONDITIONS SHOWN. SHOP DETAILS MUST BE SUBMITTED TO THIS OFFICE FOR APPROVAL BEFORE PROCEEDING WITH FABRICATION.

ALTERATIONS BY ANY PERSON, IN ANY WAY, OF ANY ITEM CONTAINED ON THIS DOCUMENT, UNLESS ACTING UNDER THE DIRECTION OF THE LICENCED ARCHITECT WHOSE PROFESSIONAL SEAL IS AFFIXED HERETO, IS A VIOLATION OF TITLE VI, SECT. 65 § 2L OF NEW YORK STATE LAW.
COPYRIGHT KAEYER, GARMENT • DAVIDSON ARCHITECTS & ENGINEERS, PC
ALL RIGHTS RESERVED.


Professional Seal

| No. | Date | Issue |
|---|---|---|
| 3 | 11/10/20 | CONSTRUCTION DOCUMENTS |
| 2 | 08/12/20 | ISSUE FOR PERMIT |

Sheet Title

PLUMBING SYMBOLS, ABBREVIATIONS, & NOTES

| Job No. | Date |
|---|---|
| NKGD0185.02 | 8/23/2019 |
| Scale: AS NOTED | Drawn / Checked: TV RG |

Sheet Number

P001

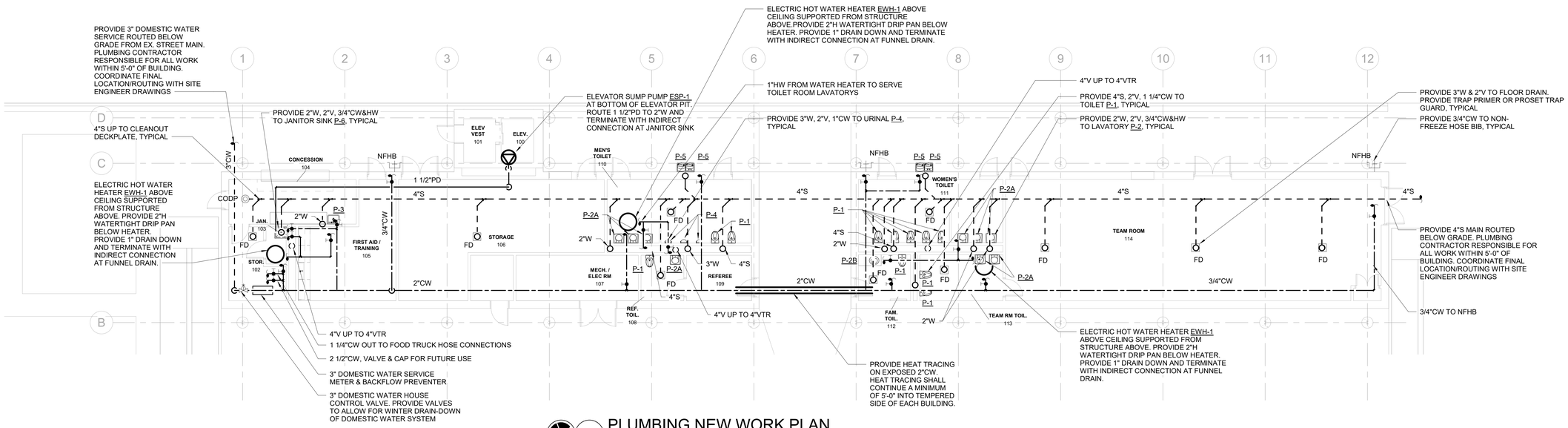


1 PLUMBING NEW WORK PLAN

SCALE: 1/8" = 1'-0"

# GHS CARDINAL STADIUM PHASE 1 BLEACHERS

Greenwich Public Schools
10 Hillside Road
Greenwich, CT 06830

KG+D listen imagine build
KG+D . ARCHITECTS PC
285 MAIN STREET MOUNT KISCO . NEW YORK . 10549
P:914.666.5900 KGDARCHITECTS.COM

OLA Consulting Engineers
50 Broadway,
Hawthorne, NY 10532
914.747.2800
8 West 38th Street,
Suite 501
New York, NY 10018
646.849.4110
olace.com

CONSTRUCTION DOCUMENTS

NOTE: ALL IDEAS, DESIGNS, ARRANGEMENTS AND PLANS INDICATED OR REPRESENTED BY THIS DRAWING ARE OWNED BY AND ARE THE PROPERTY OF KAEYER, GARMENT, & DAVIDSON ARCHITECTS, PC (KG&D), AND WERE CREATED FOR USE ON THIS PROJECT. NONE OF SUCH IDEAS, DESIGNS, ARRANGEMENTS OR PLANS SHALL BE USED BY OR DISCLOSED TO ANY PURPOSE WHATSOEVER WITHOUT THE WRITTEN PERMISSION OF KG&D.

WRITTEN DIMENSIONS ON THIS DRAWING SHALL HAVE PRECEDENCE OVER SCALED DIMENSIONS. CONTRACTOR SHALL VERIFY ALL ACTUAL DIMENSIONS AND CONDITIONS ON THE JOB AND THE ARCHITECT MUST BE NOTIFIED OF ANY VARIATIONS FROM DIMENSIONS AND CONDITIONS SHOWN. SHOP DETAILS MUST BE SUBMITTED TO THIS OFFICE FOR APPROVAL BEFORE PROCEEDING WITH FABRICATION.

ALTERATIONS BY ANY PERSON, IN ANY WAY, OF ANY ITEM CONTAINED ON THIS DOCUMENT, UNLESS ACTING UNDER THE DIRECTION OF THE LICENCED ARCHITECT WHOSE PROFESSIONAL SEAL IS AFFIXED HERETO, IS A VIOLATION OF TITLE VII, SECT. 69.5 (b) OF NEW YORK STATE LAW.
COPYRIGHT KAEYER, GARMENT • DAVIDSON ARCHITECTS & ENGINEERS, PC
ALL RIGHTS RESERVED.

Professional Seal

| No. | Date | Issue |
|---|---|---|
| 2 | 11/10/20 | CONSTRUCTION DOCUMENTS |
| 1 | 8/12/2020 | ISSUE FOR PERMIT |

Sheet Title

## PLUMBING NEW WORK PLAN

| Job No. | Date |
|---|---|
| NKGD0185.02 | 08/30/19 |
| Scale | Drawn / Checked |
| AS NOTED | Author Checker |

Sheet Number

P201

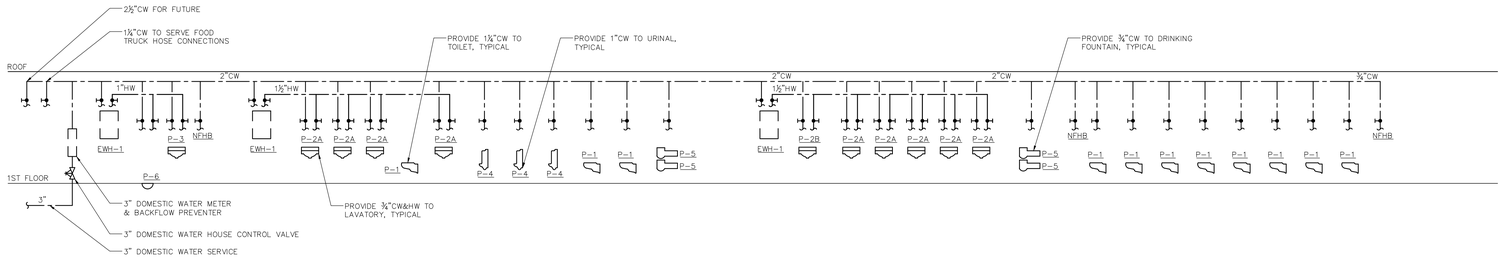


2 PLUMBING DOMESTIC WATER RISER DIAGRAM
SCALE: NOT TO SCALE

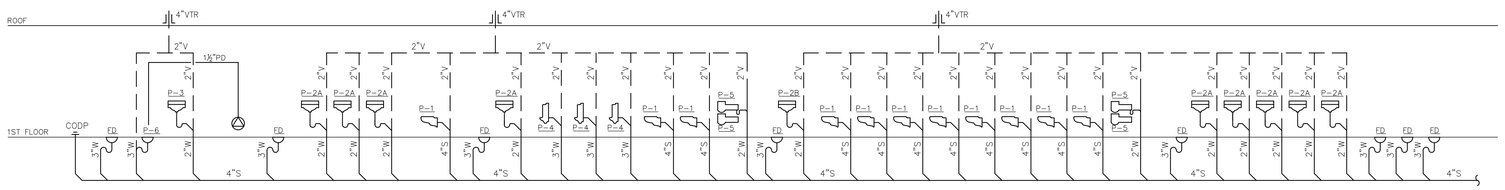


1 PLUMBING SANITARY RISER DIAGRAM
SCALE: NOT TO SCALE

# GREENWICH HS CARDINAL STADIUM PHASE 1A

GREENWICH PUBLIC SCHOOLS
10 HILLSIDE ROAD
GREENWICH CT 06830

KG+D listen imagine build
KG+D . ARCHITECTS PC
285 MAIN STREET MOUNT KISCO . NEW YORK . 10549
P:914.666.5900 KGDARCHITECTS.COM

OLA Consulting Engineers
50 Broadway,
Hawthorne, NY 10532
914.747.2800
8 West 38th Street,
Suite 501
New York, NY 10018
646.849.4110
olace.com

CONSTRUCTION DOCUMENTS

NOTE: ALL IDEAS, DESIGNS, ARRANGEMENTS AND PLANS INDICATED OR REPRESENTED BY THIS DRAWING ARE OWNED BY AND ARE THE PROPERTY OF KAEYER, GARMENT, & DAVIDSON ARCHITECTS, PC (KG&D), AND WERE CREATED FOR USE ON THIS PROJECT. NONE OF SUCH IDEAS, DESIGNS, ARRANGEMENTS OR PLANS SHALL BE USED BY OR DISCLOSED TO ANY PURPOSE WHATSOEVER WITHOUT THE WRITTEN PERMISSION OF (KG&D).

WRITTEN DIMENSIONS ON THIS DRAWING SHALL HAVE PRECEDENCE OVER SCALED DIMENSIONS. CONTRACTOR SHALL VERIFY ALL ACTUAL DIMENSIONS AND CONDITIONS ON THE JOB AND THE ARCHITECT MUST BE NOTIFIED OF ANY VARIATIONS FROM DIMENSIONS AND CONDITIONS SHOWN. SHOP DETAILS MUST BE SUBMITTED TO THIS OFFICE FOR APPROVAL BEFORE PROCEEDING WITH FABRICATION.

ALTERATIONS BY ANY PERSON, IN ANY WAY, OF ANY ITEM CONTAINED ON THIS DOCUMENT, UNLESS ACTING UNDER THE DIRECTION OF THE LICENCED ARCHITECT WHOSE PROFESSIONAL SEAL IS AFFIXED HERETO, IS A VIOLATION OF TITLE VII, SECT. 69.5 (b) OF NEW YORK STATE LAW.
COPYRIGHT KAEYER, GARMENT + DAVIDSON ARCHITECTS & ENGINEERS, PC ALL RIGHTS RESERVED.

Professional Seal

| No. | Date | Issue |
|---|---|---|
| 3 | 11/10/20 | CONSTRUCTION DOCUMENTS |
| 2 | 08/12/20 | ISSUE FOR PERMIT |

Sheet Title

PLUMBING RISER DIAGRAMS

| Job No. | Date |
|---|---|
| NKGD0185.02 | 8/23/2019 |
| Scale | Drawn / Checked |
| AS NOTED | TV RG |

Sheet Number

P501

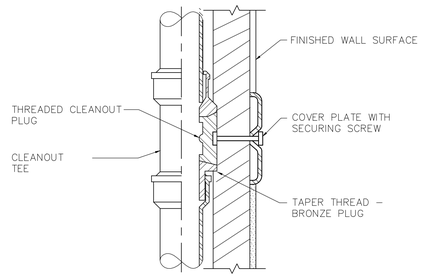


6 CLEANOUT CONCEALED BEHIND WALL DETAIL
SCALE: NONE

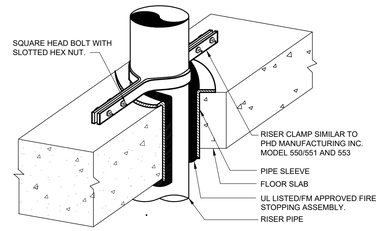


3 VERTICAL PIPE SUPPORT DETAIL
SCALE: NONE

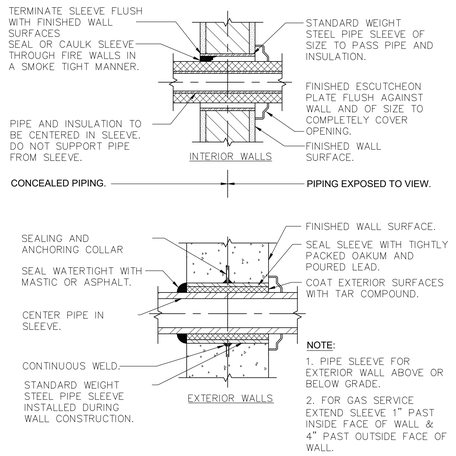


NOTE:
1. PIPE SLEEVE FOR EXTERIOR WALL ABOVE OR BELOW GRADE.
2. FOR GAS SERVICE EXTEND SLEEVE 1" PAST INSIDE FACE OF WALL & 4" PAST OUTSIDE FACE OF WALL.

8 PIPE WALL SLEEVE DETAIL FOR INTERIOR WALLS
SCALE: NONE

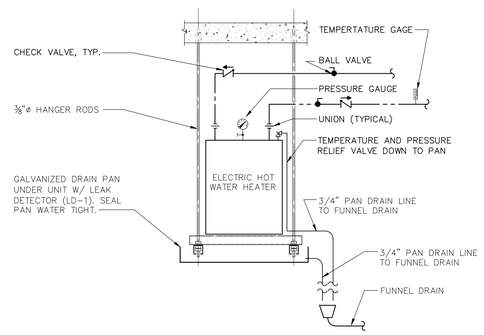


5 ELECTRIC HOT WATER HEATER DETAIL
SCALE: NONE

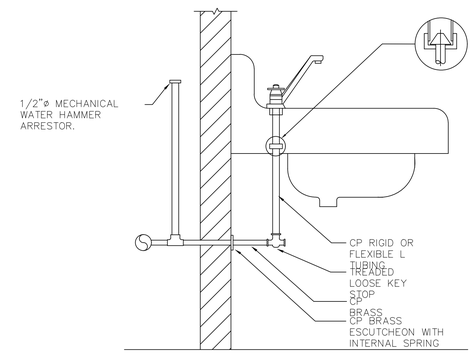


NOTE:
SIMILAR SUPPLY ARRANGEMENT TO OTHER FIXTURES

2 TYPICAL LAVATORY SUPPLY CONNECTION
SCALE: NONE

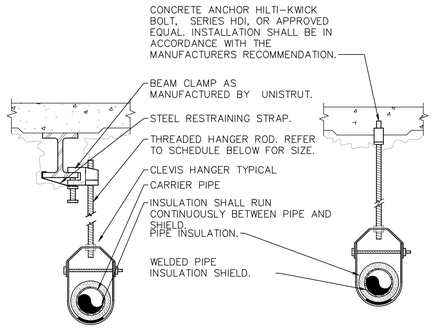


HANGER ROD SCHEDULE

| PIPING MATERIAL | PIPE SIZE (IN.) | HANGER ROD DIAMETER (IN.) |
|---|---|---|
| STEEL (SCHEDULE 40 & SCHEDULE 80) | ½"–1" | ⅜" |
| | 1¼"–3" | ½" |
| | 4"–5" | ⅝" |
| | 6"–8" | ¾" |
| | 10"–12" | ⅞" |
| | 14"–18" | 1" |
| COPPER | ¼"–2" | ⅜" |
| | 2½"–4" | ⅝" |
| | 5"–8" | ¾" |

NOTES:
a.) THE MAXIMUM HORIZONTAL SPACING OF CAST-IRON PIPE HANGERS SHALL BE INCREASED TO 10 FT. WHERE 10 FOOT LENGTHS OF PIPE ARE INSTALLED.
b.) FOR SIZES 2 IN. AND SMALLER, A GUIDE SHALL BE INSTALLED MIDWAY BETWEEN REQUIRED VERTICAL SUPPORTS. SUCH GUIDES SHALL PREVENT PIPE MOVEMENT IN A DIRECTION PERPENDICULAR TO THE AXIS OF THE PIPE.
C.) CLEVIS HANGERS WITH WELDED INSULATION SHIELDS ON ALL PIPES LARGER THAN 1".
D.) FOR PIPES 1" OR SMALLER, A BAND HANGER WITH INSULATION SHIELD MAY BE USED.
E.) FOR NON-INSULATED PIPE, INSULATION SHIELDS MAY BE OMITTED.
F.) ALL PIPE HANGERS SHALL BE GALVANIZED STEEL OR FACTORY PAINTED BLACK WITH ENAMEL.
G.) FOR NON FERROUS PIPING WITHOUT INSULATION, ALL HANGERS SHALL BE COPPER PLATED, OR FURNISHED WITH A DI-ELECTRIC BETWEEN PIPE AND HANGERS.
H.) WHERE EXISTING BUILDING STRUCTURAL COMPONENTS HAVE FIREPROOF MATERIAL, ANY AREA THAT IS DISTURBED OR DAMAGED AS A RESULT OF HANGER INSTALLATION SHALL BE PATCHED WITH UL AND FM APPROVED FIREPROOFING TO MATCH EXISTING.

9 PIPE HANGER DETAIL
SCALE: NONE

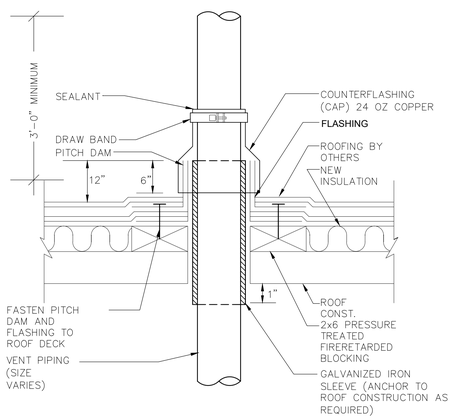


NOTES:
1. ALL PLUMBING ROOF PENETRATIONS SHALL BE COORDINATED WITH THE ARCHITECT.

7 VENT THRU ROOF
SCALE: NONE

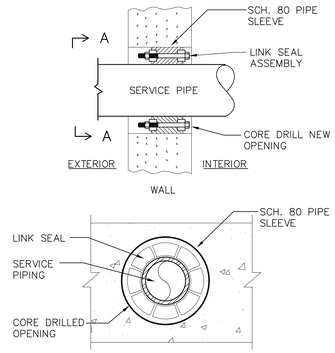


SECTION A–A
N.T.S.

NOTES:
1. SEAL ASSEMBLY BASED ON THUNDERLINE MODEL "C" LINK-SEAL MODULAR SEAL, WITH EPDM SEAL ELEMENT, COMPOSITE PRESSURE PLATES, STEEL WITH 2-PART ZINC DICHROMATE & ORGANIC COATING NUTS AND BOLTS AND WITH A OPERATING TEMPERATURE RANGE OF -40°F TO +250°F.

4 PIPE LINK SEAL DETAIL FOR EXTERIOR WALLS
SCALE: NONE

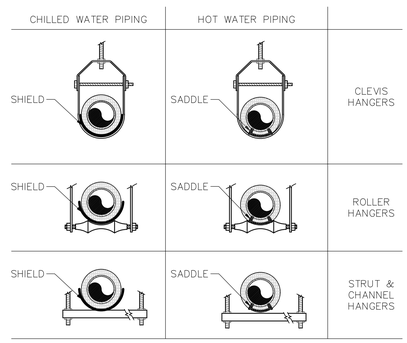


NOTES:
1. INSULATION ON ALL COLD SURFACES SHALL BE APPLIED WITH A CONTINUOUS, UNBROKEN VAPOR SEAL. HANGERS, SUPPORTS, ANCHORS, ETC., THAT ARE SECURED DIRECTLY TO COLD SURFACES SHALL BE ADEQUATELY INSULATED AND VAPOR SEALED TO PREVENT CONDENSATION.
2. GALVANIZED METAL SHIELDS SHALL BE APPLIED BETWEEN HANGERS OR SUPPORTS AND THE PIPE INSULATION AS SHOWN ABOVE. SHIELDS SHALL BE FORMED TO FIT THE INSULATION AND SHALL EXTEND UP TO THE CENTERLINE OF THE PIPE.
3. RIGID INSULATION INSERTS SHALL BE INSTALLED ON PIPE SIZES 1½" (38 MM) OR LARGER AS SHOWN ABOVE. INSERTS SHALL BE OF EQUAL THICKNESS TO THE ADJOINING INSULATION AND SHALL BE PROVIDED WITH VAPOR RETARDER SEALS.

1 PIPE INSULATION SADDLE/SHIELD SCHEDULE
SCALE: NONE

# GREENWICH HS CARDINAL STADIUM PHASE 1A

GREENWICH PUBLIC SCHOOLS
10 HILLSIDE ROAD
GREENWICH CT 06830

KG+D listen imagine build
KG+D . ARCHITECTS PC
285 MAIN STREET MOUNT KISCO . NEW YORK . 10549
P:914.666.5900 KGDARCHITECTS.COM

OLA Consulting Engineers
50 Broadway,
Hawthorne, NY 10532
914.747.2800
8 West 38th Street,
Suite 501
New York, NY 10018
646.849.4110
olace.com

CONSTRUCTION DOCUMENTS

NOTE: ALL IDEAS, DESIGNS, ARRANGEMENTS AND PLANS INDICATED OR REPRESENTED BY THIS DRAWING ARE OWNED BY AND ARE THE PROPERTY OF KAEYER, GARMENT, & DAVIDSON ARCHITECTS, PC (KG&D), AND WERE CREATED FOR USE ON THIS PROJECT. NONE OF SUCH IDEAS, DESIGNS, ARRANGEMENTS OR PLANS SHALL BE USED BY OR DISCLOSED TO ANY PURPOSE WHATSOEVER WITHOUT THE WRITTEN PERMISSION OF (KG&D).

WRITTEN DIMENSIONS ON THIS DRAWING SHALL HAVE PRECEDENCE OVER SCALED DIMENSIONS. CONTRACTOR SHALL VERIFY ALL ACTUAL DIMENSIONS AND CONDITIONS ON THE JOB AND THE ARCHITECT MUST BE NOTIFIED OF ANY VARIATIONS FROM DIMENSIONS AND CONDITIONS SHOWN. SHOP DETAILS MUST BE SUBMITTED TO THIS OFFICE FOR APPROVAL BEFORE PROCEEDING WITH FABRICATION.

ALTERATIONS BY ANY PERSON, IN ANY WAY, OF ANY ITEM CONTAINED ON THIS DOCUMENT, UNLESS ACTING UNDER THE DIRECTION OF THE LICENCED ARCHITECT WHOSE PROFESSIONAL SEAL IS AFFIXED HERETO, IS A VIOLATION OF TITLE VI, SECT. 65 § 6L OF NEW YORK STATE LAW.
COPYRIGHT KAEYER, GARMENT • DAVIDSON ARCHITECTS & ENGINEERS, PC
ALL RIGHTS RESERVED.

Professional Seal

| No. | Date | Issue |
|---|---|---|
| 3 | 11/10/20 | CONSTRUCTION DOCUMENTS |
| 2 | 08/12/20 | ISSUE FOR PERMIT |

Sheet Title
PLUMBING DETAILS

| | |
|---|---|
| Job No. NKGD0185.02 | Date 8/23/2019 |
| Scale AS NOTED | Drawn / Checked TV RG |

Sheet Number
P701

## SYMBOLS AND ABBREVIATIONS

| SYMBOL | ABBREVIATION | DESCRIPTION |
|---|---|---|
| – | AC– | AIR CONDITIONING UNIT |
| – | AD | ACCESS DOOR |
| – | AFF | ABOVE FINISHED FLOOR |
| – | AHC | ABOVE HUNG CEILING |
| – | AP | ACCESS PANEL |
| – | BHP | BRAKE HORSEPOWER |
| – | BTU | BRITISH THERMAL UNIT |
| – | CFM | CUBIC FEET PER MINUTE |
| – | COD | CABLE OPERATED DAMPER |
| – | DB | DRY BULB TEMPERATURE |
| – | DIA. OR ø | DIAMETER |
| – | DX | DIRECT EXPANSION |
| – | EA | EXHAUST AIR |
| – | EAT | ENTERING AIR TEMPERATURE |
| – | ER | EXHAUST REGISTER |
| – | ESP | EXTERNAL STATIC PRESSURE |
| – | EWT | ENTERING WATER TEMPERATURE |
| – | FCU | FAN COIL UNIT |
| – | FPM | FEET PER MINUTE |
| – | FPS | FEET PER SECOND |
| – | GPM | GALLONS PER MINUTE |
| – | HP | HORSE POWER |
| – | LAT | LEAVING AIR TEMPERATURE |
| – | LF | LINEAR FEET |
| – | LWT | LEAVING WATER TEMPERATURE |
| – | MBH | 1000 BRITISH THERMAL UNITS PER HOUR |
| – | MER | MECHANICAL EQUIPMENT ROOM |
| – | NIC | NOT IN CONTRACT |
| – | OAI | OUTSIDE AIR INTAKE |
| – | PSI | POUNDS PER SQUARE INCH |
| – | RA | RETURN AIR |
| – | RF– | RETURN FAN |
| – | RPM | REVOLUTIONS PER MINUTE |
| – | SA | SUPPLY AIR |
| – | SP | STATIC PRESSURE |
| – | TD | TRANSFER DUCT |
| – | TF– | TRANSFER FAN |
| – | TSP | TOTAL STATIC PRESSURE |
| – | TYP. | TYPICAL |
| – | U.O.N. | UNLESS OTHERWISE NOTED |
| – | WB | WET BULB TEMPERATURE |
| – | WG | INCHES OF WATER GAUGE |
| | EX. | EXISTING TO REMAIN |
| – – – – – | REL. | REMOVE AND RELOCATE |
| | NEW | NEW WORK |
| – – – – – | DEM. | EXISTING TO BE REMOVED |
| (T) | – | THERMOSTAT |
| | – | AIR INTO REGISTER |
| | – | POINT OF CONNECTION DISCONNECTION |
| | SR | SUPPLY REGISTER |
| | CD | 1–WAY |
| CD | | 2–WAY |
| CD | | 2–WAY |
| CD | | 3–WAY |
| CD | | 4–WAY |
| RR/RG/ER | | RETURN REGISTER/GRILLE/EXHAUST REGISTER |
| | – | SUPPLY DUCT UP |
| | – | SUPPLY DUCT DOWN |
| | – | RETURN DUCT UP |
| | – | RETURN DUCT DOWN |
| | – | TRANSITION FROM SQUARE TO ROUND DUCT |
| | – | TRANSITION |
| D | – | DUCT DROP |
| R | – | DUCT RISE |
| | – | SQUARE VANED ELBOW |
| | – | DUCT RISE |
| | – | DUCT DROP |
| | – | DUCT TRANSITION |
| | – | ALUMINUM DUCT |
| – – – – – – | AL | ACOUSTIC LINING |
| | FD/AD | FIRE DAMPER W/ ACCESS DOOR |
| | SD/AD | SMOKE DAMPER W/ ACCESS DOOR |
| | CFSD | COMBINATION FIRE/SMOKE DAMPER W/ ACCESS DOOR |
| | VD | VOLUME DAMPER |

## SYMBOLS AND ABBREVIATIONS

| SYMBOL | ABBREVIATION | DESCRIPTION |
|---|---|---|
| | AL | ACOUSTIC LINING |
| 6x8 | – | DUCT SIZE – 1ST FIGURE IS SIDE SHOWN |
| | FC | FLEXIBLE CONNECTION |
| | – | ALUMINUM DUCT |
| ER CFM | – | EXHAUST REGISTER |
| CD–A CFM | – | NEW CEILING DIFFUSER |

## GENERAL NOTES

1. DUCT DIMENSIONS SHOWN ON MECHANICAL DRAWINGS REFER TO INSIDE CLEAR DUCT DIMENSIONS. WHERE DUCTWORK IS LINED THE CONTRACTOR SHALL INCREASE THE SIZE OF DUCT TO COMPENSATE FOR LINING.
2. THE CONTRACTOR SHALL INSTALL FIRE DAMPERS WITH ACCESS DOORS IN ALL DUCTS PENETRATING FIRE RATED WALLS WHETHER SPECIFICALLY SHOWN ON THE DRAWING OR NOT.
3. PROVIDE ALL PIPE OPENINGS THROUGH PARTITIONS WITH PIPE SLEEVES. FOR PIPES PENETRATING FIRE RATED PARTITIONS, THE SPACE BETWEEN THE PIPE AND THE SLEEVE SHALL BE SEALED WITH FIRE STOPPING MATERIAL.
4. THIS CONTRACTOR SHALL SUBMIT FOR REVIEW A COMPOSITE SHOP DRAWING, FULLY COORDINATED WITH ALL OTHER TRADES, INDICATING DUCTWORK, PLUMBING PIPING, SMOKE DETECTORS, LIGHTS, CONDUITS, DIFFUSERS, GRILLES, ETC.
5. CONTRACT DRAWINGS AS FAR AS THEY RELATE TO THE GENERAL ARRANGEMENT AND LOCATION OF EQUIPMENT, PIPING AND SHEETMETAL, SHALL BE UNDERSTOOD AS DIAGRAMMATIC. ANY CHANGES TO SHEETMETAL AND EQUIPMENT LOCATIONS NECESSARY TO AVOID INTERFERENCE WITH OTHER TRADES SHALL BE MADE AT NO EXTRA COST.
6. PROVIDE CABLE OPERATED DAMPERS ON DUCTWORK ABOVE DRYWALL CEILINGS.
7. THE MECHANICAL CONTRACTOR SHALL FURNISH AND INSTALL VOLUME DAMPERS IN DUCTWORK AS REQUIRED TO BALANCE THE AIRFLOW AT ALL REGISTERS AND DIFFUSERS TO THE CFM'S INDICATED ON PLAN, WHETHER SPECIFICALLY SHOWN ON THE DRAWINGS OR NOT.
8. PROVIDE ALL PIPE OPENINGS THROUGH PARTITIONS WITH PIPE SLEEVES. FOR PIPES PENETRATING FIRE RATED PARTITIONS, THE SPACE BETWEEN THE PIPE AND THE SLEEVE SHALL BE SEALED WITH FIRE STOPPING MATERIAL. PENETRATIONS FOR PIPING SHALL BE MADE BY CORE DRILLING WHENEVER POSSIBLE.
9. ALL MOTOR STARTERS AND DISCONNECT SWITCHES FOR HVAC EQUIPMENT SHALL BE FURNISHED BY THE MECHANICAL CONTRACTOR AND INSTALLED BY THE ELECTRICAL CONTRACTOR, UNLESS OTHERWISE NOTED. DISCONNECT SWITCHES FURNISHED BY THE MECHANICAL CONTRACTOR FOR HVAC EQUIPMENT SHALL BE HEAVY DUTY TYPE.
10. LOCATE THERMOSTATS AND TEMPERATURE SENSORS 5'–6" ABOVE FINISHED FLOOR UNLESS OTHERWISE NOTED. COORDINATE LOCATION WITH FURNITURE, CABINETS, ETC.
11. THE MECHANICAL CONTRACTOR SHALL NOTE THAT, IN ADDITION TO THE SPECIFICATIONS AND DETAILS GIVEN IN THESE PLANS FOR PIPE HANGERS AND SUPPORTS, ALL HANGERS AND SUPPORTS SHALL BE DESIGNED AND INSTALLED IN COMPLIANCE WITH APPLICABLE SEISMIC CODES.
12. ALL HVAC EQUIPMENT SHALL HAVE 3" HIGH BLACK LAMACOID NAME PLATES WITH WHITE ENGRAVED LETTERS PERMANENTLY FASTENED TO EQUIPMENT.
13. ALL WORK SHALL COMPLY WITH INTERNATIONAL AND CT BUILDING CODES, LOCAL BUILDING CODE, AND ENERGY CODE REQUIREMENTS. IN CASE OF CONFLICT BETWEEN THE CONTRACT DOCUMENTS AND A GOVERNING CODE OR ORDINANCE, THE MORE STRINGENT STANDARD SHALL APPLY.
14. DURING CONSTRUCTION, ALL OPEN OR INCOMPLETE DUCTWORK SHALL BE CAPPED AIRTIGHT WITH WITH HEAVY POLYETHYLENE PLASTIC. AFTER THE INSTALLATION OF DUCTWORK, REGISTERS, GRILLES, AND DIFFUSERS, THE CONTRACTOR SHALL BLANK OFF ALL REGISTERS, GRILLES, AND DIFFUSERS WITH HEAVY POLYETHYLENE PLASTIC AND TAPE AIR TIGHT, IN AREAS THAT ARE UNDER CONSTRUCTION, UNTIL WORK IS COMPLETE IN THOSE AREAS. FLOOR REGISTERS AND GRILLES SHALL ALSO BE COVERED WITH 1/8" MASONITE.
15. WHEN GENERAL CONSTRUCTION IS COMPLETE, VACUUM CLEAN ALL DIFFUSERS, REGISTERS, GRILLES, AND HVAC EQUIPMENT IN THE PROJECT AREA OR SERVING THE PROJECT AREA. REMOVE ANY CONSTRUCTION DEBRIS. REPLACE ALL AIR FILTERS WITH NEW.
16. THE OWNER'S PERMANENT HVAC EQUIPMENT SHALL NOT BE USED BY ANY CONTRACTOR DURING CONSTRUCTION FOR TEMPORARY HEATING, COOLING, OR VENTILATION. IF TEMPORARY HEATING, COOLING, OR VENTILATION IS REQUIRED AT ANY POINT DURING CONSTRUCTION, THE CONTRACTOR SHALL PROVIDE TEMPORARY HEATING, COOLING, OR VENTILATION EQUIPMENT, DUCTWORK, CONTROLS, AND POWER AT HIS OWN EXPENSE.
17. THE CONTRACTOR SHALL BE RESPONSIBLE FOR PROVIDING TEMPORARY VENTILATION AND EXHAUST AIR WHEN WELDING OR SOLDERING OPERATIONS ARE PERFORMED, AS REQUIRED BY OSHA.
18. THE MECHANICAL CONTRACTOR SHALL BE RESPONSIBLE FOR OBTAINING ALL NECESSARY PERMITS AND FOR PAYING RELATED FEES.
19. THE MECHANICAL CONTRACTOR SHALL PROVIDE ALL CUTTING, PATCHING, CORE DRILLING, ACCESS PANELS, PAINTING, AND FINAL RESTORATION REQUIRED TO FACILITATE THE INSTALLATION OF HVAC DUCTWORK, CONTROL CONDUITS, AND PIPING, INCLUDING ABOVE CEILINGS AND IN SHAFTS THAT WILL NOT BE REPLACED OR OPENED UNDER ANY OTHER SCOPE OF WORK RELATED TO THIS PROJECT. CONTRACTOR TO REMOVE AND REPLACE CEILINGS, AND OPEN AND PATCH SHAFTS AND WALLS, AS REQUIRED TO EXECUTE THE MECHANICAL WORK.
20. PROVIDE 1" ACOUSTIC LINING ON ALL DUCTWORK FROM THE INLET AND OUTLET OF ALL FANS.

## AUTOMATIC TEMPERATURE CONTROLS

AUTOMATIC TEMPERATURE CONTROLS

A.) PROVIDE ALL LABOR, MATERIALS, EQUIPMENT AND SERVICES, AND PERFORM ALL OPERATIONS REQUIRED FOR THE AUTOMATIC TEMPERATURE CONTROL SYSTEM.

B.) THE CONTROL SYSTEM SHALL BE COMPLETE WITH ALL NECESSARY CONTROL DEVICES, THERMOSTATS, VALVES, SWITCHES, PANELS AND CONTROL WIRING TO PROVIDE THE DESCRIBED FUNCTIONS. PROVIDE INFORMATION TO THE ELECTRICAL CONTRACTOR REQUIRED TO PERMIT INSTALLATION OF POWER WIRING TO ANY CONTROL COMPONENTS.

C.) THE CONTROLS MANUFACTURER SHALL FURNISH FACTORY WIRED CONTROL PANELS WHICH SHALL HOUSE ALL RELAYS, DEVICES, SWITCHES, TRANSFORMERS, TERMINAL STRIPS, ETC., AS REQUIRED FOR THE COMPLETE TEMPERATURE CONTROL OF THE SYSTEM.

D.) ALL CONTROLS SHALL BE THE PRODUCT OF ONE MANUFACTURER AND ALL COMPONENTS SHALL BE U.L. APPROVED WHERE APPLICABLE. SYSTEM SHALL BE THE LATEST TOP QUALITY EQUIPMENT AND SHALL BE INSTALLED COMPLETE IN ALL RESPECTS BY COMPETENT MECHANICS, REGULARLY EMPLOYED BY THE MANUFACTURER OF THE CONTROL SYSTEM. ALL AUTOMATIC CONTROL VALVES AND DAMPERS SHALL BE MANUFACTURED BY THE CONTROL MANUFACTURER.

E.) AFTER COMPLETION OF THE CONTROL SYSTEM WORK, THE CONTROL MANUFACTURER SHALL REGULATE AND ADJUST ALL THERMOSTATS, CONTROL VALVES, ETC., AND PLACE THEM IN COMPLETE OPERATING CONDITION SUBJECT TO THE REVIEW OF THE ENGINEERS. COMPLETE INSTRUCTIONS SHALL BE GIVEN TO THE OPERATING PERSONNEL.

F.) THE CONTROL SYSTEM HEREIN SPECIFIED SHALL BE FREE FROM DEFECTS IN WORKMANSHIP AND MATERIAL UNDER NORMAL USE AND SERVICE. IF, WITHIN ONE YEAR FROM DATE OF ACCEPTANCE BY THE OWNER, ANY EQUIPMENT HEREIN DESCRIBED IS PROVED TO BE DEFECTIVE IN WORKMANSHIP OR MATERIAL, IT SHALL BE ADJUSTED, REPAIRED OR REPLACED FREE OF CHARGE.

G.) DELIVER TO THE OWNER TWO COPIES OF THE AS–INSTALLED CONTROL SYSTEM, LAMINATED IN CLEAR PLASTIC. PROVIDE IDENTIFYING TAGS ON ALL CONTROLS TO CONFORM TO THE DESIGNATIONS ON THE CONTROL DIAGRAMS.

I.) ALL CONTROL WIRING SHALL BE RUN IN EMT OR GALVANIZED CONDUIT. CONTROL CONDUIT AND/OR PIPING SHALL BE CONCEALED IN ALL SPACES EXCEPT IN MECHANICAL EQUIPMENT ROOMS AND UNFINISHED SPACES, AND SHALL BE INSTALLED IN PARALLEL BANKS WITH ALL CHANGES IN DIRECTIONS MADE AT 90 DEGREE ANGLES. CONTROL AND INSTRUMENT WIRING SHALL NOT BE INSTALLED ON DUCTWORK. WIRING AND PIPING SHALL BE SECURED TO THE BUILDING STRUCTURE, SUCH AS WALLS, COLUMNS, UNDERSIDE OF SLABS, ETC..

J.) ALL CONTROLLERS SHALL BE OF THE FULLY PROPORTIONING TYPE AND SHALL BE PROVIDED WITH AN ADJUSTABLE THROTTLING RANGE, MINIMUM RANGE SHALL BE 1°F. ALL ROOM THERMOSTATS SHALL BE LOCATED AS SHOWN ON THE PLANS. ALL THERMOSTATS AND OTHER CONTROLLERS SHALL HAVE ADJUSTABLE SET POINTS.

K.) PROVIDE A MINIMUM OF 5 FEET EXCESS CONTROL WIRING TO EACH THERMOSTAT FOR FUTURE RELOCATION OF THERMOSTATS.

SEQUENCE OF OPERATIONS

1.) THIS CONTRACTOR SHALL PROVIDE A STAND ALONE CONTROL SYSTEM COMPLETE WITH ALL NECESSARY WIRING, VALVES, INTERLOCKS, PANELS, ETC. FOR SYSTEM TO OPERATE AS SPECIFIED IN THE SEQUENCE OF OPERATION.

2.) SUBMITTALS FOR REVIEW

A. SHOP DRAWINGS: INDICATE ALL MECHANICAL CONTROLLED COMPONENTS AND CONTROL SYSTEM COMPONENTS. LABELED WITH SETTINGS, AND ADJUSTABLE RANGE OF CONTROLS AND LIMITS. INCLUDE WRITTEN DESCRIPTION OF CONTROL SEQUENCE.

B. INCLUDE FLOW DIAGRAMS FOR EACH CONTROL SYSTEM, GRAPHICALLY DEPICTING CONTROL LOGIC. INCLUDE DRAFT COPIES OF GRAPHIC DISPLAYS INDICATING MECHANICAL SYSTEM COMPONENTS, CONTROL SYSTEM COMPONENTS, AND CONTROLLED FUNCTION STATUS AND VALUE.

3.) H&V UNITS: AHU–# AND AHU–#

PROVIDE A NEW TEMPERATURE CONTROL PANEL WITH 7–DAY PROGRAMMABLE THERMOSTAT FOR EACH UNIT IN THE MER WITH AUTO CHANGEOVER AND HEAT–OFF AND ON–OFF–AUTO FAN SWITCH AND REMOTE HARD WIRED SPACE TEMPERATURE SENSORS.

UNITS OFF: THE OUTSIDE AIR INTAKE DAMPER SHALL BE CLOSED AND THE RETURN AIR DAMPER SHALL BE FULL OPEN. THE FAN SHALL BE OFF AND THE ELECTRIC HEATER SHALL BE DE–ENERGIZED.

SUMMER OPERATION: UPON START UP, THE CONTROL CIRCUITS SHALL BE ENERGIZED. THE SUPPLY FAN SHALL RUN CONTINUOUSLY. THE OUTSIDE AIR INTAKE DAMPER SHALL OPEN TO MAXIMUM POSITION AND THE RETURN DAMPER SHALL OPEN TO THE MINIMUM POSITION.

WINTER OPERATION: UPON START UP, THE CONTROL CIRCUITS SHALL BE ENERGIZED. THE SUPPLY FAN SHALL RUN CONTINUOUSLY. THE OUTSIDE AIR INTAKE DAMPER SHALL OPEN TO MINIMUM POSITION AND THE RETURN DAMPER SHALL OPEN TO THE MAXIMUM POSITION. THE ELECTRIC HEATING COIL SHALL ENERGIZE AND MODULATE TO MAINTAIN A SPACE TEMPERATURE SET–POINT OF 68°F(ADJUSTABLE). A SPACE TEMPERATURE SENSOR SHALL BE ARRANGED TO MODULATE THE HEATING CAPACITY TO MAINTAIN THE SPACE TEMPERATURE. SET THE ELECTRIC HEATER DISCHARGE TEMPERATURE MAXIMUM AT 110°F (ADJUSTABLE).

UNOCCUPIED OPERATION: UNIT SUPPLY FAN AND ELECTRIC HEATING COIL SHALL CYCLE ON AND ENERGIZE UPON A CALL FOR HEATING. DURING UNOCCUPIED OPERATION, THE UNIT SHALL OPERATE WITH 100% RE–CIRCULATED AIR. UNIT CONTROLS SHALL ALLOW COMPLETE SHUTDOWN IF DESIRED. SET POINT SHALL BE 68°F (ADJUSTABLE) IN THE HEATING SEASON.

LIMIT CONTROLS: PROVIDE A HIGH/LOW LIMIT CONTROL(S) IN THE SUPPLY FAN DISCHARGE ARRANGED TO OVERRIDE TEMPERATURE CONTROLS AND PREVENT DISCHARGE TEMPERATURE FROM DROPPING BELOW 50°F (ADJUSTABLE). PROVIDE LIMIT CONTROL ON FAN SPEED TO LIMIT SPEED REDUCTION TO 75% OF AIR FLOW.

4.) TX FANS

PROVIDE TIME CLOCK FOR EACH TOILET EXHAUST FAN. TOILET EXHAUST FANS SHALL RUN & ASSOCIATED MOTORIZED DAMPER SHALL OPEN DURING THE OCCUPIED PERIODS AS PROGRAMMED THROUGH TIME CLOCK. TOILET FAN SHALL NOT ENERGIZE UNTIL ASSOCIATED EXHAUST AIR MOTORIZED DAMPER IS PROVEN OPEN.

5.) ELECTRIC SPACE UNIT HEATERS:

PROVIDE NEW 7 DAY PROGRAMMABLE THERMOSTAT WITH ON–AUTO–OFF SWITCH, LOCATED AS SHOWN ON PLAN, TO MAINTAIN ROOM TEMPERATURE SET–POINT OF 55°F (ADJUSTABLE).

6.) ELECTRIC FIN TUBE RADIATORS:

PROVIDE LOCATL DIGITAL THERMOSTAT AS SHOWN ON PLAN. SPACE TEMPERATURE SET–POINT SHALL BE SET TO 55°F (ADJUSTABLE). INTENT OF ELECTRIC FIN TUBE RADIATOR IS FOR FREEZE PROTECTION DURING WINTER MONTHS WHEN H&V UNITS ARE NOT OPERATIONAL.

7.) DUCTLESS SPLIT SYSTEM (ELEVATOR MACHINE ROOM):

SHALL BE STARTED AND STOPPED THROUGH A SPACE MOUNTED ELECTRONIC MICROCOMPUTER–BASED ROOM THERMOSTAT, BY THE EQUIPMENT MANUFACTURE. THE ROOM THERMOSTAT SHALL BE CAPABLE OF PROVIDING SET–POINT ADJUSTMENTS AND ALL PROGRAMMING CONTROL SEQUENCES. EACH EVAPORATOR SHALL HAVE A SEPARATE THERMOSTAT. EACH EVAPORATOR'S FAN AND COMPRESSORS SHALL CYCLE TO MAINTAIN ROOM TEMPERATURE SET POINT 75°(ADJUSTABLE) WHEN INDEXED TO THE AUTO MODE. ALL CONDENSER, AND COMPRESSOR OPERATIONS SHALL BE CONTROLLED BY THE AC UNIT'S BUILT IN UNITARY CONTROLLER. PROVIDE A SEPARATE ROOM TEMPERATURE SENSOR FOR EACH EVAPORATOR.

# GREENWICH HS CARDINAL STADIUM PHASE 1A

GREENWICH PUBLIC SCHOOLS
10 HILLSIDE ROAD
GREENWICH CT 06830


KG+D listen imagine build
KG+D . ARCHITECTS PC
285 MAIN STREET MOUNT KISCO . NEW YORK . 10549
P:914.666.5900 KGDARCHITECTS.COM

OLA Consulting Engineers
50 Broadway,
Hawthorne, NY 10532
914.747.2800
8 West 38th Street,
Suite 501
New York, NY 10018
646.849.4110
olace.com


CONSTRUCTION DOCUMENTS


NOTE: ALL IDEAS, DESIGNS, ARRANGEMENTS AND PLANS INDICATED OR REPRESENTED BY THIS DRAWING ARE OWNED BY AND ARE THE PROPERTY OF KAEYER, GARMENT, & DAVIDSON ARCHITECTS, PC (KG&D), AND WERE CREATED FOR USE ON THIS PROJECT. NONE OF SUCH IDEAS, DESIGNS, ARRANGEMENTS OR PLANS SHALL BE USED BY OR DISCLOSED TO ANY PURPOSE WHATSOEVER WITHOUT THE WRITTEN PERMISSION OF (KG&D).

WRITTEN DIMENSIONS ON THIS DRAWING SHALL HAVE PRECEDENCE OVER SCALED DIMENSIONS. CONTRACTOR SHALL VERIFY ALL ACTUAL DIMENSIONS AND CONDITIONS ON THE JOB AND THE ARCHITECT MUST BE NOTIFIED OF ANY VARIATIONS FROM DIMENSIONS AND CONDITIONS SHOWN. SHOP DETAILS MUST BE SUBMITTED TO THIS OFFICE FOR APPROVAL BEFORE PROCEEDING WITH FABRICATION.

ALTERATIONS BY ANY PERSON, IN ANY WAY, OF ANY ITEM CONTAINED ON THIS DOCUMENT, UNLESS ACTING UNDER THE DIRECTION OF THE LICENCED ARCHITECT WHOSE PROFESSIONAL SEAL IS AFFIXED HERETO, IS A VIOLATION OF TITLE VII, SECT. 69.5 (b) OF NEW YORK STATE LAW.
COPYRIGHT KAEYER, GARMENT + DAVIDSON ARCHITECTS & ENGINEERS, PC ALL RIGHTS RESERVED.


Professional Seal

| No. | Date | Issue |
|---|---|---|
| 3 | 11/10/20 | CONSTRUCTION DOCUMENTS |
| 2 | 08/12/20 | ISSUE FOR PERMIT |

Sheet Title

MECHANICAL SYMBOLS, ABBREVIATIONS, AND NOTES

| | |
|---|---|
| Job No. NKGD0185.02 | Date 8/23/2019 |
| Scale AS NOTED | Drawn / Checked TV RG |

Sheet Number

M001

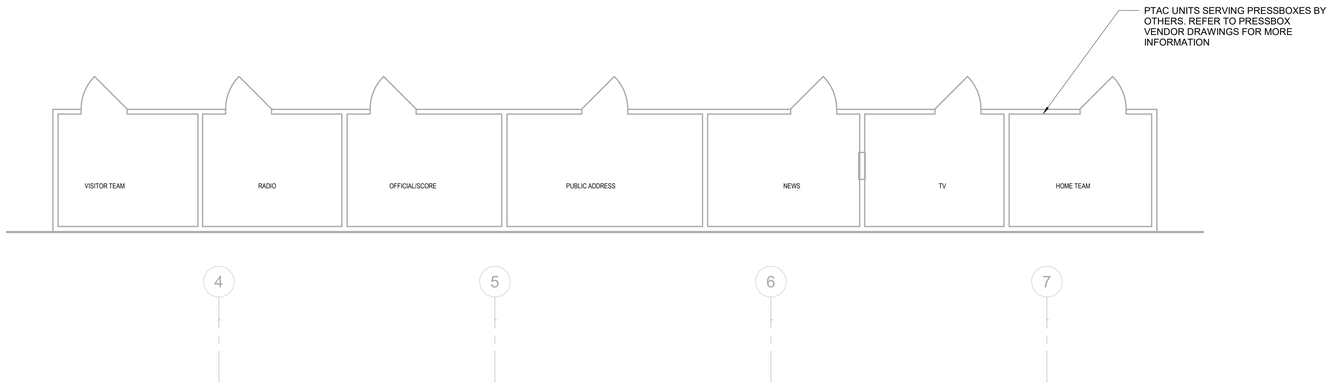


NORTH

## 2 MECHANICAL PRESSBOX PLAN

SCALE: 1/4" = 1'-0"

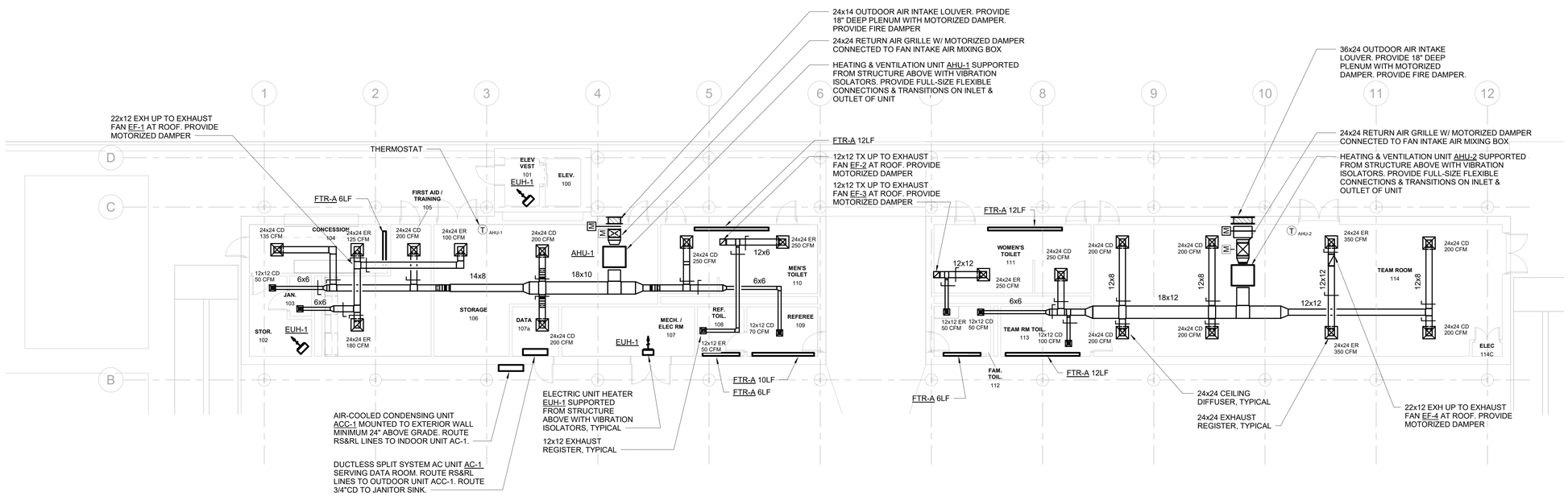


NORTH

## 1 MECHANICAL NEW WORK PLAN

SCALE: 1/8" = 1'-0"

NOTES:
1. REFER TO PRESSBOX VENDOR DRAWINGS FOR HVAC WORK RELATED TO THE PRESSBOXES.
2. ROOFTOP EXHAUST FANS SHALL BE MOUNTED ON 24"HIGH ROOF CURBS.
3. PROVIDE 1" ACOUSTICAL LINING ON DUCTWORK A MINIMUM OF 25' UPSTREAM & DOWNSTREAM OF FANS

# GHS CARDINAL STADIUM PHASE 1 BLEACHERS

Greenwich Public Schools
10 Hillside Road
Greenwich, CT 06830


KG+D listen imagine build

KG+D . ARCHITECTS PC
285 MAIN STREET MOUNT KISCO . NEW YORK . 10549
P:914.666.5900 KGDARCHITECTS.COM

OLA Consulting Engineers
50 Broadway,
Hawthorne, NY 10532
914.747.2800

8 West 38th Street,
Suite 501
New York, NY 10018
646.849.4110

olace.com


CONSTRUCTION DOCUMENTS


NOTE: ALL IDEAS, DESIGNS, ARRANGEMENTS AND PLANS INDICATED OR REPRESENTED BY THIS DRAWING ARE OWNED BY AND ARE THE PROPERTY OF KAEYER, GARMENT, & DAVIDSON ARCHITECTS, PC (KG&D), AND WERE CREATED FOR USE ON THIS PROJECT. NONE OF SUCH IDEAS, DESIGNS, ARRANGEMENTS OR PLANS SHALL BE USED BY OR DISCLOSED TO ANY PURPOSE WHATSOEVER WITHOUT THE WRITTEN PERMISSION OF (KG&D).

WRITTEN DIMENSIONS ON THIS DRAWING SHALL HAVE PRECEDENCE OVER SCALED DIMENSIONS. CONTRACTOR SHALL VERIFY ALL ACTUAL DIMENSIONS AND CONDITIONS ON THE JOB AND THE ARCHITECT MUST BE NOTIFIED OF ANY VARIATIONS FROM DIMENSIONS AND CONDITIONS SHOWN. SHOP DETAILS MUST BE SUBMITTED TO THIS OFFICE FOR APPROVAL BEFORE PROCEEDING WITH FABRICATION.

ALTERATIONS BY ANY PERSON, IN ANY WAY, OF ANY ITEM CONTAINED ON THIS DOCUMENT, UNLESS ACTING UNDER THE DIRECTION OF THE LICENCED ARCHITECT WHOSE PROFESSIONAL SEAL IS AFFIXED HERETO, IS A VIOLATION OF TITLE VI, SECT. 69-5 (b) OF NEW YORK STATE LAW.
COPYRIGHT KAEYER, GARMENT + DAVIDSON ARCHITECTS & ENGINEERS, PC
ALL RIGHTS RESERVED.


Professional Seal

| No. | Date | Issue |
|---|---|---|
| 2 | 11/10/20 | CONSTRUCTION DOCUMENTS |
| 1 | 8/12/2020 | ISSUE FOR PERMIT |

Sheet Title

MECHANICAL NEW WORK PLAN

| Job No. | Date |
|---|---|
| NKGD0185.02 | 08/11/20 |
| Scale: AS NOTED | Drawn / Checked: Author Checker |

Sheet Number

M201

## HEATING & VENTILATING UNIT SCHEDULE

| DESIGNATION | AHU-1 | AHU-2 |
|---|---|---|
| LOCATION | STORAGE 106 | TEAM ROOM 114 |
| MANUFACTURER | ENVIRO-TEC | ENVIRO-TEC |
| MODEL | MODEL H 12 | MODEL H 16 |
| WEIGHT (LBS) | 253 | 284 |
| CONFIGURATION | BLOW-THRU | BLOW-THRU |
| DESIGN DATA: | | |
| WINTER OA TEMP (°F) | 0 | 0 |
| WINTER RA TEMP (°F) | 50 | 50 |
| SUPPLY FAN: | | |
| CFM | 1200 | 1600 |
| MIN OA CFM | 555 | 1105 |
| BHP/HP | 0.68 / | 0.7 / |
| RPM | 1378 | 1203 |
| ESP/TSP (IN $H_2O$) | 0.5 / 1.5 | 0.5 / 1.5 |
| STARTER LOCATION | MER | MER |
| ELECTRIC HEATING COIL: | | |
| FACE AREA (SQ. FT.) | 2.7 | 3.5 |
| AMPS | 44.5 | 44.5 |
| CAPACITY (KW) | 16 | 16 |
| VOLTS/ø/Hz | 208/3/60 | 208/3/60 |
| FILTERS: | | |
| QUANTITY/SIZE | 2 / 16x20x2 | 1 / 16x25x2 |
| TYPE | THROWAWAY | THROWAWAY |

NOTES:
1. PROVIDE THE FOLLOWING MODULES FOR EACH UNIT (BACK TO FRONT):-
•COMBINATION ANGLE FILTER & MIXING BOX MODULE, WITH MODULATING OAI & RA DAMPERS.
•COMBINATION SUPPLY FAN & ELECTRIC HEATING COIL MODULE.
2. PROVIDE THE FOLLOWING OPTIONAL EQUIPMENT FOR EACH UNIT:
•FURNISH A FREEZE STAT ARRANGED TO OVERRIDE THE HW CONTROL VALVE & SHUT DOWN UNIT, AS PER THE SEQUENCE OF OPERATIONS.
•FURNISH EXTRA DRIVE BELT AND EXTRA FILTER SET FOR EACH UNIT.
•COORDINATE LEFT/RIGHT COIL CONNECTION AND FAN DRIVE IN FIELD.
3. PROVIDE THE FOLLOWING MOTOR CONTROL OPTIONS FOR EACH UNIT:
•UNITARY CONTROLLER BY AUTOMATIC TEMPERATURE CONTROLS MANUFACTURER, COMPATIBLE WITH THE BUILDING AUTOMATION SYSTEM.
•COMBINATION MOTOR STARTER & DISCONNECT SWITCH FOR SUPPLY FAN MOTOR SHALL BE FURNISHED BY THE MECHANICAL CONTRACTOR & INSTALLED BY THE ELECTRICAL CONTRACTOR.
•ALL MOTORS SHALL BE PREMIUM EFFICIENCY.

## DUCTLESS SPLIT-SYSTEM AC UNIT SCHEDULE

| INDOOR/OUTDOOR UNIT DESIGNATION | AC-1/ACC-1 |
|---|---|
| MANUFACTURER | DAIKIN |
| MODEL | FTXB12AXVJU |
| NOMINAL COOLING CAPACITY (TONS) | 1 |
| COOLING CAPACITY (BTU/HR) | 11,000 |
| HEATING CAPACITY (BTU/HR) | 11,300 |
| CFM (H/M/L) | 360/282/232 |
| SEER | 17 |
| RS PIPE SIZE (IN) | ⅜ |
| RL PIPE SIZE (IN) | ¼ |
| CONDENSATE DRAIN PIPE SIZE (IN) | ¾ |
| ELECTRICAL DATA: | |
| MCA / MOCP | 7.95 / 15 |
| COMPRESSOR RLA | 7.75 |
| VOLTS/ø/Hz | 208/1/60 |
| INDOOR EVAPORATOR UNIT DATA | |
| LOCATION | DATA 107A |
| MODEL | FTXB12AXVJU |
| HEIGHT x WIDTH x DEPTH (IN) | 11.8x35x8.2 |
| WEIGHT (LBS) | 20 |
| OUTDOOR CONDENSING UNIT DATA: | |
| LOCATION | OUTDOORS |
| MODEL | RXB12AXVJU |
| HEIGHT x WIDTH x DEPTH (IN) | 21.6x25.9x10.8 |
| WEIGHT (LBS) | 57 |
| REFRIGERANT TYPE | R-410A |

NOTES:
1. PROVIDE THE FOLLOWING OPTIONS FOR EACH UNIT:
•0° LOW AMBIENT CONTROLS.
•7-DAY PROGRAMMABLE SYSTEM CONTROLLER.
2. FIELD SUPPLIED LOCAL DISCONNECT SWITCH AT EACH INDOOR UNIT SHALL BE FURNISHED BY THE MECHANICAL CONTRACTOR & INSTALLED BY THE ELECTRICAL CONTRACTOR.
3. FIELD SUPPLIED WEATHERPROOF LOCAL DISCONNECT SWITCH AT EACH OUTDOOR UNIT SHALL BE FURNISHED BY THE MECHANICAL CONTRACTOR & INSTALLED BY THE ELECTRICAL CONTRACTOR.
4. SINGLE POINT EXTERNAL POWER CONNECTION FOR EACH INDOOR/OUTDOOR SET OF UNITS SHALL BE AT THE OUTDOOR UNIT. THE ELECTRICAL CONTRACTOR SHALL PROVIDE POWER WIRING FROM THE OUTDOOR UNIT TO THE INDOOR UNIT.
5. THE AUTOMATIC TEMPERATURE CONTROLS CONTRACTOR SHALL PROVIDE CONTROL WIRING BETWEEN THE OUTDOOR UNIT AND INDOOR UNIT.

## FAN SCHEDULE

| DESIGNATION | EF-1 | EF-2 | EF-3 | EF-4 |
|---|---|---|---|---|
| LOCATION | ROOF | ROOF | ROOF | ROOF |
| AREA SERVED | SEE PLAN | SEE PLAN | SEE PLAN | SEE PLAN |
| MODEL | G-080 (VARIO-GREEN) | G-080 (VARIO-GREEN) | G-080 (VARIO-GREEN) | G-090 (VARIO-GREEN) |
| CFM | 255 | 300 | 400 | 705 |
| BHP | 0.06 | 0.06 | 0.07 | 0.14 |
| HP | ¼ | ¼ | ¼ | ¼ |
| FAN RPM | 1550 | 1550 | 1725 | 1550 |
| SP (IN $H_2O$) | 0.375 | 0.375 | 0.375 | 0.375 |
| VOLTS/ø/Hz | 208/1/60 | 208/1/60 | 208/1/60 | 208/1/60 |
| STARTER LOCATION | MER | MER | MER | MER |
| DISCONNECT SWITCH AT FAN | YES | YES | YES | YES |
| INTERLOCK | TIMECLOCK | TIMECLOCK | TIMECLOCK | TIMECLOCK |

NOTES:
1. FANS BASED ON GREENHECK.
2. FURNISH MOTOR STARTERS AND DISCONNECT SWITCHES FOR EACH FAN.
3. FURNISH RUBBER IN SHEAR OR SPRING VIBRATION ISOLATORS. SEE PLAN FOR INLET AND DISCHARGE ORIENTATION.
4. FURNISH WALL MOUNTED SPEED CONTROLLER OR THERMOSTAT AS INDICATED ON PLAN.
5. FURNISH MOTOR AND BELT GUARDS FOR ALL EXTERNAL MOTOR DRIVES.
6. MOTOR STARTER & DISCONNECT SWITCH FOR EACH FAN SHALL BE FURNISHED BY THE MECHANICAL CONTRACTOR & INSTALLED BY THE ELECTRICAL CONTRACTOR. EACH ROOFTOP FAN SHALL BE FURNISHED WITH WEATHERPROOF UNIT-MOUNTED LOCAL DISCONNECT SWITCH.
7. FURNISH MOTORIZED BACK-DRAFT DAMPER IN ROOF CURB FOR ALL ROOFTOP FANS.
8. ALL MOTORS 1 HP OR GREATER SHALL BE PREMIUM EFFICIENCY. ALL MOTORS FURNISHED WITH VARIABLE FREQUENCY DRIVES SHALL BE INVERTER DUTY RATER & APPROVED FOR VARIABLE SPEED AND TORQUE APPLICATIONS.
9. STARTER TYPE FOR EACH FAN SHALL BE CONST. SPEED STARTER W/ H-O-A.

## CEILING DIFFUSER SCHEDULE

| DESIGNATION | CD | | - | | - | |
|---|---|---|---|---|---|---|
| MODEL | OMNI | | | | | |
| MAX CORE VEL (FT/MIN) | 550 | | | | | |
| MAX NC | 25 | | | | | |
| CONSTRUCTION | STEEL | | | | | |
| FRAME | LAY-IN | | | | | |
| DEFLECTION | 4 WAY | | | | | |
| FACE SIZE | 24x24 | | | | | |
| | CFM RANGE | NECK SIZE ø | CFM RANGE | NECK SIZE ø | CFM RANGE | NECK SIZE ø |
| | 0-100 | 6" | | | | |
| | 101-200 | 8" | | | | |
| | 201-350 | 10" | | | | |
| | 351-450 | 12" | | | | |
| | 451-600 | 14" | | | | |
| | 601-700 | 15" | | | | |

NOTES:
1. CEILING SUPPLY DIFFUSERS ARE BASED ON TITUS.
2. ALL DIFFUSERS SHALL BE EQUIPPED WITH AN OPPOSED BLADE VOLUME DAMPER.
3. COORDINATE COLOR SELECTION WITH ARCH PLANS.
4. SUPPLY DIFFUSERS SHALL HAVE FRAMES AND BORDERS SUITABLE FOR THE CONSTRUCTION IN WHICH THEY WILL BE INSTALLED, CONTRACTOR TO COORDINATE.
5. ALL LAY-IN DIFFUSERS SHALL HAVE A MODULE SIZE OF 24x24. FACE SIZES SHOWN IN SCHEDULE ARE FOR SURFACE MOUNT DIFFUSERS. NECK SIZES VARY ACCORDING TO THE SCHEDULE.
6. DIFFUSER BLOW PATTERN IS AS SHOWN ON DRAWINGS.

## RETURN / EXHAUST REGISTER SCHEDULE

| DESIGNATION | RR / ER | | - | |
|---|---|---|---|---|
| MODEL | 3 FL | | | |
| MAX NK VEL (FT/MIN) | 500 | | | |
| MAX NC | 25 | | | |
| CONSTRUCTION | ALUMINUM | | | |
| BORDER/FRAME | SURFACE MOUNTED | | | |
| DEFLECTION | 45° FIXED | | | |
| SPACING | ¾" | | | |
| | CFM RANGE | NOMINAL NECK SIZE | CFM RANGE | NOMINAL NECK SIZE |
| | 0-150 | 8x8 | | |
| | 151-250 | 10x10 | | |
| | 251-350 | 12x12 | | |
| | 351-725 | 18x18 | | |
| | 726-950 | 22x22 | | |
| | 951-1100 | 24x24 | | |
| | 1101-1400 | 24x30 | | |
| | 1401-1700 | 24x36 | | |

NOTES:
1. RETURN REGISTERS ARE BASED ON TITUS.
2. THE ABOVE SCHEDULE INDICATES NOMINAL REGISTER NECK SIZES. THE CONTRACTOR SHALL COORDINATE THE REGISTER SIZE IN THE FIELD ACCORDING TO THE ACTUAL DUCT DIMENSIONS AND MAINTAIN AN EQUIVALENT CORE AREA.
3. ALL REGISTERS SHALL BE EQUIPPED WITH AN OPPOSED BLADE VOLUME DAMPER.
4. SUBMIT COLOR CHART FOR REVIEW AND APPROVAL BY ARCHITECT.
5. RETURN REGISTERS SHALL HAVE FRAMES AND BORDERS SUITABLE FOR THE CONSTRUCTION IN WHICH THEY WILL BE INSTALLED. CONTRACTOR TO COORDINATE.

## EQUIPMENT NOTES

1.) PIPE INSULATION JACKETING: SHALL BE WHITE ZESTON 2000 PVC COVERS FOR PIPING AND FITTINGS. JACKET ALL PIPING AND FITTING THAT ARE EXPOSED IN ANY ROOM AND OUTDOORS.

2.) PIPE LABELS: SHALL BE SETON ULTRA-MARK WEATHER RESISTANT FOR OUTDOOR APPLICATION AND OPTI-CODE FOR INDOOR APPLICATION. LETTERS AND ARROWS SHALL BE 2 1/2" HIGH AND SHALL BE WHITE ON A GREEN BACKGROUND AND SHALL CONFORM TO ANSI AND OSHA STANDARDS. APPLY OVER INSULATION ONLY.

3.) ALL HVAC EQUIPMENT SHALL HAVE 3" HIGH BLACK LAMACOID NAME PLATES WITH WHITE ENGRAVED LETTERS PERMANENTLY FASTENED TO EQUIPMENT. TYPICAL FOR All FANS, UNIT HEATERS, AC UNITS AND CONDENSERS.

4.) REFRIGERANT PIPE INSULATION: SHALL BE AP ARMAFLEX PIPE INSULATION. 1" THICK UNSLIT, TO BE INSTALLED BEFORE FINAL CONNECTION. FIELD FABRICATE FITTING INSULATION WITH MITER-CUTS. ALL BUTT JOINTS AND SEAMS ARE TO BE SEALED WITH ARMSTRONG 520 ADHESIVE. ALL INSULATION INSTALLED OUTDOORS SHALL BE COATED WITH ARMSTRONG ARMAFLEX FINISH, AS PER THE MANUFACTURERS RECOMMENDATIONS.

5.) FIRE DAMPERS: SHALL BE RUSKIN MODEL DIBD-2, 1-1/2 HOUR UL555 RATED, SUITABLE FOR INSTALLATION IN WALL AND FLOOR PARTITIONS WITH FIRE RATINGS OF LESS THAN 3 HOURS. DAMPER SHALL BE A COMPLETE FACTORY PACKAGE INCLUDING U.L. APPROVED ANGLES, WALL SLEEVE, AND BREAKAWAY CONNECTIONS. DAMPER SHALL BE RATED FOR DYNAMIC AIRFLOW CONDITIONS OF 2,000 FPM AND 4.0" SP.

6.) MOTORIZED DAMPERS: SHALL BE RUSKIN MODEL CD40, 4" DEEP EXTRUDED ALUMINUM AIRFOIL DAMPER. DAMPER SHALL HAVE OPPOSED BLADES, MOTOR AND LINKAGE. DAMPERS SHALL BE 120V/1ϕ/60Hz, 3 AMPS MAX. FURNISH DISCONNECT SWITCH. DAMPER SHALL BE LOW-LEAKAGE RATED TYPE.
6.1 OUTSIDE AIR INTAKE & EXHAUST DAMPERS SHALL BE CLASS I MOTORIZED DAMPERS WITH MAXIMUM LEAKAGE RATE OF 4 CFM/FT² @ 1.0" W.G.; TESTED IN ACCORDANCE WITH AMCA 500D & IN COMPLIANCE WITH SECTION C403.2.4.3 OF THE 2015 IECC. DAMPERS SHALL BE CONFIGURED TO CLOSE AUTOMATICALLY WHEN THE SYSTEMS OF SPACE SERVED ARE NOT IN USE.

7.) BACK-DRAFT DAMPERS: SHALL BE RUSKIN MODEL BD6, HEAVY DUTY BACK-DRAFT DAMPER, EXTRUDED ALUMINUM FRAME & DAMPER. DAMPER SHALL HAVE PARALLEL BLADES. SIZE AS INDICATED ON PLAN. PROVIDE SPC STATIC PRESSURE CONTROL.

8.) VOLUME CONTROL DAMPERS: FOR ALL ROUND & RECTANGULAR VOLUME CONTROL DAMPERS THAT ARE LOCATED ABOVE INACCESSIBLE CEILINGS, PROVIDE CABLE OPERATED DAMPERS. ROUND DAMPERS SHALL BE YOUNG BOWDEN MODEL 5020-CC. RECTANGULAR DAMPERS SHALL BE MODEL 830-CC2. CABLE CONTROLS SHALL BE MODEL 270-275 FOR CONCEALED LOCATIONS & MODEL 270-896C FOR LOCATIONS WHERE CABLES TERMINATE IN FINISHED SPACES. COORDINATE LOCATIONS IN THE FIELD.

9.) ELECTRIC UNIT HEATER (EUH-1): SHALL BE INDEECO COMMERCIAL UNIT HEATER, RATED AT 300 CFM, 1.5 kW, 208V/1ϕ/60Hz, 7.6 AMPS. PROVIDE THE FOLLOWING OPTIONS: FAN GUARD, AIR DEFLECTION LOUVER, SUMMER FAN SWITCH, HEAT PURGE FAN DELAY SWITCH, DISCONNECT SWITCH, & WALL THERMOSTAT.

10.) ELECTRIC FIN-TUBE RADIATOR (FTR-A): SHALL BE VULCAN MODEL LBT-PD, 250 WATTS/LF, ELEMENT LENGTH AS SPECIFIED ON PLAN, 5" DEEP x 7" HIGH ENCLOSURE WITH ¼" PENCIL PROOF TOP DISCHARGE. PROVIDE ¾" EMT BUILT-IN RACEWAY WITH FACTORY WIRING, ⅞" KNOCK-OUTS ON ENDS/BOTTOM OF ENCLOSURE, MOUNTING BRACKETS & HANGERS, BACK-PLATES, SLIP-JOINTS, END CAPS, WALL SLEEVE, CORNERS, ACCESS DOORS AS REQUIRED. CUSTOM ENCLOSURE SHALL BE STAINLESS STEEL AND PROVIDED BY OTHERS; REFER TO ARCHITECTURAL PLANS. COORDINATE DIMENSIONS & ENCLOSURE WITH HEATING ELEMENT. PROVIDE WALL MOUNTED THERMOSTAT.

11.) THERMOSTAT GUARDS: SHALL BE SHAW-PERKINS PROTECTION SERIES 16 STEEL THERMOSTAT GUARD. CONSTRUCTED OF HEAVY GAUGE DIE-FORMED 16 GAUGE PERFORATED STEEL, ⅛" PERFORATIONS ON 3⁄16" CENTERS. SIDE AND MOUNTING FRAME CONSTRUCTED OF 14-GAUGE SOLID STEEL. COORDINATE FINAL COLOR AND FINISH WITH OWNER.

# GREENWICH HS CARDINAL STADIUM PHASE 1A

GREENWICH PUBLIC SCHOOLS
10 HILLSIDE ROAD
GREENWICH CT 06830


KG+D listen imagine build
KG+D . ARCHITECTS PC
285 MAIN STREET MOUNT KISCO . NEW YORK . 10549
P:914.666.5900 KGDARCHITECTS.COM

OLA Consulting Engineers
50 Broadway,
Hawthorne, NY 10532
914.747.2800
8 West 38th Street,
Suite 501
New York, NY 10018
646.849.4110
olace.com


CONSTRUCTION DOCUMENTS


NOTE: ALL IDEAS, DESIGNS, ARRANGEMENTS AND PLANS INDICATED OR REPRESENTED BY THIS DRAWING ARE OWNED BY AND ARE THE PROPERTY OF KAEYER, GARMENT, & DAVIDSON ARCHITECTS, PC (KG&D), AND WERE CREATED FOR USE ON THIS PROJECT. NONE OF SUCH IDEAS, DESIGNS, ARRANGEMENTS OR PLANS SHALL BE USED BY OR DISCLOSED TO ANY PURPOSE WHATSOEVER WITHOUT THE WRITTEN PERMISSION OF (KG&D).

WRITTEN DIMENSIONS ON THIS DRAWING SHALL HAVE PRECEDENCE OVER SCALED DIMENSIONS. CONTRACTOR SHALL VERIFY ALL ACTUAL DIMENSIONS AND CONDITIONS ON THE JOB AND THE ARCHITECT MUST BE NOTIFIED OF ANY VARIATIONS FROM DIMENSIONS AND CONDITIONS SHOWN. SHOP DETAILS MUST BE SUBMITTED TO THIS OFFICE FOR APPROVAL BEFORE PROCEEDING WITH FABRICATION.

ALTERATIONS BY ANY PERSON, IN ANY WAY, OF ANY ITEM CONTAINED ON THIS DOCUMENT, UNLESS ACTING UNDER THE DIRECTION OF THE LICENCED ARCHITECT WHOSE PROFESSIONAL SEAL IS AFFIXED HERETO, IS A VIOLATION OF TITLE VI, SECT. 65.5 (b) OF NEW YORK STATE LAW.
COPYRIGHT KAEYER, GARMENT + DAVIDSON ARCHITECTS & ENGINEERS, PC
ALL RIGHTS RESERVED.


Professional Seal

| No. | Date | Issue |
|---|---|---|
| 3 | 11/10/20 | CONSTRUCTION DOCUMENTS |
| 2 | 08/12/20 | ISSUE FOR PERMIT |

Sheet Title

MECHANICAL EQUIPMENT NOTES & SCHEDULES

| Job No. | Date |
|---|---|
| NKGD0185.02 | 8/23/2019 |
| Scale: AS NOTED | Drawn / Checked: TV RG |

Sheet Number

M601

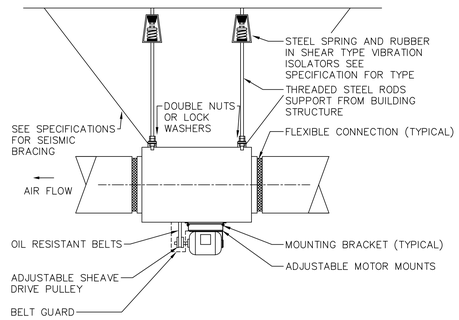


6 IN–LINE FAN DETAIL
SCALE: NONE

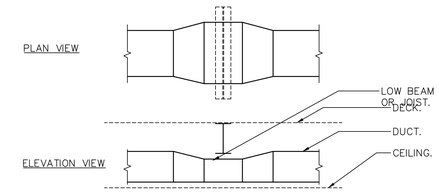


NOTES:
1.) WHERE INDICATED ON THE PLANS, OR REQUIRED DUE TO FIELD CONDITIONS, THE CONTRACTOR SHALL ROUTE DUCTWORK UNDER LOW BEAMS OR JOISTS IN THE MANNER INDICATED ABOVE.
2.) REDUCE DUCT HEIGHT AT THE CROSSING IN ORDER TO FIT UNDER THE BEAM OR JOIST.
3.) INCREASE DUCT WIDTH AT THE CROSSING IN ORDER TO MAINTAIN THE SAME CROSS SECTIONAL AREA.
4.) USE SMACNA APPROVED TRANSITIONS.

3 DUCT UNDER LOW BEAM DETAIL
SCALE: NONE

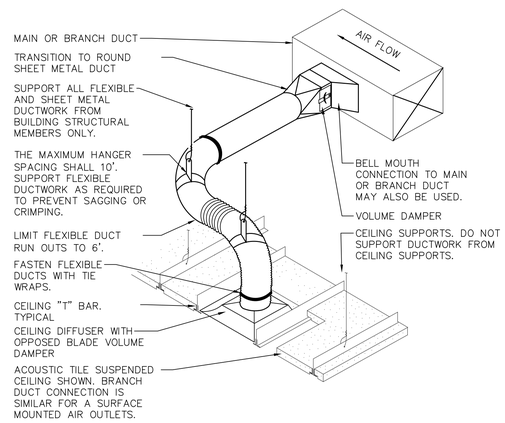


NOTES:
1.) THIS BRANCH DUCT ARRANGEMENT IS SIMILAR FOR PLENUM SLOT DIFFUSERS.

8 FLEXIBLE DUCT CONNECTION DETAIL
SCALE: NONE

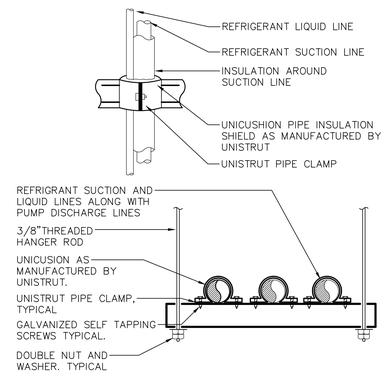


NOTES:
1.) LIQUID AND SUCTION LINES MAY BE ROUTED TOGETHER FOR CONVENIENCE, BUT MUST BE COMPLETELY INSULATED FROM EACH OTHER. DO NOT SOLDER LIQUID AND SUCTION LINES TOGETHER. DO NOT ALLOW METAL TO METAL CONTACT.
2.) LINES SHOULD BE INSTALLED WITH AS FEW BENDS AS POSSIBLE, ALLOWING SERVICE ACCESS TO THE INDOOR COIL.
3.) USE LONG RADIUS ELBOWS WHEREVER POSSIBLE, EXCEPT IN OIL RETURN TRAPS, WHERE SHORT RADIUS ELBOWS SHOULD BE USED.
4.) SLOPE HORIZONTAL SUCTION LINES 1 INCH EVERY 20 FEET TOWARD THE OUTDOOR UNIT.

5 REFRIGERANT PIPE SUPPORT DETAIL
SCALE: NONE

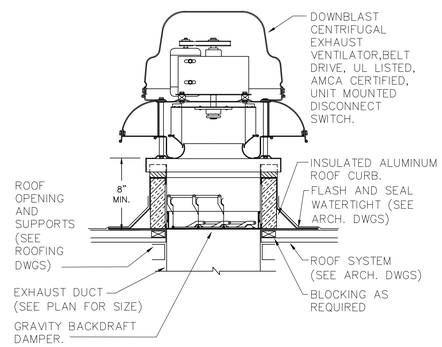


2 TYPICAL EXHAUST FAN DETAIL
SCALE: NONE

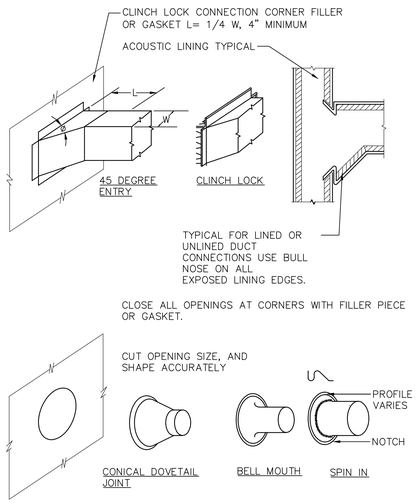


7 DUCT BRANCH CONNECTION DETAIL
SCALE: NONE

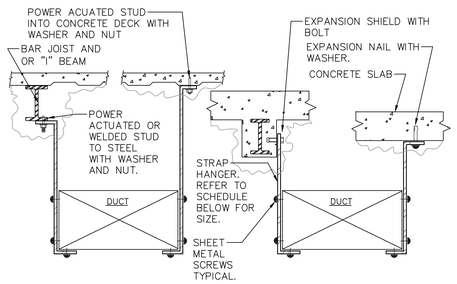


NOTES:
1.) FOR DUCTS OVER 49" WIDE, THE STRAP HANGER SHALL BE TURNED UNDER THE BOTTOM OF THE DUCT.
2.) WHERE EXISTING BUILDING STRUCTURAL COMPONENTS HAVE FIREPROOF MATERIAL, ANY AREA THAT IS DISTURBED OR DAMAGED AS A RESULT OF HANGER INSTALLATION SHALL BE PATCHED WITH UL AND FM APPROVED FIREPROOFING TO MATCH EXISTING.

HANGER STRAP SCHEDULE

| DUCT SIZE | HANGER SIZE | MAXIMUM SPACING |
|---|---|---|
| UP TO 2 SQ.FT. | 1" X 1/16" | 8'–0" |
| 2 SQ.FT. TO 4 SQ.FT. | 1" X 1/8" | 8'–0" |
| 4 SQ.FT. TO 10 SQ.FT. | 1" X 1/8" | 6'–0" |
| OVER 10 SQ.FT. | 1" X 1/8" | 4'–0" |

4 DUCT HANGER DETAIL
SCALE: NONE

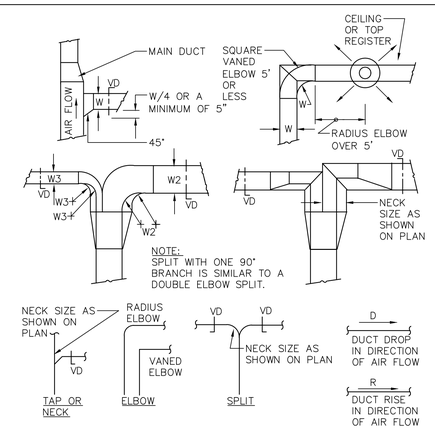


NOTES:
1.) SINGLE LINE REPRESENTATIONS REFER TO DOUBLE LINE DETAILS.
2.) USE RADIUS OR SQUARE VANED BENDS FOR BOTH ELBOWS AND SPLITS AS DETERMINED BY SPACE LIMITATIONS, AND THE DISTANCE FROM AIR OUTLETS.
3.) ALL SQUARE ELBOWS SHALL HAVE FACTORY TURNING VANES, AND MAINTAIN A CONSTANT WIDTH.
4.) WHERE DUCTS SPLIT, THE SOLID LINE REPRESENTATION IS PREFERRED, UNLESS PRECLUDED BY SPACE, OR OTHERWISE INDICATED.
5.) USE ELBOW SPLIT FOR BRANCH CONNECTIONS ONLY WHERE NECK SIZE IS GIVEN.

1 DUCT BRANCH TAKE–OFF DETAIL
SCALE: NONE

# GREENWICH HS CARDINAL STADIUM PHASE 1A

GREENWICH PUBLIC SCHOOLS
10 HILLSIDE ROAD
GREENWICH CT 06830

KG+D listen imagine build
KG+D . ARCHITECTS PC
285 MAIN STREET MOUNT KISCO . NEW YORK . 10549
P:914.666.5900 KGDARCHITECTS.COM

OLA Consulting Engineers
50 Broadway,
Hawthorne, NY 10532
914.747.2800
8 West 38th Street,
Suite 501
New York, NY 10018
646.849.4110
olace.com

CONSTRUCTION DOCUMENTS

NOTE: ALL IDEAS, DESIGNS, ARRANGEMENTS AND PLANS INDICATED OR REPRESENTED BY THIS DRAWING ARE OWNED BY AND ARE THE PROPERTY OF KAETHER, GARMENT, & DIVIDSON ARCHITECTS, PC (KG&D), AND WERE CREATED FOR USE ON THIS PROJECT. NONE OF SUCH IDEAS, DESIGNS, ARRANGEMENTS OR PLANS SHALL BE USED BY OR DISCLOSED TO ANY PURPOSE WHATSOEVER WITHOUT THE WRITTEN PERMISSION OF (KG&D).

WRITTEN DIMENSIONS ON THIS DRAWING SHALL HAVE PRECEDENCE OVER SCALED DIMENSIONS. CONTRACTOR SHALL VERIFY ALL ACTUAL DIMENSIONS AND CONDITIONS ON THE JOB AND THE ARCHITECT MUST BE NOTIFIED OF ANY VARIATIONS FROM DIMENSIONS AND CONDITIONS SHOWN. SHOP DETAILS MUST BE SUBMITTED TO THIS OFFICE FOR APPROVAL BEFORE PROCEEDING WITH FABRICATION.

ALTERATIONS BY ANY PERSON, IN ANY WAY, OF ANY ITEM CONTAINED ON THIS DOCUMENT, UNLESS ACTING UNDER THE DIRECTION OF THE LICENCED ARCHITECT WHOSE PROFESSIONAL SEAL IS AFFIXED HERETO, IS A VIOLATION OF TITLE VII, SECT. 6B § (b) OF NEW YORK STATE LAW.
COPYRIGHT KAETHER, GARMENT + DAVIDSON ARCHITECTS & ENGINEERS, PC
ALL RIGHTS RESERVED.

Professional Seal

| No. | Date | Issue |
|---|---|---|
| 3 | 11/10/20 | CONSTRUCTION DOCUMENTS |
| 2 | 08/12/20 | ISSUE FOR PERMIT |

Sheet Title
MECHANICAL DETAILS

| | |
|---|---|
| Job No. NKGD0185.02 | Date 8/23/2019 |
| Scale AS NOTED | Drawn / Checked TV RG |

Sheet Number
M701

# SYMBOLS AND ABBREVIATIONS

| SYMBOL | ABBREVIATION | DESCRIPTION |
|---|---|---|
| | – | CONDUIT AND WIRING |
| | – | CONDUIT & WIRING TO BE REMOVED UON |
| —UG— | – | BURIED CONDUIT |
| —OH— | – | OVERHEAD CONDUCTORS |
| | – | HOMERUN TO PANEL, ARROWS INDICATE # 1P |
| | – | MULTI-POLE HOMERUN |
| | – | ELECTRICAL EQUIPMENT AS INDICATED |
| | – | ELECTRICAL EQUIPMENT TO BE REMOVED UON |
| M | – | ELECTRIC METER |
| J | – | JUNCTION BOX |
| | – | FUSED DISCONNECT SWITCH |
| | – | UNFUSED DISCONNECT SWITCH |
| | – | COMBINATION MOTOR STARTER/FUSED DISC. |
| | – | MOTOR STARTER |
| | – | MOTOR |
| | – | BATTERY PACK EMERGENCY LIGHT FIXTURE |
| | – | EXIT LIGHT, FACES-SHADED, CHEVRON-ARROW |
| $S_x$ | – | SINGLE POLE SWITCH (x – INDICATES FIXTURE BEING CONTROLLED) |
| $S_x^3$ | – | THREE WAY SWITCH (x – INDICATES FIXTURE BEING CONTROLLED) |
| $S_M$ | – | MOTOR RATED TOGGLE SWITCH |
| $S_K$ | – | KEY OPERATED SINGLE POLE SWITCH |
| | – | WALL MOUNTED OCCUPANCY SENSOR |
| OC | – | CEILING MOUNTED OCCUPANCY SENSOR |
| | – | DUPLEX RECEPTACLE('CT' INDICATES ABOVE COUNTERTOP) |
| | – | DOUBLE DUPLEX RECEPTACLE |
| | – | SPECIAL RECEPTACLE |
| | – | TELEPHONE OUTLET |
| x | – | DATA OUTLET (x – INDICATES # OF JACKS, 1 JACK UON) |
| | – | COMBINATION TELEPHONE/DATA OUTLET |
| F | – | FIRE ALARM MANUAL PULL STATION |
| F V | – | FIRE ALARM COMBINATION AUDIO/VISUAL DEVICE (15/75 CD – STROBE) ('V' DENOTES VOICE COMMUNICATION DEVICE) |
| F V 110 | – | FIRE ALARM COMBINATION AUDIO/VISUAL DEVICE (110 CD – STROBE) ('V' DENOTES VOICE COMMUNICATION DEVICE) |
| F | – | FIRE ALARM STROBE 15/75 CD |
| S | – | SMOKE DETECTOR |
| S | – | DUCT MOUNTED SMOKE DETECTOR |
| H | – | HEAT DETECTOR |
| ANN | – | FIRE ALARM ANNUNCIATOR PANEL |
| CM | CM | FIRE ALARM CONTROL MODULE |
| MM | MM | FIRE ALARM MONITORING MODULE |
| FACP | FACP | FIRE ALARM CONTROL PANEL |
| BPS | BPS | BOOSTER POWER SUPPLY |
| R | – | FIRE ALARM RELAY |
| | EOL | END OF LINE RESISTOR |
| | – | WALL MOUNTED PUBLIC ADDRESS SPEAKER |
| | – | PUBLIC ADDRESS TELEPHONE |
| C | – | CLOCK |
| TC | – | TIME CLOCK |
| CR | – | CARD READER |
| PTZ | – | SECURITY CAMERA PTZ – PAN, TILT, ZOOM |
| CFA | – | CALL FOR AID PULL STATION |
| CFA | – | CALL FOR AID A/V DEVICE |
| HD | – | ELECTRIC HAND DRYER |
| RASP | RASP | RESCUE ASSIST. SYSTEM MASTER STATION |
| RA | – | REMOTE RESCUE STATION |
| | CB | CIRCUIT BREAKER |
| | – | ENCLOSED CIRCUIT BREAKER |
| 200AS 150AF | – | FUSED SWITCH |
| G | GEN | GENERATOR |
| OR | GND | GROUND AS PER LOCAL CODE |
| | – | GROUND BAR |
| OR | – | GROUND ROD |
| | – | TRANSFER SWITCH |
| | CT | CURRENT TRANSFORMER |
| | – | UTILITY POLE |
| WM | WM | WATER MAIN |
| M | MD | MOTORIZED DAMPER |
| UH | UH | UNIT HEATER |
| | A | AMPERE(S) |
| | AC | AIR CONDITIONER |
| | ACC | AIR CONDITIONER CONDENSER |

| SYMBOL | ABBREVIATION | DESCRIPTION |
|---|---|---|
| | AF | AMPERAGE OF FUSE |
| | AGL | ABOVE GRADE LEVEL |
| | AHU | AIR HANDLING UNIT |
| | ARC | ARC FAULT INTERRUPTER |
| | AS | AMPERAGE OF SWITCH |
| | ATS | AUTOMATIC TRANSFER SWITCH |
| | AWG | AMERICAN WIRE GAUGE |
| | BCW | BARE COPPER WIRE |
| | C | CONDUIT |
| | CD | CANDELA |
| | CKT | CIRCUIT |
| | CLG | CEILING |
| | COL | COLUMN |
| | CU | COPPER |
| | CUH | CABINET UNIT HEATER |
| | DEM. | DEMOLISH AND REMOVE |
| | DISC | DISCONNECT |
| | DIM | DIMMER |
| | DWG | DRAWING |
| | ELEV | ELEVATOR |
| | EMT | ELECTRICAL METALLIC TUBING |
| | EM | EMERGENCY |
| | EX. | EXISTING TO REMAIN |
| | F | FLOOR |
| | FBO | FURNISHED BY OTHERS |
| | FC | FAN COIL UNIT |
| | GEN | GENERATOR |
| | GFI | GROUND FAULT INTERRUPTER |
| | HP | HORSEPOWER |
| | HVAC | HEATING VENTILATION AIR CONDITIONING |
| | IG | ISOLATED GROUND |
| | KVA | KILO-VOLT-AMPERE |
| | KW | KILO-WATT |
| | MAX | MAXIMUM |
| | MCB | MAIN CIRCUIT BREAKER |
| | MCC | MOTOR CONTROL CENTER |
| | MIN | MINIMUM |
| | MLO | MAIN LUG ONLY |
| | MTS | MANUAL TRANSFER SWITCH |
| | NIC | NOT IN CONTRACT |
| | NL | NIGHT LIGHT |
| | NTS | NOT TO SCALE |
| | OH | OVERHEAD |
| | P | POLE |
| | PBO | PROVIDED BY OTHERS |
| | PNL | PANEL |
| | PT | PRESSURE TREATED |
| | PVC | POLY VINYL CHLORIDE |
| | REL. | REMOVE AND RELOCATE |
| | RGS | RIGID GALVANIZED STEEL |
| | RTU | ROOF TOP UNIT |
| | SCH | SCHEDULE |
| | SPD | SURGE PROTECTION DEVICE |
| | SW | SWITCH(ES) |
| | TELCO | TELEPHONE COMPANY |
| | TYP | TYPICAL |
| | UG | UNDERGROUND |
| | UON | UNLESS OTHERWISE NOTED |
| | UV | UNIT VENTILATOR |
| | VIF | VERIFY IN FIELD |
| | V | VOLT(S) |
| | WH | WATER HEATER |
| | WP | WEATHERPROOF |

NOTES:
1.) ALL SYMBOLS AND ABBREVIATIONS MAY NOT BE APPLICABLE FOR THIS PROJECT.
2.) SEE LIGHTING FIXTURE SCHEDULE FOR LIGHT FIXTURE SYMBOLS.

## TRENCHING NOTES

1. CONTRACTOR SHALL LOCATE ALL EXISTING UNDERGROUND UTILITIES THAT ARE NOT PART OF N.Y. STATE "CODE 753" PRIOR TO DIGGING.
2. ALL EXCAVATING IN THE AREA OF THE EXISTING UNDERGROUND EQUIPMENT, PIPES AND CONDUITS SHALL BE PERFORMED BY HAND.
3. ANY AREA/PLANTS OR LANDSCAPING OR PAVEMENTS DISTURBED DURING THE EXCAVATION SHALL BE RESTORED OR REPLACED TO MATCH EXISTING CONDITIONS BY THE CONTRACTOR AT NO COST TO THE OWNER.
4. ANY EXISTING BURIED CONDUITS, DRAINAGE, SPRINKLER PIPING, ETC. THAT IS DISTURBED AND/OR DAMAGED DURING CONSTRUCTION SHALL BE REPAIRED BY THE CONTRACTOR AT NO COST TO THE OWNER.
5. THE PLANS SHOW SOME KNOWN SUBSURFACE STRUCTURES, ABOVE GROUND STRUCTURES AND/OR UTILITIES BELIEVED TO EXIST IN THE WORKING AREA. EXACT LOCATION OF WHICH MAY VARY FROM THE LOCATIONS INDICATED. IN PARTICULAR, THE CONTRACTOR IS WARNED THAT THE EXACT OR EVEN APPROXIMATE LOCATION OF SUCH PIPELINES, SUBSURFACE STRUCTURES AND/OR UTILITIES IN THE AREA MAY OR MAY NOT BE SHOWN; AND IT SHALL BE HIS RESPONSIBILITY TO PROCEED WITH GREAT CARE IN EXECUTING ANY WORK. 48 HOURS BEFORE YOU DIG, DRILL OR BLAST, CALL 1-800-922-4455 (CONNECTICUT).

## DEMOLITION NOTES

1. ALL EQUIPMENT SHALL BE DISCONNECTED AND REMOVED BACK TO POWER SOURCE ORIGINATION UNLESS OTHERWISE NOTED (UON) EXISTING TO REMAIN (EX.).
2. CONTRACTOR SHALL VERIFY EXTENT OF DEMOLITION WORK IN THE FIELD PRIOR TO BID AND SHALL INCLUDE ALL LABOR AND MATERIALS IN BASE BID INCLUDING ALL TEMPORARY CONNECTIONS, CONDUIT AND WIRE IN ORDER TO ACCOMMODATE CONSTRUCTION AND PROVIDE CONTINUOUS SERVICE TO DEVICES AND SYSTEMS TO REMAIN, TEMPORARY AND PERMANENTLY. WORK REQUIRING THE SHUT-DOWN OF THE BUILDING POWER SHALL BE PERFORMED DURING OVERTIME AND SHALL BE INCLUDED IN BASE BID.
3. CIRCUIT BREAKER, CONDUIT AND CONDUCTOR SIZES INDICATED SHALL BE FIELD VERIFIED PRIOR TO BID.
4. ALL EXISTING ELECTRICAL EQUIPMENT NO LONGER IN USE, SUCH AS DISCONNECT SWITCHES, MOTOR CONTROLLERS, MOTOR STARTER PANELS, ETC. SHALL BE REMOVED UON.
5. ALL DISCONNECTED & REMOVED EXISTING ELECTRICAL ITEMS THAT ARE NOT BEING REUSED SHALL BE RETURNED TO THE OWNER OR DISPOSED OF AS DIRECTED.
6. THE CONTRACTOR SHALL INCLUDE IN THE BASE BID FOR ALL MATERIAL & LABOR REQUIRED FOR THE EXTENSIONS, REROUTING & RELOCATION OF EXISTING SYSTEM COMPONENTS, EQUIPMENT, WIRING, CONDUITS & CABLING SO AS TO MAINTAIN OPERATION OF ALL SYSTEMS THROUGHOUT THE BUILDING DURING DEMOLITION & CONSTRUCTION PHASES.

## ADDITIONAL CONDUITS

1.) ELECTRICAL CONTRACTOR SHALL PROVIDE THE FOLLOWING CONDUIT RUNS FROM DATA RM. 107A TO THE PRESSBOX FOR THE FOLLOWING SYSTEMS:
WIRELESS ACCESS POINTS – (8) 2" CONDUITS 150' EACH WITH DRAGLINES.
COORDINATE EXACT LOCATIONS WITH SCHOOL DISTRICT'S VENDOR. CONTRACTOR SHALL PROVIDE BACK-BOXES AT EACH LOCATION. WIRING BY OTHERS.

2.) ELECTRICAL CONTRACTOR SHALL PROVIDE THE FOLLOWING CONDUIT RUNS FROM DATA RM 107A TO THE HOME BLEACHER FOR THE FOLLOWING SYSTEMS:
WIRELESS ACCESS POINTS – (10) 2" CONDUITS 200' EACH WITH DRAGLINES.
COORDINATE EXACT LOCATIONS WITH SCHOOL DISTRICT'S VENDOR. CONTRACTOR SHALL PROVIDE BACK-BOXES AT EACH LOCATION. WIRING BY OTHERS.

3.) ELECTRICAL CONTRACTOR SHALL PROVIDE THE FOLLOWING CONDUIT RUNS FROM DATA RM 107A TO THE BUILDING UNDER THE HOME BLEACHER FOR THE FOLLOWING SYSTEMS:
WIRELESS ACCESS POINTS – (5) 1" CONDUITS 100' EACH WITH DRAGLINES.
COORDINATE EXACT LOCATIONS WITH SCHOOL DISTRICT'S VENDOR. CONTRACTOR SHALL PROVIDE BACK-BOXES AT EACH LOCATION. WIRING BY OTHERS.

4.) ELECTRICAL CONTRACTOR SHALL PROVIDE THE FOLLOWING SPARE CONDUIT RUNS FROM MECH/ELEC RM. 107 TO THE PRESSBOX:
(4) 2" CONDUITS 150' EACH WITH DRAGLINES.

5.) ELECTRICAL CONTRACTOR SHALL PROVIDE THE FOLLOWING SPARE CONDUIT RUNS FROM MECH/ELEC RM. 107 TO THE ROOF OF THE PRESSBOX:
(2) 2" CONDUITS 150' EACH WITH DRAGLINES.

## TYPICAL BRANCH CIRCUIT WIRING LEGEND

2-#12 & 1-#12 GND (1-1P-20A OR 1-1P-15A CB)
3-#12 & 1-#12 GND (3P-20A OR 3P-15A CB)
2-#12 & 1-#12 GND (2P-20A OR 2P-15A CB)

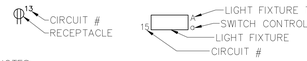


NOTES:
1.) EACH 120V AND 277V CIRCUIT SHALL HAVE A DEDICATED NEUTRAL CONDUCTOR. SHARED NEUTRAL HOMERUNS ARE NOT PERMITTED.
2.) CONDUCTORS SHALL BE INCREASED FOR VOLTAGE DROP AND DERATING AS PER APPLICABLE ELECTRICAL CODE. FOR CIRCUITS THAT ARE BETWEEN 100' AND 150' IN LENGTH, PHASE AND NEUTRAL CONDUCTORS SHALL BE #10 AWG. FOR CIRCUITS THAT ARE BETWEEN 150' AND 225' IN LENGTH, PHASE AND NEUTRAL CONDUCTORS SHALL BE #8 AWG. FOR LENGTHS GREATER THAN 225' IN LENGTH, VERIFY CONDUCTOR SIZES WITH ENGINEER.

## GENERAL NOTES

1.) ALL WORK SHOWN IS NEW UNLESS OTHERWISE NOTED (UON) EXISTING TO REMAIN (EX.).

2.) THE DRAWINGS ARE TO BE CONSIDERED SCHEMATIC ONLY AND DO NOT NECESSARILY SHOW THE EXACT LOCATIONS AND DETAILS OF THE WORK TO BE INSTALLED.

3.) THE ELECTRICAL CONTRACTOR SHALL BE RESPONSIBLE FOR OBTAINING ALL NECESSARY PERMITS AND PAYING ALL FEES ASSOCIATED WITH THIS WORK INCLUDING FILING WITH THE UTILITY COMPANY (AS REQUIRED), AND WITH LOCAL AUTHORITY HAVING JURISDICTION.

4.) ALL WORK INVOLVING THE ELECTRIC SERVICE SHALL BE COORDINATED AND APPROVED BY THE UTILITY COMPANY.

5.) ALL CONDUCTORS SHALL BE COPPER UON "ON DRAWINGS".

6.) ELECTRONIC FILES OF THE MECHANICAL, ELECTRICAL, PLUMBING AND FIRE PROTECTION DRAWINGS ARE AVAILABLE TO THE CONTRACTOR. THE ENGINEER MAY GRANT THE CONTRACTOR A LIMITED LICENSE TO MAKE A DERIVATIVE WORK OF THE DATABASE FOR THE PURPOSE OF SHOP DRAWINGS, SUBMITTALS AND AS-BUILT DRAWINGS. UPON REQUEST, THE ENGINEER SHALL PROVIDE A RELEASE FORM THAT MUST BE SIGNED AND RETURNED BY THE CONTRACTOR PRIOR TO RELEASE OF THE ELECTRONIC FILES.

7.) CIRCUIT NUMBERS ARE FOR INFORMATION PURPOSES ONLY. ACTUAL CIRCUIT NUMBERS SHALL BE DETERMINED IN THE FIELD.

8.) CORE DRILLING OR TRENCHING THROUGH AN EXISTING FLOOR SLAB, WHEN REQUIRED, SHALL BE COORDINATED WITH THE OWNER. FLOOR SLABS SHALL BE RADAR SCANNED PRIOR TO CORE DRILLING OR TRENCHING. ALL WORK, INCLUDING CORE DRILLING, RADAR SCAN, INSTALLATION OF FIRE STOPPING, & CONDUIT/CABLE INSTALLATION SHALL BE PERFORMED DURING NON-BUSINESS HOURS AND INCLUDED IN BASE BID. USE EXTREME CAUTION DURING ANY CUTTING OPERATION TO AVOID DAMAGE TO EXISTING EQUIPMENT/SYSTEMS. ANY ITEMS DAMAGED AS A RESULT OF CORE DRILLING SHALL BE REPAIRED AT NO COST TO THE CLIENT. ALL CORES SHALL BE FIRE SEALED.

9.) FOR EACH WALL MOUNTED COMMUNICATIONS OUTLET, PROVIDE A 1900 JUNCTION BOX WITH AN EXTENDER COLLAR AND 1 INCH CONDUIT WITH DRAGLINE 6 INCHES ABOVE ACCESSIBLE CEILING FOR INSTALLATION OF CABLE BY OTHERS.

10.) COMMUNICATION WIRING BY ELECTRICAL CONTRACTOR. COORDINATE COMMUNICATION OUTLET DEVICES WITH CLIENT'S VENDOR.

11.) WHERE GFI RECEPTACLES ARE CIRCUITED WITH GENERAL CONVENIENCE RECEPTACLES, THE GFI RECEPTACLE SHALL BE THE LAST DEVICE ON THE CIRCUIT.

12.) INSTALL CONDUIT EXPANSION FITTINGS AT ALL LOCATIONS WHERE CONDUITS CROSS BUILDING OR STRUCTURE EXPANSION JOINTS.

13.) CEILING MOUNTED RECEPTACLES SHALL BE MOUNTED FLUSH TO CEILING.

14.) UNLESS OTHERWISE NOTED, DISCONNECT SWITCHES, STARTERS, HOAS AND MOTOR RATED TOGGLE SWITCHES FOR MECHANICAL PUMPS, CABINET AND UNIT HEATERS, RETURN FANS, ROOF FANS, VAV BOXES, COMPRESSORS, FAN COIL UNITS, AIR HANDLERS AND CONDENSERS SHALL BE FURNISHED BY THE MECHANICAL CONTRACTOR AND INSTALLED BY THE ELECTRICAL CONTRACTOR. COORDINATE ALL WORK WITH THE MECHANICAL CONTRACTOR.

15.) DISCONNECT SWITCHES FOR MOTORIZED DAMPERS, CFSD/SD AND VAV BOXES SUPPLIED BY MECHANICAL CONTRACTOR AND INSTALLED AND WIRED BY ELECTRICAL CONTRACTOR. SWITCHES NOT SHOWN ON PLANS.

16.) THE ELECTRICAL CONTRACTOR SHALL PROVIDE ALL CUTTING, PATCHING, PAINTING, AND FINAL RESTORATION REQUIRED TO FACILITATE THE DEMOLITION AND INSTALLATION OF ALL ELECTRICAL EQUIPMENT, INCLUDING BUT NOT LIMITED TO PANELBOARDS, CONDUITS, WIRING, DEVICES, FIXTURES, ETC. INCLUDING ABOVE CEILINGS. CONTRACTOR TO REMOVE AND REPLACE CEILINGS, AND OPEN AND PATCH WALLS, AS REQUIRED TO EXECUTE THE ELECTRICAL WORK.

## DEFINITION OF TERMS

1.) WHEREVER IN THE CONTRACT DOCUMENTS THE WORD "CLIENT" IS USED, IT MUST BE UNDERSTOOD THAT "GREENWICH PUBLIC SCHOOLS" IS INTENDED.

2.) WHEREVER IN THE CONTRACT DOCUMENTS THE WORD "ARCHITECT" IS USED, IT MUST BE UNDERSTOOD THAT "KG&D ARCHITECTS, PC" IS INTENDED.

3.) WHEREVER IN THE CONTRACT DOCUMENTS THE WORD "ENGINEER" IS USED, IT MUST BE UNDERSTOOD THAT "OLA CONSULTING ENGINEERS" IS INTENDED.

4.) WHEREVER IN THE CONTRACT DOCUMENTS THE WORDS "ELECTRICAL UTILITY" OR "POWER COMPANY" ARE USED, IT MUST BE UNDERSTOOD THAT "EVERSOURCE ENERGY" IS INTENDED.

5.) WHEREVER IN THE CONTRACT DOCUMENTS THE WORDS "TELEPHONE UTILITY" OR "TELCO" ARE USED, IT MUST BE UNDERSTOOD THAT "TOTAL COMMUNICATIONS" IS INTENDED.

6.) WHEREVER IN THE CONTRACT DOCUMENTS THE WORDS "FIRE ALARM SYSTEM" OR "FIRE ALARM VENDOR" ARE USED, IT MUST BE UNDERSTOOD THAT "INTEGRATED TECHNICAL SYSTEMS" IS INTENDED.

7.) "WORK" MUST BE DEEMED TO CONSIST OF ALL LABOR AND OPERATIONS, TRANSPORTATION, HOISTING, MATERIALS, TOOLS, EQUIPMENT, SERVICES, INSPECTIONS, INVESTIGATIONS, COORDINATION AND SUPERVISION REQUIRED AND / OR REASONABLY NECESSARY TO PRODUCE THE CONSTRUCTION REQUIRED BY THE CONTRACT DOCUMENTS.

8.) "FURNISH" MEANS THE DESIGN, FABRICATION, PURCHASE AND DELIVERY TO THE JOB SITE.

9.) "INSTALL OR INSTALLATION" MEANS THE ACT OF PHYSICALLY PLACING, APPLYING, SETTING, ERECTING, ANCHORING, SECURING, ETC., CONSTRUCTION MATERIALS, EQUIPMENT, FURNISHINGS, APPLIANCES, AND SIMILAR ITEMS SPECIFIED AND FURNISHED AT THE JOB SITE. INSTALLATION OF SPECIFIED ITEMS MUST BE COMPLETE IN ALL RESPECTS.

10.) "PROVIDE" MEANS TO FURNISH AND INSTALL CONSTRUCTION MATERIAL, EQUIPMENT, ETC. AS DEFINED ABOVE.

11.) THE FOLLOWING ARE DEFINITIONS OF SHOP DRAWING STAMP ACTIONS:

A.) "NO EXCEPTIONS TAKEN" MEANS THAT THE SHOP DRAWING IS CORRECT AS TO PERFORMANCE, CAPACITY, ETC. AND SUBSTANTIAL CONFORMANCE TO THE CONTRACT DRAWINGS AND SPECIFICATIONS. FABRICATION AND/OR PURCHASE MAY COMMENCE.

B.) "MAKE CORRECTIONS NOTED" MEANS THAT THE SHOP DRAWING IS CORRECT AS TO PERFORMANCE, CAPACITY, ETC. AND SUBSTANTIAL CONFORMANCE TO THE CONTRACT DRAWINGS AND/OR SPECIFICATIONS, SUBJECT TO AND IN COMPLIANCE WITH THE ANNOTATIONS AND/OR CORRECTIONS INDICATED ON THE SHOP DRAWING. FABRICATION AND/OR PURCHASE MAY COMMENCE.

C.) "AMEND AND RESUBMIT" MEANS THAT THE COMMENTS AND/OR CORRECTION ARE SO EXTENSIVE AND IMPORTANT THAT THE REVIEWER WANTS TO SEE HOW THE COMMENTS AND/OR CORRECTIONS ARE RESOLVED PRIOR TO RELEASE FOR FABRICATION AND/OR PURCHASE. FABRICATIONS AND/OR PURCHASE MAY NOT COMMENCE.

D.) "REJECTED" MEANS THAT THE SHOP DRAWING DOES NOT COMPLY OR CONFORM TO THE CONTRACT DRAWINGS AND/OR SPECIFICATIONS. FABRICATION AND/OR PURCHASE MAY NOT COMMENCE.

# GREENWICH HS CARDINAL STADIUM PHASE 1A

GREENWICH PUBLIC SCHOOLS
10 HILLSIDE ROAD
GREENWICH CT 06830


KG+D listen imagine build
KG+D . ARCHITECTS PC
285 MAIN STREET MOUNT KISCO . NEW YORK . 10549
P:914.666.5900 KGDARCHITECTS.COM

OLA Consulting Engineers
50 Broadway,
Hawthorne, NY 10532
914.747.2800
8 West 38th Street,
Suite 501
New York, NY 10018
646.849.4110
olace.com


CONSTRUCTION DOCUMENTS


NOTE: ALL IDEAS, DESIGNS, ARRANGEMENTS AND PLANS INDICATED OR REPRESENTED BY THIS DRAWING ARE OWNED BY AND ARE THE PROPERTY OF KAEYER, GARMENT, & DAVIDSON ARCHITECTS, PC (KG&D), AND WERE CREATED FOR USE ON THIS PROJECT. NONE OF SUCH IDEAS, DESIGNS, ARRANGEMENTS OR PLANS SHALL BE USED BY OR DISCLOSED TO ANY PURPOSE WHATSOEVER WITHOUT THE WRITTEN PERMISSION OF (KG&D).

WRITTEN DIMENSIONS ON THIS DRAWING SHALL HAVE PRECEDENCE OVER SCALED DIMENSIONS. CONTRACTOR SHALL VERIFY ALL ACTUAL DIMENSIONS AND CONDITIONS ON THE JOB AND THE ARCHITECT MUST BE NOTIFIED OF ANY VARIATIONS FROM DIMENSIONS AND CONDITIONS SHOWN. SHOP DETAILS MUST BE SUBMITTED TO THIS OFFICE FOR APPROVAL BEFORE PROCEEDING WITH FABRICATION.

ALTERATIONS BY ANY PERSON, IN ANY WAY, OF ANY ITEM CONTAINED ON THIS DOCUMENT, UNLESS ACTING UNDER THE DIRECTION OF THE LICENCED ARCHITECT WHOSE PROFESSIONAL SEAL IS AFFIXED HERETO, IS A VIOLATION OF TITLE VII, SECT. 69.5 (a) OF NEW YORK STATE LAW.
COPYRIGHT KAEYER, GARMENT • DAVIDSON ARCHITECTS & ENGINEERS, PC
ALL RIGHTS RESERVED.


Professional Seal

| No. | Date | Issue |
|---|---|---|
| 3 | 11/10/20 | CONSTRUCTION DOCUMENTS |
| 2 | 08/12/20 | ISSUE FOR PERMIT |

Sheet Title

ELECTRICAL NOTES, SYMBOLS & ABBREVIATIONS

| | |
|---|---|
| Job No. NKGD0185.02 | Date 08/23/2019 |
| Scale AS NOTED | Drawn / Checked NL/KS |

Sheet Number

E001

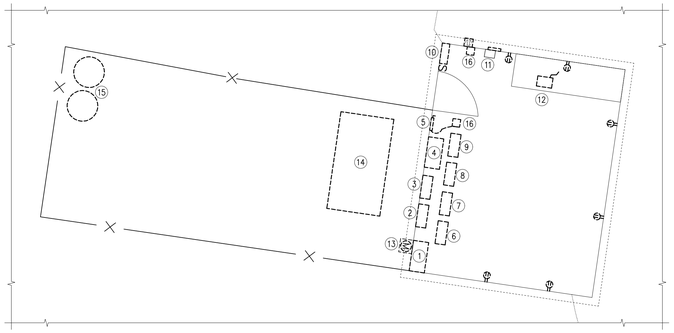

NORTH

## 2 CONCESSION STAND DEMOLITION PART PLAN

SCALE: 1/4" = 1'-0"

## EQUIPMENT LEGEND:

1. DEM. 400A, 208Y/120V, 3PH. 4W, 42 POLE WITH 400A MCB PANELBOARD.
2. DEM. LIGHTING CONTACTOR.
3. DEM. LIGHTING CONTACTOR.
4. DEM. MANUAL TRANSFER SWITCH.
5. DEM. DISCONNECT SWITCH.
6. DISCONNECT AND REMOVE 100A GE 300 LINE CONTROL (CR360L4130ANAD) 60A FOR EX. FIELD LIGHTING POLE #1. RETURN TO OWNER.
7. DISCONNECT AND REMOVE 100A GE 300 LINE CONTROL (CR360L4130ANAD) 60A FOR EX. FIELD LIGHTING POLE #2. RETURN TO OWNER.
8. DISCONNECT AND REMOVE 100A GE 300 LINE CONTROL (CR360L4130ANAD) 60A FOR EX. FIELD LIGHTING POLE #3. RETURN TO OWNER.
9. DISCONNECT AND REMOVE 100A GE 300 LINE CONTROL (CR360L4130ANAD) 60A FOR EX. FIELD LIGHTING POLE #4. RETURN TO OWNER.
10. DEM. 125A, 120/240V, 3W, 1PH PANELBOARD.
11. DISCONNECT AND RELOCATE IRRIGATION CONTROLLER.
12. REMOVE NOVASTAR VX4S W/ LED DISPLAY VIDEO CONTROLLER. TURN OVER TO OWNER.
13. DISCONNECT AND REMOVE UTILITY METER. TURN OVER METER TO UTILITY COMPANY.
14. DISCONNECT AND REMOVE GENERAC 20KW PROPANE GENERATOR. TURN OVER TO OWNER.
15. DISCONNECT AND REMOVE PROPANE GAS TANKS. TURN OVER TO OWNER.
16. DISCONNECT AND REMOVE EXTERIOR RECEPTACLE AND CORD. TURN OVER TO OWNER.

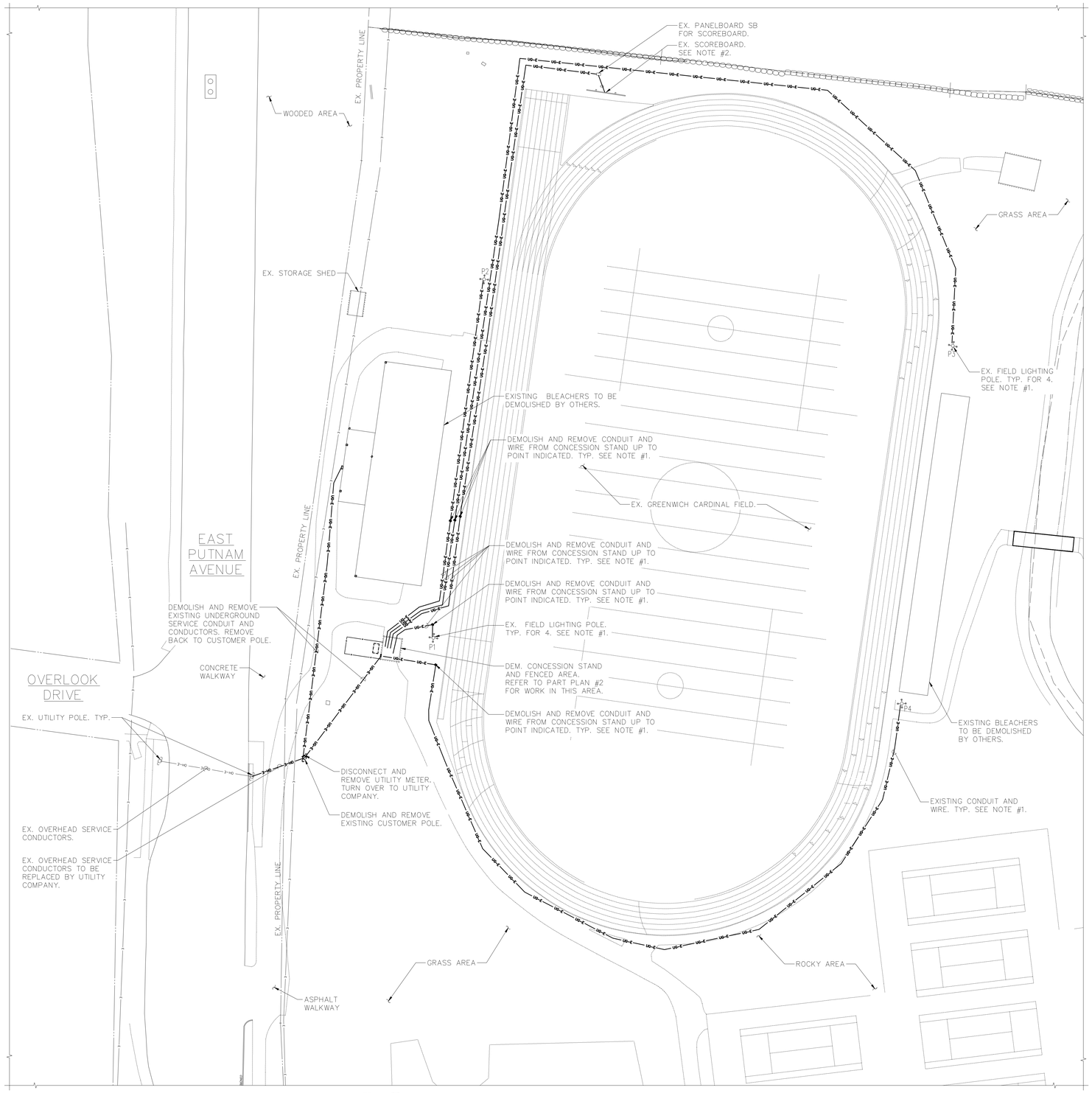


NORTH

## 1 ELECTRICAL DEMOLITION SITE PLAN

SCALE: 1" = 30'-0"

## NOTES:

1.) EXISTING FIELD LIGHTING POLES. DEMOLISH AND REMOVE EXISTING LIGHTING FIXTURES & CAROLINA HIGH MAST LOWERING DEVICE. EXISTING CONDUIT AND WIRING SHALL BE CUT BACK TO CONCESSION STAND WHERE INDICATED AND INTERCEPTED, SPLICE AND REDIRECTED TO NEW FIELD LIGHTING CONTROLLERS IN MECH/ELEC 107. REFER TO DWGS. E200, E300, E301 AND E501 FOR MORE INFORMATION. ELECTRICAL CONTRACTOR SHALL TRACE EXISTING CONDUITS AND WIRES AND PROVIDE HAND HOLES AS NECESSARY TO INTERCEPT, SPLICE AND REDIRECT CONDUIT AND WIRES INTO MECH/ELEC 107.

2.) CONTROLS FOR EXISTING SCOREBOARD SHALL BE INTERCEPTED, SPLICE, AND REDIRECTED TO THE NEW PRESSBOX. REFER TO DWG. E300 FOR MORE INFORMATION.

# GREENWICH HS CARDINAL STADIUM PHASE 1A

GREENWICH PUBLIC SCHOOLS
10 HILLSIDE ROAD
GREENWICH CT 06830


KG+D listen imagine build

KG+D . ARCHITECTS PC
285 MAIN STREET MOUNT KISCO . NEW YORK . 10549
P:914.666.5900 KGDARCHITECTS.COM

OLA Consulting Engineers
50 Broadway,
Hawthorne, NY 10532
914.747.2800

8 West 38th Street,
Suite 501
New York, NY 10018
646.849.4110

olace.com


CONSTRUCTION DOCUMENTS


NOTE: ALL IDEAS, DESIGNS, ARRANGEMENTS AND PLANS INDICATED OR REPRESENTED BY THIS DRAWING ARE OWNED BY AND ARE THE PROPERTY OF KAEYER, GARMENT, & DAVIDSON ARCHITECTS, PC (KG&D), AND WERE CREATED FOR USE ON THIS PROJECT. NONE OF SUCH IDEAS, DESIGNS, ARRANGEMENTS OR PLANS SHALL BE USED BY OR DISCLOSED TO ANY PURPOSE WHATSOEVER WITHOUT THE WRITTEN PERMISSION OF (KG&D).

WRITTEN DIMENSIONS ON THIS DRAWING SHALL HAVE PRECEDENCE OVER SCALED DIMENSIONS. CONTRACTOR SHALL VERIFY ALL ACTUAL DIMENSIONS AND CONDITIONS ON THE JOB AND THE ARCHITECT MUST BE NOTIFIED OF ANY VARIATIONS FROM DIMENSIONS AND CONDITIONS SHOWN. SHOP DETAILS MUST BE SUBMITTED TO THIS OFFICE FOR APPROVAL BEFORE PROCEEDING WITH FABRICATION.

ALTERATIONS BY ANY PERSON, IN ANY WAY, OF ANY ITEM CONTAINED ON THIS DOCUMENT, UNLESS ACTING UNDER THE DIRECTION OF THE LICENCED ARCHITECT WHOSE PROFESSIONAL SEAL IS AFFIXED HERETO, IS A VIOLATION OF TITLE 16, SECT. 893 (b) OF NEW YORK STATE LAW.
COPYRIGHT KAEYER, GARMENT • DAVIDSON ARCHITECTS & ENGINEERS, PC
ALL RIGHTS RESERVED.


Professional Seal

| No. | Date | Issue |
|---|---|---|
| 3 | 11/10/20 | CONSTRUCTION DOCUMENTS |
| 2 | 08/12/20 | ISSUE FOR PERMIT |

Sheet Title

ELECTRICAL DEMOLITION SITE PLAN

| Job No. | Date |
|---|---|
| NKGD0185.02 | 08/23/2019 |
| Scale | Drawn / Checked |
| AS NOTED | NL/KS |

Sheet Number

E100

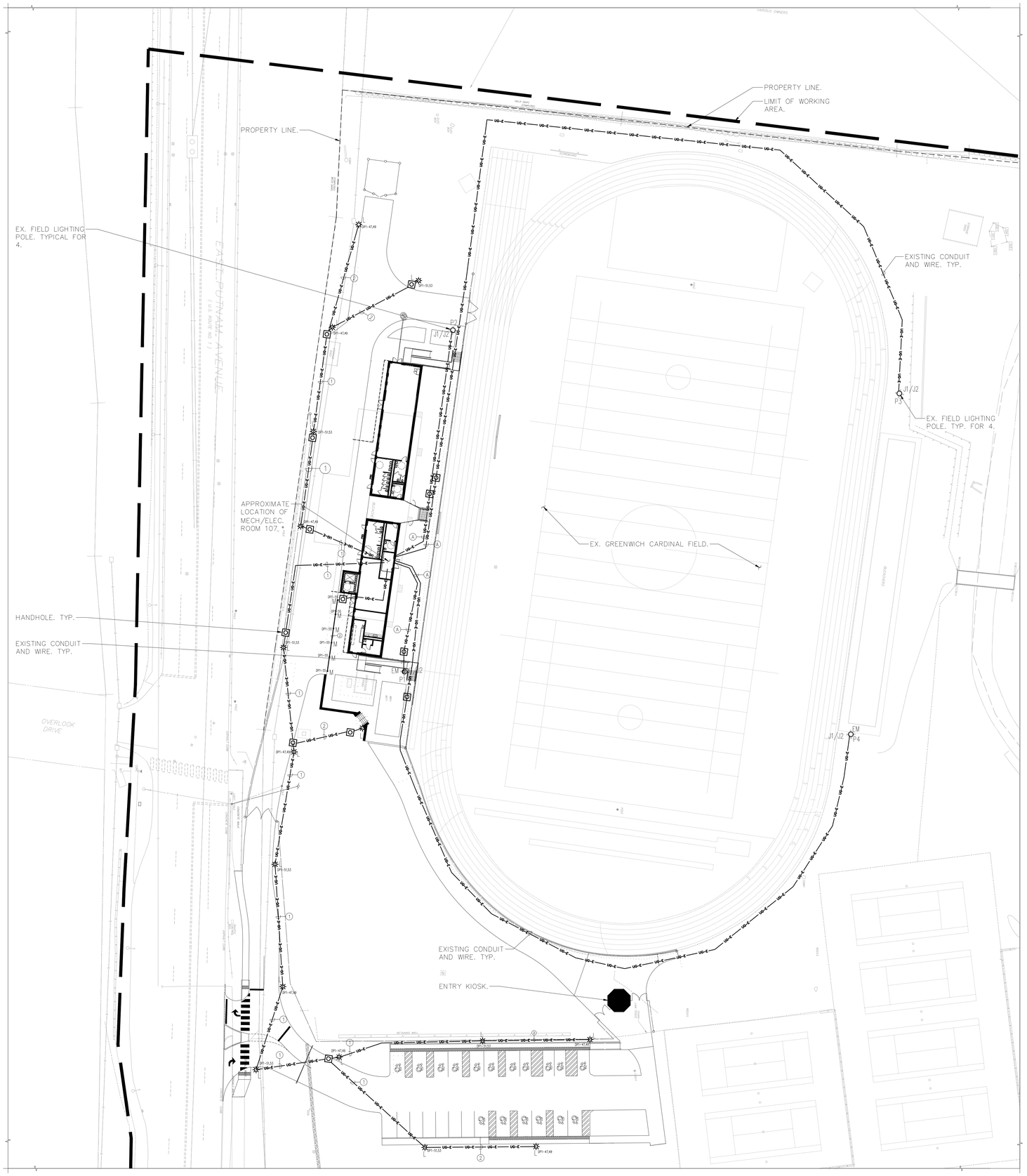


1 ELECTRICAL SITE LIGHTING PLAN
SCALE: 1"=30'-0"

## DESIGN INTENT – LIGHTING CONTROL SYSTEM

1.) LIGHTING CONTROL SYSTEM IS BASED ON N-LIGHT BY SENSOR SWITCH (KAREN BLACKMAN (212) 462-0088 x5237) OR APPROVED EQUAL. (OTHER ACCEPTABLE MANUFACTURERS ARE LUTRON & COOPER LIGHTING.)

2.) LIGHTING CONTROL COMPONENTS SHOWN ARE FOR GENERAL DESIGN INTENT. ALL COMPONENTS AND WIRING ARE NOT SHOWN. CONTRACTOR SHALL BE RESPONSIBLE FOR ALL NECESSARY COMPONENTS, WIRING (LINE AND LOW VOLTAGE) AND PROGRAMMING FOR A FULLY OPERATIONAL SYSTEM. CONTRACTOR IS RESPONSIBLE FOR FULL DELEGATED DESIGN OF SYSTEM BASED ON THE DESIGN INTENT INCLUDED ON THESE DRAWINGS.

3.) THE CONTRACTOR SHALL BE RESPONSIBLE TO COORDINATE LIGHTING CONTROLS WITH LIGHT FIXTURES.

4.) ALL LIGHT FIXTURE AND LIGHTING CONTROL SUBMITTALS SHALL BE SUBMITTED AT THE SAME TIME FOR APPROVAL.

5.) EXTERIOR MOUNTED LIGHT FIXTURES ARE TO BE CONTROLLED VIA PHOTOCELL AND TIME CLOCK WITH MANUAL OVERRIDE SWITCH. PROVIDE SEPARATE CONTROL CIRCUITS FOR THE FOLLOWING:

- BUILDING MOUNTED LIGHTS (UON).
- SITE POLE LIGHTS.

6.) ALL LIGHT FIXTURES TAGGED AS "EM" SHALL BE FED FROM EMERGENCY POWER PANELS, U.O.N. THESE FIXTURES SHALL BE SWITCHED AS INDICATED ALONG WITH LIGHTING FIXTURES FED FROM NORMAL POWER SOURCES. UPON LOSS OF NORMAL POWER, EMERGENCY LIGHT FIXTURES SHALL BE AUTOMATICALLY SHUNTED FULL BRIGHT REGARDLESS OF STATE OF CONTROLLING SWITCH. SEE DETAIL FOR ADDITIONAL INFORMATION.

## NOTES:

1.) PANELBOARD DP1 LOCATED IN MECH/ELEC 107. SEE DWG. E301 FOR LOCATION.

## FIELD WIRING/CONDUIT LEGEND

1. 4-#10 & 2-#10 GND IN 1-1/2"C.
2. 2-#10 & 1-#10 GND IN 1"C.

## FIELD LIGHTING POLE WIRING LEGEND:

A. 3-#6 CONTROL WIRING IN 1" CONDUIT FOR EX. FIELD LIGHTING POLE LIGHT FIXTURES. SEE DWG. E501 FOR MORE INFORMATION.

# GREENWICH HS CARDINAL STADIUM PHASE 1A

GREENWICH PUBLIC SCHOOLS
10 HILLSIDE ROAD
GREENWICH CT 06830

KG+D listen imagine build
KG+D . ARCHITECTS PC
285 MAIN STREET MOUNT KISCO . NEW YORK . 10549
P:914.666.5900 KGDARCHITECTS.COM

OLA Consulting Engineers
50 Broadway,
Hawthorne, NY 10532
914.747.2800
8 West 38th Street,
Suite 501
New York, NY 10018
646.849.4110
olace.com

CONSTRUCTION DOCUMENTS

NOTE: ALL IDEAS, DESIGNS, ARRANGEMENTS AND PLANS INDICATED OR REPRESENTED BY THIS DRAWING ARE OWNED BY AND ARE THE PROPERTY OF KAEYER, GARMENT, & DAVIDSON ARCHITECTS, PC (KG&D), AND WERE CREATED FOR USE ON THIS PROJECT. NONE OF SUCH IDEAS, DESIGNS, ARRANGEMENTS OR PLANS SHALL BE USED BY OR DISCLOSED TO ANY PURPOSE WHATSOEVER WITHOUT THE WRITTEN PERMISSION OF (KG&D).

WRITTEN DIMENSIONS ON THIS DRAWING SHALL HAVE PRECEDENCE OVER SCALED DIMENSIONS. CONTRACTOR SHALL VERIFY ALL ACTUAL DIMENSIONS AND CONDITIONS ON THE JOB AND THE ARCHITECT MUST BE NOTIFIED OF ANY VARIATIONS FROM DIMENSIONS AND CONDITIONS SHOWN. SHOP DETAILS MUST BE SUBMITTED TO THIS OFFICE FOR APPROVAL BEFORE PROCEEDING WITH FABRICATION.

ALTERATIONS BY ANY PERSON, IN ANY WAY, OF ANY ITEM CONTAINED ON THIS DOCUMENT, UNLESS ACTING UNDER THE DIRECTION OF THE LICENCED ARCHITECT WHOSE PROFESSIONAL SEAL IS AFFIXED HERETO, IS A VIOLATION OF TITLE VII, SECT. 893 § (b) OF NEW YORK STATE LAW.
COPYRIGHT KAEYER, GARMENT • DAVIDSON ARCHITECTS & ENGINEERS, PC
ALL RIGHTS RESERVED.

Professional Seal

| No. | Date | Issue |
|---|---|---|
| 3 | 11/10/20 | CONSTRUCTION DOCUMENTS |
| 2 | 08/12/20 | ISSUE FOR PERMIT |

Sheet Title

# ELECTRICAL SITE LIGHTING PLAN

| Job No. | Date |
|---|---|
| NKGD0185.02 | 03/25/2020 |
| Scale | Drawn / Checked |
| AS NOTED | NL/KS |

Sheet Number

E200

## LIGHTING CONTROLS LEGEND

1 - LINE VOLTAGE WALL MOUNTED DUAL TECHNOLOGY OCCUPANCY SENSOR.

2 - LOW VOLTAGE WALL MOUNTED KEY SWITCH WITH CEILING MOUNTED DUAL TECHNOLOGY OCCUPANCY SENSOR.

3 - EXTERIOR LIGHTING CONTROLS. SEE DESIGN INTENT, NOTE #5.

4 - LOW VOLTAGE MANUAL ON WALL SWITCH WITH CEILING MOUNTED DUAL TECHNOLOGY VACANCY SENSOR.

5 - LINE VOLTAGE WALL MOUNTED DUAL TECHNOLOGY VACANCY SENSOR.

6 - LINE VOLTAGE WALL SWITCH.

## DESIGN INTENT - LIGHTING CONTROL SYSTEM

1.) LIGHTING CONTROL SYSTEM IS BASED ON N-LIGHT BY SENSOR SWITCH (KAREN BLACKMAN (212) 462-0088 x5237) OR APPROVED EQUAL. (OTHER ACCEPTABLE MANUFACTURERS ARE LUTRON & COPPER LIGHTING.)

2.) LIGHTING CONTROL COMPONENTS SHOWN ARE FOR GENERAL DESIGN INTENT. ALL COMPONENTS AND WIRING ARE NOT SHOWN. CONTRACTOR SHALL BE RESPONSIBLE FOR ALL NECESSARY COMPONENTS, WIRING (LINE AND LOW VOLTAGE) AND PROGRAMMING FOR A FULLY OPERATIONAL SYSTEM. CONTRACTOR IS RESPONSIBLE FOR FULL DELEGATED DESIGN OF SYSTEM BASED ON THE DESIGN INTENT INCLUDED ON THESE DRAWINGS.

3.) THE CONTRACTOR SHALL BE RESPONSIBLE TO COORDINATE LIGHTING CONTROLS WITH LIGHT FIXTURES.

4.) ALL LIGHT FIXTURE AND LIGHTING CONTROL SUBMITTALS SHALL BE SUBMITTED AT THE SAME TIME FOR APPROVAL.

5.) EXTERIOR MOUNTED LIGHT FIXTURES ARE TO BE CONTROLLED VIA PHOTOCELL AND TIME CLOCK WITH MANUAL OVERRIDE SWITCH.
- BUILDING MOUNTED LIGHTS (UON).

6.) ALL LIGHT FIXTURES TAGGED AS "EM" SHALL BE FED FROM EMERGENCY POWER PANELS. THESE FIXTURES SHALL BE SWITCHED AS INDICATED ALONG WITH LIGHTING FIXTURES FED FROM NORMAL POWER SOURCES. UPON LOSS OF NORMAL POWER, EMERGENCY LIGHT FIXTURES SHALL BE AUTOMATICALLY SHUNTED TO FULL BRIGHT REGARDLESS OF STATE OF CONTROLLING SWITCH. SEE DETAIL FOR ADDITIONAL INFORMATION.

7.) ALL EXIT AND EMERGENCY FIXTURES SHALL BE FED FROM EMERGENCY GENERATOR POWERED PANELS.

8.) FOR EACH EXIT SIGN LOCATION SHOWN, (2) EXIT SIGNS SHALL BE INSTALLED, ONE AT 80" AFF AND ONE AT 18" AFF.

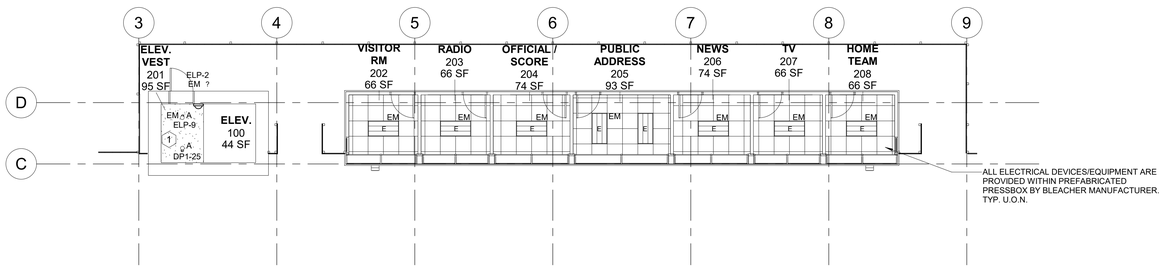


NORTH

## 2 ELECTRICAL PRESSBOX LIGHTING PLAN

SCALE: 1/8" = 1'-0"

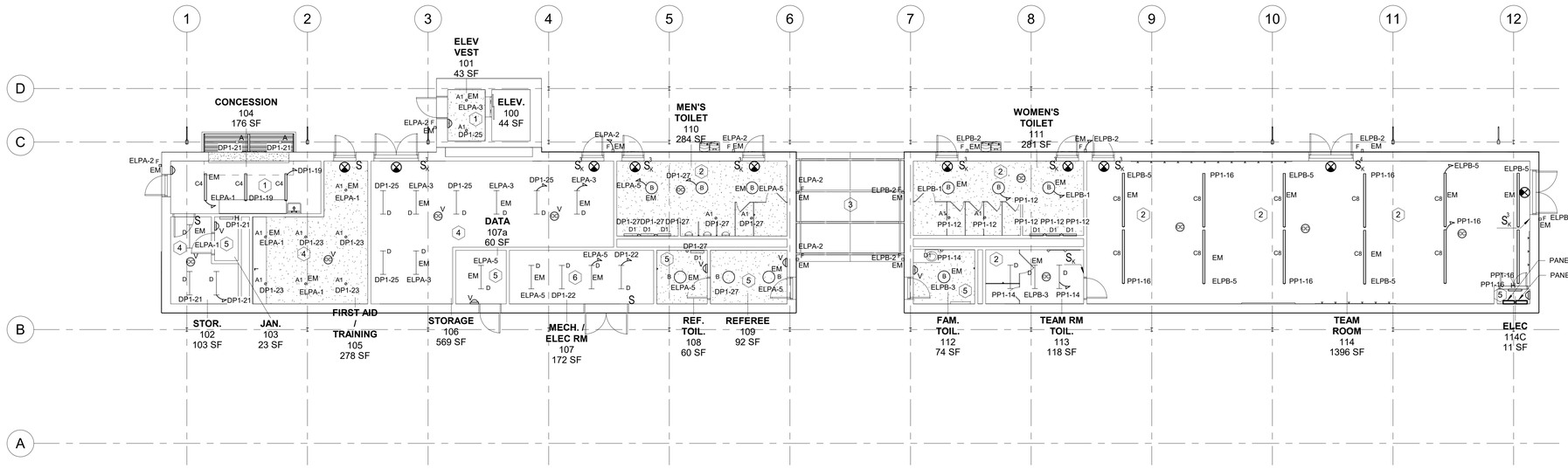


NORTH

## 1 ELECTRICAL 1ST FLOOR LIGHTING PLAN

SCALE: 1/8" = 1'-0"

NOTES:

1.) FOR EACH EXIT SIGN LOCATION SHOWN, (2) EXIT SIGNS SHALL BE INSTALLED, ONE AT 80" AFF AND ONE AT 18" AFF.

# GREENWICH HS CARDINAL STADIUM PHASE 1A

Greenwich Public Schools
10 Hillside Road
Greenwich, CT 06830


KG+D listen imagine build
KG+D . ARCHITECTS PC
285 MAIN STREET MOUNT KISCO . NEW YORK . 10549
P:914.666.5900 KGDARCHITECTS.COM

OLA Consulting Engineers
50 Broadway,
Hawthorne, NY 10532
914.747.2800
8 West 38th Street,
Suite 501
New York, NY 10018
646.849.4110
olace.com


CONSTRUCTION DOCUMENTS


NOTE: ALL IDEAS, DESIGNS, ARRANGEMENTS AND PLANS INDICATED OR REPRESENTED BY THIS DRAWING ARE OWNED BY AND ARE THE PROPERTY OF KAEYER, GARMENT, & DAVIDSON ARCHITECTS, PC (KG&D), AND WERE CREATED FOR USE ON THIS PROJECT. NONE OF SUCH IDEAS, DESIGNS, ARRANGEMENTS OR PLANS SHALL BE USED BY OR DISCLOSED TO ANY PURPOSE WHATSOEVER WITHOUT THE WRITTEN PERMISSION OF KG&D.

WRITTEN DIMENSIONS ON THIS DRAWING SHALL HAVE PRECEDENCE OVER SCALED DIMENSIONS. CONTRACTOR SHALL VERIFY ALL ACTUAL DIMENSIONS AND CONDITIONS ON THE JOB AND THE ARCHITECT MUST BE NOTIFIED OF ANY VARIATIONS FROM DIMENSIONS AND CONDITIONS SHOWN. SHOP DETAILS MUST BE SUBMITTED TO THIS OFFICE FOR APPROVAL BEFORE PROCEEDING WITH FABRICATION.

ALTERATIONS BY ANY PERSON, IN ANY WAY, OF ANY ITEM CONTAINED ON THIS DOCUMENT, UNLESS ACTING UNDER THE DIRECTION OF THE LICENCED ARCHITECT WHOSE PROFESSIONAL SEAL IS AFFIXED HERETO, IS A VIOLATION OF TITLE VII, SECT. 69.5 (b) OF NEW YORK STATE LAW.
COPYRIGHT KAEYER, GARMENT • DAVIDSON ARCHITECTS & ENGINEERS, PC
ALL RIGHTS RESERVED.


Professional Seal

| No. | Date | Issue |
|---|---|---|
| 3 | 11/10/20 | CONSTRUCTION DOCUMENTS |
| 2 | 08/12/20 | ISSUE FOR PERMIT |

Sheet Title
ELECTRICAL 1ST FLOOR AND PRESSBOX LIGHTING PLAN

| | |
|---|---|
| Job No. NKGD0185.02 | Date 08/21/19 |
| Scale AS NOTED | Drawn / Checked NL / KS |

Sheet Number
E201

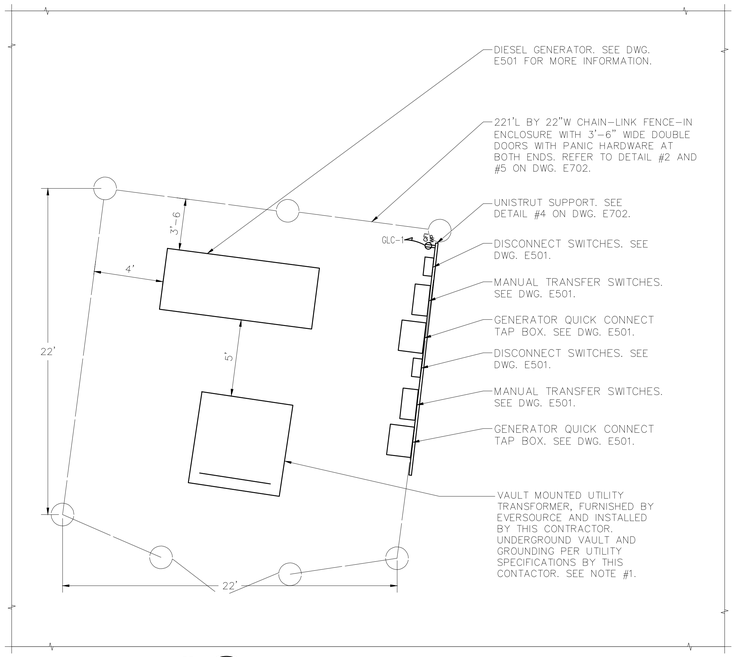


NORTH

## 2 EQUIPMENT POWER PART PLAN

SCALE: 1/4" = 1'

### NOTES:

1.) ELECTRICAL CONTRACTOR SHALL CARRY AN ALLOWANCE OF $14,000 FOR EVERSOURCE FEES.

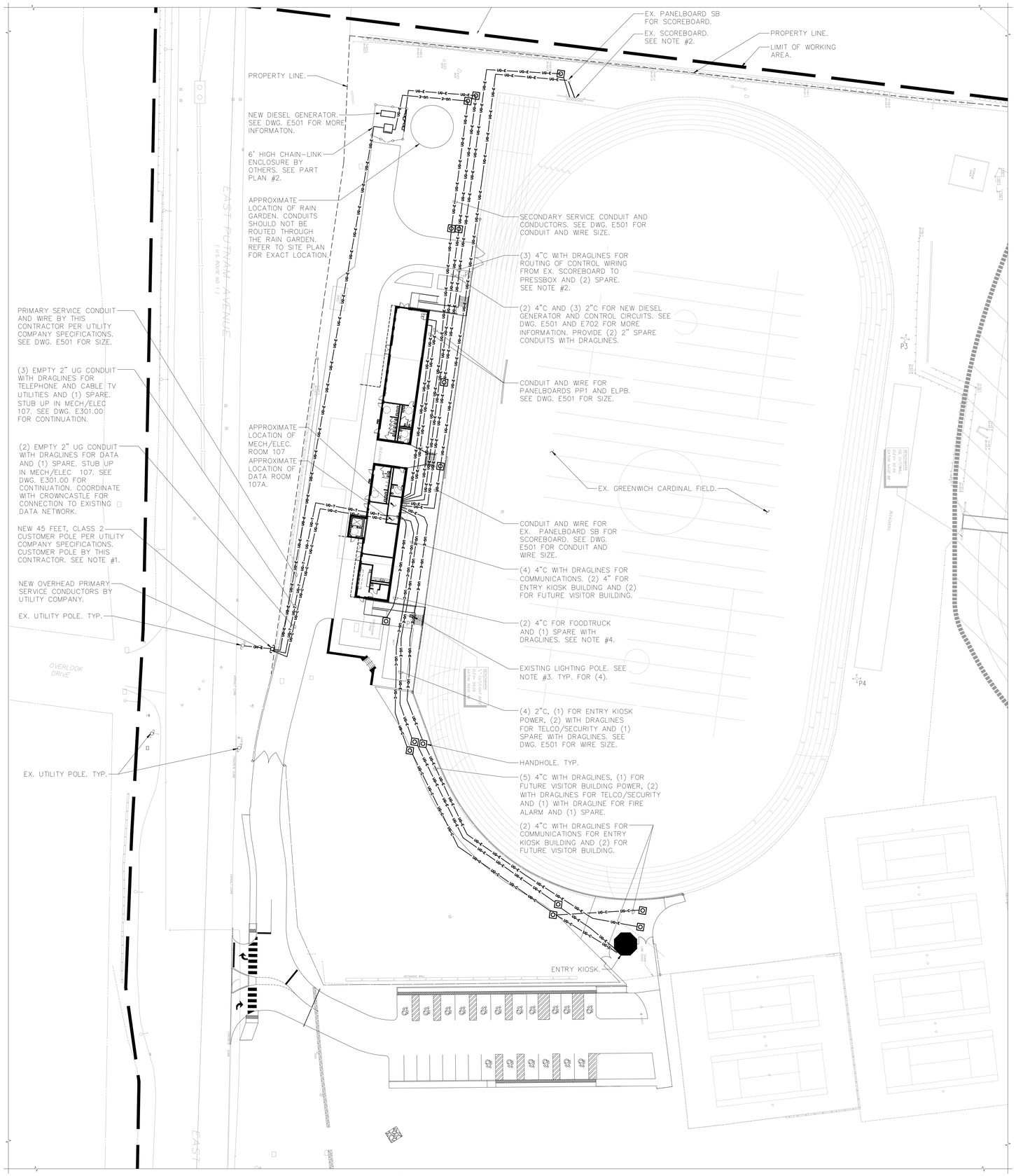


NORTH

## 1 ELECTRICAL SITE PLAN

SCALE: 1" = 30'-0"

### NOTES:

1.) PROVIDE RGS SWEEP AND RISER CONDUITS FOR PRIMARY, TELCO, CABLE TV AND SPARE 20' UP CUSTOMER POLE. PROVIDE CROSSARMS, INSULATORS AND FUSE CUTOUTS AS REQUIRED PER UTILITY COMPANY STANDARDS. FINAL PRIMARY CONNECTOR BY POWER UTILITY COMPANY.

2.) ELECTRICAL CONTRACTOR SHALL SPLICE AND EXTEND EXISTING CONTROL WIRING FROM EXISTING SCOREBOARD TO NEW PRESSBOX.

3.) ELECTRICAL CONTRACTOR SHALL PROVIDE A COMPLETE CAROLINA HIGH MAST LOWERING DEVICE SYSTEM FOR EACH EXISTING LIGHTING POLE COMPRISING AT A MINIMUM OF:

- WINCHES,
- CABLING,
- CONTROLLERS,
- LIGHT FIXTURES,
- TOP LATCHING SPORTS EXTERNAL DRIVE,
- SYSTEM SHALL BE SIMILAR TO CAROLINA HIGH MAST MODEL C522,
- CONTACT JOHN GINSBURG AT 610-457-7899 FOR MORE INFORMATION.

4.) PROVIDE 6-#10 & 3-#10 GND IN 4"C FOR FOOD TRUCK RECEPTACLES. PROVIDE (3) WATERPROOF, GRI TYPE QUAD RECEPTACLES. CIRCUIT TO PANELBOARD DP1-41, DP1-43 AND DP1-45.

# GREENWICH HS CARDINAL STADIUM PHASE 1A

GREENWICH PUBLIC SCHOOLS
10 HILLSIDE ROAD
GREENWICH CT 06830

KG+D listen imagine build
KG+D . ARCHITECTS PC
285 MAIN STREET MOUNT KISCO . NEW YORK . 10549
P:914.666.5900 KGDARCHITECTS.COM

OLA Consulting Engineers
50 Broadway,
Hawthorne, NY 10532
914.747.2800
8 West 38th Street,
Suite 501
New York, NY 10018
646.849.4110
olace.com

CONSTRUCTION DOCUMENTS

NOTE: ALL IDEAS, DESIGNS, ARRANGEMENTS AND PLANS INDICATED OR REPRESENTED BY THIS DRAWING ARE OWNED BY AND ARE THE PROPERTY OF KAEYER, GARMENT, & DAVIDSON ARCHITECTS, PC (KG&D), AND WERE CREATED FOR USE ON THIS PROJECT. NONE OF SUCH IDEAS, DESIGNS, ARRANGEMENTS OR PLANS SHALL BE USED BY OR DISCLOSED TO ANY PURPOSE WHATSOEVER WITHOUT THE WRITTEN PERMISSION OF (KG&D).

WRITTEN DIMENSIONS ON THIS DRAWING SHALL HAVE PRECEDENCE OVER SCALED DIMENSIONS. CONTRACTOR SHALL VERIFY ALL ACTUAL DIMENSIONS AND CONDITIONS ON THE JOB AND THE ARCHITECT MUST BE NOTIFIED OF ANY VARIATIONS FROM DIMENSIONS AND CONDITIONS SHOWN. SHOP DETAILS MUST BE SUBMITTED TO THIS OFFICE FOR APPROVAL BEFORE PROCEEDING WITH FABRICATION.

ALTERATIONS BY ANY PERSON, IN ANY WAY, OF ANY ITEM CONTAINED ON THIS DOCUMENT, UNLESS ACTING UNDER THE DIRECTION OF THE LICENCED ARCHITECT WHOSE PROFESSIONAL SEAL IS AFFIXED HERETO, IS A VIOLATION OF TITLE VI, SECT. 69 b (s) OF NEW YORK STATE LAW.
COPYRIGHT KAEYER, GARMENT + DAVIDSON ARCHITECTS & ENGINEERS, PC
ALL RIGHTS RESERVED.

Professional Seal

| No. | Date | Issue |
|---|---|---|
| 3 | 11/10/20 | CONSTRUCTION DOCUMENTS |
| 2 | 08/12/20 | ISSUE FOR PERMIT |

Sheet Title

## ELECTRICAL SITE PLAN

| | |
|---|---|
| Job No. NKGD0185.02 | Date 05/18/2020 |
| Scale AS NOTED | Drawn / Checked NL/KS |

Sheet Number

# E300

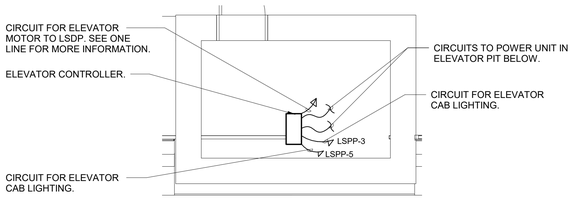


## 6 ELEVATOR 201 PART PLAN

NORTH

SCALE: 1/4" = 1'-0"

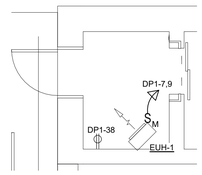


## 5 ELEVATOR VESTIBULE 101 PART PLAN

NORTH

SCALE: 1/4" = 1'-0"

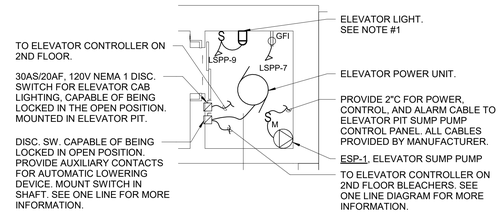


## 4 ELEVATOR PIT PART PLAN

NORTH

SCALE: 1/4" = 1'-0"

### NOTES:

1.) WALL MOUNTED ELEVATOR LIGHT, VAPORPROOF, 13W LED, DIE-CAST GUARD AND FROSTED GLOBE, AS MANUFACTURED BY RAB LIGHTING MODEL VXBRLED13DG OR APPROVED EQUAL.

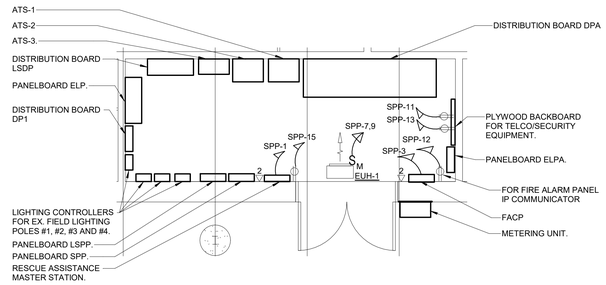


## 3 MECH/ELEC RM 107 PART PLAN

NORTH

SCALE: 1/4" = 1'-0"

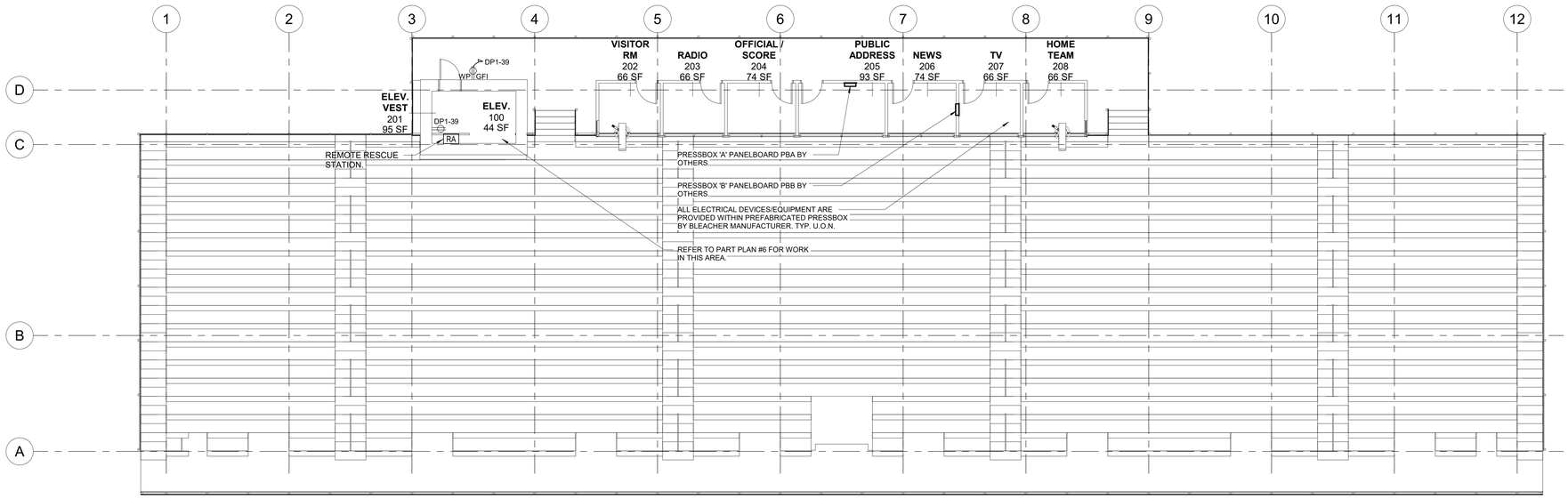


## 2 ELECTRICAL HOME BLEACHER & PRESSBOX POWER PLAN

NORTH

SCALE: 1/8" = 1'-0"

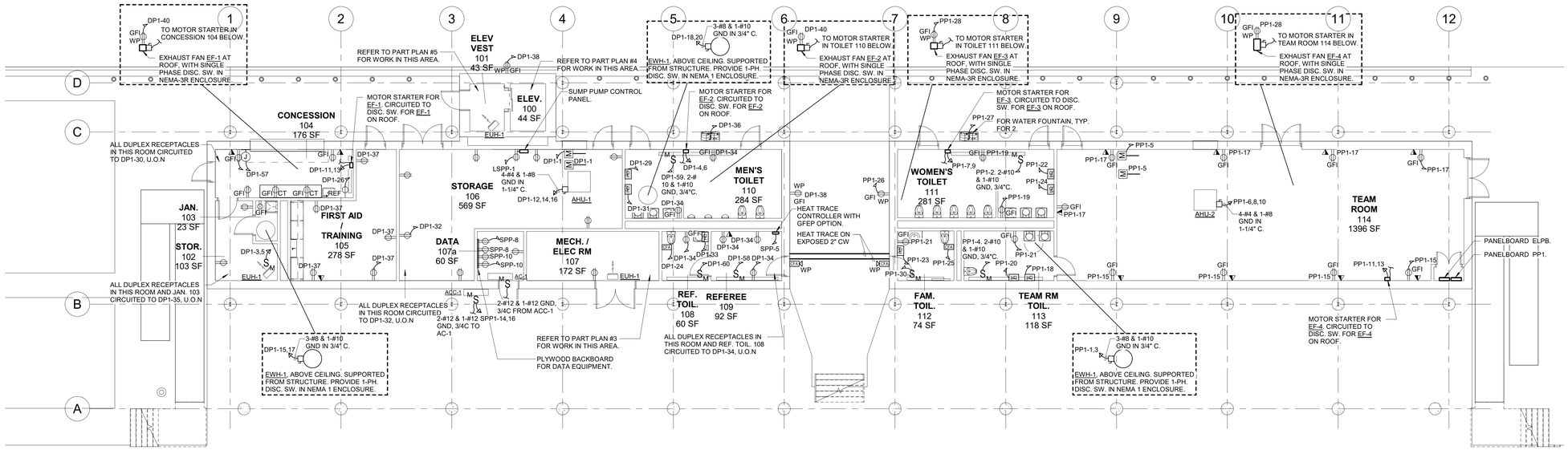


## 1 ELECTRICAL 1ST FLOOR POWER PLAN

NORTH

SCALE: 1/8" = 1'-0"

### NOTES:

1.) PROVIDE (2) SETS OF 2-#10 & 1-#12 GND IN 3/4"C FOR GFI, WEATHERPROOF RECEPTACLE ON ROOF FOR CAMERA. FEED RECEPTACLE FROM PANELBOARD DP1-54 AND DP1-56.

# GREENWICH HS CARDINAL STADIUM PHASE 1A

Greenwich Public Schools
10 Hillside Road
Greenwich, CT 06830


KG+D . ARCHITECTS PC
285 MAIN STREET MOUNT KISCO . NEW YORK . 10549
P:914.666.5900 KGDARCHITECTS.COM

OLA Consulting Engineers
50 Broadway,
Hawthorne, NY 10532
914.747.2800

8 West 38th Street,
Suite 501
New York, NY 10018
646.849.4110

olace.com


CONSTRUCTION DOCUMENTS


NOTE: ALL IDEAS, DESIGNS, ARRANGEMENTS AND PLANS INDICATED OR REPRESENTED BY THIS DRAWING ARE OWNED BY AND ARE THE PROPERTY OF KAEYER, GARMENT, & DAVIDSON ARCHITECTS, PC (KG&D), AND WERE CREATED FOR USE ON THIS PROJECT. NONE OF SUCH IDEAS, DESIGNS, ARRANGEMENTS OR PLANS SHALL BE USED BY OR DISCLOSED TO ANY PURPOSE WHATSOEVER WITHOUT THE WRITTEN PERMISSION OF (KG&D).

WRITTEN DIMENSIONS ON THIS DRAWING SHALL HAVE PRECEDENCE OVER SCALED DIMENSIONS. CONTRACTOR SHALL VERIFY ALL ACTUAL DIMENSIONS AND CONDITIONS ON THE JOB AND THE ARCHITECT MUST BE NOTIFIED OF ANY VARIATIONS FROM DIMENSIONS AND CONDITIONS SHOWN. SHOP DETAILS MUST BE SUBMITTED TO THIS OFFICE FOR APPROVAL BEFORE PROCEEDING WITH FABRICATION.

ALTERATIONS BY ANY PERSON, IN ANY WAY, OF ANY ITEM CONTAINED ON THIS DOCUMENT, UNLESS ACTING UNDER THE DIRECTION OF THE LICENSED ARCHITECT WHOSE PROFESSIONAL SEAL IS AFFIXED HERETO, IS A VIOLATION OF TITLE 8 VII, SECT. 89.5 (h) OF NEW YORK STATE LAW.
COPYRIGHT KAEYER, GARMENT + DAVIDSON ARCHITECTS & ENGINEERS, PC ALL RIGHTS RESERVED.


Professional Seal

| No. | Date | Issue |
|---|---|---|
| 3 | 11/10/20 | CONSTRUCTION DOCUMENTS |
| 2 | 08/12/20 | ISSUE FOR PERMIT |

Sheet Title

ELECTRICAL 1ST FLOOR AND PRESBOX POWER PLAN

| Job No. | Date |
|---|---|
| NKGD0185.02 | 08/21/19 |
| Scale: AS NOTED | Drawn / Checked: NL / KS |

Sheet Number

E301

## LIGHTING CONTROLS LEGEND

1 - LINE VOLTAGE WALL MOUNTED DUAL TECHNOLOGY OCCUPANCY SENSOR.

2 - EXTERIOR LIGHTING CONTROLS. SEE DESIGN INTENT, NOTE #5.

## DESIGN INTENT - LIGHTING CONTROL SYSTEM

1.) LIGHTING CONTROL SYSTEM IS BASED ON N-LIGHT BY SENSOR SWITCH (KAREN BLACKMAN (212) 462-0088 x5237) OR APPROVED EQUAL. (OTHER ACCEPTABLE MANUFACTURERS ARE LUTRON & COPPER LIGHTING.)

2.) LIGHTING CONTROL COMPONENTS SHOWN ARE FOR GENERAL DESIGN INTENT. ALL COMPONENTS AND WIRING ARE NOT SHOWN. CONTRACTOR SHALL BE RESPONSIBLE FOR ALL NECESSARY COMPONENTS, WIRING (LINE AND LOW VOLTAGE) AND PROGRAMMING FOR A FULLY OPERATIONAL SYSTEM. CONTRACTOR IS RESPONSIBLE FOR FULL DELEGATED DESIGN OF SYSTEM BASED ON THE DESIGN INTENT INCLUDED ON THESE DRAWINGS.

3.) THE CONTRACTOR SHALL BE RESPONSIBLE TO COORDINATE LIGHTING CONTROLS WITH LIGHT FIXTURES.

4.) ALL LIGHT FIXTURE AND LIGHTING CONTROL SUBMITTALS SHALL BE SUBMITTED AT THE SAME TIME FOR APPROVAL.

5.) EXTERIOR MOUNTED LIGHT FIXTURES ARE TO BE CONTROLLED VIA PHOTOCELL AND TIME CLOCK WITH MANUAL OVERRIDE SWITCH.
- KIOSK BUILDING MOUNTED LIGHTS (UON).

6.) ALL EXIT AND EMERGENCY FIXTURES SHALL BE FED FROM UNSWITCHED LEG OF ASSOCIATED LOCAL LIGHTING CIRCUITS.

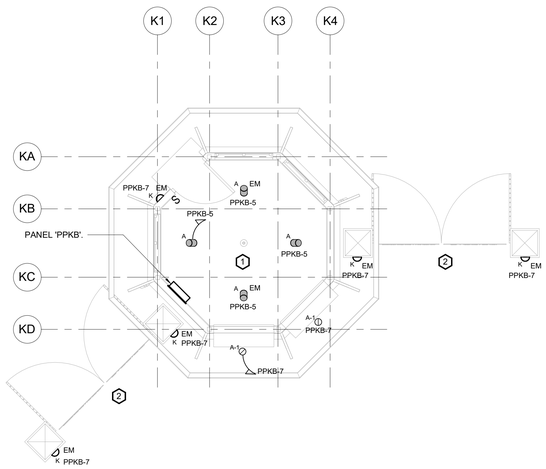


## ELECTRICAL KIOSK LIGHTING PLAN

2 NORTH

SCALE: 1/4" = 1'-0"

### NOTES:

1.) PROVIDE (2) MINI LIGHT INVERTER SIMILAR TO IOTA IIS-125-I FOR LIGHT FIXTURES IN ENTRY KIOSK BUILDING AND AT EXTERIOR GATES OF ENTRY KIOSK BUILDING TAGGED AS "EM". INVERTER SHALL BE INSTALLED HIGH ON WALL BY PANELBOARD. PROVIDE TEST SWITCH BELOW MINI-INVERTER.

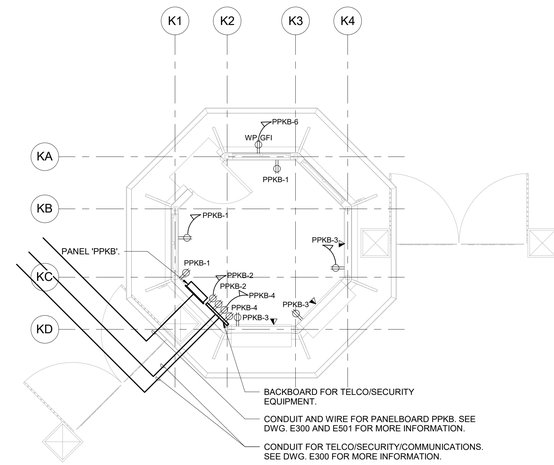


## ELECTRICAL KIOSK POWER & FIRE ALARM PLAN

1 NORTH

SCALE: 1/4" = 1'-0"

### NOTES:

1.) REFER TO DRAWINGS E300 AND E501 FOR PANELBOARD FEEDER AND CONDUIT SIZES.

# GREENWICH HIGH SCHOOL CARDINAL STADIUM PHASE 1

10 Hillside Road
Greenwich, CT 06830


KG+D listen imagine build

KG+D . ARCHITECTS PC
285 MAIN STREET MOUNT KISCO . NEW YORK . 10549
P:914.666.5900 KGDARCHITECTS.COM

OLA Consulting Engineers
50 Broadway,
Hawthorne, NY 10532
914.747.2800

8 West 38th Street,
Suite 501
New York, NY 10018
646.849.4110

olace.com


CONSTRUCTION DOCUMENTS


NOTE: ALL IDEAS, DESIGNS, ARRANGEMENTS AND PLANS INDICATED OR REPRESENTED BY THIS DRAWING ARE OWNED BY AND ARE THE PROPERTY OF KNETEL GARMENT, & DAVIDSON ARCHITECTS, PC (KG&D), AND WERE CREATED, EVOLVED AND DEVELOPED FOR USE ON AND IN CONNECTION WITH THIS PROJECT. NO OF THESE IDEAS, DESIGNS, ARRANGEMENTS AND PLANS SHALL BE USED BY OR DISCLOSED TO ANY PURPOSE WHATSOEVER WITHOUT THE WRITTEN PERMISSION OF (KG&D).

WRITTEN DIMENSIONS ON THIS DRAWING SHALL HAVE PRECEDENCE OVER SCALED DIMENSIONS. CONTRACTOR SHALL VERIFY ALL ACTUAL DIMENSIONS AND CONDITIONS ON THE JOB AND THE ARCHITECT MUST BE NOTIFIED OF ANY VARIATION FROM DIMENSIONS AND CONDITIONS SHOWN. SHOP DETAILS MUST BE SUBMITTED TO THIS OFFICE FOR APPROVAL BEFORE PROCEEDING WITH FABRICATION.

ALTERATIONS BY ANY PERSON, IN ANY WAY, OF ANY ITEM CONTAINED ON THIS DOCUMENT, UNLESS ACTING UNDER THE DIRECTION OF THE LICENCED ARCHITECT WHOSE PROFESSIONAL SEAL IS AFFIXED HERETO, IS A VIOLATION OF SEC. 7209 OF THE N.Y.S. OF NEW YORK STATE LAW.
COPYRIGHT MATTER: GARMENT + DAVIDSON ARCHITECTS & ENGINEERS, PC
ALL RIGHTS RESERVED


Professional Seal

| No. | Date | Issue |
|---|---|---|
| 3 | 11/10/20 | CONSTRUCTION DOCUMENTS |
| 2 | 5/28/20 | CONSTRUCTION DOCUMENTS |

Sheet Title

ELECTRICAL KIOSK POWER & LIGHTING PLANS

| Job No. | Date |
|---|---|
| NKGD0185.02 | 5/28/20 |
| Scale | Drawn / Checked |
| AS NOTED | NL / KS |

Sheet Number

E302

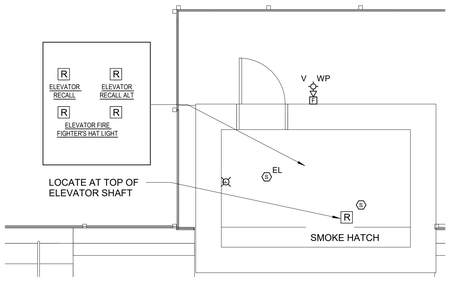


NORTH 3 FIRE ALARM ELEVATOR VESTIBULE 201 PART PLAN
SCALE: 1/4" = 1'-0"

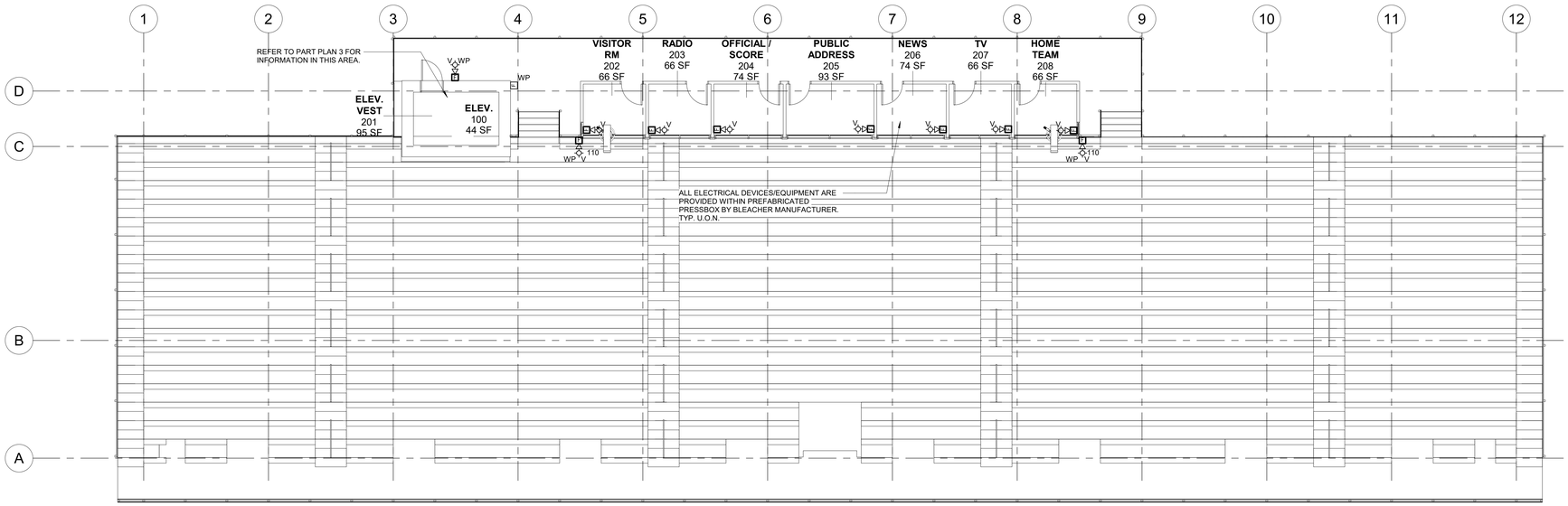


NORTH 2 FIRE ALARM HOME BLEACHER & PRESSBOX PLAN
SCALE: 1/8" = 1'-0"

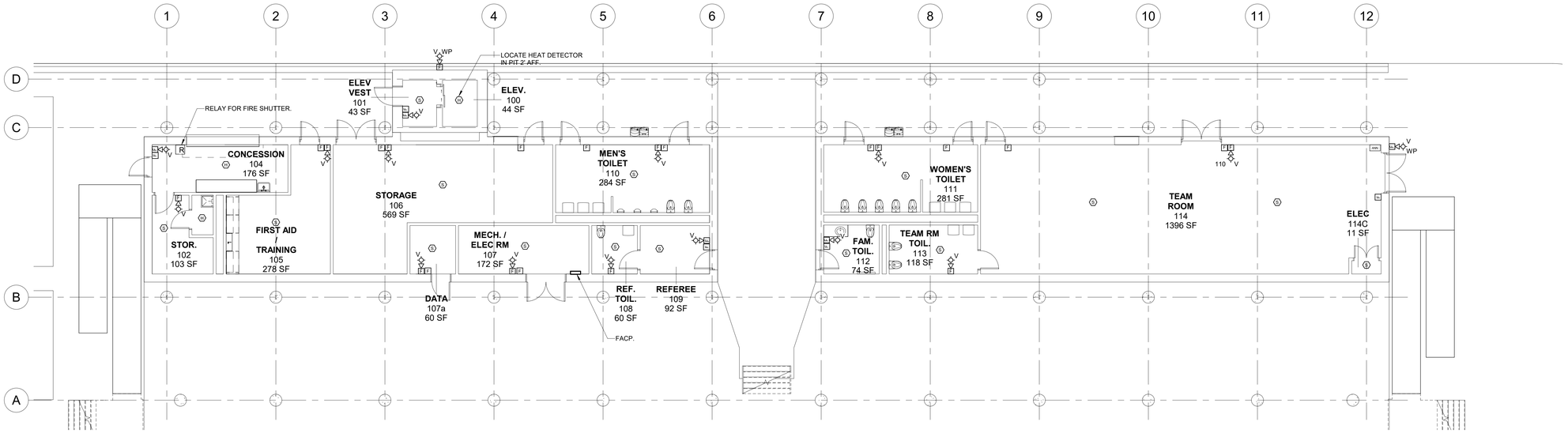


NORTH 1 FIRE ALARM 1ST FLOOR PLAN
SCALE: 1/8" = 1'-0"

# GREENWICH HS CARDINAL STADIUM PHASE 1A

Greenwich Public Schools
10 Hillside Road
Greenwich, CT 06830

KG+D listen imagine build
KG+D . ARCHITECTS PC
285 MAIN STREET MOUNT KISCO . NEW YORK . 10549
P:914.666.5900 KGDARCHITECTS.COM

OLA Consulting Engineers
50 Broadway,
Hawthorne, NY 10532
914.747.2800
8 West 38th Street,
Suite 501
New York, NY 10018
646.849.4110
olace.com

CONSTRUCTION DOCUMENTS

NOTE: ALL IDEAS, DESIGNS, ARRANGEMENTS AND PLANS INDICATED OR REPRESENTED BY THIS DRAWING ARE OWNED BY AND ARE THE PROPERTY OF KAEYER, GARMENT, & DAVIDSON ARCHITECTS, PC (KG&D), AND WERE CREATED FOR USE ON THIS PROJECT. NONE OF SUCH IDEAS, DESIGNS, ARRANGEMENTS OR PLANS SHALL BE USED BY OR DISCLOSED TO ANY PURPOSE WHATSOEVER WITHOUT THE WRITTEN PERMISSION OF (KG&D).

WRITTEN DIMENSIONS ON THIS DRAWING SHALL HAVE PRECEDENCE OVER SCALED DIMENSIONS. CONTRACTOR SHALL VERIFY ALL ACTUAL DIMENSIONS AND CONDITIONS ON THE JOB AND THE ARCHITECT MUST BE NOTIFIED OF ANY VARIATIONS FROM DIMENSIONS AND CONDITIONS SHOWN. SHOP DETAILS MUST BE SUBMITTED TO THIS OFFICE FOR APPROVAL BEFORE PROCEEDING WITH FABRICATION.

ALTERATIONS BY ANY PERSON, IN ANY WAY, OF ANY ITEM CONTAINED ON THIS DOCUMENT, UNLESS ACTING UNDER THE DIRECTION OF THE LICENCED ARCHITECT WHOSE PROFESSIONAL SEAL IS AFFIXED HERETO, IS A VIOLATION OF TITLE VII, SECT. 7209 OF NEW YORK STATE LAW.
COPYRIGHT KAEYER, GARMENT + DAVIDSON ARCHITECTS & ENGINEERS, PC
ALL RIGHTS RESERVED.

Professional Seal

| No. | Date | Issue |
|---|---|---|
| 3 | 11/10/20 | CONSTRUCTION DOCUMENTS |
| 2 | 08/12/20 | ISSUE FOR PERMIT |

Sheet Title

## FIRE ALARM 1ST FLOOR AND PRESSBOX PLAN

| Job No. | Date |
|---|---|
| NKGD0185.02 | 08/23/19 |
| Scale | Drawn / Checked |
| AS NOTED | NL / KS |

Sheet Number

E401

## ELECTRICAL NOTES:

1.) PROVIDE ASCO 5101 MODULES TO MONITOR THE INTEGRITY OF THE GENERATOR CONTROL WIRING. LOSS OF INTEGRITY OF THE REMOTE START CIRCUIT(S) SHALL INITIATE VISUAL AND AUDIBLE ANNUNCIATION OF GENERATOR MALFUNCTION AT THE GENERATOR LOCAL AND REMOTE ANNUNCIATOR(S) AND START THE GENERATOR.

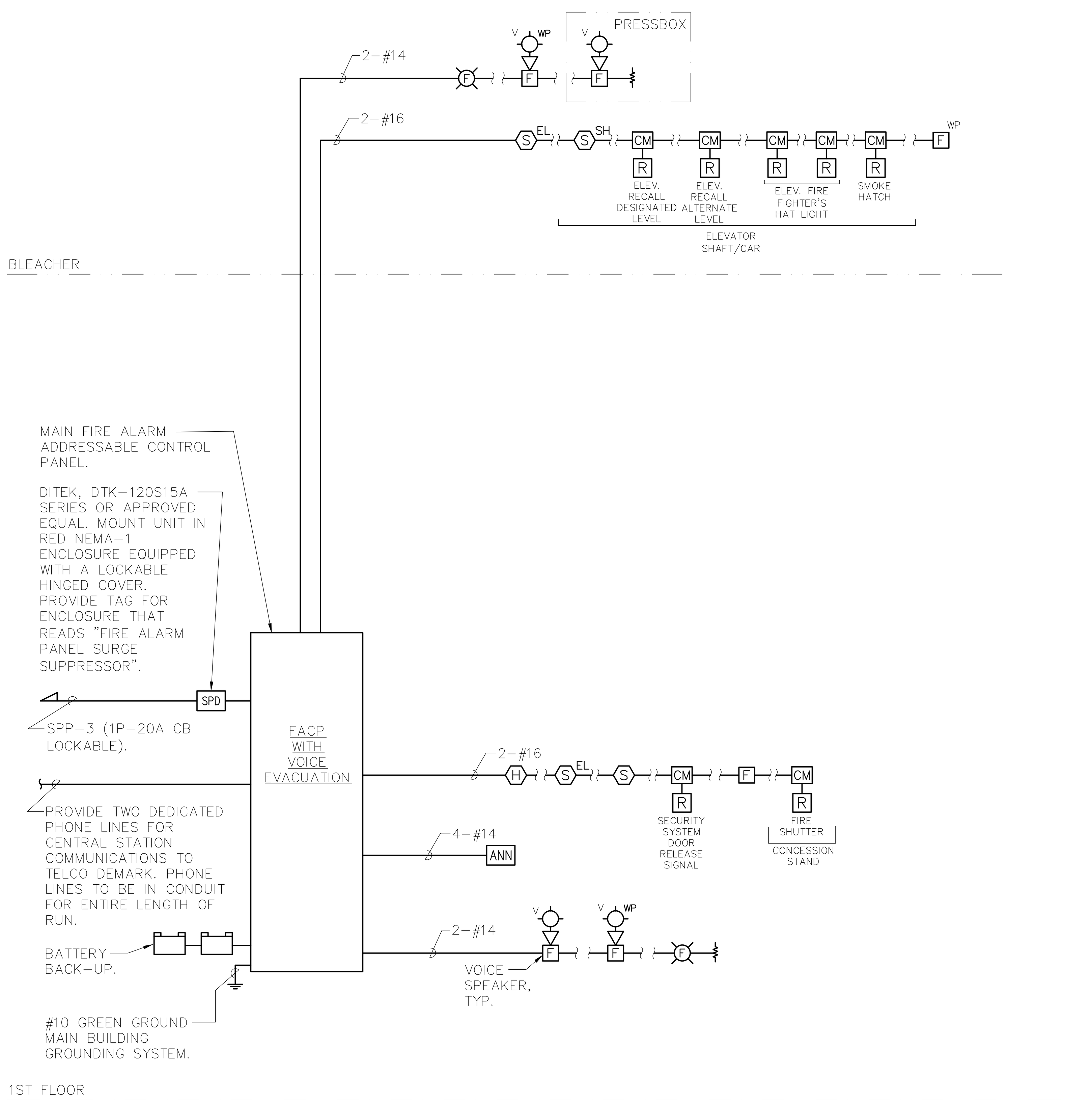


### 3 FIRE ALARM RISER DIAGRAM
SCALE: NONE

## RISER NOTES:

1.) THIS IS NOT A POINT-TO-POINT WIRING DIAGRAM. PRIOR TO STARTING ANY WORK, A WORKING POINT-TO-POINT WIRING DIAGRAM SHALL BE OBTAINED FROM FIRE ALARM SYSTEM VENDOR AND PERFORM ALL WORK IN ACCORDANCE WITH THAT DIAGRAM.

2.) ELECTRICAL CONTRACTOR SHALL INCLUDE IN THE BASE BID ALL 120V CIRCUITS THAT ARE REQUIRED TO SUPPORT THE OPERATION OF THE FIRE ALARM SYSTEM. COORDINATE REQUIREMENTS WITH THE FIRE ALARM VENDOR.

3.) QUANTITY OF STROBE BOOSTER POWER SUPPLY PANELS AND ASSOCIATED 120V CIRCUITS SHALL BE COORDINATED WITH SELECTED FIRE ALARM SYSTEM MANUFACTURER AND/OR FIRE ALARM VENDOR.

4.) PROVIDE ALL NECESSARY HARDWARE AND PROGRAMMING TO PROVIDE THE CLIENT WITH 20% SPARE CAPACITY ON ALL INITIATING AND INDICATING CIRCUITS.

5.) PROVIDE AS PART OF THE BASE CONTRACT ALL LABOR AND MATERIALS TO INSTALL TWENTY (20) ADDITIONAL FIRE ALARM DEVICES DURING CONSTRUCTION. THE TWENTY (20) FIRE ALARM DEVICES CAN BE BUT NOT LIMITED TO SMOKE DETECTOR, HEAT DETECTOR, DOOR HOLDER, DUCT DETECTOR, FAN SHUTDOWN, TAMPER SWITCHES, FLOW SWITCHES, ETC. INCLUDE ALL LABOR AND MATERIALS INCLUDING WIRE, BOXES, CONDUIT, TERMINATIONS, HARDWARE, SOFTWARE, PROGRAMMING AND TESTING.

6.) ALL VISUAL ALARM DEVICES SHALL BE ADA COMPLIANT.

7.) CONTRACTOR TO PROVIDE SMOKE DETECTOR(S) IN ALL LOCATIONS CONTAINING FIRE ALARM CONTROL PANELS, DATA GATHERING PANELS, BOOSTER POWER SUPPLIES, OR ANY OTHER FIRE ALARM SYSTEM PANEL, WHETHER SHOWN ON PLANS OR NOT.

8.) SYSTEM SHALL BE A EMERGENCY VOICE/ALARM COMMUNICATION SYSTEM.

9.) CONTRACTOR TO PROVIDE SMOKE DETECTOR(S) IN ALL LOCATIONS CONTAINING FIRE ALARM CONTROL PANELS, DATA GATHERING PANELS, BOOSTER POWER SUPPLIES, OR ANY OTHER FIRE ALARM SYSTEM PANEL, WHETHER SHOWN ON PLANS OR NOT.

10.) CONTROL MODULES USED TO INITIATE EMERGENCY CONTROL FUNCTIONS THAT DO NOT FAIL IN A SAFE POSITION SHALL BE LOCATED WITHIN 3 FEET OF THE COMPONENT CONTROLLING THE EMERGENCY CONTROL FUNCTION PER NFPA 72. THIS INCLUDES, BUT IS NOT LIMITED TO, CONTROL MODULES CONNECTED TO FAN MOTOR CONTROLLERS, ELEVATOR CONTROLLERS, ETC.

11.) BATTERY BACKUP FOR FACP SHALL PROVIDE A MINIMUM OF 24 HOURS OF STAND BY POWER FOLLOWED BY 45 MINUTES OF ALARM.

12.) ALL FIRE ALARM PANELS, JUNCTION BOX COVERS, ETC SHALL BE PAINTED "FIRE DEPARTMENT RED".

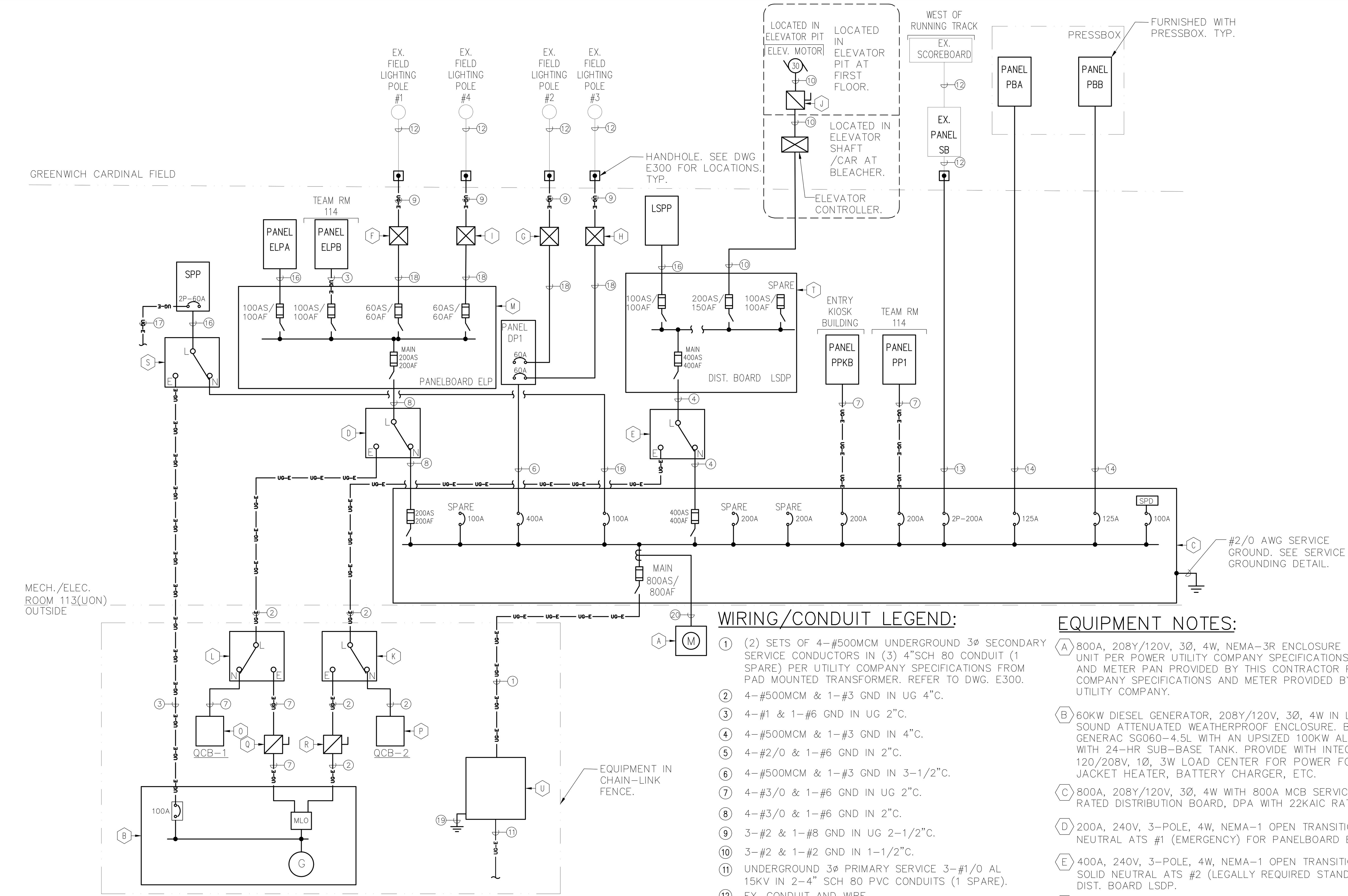


### 2 ELECTRICAL NEW WORK ONE-LINE DAIGRAM
SCALE: NONE

## WIRING/CONDUIT LEGEND:

1. (2) SETS OF 4-#500MCM UNDERGROUND 3ø SECONDARY SERVICE CONDUCTORS IN (3) 4"SCH 80 CONDUIT (1 SPARE) PER UTILITY COMPANY SPECIFICATIONS FROM PAD MOUNTED TRANSFORMER. REFER TO DWG. E300.
2. 4-#500MCM & 1-#3 GND IN UG 4"C.
3. 4-#1 & 1-#6 GND IN UG 2"C.
4. 4-#500MCM & 1-#3 GND IN 4"C.
5. 4-#2/0 & 1-#6 GND IN 2"C.
6. 4-#500MCM & 1-#3 GND IN 3-1/2"C.
7. 4-#3/0 & 1-#6 GND IN UG 2"C.
8. 4-#3/0 & 1-#6 GND IN 2"C.
9. 3-#2 & 1-#8 GND IN UG 2-1/2"C.
10. 3-#2 & 1-#2 GND IN 1-1/2"C.
11. UNDERGROUND 3ø PRIMARY SERVICE 3-#1/0 AL 15KV IN 2-4" SCH 80 PVC CONDUITS (1 SPARE).
12. EX. CONDUIT AND WIRE.
13. 3-#4/0 & 1-#6 GND IN UG 2-1/2"C.
14. 4-#1 & 1-#6 GND IN 1-1/2"C.
15. 4-#4 & 1-#10 GND IN 1-1/4"C.
16. 4-#2 & 1-#8 GND IN 1-1/4"C.
17. 3-#2 & 1-#8 GND IN UG 2"C FOR 120/208V, 1ø, 3W LOAD CENTER PROVIDED IN GENERATOR. SEE GENERATOR CONTROL WIRING RISER DIAGRAM FOR ADDITIONAL INFORMATION.
18. 3-#2 & 1-#8 GND IN 2-1/2"C.
19. GROUND PER UTILITY COMPANY SPECIFICATIONS.
20. WIRING PER MANUFACTURER.

## EQUIPMENT NOTES:

- (A) 800A, 208Y/120V, 3Ø, 4W, NEMA-3R ENCLOSURE METERING UNIT PER POWER UTILITY COMPANY SPECIFICATIONS. CABINET AND METER PAN PROVIDED BY THIS CONTRACTOR PER UTILITY COMPANY SPECIFICATIONS AND METER PROVIDED BY POWER UTILITY COMPANY.
- (B) 60KW DIESEL GENERATOR, 208Y/120V, 3Ø, 4W IN LEVEL II SOUND ATTENUATED WEATHERPROOF ENCLOSURE. BASED ON GENERAC SG060-4.5L WITH AN UPSIZED 100KW ALTERNATOR WITH 24-HR SUB-BASE TANK. PROVIDE WITH INTEGRAL 60A, 120/208V, 1Ø, 3W LOAD CENTER FOR POWER FOR JACKET HEATER, BATTERY CHARGER, ETC.
- (C) 800A, 208Y/120V, 3Ø, 4W WITH 800A MCB SERVICE RATED DISTRIBUTION BOARD, DPA WITH 22KAIC RATING.
- (D) 200A, 240V, 3-POLE, 4W, NEMA-1 OPEN TRANSITION WITH SOLID NEUTRAL ATS #1 (EMERGENCY) FOR PANELBOARD ELP.
- (E) 400A, 240V, 3-POLE, 4W, NEMA-1 OPEN TRANSITION WITH SOLID NEUTRAL ATS #2 (LEGALLY REQUIRED STANDBY) FOR DIST. BOARD LSDP.
- (F) CAROLINA HIGH MAST CONTROLLER LISTED FOR UL 924 FOR EX. FIELD LIGHTING POLE #1 TO MECH/ELE. RM 107
- (G) CAROLINA HIGH MAST CONTROLLER FOR EX. FIELD LIGHTING POLE #2 TO MECH/ELE. RM 107.
- (H) CAROLINA HIGH MAST CONTROLLER FOR EX. FIELD LIGHTING POLE #3 TO MECH/ELE. RM 107.
- (I) CAROLINA HIGH MAST CONTROLLER LISTED FOR UL 924 FOR EX. FIELD LIGHTING POLE #4 TO MECH/ELE. RM 107
- (J) 200A, 240V, 3Ø, 4W ELEVATOR DISCONNECT SWITCH WITH (3) 150A FUSES.
- (K) 400A, 208Y/120V, 3Ø, 4W MANUAL TRANSFER SWITCH, 3-POLE, SOLID NEUTRAL. NEMA-3R ENCLOSURE FOR DIST. BOARD LSDP.
- (L) 200A, 208Y/120V, 3Ø, 4W MANUAL TRANSFER SWITCH, 3-POLE, SOLID NEUTRAL. NEMA-3R ENCLOSURE FOR PANELBOARD ELP.
- (M) 200A, 208Y/120V, 3Ø, 4W DISTRIBUTION BOARD, ELP WITH 22KAIC RATING.
- (N) NOT USED.
- (O) 200A, 208Y/120V, 3Ø, 4W GENERATOR QUICK CONNECT TAP BOX. NEMA-3R ENCLOSURE. CAM-LOCK POWER CONNECTORS. POWERTRON 200 SERIES OR EQUAL FOR PANELBOARD ELP.
- (P) 400A, 208Y/120V, 3Ø, 4W GENERATOR QUICK CONNECT TAP BOX. NEMA-3R ENCLOSURE. CAM-LOCK POWER CONNECTORS. POWERTRON 400 SERIES OR EQUAL FOR DIST. BOARD LSDP.
- (Q) 200A, 240V, 3-POLE, 4W, NEMA-3R DISCONNECT SWITCH. PROVIDE WITH (3) 200A FUSES FOR PANELBOARD ELP.
- (R) 400A, 240V, 3-POLE, 4W, NEMA-3R DISCONNECT SWITCH. PROVIDE WITH (3) 400A FUSES FOR DIST. BOARD. LSDP.
- (S) 100A, 240V, 3-POLE, 4W, NEMA-1 OPEN TRANSITION WITH SOLID NEUTRAL ATS #3 (STANDBY) FOR PANELBOARD SPP.
- (T) 400A, 208Y/120V, 3Ø, 4W DISTRIBUTION BOARD, LSDP WITH 22KAIC RATING.
- (U) 150KVA PAD MOUNTED UTILITY TRANSFORMER FURNISHED BY THE UTILITY COMPANY AND INSTALLED BY THIS CONTRACTOR. UNDERGROUND VAULT AND GROUNDING PER UTILITY COMPANY SPECIFICATIONS BY THIS CONTRACTOR.

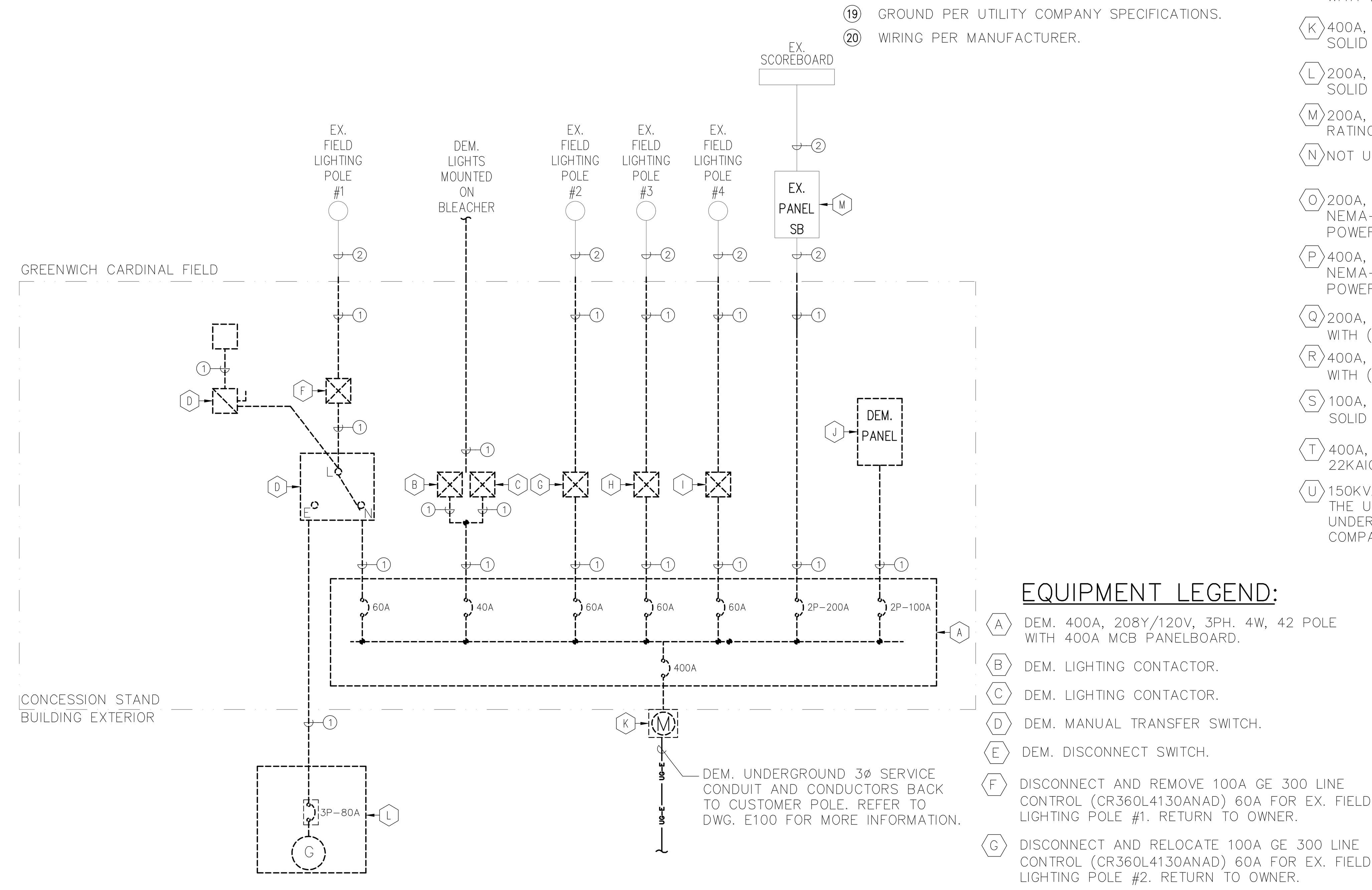


### 1 ELECTRICAL DEMOLITION ONE-LINE DAIGRAM
SCALE: NONE

## WIRING/CONDUIT LEGEND:

1. REMOVE CONDUIT AND WIRE BACK TO SOURCE.
2. EXISTING CONDUIT AND WIRE TO REMAIN.

## EQUIPMENT LEGEND:

- (A) DEM. 400A, 208Y/120V, 3PH. 4W, 42 POLE WITH 400A MCB PANELBOARD.
- (B) DEM. LIGHTING CONTACTOR.
- (C) DEM. LIGHTING CONTACTOR.
- (D) DEM. MANUAL TRANSFER SWITCH.
- (E) DEM. DISCONNECT SWITCH.
- (F) DISCONNECT AND REMOVE 100A GE 300 LINE CONTROL (CR360L4130ANAD) 60A FOR EX. FIELD LIGHTING POLE #1. RETURN TO OWNER.
- (G) DISCONNECT AND RELOCATE 100A GE 300 LINE CONTROL (CR360L4130ANAD) 60A FOR EX. FIELD LIGHTING POLE #2. RETURN TO OWNER.
- (H) DISCONNECT AND RELOCATE 100A GE 300 LINE CONTROL (CR360L4130ANAD) 60A FOR EX. FIELD LIGHTING POLE #3. RETURN TO OWNER.
- (I) DISCONNECT AND REMOVE 100A GE 300 LINE CONTROL (CR360L4130ANAD) 60A FOR EX. FIELD LIGHTING POLE #4. RETURN TO OWNER.
- (J) DEM. 125A, 120/240V, 3W, 1PH PANELBOARD.
- (K) DISCONNECT AND REMOVE UTILITY METER. TURN OVER METER TO UTILITY COMPANY.
- (L) DISCONNECT AND REMOVE EXTERIOR MOUNTED GENERAC 20KW PROPANE GENERATOR. TURN OVER TO CLIENT.
- (M) EX. 200A, 120/240V, 3W, 1PH SCOREBOARD PANELBOARD SB.

# GREENWICH HS CARDINAL STADIUM PHASE 1A

GREENWICH PUBLIC SCHOOLS
10 HILLSIDE ROAD
GREENWICH CT 06830


KG+D . ARCHITECTS PC
285 MAIN STREET MOUNT KISCO . NEW YORK . 10549
P:914.666.5900 KGDARCHITECTS.COM

OLA Consulting Engineers
50 Broadway, Hawthorne, NY 10532
914.747.2800
8 West 38th Street, Suite 501
New York, NY 10018
646.849.4110
olace.com


CONSTRUCTION DOCUMENTS


NOTE: ALL IDEAS, DESIGNS, ARRANGEMENTS AND PLANS INDICATED OR REPRESENTED BY THIS DRAWING ARE OWNED BY AND ARE THE PROPERTY OF KAEYER, GARMENT, & DAVIDSON ARCHITECTS, PC (KG&D), AND WERE CREATED FOR USE ON THIS PROJECT. NONE OF SUCH IDEAS, DESIGNS, ARRANGEMENTS OR PLANS SHALL BE USED BY OR DISCLOSED TO ANY PURPOSE WHATSOEVER WITHOUT THE WRITTEN PERMISSION OF (KG&D).

WRITTEN DIMENSIONS ON THIS DRAWING SHALL HAVE PRECEDENCE OVER SCALED DIMENSIONS. CONTRACTOR SHALL VERIFY ALL ACTUAL DIMENSIONS AND CONDITIONS ON THE JOB AND THE ARCHITECT MUST BE NOTIFIED OF ANY VARIATIONS FROM DIMENSIONS AND CONDITIONS SHOWN. SHOP DETAILS MUST BE SUBMITTED TO THIS OFFICE FOR APPROVAL BEFORE PROCEEDING WITH FABRICATION.

ALTERATIONS BY ANY PERSON, IN ANY WAY, OF ANY ITEM CONTAINED ON THIS DOCUMENT, UNLESS ACTING UNDER THE DIRECTION OF THE LICENCED ARCHITECT WHOSE PROFESSIONAL SEAL IS AFFIXED HERETO, IS A VIOLATION OF TITLE VII, SECT. 69.5 (b) OF NEW YORK STATE LAW.
COPYRIGHT KAEYER, GARMENT + DAVIDSON ARCHITECTS & ENGINEERS, PC ALL RIGHTS RESERVED.


Professional Seal

| No. | Date | Issue |
|---|---|---|
| 3 | 11/10/20 | CONSTRUCTION DOCUMENTS |
| 2 | 08/12/20 | ISSUE FOR PERMIT |

Sheet Title
## ELECTRICAL ONE-LINE DIAGRAMS

| Job No. | Date |
|---|---|
| NKGD0185.02 | 08/23/2019 |
| Scale: AS NOTED | Drawn / Checked: NL/KS |

Sheet Number
# E501

## PANEL ELPA SCHEDULE

MAIN RATING: 100A  MAIN F.S.: MLO  KAIC RATING: 10KAIC
VOLTAGE: 208Y/120V  PHASE: 3  WIRE: 4  MOUNTING: SURFACE

| CIRC. NO. | LOAD DESCRIPTION | FUSE AMPS | NO. OF POLES | NO. OF POLES | FUSE AMPS | LOAD DESCRIPTION | CIRC. NO. |
|---|---|---|---|---|---|---|---|
| 1 | LTG – RM 104/RM 102/RM 105 | 20 | 1 | 1 | 20 | LTG – EXTERIOR BLDG. | 2 |
| 3 | LTG – STORAGE 106/VEST 101 | 20 | 1 | 1 | 20 | SPARE | 4 |
| 5 | LTG – MECH/ELEC RM 107 | 20 | 1 | 1 | 20 | SPARE | 6 |
| 7 | SPARE | 20 | 1 | 1 | 20 | SPARE | 8 |
| 9 | SPARE | 20 | 1 | 1 | 20 | SPARE | 10 |
| 11 | SPARE | 20 | 1 | – | – | – | 12 |
| 13 | SPARE | 20 | 1 | – | – | – | 14 |
| 15 | – | – | – | – | – | – | 16 |
| 17 | – | – | – | – | – | – | 18 |
| 19 | – | – | – | – | – | – | 20 |
| 21 | – | – | – | – | – | – | 22 |
| 23 | – | – | – | – | – | – | 24 |

LK – PROVIDE LOCKING TABS ON SWITCH HANDLES.

NOTES:
1.) PANELBOARD SHALL BE A FUSED COORDINATION PANEL AS MANUFACTURED BY LITTELFUSE, SERIES LCP OR APPROVED EQUAL.
2.) BRANCH FUSES SHALL BE 20A, FAST ACTING CLASS CC FUSES AS MANUFACTURED BY LITTELFUSE, KLKR SERIES OR APPROVED EQUAL. PROVIDE FUSES FOR ALL BRANCH SWITCHES.
3.) ENCLOSURE SHALL BE NEMA–1.
4.) ALL EMERGENCY PANELBOARDS SHALL BE FUSED COORDINATION PANELS. IF THE CONTRACTOR CHOOSES TO SUBSTITUTE FUSED COORDINATION PANELS WITH CIRCUIT BREAKER PANELBOARDS OR ANY OF THE FUSED SWITCHES FOR CIRCUIT BREAKERS, THE CONTRACTOR SHALL BE RESPONSIBLE TO PROVIDE A SHORT CIRCUIT STUDY AND COORDINATION STUDY PROVING THAT ALL OF THE OVERCURRENT PROTECTIVE DEVICES IN THE EMERGENCY SYSTEM ARE SELECTIVELY COORDINATED. THIS STUDY SHALL BE SUBMITTED TO THE ENGINEER FOR REVIEW AND APPROVAL AS A SHOP DRAWING PRIOR TO PURCHASING EQUIPMENT.
5.) PROVIDE PANEL BOARD WITH INTEGRAL SPD.

## PANEL ELPB SCHEDULE

MAIN RATING: 100A  MAIN F.S.: 100A  KAIC RATING: 10KAIC
VOLTAGE: 208Y/120V  PHASE: 3  WIRE: 4  MOUNTING: SURFACE

| CIRC. NO. | LOAD DESCRIPTION | FUSE AMPS | NO. OF POLES | NO. OF POLES | FUSE AMPS | LOAD DESCRIPTION | CIRC. NO. |
|---|---|---|---|---|---|---|---|
| 1 | LTG – WOMEN TOIL 111 | 20 | 1 | 1 | 20 | LTG – EXTERIOR BLDG. | 2 |
| 3 | LTG – TOIL 112/TEAM TOIL 113 | 20 | 1 | 1 | 20 | SPARE | 4 |
| 5 | LTG – TEAM ROOM 114 | 20 | 1 | 1 | 20 | SPARE | 6 |
| 7 | SPARE | 20 | 1 | 1 | 20 | SPARE | 8 |
| 9 | SPARE | 20 | 1 | 1 | 20 | SPARE | 10 |
| 11 | SPARE | 20 | 1 | – | – | – | 12 |
| 13 | SPARE | 20 | 1 | – | – | – | 14 |
| 15 | – | – | – | – | – | – | 16 |
| 17 | – | – | – | – | – | – | 18 |
| 19 | – | – | – | – | – | – | 20 |
| 21 | – | – | – | – | – | – | 22 |
| 23 | – | – | – | – | – | – | 24 |

LK – PROVIDE LOCKING TABS ON SWITCH HANDLES.

NOTES:
1.) PANELBOARD SHALL BE A FUSED COORDINATION PANEL AS MANUFACTURED BY LITTELFUSE, SERIES LCP OR APPROVED EQUAL.
2.) BRANCH FUSES SHALL BE 20A, FAST ACTING CLASS CC FUSES AS MANUFACTURED BY LITTELFUSE, KLKR SERIES OR APPROVED EQUAL. PROVIDE FUSES FOR ALL BRANCH SWITCHES.
3.) ENCLOSURE SHALL BE NEMA–1.
4.) ALL EMERGENCY PANELBOARDS SHALL BE FUSED COORDINATION PANELS. IF THE CONTRACTOR CHOOSES TO SUBSTITUTE FUSED COORDINATION PANELS WITH CIRCUIT BREAKER PANELBOARDS OR ANY OF THE FUSED SWITCHES FOR CIRCUIT BREAKERS, THE CONTRACTOR SHALL BE RESPONSIBLE TO PROVIDE A SHORT CIRCUIT STUDY AND COORDINATION STUDY PROVING THAT ALL OF THE OVERCURRENT PROTECTIVE DEVICES IN THE EMERGENCY SYSTEM ARE SELECTIVELY COORDINATED. THIS STUDY SHALL BE SUBMITTED TO THE ENGINEER FOR REVIEW AND APPROVAL AS A SHOP DRAWING PRIOR TO PURCHASING EQUIPMENT.
5.) PROVIDE PANEL BOARD WITH INTEGRAL SPD.

## PANEL DP1 SCHEDULE

MAIN RATING: 400A  MAIN C.B.: 400A  KAIC RATING: 22KAIC
VOLTAGE: 208Y/120V  PHASE: 3  WIRE: 4  MOUNTING: SURFACE

| CIRC. NO. | LOAD DESCRIPTION | BKR. AMPS | NO. OF POLES | NO. OF POLES | BKR. AMPS | LOAD DESCRIPTION | CIRC. NO. |
|---|---|---|---|---|---|---|---|
| 1 | MOTORIZED DAMPERS | 20 | 1 | 1 | 20 | SPARE | 2 |
| 3 | EUH–1 – STORAGE 102 | 15 | 2 | 2 | 15 | EF–2 | 4 |
| 5 | | | | | | | 6 |
| 7 | EUH–1 – ELEV VEST 101 | 15 | 2 | 1 | 20 | SPARE | 8 |
| 9 | | | | 1 | 20 | SPARE | 10 |
| 11 | EF–1 | 15 | 2 | 3 | 60 | AHU–1 | 12 |
| 13 | | | | | | | 14 |
| 15 | EWH–1 – JAN 103 | 40 | 2 | | | | 16 |
| 17 | | | | 2 | 40 | EWH–1 – MENS TOILET 110 | 18 |
| 19 | LTG – CONCESSION 104 | 20 | 1 | | | | 20 |
| 21 | LTG – STORAGE 102/JAN 103 | 20 | 1 | 1 | 20 | LTG – MECH/ELEC RM 107 | 22 |
| 23 | LTG – FIRST AID/TRAINING 105 | 20 | 1 | 1 | 20 | CALL FOR AID | 24 |
| 25 | LTG – STORAGE 106/VEST 101 | 20 | 1 | 1 | 20 | REC – CONCESSION 104 REF | 26 |
| 27 | LTG – MENS TLT 110/REF 109 | 20 | 1 | 1 | 20 | SPARE | 28 |
| 29 | HAND DRYER – TOILET 110 | 20 | 1 | 1 | 20 | REC – CONCESSION 104 | 30 |
| 31 | HAND DRYER – TOILET 110 | 20 | 1 | 1 | 20 | REC – STORAGE 106 | 32 |
| 33 | HAND DRYER – REF TOILET 108 | 20 | 1 | 1 | 20 | REC – TOILET 110/TOILET 108 | 34 |
| 35 | REC – STORAGE 102/JAN 103 | 20 | 1 | 1 | 20 | JBOX – WATER FOUNTAIN | 36 |
| 37 | REC – FIRST AID/TRAINING 105 | 20 | 1 | 1 | 20 | REC – EXTERIOR GFI/VEST 101 | 38 |
| 39 | REC – ELEV. VEST 201 | 20 | 1 | 1 | 20 | REC – ROOFTOP EQUIPMENT | 40 |
| 41 | REC. – FOOD TRUCK | 20 | 1 | 3 | 60 | EX. FIELD LIGHTING POLE #2 | 42 |
| 43 | REC. – FOOD TRUCK | 20 | 1 | | | | 44 |
| 45 | REC. – FOOD TRUCK | 20 | 1 | | | | 46 |
| 47 | SITE LIGHTING | 20 | 2 | 3 | 60 | EX. FIELD LIGHTING POLE #3 | 48 |
| 49 | | | | | | | 50 |
| 51 | SITE LIGHTING | 20 | 2 | | | | 52 |
| 53 | | | | 1 | 20 | REC. – ROOF FOR CAMERA. | 54 |
| 55 | SITE LIGHTING | 20 | 1 | 1 | 20 | REC. – ROOF FOR CAMERA. | 56 |
| 57 | CONCESSION STAND FIRE SHUTTER. | 20 | 1 | 1 | 25 | FINTUBE ELEC. HEAT – REF 109 | 58 |
| 59 | FINTUBE ELEC. HEAT – TOIL 110 | 30 | 1 | 1 | 20 | FINTUBE ELEC. HEAT – TOIL 108 | 60 |
| 61 | SPARE | 20 | 1 | 1 | 20 | SPARE | 62 |
| 63 | SPARE | 20 | 1 | 1 | 20 | SPARE | 64 |
| 65 | SPARE | 20 | 1 | 1 | 20 | SPARE | 66 |

LK – PROVIDE LOCKING TABS ON C.B.; GF – GFI TYPE C.B.; GP – GFP TYPE C.B.;
AF – ARC FAULT TYPE C.B.; ST – SHUNT TRIP C.B.

## LIGHTING FIXTURE SCHEDULE

| FIXTURE DESIGNATION | MANUFACTURER | CATALOG NUMBER | LAMPS | VOLTS | MOUNTING | LUMENS | REMARKS |
|---|---|---|---|---|---|---|---|
| A | RAB LIGHTING | ND6R20D/ E2+NDLED6RD–80–YN–W–W | (1) 20W LED | 120V | RECESSED | 1485 | RAB LIGHTING 6" RECESSED LED DOWNLIGHT. PROVIDE WITH INTEGRAL BATTERY BACKUP WHERE DESIGNATED BY 'EM' IN ENTRY KIOSK BUILDING. |
| A–1 | RAB LIGHTING | RDLED–4R–20–D–80–YN–W–W | (1) 20W LED | 120V | RECESSED | | RAB LIGHTING 6" RECESSED LED DOWNLIGHT. PROVIDE WITH INTEGRAL BATTERY BACKUP WHERE DESIGNATED BY 'EM' IN ENTRY KIOSK BUILDING. |
| B | RAB LIGHTING | SK21XL25RDYN | (1) 25W LED | 120V | SURFACE | | RAB LIGHTING 21" SURFACE MOUNTED LED FIXTURE. |
| C | RAB LIGHTING | BOA–XXFT–P–80D10–40–YN–S/E2 | 10W/FT LED | 120V | PENDANT | | RAB LIGHTING PENDANT MOUNTED LED FIXTURE. LENGTH SPECIFIED ON PLANS. |
| D | RAB LIGHTING | STRP440–835U/E2 | 5W/FT LED | 120V | SUSPENDED | | RAB LIGHTING PENDANT MOUNTED LED FIXTURE 4' LENGTH WITH STRP SHOOK ACCESSORY. |
| F | RAB LIGHTING | SLIM26–N–W | 26W LED | 120V | WALL | | WAC LIGHTING. VISTA WALL MOUNTED LED SCONCE. |
| G | RAB LIGHTING | KNOOKFA–32–35K–W | (1) 17W LED | 120V | SURFACE | | UNDERCABINET LIGHT. |
| H | ALCON LIGHTING | 11122–2–X | (1) 27W LED | 120V | SURFACE | 2400 | LED LINEAR FIXTURE. COORDINATE FINISH WITH ARCHITECT. |
| J1 | HUBBELL OUTDOOR LIGHTING | VFS–Y–126L–880–5K7–3–208–3C | (1) 880W LED | 208V | POLE | | (6) TYPE C1 AND (3) TYPE C2 NEW FIXTURES TO BE MOUNTED ON EXISTING POLE. TYPICAL FOR EACH LOCATION. |
| J2 | | VFS–Y–126L–880–5K7–4–208–3C | | | | | |
| K | HUBBARTON FORGE | 305993–10–GG–LED | XXW LED | 120V | WALL | | WAC LIGHTING. VISTA WALL MOUNTED LED SCONCE. |
| L | CYCLONE LIGHTING | CY55P1B–FGC–3M–40W–3K | (1) 45W LED | 208V | POLE | | EXTERIOR POLE MOUNTED LIGHT FIXTURE WITH 16FT POLE. |
| M | LITHONIA LIGHTING | RADB LED P4 27K SYM DBLXD | (1) 18.59W LED | 120V | SURFACE | | EXTERIOR BOLLARD WALKWAY LIGHT FIXTURE. |
| HC; HCL | SIGNTEX INC. LIGHTING | HC: HANDICAPPED EXIT SIGN – MASTER<br>HCL: FLOOR FROXIMITY HANDICAPPED EXIT SIGN – REMOTE<br>CAEFP–BB–1/2–R–C–W–W | LED | 120V | SURFACE | | HANDICAPPED EXIT SIGN WITH MASTER OVER DOOR AND FLOOR PROXIMITY SYSTEM. PROVIDE A WIRE GUARD ON ALL EXIT SIGNS TAGGED "HCL". REFER TO DETAIL ON DRAWING E701. |

NOTES:
1.) VERIFY ALL FIXTURE CATALOG NUMBERS FOR INTENDED APPLICATIONS WITH REQUIRED ACCESSORIES.
2.) ALL BALLASTS AND DRIVERS IN FIXTURES LOCATED OUTDOORS SHALL BE ZERO DEGREE RATED STARTING TEMPERATURE. REFER TO DRAWINGS FOR LOCATION OF FIXTURES.
3.) ALL EXIT AND EMERGENCY FIXTURES SHALL BE FED FROM EMERGENCY POWERED PANELS.
4.) ALL LIGHT FIXTURES TAGGED AS "EM" SHALL BE FED FROM EMERGENCY POWER PANELS. THESE FIXTURES SHALL BE SWITCHED AS INDICATED ALONG WITH LIGHTING FIXTURES FED FROM NORMAL POWER SOURCES. UPON LOSS OF NORMAL POWER, EMERGENCY LIGHT FIXTURES SHALL BE AUTOMATICALLY SHUNTED TO FULL BRIGHT REGARDLESS OF STATE OF CONTROLLING SWITCH. SEE DETAIL FOR ADDITIONAL INFORMATION.
5.) IN THE EVENT THE CONTRACTOR CHOOSES TO SUBSTITUTE LIGHT FIXTURES FOR THOSE THAT ARE SPECIFIED ON THE LIGHT FIXTURE SCHEDULE, THE CONTRACTOR SHALL SUBMIT POINT–TO–POINT PHOTOMETRIC CALCULATIONS FOR ALL AREAS WHERE THE SUBSTITUTED FIXTURES ARE INDICATED TO BE INSTALLED ON THE DRAWINGS. THESE CALCULATIONS SHALL BE SUBMITTED ALONG WITH THE LIGHT FIXTURE SHOP DRAWINGS.

## PANEL PP1 SCHEDULE

MAIN RATING: 200A  MAIN C.B.: 200A  KAIC RATING: 22KAIC
VOLTAGE: 208Y/120V  PHASE: 3  WIRE: 4  MOUNTING: SURFACE

| CIRC. NO. | LOAD DESCRIPTION | BKR. AMPS | NO. OF POLES | NO. OF POLES | BKR. AMPS | LOAD DESCRIPTION | CIRC. NO. |
|---|---|---|---|---|---|---|---|
| 1 | EWH–1 – TEAM RM TOIL. 113 | 40 | 2 | 1 | 30 | FINTUBE ELEC. HEAT – TOIL 111 | 2 |
| 3 | | | | 1 | 30 | FINTUBE ELEC. HEAT – TOIL 113 | 4 |
| 5 | MOTORIZED DAMPERS | 20 | 1 | 3 | 60 | AHU–2 | 6 |
| 7 | EF–3 | 15 | 2 | | | | 8 |
| 9 | | | | | | | 10 |
| 11 | EF–4 | 15 | 2 | 1 | 20 | LTG – WOMENS TOILET 111 | 12 |
| 13 | | | | 1 | 20 | LTG – TEAM RM TOIL 113 | 14 |
| 15 | REC – TEAM ROOM 114 | 20 | 1 | 1 | 20 | LTG – TEAM ROOM 114 | 16 |
| 17 | REC – TEAM ROOM 114 | 20 | 1 | 1 | 20 | HAND DRYER – TOIL 113 | 18 |
| 19 | REC – WOMENS TOILET 111 | 20 | 1 | 1 | 20 | HAND DRYER – TOIL 113 | 20 |
| 21 | REC – TOIL. 112/TOIL. 113 | 20 | 1 | 1 | 20 | HAND DRYER – TOIL 111 | 22 |
| 23 | HAND DRYER – TOIL. 112 | 20 | 1 | 1 | 20 | HAND DRYER – TOIL 111 | 24 |
| 25 | CALL FOR AID | 20 | 1 | 1 | 20 | REC – EXTERIOR GFI | 26 |
| 27 | JBOX – WATER FOUNTAIN | 20 | 1 | 1 | 20 | REC – ROOFTOP EQUIPMENT | 28 |
| 29 | SPARE | 20 | 1 | 1 | 20 | FINTUBE ELEC. HEAT – TOIL 112 | 30 |
| 31 | SPARE | 20 | 1 | 1 | 20 | SPARE | 32 |
| 33 | SPARE | 20 | 1 | 1 | 20 | SPARE | 34 |
| 35 | SPARE | 20 | 1 | 1 | 20 | SPARE | 36 |
| 37 | SPARE | 20 | 1 | 1 | 20 | SPARE | 38 |
| 39 | SPARE | 20 | 1 | 1 | 20 | SPARE | 40 |
| 41 | SPARE | 20 | 1 | 1 | 20 | SPARE | 42 |

LK – PROVIDE LOCKING TABS ON C.B.; GF – GFI TYPE C.B.; GP – GFP TYPE C.B.;
AF – ARC FAULT TYPE C.B.; ST – SHUNT TRIP C.B.

## PANEL LSPP SCHEDULE

MAIN RATING: 100A  MAIN F.S.: 100A  KAIC RATING: 10KAIC
VOLTAGE: 208Y/120V  PHASE: 3  WIRE: 4  MOUNTING: SURFACE

| CIRC. NO. | LOAD DESCRIPTION | FUSE AMPS | NO. OF POLES | NO. OF POLES | FUSE AMPS | LOAD DESCRIPTION | CIRC. NO. |
|---|---|---|---|---|---|---|---|
| 1 | ESP–1 | 25 | 1 | 1 | 20 | SPARE | 2 |
| 3 | ELEVATOR CAB LIGHTING | 20 | 1 | 1 | 20 | SPARE | 4 |
| 5 | ELEVATOR CAB LIGHTING | 20 | 1 | 1 | 20 | SPARE | 6 |
| 7 | ELEVATOR PIT RECEPTACLE | 20 | 1 | 1 | 20 | SPARE | 8 |
| 9 | ELEVATOR PIT LIGHT | 20 | 1 | – | – | – | 10 |
| 11 | SPARE | 20 | 1 | – | – | – | 12 |
| 13 | SPARE | 20 | 1 | – | – | – | 14 |
| 15 | – | – | – | – | – | – | 16 |
| 17 | – | – | – | – | – | – | 18 |

LK – PROVIDE LOCKING TABS ON SWITCH HANDLES.

1.) PANELBOARD SHALL BE A FUSED COORDINATION PANEL AS MANUFACTURED BY LITTELFUSE, SERIES LCP OR APPROVED EQUAL.
2.) BRANCH FUSES SHALL BE 20A, FAST ACTING CLASS CC FUSES AS MANUFACTURED BY LITTELFUSE, KLKR SERIES OR APPROVED EQUAL. PROVIDE FUSES FOR ALL BRANCH SWITCHES.
3.) ENCLOSURE SHALL BE NEMA–1.
4.) ALL EMERGENCY PANELBOARDS SHALL BE FUSED COORDINATION PANELS. IF THE CONTRACTOR CHOOSES TO SUBSTITUTE FUSED COORDINATION PANELS WITH CIRCUIT BREAKER PANELBOARDS OR ANY OF THE FUSED SWITCHES FOR CIRCUIT BREAKERS, THE CONTRACTOR SHALL BE RESPONSIBLE TO PROVIDE A SHORT CIRCUIT STUDY AND COORDINATION STUDY PROVING THAT ALL OF THE OVERCURRENT PROTECTIVE DEVICES IN THE EMERGENCY SYSTEM ARE SELECTIVELY COORDINATED. THIS STUDY SHALL BE SUBMITTED TO THE ENGINEER FOR REVIEW AND APPROVAL AS A SHOP DRAWING PRIOR TO PURCHASING EQUIPMENT.
5.) PROVIDE PANEL BOARD WITH INTEGRAL SPD.

## LIGHTING SYSTEM FUNCTIONAL TESTING/COMMISSIONING

I. FUNCTIONAL TESTING

PRIOR TO PASSING FINAL INSPECTION, THE CONTRACTOR SHALL PROVIDE EVIDENCE TO THE BUILDING OWNER AND THE ENGINEER THAT THE LIGHTING CONTROL SYSTEMS HAVE BEEN TESTED TO ENSURE THAT CONTROL HARDWARE AND SOFTWARE ARE CALIBRATED, ADJUSTED, PROGRAMMED AND IN PROPER WORKING CONDITION IN ACCORDANCE WITH THE CONSTRUCTION DOCUMENTS AND MANUFACTURER'S DOCUMENTS. FUNCTIONAL TESTING, FOR THE APPLICABLE CONTROL TYPE, SHALL BE IN ACCORDANCE WITH THE FOLLOWING:

1. OCCUPANT SENSOR CONTROLS

WHERE OCCUPANT SENSOR CONTROLS ARE PROVIDED, THE FOLLOWING PROCEDURES SHALL BE PERFORMED:

A. CERTIFY THAT THE OCCUPANT SENSOR HAS BEEN LOCATED AND AIMED IN ACCORDANCE WITH MANUFACTURER RECOMMENDATIONS.
B. FOR PROJECTS WITH SEVEN OF FEWER OCCUPANT SENSORS, EACH SENSOR SHALL BE TESTED.
C. FOR PROJECTS WITH MORE THAN SEVEN OCCUPANT SENSORS, TESTING SHALL BE DONE FOR EACH UNIQUE COMBINATION OF SENSOR TYPE AND SPACE GEOMETRY. WHERE MULTIPLES OF EACH UNIQUE COMBINATION OF SENSOR TYPE AND SPACE GEOMETRY ARE PROVIDED, NOT LESS THAN 10 PERCENT, BUT IN NO CASE LESS THAN ONE, OF EACH COMBINATION SHALL BE TESTED UNLESS THE BUILDING OFFICIAL OR DESIGN PROFESSIONAL REQUIRES A HIGHER PERCENTAGE TO BE TESTED. WHERE 30 PERCENT OR MORE OF THE TESTED CONTROLS FAIL, ALL REMAINING IDENTICAL COMBINATIONS SHALL BE TESTED.

FOR OCCUPANT SENSOR CONTROLS TO BE TESTED, VERIFY THE FOLLOWING:
i. WHERE OCCUPANT SENSOR CONTROLS INCLUDE STATUS INDICATORS, VERIFY CORRECT OPERATION.
ii. THE CONTROLLED LIGHTS TURN OFF OR DOWN TO THE PERMITTED LEVEL WITHIN THE REQUIRED TIME.
iii. FOR AUTO–ON OCCUPANT SENSOR CONTROLS, THE LIGHTS TURN ON TO THE PERMITTED LEVEL WHEN AN OCCUPANT ENTERS THE SPACE.
iv. FOR MANUAL–ON OCCUPANT SENSOR CONTROLS, THE LIGHTS TURN ON ONLY WHEN MANUALLY ACTIVATED.
v. THE LIGHTS ARE NOT INCORRECTLY TURNED ON BY MOVEMENT IN ADJACENT AREAS OR BY HVAC OPERATION.

2. TIME–SWITCH CONTROLS

WHERE TIME–SWITCH CONTROLS ARE PROVIDED, THE FOLLOWING PROCEDURES SHALL BE PERFORMED:

A. CONFIRM THAT THE TIME–SWITCH CONTROL IS PROGRAMMED WITH ACCURATE WEEKDAY, WEEKEND AND HOLIDAY SCHEDULES.
B. PROVIDE DOCUMENTATION TO THE OWNER OF TIME–SWITCH CONTROLS PROGRAMMING INCLUDING WEEKDAY, WEEKEND, HOLIDAY SCHEDULES, AND SET–UP AND PREFERENCE PROGRAM SETTINGS.
C. VERIFY THE CORRECT TIME AND DATE IN THE TIME SWITCH.
D. VERIFY THAT ANY BATTERY BACK–UP IS INSTALLED AND ENERGIZED.
E. VERIFY THAT THE OVERRIDE TIME LIMIT IS SET TO NOT MORE THAN 2 HOURS.
F. SIMULATE OCCUPIED CONDITION. VERIFY AND DOCUMENT THE FOLLOWING:
i. ALL LIGHTS CAN BE TURNED ON AND OFF BY THEIR RESPECTIVE AREA CONTROL SWITCH.
ii. THE SWITCH ONLY OPERATES LIGHTING IN THE ENCLOSED SPACE IN WHICH THE SWITCH IS LOCATED.
G. SIMULATE UNOCCUPIED CONDITION. VERIFY AND DOCUMENT THE FOLLOWING:
i. NONEXEMPT LIGHTING TURNS OFF.
ii. MANUAL OVERRIDE SWITCH ALLOWS ONLY THE LIGHTS IN THE ENCLOSED SPACE WHERE THE OVERRIDE SWITCH IS LOCATED TO TURN ON OR REMAIN ON UNTIL THE NEXT SCHEDULED SHUTOFF OCCURS.

II. DOCUMENTATION REQUIREMENTS

THE DOCUMENTS DESCRIBED IN THIS SECTION SHALL BE PROVIDED TO THE BUILDING OWNER OR OWNER'S AUTHORIZED AGENT WITHIN 60 DAYS OF THE DATE OF RECEIPT OF THE CERTIFICATE OF OCCUPANCY.

A. DRAWINGS:
i. AS–BUILT CONSTRUCTION DOCUMENTS, SHOWING THE LOCATION AND CATALOG NUMBER OF EACH PIECE OF EQUIPMENT.
B. MANUALS: AN OPERATING AND MAINTENANCE MANUAL SHALL BE PROVIDED AND INCLUDE THE FOLLOWING:
i. NAME AND ADDRESS OF NOT LESS THAN ONE SERVICE AGENCY FOR INSTALLED EQUIPMENT.
ii. A NARRATIVE OF HOW EACH SYSTEM IS INTENDED TO OPERATE, INCLUDING RECOMMENDED SET POINTS.
iii. SUBMITTAL DATA INDICATING ALL SELECTED OPTIONS FOR EACH PIECE OF LIGHTING EQUIPMENT AND LIGHTING CONTROLS.
iii. OPERATION AND MAINTENANCE MANUALS FOR EACH PIECE OF LIGHTING EQUIPMENT. REQUIRED ROUTINE MAINTENANCE ACTIONS, CLEANING AND RECOMMENDED RELAMPING SHALL BE CLEARLY IDENTIFIED.
iv. A SCHEDULE FOR INSPECTING AND RECALIBRATING ALL LIGHTING CONTROLS.
C. REPORT: A REPORT OF TEST RESULTS SHALL BE PROVIDED AND INCLUDE THE FOLLOWING.
i. RESULTS OF FUNCTIONAL PERFORMANCE TESTS.
ii. DISPOSITION OF DEFICIENCIES FOUND DURING TESTING, INCLUDING DETAILS OF CORRECTIVE MEASURES USED OR PROPOSED.

## PANEL PPKB SCHEDULE

MAIN RATING: 100A  MAIN C.B.: 100A  KAIC RATING: 22KAIC
VOLTAGE: 208Y/120V  PHASE: 3  WIRE: 4  MOUNTING: SURFACE

| CIRC. NO. | LOAD DESCRIPTION | BKR. AMPS | NO. OF POLES | NO. OF POLES | BKR. AMPS | LOAD DESCRIPTION | CIRC. NO. |
|---|---|---|---|---|---|---|---|
| 1 | REC. – KIOSK BLDG. | | | 1 | 20 | REC. –TELCO/SECURITY. | 2 |
| 3 | REC. – KIOSK BLDG. | 20 | 1 | 1 | 20 | REC. –TELCO/SECURITY. | 4 |
| 5 | LTG. – KIOSK BLDG. | 20 | 1 | 1 | 20 | REC. – EXTERIOR. | 6 |
| 7 | LTG. – EXTERIOR KIOSK BLDG. | 20 | 1 | 1 | 20 | SPARE | 8 |
| 9 | SPARE | 20 | 1 | 1 | 20 | SPARE | 10 |
| 11 | SPARE | 20 | 1 | 1 | 20 | SPARE | 12 |
| 13 | SPARE | 20 | 1 | 1 | 20 | SPARE | 14 |
| 15 | SPARE | 20 | 1 | 1 | 20 | SPARE | 16 |
| 17 | SPARE | 20 | 1 | 1 | 20 | SPARE | 18 |
| 19 | SPARE | 20 | 1 | 1 | 20 | SPARE | 20 |
| 21 | SPARE | 20 | 1 | 1 | 20 | SPARE | 22 |
| 23 | SPARE | 20 | 1 | 1 | 20 | SPARE | 24 |

LK – PROVIDE LOCKING TABS ON C.B.; GF – GFI TYPE C.B.; GP – GFP TYPE C.B.;
AF – ARC FAULT TYPE C.B.; ST – SHUNT TRIP C.B.

## PANEL SPP SCHEDULE

MAIN RATING: 100A  MAIN C.B.: MLO  KAIC RATING: 10KAIC
VOLTAGE: 208Y/120V  PHASE: 3  WIRE: 4  MOUNTING: SURFACE

| CIRC. NO. | LOAD DESCRIPTION | BKR. AMPS | NO. OF POLES | NO. OF POLES | BKR. AMPS | LOAD DESCRIPTION | CIRC. NO. |
|---|---|---|---|---|---|---|---|
| 1 | RASP PANEL. | 20 | 1 | 2 | 60 | GENERATOR LOAD CENTER, GLC. | 2 |
| 3 | FIRE ALARM CONTROL PANEL. | 20 | 1 | | | | 4 |
| 5 | HEAT TRACE SYSTEM | 20 | 1 | 1 | 20 | CALL FOR AID. | 6 |
| 7 | EUH–1 – MECH/ELEC 107 | 15 | 2 | 1 | 20 | DATA RM REC. | 8 |
| 9 | | | | 1 | 20 | DATA RM. REC. | 10 |
| 11 | TEL. CO/SECURITY REC | 20 | 1 | 1 | 20 | REC. – FIRE ALARM IP COMMUNICATOR | 12 |
| 13 | TEL. CO/SECURITY REC | 20 | 1 | 2 | 15 | AC–1/ACC–1 – DATA 107A | 14 |
| 15 | REC. – MECH/ELEC. 107. | 20 | 1 | | | | 16 |
| 17 | SPARE | 20 | 1 | 1 | 20 | SPARE | 18 |

LK – PROVIDE LOCKING TABS ON C.B.; GF – GFI TYPE C.B.; GP – GFP TYPE C.B.;
AF – ARC FAULT TYPE C.B.; ST – SHUNT TRIP C.B.

GREENWICH HS CARDINAL STADIUM PHASE 1A

GREENWICH PUBLIC SCHOOLS
10 HILLSIDE ROAD
GREENWICH CT 06830

KG+D listen imagine build
KG+D . ARCHITECTS PC
285 MAIN STREET MOUNT KISCO . NEW YORK . 10549
P:914.666.5900 KGDARCHITECTS.COM

OLA Consulting Engineers
50 Broadway,
Hawthorne, NY 10532
914.747.2800
8 West 38th Street,
Suite 501
New York, NY 10018
646.849.4110
olace.com

CONSTRUCTION DOCUMENTS

NOTE: ALL IDEAS, DESIGNS, ARRANGEMENTS AND PLANS INDICATED OR REPRESENTED BY THIS DRAWING ARE OWNED BY AND ARE THE PROPERTY OF KAEYER, GARMENT, & DAVIDSON ARCHITECTS, PC (KG&D) AND WERE CREATED FOR USE ON THIS PROJECT. NONE OF SUCH IDEAS, DESIGNS, ARRANGEMENTS OR PLANS SHALL BE USED BY OR DISCLOSED TO ANY PURPOSE WHATSOEVER WITHOUT THE WRITTEN PERMISSION OF (KG&D).

WRITTEN DIMENSIONS ON THIS DRAWING SHALL HAVE PRECEDENCE OVER SCALED DIMENSIONS. CONTRACTOR SHALL VERIFY ALL ACTUAL DIMENSIONS AND CONDITIONS ON THE JOB AND THE ARCHITECT MUST BE NOTIFIED OF ANY VARIATIONS FROM DIMENSIONS AND CONDITIONS SHOWN. SHOP DETAILS MUST BE SUBMITTED TO THIS OFFICE FOR APPROVAL BEFORE PROCEEDING WITH FABRICATION.

ALTERATIONS BY ANY PERSON, IN ANY WAY, OF ANY ITEM CONTAINED ON THIS DOCUMENT, UNLESS ACTING UNDER THE DIRECTION OF THE LICENCED ARCHITECT WHOSE PROFESSIONAL SEAL IS AFFIXED HERETO, IS A VIOLATION OF TITLE VII, SECT. 7209 (2) OF NEW YORK STATE LAW.
COPYRIGHT KAEYER, GARMENT • DAVIDSON ARCHITECTS & ENGINEERS, PC
ALL RIGHTS RESERVED.

Professional Seal

| No. | Date | Issue |
|---|---|---|
| 3 | 11/10/20 | CONSTRUCTION DOCUMENTS |
| 2 | 08/12/20 | ISSUE FOR PERMIT |

Sheet Title
ELECTRICAL SCHEDULES

Job No. NKGD0185.02
Date 08/23/2019
Scale AS NOTED
Drawn / Checked NL/KS

Sheet Number
E601

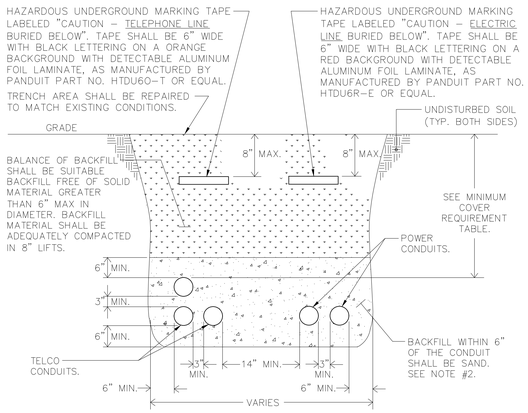


| MINIMUM COVER REQUIREMENT TABLE | |
|---|---|
| LOCATION | NONMETALLIC RACEWAYS LISTED FOR DIRECT BURIAL WITHOUT CONCRETE ENCASEMENT OR OTHER APPROVED RACEWAYS |
| ALL LOCATION NOT SPECIFIED BELOW. | 18" |
| IN TRENCH BELOW 2-IN. THICK CONCRETE OR EQUIVALENT. | 12" |
| UNDER MINIMUM OF 4-IN. THICK CONCRETE EXTERIOR SLAB WITH NO VEHICULAR TRAFFIC AND THE SLAB EXTENDING NOT LESS THAN 6 IN. BEYOND THE UNDERGROUND INSTALLATION. | 4" SEE NOTE #2. |
| UNDER STREETS, HIGHWAYS, ROADS, ALLEYS, DRIVEWAYS, AND PARKING LOTS. | 24" |

NOTES:

1.) DETAIL SHOWN FOR INFORMATION PURPOSES. SAME CONCEPT SHALL ALSO APPLY FOR SINGLE CONDUITS.

2.) SAND MAY BE OMITTED FOR INSTALLATIONS WHERE COVER REQUIREMENTS ARE 6" OR LESS.

9 TRENCHING DETAIL FOR CONDUIT
SCALE: NONE

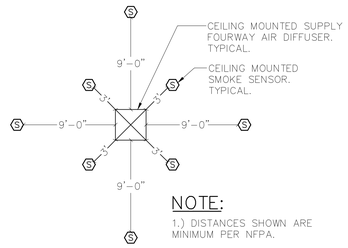


NOTE:

1.) DISTANCES SHOWN ARE MINIMUM PER NFPA.

6 CEILING MOUNTED SMOKE DETECTOR LOCATION WITH RESPECT TO AIR DIFFUSER
SCALE: NONE

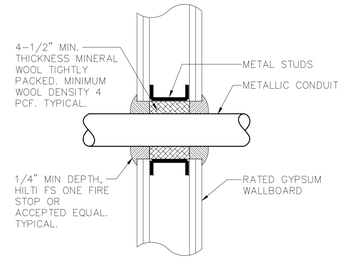


3 TYPICAL CONDUIT GYPSUM WALL PENETRATION DETAIL
SCALE: NONE

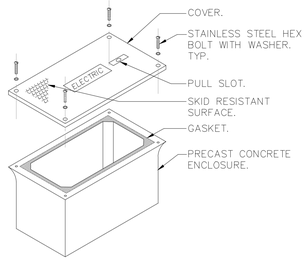


NOTES:

1.) HAND HOLE SHALL BE 18"L x 11"W x 12"H WITH OPEN BOTTOM AND RATED FOR VEHICULAR TRAFFIC AS MANUFACTURED BY QUAZITE, OR EQUAL. BOX SHALL BE INSTALLED IN ACCORDANCE WITH MANUFACTURER'S INSTRUCTIONS.

2.) PROVIDE 6" OF GRAVEL BELOW BOX.

3.) COVER SHALL BE IMPRINTED WITH THE APPROPRIATE DESCRIPTION OF BOX CONTENTS (I.E. ELECTRIC, TELEPHONE, DATA, CABLE TV, ETC.).

11 HAND HOLE DETAIL
SCALE: NONE

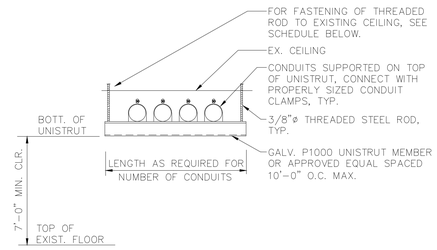


| CEILING CONSTRUCTION | ANCHOR TYPE | EMBEDMENT |
|---|---|---|
| NORMAL WT. CONC | HILTI HDI DROP-IN ANCHOR | 1" MIN. |
| CINDER CONCRETE | HILTI KWIK BOLT II | 3" MIN. |
| HOLLOW CONSTRUCTION | TOGGLE BOLTS | NA |

8 TRAPEZE SUPPORT DETAIL
SCALE: NONE

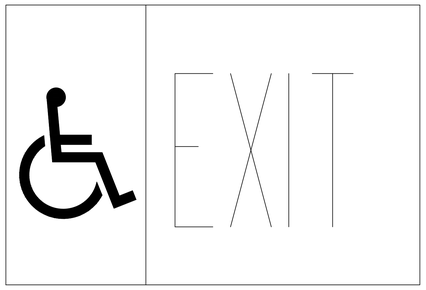


NOTES:

1.) LETTERS SHALL NOT BE LESS THAN 6" HIGH WITH PRACTICAL STROKES OF LETTERS NOT LESS THAN 3/4" WIDE. THE WORD "EXIT" SHALL BE IN LETTERS OF A WIDTH NOT LESS THAN 2" AND THE MINIMUM SPACING BETWEEN LETTERS SHALL BE NOT LESS THAN 3/8".

5 HANDICAPPED EXIT SIGN
SCALE: NONE

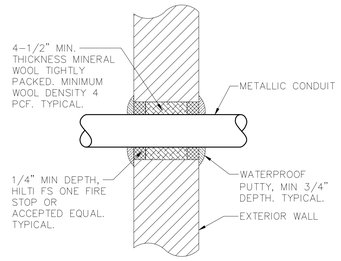


2 TYPICAL ABOVE GRADE CONDUIT EXTERIOR MASONRY WALL PENETRATION DETAIL
SCALE: NONE

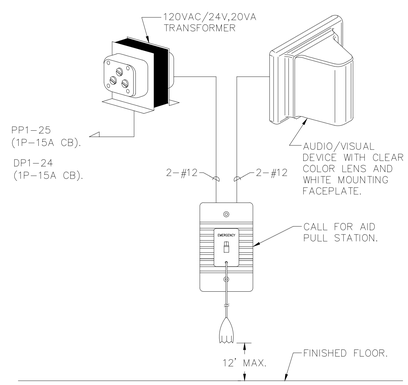


NOTE:

1.) SYSTEM KIT SHOWN BASED ON EDWARDS SIGNALING, MODEL #6538-G5 OR APPROVED EQUAL.

10 CALL FOR AID WIRING DIAGRAM
SCALE: NONE

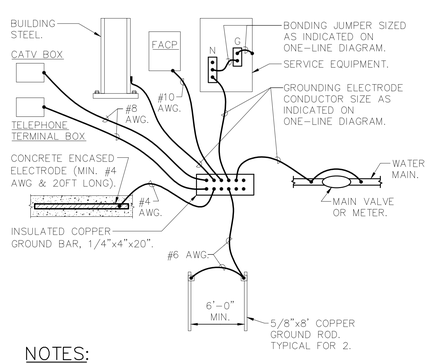


NOTES:

1.) CONNECTION TO WATER MAIN AND FIRE PROTECTION MAIN SHALL BE A MAXIMUM OF 5'-0" FROM WHERE THE PIPE ENTERS THE BUILDING AND BE PRIOR TO ANY METER, VALVE JOINT, ETC.

2.) ALL CONNECTIONS TO THE GROUND BAR SHALL BE MADE USING COMPRESSION LUGS SIZED TO ACCOMODATE THE CONDUCTORS.

7 SERVICE GROUNDING DETAIL
SCALE: NONE

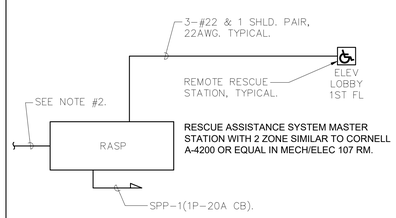


NOTES:

1.) PROVIDE ALL NECESSARY WIRING, MODULES, COMPONENTS, EXTENDER CABINET, AND PROGRAMMING REQUIRED.

2.) PROVIDE A PHONE LINE PLUS A DIALER FOR RESCUE ASSISTANCE SYSTEM MASTER STATION MONITORING.

4 RESCUE ASSISTANCE SYSTEM RISER DIAGRAM
SCALE: NONE

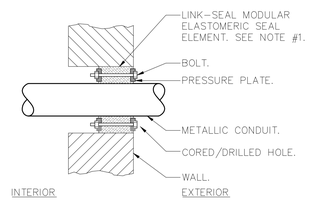


NOTES:

1.) SEAL ASSEMBLY BASED ON THUNDERLINE MODEL "C" LINK-SEAL MODULAR SEAL, WITH EPDM SEAL ELEMENT, COMPOSITE PRESSURE PLATES, STEEL WITH 2-PART ZINC DICHROMATE & ORGANIC COATING NUTS AND BOLTS AND WITH A OPERATING TEMPERATURE RANGE OF -40°F TO +250°F.
2.) PROVIDE AND INSTALL TWO SEALS WHEN PENETRATED WALL THICKNESS IS GREATER THAN 12".
3.) PROVIDE SCHEDULE 80 WALL SLEEVE FOR NEW WALL CONSTRUCTION PER MANUFACTURER'S REQUIREMENTS.

1 TYPICAL BELOW GRADE CONDUIT EXTERIOR MASONRY WALL PENETRATION DETAIL
SCALE: NONE

GREENWICH HS CARDINAL STADIUM PHASE 1A

GREENWICH PUBLIC SCHOOLS
10 HILLSIDE ROAD
GREENWICH CT 06830

KG+D listen imagine build
KG+D . ARCHITECTS PC
285 MAIN STREET MOUNT KISCO . NEW YORK . 10549
P:914.666.5900 KGDARCHITECTS.COM

OLA Consulting Engineers
50 Broadway,
Hawthorne, NY 10532
914.747.2800
8 West 38th Street,
Suite 501
New York, NY 10018
646.849.4110
olace.com

CONSTRUCTION DOCUMENTS

NOTE: ALL IDEAS, DESIGNS, ARRANGEMENTS AND PLANS INDICATED OR REPRESENTED BY THIS DRAWING ARE OWNED BY AND ARE THE PROPERTY OF KAEYER, GARMENT, & DAVIDSON ARCHITECTS, PC (KG&D), AND WERE CREATED FOR USE ON THIS PROJECT. NONE OF SUCH IDEAS, DESIGNS, ARRANGEMENTS OR PLANS SHALL BE USED BY OR DISCLOSED TO ANY PURPOSE WHATSOEVER WITHOUT THE WRITTEN PERMISSION OF (KG&D).

WRITTEN DIMENSIONS ON THIS DRAWING SHALL HAVE PRECEDENCE OVER SCALED DIMENSIONS. CONTRACTOR SHALL VERIFY ALL ACTUAL DIMENSIONS AND CONDITIONS ON THE JOB AND THE ARCHITECT MUST BE NOTIFIED OF ANY VARIATIONS FROM DIMENSIONS AND CONDITIONS SHOWN. SHOP DETAILS MUST BE SUBMITTED TO THIS OFFICE FOR APPROVAL BEFORE PROCEEDING WITH FABRICATION.

ALTERATIONS BY ANY PERSON, IN ANY WAY, OF ANY ITEM CONTAINED ON THIS DOCUMENT, UNLESS ACTING UNDER THE DIRECTION OF THE LICENCED ARCHITECT WHOSE PROFESSIONAL SEAL IS AFFIXED HERETO, IS A VIOLATION OF TITLE VI, SECT. 6B § 7b (1) OF NEW YORK STATE LAW.
COPYRIGHT KAEYER, GARMENT • DAVIDSON ARCHITECTS & ENGINEERS, PC
ALL RIGHTS RESERVED.

Professional Seal

| No. | Date | Issue |
|---|---|---|
| 3 | 11/10/20 | CONSTRUCTION DOCUMENTS |
| 2 | 08/12/20 | ISSUE FOR PERMIT |

Sheet Title
ELECTRICAL DETAILS

| Job No. | Date |
|---|---|
| NKGD0185.02 | 08/23/2019 |
| Scale: AS NOTED | Drawn / Checked: NL/KS |

Sheet Number
E701

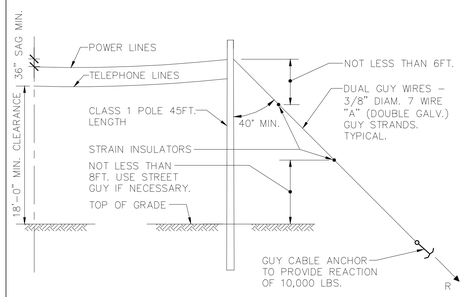


9 TYPICAL CABLE SAG AND POLE DETAIL
SCALE: NONE

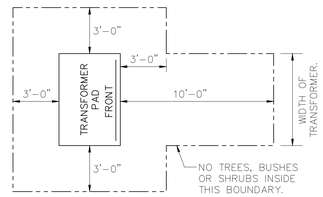


TRANSFORMER CLEARANCE NOTES:

1.) AREA IN FRONT OF DOOR TO BE CLEAR OF ALL ROCKS, STUMPS AND OTHER OBSTRUCTIONS SO THAT THE OPERATOR HAS A SAFE WORKING AREA.
2.) UTILITY COMPANY SHALL HAVE THE RIGHT TO CUT BACK GROWING BUSHES TO WITHIN STATED CLEARANCES.

6 CLEARANCE FOR PLANTING AROUND TRANSFORMER PAD
SCALE: NONE

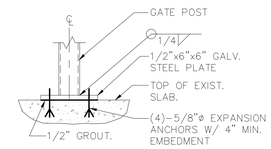


4 FENCE BASE DETAIL
SCALE: NONE

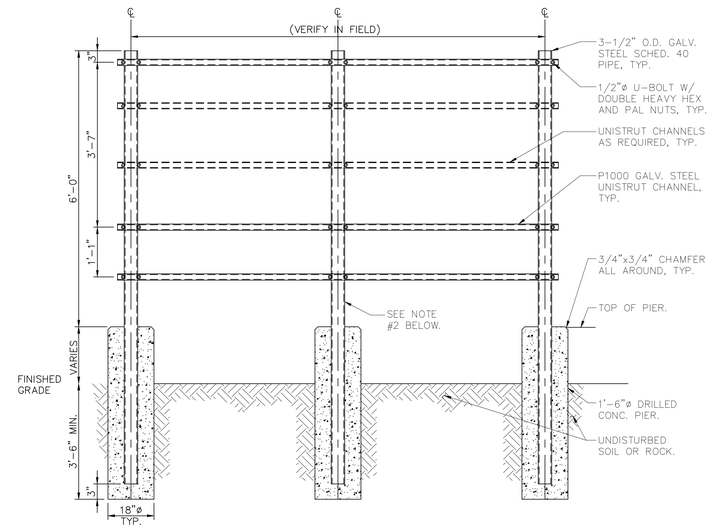


3 EQUIPMENT SUPPORT FRAME DETAIL
SCALE: NONE

NOTES:
1.) DESIGN TYPICAL FOR MOUNTING ALL WALL MOUNTED POWER EQUIPMENT.
2.) CENTER PIER/SUPPORT CAN BE ELIMINATED IF WIDTH OF FRAME IS LESS THAN 9'-0".

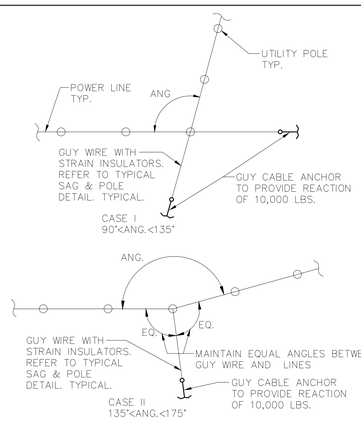


8 TYPICAL GUY WIRE ORIENTATION DETAIL
SCALE: NONE

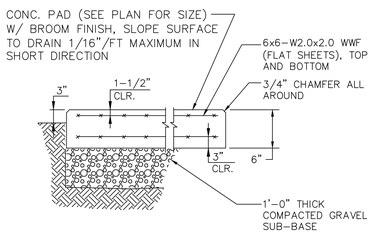


5 CONCRETE PAD DETAIL
N.T.S.

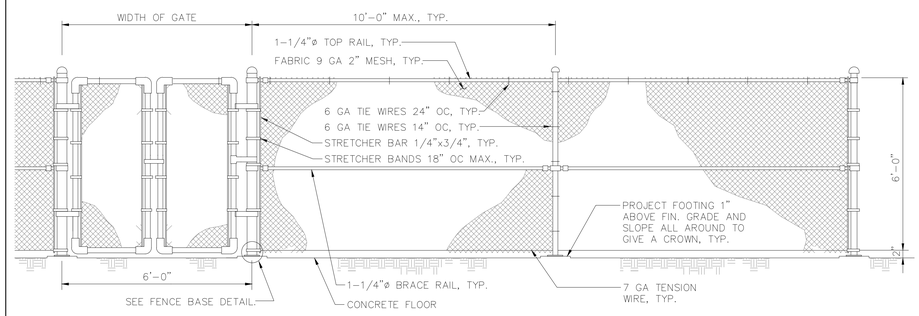


CHAIN LINK FENCE NOTES:

1.) ALL FENCE MATERIAL SHALL BE GALVANIZED STEEL UNLESS OTHERWISE NOTED.
2.) GATE LATCH: 1⅜" O.D. PLUNGER ROD WITH MUSHROOM TYPE CATCH AND LOCK.
3.) PROVIDE PRIVACY SLATS (GREEN).

2 CHAIN LINK FENCE ON CONCRETE SLAB DETAIL
SCALE: NONE

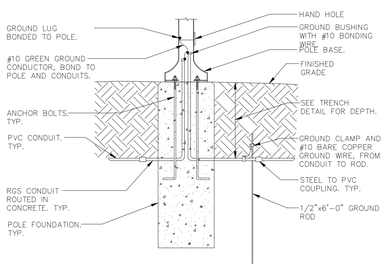


NOTE:

1.) SEE STRUCTURAL DRAWINGS FOR FOUNDATION DETAIL.

7 LIGHT POST ELECTRICAL INSTALLATION DETAIL
SCALE: NONE

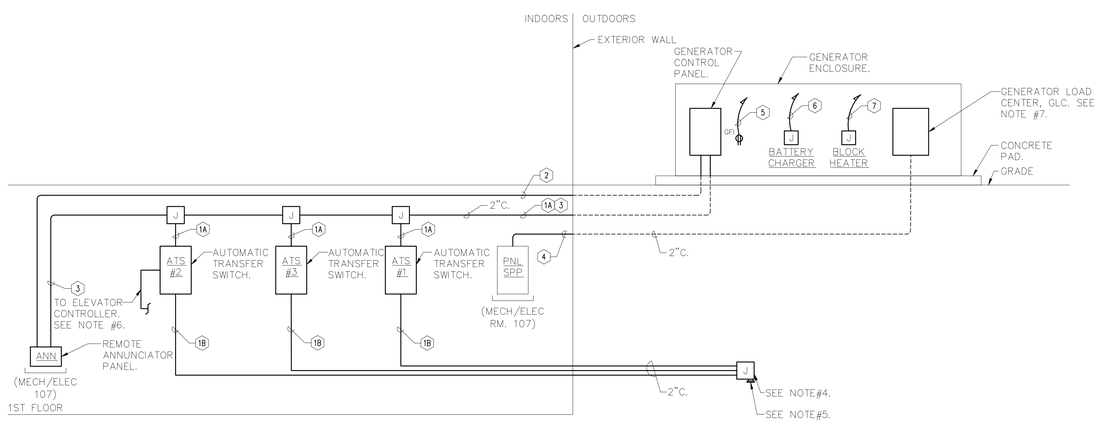


1 GENERATOR CONTROL WIRING RISER DIAGRAM
SCALE: NONE

LEGEND:

1A 4-#12 AWG. START CIRCUIT FROM AUTOMATIC TRANSFER SWITCH TO GENERATOR CONTROL PANEL.

1B 4-#12 AWG. START CIRCUIT FROM AUTOMATIC TRANSFER SWITCH TO JUNCTION BOX FOR TEMPORARY GENERATOR STARTING CIRCUIT CONNECTION.

2 TWISTED SHIELDED PAIR – BELDEN #9841. COMMUNICATIONS CIRCUIT FROM GENERATOR CONTROL PANEL TO REMOTE ANNUNCIATOR.

3 2-#8 AWG. POWER FROM GENERATOR SET BATTERY TO REMOTE ANNUNCIATOR.

4 FEEDER FOR GENERATOR LOAD CENTER. SEE ONE-LINE ON E501 FOR CIRCUIT INFORMATION.

5 GLC-2.

6 GLC-4

7 GLC-6,8

NOTES:

1.) WIRING ON THIS DETAIL SHOWN FOR INFORMATIONAL PURPOSES ONLY. COORDINATE EXACT SIZE, QUANTITY AND TYPE OF WIRING WITH MANUFACTURER'S SUGGESTION FOR EQUIPMENT PURCHASED.

2.) CONDUITS SHALL BE 1" U.O.N.

3.) SEE ONE-LINE DIAGRAM FOR POWER OUTPUT FEEDERS INFORMATION.

4.) NEMA-3R JUNCTION BOX WITH TERMINAL BLOCK FOR TEMPORARY ROLL UP GENERATOR STARTING CIRCUIT CONNECTION.

5.) 1" CONDUIT STUB WITH THREADED CAP ON BOTTOM OF BOX FOR TEMP WIRING.

6.) PROVIDE TRANSFER SIGNALS TO THE ELEVATOR CONTROLLER VIA FORM C CONTACTS IN ATS#2 TO IDENTIFY THAT TRANSFER TO GENERATOR POWER HAS OCCURED AND ANOTHER SIGNAL PRIOR TO TRANSFER BACK TO NORMAL POWER.

7.) GENERATOR TO BE PROVIDED WITH INTEGRAL 60A, 120/208V, 1ø, 3W LOAD CENTER FOR POWER FOR BLOCK HEATER, BATTERY CHARGER, ETC.

GREENWICH HS CARDINAL STADIUM PHASE 1A

GREENWICH PUBLIC SCHOOLS
10 HILLSIDE ROAD
GREENWICH CT 06830

KG+D listen imagine build
KG+D . ARCHITECTS PC
285 MAIN STREET MOUNT KISCO . NEW YORK . 10549
P:914.666.5900 KGDARCHITECTS.COM

OLA Consulting Engineers
50 Broadway,
Hawthorne, NY 10532
914.747.2800
8 West 38th Street,
Suite 501
New York, NY 10018
646.849.4110
olace.com

CONSTRUCTION DOCUMENTS

NOTE: ALL IDEAS, DESIGNS, ARRANGEMENTS AND PLANS INDICATED OR REPRESENTED BY THIS DRAWING ARE OWNED BY AND ARE THE PROPERTY OF KAEYER, GARMENT, & DAVIDSON ARCHITECTS, PC (KG&D), AND WERE CREATED FOR USE ON THIS PROJECT. NONE OF SUCH IDEAS, DESIGNS, ARRANGEMENTS OR PLANS SHALL BE USED BY OR DISCLOSED TO ANY PURPOSE WHATSOEVER WITHOUT THE WRITTEN PERMISSION OF (KG&D).

WRITTEN DIMENSIONS ON THIS DRAWING SHALL HAVE PRECEDENCE OVER SCALED DIMENSIONS. CONTRACTOR SHALL VERIFY ALL ACTUAL DIMENSIONS AND CONDITIONS ON THE JOB AND THE ARCHITECT MUST BE NOTIFIED OF ANY VARIATIONS FROM DIMENSIONS AND CONDITIONS SHOWN. SHOP DETAILS MUST BE SUBMITTED TO THIS OFFICE FOR APPROVAL BEFORE PROCEEDING WITH FABRICATION.

ALTERATIONS BY ANY PERSON, IN ANY WAY, OF ANY ITEM CONTAINED ON THIS DOCUMENT, UNLESS ACTING UNDER THE DIRECTION OF THE LICENCED ARCHITECT WHOSE PROFESSIONAL SEAL IS AFFIXED HERETO, IS A VIOLATION OF TITLE VI, SECT. 6B § 7b LP NEW YORK STATE LAW.
COPYRIGHT KAEYER, GARMENT • DAVIDSON ARCHITECTS & ENGINEERS, PC
ALL RIGHTS RESERVED.

Professional Seal

| No. | Date | Issue |
|---|---|---|
| 3 | 11/10/20 | CONSTRUCTION DOCUMENTS |
| 2 | 08/12/20 | ISSUE FOR PERMIT |

Sheet Title
ELECTRICAL DETAILS

| | |
|---|---|
| Job No. NKGD0185.02 | Date 08/23/2019 |
| Scale AS NOTED | Drawn / Checked NL/KS |

Sheet Number
E702

# GREENWICH HIGH SCHOOL
# CARDINAL STADIUM - HOME GRANDSTAND
# GREENWICH, CONNECTICUT

SEE ATTACHED DRAWINGS / INFORMATION REGARDING THE LOCATION OF THE FIELD LIGHTING. LOCATION OF THE EAST POLE LIGHT IS VERY CLOSE TO THE PROPOSED BLEACHER. LIGHTING IS NOT CENTERED ON THE FIELD, BUT THE BLEACHER SHOULD BE CENTERED ON THE FIELD. NEED TO CONFIRM LOCATION OF POLE LIGHTING

CONFIRM CONDUIT / J-BOXES FOR FIRE ALARM SYSTEM (PER DISCUSSIONS JUNE 1-JUNE 3, 2020)

FENCING AND SUPPORTING RAILS/POSTS SHALL BE BLACK AT NO ADDITIONAL COST (PER EMAILS WITH REECE 10/9/20)

NOTE FROM STRUCTURAL ENGINEER:
The design wind speed and seismic coefficients shown, and used in the calculations (pages 11-12 of calc package) do match the correct umbrella design codes (ASCE7-10 and IBC 2015), however they differ slightly from the amendments for the 2018 Connecticut Building Code (Appendix N), as shown on the structural drawings, and attached here for your reference. The differences are small, and any impact on their design would be negligible. That said, the calcs (computer output) looks thorough, and on first pass seems to include appropriate information.

COLOR SELECTION
SEE RENDERING ATTACHMENT
- SEATING = CARDINAL RED AND ANODIZED/SILVER
- RISER BOARD FACADE = WHITE
- PRESS BOX COLORS TBD

| SHEET TITLE | SHEET NUMBER |
|---|---|
| COVER PAGE | B1 |
| FOOTING LAYOUT | B2 |
| UNDERSTRUCTURE LAYOUT | B3 |
| ELEVATION VIEWS | B4 |
| SECTION VIEW | B5 |
| SECTION VIEW @ PRESS BOX | B6 |
| SECTION VIEW @ PORTAL STAIR | B7 |
| SIGHT LINES | B8 |
| SEATING LAYOUT | B9 |
| EXITS | B10 |
| RAMP SECTIONS | B10.1 |
| PRESS BOX LAYOUT | B11 |
| PRESS BOX ELEVATION VIEWS | B12 |
| PRESS BOX FRAMING PLAN | B13 |
| PRESS BOX DETAILS | B14 |
| PRESS BOX DETAILS | B15 |
| DETAILS | B16 |
| DETAILS | B17 |

10/01/20
STATE OF TEXAS
THOMAS R. SADLER
45440
REGISTERED PROFESSIONAL ENGINEER
Firm Reg. #F-4167
Thomas R. Sadler

REVISION #3: 10/01/20
REVISION #2: 05/29/20
REVISION #1: 05/27/20
HOME

| GENERAL INFORMATION | |
|---|---|
| RISE: | 16.25" w/ .25" SLOPE |
| TREAD: | 32" |
| ROWS: | 18 |
| LENGTH: | 205'- 6" |
| SEAT COUNT: | 2020 |

DATE: 05/05/20
JOB #20101
GREENWICH HIGH SCHOOL
CARDINAL STADIUM - HOME GRANDSTAND
GREENWICH, CONNECTICUT

#20101- GREENWICH, CONNECTICUT

AWS CWF CERTIFIED WELDING FABRICATOR®

AISC CERTIFIED FABRICATOR

GENERAL NOTES & SITE CONDITIONS

1. ALL DIMENSION PERTAINING TO GRANDSTAND AND SITE CONDITIONS/OBJECTS TO BE FIELD VERIFIED OR LOCATED PRIOR TO FABRICATION.

2. AS SPECIFIED AND ILLUSTRATED, ALL ALUMINUM FOOTBOARDS AND WALKING SURFACES ARE MILL FINISH. MILL FINISH ALUMINUM, WHEN EXPOSED TO THE ATMOSPHERE, FORMS A TRANSPARENT, PROTECTIVE OXIDE COATING. MILL FINISH ALUMINUM WILL STAIN WHEN MOISTURE IS TRAPPED AGAINST IT. THIS MOISTURE ENTRAPMENT CAN OCCUR AT SEVERAL STAGES OF MATERIAL DELIVERY, INCLUDING PACKAGING, SHIPPING AND STORAGE. THESE STAINS CAN BE ERRATIC AND VARY IN COLOR FROM LIGHT BRONZE TO BLACK TO CHALKY WHITE. MOISTURE STAINS HAVE NO EFFECT ON THE STRENGTH OF THE MATERIAL. THESE STAINS BECOME LESS NOTICEABLE DURING NORMAL USAGE AND EXPOSURE TO THE SUN'S RADIATION.

PROVIDE PREMIUM TRACTION TREATED TREADS AT ALL WALKING SURFACES PER APPROVAL ON 9/25/20

DESIGN LOADING
TREAD & SEAT AREA 100psf UNIFORM LIVE LOAD.
SEAT (VERTICAL) 120 lbs/lf.
SEAT (HORIZONTAL SWAY) 24lbs/lf PARALLEL AND 10lbs/lf PERPENDICULAR TO SEAT.
TREAD - STAIR AND AISLE TREADS - MINIMUM CONCENTRATED LOAD OF 300LBS ON AN AREA OF 4 SQUARE INCHES
HANDRAIL & GUARDRAIL 50 lbs/lf IN ANY DIRECTION AT THE TOP.
HANDRAIL & GUARDRAIL 200 lbs CONCENTRATED IN ANY DIRECTION.
GUARDS, INFILL COMPONENTS - 50LBS PER SQFT IN HORIZON DIRECTION

Southern® BLEACHER COMPANY
GRANDSTANDS ▪ BLEACHERS ▪ STADIUMS
PO Box One, Graham, Texas 76450
801 Fifth Street.
Phone: 940/549-0733 Fax: 940/549-1365
Established 1946

NOTES
1. STRUCTURAL SHAPES MEET ONE OF THE FOLLOWING ASTM SPECIFICATIONS: A36, A36/A572 GRADE 50, A572 GRADE 50, A529-50, OR A500 GRADE B.
2. WELDS ARE ALL AROUND WITH TYPE ER70S-6 WIRE MIG.
3. ALL STEEL TO BE HOT DIPPED GALVANIZED TO A.S.T.M. A-123-89 ae1.
4. STRUCTURAL BOLTS ARE HOT DIPPED GALV. AND ARE EQUAL TO OR GREATER THAN A-307.
5. NO CONNECTIONS UTILIZING HIGH STRENGTH BOLTS ARE CLASSED AS SLIP CRITICAL.
6. ANODIZED ALUMINUM RAIL IS 1 1/4" NOMINAL PIPE SIZE. (1 5/8" O.D.)
7. SOUTHERN BLEACHER COMPANY AS A MANUFACTURER AND INSTALLER OF GRANDSTAND SEATING IS NOT AUTHORIZED TO CERTIFY PLANS AS ADA COMPLIANT. HOWEVER, TO THE BEST OF OUR KNOWLEDGE THESE PLANS MEET OR EXCEED ADA REQUIREMENTS FOR QUANTITY OF ADA SEATING, ACCESS/EGRESS TO ADA SEATING, & DISPERSAL OF ADA SEATING.

OWNER/REPRESENTATIVE/ARCHITECTURAL REVIEW
PLEASE REVIEW THE DRAWINGS FOR COMPLIANCE WITH YOUR ORDER. PLEASE INDICATE ANY CHANGES OR COMMENTS ON THE DRAWINGS.

[ ] APPROVED
[X] APPROVED AS NOTED
[ ] REVISE AND RE-SUBMIT

BMANGAN - KG+D ARCHITECTS
SIGNATURE
TITLE
10/9/20
DATE

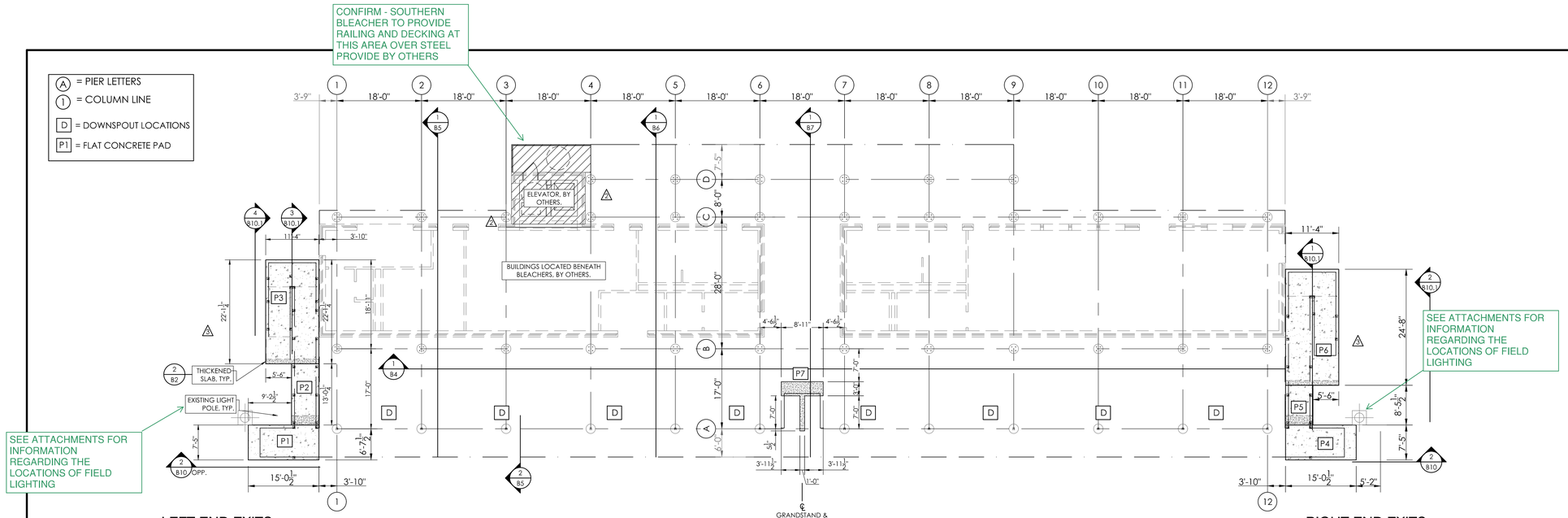


LEFT END EXITS

RIGHT END EXITS

1 B2 FOOTING LAYOUT
SCALE: 3/32"=1'-0"

## FOUNDATION NOTES

1. OWNER/OWNERS REP SHALL VERIFY ALL DIMENSIONS PRIOR TO START OF CONSTRUCTION.
2. MAXIMUM HORIZONTAL TOLERANCE OF ANCHOR BOLT PLACEMENT SHALL BE $\pm\frac{1}{8}$".
3. ALL ANCHOR BOLTS SHALL HAVE A $3\frac{1}{2}$" PROJECTION ($\pm\frac{1}{8}$") ABOVE THE TOP OF PIER ELEVATION, UNLESS SPECIFICALLY NOTED OTHERWISE.
4. THE CONCRETE FOUNDATION CONTRACTOR IS RESPONSIBLE FOR NON SHRINK GROUTING.
5. THE ELEVATION AT THE TOP OF THE CONCRETE PIER IS DESIGNED TO BE 1" BELOW THE BOTTOM OF STEEL ELEVATION. THE TOLERANCE FOR THE BOTTOM OF STEEL ELEVATION IS $\pm\frac{1}{8}$". THE TOP OF CONCRETE ELEVATION MAY BE RAISED TO MATCH THE BOTTOM OF STEEL ELEVATION, AT THE CONCRETE CONTRACTORS DISCRETION. THE CONTRACTOR OF THE CONCRETE FOUNDATIONS IS RESPONSIBLE FOR ANY ADJUSTMENTS REQUIRED.
6. A307 $\frac{3}{4}$"Ø X 21" X 3" RIGHT ANGLE BEND BOLT MAY BE USED IN PLACE OF $\frac{3}{4}$"Ø X 18" HEADED BOLT.

## LOADS DESCRIPTION

NOTE: DESIGN LOADS @ EACH COLUMN LOCATION

| | | |
|---|---|---|
| D = | (DEAD LOAD) | (VERTICAL LOAD - DOWN) |
| L = | (LIVE LOAD) | (VERTICAL LOAD - DOWN) |
| H = | (HORIZONTAL WIND LOAD) | (HORIZONTAL WIND LOAD PERPENDICULAR TO BLEACHER - HORIZONTAL) |
| S = | (HORIZONTAL SWAY) | (HORIZONTAL SWAY LOAD PERPENDICULAR TO BLEACHER - HORIZONTAL) |
| $S_H$= | (LONGITUDINAL SWAY) | (HORIZONTAL SWAY LOAD PARALLEL TO BLEACHER - HORIZONTAL) |
| $S_V$= | (LONGITUDINAL SWAY) | (VERTICAL LOAD - UP OR DOWN DUE TO SWAY PARALLEL TO BLEACHER) |
| $M_Z$= | MOMENT | MOMENT DUE TO SWAY LOAD PARALLEL TO BLEACHER |

GRID LINE 4-9

| | ROW "A" | ROW "B" | ROW "C" | ROW "D" |
|---|---|---|---|---|
| D | 4.2 k | 6.5 k | 11 k | 12 k |
| L | 27 k | 41 k | 38 k | 34 k |
| H | 25.2 k | N/A | N/A | N/A |
| S | 3.3 k | N/A | N/A | N/A |
| $S_H$ | 1.6 k | 7.4 k | 5.2 k | 3.4 k |
| $S_V$ | N/A | 3.9 k | 6.8 k | 6.0 k |
| $M_Z$ | N/A | N/A | 25.3 ft-k | 4.2 ft-k |

GRID LINE 1-3 & 10-12

| | ROW "A" | ROW "B" | ROW "C" |
|---|---|---|---|
| D | 4.2 k | 6.5 k | 5.6 k |
| L | 27 k | 41 k | 28 k |
| H | 17.8 k | N/A | N/A |
| S | 3.3 k | N/A | N/A |
| $S_H$ | 1.6 k | 7.4 k | 5.2 k |
| $S_V$ | N/A | 3.9 k | 6.8 k |
| $M_Z$ | N/A | N/A | 20.2 ft-k |

## FLAT WORK ELEVATIONS

ALL EXIT PADS TO BE POURED LEVEL △1

| CONCRETE PAD # | TOP OF CONCRETE ELEV. |
|---|---|
| P1 | 58.800' |
| P2 | 59.300' |
| P3 | 59.500' |
| P4 | 58.800' |
| P5 | 59.300' |
| P6 | 59.500' |
| P7 | 59.292' |

## FOOTING SCHEDULE

T.O.P. = TOP OF PIER

B.O.S. = BOTTOM OF STEEL △1

| FOOTING # (R = RAMP PIER) | T.O.P. ELEV. | B.O.S. ELEV. |
|---|---|---|
| A ROW | 60.293' | 60.377' |
| B ROW | 60.166' | 60.250' |
| C ROW | 60.166' | 60.250' |
| D ROW | 60.166' | 60.250' |

## ALL CONCRETE FOUNDATIONS BY OTHERS.

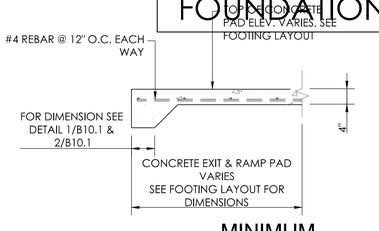


2 B2 MINIMUM EXIT PAD DETAIL
NOT TO SCALE

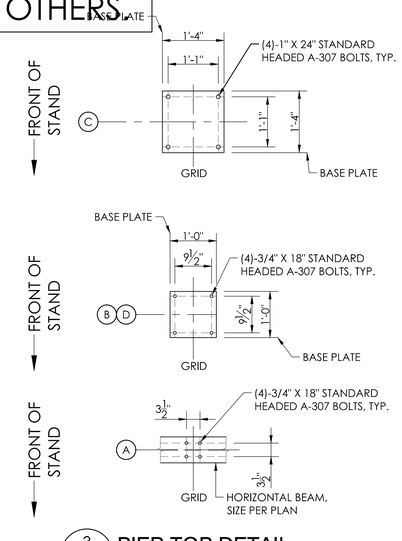


△1 3 B2 PIER TOP DETAIL
NOT TO SCALE


THE ADLER GROUP
STRUCTURAL ENGINEERS - LICENSED IN 34 STATES
500 MAIN STREET, SUITE 700 • FORT WORTH, TEXAS 76102
Ph: (817) 332-0194
Fax: (817) 332-0195
Toll: (800) 900-2373
Email: info@theadlergroup.com

Southern BLEACHER COMPANY
GRANDSTANDS • BLEACHERS • STADIUMS
PO Box One, Graham, Texas 76450
801 Fifth Street,
Phone: 940/549-0733 Fax: 940/549-1365
Established 1946



THIS DRAWING AND ALL INFORMATION THEREIN IS THE PROPERTY OF THE SOUTHERN BLEACHER COMPANY. IT MAY NOT BE COPIED OR REPRODUCED IN WHOLE OR IN PART WITHOUT THE EXPRESS WRITTEN CONSENT OF BOTH ADLER GROUP AND SOUTHERN BLEACHER COMPANY. THE DRAWING IS LOANED AND MUST BE RETURNED UPON REQUEST. THE DRAWING IS PROTECTED UNDER U.S. AND INTERNATIONAL COPYRIGHT LAW.


10/01/20
STATE OF TEXAS
THOMAS R. SADLER
45440
REGISTERED
PROFESSIONAL ENGINEER
Thomas R. Sadler

| REV | BY | DATE | DESCRIPTION |
|---|---|---|---|
| A | ES | 10/01/20 | RAMP LAYOUTS |
| B | ES | 8/20/20 | SHIFTED PIERS @ ELEVATOR |
| C | ES | 8/20/20 | LEFT END RAMP ELEVATIONS |

DATE 05/05/20 DRAWN ES CHECKED EM/RR

JOB NUMBER 20101

SHEET B2 OF B17

TITLE FOOTING LAYOUT
32" TREAD X 18 ROWS / 205'- 6"

PROJECT GREENWICH HIGH SCHOOL
CARDINAL STADIUM
GREENWICH, CONNECTICUT

22" X 34" (1:1x17 = 1/2 indicated scale)

No

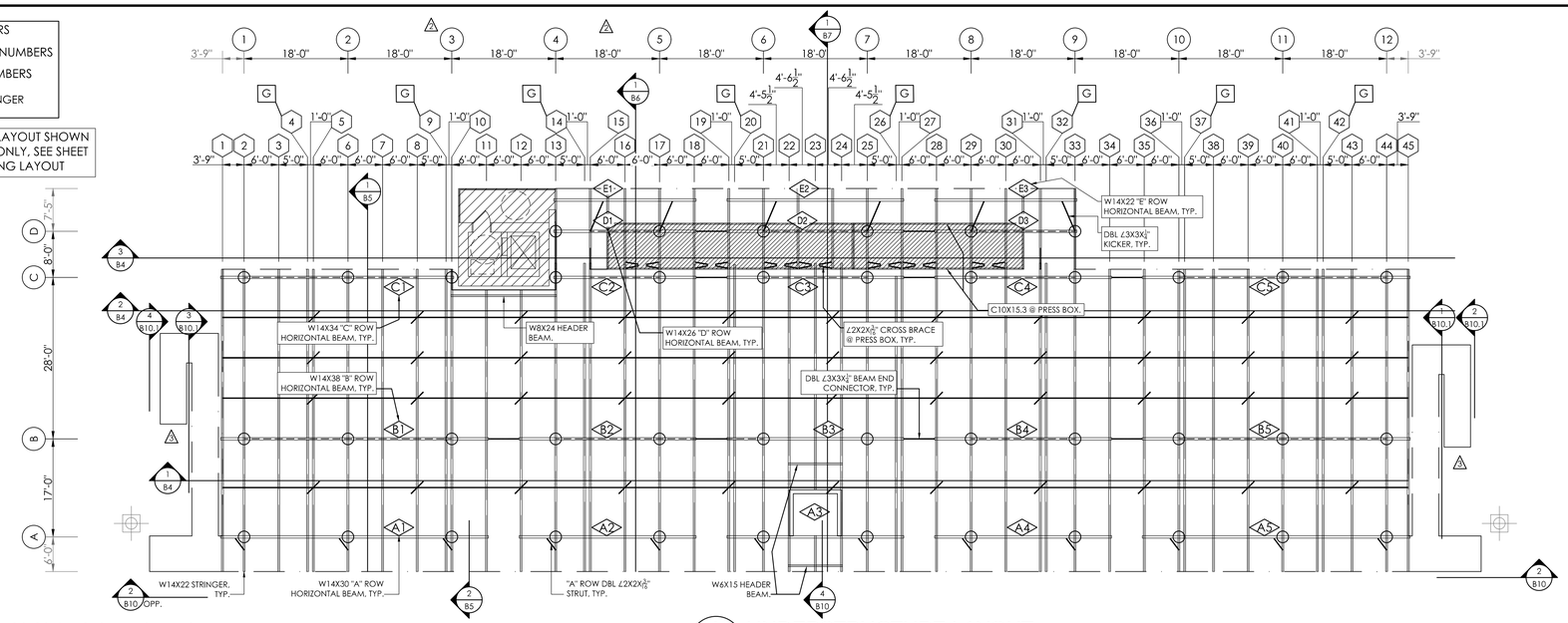


NOTE:
ALL DIMENSIONS SHOWN ON SEAT BRACKET LAYOUT ARE TO/FROM THE WELDED EDGE OF THE BRACKET

1 / B3 UNDERSTRUCTURE LAYOUT
SCALE: 3/32"=1'-0"

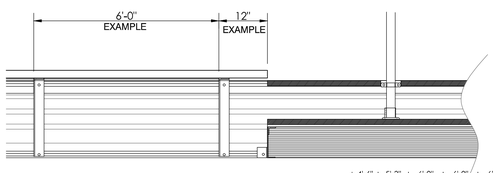


3 / B3 BRACKET SPACE
NOT TO SCALE

2 / B3 SEAT BRACKET LAYOUT
SCALE: 3/32"=1'-0"

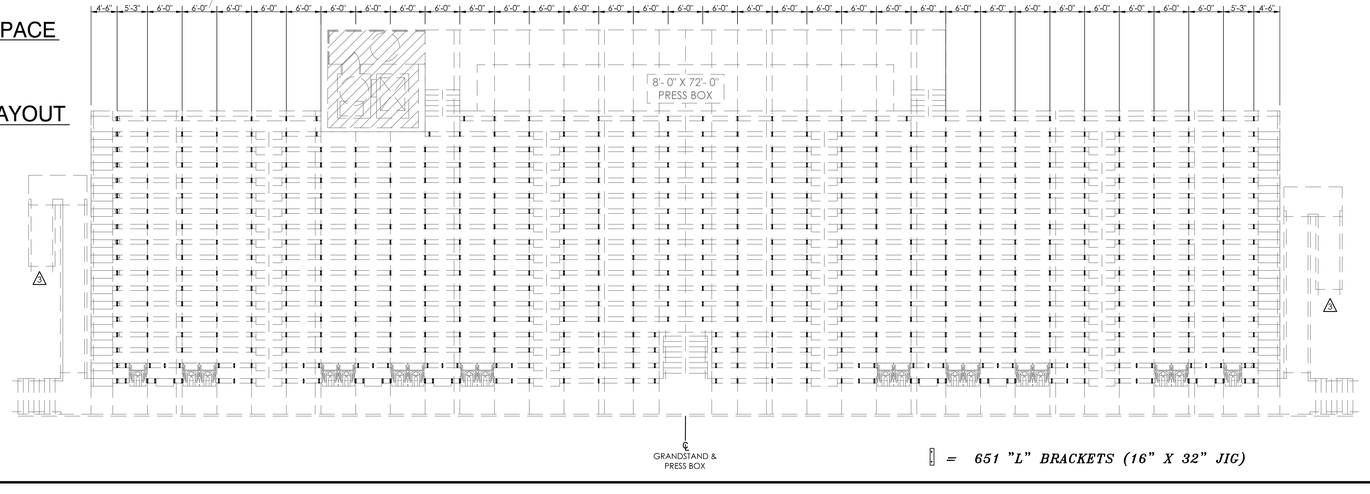


= 651 "L" BRACKETS (16" X 32" JIG)


THE SADLER GROUP
STRUCTURAL ENGINEERS LICENSED IN 45 STATES
500 MAIN STREET, SUITE 700 • FORT WORTH, TEXAS 76102
Southern BLEACHER COMPANY
GRANDSTANDS • BLEACHERS • STADIUMS
PO Box One, Graham, Texas 76450
801 Fifth Street,
Phone: 940/549-0733 Fax: 940/549-1365
Established 1946
Ph: (817) 332-1074
Fax: (817) 336-0335
Toll: (800) 900-7373
Email: sadler@swbell.net



THIS DRAWING AND ALL INFORMATION THEREIN IS THE PROPERTY OF SADLER GROUP AND SOUTHERN BLEACHER COMPANY. IT MAY NOT BE COPIED OR REPRODUCED WITHOUT PRIOR WRITTEN CONSENT OF BOTH SADLER GROUP AND SOUTHERN BLEACHER COMPANY. THE DRAWING IS LOANED AND SUBJECT TO RETURN UPON DEMAND. DRAWING IS PROTECTED UNDER U.S. AND INTERNATIONAL COPYRIGHT LAW.


| REV | BY | DATE | DESCRIPTION |
|---|---|---|---|
| 1 | ES | 10/01/20 | RAMP LAYOUTS |
| 2 | ES | 05/29/20 | SHIFTED PIERS @ ELEVATOR |
| 3 | ES | 05/07/20 | SHIFTED PIERS @ ELEVATOR |

DATE 05/05/20 DRAWN ES CHECKED EM/RR

JOB NUMBER 20101

SHEET B3 OF B17

22" X 34" (11x17 = 1/2 indicated scale)

No

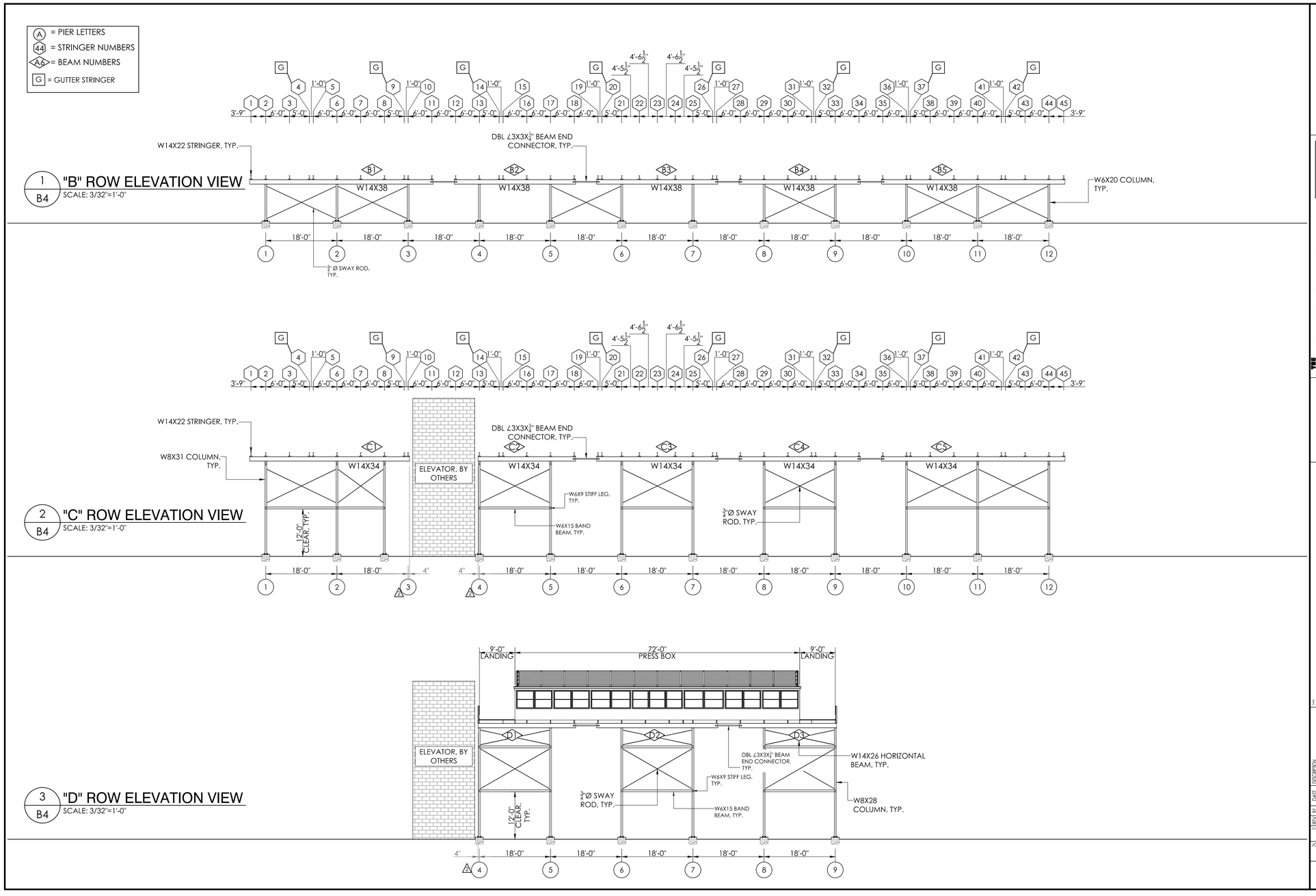


1 B4 "B" ROW ELEVATION VIEW
SCALE: 3/32"=1'-0"

2 B4 "C" ROW ELEVATION VIEW
SCALE: 3/32"=1'-0"

3 B4 "D" ROW ELEVATION VIEW
SCALE: 3/32"=1'-0"


THE SADLER GROUP
STRUCTURAL ENGINEERS LICENSED IN 45 STATES
500 MAIN STREET, SUITE 700 • FORT WORTH, TEXAS 76102
Ph: (817) 332-1074
Fax: (817) 336-0155
Toll: (800) 900-7373
Email: sadler@swbellnet
Southern BLEACHER COMPANY
GRANDSTANDS • BLEACHERS • STADIUMS
PO Box One, Graham, Texas 76450
801 Fifth Street
Phone: 940/549-0733 Fax: 940/549-1365
Established 1946



THIS DRAWING AND ALL INFORMATION THEREIN IS THE PROPERTY OF SADLER GROUP AND SOUTHERN BLEACHER COMPANY. IT MAY NOT BE COPIED OR REPRODUCED WITHOUT PRIOR WRITTEN CONSENT OF BOTH SADLER GROUP AND SOUTHERN BLEACHER COMPANY. THE DRAWING IS LOANED AND SUBJECT TO RETURN UPON DEMAND. DRAWING IS PROTECTED UNDER U.S. AND INTERNATIONAL COPYRIGHT LAW.


TITLE: ELEVATION VIEWS

TITLE: GREENWICH HIGH SCHOOL
CARDINAL STADIUM
GREENWICH, CONNECTICUT

| REV | BY | DATE | DESCRIPTION |
|---|---|---|---|
| 3 | ES | 10/01/20 | NONE THIS SHEET |
| 2 | ES | 05/29/20 | SHIFTED PIERS @ ELEVATOR |
| 1 | ES | 05/07/20 | SHIFTED PIERS @ ELEVATOR |

| DATE | DRAWN | CHECKED |
|---|---|---|
| 05/05/20 | ES | EM/RR |

JOB NUMBER: 20101

SHEET: B4 OF: B17

22" X 34" (11x17 = 1/2 indicated scale)

No

ITEM DESCRIPTION

1. W 14 X 38 (50 ksi) "B" ROW H-BEAM
2. W 14 X 34 (50 ksi) "C" ROW H-BEAM
3. W 14 X 30 (50 ksi) "A" ROW H-BEAM
4. W 14 X 26 (50 ksi) "D" ROW H-BEAM
5. W 14 X 22 (50 ksi) GRANDSTAND STINGER "E" ROW H-BEAM
6. W 10 X 12 (50 ksi) PRESS BOX BASE & BOOT
7. W 8 X 31 (50 ksi) "C" ROW COLUMN
8. W 8 X 28 (50 ksi) "D" ROW COLUMN
9. W 6 X 20 (50 ksi) "B" ROW COLUMN
10. W 6 X 15 (50 ksi) BANDS
11. W 6 X 9 (50 ksi) STIFF LEGS
12. L 3 X 3 X 1/4 (50 ksi)
13. L 2 X 2 X 3/16 (50 ksi)
14. L 2 X 1 1/2 X 3/16 (50 ksi)
15. L 1 1/2 X 1 1/2 X 3/16 (50 ksi)
16. 14" X14" X 1" PLATE
17. 12 X 12 X 5/8 PLATE
18. 6 X 8 X 3/8 PLATE
19. 3/4 X REQ'D LENGTH SWAY ROD (50 ksi)
20. 1" Ø X 24" A307 HEADED BOLTS
21. 3/4 X 18 ANCHOR BOLT W/2 HEX HEAD NUTS & FLAT WASHER
22. BLACK VINYL COATED CHAINLINK FENCE
23. ANODIZED ALUMINUM RAIL
24. 5 X 3/8 GUSSET PLATE (A36)
25. 3 X 3/8 GUSSET PLATE (A36)
26. 2 X 1/4 GUSSET PLATE (A36)

DESIGN LOADING
TREAD & SEAT AREA 100psf UNIFORM LIVE LOAD.
SEAT (VERTICAL) 120 lbs/ft.
SEAT (HORIZONTAL SWAY) 24lbs/ft PARALLEL AND 10lbs/ft PERPENDICULAR TO SEAT.
TREAD - STAIR AND AISLE TREADS - MINIMUM CONCENTRATED LOAD OF 300LBS ON AN AREA OF 4 SQUARE INCHES
HANDRAIL & GUARDRAIL 50 lbs/ft IN ANY DIRECTION AT THE TOP.
HANDRAIL & GUARDRAIL 200 lbs CONCENTRATED IN ANY DIRECTION.
GUARDS, INFILL COMPONENTS - 50LBS PER SQ.FT. IN HORIZONTAL DIRECTION

DESIGN CRITERIA

SNOW LOAD: 30 P.S.F.
WIND SPEED: 126 M.P.H. (3 SEC. GUST) EXPOSURE - C
SEISMIC DESIGN CATEGORY: B
SPECTRAL RESPONSE COEFFICIENT ; $S_{DS}$ = 0.274
SPECTRAL RESPONSE COEFFICIENT ; $S_{DI}$ = 0.112
SITE CLASS: D

NOTES

1. ALL STRUCTURAL AND MISCELLANEOUS STEEL SHALL CONFORM TO THE FOLLOWING A.I.S.C. STANDARDS
   PLATE UP TO 1/2" THICK = A36 Gr. 36 Fy = 36 ksi Min.
   PLATE 5/8 and greater = 572 Gr 50, Fy = 50 ksi Min.
   ANGLE = A36/A36M GRADE 50
   WIDE FLANGE = A992 Fy=50 ksi
   CHANNEL = A36/A36M GRADE 50
   ROD = A36/A529 GRADE 50
   TUBE = A500 GRADE "B" 46 ksi
2. WELDS ARE ALL AROUND WITH TYPE ER70S-6 WIRE MIG.
3. ALL STEEL TO BE HOT DIPPED GALVANIZED TO A.S.T.M. A-123-89 ae1.
4. STRUCTURAL BOLTS ARE HOT DIPPED GALV. AND ARE EQUAL TO OR GREATER THAN A-307.
5. NO CONNECTIONS UTILIZING HIGH STRENGTH BOLTS ARE CLASSED AS SLIP CRITICAL.
6. ANODIZED ALUMINUM RAIL IS 1 1/4" NOMINAL PIPE SIZE. (1 5/8" O.D.)
7. SOUTHERN BLEACHER COMPANY AS A MANUFACTURER AND INSTALLER OF GRANDSTAND SEATING IS NOT AUTHORIZED TO CERTIFY PLANS AS ADA COMPLIANT. HOWEVER, TO THE BEST OF OUR KNOWLEDGE THESE PLANS MEET OR EXCEED ADA REQUIREMENTS FOR QUANTITY OF ADA SEATING, ACCESS/EGRESS TO ADA SEATING, & DISPERSAL OF ADA SEATING.
8. ALL FIELD CONNECTIONS ARE NON-SLIP CRITICAL U.N.O. ALL CONNECTIONS ARE DESIGNED TO UTILIZE A307 BOLTS. IT IS ACCEPTABLE TO USE A325N BOLTS IN LIEU OF THE A307 BOLTS. THE INSTALLATION OF THESE BOLTS ARE TO BE TIGHTENED A SNUG TIGHT CONDITION AS SPECIFIED BY AISC.

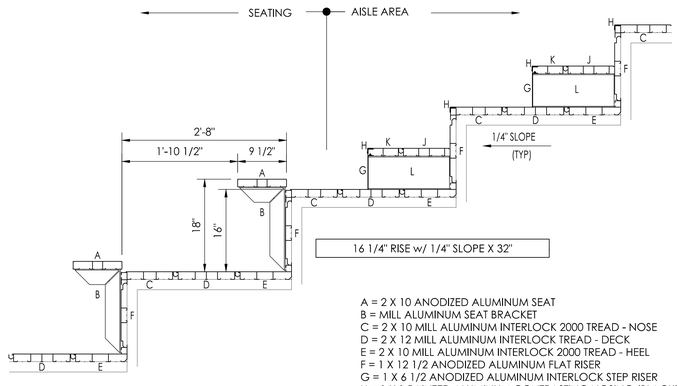


NOTE: ALL WALKING SURFACES TO BE TRACTION COATED (ASH GRAY) WITH THE EXCEPTION OF THE "STARTER RAMP"

A = 2 X 10 ANODIZED ALUMINUM SEAT
B = MILL ALUMINUM SEAT BRACKET
C = 2 X 10 MILL ALUMINUM INTERLOCK 2000 TREAD - NOSE
D = 2 X 12 MILL ALUMINUM INTERLOCK TREAD - DECK
E = 2 X 10 MILL ALUMINUM INTERLOCK 2000 TREAD - HEEL
F = 1 X 12 1/2 ANODIZED ALUMINUM FLAT RISER
G = 1 X 6 1/2 ANODIZED ALUMINUM INTERLOCK STEP RISER
H = 1 X 1 PAINTED ALUMINUM CONTRASTING NOSING (BLACK)
J = 2 X 9 MILL ALUM. INTERLOCK HALFSTEP - DECK
K = 2 X 7 MILL ALUM. INTERLOCK HALFSTEP - NOSE
L = 6 1/2" MILL ALUMINUM HALFSTEP BRACKET

3 / B5 PLANK ARRANGEMENT
SCALE: 1" = 1'- 0" 16" X 32"

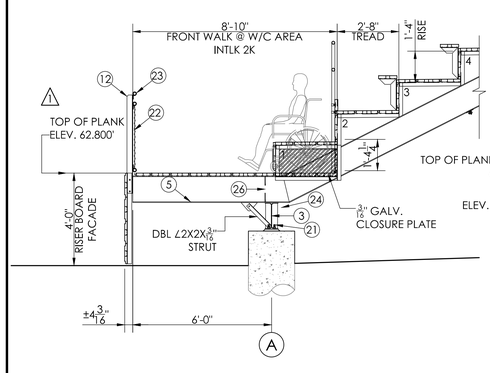


2 / B5 SECTION VIEW @ W/C AREA
SCALE: 3/8"=1'-0"

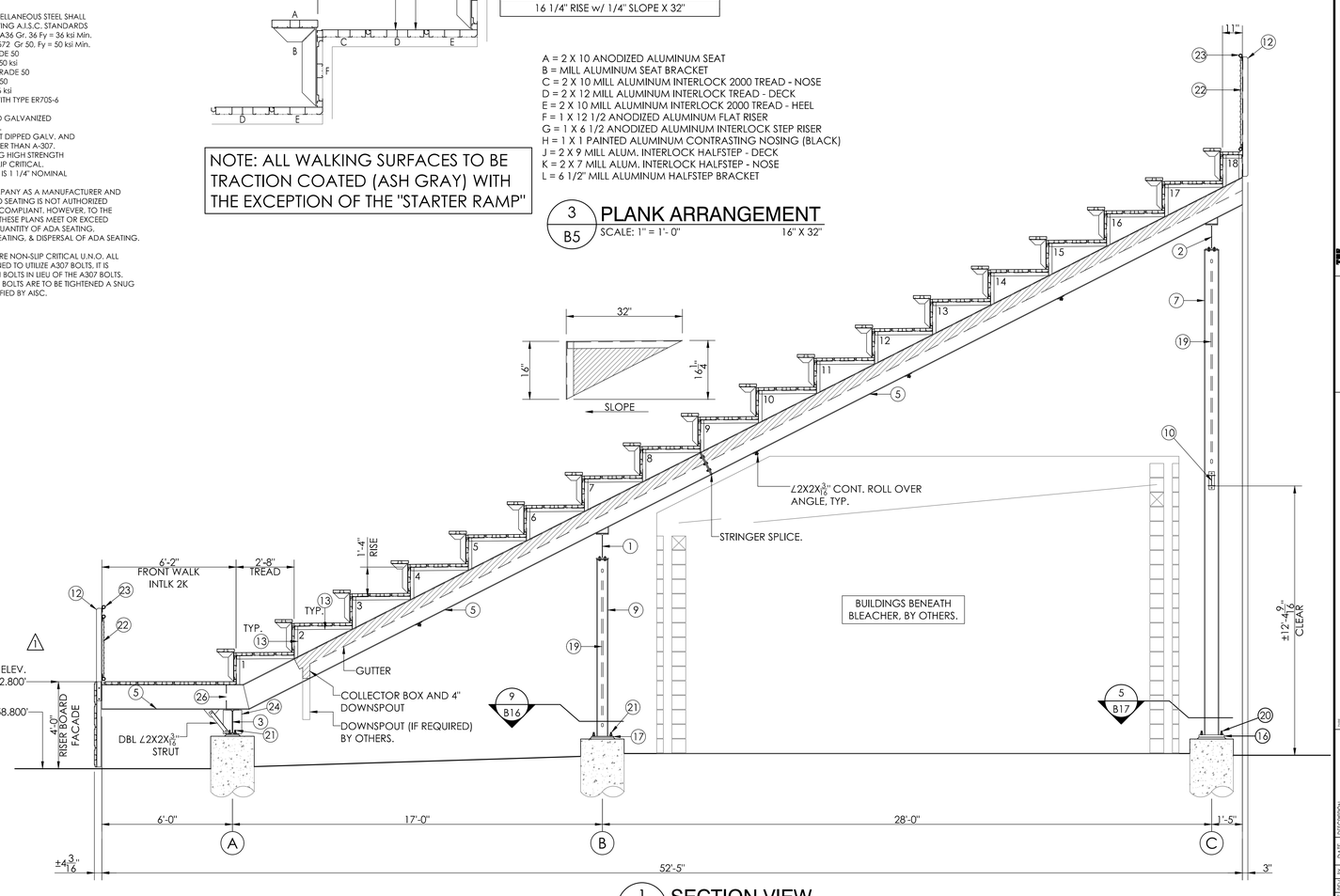


1 / B5 SECTION VIEW
SCALE: 3/8"=1'-0"


THE ADLER GROUP
STRUCTURAL ENGINEERS - LICENSED IN 44 STATES
500 MAIN STREET, SUITE 700 • FORT WORTH, TEXAS 76102

Ph: (817) 332-0194
Fax: (817) 332-0195
Toll: (800) 900-7373
Email: tag@theadlergroup.com

Southern BLEACHER COMPANY
GRANDSTANDS • BLEACHERS • STADIUMS
PO Box One, Graham, Texas 76450
Phone: 940/549-0733 Fax: 940/549-1365
801 Fifth Street.
Established 1946



THIS DRAWING AND ALL INFORMATION THEREIN IS THE PROPERTY OF SOUTHERN BLEACHER COMPANY. IT MAY NOT BE REPRODUCED OR DISTRIBUTED WITHOUT THE CONSENT OF SOUTHERN BLEACHER COMPANY. THE DRAWING IS LOANED AND MUST BE RETURNED UPON REQUEST. THE DRAWING IS PROTECTED UNDER U.S. AND INTERNATIONAL COPYRIGHT LAW.


TITLE: SECTION VIEW
16.25" RISE w/ .25" SLOPE X 32" TREAD X 18 ROWS

GREENWICH HIGH SCHOOL
CARDINAL STADIUM
GREENWICH, CONNECTICUT

| REV | BY | DATE | DESCRIPTION |
|---|---|---|---|
| | | | |
| | | | |
| | | | |

ITEM DESCRIPTION

1. W 14 X 38 (50 ksi) "B" ROW H-BEAM
2. W 14 X 34 (50 ksi) "C" ROW H-BEAM
3. W 14 X 30 (50 ksi) "A" ROW H-BEAM
4. W 14 X 26 (50 ksi) "D" ROW H-BEAM
5. W 14 X 22 (50 ksi) GRANDSTAND STINGER "E" ROW H-BEAM
6. W 10 X 12 (50 ksi) PRESS BOX BASE & BOOT
7. W 8 X 31 (50 ksi) "C" ROW COLUMN
8. W 8 X 28 (50 ksi) "D" ROW COLUMN
9. W 6 X 20 (50 ksi) "B" ROW COLUMN
10. W 6 X 15 (50 ksi) BANDS
11. W 6 X 9 (50 ksi) STIFF LEGS
12. L 3 X 3 X 1/4 (50 ksi)
13. L 2 X 2 X 3/16 (50 ksi)
14. L 2 X 1 1/2 X 3/16 (50 ksi)
15. L 1 1/2 X 1 1/2 X 3/16 (50 ksi)
16. 14" X14" X 1" PLATE
17. 12 X 12 X 5/8 PLATE
18. 6 X 8 X 3/8 PLATE
19. 3/4 X REQ'D LENGTH SWAY ROD (50 ksi)
20. 1" Ø X 24" A307 HEADED BOLTS
21. 3/4 X 18 ANCHOR BOLT W/2 HEX HEAD NUTS & FLAT WASHER
22. BLACK VINYL COATED CHAINLINK FENCE
23. ANODIZED ALUMINUM RAIL
24. 5 X 3/8 GUSSET PLATE (A36)
25. 3 X 3/8 GUSSET PLATE (A36)
26. 2 X 1/4 GUSSET PLATE (A36)

DESIGN LOADING
TREAD & SEAT AREA 100psf UNIFORM LIVE LOAD.
SEAT (VERTICAL) 120 lbs/ft.
SEAT (HORIZONTAL SWAY) 24lbs/ft PARALLEL AND 10lbs/ft PERPENDICULAR TO SEAT.
TREAD - STAIR AND AISLE TREADS - MINIMUM CONCENTRATED LOAD OF 300LBS ON AN AREA OF 4 SQUARE INCHES
HANDRAIL & GUARDRAIL 50 lbs/ft IN ANY DIRECTION AT THE TOP.
HANDRAIL & GUARDRAIL 200 lbs CONCENTRATED IN ANY DIRECTION.
GUARDS, INFILL COMPONENTS - 50LBS PER SQ.FT. IN HORIZONTAL DIRECTION

DESIGN CRITERIA
SNOW LOAD: 30 P.S.F.
WIND SPEED: 126 M.P.H. (3 SEC. GUST) EXPOSURE - C
SEISMIC DESIGN CATEGORY: B
SPECTRAL RESPONSE COEFFICIENT ; $S_{DS}$ = 0.274
SPECTRAL RESPONSE COEFFICIENT ; $S_{D1}$ = 0.112
SITE CLASS: D

NOTES
1. ALL STRUCTURAL AND MISCELLANEOUS STEEL SHALL CONFORM TO THE FOLLOWING A.I.S.C. STANDARDS
   PLATE UP TO 1/2" THICK = A36 Gr. 36 Fy = 36 ksi Min.
   PLATE 5/8 and greater = 572 Gr 50, Fy = 50 ksi Min.
   ANGLE = A36/A36M GRADE 50
   WIDE FLANGE = A992 Fy=50 ksi
   CHANNEL = A36/A36M GRADE 50
   ROD = A36/A529 GRADE 50
   TUBE = A500 GRADE "B" 46 ksi
2. WELDS ARE ALL AROUND WITH TYPE ER70S-6 WIRE MIG.
3. ALL STEEL TO BE HOT DIPPED GALVANIZED TO A.S.T.M. A-123-89 ae1.
4. STRUCTURAL BOLTS ARE HOT DIPPED GALV. AND ARE EQUAL TO OR GREATER THAN A-307.
5. NO CONNECTIONS UTILIZING HIGH STRENGTH BOLTS ARE CLASSED AS SLIP CRITICAL.
6. ANODIZED ALUMINUM RAIL IS 1 1/4" NOMINAL PIPE SIZE. (1 5/8" O.D.)
7. SOUTHERN BLEACHER COMPANY AS A MANUFACTURER AND INSTALLER OF GRANDSTAND SEATING IS NOT AUTHORIZED TO CERTIFY PLANS AS ADA COMPLIANT. HOWEVER, TO THE BEST OF OUR KNOWLEDGE THESE PLANS MEET OR EXCEED ADA REQUIREMENTS FOR QUANTITY OF ADA SEATING, ACCESS/EGRESS TO ADA SEATING, & DISPERSAL OF ADA SEATING.
8. ALL FIELD CONNECTIONS ARE NON-SLIP CRITICAL U.N.O. ALL CONNECTIONS ARE DESIGNED TO UTILIZE A307 BOLTS. IT IS ACCEPTABLE TO USE A325N BOLTS IN LIEU OF THE A307 BOLTS. THE INSTALLATION OF THESE BOLTS ARE TO BE TIGHTENED A SNUG TIGHT CONDITION AS SPECIFIED BY AISC.




2 / B6 SIDE RAILING @ END AISLE
NOT TO SCALE

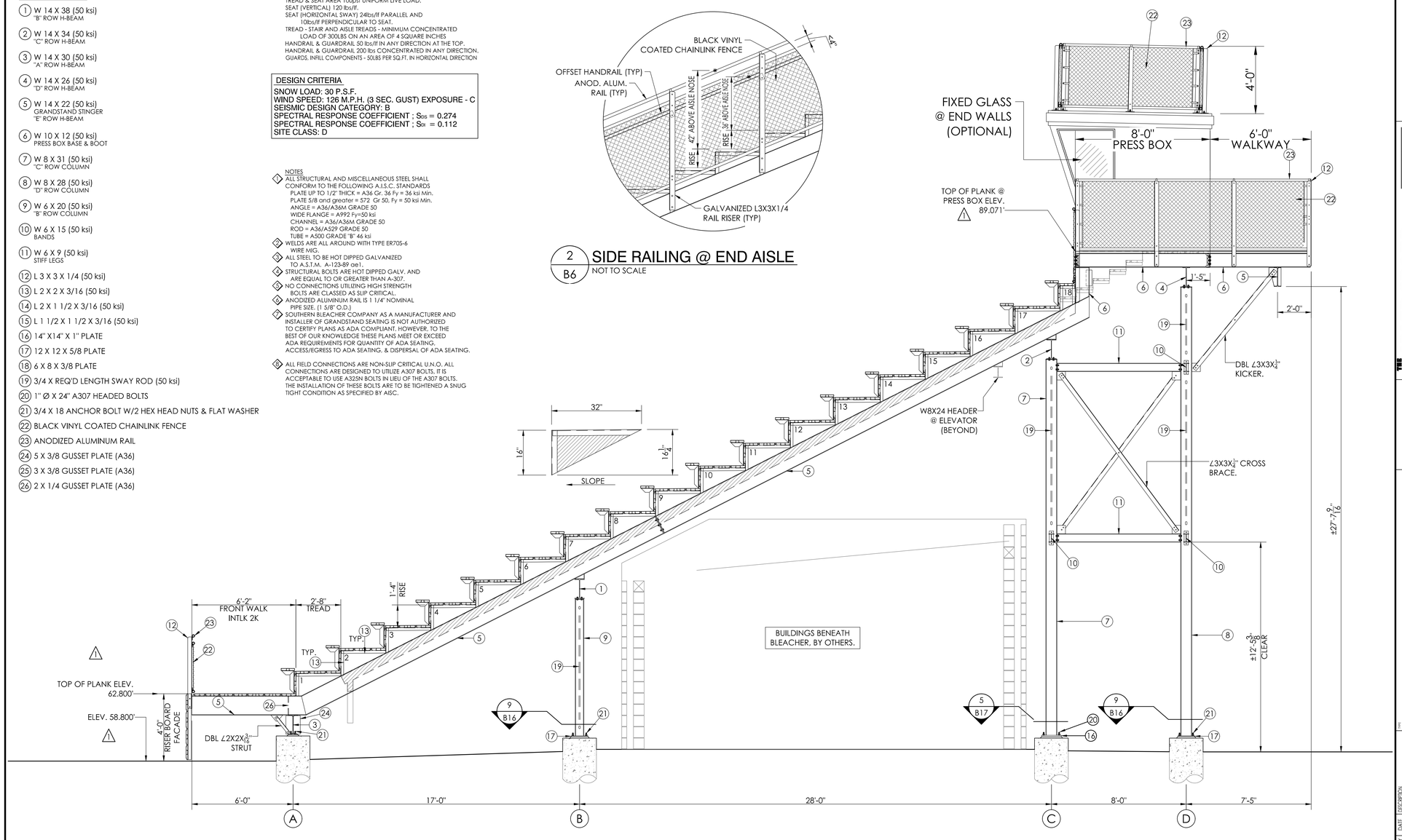


1 / B6 SECTION VIEW @ PRESS BOX
SCALE: 3/8"=1'-0"


THE ADLER GROUP
STRUCTURAL ENGINEERS • LICENSED IN 44 STATES
500 MAIN STREET, SUITE 700 • FORT WORTH, TEXAS 76102
Ph: (817) 332-0174
Fax: (817) 332-0175
Toll: (800) 900-2373
Email: tag@theadlergroup.com

Southern BLEACHER COMPANY
GRANDSTANDS • BLEACHERS • STADIUMS
PO Box One, Graham, Texas 76450
Phone: 940/549-0733 Fax: 940/549-1365
801 Fifth Street.
Established 1946



THIS DRAWING AND ALL INFORMATION THEREIN IS THE PROPERTY OF SOUTHERN BLEACHER COMPANY. IT MAY NOT BE COPIED OR REPRODUCED WITHOUT THE CONSENT OF SOUTHERN BLEACHER COMPANY. THE DRAWING IS LOANED TO THE OWNER FOR USE WITH THE BLEACHERS. DRAWING IS PROTECTED UNDER U.S. AND INTERNATIONAL COPYRIGHT LAW.


TITLE: SECTION VIEW @ PRESS BOX
16.25" RISE w/ .25" SLOPE X 32" TREAD X 18 ROWS

GREENWICH HIGH SCHOOL
CARDINAL STADIUM
GREENWICH, CONNECTICUT

| REV. BY | DATE | DESCRIPTION |
|---|---|---|
| ES | 10/01/20 | NONE THIS SHEET |
| ES | 10/29/20 | NONE THIS SHEET |
| ES | 02/02/21 | TOP OF PLANK ELEVATIONS |

DATE: 05/05/20 | DRAWN: ES | REVIEWED: EM/RR
JOB NUMBER: 20101
SHEET: B6 OF B17

22" X 34" (11X17 = 1/2 indicated scale)

No

ITEM DESCRIPTION

1. W 14 X 38 (50 ksi) "B" ROW H-BEAM
2. W 14 X 34 (50 ksi) "C" ROW H-BEAM
3. W 14 X 30 (50 ksi) "A" ROW H-BEAM
4. W 14 X 26 (50 ksi) "D" ROW H-BEAM
5. W 14 X 22 (50 ksi) GRANDSTAND STINGER "E" ROW H-BEAM
6. W 10 X 12 (50 ksi) PRESS BOX BASE & BOOT
7. W 8 X 31 (50 ksi) "C" ROW COLUMN
8. W 8 X 28 (50 ksi) "D" ROW COLUMN
9. W 6 X 20 (50 ksi) "B" ROW COLUMN
10. W 6 X 15 (50 ksi) BANDS
11. W 6 X 9 (50 ksi) STIFF LEGS
12. L 3 X 3 X 1/4 (50 ksi)
13. L 2 X 2 X 3/16 (50 ksi)
14. L 2 X 1 1/2 X 3/16 (50 ksi)
15. L 1 1/2 X 1 1/2 X 3/16 (50 ksi)
16. 14" X14" X 1" PLATE
17. 12 X 12 X 5/8 PLATE
18. 6 X 8 X 3/8 PLATE
19. 3/4 X REQ'D LENGTH SWAY ROD (50 ksi)
20. 1" Ø X 24" A307 HEADED BOLTS
21. 3/4 X 18 ANCHOR BOLT W/2 HEX HEAD NUTS & FLAT WASHER
22. BLACK VINYL COATED CHAINLINK FENCE
23. ANODIZED ALUMINUM RAIL
24. 5 X 3/8 GUSSET PLATE (A36)
25. 3 X 3/8 GUSSET PLATE (A36)
26. 2 X 1/4 GUSSET PLATE (A36)

DESIGN LOADING
TREAD & SEAT AREA 100psf UNIFORM LIVE LOAD.
SEAT (VERTICAL) 120 lbs/ft.
SEAT (HORIZONTAL SWAY) 24lbs/ft PARALLEL AND 10lbs/ft PERPENDICULAR TO SEAT.
TREAD - STAIR AND AISLE TREADS - MINIMUM CONCENTRATED LOAD OF 300LBS ON AN AREA OF 4 SQUARE INCHES
HANDRAIL & GUARDRAIL 50 lbs/ft IN ANY DIRECTION AT THE TOP.
HANDRAIL & GUARDRAIL 200 lbs CONCENTRATED IN ANY DIRECTION.
GUARDS, INFILL COMPONENTS - 50LBS PER SQ.FT. IN HORIZONTAL DIRECTION

DESIGN CRITERIA
SNOW LOAD: 30 P.S.F.
WIND SPEED: 126 M.P.H. (3 SEC. GUST) EXPOSURE - C
SEISMIC DESIGN CATEGORY: B
SPECTRAL RESPONSE COEFFICIENT ; $S_{DS}$ = 0.274
SPECTRAL RESPONSE COEFFICIENT ; $S_{D1}$ = 0.112
SITE CLASS: D

NOTES
1. ALL STRUCTURAL AND MISCELLANEOUS STEEL SHALL CONFORM TO THE FOLLOWING A.I.S.C. STANDARDS
   PLATE UP TO 1/2" THICK = A36 Gr. 36 Fy = 36 ksi Min.
   PLATE 5/8 and greater = 572 Gr 50, Fy = 50 ksi Min.
   ANGLE = A36/A36M GRADE 50
   WIDE FLANGE = A992 Fy=50 ksi
   CHANNEL = A36/A36M GRADE 50
   ROD = A36/A529 GRADE 50
   TUBE = A500 GRADE "B" 46 ksi
2. WELDS ARE ALL AROUND WITH TYPE ER70S-6 WIRE MIG.
3. ALL STEEL TO BE HOT DIPPED GALVANIZED TO A.S.T.M. A-123-89 ae1.
4. STRUCTURAL BOLTS ARE HOT DIPPED GALV. AND ARE EQUAL TO OR GREATER THAN A-307.
5. NO CONNECTIONS UTILIZING HIGH STRENGTH BOLTS ARE CLASSED AS SLIP CRITICAL.
6. ANODIZED ALUMINUM RAIL IS 1 1/4" NOMINAL PIPE SIZE. (1 5/8" O.D.)
7. SOUTHERN BLEACHER COMPANY AS A MANUFACTURER AND INSTALLER OF GRANDSTAND SEATING IS NOT AUTHORIZED TO CERTIFY PLANS AS ADA COMPLIANT, HOWEVER, TO THE BEST OF OUR KNOWLEDGE THESE PLANS MEET OR EXCEED ADA REQUIREMENTS FOR QUANTITY OF ADA SEATING, ACCESS/EGRESS TO ADA SEATING, & DISPERSAL OF ADA SEATING.
8. ALL FIELD CONNECTIONS ARE NON-SLIP CRITICAL U.N.O. ALL CONNECTIONS ARE DESIGNED TO UTILIZE A307 BOLTS. IT IS ACCEPTABLE TO USE A325N BOLTS IN LIEU OF THE A307 BOLTS. THE INSTALLATION OF THESE BOLTS ARE TO BE TIGHTENED A SNUG TIGHT CONDITION AS SPECIFIED BY AISC.

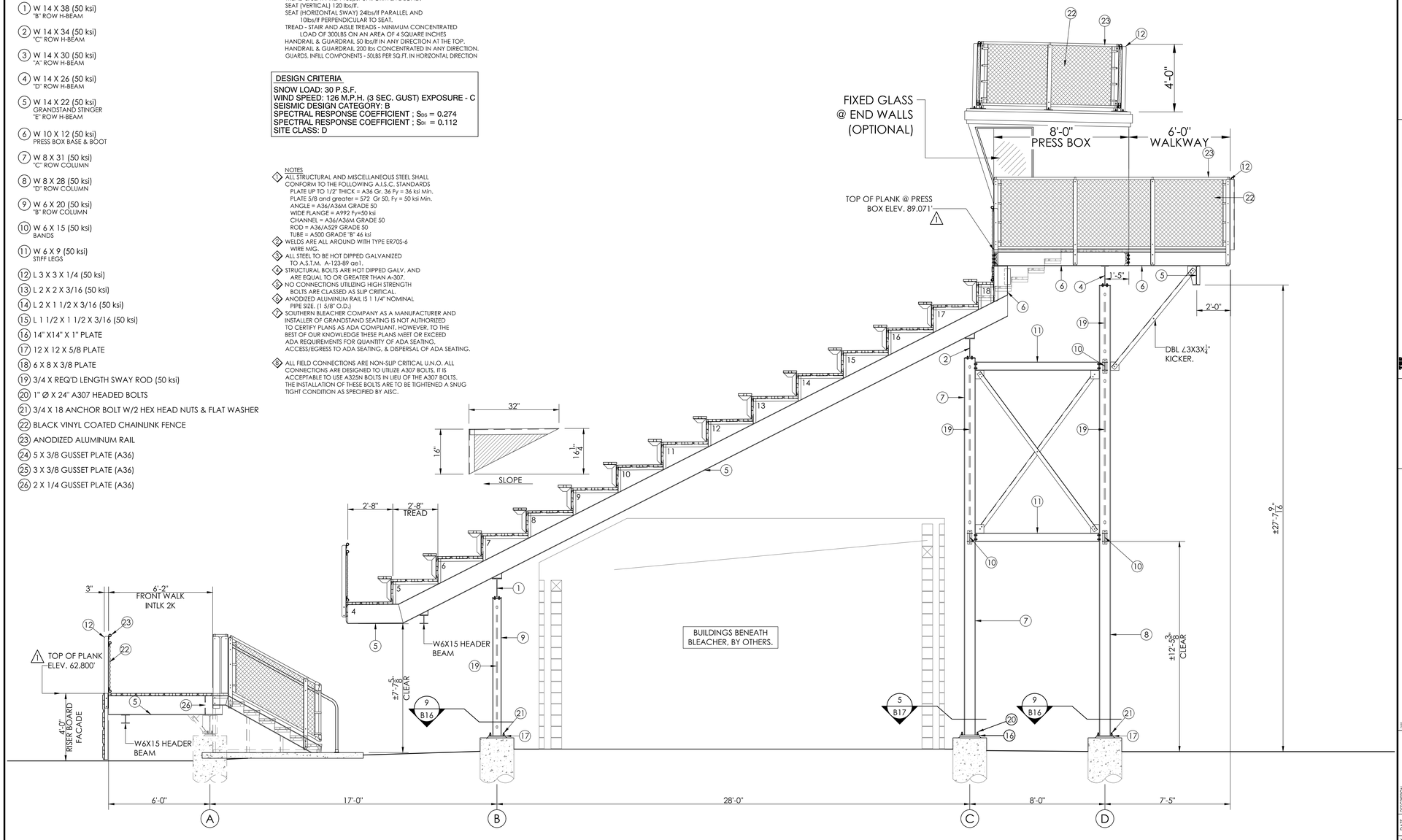


1 / B7 SECTION VIEW @ PORTAL STAIR
SCALE: 3/8"=1'-0"


THE ADLER GROUP
STRUCTURAL ENGINEERS • LICENSED IN 44 STATES
500 MAIN STREET, SUITE 700 • FORT WORTH, TEXAS 76102
Ph: (817) 332-0194
Fax: (817) 332-0195
Toll: (800) 800-7373
Email: info@theadlergroup.com

Southern BLEACHER COMPANY®
PO Box One, Graham, Texas 76450
Phone: 940/549-0733 Fax: 940/549-1365
801 Fifth Street.
GRANDSTANDS •BLEACHERS •STADIUMS
Established 1946



THIS DRAWING AND ALL INFORMATION THEREIN IS PROPRIETARY TO SOUTHERN BLEACHER COMPANY. IT MAY NOT BE REPRODUCED, DISTRIBUTED OR DISCLOSED WITHOUT THE CONSENT OF SOUTHERN BLEACHER COMPANY. THE DRAWING IS LOANED AND MUST BE RETURNED UPON REQUEST. THE DRAWING IS PROTECTED UNDER U.S. AND INTERNATIONAL COPYRIGHT LAW.


TITLE: SECTION VIEW @ PORTAL STAIR
16.25" RISE w/ .25" SLOPE X 32" TREAD X 18 ROWS

GREENWICH HIGH SCHOOL
CARDINAL STADIUM
GREENWICH, CONNECTICUT

| REV | BY | DATE | DESCRIPTION |
|---|---|---|---|
| | ES | 10/01/20 | NONE THIS SHEET |
| | ES | 10/29/20 | NONE THIS SHEET |
| | ES | 02/01/21 | 10'-0" PLANE ELEVATIONS |

DATE 05/05/20 DRAWN ES CHECKED EM/RR
JOB NUMBER 20101
SHEET B7 OF B17

22" X 34" (11X17 = 1/2 indicated scale)

No

3 / B8 SIGHT LINE PARAMETERS
NOT TO SCALE




2 / B8 SIGHT LINES @ W/C AREA
SCALE: 3/8"=1'-0"

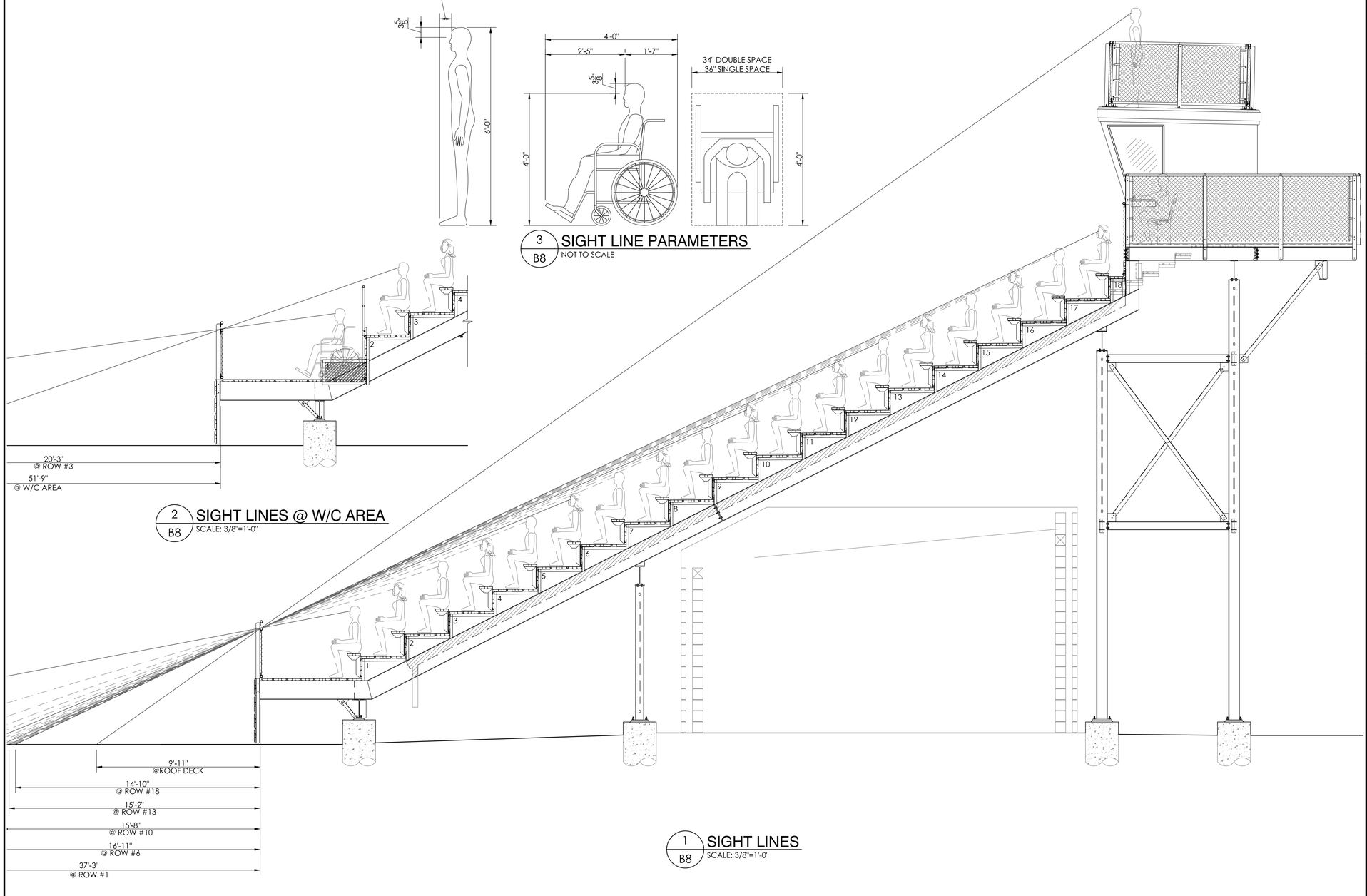


1 / B8 SIGHT LINES
SCALE: 3/8"=1'-0"

THE ADLER GROUP
STRUCTURAL ENGINEERS • LICENSED IN 44 STATES
500 MAIN STREET, SUITE 700 • FORT WORTH, TEXAS 76102
Ph: (817) 332-0194
Fax: (817) 332-0195
Toll: (800) 900-2373
Email: tag@adlergroup.net

Southern BLEACHER COMPANY®
GRANDSTANDS • BLEACHERS • STADIUMS
PO Box One, Graham, Texas 76450
801 Fifth Street.
Phone: 940/549-0733 Fax: 940/549-1365
Established 1946

THIS DRAWING AND ALL INFORMATION THEREIN IS THE PROPERTY OF THE ADLER GROUP & SOUTHERN BLEACHER COMPANY. IT MAY NOT BE COPIED OUTSIDE THE ADLER GROUP AND SOUTHERN BLEACHER COMPANY. THE DRAWING IS LOANED FOR USE WITH THE PROJECT SPECIFIED HEREIN. DRAWING IS PROTECTED UNDER U.S. AND INTERNATIONAL COPYRIGHT LAW.

| REV | BY | DATE | DESCRIPTION |
|---|---|---|---|
| | | | |
| | | | |
| | | | |

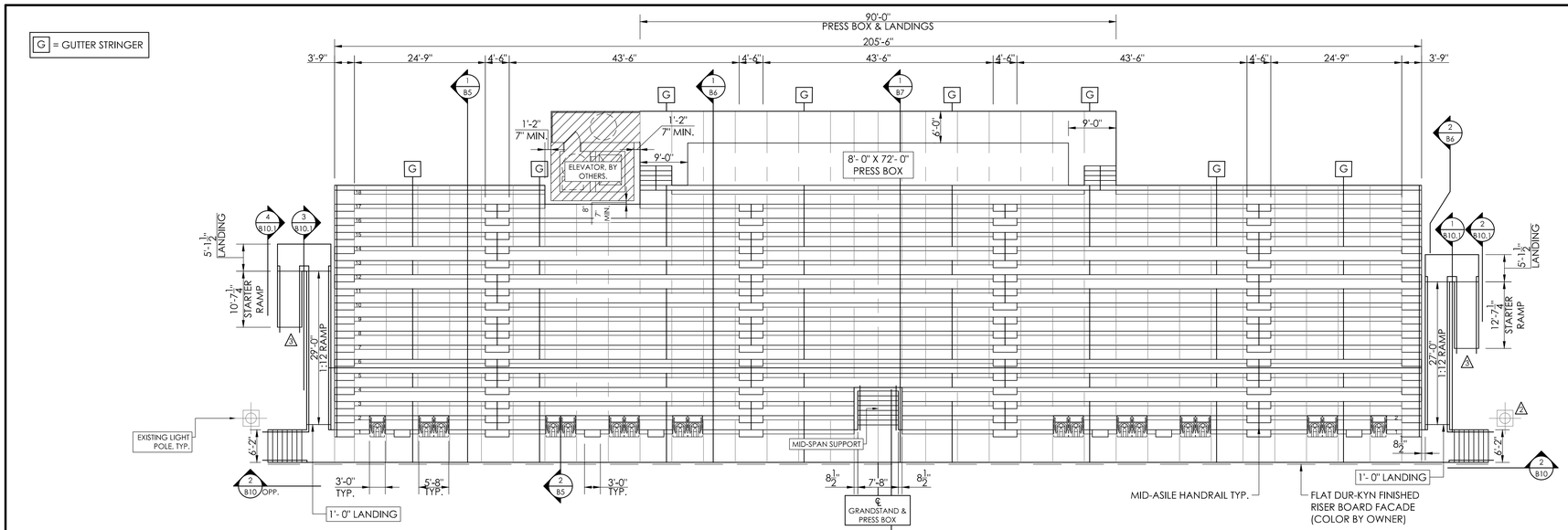


1 / B9 SEATING LAYOUT
SCALE: 3/32"=1'-0"

*2002 TOTAL NET 18" SEATS*
*18 TOTAL NET WHEELCHAIR SPACES*
*2020 TOTAL SEATING CAPACITY*

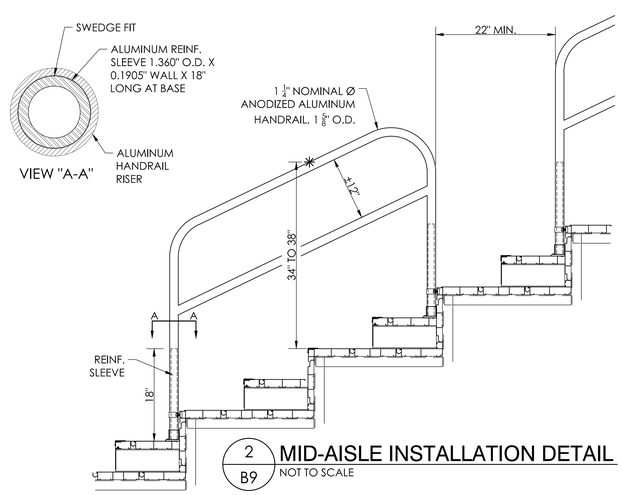


2 / B9 MID-AISLE INSTALLATION DETAIL
NOT TO SCALE


THE SADLER GROUP
STRUCTURAL ENGINEERS • LICENSED IN 44 STATES
500 MAIN STREET, SUITE 700 • FORT WORTH, TEXAS 76102

Ph: (817) 332-0194
Fax: (817) 332-0195
Toll: (800) 900-2373
Email: hsadler@sadlerlaw

Southern® BLEACHER COMPANY
GRANDSTANDS •BLEACHERS •SCYTADIUMS

PO Box One, Graham, Texas 76450
801 Fifth Street.
Phone: 940/549-0733 Fax: 940/549-1365

Established 1946



THIS DRAWING AND ALL INFORMATION THEREIN IS THE PROPERTY OF SOUTHERN BLEACHER COMPANY. IT MAY NOT BE COPIED OR REPRODUCED WITHOUT THE CONSENT OF SOUTHERN BLEACHER COMPANY. THE DRAWING IS LOANED TO THE OWNER AS ITS EXCLUSIVE PROPERTY. THE DRAWING IS PROTECTED UNDER U.S. AND INTERNATIONAL COPYRIGHT LAW.


| REV | BY | DATE | DESCRIPTION |
|---|---|---|---|
| | | | |
| | | | |
| | | | |
| | | | |
| | | | |
| | | | |
| | ES | 10/01/02 | RAMP LAYOUTS |
| | ES | 05/29/02 | NONE THIS SHEET |
| | ES | 05/01/02 | TOP OF FLARE ELEVATIONS |

TITLE: SEATING LAYOUT
32" TREAD X 18 ROWS / 205'- 6"

PROJECT: GREENWICH HIGH SCHOOL
CARDINAL STADIUM
GREENWICH, CONNECTICUT

DATE: 05/05/20
DRAWN: ES
CHECKED: EM/RR
JOB NUMBER: 20101
SHEET: B9 OF B17

22" X 34" (1:x17 = 1/2 indicated scale)

No

## 1 / B10 DETAIL OMITTED (revision 3)

SCALE: 3/4"=1'-0"

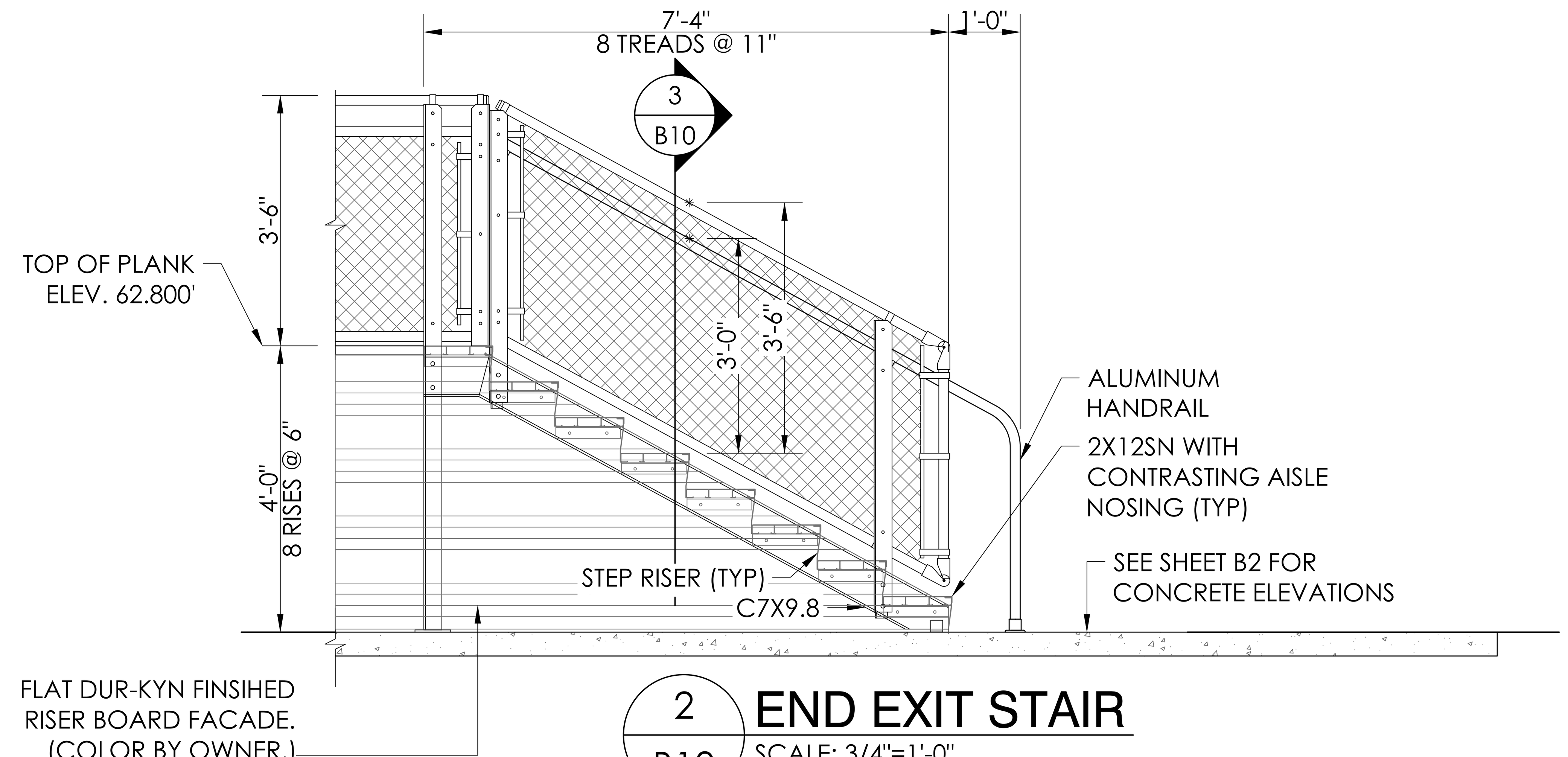


## 2 / B10 END EXIT STAIR

SCALE: 3/4"=1'-0"

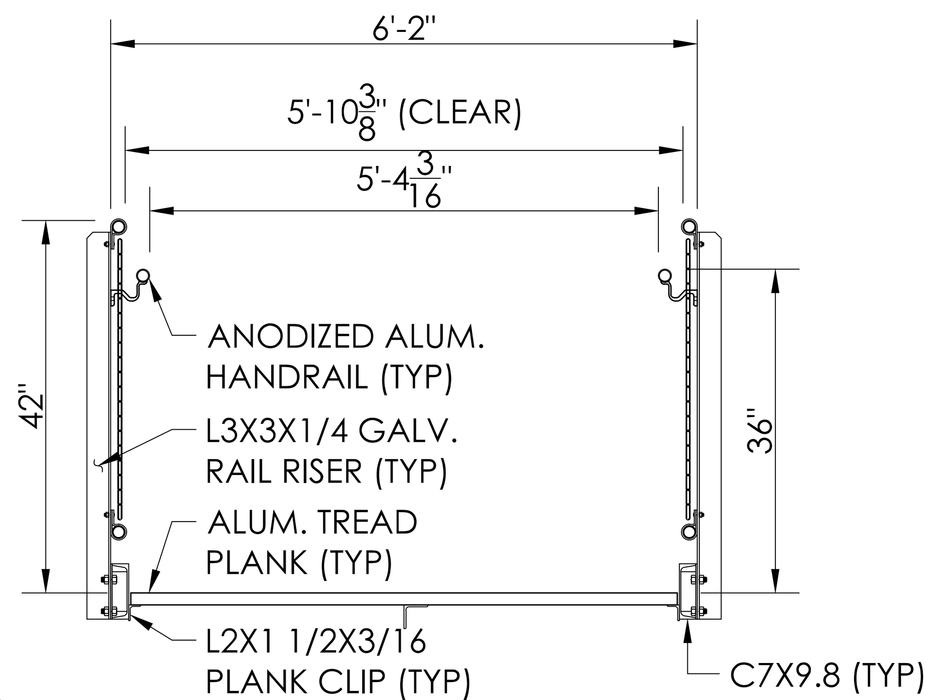


## 3 / B10 EXIT STEP SECTION

NOT TO SCALE

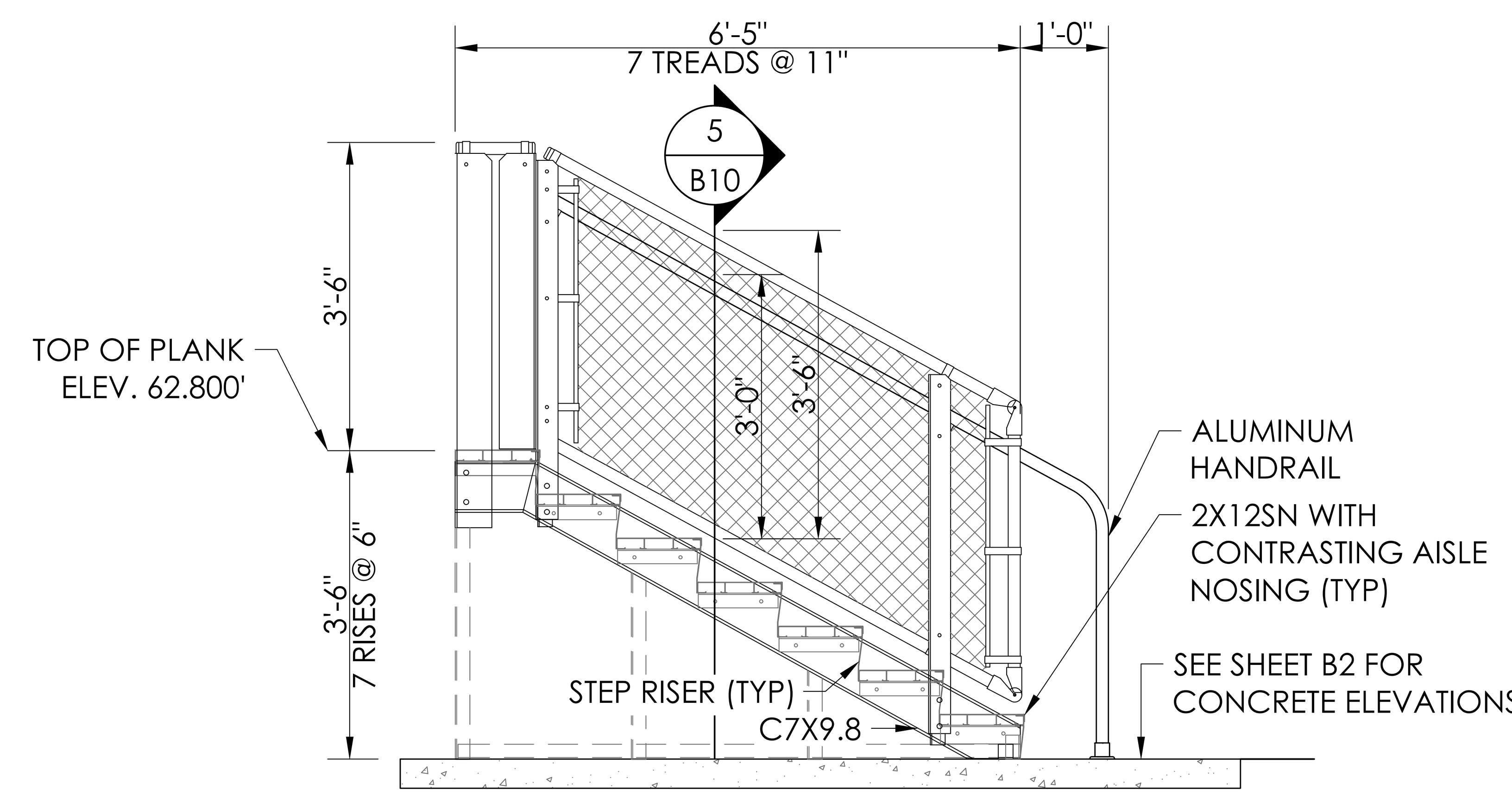


## 4 / B10 PORTAL STAIR

SCALE: 3/4"=1'-0"

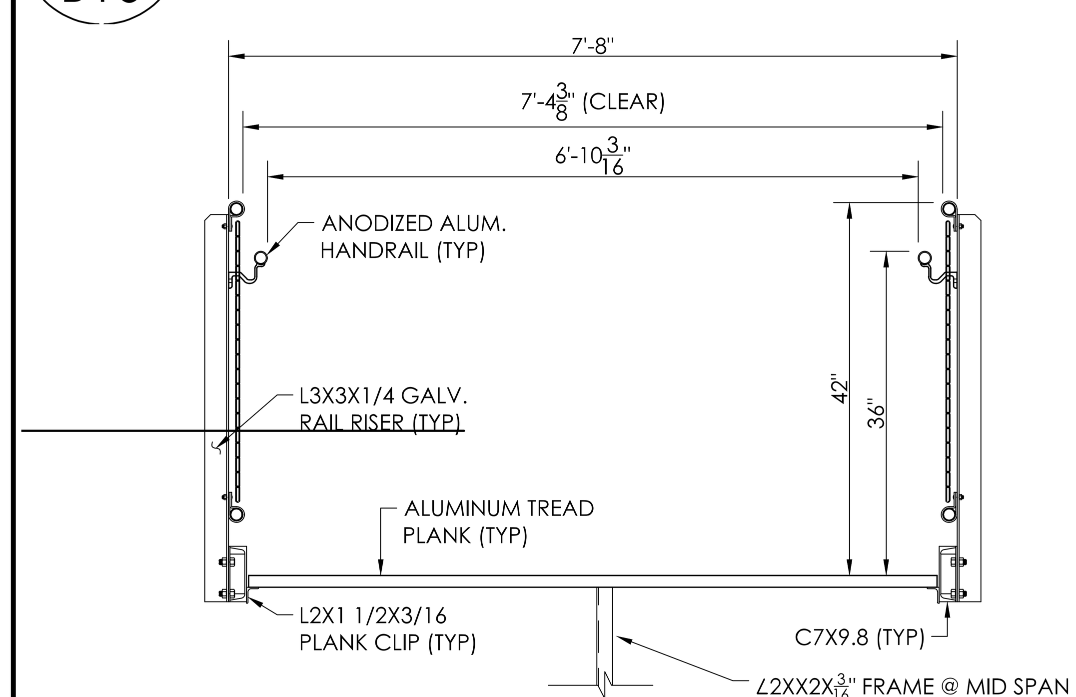


## 5 / B10 PORTAL EXIT STEP SECTION

NOT TO SCALE

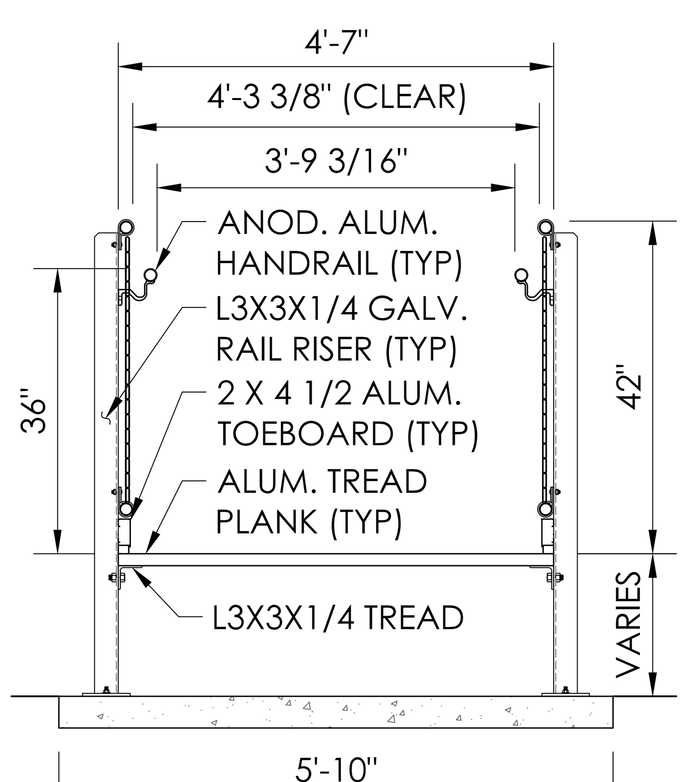


## 6 / B10 RAMP SECTION

NOT TO SCALE

THE SADLER GROUP
STRUCTURAL ENGINEERS LICENSED IN 45 STATES
500 MAIN STREET, SUITE 700 • FORT WORTH, TEXAS 76102
Ph: (817) 332-1074
Fax: (817) 338-0335
Toll: (800) 900-7373
Email: tsadler@swbell.net

Southern® BLEACHER COMPANY
GRANDSTANDS ▪BLEACHERS ▪STADIUMS
PO Box One, Graham, Texas 76450
801 Fifth Street.
Phone: 940/549-0733 Fax: 940/549-1365
Established 1946

THIS DRAWING AND ALL INFORMATION THEREIN IS THE PROPERTY OF SADLER GROUP AND SOUTHERN BLEACHER COMPANY. IT MAY NOT BE COPIED OR REPRODUCED WITHOUT PRIOR WRITTEN CONSENT OF BOTH SADLER GROUP AND SOUTHERN BLEACHER COMPANY. THE DRAWING IS LOANED AND SUBJECT TO RETURN UPON DEMAND. DRAWING IS PROTECTED UNDER U.S. AND INTERNATIONAL COPYRIGHT LAW.

TYPE: EXITS

TITLE: GREENWICH HIGH SCHOOL
CARDINAL STADIUM
GREENWICH, CONNECTICUT

| REV | BY | DATE | DESCRIPTION |
|---|---|---|---|
| 3 | ES | 10/01/20 | DETAIL 1/B10 OMITTED |
| 2 | ES | 05/29/20 | NONE THIS SHEET |
| 1 | ES | 05/27/20 | TOP OF PLANK ELEVATIONS |

DATE: 05/05/20 DRAWN: ES CHECKED: EM/RR

JOB NUMBER: 20101

SHEET: B10 OF: B17

22" X 34" (11x17 = 1/2 indicated scale)

No

FOR TOP OF CONCRETE ELEVATIONS, SEE SHEET B2

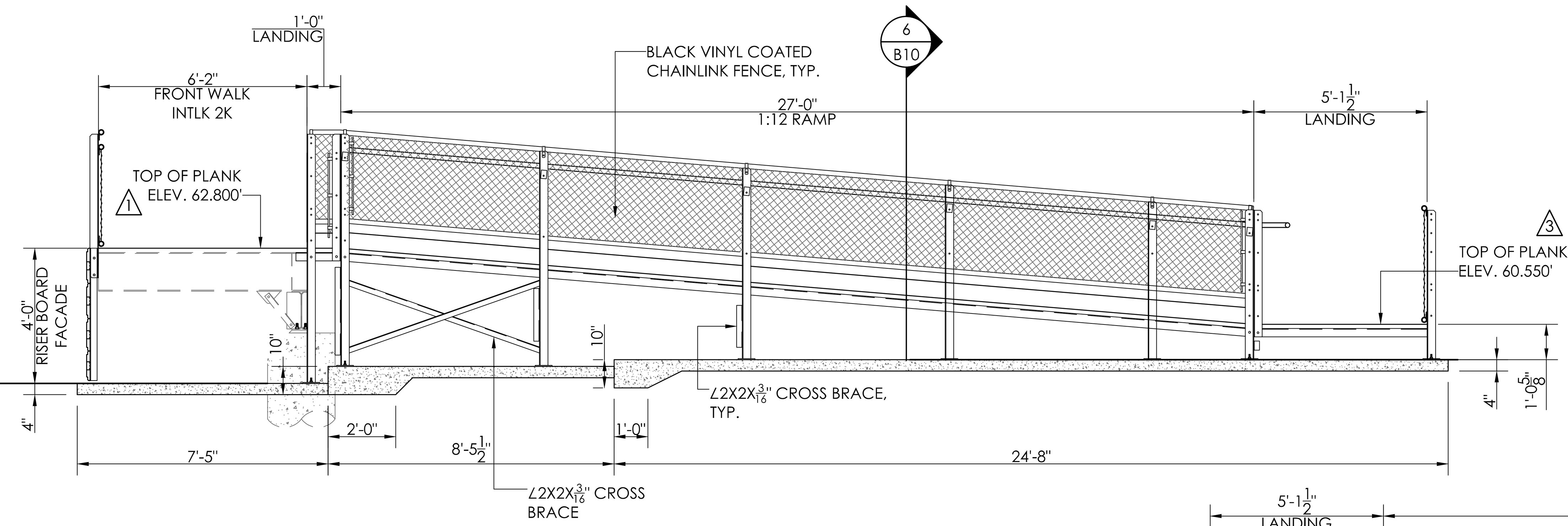


2 1 RIGHT END 1:12 RAMP SECTION
B10.1
SCALE: 3/8"=1'-0"

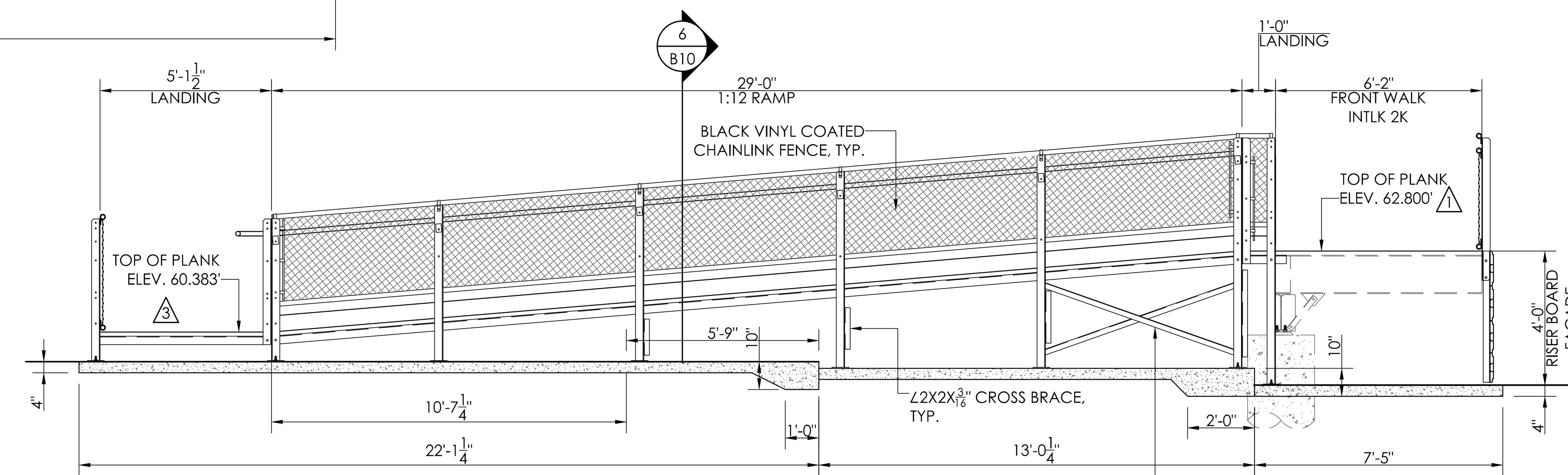


3 1 3 LEFT END 1:12 RAMP SECTION
B10.1
SCALE: 3/8"=1'-0"

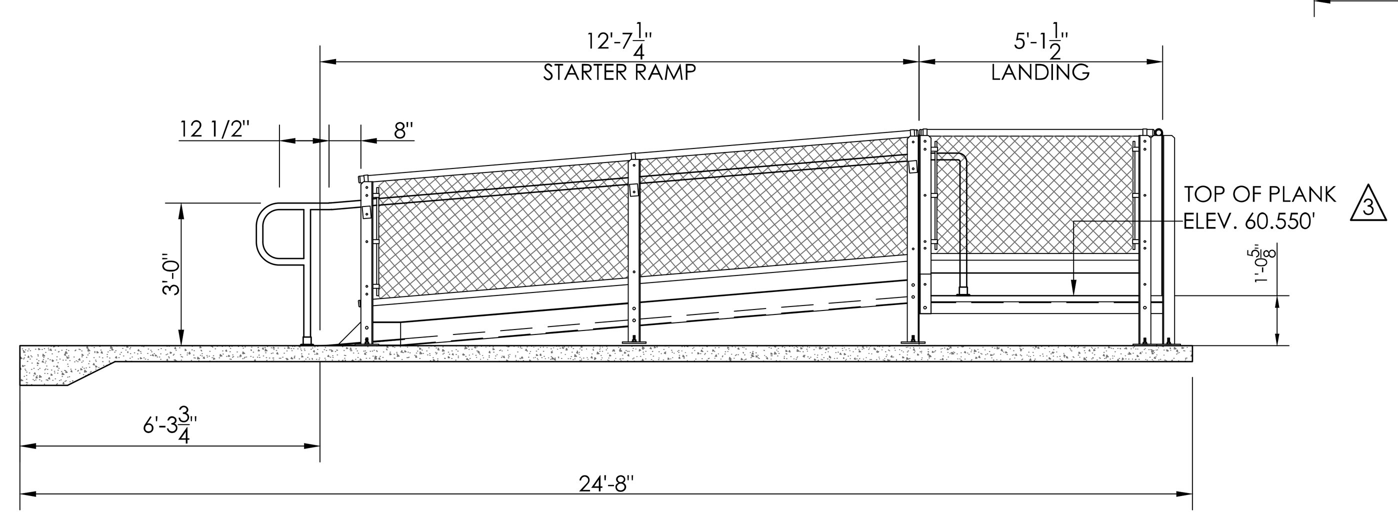


2 2 RIGHT END 1:12 RAMP SECTION
B10.1
SCALE: 3/8"=1'-0"

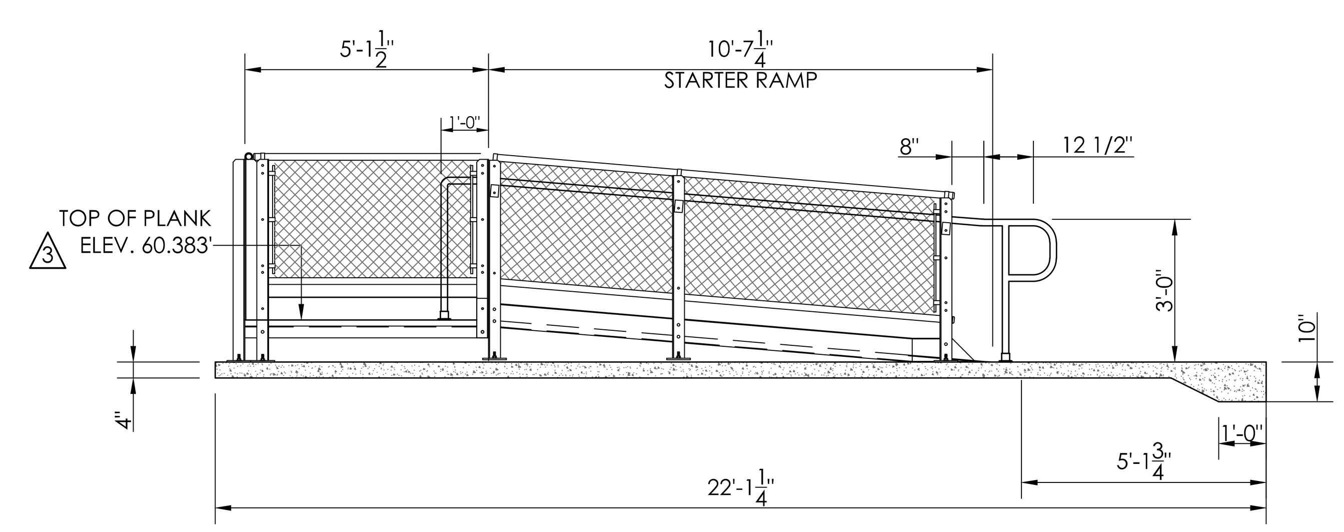


2 1 4 LEFT END 1:12 RAMP SECTION
B10.1
SCALE: 3/8"=1'-0"

THE SADLER GROUP
STRUCTURAL ENGINEERS LICENSED IN 45 STATES
500 MAIN STREET, SUITE 700 • FORT WORTH, TEXAS 76102
Ph: (817) 332-1074
Fax: (817) 338-0335
Toll: (800) 900-7373
Email: tsadler@swbell.net

Southern® BLEACHER COMPANY
GRANDSTANDS ▪BLEACHERS ▪STADIUMS
PO Box One, Graham, Texas 76450
801 Fifth Street.
Phone: 940/549-0733 Fax: 940/549-1365
Established 1946

THIS DRAWING AND ALL INFORMATION THEREIN IS THE PROPERTY OF SADLER GROUP AND SOUTHERN BLEACHER COMPANY. IT MAY NOT BE COPIED OR REPRODUCED WITHOUT PRIOR WRITTEN CONSENT OF BOTH SADLER GROUP AND SOUTHERN BLEACHER COMPANY. THE DRAWING IS LOANED AND SUBJECT TO RETURN UPON DEMAND. DRAWING IS PROTECTED UNDER U.S. AND INTERNATIONAL COPYRIGHT LAW.

TYPE: RAMP SECTIONS

TITLE: GREENWICH HIGH SCHOOL
CARDINAL STADIUM
GREENWICH, CONNECTICUT

| REV | BY | DATE | DESCRIPTION |
|---|---|---|---|
| 3 | ES | 10/01/20 | RAMP LENGTHS |
| 2 | ES | 05/29/20 | NONE THIS SHEET |
| 1 | ES | 05/27/20 | TOP OF PLANK ELEV./LEFT END RAMP |

DATE: 05/05/20 DRAWN: ES CHECKED: EM/RR

JOB NUMBER: 20101

SHEET: B10.1 OF: B17

22" X 34" (11x17 = 1/2 indicated scale)

No

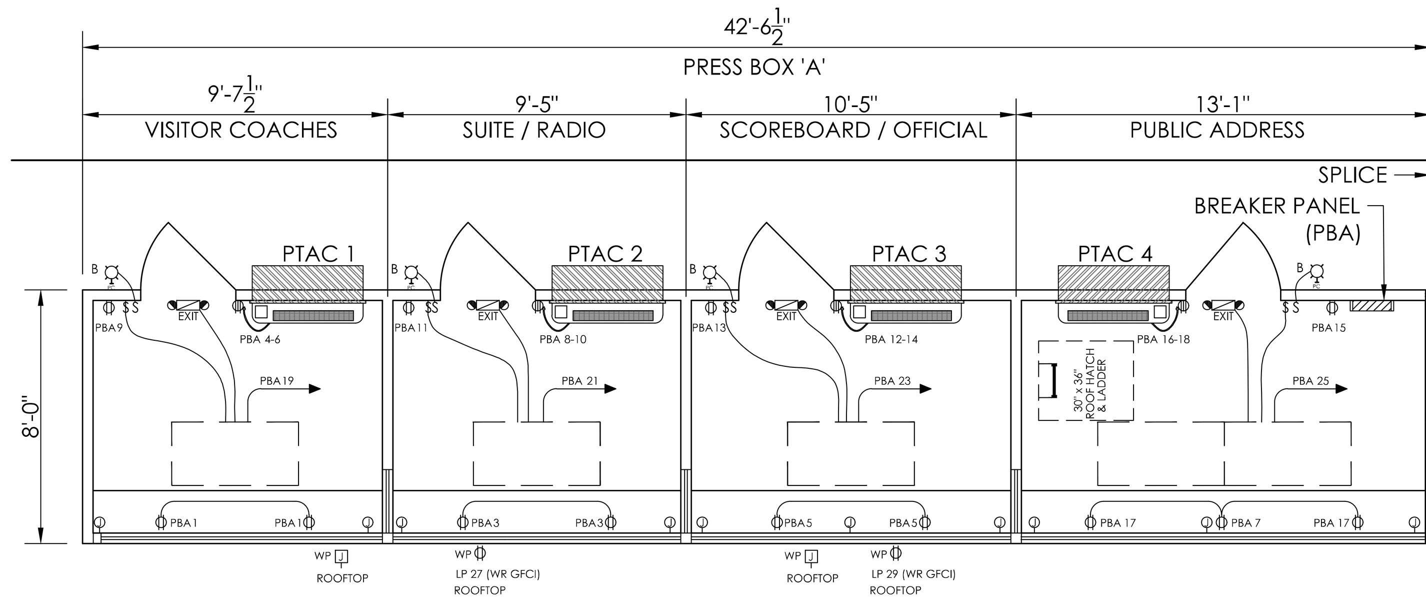


1 / B11 PRESS BOX "A" ELECTRICAL PANEL
SCALE:1/4"=1'-0"

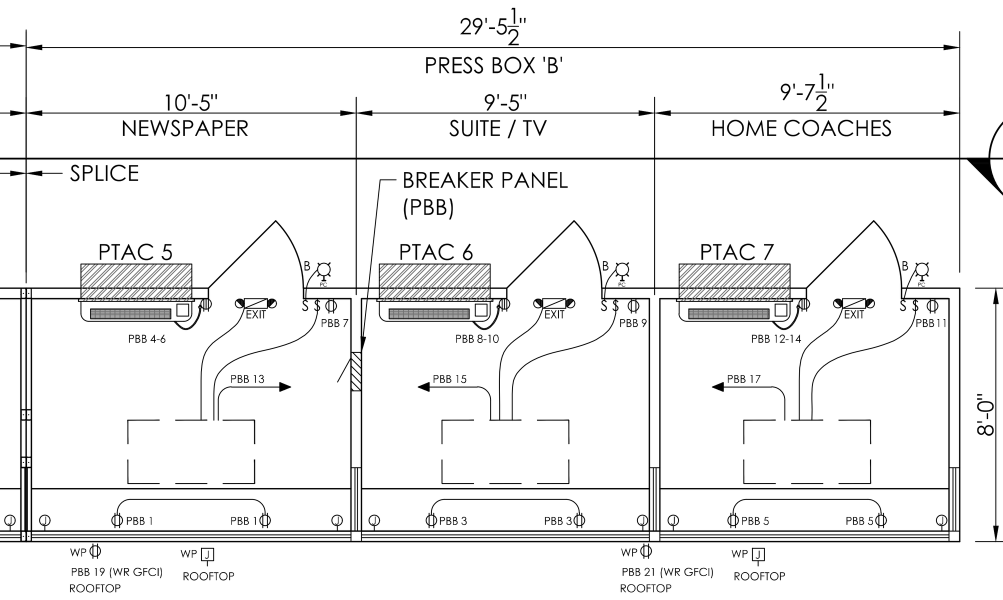


3 / B12
2 / B13

2 / B11 PRESSBOX "B" ELECTRICAL PLAN
SCALE:1/4"=1'-0"

## PRESS BOX LEGEND

- 250V. SINGLE POWER RECPT. (20A.) NEMA 6-20R
- 20A. 125V. DUPLEX RECPT. (GFCI WHERE NOTED)
- $ OS - 20A. 125V. SINGLE POLE DECORATOR STYLE SWITCH WITH MANUAL ON/OFF OCCUPANCY SENSOR
- 4X4X2 1/8" JUNCTION BOX W/ 3/4" C STUBOUT UNDER FLOOR WP ON ROOF STUBBED INTO CEILING SPACE FOR USE BY OTHERS
- 4'X2' EDGELIT LED PANEL LIGHT RAB LIGHTING EZPANFA2X4/D10 0.26A @ 120V INPUT WATTS: 29.6W
- EXIT: BATTERY BACK UP EMERGENCY/EXIT LIGHT CONNECT TO LIGHT CIRCUIT AHEAD OF SWITCH. NEC 700.12 (F)
- 12,000 BTU COOL/12,000 BTU EHEAT 5.6 A. COOL/15.4 A. HEAT - 208/230V. AMANA # PTC123E35AXXX OR EQUAL FIELD INSTALLED
- B: 12W. LED EXTERIOR LIGHT W/PHOTOCELL

NOTE:
120V. DUPLEX RECPT. ARE LOCATED IN ONE END OF BASEBOARD HEATERS USING ACCESSORY COVER BKORA1. THERMOSTAT IN THE OTHER END - COVER BKOTA1A W/ THERMOSTAT TA2A.
WALL RECPT. ARE NOT ABOVE BB HEATERS.

PRESS BOX 'A' (1)

LOAD CENTER SCHEDULE — G.E. TLM30412C OR EQUAL

PANEL PBA — 125A - 30 CIRCUIT W/ EQUIPMENT GROUND — 240/120 VOLTS 3 PH. 4 W

MOUNTING: ☐ FLUSH ☒ SURFACE — 125 AMP MAIN BREAKER

| | BREAKER SIZE | BREAKER POLE | CIR. # | BUS | CIR. # | BREAKER SIZE | BREAKER POLE | |
|---|---|---|---|---|---|---|---|---|
| (2) DUPLEX RECPT. FRONT WALL | 20 | 1 | 1 | A | 2 | 20 | 1 | SPARE |
| (2) DUPLEX RECPT. FRONT WALL | 20 | 1 | 3 | B | 4 | 20 | | PTAC UNIT #1 |
| (2) DUPLEX RECPT. FRONT WALL | 20 | 1 | 5 | C | 6 | | 2 | PTAC UNIT #1 |
| (2) DUPLEX RECPT. FRONT WALL | 20 | 1 | 7 | A | 8 | 20 | | PTAC UNIT #2 |
| DUPLEX RECPT. BACK WALL | 20 | 1 | 9 | B | 10 | | 2 | PTAC UNIT #2 |
| DUPLEX RECPT. BACK WALL | 20 | 1 | 11 | C | 12 | 20 | | PTAC UNIT #3 |
| DUPLEX RECPT. BACK WALL | 20 | 1 | 13 | A | 14 | | 2 | PTAC UNIT #3 |
| DUPLEX RECPT. BACK WALL | 20 | 1 | 15 | B | 16 | 20 | | PTAC UNIT #4 |
| (2) DUPLEX RECPT. FRONT WALL | 20 | 1 | 17 | C | 18 | | 2 | PTAC UNIT #4 |
| LIGHTS | 20 | 1 | 19 | A | 20 | 20 | 1 | SPARE |
| LIGHTS | 20 | 1 | 21 | B | 22 | | | SPACE |
| LIGHTS | 20 | 1 | 23 | C | 24 | | | SPACE |
| LIGHTS | 20 | 1 | 25 | A | 26 | | | SPACE |
| WP DUPLEX RECPT GFCI ROOFTOP | 20 | 1 | 27 | B | 28 | | | SPACE |
| WP DUPLEX RECPT GFCI ROOFTOP | 20 | 1 | 29 | C | 30 | | | SPACE |

PRESS BOX 'B' (1)

LOAD CENTER SCHEDULE — G.E. TLM30412C OR EQUAL

PANEL PBB — 125A - 30 CIRCUIT W/ EQUIPMENT GROUND — 240/120 VOLTS 3 PH. 4 W

MOUNTING: ☒ FLUSH ☐ SURFACE — 125 AMP MAIN BREAKER

| | BREAKER SIZE | BREAKER POLE | CIR. # | BUS | CIR. # | BREAKER SIZE | BREAKER POLE | |
|---|---|---|---|---|---|---|---|---|
| (2) DUPLEX RECPT. FRONT WALL | 20 | 1 | 1 | A | 2 | 20 | 1 | SPARE |
| (2) DUPLEX RECPT. FRONT WALL | 20 | 1 | 3 | B | 4 | 20 | | PTAC UNIT #5 |
| (2) DUPLEX RECPT. FRONT WALL | 20 | 1 | 5 | C | 6 | | 2 | PTAC UNIT #5 |
| DUPLEX RECPT. BACK WALL | 20 | 1 | 7 | A | 8 | 20 | | PTAC UNIT #6 |
| DUPLEX RECPT. BACK WALL | 20 | 1 | 9 | B | 10 | | 2 | PTAC UNIT #6 |
| DUPLEX RECPT. BACK WALL | 20 | 1 | 11 | C | 12 | 20 | | PTAC UNIT #7 |
| LIGHTS | 20 | 1 | 13 | A | 14 | | 2 | PTAC UNIT #7 |
| LIGHTS | 20 | 1 | 15 | B | 16 | 20 | 1 | SPARE |
| LIGHTS | 20 | 1 | 17 | C | 18 | | | SPACE |
| WP DUPLEX RECPT GFCI ROOFTOP | 20 | 1 | 19 | A | 20 | | | SPACE |
| WP DUPLEX RECPT GFCI ROOFTOP | 20 | 1 | 21 | B | 22 | | | SPACE |
| SPACE | | | 23 | C | 24 | | | SPACE |
| SPACE | | | 25 | A | 26 | | | SPACE |
| SPACE | | | 27 | B | 28 | | | SPACE |
| SPACE | | | 29 | C | 30 | | | SPACE |

CONDUIT WILL BE 1/2" EMT, 1/2" STEELFLEX, OR SURFACE RACEWAY UNLESS OTHERWISE NOTED

WIRING ON 20A BREAKERS WILL BE #12 = THWN - THHN

EQUIPMENT GROUND RUN IN ALL CONDUITS OR NON-METALLIC SURFACE RACEWAYS

PANEL FEEDER, NEUTRAL, BONDING, AND GROUNDING TO BE ACCORDING TO APPLICABLE CODES ADOPTED BY THE LOCAL AHJ ON SITE BY ELECTRICAL CONTRACTOR.

PANEL BONDED TO METAL BUILDING FRAME BY PRESS BOX MANUF.

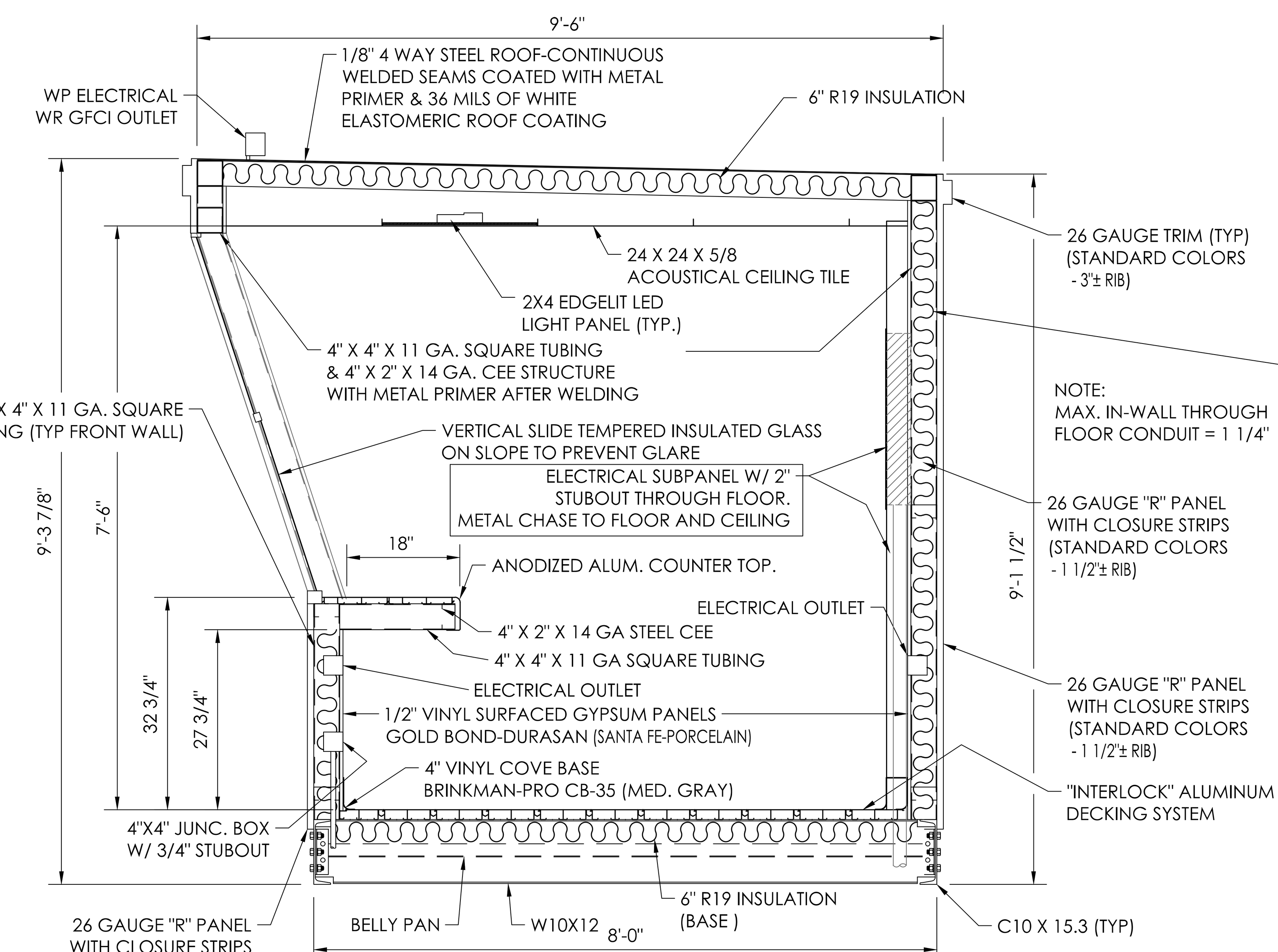


3 / B11 SECTION VIEW
SCALE:1/4"=1'-0"

NOTE:
MAX. IN-WALL THROUGH FLOOR CONDUIT = 1 1/4"

WALLS: R15 INSULATION IN CAVITY WITH ARMORFLECT WHITE CONTINUOUS WRAP INSULATION: R-8 CONT. 1/2" FIBERGLASS CORE BONDED TO REINFORCED SCRIM FACING

NOTES:

ROOF PLATE STEEL IS WELDED ON BOTH SIDES OF RAFTERS WITH 1-1/2" LONG 1/8" FILLET WELDS ON 12" CENTERS.

WALL PANELS ARE ATTACHED WITH #12 TEK SCREWS - 6" O.C. AT THE TOP AND BOTTOM OF THE PANELS AND 12" O.C. AT ANY INTERMEDIATE BRACE.

LAP SCREWS ARE PLACED AT EACH END OF THE PANELS, AT THE INTERMEDIATE SUPPORTS, AND AT THE MID POINT BETWEEN SUPPORTS (TEK #14)

FLOOR PLANK IS ATTACHED TO W10 X 12 WITH 2- 2" TEK SCREWS PER END OF PLANK AND AT INTERMEDIATE SUPPORTS.

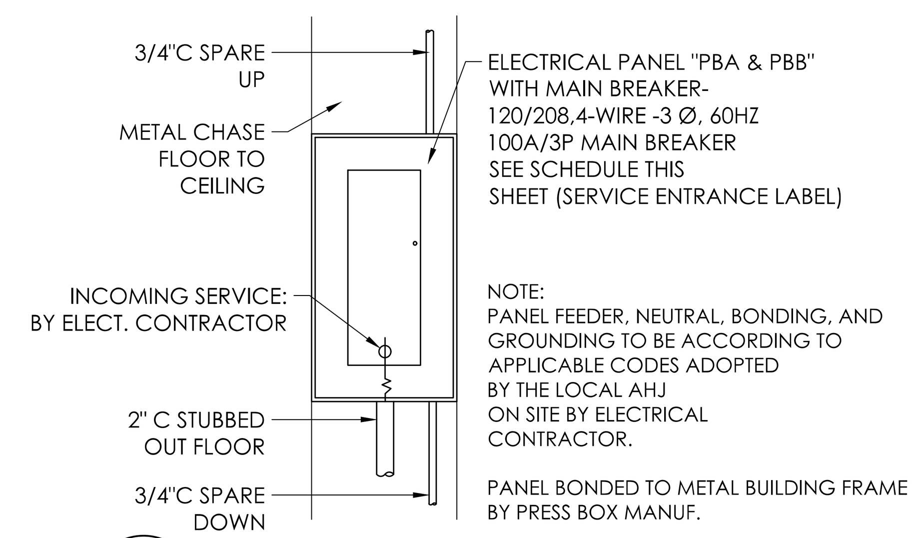


NOTE:
PANEL FEEDER, NEUTRAL, BONDING, AND GROUNDING TO BE ACCORDING TO APPLICABLE CODES ADOPTED BY THE LOCAL AHJ ON SITE BY ELECTRICAL CONTRACTOR.

PANEL BONDED TO METAL BUILDING FRAME BY PRESS BOX MANUF.

4 / B11 ELECTRICAL PANEL ELEVATION
NOT TO SCALE

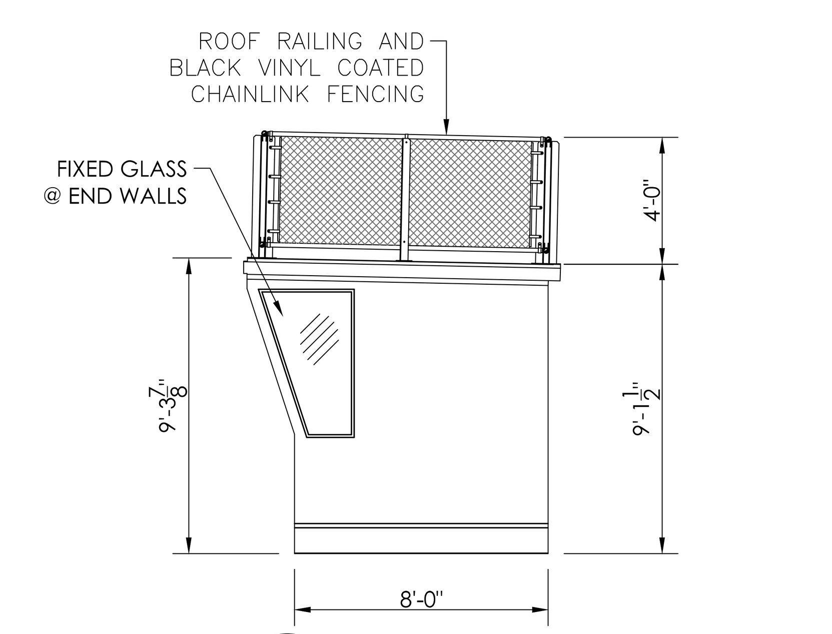


5 / B11 SIDE VIEW
SCALE:1/4"=1'-0"

THE SADLER GROUP
STRUCTURAL ENGINEERS LICENSED IN 45 STATES
500 MAIN STREET, SUITE 700 • FORT WORTH, TEXAS 76102
Ph: (817) 332-1074
Fax: (817) 338-0335
Toll: (800) 900-7373
Email: tsadler@swbell.net

Southern® BLEACHER COMPANY
GRANDSTANDS • BLEACHERS • STADIUMS
PO Box One, Graham, Texas 76450
801 Fifth Street.
Phone: 940/549-0733 Fax: 940/549-1365
Established 1946

THIS DRAWING AND ALL INFORMATION THEREIN IS THE PROPERTY OF SADLER GROUP AND SOUTHERN BLEACHER COMPANY. IT MAY NOT BE COPIED OR REPRODUCED WITHOUT PRIOR WRITTEN CONSENT OF BOTH SADLER GROUP AND SOUTHERN BLEACHER COMPANY. THE DRAWING IS LOANED AND SUBJECT TO RETURN UPON DEMAND. DRAWING IS PROTECTED UNDER U.S. AND INTERNATIONAL COPYRIGHT LAW.

TYPE: PRESS BOX LAYOUT
8'- 0" X 72'- 0" / SLOPED FRONT

TITLE: GREENWICH HIGH SCHOOL
CARDINAL STADIUM
GREENWICH, CONNECTICUT

| REV | BY | DATE | DESCRIPTION |
|---|---|---|---|
| 3 | ES | 10/01/20 | NONE THIS SHEET |
| 2 | ES | 05/29/20 | NONE THIS SHEET |
| 1 | ES | 05/27/20 | PTAC UNITS |

DATE: 05/05/20 DRAWN: ES CHECKED: EM/RR

JOB NUMBER: 20101

SHEET: B11 OF: B17

22" X 34" (11x17 = 1/2 indicated scale)

No

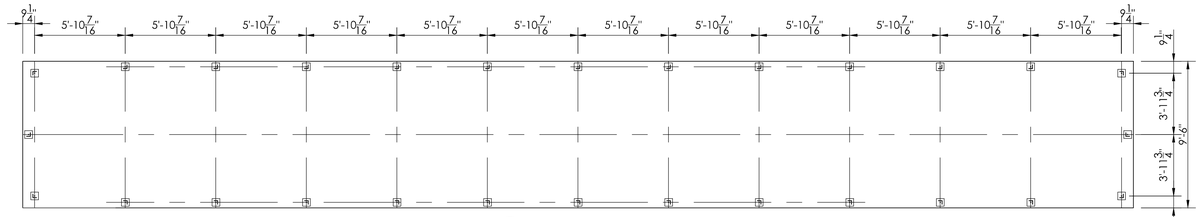


1 / B12 ROOF RAIL LAYOUT
SCALE:1/4"=1'-0"

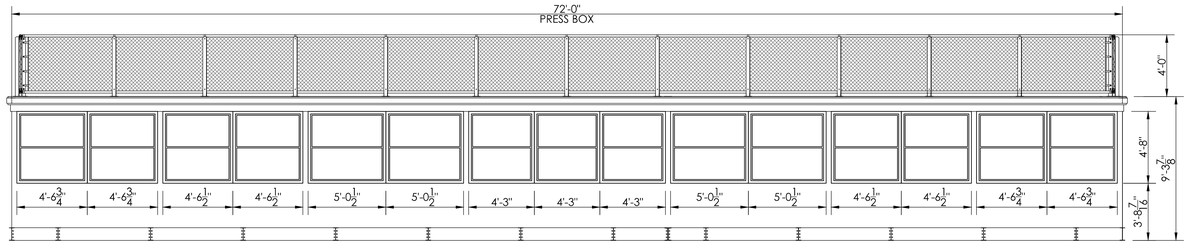


2 / B12 FRONT ELEVATION
SCALE:1/4"=1'-0"

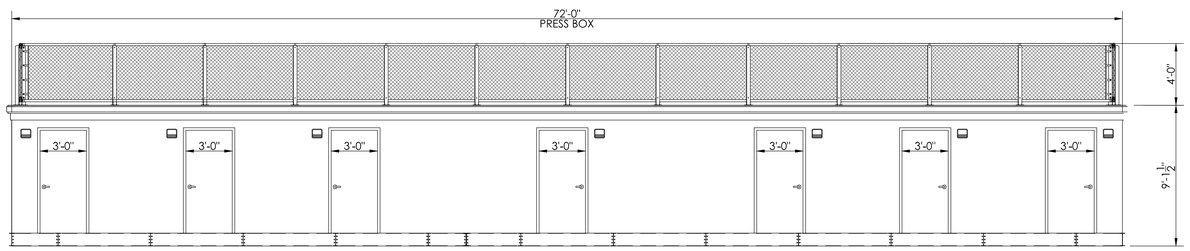


3 / B12 REAR ELEVATION
SCALE:1/4"=1'-0"

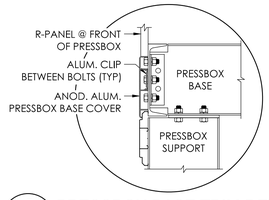


5 / B12 PRESSBOX BASE TRIM DETAIL
NOT TO SCALE

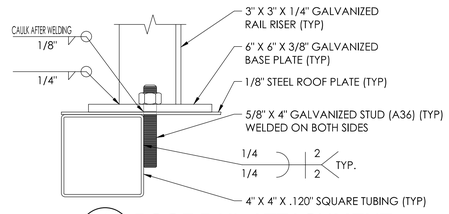


6 / B12 ROOF RAIL ATTACHMENT
NOT TO SCALE


THE SADLER GROUP
STRUCTURAL ENGINEERS LICENSED IN 45 STATES
500 MAIN STREET, SUITE 700 • FORT WORTH, TEXAS 76102
Ph: (817) 332-1074
Fax: (817) 336-0355
Toll: (800) 900-7373
Email: sadler@swbsl.net

Southern® BLEACHER COMPANY
GRANDSTANDS • BLEACHERS • STADIUMS
PO Box One, Graham, Texas 76450
801 Fifth Street
Phone: 940/549-0733 Fax: 940/549-1365
Established 1946



THIS DRAWING AND ALL INFORMATION THEREIN IS THE PROPERTY OF SADLER GROUP AND SOUTHERN BLEACHER COMPANY. IT MAY NOT BE COPIED OR REPRODUCED WITHOUT PRIOR WRITTEN CONSENT OF SOUTH SADLER GROUP AND SOUTHERN BLEACHER COMPANY. THE DRAWING IS LOANED AND SUBJECT TO RETURN UPON DEMAND. DRAWING IS PROTECTED UNDER U.S. AND INTERNATIONAL COPYRIGHT LAW.


PRESS BOX ELEVATION VIEWS
8'- 0" X 72'- 0" / SLOPED FRONT

GREENWICH HIGH SCHOOL
CARDINAL STADIUM
GREENWICH, CONNECTICUT

| REV | BY | DATE | DESCRIPTION |
|---|---|---|---|
| | | | |

| DATE | DRAWN | CHECKED |
|---|---|---|
| 05/05/20 | ES | EM/RR |

JOB NUMBER 20101

SHEET B12 OF B17

22" X 34" (11x17 = 1/2 indicated scale)

No

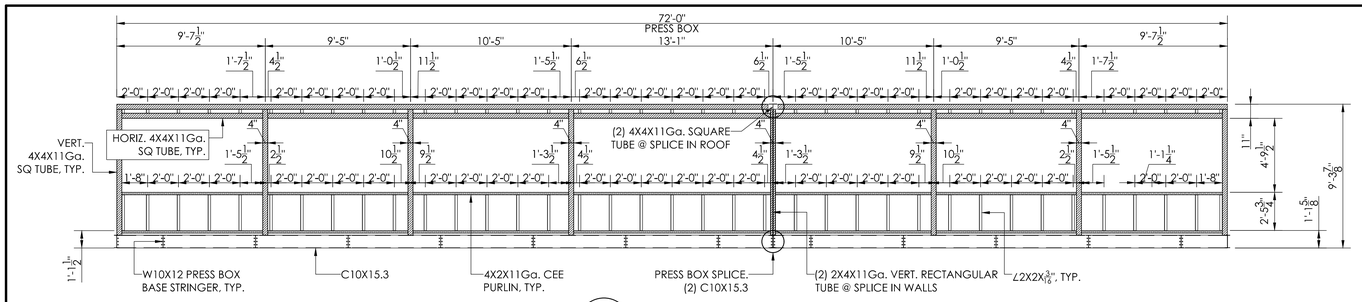


1 / B13 FRONT WALL FRAMING PLAN
SCALE:1/4"=1'-0"

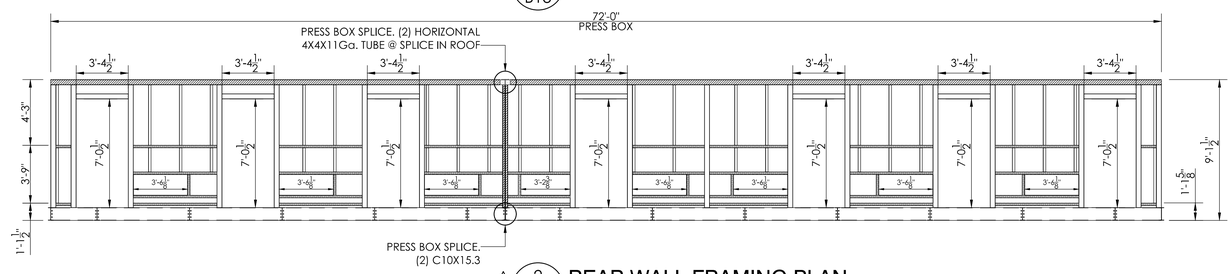


2 / B13 REAR WALL FRAMING PLAN
SCALE:1/4"=1'-0"

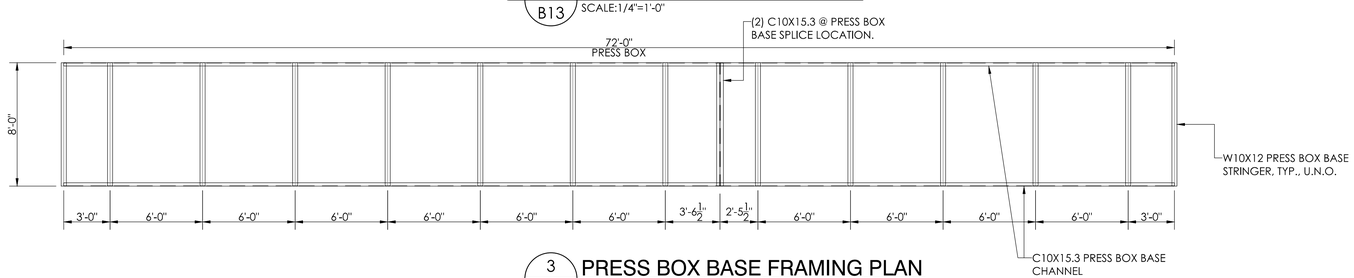


3 / B13 PRESS BOX BASE FRAMING PLAN
SCALE:1/4"=1'-0"

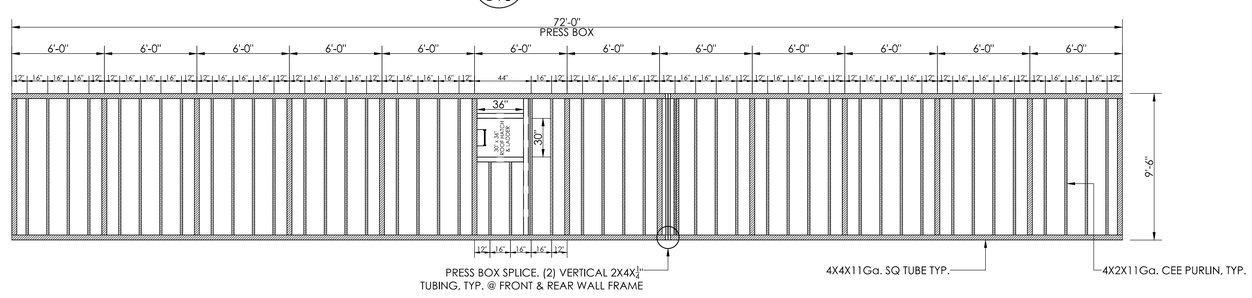


4 / B13 PRESS BOX ROOF FRAMING PLAN
SCALE:1/4"=1'-0"

THE SADLER GROUP
STRUCTURAL ENGINEERS LICENSED IN 44 STATES
500 MAIN STREET, SUITE 700 • FORT WORTH, TEXAS 76102
Ph: (817) 332-0174
Fax: (817) 334-0135
Toll: (800) 900-2373
Email: sadler@wfsadler.com

Southern® BLEACHER COMPANY
GRANDSTANDS • BLEACHERS • STADIUMS
PO Box One, Graham, Texas 76450
801 Fifth Street
Phone: 940/549-0733 Fax: 940/549-1365
Established 1946

THIS DRAWING AND ALL INFORMATION THEREIN IS THE PROPERTY OF SOUTHERN BLEACHER COMPANY. IT MAY NOT BE COPIED OR REPRODUCED WITHOUT THE CONSENT OF SOUTHERN BLEACHER COMPANY. THE DRAWING IS LOANED TO THE RECIPIENT FOR THE PURPOSE OF BIDDING. DRAWING IS PROTECTED UNDER U.S. AND INTERNATIONAL COPYRIGHT LAW.

| REV | BY | DATE | DESCRIPTION |
|---|---|---|---|
| | ES | 00/00/00 | NONE THIS SHEET |
| | ES | 00/00/00 | NONE THIS SHEET |
| | ES | 05/05/20 | REAR WALL FRAMING FOR PTACS |

TITLE: PRESS BOX FRAMING PLAN
8'- 0" X 72'- 0" / SLOPED FRONT

SITE: GREENWICH HIGH SCHOOL
CARDINAL STADIUM
GREENWICH, CONNECTICUT

DATE: 05/05/20
DRAWN: ES
CHECKED: EM/RR
JOB NUMBER: 20101
SHEET: B13 OF B17

22" X 34" (1:1x17 = 1/2 indicated scale)

No

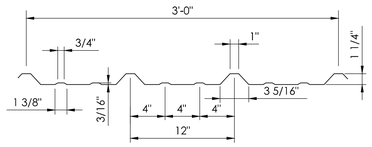


| PANEL GAUGE | Fy PSI | THK. IN. | Fb PSI | wt PSF | GIRTH IN. | IxIN POS. | SxIN BEND | IxIN NEG. | SxIN BEND |
|---|---|---|---|---|---|---|---|---|---|
| 26 | 80,000 | .0198 | 30,000 | 0.96 | 41.56 | .0423 | .0408 | .0383 | .0434 |

ALLOWABLE LOADS

| PANEL GAUGE | WIND LOAD | | | | | LIVE LOAD (STRESS) | | | | | LIVE LOAD (DEFLECTION) | | | | |
|---|---|---|---|---|---|---|---|---|---|---|---|---|---|---|---|
| | 4' | 5' | 6' | 7' | 8' | 3' | 4' | 5' | 6' | 7' | 3' | 4' | 5' | 6' | 7' |
| 26 | 90 | 58 | 40 | 29 | 23 | 121 | 68 | 43 | 30 | 22 | 121 | 68 | 43 | 30 | 22 |

1 B14 "R" PANEL DET.
NOT TO SCALE

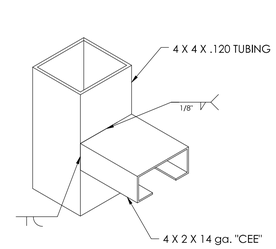


2 B14 WELD DETAIL
NOT TO SCALE

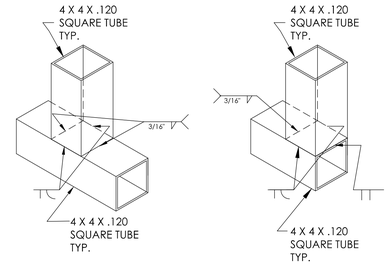


3 B14 WELD DETAIL
NOT TO SCALE

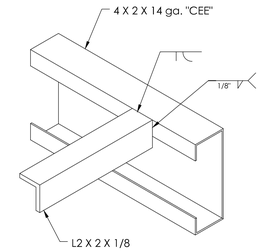


4 B14 WELD DETAIL
NOT TO SCALE

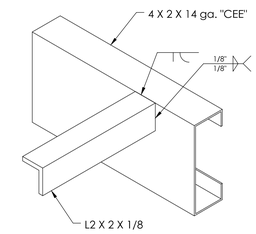


5 B14 WELD DETAIL
NOT TO SCALE

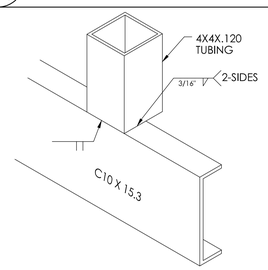


6 B14 WELD DETAIL
NOT TO SCALE

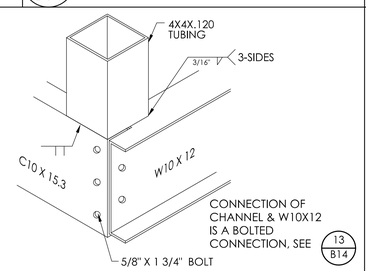


7 B14 WELD DETAIL
NOT TO SCALE

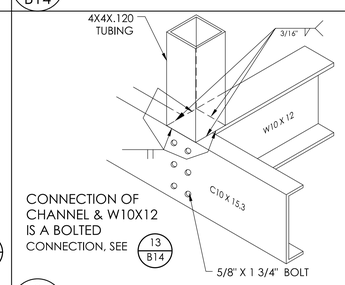


8 B14 WELD DETAIL
NOT TO SCALE

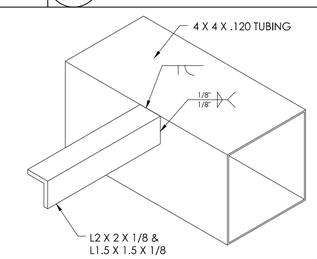


9 B14 WELD DETAIL
NOT TO SCALE

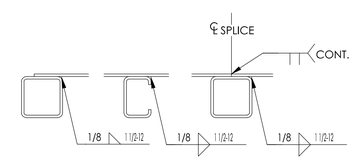


10 B14 STEEL ROOF TO TUBING
NOT TO SCALE

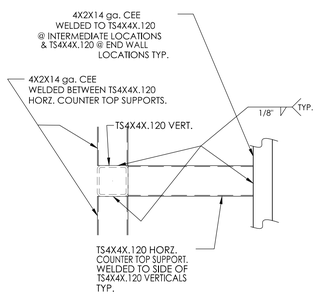


11 B14 COUNTER TOP DETAIL
NOT TO SCALE

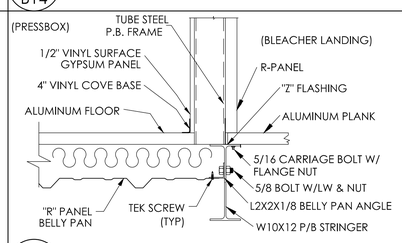


12 B14 LANDING TRANSITION DETAIL
NOT TO SCALE

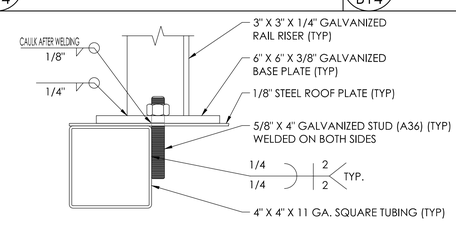


14 B14 ROOF RAIL ATTACHMENT
NOT TO SCALE

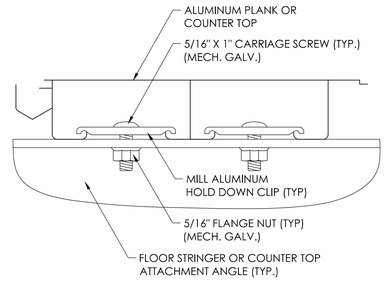


NOTE:
FRONT (LAST) FLOOR PLANK IS ATTACHED TO W10X12
W/ (2)-2" COUNTERSUNK TEK SCREWS PER END OF
PLANK AND AT INTERMEDIATE SUPPORTS.

16 B14 ALUMINUM PLANK / COUNTER TOP ATTACHMENT DETAIL
NOT TO SCALE

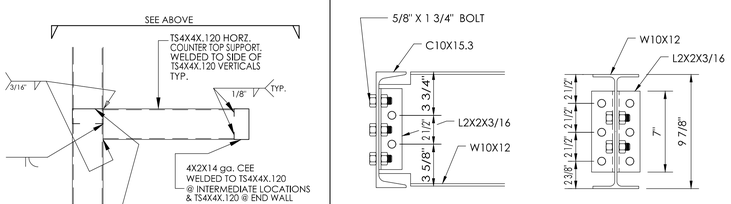


13 B14 CHANNEL CONN. DETAIL
NOT TO SCALE

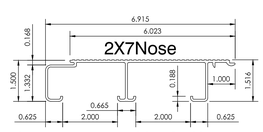


2X7 ALUMINUM INTERLOCKING NOSE PLANK
.078 WALL , 1.330#/FT.
1. Ix =.331 IN. e-4
2. MATERIAL - 6063 T-6
3. MIN. MAT. PROP. - 25000 PSI
4. E = 10,000,000 PSI
5. C = 1.03 IN.

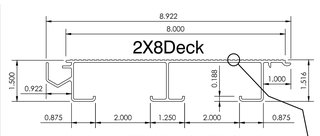


2X8 ALUMINUM INTERLOCKING DECK PLANK
.078 WALL , 1.746#/FT.
1. Ix = .461 IN. e-4
2. MATERIAL - 6063 T-6
3. MIN. MAT. PROP. - 25000 PSI
4. E = 10,000,000 PSI
5. C = 1.00 IN.

SEE
4
B15

15 B14 INTERLOCKING PLANK DETAIL
NOT TO SCALE

manufactured exclusively for Southern Bleacher Company

# HUB Machine and Tool Inc.

PO Box 1508 Graham, Texas 76450
900 Hwy. 380 Bypass
Phone: 940/549-0155 Fax: 940/549-8557

Established 1954


THE ADLER GROUP
STRUCTURAL ENGINEERS • LICENSED IN 34 STATES
500 MAIN STREET, SUITE 700 • FORT WORTH, TEXAS 76102

Southern® BLEACHER COMPANY
GRANDSTANDS • BLEACHERS • STADIUMS
PO Box One, Graham, Texas 76450
801 Fifth Street,
Phone: 940/549-0733 Fax: 940/549-1365
Established 1946

Ph: (817) 332-0174
Fax: (817) 332-0175
Toll: (800) 900-7373
Email: hub@tcadlerc



THIS DRAWING AND ALL INFORMATION THEREIN IS PROPRIETARY TO SOUTHERN BLEACHER COMPANY. IT MAY NOT BE COPIED OR DISTRIBUTED WITHOUT THE CONSENT OF SOUTHERN BLEACHER COMPANY. THE DRAWING IS LOANED AND MUST BE RETURNED UPON REQUEST. THE DRAWING IS PROTECTED UNDER U.S. AND INTERNATIONAL COPYRIGHT LAW.


| REV. | BY | DATE | DESCRIPTION |
|---|---|---|---|
| | ES | 10/01/02 | NONE THIS SHEET |
| | ES | 12/20/02 | NONE THIS SHEET |
| | ES | 02/02/03 | NONE THIS PAGE |

PRESS BOX DETAILS
8'-0" X 72'-0" / SLOPED FRONT

GREENWICH HIGH SCHOOL
CARDINAL STADIUM
GREENWICH, CONNECTICUT

DATE 05/05/20 | DRAWN ES | REVIEWED EM/RR
JOB NUMBER 20101
SHEET B14 OF B17

22" X 34" (11x17 = 1/2 indicated scale)

No

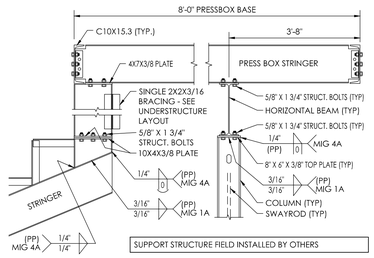


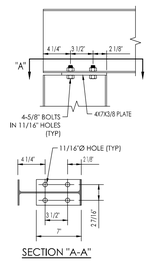


SECTION "A-A"

1 B15 PRESSBOX BASE DETAIL
NOT TO SCALE

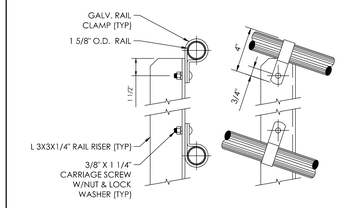


2 B15 RAIL RISER ATTACHMENT DETAIL
NOT TO SCALE — OPTIONAL ROOFTOP FILM DECK

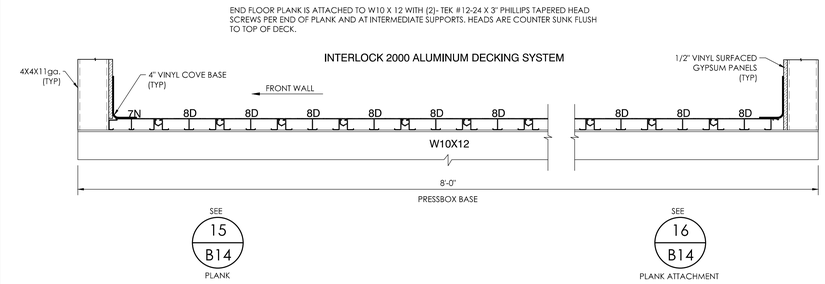


3 B15 PRESSBOX FLOOR DETAIL
NOT TO SCALE

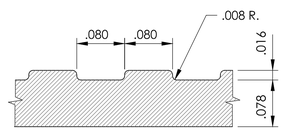


NOTE: TYPICAL FOR ALL PLANKS.

4 B15 FLUTED SURFACE DETAIL
NOT TO SCALE

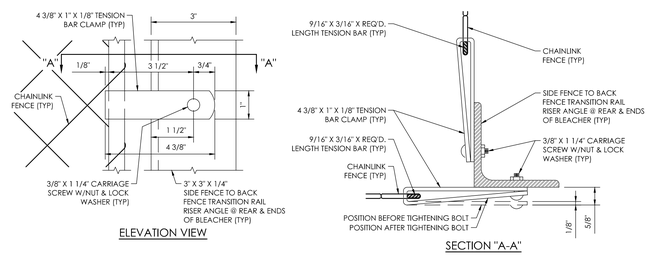


5 B15 TENSION BAR CLAMP DETAIL
NOT TO SCALE — OPTIONAL ROOFTOP FILM DECK

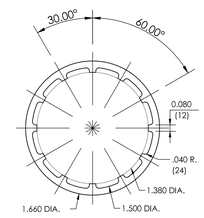


6 B15 1 5/8" O.D. ALUMINUM RAIL DETAIL
NOT TO SCALE — OPTIONAL ROOFTOP FILM DECK

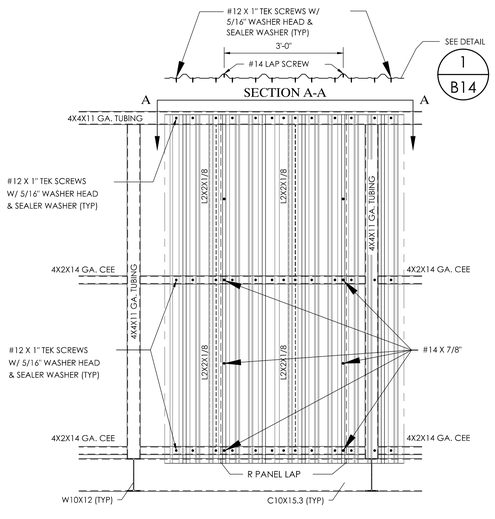


7 B15 "R" PANEL ATTACHMENT DETAIL
NOT TO SCALE

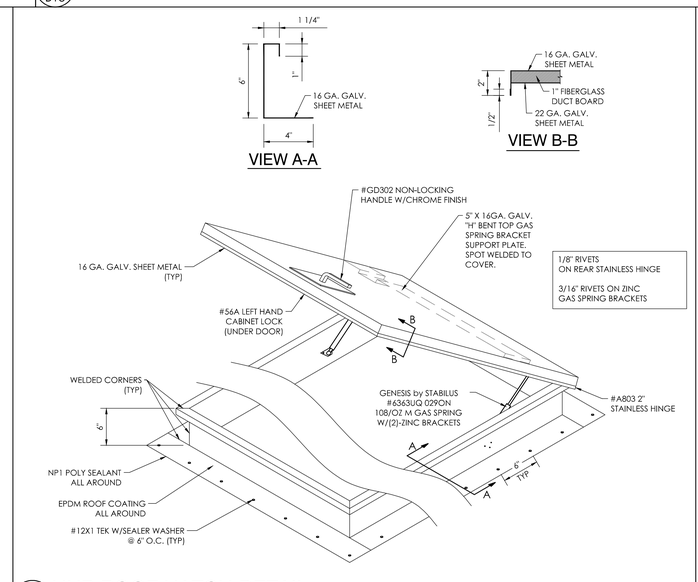


8 B15 HUB ROOF HATCH DETAIL
NOT TO SCALE — OPTIONAL ROOFTOP FILM DECK

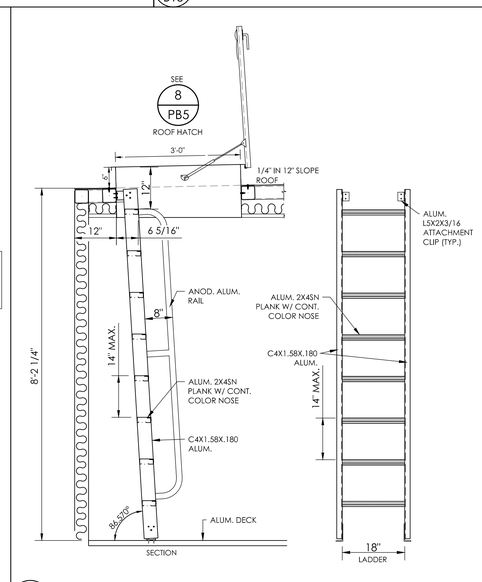


9 B15 HUB LADDER DETAIL
NOT TO SCALE — OPTIONAL ROOFTOP FILM DECK

manufactured exclusively for Southern Bleacher Company

HUB Machine and Tool Inc.

PO Box 1508 Graham, Texas 76450
900 Hwy. 380 Bypass
Phone: 940/549-0155 Fax: 940/549-8557

Established 1954


THE ADLER GROUP
STREET, RAIL ENGINEERS - LICENSED IN 44 STATES
500 MAIN STREET, SUITE 700 • FORT WORTH, TEXAS 76102
Ph: (817) 332-0174
Fax: (817) 332-0175
Toll: (800) 900-2373
Email: info@theadlergroup.com

Southern BLEACHER COMPANY
GRANDSTANDS • BLEACHERS • STADIUMS
PO Box One, Graham, Texas 76450
Phone: 940/549-0733 Fax: 940/549-1365
801 Fifth Street.
Established 1946



THIS DRAWING AND ALL INFORMATION THEREIN IS THE PROPERTY OF THE ADLER GROUP & SOUTHERN BLEACHER COMPANY. IT MAY NOT BE COPIED OR REPRODUCED IN WHOLE OR IN PART WITHOUT THE CONSENT OF THE ADLER GROUP AND SOUTHERN BLEACHER COMPANY. THE DRAWING IS LOANED AND MUST BE RETURNED UPON REQUEST. THE DRAWING IS PROTECTED UNDER U.S. AND INTERNATIONAL COPYRIGHT LAWS.


| REV | BY | DATE | DESCRIPTION |
|---|---|---|---|
| | | | |

| | | | |
|---|---|---|---|
| DATE 05/05/20 | DRAWN ES | CHECKED EM/RR | |
| JOB NUMBER 20101 | | | |
| SHEET B15 | OF B17 | | |

PRESS BOX DETAILS
8'- 0" X 72'- 0" / SLOPED FRONT

GREENWICH HIGH SCHOOL
CARDINAL STADIUM
GREENWICH, CONNECTICUT

22" X 34" (1:1x17 = 1/2 indicated scale)

No

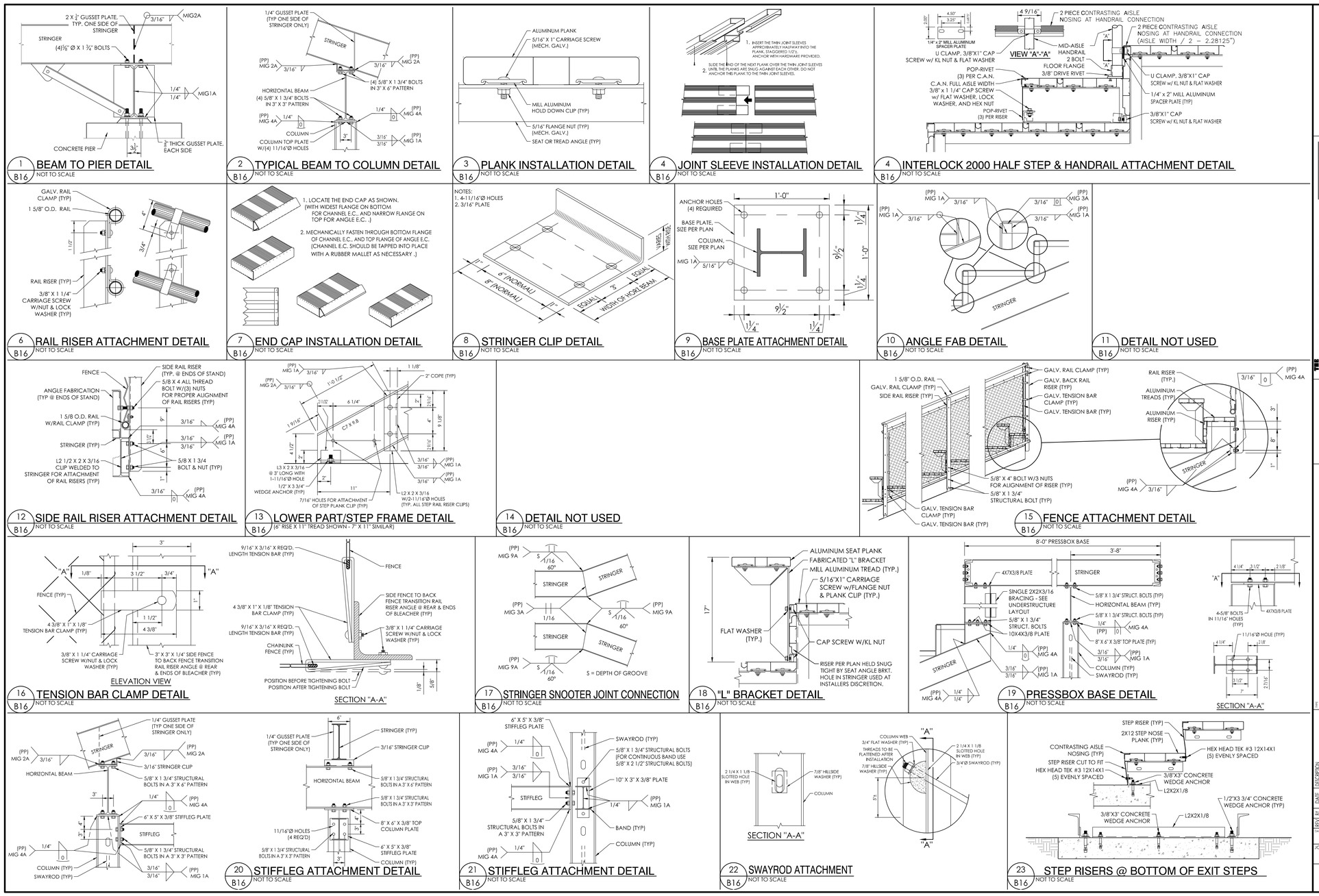


THE SADLER GROUP
STRUCTURAL ENGINEERS • LICENSED IN 44 STATES
500 MAIN STREET, SUITE 700 • FORT WORTH, TEXAS 76102

Southern BLEACHER COMPANY
GRANDSTANDS • BLEACHERS • STADIUMS
PO Box One, Graham, Texas 76450
Phone: 940/549-0733 Fax: 940/549-1365
801 Fifth Street.

Ph: (817) 332-0174
Fax: (817) 332-7635
Toll: (800) 900-2373
Email: sadler@sadlerfi.net

Established 1946

THIS DRAWING AND ALL INFORMATION THEREIN IS PROPRIETARY TO THE SADLER GROUP & SOUTHERN BLEACHER COMPANY. IT MAY NOT BE COPIED OF REPRODUCED WITHOUT THE CONSENT OF THE SADLER GROUP AND SOUTHERN BLEACHER COMPANY. THE DRAWING IS LOANED FOR USE ONLY ON THE PROJECT SPECIFIED. THE DRAWING IS PROTECTED UNDER U.S. AND INTERNATIONAL COPYRIGHT LAW.

DETAILS

GREENWICH HIGH SCHOOL
CARDINAL STADIUM
GREENWICH, CONNECTICUT

| REV. | BY | DATE | DESCRIPTION |
|---|---|---|---|
| A | ES | 1/30/20 | NONE THIS SHEET |
| B | ES | 3/20/20 | NONE THIS SHEET |
| C | ES | 4/01/20 | NONE THIS PAGE |

DATE 05/05/20 DRAWN ES CHECKED EM/RR

JOB NUMBER 20101

SHEET B16 OF B17

22" X 34" (11X17 = 1/2 indicated scale)

No

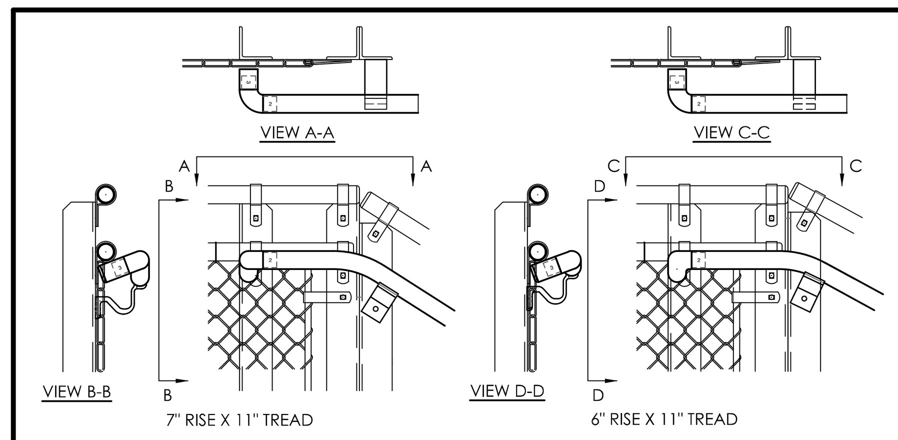


1 / B17 EXIT STEP HANDRAIL TERMINATION DETAIL
NOT TO SCALE

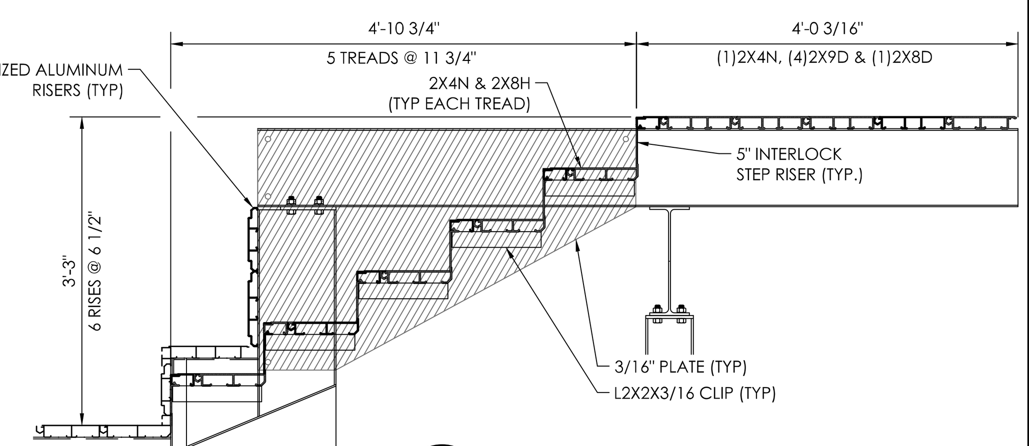


2 / B17 PRESSBOX STEP DETAIL
NOT TO SCALE

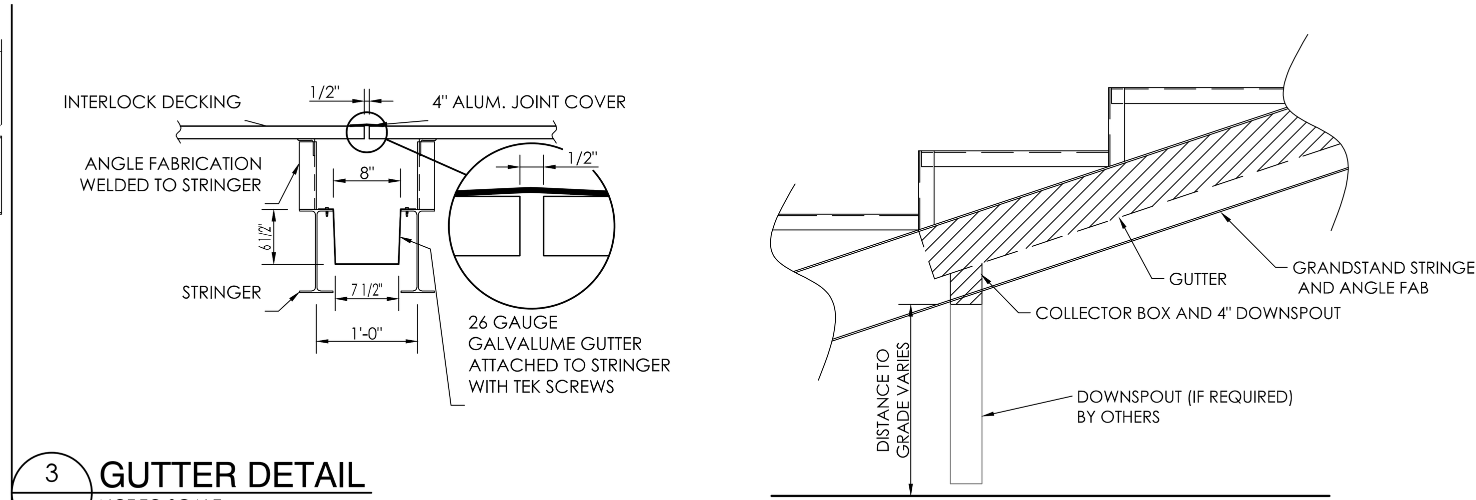


3 / B17 GUTTER DETAIL
NOT TO SCALE

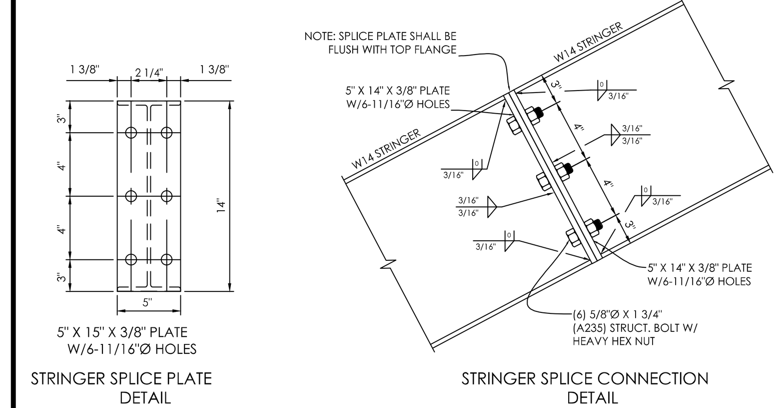


4 / B17 CONNECTION DETAIL
NOT TO SCALE

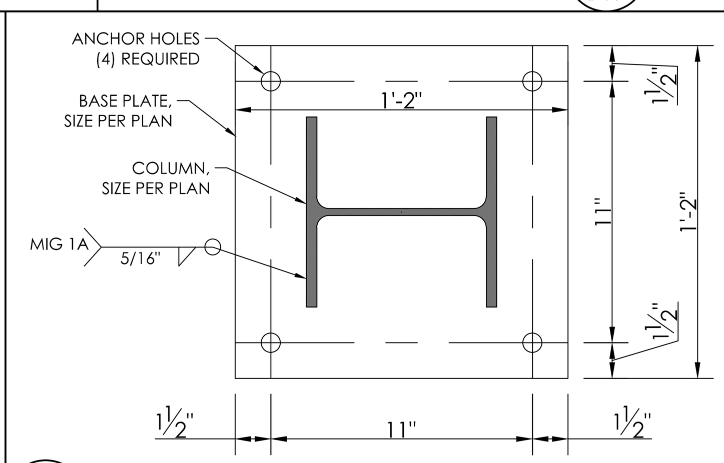


5 / B17 "C" ROW BASE PLATE ATTACHMENT DETAIL
NOT TO SCALE

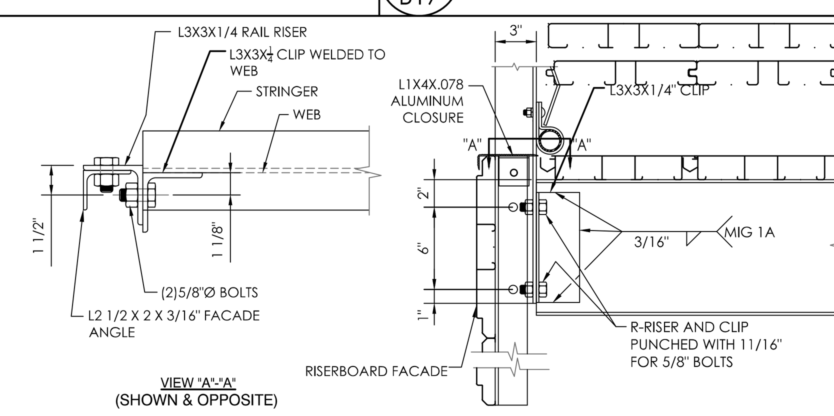


6 / B17 FRONT RAIL RISER ATTACHMENT DETAIL
NOT TO SCALE

THE SADLER GROUP
STRUCTURAL ENGINEERS LICENSED IN 45 STATES
500 MAIN STREET, SUITE 700 • FORT WORTH, TEXAS 76102
Ph: (817) 332-1074
Fax: (817) 338-0335
Toll: (800) 900-7373
Email: tsadler@swbell.net

Southern® BLEACHER COMPANY
GRANDSTANDS ▪BLEACHERS ▪STADIUMS
PO Box One, Graham, Texas 76450
801 Fifth Street.
Phone: 940/549-0733 Fax: 940/549-1365
Established 1946

THIS DRAWING AND ALL INFORMATION THEREIN IS THE PROPERTY OF SADLER GROUP AND SOUTHERN BLEACHER COMPANY. IT MAY NOT BE COPIED OR REPRODUCED WITHOUT PRIOR WRITTEN CONSENT OF BOTH SADLER GROUP AND SOUTHERN BLEACHER COMPANY. THE DRAWING IS LOANED AND SUBJECT TO RETURN UPON DEMAND. DRAWING IS PROTECTED UNDER U.S. AND INTERNATIONAL COPYRIGHT LAW.

| REV | BY | DATE | DESCRIPTION |
|---|---|---|---|
| 3 | ES | 10/01/20 | NONE THIS SHEET |
| 2 | ES | 05/29/20 | NONE THIS SHEET |
| 1 | ES | 05/27/20 | NONE THIS PAGE |

TYPE: DETAILS

TITLE: GREENWICH HIGH SCHOOL
CARDINAL STADIUM
GREENWICH, CONNECTICUT

DATE: 05/05/20 DRAWN: ES CHECKED: EM/RR

JOB NUMBER: 20101

SHEET: B17 OF: B17

22" X 34" (11x17 = 1/2 indicated scale)

No