GENERAL NOTES

1. TOPOGRAPHIC INFORMATION IS COMPILED USING AVAILABLE TOWN OF WEST HARTFORD GIS INFORMATION, AS WELL AS A SURVEY COMPLETED BY THE TOWN OF WEST HARTFORD ENGINEERING DIVISION.
2. NORTH ARROW IS BASED UPON CONNECTICUT COORDINATE SYSTEM NAD 1927.
3. ELEVATIONS, CONTOURS, AND BENCHMARK ARE BASED UPON NAVD 1988.
4. INFORMATION REGARDING THE LOCATION OF EXISTING UTILITIES HAS BEEN BASED UPON AVAILABLE INFORMATION AND MAY BE INCOMPLETE, AND WHERE SHOWN SHOULD BE CONSIDERED APPROXIMATE. THE LOCATION OF ALL EXISTING UTILITIES SHOULD BE CONFIRMED PRIOR TO BEGINNING CONSTRUCTION. CALL "CALL BEFORE YOU DIG", 1-800-922-4455. ALL UTILITY LOCATIONS THAT DO NOT MATCH THE VERTICAL OR HORIZONTAL CONTROL SHOWN ON THE PLANS SHALL IMMEDIATELY BE BROUGHT TO THE ATTENTION OF THE ENGINEER FOR RESOLUTION.
5. MILONE & MACBROOM INC. ACCEPTS NO RESPONSIBILITY FOR THE ACCURACY OF MAPS AND DATA WHICH HAVE BEEN SUPPLIED BY OTHERS.
6. ALL DIMENSIONS AND ELEVATIONS SHALL BE VERIFIED IN THE FIELD PRIOR TO CONSTRUCTION. ANY DISCREPANCIES SHALL BE BROUGHT TO THE ATTENTION OF THE ENGINEER.
7. SEDIMENT AND EROSION CONTROL MEASURES AS DEPICTED ON THESE PLANS AND DESCRIBED WITHIN THE SEDIMENT AND EROSION CONTROL NARRATIVE SHALL BE IMPLEMENTED AND MAINTAINED UNTIL PERMANENT COVER AND STABILIZATION IS ESTABLISHED. ALL SEDIMENT AND EROSION CONTROL MEASURES SHALL CONFORM TO THE "GUIDELINES FOR SOIL EROSION AND SEDIMENT CONTROL, CONNECTICUT - 2002", AND IN ALL CASES BEST MANAGEMENT PRACTICES SHALL PREVAIL.
8. ALL DISTURBED AREAS SHALL RECEIVE A MINIMUM OF 6" TOPSOIL, AND BE SEEDED WITH GRASS, AS SHOWN ON THE PLANS.
9. ALL PROPOSED CONTOURS AND SPOT ELEVATIONS INDICATE FINISHED GRADE.
10. ALL CONSTRUCTION MATERIALS AND METHODS SHALL CONFORM TO THE TOWN OF WEST HARTFORD REQUIREMENTS AND TO THE APPLICABLE SECTIONS OF THE STATE OF CONNECTICUT DEPARTMENT OF TRANSPORTATION STANDARD SPECIFICATIONS FOR ROADS, BRIDGES, AND INCIDENTAL CONSTRUCTION, FORM 817 AND ADDENDUMS
11. THE PLANS REQUIRE A CONTRACTOR'S WORKING KNOWLEDGE OF LOCAL, MUNICIPAL, WATER AUTHORITY, AND STATE CODES FOR UTILITY SYSTEMS. ANY CONFLICTS BETWEEN MATERIALS AND LOCATIONS SHOWN, AND LOCAL REQUIREMENTS SHALL BE BROUGHT TO THE ATTENTION OF THE ENGINEER PRIOR TO THE EXECUTION OF WORK. THE ENGINEER WILL NOT BE HELD LIABLE FOR COSTS INCURRED TO IMPLEMENT OR CORRECT WORK WHICH DOES NOT CONFORM TO LOCAL CODE.
12. ALL FUEL, OIL, PAINT, OR OTHER HAZARDOUS MATERIALS USED DURING CONSTRUCTION SHOULD BE STORED IN A SECONDARY CONTAINER AND REMOVED TO A LOCKED INDOOR AREA WITH AN IMPERVIOUS FLOOR DURING NON-WORK HOURS.

PROPOSED OUTDOOR CLASSROOM
WESTMOOR PARK

119 FLAGG ROAD
WEST HARTFORD, CONNECTICUT

MMI #1197-32
SEPTEMBER 27, 2019
REVISED: OCTOBER 16, 2019
REVISED: OCTOBER 29, 2019
REVISED: NOVEMBER 5, 2019
REVISED: NOVEMBER 22, 2019
REVISED: FEBRUARY 5, 2020 (SITE BID)
REVISED: FEBRUARY 24, 2020 (ADDENDUM #1)

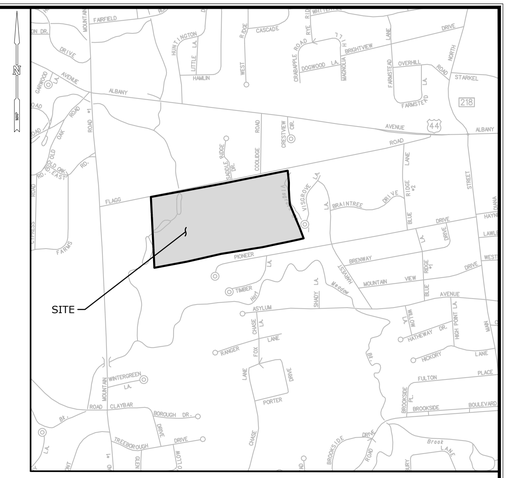

LOCATION MAP:

0' 500' 1000'
0 1/2" 1"
SCALE 1" = 1000'

RENDERING OF CONCEPTUAL OUTDOOR CLASSROOM

PROJECT SITE VICINITY MAP:

0' 75' 150'
0 1/2" 1"
SCALE 1" = 150'

Know what's **below.**
Call before you dig.
www.cbyd.com

OWNER/APPLICANT:

TOWN OF WEST HARTFORD
50 SOUTH MAIN STREET
WEST HARTFORD, CT 06107

PREPARED BY:

MILONE & MACBROOM
99 REALTY DRIVE
CHESHIRE, CT 06410
203.271.1773
WWW.MMINC.COM

LIST OF DRAWINGS

NO.	NAME	TITLE
01	--	TITLE SHEET
02	SP-1	SITE PLAN
03	SP-2	SITE PLAN
04	SD-1	SITE DETAILS
05	SD-2	SITE DETAILS

Copyright Milone & MacBroom, Inc - 2019

WEST HARTFORD

Town Plan and Zoning Commission
Town of West Hartford
50 South Main Street, Room 214, West Hartford, CT 06107
P: (860) 561-7555 www.westhartfordct.gov

CERTIFIED MAIL

November 7, 2019

Helen Rubino-Turco
50 South Main Street
West Hartford, CT 06107

SUBJECT: 119 Flagg Road (Westmoor Park) – SUP #1352 - Revised

Dear Ms. Rubino-Turco:

At its regular meeting of Wednesday, November 6, 2019, the West Hartford Town Plan and Zoning Commission (TPZ) gave consideration to the following item:

> **119 Flagg Road (Westmoor Park)** – Application (SUP #1352) of the Town of West Hartford, (Helen Rubino-Turco, Director of Leisure Services) requesting approval of a Special Use Permit for the construction of an open-air outdoor classroom structure with a maximum footprint of 25 x 50 ft. The structure includes handicapped accessibility and limited lighting. No sound amplification system is proposed. (Submitted for TPZ receipt on October 7, 2019. Required public hearing scheduled for November 6, 2019.)

The TPZ acted by **unanimous vote (5 - 0)** (Motion/Prestage; Second/Binkhorst) (Binkhorst seated for Maresca, Gomes seated for O'Donnell) to **GRANT** the Special Use Permit application with conditions. During its discussions and deliberations on this matter, the Commission made the following findings and conditions:

1. The proposal meets the finding requirements of Section 177-42A (5a) of the West Hartford Code of Ordinances. In particular:
   a. The location and size of the use, the nature and intensity of the operations connected with this use, the size of the lot in relation to it and the location of the lot with respect to streets giving access to it are such that it will be in harmony with the appropriate and orderly development of the district in which it is located.
   b. The kind, location and height of all structures and the nature and extent of the landscaping on the lot are such that the use will not hinder or discourage the appropriate development and use of adjacent properties.
   c. The parking, loading, trash and recycling facilities are adequate and properly located for the proposed use, and the entrance and exit driveways are laid out so as to achieve maximum safety.
2. Plans of record are incorporated by reference in this approval as fully set forth herein and modified by the conditions below.
3. The special use permit approval is subject to full compliance with the Town erosion and sediment requirements and shall be installed and maintained in accordance with the 2002 Connecticut Guidelines for Soil Erosion and Sediment Control as amended.
4. Prior to the start of any site disturbance, all sediment and erosion controls and tree protection shall be installed. Once installed, but before the commencement of any disturbance, the Town Planner shall be notified and provided the opportunity to inspect.
5. Pursuant to West Hartford Code of Ordinances Section 177-42A (8), the applicant shall return to the TPZ by December 2021 for further review and evaluation. The TPZ may consider supplemental conditions of approval if operational concerns are identified.
6. This letter of approval shall be stripped onto the final plan.

Please contact the Planning Division to discuss final filing requirements for the approval. Final plan submission requirements include a full sized mylar set and a 11"x17" reduced sized set with this letter stripped onto it. A digital copy, in PDF format, of the final plans is also required to be submitted.

This TPZ approval is not final until the legal requirements for filing are completed. The effective date of approval is **November 27, 2019.**

If you have any questions, please feel free to contact the Planning Staff at 860.561.7555.

Sincerely,

Kevin Ahern
Chairman TPZ/IWWA

c: Matthew Hart, Town Manager
Essie Labrot, Town Clerk
Tim Mikloche, Supervisor of Inspections
Subject File
Mark McGovern, Director of Community Development
Todd Dumais, Town Planner
Brian Padlik, Zoning Enforcement Officer

S:\tpz\decisionlettr\2019\119 Flagg Road_November 6_SUP_Granted

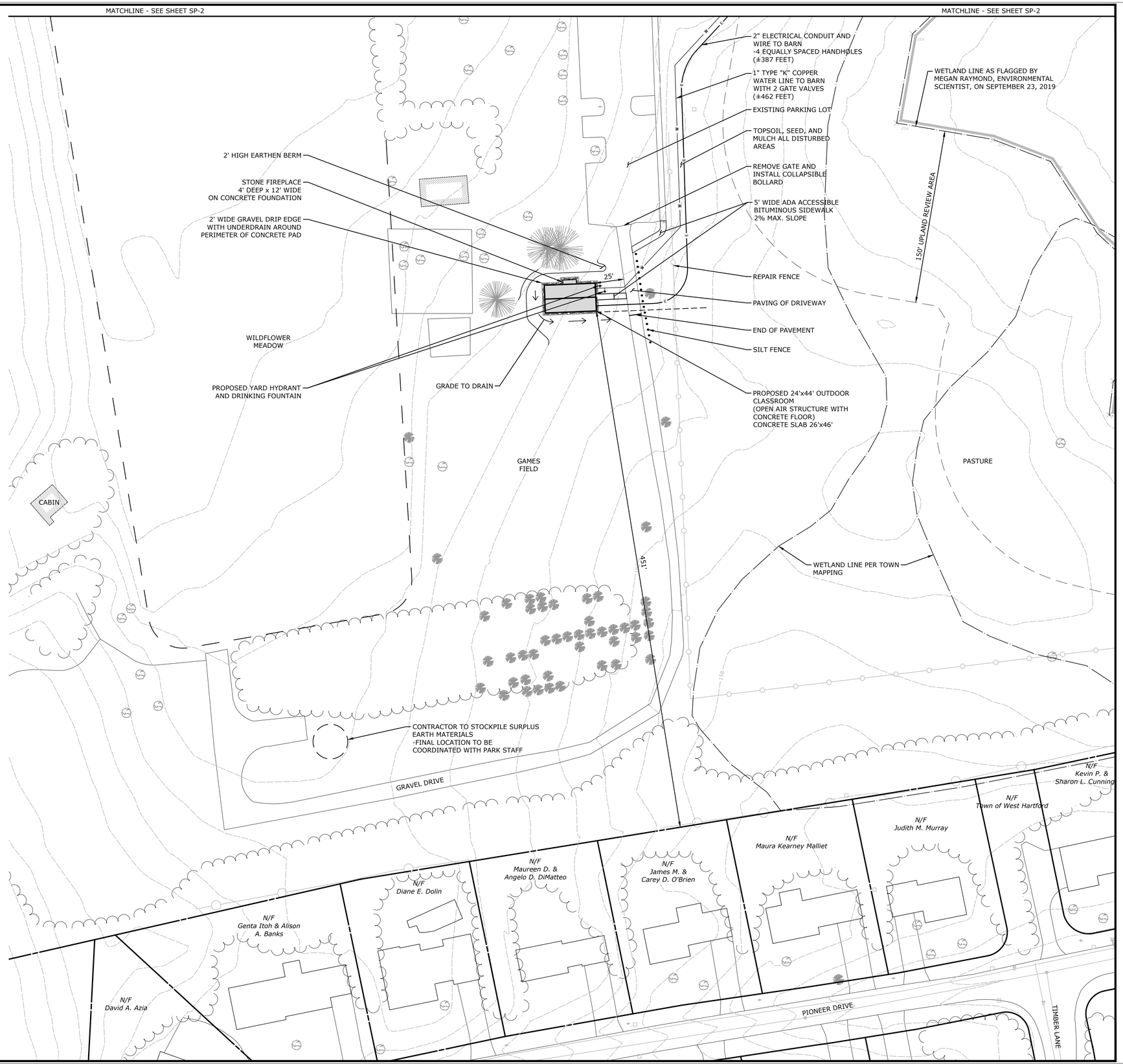

MILONE & MACBROOM
99 REALTY DRIVE
CHESHIRE, CT 06410
203.271.1773
WWW.MMINC.COM

DESCRIPTION	DATE	BY
MISCELLANEOUS REVISIONS	10/16/2019	AWG
OUTDOOR CLASSROOM LOCATION	10/28/2019	AWG
OUTDOOR CLASSROOM LOCATION	11/05/2019	AWG
BID DOCUMENTS	11/22/2019	AWG
SITE BID	02/05/2020	AWG
ADDENDUM #1	02/24/2020	AWG

SITE PLAN
PROPOSED OUTDOOR CLASSROOM
WESTMOOR PARK
119 FLAGG ROAD
WEST HARTFORD, CONNECTICUT

AWG	AWG	TD
DESIGNED	DRAWN	CHECKED

SCALE: 1"=40'
DATE: SEPTEMBER 27, 2019
PROJECT NO.: 1197-32
SHEET NO.: 02 OF 05
SHEET NAME: SP-1

Copyright Milone & MacBroom, Inc - 2019

DESCRIPTION	DATE	BY
MISCELLANEOUS REVISIONS	10/16/2019	AWG
OUTDOOR CLASSROOM LOCATION	10/29/2019	AWG
OUTDOOR CLASSROOM LOCATION	11/05/2019	AWG
BID DOCUMENTS	11/22/2019	AWG
SITE BID	02/05/2020	AWG
ADDENDUM #1	02/24/2020	AWG

MILONE & MACBROOM
99 REALTY DRIVE
CHESHIRE, CT 06410
203.271.1773
WWW.MMINC.COM

SITE PLAN

PROPOSED OUTDOOR CLASSROOM
WESTMOOR PARK
119 FLAGG ROAD
WEST HARTFORD, CONNECTICUT

AWG	AWG	TD
DESIGNED	DRAWN	CHECKED

SCALE: 1"=40'

DATE: SEPTEMBER 27, 2019

PROJECT NO.: 1197-32

SHEET NO.: 03 OF 05

SHEET NAME: SP-2

Copyright Milone & MacBroom, Inc - 2019

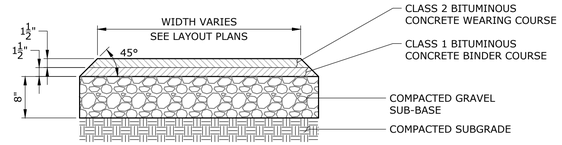

BITUMINOUS CONCRETE SIDEWALK

NOT TO SCALE

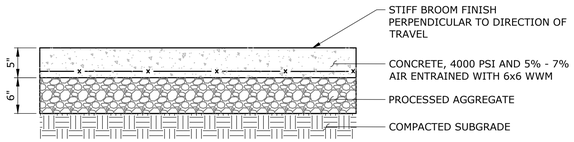

FOUNTAIN PAD (36"x78")

NOT TO SCALE

Maxi*Force*™ Collapsible Bollard

Standard Body, Padlock Operated, Standard Style 2 Head, Simple Base

AHJ approved in many cities / counties / campuses for use in fire lanes per International Fire Code (IFC) 503

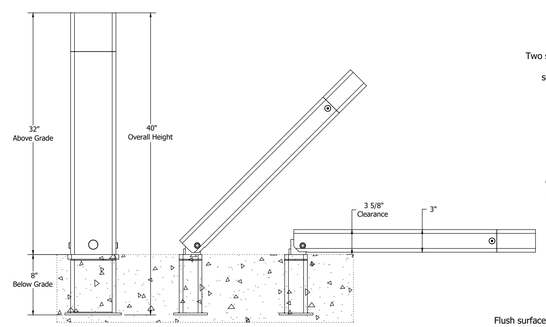

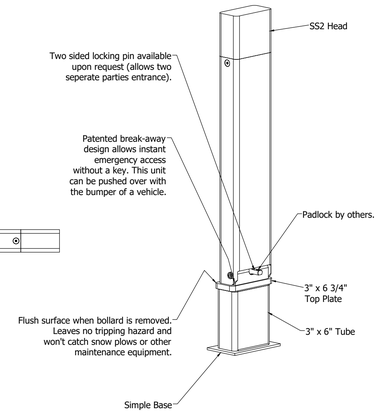

- Low Maintenance / Durable steel construction
- One year warranty / Protected by $1,000,000 in liability insurance
- No complex assembly required in the field
- Custom sizes, options, colors and finishes available upon request
- Finish options available (add code to the end of the model number)
  - Powder coated (PC)
  - Powder coated with DRYZINC primer (PCZ)
  - Hot dip galvanized (G)
  - Hot dip galvanized & powder coated (GPC)
- Reflective tape available upon request

Bollard Assy. Weight	Base Weight
44 lbs	14 lbs
Drawing Rev.	Created
1	11/2/2009

PROPRIETARY AND CONFIDENTIAL

THIS DRAWING CONTAINS PROPRIETARY INFORMATION OF **BLUE EMBER TECHNOLOGIES, LLC**. ANY USE OF THIS DRAWING OR THE INFORMATION CONTAINED HEREIN FOR OTHER THAN THE SPECIFIC PURPOSE FOR WHICH THIS DRAWING IS FURNISHED IS FORBIDDEN.

Maxi*Force*™ Traffic Control Bollards
7560 Main Street
Sykesville, MD 21784
410-552-9888 (phone) - 410-552-9939 (fax)
www.maxiforcebollards.com - sales@maxiforcebollards.com

Model **MCSP-SS2-S**
Size C | File Name MCSP-SS2-S
Scale NA | DO NOT SCALE DRAWING | Sheet 1 Of 1

COLLAPSIBLE STEEL BOLLARD

NOT TO SCALE

IMAGES OF SAMPLE STRUCTURES

NOT TO SCALE

SEDIMENT AND EROSION CONTROL SPECIFICATIONS

GENERAL:

THESE GUIDELINES SHALL APPLY TO ALL WORK CONSISTING OF ANY AND ALL TEMPORARY AND/OR PERMANENT MEASURES TO CONTROL WATER POLLUTION AND SOIL EROSION, AS MAY BE REQUIRED, DURING THE CONSTRUCTION OF THE PROJECT. IN GENERAL, ALL CONSTRUCTION ACTIVITIES SHALL PROCEED IN SUCH A MANNER SO AS NOT TO POLLUTE ANY WETLANDS, WATERCOURSE, WATERBODY, AND CONDUIT CARRYING WATER, ETC. THE CONTRACTOR SHALL LIMIT, INSOFAR AS POSSIBLE, THE SURFACE AREA OF EARTH MATERIALS EXPOSED BY CONSTRUCTION METHODS AND IMMEDIATELY PROVIDE PERMANENT AND TEMPORARY POLLUTION CONTROL MEASURES TO PREVENT CONTAMINATION OF ADJACENT WETLANDS, WATERCOURSES, AND WATERBODIES, AND TO PREVENT, INSOFAR AS POSSIBLE, EROSION ON THE SITE.

LAND GRADING

GENERAL:

1. THE RESHAPING OF THE GROUND SURFACE BY EXCAVATION AND FILLING OR A COMBINATION OF BOTH, TO OBTAIN PLANNED GRADES, SHALL PROCEED IN ACCORDANCE WITH THE FOLLOWING CRITERIA:
   a. THE CUT FACE OF EARTH EXCAVATION SHALL NOT BE STEEPER THAN TWO HORIZONTAL TO ONE VERTICAL (2:1).
   b. THE PERMANENT EXPOSED FACES OF FILLS SHALL NOT BE STEEPER THAN TWO HORIZONTAL TO ONE VERTICAL (2:1).
   c. THE CUT FACE OF ROCK EXCAVATION SHALL NOT BE STEEPER THAN ONE HORIZONTAL TO FOUR VERTICAL (1:4).
   d. PROVISION SHOULD BE MADE TO CONDUCT SURFACE WATER SAFELY TO STORM DRAINS TO PREVENT SURFACE RUNOFF FROM DAMAGING CUT FACES AND FILL SLOPES.
   e. EXCAVATIONS SHOULD NOT BE MADE SO CLOSE TO PROPERTY LINES AS TO ENDANGER ADJOINING PROPERTY WITHOUT PROTECTING SUCH PROPERTY FROM EROSION, SLIDING, SETTLING, OR CRACKING.
   f. NO FILL SHOULD BE PLACED WHERE IT WILL SLIDE OR WASH UPON THE PREMISES OF ANOTHER OWNER OR UPON ADJACENT WETLANDS, WATERCOURSES, OR WATERBODIES.
   g. PRIOR TO ANY REGRADING, A STABILIZED CONSTRUCTION ENTRANCE SHALL BE PLACED AT THE ENTRANCE TO THE WORK AREA IN ORDER TO REDUCE MUD AND OTHER SEDIMENTS FROM LEAVING THE SITE.

TOPSOILING

GENERAL:

1. TOPSOIL SHALL BE SPREAD OVER ALL EXPOSED AREAS IN ORDER TO PROVIDE A SOIL MEDIUM HAVING FAVORABLE CHARACTERISTICS FOR THE ESTABLISHMENT, GROWTH, AND MAINTENANCE OF VEGETATION.
2. UPON ATTAINING FINAL SUBGRADES, SCARIFY SURFACE TO PROVIDE A GOOD BOND WITH TOPSOIL.
3. REMOVE ALL LARGE STONES, TREE LIMBS, ROOTS AND CONSTRUCTION DEBRIS.
4. APPLY SOIL AMENDMENTS AS FOLLOWS:
   LIME: ACCORDING TO SOIL TEST OR AT THE RATE OF 2 TONS PER ACRE.

MATERIAL:

1. TOPSOIL SHOULD HAVE PHYSICAL, CHEMICAL, AND BIOLOGICAL CHARACTERISTICS FAVORABLE TO THE GROWTH OF PLANTS.
2. TOPSOIL SHOULD HAVE A SANDY OR LOAMY TEXTURE.
3. TOPSOIL SHOULD BE RELATIVELY FREE OF SUBSOIL MATERIAL AND MUST BE FREE OF LARGE STONES , LUMPS OF SOIL, ROOTS, TREE LIMBS, TRASH, OR CONSTRUCTION DEBRIS. IT SHOULD BE FREE OF ROOTS OR RHIZOMES SUCH AS THISTLE, NUTGRASS, AND QUACKGRASS.
4. AN ORGANIC MATTER CONTENT OF SIX PERCENT (6%) IS REQUIRED. AVOID LIGHT COLORED SUBSOIL MATERIAL.
5. SOLUBLE SALT CONTENT OF LESS THAN 400 PPM IS REQUIRED.
6. THE TOPSOIL SHALL BE WARRANTED BY SELLER TO BE FREE OF DETECTABLE RESIDUES OF CHEMICAL PESTICIDES, HERBICIDES, PETROLEUM PRODUCTS, OR OTHER UNSUITABLE TOXINS.

APPLICATION:

1. AVOID SPREADING WHEN TOPSOIL IS WET OR FROZEN.
2. SPREAD TOPSOIL UNIFORMLY TO A DEPTH OF AT LEAST FOUR INCHES (4"), OR TO THE DEPTH SHOWN ON THE LANDSCAPING PLANS.

TEMPORARY VEGETATIVE COVER

TEMPORARY VEGETATIVE COVER SHALL BE ESTABLISHED ON ALL UNPROTECTED AREAS THAT PRODUCE SEDIMENT, AREAS WHERE FINAL GRADING HAS BEEN COMPLETED, AND AREAS WHERE THE ESTIMATED PERIOD OF BARE SOIL EXPOSURE IS LESS THAN 12 MONTHS. TEMPORARY VEGETATIVE COVER SHALL BE APPLIED IF AREAS WILL NOT BE PERMANENTLY SEEDED BY SEPTEMBER 1.

GENERAL:

1. INSTALL REQUIRED SURFACE WATER CONTROL MEASURES.
2. REMOVE LOOSE ROCK, STONE, AND CONSTRUCTION DEBRIS FROM AREA.
3. APPLY SOIL AMENDMENTS AS FOLLOWS:
   LIME: ACCORDING TO SOIL TEST OR AT THE RATE OF 1 TONS PER ACRE.
4. UNLESS HYDROSEEDED, WORK IN LIME TO A DEPTH OF 4 INCHES WITH A DISK OR ANY SUITABLE EQUIPMENT. DO NOT WORK FINISHED COMPOST INTO THE SOIL - APPLY IT EVENLY TO SOIL SURFACE AS A SEED BED.
5. TILLAGE SHOULD ACHIEVE A REASONABLY UNIFORM LOOSE SEEDBED. WORK ON CONTOUR IF SITE IS SLOPING.

SITE PREPARATION:

1. SELECT APPROPRIATE SPECIES FOR THE SITUATION. NOTE RATES AND SEEDING DATES (SEE VEGETATIVE COVER SELECTION & MULCHING)
2. APPLY SEED UNIFORMLY ACCORDING TO THE RATE INDICATED BY BROADCASTING, DRILLING, OR HYDRAULIC APPLICATION.
3. UNLESS HYDROSEEDED, COVER RYEGRASS SEEDS WITH NOT MORE THAN 1/4 INCH OF SOIL USING SUITABLE EQUIPMENT.
4. MULCH IMMEDIATELY AFTER SEEDING IF REQUIRED. (SEE VEGETATIVE COVER SELECTION & MULCHING SPECIFICATION BELOW.) APPLY STRAW AND ANCHOR TO SLOPES GREATER THAN 3%%% OR WHERE NEEDED.

EROSION CHECKS

GENERAL:

1. TEMPORARY PERVIOUS BARRIERS USING BALES OF HAY OR STRAW, HELD IN PLACE WITH STAKES DRIVEN THROUGH THE BALES AND INTO THE GROUND OR GEOTEXTILE FABRIC FASTENED TO A FENCE POST AND BURIED INTO THE GROUND, SHALL BE INSTALLED AND MAINTAINED AS REQUIRED TO CHECK EROSION AND REDUCE SEDIMENTATION.

CONSTRUCTION:

1. BALES SHOULD BE PLACED IN A ROW WITH ENDS TIGHTLY ABUTTING THE ADJACENT BALES.
2. EACH BALE SHALL BE EMBEDDED INTO THE SOIL A MINIMUM OF FOUR (4") INCHES.
3. BALES SHALL BE SECURELY ANCHORED IN PLACE BY WOOD STAKES OR REINFORCEMENT BARS DRIVEN THROUGH THE BALES AND INTO THE GROUND. THE FIRST STAKE IN EACH BALE SHALL BE ANGLED TOWARD THE PREVIOUSLY LAID BALE TO FORCE BALES TOGETHER.
4. GEOTEXTILE FABRIC SHALL BE SECURELY ANCHORED AT THE TOP OF A THREE FOOT (3') HIGH FENCE AND BURIED A MINIMUM OF FOUR INCHES (4") TO THE SOIL. SEAMS BETWEEN SECTIONS OF FILTER FABRIC SHALL OVERLAP A MINIMUM OF TWO FEET (2').

INSTALLATION AND MAINTENANCE:

1. BALED HAY EROSION BARRIERS SHALL BE INSTALLED AT ALL STORM SEWER INLETS.
2. BALED HAY EROSION BARRIERS AND GEOTEXTILE FENCE SHALL BE INSTALLED AT THE LOCATION INDICATED ON THE PLAN AND IN ADDITIONAL AREAS AS MAY BE DEEMED APPROPRIATE DURING CONSTRUCTION.
3. ALL EROSION CHECKS SHALL BE MAINTAINED UNTIL ADJACENT AREAS ARE STABILIZED.
4. INSPECTION SHALL BE FREQUENT (AT MINIMUM MONTHLY AND BEFORE AND AFTER HEAVY RAIN) AND REPAIR OR REPLACEMENT SHALL BE MADE PROMPTLY AS NEEDED.
5. EROSION CHECKS SHALL BE REMOVED WHEN THEY HAVE SERVED THEIR USEFULNESS SO AS NOT TO BLOCK OR IMPEDE STORMWATER FLOW OR DRAINAGE.

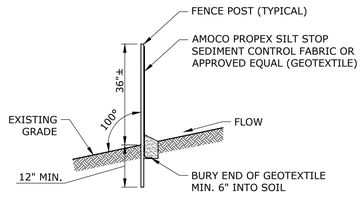

SEDIMENT FILTER FENCE

NOT TO SCALE

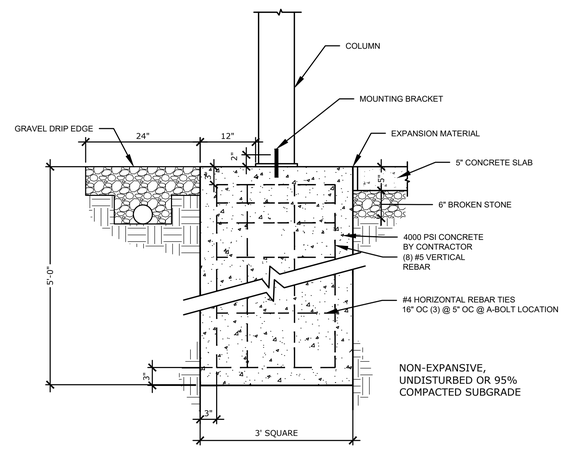

NOTE:
FINAL DESIGN OF FOOTING AND SLAB TO BE PREPARED
BY LICENSED ENGINEER HIRED BY SITE CONTRACTOR

SCHEMATIC CAISSON FOOTING & SLAB DETAIL

NOT TO SCALE

MILONE & MACBROOM
99 REALTY DRIVE
CHESHIRE, CT 06410
203.271.1773
WWW.MMINC.COM

DESCRIPTION	DATE	BY
MISCELLANEOUS REVISIONS	10/16/2019	AWG
BID DOCUMENTS	11/22/2019	AWG
SITE BID	02/05/2020	AWG

SITE DETAILS

PROPOSED OUTDOOR CLASSROOM
WESTMOOR PARK
119 FLAGG ROAD
WEST HARTFORD, CONNECTICUT

AWG	AWG	TD
DESIGNED	DRAWN	CHECKED

SCALE: AS NOTED

DATE: SEPTEMBER 27, 2019

PROJECT NO.: 1197-32

SHEET NO.: 04 OF 05

SHEET NAME: SD-1

Copyright Milone & MacBroom, Inc - 2019

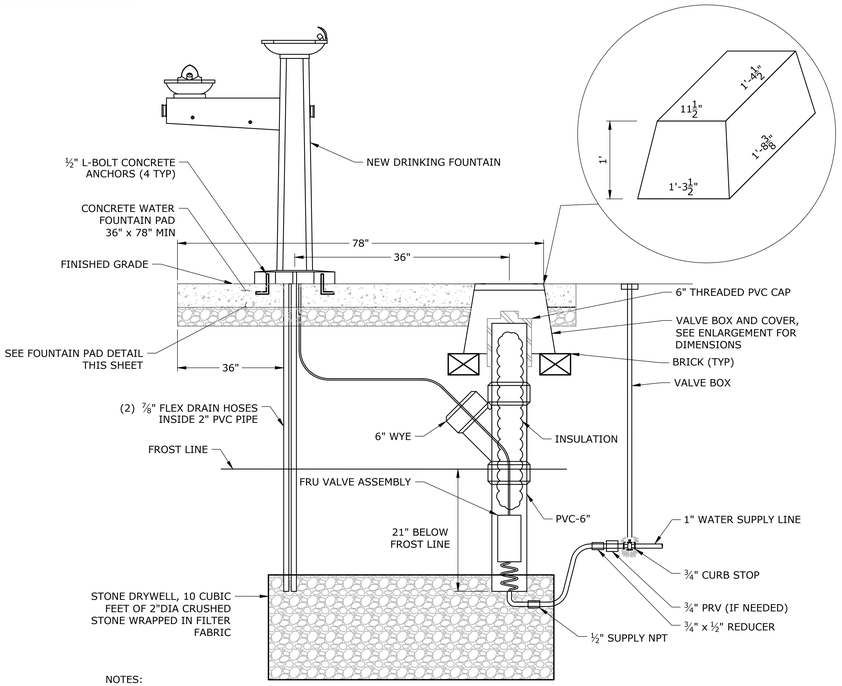

NOTES:

1. INLET WATER PRESSURE MUST BE BETWEEN 40-60 PSI. INSTALL PRESSURE REDUCING VALVE IF SYSTEM PRESSURE EXCEEDS 60 PSI AT ANY TIME.
2. CONTRACTOR SHALL PRESSURE TEST AND DISINFECT THE WATER LINE UPON INSTALATION OF THE DRINKING FOUNTAIN AND PROVIDE A WATER ANALYSIS FOR POTABILITY
3. INSTALL FREEZE RESISTANT ADA COMPLIANT DRINKING FOUNTAIN AS MANUFACTURED BY MURDOCK, MODEL M-23B-JF2, COLOR BROWN PER MANUFACTURER'S RECOMMENDATIONS

DRINKING FOUNTAIN CONNECTION

NOT TO SCALE

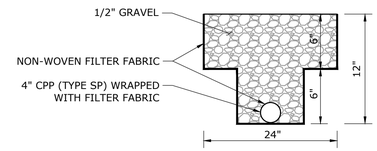

2' GRAVEL DRIP EDGE WITH UNDERDRAIN

NOT TO SCALE

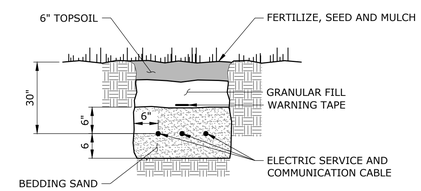

ELECTRICAL UTILITY TRENCH

NOT TO SCALE

THE METROPOLITAN DISTRICT
WATER STANDARD DETAILS

MDC

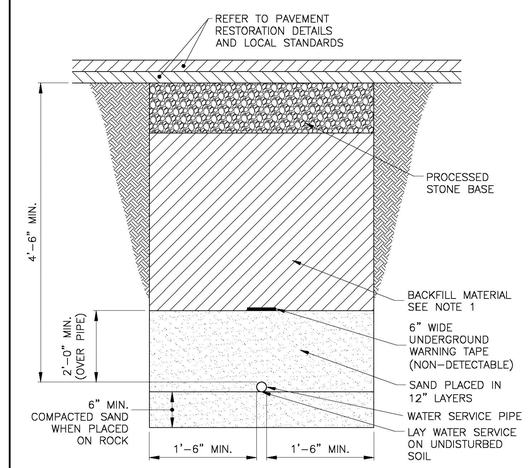

NOTE:

1. BACKFILL MATERIAL SHALL BE BANK-RUN GRAVEL IN PAVED AREAS (INCLUDING SIDEWALKS AND DRIVEWAYS) OR COMMON FILL IN NON-PAVED AREAS.

WATER SERVICE TRENCH
DETAIL W
NTS 4

FILE: W-4 Water Service Trench.dwg PAGE 52 Latest Revision: JANUARY 2017

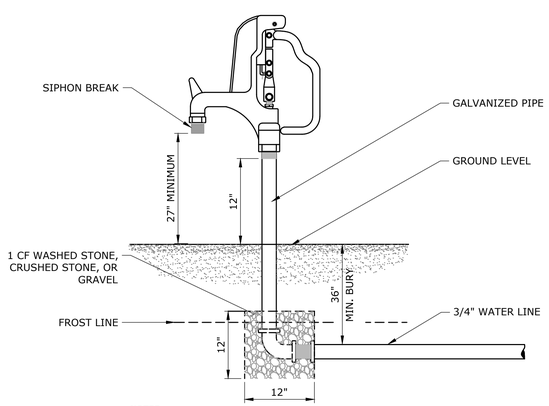

NOTES:

1. HOSE BIB SHALL ACCOMMODATE STANDARD 3/4" GARDEN HOSE.

YARD HYDRANT (NON-FREEZE)

NOT TO SCALE

STONE FIRE PLACE IMAGES

NOT TO SCALE

DESCRIPTION	DATE	BY
MISCELLANEOUS REVISIONS	10/16/2019	AWG
BID DOCUMENTS	11/22/2019	AWG
SITE BID	02/05/2020	AWG

MILONE & MACBROOM
99 REALTY DRIVE
CHESHIRE, CT 06410
203.271.1773
WWW.MBINC.COM

SITE DETAILS

PROPOSED OUTDOOR CLASSROOM
WESTMOOR PARK
119 FLAGG ROAD
WEST HARTFORD, CONNECTICUT

AWG	AWG	TD
DESIGNED	DRAWN	CHECKED

SCALE: AS NOTED
DATE: SEPTEMBER 27, 2019
PROJECT NO.: 1197-32
SHEET NO.: 05 OF 05
SHEET NAME: SD-2

Copyright Milone & MacBroom, Inc - 2019