Inglemoor High School Concert Hall + Music Building

Northshore School District No. 417

Volume I

BID DOCUMENTS

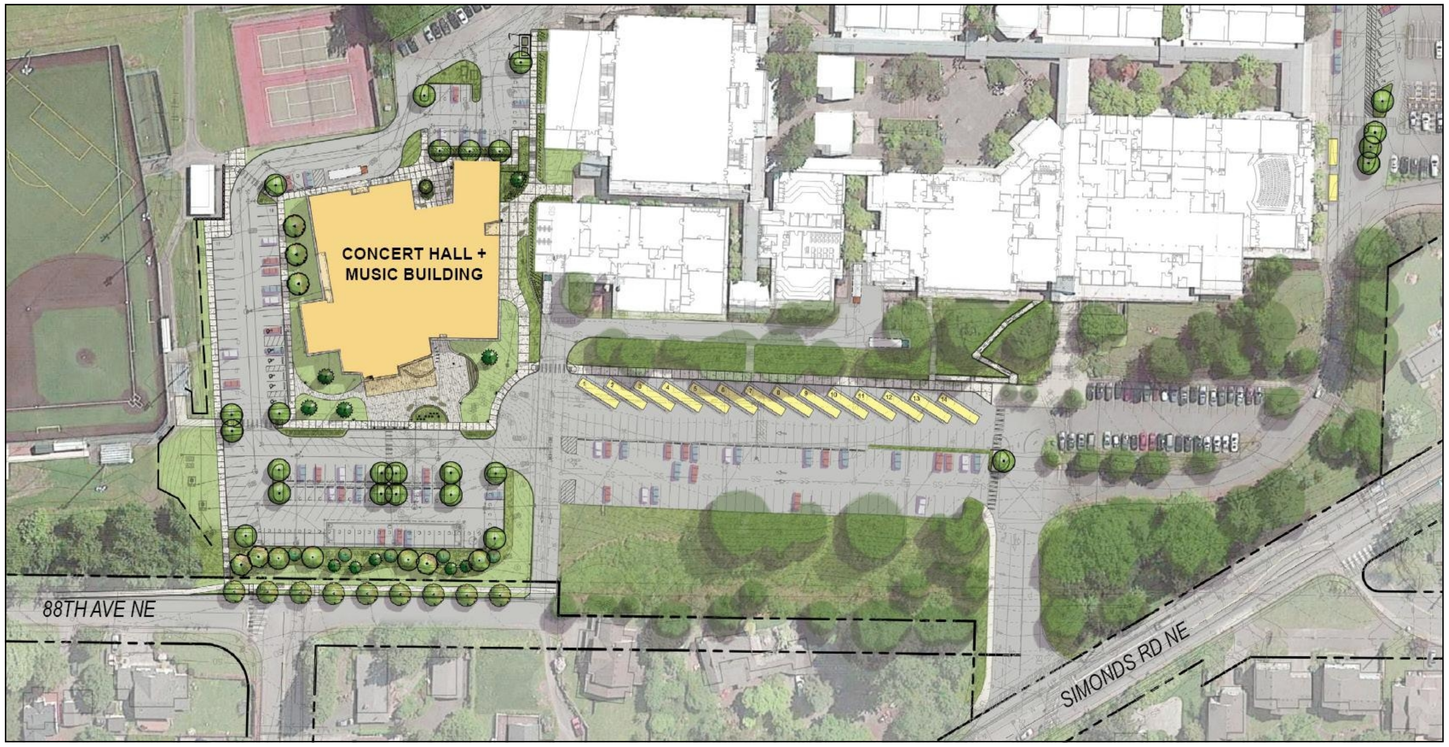

Drawing Index

VOLUME I

GENERAL
G0.10 v1 Drawing Index & General Information
G0.20 Existing Aerial Photograph
G0.21 Overall Site Rendering
SD1.10 Site Coordination Plan

SURVEY
S1 Survey - Control Diagram and Legal Description
S2 Survey - Easements
S3 Survey
S4 Survey
S5 Survey
S6 Survey
S7 Survey
S8 Survey
S9 Survey
S10 Survey

CIVIL
C1.00 Cover Sheet
C1.01 Legends, Symbols, and Notes
C2.00 T.E.S.C. Plan
C2.01 T.E.S.C. Plan
C2.02 T.E.S.C. Details
C2.03 T.E.S.C. Details
C3.00 Demolition Plan
C3.01 Demolition Plan
C3.02 Demolition Notes
C3.03 Building Subgrade Preparation Plan
C4.00 Grading Plan
C4.01 Grading Plan
C5.00 Storm Drainage Plan
C5.01 Storm Drainage Details
C5.02 Storm Drainage Details
C5.03 Storm Drainage Details
C5.04 Storm Drainage Details
C5.05 Storm Drainage Details
C5.06 Storm Drainage Details
C5.07 Storm Drainage Details
C5.08 Storm Drainage Details
C6.00 Horizontal Control and Paving Plan
C6.01 Horizontal Control and Paving Plan
C6.02 Paving Details
C6.03 Paving Details
C6.04 Paving Details
C6.05 Paving Details
C6.06 Paving Details
C6.07 Paving Details
C7.00 Signage and Paving Plan
C7.01 Signage and Paving Plan
C7.02 Signage and Paving Details
C7.03 Signage and Paving Details
C7.04 Signage and Paving Details
WS1.01 Legends, Symbols and Notes
SS2.00 Sanitary Sewer Plan
SS2.01 Sanitary Sewer Profile
W3.00 Water Plan
W3.01 Water Profile
W3.02 Water Details
R1.00 88th Ave NE Demolition and T.E.S.C. Plan
R2.00 Roadway and Drainage Plan
R2.01 Roadway Details
R2.02 Roadway Details

LANDSCAPE
L1.00 Overall Site Plan
L1.01 Enlarged Site Plan
L1.02 Enlarged Site Plans
L2.00 Overall Planting Plan
L2.01 Enlarged Planting Plan
L2.02 Enlarged Planting Plans
L2.03 Plant Schedule & Details
L2.04 Overall Tree Protection Plan
L2.05 Enlarge Tree Protection Plan
L2.06 Enlarge Tree Protection Plan
L2.07 Enlarge Tree Protection Plan
L2.08 Tree Protection Legend & Tree Density Calculations
L3.00 Overall Irrigation Plan
L3.01 Enlarged Irrigation Plan
L3.02 Irrigation Schedule & Enlarged Irrigation Plans
L3.03 Irrigation Details
L4.00 Site Details
L4.01 Site Details
L4.02 Site Details
L4.03 Site Details
L5.00 Overall Soil Plan

VOLUME II

ARCHITECTURAL

BUILDING ENVELOPE

VOLUME III

GENERAL

STRUCTURAL

MECHANICAL

ELECTRICAL

AUDIO VISUAL

THEATER

Project Team

OWNER

Northshore School District No. 417
3330 Monte Villa Parkway
Bothell, WA 98021
425.408.7701

Dr. Michelle Reid, Superintendant
Dr. Joe Paperman, Chief Operating Officer
Dugan Harman, Deputy Superintendant

CAPITAL PROJECTS

Northshore School District
22105 23rd Drive SE
Bothell, WA 98021
425.408.7851

Dri Ralph dralph@nsd.org

GC/CM

Cornerstone General Contractors, Inc.
11805 North Creek Parkway S. #115
Bothell, WA 98011
425.481.7460

Sam Comer sam@cornerstonegci.com

ARCHITECT

Hutteball & Oremus Architecture, Inc.
4010 Lake Washington Blvd. NE, Suite 320
Kirkland, WA 98033
425.828.8948

Kevin Oremus koremus@hoarch.com
Aaron MacDonald amacdonald@hoarch.com
Marissa Rutler mrutler@hoarch.com

CIVIL ENGINEER

Integrity Works Consulting Engineers
170 West Dayton Street, Suite 204
Edmonds, WA 98020
425.967.7913

Joe Moon jmoon@integworks.com

LANDSCAPE ARCHITECT

Weisman Design Group, Inc.
2329 E Madison Street
Seattle, WA 98112
206.322.1732

Nick Hagan nick@wdginc.com

STRUCTURAL ENGINEER

Coughlin Porter Lundeen
801 2nd Ave, Suite 900
Seattle, WA 98104
206.343.0460

Cory Hitzemann coryh@cplinc.com
Christen Sanders christens@cplinc.com

MECHANICAL ENGINEER

Hargis Engineers
1201 3rd Ave, Suite 600
Seattle, WA 98101
206.448.3376

Brian Haugk brianh@hargis.biz

ELECTRICAL ENGINEER

TFWB Engineers Inc.
1200 Westlake Ave N, Suite 509
Seattle, WA 98109
206.285.7228

Mike Fitzmaurice mike@tf-wb.com
Aprille Balangue aprille@tf-wb.com

ESTIMATING CONSULTANT

RLB | Robinson
101 Stewart Street, Suite 925
Seattle, WA 98101
206.441.8872

Dan Cassidy dcassidy@us.rlb.com

ACOUSTICAL / AUDIOVISUAL

BRC Acoustics & Audiovisual Design
1932 First Ave, Suite 620
Seattle, WA 98101
206.270.8910

Dan Bruck danb@brcacoustics.com
John Hardwick jhardwick@brcacoustics.com

THEATER LIGHTING

PLA Designs
4914 55th Ave S
Seattle, WA 98118
206.257.2251

Robert Smulling robert@pladesigns.com

WEATHERIZATION

Building Envelope Engineering
170 W Dayton Street, Suite 206
Edmonds, WA 98020
425.672.3900

Chad Smith chad@bee-engineers.com

ARBORIST

Gilles consulting
12823 NE 107th Place
Kirkland, WA 98033
425.822.6314

Brian Gilles bkgilles@comcast.net

SURVEYOR

Harmsen & Associates, Inc.
16778 146th St SE, Suite 104
Monroe, WA 98272
360.794.7811

Rink Carpenter rinkc@harmseninc.com

LAND USE PLANNING

Brent Planning Solutions
PO Box 1586
Mukilteo, WA 98275
425.971.6409

Laura Brent lbrent@brentplanningsolutions.com
Paula Townsell ptownsell@brentplanningsolutions.com

ENVIRONMENTAL

Wetland Resources
9505 19th Ave SE, Suite 106
Everett, WA 98206
425.337.3174

Meryl Kamowski meryl@wetlandresources.com

GEOTECHNICAL ENGINEER

Associated Earth Sciences, Inc.
911 5th Ave, Suite 110
Kirkland, WA 98033
425.827.7701

Kurt Merriman kmerriman@aesgeo.com
Bruce Guenzler bruceg@aesgeo.com

TRAFFIC

Heffron Transportation
6544 NE 61st St
Seattle, WA 98115
206.523.3939

Jennifer Barnes jennifer@hefftrans.com

COMMISSIONING AGENT

McKinstry
5005 3rd Ave S
Seattle, WA 98134
206.762.3311

Scott Henderson scotthe@mckinstry.com
Clint Hawn clinth@mckinstry.com

BID DOCUMENTS **04.13.2020**

HUTTEBALL +OREMUS architecture
4010 LAKE WASHINGTON BLVD NE
SUITE 320
KIRKLAND, WA 98033

425.828.8948

HOARCH.COM

ARCHITECT STAMP

REGISTERED ARCHITECT No. 7080
Kevin S. Oremus
STATE OF WASHINGTON

CONSULTANT STAMP

PROJECT INFORMATION

Inglemoor High School Concert Hall + Music Building

Inglemoor High School
15500 Simonds Road NE
Kenmore, WA 98028

Northshore School District No. 417

SCHOOL DISTRICT LOGO

Northshore School District

02.13.2019	SCHEMATIC DESIGN
04.08.2019	VALUE ENGINEERING
09.16.2019	SITE PLAN REVIEW
10.18.2019	DESIGN DEVELOPMENT
01.13.2020	CONSTRUCTABILITY REVIEW
03.23.2020	HEALTH DEPARTMENT PERMIT SUBMITTAL
04.13.2020	BID DOCUMENTS

BID DOCUMENTS

04.13.2020

PROJECT NUMBER: 1711

SHEET NAME

Drawing Index & General Information

SHEET NUMBER

G0.10 v1

4/9/2020 11:26:23 AM



1 AERIAL SITE PLAN
SCALE: 1" = 60'-0"

NORTH

HUTTEBALL +OREMUS architecture

4010 LAKE WASHINGTON BLVD NE
SUITE 320
KIRKLAND, WA 98033

425.828.8948

HOARCH.COM

ARCHITECT STAMP

CONSULTANT STAMP

PROJECT INFORMATION

Inglemoor High School Concert Hall + Music Building

15500 Simonds Rd NE
Kenmore, WA 98028

NORTHSHORE SCHOOL DISTRICT No. 417

Northshore School District

02.13.2019	SCHEMATIC DESIGN
04.08.2019	VALUE ENGINEERING
09.16.2019	SITE PLAN REVIEW
10.18.2019	DESIGN DEVELOPMENT
01.13.2020	CONSTRUCTABILITY REVIEW
03.23.2020	HEALTH DEPARTMENT PERMIT SUBMITTAL
04.13.2020	BID DOCUMENTS

BID DOCUMENTS

04.13.2020

PROJECT NUMBER: 1711.00

SHEET NAME

Existing Aerial Photograph

SHEET NUMBER

G0.20



SCALE: 1"=60'-0"

0' 30' 60' 120' 240' N

WEISMANDESIGNGROUP

LANDSCAPE CONSULTANT | 2329 E MADISON ST SEATTLE WA 98112 | 206-322-1732 WWW.WDGINC.COM

HUTTEBALL +OREMUS architecture

4010 LAKE WASHINGTON BLVD NE
SUITE 320
KIRKLAND, WA 98033

425.828.8948

HOARCH.COM

ARCHITECT STAMP

CONSULTANT STAMP

STATE OF WASHINGTON NICHOLAS P HAGAN LANDSCAPE ARCHITECT NO 393 EXP. 4/17/2020

PROJECT INFORMATION

Inglemoor High School Concert Hall + Music Building

15500 Simonds Rd NE
Kenmore, WA 98028

NORTHSHORE SCHOOL DISTRICT No. 417

SCHOOL DISTRICT LOGO

Northshore School District

02.13.2019	SCHEMATIC DESIGN
04.08.2019	VALUE ENGINEERING
09.16.2019	SITE PLAN REVIEW
10.18.2019	DESIGN DEVELOPMENT
01.13.2020	CONSTRUCTABILITY REVIEW
03.23.2020	HEALTH DEPARTMENT PERMIT SUBMITTAL
04.13.2020	BID DOCUMENTS

BID DOCUMENTS

04.13.2020

PROJECT NUMBER: 1711.00

SHEET NAME

Overall Site Rendering

SHEET NUMBER

G0.21

S 1/2, NW 1/4, & N 1/2, SW 1/4, SECTION 18, TOWNSHIP 26 NORTH, RANGE 5 EAST, W.M.

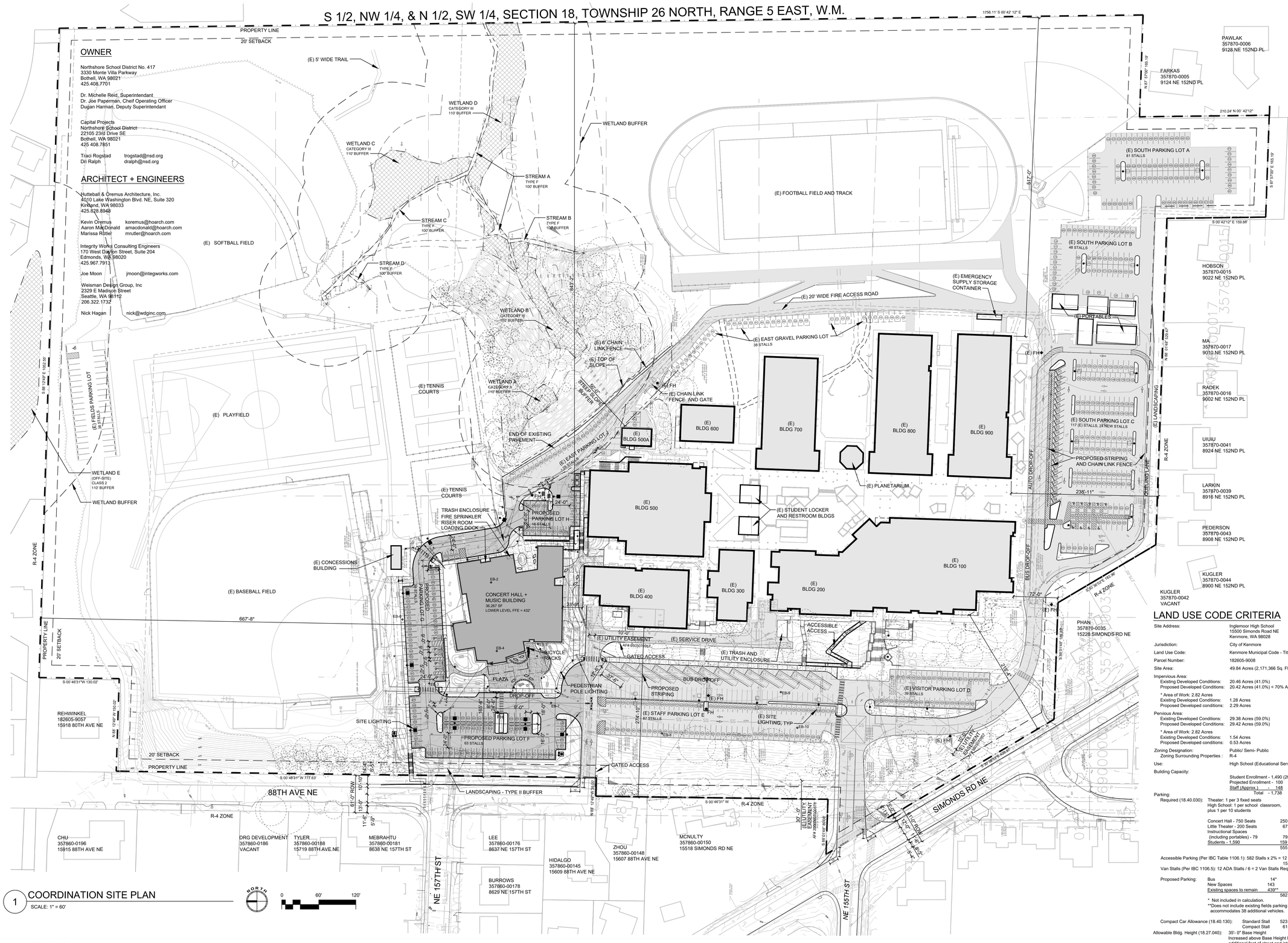

OWNER

Northshore School District No. 417
3330 Monte Villa Parkway
Bothell, WA 98021
425.408.7701

Dr. Michelle Reid, Superintendant
Dr. Joe Paperman, Cheif Operating Officer
Dugan Harman, Deputy Superintendant

Capital Projects
Northshore School District
22105 23rd Drive SE
Bothell, WA 98021
425.408.7851

Traci Rogstad trogstad@nsd.org
Dri Ralph dralph@nsd.org

ARCHITECT + ENGINEERS

Hutteball & Oremus Architecture, Inc.
4010 Lake Washington Blvd. NE, Suite 320
Kirkland, WA 98033
425.828.8948

Kevin Oremus koremus@hoarch.com
Aaron MacDonald amacdonald@hoarch.com
Marissa Rotter mrutler@hoarch.com

Integrity Works Consulting Engineers
170 West Dayton Street, Suite 204
Edmonds, WA 98020
425.967.7913

Joe Moon jmoon@integworks.com

Weisman Design Group, Inc
2329 E Madison Street
Seattle, WA 98112
206.322.1732

Nick Hagan nick@wdginc.com

1 COORDINATION SITE PLAN
SCALE: 1" = 60'

NORTH 0 60' 120'

VICINITY MAP

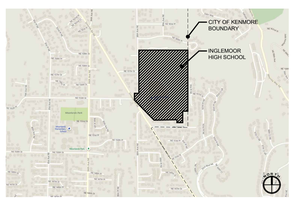

LEGAL DESCRIPTION

(PER TRANSAMERICA TITLE INSURANCE COMPANY LIMITED LIABILITY CERTIFICATE ORDER NUMBER 990054 DATED FEBRUARY 25, 1994.)

PARCEL A:
THAT PORTION OF GOVERNMENT LOTS 2 AND 3 IN SECTION 18, TOWNSHIP 26 NORTH, RANGE 5 EAST, W.M., LYING SOUTHERLY OF A LINE WHICH IS PARALLEL TO AND 990 FEET SOUTHERLY OF THE NORTHERLY LINE OF SAID LOT 2;
THENCE WESTERLY PARALLEL WITH THE NORTHERLY LINE OF SAID LOT 2, 238.97 FEET, MORE OR LESS, TO THE ORIGINAL NORTHEASTERLY LINE OF SIMONDS ROAD NORTHEAST;
THENCE SOUTHEASTERLY ALONG SAID ORIGINAL LINE TO THE POINT OF INTERSECTION WITH THE WEST LINE OF 88TH AVE NORTHEAST;
THENCE NORTHERLY ALONG SAID WEST LINE 385 FEET, MORE OR LESS, TO THE POINT OF BEGINNING;
(ALSO KNOWN AS LOT 27-B,INGLEWOOD HEIGHTS, ACCORDING TO THE UNRECORDED PLAT THEREOF);
SITUATE IN THE COUNTY OF KING, STATE OF WASHINGTON.

PARCEL B:
THE SOUTHEAST 1/4 OF THE NORTHWEST 1/4 OF SECTION 18, TOWNSHIP 26 NORTH, RANGE 5 EAST, W.M.;
EXCEPT THE WEST 30 FEET THEREOF CONVEYED TO KING COUNTY FOR ROAD BY DEED RECORDED UNDER RECORDING NUMBER 1080810;
AND EXCEPT THE NORTH 130 FEET OF THE WEST 150 FEET OF THE REMAINDER THEREOF;
SITUATE IN THE COUNTY OF KING, STATE OF WASHINGTON.

PARCEL C:
THE EAST 165 FEET OF THE NORTHEAST 1/4 OF THE NORTHEAST 1/4 OF THE SOUTHWEST 1/4 OF SECTION 18, TOWNSHIP 26 NORTH, RANGE 5 EAST, W.M.;
EXCEPT THE SOUTH 240 FEET THEREOF;
(ALSO KNOWN AS LOT 1 OF INGLEWOOD HEIGHTS 2ND PLAT, AN UNRECORDED PLAT, EXCEPT THE SOUTH 210 FEET THEREOF);
SITUATE IN THE COUNTY OF KING, STATE OF WASHINGTON.

PARCEL D:
THE WESTERLY 165 FEET OF THE EASTERLY 330 FEET, MEASURED AT RIGHT ANGLES FROM THE EASTERLY LINE THEREOF, OF THE NORTH 1/2 OF THE NORTHEAST 1/4 OF THE SOUTHWEST 1/4 OF SECTION 18, TOWNSHIP 26 NORTH, RANGE 5 EAST, W.M.;
EXCEPT THE SOUTHERLY 30 FEET THEREOF;
(ALSO KNOWN AS TRACT 2 OF INGLEWOOD HEIGHTS - 2ND PLAT, AN UNRECORDED PLAT);
SITUATE IN THE COUNTY OF KING, STATE OF WASHINGTON.

PARCEL E:
THE NORTH 475 FEET OF THE WESTERLY 330 FEET OF THE EASTERLY 660 FEET , AS MEASURED AT RIGHT ANGLES TO THE EASTERLY LINE OF THE NORTH HALF OF THE THE NORTHEAST 1/4 OF THE SOUTHWEST 1/4 OF SECTION 18, TOWNSHIP 26 NORTH, RANGE 5 EAST, W.M.;
(ALSO KNOW AS A PORTION OF TRACTS 3 AND 4 OF INGLEWOOD HEIGHTS 2ND PLAT, AN UNRECORDED PLAT);
SITUATE IN THE COUNTY OF KING, STATE OF WASHINGTON.

PARCEL F:
THE SOUTH 155 FEET OF THE NORTH 475 FEET OF THAT PORTION OF THE NORTHEAST 1/4 OF THE SOUTHWEST 1/4 OF SECTION 18, TOWNSHIP 26 NORTH, RANGE 5 EAST, W.M., WHICH LIES WESTERLY OF A LINE 660 FEET WEST OF, AS MEASURED AT RIGHT ANGLES FROM AND PARALLEL TO THE EAST LINE OF SAID SUBDIVISION, AND WHICH LIES EASTERLY OF A LINE PARALLEL TO AND 275 FEET EASTERLY, AS MEASURED AT RIGHT ANGLES FROM THE EASTERLY MARGIN OF SIMONDS COUNTY ROAD;
(ALSO KNOWN AS A PORTION OF TRACT 7 OF INGLEWOOD HEIGHTS 2ND PLAT, AN UNRECORDED PLAT);
SITUATE IN THE COUNTY OF KING, STATE OF WASHINGTON.

PARCEL G:
THE NORTH 165 FEET OF THAT PORTION OF THE NORTH 1/2 OF THE NORTHEAST 1/4 OF THE SOUTHWEST 1/4 OF SECTION 18, TOWNSHIP 26 NORTH, RANGE 5 EAST, W.M., LYING WEST OF A LINE 660 FEET WEST OF, MEASURED AT RIGHT ANGLES THERETO, AND PARALLEL TO THE EAST BOUNDARY LINE OF THE NORTHEAST 1/4 OF THE SOUTHWEST 1/4 OF SAID SECTION;
EXCEPT COUNTY ROADS;
(ALSO KNOWN AS TRACT 5 OF INGLEWOOD HEIGHTS - 2ND PLAT, AN UNRECORDED PLAT);
SITUATE IN THE COUNTY OF KING, STATE OF WASHINGTON.

PARCEL H:
THE SOUTH 155 FEET OF THE NORTH 320 FEET OF THAT PORTION OF THE NORTH 1/2 OF THE NORTHEAST 1/4 OF THE SOUTHWEST 1/4 OF SECTION 18, TOWNSHIP 26 NORTH, RANGE 5 EAST, W.M., LYING WEST OF A LINE 660 FEET WEST OF, AND MEASURED AT RIGHT ANGLES THERETO, AND PARALLEL TO THE EAST BOUNDARY LINE OF THE NORTHEAST 1/4 OF THE SOUTHWEST 1/4 OF SAID SECTION AND LYING EASTERLY OF THE COUNTY ROAD KNOWN AS SIMONDS ROAD;
(ALSO KNOWN AS TRACT 6 OF INGLEWOOD HEIGHTS - 2ND PLAT, AN UNRECORDED PLAT);
TOGETHER WITH PARCEL AS DESCRIBED IN KING COUNTY VACATION ORDINANCE V2178, AUDITOR'S FILE # 20020219000834.
SITUATE IN THE COUNTY OF KING, STATE OF WASHINGTON.

LAND USE CODE CRITERIA

Site Address:	Inglemoor High School 15500 Simonds Road NE Kenmore, WA 98028
Jurisdiction:	City of Kenmore
Land Use Code:	Kenmore Municipal Code - Title 18 Zoning
Parcel Number:	182605-9008
Site Area:	49.84 Acres (2,171,366 Sq. Ft.)
Impervious Area: Existing Developed Conditions: Proposed Developed Conditions:	 20.46 Acres (41.0%) 20.42 Acres (41.0%) < 70% Allowed
* Area of Work: 2.82 Acres Existing Developed Conditions: Proposed Developed conditions:	 1.28 Acres 2.29 Acres
Pervious Area: Existing Developed Conditions: Proposed Developed Conditions:	 29.38 Acres (59.0%) 29.42 Acres (59.0%)
* Area of Work: 2.82 Acres Existing Developed Conditions: Proposed Developed conditions:	 1.54 Acres 0.53 Acres
Zoning Designation: Zoning Surrounding Properties :	Public/ Semi- Public R-4
Use:	High School (Educational Service)
Building Capacity:	Student Enrollment - 1,490 (2019-2020) Projected Enrollment - 100 Staff (Approx.) - 148 Total - 1,738
Parking: Required (18.40.030):	Theater: 1 per 3 fixed seats High School: 1 per school classroom, plus 1 per 10 students Concert Hall - 750 Seats 250 Little Theater - 200 Seats 67 Instructional Spaces (including portables) - 79 79 Students - 1,590 159 555
	Accessible Parking (Per IBC Table 1106.1): 582 Stalls x 2% = 12 ADA Stalls Required; 15 ADA Stalls Provided - Allowed Van Stalls (Per IBC 1106.5): 12 ADA Stalls / 6 = 2 Van Stalls Required - 3 Van Stalls Provided - Allowed
Proposed Parking:	Bus 14* New Spaces 143 Existing spaces to remain 439** 582 > 555 Allowed * Not included in calculation. **Does not include existing fields parking lot which accommodates 38 additional vehicles.
Compact Car Allowance (18.40.130):	Standard Stall 523 Compact Stall 61 < 50% Allowed
Allowable Bldg. Height (18.27.040):	35'- 0" Base Height Increased above Base Height by providing one additional foot of street and interior setback for each foot above base height limit, provided maximum does not exceed 75 feet.
Proposed Bldg. Height:	53' - 0" < 75' - 0" Allowed
Minimum Bldg. Setbacks (18.27.040 Public and Semi- Private Zone): Minimum Street Setback: Minimum Interior Setback :	 20 Feet 20 Feet
Critical Areas: Wetlands/ Streams:	 Wetland A, Category II; 110' Buffer - Wetlands B, C, and E, Category III; 110' Buffer - Streams A, B, C and D, Type F; 100' Buffer
Landscaping (18.35.040 and 18.35.045): Street Frontage Perimeter: Interior Lot Line Perimeter: Surface Parking Lots:	 20' Type II (excluding playgrounds & playfields) 10' Type II 25 sqft per stall
School District:	Northshore School District No. 417
Sewer District:	Northshore Utility District
Power District:	Puget Sound Energy
Water District:	Northshore Utility District
Fire District:	King County Fire Protection District No. 16

HUTTEBALL +OREMUS architecture
4010 LAKE WASHINGTON BLVD NE
SUITE 320
KIRKLAND, WA 98033
425.828.8948
HOARCH.COM

ARCHITECT STAMP

CONSULTANT STAMP

PROJECT INFORMATION

Inglemoor High School Concert Hall + Music Building

15500 Simonds Rd NE
Kenmore, WA 98028

NORTHSHORE SCHOOL DISTRICT No. 417

SCHOOL DISTRICT LOGO

Northshore School District

02.13.19	SCHEMATIC DESIGN
04.08.19	VALUE ENGINEERING
09.16.19	SITE PLAN REVIEW
10.18.19	DESIGN DEVELOPMENT
01.13.20	CONTRUCTIABILITY REVIEW
03.23.20	HEALTH DEPARTMENT PERMIT SUBMITTAL
04.13.20	BID DOCUMENTS

BID DOCUMENTS
04.13.2020

PROJECT NUMBER: 1711.00

SHEET NAME

SITE COORDINATION PLAN

SHEET NUMBER

SD1.10

S 1/2, NW 1/4 & N 1/2 SW 1/4, SECTION 18, TOWNSHIP 26 NORTH, RANGE 5 EAST, W.M.

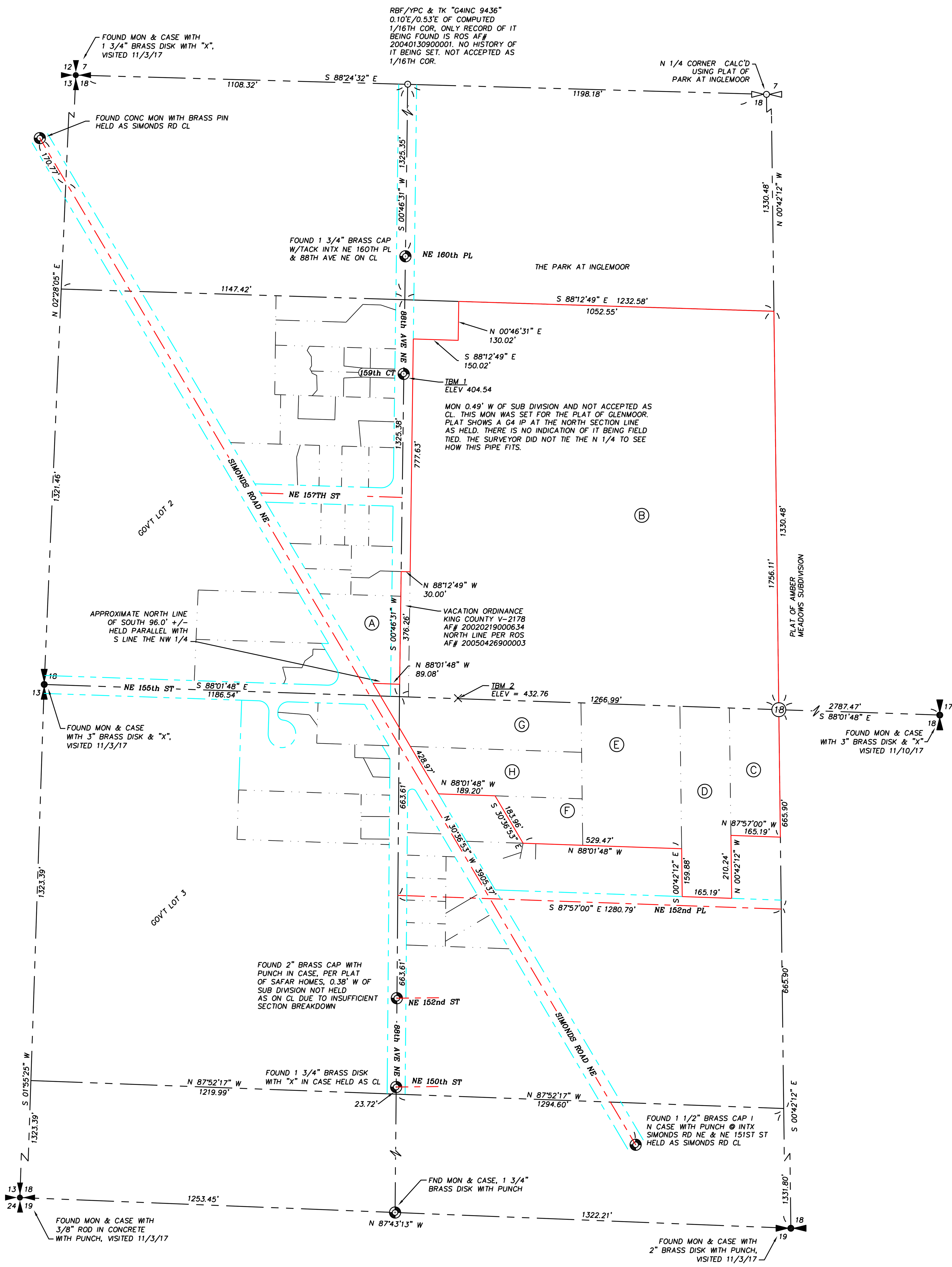

LEGAL DESCRIPTION:

(PER TRANSAMERICA TITLE INSURANCE COMPANY LIMITED LIABILITY CERTIFICATE ORDER NUMBER 990054 DATED FEBRUARY 25, 1994.)

PARCEL A:

THAT PORTION OF GOVERNMENT LOTS 2 AND 3 IN SECTION 18, TOWNSHIP 26 NORTH, RANGE 5 EAST, W.M., LYING SOUTHERLY OF A LINE WHICH IS PARALLEL TO AND 990 FEET SOUTHERLY OF THE NORTHERLY LINE OF SAID LOT 2;
THENCE WESTERLY PARALLEL WITH THE NORTHERLY LINE OF SAID LOT 2, 238.97 FEET, MORE OR LESS, TO THE ORIGINAL NORTHEASTERLY LINE OF SIMONDS ROAD NORTHEAST;
THENCE SOUTHEASTERLY ALONG SAID ORIGINAL LINE TO THE POINT OF INTERSECTION WITH THE WEST LINE OF 88TH AVE NORTHEAST;
THENCE NORTHERLY ALONG SAID WEST LINE 385 FEET, MORE OR LESS, TO THE POINT OF BEGINNING;

(ALSO KNOWN AS LOT 27-B,INGLEWOOD HEIGHTS, ACCORDING TO THE UNRECORDED PLAT THEREOF);

SITUATE IN THE COUNTY OF KING, STATE OF WASHINGTON.

PARCEL B:

THE SOUTHEAST 1/4 OF THE NORTHWEST 1/4 OF SECTION 18, TOWNSHIP 26 NORTH, RANGE 5 EAST, W.M.;

EXCEPT THE WEST 30 FEET THEREOF CONVEYED TO KING COUNTY FOR ROAD BY DEED RECORDED UNDER RECORDING NUMBER 1080810;

AND EXCEPT THE NORTH 130 FEET OF THE WEST 150 FEET OF THE REMAINDER THEREOF;

SITUATE IN THE COUNTY OF KING, STATE OF WASHINGTON.

PARCEL C:

THE EAST 165 FEET OF THE NORTHEAST 1/4 OF THE NORTHEAST 1/4 OF THE SOUTHWEST 1/4 OF SECTION 18, TOWNSHIP 26 NORTH, RANGE 5 EAST, W.M.;

EXCEPT THE SOUTH 240 FEET THEREOF;

(ALSO KNOWN AS LOT 1 OF INGLEWOOD HEIGHTS 2ND PLAT, AN UNRECORDED PLAT, EXCEPT THE SOUTH 210 FEET THEREOF);

SITUATE IN THE COUNTY OF KING, STATE OF WASHINGTON.

PARCEL D:

THE WESTERLY 165 FEET OF THE EASTERLY 330 FEET, MEASURED AT RIGHT ANGLES FROM THE EASTERLY LINE THEREOF, OF THE NORTH 1/2 OF THE NORTHEAST 1/4 OF THE SOUTHWEST 1/4 OF SECTION 18, TOWNSHIP 26 NORTH, RANGE 5 EAST, W.M.;

EXCEPT THE SOUTHERLY 30 FEET THEREOF;

(ALSO KNOWN AS TRACT 2 OF INGLEWOOD HEIGHTS – 2ND PLAT, AN UNRECORDED PLAT);

SITUATE IN THE COUNTY OF KING, STATE OF WASHINGTON.

PARCEL E:

THE NORTH 475 FEET OF THE WESTERLY 330 FEET OF THE EASTERLY 660 FEET , AS MEASURED AT RIGHT ANGLES TO THE EASTERLY LINE OF THE NORTH HALF OF THE THE NORTHEAST 1/4 OF THE SOUTHWEST 1/4 OF SECTION 18, TOWNSHIP 26 NORTH, RANGE 5 EAST, W.M.;

(ALSO KNOW AS A PORTION OF TRACTS 3 AND 4 OF INGLEWOOD HEIGHTS 2ND PLAT, AN UNRECORDED PLAT);

SITUATE IN THE COUNTY OF KING, STATE OF WASHINGTON.

PARCEL F:

THE SOUTH 155 FEET OF THE NORTH 475 FEET OF THAT PORTION OF THE NORTHEAST 1/4 OF THE SOUTHWEST 1/4 OF SECTION 18, TOWNSHIP 26 NORTH, RANGE 5 EAST, W.M., WHICH LIES WESTERLY OF A LINE 660 FEET WEST OF, AS MEASURED AT RIGHT ANGLES FROM AND PARALLEL TO THE EAST LINE OF SAID SUBDIVISION, AND WHICH LIES EASTERLY OF A LINE PARALLEL TO AND 275 FEET EASTERLY, AS MEASURED AT RIGHT ANGLES FROM THE EASTERLY MARGIN OF SIMONDS COUNTY ROAD;

(ALSO KNOWN AS A PORTION OF TRACT 7 OF INGLEWOOD HEIGHTS 2ND PLAT, AN UNRECORDED PLAT);

SITUATE IN THE COUNTY OF KING, STATE OF WASHINGTON.

PARCEL G:

THE NORTH 165 FEET OF THAT PORTION OF THE NORTH 1/2 OF THE NORTHEAST 1/4 OF THE SOUTHWEST 1/4 OF SECTION 18, TOWNSHIP 26 NORTH, RANGE 5 EAST, W.M., LYING WEST OF A LINE 660 FEET WEST OF, MEASURED AT RIGHT ANGLES THERETO, AND PARALLEL TO THE EAST BOUNDARY LINE OF THE NORTHEAST 1/4 OF THE SOUTHWEST 1/4 OF SAID SECTION;

EXCEPT COUNTY ROADS;

(ALSO KNOWN AS TRACT 5 OF INGLEWOOD HEIGHTS – 2ND PLAT, AN UNRECORDED PLAT);

SITUATE IN THE COUNTY OF KING, STATE OF WASHINGTON.

PARCEL H:

THE SOUTH 155 FEET OF THE NORTH 320 FEET OF THAT PORTION OF THE NORTH 1/2 OF THE NORTHEAST 1/4 OF THE SOUTHWEST 1/4 OF SECTION 18, TOWNSHIP 26 NORTH, RANGE 5 EAST, W.M., LYING WEST OF A LINE 660 FEET WEST OF, AND MEASURED AT RIGHT ANGLES THERETO, AND PARALLEL TO THE EAST BOUNDARY LINE OF THE NORTHEAST 1/4 OF THE SOUTHWEST 1/4 OF SAID SECTION AND LYING EASTERLY OF THE COUNTY ROAD KNOWN AS SIMONDS ROAD;

(ALSO KNOWN AS TRACT 6 OF INGLEWOOD HEIGHTS – 2ND PLAT, AN UNRECORDED PLAT);

TOGETHER WITH PARCEL AS DESCRIBED IN KING COUNTY VACATION ORDINANCE V2178, AUDITOR'S FILE # 20020219000634.

SITUATE IN THE COUNTY OF KING, STATE OF WASHINGTON.

SURVEYOR'S NARRATIVE:

LEGAL DESCRIPTION FOR PARCEL A PER TRANSAMERICA TITLE INSURANCE 02/25/1994 CALLS FOR THE LEGAL DESCRIPTION TO BE ALL OF LOT 27-B PER THE UNRECORDED PLAT OF INGLEWOOD HEIGHTS.
A DEED FROM STEWART TITLE COMPANY DATED 04/22/1993 SHOWS THAT McNULTY SOLD THE SOUTH 96.00 FEET TO NORTHSHORE SCHOOL DISTRICT.
I HELD THIS AS PARCEL OWNED BY NORTHSHORE SCHOOL DISTRICT. THE NORTH LINE OF THIS PARCEL WAS DERIVED FROM HOLDING A PERPENDICULAR DISTANCE FROM THE INTERSECTION OF THE WEST SIDE OF 88TH AVE NE WITH EASTERLY SIDE OF SIMONDS ROAD NE.

1" = 200'
0 100 200 400

BASIS BEARING; NORTH LINE OF NW 1/4 SECTION 18 – T26N – R05E BEARS S 88°24'32" E

VERTICAL DATUM
NAVD 88 GEOID 12A
ESTABLISHED BY GPS

BENCHMARKS:

TBM #1:
TOP OF MONUMENT IN CASE INTERSECTION OF 88TH AVE NE & 159TH CT
ELEV = 404.54

TBM #2
MAG NAIL IN SIDEWALK 2.4' EAST OF FACE OF CURB
ELEV = 432.76

SURVEY NOTES:

1) SURVEY PROCEDURES & EQUIPMENT:
SECTION CONTROL: TOPCON GNSS GR-3 RECEIVERS. ON SITE CONTROL AND STAKING: TOPCON GNSS GR-3 RECEIVERS AND/OR FIELD TRAVERSE & 10" TOTAL STATION.

2) THE GPS SURVEY PERFORMED FOR THIS SURVEY MEETS OR EXCEEDS THOSE STANDARDS CONTAINED IN WAC 332-130-160. THE FIELD TRAVERSES USED IN THIS SURVEY MEET OR EXCEED THOSE STANDARDS CONTAINED IN WAC 332-130-090.

3) GPS CONTROL: WASHINGTON STATE REFERENCE NETWORK (WSRN) GPS NETWORK. HORIZONTAL DATUM IS NAD83 (NA2011) EPOCH 2010.00. VERTICAL DATUM IS NAVD88 GEOID 12A.

3) DISTANCES ARE IN FEET AND DECIMALS THEREOF.

4) ALL CONTROLLING MONUMENTS SHOWN ARE OF RECORD, ARE LOCALLY ACCEPTED AS REPRESENTATIVE OF THEIR PURPORTED POSITIONS, AND WERE VISITED DURING THE COURSE OF THIS SURVEY UNLESS OTHERWISE NOTED.

5) THIS SURVEY DOES NOT PURPORT TO SHOW ALL EASEMENTS.

UTILITY NOTE:

ALL UNDERGROUND UTILITY LOCATIONS ARE BASED ON STRUCTURES LOCATED BY FIELD MEASUREMENTS IN OCTOBER 2017 THROUGH JANUARY, 2018 (AND FURTHER 02/2020) AND LOCATIONS PROVIDED BY:

APPLIED PROFESSIONAL SERVICES
43530 SE NORTH BEND WAY
NORTH BEND, WA 98045
(425) 888-2590

UNDERGROUND PIPE MATERIALS AND SIZES SHOWN WERE OBTAINED FROM AS/BUILT DATA FROM CLIENT WHERE AVAILABLE. THE SURVEYOR MAKES NO GUARANTEE THAT THIS IS ACCURATE.

THE SURVEYOR MAKES NO GUARANTEE THAT THE UNDERGROUND UTILITIES SHOWN COMPRISE ALL SUCH UTILITIES IN THE AREA, EITHER IN SERVICE OR ABANDONED. THE SURVEYOR DOES NOT WARRANT THAT THE UNDERGROUND UTILITIES SHOWN ARE IN THE EXACT LOCATION INDICATED ALTHOUGH HE DOES CERTIFY THAT THEY ARE LOCATED AS ACCURATELY AS POSSIBLE FROM THE INFORMATION PROVIDED. ALL EXISTING UTILITIES SHOWN ON PLANS ARE TO BE VERIFIED HORIZONTALLY AND VERTICALLY PRIOR TO ANY CONSTRUCTION.

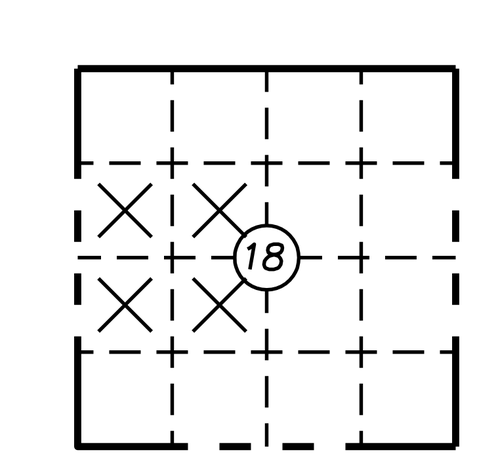

INDEX KEY
T26N-R05E

SURVEYOR'S CERTIFICATION:

LOCATIONS SHOWN ON THIS MAP ARE BASED ON A FIELD SURVEY BY HARMSEN, LLC ON OCTOBER 30, 2017 THROUGH JANUARY 18, 2018 AND RECORDED IN FIELDBOOKS 1192 & 1212. ADDITIONAL FEATURES WERE OBTAINED NOVEMBER 27 THROUGH DECEMBER 13, 2018 AND RECORDED IN FIELDBOOK 1226. BOUNDARY INFORMATION IS BASED UPON A SECTION BREAKDOWN BY HARMSEN, LLC. LOCATION SURVEY WAS PERFORMED UNDER MY SUPERVISION IN CONFORMANCE WITH APPLICABLE STATE AND INDUSTRY STANDARDS AT THE REQUEST OF NORTH SHORE SCHOOL DISTRICT IN OCTOBER, 2017.

PRELIMINARY
02/21/20

RICHARD F. CARPENTER, PROFESSIONAL LAND SURVEYOR (DATE)
REGISTRATION NO. 34137

UNPUBLISHED WORK COPYRIGHT © 2018 BY HARMSEN, LLC

C:\USERS\ROGERL\LOCAL SETTINGS\TEMP\ACPUBLISH_12140\NSSD INGLEWOOD TOPO 17-307.DWG 02/21/2020

REVISIONS
1. 02-21-20 CORRECTED CB PT 1492/ADDED UTILITIES
2. 9-3-19 ADDED MISSING STORM OUTLET TO SIMMONDS
3. 7-26-19 ADDED TOPO BASEBALL FIELD & SOUTH PARKING LOT
4. 1-25-19 ADDED WETLAND FLAGS
5. 02/21/20 ADDED TOPO COVERAGE

DWN. BY:RML
CHK. BY:RFC
DATE: 02/21/20
JOB #:17-307
F/B #:1192/1212
SCALE:1" = 200'

HARMSEN
ENGINEERS SURVEYORS PLANNERS
HARMSEN, LLC
125 EAST MAIN STREET, SUITE 104
P.O. BOX 516
MONROE, WA 98272
(360) 794-7811
www.harmsenllc.com

RICHARD F. CARPENTER PROFESSIONAL LAND SURVEYOR, STATE OF WASHINGTON, REGISTERED 34137, 02/21/20

NORTHSHORE SCHOOL DISTRICT #417
22105 23RD DRIVE SE
BOTHELL, WA 98021

TOPOGRAPHIC MAP
INGLEMOOR HIGH SCHOOL

DRAWING: S1

SHEET: 1 OF 10

S 1/2, NW 1/4 & N 1/2 SW 1/4, SECTION 18, TOWNSHIP 26 NORTH, RANGE 5 EAST, W.M.

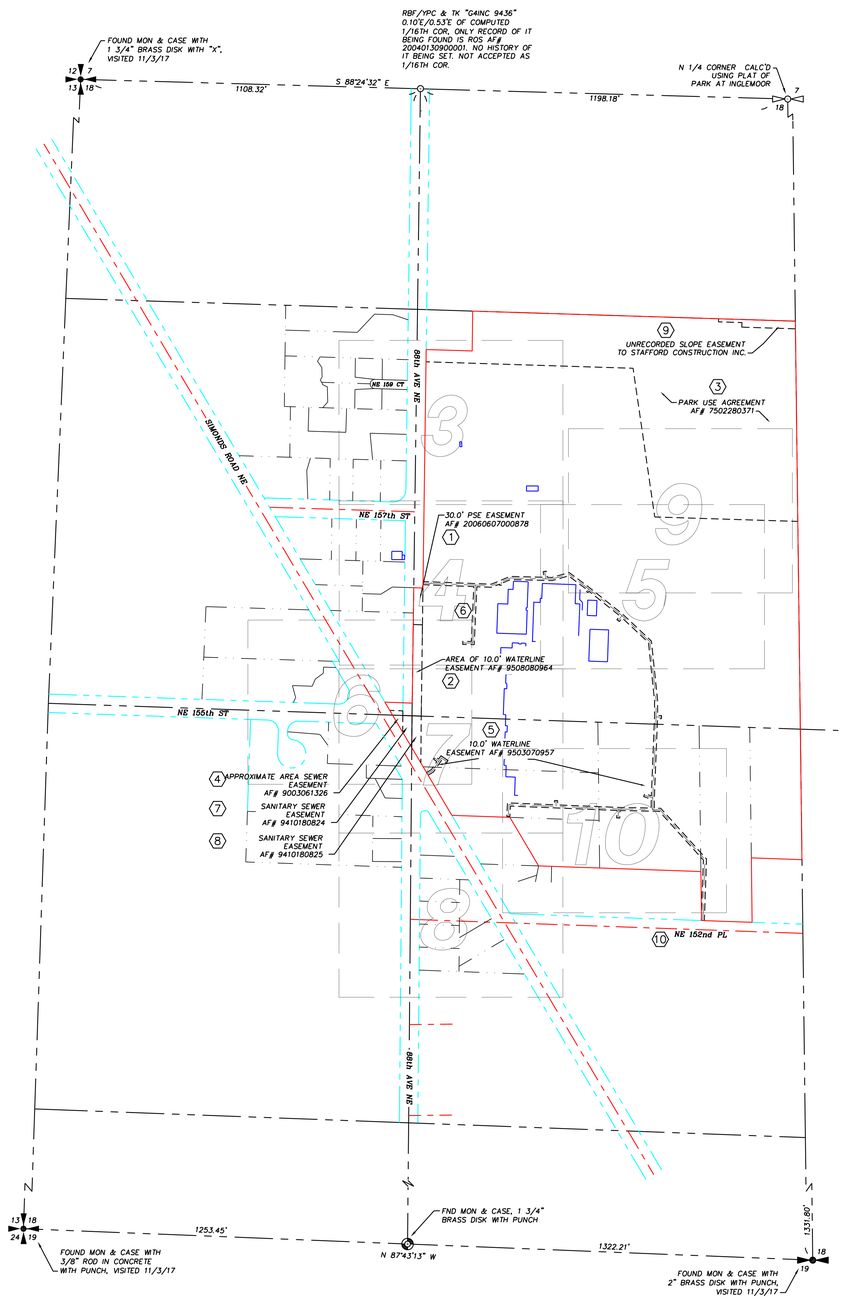

LEGEND

- PK NAIL FOR CONTROL
- FOUND MONUMENT IN CASE
- FOUND REBAR AS NOTED
- BOULDER
- BUSH
- GATE POST
- CATCH BASIN
- TURN ARROW
- WATER VALVE
- FENCE POST
- FINISHED FLOOR ELEVATION
- GAS METER
- GAS VALVE
- HAND HOLE
- IRRIGATION CONTROL VALVE
- LUMINAIRE
- POLE & LUMINAIRE
- YARD POLE
- CULVERT END
- TRANSFORMER PAD
- POWER VAULT
- POWER METER
- ROOF DRAIN
- FLAGPOLE
- STORM DRAIN MANHOLE
- MAILBOX
- SIGN POST
- SEWER MANHOLE
- COLUMN
- DECIDUOUS TREE W/DRIP LINE
- CHESTNUT TREE
- CHERRY
- OAK TREE
- ALDER TREE
- COTTONWOOD TREE
- CEDAR TREE
- CONIFER TREE
- FIR TREE
- FRUIT TREE
- HEMLOCK TREE
- MAPLE TREE
- PINE TREE
- TELEPHONE MANHOLE
- TELEPHONE PEDESTAL
- JUNCTION BOX
- PEDESTRIAN POLE
- TRAFFIC SIGN
- TELEPHONE VAULT
- MANHOLE (UNKNOWN)
- POWER POLE W/ U.G. FEED
- POWER POLE
- GUY ANCHOR
- FIRE STD PIPE
- FIRE HYDRANT
- BOLLARD
- WATER FAUCET
- WATER METER
- WATER VAULT
- YARD DRAIN
- GROUND SHOT
- FENCE LINE
- GAS LINE
- POWER LINE
- POWER LINE (UNDERGROUND)
- SEWER LINE
- STORM DRAIN LINE
- TELEPHONE LINE
- TELEPHONE LINE (UNDERGROUND)
- WATER LINE
- WATER LINE LOCATION FROM A/B DATA
- WETLAND BOUNDARY
- ORDINARY HIGH WATER OF STREAM
- WETLAND FLAG
- EASEMENT NUMBER REFERENCE TABLE OF EASEMENTS – SHEET 2
- POWER LINE (UNDERGROUND) LOCATED 2/2020
- GAS LINE RE-LOCATED 2/2020
- SEWER LINE LOCATED BY APS 2/2020

- EASEMENT
- RIGHT-OF-WAY
- PROPERTY LINE
- RIGHT-OF-WAY CENTER LINE
- DIRT TRAIL
- EXTENTS OF UNDERGROWTH VEGETATION
- EDGE OF VEGETATION
- SECTION LINE
- PLAT

N

1" = 200'
0 100 200 400

BASIS BEARING; NORTH LINE OF NW 1/4
SECTION 18 – T26N – R05E
BEARS S 88°24'32" E

VERTICAL DATUM
NAVD 88 GEOID 12A
ESTABLISHED BY GPS

TABLE OF EASEMENTS: (X)

A.F.N. 20060607000878
PUGET SOUND ENERGY, INC.
ELECTRICAL EASEMENT FOR CENTERLINE OF GRANTEE'S FACILITIES AS CONSTRUCTED LYING WITHIN THE EAST 30 FEET OF THE NORTH 120 FEET OF THE DESCRIBED PROPERTY.

A.F.N. 9508080964
NORTHSHORE UTILITY DISTRICT.
WATER LINE EASEMENT FOR A STRIP OF LAND 10' WIDE HAVING 5' WIDTH ON EITHER SIDE OF WATER LINE AS INSTALLED LYING WITHIN DESCRIBED PROPERTY; THAT PORTION OF 88TH AVE NE TO BE VACATED LYING SOUTH OF THE INTERSECTION OF NE 157TH ST AND SAID 88TH AVE NE AND NORTH OF THE INTERSECTION OF SIMONDS RD. NE AND 88TH AVE NE.

A.F.N. 7502280371
KING COUNTY, WASHINGTON
PARK USE AGREEMENT FOR USE BY COUNTY AS PUBLIC PARK. AFFECTS PARCEL B.

4. A.F.N. 9003061326
NORTHEAST LAKE WASHINGTON SEWER AND WATER DISTRICT
PERPETUAL SANITARY SEWER EASEMENT

5. A.F.N. 9503070957
NORTHSHORE UTILITY DISTRICT
WATER LINE EASEMENT
10' EASEMENT 5' EITHER SIDE OF CENTERLINE AS DESCRIBED IN EXHIBIT B.

6. A.F.N. 9503070958
NORTHSHORE UTILITY DISTRICT
LOCATING PORTABLE CLASSROOMS ON EXISTING WATER EASEMENT A.F.N. 9503070957 AS DESCRIBED IN EXHIBIT C. PORTABLE CLASSROOMS HAVE SINCE BEEN REMOVED.

7. A.F.N. 9410180824
NORTHSHORE UTILITY DISTRICT
PERPETUAL SANITARY SEWER EASEMENT

8. A.F.N. 9410180825
NORTHSHORE UTILITY DISTRICT
PERPETUAL SANITARY SEWER EASEMENT

UNRECORDED PERMANENT SLOPE EASEMENT
STAFFORD CONSTRUCTION INC.

A.F.N. 8309160047
JOINT MAINTENANCE AGREEMENT FOR N.E. 152ND PLACE

OTHER EASEMENTS

A.F.N. 9210200591
PUGET POWER
CENTERLINE OF GRANTEE'S FACILITIES AS CONSTRUCTED OR TO BE CONSTRUCTED, EXTENDED OR RELOCATED WITHIN PROPERTY.

PRELIMINARY

C:\USERS\ROGERL\LOCAL SETTINGS\TEMP\ACPUBLISH_12140\NSSD INGLEWOOD TOPO 17-307.DWG 02/21/2020

UNPUBLISHED WORK COPYRIGHT © 2018 BY HARMSEN, LLC

REVISIONS

DWN. BY:RML
CHK. BY:RFC
DATE: 02/21/20
JOB #:17-307
F/B #:1192/1212
SCALE:1" = 200'

HARMSEN
ENGINEERS
SURVEYORS
PLANNERS
HARMSEN, LLC
135 EAST MAIN STREET, SUITE 104
P.O. BOX 516
MONROE, WA 98272
(360) 794-7811
www.harmsenllc.com

R. CARPENTER RICHARD WASHINGTON STATE REGISTERED PROFESSIONAL ENGINEER

NORTHSHORE SCHOOL DISTRICT #417
22105 23RD DRIVE SE
BOTHELL, WA 98021

TOPOGRAPHIC MAP
INGLEMOOR HIGH SCHOOL

DRAWING: S2

SHEET: 2 OF 10

S 1/2, NW 1/4 & N 1/2 SW 1/4, SECTION 18, TOWNSHIP 26 NORTH, RANGE 5 EAST, W.M.

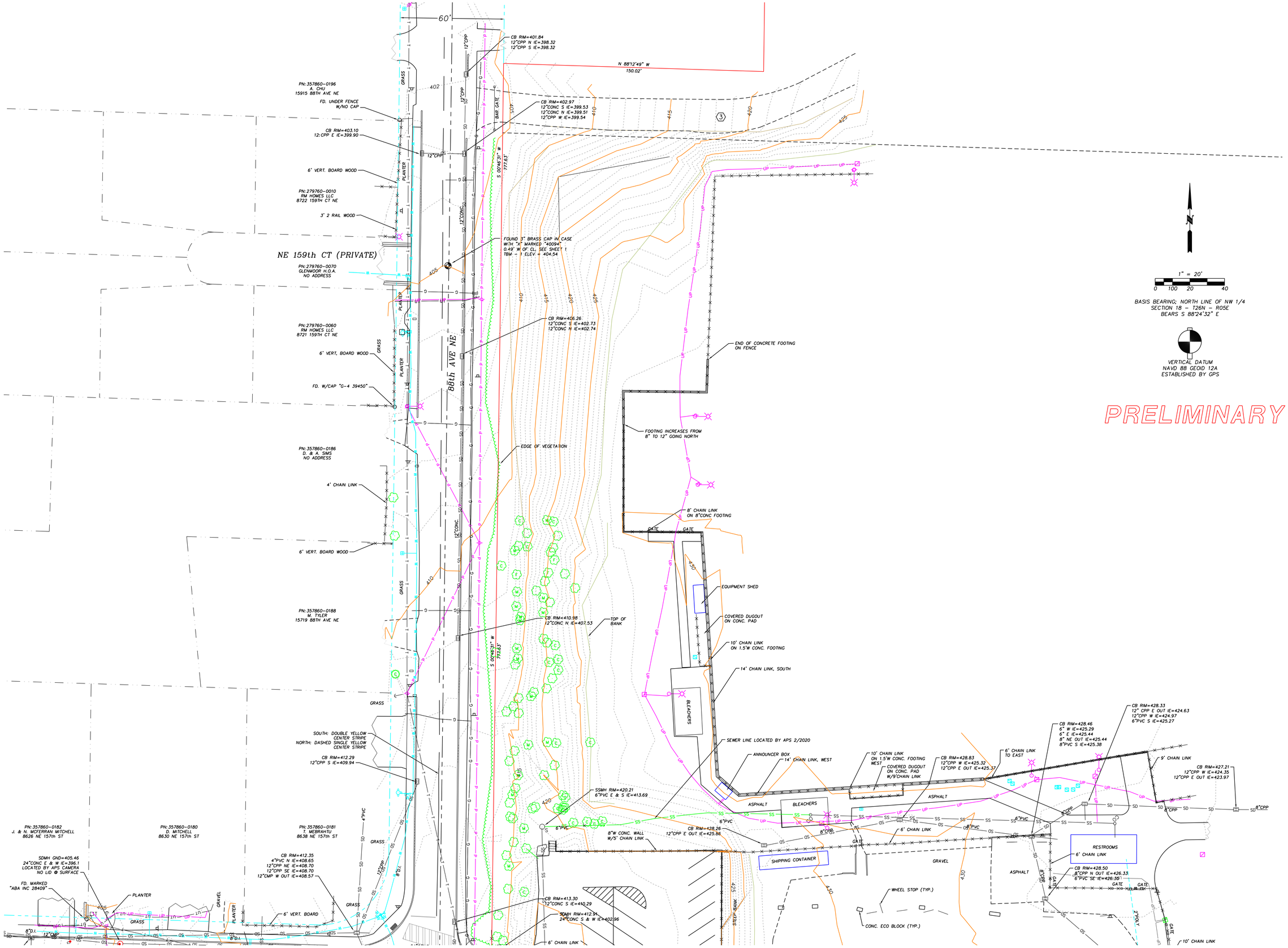

C:\USERS\ROGERL\LOCAL SETTINGS\TEMP\ACPUBLISH_12140\NSSD INGLEWOOD TOPO 17-307.DWG 02/21/2020

UNPUBLISHED WORK COPYRIGHT © 2018 BY HARMSEN, LLC

REVISIONS

△1 02/21/20 ADDED TOPO COVERAGE

DWN. BY:RML
CHK. BY:RRC
DATE: 02/21/20
JOB #:17-307
F/B #:1192/1212
SCALE:1" = 20'

HARMSEN
ENGINEERS SURVEYORS PLANNERS
HARMSEN, LLC
125 EAST MAIN STREET, SUITE 104
P.O. BOX 516
MONROE, WA 98272
(360) 794-7811
www.harmsenllc.com

RICHARD F. CARPENTER
STATE OF WASHINGTON
REGISTERED PROFESSIONAL LAND SURVEYOR
02/21/20

NORTHSHORE SCHOOL DISTRICT #417
22105 23RD DRIVE SE
BOTHELL, WA 98021

TOPOGRAPHIC MAP
INGLEMOOR HIGH SCHOOL

DRAWING:
S3

SHEET: 3 OF 10

S 1/2, NW 1/4 & N 1/2 SW 1/4, SECTION 18, TOWNSHIP 26 NORTH, RANGE 5 EAST, W.M.

NE 157th ST

PN:357860-0177
T. ABENROTH
8621 NE 157th ST

PN:357860-0178
R. & K. BURROWS
8629 NE 157th ST

PN:357860-0176
L. ANDREW & K. CRYSTAL
8637 NE 157th ST

PN:357860-0145
B & G HIDALGO
15609 88th AVE NE

PN:357860-0148
ZHOU YIXUE+ZHAN XI
15607 88th AVE NE

PN:357860-0150
R & W MCNULTY
15518 SIMONDS RD NE

GARAGE & LEAN TO

LAURAL HEDGE 5'H x 3'W

CB RIM=400.42
6"PVC E IE=398.73
12"CONC N OUT IE=398.27

CB RIM=400.16
12"CMP E IE=398.26
12"CMP W OUT IE=398.26
12"CONC S IE=398.26

CB RIM=413.93
12"CONC E IE=410.01
12"CONC N IE=409.99
12"CONC W IE=409.98

CB RIM=412.69
12"CONC N IE=409.59
12"CONC SE IE=410.43
12"CONC E IE=409.53

SSMH RIM=411.25
8"PVC N IE=402.99
8"PVC S IE=402.78
8"PVC W OUT IE=402.58

SDMH RIM=412.91
24"CONC S & W IE=402.96

SSMH RIM=414.26
8" N IE=407.51
8" W IE=407.51

CB RIM=426.82
6"PVC NW IE=426.82

CB RIM=426.74
18"CONC E IE=415.54
24"CONC W OUT IE=415.62
6" S IE=415.71

CB RIM=426.62
6" N IE=424.72

SSMH RIM=429.70
8" E IE=424.01
8" S IE=423.83

SDMH RIM=420.79
24"CONC E IE=412.69
24"CONC N OUT IE=412.59

SDMH RIM=438.38
CONTROL STRUCTURE
12" OUT S

SDMH RIM=441.19
WATER LEVEL=432.34

SDMH RIM=438.88
WATER LEVEL=434.36

SDMH RIM=444.77
8"PVC E - IN IE=427.00
8"PVC S - OUT IE=427.00

SDMH RIM=445.73
8"PVC N - IN IE=426.73
12" W - OUT IE=426.61

SDMH RIM=441.85
12" E IE=423.52
12" N IE=423.52
18" W OUT IE=423.52
4" E IE=434.17
15" S IE=431.58

CB SOLID RIM=445.06
8"PVC S IE=441.94
4"PVC W IE=442.51
12"PVC N OUT IE=438.64

CB RIM=434.40
4"PVC E IE=431.15
8"PVC E IE=429.10
8"PVC W OUT IE=429.008

CB RIM=448.16
6"PVC N IE=446.76

CB RIM=448.72
6"PVC NE IE=446.56

CB RIM=448.33
4"PVC E IE=446.81
4"PVC W IE=446.66
4"PVC SW IE=446.78

CB RIM=443.84
6" N IE=442.22
4"PVC E IE=442.62

SDMH RIM=444.62
6"PVC E IE=436.67
12"CONC E IE=436.16
8"CONC S IE=436.36
8"CONC SE IE=436.36
15"CONC N IE=436.17

CB RIM=404.29
18"CPP S IN IE=399.09
18"CPP N OUT IE=397.09
12"CMP W IE=401.79

SSMH RIM=431.99
8"CONC N & S IE=423.63
APPEARS DRY

CB RIM=431.69
6"I.P. S IE=429.19

SSMH RIM=432.82

6' VERT. BOARD

4' CHAIN LINK

3' CHAIN LINK

CONC. BLOCK RETAINING WALL

4'HOGWIRE W. 6'VERT BD. E.

8' VERT. BD.

6' CHAIN LINK

8"W CONC. WALL W/5' CHAIN LINK

6' CHAIN LINK W/2 BARB WIRE

6"x8" TIMBER STAIRS

C/L DIRT/GRAVEL TRAIL

6"x6" TIMBER STAIRS

PIPE GATE

UTILITIES CONTINUES SOUTH

5' VERT. BOARD WOOD

4' VERT. BOARD WOOD

WIRE ON TEE POSTS

SINGLE SOLID YELLOW LINE

SPEED BUMP

STEEP BANK

LANDSCAPING

CONC. ECO BLOCK (TYP.)

WHEEL STOP (TYP.)

GRAVEL

10' CHAIN LINK

ASPHALT STRIP 0.2'H x 0.4'W

2 x TENNIS COURTS

WATER DIVERSION BERM 1.5'W x 0.2'H

EQUIPMENT COMPOUND

STORAGE CONTAINER

GAS LINE RE-LOCATED 2/20

36" DETENTION PIPE

ROCK RETAINING WALL

4' CHAIN LINK FENCED ENCLOSURE

ROCKERY

HANDRAIL & 8" CONC WALL & DOWN RAMP TO DOOR

AIR HANDLER IN 8' CHAIN LINK FENCED ENCLOSURE

GAS ENTRY EQPT. W/7' CHAIN LINK ENCLOSURE

SOLID LID RIM=443.14
8"PVC VERT. MON. WELL?

PASSAGEWAY BETWEEN BUILDINGS

BLDG. 500

BLDG. 400

BLDG. 300

DOORS

CONC.

GRASS

HEDGE 3'W x 2'H

RAMP

DOCK

1" = 20'
0 100 20 40

BASIS BEARING; NORTH LINE OF NW 1/4
SECTION 18 – T26N – R05E
BEARS S 88°24'32" E

VERTICAL DATUM
NAVD 88 GEOID 12A
ESTABLISHED BY GPS

PRELIMINARY

C:\USERS\ROGERL\LOCAL SETTINGS\TEMP\ACPUBLISH_12140\NSSD INGLEWOOD TOPO 17-307.DWG 02/21/2020

UNPUBLISHED WORK COPYRIGHT © 2018 BY HARMSEN, LLC

REVISIONS

DWN. BY:RWL
CHK. BY:RFC
DATE: 02/21/20
JOB #:17-307
F/B #:1192/1212
SCALE:1" = 20'

ENGINEERS
SURVEYORS
PLANNERS

HARMSEN

HARMSEN, LLC
1325 5TH STREET, SUITE 104
P.O. BOX 518
MONROE, WA 98272
(360) 794-7811
www.harmsenllc.com

F. CARPENTER RICHARD
REGISTERED PROFESSIONAL LAND SURVEYOR
STATE OF WASHINGTON
21241
2/21/20

NORTHSHORE SCHOOL DISTRICT #417
22105 23RD DRIVE SE
BOTHELL, WA 98021

TOPOGRAPHIC MAP
INGLEMOOR HIGH SCHOOL

DRAWING:
S4

SHEET: 4 OF 10

S 1/2, NW 1/4 & N 1/2 SW 1/4, SECTION 18, TOWNSHIP 26 NORTH, RANGE 5 EAST, W.M.

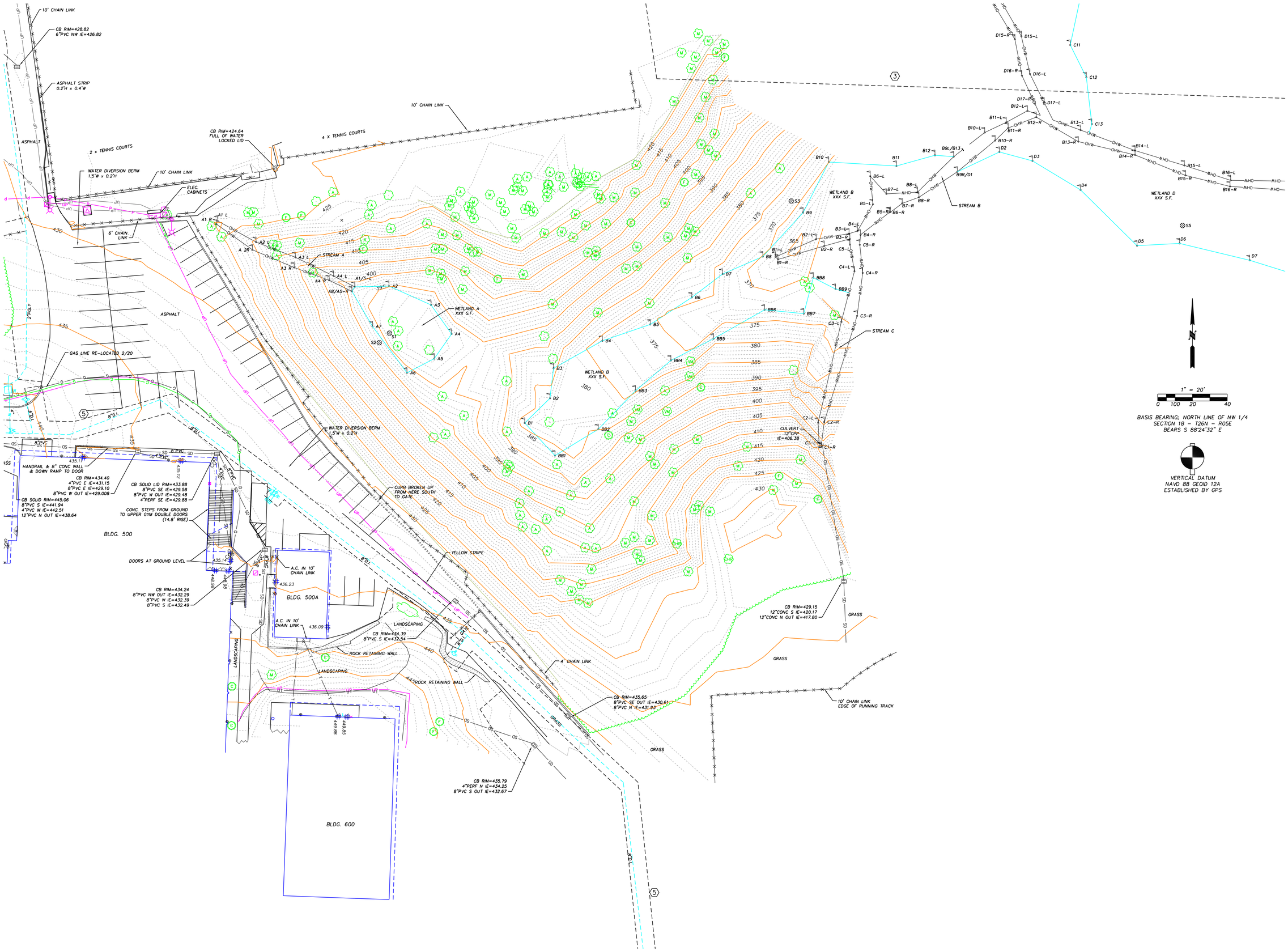

REVISIONS

DWN. BY:RMJ
CHK. BY:RFC
DATE: 02/21/20
JOB #:17-307
F/B #:1192/1212
SCALE:1" = 20'

HARMSEN
ENGINEERS
SURVEYORS
PLANNERS
HARMSEN, LLC
125 EAST MAIN STREET, SUITE 104
P.O. BOX 516
MONROE, WA 98272
(360) 794-7811
www.harmsenllc.com

RICHARD F. CARPENTER
STATE OF WASHINGTON
REGISTERED PROFESSIONAL LAND SURVEYOR
02/21/20

NORTHSHORE SCHOOL DISTRICT #417
22105 23RD DRIVE SE
BOTHELL, WA 98021

TOPOGRAPHIC MAP
INGLEMOOR HIGH SCHOOL

DRAWING:
S5

SHEET: 5 OF 10

C:\USERS\ROGERL\LOCAL SETTINGS\TEMP\ACPUBLISH_12140\NSSD INGLEWOOD TOPO 17-307.DWG 02/21/2020

UNPUBLISHED WORK COPYRIGHT © 2018 BY HARMSEN, LLC

S 1/2, NW 1/4 & N 1/2 SW 1/4, SECTION 18, TOWNSHIP 26 NORTH, RANGE 5 EAST, W.M.



C:\USERS\ROGERL\LOCAL SETTINGS\TEMP\ACPUBLISH_12140\NSSD INGLEWOOD TOPO 17-307.DWG 02/21/2020

UNPUBLISHED WORK COPYRIGHT © 2018 BY HARMSEN, LLC

REVISIONS

DWN. BY:RML
CHK. BY:RRC
DATE: 02/21/20
JOB #:17-307
F/B #:1192/1212
SCALE:1" = 20'

HARMSEN
ENGINEERS
SURVEYORS
PLANNERS
HARMSEN, LLC
125 EAST MAIN STREET, SUITE 104
P.O. BOX 516
MONROE, WA 98272
(360) 794-7811
www.harmsenllc.com

RICHARD F. CARPENTER
STATE OF WASHINGTON
REGISTERED PROFESSIONAL LAND SURVEYOR
2/21/20

NORTHSHORE SCHOOL DISTRICT #417
22105 23RD DRIVE SE
BOTHELL, WA 98021

TOPOGRAPHIC MAP
INGLEMOOR HIGH SCHOOL

DRAWING:
S6

SHEET: 6 OF 10

S 1/2, NW 1/4 & N 1/2 SW 1/4, SECTION 18, TOWNSHIP 26 NORTH, RANGE 5 EAST, W.M.

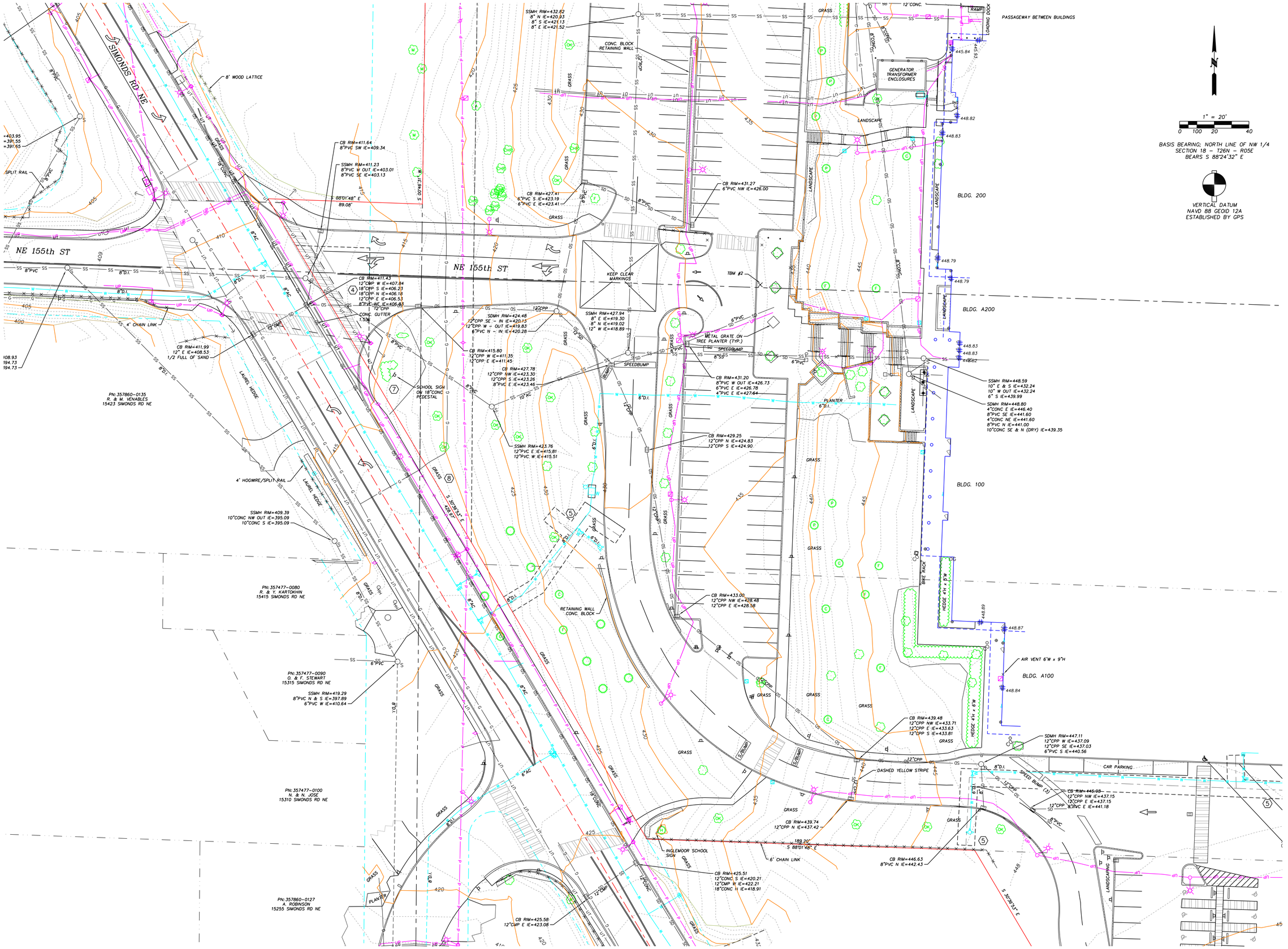

C:\USERS\ROGERL\LOCAL SETTINGS\TEMP\ACPUBLISH_12140\NSSD INGLEWOOD TOPO 17-307.DWG 02/21/2020

UNPUBLISHED WORK COPYRIGHT © 2018 BY HARMSEN, LLC

REVISIONS

DWN. BY:RML
CHK. BY:RFC
DATE: 02/21/20
JOB #:17-307
F/B #:1192/1212
SCALE:1" = 20'

HARMSEN
HARMSEN, LLC
LAND SURVEYING
P.O. BOX 516
MONROE, WA 98272
ENGINEERS
SURVEYORS
PLANNERS
1232 LINDA STREET, SUITE 104
(360) 794-7811
www.harmsenllc.com

R. CARPENTER RICHARD
REGISTERED PROFESSIONAL ENGINEER
STATE OF WASHINGTON

NORTHSHORE SCHOOL DISTRICT #417
22105 23RD DRIVE SE
BOTHELL, WA 98021

TOPOGRAPHIC MAP
INGLEMOOR HIGH SCHOOL

DRAWING:
S7

SHEET: 7 OF 10

S 1/2, NW 1/4 & N 1/2 SW 1/4, SECTION 18, TOWNSHIP 26 NORTH, RANGE 5 EAST, W.M.

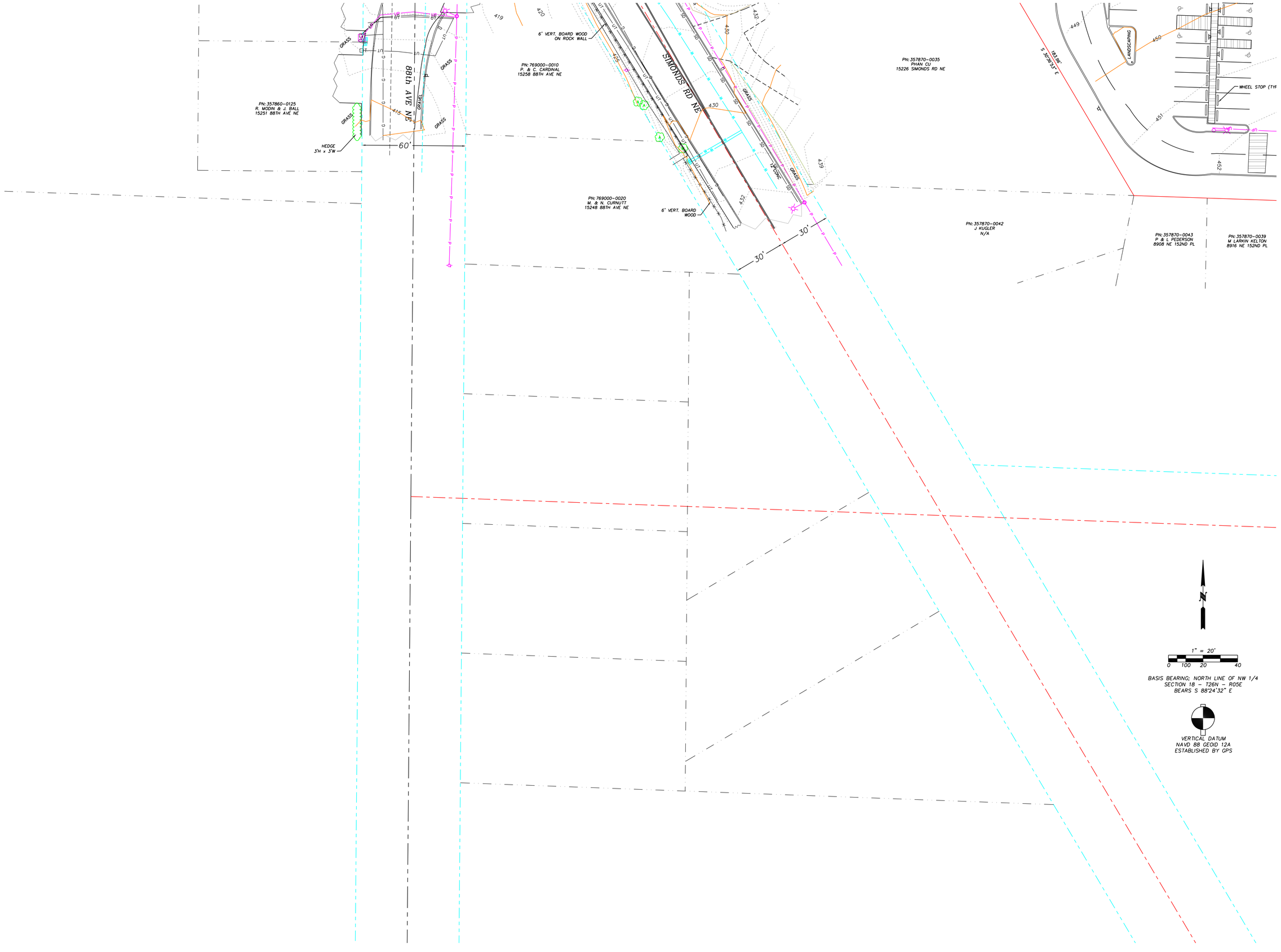

REVISIONS

DWN. BY:RML
CHK. BY:RFC
DATE: 02/21/20
JOB #:17-307
F/B #:1192/1212
SCALE:1" = 20'

HARMSEN
ENGINEERS
SURVEYORS
PLANNERS
HARMSEN, LLC
125 EAST MAIN STREET, SUITE 104
P.O. BOX 516
MONROE, WA 98272
(360) 794-7811
www.harmsenllc.com

RICHARD F. CARPENTER
STATE OF WASHINGTON
REGISTERED PROFESSIONAL LAND SURVEYOR
02/21/20

NORTHSHORE SCHOOL DISTRICT #417
22105 23RD DRIVE SE
BOTHELL, WA 98021

TOPOGRAPHIC MAP
INGLEMOOR HIGH SCHOOL

DRAWING:
S8

SHEET: 8 OF 10

C:\USERS\ROGERL\LOCAL SETTINGS\TEMP\ACPUBLISH_12140\NSSD INGLEWOOD TOPO 17-307.DWG 02/21/2020

UNPUBLISHED WORK COPYRIGHT © 2018 BY HARMSEN, LLC

S 1/2, NW 1/4 & N 1/2 SW 1/4, SECTION 18, TOWNSHIP 26 NORTH, RANGE 5 EAST, W.M.

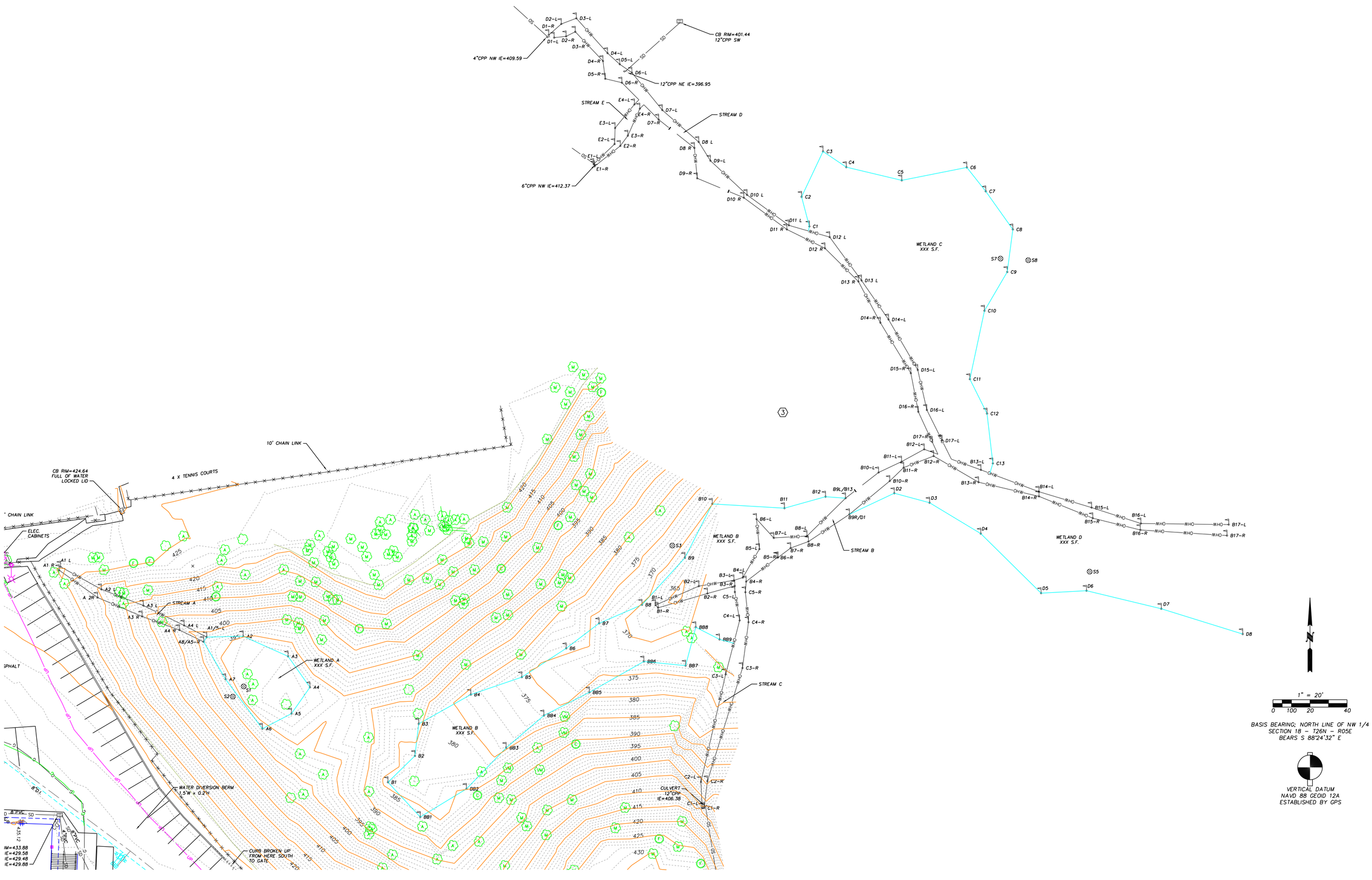

C:\USERS\ROGERL\LOCAL SETTINGS\TEMP\ACPUBLISH_12140\NSSD INGLEWOOD TOPO 17-307.DWG 02/21/2020

UNPUBLISHED WORK COPYRIGHT © 2018 BY HARMSEN, LLC

REVISIONS

1-25-19 ADDED WETLAND FLAGS

DWN. BY:RML
CHK. BY:RFC
DATE: 02/21/20
JOB #:17-307
F/B #:1192/1212
SCALE:1" = 20'

HARMSEN
ENGINEERS
SURVEYORS
PLANNERS
HARMSEN, LLC
125 EAST MAIN STREET, SUITE 104
P.O. BOX 516
MONROE, WA 98272
(360) 794-7811
www.harmsenllc.com

RICHARD F. CARPENTER
STATE OF WASHINGTON
REGISTERED PROFESSIONAL LAND SURVEYOR
02/21/20

NORTHSHORE SCHOOL DISTRICT #417
22105 23RD DRIVE SE
BOTHELL, WA 98021

TOPOGRAPHIC MAP
INGLEMOOR HIGH SCHOOL

DRAWING:
S9

SHEET: 9 OF 10

S 1/2, NW 1/4 & N 1/2 SW 1/4, SECTION 18, TOWNSHIP 26 NORTH, RANGE 5 EAST, W.M.

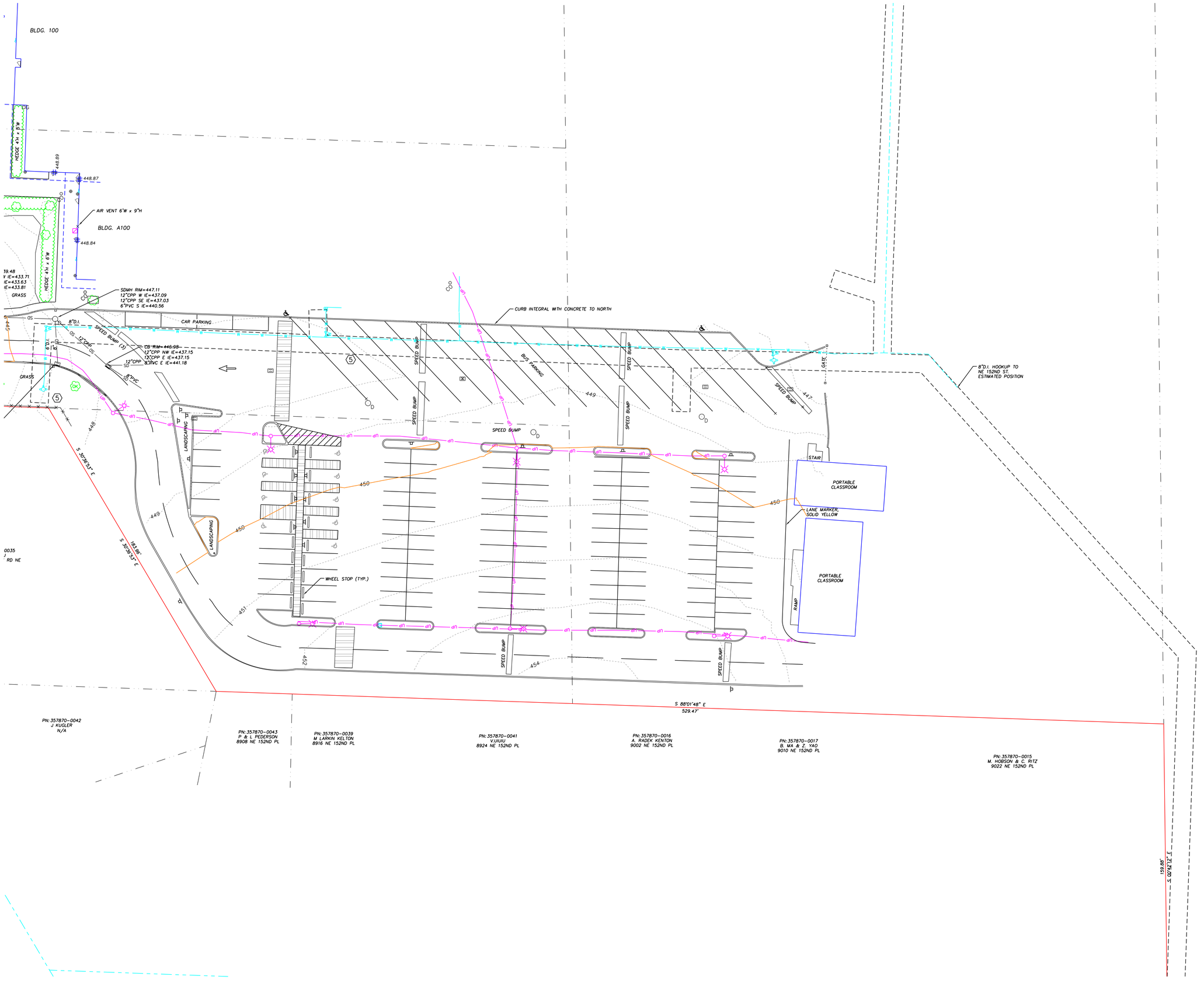

C:\USERS\ROGERL\LOCAL SETTINGS\TEMP\ACPUBLISH_12140\NSSD INGLEWOOD TOPO 17-307.DWG 02/21/2020

UNPUBLISHED WORK COPYRIGHT © 2018 BY HARMSEN, LLC

REVISIONS

1-25-19 ADDED WETLAND FLAGS

DWN. BY:RML
CHK. BY:RRC
DATE: 02/21/20
JOB #:17-307
F/B #:1192/1212
SCALE:1" = 20'

HARMSEN
ENGINEERS
SURVEYORS
PLANNERS
HARMSEN, LLC
125 EAST MAIN STREET, SUITE 104
P.O. BOX 516
MONROE, WA 98272
(360) 794-7811
www.harmsenllc.com

RICHARD F. CARPENTER
STATE OF WASHINGTON
REGISTERED PROFESSIONAL LAND SURVEYOR
02/21/20

NORTHSHORE SCHOOL DISTRICT #417
22105 23RD DRIVE SE
BOTHELL, WA 98021

TOPOGRAPHIC MAP
INGLEMOOR HIGH SCHOOL

DRAWING:
S10

SHEET: 10 OF 10

LEGAL DESCRIPTION

(PER TRANSAMERICA TITLE INSURANCE COMPANY LIMITED LIABILITY CERTIFICATE ORDER NUMBER 990054 DATED FEBRUARY 25, 1994.)

PARCEL A:

THAT PORTION OF GOVERNMENT LOTS 2 AND 3 IN SECTION 18, TOWNSHIP 26 NORTH, RANGE 5 EAST, W.M., LYING SOUTHERLY OF A LINE WHICH IS PARALLEL TO AND 990 FEET SOUTHERLY OF THE NORTHERLY LINE OF SAID LOT 2;
THENCE WESTERLY PARALLEL WITH THE NORTHERLY LINE OF SAID LOT 2, 238.97 FEET, MORE OR LESS, TO THE ORIGINAL NORTHEASTERLY LINE OF SIMONDS ROAD NORTHEAST;
THENCE SOUTHEASTERLY ALONG SAID ORIGINAL LINE TO THE POINT OF INTERSECTION WITH THE WEST LINE OF 88TH AVE NORTHEAST;
THENCE NORTHERLY ALONG SAID WEST LINE 385 FEET, MORE OR LESS, TO THE POINT OF BEGINNING;

(ALSO KNOWN AS LOT 27-B,INGLEWOOD HEIGHTS, ACCORDING TO THE UNRECORDED PLAT THEREOF);

SITUATE IN THE COUNTY OF KING, STATE OF WASHINGTON.

PARCEL B:

THE SOUTHEAST 1/4 OF THE NORTHWEST 1/4 OF SECTION 18, TOWNSHIP 26 NORTH, RANGE 5 EAST, W.M.;

EXCEPT THE WEST 30 FEET THEREOF CONVEYED TO KING COUNTY FOR ROAD BY DEED RECORDED UNDER RECORDING NUMBER 1080810;

AND EXCEPT THE NORTH 130 FEET OF THE WEST 150 FEET OF THE REMAINDER THEREOF;

SITUATE IN THE COUNTY OF KING, STATE OF WASHINGTON.

PARCEL C:

THE EAST 165 FEET OF THE NORTHEAST 1/4 OF THE NORTHEAST 1/4 OF THE SOUTHWEST 1/4 OF SECTION 18, TOWNSHIP 26 NORTH, RANGE 5 EAST, W.M.;

EXCEPT THE SOUTH 240 FEET THEREOF;

(ALSO KNOWN AS LOT 1 OF INGLEWOOD HEIGHTS 2ND PLAT, AN UNRECORDED PLAT, EXCEPT THE SOUTH 210 FEET THEREOF);

SITUATE IN THE COUNTY OF KING, STATE OF WASHINGTON.

PARCEL D:

THE WESTERLY 165 FEET OF THE EASTERLY 330 FEET, MEASURED AT RIGHT ANGLES FROM THE EASTERLY LINE THEREOF, OF THE NORTH 1/2 OF THE NORTHEAST 1/4 OF THE SOUTHWEST 1/4 OF SECTION 18, TOWNSHIP 26 NORTH, RANGE 5 EAST, W.M.;

EXCEPT THE SOUTHERLY 30 FEET THEREOF;

(ALSO KNOWN AS TRACT 2 OF INGLEWOOD HEIGHTS - 2ND PLAT, AN UNRECORDED PLAT);

SITUATE IN THE COUNTY OF KING, STATE OF WASHINGTON.

PARCEL E:

THE NORTH 475 FEET OF THE WESTERLY 330 FEET OF THE EASTERLY 660 FEET , AS MEASURED AT RIGHT ANGLES TO THE EASTERLY LINE OF THE NORTH HALF OF THE THE NORTHEAST 1/4 OF THE SOUTHWEST 1/4 OF SECTION 18, TOWNSHIP 26 NORTH, RANGE 5 EAST, W.M.;

(ALSO KNOW AS A PORTION OF TRACTS 3 AND 4 OF INGLEWOOD HEIGHTS 2ND PLAT, AN UNRECORDED PLAT);

SITUATE IN THE COUNTY OF KING, STATE OF WASHINGTON.

PARCEL F:

THE SOUTH 155 FEET OF THE NORTH 475 FEET OF THAT PORTION OF THE NORTHEAST 1/4 OF THE SOUTHWEST 1/4 OF SECTON 18, TOWNSHIP 26 NORTH, RANGE 5 EAST, W.M., WHICH LIES WESTERLY OF A LINE 660 FEET WEST OF, AS MEASURED AT RIGHT ANGLES FROM AND PARALLEL TO THE EAST LINE OF SAID SUBDIVISION, AND WHICH LIES EASTERLY OF A LINE PARALLEL TO AND 275 FEET EASTERLY, AS MEASURED AT RIGHT ANGLES FROM THE EASTERLY MARGIN OF SIMONDS COUNTY ROAD;

(ALSO KNOWN AS A PORTION OF TRACT 7 OF INGLEWOOD HEIGHTS 2ND PLAT, AN UNRECORDED PLAT);

SITUATE IN THE COUNTY OF KING, STATE OF WASHINGTON.

PARCEL G:

THE NORTH 165 FEET OF THAT PORTION OF THE NORTH 1/2 OF THE NORTHEAST 1/4 OF THE SOUTHWEST 1/4 OF SECTION 18, TOWNSHIP 26 NORTH, RANGE 5 EAST, W.M., LYING WEST OF A LINE 660 FEET WEST OF, MEASURED AT RIGHT ANGLES THERETO, AND PARALLEL TO THE EAST BOUNDARY LINE OF THE NORTHEAST 1/4 OF THE SOUTHWEST 1/4 OF SAID SECTION;

EXCEPT COUNTY ROADS;

(ALSO KNOWN AS TRACT 5 OF INGLEWOOD HEIGHTS - 2ND PLAT, AN UNRECORDED PLAT);

SITUATE IN THE COUNTY OF KING, STATE OF WASHINGTON.

PARCEL H:

THE SOUTH 155 FEET OF THE NORTH 320 FEET OF THAT PORTION OF THE NORTH 1/2 OF THE NORTHEAST 1/4 OF THE SOUTHWEST 1/4 OF SECTION 18, TOWNSHIP 26 NORTH, RANGE 5 EAST, W.M., LYING WEST OF A LINE 660 FEET WEST OF, AND MEASURED AT RIGHT ANGLES THERETO, AND PARALLEL TO THE EAST BOUNDARY LINE OF THE NORTHEAST 1/4 OF THE SOUTHWEST 1/4 OF SAID SECTION AND LYING EASTERLY OF THE COUNTY ROAD KNOWN AS SIMONDS ROAD;

(ALSO KNOWN AS TRACT 6 OF INGLEWOOD HEIGHTS - 2ND PLAT, AN UNRECORDED PLAT);

TOGETHER WITH PARCEL AS DESCRIBED IN KING COUNTY VACATION ORDINANCE V2178, AUDITOR'S FILE # 20020219000634.

SITUATE IN THE COUNTY OF KING, STATE OF WASHINGTON.

HORIZONTAL CONTROL

BASIS OF BEARING: NORTH LINE OF NW 1/4
SECTION 18 - T26N - R05E
BEARS S88°24'32"E

VERTICAL DATUM AND BENCHMARK

VERTICAL DATUM: NAVD 88 GEOID 12A
ESTABLISHED BY GPS

BENCH MARKS:

TBM #1:
TOP OF MONUMENT IN CASE INTERSECTION OF
88TH AVE NE & 159TH CT
ELEV = 404.54

TBM #2
MAG NAIL IN SIDEWALK 2.4' EAST OF FACE OF CURB
ELEV = 432.76

SURVEYOR'S NARRATIVE

LEGAL DESCRIPTION FOR PARCEL A PER TRANSAMERICA TITLE INSURANCE 02/25/1994 CALLS FOR THE LEGAL DESCRIPTION TO BE ALL OF LOT 27-B PER THE UNRECORDED PLAT OF INGLEWOOD HEIGHTS.
A DEED FROM STEWART TITLE COMPANY DATED 04/22/1993 SHOWS THAT McNULTY SOLD THE SOUTH 96.00 FEET TO NORTHSHORE SCHOOL DISTRICT.
I HELD THIS AS PARCEL OWNED BY NORTHSHORE SCHOOL DISTRICT. THE NORTH LINE OF THIS PARCEL WAS DERIVED FROM HOLDING A PERPENDICULAR DISTANCE FROM THE INTERSECTION OF THE WEST SIDE OF 88TH AVE NE WITH EASTERLY SIDE OF SIMONDS ROAD NE.

TABLE OF EASEMENTS:

A.F.N. 20060607000878
PUGET SOUND ENERGY, INC.
ELECTRICAL EASEMENT FOR CENTERLINE OF GRANTEE'S FACILITIES AS CONSTRUCTED LYING WITHIN THE EAST 30 FEET OF THE NORTH 120 FEET OF THE DESCRIBED PROPERTY.

A.F.N. 9508080964
NORTHSHORE UTILITY DISTRICT.
WATER LINE EASEMENT FOR A STRIP OF LAND 10' WIDE HAVING 5' WIDTH ON EITHER SIDE OF WATER LINE AS INSTALLED LYING WITHIN DESCRIBED PROPERTY. THAT PORTION OF 88TH AVE NE TO BE VACATED LYING SOUTH OF THE INTERSECTION OF NE 157TH ST AND SAID 88TH AVE NE AND NORTH OF THE INTERSECTION OF SIMONDS RD. NE AND 88TH AVE NE.

A.F.N. 7502280371
KING COUNTY, WASHINGTON
PARK USE AGREEMENT FOR USE BY COUNTY AS PUBLIC PARK. AFFECTS PARCEL B.

4. A.F.N. 9003061326
NORTHEAST LAKE WASHINGTON SEWER AND WATER DISTRICT
PERPETUAL SANITARY SEWER EASEMENT

5. A.F.N. 9503070957
NORTHSHORE UTILITY DISTRICT
WATER LINE EASEMENT
10' EASEMENT 5' EITHER SIDE OF CENTERLINE AS DESCRIBED IN EXHIBIT B.

6. A.F.N. 9503070958
NORTHSHORE UTILITY DISTRICT
LOCATING PORTABLE CLASSROOMS ON EXISTING WATER EASEMENT A.F.N. 9503070957 AS DESCRIBED IN EXHIBIT C. PORTABLE CLASSROOMS HAVE SINCE BEEN REMOVED.

7. A.F.N. 9410180824
NORTHSHORE UTILITY DISTRICT
PERPETUAL SANITARY SEWER EASEMENT

8. A.F.N. 9410180825
NORTHSHORE UTILITY DISTRICT
PERPETUAL SANITARY SEWER EASEMENT

UNRECORDED PERMANENT SLOPE EASEMENT
STAFFORD CONSTRUCTION INC.

A.F.N. 8309160047
JOINT MAINTENANCE AGREEMENT FOR N.E. 152ND PLACE

OTHER EASEMENTS

A.F.N. 9210200591
PUGET POWER
CENTERLINE OF GRANTEE'S FACILITIES AS CONSTRUCTED OR TO BE CONSTRUCTED, EXTENDED OR RELOCATED WITHIN PROPERTY.

OWNER

NORTHSHORE SCHOOL DISTRICT
22105 23RD DRIVE S.E.
BOTHELL, WA 98021
PHONE: (425) 408-7864
CONTACT: DRI RALPH

ARCHITECT

HUTTEBALL + OREMUS ARCHITECTURE
4010 LAKE WASHINGTON BLVD. N.E., SUITE 320
KIRKLAND, WA 98033
PHONE: (425) 828-8948
CONTACT: KEVIN OREMUS, AIA

CIVIL ENGINEER

INTEGRITY WORKS CONSULTING ENGINEERS, LLC
170 W. DAYTON ST., SUITE 204
EDMONDS, WA 98020
PHONE: (206) 920-9410
CONTACT: JOE MOON, P.E.

LANDSCAPE ARCHITECT

WEISMAN DESIGN GROUP
2329 EAST MADISON ST.
SEATTLE, WA 98112
PHONE: (206) 322-1732
CONTACT: NICK HAGAN, ASLA

SURVEYOR

HARMSEN LLC
125 EAST MAIN ST., SUITE 104
MONROE, WA 98272
PHONE: (360) 794-7811
CONTACT: RINK CARPENTER, P.L.S.

GEOTECHNICAL ENGINEER/CESCL

ASSOCIATED EARTH SCIENCES INC.
911 5TH AVE.
KIRKLAND, WA 98033
PHONE: (425) 827-7701
CONTACT: KURT MERRIMAN, P.E.

STRUCTURAL ENGINEER

COUGHLIN PORTER LUNDEEN
801 2ND AVE., SUITE 900
SEATTLE, WA 98104
PHONE: (206) 343-0460
CONTACT: CHRISTEN SANDERS, P.E.

MECHANICAL ENGINEER

HARGIS ENGINEERS, INC.
1201 3RD AVE., SUITE 600
SEATTLE, WA 98101
PHONE: (206) 448-3376
CONTACT: BRIAN HAUGK, P.E.

UTILITY PURVEYORS

WATER AND SEWER: NORTHSHORE UTILITY DISTRICT
6830 N.E. 185TH ST.
KENMORE, WA 98028
PHONE (425) 398-4400

POWER AND GAS: PUGET SOUND ENERGY INC
10885 NE 4TH STREET
BELLEVUE, WA 98004
PHONE (888) 321-7779

COMM: CENTURYLINK
10200 NE 10TH STREET
BELLEVUE, WA 98004
PHONE (425) 452-0010

"UNDERGROUND UTILITIES ARE SHOWN IN APPROXIMATE LOCATION. THERE IS NO GUARANTEE THAT ALL UTILITY LINES ARE SHOWN, OR THAT THE LOCATION, SIZE, AND MATERIAL IS ACCURATE. THE CONTRACTOR SHALL UNCOVER ALL INDICATED PIPING WHERE CROSSING, INTERFERENCES, OR CONNECTIONS OCCUR PRIOR TO TRENCHING OR EXCAVATION FOR ANY PIPE OF STRUCTURES, TO DETERMINE ACTUAL LOCATIONS, SIZE, AND MATERIAL. THE CONTRACTOR SHALL MAKE THE APPROPRIATE PROVISION FOR PROTECTION OF SAID FACILITIES. THE CONTRACTOR SHALL NOTIFY **ONE CALL** AT 811 OR 1-800-424-5555 AND ARRANGE FOR FIELD LOCATION OF EXISTING FACILITIES BEFORE CONSTRUCTION"

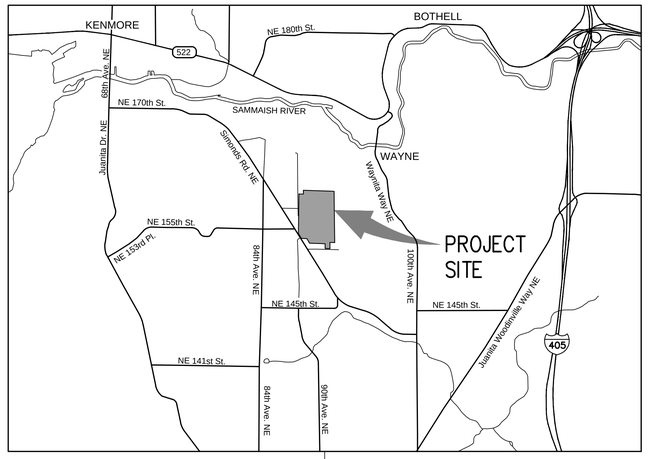

VICINITY MAP
SCALE: 1" = 1000'

N

SITE INFORMATION

1. SITE ADDRESS:
INGLEMOOR HIGH SCHOOL
15500 SIMONDS ROAD N.E.
KENMORE, WA 98028
2. TAX PARCEL NUMBER: 182605-9008
3. SITE AREA: 49.73 ACRES
4. ZONING: PUBLIC/SEMI-PUBLIC

EARTHWORKS QUANTITIES

CUT =12,198 CY
FILL =17,080 CY

NOTE:
EARTHWORK QUANTITIES ARE ESTIMATES INTENDED FOR PERMITTING AND INFORMATIONAL PURPOSES ONLY. CONTRACTOR SHALL PERFORM INDEPENDENT EARTHWORK ANALYSIS TO DETERMINE QUANTITIES REQUIRED FOR THE PROJECT.

DRAWING INDEX

SHEET NO.	TITLE
C1.00	COVER SHEET
C1.01	LEGENDS, SYMBOLS AND NOTES
C2.00	T.E.S.C. PLAN
C2.01	T.E.S.C. PLAN
C2.02	T.E.S.C. DETAILS
C2.03	T.E.S.C. DETAILS
C3.00	DEMOLITION PLAN
C3.01	DEMOLITION PLAN
C3.02	DEMOLITION NOTES
C3.03	BUILDING SUBGRADE PREPARATION PLAN
C4.00	GRADING PLAN
C4.01	GRADING PLAN
C5.00	STORM DRAINAGE PLAN
C5.01	STORM DRAINAGE DETAILS
C5.02	STORM DRAINAGE DETAILS
C5.03	STORM DRAINAGE DETAILS
C5.04	STORM DRAINAGE DETAILS
C5.05	STORM DRAINAGE DETAILS
C5.06	STORM DRAINAGE DETAILS
C5.07	STORM DRAINAGE DETAILS
C5.08	STORM DRAINAGE DETAILS
C6.00	HORIZONTAL CONTROL AND PAVING PLAN
C6.01	HORIZONTAL CONTROL AND PAVING PLAN
C6.02	PAVING DETAILS
C6.03	PAVING DETAILS
C6.04	PAVING DETAILS
C6.05	PAVING DETAILS
C6.06	PAVING DETAILS
C6.07	PAVING DETAILS
C7.00	SIGNAGE AND STRIPING PLAN
C7.01	SIGNAGE AND STRIPING PLAN
C7.02	SIGNAGE AND STRIPING DETAILS
C7.03	SIGNAGE AND STRIPING DETAILS
C7.04	SIGNAGE AND STRIPING DETAILS
WS1.01	LEGENDS, SYMBOLS AND NOTES
SS2.00	SANITARY SEWER PLAN
SS2.01	SANITARY SEWER PROFILE
W3.00	WATER PLAN
W3.01	WATER PROFILE
W3.02	WATER DETAILS
R1.00	88TH AVE. N.E. DEMOLITION AND T.E.S.C. PLAN
R2.00	ROADWAY AND DRAINAGE PLAN
R2.01	ROADWAY DETAILS
R2.02	ROADWAY DETAILS

811 CALL 2 BUSINESS DAYS BEFORE YOU DIG 811 OR 1-800-424-5555

THESE DRAWINGS ARE NOT TO BE USED FOR CONSTRUCTION UNLESS SIGNED BY THE REVIEWING AGENCY

Integrity Works
Consulting Engineers, LLC
170 W. Dayton St. Suite 204 Edmonds WA 98020
O: 425.967.7913 C: 206.920.9410

PLAN APPROVAL

CITY OF KENMORE, PLAN REVIEWER

HUTTEBALL + OREMUS architecture
4010 LAKE WASHINGTON BLVD NE
SUITE 320
KIRKLAND, WA 98033
425.828.8948
HOARCH.COM

ARCHITECT STAMP

CONSULTANT STAMP

JOSEPH B. MOON
STATE OF WASHINGTON
36022
REGISTERED
PROFESSIONAL ENGINEER
4/13/20

PROJECT INFORMATION

Inglemoor High School Concert Hall + Music Building

15500 Simonds Rd NE
Kenmore, WA 98028

NORTHSHORE SCHOOL DISTRICT No. 417

SCHOOL DISTRICT LOGO

Northshore School District

02.13.2019 SCHEMATIC DESIGN
04.08.2019 VALUE ENGINEERING
09.16.2019 SITE PLAN REVIEW
10.18.2019 DESIGN DEVELOPMENT
01.13.2020 CONSTRUCTABILITY REVIEW
03.23.2020 HEALTH DEPARTMENT PERMIT SUBMITTAL
04.13.2020 BID DOCUMENTS

BID DOCUMENTS

04.13.2020

PROJECT NUMBER: 1711

SHEET NAME

COVER SHEET

SHEET NUMBER

C1.00

SURVEY LEGEND

- PK NAIL FOR CONTROL
- FOUND MONUMENT IN CASE
- FOUND REBAR AS NOTED
- BOULDER
- BUSH
- GATE POST
- CATCH BASIN
- TURN ARROW
- WATER VALVE
- FENCE POST
- FINISHED FLOOR ELEVATION
- GAS METER
- GAS VALVE
- HAND HOLE
- IRRIGATION CONTROL VALVE
- LUMINAIRE
- POLE & LUMINAIRE
- YARD POLE
- CULVERT END
- TRANSFORMER PAD
- POWER VAULT
- POWER METER
- ROOF DRAIN
- FLAGPOLE
- STORM DRAIN MANHOLE
- MAILBOX
- SIGN POST
- SEWER MANHOLE
- COLUMN
- DECIDUOUS TREE W/DRIP LINE
- CHESTNUT TREE
- CHERRY
- OAK TREE
- ALDER TREE
- COTTONWOOD TREE
- CEDAR TREE
- CONIFER TREE
- FIR TREE
- FRUIT TREE
- HEMLOCK TREE
- MAPLE TREE
- PINE TREE
- TELEPHONE MANHOLE
- TELEPHONE PEDESTAL
- JUNCTION BOX
- PEDESTRIAN POLE
- TRAFFIC SIGN
- TELEPHONE VAULT
- MANHOLE (UNKNOWN)
- POWER POLE W/ U.G. FEED
- POWER POLE
- GUY ANCHOR
- FIRE STD PIPE
- FIRE HYDRANT
- BOLLARD
- WATER FAUCET
- WATER METER
- WATER VAULT
- YARD DRAIN
- GROUND SHOT

- FENCE LINE
- GAS LINE
- POWER LINE
- POWER LINE (UNDERGROUND)
- SEWER LINE
- STORM DRAIN LINE
- TELEPHONE LINE
- TELEPHONE LINE (UNDERGROUND)
- WATER LINE
- WATER LINE LOCATION FROM A/B DATA
- WETLAND BOUNDARY
- ORDINARY HIGH WATER OF STREAM
- WETLAND FLAG
- EASEMENT NUMBER REFERENCE TABLE OF EASEMENTS – SHEET 2
- EASEMENT
- RIGHT-OF-WAY
- PROPERTY LINE
- RIGHT-OF-WAY CENTER LINE
- DIRT TRAIL
- EXTENTS OF UNDERGROWTH VEGETATION
- EDGE OF VEGETATION
- SURVEY LIMITS
- SECTION LINE
- PLAT

PROPOSED LEGEND

- CATCH BASIN TYPE 1
- AREA DRAIN
- CATCH BASIN TYPE 2 WITH GRATE
- STORM DRAIN MANHOLE TYPE 2 WITH SOLID LID
- STORM CLEANOUT
- CULVERT
- SWALE
- FOOTING DRAIN
- DOWNSPOUT TIGHTLINE
- SANITARY SEWER MANHOLE TYPE 1
- SANITARY SEWER CLEANOUT
- FIRE HYDRANT
- FIRE DEPARTMENT CONNECTION
- POST INDICATOR VALVE (PIV)
- GATE VALVE
- BUTTERFLY VALVE
- REDUCER
- COUPLING SLEEVE
- THRUST BLOCK
- TEE
- BEND
- 90° BEND
- WATER METER
- PIPE CAP
- BLOWOFF ASSEMBLY
- AIR VACUUM ASSEMBLY
- CONCRETE WALL
- RETAINING WALL (ROCKERY, KEYSTONE, REDI-ROCK)
- PROPERTY LINE
- AD — AREA DRAIN
- H.P. — HIGH POINT
- L.P. — LOW POINT
- G.P. — GRADE BREAK
- STORM DRAIN LINE
- PERF. PIPE
- FIELD UNDER DRAIN
- SANITARY SEWER LINE
- WATER MAIN
- GUARD RAIL
- STANDARD DUTY ASPHALT PAVEMENT
- HEAVY DUTY ASPHALT PAVEMENT
- CONCRETE PAVEMENT

GENERAL NOTES

1. ALL DESIGN AND CONSTRUCTION SHALL BE IN ACCORDANCE WITH THE PERMIT CONDITIONS, THE CITY OF KENMORE MUNICIPAL CODE, CITY OF KENMORE ROAD STANDARDS, AND THE WASHINGTON STATE DOT (WSDOT) STANDARD SPECIFICATIONS. IT SHALL BE THE SOLE RESPONSIBILITY OF THE APPLICANT AND THE PROFESSIONAL CIVIL ENGINEER TO CORRECT ANY ERROR, OMISSION, OR VARIATION FROM THE ABOVE REQUIREMENTS FOUND IN THESE PLANS. ALL CORRECTIONS SHALL BE AT NO ADDITIONAL COST OR LIABILITY TO THE CITY OF KENMORE.
2. THE DESIGN ELEMENTS WITHIN THESE PLANS HAVE BEEN REVIEWED ACCORDING TO THE CITY OF KENMORE ENGINEERING REVIEW CHECKLIST. SOME ELEMENTS MAY HAVE BEEN OVERLOOKED OR MISSED BY THE CITY'S PLAN REVIEWER. ANY VARIANCE FROM ADOPTED STANDARDS IS NOT ALLOWED UNLESS SPECIFICALLY APPROVED BY THE CITY PRIOR TO CONSTRUCTION.
3. APPROVAL OF THIS ROAD, GRADING, PARKING AND DRAINAGE PLAN DOES NOT CONSTITUTE AN APPROVAL OF ANY OTHER CONSTRUCTION (E.G. DOMESTIC WATER CONVEYANCE, SEWER CONVEYANCE, GAS, ELECTRICAL, ETC.)
4. BEFORE ANY CONSTRUCTION OR DEVELOPMENT ACTIVITY, A PRECONSTRUCTION MEETING MUST BE HELD BETWEEN THE CITY OF KENMORE, THE APPLICANT, AND THE APPLICANT'S CONSTRUCTION REPRESENTATIVE.
5. A COPY OF THESE APPROVED PLANS MUST BE ON THE JOB SITE WHENEVER CONSTRUCTION IS IN PROGRESS.
6. GRADING ACTIVITIES (SITE ALTERATION) ARE LIMITED TO THE HOURS OF 7 A.M. TO 7 P.M. MONDAY THROUGH SATURDAY AND 10 A.M. TO 5 P.M. ON SUNDAY, UNLESS OTHERWISE APPROVED WITH A WRITTEN DECISION BY THE REVIEWING AGENCY.
7. IT SHALL BE THE APPLICANT'S/CONTRACTOR'S RESPONSIBILITY TO OBTAIN ALL CONSTRUCTION EASEMENTS NECESSARY BEFORE INITIATING OFF-SITE WORK. EASEMENTS REQUIRE REVIEW AND APPROVAL PRIOR TO CONSTRUCTION.
8. FRANCHISED UTILITIES OR OTHER INSTALLATIONS THAT ARE NOT SHOWN ON THESE APPROVED PLANS SHALL NOT BE CONSTRUCTED UNLESS AN APPROVED SET OF PLANS THAT MEET ALL REQUIREMENTS OF THE CITY OF KENMORE THREE DAYS PRIOR TO CONSTRUCTION.
9. DATUM SHALL BE KCAS UNLESS OTHERWISE APPROVED BY THE CITY OF KENMORE.
10. DEWATERING SYSTEM (UNDERDRAIN) CONSTRUCTION SHALL BE WITHIN A RIGHT-OF-WAY OR APPROPRIATE DRAINAGE EASEMENT, BUT NOT UNDERNEATH THE ROADWAY SECTION. ALL UNDERDRAIN SYSTEMS MUST BE CONSTRUCTED IN ACCORDANCE WITH WSDOT STANDARD SPECIFICATIONS.
11. ALL UTILITY TRENCHES AND ROADWAY SUBGRADE SHALL BE BACKFILLED AND COMPACTED TO 95 PERCENT DENSITY, STANDARD PROCTOR.
12. OPEN CUTTING OF EXISTING ROADWAYS FOR NON-FRANCHISED UTILITY OR STORM WORK IS NOT ALLOWED UNLESS SPECIFICALLY APPROVED BY THE CITY OF KENMORE AND NOTED ON THESE APPROVED PLANS. ANY OPEN CUT SHALL BE RESTORED IN ACCORDANCE WITH THE CITY OF KEMORE ROAD STANDARDS.
13. THE CONTRACTOR SHALL BE RESPONSIBLE FOR PROVIDING ADEQUATE SAFEGUARDS, SAFETY DEVICES, PROTECTIVE EQUIPMENT, FLAGGERS, AND ANY OTHER NEEDED ACTIONS TO PROTECT THE LIFE, HEALTH, AND SAFETY OF THE PUBLIC, AND TO PROTECT PROPERTY IN CONNECTION WITH THE PERFORMANCE OF WORK COVERED BY THE CONTRACTOR. ANY WORK WITHIN THE TRAVELED RIGHT-OF-WAY THAT MAY INTERRUPT NORMAL TRAFFIC FLOW SHALL REQUIRE AT LEAST ONE FLAGGER FOR EACH LANE OF TRAFFIC AFFECTED. MANUAL ON UNIFORM TRAFFIC CONTROL DEVICES (MUTCD) SHALL APPLY. WORK IN RIGHT-OF-WAY IS NOT AUTHORIZED UNTIL A TRAFFIC CONTROL PLAN IS APPROVED BY THE CITY OF KENMORE.

CONSTRUCTION SEQUENCE

1. CONTRACTOR SHALL ATTEND PRE-CONSTRUCTION MEETING WITH THE OWNER, ARCHITECT, ENGINEER, CITY OF KENMORE, AND UTILITY PURVEYORS.
2. POST NOTICE OF CONSTRUCTION ACTIVITY SIGN WITH NAME AND PHONE NUMBER OF CESCL/ESC SUPERVISOR.
3. FLAG OR FENCE CLEARING LIMITS.
4. INSTALL CATCH BASIN PROTECTION.
5. GRADE AND INSTALL CONSTRUCTION ENTRANCE.
6. INSTALL PERIMETER PROTECTION (SILT FENCE, ETC.).
9. CONSTRUCT PERMANENT STORMWATER VAULT AND ASSOCIATED DOWNSTREAM DRAINAGE SYSTEM FOR EROSION AND SEDIMENTATION CONTROL DURING CONSTRUCTION. SEE T.E.S.C. AND STORM DRAINAGE PLANS FOR DETAILS.
10. INSTALL SWPPP MEASURES PER PLAN.
11. GRADE AND STABILIZE CONSTRUCTION ROADS.
12. CONSTRUCT SURFACE WATER CONTROLS (INTERCEPTOR DIKES, PIPE SLOPE DRAINS, ETC.) SIMULTANEOUSLY WITH CLEARING AND GRADING FOR PROJECT DEVELOPMENT.
13. PERFORM SITE DEMOLITION PER CONTRACT DOCUMENTS.
14. INSTALL SITE UTILITIES PER CONTRACT DOCUMENTS.
15. CONSTRUCT NEW BUILDING.
16. GRADE SITE TO FINAL SUBGRADE ELEVATIONS.
17. MAINTAIN EROSION CONTROL MEASURES IN ACCORDANCE WITH THE CITY OF KENMORE PUBLIC WORKS STANDARDS AND MANUFACTURER'S RECOMMENDATIONS.
18. MAINTAIN, RELOCATE, AND INSTALL NEW SWPPP MEASURES AS SITE AND WEATHER CONDITIONS DICTATE.
19. COVER ALL AREAS THAT WILL BE UNWORKED FOR MORE THAN SEVEN DAYS DURING THE DRY SEASON OR TWO DAYS DURING THE WET SEASON WITH STRAW, WOOD FIBER MULCH, COMPOST, PLASTIC SHEETING, CRUSHED ROCK, OR EQUIVALENT.
20. STABILIZE ALL AREAS THAT REACH FINAL GRADE WITHIN SEVEN (7) DAYS.
21. SEED OR SOD ANY AREAS TO REMAIN UNWORKED FOR MORE THAN 30 DAYS.
22. PAVE SITE PER CONTRACT DOCUMENTS.
23. CLEAN STORM DRAINAGE SYSTEM, ON AND OFF SITE, OF ALL SEDIMENT AND DEBRIS. DEBRIS OR SEDIMENT SHALL NOT BE DISCHARGED TO THE EXISTING/PROPOSED WATER QUALITY SYSTEMS AND TO OFF-SITE DRAINAGE FACILITIES.
24. UPON COMPLETION OF THE PROJECT, ALL DISTURBED AREAS MUST BE STABILIZED.
25. REMOVE SWPPP FACILITIES WHEN SITE IS COMPLETELY STABILIZED.

GENERAL STORM DRAINAGE NOTES

1. PROOF OF LIABILITY INSURANCE SHALL BE SUBMITTED TO THE CITY OF KENMORE PRIOR TO THE CONSTRUCTION OF THE DRAINAGE FACILITIES, PREFERABLY AT THE PRECONSTRUCTION MEETING.
2. ALL PIPE AND APPURTENANCES SHALL BE LAID ON A PROPERLY PREPARED FOUNDATION IN ACCORDANCE WITH WSDOT SPECIFICATIONS. THIS SHALL INCLUDE LEVELING AND COMPACTING THE TRENCH BOTTOM, THE TOP OF THE FOUNDATION MATERIAL, AND ANY REQUIRED PIPE BEDDING, TO A UNIFORM GRADE SO THAT THE ENTIRE PIPE IS SUPPORTED BY A UNIFORMLY DENSE UNYIELDING BASE.
3. STEEL PIPE SHALL BE ALUMINIZED, OR GALVANIZED WITH ASPHALT TREATMENT #1 OR BETTER INSIDE AND OUTSIDE.
4. ALL DRAINAGE STRUCTURES, SUCH AS CATCH BASINS AND MANHOLES, NOT LOCATED WITHIN A TRAVELED ROADWAY OR SIDEWALK, SHALL HAVE SOLID LOCKING LIDS. ALL DRAINAGE STRUCTURES ASSOCIATED WITH A PERMANENT RETENTION/DETENTION FACILITY SHALL HAVE SOLID LOCKING LIDS.
5. ALL CATCH BASIN GRATES SHALL CONFORM TO KCRS, WHICH INCLUDES THE STAMPING "OUTFALL TO STREAM, DUMP NO POLLUTANTS".
6. ALL DRIVEWAY CULVERTS LOCATED WITHIN CITY OF KENMORE RIGHT-OF-WAY SHALL BE OF SUFFICIENT LENGTH TO PROVIDE A MINIMUM 3:1 SLOPE FROM THE EDGE OF THE DRIVEWAY TO THE BOTTOM OF THE DITCH. CULVERTS SHALL HAVE BEVELED END SECTIONS TO MATCH THE SIDE SLOPE.
7. ROCK FOR EROSION PROTECTION OF ROADWAY DITCHES, WHERE REQUIRED, MUST BE OF SOUND QUARRY ROCK, PLACED TO A DEPTH OF 1 FOOT, AND MUST MEET THE FOLLOWING SPECIFICATIONS: 4"-8"/40%-70% PASSING; 2"- 4" ROCK/30%-40% PASSING; AND -2" ROCK/10%-20% PASSING. INSTALLATION SHALL BE IN ACCORDANCE WITH KCRS.
8. ALL DISTURBED PERVIOUS AREAS (COMPACTED, GRADED, LANDSCAPED, ETC.) OF THE DEVELOPMENT SITE MUST DEMONSTRATE ONE OF THE FOLLOWING: THE EXISTING DUFF LAYER SHALL BE STAGED AND REDISTRIBUTED TO MAINTAIN THE MOISTURE CAPACITY OF THE SOIL, OR; AMENDED SOIL SHALL BE ADDED TO MAINTAIN THE MOISTURE CAPACITY.
9. SEASONAL CLEARING IS LIMITED BETWEEN OCTOBER 1 AND MARCH 30 INCLUSIVE, UNLESS OTHERWISE APPROVED WITH A WRITTEN DECISION BY THE REVIEWING AGENCY.
10. IMPROVEMENTS AND/OR BUILDINGS SHALL NOT BE INSTALLED UNTIL DRAINAGE FACILITIES ARE 'IN OPERATION', (KCC 9.04).

CALL 2 BUSINESS DAYS BEFORE YOU DIG 811 OR 1-800-424-5555

THESE DRAWINGS ARE NOT TO BE USED FOR CONSTRUCTION UNLESS SIGNED BY THE REVIEWING AGENCY

Integrity Works
Consulting Engineers, LLC
170 W. Dayton St. Suite 204 Edmonds WA 98020
O: 425.967.7913 C: 206.920.9410

HUTTEBALL + OREMUS architecture
4010 LAKE WASHINGTON BLVD NE
SUITE 320
KIRKLAND, WA 98033
425.828.8948
HOARCH.COM

ARCHITECT STAMP

CONSULTANT STAMP

JOSEPH B. MOON — STATE OF WASHINGTON — 36022 — REGISTERED PROFESSIONAL ENGINEER
4/13/20

PROJECT INFORMATION

Inglemoor High School Concert Hall + Music Building

15500 Simonds Rd NE
Kenmore, WA 98028

NORTHSHORE SCHOOL DISTRICT No. 417

SCHOOL DISTRICT LOGO

Northshore School District

02.13.2019 SCHEMATIC DESIGN
04.08.2019 VALUE ENGINEERING
09.16.2019 SITE PLAN REVIEW
10.18.2019 DESIGN DEVELOPMENT
01.13.2020 CONSTRUCTABILITY REVIEW
03.23.2020 HEALTH DEPARTMENT PERMIT SUBMITTAL
04.13.2020 BID DOCUMENTS

BID DOCUMENTS

04.13.2020

PROJECT NUMBER: 1711

SHEET NAME

LEGENDS, SYMBOLS, AND NOTES

SHEET NUMBER

C1.01

TEMPORARY EROSION AND SEDIMENT CONTROL NOTES

1. APPROVAL OF THIS EROSION AND SEDIMENTATION CONTROL (ESC) PLAN DOES NOT CONSTITUTE AN APPROVAL OF PERMANENT ROAD OR DRAINAGE DESIGN (E.G., SIZE AND LOCATION OF ROADS, PIPES, RESTRICTORS, CHANNELS, RETENTION FACILITIES, UTILITIES, ETC.).
2. THE IMPLEMENTATION OF THESE ESC PLANS AND THE CONSTRUCTION, MAINTENANCE, REPLACEMENT, AND UPGRADING OF THESE ESC FACILITIES IS THE RESPONSIBILITY OF THE APPLICANT/ESC SUPERVISOR UNTIL ALL CONSTRUCTION IS APPROVED.
3. THE BOUNDARIES OF THE CLEARING LIMITS SHOWN ON THIS PLAN SHALL BE CLEARLY FLAGGED BY SURVEY TAPE OR FENCING, IF REQUIRED, PRIOR TO CONSTRUCTION. DURING THE CONSTRUCTION PERIOD, NO DISTURBANCE BEYOND THE CLEARING LIMITS SHALL BE PERMITTED. THE CLEARING LIMITS SHALL BE MAINTAINED BY THE APPLICANT/ESC SUPERVISOR FOR THE DURATION OF CONSTRUCTION.
4. STABILIZED CONSTRUCTION ENTRANCES SHALL BE INSTALLED AT THE BEGINNING OF CONSTRUCTION AND MAINTAINED FOR THE DURATION OF THE PROJECT. ADDITIONAL MEASURES, SUCH AS CONSTRUCTED WHEEL WASH SYSTEMS OR WASH PADS, MAY BE REQUIRED TO ENSURE THAT ALL PAVED AREAS ARE KEPT CLEAN AND TRACK OUT TO ROAD RIGHT-OF-WAY DOES NOT OCCUR FOR THE DURATION OF THE PROJECT.
5. THE ESC FACILITIES SHOWN ON THIS PLAN MUST BE CONSTRUCTED PRIOR TO OR IN CONJUNCTION WITH ALL CLEARING AND GRADING SO AS TO ENSURE THAT THE TRANSPORT OF SEDIMENT TO SURFACE WATERS, DRAINAGE SYSTEMS, FLOW CONTROL BMP LOCATIONS (EXISTING AND PROPOSED), AND ADJACENT PROPERTIES IS MINIMIZED.
6. THE ESC FACILITIES SHOWN ON THIS PLAN ARE THE MINIMUM REQUIREMENTS FOR ANTICIPATED SITE CONDITIONS. DURING THE CONSTRUCTION PERIOD, THESE ESC FACILITIES SHALL BE UPGRADED AS NEEDED FOR UNEXPECTED STORM EVENTS AND MODIFIED TO ACCOUNT FOR CHANGING SITE CONDITIONS (E.G., ADDITIONAL COVER MEASURES, ADDITIONAL SUMP PUMPS, RELOCATION OF DITCHES AND SILT FENCES, PERIMETER PROTECTION ETC.) AS DIRECTED BY KING COUNTY.
7. THE ESC FACILITIES SHALL BE INSPECTED DAILY BY THE APPLICANT/ESC SUPERVISOR AND MAINTAINED TO ENSURE CONTINUED PROPER FUNCTIONING. WRITTEN RECORDS SHALL BE KEPT OF WEEKLY REVIEWS OF THE ESC FACILITIES.
8. ANY AREAS OF EXPOSED SOILS, INCLUDING ROADWAY EMBANKMENTS, THAT WILL NOT BE DISTURBED FOR TWO CONSECUTIVE DAYS DURING THE WET SEASON OR SEVEN DAYS DURING THE DRY SEASON SHALL BE IMMEDIATELY STABILIZED WITH THE APPROVED ESC COVER METHODS (E.G., SEEDING, MULCHING, PLASTIC COVERING, ETC.).
9. ANY AREA NEEDING ESC MEASURES THAT DO NOT REQUIRE IMMEDIATE ATTENTION SHALL BE ADDRESSED WITHIN SEVEN (7) DAYS.
10. THE ESC FACILITIES ON INACTIVE SITES SHALL BE INSPECTED AND MAINTAINED A MINIMUM OF ONCE A MONTH DURING THE DRY SEASON, BI-MONTHLY DURING THE WET SEASON, OR WITHIN TWENTY-FOUR (24) HOURS FOLLOWING A STORM EVENT.
11. AT NO TIME SHALL MORE THAN ONE (1) FOOT OF SEDIMENT BE ALLOWED TO ACCUMULATE WITHIN A CATCH BASIN. ALL CATCH BASINS AND CONVEYANCE LINES SHALL BE CLEANED PRIOR TO PAVING. THE CLEANING OPERATION SHALL NOT FLUSH SEDIMENT-LADEN WATER INTO THE DOWNSTREAM SYSTEM.
12. ANY PERMANENT RETENTION/DETENTION FACILITY USED AS A TEMPORARY SETTLING BASIN SHALL BE MODIFIED WITH THE NECESSARY EROSION CONTROL MEASURES AND SHALL PROVIDE ADEQUATE STORAGE CAPACITY. IF THE FACILITY IS TO FUNCTION ULTIMATELY AS AN INFILTRATION SYSTEM, THE TEMPORARY FACILITY SHALL MUST BE ROUGH GRADED SO THAT THE BOTTOM AND SIDES ARE AT LEAST THREE FEET ABOVE THE FINAL GRADE OF THE PERMANENT FACILITY. FLOW CONTROL BMP AREAS (EXISTING OR PROPOSED) SHALL NOT BE USED AS TEMPORARY FACILITIES AND SHALL BE PROTECTED FROM SEDIMENTATION AND INTRUSION.
13. COVER MEASURES WILL BE APPLIED IN CONFORMANCE WITH APPENDIX D OF THE KING COUNTY SURFACE WATER DESIGN MANUAL.
14. PRIOR TO THE BEGINNING OF THE WET SEASON (OCTOBER 1), ALL DISTURBED AREAS SHALL BE REVIEWED TO IDENTIFY WHICH ONES CAN BE SEEDED IN PREPARATION FOR THE WINTER RAINS. DISTURBED AREAS SHALL BE SEEDED WITHIN ONE WEEK OF THE BEGINNING OF THE WET SEASON. A SKETCH MAP OF THOSE AREAS TO BE SEEDED AND THOSE AREAS TO REMAIN UNCOVERED SHALL BE SUBMITTED TO THE DPER INSPECTOR.

SWPPS PLAN NOTES

1. ALL POLLUTANTS, INCLUDING WASTE MATERIALS, THAT OCCUR ONSITE SHALL BE HANDLED AND DISPOSED OF IN A MANNER THAT DOES NOT CAUSE CONTAMINATION OF STORMWATER.
2. COVER, CONTAINMENT, AND PROTECTION FROM VANDALISM SHALL BE PROVIDED FOR ALL CHEMICALS, LIQUID PRODUCTS, PETROLEUM PRODUCTS, AND NON-INERT WASTES PRESENT ON THE SITE (SEE CHAPTER 173-304 WAC FOR THE DEFINITION OF INERT WASTE). ONSITE FUELING TANKS SHALL INCLUDE SECONDARY CONTAINMENT.
3. MAINTENANCE AND REPAIR OF HEAVY EQUIPMENT AND VEHICLES INVOLVING OIL CHANGES, HYDRAULIC SYSTEM DRAIN DOWN, SOLVENT AND DE-GREASING CLEANING OPERATIONS, FUEL TANK DRAIN DOWN AND REMOVAL, AND OTHER ACTIVITIES WHICH MAY RESULT IN DISCHARGE OR SPILLAGE OF POLLUTANTS TO THE GROUND OR INTO STORMWATER RUNOFF MUST BE CONDUCTED USING SPILL PREVENTION MEASURES, SUCH AS DRIP PANS. CONTAMINATED SURFACES SHALL BE CLEANED IMMEDIATELY FOLLOWING ANY DISCHARGE OR SPILL INCIDENT. EMERGENCY REPAIRS MAY BE PERFORMED ONSITE USING TEMPORARY PLASTIC PLACED BENEATH AND, IF RAINING, OVER THE VEHICLE.
4. APPLICATION OF AGRICULTURAL CHEMICALS, INCLUDING FERTILIZERS AND PESTICIDES, SHALL BE CONDUCTED IN A MANNER AND AT APPLICATION RATES THAT WILL NOT RESULT IN LOSS OF CHEMICAL TO STORMWATER RUNOFF. MANUFACTURERS' RECOMMENDATIONS FOR APPLICATION RATES AND PROCEDURES SHALL BE FOLLOWED.
5. MEASURES SHALL BE USED TO PREVENT OR TREAT CONTAMINATION OF STORMWATER RUNOFF BY PH MODIFYING SOURCES. THESE SOURCES INCLUDE, BUT ARE NOT LIMITED TO, BULK CEMENT, CEMENT KILN DUST, FLY ASH, NEW CONCRETE WASHING AND CURING WATERS, WASTE STREAMS GENERATED FROM CONCRETE GRINDING AND SAWING, EXPOSED AGGREGATE PROCESSES, AND CONCRETE PUMPING AND MIXER WASHOUT WATERS. STORMWATER DISCHARGES SHALL NOT CAUSE OR CONTRIBUTE TO A VIOLATION OF THE WATER QUALITY STANDARD FOR PH IN THE RECEIVING WATER.

DEMOLITION AND T.E.S.C. LEGEND

- CLEARING LIMIT WITH ORANGE OR CHAINLINK CONSTRUCTION FENCING AS REQUIRED.
- SAWCUT LINE
- SILT FENCE (1/C2.02)
- INTERCEPTOR SWALE W/ ROCK CHECK DAMS (4/C2.02, 1/C2.03)
- CATCH BASIN INLET PROTECTION (2/C2.02)
- STABILIZED ROCK CONSTRUCTION ENTRANCE (3/C2.02)
- HYDROSEED (SEE SPECIFICATIONS) (HS)
- EROSION CONTROL BLANKET (EC)
- PLASTIC COVERING (PC)

NOTE TO CONTRACTOR

CONTRACTOR SHALL MAINTAIN A VACUUM SWEEPER ONSITE AT ALL TIMES TO CLEAN PAVED SURFACES AND PREVENT TRACKOUT ONTO CAMPUS AND PUBLIC STREETS.

SILT FENCE (TYP.)

LIMITS OF CONSTRUCTION (TYP.)

SILT FENCE (1/C2.02)

PROVIDE CATCH BASIN PROTECTION IN ALL INLETS AFFECTED BY CONSTRUCTION ACTIVITIES (TYP.). (2/C2.02)

INTERCEPTOR SWALE W/ ROCK CHECK DAMS (TYP.) (4/C2.02, 1/C2.03)

TEMP. STORM PIPE

TURBIDITY MONITORING POINT.

SEE STORM DRAINAGE PLANS FOR DETAILS. (TYP.)

CONTRACTOR SHALL PROVIDE EROSION CONTROL MEASURES ON SLOPE. THREE OPTIONS ARE SHOWN. (TYP.)

STORM DETENTION VAULT #17
VAULT INSIDE DIM.:
120'x18'x14.5'(D)
REQ. VOL.=27,966 CF
PROV'D. VOL.=29,160 CF
INSIDE TOP ELEV.=422.00
INSIDE BOTTOM ELEV.=407.50
SEE STORM DRAINAGE PLANS FOR ADDITIONAL DETAILS.

TEMP. STORM PIPE

SILT FENCE (1/C2.02)

STABILIZED CONSTRUCTION ENTRANCE (3/C2.02)

LIMITS OF CONSTRUCTION (TYP.)

EXISTING WETLAND

LIMITS OF CONSTRUCTION (TYP.)

SILT FENCE (TYP.)

N.E. 157TH STREET

88TH AVE. N.E.

NE 159th CT (PRIVATE)

MATCHLINE – SEE SHEET C2.01

N

SCALE: 1" = 30'
0 15' 30' 60'

CALL 2 BUSINESS DAYS BEFORE YOU DIG 811 OR 1-800-424-5555

THESE DRAWINGS ARE NOT TO BE USED FOR CONSTRUCTION UNLESS SIGNED BY THE REVIEWING AGENCY

Integrity Works
Consulting Engineers, LLC
170 W. Dayton St. Suite 204 Edmonds WA 98020
O: 425.967.7913 C: 206.920.9410

HUTTEBALL +OREMUS architecture
4010 LAKE WASHINGTON BLVD NE
SUITE 320
KIRKLAND, WA 98033
425.828.8948
HOARCH.COM

ARCHITECT STAMP

CONSULTANT STAMP

JOSEPH B. MOON — STATE OF WASHINGTON — 36022 — REGISTERED PROFESSIONAL ENGINEER
4/13/20

PROJECT INFORMATION

Inglemoor High School Concert Hall + Music Building

15500 Simonds Rd NE
Kenmore, WA 98028

NORTHSHORE SCHOOL DISTRICT No. 417

SCHOOL DISTRICT LOGO

Northshore School District

02.13.2019 SCHEMATIC DESIGN
04.08.2019 VALUE ENGINEERING
09.16.2019 SITE PLAN REVIEW
10.18.2019 DESIGN DEVELOPMENT
01.13.2020 CONSTRUCTABILITY REVIEW
03.23.2020 HEALTH DEPARTMENT PERMIT SUBMITTAL
04.13.2020 BID DOCUMENTS

BID DOCUMENTS

04.13.2020

PROJECT NUMBER: 1711

SHEET NAME

T.E.S.C. PLAN

SHEET NUMBER

C2.00

S1/2, NW1/4 & N1/2 SW1/4, SEC.18, T.26N., R.5E., W.M.

MATCHLINE – SEE SHEET C2.00

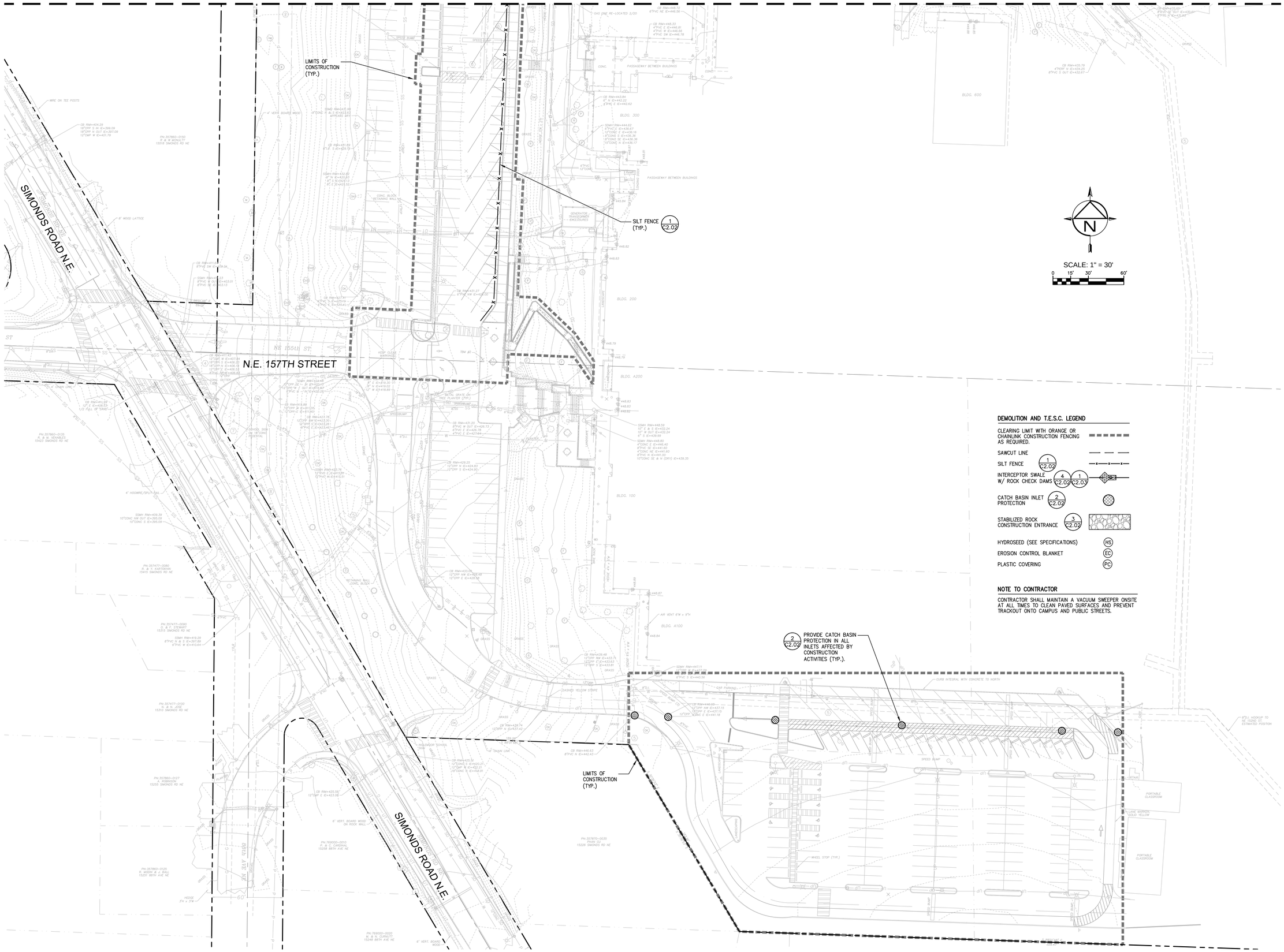

N

SCALE: 1" = 30'

0 15' 30' 60'

DEMOLITION AND T.E.S.C. LEGEND

CLEARING LIMIT WITH ORANGE OR CHAINLINK CONSTRUCTION FENCING AS REQUIRED.	
SAWCUT LINE	
SILT FENCE	1 C2.02
INTERCEPTOR SWALE W/ ROCK CHECK DAMS	4 C2.02, 1 C2.03
CATCH BASIN INLET PROTECTION	2 C2.02
STABILIZED ROCK CONSTRUCTION ENTRANCE	3 C2.02
HYDROSEED (SEE SPECIFICATIONS)	HS
EROSION CONTROL BLANKET	EC
PLASTIC COVERING	PC

NOTE TO CONTRACTOR

CONTRACTOR SHALL MAINTAIN A VACUUM SWEEPER ONSITE AT ALL TIMES TO CLEAN PAVED SURFACES AND PREVENT TRACKOUT ONTO CAMPUS AND PUBLIC STREETS.

811 CALL 2 BUSINESS DAYS BEFORE YOU DIG 811 OR 1-800-424-5555

THESE DRAWINGS ARE NOT TO BE USED FOR CONSTRUCTION UNLESS SIGNED BY THE REVIEWING AGENCY

Integrity Works
Consulting Engineers, LLC
170 W. Dayton St. Suite 204 Edmonds WA 98020
O: 425.967.7913 C: 206.920.9410

HUTTEBALL + OREMUS architecture
4010 LAKE WASHINGTON BLVD NE
SUITE 320
KIRKLAND, WA 98033
425.828.8948
HOARCH.COM

ARCHITECT STAMP

CONSULTANT STAMP

JOSEPH B. MOON STATE OF WASHINGTON 36022 REGISTERED PROFESSIONAL ENGINEER
4/13/20

PROJECT INFORMATION

Inglemoor High School Concert Hall + Music Building

15500 Simonds Rd NE
Kenmore, WA 98028

NORTHSHORE SCHOOL DISTRICT No. 417

SCHOOL DISTRICT LOGO

Northshore School District

02.13.2019	SCHEMATIC DESIGN
04.08.2019	VALUE ENGINEERING
09.16.2019	SITE PLAN REVIEW
10.18.2019	DESIGN DEVELOPMENT
01.13.2020	CONSTRUCTABILITY REVIEW
03.23.2020	HEALTH DEPARTMENT PERMIT SUBMITTAL
04.13.2020	BID DOCUMENTS

BID DOCUMENTS

04.13.2020

PROJECT NUMBER: 1711

SHEET NAME

T.E.S.C. PLAN

SHEET NUMBER

C2.01

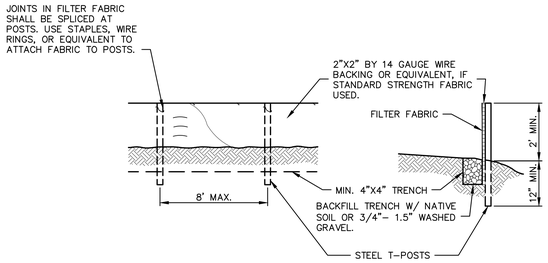

MAINTENANCE STANDARDS:

1. ANY DAMAGE SHALL BE REPAIRED IMMEDIATELY.
2. IF CONCENTRATED FLOWS ARE EVIDENT UPHILL OF THE FENCE, THEY MUST BE INTERCEPTED AND CONVEYED TO A SEDIMENT TRAP OR POND.
3. IT IS IMPORTANT TO CHECK THE UPHILL SIDE OF THE FENCE FOR SIGNS OF THE FENCE CLOGGING AND ACTING AS A BARRIER TO FLOW AND THEN CAUSING CHANNELIZATION OF FLOWS PARALLEL TO THE FENCE. IF THIS OCCURS, REPLACE THE FENCE AND/OR REMOVE THE TRAPPED SEDIMENT.
4. SEDIMENT MUST BE REMOVED WHEN THE DEPTH IS 6 INCHES HIGH.
5. IF THE FILTER FABRIC (GEOTEXTILE) HAS DETERIORATED DUE TO ULTRAVIOLET BREAKDOWN, IT SHALL BE REPLACED.

1 SILT FENCE
NOT TO SCALE

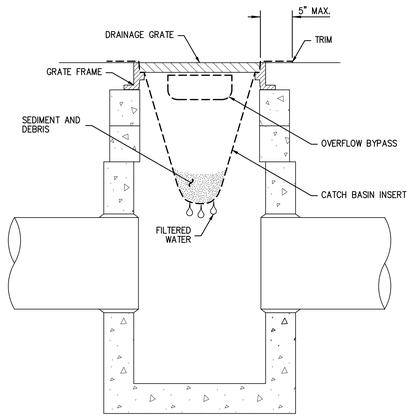

SECTION VIEW
NOT TO SCALE

MAINTENANCE STANDARDS:

1. INSERT SHALL BE INSTALLED IN ALL OPERATIONAL CATCH BASINS PRIOR TO CLEARING AND GRADING ACTIVITY, OR UPON PLACEMENT OF A NEW CATCH BASIN.
2. ANY ACCUMULATED SEDIMENT ON OR AROUND INLET PROTECTION SHALL BE REMOVED IMMEDIATELY. SEDIMENT SHALL NOT BE REMOVED WITH WATER, AND ALL SEDIMENT MUST BE DISPOSED OF AS FILL ON–SITE OR HAULED OFF–SITE.
3. ANY SEDIMENT IN THE CATCH BASIN INSERT SHALL BE REMOVED WHEN THE SEDIMENT HAS FILLED ONE–THIRD OF THE AVAILABLE STORAGE. THE FILTER MEDIA FOR THE INSERT SHALL BE CLEANED OR REPLACED AT LEAST MONTHLY.
4. REGULAR MAINTENANCE IS CRITICAL FOR ALL FORMS OF BASIN/INLET PROTECTION. UNLIKE MANY FORMS OF PROTECTION THAT FAIL GRADUALLY, CATCH BASIN PROTECTION WILL FAIL SUDDENLY AND COMPLETELY IF NOT MAINTAINED PROPERLY,

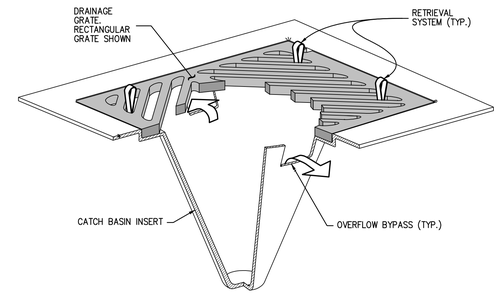

ISOMETRIC VIEW

2 CATCH BASIN INSERT
NOT TO SCALE

AS PER CITY OF KENMORE ROAD STANDARDS. DRIVEWAYS SHALL BE PAVED TO THE EDGE OF R–O–W PRIOR TO INSTALLATION OF THE CONSTRUCTION ENTRANCE TO AVOID DAMAGING OF THE ROADWAY.

IT IS RECOMMENDED THAT THE ENTRANCE BE CROWNED SO THAT RUNOFF DRAINS OFF THE PAD.

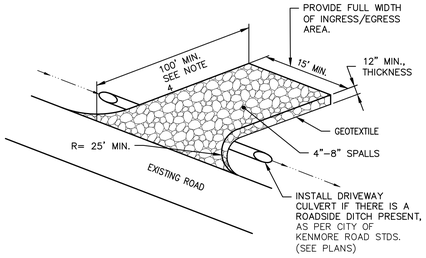

NOTES:

1. THE ENTRANCE SHALL BE MAINTAINED IN A CONDITION WHICH WILL PREVENT TRACKING OR FLOW OF MUD ONTO PUBLIC RIGHTS–OF–WAY. THIS MAY REQUIRE PERIODIC TOP DRESSING WITH 6" STONE, AS CONDITIONS DEMAND, AND REPAIR AND/OR CLEANOUT OF ANY STRUCTURES USED TO TRAP SEDIMENT. ALL MATERIALS SPILLED, DROPPED, WASHED, TRACKED FROM VEHICLES ONTO ROADWAY OR INTO STORM DRAINS MUST BE REMOVED IMMEDIATELY.
2. CONSTRUCTION ENTRANCE SHALL BE USED FOR TIRE CLEANING/WASHDOWN ONLY. GENERAL CLEANING/WASHDOWN (CONCRETE BOOMS, ETC.) SHALL OCCUR AT APPROPRIATE OFF–SITE LOCATIONS.
3. HAZARDOUS CONDITIONS MAY EXIST NEAR THE CONSTRUCTION ENTRANCE LOCATION (OVERHEAD POWER, ETC.). THEREFORE, IT SHALL BE THE FULL RESPONSIBILITY OF THE CONSTRUCTION ENTRANCE USERS TO EMPLOY SAFETY PRECAUTIONS AS DEEMED NECESSARY.
4. AS REQUIRED ~ 100' MIN., EXCEPT MAY BE REDUCED TO 50' MIN. FOR SITES WITH LESS THAN ONE ACRE OF EXPOSED SOIL.

MAINTENANCE STANDARDS:

1. QUARRY SPALLS (OR HOG FUEL) SHALL BE ADDED IF THE PAD IS NO LONGER IN ACCORDANCE WITH THE SPECIFICATIONS.
2. IF THE ENTRANCE IS NOT PREVENTING SEDIMENT FROM BEING TRACKED ONTO PAVEMENT, THEN ALTERNATIVE MEASURES TO KEEP THE STREETS FREE OF SEDIMENT SHALL BE USED. THIS MAY INCLUDE STREET SWEEPING, AN INCREASE IN THE DIMENSIONS OF THE ENTRANCE, OR THE INSTALLATION OF A WHEEL WASH. IF WASHING IS USED, IT SHALL BE DONE ON AN AREA COVERED WITH CRUSHED ROCK, AND WASH WATER SHALL DRAIN TO A SEDIMENT TRAP OR POND.
3. ANY SEDIMENT THAT IS TRACKED ONTO PAVEMENT SHALL BE REMOVED IMMEDIATELY BY SWEEPING. THE SEDIMENT COLLECTED BY SWEEPING SHALL BE REMOVED OR STABILIZED ON SITE. THE PAVEMENT SHALL NOT BE CLEANED BY WASHING DOWN THE STREET, EXCEPT WHEN SWEEPING IS INEFFECTIVE AND THERE IS A THREAT TO PUBLIC SAFETY. IF IT IS NECESSARY TO WASH THE STREETS, A SMALL SUMP SHALL BE CONSTRUCTED. THE SEDIMENT WOULD THEN BE WASHED INTO THE SUMP WHERE IT CAN BE CONTROLLED. WASH WATER MUST BE PUMPED BACK ONTO THE SITE AND CAN NOT DISCHARGE TO SYSTEMS TRIBUTARY TO SURFACE WATERS.
4. ANY QUARRY SPALLS THAT ARE LOOSENED FROM THE PAD AND END UP ON THE ROADWAY SHALL BE REMOVED IMMEDIATELY.
5. IF VEHICLES ARE ENTERING OR EXITING THE SITE AT POINTS OTHER THAN THE CONSTRUCTION ENTRANCE(S), FENCING (SEE SECTION D.3.1) SHALL BE INSTALLED TO CONTROL TRAFFIC.

GEOTEXTILE STANDARDS:

GRAB TENSILE STRENGTH (ASTM D4751)	200 PSI MIN.
GRAB TENSILE ELONGATION (ASTM D4632)	30% MAX.
MULLEN BURST STRENGTH (ASTM D3786–80a)	400 PSI MIN.
AOS (ASTM D4751)	20–45 (U.S. STANDARD SIEVE SIZE)

3 STABILIZED CONSTRUCTION ENTRANCE
NOT TO SCALE

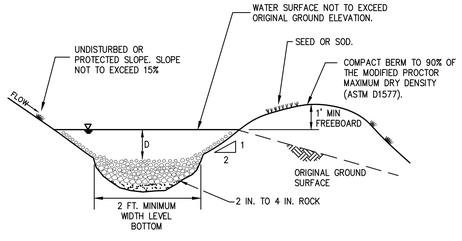

NOTES:

1. SEE CHECK DAM DETAIL FOR ADDITIONAL REQUIREMENTS.
2. DIMENSIONS: 1 FT. MINIMUM DEPTH (D) BY 2 FT. MINIMUM BOTTOM WIDTH.
3. SWALE GRADES SHOULD NOT EXCEED 5%. SIDE SLOPES SHALL BE 2 (H):1 (V) OR LESS.
4. OUTLET SHALL CONSIST OF RIPRAP DISCHARGING TO STABILIZED OUTLET, SEDIMENT POND OR LEVEL SPREADER.

4 INTERCEPTOR SWALE
NOT TO SCALE

811 CALL 2 BUSINESS DAYS BEFORE YOU DIG 811 OR 1-800-424-5555

THESE DRAWINGS ARE NOT TO BE USED FOR CONSTRUCTION UNLESS SIGNED BY THE REVIEWING AGENCY

Integrity Works
Consulting Engineers, LLC
170 W. Dayton St. Suite 204 Edmonds WA 98020
O: 425.967.7913 C: 206.920.9410

HUTTEBALL + OREMUS architecture
4010 LAKE WASHINGTON BLVD NE
SUITE 320
KIRKLAND, WA 98033
425.828.8948
HOARCH.COM

ARCHITECT STAMP

CONSULTANT STAMP

JOSEPH B. MOON STATE OF WASHINGTON 36022 REGISTERED PROFESSIONAL ENGINEER
4/13/20

PROJECT INFORMATION

Inglemoor High School Concert Hall + Music Building

15500 Simonds Rd NE
Kenmore, WA 98028

NORTHSHORE SCHOOL DISTRICT No. 417

SCHOOL DISTRICT LOGO

Northshore School District

02.13.2019 SCHEMATIC DESIGN
04.08.2019 VALUE ENGINEERING
09.16.2019 SITE PLAN REVIEW
10.18.2019 DESIGN DEVELOPMENT
01.13.2020 CONSTRUCTABILITY REVIEW
03.23.2020 HEALTH DEPARTMENT PERMIT SUBMITTAL
04.13.2020 BID DOCUMENTS

BID DOCUMENTS

04.13.2020

PROJECT NUMBER: 1711

SHEET NAME

T.E.S.C. DETAILS

SHEET NUMBER

C2.02

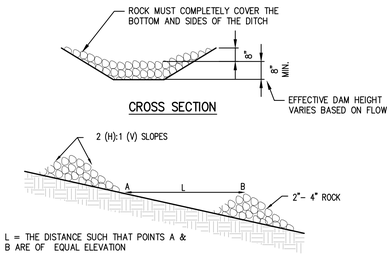

MAINTENANCE STANDARDS:

1. ANY SEDIMENT DEPOSITION OF MORE THAN 0.5 FEET SHALL BE REMOVED SO THAT THE CHANNEL IS RESTORED TO ITS DESIGN CAPACITY.
2. THE CHANNEL SHALL BE EXAMINED FOR SIGNS OF SCOURING AND EROSION OF THE BED AND BANKS. IF SCOURING OR EROSION HAS OCCURRED, AFFECTED AREAS SHALL BE PROTECTED BY RIP-RAP OR AN EROSION CONTROL BLANKET OR NET.

1 ROCK CHECK DAMS
NOT TO SCALE

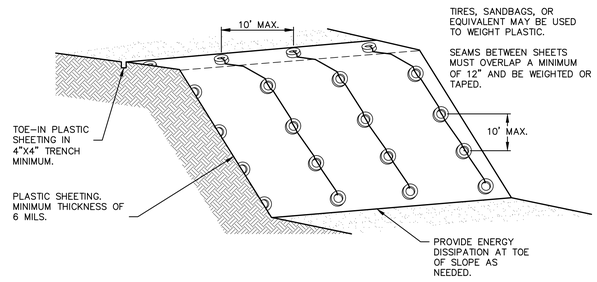

2 PLASTIC COVERING
NOT TO SCALE

3 NOT USED
NOT TO SCALE

CALL 2 BUSINESS DAYS BEFORE YOU DIG 811 OR 1-800-424-5555

THESE DRAWINGS ARE NOT TO BE USED FOR CONSTRUCTION UNLESS SIGNED BY THE REVIEWING AGENCY

4 NOT USED
NOT TO SCALE

5 NOT USED
NOT TO SCALE

6 NOT USED
NOT TO SCALE

Integrity Works
Consulting Engineers, LLC
170 W. Dayton St. Suite 204 Edmonds WA 98020
O: 425.967.7913 C: 206.920.8410

HUTTEBALL + OREMUS architecture
4010 LAKE WASHINGTON BLVD NE
SUITE 320
KIRKLAND, WA 98033
425.828.8948
HOARCH.COM

ARCHITECT STAMP

CONSULTANT STAMP

JOSEPH B. MOON STATE OF WASHINGTON 36022 REGISTERED PROFESSIONAL ENGINEER
4/13/20

PROJECT INFORMATION

Inglemoor High School Concert Hall + Music Building

15500 Simonds Rd NE
Kenmore, WA 98028

NORTHSHORE SCHOOL DISTRICT No. 417

SCHOOL DISTRICT LOGO

Northshore School District

02.13.2019 SCHEMATIC DESIGN
04.08.2019 VALUE ENGINEERING
09.16.2019 SITE PLAN REVIEW
10.18.2019 DESIGN DEVELOPMENT
01.13.2020 CONSTRUCTABILITY REVIEW
03.23.2020 HEALTH DEPARTMENT PERMIT SUBMITTAL
04.13.2020 BID DOCUMENTS

BID DOCUMENTS

04.13.2020

PROJECT NUMBER: 1711

SHEET NAME

T.E.S.C. DETAILS

SHEET NUMBER

C2.03

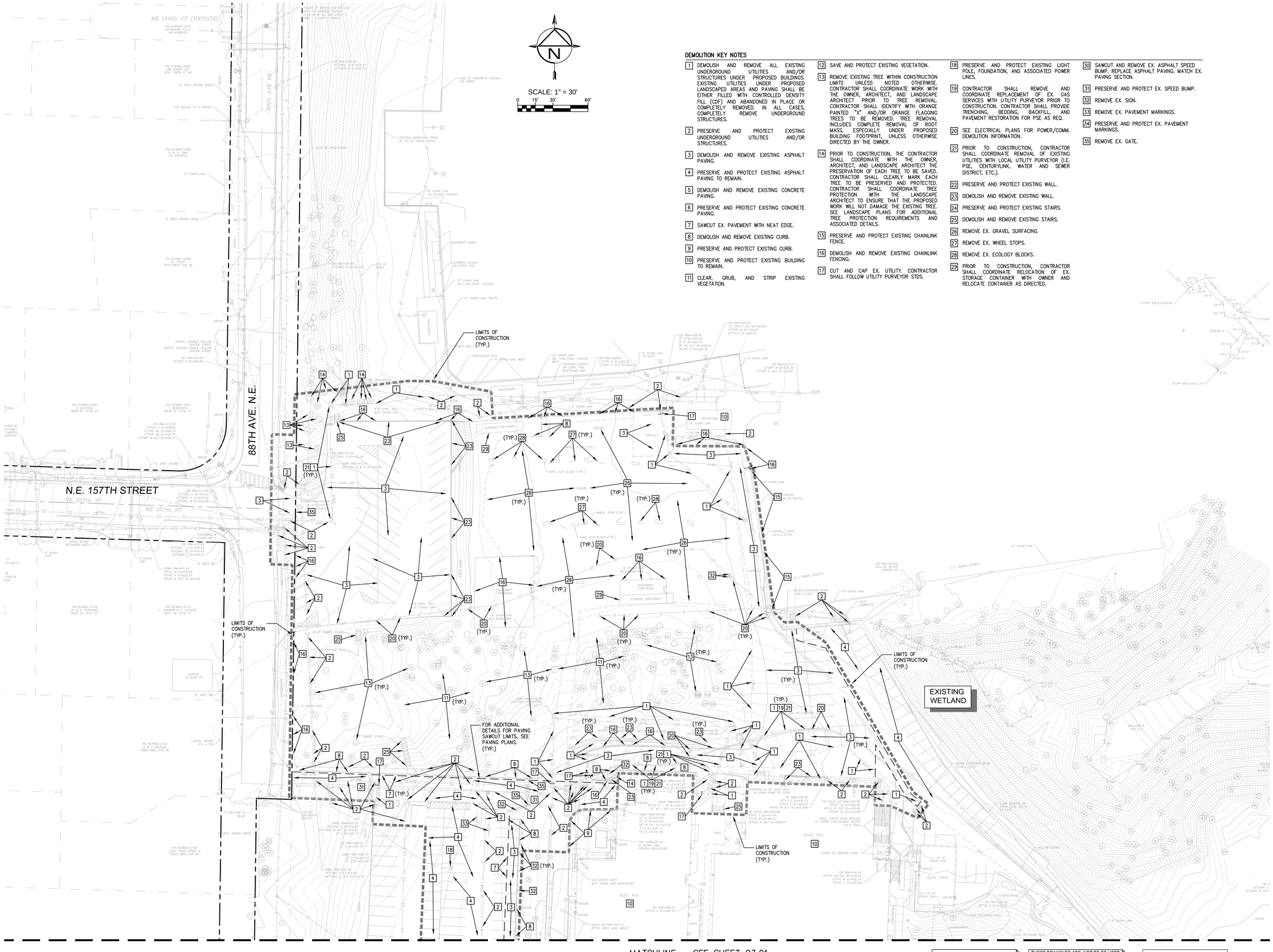

DEMOLITION KEY NOTES

1. DEMOLISH AND REMOVE ALL EXISTING UNDERGROUND UTILITIES AND/OR STRUCTURES UNDER PROPOSED BUILDINGS. EXISTING UTILITIES UNDER PROPOSED LANDSCAPED AREAS AND PAVING SHALL BE EITHER FILLED WITH CONTROLLED DENSITY FILL (CDF) AND ABANDONED IN PLACE OR COMPLETELY REMOVED. IN ALL CASES, COMPLETELY REMOVE UNDERGROUND STRUCTURES.
2. PRESERVE AND PROTECT EXISTING UNDERGROUND UTILITIES AND/OR STRUCTURES.
3. DEMOLISH AND REMOVE EXISTING ASPHALT PAVING.
4. PRESERVE AND PROTECT EXISTING ASPHALT PAVING TO REMAIN.
5. DEMOLISH AND REMOVE EXISTING CONCRETE PAVING.
6. PRESERVE AND PROTECT EXISTING CONCRETE PAVING.
7. SAWCUT EX. PAVEMENT WITH NEAT EDGE.
8. DEMOLISH AND REMOVE EXISTING CURB.
9. PRESERVE AND PROTECT EXISTING CURB.
10. PRESERVE AND PROTECT EXISTING BUILDING TO REMAIN.
11. CLEAR, GRUB, AND STRIP EXISTING VEGETATION.
12. SAVE AND PROTECT EXISTING VEGETATION.
13. REMOVE EXISTING TREE WITHIN CONSTRUCTION LIMITS UNLESS NOTED OTHERWISE. CONTRACTOR SHALL COORDINATE WORK WITH THE OWNER, ARCHITECT, AND LANDSCAPE ARCHITECT PRIOR TO TREE REMOVAL. CONTRACTOR SHALL IDENTIFY WITH ORANGE PAINTED "X" AND/OR ORANGE FLAGGING TREES TO BE REMOVED. TREE REMOVAL INCLUDES COMPLETE REMOVAL OF ROOT MASS, ESPECIALLY UNDER PROPOSED BUILDING FOOTPRINT, UNLESS OTHERWISE DIRECTED BY THE OWNER.
14. PRIOR TO CONSTRUCTION, THE CONTRACTOR SHALL COORDINATE WITH THE OWNER, ARCHITECT, AND LANDSCAPE ARCHITECT THE PRESERVATION OF EACH TREE TO BE SAVED. CONTRACTOR SHALL CLEARLY MARK EACH TREE TO BE PRESERVED AND PROTECTED. CONTRACTOR SHALL COORDINATE TREE PROTECTION WITH THE LANDSCAPE ARCHITECT TO ENSURE THAT THE PROPOSED WORK WILL NOT DAMAGE THE EXISTING TREE. SEE LANDSCAPE PLANS FOR ADDITIONAL TREE PROTECTION REQUIREMENTS AND ASSOCIATED DETAILS.
15. PRESERVE AND PROTECT EXISTING CHAINLINK FENCE.
16. DEMOLISH AND REMOVE EXISTING CHAINLINK FENCING.
17. CUT AND CAP EX. UTILITY. CONTRACTOR SHALL FOLLOW UTILITY PURVEYOR STDS.
18. PRESERVE AND PROTECT EXISTING LIGHT POLE, FOUNDATION, AND ASSOCIATED POWER LINES.
19. CONTRACTOR SHALL REMOVE AND COORDINATE REPLACEMENT OF EX. GAS SERVICES WITH UTILITY PURVEYOR PRIOR TO CONSTRUCTION. CONTRACTOR SHALL PROVIDE TRENCHING, BEDDING, BACKFILL, AND PAVEMENT RESTORATION FOR PSE AS REQ.
20. SEE ELECTRICAL PLANS FOR POWER/COMM. DEMOLITION INFORMATION.
21. PRIOR TO CONSTRUCTION, CONTRACTOR SHALL COORDINATE REMOVAL OF EXISTING UTILITIES WITH LOCAL UTILITY PURVEYOR (I.E. PSE, CENTURYLINK, WATER AND SEWER DISTRICT, ETC.).
22. PRESERVE AND PROTECT EXISTING WALL.
23. DEMOLISH AND REMOVE EXISTING WALL.
24. PRESERVE AND PROTECT EXISTING STAIRS.
25. DEMOLISH AND REMOVE EXISTING STAIRS.
26. REMOVE EX. GRAVEL SURFACING.
27. REMOVE EX. WHEEL STOPS.
28. REMOVE EX. ECOLOGY BLOCKS.
29. PRIOR TO CONSTRUCTION, CONTRACTOR SHALL COORDINATE RELOCATION OF EX. STORAGE CONTAINER WITH OWNER AND RELOCATE CONTAINER AS DIRECTED.
30. SAWCUT AND REMOVE EX. ASPHALT SPEED BUMP. REPLACE ASPHALT PAVING. MATCH EX. PAVING SECTION.
31. PRESERVE AND PROTECT EX. SPEED BUMP.
32. REMOVE EX. SIGN.
33. REMOVE EX. PAVEMENT MARKINGS.
34. PRESERVE AND PROTECT EX. PAVEMENT MARKINGS.
35. REMOVE EX. GATE.

CALL 2 BUSINESS DAYS BEFORE YOU DIG 811 OR 1-800-424-5555

THESE DRAWINGS ARE NOT TO BE USED FOR CONSTRUCTION UNLESS SIGNED BY THE REVIEWING AGENCY

Integrity Works
Consulting Engineers, LLC
170 W. Dayton St. Suite 204 Edmonds WA 98020
O: 425.967.7913 C: 206.920.9410

HUTTEBALL + OREMUS architecture
4010 LAKE WASHINGTON BLVD NE
SUITE 320
KIRKLAND, WA 98033
425.828.8948
HOARCH.COM

ARCHITECT STAMP

CONSULTANT STAMP

JOSEPH B. MOON — STATE OF WASHINGTON — 36022 — REGISTERED PROFESSIONAL ENGINEER
4/13/20

PROJECT INFORMATION

Inglemoor High School Concert Hall + Music Building

15500 Simonds Rd NE
Kenmore, WA 98028

NORTHSHORE SCHOOL DISTRICT No. 417

SCHOOL DISTRICT LOGO

Northshore School District

02.13.2019 SCHEMATIC DESIGN
04.08.2019 VALUE ENGINEERING
09.16.2019 SITE PLAN REVIEW
10.18.2019 DESIGN DEVELOPMENT
01.13.2020 CONSTRUCTABILITY REVIEW
03.23.2020 HEALTH DEPARTMENT PERMIT SUBMITTAL
04.13.2020 BID DOCUMENTS

BID DOCUMENTS

04.13.2020

PROJECT NUMBER: 1711

SHEET NAME

DEMOLITION PLAN

SHEET NUMBER

C3.00

S1/2, NW1/4 & N1/2 SW1/4, SEC.18, T.26N., R.5E., W.M.

MATCHLINE – SEE SHEET C3.00

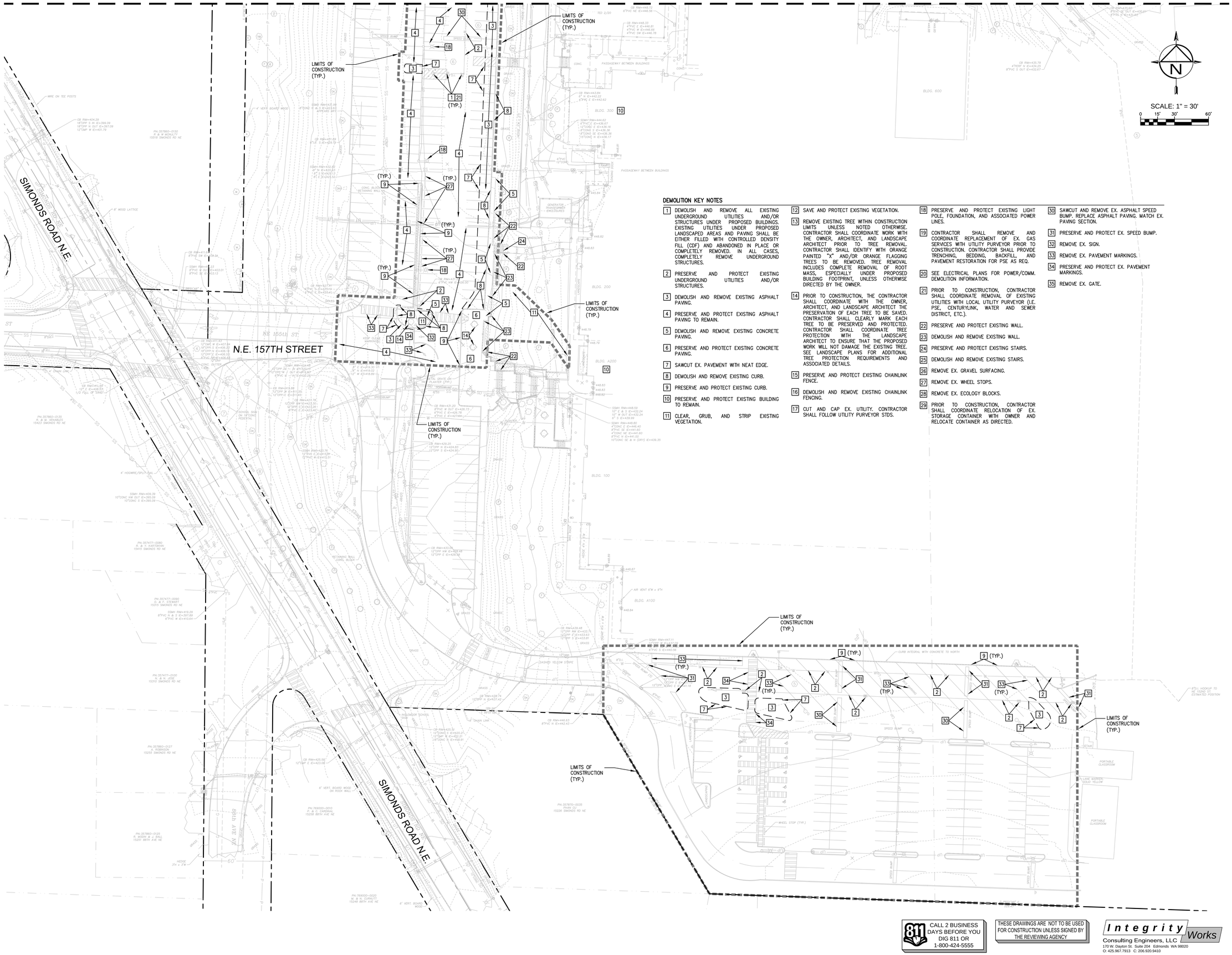

DEMOLITION KEY NOTES

1. DEMOLISH AND REMOVE ALL EXISTING UNDERGROUND UTILITIES AND/OR STRUCTURES UNDER PROPOSED BUILDINGS. EXISTING UTILITIES UNDER PROPOSED LANDSCAPED AREAS AND PAVING SHALL BE EITHER FILLED WITH CONTROLLED DENSITY FILL (CDF) AND ABANDONED IN PLACE OR COMPLETELY REMOVED. IN ALL CASES, COMPLETELY REMOVE UNDERGROUND STRUCTURES.
2. PRESERVE AND PROTECT EXISTING UNDERGROUND UTILITIES AND/OR STRUCTURES.
3. DEMOLISH AND REMOVE EXISTING ASPHALT PAVING.
4. PRESERVE AND PROTECT EXISTING ASPHALT PAVING TO REMAIN.
5. DEMOLISH AND REMOVE EXISTING CONCRETE PAVING.
6. PRESERVE AND PROTECT EXISTING CONCRETE PAVING.
7. SAWCUT EX. PAVEMENT WITH NEAT EDGE.
8. DEMOLISH AND REMOVE EXISTING CURB.
9. PRESERVE AND PROTECT EXISTING CURB.
10. PRESERVE AND PROTECT EXISTING BUILDING TO REMAIN.
11. CLEAR, GRUB, AND STRIP EXISTING VEGETATION.
12. SAVE AND PROTECT EXISTING VEGETATION.
13. REMOVE EXISTING TREE WITHIN CONSTRUCTION LIMITS UNLESS NOTED OTHERWSE. CONTRACTOR SHALL COORDINATE WORK WITH THE OWNER, ARCHITECT, AND LANDSCAPE ARCHITECT PRIOR TO TREE REMOVAL. CONTRACTOR SHALL IDENTIFY WITH ORANGE PAINTED "X" AND/OR ORANGE FLAGGING TREES TO BE REMOVED. TREE REMOVAL INCLUDES COMPLETE REMOVAL OF ROOT MASS, ESPECIALLY UNDER PROPOSED BUILDING FOOTPRINT, UNLESS OTHERWISE DIRECTED BY THE OWNER.
14. PRIOR TO CONSTRUCTION, THE CONTRACTOR SHALL COORDINATE WITH THE OWNER, ARCHITECT, AND LANDSCAPE ARCHITECT THE PRESERVATION OF EACH TREE TO BE SAVED. CONTRACTOR SHALL CLEARLY MARK EACH TREE TO BE PRESERVED AND PROTECTED. CONTRACTOR SHALL COORDINATE TREE PROTECTION WITH THE LANDSCAPE ARCHITECT TO ENSURE THAT THE PROPOSED WORK WILL NOT DAMAGE THE EXISTING TREE. SEE LANDSCAPE PLANS FOR ADDITIONAL TREE PROTECTION REQUIREMENTS AND ASSOCIATED DETAILS.
15. PRESERVE AND PROTECT EXISTING CHAINLINK FENCE.
16. DEMOLISH AND REMOVE EXISTING CHAINLINK FENCING.
17. CUT AND CAP EX. UTILITY. CONTRACTOR SHALL FOLLOW UTILITY PURVEYOR STDS.
18. PRESERVE AND PROTECT EXISTING LIGHT POLE, FOUNDATION, AND ASSOCIATED POWER LINES.
19. CONTRACTOR SHALL REMOVE AND COORDINATE REPLACEMENT OF EX. GAS SERVICES WITH UTILITY PURVEYOR PRIOR TO CONSTRUCTION. CONTRACTOR SHALL PROVIDE TRENCHING, BEDDING, BACKFILL, AND PAVEMENT RESTORATION FOR PSE AS REQ.
20. SEE ELECTRICAL PLANS FOR POWER/COMM. DEMOLITION INFORMATION.
21. PRIOR TO CONSTRUCTION, CONTRACTOR SHALL COORDINATE REMOVAL OF EXISTING UTILITIES WITH LOCAL UTILITY PURVEYOR (I.E. PSE, CENTURYLINK, WATER AND SEWER DISTRICT, ETC.).
22. PRESERVE AND PROTECT EXISTING WALL.
23. DEMOLISH AND REMOVE EXISTING WALL.
24. PRESERVE AND PROTECT EXISTING STAIRS.
25. DEMOLISH AND REMOVE EXISTING STAIRS.
26. REMOVE EX. GRAVEL SURFACING.
27. REMOVE EX. WHEEL STOPS.
28. REMOVE EX. ECOLOGY BLOCKS.
29. PRIOR TO CONSTRUCTION, CONTRACTOR SHALL COORDINATE RELOCATION OF EX. STORAGE CONTAINER WITH OWNER AND RELOCATE CONTAINER AS DIRECTED.
30. SAWCUT AND REMOVE EX. ASPHALT SPEED BUMP. REPLACE ASPHALT PAVING. MATCH EX. PAVING SECTION.
31. PRESERVE AND PROTECT EX. SPEED BUMP.
32. REMOVE EX. SIGN.
33. REMOVE EX. PAVEMENT MARKINGS.
34. PRESERVE AND PROTECT EX. PAVEMENT MARKINGS.
35. REMOVE EX. GATE.

811 CALL 2 BUSINESS DAYS BEFORE YOU DIG 811 OR 1-800-424-5555

THESE DRAWINGS ARE NOT TO BE USED FOR CONSTRUCTION UNLESS SIGNED BY THE REVIEWING AGENCY

Integrity Works
Consulting Engineers, LLC
170 W. Dayton St Suite 204 Edmonds WA 98020
O: 425.967.7913 C: 206.920.9410

HUTTEBALL + OREMUS architecture
4010 LAKE WASHINGTON BLVD NE
SUITE 320
KIRKLAND, WA 98033
425.828.8948
HOARCH.COM

ARCHITECT STAMP

CONSULTANT STAMP

JOSEPH B. MOON — STATE OF WASHINGTON — 36022 — REGISTERED PROFESSIONAL ENGINEER
4/13/20

PROJECT INFORMATION

Inglemoor High School Concert Hall + Music Building

15500 Simonds Rd NE
Kenmore, WA 98028

NORTHSHORE SCHOOL DISTRICT No. 417

SCHOOL DISTRICT LOGO

Northshore School District

02.13.2019 SCHEMATIC DESIGN
04.08.2019 VALUE ENGINEERING
09.16.2019 SITE PLAN REVIEW
10.18.2019 DESIGN DEVELOPMENT
01.13.2020 CONSTRUCTABILITY REVIEW
03.23.2020 HEALTH DEPARTMENT PERMIT SUBMITTAL
04.13.2020 BID DOCUMENTS

BID DOCUMENTS

04.13.2020

PROJECT NUMBER: 1711

SHEET NAME

DEMOLITION PLAN

SHEET NUMBER

C3.01

DEMOLITION GENERAL NOTES

1. IT IS THE INTENT OF THE WORK UNDER THIS CONTRACT TO INCLUDE, BUT NOT LIMITED TO, THE DEMOLITION OF EXISTING PAVING, UTILITIES, AND OTHER EXISTING SITE IMPROVEMENTS INCLUDING THEIR UNDERGROUND COMPONENTS AS CLARIFIED BY THIS DRAWING UNLESS OTHERWISE NOTED. IT IS THE CONTRACTOR'S RESPONSIBILITY TO FULLY REVIEW THE SITE CONDITIONS AND TO CORRELATE THESE OBSERVATIONS WITH THE PROJECT WORK AND INCLUDE ALL NECESSARY DEMOLITION, WHETHER SHOWN OR NOT, AND INCLUDE ALL SUCH COSTS IN THE SCOPE OF WORK.
2. IT IS THE INTENT OF THIS CONTRACT TO CONDUCT ALL CLEARING NECESSARY TO COMPLETE WORK ASSOCIATED WITH THIS PROJECT.
3. CONTRACTOR SHALL LEGALLY DISPOSE OF ALL DEMOLISHED AND REMOVED MATERIALS UNLESS OTHERWISE NOTED. REFER TO CONSTRUCTION WASTE MANAGEMENT IN THE PROJECT MANUAL.
4. IT IS THE RESPONSIBILITY OF THE CONTRACTOR TO COMPLETELY COORDINATE UTILITY DEMOLITION WITH NEW CONSTRUCTION.
5. EXISTING UTILITIES AND UNDERGROUND STRUCTURES SHOWN ON THE PLANS ARE BASED UPON THE BEST AVAILABLE PUBLIC AND/OR PRIVATE RECORDS AS SUPPLIED BY THE PROJECT OWNER AND/OR DATA OBTAINED FROM LOCAL AGENCIES ASSOCIATED WITH THE PARTICULAR UTILITY. NEITHER THE OWNER NOR THE ENGINEER GUARANTEE ACCURACY OR COMPLETENESS OF THIS INFORMATION AND ASSUME NO RESPONSIBILITY FOR IMPROPER LOCATIONS SHOWN ON THE CONSTRUCTION PLANS. OTHER UNDERGROUND FACILITIES NOT SHOWN ON THE DRAWINGS MAY BE ENCOUNTERED DURING THE COURSE OF CONSTRUCTION. ALL ELEVATIONS SHOWN ON THE DRAWINGS SHALL BE VERIFIED BY THE CONTRACTOR PRIOR TO CONSTRUCTION.
6. IF CHANGED PREEXISTING CONDITIONS ARE ENCOUNTERED, THE CONTRACTOR SHALL NOTIFY THE ENGINEER PROMPTLY OF (1) PREEXISTING SUBSURFACE CONDITIONS DIFFERING FROM THOSE INDICATED IN THE PLANS, OR (2) PREEXISTING UNKNOWN SUBSURFACE CONDITIONS, DIFFERING MATERIALLY FROM THOSE ORIGINALLY ENCOUNTERED AND GENERALLY RECOGNIZED AS INHERENT IN WORK OF THE CHARACTER PROVIDED FOR IN THE CONTRACT. THE CONTRACTOR SHALL MAKE NO CLAIMS TO THE ENGINEER AND/OR OWNER FOR COMPENSATION FOR EXTRA WORK RESULTING FROM CHANGED CONDITIONS UNLESS THE OWNER HAS APPROVED THE WORK IN WRITING.
7. CONTRACTOR SHALL CALL THE UTILITIES UNDERGROUND LOCATION CENTER FOR FIELD LOCATION OF ALL UTILITIES AND SHALL NOT BEGIN EXCAVATION ACTIVITIES UNTIL ALL KNOWN UNDERGROUND FACILITIES IN THE VICINITY OF THE PROPOSED WORK HAVE BEEN LOCATED AND MARKED.
8. THE CONTRACTOR IS RESPONSIBLE FOR REVIEWING ALL UTILITY PURVEYOR, AND CITY/STATE RECORDS RELATIVE TO EXISTING UNDERGROUND UTILITIES. THE CONTRACTOR IS RESPONSIBLE FOR AVOIDING DAMAGE TO THESE FACILITIES AND SHALL RESTORE ALL UTILITIES AT CONTRACTOR'S OWN EXPENSE AS NECESSARY.
9. CONTRACTOR SHALL VERIFY THAT ALL UTILITY SERVICES TO BE DEMOLISHED HAVE BEEN DISCONNECTED PRIOR TO DEMOLITION ACTIVITIES.
10. ERECT BARRIERS, SHORING AND THE LIKE TO PROTECT PERSONNEL, CONSTRUCTION AND VEGETATION TO REMAIN. COMPLY WITH ALL STATE AND LOCAL AGENCY REQUIREMENTS.
11. DO NOT SHUT OFF OR CAP UTILITIES WITHOUT PRIOR NOTICE TO THE LOCAL UTILITY PURVEYORS.
12. MAINTAIN VEHICULAR AND PEDESTRIAN TRAFFIC ROUTES: ENSURE MINIMUM INTERFERENCE WITH ROADS, STREETS, SIDEWALKS, AND ADJACENT FACILITIES; DO NOT CLOSE OR OBSTRUCT STREETS, SIDEWALKS, OR PASSAGEWAYS WITHOUT PERMISSION FROM AUTHORITIES HAVING JURISDICTION; MAINTAIN FIRE ACCESS ALONG ACCESS ROAD AT ALL TIMES; MEET ALL APPLICABLE CODES AND ORDINANCES.
13. PROTECT FROM HARM ANY TREES, OR OTHER OBJECTS SELECTED TO REMAIN.
14. DO NOT DAMAGE EXISTING IMPROVEMENTS TO REMAIN.
15. RESTORE ANY EXISTING IMPROVEMENTS DAMAGED BY CONSTRUCTION ACTIVITIES TO IT'S ORIGINAL CONDITION, AS ACCEPTABLE TO OWNER. REPAIR ANY DAMAGE TO ADJACENT STRUCTURES, UTILITIES, SITE, AND WORK OF THIS CONTRACT TO REMAIN AT NO ADDITIONAL COST TO OWNER. EXISTING ASPHALT PAVING DAMAGED BY CONSTRUCTION ACTIVITIES SHALL BE COMPLETELY REMOVED AND RESTORED BASED ON THE HEAVY DUTY ASPHALT PAVING SECTION SHOWN ON THE PAVING PLANS.
16. NO BLASTING ON SITE. DO NOT USE EXPLOSIVES.
17. WATER DEBRIS AS NECESSARY TO LIMIT DUST TO LOWEST PRACTICABLE LEVEL. DO NOT WATER TO EXTENT CAUSING FLOODING, CONTAMINATED RUNOFF OR ICING.
18. REMOVE EXISTING ABOVE-GRADE AND BELOW-GRADE IMPROVEMENTS AS INDICATED AND AS NECESSARY TO FACILITATE NEW CONSTRUCTION. CARE SHALL BE TAKEN THAT DAMAGE DOES NOT OCCUR TO EXISTING PAVEMENT WHICH IS TO REMAIN IN PLACE AND THAT ALL PAVEMENT REMOVALS ARE ACCOMPLISHED BY MAKING A NEAT VERTICAL SAW CUT AT THE BOUNDARIES OF THE AREA TO BE REMOVED.
19. REMOVE TREES, GROWTH AND UNDERBRUSH AS REQUIRED FOR NEW CONSTRUCTION AND AS INDICATED. REMOVAL OPERATIONS SHALL BE PERFORMED IN A MANNER TO PROTECT PROPERTY.
20. MAKE PAVING CUTS AT CLOSEST EXISTING JOINT.
21. THE CONTRACTOR SHALL BE RESPONSIBLE FOR FURNISHING, SETTING AND MARKING ALL LINE AND LOCATION STAKES, INCLUDING OFFSETS AND GENERAL CONSTRUCTION STAKING. WHEN WORK REQUIRING CONTROL IS BEING PERFORMED, ALL NECESSARY RELATED EQUIPMENT, SUPPLIES AND INSTRUMENTS SHALL BE ON SITE. A QUALIFIED LAYOUT ENGINEER, SURVEYOR, OR TECHNICAL SPECIALIST MUST BE ASSIGNED TO THE CONTRACTOR'S CREW FOR THIS WORK. THIS EQUIPMENT AND PERSONNEL MUST BE AVAILABLE, AT NO ADDITIONAL COST TO OWNER FOR THE PURPOSE OF VERIFYING LAYOUT AND CERTIFYING THE ACCURACY OF WORK ON THE SITE.
22. PROVIDE FOR THE PROTECTION OF PERSONS PASSING AROUND OR THROUGH THE AREA OF DEMOLITION.
23. TRAFFIC: DO NOT OBSTRUCT WALKS OR PUBLIC WAYS WITHOUT THE WRITTEN PERMISSION OF GOVERNING AUTHORITIES AND OF THE OWNER. WHERE ROUTES ARE PERMITTED TO BE CLOSED, PROVIDE ALTERNATE ROUTES IF REQUIRED.
24. WHERE SHOWN ON THE PLANS, COMPLETELY REMOVE ALL GROWTH INCLUDING ROOT SYSTEMS OF TREES, SHRUBS, HERBACEOUS WEEDS, AND GRASSES.
25. PROVIDE PROTECTIVE MEASURES TO ENSURE FREE AND SAFE PASSAGE OF PERSONS TO AND FROM OCCUPIED AREAS.
26. WITHOUT COST OR DELAY TO THE OWNER, REPAIR ANY DAMAGES BY THE CONTRACTOR TO FACILITIES TO REMAIN.
27. THE CONTRACTOR IS RESPONSIBLE FOR PRESERVING ALL BENCHMARKS AND STAKES AND THE REPLACEMENT OF ANY THAT ARE DISPLACED OR MISSING.
28. THE REFUSE RESULTING FROM CLEARING AND GRUBBING SHALL BE DISPOSED OF BY THE CONTRACTOR IN A MANNER CONSISTENT WITH ALL GOVERNMENT REGULATIONS. IN NO CASE SHALL REFUSE MATERIAL BE LEFT ON THE PROJECT SITE, SHOVED ONTO ABUTTING PRIVATE PROPERTIES, OR BE BURIED IN EMBANKMENTS OR TRENCHES ON THE PROJECT SITE. DEBRIS SHALL NOT BE DEPOSITED IN ANY STREAM OR BODY OF WATER, WETLAND, OR IN ANY STREET OR ALLEY, OR UPON ANY PRIVATE PROPERTY EXCEPT BY WRITTEN CONSENT OF THE PRIVATE PROPERTY OWNER. MAINTAIN HAULING ROUTES CLEAN AND FREE OF ANY DEBRIS RESULTING FROM DEMOLITION/CONSTRUCTION WORK ON THIS PROJECT.
29. CONTRACTOR SHALL CAP ALL EXISTING UTILITIES TO BE ABANDONED IN PLACE.

CALL 2 BUSINESS DAYS BEFORE YOU DIG 811 OR 1-800-424-5555

THESE DRAWINGS ARE NOT TO BE USED FOR CONSTRUCTION UNLESS SIGNED BY THE REVIEWING AGENCY

Integrity Works
Consulting Engineers, LLC
170 W. Dayton St. Suite 204 Edmonds WA 98020
O: 425.967.7913 C: 206.920.9410

HUTTEBALL + OREMUS architecture
4010 LAKE WASHINGTON BLVD NE
SUITE 320
KIRKLAND, WA 98033
425.828.8948
HOARCH.COM

ARCHITECT STAMP

CONSULTANT STAMP

JOSEPH B. MOON STATE OF WASHINGTON 36022 REGISTERED PROFESSIONAL ENGINEER
4/13/20

PROJECT INFORMATION

Inglemoor High School Concert Hall + Music Building

15500 Simonds Rd NE
Kenmore, WA 98028

NORTHSHORE SCHOOL DISTRICT No. 417

SCHOOL DISTRICT LOGO

Northshore School District

02.13.2019 SCHEMATIC DESIGN
04.08.2019 VALUE ENGINEERING
09.16.2019 SITE PLAN REVIEW
10.18.2019 DESIGN DEVELOPMENT
01.13.2020 CONSTRUCTABILITY REVIEW
03.23.2020 HEALTH DEPARTMENT PERMIT SUBMITTAL
04.13.2020 BID DOCUMENTS

BID DOCUMENTS

04.13.2020

PROJECT NUMBER: 1711

SHEET NAME

DEMOLITION NOTES

SHEET NUMBER

C3.02

S1/2, NW1/4 & N1/2 SW1/4, SEC.18, T.26N., R.5E., W.M.

88TH AVE. N.E.

N.E. 157TH STREET

NE 157th ST

SIMONDS ROAD N.E.

NE 155th ST

N.E. 157TH STREET

1.2(H):1(V) TEMPORARY CUT SLOPE. (TYP.)

BUILDING FOUNDATIONS. SEE STRUCTURAL PLANS FOR DETAILS. (TYP.)

6" PVC BLDG. FOOTING DRAIN. IE=423.33 SEE STORM DRAINAGE PLAN FOR ADDITIONAL DETAILS.

6" PVC BLDG. FOOTING DRAIN. IE=429.17 SEE STORM DRAINAGE PLAN FOR ADDITIONAL DETAILS.

EXISTING WETLAND

CONTRACTOR SHALL OVER-EXCAVATE CONTAMINATED SOILS AND/OR UNSUITABLE FILL SOILS UNDER THE PROPOSED BUILDING AS DIRECTED BY THE GEOTECHNICAL ENGINEER. BACKFILL AREA WITH STRUCTURAL FILL TO FOUNDATION SUBGRADE ELEVATIONS. PROVIDE COMPACTION AS REQUIRED IN THE PROJECT SPECIFICATIONS.

BOTTOM OF FOOTING ELEVATIONS. (TYP.)

CONTRACTOR SHALL COORDINATE ALL BUILDING AND FOUNDATION EXCAVATIONS WITH THE GEOTECHNICAL ENGINEER PRIOR TO CONSTRUCTION.

MATCH EX. GRADE ALONG NORTH EDGE OF EX. BUILDING. (TYP.)

1.2(H):1(V) TEMPORARY CUT SLOPE. (TYP.)

SCALE: 1" = 30'

0 15' 30' 60'

HUTTEBALL + OREMUS architecture

4010 LAKE WASHINGTON BLVD NE
SUITE 320
KIRKLAND, WA 98033

425.828.8948

HOARCH.COM

ARCHITECT STAMP

CONSULTANT STAMP

JOSEPH B. MOORE — STATE OF WASHINGTON — 36022 — REGISTERED PROFESSIONAL ENGINEER

4/13/20

PROJECT INFORMATION

Inglemoor High School Concert Hall + Music Building

15500 Simonds Rd NE
Kenmore, WA 98028

NORTHSHORE SCHOOL DISTRICT No. 417

SCHOOL DISTRICT LOGO

Northshore School District

02.13.2019 SCHEMATIC DESIGN
04.08.2019 VALUE ENGINEERING
09.16.2019 SITE PLAN REVIEW
10.18.2019 DESIGN DEVELOPMENT
01.13.2020 CONSTRUCTABILITY REVIEW
03.23.2020 HEALTH DEPARTMENT PERMIT SUBMITTAL
04.13.2020 BID DOCUMENTS

BID DOCUMENTS

04.13.2020

PROJECT NUMBER: 1711

SHEET NAME

BUILDING SUBGRADE PREPARATION PLAN

SHEET NUMBER

C3.03

S1/2, NW1/4 & N1/2 SW1/4, SEC.18, T.26N., R.5E., W.M.

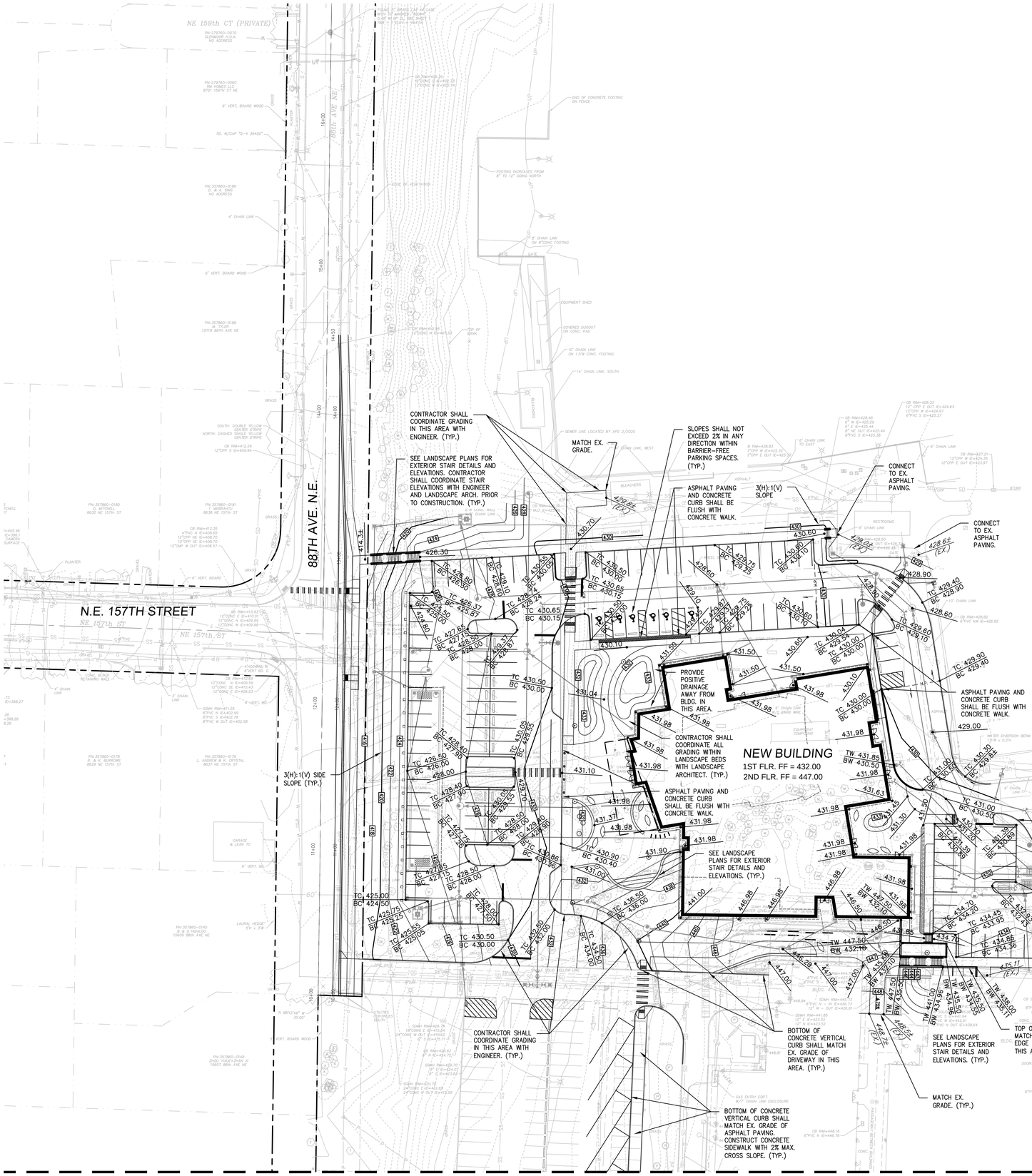

MATCHLINE – SEE SHEET C4.01

GRADING NOTES

1. CONTRACTOR SHALL OBTAIN ENGINEER'S APPROVAL OF SUBGRADE ELEVATIONS/GRADING PRIOR TO PAVING.
2. CONTRACTOR SHALL PROVIDE SMOOTH GRADING TRANSITIONS.
3. CONTRACTOR SHALL MAKE ADJUSTMENTS TO SUBGRADE ELEVATIONS AS DIRECTED BY THE ENGINEER AT NO ADDITIONAL COST TO THE OWNER.

N

SCALE: 1" = 30'

0 15' 30' 60'

CALL 2 BUSINESS DAYS BEFORE YOU DIG 811 OR 1-800-424-5555

THESE DRAWINGS ARE NOT TO BE USED FOR CONSTRUCTION UNLESS SIGNED BY THE REVIEWING AGENCY

Integrity Works
Consulting Engineers, LLC
170 W. Dayton St. Suite 204 Edmonds WA 98020
O: 425.967.7913 C: 206.920.9410

HUTTEBALL + OREMUS architecture
4010 LAKE WASHINGTON BLVD NE
SUITE 320
KIRKLAND, WA 98033
425.828.8948
HOARCH.COM

ARCHITECT STAMP

CONSULTANT STAMP

JOSEPH B. MOON
STATE OF WASHINGTON
38022
REGISTERED
PROFESSIONAL ENGINEER
4/13/20

PROJECT INFORMATION

Inglemoor High School Concert Hall + Music Building

15500 Simonds Rd NE
Kenmore, WA 98028

NORTHSHORE SCHOOL DISTRICT No. 417

SCHOOL DISTRICT LOGO

Northshore School District

02.13.2019 SCHEMATIC DESIGN
04.08.2019 VALUE ENGINEERING
09.16.2019 SITE PLAN REVIEW
10.18.2019 DESIGN DEVELOPMENT
01.13.2020 CONSTRUCTABILITY REVIEW
03.23.2020 HEALTH DEPARTMENT PERMIT SUBMITTAL
04.13.2020 BID DOCUMENTS

BID DOCUMENTS

04.13.2020

PROJECT NUMBER: 1711

SHEET NAME

GRADING PLAN

SHEET NUMBER

C4.00

S1/2, NW1/4 & N1/2 SW1/4, SEC.18, T.26N., R.5E., W.M.

MATCHLINE – SEE SHEET C4.00

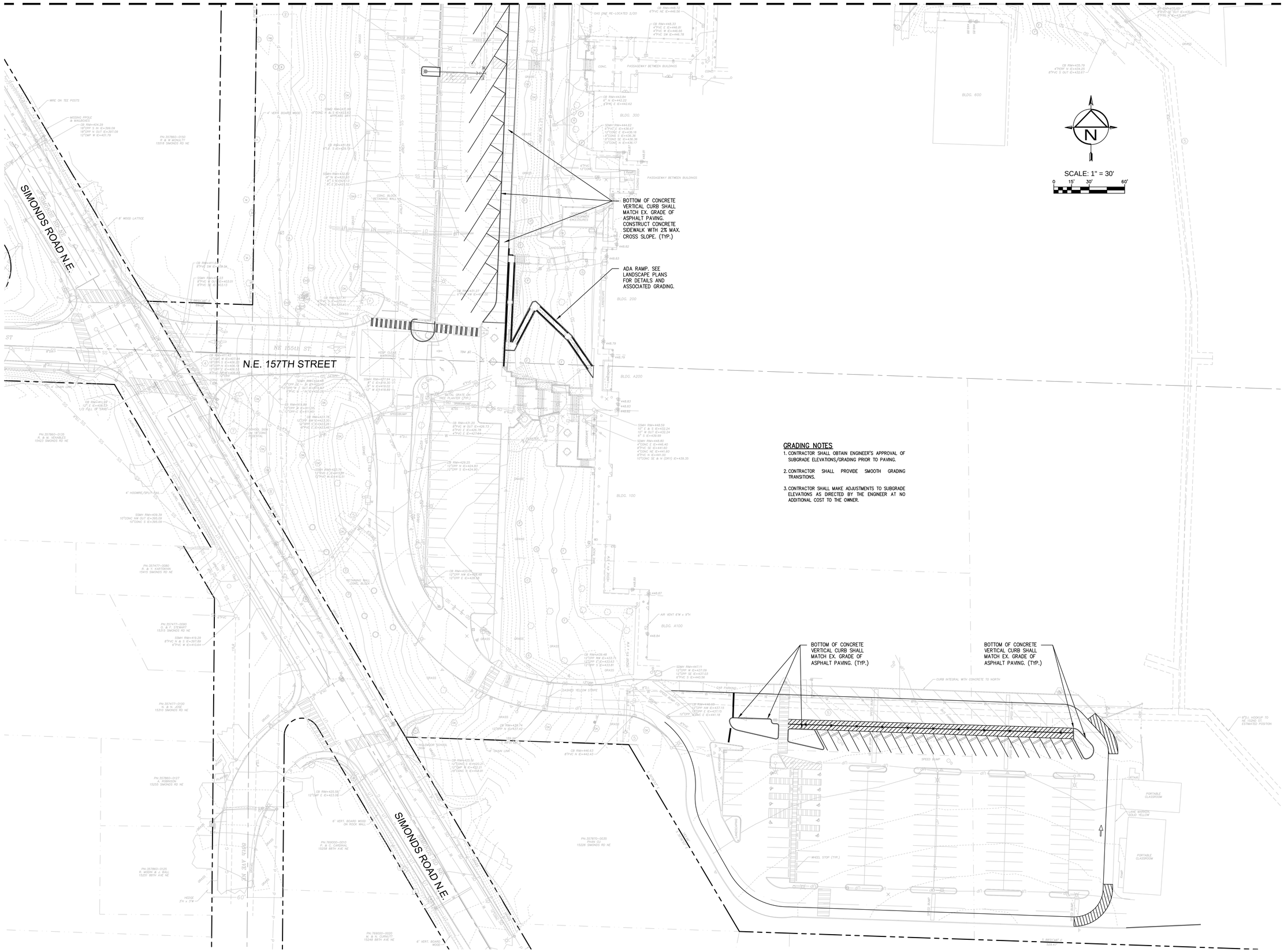

GRADING NOTES

1. CONTRACTOR SHALL OBTAIN ENGINEER'S APPROVAL OF SUBGRADE ELEVATIONS/GRADING PRIOR TO PAVING.
2. CONTRACTOR SHALL PROVIDE SMOOTH GRADING TRANSITIONS.
3. CONTRACTOR SHALL MAKE ADJUSTMENTS TO SUBGRADE ELEVATIONS AS DIRECTED BY THE ENGINEER AT NO ADDITIONAL COST TO THE OWNER.

811 CALL 2 BUSINESS DAYS BEFORE YOU DIG 811 OR 1-800-424-5555

THESE DRAWINGS ARE NOT TO BE USED FOR CONSTRUCTION UNLESS SIGNED BY THE REVIEWING AGENCY

Integrity Works
Consulting Engineers, LLC
170 W. Dayton St Suite 204 Edmonds WA 98020
O: 425.967.7913 C: 206.920.9410

HUTTEBALL + OREMUS architecture
4010 LAKE WASHINGTON BLVD NE
SUITE 320
KIRKLAND, WA 98033
425.828.8948
HOARCH.COM

ARCHITECT STAMP

CONSULTANT STAMP

JOSEPH B. MOON STATE OF WASHINGTON 36022 REGISTERED PROFESSIONAL ENGINEER
4/13/20

PROJECT INFORMATION

Inglemoor High School Concert Hall + Music Building

15500 Simonds Rd NE
Kenmore, WA 98028

NORTHSHORE SCHOOL DISTRICT No. 417

SCHOOL DISTRICT LOGO

Northshore School District

02.13.2019 SCHEMATIC DESIGN
04.08.2019 VALUE ENGINEERING
09.16.2019 SITE PLAN REVIEW
10.18.2019 DESIGN DEVELOPMENT
01.13.2020 CONSTRUCTABILITY REVIEW
03.23.2020 HEALTH DEPARTMENT PERMIT SUBMITTAL
04.13.2020 BID DOCUMENTS

BID DOCUMENTS

04.13.2020

PROJECT NUMBER: 1711

SHEET NAME

GRADING PLAN

SHEET NUMBER

C4.01

S1/2, NW1/4 & N1/2 SW1/4, SEC.18, T.26N., R.5E., W.M.

N.E. 157TH STREET

88TH AVE. N.E.

SIMONDS ROAD N.E.

NE 155th ST

N.E. 157TH STREET

UTILITY CROSSING KEY NOTES

1. UTILITY CROSSING
IE=419.70 (12" SD)
TOP=418.11 (8" SS)
PROPOSED CLEARANCE = 1.59'

2. UTILITY CROSSING
IE=425.90 (6" SD)
TOP=424.9± (12" W)
PROPOSED CLEARANCE = 1'

3. UTILITY CROSSING
IE=424.4± (12" W)
TOP=421.80 (6" SD)
PROPOSED CLEARANCE = 2.6'

4. UTILITY CROSSING
IE=424.3± (12" W)
TOP=422.47 (6" SD)
PROPOSED CLEARANCE = 1.8'

5. UTILITY CROSSING
IE=425.13 (12" SD)
TOP=424.1± (12" W)
PROPOSED CLEARANCE = 1'

6. UTILITY CROSSING
IE=427.8± (6" FIRE W)
TOP=426.47 (12" SD)
PROPOSED CLEARANCE = 1.3'

7. UTILITY CROSSING
IE=428.2± (3" DOM. W)
TOP=426.52 (12" SD)
PROPOSED CLEARANCE = 1.6'

8. UTILITY CROSSING
IE=FIELD LOC. (EX. GAS/POWER)
TOP=429.16 (12" SD)
PROPOSED CLEARANCE = TBD

9. UTILITY CROSSING
IE=422.69 (6" SD)
TOP=420.85 (8" SS)
PROPOSED CLEARANCE = 1.84'

10. UTILITY CROSSING
IE=424.8± (12" W)
TOP=423.29 (6" SD)
PROPOSED CLEARANCE = 1.5'

11. UTILITY CROSSING
IE=422.38 (12" SD)
TOP=411.88 (8" SS)
PROPOSED CLEARANCE = 10.50'

12. UTILITY CROSSING
IE=FIELD LOCATE (EX. GAS)
TOP=424.29 (12" SD)
PROPOSED CLEARANCE = TBD

13. UTILITY CROSSING
IE=424.9± (12" W)
TOP=422.63 (12" SD)
PROPOSED CLEARANCE = 2.3'

14. UTILITY CROSSING
IE=FIELD LOCATE (EX. GAS)
TOP=436.93 (12" SD)
PROPOSED CLEARANCE = TBD

15. UTILITY CROSSING
IE=424.7± (2" W)
TOP=422.50 (12" SD)
PROPOSED CLEARANCE = 2.2'

16. UTILITY CROSSING
IE=423.63 (12" SD)
TOP=417.4± (EX. 24" SD)
PROPOSED CLEARANCE = 6.2'

17. UTILITY CROSSING
IE=422.45 (12" SD)
TOP=420.96 (12" SD)
PROPOSED CLEARANCE = 1.49'

18. UTILITY CROSSING
IE=423.73 (12" SD)
TOP=FIELD LOCATE (EX. 8" W)
PROPOSED CLEARANCE = TBD

19. UTILITY CROSSING
IE=426.30 (6" SD)
TOP=424.8± (12" W)
PROPOSED CLEARANCE = 1.5'

20. UTILITY CROSSING
IE=436.10 (12" SD)
TOP=424.0± (EX. 24" SD)
PROPOSED CLEARANCE = 12.1'

21. UTILITY CROSSING
IE=436.22 (12" SD)
TOP=FIELD LOCATE (EX. 8" W)
PROPOSED CLEARANCE = TBD

22. UTILITY CROSSING
IE=436.45 (12" SD)
TOP=FIELD LOCATE (EX. 8" SS)
PROPOSED CLEARANCE = TBD

STORM KEY NOTES

1. CONNECT TO EX. STORM MANHOLE. CORE-DRILL AND GROUT PIPE. ADJUST RIM TO FINISHED GRADE. IE=403.96
2. 46 LF 12" PERF. FRENCH DRAIN PVC SD S=0.61% (1/C5.03) (TYP.)
3. SDCO #12
RIM=431.50
IE=427.58
4. 26 LF 12" PERF. FRENCH DRAIN PVC SD S=0.62%
5. SDCO #13 (6/C5.02) (TYP.)
RIM=431.8±
IE=427.46
6. 34 LF 12" PVC SD S=9.68%
7. 13 LF 12" PVC SD S=0.62%
8. 26 LF 6" PVC SD S=1.00% MIN.
9. 28 LF 12" PVC SD S=0.61%
10. 26 LF 12" PVC SD S=0.62%
11. SDMH #18 (TYPE 2-48")
W/ SOLID LOCKING LID
RIM=426.4± (FIELD ADJ.)
IE=422.16 (12" W,S)
IE=420.16 (12" SW,N,E)
12. 36 LF 12" D.I. SD S=0.94%
13. 17 LF 12" D.I. SD S=0.65%
14. CB #20 (TYPE 1)
RIM=426.1± (FIELD ADJ.)
IE=422.27
15. 21 LF 12" D.I. SD S=0.62%
16. CB #21 (TYPE 1)
RIM=425.05
IE=422.40
17. 28 LF 12" D.I. SD S=4.39%
18. SDMH #23 (TYPE 2-48")
W/ SOLID LOCKING LID
RIM=427.5± (FIELD ADJ.)
IE=422.24 (6" RD E)
IE=421.74 (12" N,S)
CONNECT TO 6" ROOF DOWNSPOUT TIGHTLINE.
19. CB #24 (TYPE 1)
RIM=426.8± (FIELD ADJ.)
IE=422.58
20. 36 LF 12" D.I. SD S=0.61%
21. 6" PVC BLDG. FOOTING DRAIN TIGHTLINE. S=1.00% MIN. LENGTH TO SUIT. (TYP.)
22. 6" BLDG. FOOTING DRAIN CONNECTION. SEE SHT. C3.03. IE=423.00.
23. 31 LF 12" PVC SD S=1.00%
24. CB #30 (TYPE 1)
RIM=440.0± (FIELD ADJ.)
IE=436.00
25. CB #22A (TYPE 1)
RIM=426.62
IE=424.00
26. 24 LF 12" PVC SD S=2.08%
27. CB #31 (TYPE 1L)
RIM=440.5± (FIELD ADJ.)
IE=436.50
28. CUT AND CAP EX. STORM PIPE.
29. 6" PVC FOOTING DRAIN FOR BLDG. RETAINING WALL.
30. 6" PVC ROOF DOWNSPOUT TIGHTLINE. S=1.00% MIN. LENGTH TO SUIT. (TYP.)
31. 6" PVC STORM VAULT FOOTING DRAIN. (TYP.) (5/C5.02)
32. CONTRACTOR SHALL RELOCATE EX. GAS/POWER/WATER SERVICE LINE AS NECESSARY TO AVOID CONFLICT WITH NEW DRAINAGE SYSTEM. PROVIDE A MIN. OF 1 FOOT OF VERTICAL CLEARANCE BETWEEN UTILITIES.
33. 28 LF 12" D.I. SD S=1.79%

SCALE: 1" = 30'
0 15' 30' 60'

HUTTEBALL + OREMUS architecture
4010 LAKE WASHINGTON BLVD NE
SUITE 320
KIRKLAND, WA 98033
425.828.8948
HOARCH.COM

ARCHITECT STAMP

CONSULTANT STAMP

JOSEPH B. MOON — STATE OF WASHINGTON — 36522 — REGISTERED PROFESSIONAL ENGINEER
4/13/20

PROJECT INFORMATION

Inglemoor High School Concert Hall + Music Building

15500 Simonds Rd NE
Kenmore, WA 98028

NORTHSHORE SCHOOL DISTRICT No. 417

SCHOOL DISTRICT LOGO

Northshore School District

02.13.2019 SCHEMATIC DESIGN
04.08.2019 VALUE ENGINEERING
09.16.2019 SITE PLAN REVIEW
10.18.2019 DESIGN DEVELOPMENT
01.13.2020 CONSTRUCTABILITY REVIEW
03.23.2020 HEALTH DEPARTMENT PERMIT SUBMITTAL
04.13.2020 BID DOCUMENTS

BID DOCUMENTS

04.13.2020

PROJECT NUMBER: 1711

SHEET NAME

STORM DRAINAGE PLAN

SHEET NUMBER

C5.00

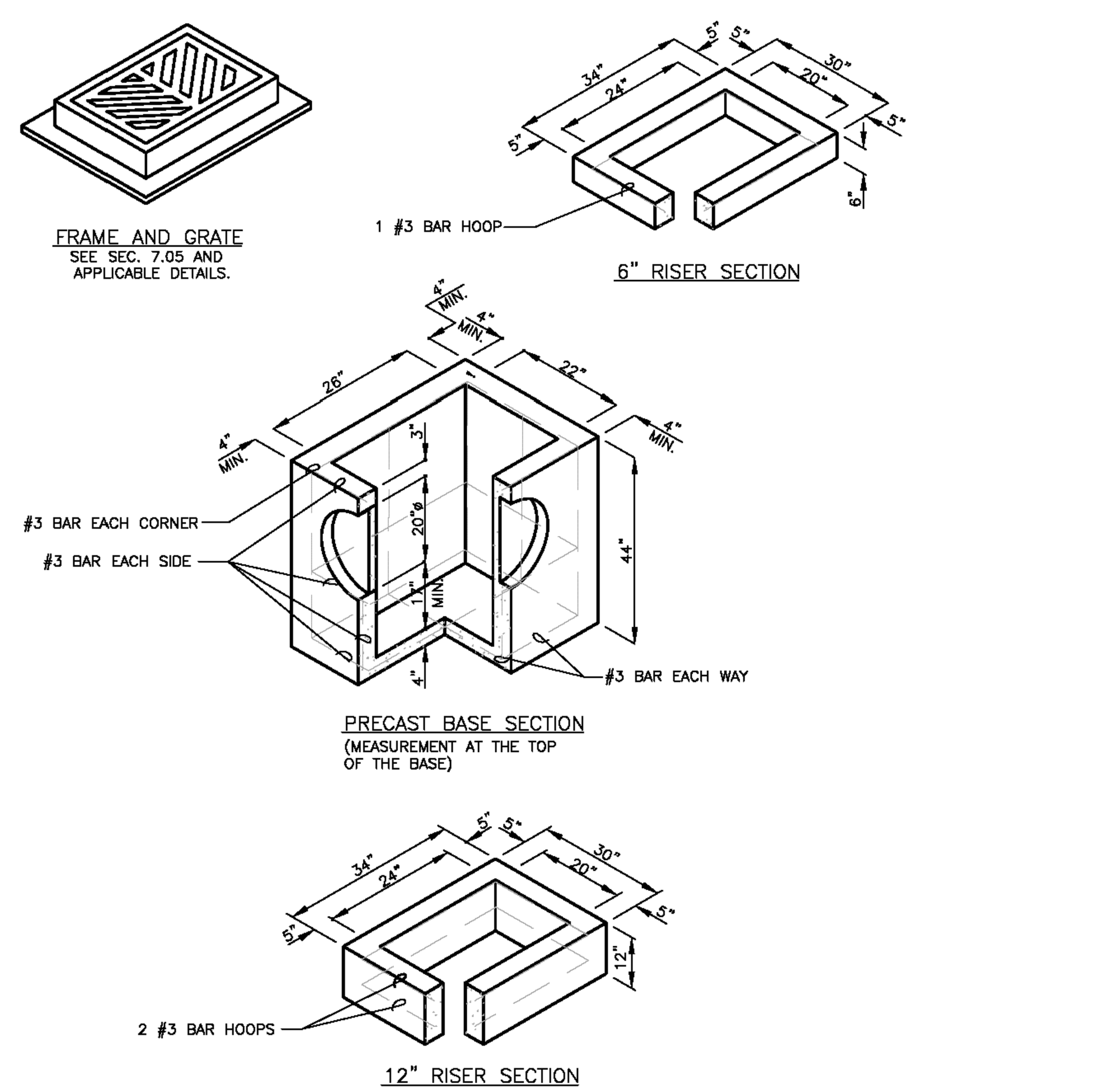

NOTES:

1. CATCH BASINS SHALL BE CONSTRUCTED IN ACCORDANCE WITH AASHTO M 199 UNLESS OTHERWISE SHOWN ON PLANS OR NOTED IN THE WSDOT/APWA STANDARD SPECIFICATIONS.
2. AS AN ACCEPTABLE ALTERNATIVE TO REBAR, WELDED WIRE FABRIC HAVING A MIN. AREA OF 0.12 SQ. IN. PER FT. MAY BE USED. WELDED WIRE FABRIC SHALL COMPLY TO ASTM A497 (AASHTO M 221). WIRE FABRIC SHALL NOT BE PLACED IN KNOCKOUTS.
3. ALL REINFORCED CAST-IN-PLACE CONCRETE SHALL BE CLASS 4000.
4. PRECAST BASES SHALL BE FURNISHED WITH CUTOUTS OR KNOCKOUTS. KNOCKOUTS SHALL HAVE A WALL THICKNESS OF 2 IN. MIN. ALL PIPE SHALL BE INSTALLED IN FACTORY PROVIDED KNOCKOUTS. UNUSED KNOCKOUTS NEED NOT BE GROUTED IF WALL IS LEFT INTACT.
5. KNOCKOUT OR CUTOUT HOLE SIZE IS EQUAL TO PIPE OUTER DIAM. PLUS CATCH BASIN WALL THICKNESS.
6. ROUND KNOCKOUTS MAY BE ON ALL 4 SIDES, WITH MAX. DIAM. OF 20 IN. KNOCKOUTS MAY BE EITHER ROUND OR "D" SHAPE.
7. THE MAX. DEPTH FROM THE FINISHED GRADE TO THE PIPE INVERT IS 5 FT.
8. THE TAPER ON THE SIDES OF THE PRECAST BASE SECTION AND RISER SECTION SHALL NOT EXCEED 1/2" PER FT.
9. CATCH BASIN FRAME AND GRATE SHALL BE IN ACCORDANCE WITH STANDARD SPECIFICATIONS AND MEET THE STRENGTH REQUIREMENTS OF FEDERAL SPECIFICATION RR-F-621E. MATING SURFACES SHALL BE FINISHED TO ASSURE NON-ROCKING FIT WITH ANY COVER POSITION.
10. FRAME AND GRATE MAY BE INSTALLED WITH FLANGE DOWN OR CAST INTO RISER.
11. FOR CATCH BASINS IN PARKING LOTS REFER TO WSDOT/APWA STANDARD DWG. B-5.60-01.
12. EDGE OF RISER OR BRICK SHALL NOT BE MORE THAN 2 IN. FROM VERTICAL EDGE OF CATCH BASIN WALL.
13. SEE THE WSDOT/APWA STANDARD SPECIFICATIONS SECTION 9-05.15 FOR METAL CASTINGS REQUIREMENTS.

Department of Transportation
Road Services Division

CATCH BASIN TYPE 1 — FIG. 7-003

1 CATCH BASIN (TYPE 1)
NOT TO SCALE

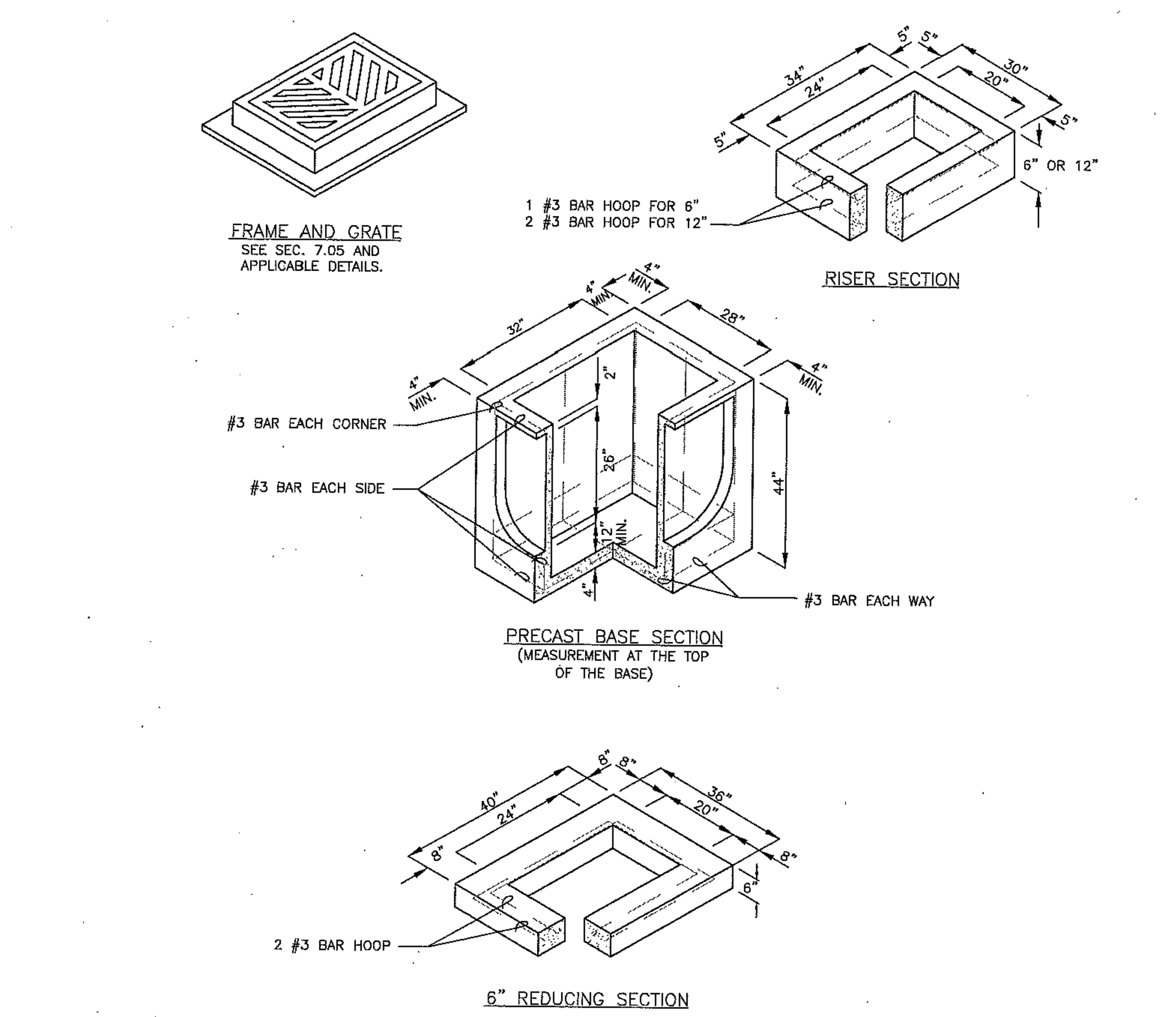

NOTES:

1. CATCH BASINS SHALL BE CONSTRUCTED IN ACCORDANCE WITH AASHTO M199 UNLESS OTHERWISE SHOWN ON PLANS OR NOTED IN THE WSDOT/APWA STANDARD SPECIFICATIONS.
2. AS AN ACCEPTABLE ALTERNATIVE TO REBAR, WELDED WIRE FABRIC HAVING A MIN. AREA OF 0.12 SQ. IN. PER FT. MAY BE USED. WELDED WIRE FABRIC SHALL COMPLY TO ASTM A497 (AASHTO M 221). WIRE FABRIC SHALL NOT BE PLACED IN KNOCKOUTS.
3. ALL REINFORCED CAST-IN-PLACE CONCRETE SHALL BE CLASS 4000.
4. PRECAST BASES SHALL BE FURNISHED WITH CUTOUTS OR KNOCKOUTS. KNOCKOUTS SHALL HAVE A WALL THICKNESS OF 2 IN. MIN. ALL PIPE SHALL BE INSTALLED IN FACTORY PROVIDED KNOCKOUTS. UNUSED KNOCKOUTS NEED NOT BE GROUTED IF WALL IS LEFT INTACT.
5. KNOCKOUT OR CUTOUT HOLE SIZE IS EQUAL TO PIPE OUTER DIAM. PLUS CATCH BASIN WALL THICKNESS.
6. KNOCKOUTS MAY BE ON ALL 4 SIDES WITH MAX. DIAM. OF 28 IN. KNOCKOUTS MAY BE EITHER ROUND OR "D" SHAPE.
7. THE TAPER ON THE SIDES OF THE PRECAST BASE SECTION AND RISER SECTION SHALL NOT EXCEED 1/2" PER FT.
8. CATCH BASIN FRAME AND GRATE SHALL BE IN ACCORDANCE WITH STANDARD SPECIFICATIONS AND MEET THE STRENGTH REQUIREMENTS OF FEDERAL SPECIFICATION RR-F-621E. MATING SURFACES SHALL BE FINISHED TO ASSURE NON-ROCKING FIT WITH ANY COVER POSITION.
9. FRAME AND GRATE MAY BE INSTALLED WITH FLANGE DOWN OR CAST INTO RISER.
10. MAX. DEPTH FROM FINISHED GRADE TO PIPE INVERT SHALL BE 5 FT.
11. EDGE OF REDUCING SECTION OR BRICK SHALL NOT BE MORE THAN 2 IN. FROM VERTICAL EDGE OF CATCH BASIN WALL.
12. SEE THE WSDOT/APWA STANDARD SPECIFICATIONS SECTION 9-05.15 FOR METAL CASTINGS REQUIRMENTS.

Department of Transportation
Road Services Division
2016 Design and
Construction Standards
King County

CATCH BASIN TYPE 1-L — FIG. 7-004

7-9

2 CATCH BASIN (TYPE 1L)
NOT TO SCALE

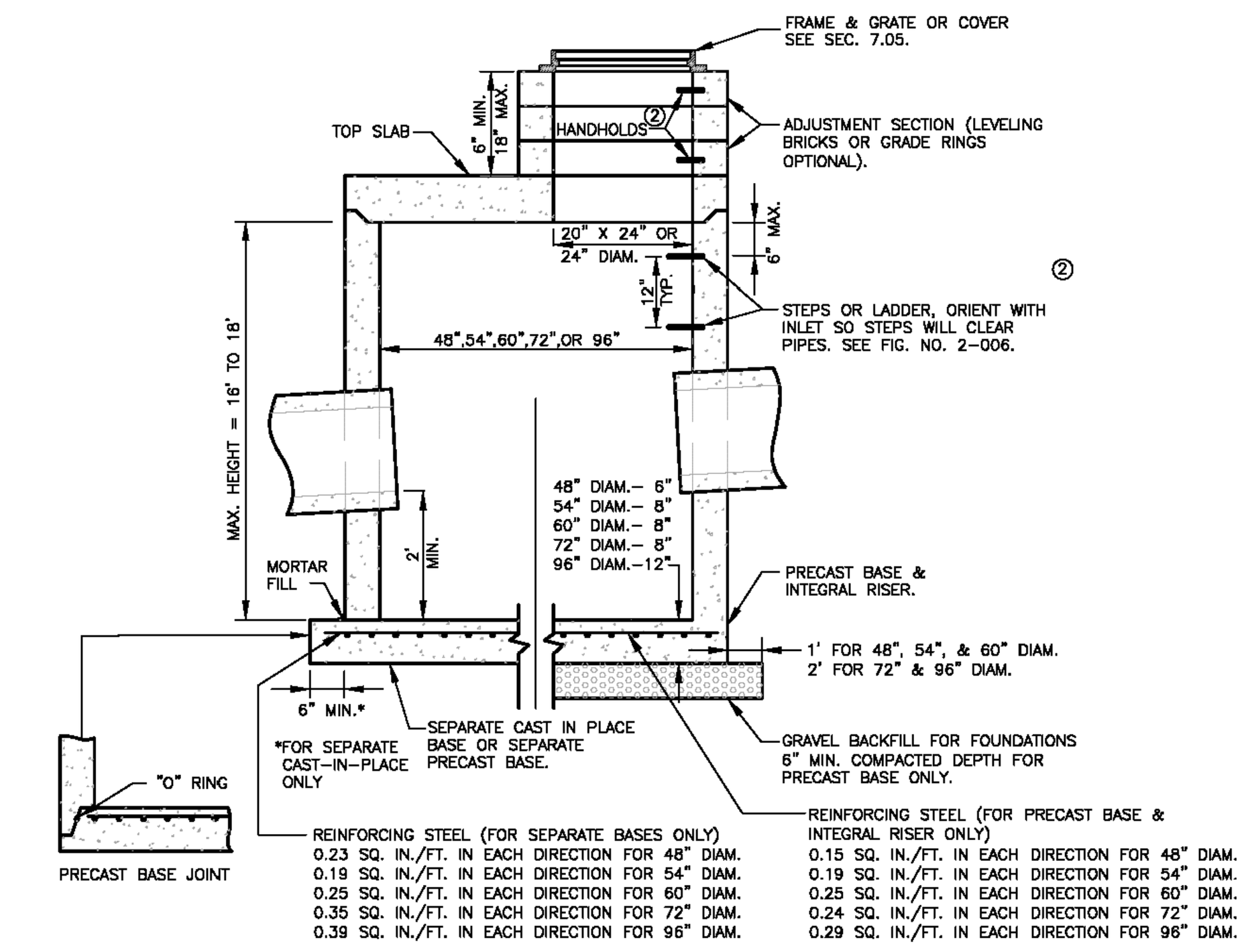

NOTES:

1. CATCH BASINS SHALL BE CONSTRUCTED IN ACCORDANCE WITH AASHTO M199 UNLESS OTHERWISE SHOWN ON PLANS OR NOTED IN THE WSDOT/APWA STANDARD SPECIFICATIONS.
2. HANDHOLDS IN ADJUSTMENT SECTION SHALL HAVE 3" MIN. CLEARANCE. STEPS IN CATCH BASIN SHALL HAVE 6" MIN. CLEARANCE. SEE FIG. NO. 7-006, CATCH BASIN DETAILS. HANDHOLDS SHALL BE PLACED IN ALTERNATING GRADE RINGS OR LEVELING BRICK COURSE WITH A MIN. OF ONE HANDHOLD BETWEEN THE LAST STEP AND TOP OF THE MANHOLE.
3. ALL REINFORCED CAST-IN-PLACE CONCRETE SHALL BE CLASS 4000. ALL PRECAST CONCRETE SHALL BE CLASS 4000.
4. PRECAST BASES SHALL BE FURNISHED WITH CUTOUTS OR KNOCKOUTS. KNOCKOUTS SHALL HAVE WALL THICKNESS OF 2 IN. MIN. UNUSED KNOCKOUTS NEED NOT BE GROUTED IF WALL IS LEFT INTACT. PIPES SHALL BE INSTALLED ONLY IN FACTORY KNOCKOUTS UNLESS OTHERWISE APPROVED BY THE ENGINEER.
5. KNOCKOUT OR CUTOUT HOLE SIZE SHALL EQUAL PIPE OUTER DIAM. PLUS CATCH BASIN WALL THICKNESS. MAX. HOLE SIZE SHALL BE 36 IN. FOR 48 IN. CATCH BASIN, 42 IN. FOR 54 IN. C.B., 48 IN. FOR 60 IN. C.B., 60 IN. FOR 72 IN. C.B., 84 IN. FOR 96 IN. C.B. MIN. DISTANCE BETWEEN HOLES SHALL BE 8 IN. FOR 48 IN., 54 IN,. AND 60 IN. C.B.; 12 IN. FOR 72 IN. AND 96 IN. C.B.
6. CATCH BASIN FRAMES AND GRATES OR COVERS SHALL BE IN ACCORDANCE WITH SEC. 7.05 AND MEET THE STRENGTH REQUIREMENTS OF FEDERAL SPECIFICATION RR-F-621E. MATING SURFACES SHALL BE FINISHED TO ASSURE NON-ROCKING FIT WITH ANY COVER POSITION.
7. ALL BASE REINFORCING STEEL SHALL HAVE A MIN. YIELD STRENGTH OF 60,000 PSI AND BE PLACED IN THE UPPER HALF OF THE BASE WITH 1 IN. MIN. CLEARANCE.
8. MIN. SOIL BEARING VALUE SHALL EQUAL 3,300 POUNDS PER SQUARE FOOT.
9. FOR DETAILS SHOWING LADDER, STEPS, HANDRAILS AND TOP SLABS. SEE FIG. 7-006.
10. SEE THE WSDOT/APWA STANDARD SPECIFICATIONS SEC. 7-05.3 FOR JOINT REQUIREMENTS.
11. SEE THE WSDOT/APWA STANDARD SPECIFICATIONS SECTION 9-05.15 FOR METAL CASTINGS REQUIREMENTS.

Department of Transportation
Road Services Division
2016 Design and
Construction Standards
King County

CATCH BASIN TYPE 2
48", 54", 60", 72", AND 96" — FIG. 7-005

7-10

3 CATCH BASIN (TYPE 2)
NOT TO SCALE

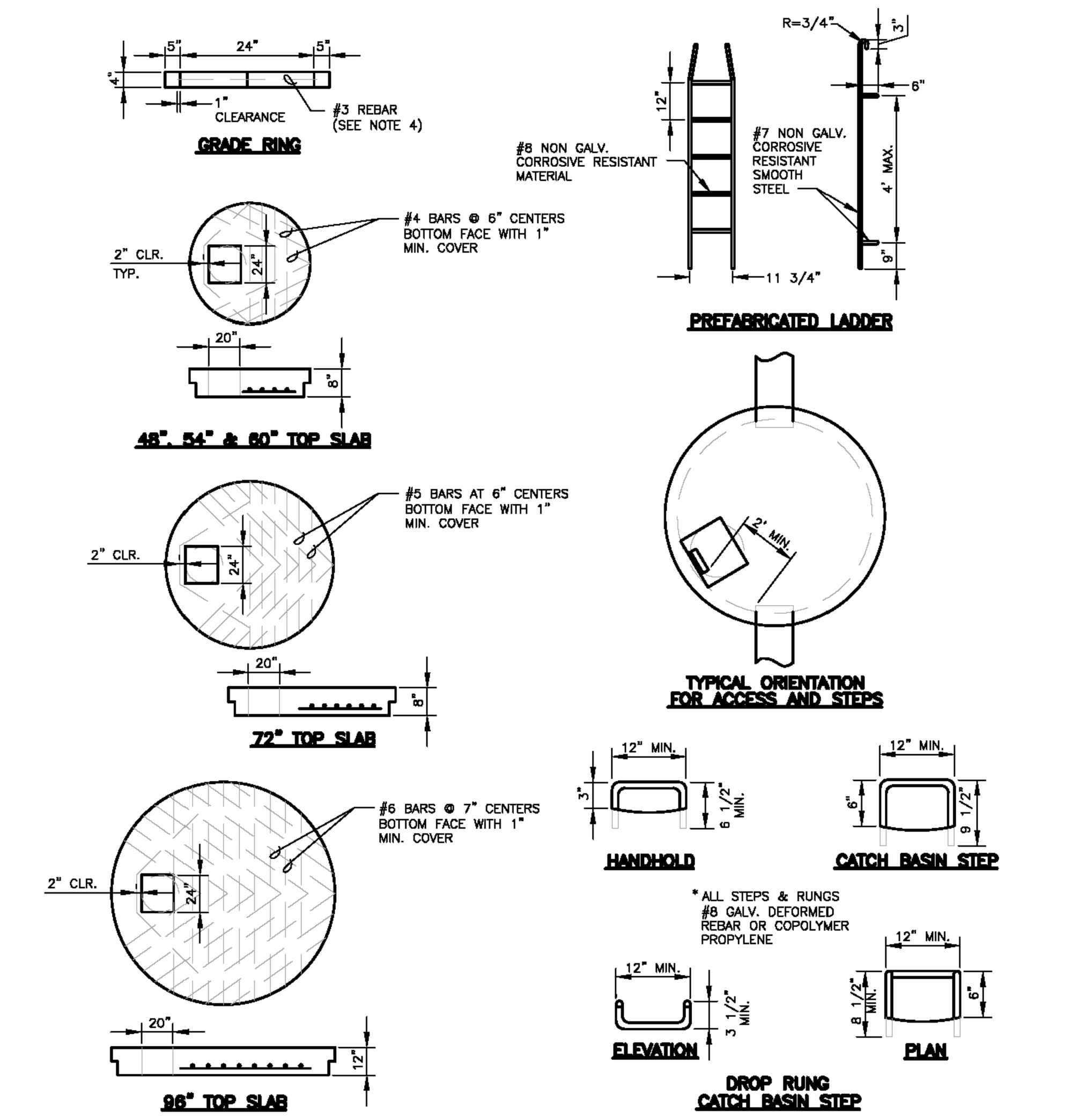

NOTES:

1. PROPRIETARY CATCH BASIN HANDHOLDS AND STEPS ARE ACCEPTABLE, PROVIDED THAT THEY CONFORM TO SEC. R, ASTM C478, AASHTO M-199 AND MEET ALL WISHA REQUIREMENTS.
2. CATCH BASIN STEP/HANDHOLD LEGS SHALL BE PARALLEL OR APPROXIMATELY RADIAL AT THE OPTION OF THE MANUFACTURER, EXCPET THAT ALL STEPS IN ANY CATCH BASIN SHALL BE SIMILAR. PENETRATION OF OUTER WALL BY A LEG IS PROHIBITIED.
3. HANDHOLDS AND STEPS SHALL HAVE "DROP" RUNGS AS SHOWN ON DETAIL OR PROTUBERANCES TO PREVENT SIDEWAYS SLIP.
4. SLAB OPENING MAY BE 24" x 20" OR 24" DIAM.
5. AS AN ACCEPTABLE ALTERNATIVE TO REBAR, WELDED WIRE FABRIC HAVING A MIN. AREA OF 0.012 SQ. IN. PER FT. MAY BE USED. WELDED WIRE FABRIC SHALL COMPLY TO ASTM A497.
6. LADDERS OR STEPS SHALL EXTEND TO WITHIN 16 IN. OF BOTTM OF CATCH BASIN.
7. HANGING LADDERS SHALL BE PERMANENTLY FASTENED AT TOP BY HANGING ON STEP OR BY BOLTING OR EMBEDDING IN CONCRETE. EASH SHALL BE EMBEDDED AT BOTTOM IN BASE.
8. ADDITIONAL SAFETY FEATURES MAY BE REQUIRED IN VERY DEEP OR UNUSUAL STRUCTURES.
9. SEE THE WSDOT/APWA STANDARD SPECIFICATIONS SECTION 9-05.15 FOR METAL CASTINGS REQUIREMENTS.

Department of Transportation
Road Services Division
2016 Design and
Construction Standards
King County

CATCH BASIN DETAILS — FIG. 7-006

7-11

4 CATCH BASIN DETAILS
NOT TO SCALE

THESE DRAWINGS ARE NOT TO BE USED FOR CONSTRUCTION UNLESS SIGNED BY THE REVIEWING AGENCY

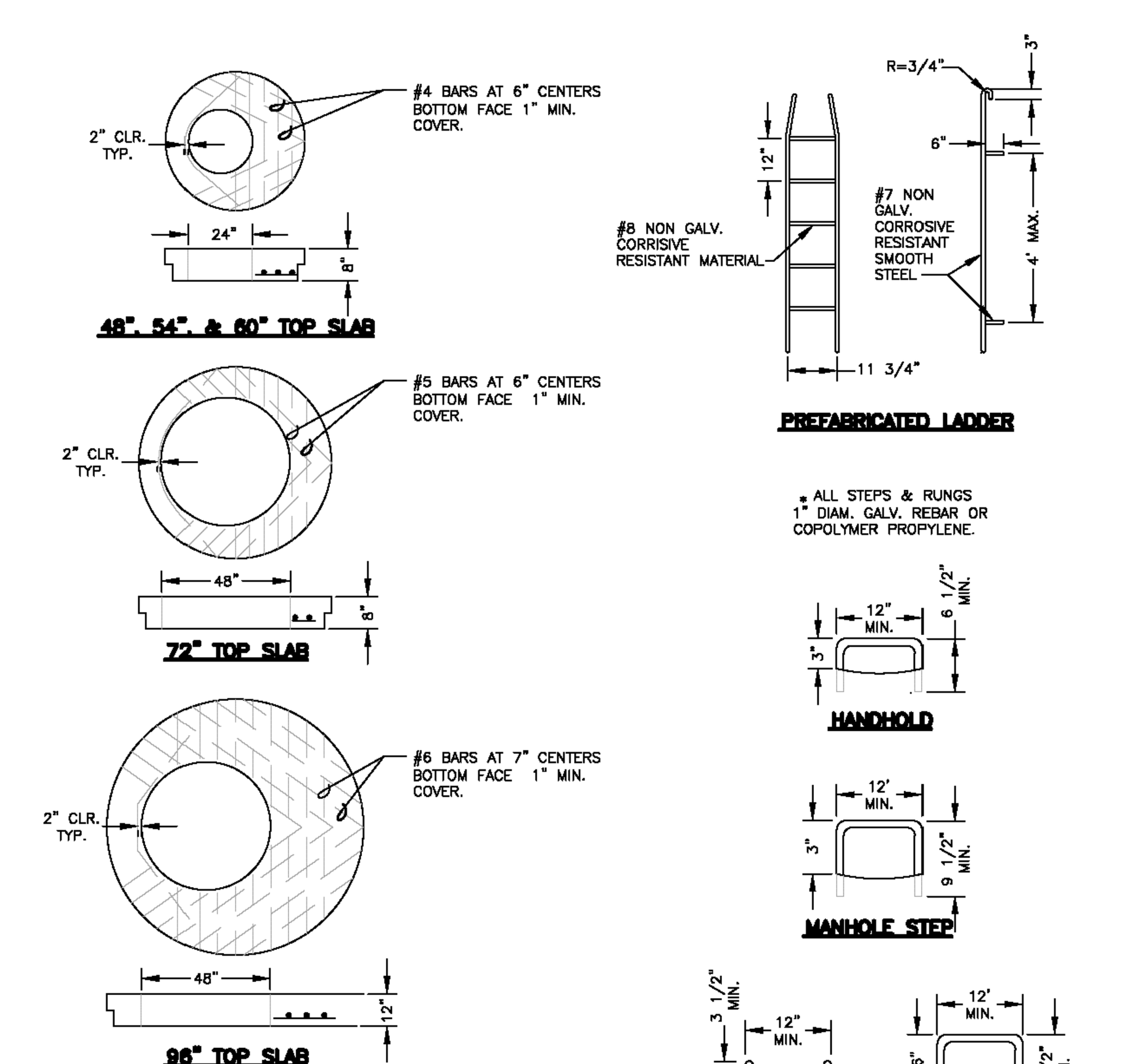

NOTES:

1. PROPRIETARY MANHOLE HANDHOLDS AND STEPS ARE ACCEPTABLE, PROVIDED THAT THEY CONFORM TO SEC. R, ASTM C478, AASHTO M199 AND MEET ALL WISHA REQUIRMENTS.
2. MANHOLE STEP/HANDHOLD LEGS SHALL BE PARALLEL OR APPROXIMATELY RADIAL AT THE OPTION OF THE MANUFACTURER, EXCEPT THAT ALL STEPS IN ANY MANHOLE SHALL BE SIMILAR. PENETRATION OF OUTER WALL BY A LEG IS PROHIBITED.
3. HANHOLDS AND STOPS SHALL HAVE "DROP" RUNGS OR PROTUBERANCES TO PREVENT SIDEWAYS SLIP.
4. LADDERS OR STEPS SHALL EXTEND TO WITHIN 16" OF BOTTOM OF MANHOLE.
5. HANGING LADDERS SHALL BE PERMANENTLY FASTENED AT TOP BY HANGING ON STEP OR BY BOLTING OR EMBEDDING IN CONCRETE. EACH SHALL BE EMBEDDED AT BOTTOM IN BASE.
6. ADDITIONAL SAFETY FEATURES MAY BE REQUIRED IN VERY DEEP OR UNUSUAL STRUCTURES.
7. SEE WSDOT/APWA STANDARD SPECIFICATIONS SECTION 9-05.15 FOR METAL CASTINGS REQUIREMENTS.

Department of Transportation
Road Services Division
2016 Design and
Construction Standards
King County

MANHOLE DETAILS — FIG. 7-011

7-16

5 MANHOLE DETAILS
NOT TO SCALE

811 CALL 2 BUSINESS DAYS BEFORE YOU DIG 811 OR 1-800-424-5555

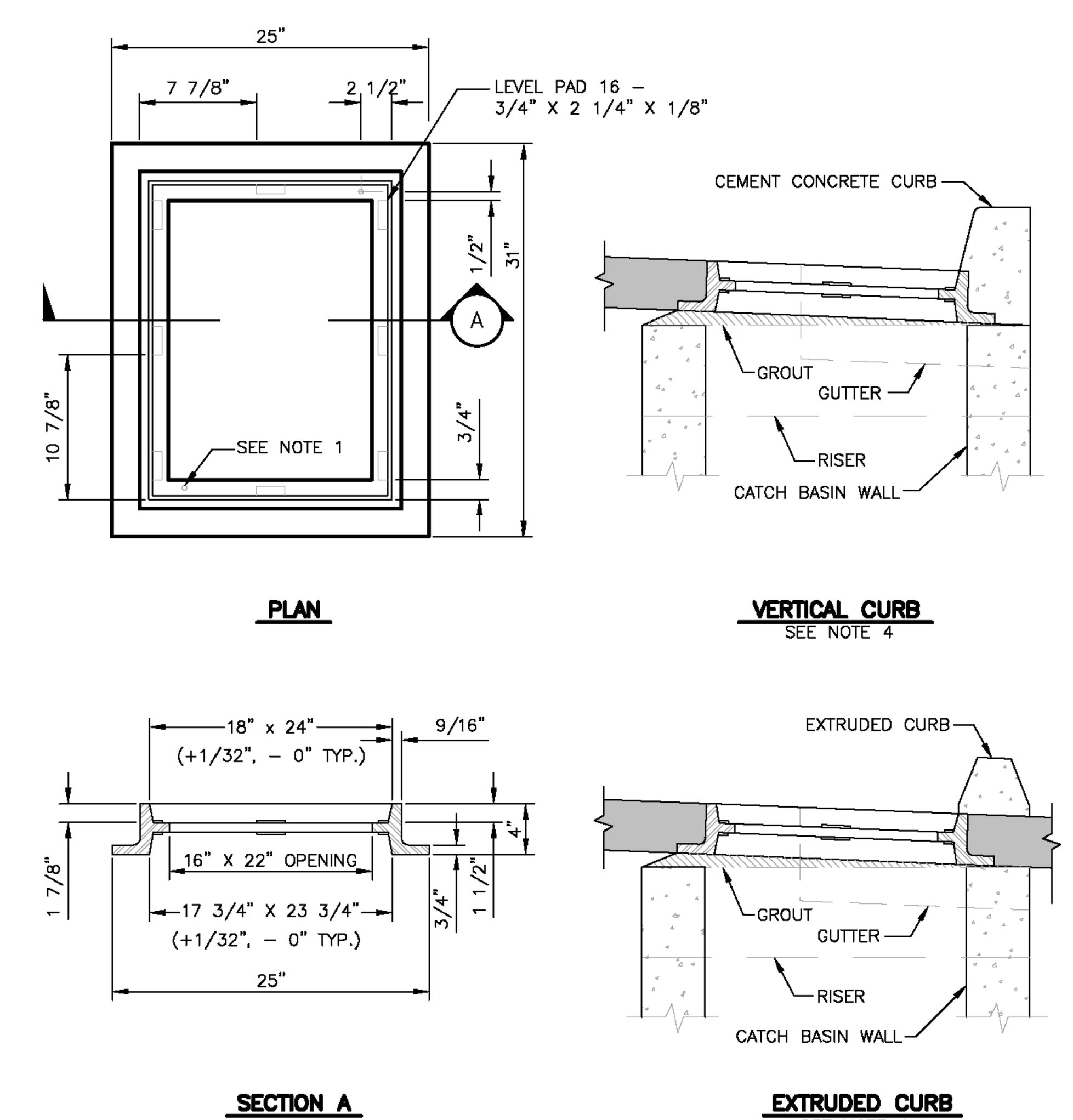

NOTES:

1. DRILL AND TAP FOR, AND PROVIDE, TWO LOCKING BOLTS 5/8 IN.–11 NC STAINLESS TYPE 304 STEEL SOCKET HEAD (ALLEN HEAD) CAP SCREWS 2 IN. LONG WHEN USED WITH SOLID COVER (FIG. 7-015) OR WHEN SPECIFIED BY ENGINEER.
2. FRAME MATERIAL IS DUCTILE IRON PER ASTM A48 CLASS 30.
3. SET FRAME TO GRADE AND CONSTRUCT ROAD AND GUTTER TO BE FLUSH WITH FRAME.
4. SEE SEC. 7.05.
5. SEE WSDOT/APWA STANDARD SPECIFICATIONS SECTION 9-05.15 FOR METAL CASTINGS REQUIREMENTS.

Department of Transportation
Road Services Division
2016 Design and
Construction Standards
King County

STANDARD FRAME WITH VERTICAL OR EXTRUDED CURB INSTALLATION — FIG. 7-014

7-19

6 STANDARD FRAME
NOT TO SCALE

Integrity Works
Consulting Engineers, LLC
170 W. Dayton St. Suite 204 Edmonds WA 98020
O: 425.967.7913 C: 206.920.9410

HUTTEBALL +OREMUS architecture
4010 LAKE WASHINGTON BLVD NE
SUITE 320
KIRKLAND, WA 98033
425.828.8948
HOARCH.COM

ARCHITECT STAMP

CONSULTANT STAMP

JOSEPH B. MOON — STATE OF WASHINGTON — 36922 — REGISTERED PROFESSIONAL ENGINEER
4/13/20

PROJECT INFORMATION

Inglemoor High School Concert Hall + Music Building

15500 Simonds Rd NE
Kenmore, WA 98028

NORTHSHORE SCHOOL DISTRICT No. 417

SCHOOL DISTRICT LOGO

Northshore School District

02.13.2019 SCHEMATIC DESIGN
04.08.2019 VALUE ENGINEERING
09.16.2019 SITE PLAN REVIEW
10.18.2019 DESIGN DEVELOPMENT
01.13.2020 CONSTRUCTABILITY REVIEW
03.23.2020 HEALTH DEPARTMENT PERMIT SUBMITTAL
04.13.2020 BID DOCUMENTS

BID DOCUMENTS

04.13.2020

PROJECT NUMBER: 1711

SHEET NAME

STORM DRAINAGE DETAILS

SHEET NUMBER

C5.01

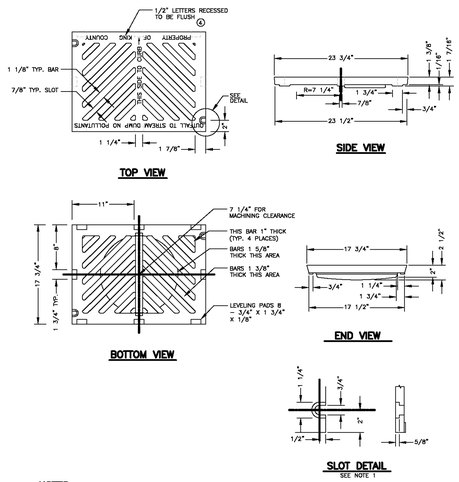

NOTES:

1. SLOT FORMED AND RECESSED FOR 5/8 IN.–11 NC X 2 IN. SOCKET HEAD (ALLEN HEAD) CAP SCREW.
2. GRATE SHALL BE CAST IRON PER ASTM A48 CLASS 30 UNLESS OTHERWISE SPECIFIED.
3. SEE SEC. 7.05.
4. THE WORDS "PROPERTY OF KING COUNTY" SHALL BE OMITTED IF GRATE IS ON PRIVATE SYSTEM.
5. GRATES SHALL BE MIN 32 IN. CLEAR OF WHERE WHEELCHAIR RAMPS ARE FLUSH WITH PAVEMENT.
6. SEE THE WSDOT/APWA STANDARD SPECIFICATIONS SECTION 9–05.15 FOR METAL CASTINGS REQUIREMENTS.

King County Department of Transportation Road Services Division 2016 Design and Construction Standards

STANDARD GRATE FIG. 7-013

7-18

1 STANDARD GRATE
NOT TO SCALE

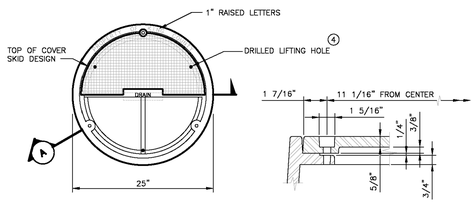

NOTES:

1. USE WITH THREE LOCKING BOLTS 5/8 IN.–11 NC STAINLESS TYPE 304 STEEL SOCKET HEAD (ALLEN HEAD) CAP SCREWS 2 IN. LONG. DRILL HOLES SPACED 120° AT 11 1/16 IN. RADIUS.
2. MATERIAL IS DUCTILE IRON ASTM A536 GRADE 80–55–06.
3. SEE SEC. 7.05.
4. DRILL THREE 1 IN. HOLES SPACED AT 120° AND 9 1/2 IN. RADIUS.
5. SEE THE WSDOT/APWA STANDARD SPECIFICATIONS SECTION 9–05.15 FOR METAL CASTINGS REQUIREMENTS.

King County Department of Transportation Road Services Division 2016 Design and Construction Standards

LOCKING MANHOLE COVER FIG. 7-022

7-27

2 LOCKING MANHOLE COVER
NOT TO SCALE

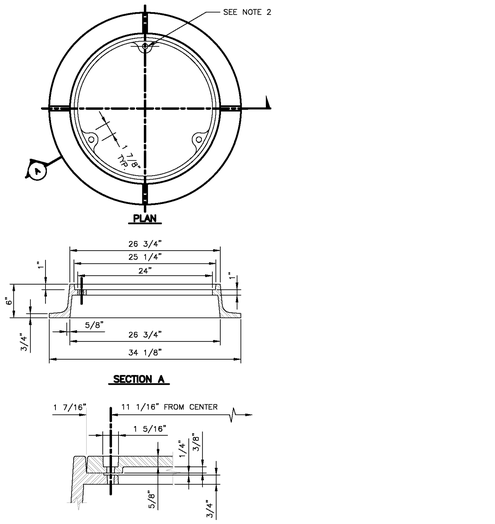

NOTES:

1. MATERIAL IS CAST IRON ASTM A48 CLASS 30.
2. DRILL AND TAP THREE 5/8 IN.–11 NC HOLES THROUGH FRAME AT 120° AND 11 1/16 IN. RADIUS.
3. SEE SEC. 7.05.
4. SEE THE WSDOT/APWA STANDARD SPECIFICATIONS SECTION 9–05.15 FOR METAL CASTINGS REQUIREMENTS.

King County Department of Transportation Road Services Division 2016 Design and Construction Standards

LOCKING MANHOLE FRAME FIG. 7-023

7-28

3 LOCKING MANHOLE FRAME
NOT TO SCALE

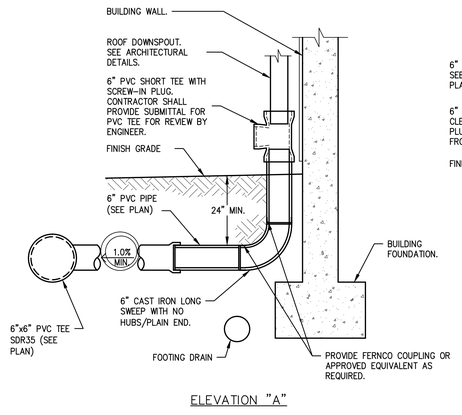

4 ROOF DOWNSPOUT CONNECTION
NOT TO SCALE

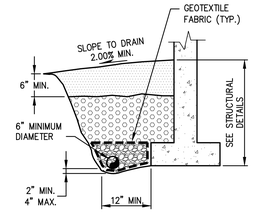

LEGEND

- SURFACE SEAL; NATIVE SOIL OR OTHER LOW PERMEABILITY MATERIAL.
- GRAVEL BACKFILL FOR WALLS; WSDOT STANDARD SPECIFICATIONS, SECTION 9–03.12(2).
- 6" MIN. COVER ON ALL SIDES WITH 3/4" WASHED PEA GRAVEL; WSDOT STANDARD SPECIFICATIONS, SECTION 9–03.12(4).
- FOUNDATION STRUCTURE
- DRAIN PIPE; PERFORATED RIGID PVC PIPE LAID WITH PERFORATIONS FACING DOWN; TIGHT JOINTED; WITH A POSITIVE GRADIENT CONNECTED TO CATCH BASIN. DO NOT USE FLEXIBLE CORRUGATED PLASTIC PIPE. DO NOT CONNECT BUILDING DOWNSPOUTS INTO FOOTING DRAIN.
- GEOTEXTILE FABRIC, MIRAFI 140N OR APPROVED EQUAL, WRAPPED ON ALL SIDES.

2 FOOTING DRAIN
NOT TO SCALE

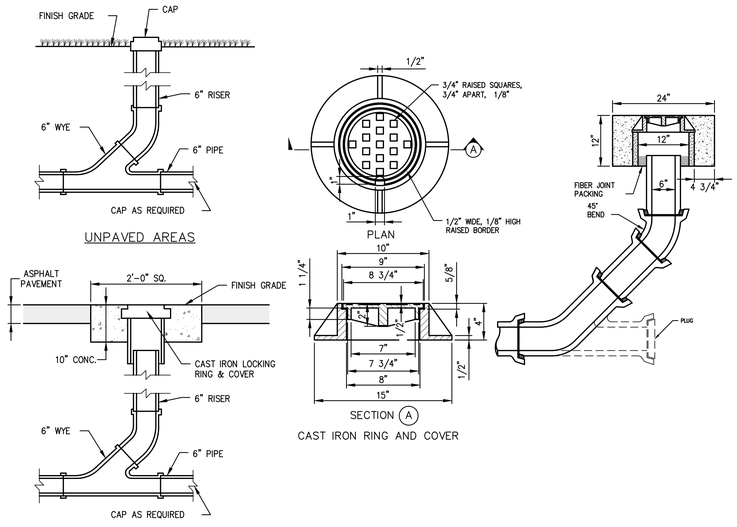

6 CLEANOUT
NOT TO SCALE

THESE DRAWINGS ARE NOT TO BE USED FOR CONSTRUCTION UNLESS SIGNED BY THE REVIEWING AGENCY

811 CALL 2 BUSINESS DAYS BEFORE YOU DIG 811 OR 1-800-424-5555

5 FOOTING DRAIN
NOT TO SCALE

HUTTEBALL + OREMUS architecture
4010 LAKE WASHINGTON BLVD NE
SUITE 320
KIRKLAND, WA 98033
425.828.8948
HOARCH.COM

ARCHITECT STAMP

CONSULTANT STAMP

JOSEPH B. MOON STATE OF WASHINGTON 36022 REGISTERED PROFESSIONAL ENGINEER
4/13/20

PROJECT INFORMATION

Inglemoor High School Concert Hall + Music Building

15500 Simonds Rd NE
Kenmore, WA 98028

NORTHSHORE SCHOOL DISTRICT No. 417

SCHOOL DISTRICT LOGO

Northshore School District

02.13.2019 SCHEMATIC DESIGN
04.08.2019 VALUE ENGINEERING
09.16.2019 SITE PLAN REVIEW
10.18.2019 DESIGN DEVELOPMENT
01.13.2020 CONSTRUCTABILITY REVIEW
03.23.2020 HEALTH DEPARTMENT PERMIT SUBMITTAL
04.13.2020 BID DOCUMENTS

BID DOCUMENTS

04.13.2020

PROJECT NUMBER: 1711

SHEET NAME

STORM DRAINAGE DETAILS

SHEET NUMBER

C5.02

Integrity Works
Consulting Engineers, LLC
170 W. Dayton St. Suite 204 Edmonds, WA 98020
O: 425.967.7913 C: 206.920.9410

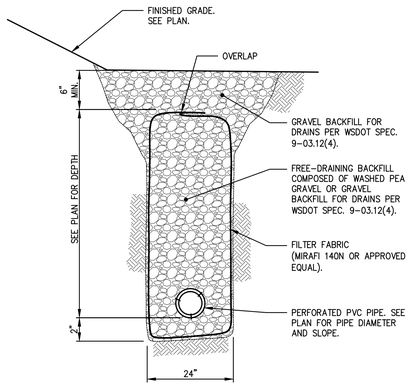

NOTE:
METHOD OF THE DRAIN INSTALLATION AND THE TRENCH SIDEWALL STABILITY SHOULD BE ASSESSED BY THE GEOTECHNICAL ENGINEER.

1 FRENCH DRAIN
NOT TO SCALE

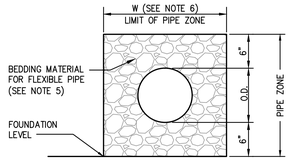

BEDDING FOR FLEXIBLE PIPE

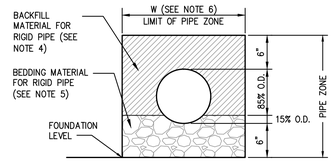

BEDDING FOR RIGID PIPE

NOTES:

1. PROVIDE UNIFORM SUPPORT UNDER BARRELS.
2. HAND TAMP UNDER HAUNCHES.
3. COMPACT BEDDING MATERIAL TO 95% MAX. DENSITY. HAND TAMP ONLY DIRECTLY OVER PIPE.
4. GRAVEL BACKFILL FOR PIPE ZONE BEDDING SHALL MEET WSDOT SPEC. SECTION 7-08.3(3).
5. PIPE BEDDING FOR FLEXIBLE PIPE SHALL CONSIST OF 3/4" CRUSHED GRAVEL PER WSDOT SPEC. SECTION 9-03.12(3).
6. SEE "EXCAVATION AND PREPARATION OF TRENCH" IN STORM SEWER SECTION OF THE STANDARD WSDOT/APWA SPECIFICATIONS FOR TRENCH WIDTH "W" AND TRENCHING OPTIONS. THE PIPE ZONE SHALL BE THE ACTUAL TRENCH WIDTH. THE MINIMUM TRENCH WIDTH SHALL BE 1-1/2 I.D. + 18".
7. TRENCH BACKFILL SHALL CONFORM TO "BACKFILLING SEWER TRENCHES" IN THE STORM SEWERS SECTION OF THE WSDOT/APWA STANDARD SPECIFICATIONS, EXCEPT THAT ROCKS OR LUMPS LARGER THAN 1" PER FOOT OF PIPE DIAMETER SHALL NOT BE USED IN THE BACKFILL MATERIAL.

PIPE	SIZE	MIN. DIST. BETWEEN BARRELS
CIRCULAR PIPE CONCRETE, LCPE, CMP (DIAMETER)	8" TO 24"	12"

2 PIPE BEDDING
NOT TO SCALE

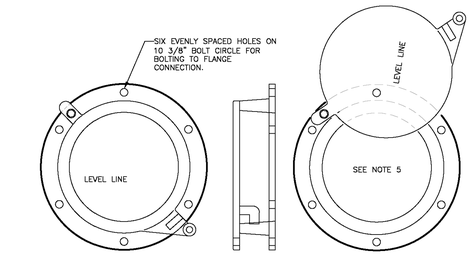

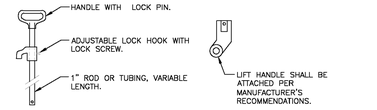

LIFT HANDLE

NOTES:

1. SHEAR GATE SHALL BE ALUMINUM ALLOY PER ASTM B-26-ZG-32a OR CAST IRON ASTM A48 CLASS 30B AS REQUIRED.
2. GATE SHALL BE 8 IN. DIAM. UNLESS OTHERWISE SPECIFIED.
3. GATE SHALL BE JOINED TO TEE SECTION BY BOLTING (THROUGH FLANGE), WELDING, OR OTHER SECURE MEANS.
4. LIFT ROD: AS SPECIFIED BY MFR. WITH HANDLE EXTENDING TO WITHIN ONE FOOT OF COVER AND ADJUSTABLE HOOK LOCK FASTENED TO FRAME OR UPPER HANDHOLD.
5. GATE SHALL NOT OPEN BEYOND THE CLEAR OPENING BY LIMITED HINGE MOVEMENT, STOP TAB, OR SOME OTHER DEVICE.
6. NEOPRENE RUBBER GASKET REQUIRED BETWEEN RISER MOUNTING FLANGE AND GATE FLANGE.
7. MATING SURFACES OF LID AND BODY TO BE MACHINED FOR PROPER FIT.
8. FLANGE MOUNTING BOLTS SHALL BE 3/8 IN. DIAM. STAINLESS STEEL.
9. ALTERNATE CLEANOUT/SHEAR GATES TO THE DESIGN SHOWN ARE ACCEPTABLE, PROVIDED THEY MEET THE MATERIAL SPECIFICATIONS ABOVE AND HAVE A SIX BOLT, 10 3/8 IN. BOLT CIRCLE FOR BOLTING TO THE FLANGE CONNECTION.
10. SEE THE WSDOT/APWA STANDARD SPECIFICATIONS SECTION 9-05.15 FOR METAL CASTINGS REQUIREMENTS.

King County Department of Transportation Road Services Division 2016 Design and Construction Standards

TEE SECTION SHEAR GATE DETAIL FIGL 7-026

7-31

3 TEE SECTION SHEAR GATE DETAIL
NOT TO SCALE

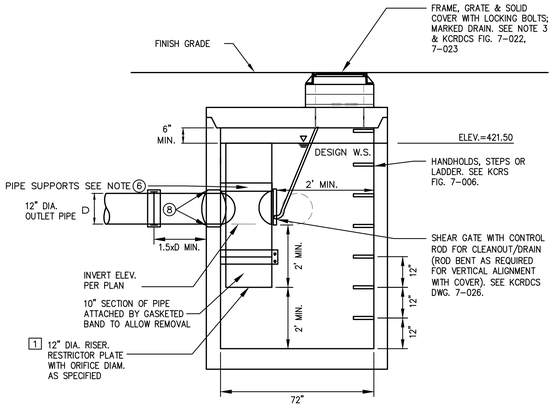

SECTION A-A
NTS

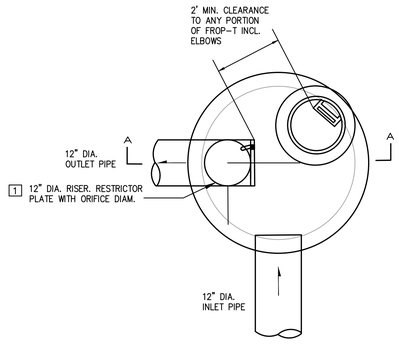

PLAN VIEW
NTS

ORIFICE TABLE		
ORIFICE NO.	ELEV.	DIA.
1	405.92	0.783 INCHES

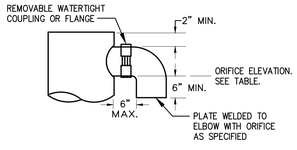

ELBOW RESTRICTOR DETAIL
N.T.S.

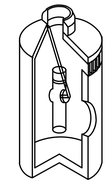

ISOMETRIC
N.T.S.

NOTES:

1. USE A MINIMUM OF A 72 IN. DIAM. TYPE 2 CATCH BASIN.
2. OUTLET CAPACITY: 100-YEAR DEVELOPED PEAK FLOW.
3. METAL PARTS: CORROSION RESISTANT. STAINLESS STEEL OR ALUMINIZED STEEL REQUIRED.
4. FRAME AND LADDER OR STEPS OFFSET SO:
   A. CLEANOUT GATE IS VISIBLE FROM TOP;
   B. CLIMB-DOWN SPACE IS CLEAR OF RISER AND CLEANOUT GATE;
   C. FRAME IS CLEAR OF CURB.
5. IF METAL OUTLET PIPE CONNECTS TO CEMENT CONCRETE PIPE, OUTLET PIPE TO HAVE SMOOTH O.D. EQUAL TO CONCRETE PIPE I.D. LESS 1/4 IN.
6. PROVIDE AT LEAST TWO 3" X 0.090 GAUGE SUPPORT BRACKET ANCHORED TO CONCRETE WALL. (MAXIMUM 3'-0" VERTICAL SPACING).
7. LOCATE ELBOW RESTRICTOR(S) AS NECESSARY TO PROVIDE MIN. CLEARANCE AS SHOWN.
8. PROVIDE WATER-TIGHT SEALANT.
9. TEE SHALL BE CONSTRUCTED OF ALUMINUM CMP OR ALUMINIZED STEEL CMP MEETING WSDOT/APWA STANDARDS.

4 FLOW CONTROL STRUCTURE
NOT TO SCALE

THESE DRAWINGS ARE NOT TO BE USED FOR CONSTRUCTION UNLESS SIGNED BY THE REVIEWING AGENCY

811 CALL 2 BUSINESS DAYS BEFORE YOU DIG 811 OR 1-800-424-5555

HUTTEBALL + OREMUS architecture
4010 LAKE WASHINGTON BLVD NE
SUITE 320
KIRKLAND, WA 98033
425.828.8948
HOARCH.COM

ARCHITECT STAMP

CONSULTANT STAMP

JOSEPH B. MOORE STATE OF WASHINGTON 36022 REGISTERED PROFESSIONAL ENGINEER
4/13/20

PROJECT INFORMATION

Inglemoor High School Concert Hall + Music Building

15500 Simonds Rd NE
Kenmore, WA 98028

NORTHSHORE SCHOOL DISTRICT No. 417

SCHOOL DISTRICT LOGO

Northshore School District

02.13.2019 SCHEMATIC DESIGN
04.08.2019 VALUE ENGINEERING
09.16.2019 SITE PLAN REVIEW
10.18.2019 DESIGN DEVELOPMENT
01.13.2020 CONSTRUCTABILITY REVIEW
03.23.2020 HEALTH DEPARTMENT PERMIT SUBMITTAL
04.13.2020 BID DOCUMENTS

BID DOCUMENTS

04.13.2020

PROJECT NUMBER: 1711

SHEET NAME

STORM DRAINAGE DETAILS

SHEET NUMBER

C5.03

Integrity Works
Consulting Engineers, LLC
170 W. Dayton St. Suite 204 Edmonds WA 98020
O: 425.967.7913 C: 206.920.9410

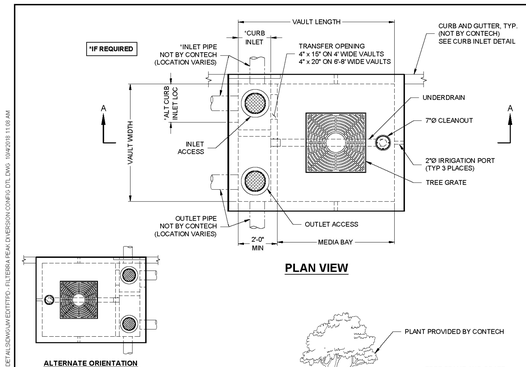

PLAN VIEW

ALTERNATE ORIENTATION

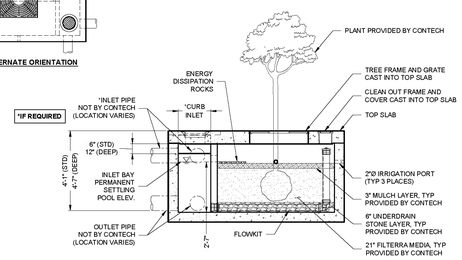

SECTION A-A
(STANDARD DEPTH SHOWN)

INTERNAL PIPE CONFIGURATION MAY VARY DEPENDING UPON OUTLET LOCATION.

FTPD STANDARD HEIGHT CONFIGURATION

DESIGNATION (OPTIONS: -P, -T, -PT)	AVAILABILITY	MEDIA BAY SIZE	VAULT SIZE (W x L)	WEIR LENGTH/ MAX CURB OPENING	*MAX BYPASS FLOW (CFS)	INLET/ OUTLET ACCESS DIA	TREE GRATE QTY & SIZE
FTPD0404	N/A CA	4 x 4	4 x 6	1'-8"	1.4	12"/12"	(1) 3' x 3'
FTPD04045	CA ONLY	4 x 4.5	4 x 6.5	1'-8"	1.4	12"/12"	(1) 3' x 3'
FTPD0406	N/A MID-ATL	4 x 6	4 x 8	1'-8"	1.4	12"/12"	(1) 3' x 3'
FTPD045058	MID-ATL ONLY	4.5 x 5.83	4.5 x 7.83	1'-8"	1.4	12"/12"	(1) 3' x 3'
FTPD0604	ALL	6 x 4	6 x 6	1'-8"	1.4	12"/12"	(1) 3' x 3'
FTPD0606	ALL	6 x 6	6 x 8	1'-8"	1.4	12"/12"	(1) 3' x 3'
FTPD0608	ALL	6 x 8	6 x 10	1'-8"	1.4	12"/12"	(1) 4' x 4'
FTPD0610	ALL	6 x 10	6 x 12	1'-8"	1.4	12"/12"	(1) 4' x 4'
FTPD0710	ALL	7 x 10	7 x 13	2'-6"	2.1	24"/24"	(1) 4' x 4'
FTPD08105	ALL	8 x 10.5	8 x 14	3'-0"	2.5	24"/24"	(1) 4' x 4'
FTPD08125	ALL	8 x 12.5	8 x 16	3'-0"	2.5	24"/24"	(2) 4' x 4'

N/A = NOT AVAILABLE

FTPD-D DEEP OPTION CONFIGURATION

DESIGNATION (OPTIONS: -P, -T, -PT)	AVAILABILITY	MEDIA BAY SIZE	VAULT SIZE (W x L)	WEIR LENGTH/ MAX CURB OPENING	*MAX BYPASS FLOW (CFS)	INLET/ OUTLET ACCESS DIA	TREE GRATE QTY & SIZE
FTPD0404-D	N/A CA	4 x 4	4 x 6	1'-8"	4.6	12"/12"	(1) 3' x 3'
FTPD04045-D	CA ONLY	4 x 4.5	4 x 6.5	1'-8"	4.6	12"/12"	(1) 3' x 3'
FTPD0406-D	N/A MID-ATL	4 x 6	4 x 8	1'-8"	4.6	12"/12"	(1) 3' x 3'
FTPD045058-D	MID-ATL ONLY	4.5 x 5.83	4.5 x 7.83	1'-8"	4.6	12"/12"	(1) 3' x 3'
FTPD0604-D	ALL	6 x 4	6 x 6	1'-8"	4.6	12"/12"	(1) 3' x 3'
FTPD0606-D	ALL	6 x 6	6 x 8	1'-8"	4.6	12"/12"	(1) 3' x 3'
FTPD0608-D	ALL	6 x 8	6 x 10	1'-8"	4.6	12"/12"	(1) 4' x 4'
FTPD0610-D	ALL	6 x 10	6 x 12	1'-8"	4.6	12"/12"	(1) 4' x 4'
FTPD0710-D	ALL	7 x 10	7 x 13	2'-6"	6.8	24"/24"	(1) 4' x 4'
FTPD08105-D	ALL	8 x 10.5	8 x 14	3'-0"	8.2	24"/24"	(1) 4' x 4'
FTPD08125-D	ALL	8 x 12.5	8 x 16	3'-0"	8.2	24"/24"	(2) 4' x 4'

N/A = NOT AVAILABLE

*MAX BYPASS FLOW IS INTERNAL WEIR FLOW . SITE SPECIFIC ANALYSIS IS REQUIRED TO DETERMINE CURB INLET FLOW CAPACITY

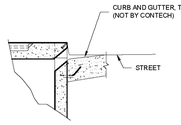

CURB INLET DETAIL

The design and information shown on this drawing is provided as a service to the project owner, engineer and contractors by Contech Engineered Solutions LLC or one of its affiliated companies (Contech). Neither this drawing, nor any part thereof, may be used, reproduced or modified in any manner without the prior written consent of Contech. Failure to comply is done at the user's own risk and Contech expressly disclaims any liability or responsibility for such use. If discrepancies between the supplied information and conditions upon which this drawing is based exist, advise Contech promptly so that revisions can be made. Contech accepts no liability for designs based on missing, incomplete or inaccurate information supplied by others.

filterra
THIS PRODUCT MAY BE COVERED BY ONE OR MORE OF THE FOLLOWING U.S. PATENTS: 7,425,262; 7,470,365; 7,704,393; 8,557,115; 8,992,765; 9,885,188; 9,957,703; 10,053,876. CANADIAN PATENTS PENDING.

CONTECH ENGINEERED SOLUTIONS LLC
www.ConTechES.com
9025 Centre Pointe Dr., Suite 400, West Chester, OH 45069
800-338-1122 513-645-7000 513-645-7993 FAX

FILTERRA PEAK DIVERSION (FTPD) CONFIGURATION DETAIL

1 FILTERRA PEAK DIVERSION DETAIL
NOT TO SCALE

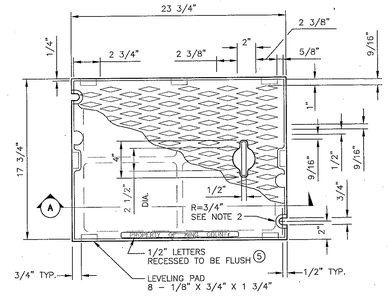

PLAN COVER

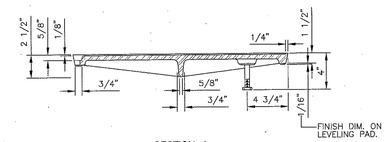

SECTION A

NOTES:

1. USE WITH FRAME (FIG. 7-014) DRILLED AND TAPPED FOR LOCKING BOLTS.
2. USE WITH TWO LOCKING BOLTS 5/8 IN.-11 NC STAINLESS STEEL TYPE 304 STEEL SOCKET HEAD (ALLEN HEAD) CAP SCREWS, MIN. 2 IN. LONG.
3. MATERIAL IS CAST IRON PER ASTM A48 CLASS 30.
4. SEE SEC. 7.05.
5. ⑤ THE WORDS "PROPERTY OF KING COUNTY" SHALL BE OMITTED IF COVER IS ON A PRIVATE SYSTEM.
6. SEE WSDOT/APWA STANDARD SPECIFICATIONS SECTION 9-05.15 FOR METAL CASTINGS REQUIREMENTS.

King County Department of Transportation Road Services Division 2016 Design and Construction Standards

SOLID COVER

FIG. 7-015

7-20

2 SOLID COVER
NOT TO SCALE

THESE DRAWINGS ARE NOT TO BE USED FOR CONSTRUCTION UNLESS SIGNED BY THE REVIEWING AGENCY

3 NOT USED
NOT TO SCALE

811 CALL 2 BUSINESS DAYS BEFORE YOU DIG 811 OR 1-800-424-5555

4 NOT USED
NOT TO SCALE

5 NOT USED
NOT TO SCALE

HUTTEBALL + OREMUS architecture
4010 LAKE WASHINGTON BLVD NE
SUITE 320
KIRKLAND, WA 98033
425.828.8948
HOARCH.COM

ARCHITECT STAMP

CONSULTANT STAMP

JOSEPH B. MOON STATE OF WASHINGTON 36022 REGISTERED PROFESSIONAL ENGINEER
4/13/20

PROJECT INFORMATION

Inglemoor High School Concert Hall + Music Building

15500 Simonds Rd NE
Kenmore, WA 98028

NORTHSHORE SCHOOL DISTRICT No. 417

SCHOOL DISTRICT LOGO

Northshore School District

02.13.2019 SCHEMATIC DESIGN
04.08.2019 VALUE ENGINEERING
09.16.2019 SITE PLAN REVIEW
10.18.2019 DESIGN DEVELOPMENT
01.13.2020 CONSTRUCTABILITY REVIEW
03.23.2020 HEALTH DEPARTMENT PERMIT SUBMITTAL
04.13.2020 BID DOCUMENTS

BID DOCUMENTS

04.13.2020

PROJECT NUMBER: 1711

SHEET NAME

STORM DRAINAGE DETAILS

SHEET NUMBER

C5.04

Integrity Works
Consulting Engineers, LLC
170 W Dayton St, Suite 204 Edmonds WA 98020
O: 425.967.7913 C: 206.920.9410

I:\STORM\WATERCOMM\PROFILES\FILTERRA\STANDARD DRAWINGS\FTPD - FILTERRA PEAK DIVERSION\FTPD-PLAN VIEW.DWG, 10/4/2019 11:08 AM

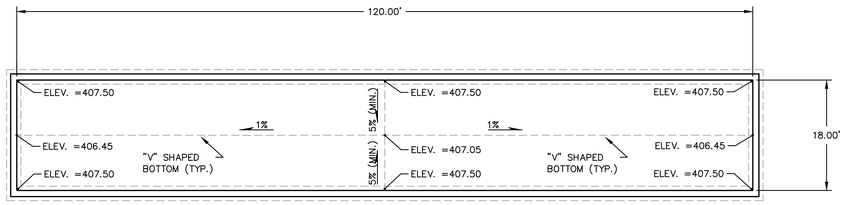

VAULT FLOOR PLAN
SCALE: 1" = 10'

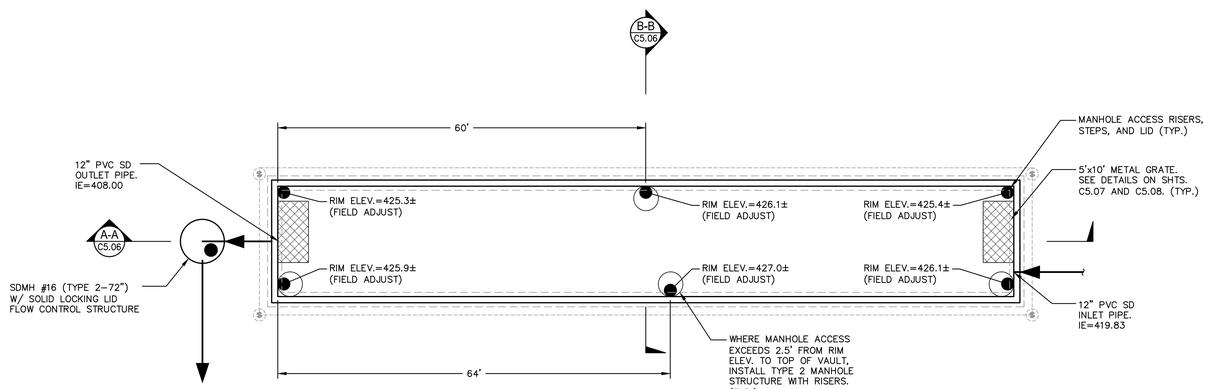

VAULT LID PLAN
SCALE: 1" = 10'

1 STORM VAULT DETAILS
SCALE AS SHOWN

THESE DRAWINGS ARE NOT TO BE USED FOR CONSTRUCTION UNLESS SIGNED BY THE REVIEWING AGENCY

811 CALL 2 BUSINESS DAYS BEFORE YOU DIG 811 OR 1-800-424-5555

HUTTEBALL + OREMUS architecture
4010 LAKE WASHINGTON BLVD NE
SUITE 320
KIRKLAND, WA 98033
425.828.8948
HOARCH.COM

ARCHITECT STAMP

CONSULTANT STAMP

JOSEPH B. MOON
STATE OF WASHINGTON
36022
REGISTERED
PROFESSIONAL ENGINEER
4/13/20

PROJECT INFORMATION

Inglemoor High School Concert Hall + Music Building

15500 Simonds Rd NE
Kenmore, WA 98028

NORTHSHORE SCHOOL DISTRICT No. 417

SCHOOL DISTRICT LOGO

Northshore School District

02.13.2019 SCHEMATIC DESIGN
04.08.2019 VALUE ENGINEERING
09.16.2019 SITE PLAN REVIEW
10.18.2019 DESIGN DEVELOPMENT
01.13.2020 CONSTRUCTABILITY REVIEW
03.23.2020 HEALTH DEPARTMENT PERMIT SUBMITTAL
04.13.2020 BID DOCUMENTS

BID DOCUMENTS

04.13.2020

PROJECT NUMBER: 1711

SHEET NAME

STORM DRAINAGE DETAILS

SHEET NUMBER

C5.05

Integrity Works
Consulting Engineers, LLC
170 W. Dayton St. Suite 204 Edmonds WA 98020
O. 425.967.7913 C. 206.920.9410

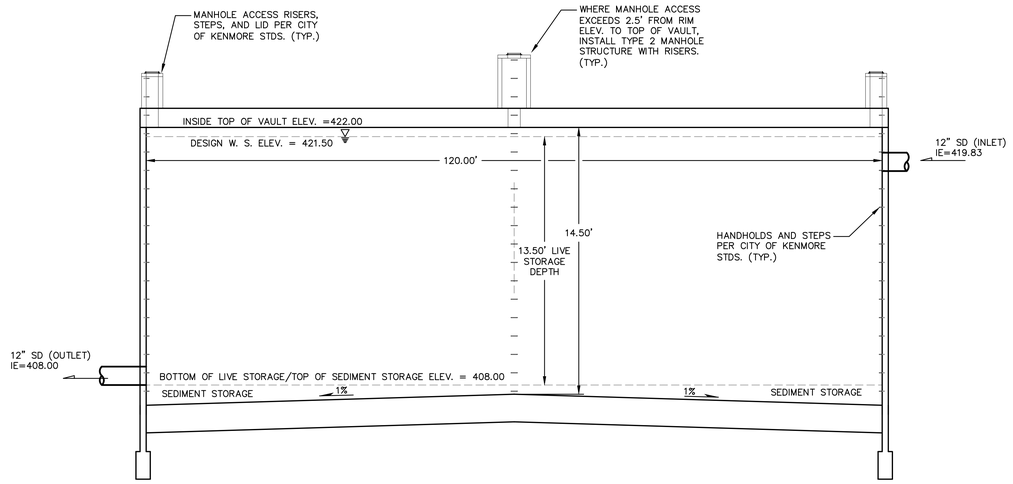

SECTION A–A
SCALE: 1" = 10'

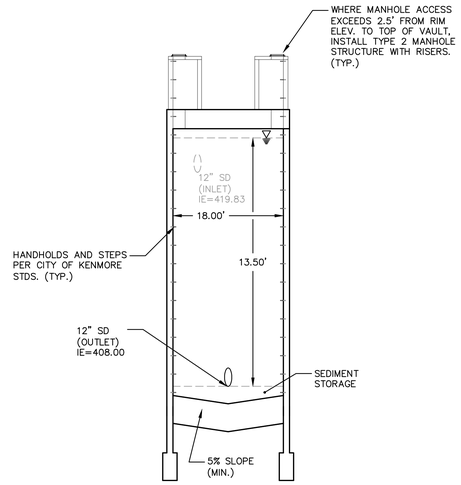

SECTION B–B
SCALE: 1" = 10'

1 STORM VAULT SECTIONS
SCALE AS SHOWN

THESE DRAWINGS ARE NOT TO BE USED FOR CONSTRUCTION UNLESS SIGNED BY THE REVIEWING AGENCY

811 CALL 2 BUSINESS DAYS BEFORE YOU DIG 811 OR 1-800-424-5555

HUTTEBALL + OREMUS architecture
4010 LAKE WASHINGTON BLVD NE
SUITE 320
KIRKLAND, WA 98033
425.828.8948
HOARCH.COM

ARCHITECT STAMP

CONSULTANT STAMP

JOSEPH B. MOON STATE OF WASHINGTON 36022 REGISTERED PROFESSIONAL ENGINEER
4/13/20

PROJECT INFORMATION

Inglemoor High School Concert Hall + Music Building

15500 Simonds Rd NE
Kenmore, WA 98028

NORTHSHORE SCHOOL DISTRICT No. 417

SCHOOL DISTRICT LOGO

Northshore School District

02.13.2019 SCHEMATIC DESIGN
04.08.2019 VALUE ENGINEERING
09.16.2019 SITE PLAN REVIEW
10.18.2019 DESIGN DEVELOPMENT
01.13.2020 CONSTRUCTABILITY REVIEW
03.23.2020 HEALTH DEPARTMENT PERMIT SUBMITTAL
04.13.2020 BID DOCUMENTS

BID DOCUMENTS

04.13.2020

PROJECT NUMBER: 1711

SHEET NAME

STORM DRAINAGE DETAILS

SHEET NUMBER

C5.06

Integrity Works
Consulting Engineers, LLC
170 W. Dayton St. Suite 204 Edmonds WA 98020
O: 425.967.7913 C: 206.920.9410

S1/2, NW1/4 & N1/2 SW1/4, SEC.18, T.26N., R.5E., W.M.

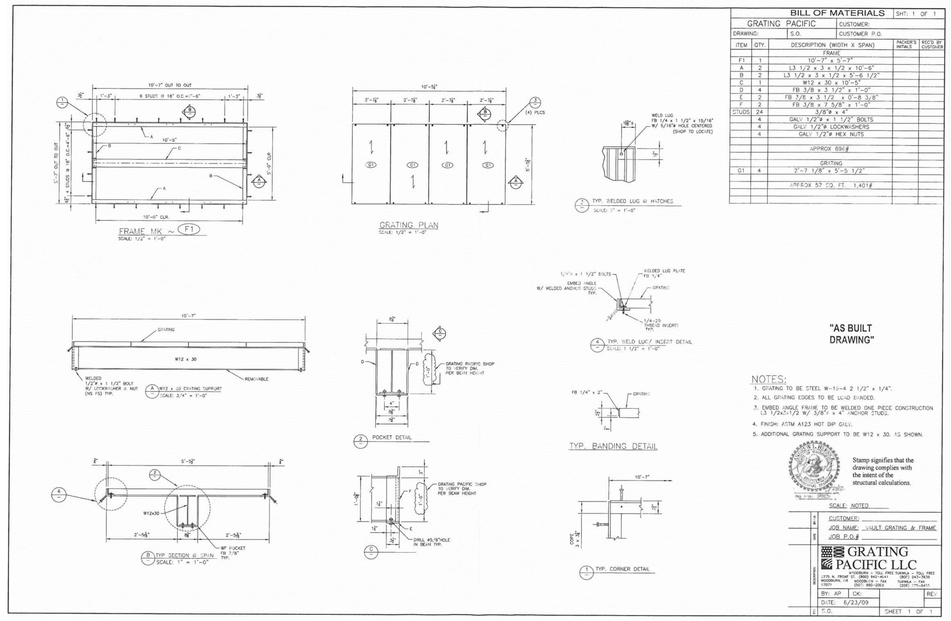

1 STORM VAULT DETAILS
SCALE AS SHOWN

THESE DRAWINGS ARE NOT TO BE USED FOR CONSTRUCTION UNLESS SIGNED BY THE REVIEWING AGENCY

811 CALL 2 BUSINESS DAYS BEFORE YOU DIG 811 OR 1-800-424-5555

HUTTEBALL + OREMUS architecture
4010 LAKE WASHINGTON BLVD NE
SUITE 320
KIRKLAND, WA 98033
425.828.8948
HOARCH.COM

ARCHITECT STAMP

CONSULTANT STAMP

JOSEPH B. MOON STATE OF WASHINGTON 36022 REGISTERED PROFESSIONAL ENGINEER
4/13/20

PROJECT INFORMATION

Inglemoor High School Concert Hall + Music Building

15500 Simonds Rd NE
Kenmore, WA 98028

NORTHSHORE SCHOOL DISTRICT No. 417

SCHOOL DISTRICT LOGO

Northshore School District

02.13.2019 SCHEMATIC DESIGN
04.08.2019 VALUE ENGINEERING
09.16.2019 SITE PLAN REVIEW
10.18.2019 DESIGN DEVELOPMENT
01.13.2020 CONSTRUCTABILITY REVIEW
03.23.2020 HEALTH DEPARTMENT PERMIT SUBMITTAL
04.13.2020 BID DOCUMENTS

BID DOCUMENTS

04.13.2020

PROJECT NUMBER: 1711

SHEET NAME

STORM DRAINAGE DETAILS

SHEET NUMBER

C5.07

Integrity Works
Consulting Engineers, LLC
170 W. Dayton St. Suite 204 Edmonds WA 98020
O: 425.967.7913 C: 206.920.9410

Heavy Duty Grating

Use this table when evaluating spans & loads for the following types of Heavy Duty steel grating:

19-W-4 and 19-W-2

19 Space (1-3/16") Load Table



Bearing Bar Size (inches)	Section Modulus per foot of width	Moment of Inertia per foot of width	Approx. Weight psf	Maximum Safe Span: H-25 Load	H-20 Load	H-15 Load	Auto Traffic	5 Ton Forklift	3 Ton Forklift	1 Ton Forklift
1 x 1/4	0.421	0.211	9.7	1'-0"	0'-10"	0'-9"	1'-0"	0'-7"	0'-6"	0'-7"
1 x 5/16	0.526	0.263	11.9	1'-1"	1'-0"	0'-10"	1'-2"	0'-8"	0'-7"	0'-8"
1 x 3/8	0.632	0.316	14.0	1'-2"	1'-1"	0'-11"	1'-4"	0'-9"	0'-8"	0'-9"
1-1/4 x 1/4	0.658	0.411	11.9	1'-3"	1'-1"	1'-0"	1'-5"	0'-9"	0'-8"	0'-10"
1-1/4 x 5/16	0.822	0.514	14.5	1'-4"	1'-3"	1'-1"	1'-8"	0'-10"	0'-9"	1'-0"
1-1/4 x 3/8	0.987	0.617	17.2	1'-6"	1'-4"	1'-2"	1'-11"	1'-0"	0'-10"	1'-2"
1-1/2 x 1/4	0.947	0.711	14.0	1'-6"	1'-4"	1'-2"	1'-11"	0'-11"	0'-10"	1'-1"
1-1/2 x 5/16	1.184	0.888	17.2	1'-8"	1'-6"	1'-4"	2'-3"	1'-1"	0'-11"	1'-4"
1-1/2 x 3/8	1.421	1.066	20.4	1'-10"	1'-8"	1'-6"	2'-6"	1'-2"	1'-1"	1'-7"
1-3/4 x 1/4	1.289	1.128	16.2	1'-9"	1'-7"	1'-5"	2'-5"	1'-2"	1'-0"	1'-5"
1-3/4 x 5/16	1.612	1.410	19.9	1'-11"	1'-9"	1'-7"	2'-11"	1'-4"	1'-3"	1'-9"
1-3/4 x 3/8	1.934	1.692	23.7	2'-2"	1'-11"	1'-9"	3'-2"	1'-6"	1'-5"	2'-1"
2 x 1/4	1.684	1.684	18.3	2'-0"	1'-10"	1'-8"	3'-1"	1'-4"	1'-3"	1'-10"
2 x 5/16	2.105	2.105	22.6	2'-3"	2'-1"	1'-11"	3'-6"	1'-7"	1'-6"	2'-4"
2 x 3/8	2.526	2.526	26.9	2'-6"	2'-4"	2'-2"	3'-10"	1'-10"	1'-9"	2'-9"
2-1/4 x 1/4	2.132	2.398	20.4	2'-3"	2'-1"	1'-11"	3'-9"	1'-7"	1'-6"	2'-4"
2-1/4 x 5/16	2.664	2.998	25.3	2'-7"	2'-5"	2'-3"	4'-2"	1'-11"	1'-10"	2'-11"
2-1/4 x 3/8	3.197	3.597	30.1	2'-10"	2'-8"	2'-7"	4'-5"	2'-2"	2'-2"	3'-5"
2-1/2 x 1/4	**2.632**	**3.289**	**22.6**	**2'-6"**	**2'-4"**	**2'-3"**	**4'-4"**	**1'-10"**	**1'-10"**	**2'-10"**
2-1/2 x 5/16	3.289	4.112	28.0	2'-11"	2'-9"	2'-7"	4'-8"	2'-3"	2'-3"	3'-6"
2-1/2 x 3/8	3.947	4.934	33.3	3'-4"	3'-2"	3'-0"	4'-11"	2'-7"	2'-7"	4'-2"
3 x 1/4	3.789	5.684	26.9	3'-3"	3'-1"	2'-11"	5'-2"	2'-6"	2'-6"	4'-1"
3 x 5/16	4.737	7.105	33.3	3'-9"	3'-7"	3'-6"	5'-7"	3'-0"	3'-1"	4'-9"
3 x 3/8	5.684	8.526	39.8	4'-4"	4'-2"	4'-1"	5'-11"	3'-7"	3'-8"	5'-1"
3-1/2 x 1/4	5.158	9.026	31.2	4'-0"	3'-10"	3'-9"	6'-0"	3'-3"	3'-4"	5'-2"
3-1/2 x 5/16	6.447	11.283	38.7	4'-9"	4'-8"	4'-7"	6'-6"	4'-0"	4'-1"	5'-7"
3-1/2 x 3/8	7.737	13.539	46.2	5'-0"	5'-0"	5'-0"	6'-11"	4'-8"	4'-10"	5'-11"
4 x 1/4	6.737	13.474	35.5	4'-11"	4'-10"	4'-9"	6'-11"	4'-2"	4'-3"	5'-11"
4 x 5/16	8.421	16.842	44.1	5'-5"	5'-5"	5'-5"	7'-5"	5'-1"	5'-2"	6'-4"
4 x 3/8	10.105	20.211	52.7	5'-8"	5'-8"	5'-9"	7'-11"	5'-6"	5'-8"	6'-9"
4-1/2 x 1/4	8.526	19.184	39.8	5'-7"	5'-7"	5'-8"	7'-9"	5'-1"	5'-4"	6'-8"
4-1/2 x 5/16	10.658	23.980	49.4	6'-0"	6'-0"	6'-1"	8'-4"	5'-10"	6'-0"	7'-2"
4-1/2 x 3/8	12.789	28.776	59.1	6'-5"	6'-5"	6'-5"	8'-11"	6'-2"	6'-4"	7'-7"
5 x 1/4	10.526	26.316	44.1	6'-3"	6'-3"	6'-3"	8'-8"	6'-0"	6'-2"	7'-5"
5 x 3/8	15.789	39.474	65.5	7'-1"	7'-1"	7'-2"	9'-11"	6'-11"	7'-1"	8'-6"
5 x 1/2	21.053	52.632	87.0	7'-10"	7'-10"	7'-11"	10'-11"	7'-7"	7'-9"	9'-4"
6 x 1/4	15.158	45.474	52.7	7'-5"	7'-5"	7'-6"	10'-4"	7'-3"	7'-5"	8'-11"
6 x 3/8	22.737	68.211	78.4	8'-6"	8'-6"	8'-7"	11'-10"	8'-3"	8'-6"	10'-2"
6 x 1/2	30.316	90.947	104.2	9'-4"	9'-4"	9'-5"	13'-1"	9'-1"	9'-4"	11'-2"
7 x 1/4	20.632	72.211	61.2	8'-8"	8'-8"	8'-9"	12'-1"	8'-5"	8'-8"	10'-4"
7 x 3/8	30.947	108.316	91.3	9'-11"	9'-11"	10'-0"	13'-10"	9'-8"	9'-11"	11'-10"
7 x 1/2	41.263	144.421	121.4	10'-10"	10'-11"	11'-0"	15'-3"	10'-7"	10'-11"	13'-1"

Welded Heavy Duty Gratings

are designed to service applications subject to heavy rolling and static loads such as highways, plant floors, loading docks, inlet covers, and airports. Since conditions can range from smaller forklift to large truck or aircraft traffic, heavy duty gratings are manufactured in a wide range of bar sizes and spacings.



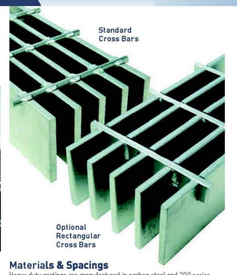

Design Criteria

Vehicular loads are designed in conformance with current AASHTO specifications for classifications H-15 through H-25. Automobile and forklift loads are similarly evaluated with loads calculated and distributed in accordance with the "Maximum Traffic Conditions" presented on page 37. If your application is not adequately addressed by these load conditions, please contact our Engineering Department and we will gladly assist in the selection of an appropriate heavy duty grating for your specific need.

Materials & Spacings

Heavy duty gratings are manufactured in carbon steel and 300 series stainless steels. Carbon steel products are available bare (no finish), painted with manufacturers standard paint, or hot dip galvanized.

Stainless steel products are available mill finish, commercially cleaned, or electro-polished.

Below you will find a table of spacings for our most popular products.

Table of Spacings

15-W-4	15/16"	Bearing Bars at 15/16" O.C. Cross Bars at 4" O.C.	15-W-2	15/16"	Bearing Bars at 15/16" O.C. Cross Bars at 2" O.C.
19-W-4	1- 3/16"	**Bearing Bars at 1-3/16" O.C. Cross Bars at 4" O.C.**	19-W-2	1- 3/16"	Bearing Bars at 1-3/16" O.C. Cross Bars at 2" O.C.
22-W-4	1-3/8"	Bearing Bars at 1-3/8" O.C. Cross Bars at 4" O.C.	22-W-2	1- 3/8"	Bearing Bars at 1-3/8" O.C. Cross Bars at 2" O.C.
30-W-4	1-7/8"	Bearing Bars at 1-7/8" O.C. Cross Bars at 4" O.C.	30-W-2	1-7/8"	Bearing Bars at 1-7/8" O.C. Cross Bars at 2" O.C.
38-W-4	2-3/8"	Bearing Bars at 2-3/8" O.C. Cross Bars at 4" O.C.	38-W-2	2-3/8"	Bearing Bars at 2-3/8" O.C. Cross Bars at 2" O.C.

Maximum Traffic Conditions	Wheel Load (lbs) (121 psi load + 30% impact)	Load Distribution: Parallel with Axle	Load Distribution: Perpendicular to Axle
H-25 Truck Traffic: 40,000 lb. Axle Load Dual Wheels Modified AASHTO H-25	28,000	2 (C)* x 25"	25"
H-20 Truck Traffic: 32,000 lb. Axle Load Dual Wheels Modified AASHTO H-20	20,800	2 (C)* x 20"	20"
H-15 Truck Traffic: 24,000 lb. Axle Load Dual Wheels Modified AASHTO H-15	15,600	2 (C)* x 15"	15"
Automobile Automobile Traffic: 6,322 lb. Vehicle 5,578 lb. Load 60% Drive Axle Load	3,861	2 (C)* x 9"	9"
5 Ton Forklift 10,000 lb. Cap. Lift Truck 14,400 lb. Vehicle 24,400 lb. Total Load 85% Drive Axle Load	13,480	2 (C)* x 11"	11"
3 Ton Forklift 6,000 lb. Cap. Lift Truck 12,000 lb. Vehicle 18,000 lb. Total Load 85% Drive Axle Load	8,730	2 (C)* x 7"	7"
1 Ton Forklift 2,000 lb. Cap. Lift Truck 4,500 lb. Vehicle 6,500 lb. Total Load 85% Drive Axle Load	3,425	2 (C)* x 4"	4"

*C = Center-to-center spacing of bearing bars.

Allowable stress = 20,000 psi
Modulus of elasticity = 29,000,000 psi

Bearing Bar Selection

Once the bar spacing is selected, the bearing bar size must be specified based upon the load and unsupported clear span to be served. The tables on pages 38-42 provide the maximum clear span for our most popular products based on the traffic conditions defined on this page. These tables incorporate strict limitations where design deflection shall not exceed the lesser of L/400 or .125" for the spans indicated.

Cross Bar Selection

While bearing bar selection is critical for specifying a proper heavy duty grating, the life cycle of your installation will often be influenced by the selection of the appropriate cross bar. The table below details the variety of cross bar sizes available.

The cross bars listed for Standard Loads are the customary twisted square or round cross bars supplied by Grating Pacific for a particular bearing bar size and spacing. These sizes have been selected to maximize manufacturing efficiency and are best used when the grating is subject to intermittent traffic with occasional full capacity loading.

The cross bars listed for Severe Loads are optional and will provide superior durability when gratings are subject to intense, continuous, or repetitious traffic. Ideal for trench covers, highways, and inlet grates, these cross bars enhance lateral stiffness thereby extending the service life of the grating. When specifying gratings with bearing bars centered at 1-3/8", 1-7/8", or 2-3/8" on center, consideration of Severe Loading cross bars is highly recommended.

Note: In the event that a cross bar size is not specified, the cross bar shall be selected at the discretion of the manufacturer.

Heavy Duty Grating Cross Bars

Bearing Bar Size		BB Centers 15/16", 1-3/16", & 1-3/8"		BB Centers 1-7/8" & 2-3/8"	
Thickness	Depth	Standard Loads	Severe Loads	Standard Loads	Severe Loads
1/4"	1" - 2 1/2"	5/16" Twisted	5/16" Twisted	5/16" Twisted	5/16" Twisted
5/16"	1" - 2 1/2"	5/16" Twisted	5/16" Twisted	5/16" Twisted	5/16" Twisted
3/8"	1" - 2 1/2"	5/16" Twisted	5/16" Twisted	5/16" Twisted	5/16" Twisted
1/4"	3" - 5"	5/16" Twisted	1" x 1/4"	3/8" Round	1" x 1/4"
5/16" - 1/2"	3" - 5"	3/8" Round	1" x 3/8"	7/16" Round	1" x 3/8"
1/4"	5 1/2" - 7"	3/8" Round	1 1/4" x 1/4"	7/16" Round	1 1/4" x 1/4"
5/16" - 1/2"	5 1/2" - 7"	3/8" Round	1 1/4" x 3/8"	7/16" Round	1 1/4" x 3/8"

The sizes shown above are listed as minimums. Twisted and round cross bars are typically interchangeable and, unless otherwise specified, may be substituted at the discretion of the manufacturer. In substitution, the cross sectional area of the alternative cross bar shall equal or exceed the minimum size listed above.

Banding

Heavy duty gratings are commonly subjected to shock and impact loads and it is highly recommended that all open ends be banded. The welded band bar helps distribute impact loads and minimizes distortion when subjected to repetitive traffic patterns. Banding details can be found on page 58.



Serrated Surface

Optional serrated bearing bars enhance skid-resistance. Consider this surface for applications subject to the accumulation of liquids or lubricants or inclined installations.



How to Specify Heavy Duty Bar Grating

1. Select type of grating
   - **"W"** for welded steel grating
   - **"WS"** for welded stainless steel grating
2. Select bar spacing from table on page 36
3. Select bearing bar size from tables on pages 38-42
4. Specify cross bar size from selection table above
5. Specify plain or serrated surface
6. Specify banding and any additional trim required
7. Specify finish
   - Bare steel (no finish)
   - Painted (red, black, silver, other)
   - Hot dip galvanized (per ASTM A-123)
   - Other
8. Specify fasteners (if required) – see page 59

1 STORM VAULT DETAILS
SCALE AS SHOWN

THESE DRAWINGS ARE NOT TO BE USED FOR CONSTRUCTION UNLESS SIGNED BY THE REVIEWING AGENCY

811 CALL 2 BUSINESS DAYS BEFORE YOU DIG 811 OR 1-800-424-5555

HUTTEBALL + OREMUS architecture
4010 LAKE WASHINGTON BLVD NE
SUITE 320
KIRKLAND, WA 98033
425.828.8948
HOARCH.COM

ARCHITECT STAMP

CONSULTANT STAMP

JOSEPH B. MOON STATE OF WASHINGTON 36022 REGISTERED PROFESSIONAL ENGINEER
4/13/20

PROJECT INFORMATION

Inglemoor High School Concert Hall + Music Building

15500 Simonds Rd NE
Kenmore, WA 98028

NORTHSHORE SCHOOL DISTRICT No. 417

SCHOOL DISTRICT LOGO

Northshore School District

02.13.2019	SCHEMATIC DESIGN
04.08.2019	VALUE ENGINEERING
09.16.2019	SITE PLAN REVIEW
10.18.2019	DESIGN DEVELOPMENT
01.13.2020	CONSTRUCTABILITY REVIEW
03.23.2020	HEALTH DEPARTMENT PERMIT SUBMITTAL
04.13.2020	BID DOCUMENTS

BID DOCUMENTS

04.13.2020

PROJECT NUMBER: 1711

SHEET NAME

STORM DRAINAGE DETAILS

SHEET NUMBER

C5.08

Integrity Works
Consulting Engineers, LLC
170 W. Dayton St. Suite 204 Edmonds, WA 98020
O: 425.967.7913 C: 206.920.9410

GENERAL PAVING NOTES

1. ALL CURBS, PAVEMENTS, SIDEWALKS, DITCHES, AND MANHOLES SHALL BE CLEANED OF DIRT AND DEBRIS.
2. ALL FRAMES, COVERS, AND VALVE BOXES SHALL BE ADJUSTED TO FINAL GRADE.
3. FINAL PAVING SHALL NOT COMMENCE UNTIL ALL UTILITIES UNDER PAVED AREAS ARE INSTALLED AND APPROVED.
4. ASPHALT PAVING SHALL NOT BE PLACED PRIOR TO BASE COURSE AND SUBGRADE APPROVAL BY THE GEOTECHNICAL ENGINEER.
5. PROVIDE POSITIVE DRAINAGE OF ALL AREAS DISTURBED BY CONSTRUCTION. MINIMUM SLOPE IN PAVED AREAS IS 1 PERCENT. MINIMUM SLOPE IN LANDSCAPE AREAS IS 2 PERCENT UNLESS OTHERWISE NOTED. MAXIMUM SLOPE ON EARTH BANKS IS 2(H):1(V).
6. WHEN TYING INTO EXISTING PAVEMENT, SAWCUT EXISTING PAVING WITH CLEAN, STRAIGHT AND VERTICAL JOINT. WHEN REMOVING EXISTING CURB OR SIDEWALK, REMOVE TO THE NEAREST JOINT.
7. SEE LANDSCAPE ARCHITECTURAL PLANS FOR CONCRETE WALK FINISH AND JOINT/SCORING PATTERNS.
8. SEE LANDSCAPE AND ELECTRICAL PLANS FOR LOCATIONS OF SLEEVES AND CONDUITS. CONTRACTOR SHALL COORDINATE TIMING OF SLEEVE INSTALLATION WITH PAVING CONTRACTOR. TRENCHING THROUGH NEW PAVEMENT SHALL NOT BE ALLOWED.
9. ALL PARKING STALL STRIPES SHALL BE 4 INCH WIDE SOLID WHITE.

PAVING KEY NOTES

1. CONCRETE VERTICAL CURB (TYP.) (3/C6.02)
2. CONCRETE WHEEL STOPS (TYP.) (5/C6.02)
3. CONCRETE CURB SHALL BE FLUSH WITH ASPHALT PAVEMENT AND CONCRETE WALK. INSTALL DETECTABLE WARNING SURFACE WHERE SHOWN ON THE PLANS (TYP.). (2/C6.04)
4. CEMENT CONCRETE WALK (TYP.) (1/C6.03)
5. CEMENT CONCRETE PAVEMENT (TYP.) (6/C6.02)
6. NOT USED
7. NOT USED
8. CURB RAMP. CONSTRUCT AS SHOWN ON THE PLANS. (2,3,4/C6.03)(1,2/C6.04)
9. CONTRACTOR SHALL RESTORE/LENGTHEN EX. ASPHALT SPEED BUMP UPON COMPLETION OF STORM CONSTRUCTION TO DIRECT DRAINAGE TO NEW CATCH BASIN. CONTRACTOR SHALL COORD. WORK W/ ENGINEER.
10. NOT USED
11. TYPE 31 BEAM GUARDRAIL (TYP.) (1/C6.05)(1/C6.06)
12. GUARDRAIL TYPE 10 ANCHOR (2/C6.05)(2/C6.06)
13. SAWCUT EX. PAVEMENT WITH NEAT EDGE. MATCH EX. ASPHALT PAVEMENT. APPLY JOINT SEALANT.
14. PROVIDE MIN. 2' CLEAR FROM BACK OF CURB TO FACE OF GUARDRAIL (TYP.)
15. CONTRACTOR SHALL ADJUST CONCRETE VERTICAL CURB CONSTRUCTION TO LOCATE EXISTING POWER POLE WITHIN NEW PLANTER ISLAND. COORDINATE WORK WITH ENGINEER.
16. CONTRACTOR SHALL REPLACE/RESTORE EXISTING ASPHALT PAVING AND CONCRETE CURBS AS NECESSARY DUE TO UTILITY CONSTRUCTION.

PAVING LEGEND

- STANDARD DUTY ASPHALT CONCRETE PAVEMENT (1/C6.02)
- HEAVY DUTY ASPHALT CONCRETE PAVEMENT (2/C6.02)
- CEMENT CONCRETE PAVEMENT/WALK (6/C6.02)(1/C6.03)

SCALE: 1" = 30'

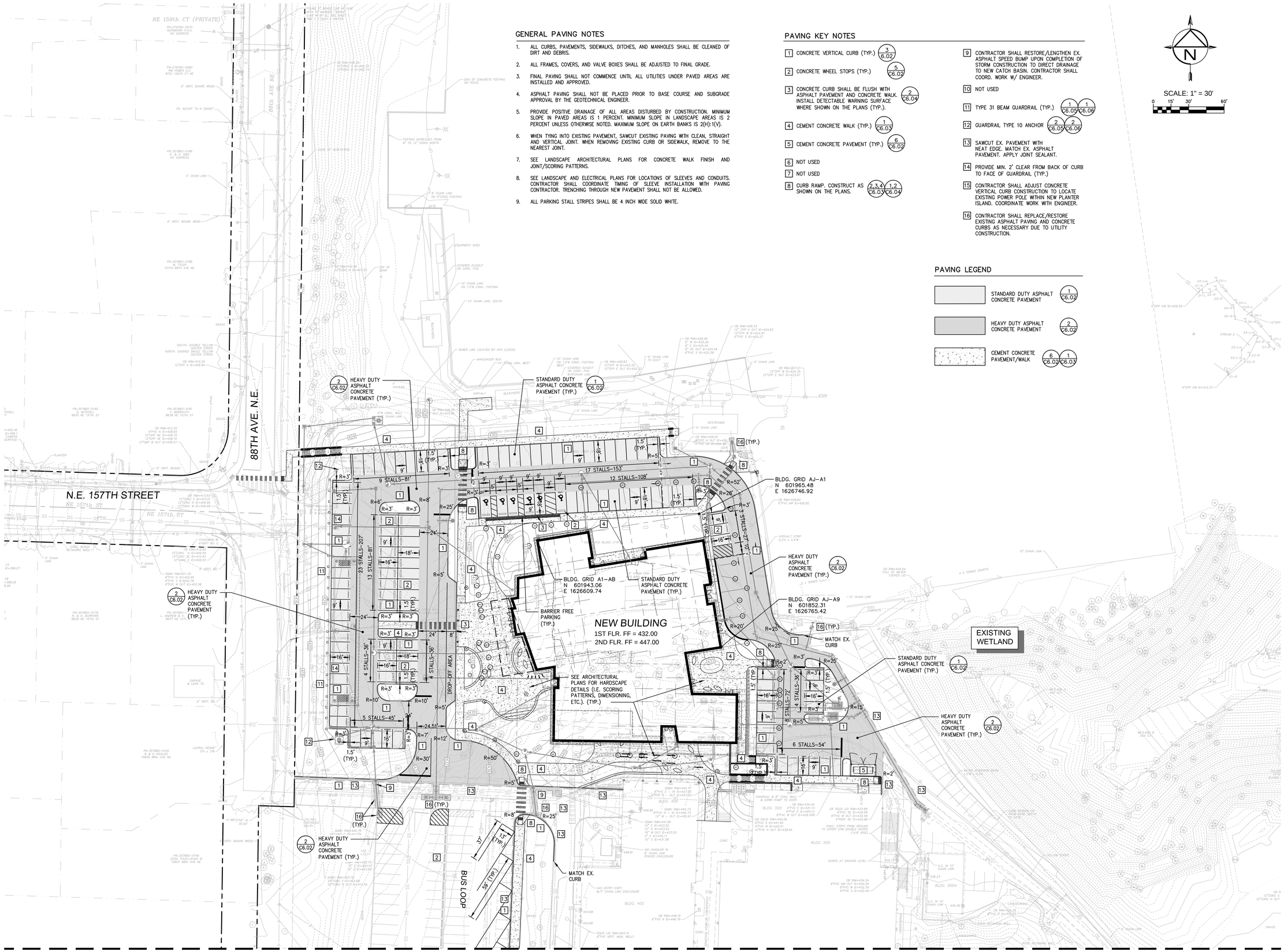

MATCHLINE – SEE SHEET C6.01

CALL 2 BUSINESS DAYS BEFORE YOU DIG 811 OR 1-800-424-5555

THESE DRAWINGS ARE NOT TO BE USED FOR CONSTRUCTION UNLESS SIGNED BY THE REVIEWING AGENCY

Integrity Works
Consulting Engineers, LLC
170 W. Dayton St. Suite 204 Edmonds WA 98020
O: 425.967.7913 C: 206.920.9410

HUTTEBALL + OREMUS architecture
4010 LAKE WASHINGTON BLVD NE
SUITE 320
KIRKLAND, WA 98033
425.828.8948
HOARCH.COM

ARCHITECT STAMP

CONSULTANT STAMP

JOSEPH B. MOON — STATE OF WASHINGTON — 36022 — REGISTERED PROFESSIONAL ENGINEER
4/13/20

PROJECT INFORMATION

Inglemoor High School Concert Hall + Music Building

15500 Simonds Rd NE
Kenmore, WA 98028

NORTHSHORE SCHOOL DISTRICT No. 417

SCHOOL DISTRICT LOGO

Northshore School District

02.13.2019 SCHEMATIC DESIGN
04.08.2019 VALUE ENGINEERING
09.16.2019 SITE PLAN REVIEW
10.18.2019 DESIGN DEVELOPMENT
01.13.2020 CONSTRUCTABILITY REVIEW
03.23.2020 HEALTH DEPARTMENT PERMIT SUBMITTAL
04.13.2020 BID DOCUMENTS

BID DOCUMENTS

04.13.2020

PROJECT NUMBER: 1711

SHEET NAME

HORIZONTAL CONTROL AND PAVING PLAN

SHEET NUMBER

C6.00

S1/2, NW1/4 & N1/2 SW1/4, SEC.18, T.26N., R.5E., W.M.

MATCHLINE – SEE SHEET C6.00

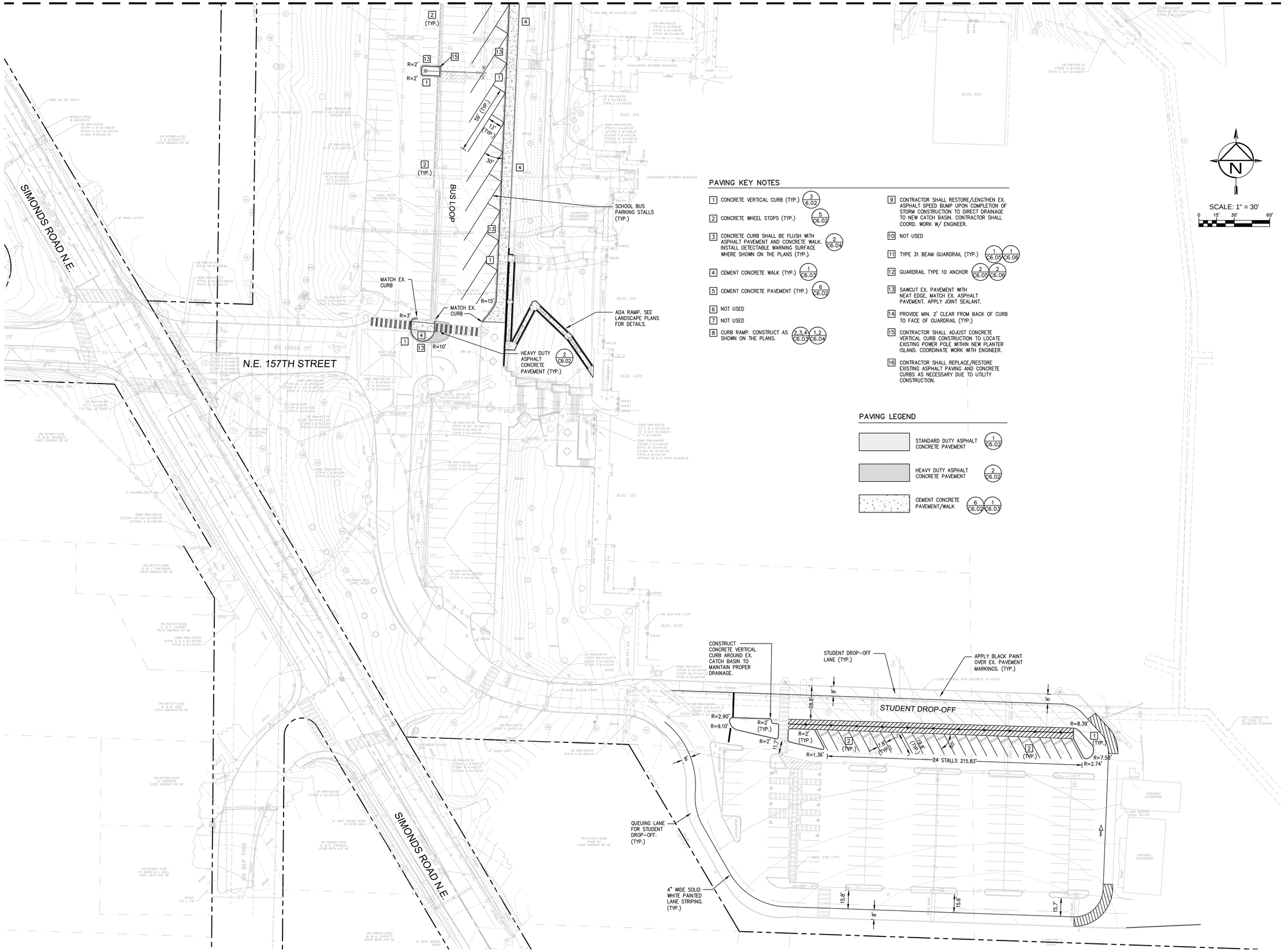

PAVING KEY NOTES

1. CONCRETE VERTICAL CURB (TYP.) (3/6.02)
2. CONCRETE WHEEL STOPS (TYP.) (5/C6.02)
3. CONCRETE CURB SHALL BE FLUSH WITH ASPHALT PAVEMENT AND CONCRETE WALK. INSTALL DETECTABLE WARNING SURFACE WHERE SHOWN ON THE PLANS (TYP.). (2/C6.04)
4. CEMENT CONCRETE WALK (TYP.) (1/C6.03)
5. CEMENT CONCRETE PAVEMENT (TYP.) (6/C6.02)
6. NOT USED
7. NOT USED
8. CURB RAMP. CONSTRUCT AS SHOWN ON THE PLANS. (2,3,4/C6.03) (1,2/C6.04)
9. CONTRACTOR SHALL RESTORE/LENGTHEN EX. ASPHALT SPEED BUMP UPON COMPLETION OF STORM CONSTRUCTION TO DIRECT DRAINAGE TO NEW CATCH BASIN. CONTRACTOR SHALL COORD. WORK W/ ENGINEER.
10. NOT USED
11. TYPE 31 BEAM GUARDRAIL (TYP.) (1/C6.05) (1/C6.06)
12. GUARDRAIL TYPE 10 ANCHOR (2/C6.05) (2/C6.06)
13. SAWCUT EX. PAVEMENT WITH NEAT EDGE. MATCH EX. ASPHALT PAVEMENT. APPLY JOINT SEALANT.
14. PROVIDE MIN. 2' CLEAR FROM BACK OF CURB TO FACE OF GUARDRAIL (TYP.)
15. CONTRACTOR SHALL ADJUST CONCRETE VERTICAL CURB CONSTRUCTION TO LOCATE EXISTING POWER POLE WITHIN NEW PLANTER ISLAND. COORDINATE WORK WITH ENGINEER.
16. CONTRACTOR SHALL REPLACE/RESTORE EXISTING ASPHALT PAVING AND CONCRETE CURBS AS NECESSARY DUE TO UTILITY CONSTRUCTION.

PAVING LEGEND

- STANDARD DUTY ASPHALT CONCRETE PAVEMENT (1/C6.02)
- HEAVY DUTY ASPHALT CONCRETE PAVEMENT (2/C6.02)
- CEMENT CONCRETE PAVEMENT/WALK (6/C6.02) (1/C6.03)

N

SCALE: 1" = 30'

0 15' 30' 60'

811 CALL 2 BUSINESS DAYS BEFORE YOU DIG 811 OR 1-800-424-5555

THESE DRAWINGS ARE NOT TO BE USED FOR CONSTRUCTION UNLESS SIGNED BY THE REVIEWING AGENCY

Integrity Works
Consulting Engineers, LLC
170 W. Dayton St. Suite 204 Edmonds WA 98020
O: 425.967.7913 C: 206.920.9410

HUTTEBALL + OREMUS architecture
4010 LAKE WASHINGTON BLVD NE
SUITE 320
KIRKLAND, WA 98033
425.828.8948
HOARCH.COM

ARCHITECT STAMP

CONSULTANT STAMP

JOSEPH B. MOON STATE OF WASHINGTON 36022 REGISTERED PROFESSIONAL ENGINEER
4/13/20

PROJECT INFORMATION

Inglemoor High School Concert Hall + Music Building

15500 Simonds Rd NE
Kenmore, WA 98028

NORTHSHORE SCHOOL DISTRICT No. 417

SCHOOL DISTRICT LOGO

Northshore School District

02.13.2019	SCHEMATIC DESIGN
04.08.2019	VALUE ENGINEERING
09.16.2019	SITE PLAN REVIEW
10.18.2019	DESIGN DEVELOPMENT
01.13.2020	CONSTRUCTABILITY REVIEW
03.23.2020	HEALTH DEPARTMENT PERMIT SUBMITTAL
04.13.2020	BID DOCUMENTS

BID DOCUMENTS

04.13.2020

PROJECT NUMBER: 1711

SHEET NAME

HORIZONTAL CONTROL AND PAVING PLAN

SHEET NUMBER

C6.01

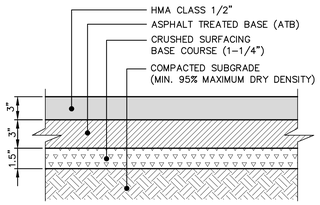

NOTES:

1. DEPTHS ARE COMPACTED THICKNESSES.
2. WHERE ATB IS USED FOR CONSTRUCTION ACCESS AND STAGING AREAS, SOME RUTTING AND DAMAGE OF THE ATB SURFACE MAY OCCUR. THE CONTRACTOR SHALL REMOVE AFFECTED AREAS AND REPLACE THEM WITH PROPERLY COMPACTED ATB PRIOR TO FINAL SURFACING AT NO ADDITIONAL COST TO THE OWNER.
3. PAVEMENT SECTIONS ARE ONLY APPLICABLE WITHIN THE SCHOOL SITE. SEE OFFSITE ROAD SECTIONS FOR PAVING REQUIREMENTS WITHIN THE RIGHT-OF-WAY.

1 STANDARD DUTY ASPHALT CONCRETE PAVEMENT
NOT TO SCALE

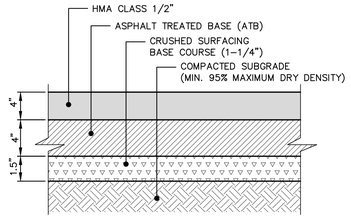

NOTES:

1. DEPTHS ARE COMPACTED THICKNESSES.
2. WHERE ATB IS USED FOR CONSTRUCTION ACCESS AND STAGING AREAS, SOME RUTTING AND DAMAGE OF THE ATB SURFACE MAY OCCUR. THE CONTRACTOR SHALL REMOVE AFFECTED AREAS AND REPLACE THEM WITH PROPERLY COMPACTED ATB PRIOR TO FINAL SURFACING AT NO ADDITIONAL COST TO THE OWNER.
3. PAVEMENT SECTIONS ARE ONLY APPLICABLE WITHIN THE SCHOOL SITE. SEE OFFSITE ROAD SECTIONS FOR PAVING REQUIREMENTS WITHIN THE RIGHT-OF-WAY.

2 HEAVY DUTY ASPHALT CONCRETE PAVEMENT
NOT TO SCALE

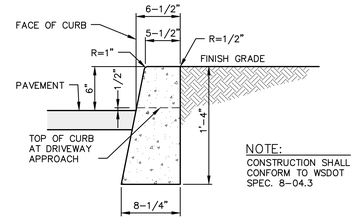

NOTE:
CONSTRUCTION SHALL CONFORM TO WSDOT SPEC. 8-04.3

3 CONCRETE VERTICAL CURB
NOT TO SCALE

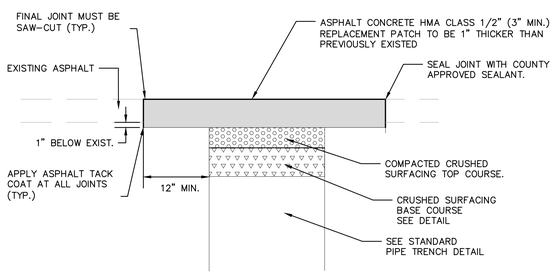

811 CALL 2 BUSINESS DAYS BEFORE YOU DIG 811 OR 1-800-424-5555

THESE DRAWINGS ARE NOT TO BE USED FOR CONSTRUCTION UNLESS SIGNED BY THE REVIEWING AGENCY

4 ASPHALT PAVEMENT PATCH
NOT TO SCALE

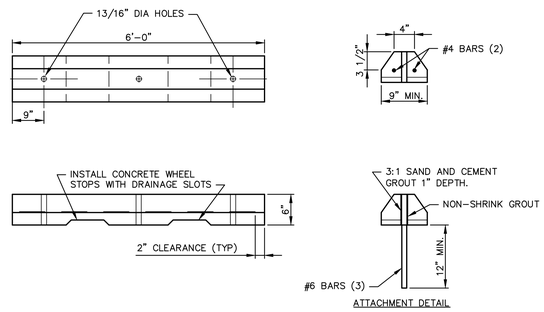

ATTACHMENT DETAIL

5 CONCRETE WHEEL STOP
NOT TO SCALE

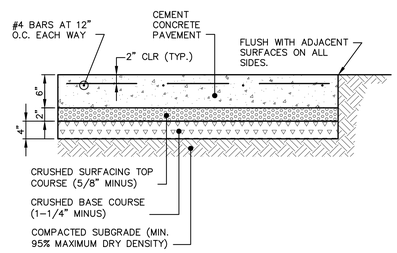

NOTES:

1. DEPTHS ARE COMPACTED THICKNESS.
2. SEE ARCHITECTURAL PLANS FOR CONCRETE SCORING AND JOINTING.
3. CEMENT CONCRETE SHALL BE CLASS 4000.

6 CEMENT CONCRETE PAVEMENT
NOT TO SCALE

Integrity Works
Consulting Engineers, LLC
170 W. Dayton St. Suite 204 Edmonds WA 98020
O: 425.967.7913 C: 206.920.9410

HUTTEBALL + OREMUS architecture
4010 LAKE WASHINGTON BLVD NE
SUITE 320
KIRKLAND, WA 98033
425.828.8948
HOARCH.COM

ARCHITECT STAMP

CONSULTANT STAMP

JOSEPH B. MOON — STATE OF WASHINGTON — 36022 — REGISTERED PROFESSIONAL ENGINEER
4/13/20

PROJECT INFORMATION

Inglemoor High Schoo Concert Hal + Music Building

15500 Simonds Rd NE
Kenmore, WA 98028

NORTHSHORE SCHOO DISTRICT No. 417

SCHOOL DISTRICT LOGO

Northsho School Distr

02.13.2019 SCHEMATIC DESIGN
04.08.2019 VALUE ENGINEERING
09.16.2019 SITE PLAN REVIEW
10.18.2019 DESIGN DEVELOPMENT
01.13.2020 CONSTRUCTABILITY REVIEW
03.23.2020 HEALTH DEPARTMENT PERMIT SUBMIT
04.13.2020 BID DOCUMENTS

BID DOCUMENTS

04.13.2020

PROJECT NUMBER: 1711

SHEET NAME

PAVING DETAILS

SHEET NUMBER

C6.02

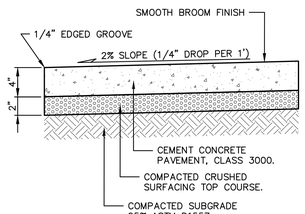

NOTES:

1. CEMENT CONCRETE SHALL BE CLASS 3000.
2. DUMMY JOINTS CONSISTING OF 3/16" BY 2" PREMOLDED JOINT MATERIAL SHALL BE PLACED AT 15 FOOT INTERVALS.

1 CEMENT CONCRETE WALK
NOT TO SCALE

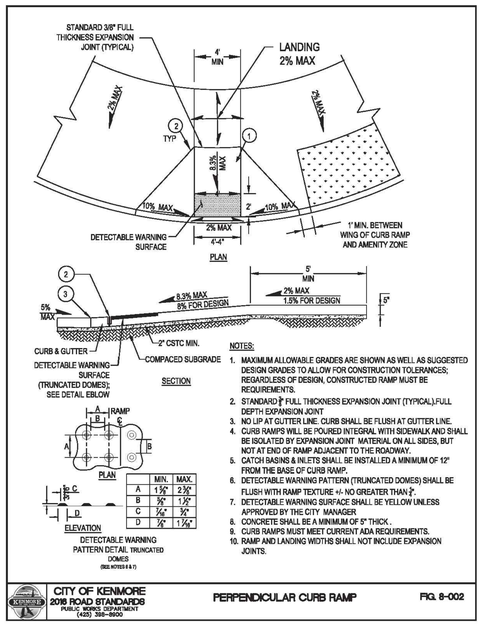

	MIN.	MAX.
A	1 ½"	2 ½"
B	½"	1 ½"
C	¼"	½"
D	½"	1 ½"

NOTES:

1. MAXIMUM ALLOWABLE GRADES ARE SHOWN AS WELL AS SUGGESTED DESIGN GRADES TO ALLOW FOR CONSTRUCTION TOLERANCES; REGARDLESS OF DESIGN, CONSTRUCTED RAMP MUST BE REQUIREMENTS.
2. STANDARD ⅜" FULL THICKNESS EXPANSION JOINT (TYPICAL),FULL DEPTH EXPANSION JOINT
3. NO LIP AT GUTTER LINE. CURB SHALL BE FLUSH AT GUTTER LINE.
4. CURB RAMPS WILL BE POURED INTEGRAL WITH SIDEWALK AND SHALL BE ISOLATED BY EXPANSION JOINT MATERIAL ON ALL SIDES, BUT NOT AT END OF RAMP ADJACENT TO THE ROADWAY.
5. CATCH BASINS & INLETS SHALL BE INSTALLED A MINIMUM OF 12" FROM THE BASE OF CURB RAMP.
6. DETECTABLE WARNING PATTERN (TRUNCATED DOMES) SHALL BE FLUSH WITH RAMP TEXTURE +/- NO GREATER THAN ¼".
7. DETECTABLE WARNING SURFACE SHALL BE YELLOW UNLESS APPROVED BY THE CITY MANAGER
8. CONCRETE SHALL BE A MINIMUM OF 5" THICK.
9. CURB RAMPS MUST MEET CURRENT ADA REQUIREMENTS.
10. RAMP AND LANDING WIDTHS SHALL NOT INCLUDE EXPANSION JOINTS.

CITY OF KENMORE 2016 ROAD STANDARDS PUBLIC WORKS DEPARTMENT (425) 398-8900 — PERPENDICULAR CURB RAMP — FIG. 8-002

2 PERPENDICULAR CURB RAMP
NOT TO SCALE

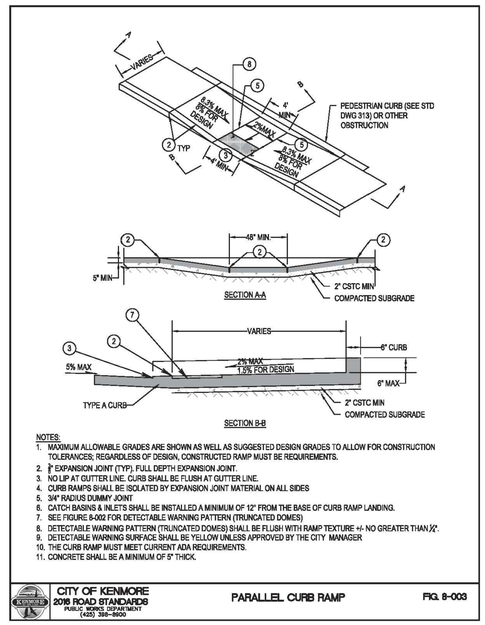

NOTES:

1. MAXIMUM ALLOWABLE GRADES ARE SHOWN AS WELL AS SUGGESTED DESIGN GRADES TO ALLOW FOR CONSTRUCTION TOLERANCES; REGARDLESS OF DESIGN, CONSTRUCTED RAMP MUST BE REQUIREMENTS.
2. ⅜" EXPANSION JOINT (TYP). FULL DEPTH EXPANSION JOINT.
3. NO LIP AT GUTTER LINE. CURB SHALL BE FLUSH AT GUTTER LINE.
4. CURB RAMPS SHALL BE ISOLATED BY EXPANSION JOINT MATERIAL ON ALL SIDES
5. 3/4" RADIUS DUMMY JOINT
6. CATCH BASINS & INLETS SHALL BE INSTALLED A MINIMUM OF 12" FROM THE BASE OF CURB RAMP LANDING.
7. SEE FIGURE 8-002 FOR DETECTABLE WARNING PATTERN (TRUNCATED DOMES)
8. DETECTABLE WARNING PATTERN (TRUNCATED DOMES) SHALL BE FLUSH WITH RAMP TEXTURE +/- NO GREATER THAN ¼".
9. DETECTABLE WARNING SURFACE SHALL BE YELLOW UNLESS APPROVED BY THE CITY MANAGER
10. THE CURB RAMP MUST MEET CURRENT ADA REQUIREMENTS.
11. CONCRETE SHALL BE A MINIMUM OF 5" THICK.

CITY OF KENMORE 2016 ROAD STANDARDS PUBLIC WORKS DEPARTMENT (425) 398-8900 — PARALLEL CURB RAMP — FIG. 8-003

3 PARALLEL CURB RAMP
NOT TO SCALE

DRAWN BY: LISA CYFORD

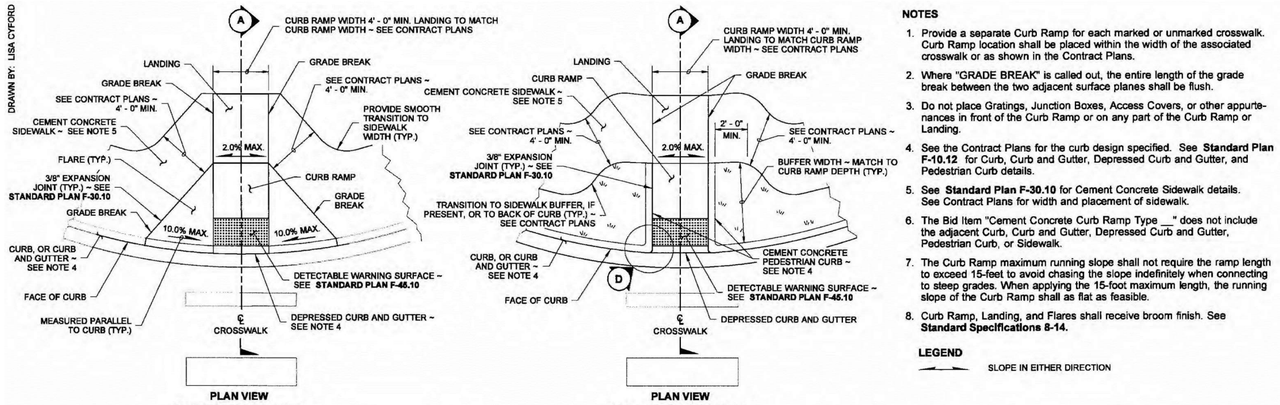

NOTES

1. Provide a separate Curb Ramp for each marked or unmarked crosswalk. Curb Ramp location shall be placed within the width of the associated crosswalk or as shown in the Contract Plans.
2. Where "GRADE BREAK" is called out, the entire length of the grade break between the two adjacent surface planes shall be flush.
3. Do not place Gratings, Junction Boxes, Access Covers, or other appurtenances in front of the Curb Ramp or on any part of the Curb Ramp or Landing.
4. See the Contract Plans for the curb design specified. See **Standard Plan F-10.12** for Curb, Curb and Gutter, Depressed Curb and Gutter, and Pedestrian Curb details.
5. See **Standard Plan F-30.10** for Cement Concrete Sidewalk details. See Contract Plans for width and placement of sidewalk.
6. The Bid Item "Cement Concrete Curb Ramp Type __" does not include the adjacent Curb, Curb and Gutter, Depressed Curb and Gutter, Pedestrian Curb, or Sidewalk.
7. The Curb Ramp maximum running slope shall not require the ramp length to exceed 15-feet to avoid chasing the slope indefinitely when connecting to steep grades. When applying the 15-foot maximum length, the running slope of the Curb Ramp shall as flat as feasible.
8. Curb Ramp, Landing, and Flares shall receive broom finish. See **Standard Specifications 8-14.**

LEGEND

SLOPE IN EITHER DIRECTION

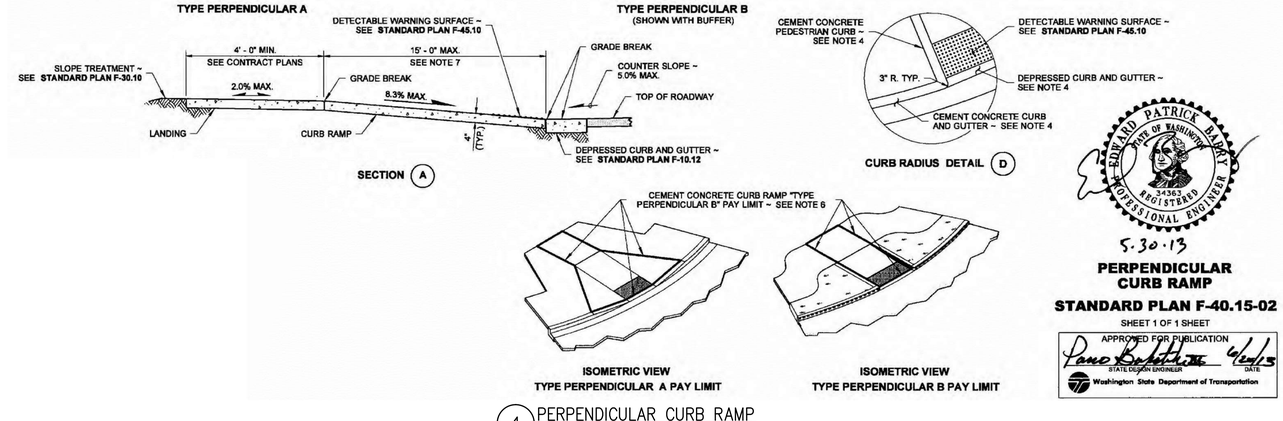

EDWARD PATRICK BARRY — STATE OF WASHINGTON — 24362 — REGISTERED PROFESSIONAL ENGINEER

5.30.13

PERPENDICULAR CURB RAMP

STANDARD PLAN F-40.15-02

SHEET 1 OF 1 SHEET

APPROVED FOR PUBLICATION

STATE DESIGN ENGINEER — DATE

Washington State Department of Transportation

4 PERPENDICULAR CURB RAMP
NOT TO SCALE

5 NOT USED
NOT TO SCALE

811 CALL 2 BUSINESS DAYS BEFORE YOU DIG 811 OR 1-800-424-5555

THESE DRAWINGS ARE NOT TO BE USED FOR CONSTRUCTION UNLESS SIGNED BY THE REVIEWING AGENCY

Integrity Works
Consulting Engineers, LLC
170 W. Dayton St. Suite 204 Edmonds, WA 98020
O: 425.967.7913 C: 206.920.9410

HUTTEBALL + OREMUS architecture
4010 LAKE WASHINGTON BLVD NE
SUITE 320
KIRKLAND, WA 98033
425.828.8948
HOARCH.COM

ARCHITECT STAMP

CONSULTANT STAMP

JOSEPH B. MOORE — STATE OF WASHINGTON — 36922 — REGISTERED PROFESSIONAL ENGINEER
4/13/20

PROJECT INFORMATION

Inglemoor High School Concert Hall + Music Building

15500 Simonds Rd NE
Kenmore, WA 98028

NORTHSHORE SCHOOL DISTRICT No. 417

SCHOOL DISTRICT LOGO

Northshore School District

02.13.2019 SCHEMATIC DESIGN
04.08.2019 VALUE ENGINEERING
09.16.2019 SITE PLAN REVIEW
10.18.2019 DESIGN DEVELOPMENT
01.13.2020 CONSTRUCTABILITY REVIEW
03.23.2020 HEALTH DEPARTMENT PERMIT SUBMITTAL
04.13.2020 BID DOCUMENTS

BID DOCUMENTS

04.13.2020

PROJECT NUMBER: 1711

SHEET NAME

PAVING DETAILS

SHEET NUMBER

C6.03

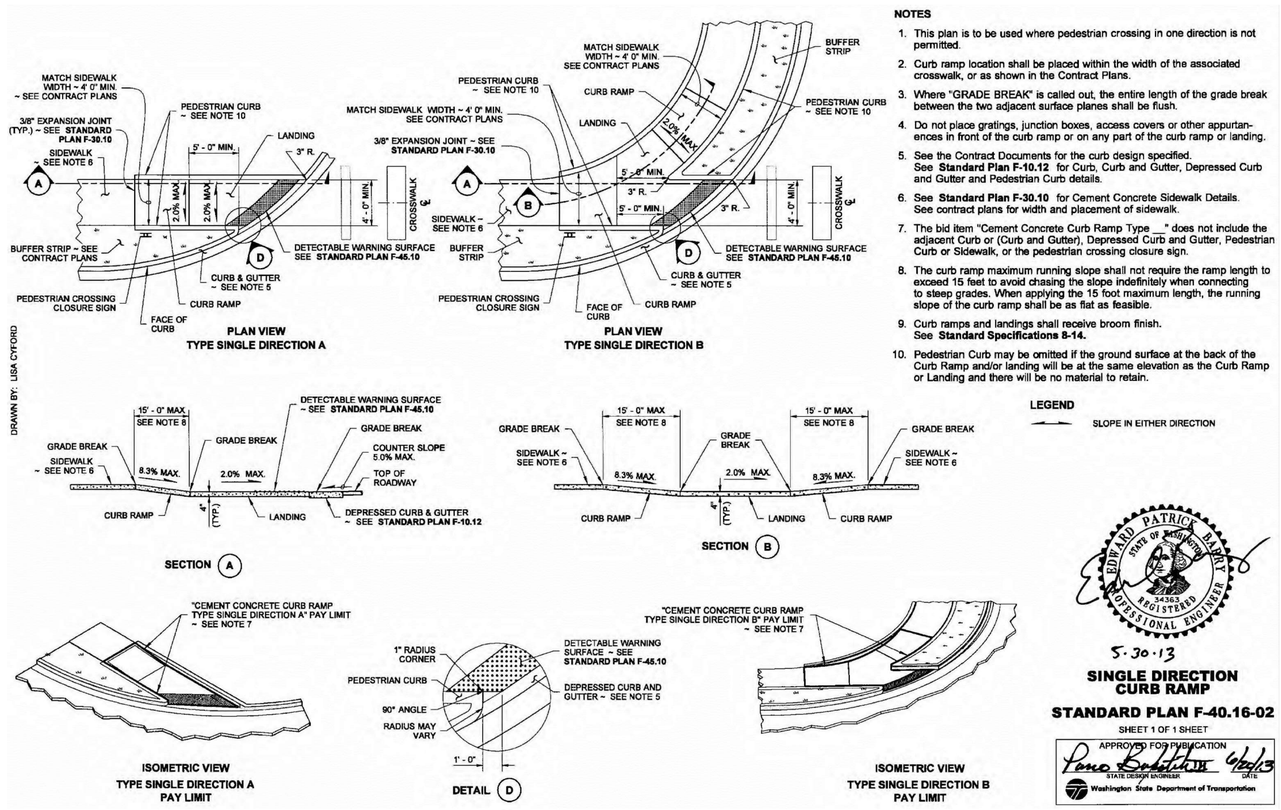

NOTES

1. This plan is to be used where pedestrian crossing in one direction is not permitted.
2. Curb ramp location shall be placed within the width of the associated crosswalk, or as shown in the Contract Plans.
3. Where "GRADE BREAK" is called out, the entire length of the grade break between the two adjacent surface planes shall be flush.
4. Do not place gratings, junction boxes, access covers or other appurtenances in front of the curb ramp or on any part of the curb ramp or landing.
5. See the Contract Documents for the curb design specified. See **Standard Plan F-10.12** for Curb, Curb and Gutter, Depressed Curb and Gutter and Pedestrian Curb details.
6. See **Standard Plan F-30.10** for Cement Concrete Sidewalk Details. See contract plans for width and placement of sidewalk.
7. The bid item "Cement Concrete Curb Ramp Type __" does not include the adjacent Curb or (Curb and Gutter), Depressed Curb and Gutter, Pedestrian Curb or Sidewalk, or the pedestrian crossing closure sign.
8. The curb ramp maximum running slope shall not require the ramp length to exceed 15 feet to avoid chasing the slope indefinitely when connecting to steep grades. When applying the 15 foot maximum length, the running slope of the curb ramp shall be as flat as feasible.
9. Curb ramps and landings shall receive broom finish. See **Standard Specifications 8-14.**
10. Pedestrian Curb may be omitted if the ground surface at the back of the Curb Ramp and/or landing will be at the same elevation as the Curb Ramp or Landing and there will be no material to retain.

LEGEND

SLOPE IN EITHER DIRECTION

EDWARD PATRICK BARRY — STATE OF WASHINGTON — 34363 — REGISTERED PROFESSIONAL ENGINEER

5-30-13

SINGLE DIRECTION CURB RAMP

STANDARD PLAN F-40.16-02

SHEET 1 OF 1 SHEET

APPROVED FOR PUBLICATION
STATE DESIGN ENGINEER — DATE 6/20/13
Washington State Department of Transportation

1 SINGLE DIRECTION CURB RAMP
NOT TO SCALE

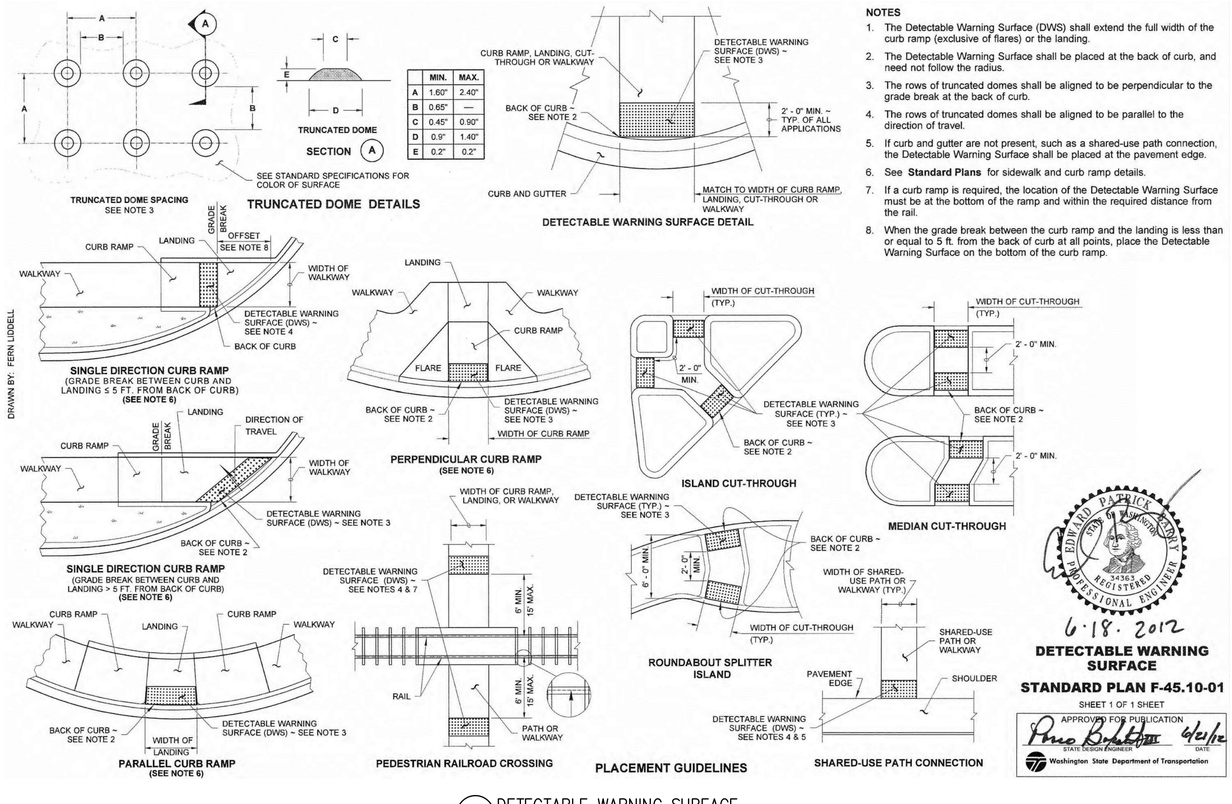

	MIN.	MAX.
A	1.60"	2.40"
B	0.65"	—
C	0.45"	0.90"
D	0.9"	1.40"
E	0.2"	0.2"

NOTES

1. The Detectable Warning Surface (DWS) shall extend the full width of the curb ramp (exclusive of flares) or the landing.
2. The Detectable Warning Surface shall be placed at the back of curb, and need not follow the radius.
3. The rows of truncated domes shall be aligned to be perpendicular to the grade break at the back of curb.
4. The rows of truncated domes shall be aligned to be parallel to the direction of travel.
5. If curb and gutter are not present, such as a shared-use path connection, the Detectable Warning Surface shall be placed at the pavement edge.
6. See **Standard Plans** for sidewalk and curb ramp details.
7. If a curb ramp is required, the location of the Detectable Warning Surface must be at the bottom of the ramp and within the required distance from the rail.
8. When the grade break between the curb ramp and the landing is less than or equal to 5 ft. from the back of curb at all points, place the Detectable Warning Surface on the bottom of the curb ramp.

EDWARD PATRICK BARRY — STATE OF WASHINGTON — 34363 — REGISTERED PROFESSIONAL ENGINEER

6-18-2012

DETECTABLE WARNING SURFACE

STANDARD PLAN F-45.10-01

SHEET 1 OF 1 SHEET

APPROVED FOR PUBLICATION
STATE DESIGN ENGINEER — DATE 6/18/12
Washington State Department of Transportation

2 DETECTABLE WARNING SURFACE
NOT TO SCALE

HUTTEBALL +OREMUS architecture
4010 LAKE WASHINGTON BLVD NE
SUITE 320
KIRKLAND, WA 98033
425.828.8948
HOARCH.COM

ARCHITECT STAMP

CONSULTANT STAMP

JOSEPH B. MOORE — STATE OF WASHINGTON — 36922 — REGISTERED PROFESSIONAL ENGINEER
4/13/20

PROJECT INFORMATION

Inglemoor High School Concert Hall + Music Building

15500 Simonds Rd NE
Kenmore, WA 98028

NORTHSHORE SCHOOL DISTRICT No. 417

811 CALL 2 BUSINESS DAYS BEFORE YOU DIG 811 OR 1-800-424-5555

THESE DRAWINGS ARE NOT TO BE USED FOR CONSTRUCTION UNLESS SIGNED BY THE REVIEWING AGENCY

Integrity Works
Consulting Engineers, LLC
170 W. Dayton St. Suite 204 Edmonds WA 98020
O: 425.967.7913 C: 206.920.9410

SCHOOL DISTRICT LOGO

Northshore School District

02.13.2019 SCHEMATIC DESIGN
04.08.2019 VALUE ENGINEERING
09.16.2019 SITE PLAN REVIEW
10.18.2019 DESIGN DEVELOPMENT
01.13.2020 CONSTRUCTABILITY REVIEW
03.23.2020 HEALTH DEPARTMENT PERMIT SUBMITTAL
04.13.2020 BID DOCUMENTS

BID DOCUMENTS

04.13.2020

PROJECT NUMBER: 1711

SHEET NAME

PAVING DETAILS

SHEET NUMBER

C6.04

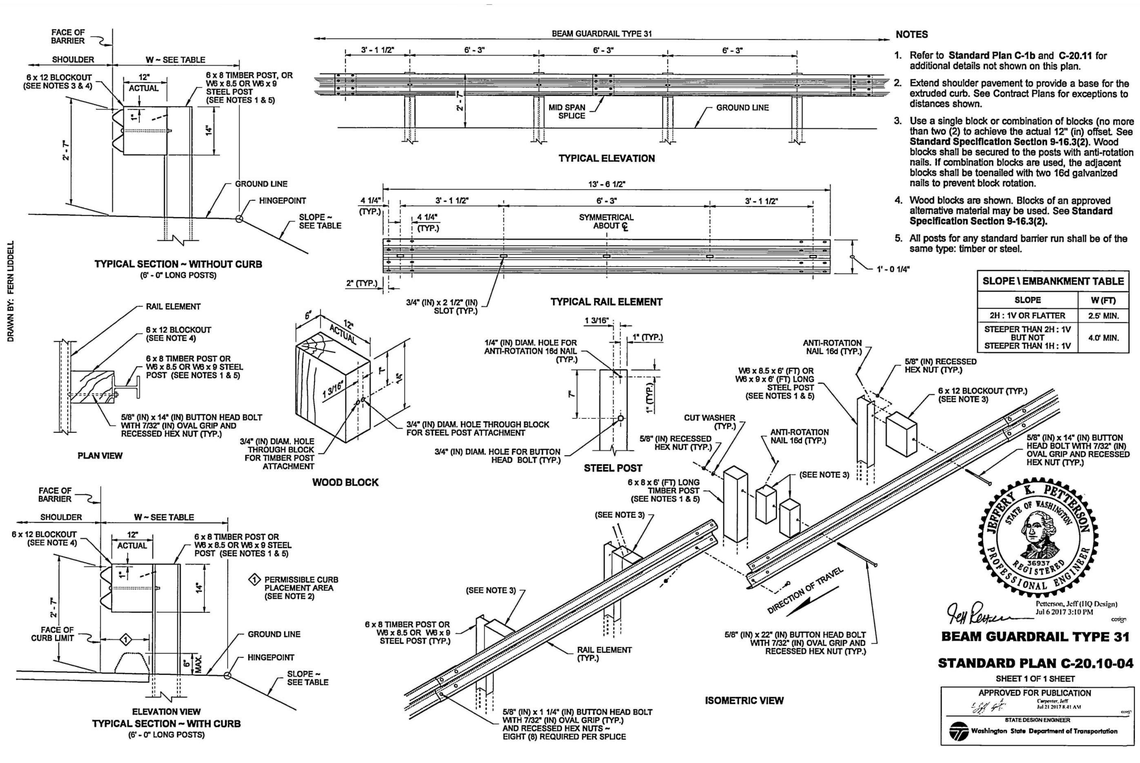

1 BEAM GUARDRAIL TYPE 31
NOT TO SCALE

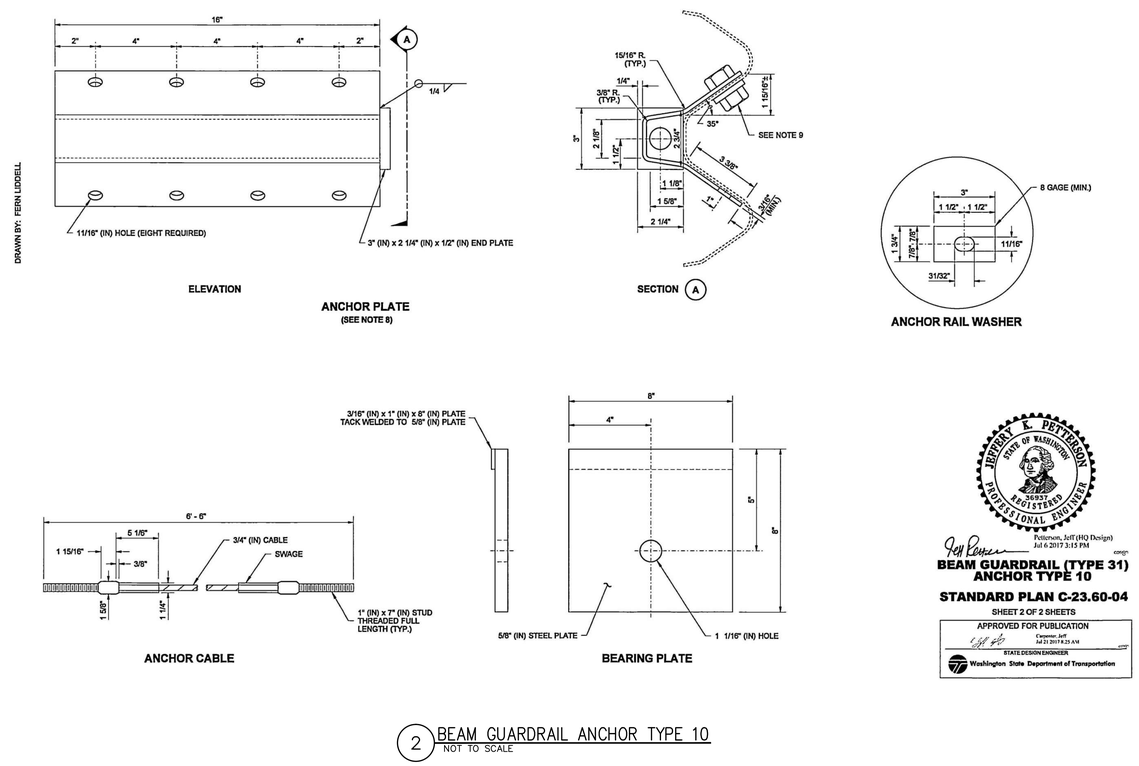

2 BEAM GUARDRAIL ANCHOR TYPE 10
NOT TO SCALE

811 CALL 2 BUSINESS DAYS BEFORE YOU DIG 811 OR 1-800-424-5555

THESE DRAWINGS ARE NOT TO BE USED FOR CONSTRUCTION UNLESS SIGNED BY THE REVIEWING AGENCY

Integrity Works
Consulting Engineers, LLC
170 W. Dayton St. Suite 204 Edmonds WA 98020
O: 425.967.7913 C: 206.920.9410

HUTTEBALL + OREMUS architecture
4010 LAKE WASHINGTON BLVD NE
SUITE 320
KIRKLAND, WA 98033
425.828.8948
HOARCH.COM

ARCHITECT STAMP

CONSULTANT STAMP

JOSEPH B. MOORE STATE OF WASHINGTON 36922 REGISTERED PROFESSIONAL ENGINEER
4/13/20

PROJECT INFORMATION

Inglemoor High School Concert Hall + Music Building

15500 Simonds Rd NE
Kenmore, WA 98028

NORTHSHORE SCHOOL DISTRICT No. 417

SCHOOL DISTRICT LOGO

Northshore School District

02.13.2019 SCHEMATIC DESIGN
04.08.2019 VALUE ENGINEERING
09.16.2019 SITE PLAN REVIEW
10.18.2019 DESIGN DEVELOPMENT
01.13.2020 CONSTRUCTABILITY REVIEW
03.23.2020 HEALTH DEPARTMENT PERMIT SUBMITTAL
04.13.2020 BID DOCUMENTS

BID DOCUMENTS

04.13.2020

PROJECT NUMBER: 1711

SHEET NAME

PAVING DETAILS

SHEET NUMBER

C6.05

DRAWN BY: FERN LUDDELL

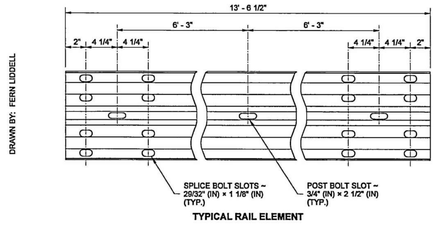

TYPICAL RAIL ELEMENT

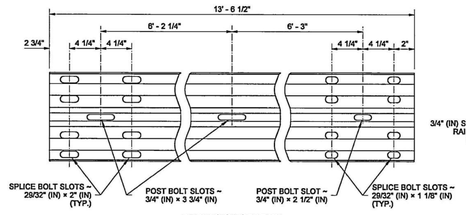

EXPANSION SECTION

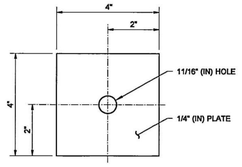

SNOW LOAD POST WASHER
SEE NOTE 1

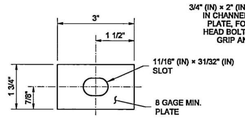

SNOW LOAD RAIL WASHER
SEE NOTES 1 & 2

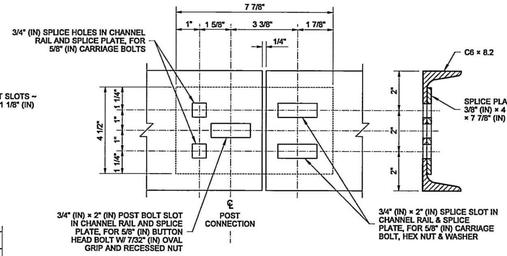

CHANNEL RAIL SPLICE

NOTES

1. When required by the Contract, a Snow Load Post Washer shall be used on the backside of the post (in lieu of the 1 3/4" (in) Post Bolt Washer) and a Snow Load Rail Washer shall be placed on the face side of Beam Guardrail Types 1 and 2. Snow Load Rail Washers shall not be installed on terminals.
2. Rail Washers, also called "Snow Load Rail Washers", are not required on new installation, except as called for in Note 1. Unnecessary Rail washers need not be removed from existing installations, except those on posts 2 through 8 of a BCT installation shall be removed.
3. Timber blocks shall be toe-nailed to the post with a 16d galvanized nail to prevent block rotation.
4. For post and block details, see **Standard Plan C-1b**.
5. When "Beam Guardrail Type - ___ Ft. Long Post" is specified in the Contract, the post length shall be stamped with numbers, 1 1/2" (in) min. high and 3/4" (in) wide at the location where the letter "H" is shown in the ASSEMBLY DETAIL. For wood post applications, the letter shall be stamped to a minimum depth of 1/4" (in). For steel post applications, the letter shall be legible after the post is galvanized. After post installation, it shall be the Contractor's responsibility to ensure the stamped numbers remain visible.
6. Existing posts shall not be raised. Replace posts as necessary to achieve required guardrail height.
7. Holes shall be located on approaching traffic side of web.

JEFFERY E. PETTERSON, STATE OF WASHINGTON, 36937, REGISTERED PROFESSIONAL ENGINEER

Jeff Petterson, Jeff (IIQ Design)
Jul 6 2017 3:11 PM
comp:

BEAM GUARDRAIL TYPE 31 COMPONENTS

STANDARD PLAN C-20.11-00

SHEET 1 OF 1 SHEET

APPROVED FOR PUBLICATION
Carpenter, Jeff
Jul 21 2017 8:31 AM
comp:
STATE DESIGN ENGINEER
Washington State Department of Transportation

1 BEAM GUARDRAIL TYPE 31 COMPONENTS
NOT TO SCALE

DRAWN BY: FERN LUDDELL

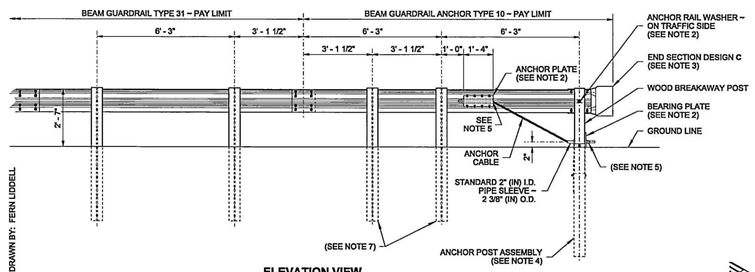

ELEVATION VIEW
W-BEAM

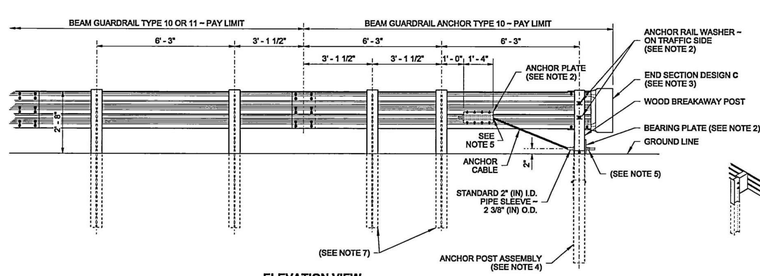

ELEVATION VIEW
THRIE BEAM

NOTES

1. For use on the end of guardrail runs when a crashworthy terminal is not required.
2. For additional details not shown, see **Sheet 2** of this Plan.
3. For end section details, see **Standard Plans C-7** and **C-7a**.
4. Use details for Wood Breakaway post shown on this plan and components shown on **Standard Plan C-1b**.
5. Fasten the Anchor Cable using two 1" (in) nuts and washer, at both ends of cable. Outside nut shall be torqued against inside nut a minimum of 100 ft.-lbs.
6. Wood blocks shown. Blocks of alternate material may be used. See **Standard Specification, Section 9-16.3(2)**.
7. Posts shall match those of the connecting run: timber or steel.
8. Anchor plate may be constructed from 1/4" (in) plates welded to equal strength and dimensions as shown.
9. Eight 5/8" (in) x 1/2" (in) machine bolts with hex nut and washer. Place washer on face side of rail.

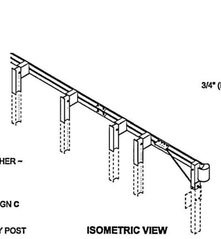

ISOMETRIC VIEW

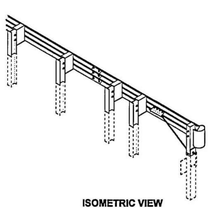

ISOMETRIC VIEW

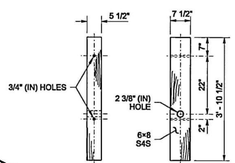

WOOD BREAKAWAY POST DETAIL

JEFFERY E. PETTERSON, STATE OF WASHINGTON, 36937, REGISTERED PROFESSIONAL ENGINEER

Jeff Petterson, Jeff (IIQ Design)
Jul 6 2017 3:15 PM
comp:

BEAM GUARDRAIL (TYPE 31) ANCHOR TYPE 10

STANDARD PLAN C-23.60-04

SHEET 1 OF 2 SHEETS

APPROVED FOR PUBLICATION
Carpenter, Jeff
Jul 21 2017 8:29 AM
comp:
STATE DESIGN ENGINEER
Washington State Department of Transportation

2 BEAM GUARDRAIL ANCHOR TYPE 10
NOT TO SCALE

HUTTEBALL + OREMUS architecture
4010 LAKE WASHINGTON BLVD NE
SUITE 320
KIRKLAND, WA 98033
425.828.8948
HOARCH.COM

ARCHITECT STAMP

CONSULTANT STAMP

JOSEPH B. MOORE, STATE OF WASHINGTON, 36922, REGISTERED PROFESSIONAL ENGINEER
4/13/20

PROJECT INFORMATION

Inglemoor High School Concert Hall + Music Building

15500 Simonds Rd NE
Kenmore, WA 98028

NORTHSHORE SCHOOL DISTRICT No. 417

SCHOOL DISTRICT LOGO

Northshore School District

02.13.2019 SCHEMATIC DESIGN
04.08.2019 VALUE ENGINEERING
09.16.2019 SITE PLAN REVIEW
10.18.2019 DESIGN DEVELOPMENT
01.13.2020 CONSTRUCTABILITY REVIEW
03.23.2020 HEALTH DEPARTMENT PERMIT SUBMITTAL
04.13.2020 BID DOCUMENTS

BID DOCUMENTS

04.13.2020

PROJECT NUMBER: 1711

SHEET NAME

PAVING DETAILS

811 CALL 2 BUSINESS DAYS BEFORE YOU DIG 811 OR 1–800–424–5555

THESE DRAWINGS ARE NOT TO BE USED FOR CONSTRUCTION UNLESS SIGNED BY THE REVIEWING AGENCY

Integrity Works
Consulting Engineers, LLC
170 W. Dayton St. Suite 204 Edmonds WA 98020
O: 425.967.7913 C: 206.920.9410

SHEET NUMBER

C6.06

DRAWN BY: FERN LIDDELL

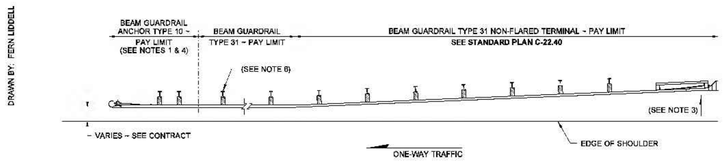

CASE 1-31

NOTES

1. For component details, see **Standard Plan C-23.60**.
2. For terminal type and details, see Contract Plans and applicable drawings.
3. The slope from the edge of the shoulder into the face of the guardrail cannot exceed 10H : 1V when the face of the guardrail is less than 12' - 0" from the edge of the shoulder.
4. For one-way traffic and where a crashworthy terminal is not required, use the Beam Guardrail Anchor Type 10; see **Standard Plan C-23.60**.
5. Where a crashworthy terminal is required, use a Beam Guardrail Type 31 Non-Flared Terminal; see **Standard Plan C-22.40**.
6. Timber or steel post. Steel post shown.

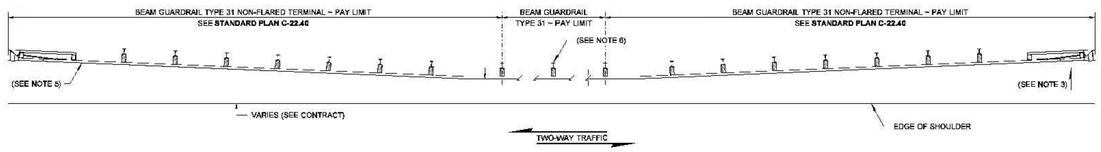

CASE 2-31

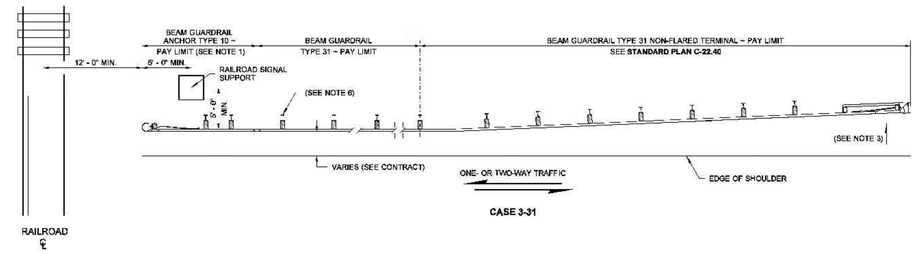

CASE 3-31

EDWARD PATRICK BARRY
STATE OF WASHINGTON
34363
REGISTERED PROFESSIONAL ENGINEER

BEAM GUARDRAIL TYPE 31 PLACEMENT (CASES 1-31, 2-31 & 3-31) STANDARD PLAN C-20.14-03

SHEET 1 OF 1 SHEET

APPROVED FOR PUBLICATION
Wednesday, 11 Mar 2020 1:05 PM
STATE DESIGN ENGINEER
Washington State Department of Transportation

1 BEAM GUARDRAIL PLACEMENT
NOT TO SCALE

2 NOT USED
NOT TO SCALE

811 CALL 2 BUSINESS DAYS BEFORE YOU DIG 811 OR 1-800-424-5555

THESE DRAWINGS ARE NOT TO BE USED FOR CONSTRUCTION UNLESS SIGNED BY THE REVIEWING AGENCY

Integrity Works
Consulting Engineers, LLC
170 W. Dayton St. Suite 204 Edmonds WA 98020
O: 425.967.7913 C: 206.920.9410

HUTTEBALL + OREMUS architecture
4010 LAKE WASHINGTON BLVD NE
SUITE 320
KIRKLAND, WA 98033
425.828.8948
HOARCH.COM

ARCHITECT STAMP

CONSULTANT STAMP

JOSEPH B. MOON
STATE OF WASHINGTON
36922
REGISTERED PROFESSIONAL ENGINEER
4/13/20

PROJECT INFORMATION

Inglemoor High School Concert Hall + Music Building

15500 Simonds Rd NE
Kenmore, WA 98028

NORTHSHORE SCHOOL DISTRICT No. 417

SCHOOL DISTRICT LOGO

Northshore School District

02.13.2019 SCHEMATIC DESIGN
04.08.2019 VALUE ENGINEERING
09.16.2019 SITE PLAN REVIEW
10.18.2019 DESIGN DEVELOPMENT
01.13.2020 CONSTRUCTABILITY REVIEW
03.23.2020 HEALTH DEPARTMENT PERMIT SUBMITTAL
04.13.2020 BID DOCUMENTS

BID DOCUMENTS

04.13.2020

PROJECT NUMBER: 1711

SHEET NAME

PAVING DETAILS

SHEET NUMBER

C6.07

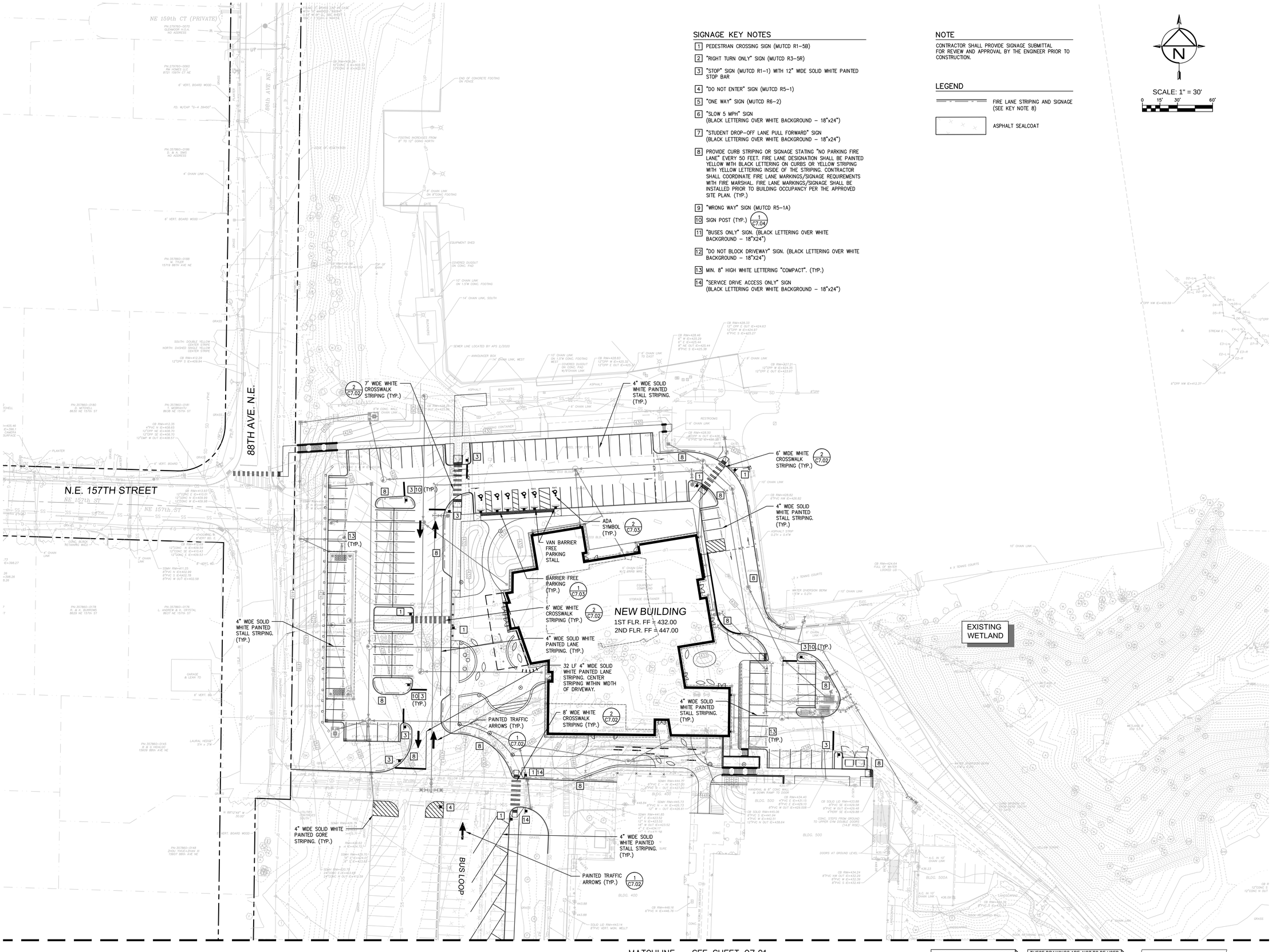

MATCHLINE – SEE SHEET C7.01

SIGNAGE KEY NOTES

1. PEDESTRIAN CROSSING SIGN (MUTCD R1-5B)
2. "RIGHT TURN ONLY" SIGN (MUTCD R3-5R)
3. "STOP" SIGN (MUTCD R1-1) WITH 12" WIDE SOLID WHITE PAINTED STOP BAR
4. "DO NOT ENTER" SIGN (MUTCD R5-1)
5. "ONE WAY" SIGN (MUTCD R6-2)
6. "SLOW 5 MPH" SIGN (BLACK LETTERING OVER WHITE BACKGROUND – 18"x24")
7. "STUDENT DROP-OFF LANE PULL FORWARD" SIGN (BLACK LETTERING OVER WHITE BACKGROUND – 18"x24")
8. PROVIDE CURB STRIPING OR SIGNAGE STATING "NO PARKING FIRE LANE" EVERY 50 FEET. FIRE LANE DESIGNATION SHALL BE PAINTED YELLOW WITH BLACK LETTERING ON CURBS OR YELLOW STRIPING WITH YELLOW LETTERING INSIDE OF THE STRIPING. CONTRACTOR SHALL COORDINATE FIRE LANE MARKINGS/SIGNAGE REQUIREMENTS WITH FIRE MARSHAL. FIRE LANE MARKINGS/SIGNAGE SHALL BE INSTALLED PRIOR TO BUILDING OCCUPANCY PER THE APPROVED SITE PLAN. (TYP.)
9. "WRONG WAY" SIGN (MUTCD R5-1A)
10. SIGN POST (TYP.) (1 / C7.04)
11. "BUSES ONLY" SIGN. (BLACK LETTERING OVER WHITE BACKGROUND – 18"x24")
12. "DO NOT BLOCK DRIVEWAY" SIGN. (BLACK LETTERING OVER WHITE BACKGROUND – 18"x24")
13. MIN. 8" HIGH WHITE LETTERING "COMPACT". (TYP.)
14. "SERVICE DRIVE ACCESS ONLY" SIGN (BLACK LETTERING OVER WHITE BACKGROUND – 18"x24")

NOTE

CONTRACTOR SHALL PROVIDE SIGNAGE SUBMITTAL FOR REVIEW AND APPROVAL BY THE ENGINEER PRIOR TO CONSTRUCTION.

LEGEND

FIRE LANE STRIPING AND SIGNAGE (SEE KEY NOTE 8)

ASPHALT SEALCOAT

N

SCALE: 1" = 30'

0 15' 30' 60'

811 CALL 2 BUSINESS DAYS BEFORE YOU DIG 811 OR 1-800-424-5555

THESE DRAWINGS ARE NOT TO BE USED FOR CONSTRUCTION UNLESS SIGNED BY THE REVIEWING AGENCY

Integrity Works
Consulting Engineers, LLC
170 W. Dayton St. Suite 204 Edmonds WA 98020
O: 425.967.7913 C: 206.920.9410

HUTTEBALL + OREMUS architecture
4010 LAKE WASHINGTON BLVD NE
SUITE 320
KIRKLAND, WA 98033
425.828.8948
HOARCH.COM

ARCHITECT STAMP

CONSULTANT STAMP

JOSEPH B. MOON STATE OF WASHINGTON 36022 REGISTERED PROFESSIONAL ENGINEER
4/13/20

PROJECT INFORMATION

Inglemoor High School Concert Hall + Music Building

15500 Simonds Rd NE
Kenmore, WA 98028

NORTHSHORE SCHOOL DISTRICT No. 417

SCHOOL DISTRICT LOGO

Northshore School District

02.13.2019 SCHEMATIC DESIGN
04.08.2019 VALUE ENGINEERING
09.16.2019 SITE PLAN REVIEW
10.18.2019 DESIGN DEVELOPMENT
01.13.2020 CONSTRUCTABILITY REVIEW
03.23.2020 HEALTH DEPARTMENT PERMIT SUBMITTAL
04.13.2020 BID DOCUMENTS

BID DOCUMENTS

04.13.2020

PROJECT NUMBER: 1711

SHEET NAME

SIGNAGE AND STRIPING PLAN

SHEET NUMBER

C7.00

S1/2, NW1/4 & N1/2 SW1/4, SEC.18, T.26N., R.5E., W.M.

MATCHLINE – SEE SHEET C7.00

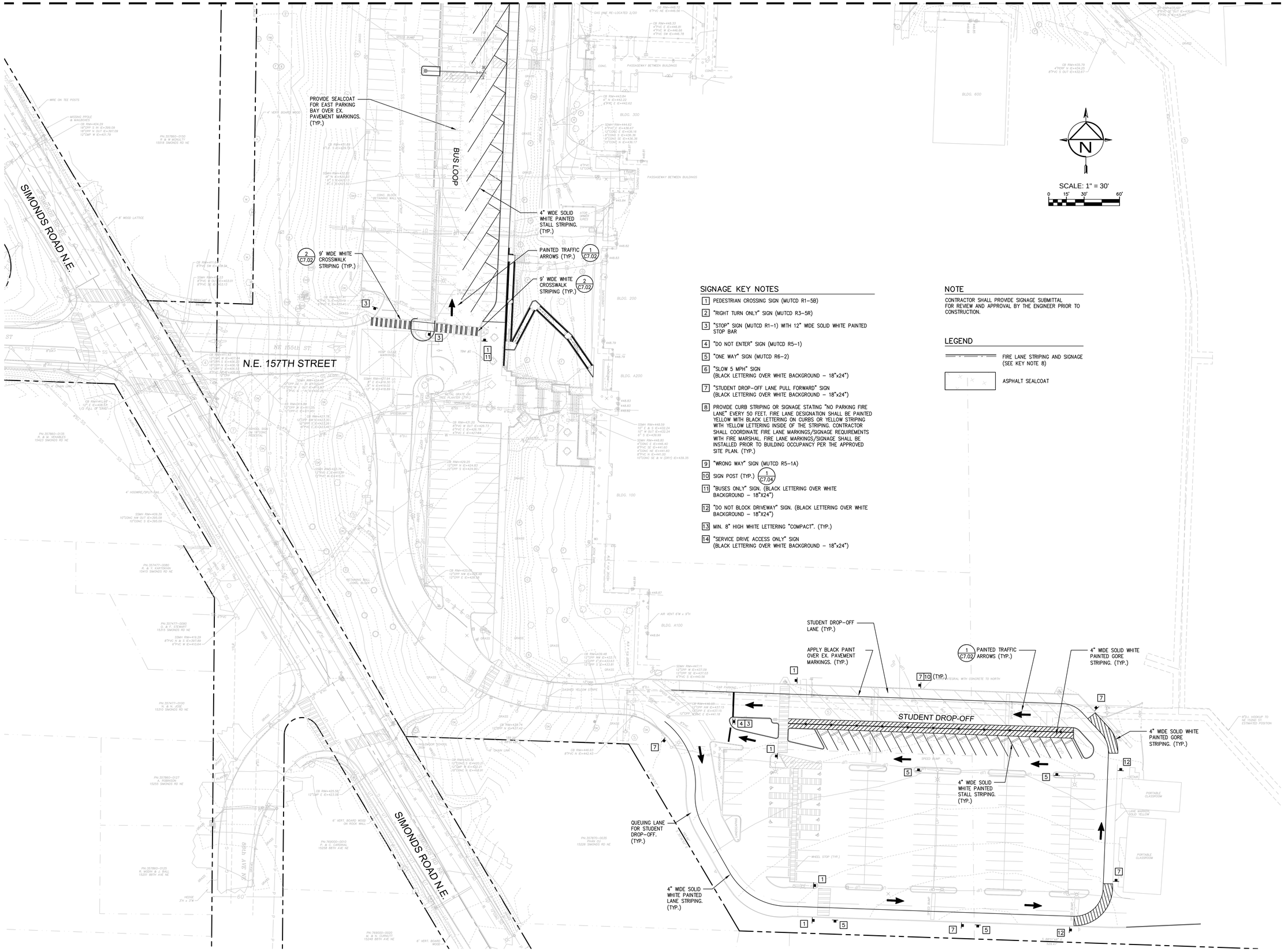

SIGNAGE KEY NOTES

1. PEDESTRIAN CROSSING SIGN (MUTCD R1-5B)
2. "RIGHT TURN ONLY" SIGN (MUTCD R3-5R)
3. "STOP" SIGN (MUTCD R1-1) WITH 12" WIDE SOLID WHITE PAINTED STOP BAR
4. "DO NOT ENTER" SIGN (MUTCD R5-1)
5. "ONE WAY" SIGN (MUTCD R6-2)
6. "SLOW 5 MPH" SIGN (BLACK LETTERING OVER WHITE BACKGROUND – 18"x24")
7. "STUDENT DROP-OFF LANE PULL FORWARD" SIGN (BLACK LETTERING OVER WHITE BACKGROUND – 18"x24")
8. PROVIDE CURB STRIPING OR SIGNAGE STATING "NO PARKING FIRE LANE" EVERY 50 FEET. FIRE LANE DESIGNATION SHALL BE PAINTED YELLOW WITH BLACK LETTERING ON CURBS OR YELLOW STRIPING WITH YELLOW LETTERING INSIDE OF THE STRIPING. CONTRACTOR SHALL COORDINATE FIRE LANE MARKINGS/SIGNAGE REQUIREMENTS WITH FIRE MARSHAL. FIRE LANE MARKINGS/SIGNAGE SHALL BE INSTALLED PRIOR TO BUILDING OCCUPANCY PER THE APPROVED SITE PLAN. (TYP.)
9. "WRONG WAY" SIGN (MUTCD R5-1A)
10. SIGN POST (TYP.) 1/C7.04
11. "BUSES ONLY" SIGN. (BLACK LETTERING OVER WHITE BACKGROUND – 18"X24")
12. "DO NOT BLOCK DRIVEWAY" SIGN. (BLACK LETTERING OVER WHITE BACKGROUND – 18"X24")
13. MIN. 8" HIGH WHITE LETTERING "COMPACT". (TYP.)
14. "SERVICE DRIVE ACCESS ONLY" SIGN (BLACK LETTERING OVER WHITE BACKGROUND – 18"x24")

NOTE

CONTRACTOR SHALL PROVIDE SIGNAGE SUBMITTAL FOR REVIEW AND APPROVAL BY THE ENGINEER PRIOR TO CONSTRUCTION.

LEGEND

- FIRE LANE STRIPING AND SIGNAGE (SEE KEY NOTE 8)
- ASPHALT SEALCOAT

811 CALL 2 BUSINESS DAYS BEFORE YOU DIG 811 OR 1-800-424-5555

THESE DRAWINGS ARE NOT TO BE USED FOR CONSTRUCTION UNLESS SIGNED BY THE REVIEWING AGENCY

Integrity Works
Consulting Engineers, LLC
170 W. Dayton St. Suite 204 Edmonds WA 98020
O: 425.967.7913 C: 206.920.9410

HUTTEBALL + OREMUS architecture
4010 LAKE WASHINGTON BLVD NE
SUITE 320
KIRKLAND, WA 98033
425.828.8948
HOARCH.COM

ARCHITECT STAMP

CONSULTANT STAMP

JOSEPH B. MOON STATE OF WASHINGTON 18822 REGISTERED PROFESSIONAL ENGINEER
4/13/20

PROJECT INFORMATION

Inglemoor High School Concert Hall + Music Building

15500 Simonds Rd NE
Kenmore, WA 98028

NORTHSHORE SCHOOL DISTRICT No. 417

SCHOOL DISTRICT LOGO

Northshore School District

02.13.2019	SCHEMATIC DESIGN
04.08.2019	VALUE ENGINEERING
09.16.2019	SITE PLAN REVIEW
10.18.2019	DESIGN DEVELOPMENT
01.13.2020	CONSTRUCTABILITY REVIEW
03.23.2020	HEALTH DEPARTMENT PERMIT SUBMITTAL
04.13.2020	BID DOCUMENTS

BID DOCUMENTS

04.13.2020

PROJECT NUMBER: 1711

SHEET NAME

SIGNAGE AND STRIPING PLAN

SHEET NUMBER

C7.01

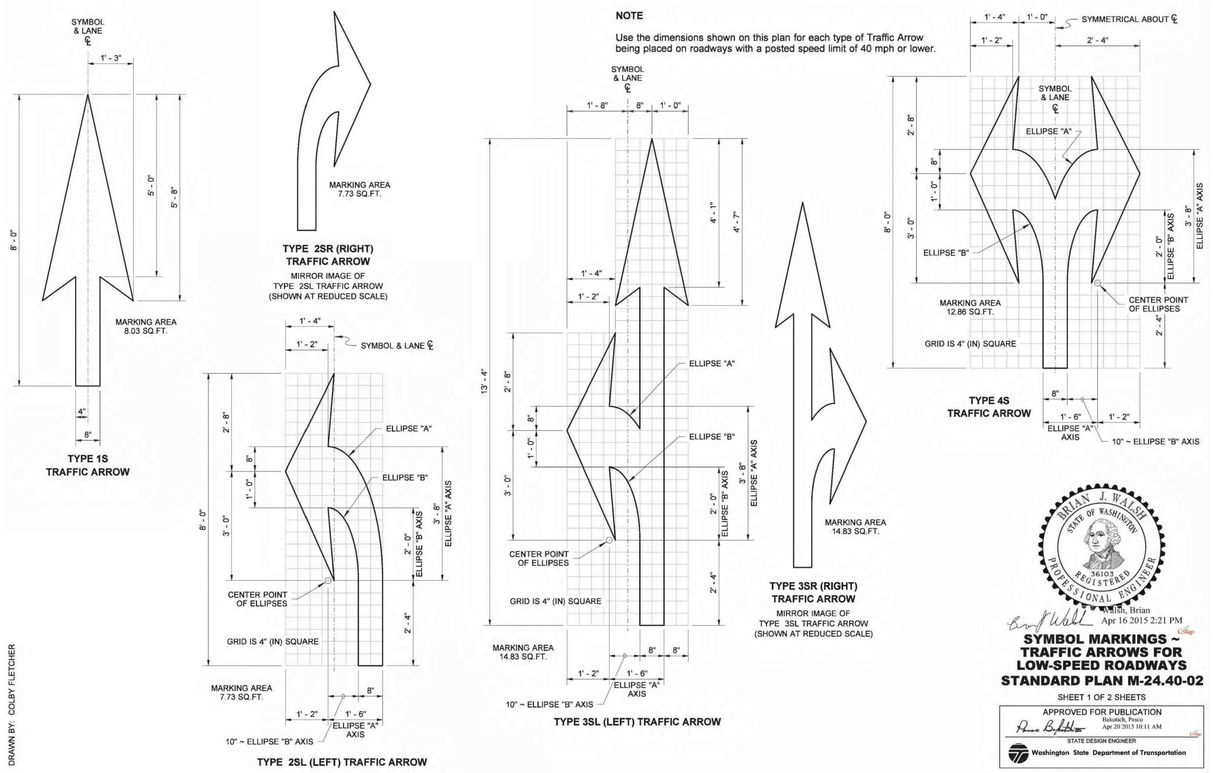

DRAWN BY: COLBY FLETCHER

1 TRAFFIC ARROWS
NOT TO SCALE

BRIAN J. WALSH
STATE OF WASHINGTON
36103
REGISTERED
PROFESSIONAL ENGINEER

Walsh, Brian
Apr 16 2015 2:21 PM

SYMBOL MARKINGS ~ TRAFFIC ARROWS FOR LOW-SPEED ROADWAYS
STANDARD PLAN M-24.40-02

SHEET 1 OF 2 SHEETS

APPROVED FOR PUBLICATION
Bakotich, Peace
Apr 20 2015 10:11 AM
STATE DESIGN ENGINEER
Washington State Department of Transportation

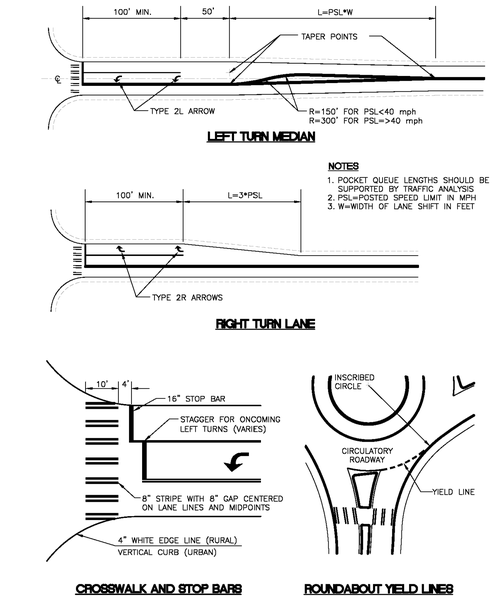

Department of Transportation
Road Services Division
2016 Design and Construction Standards
King County

CHANNELIZATION DETAILS FIG. 4-001

4-13

2 CROSSWALK STRIPING
NOT TO SCALE

811 CALL 2 BUSINESS DAYS BEFORE YOU DIG 811 OR 1-800-424-5555

THESE DRAWINGS ARE NOT TO BE USED FOR CONSTRUCTION UNLESS SIGNED BY THE REVIEWING AGENCY

HUTTEBALL + OREMUS architecture
4010 LAKE WASHINGTON BLVD NE
SUITE 320
KIRKLAND, WA 98033
425.828.8948
HOARCH.COM

ARCHITECT STAMP

CONSULTANT STAMP

JOSEPH B. MOON
STATE OF WASHINGTON
36022
REGISTERED
PROFESSIONAL ENGINEER
4/13/20

PROJECT INFORMATION

Inglemoor High School Concert Hall + Music Building

15500 Simonds Rd NE
Kenmore, WA 98028

NORTHSHORE SCHOOL DISTRICT No. 417

SCHOOL DISTRICT LOGO

Northshore School District

02.13.2019 SCHEMATIC DESIGN
04.08.2019 VALUE ENGINEERING
09.16.2019 SITE PLAN REVIEW
10.18.2019 DESIGN DEVELOPMENT
01.13.2020 CONSTRUCTABILITY REVIEW
03.23.2020 HEALTH DEPARTMENT PERMIT SUBMITTAL
04.13.2020 BID DOCUMENTS

BID DOCUMENTS

04.13.2020

PROJECT NUMBER: 1711

SHEET NAME

SIGNAGE AND STRIPING DETAILS

SHEET NUMBER

C7.02

Integrity Works
Consulting Engineers, LLC
170 W. Dayton St. Suite 204 Edmonds, WA 98020
O: 425.967.7913 C: 206.920.9410

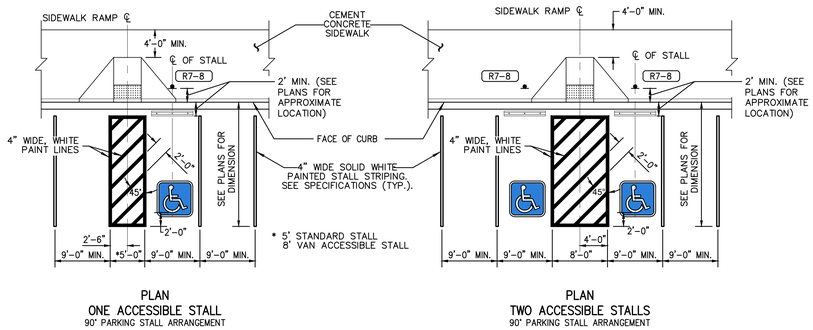

PLAN
ONE ACCESSIBLE STALL
90° PARKING STALL ARRANGEMENT

PLAN
TWO ACCESSIBLE STALLS
90° PARKING STALL ARRANGEMENT

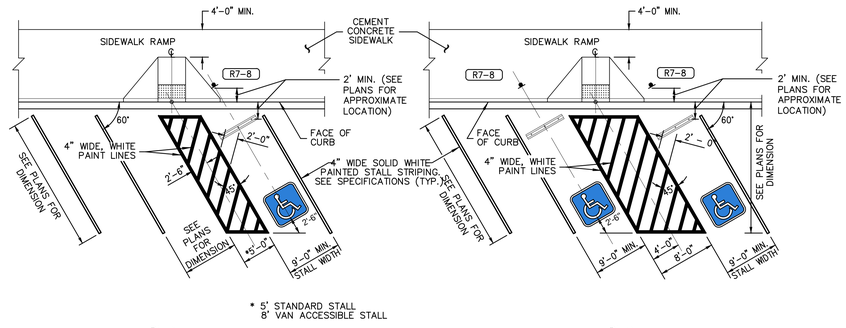

PLAN
ONE ACCESSIBLE STALL
60° PARKING STALL ARRANGEMENT

PLAN
TWO ACCESSIBLE STALLS
60° PARKING STALL ARRANGEMENT

LEGEND

- R7-8 — RESERVED PARKING SIGN AND POST WITH R7-8 PLAQUE PER MUTCD MANUAL. (3/—)
- ACCESS PARKING SPACE SYMBOL. (2/—) REQUIRED FOR EACH STALL.
- CONCRETE WHEEL STOP
- DETECTABLE WARNING PATTERN

NOTES

1. SEE SITE PLAN FOR ACCESSIBLE PARKING SPACE LOCATIONS.
2. AN ACCESS PARKING SPACE SYMBOL IS REQUIRED FOR EACH ACCESSIBLE PARKING STALL. A BLUE BACKGROUND AND WHITE BORDER ARE REQUIRED.
3. ALL ACCESSIBLE STALLS SHALL HAVE WHEEL STOPS.
4. REFER TO THE PAVING PLANS FOR SIDEWALK RAMP, DETECTABLE WARNING PATTERN, AND CURB DETAILS.
5. SLOPES SHALL NOT EXCEED 2.0% IN ANY DIRECTION WITHIN ACCESSIBLE PARKING SPACES.

1 BARRIER FREE PARKING AREA AND STRIPING
NOT TO SCALE

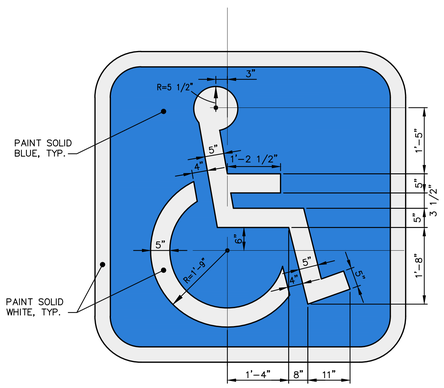

2 INTERNATIONAL ACCESSIBLE (ADA) SYMBOL
NOT TO SCALE

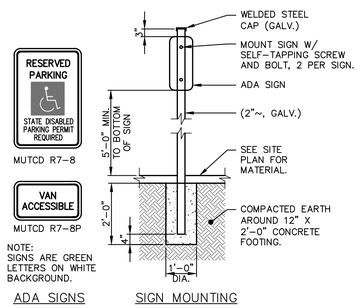

ADA SIGNS

SIGN MOUNTING

3 ADA SIGN
NOT TO SCALE

6 NOT USED
NOT TO SCALE

811 CALL 2 BUSINESS DAYS BEFORE YOU DIG 811 OR 1-800-424-5555

THESE DRAWINGS ARE NOT TO BE USED FOR CONSTRUCTION UNLESS SIGNED BY THE REVIEWING AGENCY

Integrity Works
Consulting Engineers, LLC
170 W. Dayton St. Suite 204 Edmonds WA 98020
O: 425.967.7913 C: 206.920.9410

HUTTEBALL + OREMUS architecture
4010 LAKE WASHINGTON BLVD NE
SUITE 320
KIRKLAND, WA 98033
425.828.8948
HOARCH.COM

ARCHITECT STAMP

CONSULTANT STAMP

JOSEPH B. MOON — STATE OF WASHINGTON — 36922 — REGISTERED PROFESSIONAL ENGINEER
4/13/20

PROJECT INFORMATION

Inglemoor High School Concert Hall + Music Building

15500 Simonds Rd NE
Kenmore, WA 98028

NORTHSHORE SCHOOL DISTRICT No. 417

SCHOOL DISTRICT LOGO

Northshore School District

02.13.2019 SCHEMATIC DESIGN
04.08.2019 VALUE ENGINEERING
09.16.2019 SITE PLAN REVIEW
10.18.2019 DESIGN DEVELOPMENT
01.13.2020 CONSTRUCTABILITY REVIEW
03.23.2020 HEALTH DEPARTMENT PERMIT SUBMITTAL
04.13.2020 BID DOCUMENTS

BID DOCUMENTS

04.13.2020

PROJECT NUMBER: 1711

SHEET NAME

SIGNAGE AND STRIPING DETAILS

SHEET NUMBER

C7.03

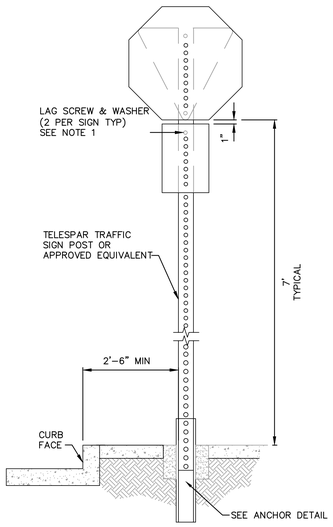

POST ANCHOR INSTALLATIONS

NOTES:
1. 5/16"X3 1/4" GALVANIZED OR PLATED LAG SCREW & 3/8"ID X 1"OD NYLON WASHER.

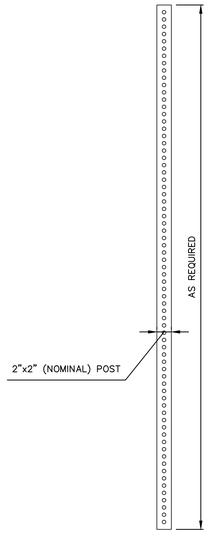

QWIK PUNCH TELESPAR STANDARD SIGN POST
(OR APPROVED EQUIV.)

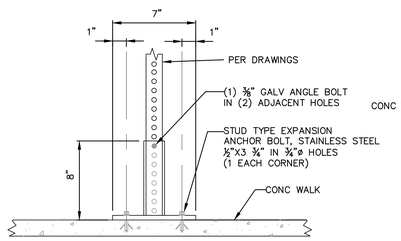

SURFACE MOUNT

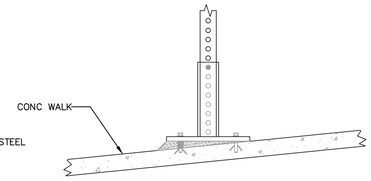

NOTE: FOR UNLEVEL SIDEWALKS INSERT WASHERS AS SPACERS BETWEEN PLATE AND SIDEWALK. GROUT ALL SPACE AS SHOWN. IF BOLT CANNOT PENETRATE SIDEWALK AT LEAST 2", CONTACT THE ENGINEER.

SURFACE MOUNT

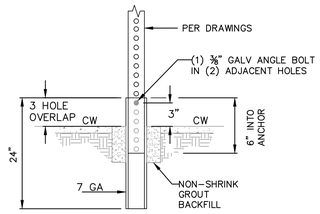

ANCHOR DETAIL

4 SIGN POST
NOT TO SCALE

2 NOT USED
NOT TO SCALE

3 NOT USED
NOT TO SCALE

4 NOT USED
NOT TO SCALE

5 NOT USED
NOT TO SCALE

811 CALL 2 BUSINESS DAYS BEFORE YOU DIG 811 OR 1-800-424-5555

THESE DRAWINGS ARE NOT TO BE USED FOR CONSTRUCTION UNLESS SIGNED BY THE REVIEWING AGENCY

Integrity Works
Consulting Engineers, LLC
170 W. Dayton St. Suite 204 Edmonds WA 98020
O: 425.967.7913 C: 206.920.9410

HUTTEBALL + OREMUS architecture
4010 LAKE WASHINGTON BLVD NE
SUITE 320
KIRKLAND, WA 98033
425.828.8948
HOARCH.COM

ARCHITECT STAMP

CONSULTANT STAMP

JOSEPH B. MOORE STATE OF WASHINGTON 36922 REGISTERED PROFESSIONAL ENGINEER
4/13/20

PROJECT INFORMATION

Inglemoor High School Concert Hall + Music Building

15500 Simonds Rd NE
Kenmore, WA 98028

NORTHSHORE SCHOOL DISTRICT No. 417

SCHOOL DISTRICT LOGO

Northshore School District

02.13.2019 SCHEMATIC DESIGN
04.08.2019 VALUE ENGINEERING
09.16.2019 SITE PLAN REVIEW
10.18.2019 DESIGN DEVELOPMENT
01.13.2020 CONSTRUCTABILITY REVIEW
03.23.2020 HEALTH DEPARTMENT PERMIT SUBMITTAL
04.13.2020 BID DOCUMENTS

BID DOCUMENTS

04.13.2020

PROJECT NUMBER: 1711

SHEET NAME

SIGNAGE AND STRIPING DETAILS

SHEET NUMBER

C7.04

S1/2, NW1/4 & N1/2 SW1/4, SEC.18, T.26N., R.5E., W.M.

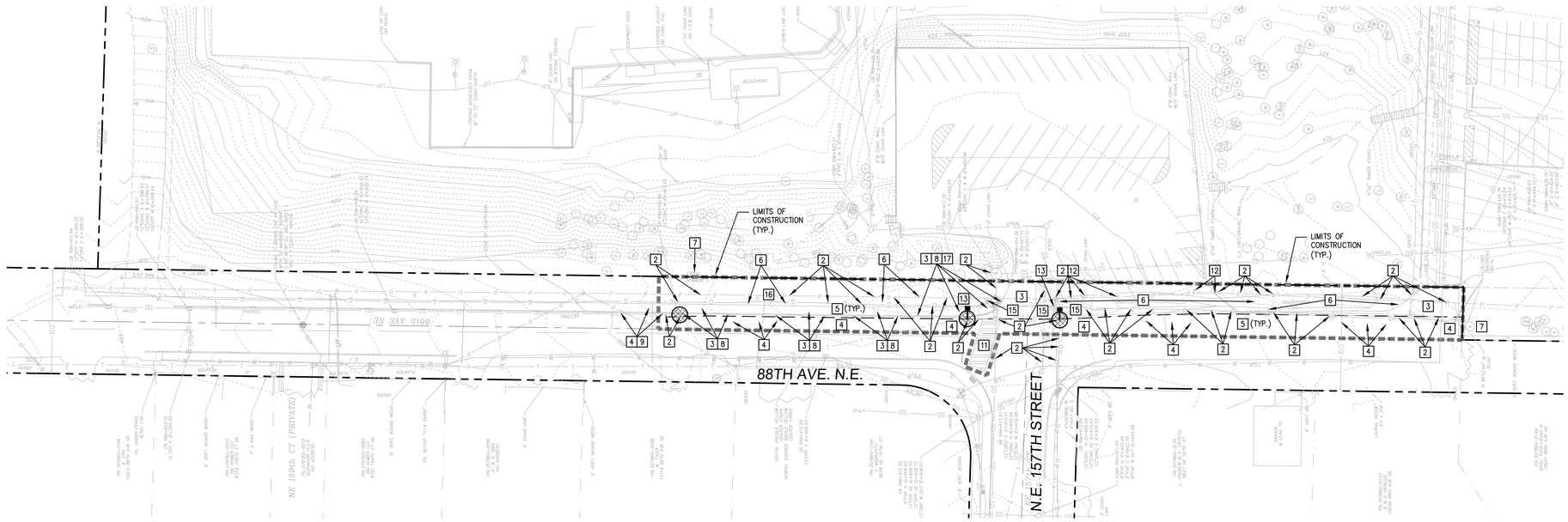

DEMOLITION KEY NOTES

1. DEMOLISH AND REMOVE EXISTING UNDERGROUND UTILITIES AND ASSOCIATED STRUCTURES.
2. PRESERVE AND PROTECT EXISTING UNDERGROUND/OVERHEAD UTILITIES AND/OR STRUCTURES.
3. DEMOLISH AND REMOVE EXISTING ASPHALT PAVING.
4. PRESERVE AND PROTECT EXISTING ASPHALT PAVING TO REMAIN.
5. SAWCUT EX. PAVEMENT WITH NEAT EDGE.
6. CLEAR, GRUB, AND STRIP EXISTING VEGETATION.
7. PRESERVE AND PROTECT EXISTING TREE. CONTRACTOR SHALL COORDINATE TREE PROTECTION WITH THE OWNER'S ARBORIST TO ENSURE THAT THE PROPOSED WORK WILL NOT DAMAGE THE TREE.
8. DEMOLISH AND REMOVE EXISTING CURB.
9. PRESERVE AND PROTECT EXISTING CURB.
10. REMOVE EX. GATE.
11. GRIND/REMOVE EX. CROSSWALK STRIPING.
12. PRESERVE AND PROTECT EX. POWER UTILITIES. RELOCATE EX. GUY WIRES AND ASSOCIATED ANCHORS TO PROVIDE CLEAR PEDESTRIAN ACCESS FOR NEW SIDEWALK. CONTRACTOR SHALL COORDINATE SIDEWALK CONSTRUCTION AND RELOCATION OF EX. UTILITIES WITH THE CITY OF KENMORE, POWER UTILITY PURVEYOR, AND THE ENGINEER.
13. TO ACCOMMODATE THE NEW STORM CONSTRUCTION, CONTRACTOR SHALL REMOVE AND COORDINATE REPLACEMENT OF EX. GAS MAIN WITH THE UTILITY PURVEYOR, CITY OF KENMORE, AND THE ENGINEER. CONTRACTOR SHALL PROVIDE UTILITY TRENCHING, BEDDING, BACKFILL, AND PAVEMENT RESTORATION AS NECESSARY.
14. NOT USED
15. REMOVE EX. SIGN DURING CONSTRUCTION. REPLACE EXISTING SIGN UPON COMPLETION OF WORK. COORDINATE NEW LOCATION WITH ENGINEER.
16. PRESERVE AND PROTECT EXISTING SIGN.
17. DEMOLISH AND REMOVE EXISTING CONCRETE PAVING.

DEMOLITION & TESC LEGEND

CLEARING LIMIT W/ ORANGE CONSTRUCTION FENCING AS REQUIRED.

SAWCUT LINE

CATCH BASIN INLET PROTECTION

SCALE: 1" = 30'

0 15' 30' 60'

811 CALL 2 BUSINESS DAYS BEFORE YOU DIG 811 OR 1-800-424-5555

THESE DRAWINGS ARE NOT TO BE USED FOR CONSTRUCTION UNLESS SIGNED BY THE REVIEWING AGENCY

Integrity Works
Consulting Engineers, LLC
11255 Kirkland Way, Suite 300, Kirkland, WA 98033
O: 425.967.7913 C: 206.920.9410

JOSEPH B. MOON STATE OF WASHINGTON 36922 REGISTERED PROFESSIONAL ENGINEER
4/13/20

Northshore School District
Inglemoor High School
Concert Hall + Music Building
15500 Simonds Rd. N.E. Kenmore WA 98028

PROJECT NO	17106
FILE	17106-DM-RD
DRAWN	RB
CHECKED	JBM
DATE:	01-06-20

ISSUE/REVISION	DATE

SHEET NAME

88TH AVE. N.E. DEMOLITION AND T.E.S.C. PLAN

SHEET NUMBER

R1.00

P:\PROJECTS\17106\CAD\17106-DM-RD.DWG 4/5/2020 6:43 PM RBELL1

HUTTEBALL + OREMUS architecture
4010 LAKE WASHINGTON BLVD NE
SUITE 320
KIRKLAND, WA 98033
425.828.8948
HOARCH.COM

ARCHITECT STAMP

CONSULTANT STAMP

JOSEPH B. MOON STATE OF WASHINGTON 36922 REGISTERED PROFESSIONAL ENGINEER
4/13/20

PROJECT INFORMATION

Inglemoor High School Concert Hall + Music Building

15500 Simonds Rd NE
Kenmore, WA 98028

NORTHSHORE SCHOOL DISTRICT No. 417

SCHOOL DISTRICT LOGO

Northshore School District

02.13.2019 SCHEMATIC DESIGN
04.08.2019 VALUE ENGINEERING
09.16.2019 SITE PLAN REVIEW
10.18.2019 DESIGN DEVELOPMENT
01.13.2020 CONSTRUCTABILITY REVIEW
03.23.2020 HEALTH DEPARTMENT PERMIT SUBMITTAL
04.13.2020 BID DOCUMENTS

BID DOCUMENTS

04.13.2020

PROJECT NUMBER: 1711

SHEET NAME

88TH AVE. N.E. DEMOLITION AND T.E.S.C. PLAN

SHEET NUMBER

R1.00

S1/2, NW1/4 & N1/2 SW1/4, SEC.18, T.26N., R.5E., W.M.

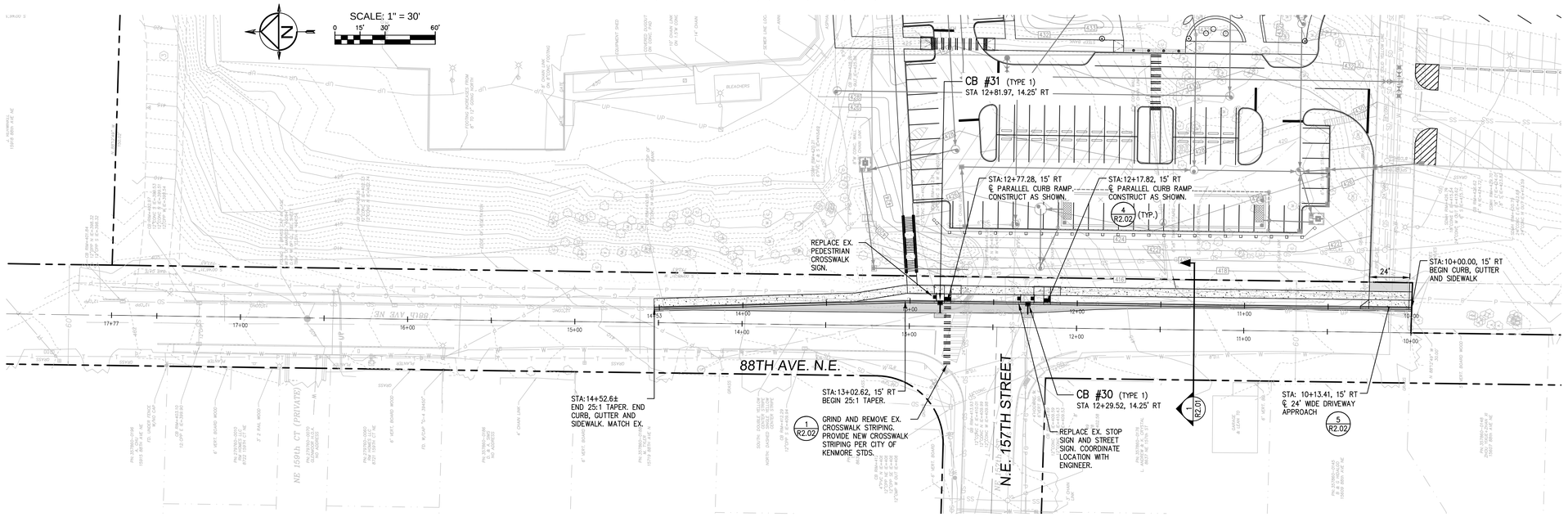

ROAD PLAN

SCALE: 1" = 30' (H)

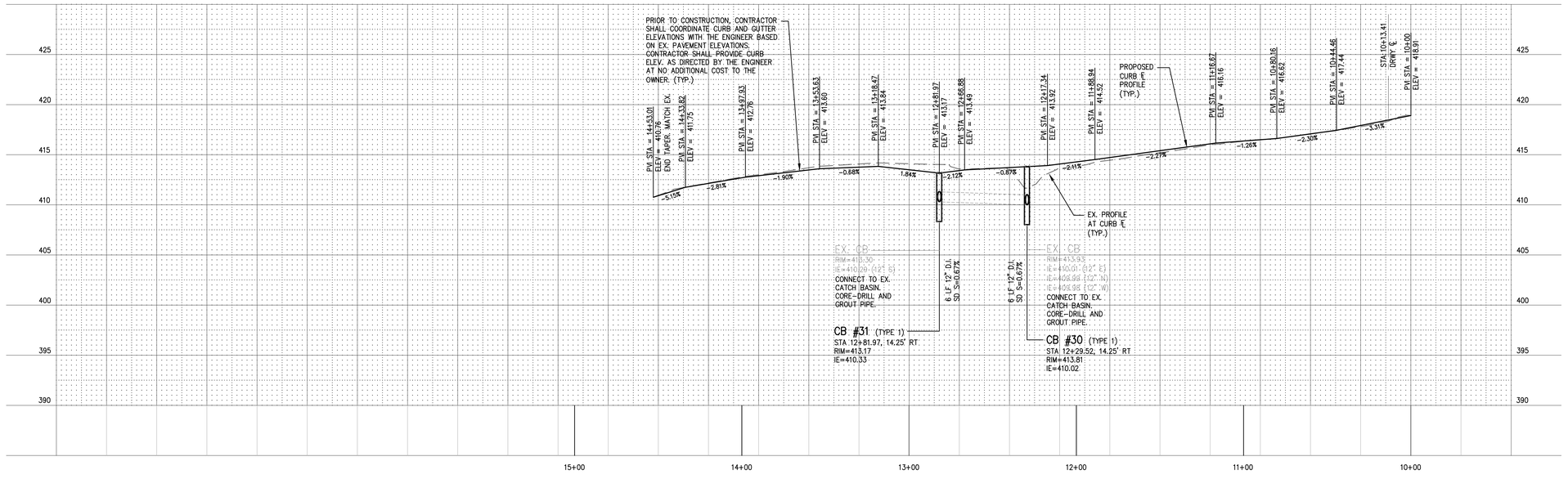

ROAD PROFILE

SCALE: 1" = 30' (H)
1" = 5' (V)

811 CALL 2 BUSINESS DAYS BEFORE YOU DIG 811 OR 1-800-424-5555

THESE DRAWINGS ARE NOT TO BE USED FOR CONSTRUCTION UNLESS SIGNED BY THE REVIEWING AGENCY

P:\PROJECTS\17106\CAD\17106-RD.DWG 4/5/2020 7:17 PM RBELL1

Integrity Works
Consulting Engineers, LLC
17522 Bothell Way NE, Bothell, Washington 98020
O: 425.967.7913 C: 206.920.9410

JOSEPH B. MOON
STATE OF WASHINGTON
36922
REGISTERED
PROFESSIONAL ENGINEER
4/13/20

Northshore School District
Inglemoor High School
Concert Hall + Music Building
15500 Simonds Rd. N.E. Kenmore WA 98028

PROJECT NO	17106
FILE	17106-RD
DRAWN	RB
CHECKED	JBM
DATE:	01-06-20

ISSUE/REVISION	DATE

SHEET NAME

ROADWAY AND DRAINAGE PLAN

SHEET NUMBER

R2.00

HUTTEBALL + OREMUS architecture
4010 LAKE WASHINGTON BLVD NE
SUITE 320
KIRKLAND, WA 98033
425.828.8948
HOARCH.COM

ARCHITECT STAMP

CONSULTANT STAMP

JOSEPH B. MOON
STATE OF WASHINGTON
36922
REGISTERED
PROFESSIONAL ENGINEER
4/13/20

PROJECT INFORMATION

Inglemoor High School Concert Hall + Music Building

15500 Simonds Rd NE
Kenmore, WA 98028

NORTHSHORE SCHOOL DISTRICT No. 417

SCHOOL DISTRICT LOGO

Northshore School District

02.13.2019 SCHEMATIC DESIGN
04.08.2019 VALUE ENGINEERING
09.16.2019 SITE PLAN REVIEW
10.18.2019 DESIGN DEVELOPMENT
01.13.2020 CONSTRUCTABILITY REVIEW
03.23.2020 HEALTH DEPARTMENT PERMIT SUBMITTAL
04.13.2020 BID DOCUMENTS

BID DOCUMENTS

04.13.2020

PROJECT NUMBER: 1711

SHEET NAME

ROADWAY AND DRAINAGE PLAN

SHEET NUMBER

R2.00

S1/2, NW1/4 & N1/2 SW1/4, SEC.18, T.26N., R.5E., W.M.

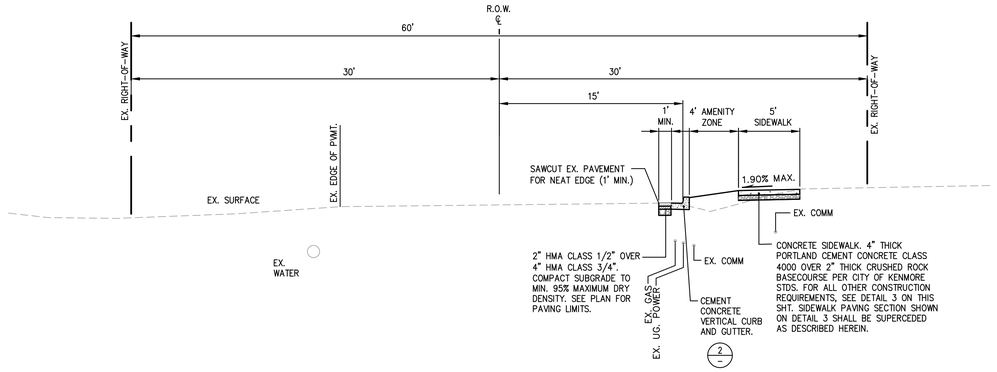

1 ROAD SECTION
NOT TO SCALE

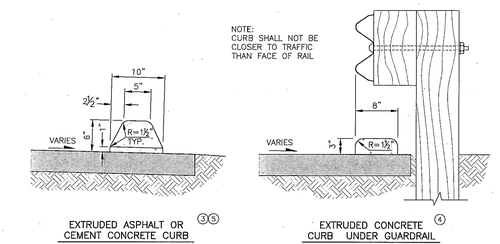

EXTRUDED ASPHALT OR CEMENT CONCRETE CURB ③⑤

EXTRUDED CONCRETE CURB UNDER GUARDRAIL ④

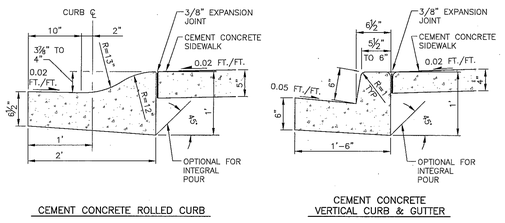

CEMENT CONCRETE ROLLED CURB

CEMENT CONCRETE VERTICAL CURB & GUTTER

NOTES:

1. SEE SEC. 3.04 K.C.R.S. FOR JOINT REQUIREMENTS.
2. ROLL AND VERTICAL GUTTER TO MATCH POSITIVE SUPERELEVATION.
3. SEE FIG. NO. 2-005 FOR CONFIGURATION OF FILL AND WALKWAY BEHIND CURB IF REQUIRED.
4. THIS IS A CURB LOCATION DETAIL, NOT A GUARDRAIL DETAIL.
5. SEE SEC. 3.03 FOR EXTRUDED CURB ANCHORAGE.

Department of Transportation Road Services Division 2016 Design and Construction Standards
King County

CURB DETAILS FIG. 3-002

3-13

2 CURB DETAILS
NOT TO SCALE

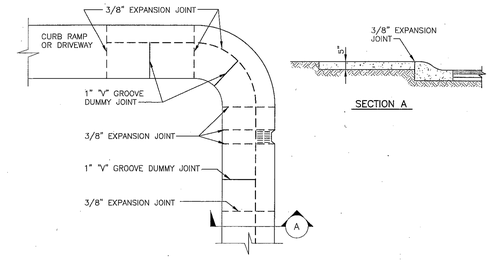

ROLLED CURB & SIDEWALK

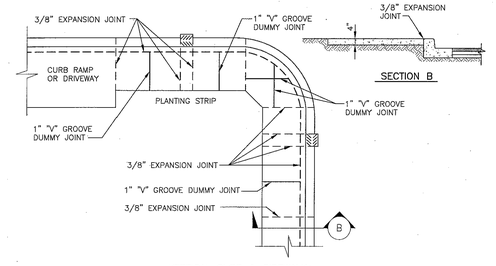

VERTICAL CURB & SIDEWALK

NOTE:

1. SEE SEC. 3.04 FOR JOINT REQUIREMENTS.

LEGEND

- 3/8" EXPANSION JOINT ALONG CURB AT MAX. 10' O.C.
- 1" "V" GROOVE DUMMY JOINT AT MAX. 5' O.C.

Department of Transportation Road Services Division 2016 Design and Construction Standards
King County

CURB AND SIDEWALK JOINTS FIG. 3-001

3-12

3 CURB AND SIDEWALK JOINTS
NOT TO SCALE

811 CALL 2 BUSINESS DAYS BEFORE YOU DIG 811 OR 1-800-424-5555

THESE DRAWINGS ARE NOT TO BE USED FOR CONSTRUCTION UNLESS SIGNED BY THE REVIEWING AGENCY

P:\PROJECTS\17106\CAD\17106-RD-DETAILS.DWG 4/5/2020 12:05 PM RBELL1

Integrity Works
Consulting Engineers, LLC
17706 68th Ave NE Suite B Bothell, Washington 98011
O: 425.867.7913 C: 206.920.3410

JOSEPH B. MOON STATE OF WASHINGTON 36922 REGISTERED PROFESSIONAL ENGINEER
4/13/20

Northshore School District
Inglemoor High School Concert Hall + Music Building
15500 Simonds Rd. N.E. Kenmore WA 98028

PROJECT NO	17106
FILE	17106-RD-DETAILS
DRAWN	RB
CHECKED	JBM
DATE:	01-06-20

ISSUE/REVISION	DATE
02.13.2019 SCHEMATIC DESIGN	
04.08.2019 VALUE ENGINEERING	
09.16.2019 SITE PLAN REVIEW	
10.18.2019 DESIGN DEVELOPMENT	
01.13.2020 CONSTRUCTABILITY REVIEW	
03.23.2020 HEALTH DEPARTMENT PERMIT SUBMITTAL	
04.13.2020 BID DOCUMENTS	

SHEET NAME

ROADWAY DETAILS

SHEET NUMBER

R2.01

HUTTEBALL + OREMUS architecture
4010 LAKE WASHINGTON BLVD NE
SUITE 320
KIRKLAND, WA 98033
425.828.8948
HOARCH.COM

ARCHITECT STAMP

CONSULTANT STAMP

JOSEPH B. MOON STATE OF WASHINGTON 36922 REGISTERED PROFESSIONAL ENGINEER
4/13/20

PROJECT INFORMATION

Inglemoor High School Concert Hall + Music Building

15500 Simonds Rd NE
Kenmore, WA 98028

NORTHSHORE SCHOOL DISTRICT No. 417

SCHOOL DISTRICT LOGO

Northshore School District

BID DOCUMENTS

04.13.2020

PROJECT NUMBER: 1711

SHEET NAME

ROADWAY DETAILS

SHEET NUMBER

R2.01

S1/2, NW1/4 & N1/2 SW1/4, SEC.18, T.26N., R.5E., W.M.

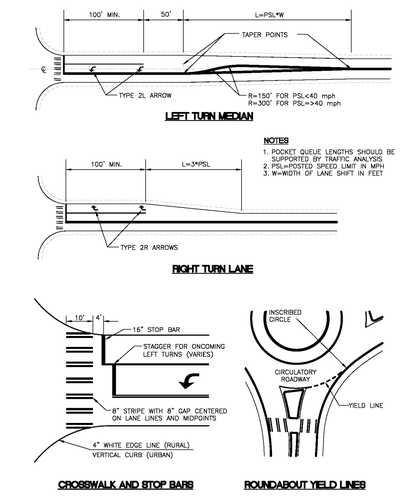

Department of Transportation
Road Services Division
2016 Design and Construction Standards
King County

CHANNELIZATION DETAILS — FIG. 4-001

4-13

1 CROSSWALK STRIPING
NOT TO SCALE

2 NOT USED
NOT TO SCALE

3 NOT USED
NOT TO SCALE

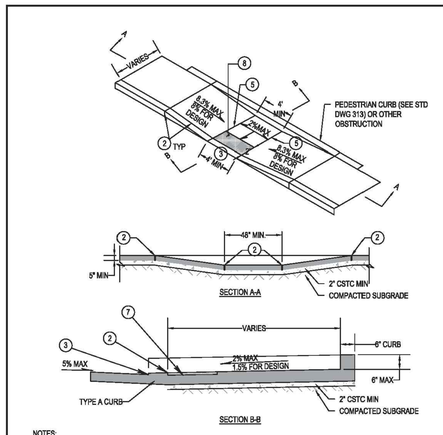

NOTES:
1. MAXIMUM ALLOWABLE GRADES ARE SHOWN AS WELL AS SUGGESTED DESIGN GRADES TO ALLOW FOR CONSTRUCTION TOLERANCES; REGARDLESS OF DESIGN, CONSTRUCTED RAMP MUST BE REQUIREMENTS.
2. ½" EXPANSION JOINT (TYP). FULL DEPTH EXPANSION JOINT.
3. NO LIP AT GUTTER LINE. CURB SHALL BE FLUSH AT GUTTER LINE.
4. CURB RAMPS SHALL BE ISOLATED BY EXPANSION JOINT MATERIAL ON ALL SIDES
5. 3/4" RADIUS DUMMY JOINT
6. CATCH BASINS & INLETS SHALL BE INSTALLED A MINIMUM OF 12' FROM THE BASE OF CURB RAMP LANDING.
7. SEE FIGURE 8-002 FOR DETECTABLE WARNING PATTERN (TRUNCATED DOMES)
8. DETECTABLE WARNING PATTERN (TRUNCATED DOMES) SHALL BE FLUSH WITH RAMP TEXTURE +/- NO GREATER THAN ¼".
9. DETECTABLE WARNING SURFACE SHALL BE YELLOW UNLESS APPROVED BY THE CITY MANAGER
10. THE CURB RAMP MUST MEET CURRENT ADA REQUIREMENTS.
11. CONCRETE SHALL BE A MINIMUM OF 5" THICK.

CITY OF KENMORE
2016 ROAD STANDARDS
PUBLIC WORKS DEPARTMENT
(425) 398-8900

PARALLEL CURB RAMP — FIG. 8-003

4 PARALLEL CURB RAMP
NOT TO SCALE

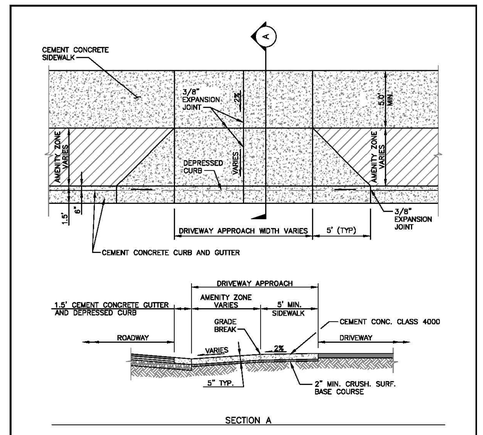

CITY OF KENMORE
2016 ROAD STANDARDS
PUBLIC WORKS DEPARTMENT
(425) 398-8900

DRIVEWAY APPROACH WITH AMENTITY ZONE — FIG. 5-001

5 DRIVEWAY APPROACH WITH AMENTITY ZONE
NOT TO SCALE

CALL 2 BUSINESS DAYS BEFORE YOU DIG 811 OR 1-800-424-5555

THESE DRAWINGS ARE NOT TO BE USED FOR CONSTRUCTION UNLESS SIGNED BY THE REVIEWING AGENCY

Integrity Works
Consulting Engineers, LLC
11818 SE 267th St, Suite 150, Kent, Washington 98030
O: 425.967.7913 C: 206.920.9410

JOSEPH B. MOON
STATE OF WASHINGTON
36922
REGISTERED
PROFESSIONAL ENGINEER
4/13/20

P:\PROJECTS\17106\CAD\17106-RD-DETAILS.DWG, 4/5/2020 1:00 PM, RBELL1

Northshore School District
Inglemoor High School
Concert Hall + Music Building
15500 Simonds Rd. N.E. Kenmore WA 98028

PROJECT NO	17106
FILE	17106-RD-DETAILS
DRAWN	RB
CHECKED	JBM
DATE:	01-06-20

ISSUE/REVISION	DATE
02.13.2019 SCHEMATIC DESIGN	
04.08.2019 VALUE ENGINEERING	
09.16.2019 SITE PLAN REVIEW	
10.18.2019 DESIGN DEVELOPMENT	
01.13.2020 CONSTRUCTABILITY REVIEW	
03.23.2020 HEALTH DEPARTMENT PERMIT SUBMITTAL	
04.13.2020 BID DOCUMENTS	

SHEET NAME

ROADWAY DETAILS

SHEET NUMBER

R2.02

HUTTEBALL + OREMUS architecture
4010 LAKE WASHINGTON BLVD NE
SUITE 320
KIRKLAND, WA 98033
425.828.8948
HOARCH.COM

ARCHITECT STAMP

CONSULTANT STAMP

JOSEPH B. MOON
STATE OF WASHINGTON
36922
REGISTERED
PROFESSIONAL ENGINEER
4/13/20

PROJECT INFORMATION

Inglemoor High School Concert Hall + Music Building

15500 Simonds Rd NE
Kenmore, WA 98028

NORTHSHORE SCHOOL DISTRICT No. 417

SCHOOL DISTRICT LOGO

Northshore School District

02.13.2019 SCHEMATIC DESIGN
04.08.2019 VALUE ENGINEERING
09.16.2019 SITE PLAN REVIEW
10.18.2019 DESIGN DEVELOPMENT
01.13.2020 CONSTRUCTABILITY REVIEW
03.23.2020 HEALTH DEPARTMENT PERMIT SUBMITTAL
04.13.2020 BID DOCUMENTS

BID DOCUMENTS

04.13.2020

PROJECT NUMBER: 1711

SHEET NAME

ROADWAY DETAILS

SHEET NUMBER

R2.02

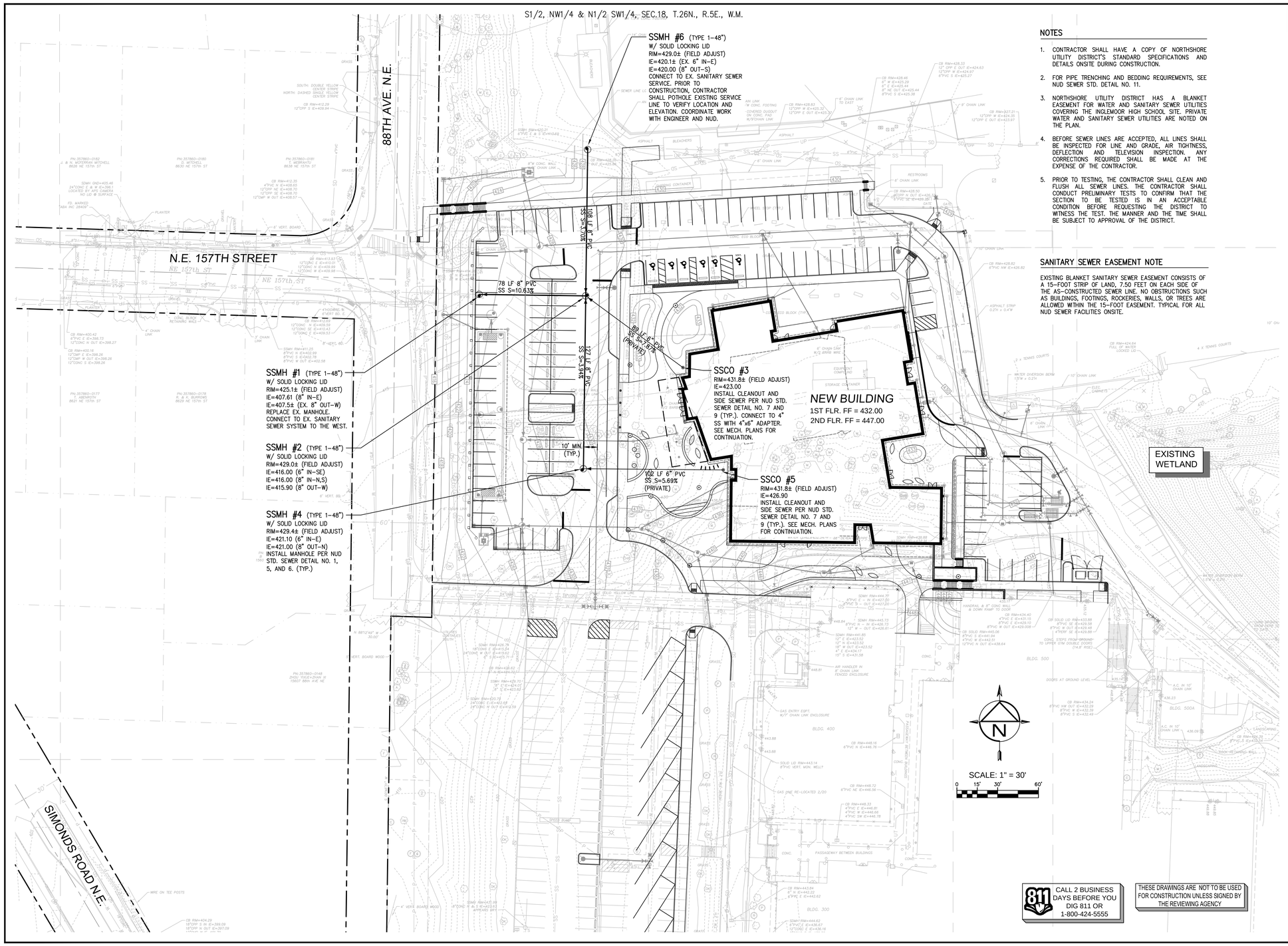

NOTES

1. CONTRACTOR SHALL HAVE A COPY OF NORTHSHORE UTILITY DISTRICT'S STANDARD SPECIFICATIONS AND DETAILS ONSITE DURING CONSTRUCTION.
2. FOR PIPE TRENCHING AND BEDDING REQUIREMENTS, SEE NUD SEWER STD. DETAIL NO. 11.
3. NORTHSHORE UTILITY DISTRICT HAS A BLANKET EASEMENT FOR WATER AND SANITARY SEWER UTILITIES COVERING THE INGLEMOOR HIGH SCHOOL SITE. PRIVATE WATER AND SANITARY SEWER UTILITIES ARE NOTED ON THE PLAN.
4. BEFORE SEWER LINES ARE ACCEPTED, ALL LINES SHALL BE INSPECTED FOR LINE AND GRADE, AIR TIGHTNESS, DEFLECTION AND TELEVISION INSPECTION. ANY CORRECTIONS REQUIRED SHALL BE MADE AT THE EXPENSE OF THE CONTRACTOR.
5. PRIOR TO TESTING, THE CONTRACTOR SHALL CLEAN AND FLUSH ALL SEWER LINES. THE CONTRACTOR SHALL CONDUCT PRELIMINARY TESTS TO CONFIRM THAT THE SECTION TO BE TESTED IS IN AN ACCEPTABLE CONDITION BEFORE REQUESTING THE DISTRICT TO WITNESS THE TEST. THE MANNER AND THE TIME SHALL BE SUBJECT TO APPROVAL OF THE DISTRICT.

SANITARY SEWER EASEMENT NOTE

EXISTING BLANKET SANITARY SEWER EASEMENT CONSISTS OF A 15-FOOT STRIP OF LAND, 7.50 FEET ON EACH SIDE OF THE AS-CONSTRUCTED SEWER LINE. NO OBSTRUCTIONS SUCH AS BUILDINGS, FOOTINGS, ROCKERIES, WALLS, OR TREES ARE ALLOWED WITHIN THE 15-FOOT EASEMENT. TYPICAL FOR ALL NUD SEWER FACILITIES ONSITE.

Integrity Works
Consulting Engineers, LLC
11431 Slater Avenue NE, Kirkland, Washington 98033
O: 425.967.7913 C: 206.920.9410

JOSEPH B. MOON STATE OF WASHINGTON 36922 REGISTERED PROFESSIONAL ENGINEER
4/13/20

Northshore School District
Inglemoor High School
Concert Hall + Music Building
15500 Simonds Rd. N.E. Kenmore WA 98028

PROJECT NO	17106
FILE	17106-SS
DRAWN	RB
CHECKED	JBM
DATE:	01-06-20

ISSUE/REVISION	DATE
02.13.2019 SCHEMATIC DESIGN	
04.08.2019 VALUE ENGINEERING	
09.16.2019 SITE PLAN REVIEW	
10.18.2019 DESIGN DEVELOPMENT	
01.13.2020 CONSTRUCTABILITY REVIEW	
03.23.2020 HEALTH DEPARTMENT PERMIT SUBMITTAL	
04.13.2020 BID DOCUMENTS	

SHEET NAME
SANITARY SEWER PLAN

SHEET NUMBER
SS2.00

P:\PROJECTS\17106\CAD\17106-SS.DWG 4/5/2020 10:50 AM RBELL

HUTTEBALL + OREMUS architecture
4010 LAKE WASHINGTON BLVD NE
SUITE 320
KIRKLAND, WA 98033
425.828.8948
HOARCH.COM

ARCHITECT STAMP

CONSULTANT STAMP

JOSEPH B. MOON STATE OF WASHINGTON 36922 REGISTERED PROFESSIONAL ENGINEER
4/13/20

PROJECT INFORMATION

Inglemoor High School Concert Hall + Music Building

15500 Simonds Rd NE
Kenmore, WA 98028

NORTHSHORE SCHOOL DISTRICT No. 417

SCHOOL DISTRICT LOGO

Northshore School District

BID DOCUMENTS

04.13.2020

PROJECT NUMBER: 1711

SHEET NAME
SANITARY SEWER PLAN

SHEET NUMBER
SS2.00

S1/2, NW1/4 & N1/2 SW1/4, SEC.18, T.26N., R.5E., W.M.

S1/2, NW1/4 & N1/2 SW1/4, SEC.18, T.26N., R.5E., W.M.

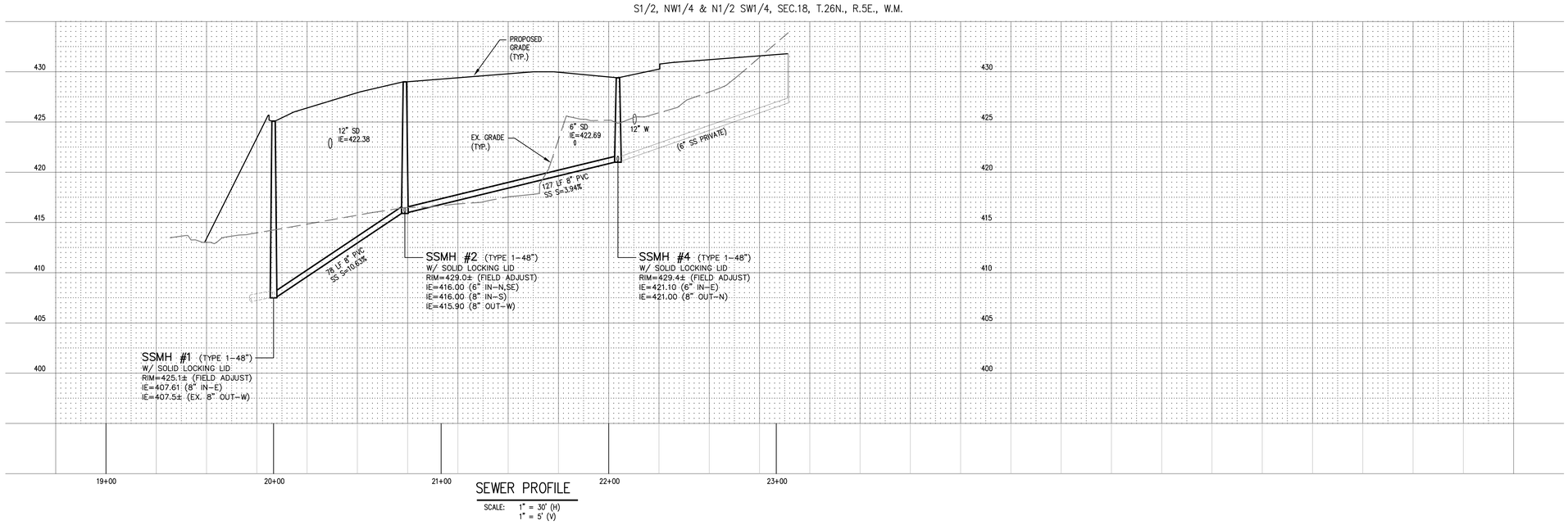

SEWER PROFILE

SCALE: 1" = 30' (H) 1" = 5' (V)

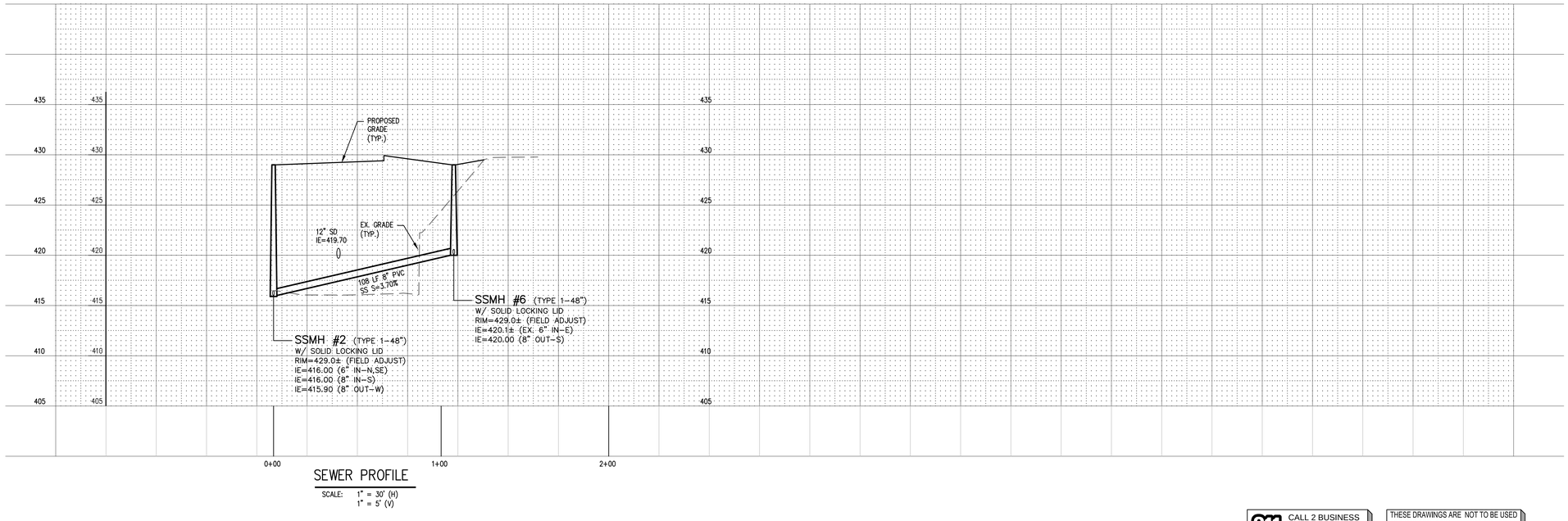

SEWER PROFILE

SCALE: 1" = 30' (H) 1" = 5' (V)

811 CALL 2 BUSINESS DAYS BEFORE YOU DIG 811 OR 1-800-424-5555

THESE DRAWINGS ARE NOT TO BE USED FOR CONSTRUCTION UNLESS SIGNED BY THE REVIEWING AGENCY

Integrity Works
Consulting Engineers, LLC
170 W. Dayton St. Suite 204 Edmonds WA 98020
O: 425.967.7913 C: 206.920.9410

P:\PROJECTS\17106\CAD\17106-SS-PROF.DWG 4/5/2020 11:01 AM RBELL1

4/13/20

Northshore School District

Inglemoor High School Concert Hall + Music Building

15500 Simonds Rd. N.E. Kenmore WA 98028

PROJECT NO	17106
FILE	17106-SS-PROF
DRAWN	RB
CHECKED	JBM
DATE:	01-06-20

ISSUE/REVISION	DATE

SHEET NAME

SANITARY SEWER PROFILE

SHEET NUMBER

SS2.01

HUTTEBALL + OREMUS architecture

4010 LAKE WASHINGTON BLVD NE
SUITE 320
KIRKLAND, WA 98033

425.828.8948

HOARCH.COM

ARCHITECT STAMP

CONSULTANT STAMP

4/13/20

PROJECT INFORMATION

Inglemoor High School Concert Hall + Music Building

15500 Simonds Rd NE
Kenmore, WA 98028

NORTHSHORE SCHOOL DISTRICT No. 417

SCHOOL DISTRICT LOGO

Northshore School District

02.13.2019 SCHEMATIC DESIGN
04.08.2019 VALUE ENGINEERING
09.16.2019 SITE PLAN REVIEW
10.18.2019 DESIGN DEVELOPMENT
01.13.2020 CONSTRUCTABILITY REVIEW
03.23.2020 HEALTH DEPARTMENT PERMIT SUBMITTAL
04.13.2020 BID DOCUMENTS

BID DOCUMENTS

04.13.2020

PROJECT NUMBER: 1711

SHEET NAME

SANITARY SEWER PROFILE

SHEET NUMBER

SS2.01

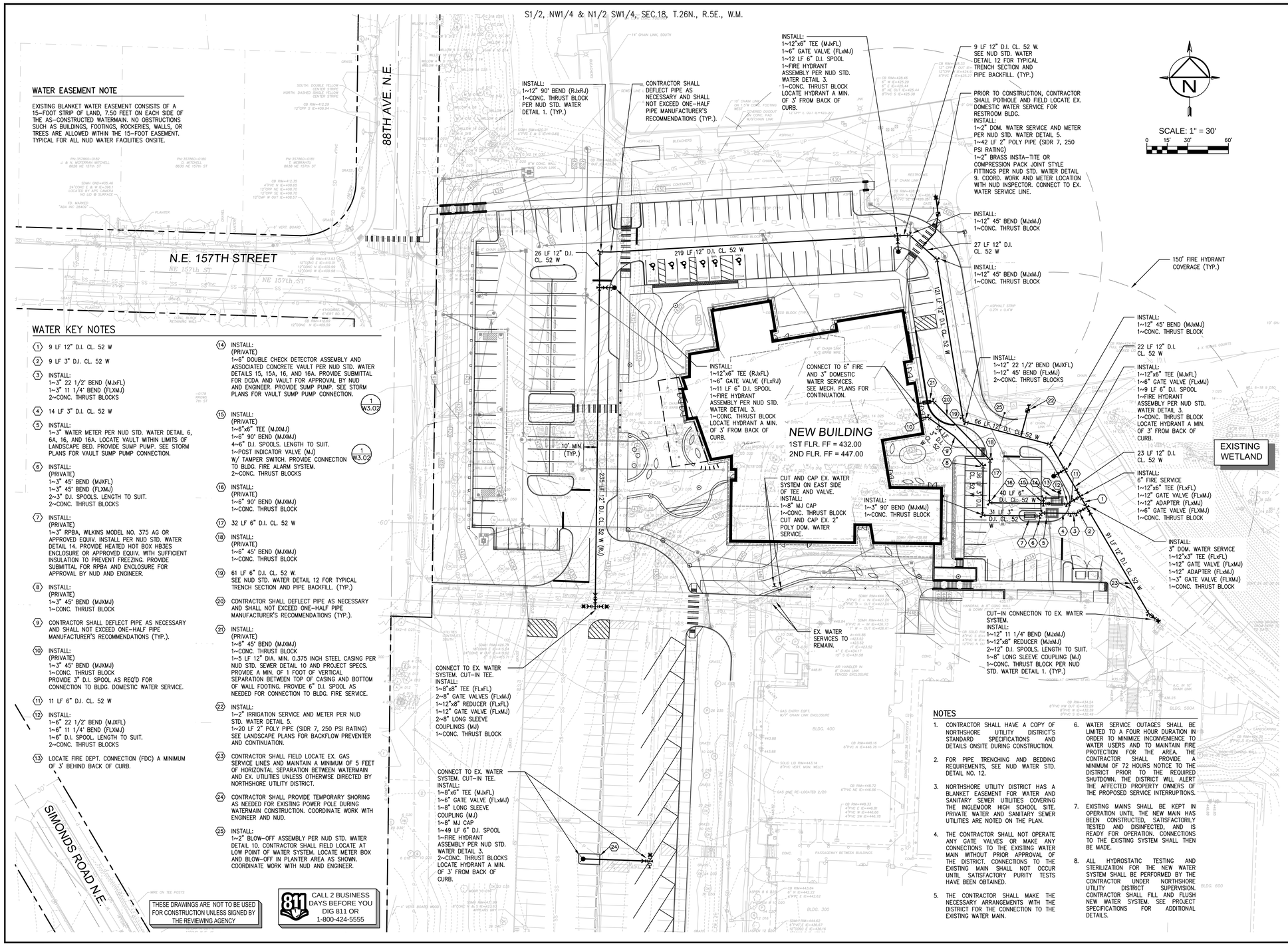

Integrity Works
Consulting Engineers, LLC
11255 Kirkland Way, Suite 300, Kirkland, Washington 98033
O: 425.967.7919 C: 206.920.9410

P:\PROJECTS\17106\CAD\17106-WA.DWG 4/5/2020 11:26 AM RBELL

Northshore School District
Inglemoor High School Concert Hall + Music Building
15500 Simonds Rd. N.E. Kenmore WA 98028

PROJECT NO	17106
FILE	17106-WA
DRAWN	RB
CHECKED	JBM
DATE:	01-06-20

ISSUE/REVISION	DATE

SHEET NAME
WATER PLAN

SHEET NUMBER
W3.00

HUTTEBALL +OREMUS architecture
4010 LAKE WASHINGTON BLVD NE
SUITE 320
KIRKLAND, WA 98033
425.828.8948
HOARCH.COM

ARCHITECT STAMP

CONSULTANT STAMP
JOSEPH B. MOON STATE OF WASHINGTON 36922 REGISTERED PROFESSIONAL ENGINEER
4/13/20

PROJECT INFORMATION

Inglemoor High School Concert Hall + Music Building

15500 Simonds Rd NE
Kenmore, WA 98028

NORTHSHORE SCHOOL DISTRICT No. 417

SCHOOL DISTRICT LOGO
Northshore School District

02.13.2019	SCHEMATIC DESIGN
04.08.2019	VALUE ENGINEERING
09.16.2019	SITE PLAN REVIEW
10.18.2019	DESIGN DEVELOPMENT
01.13.2020	CONSTRUCTABILITY REVIEW
03.23.2020	HEALTH DEPARTMENT PERMIT SUBMITTAL
04.13.2020	BID DOCUMENTS

BID DOCUMENTS
04.13.2020
PROJECT NUMBER: 1711

SHEET NAME
WATER PLAN

SHEET NUMBER
W3.00

S1/2, NW1/4 & N1/2 SW1/4, SEC.18, T.26N., R.5E., W.M.

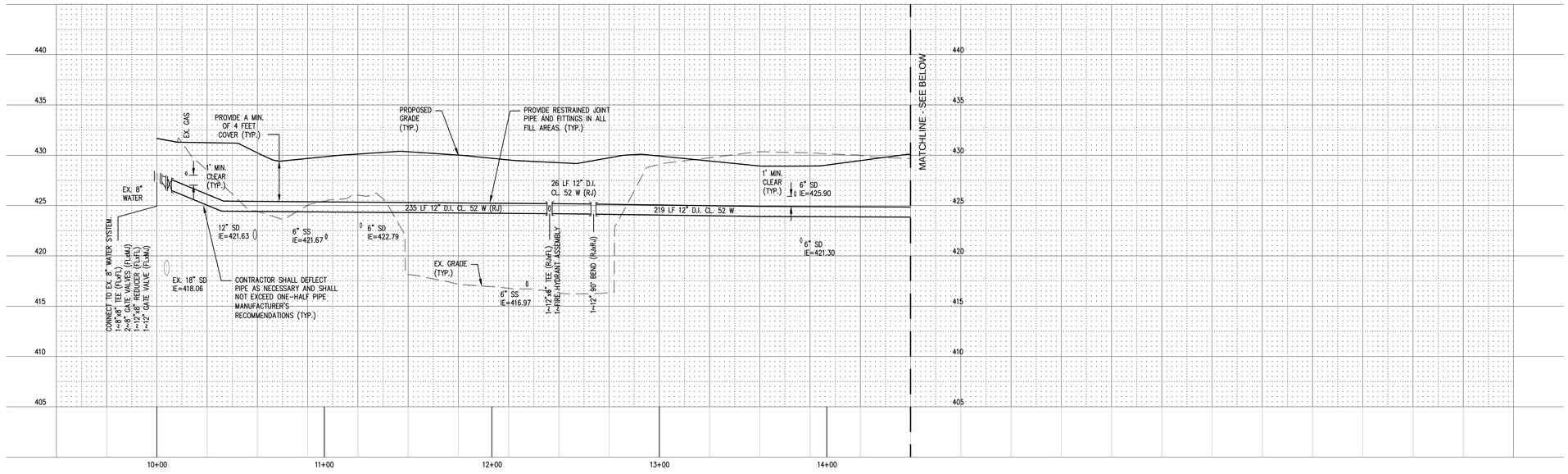

WATER PROFILE

SCALE: 1" = 30' (H)
1" = 5' (V)

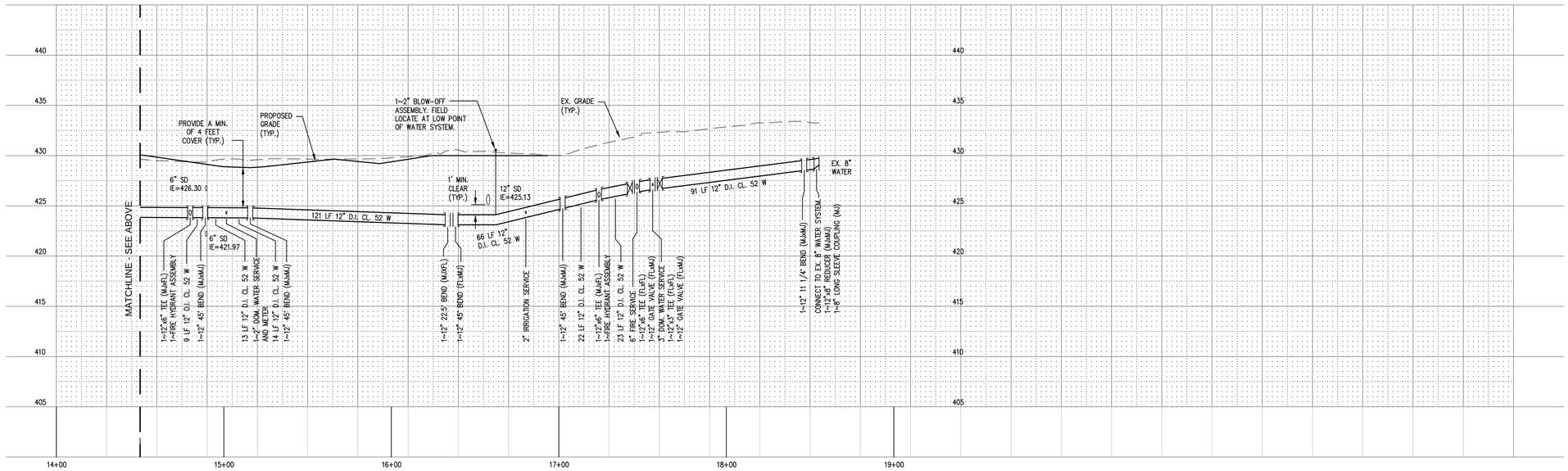

WATER PROFILE

SCALE: 1" = 30' (H)
1" = 5' (V)

811 CALL 2 BUSINESS DAYS BEFORE YOU DIG 811 OR 1-800-424-5555

THESE DRAWINGS ARE NOT TO BE USED FOR CONSTRUCTION UNLESS SIGNED BY THE REVIEWING AGENCY

P:\PROJECTS\17106\CAD\17106-WTR-PROF.DWG 4/5/2020 11:39 AM RBELL1

Integrity Works
Consulting Engineers, LLC
170 W. Dayton St., Suite 204 Edmonds, WA 98020
O: 425.967.7913 C: 206.920.8410

JOSEPH B. MOON STATE OF WASHINGTON 36022 REGISTERED PROFESSIONAL ENGINEER
4/13/20

Northshore School District
Inglemoor High School Concert Hall + Music Building
15500 Simonds Rd. N.E. Kenmore WA 98028

PROJECT NO	17106
FILE	17106-WTR-PROF
DRAWN	RB
CHECKED	JBM
DATE:	01-06-20

ISSUE/REVISION	DATE

SHEET NAME

WATER PROFILE

SHEET NUMBER

W3.01

HUTTEBALL + OREMUS architecture
4010 LAKE WASHINGTON BLVD NE
SUITE 320
KIRKLAND, WA 98033
425.828.8948
HOARCH.COM

ARCHITECT STAMP

CONSULTANT STAMP

JOSEPH B. MOON STATE OF WASHINGTON 36022 REGISTERED PROFESSIONAL ENGINEER
4/13/20

PROJECT INFORMATION

Inglemoor High School Concert Hall + Music Building

15500 Simonds Rd NE
Kenmore, WA 98028

NORTHSHORE SCHOOL DISTRICT No. 417

SCHOOL DISTRICT LOGO

Northshore School District

02.13.2019 SCHEMATIC DESIGN
04.08.2019 VALUE ENGINEERING
09.16.2019 SITE PLAN REVIEW
10.18.2019 DESIGN DEVELOPMENT
01.13.2020 CONSTRUCTABILITY REVIEW
03.23.2020 HEALTH DEPARTMENT PERMIT SUBMITTAL
04.13.2020 BID DOCUMENTS

BID DOCUMENTS

04.13.2020

PROJECT NUMBER: 1711

SHEET NAME

WATER PROFILE

SHEET NUMBER

W3.01

S1/2, NW1/4 & N1/2 SW1/4, SEC.18, T.26N., R.5E., W.M.

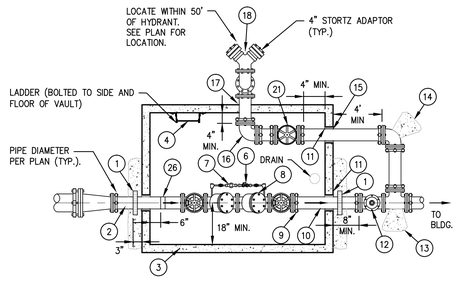

PLAN

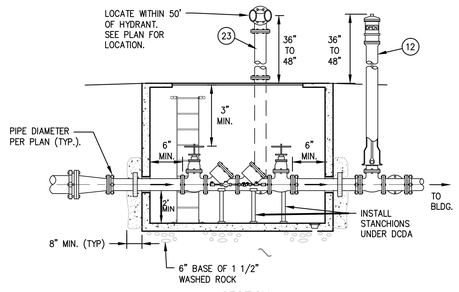

SECTION

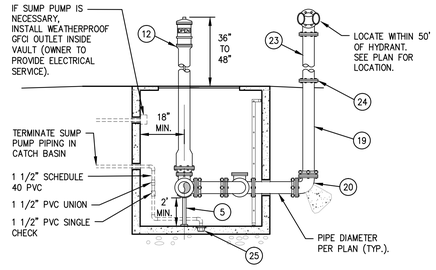

SECTION

MATERIAL LIST

1. 2'x2'x8" THICK FORMED CONCRETE BLOCKING WITH LOCKING FOLLOWER RING.
2. CL. 53 SPOOL, PExFL.
3. PRECAST CONCRETE VAULT WITH DOUBLE HINGED 3'x3' DIAMOND PLATE DOORS (HS-25 RATED), DIMENSION TO VARY WITH SIZE OF DCDA ASSEMBLY. CONTRACTOR SHALL PROVIDE PRODUCT SUBMITTAL FOR VAULT AND STEEL DOORS FOR ENGINEER'S REVIEW/APPROVAL.
4. O.S.H.A. APPROVED LADDER.
5. PIPE SUPPORT STAND UNDER DCDA.
6. COPPER OR BRASS BYPASS WITH AN APPROVED DCVA. PLUMB TO INSIDE OF VAULT.
7. 3/4" METER SUPPLIED W/ DCDA UNIT.
8. WASHINGTON STATE DEPT. OF HEALTH APPROVED DCDA IN MAIN LINE WITH TWO O.S. & Y (AWWA C-509 OR C515). RESILIENT SEATED SHUTOFF VALVES AND TEST COCKS. SEE SPECIFICATIONS FOR APPROVED DCDA. CONTRACTOR SHALL PROVIDE SUBMITTAL FOR DCDA FOR ENGINEER'S REVIEW.
9. EBAA IRON SERIES 2100 MEG-A-FLANGE.
10. CL. 52 PIPE. LENGTH TO FIT.
11. GROUT INTERIOR AND EXTERIOR ALL AROUND PIPES AND ALL WALL PENETRATIONS USING NON-SHRINK GROUT.
12. GATE VALVE MJxMJ WITH POST INDICATOR VALVE (PIV). CONTRACTOR SHALL PROVIDE SUBMITTAL FOR PIV FOR ENGINEER'S REVIEW.
13. MJ TEE ASSEMBLY SIZED ACCORDINGLY W/ CONC. THRUST BLOCK.
14. 90° BEND, MJ W/ CONC. THRUST BLOCK.
15. CL. 53 SPOOL, PExFL.
16. 90° BEND, FL.
17. CL. 53 SPOOL, FLxFL.
18. UL LISTED F.D. CONNECTION AND UL LISTED BREAKAWAY CAPS.
19. D.I. CL. 53 SPOOL, LENGTH AS REQUIRED FLxFL.
20. 90° BEND, FL W/ CONC. THRUST BLOCK.
21. SWING TYPE GRAVITY OPERATED CHECK VALVE WITH BALL DRIP VALVE TO BE INSTALLED HORIZONTALLY.
22. NOT USED
23. GALV. OR STAINLESS STEEL PIPE. SIZE PER FIRE JURISDICTION.
24. DUCTILE IRON FLANGE (ADAPT. TO GALV. OR STAINLESS STEEL PIPE).
25. PROVIDE ZOELLER CO. SUMP PUMP – MODEL NO. 57 OR APPROVED EQUIV. SEE NUD STD. PLANS 15 AND 15A FOR DETAILS.
26. 2" DOUBLE STRAP SADDLE ROMAC 202S OR APPROVED EQUAL W/ 2" BALL VALVE. TAP ON BOTTOM OF PIPE FOR FLUSHING.

DOUBLE DETECTOR CHECK AND VAULT ASSEMBLY NOTES:

1. CONTRACTOR SHALL FURNISH, AND INSTALL THE DCDA AND ALL PIPING AND APPURTENANCES SHOWN ON THIS PLAN.
2. DOUBLE DETECTOR BACKFLOW PREVENTORS SHALL BE STATE APPROVED (SUBMITTAL REQUIRED).
3. CONTRACTOR SHALL PROVIDE INSPECTION AND TESTING OF THE DCDA PRIOR TO ESTABLISHMENT OF WATER SERVICE. SUBSEQUENT ANNUAL TESTING OF DCDA REQUIRED BY OWNER.
4. IT SHALL BE THE OWNERS RESPONSIBILITY TO SIZE THE FIRE SPRINKLER SERVICE LINE, OBTAIN AND COORDINATE FIRE AND ELECTRICAL PERMIT (IF REQUIRED).
5. ALL PIPING, VALVES & FITTINGS DOWNSTREAM OF THE VAULT IS SHOWN AND CALLED OUT GENERICALLY. A SEPARATE DETAIL PLAN FOR VAULT INSTALLATION AND SPRINKLER LINE MUST BE SUBMITTED AND APPROVED BY THE FIRE MARSHALL PRIOR TO INSTALLATION.
6. LADDERS SHALL BE INSTALLED IN COMPLIANCE TO O.S.H.A. REQUIREMENTS.
7. NO CHEMICALS ARE ALLOWED IN THE FIRE SPRINKLER PIPING SYSTEM.
8. LOCATE VAULT IN LANDSCAPE/PLANTING AREA AND NOT IN PAVED AREA, UNLESS APPROVED BY THE DISTRICT.
9. PIPE SHALL BE CL. 52 AND CEMENT LINED. (EXCEPT AS SHOWN)
10. A SUMP PUMP SHALL BE INSTALLED W/POWER CONDUIT.
11. TEMPORARY SUPPORT SHALL BE PROVIDED UNDER VALVES AT THE TIME OF INSTALLATION. AFTER COMPLETE INSTALLATION, INSTALL PERMANENT PIPE SUPPORT STAND.
12. VAULT SIZE IS BASED ON SIZE OF DCDA AND MEETING MINIMUM CLEARANCES. (VAULT SUBMITTAL REQUIRED).
13. VAULT SHALL BE SEALED TO PREVENT WATER LEAKAGE.
14. ALL MJ JOINTS TO BE RESTRAINED W/MEG-A-LUG OR EQUAL.

1 6" DOUBLE CHECK DETECTOR ASSEMBLY
NOT TO SCALE

CALL 2 BUSINESS DAYS BEFORE YOU DIG 811 OR 1-800-424-5555

THESE DRAWINGS ARE NOT TO BE USED FOR CONSTRUCTION UNLESS SIGNED BY THE REVIEWING AGENCY

P:\PROJECTS\17106\CAD\17106-WA-DET.DWG 4/5/2020 11:24 AM RBELL1

Integrity Works
Consulting Engineers, LLC
11819 NE 195th St, Suite 475, Bothell, Washington 98020
O: 425.967.7913 C: 206.920.9410

JOSEPH B. MOON
STATE OF WASHINGTON
36922
REGISTERED
PROFESSIONAL ENGINEER
4/13/20

Northshore School District
Inglemoor High School Concert Hall + Music Building
15500 Simonds Rd. N.E. Kenmore WA 98028

PROJECT NO	17106
FILE	17106-WA-DET
DRAWN	RB
CHECKED	JBM
DATE	01-06-20

ISSUE/REVISION	DATE

SHEET NAME

WATER DETAILS

SHEET NUMBER

W3.02

HUTTEBALL + OREMUS architecture
4010 LAKE WASHINGTON BLVD NE
SUITE 320
KIRKLAND, WA 98033
425.828.8948
HOARCH.COM

ARCHITECT STAMP

CONSULTANT STAMP

JOSEPH B. MOON
STATE OF WASHINGTON
36922
REGISTERED
PROFESSIONAL ENGINEER
4/13/20

PROJECT INFORMATION

Inglemoor High School Concert Hall + Music Building

15500 Simonds Rd NE
Kenmore, WA 98028

NORTHSHORE SCHOOL DISTRICT No. 417

SCHOOL DISTRICT LOGO

Northshore School District

02.13.2019 SCHEMATIC DESIGN
04.08.2019 VALUE ENGINEERING
09.16.2019 SITE PLAN REVIEW
10.18.2019 DESIGN DEVELOPMENT
01.13.2020 CONSTRUCTABILITY REVIEW
03.23.2020 HEALTH DEPARTMENT PERMIT SUBMITTAL
04.13.2020 BID DOCUMENTS

BID DOCUMENTS

04.13.2020

PROJECT NUMBER: 1711

SHEET NAME

WATER DETAILS

SHEET NUMBER

W3.02

S1/2, NW1/4 & N1/2 SW1/4, SEC.18, T.26N., R.5E., W.M.

SURVEY LEGEND

- PK NAIL FOR CONTROL
- FOUND MONUMENT IN CASE
- FOUND REBAR AS NOTED
- BOULDER
- BUSH
- GATE POST
- CATCH BASIN
- TURN ARROW
- WATER VALVE
- FENCE POST
- FINISHED FLOOR ELEVATION
- GAS METER
- GAS VALVE
- HAND HOLE
- IRRIGATION CONTROL VALVE
- LUMINAIRE
- POLE & LUMINAIRE
- YARD POLE
- CULVERT END
- TRANSFORMER PAD
- POWER VAULT
- POWER METER
- ROOF DRAIN
- FLAGPOLE
- STORM DRAIN MANHOLE
- MAILBOX
- SIGN POST
- SEWER MANHOLE
- COLUMN
- DECIDUOUS TREE W/DRIP LINE
- CHESTNUT TREE (CNUT)
- CHERRY (CHR)
- OAK TREE (OK)
- ALDER TREE (A)
- COTTONWOOD TREE (C)
- CEDAR TREE (C)
- CONIFER TREE
- FIR TREE (F)
- FRUIT TREE (F)
- HEMLOCK TREE (H)
- MAPLE TREE (M)
- PINE TREE (P)
- TELEPHONE MANHOLE
- TELEPHONE PEDESTAL
- JUNCTION BOX
- PEDESTRIAN POLE
- TRAFFIC SIGN
- TELEPHONE VAULT
- MANHOLE (UNKNOWN)
- POWER POLE W/ U.G. FEED
- POWER POLE
- GUY ANCHOR
- FIRE STD PIPE
- FIRE HYDRANT
- BOLLARD
- WATER FAUCET
- WATER METER
- WATER VAULT
- YARD DRAIN
- GROUND SHOT

- FENCE LINE
- GAS LINE
- POWER LINE
- POWER LINE (UNDERGROUND)
- SEWER LINE
- STORM DRAIN LINE
- TELEPHONE LINE
- TELEPHONE LINE (UNDERGROUND)
- WATER LINE
- WATER LINE LOCATION FROM A/B DATA
- WETLAND BOUNDARY
- ORDINARY HIGH WATER OF STREAM
- WETLAND FLAG
- EASEMENT NUMBER REFERENCE TABLE OF EASEMENTS – SHEET 2
- EASEMENT
- RIGHT–OF–WAY
- PROPERTY LINE
- RIGHT–OF–WAY CENTER LINE
- DIRT TRAIL
- EXTENTS OF UNDERGROWTH VEGETATION
- EDGE OF VEGETATION
- SURVEY LIMITS
- SECTION LINE
- PLAT

PROPOSED LEGEND

- CATCH BASIN TYPE 1
- AREA DRAIN
- CATCH BASIN TYPE 2 WITH GRATE
- STORM DRAIN MANHOLE TYPE 2 WITH SOLID LID
- STORM CLEANOUT
- CULVERT
- SWALE
- FOOTING DRAIN
- DOWNSPOUT TIGHTLINE
- SANITARY SEWER MANHOLE TYPE 1
- SANITARY SEWER CLEANOUT
- FIRE HYDRANT
- FIRE DEPARTMENT CONNECTION
- POST INDICATOR VALVE (PIV)
- GATE VALVE
- BUTTERFLY VALVE
- REDUCER
- COUPLING SLEEVE
- THRUST BLOCK
- TEE
- BEND
- 90° BEND
- WATER METER
- PIPE CAP
- BLOWOFF ASSEMBLY
- AIR VACUUM ASSEMBLY
- CONCRETE WALL
- RETAINING WALL (ROCKERY, KEYSTONE, REDI–ROCK)
- PROPERTY LINE
- AD – AREA DRAIN
- H.P. – HIGH POINT
- L.P. – LOW POINT
- G.P. – GRADE BREAK
- STORM DRAIN LINE
- PERF. PIPE
- FIELD UNDER DRAIN
- SANITARY SEWER LINE
- WATER MAIN
- GUARD RAIL
- STANDARD DUTY ASPHALT PAVEMENT
- HEAVY DUTY ASPHALT PAVEMENT
- CONCRETE PAVEMENT

GENERAL SEWER NOTES

1. ALL WORK AND MATERIALS SHALL BE IN ACCORDANCE WITH THE DEVELOPER EXTENSION AGREEMENT, THE STANDARD SPECIFICATIONS, STANDARD DETAILS OF NORTHSHORE UTILITY DISTRICT.

UTILITY LOCATES:

2. THE APPROXIMATE LOCATIONS OF EXISTING UTILITIES ARE SHOWN ON PLANS AND PROFILES FOR CONVENIENCE. THE CONTRACTOR SHALL BE RESPONSIBLE FOR VERIFICATION OF UTILITY LOCATIONS SHOWN AND FOR DISCOVERY OF POSSIBLE ADDITIONAL UTILITIES NOT SHOWN ON PLANS.
3. IT SHALL BE THE RESPONSIBILITY OF THE CONTRACTOR TO HAVE LOCATED, BY APPROPRIATE UTILITY DISTRICTS OR COMPANIES, ALL UNDERGROUND UTILITIES PRIOR TO BEGINNING CONSTRUCTION.
4. FOR UTILITY LOCATES IN KING COUNTY, CALL 1–800–424–5555 PRIOR TO DIGGING.

PERMITS:

5. THE DEVELOPER IS RESPONSIBLE FOR OBTAINING ALL REGULATORY PERMITS EXCEPT THE RIGHT–OF–WAY PERMIT, WHICH NORTHSHORE UTILITY DISTRICT OBTAINS.
6. ALL WORK IN RIGHTS–OF–WAY SHALL BE IN ACCORDANCE WITH THE REQUIREMENTS OF THE PERMITTING AGENCY.

PRE–CON:

7. A PRE–CONSTRUCTION CONFERENCE SHALL BE HELD AT NORTHSHORE UTILITY DISTRICT'S OFFICE PRIOR TO THE START OF CONSTRUCTION. DISTRICT STAFF WILL NOTIFY THE APPROPRIATE AGENCIES OR REPRESENTATIVES.

SURVEYING:

8. PRIOR TO CONSTRUCTING ANY SEWER MAINS, THE STREET CENTERLINES OF THE DEVELOPMENT, CENTER OF CUL–DE–SACS, ALL SEWER LINE EASEMENTS AND ALL LOT CORNERS SHALL BE STAKED. THE MAXIMUM STATIONING INTERVAL SHALL BE 50 FEET WITH THE STATION NUMBER ON EACH STAKE.
9. HORIZONTAL CONTROL DATA SHALL BE NAD '83/91. VERTICAL CONTROL SHALL BE NAVD–88 DATUM.
10. AT THE CONCLUSION OF CONSTRUCTION, THE DEVELOPER'S REGISTERED PROFESSIONAL SURVEYOR SHALL PREPARE A DRAWING BASED ON THE SURVEYED LOCATION OF ALL AT–GRADE APPURTENANCES INSTALLED, INCLUDING BUT NOT LIMITED TO, LOCATION OF EXISTING MANHOLES INCLUDING RIM & ALL INVERT ELEVATIONS AND NEW MANHOLE LOCATIONS INCLUDING RIM & ALL INVERT ELEVATIONS. THE DRAWING SHALL BE PROVIDED TO THE DISTRICT IN AUTOCAD FORMAT, R 2000 OR NEWER. IN ADDITION, ALL SEWER EASEMENTS SHALL BE STAKED AND FLAGGED AT THEIR INTERSECTION WITH PROPERTY LINES AND AT 25 FOOT STATIONS ALONG THE EASEMENT LINES.

CONSTRUCTION:

11. THE SEWER MAIN SHALL BE PLACED FIVE (5) FEET SOUTH OR WEST FROM THE CENTERLINE OF ROADWAY, UNLESS OTHERWISE SHOWN ON THE PLAN.
12. A MINIMUM TEN (10) FOOT HORIZONTAL SEPARATION MUST BE MAINTAINED BETWEEN THE SANITARY SEWER LINE AND THE WATER MAIN.
13. AFTER TRENCH BACKFILL AND COMPACTION, PVC SANITARY SEWER MAINS SHALL BE TESTED FOR DEFLECTION AS SPECIFIED IN SECTION 7–17.3(2)G OF THE WASHINGTON STATE DEPARTMENT OF TRANSPORTATION'S STANDARD SPECIFICATIONS FOR ROAD, BRIDGE AND MUNICIPAL CONSTRUCTION. TEST OBSERVATION AND INSPECTION BY NORTHSHORE UTILITY DISTRICT.
14. WHENEVER SANITARY SEWER CROSSES BELOW A WATER MAIN, THE SEWER SHALL BE LAID AT SUCH AN ELEVATION THAT THE TOP OF THE SEWER LINE IS AT LEAST EIGHTEEN (18) INCHES BELOW THE BOTTOM OF THE WATER MAIN.
15. ALL MANHOLES SHALL HAVE A MINIMUM DROP OF ONE–TENTH (0.10) FOOT AND FIVE–TENTHS (0.50) FOOT MAXIMUM DROP BETWEEN INVERT IN AND INVERT OUT.
16. MANHOLES IN THE PUBLIC RIGHT–OF–WAY SHALL BE A MINIMUM OF EIGHT (8) FEET IN DEPTH OR PER APPROVED PLANS.
17. MANHOLES NOT IN PAVED PUBLIC RIGHT–OF–WAY TO HAVE LOCKING LIDS AND ALL FRAMES SHALL BE LOCKING TYPE PER THE STANDARD DETAILS.
18. FOR PIPE SLOPES GREATER THAN 20%, RESTRAINED–JOINT DUCTILE IRON PIPE SHALL BE USED FOR EVERY JOINT.
19. SIDE SEWER STUBS SHALL HAVE A MINIMUM OF TWO (2) PERCENT SLOPE AND MAXIMUM OF FORTY–FIVE (45) DEGREE SLOPE. STUBS SHALL BE 6" MINIMUM DIAMETER. FOR ALL STUBS LESS THAN EIGHT (8) FEET IN DEPTH : INSTALL A THREE (3) INCH WIDE GREEN METALLIC DETECTOR TAPE 12" ABOVE THE PIPE, THE ENTIRE LENGTH OF THE STUB CONTINUING UP THE 2X4 SIDE SEWER MARKER POST. IDENTIFICATION ON THE TAPE SHALL INCLUDE THE WORDS "SANITARY SEWER".

MATERIALS:

20. SANITARY SEWER PIPE LESS THAN EIGHTEEN (18) FEET IN DEPTH AND LESS THAN 20% SLOPE SHALL BE PVC CONFORMING TO ASTM D–3034, SDR–35 AND SHALL BE BEDDED WITH CLEAN, GRANULAR MANUFACTURED PEA GRAVEL FROM 4" UNDER TO 6" OVER THE PIPE. SANITARY SEWER PIPE EIGHTEEN (18) FEET DEEP AND GREATER, OR ON A SLOPE OF 20% OR MORE, SHALL BE DUCTILE–IRON MINIMUM THICKNESS CLASS 52, CEMENT– MORTAR LINED AND TYTON JOINT. ALL DUCTILE–IRON PIPE MUST MEET THE REQUIREMENTS OF AWWA C–151.
21. HIGH–DENSITY POLYETHYLENE (HDPE) SHALL BE SDR–11 MINIMUM.

GENERAL WATER NOTES

1. ALL WORK AND MATERIALS SHALL BE IN ACCORDANCE WITH THE DEVELOPER EXTENSION AGREEMENT, THE STANDARD SPECIFICATIONS AND THE STANDARD DETAILS OF NORTHSHORE UTILITY DISTRICT.

UTILITY LOCATES:

2. THE APPROXIMATE LOCATIONS OF EXISTING UTILITIES ARE SHOWN ON PLANS AND PROFILES FOR CONVENIENCE. THE CONTRACTOR SHALL BE RESPONSIBLE FOR VERIFICATION OF UTILITY LOCATIONS SHOWN AND FOR DISCOVERY OF POSSIBLE ADDITIONAL UTILITIES NOT SHOWN ON PLANS.
3. IT SHALL BE THE RESPONSIBILITY OF THE CONTRACTOR TO HAVE LOCATED, BY APPROPRIATE UTILITY DISTRICTS OR COMPANIES, ALL UNDERGROUND UTILITIES PRIOR TO BEGINNING CONSTRUCTION.
4. FOR UTILITY LOCATES IN KING COUNTY, CALL 1–800–424–5555 PRIOR TO DIGGING.

PERMITS:

5. THE DEVELOPER IS RESPONSIBLE FOR OBTAINING ALL REGULATORY PERMITS EXCEPT THE RIGHT–OF–WAY PERMIT, WHICH NORTHSHORE UTILITY DISTRICT OBTAINS.
6. ALL WORK IN RIGHTS–OF–WAY SHALL BE IN ACCORDANCE WITH THE REQUIREMENTS OF THE PERMITTING AGENCY.

PRE–CON:

7. A PRE–CONSTRUCTION CONFERENCE SHALL BE HELD AT NORTHSHORE UTILITY DISTRICT'S OFFICE PRIOR TO THE START OF CONSTRUCTION. DISTRICT STAFF WILL NOTIFY THE APPROPRIATE AGENCIES OR REPRESENTATIVES.

SURVEYING:

8. PRIOR TO CONSTRUCTING ANY WATER MAINS, THE STREET CENTERLINES OF THE DEVELOPMENT, CENTER OF CUL–DE–SACS, ALL WATERLINE EASEMENTS AND ALL LOT CORNERS SHALL BE STAKED. THE MAXIMUM STATIONING INTERVAL WILL BE 50 FEET WITH THE STATION NUMBER ON EACH STAKE.
9. HORIZONTAL CONTROL DATA SHALL BE NAD '83/91. VERTICAL CONTROL SHALL BE NAVD–88 DATUM.
10. AT THE CONCLUSION OF CONSTRUCTION, THE DEVELOPER'S REGISTERED PROFESSIONAL SURVEYOR SHALL PREPARE A DRAWING BASED ON THE SURVEYED LOCATION OF ALL APPURTENANCES INSTALLED, INCLUDING BUT NOT LIMITED TO, WATER MAIN, METER BOXES, BLOWOFFS, VALVES BOXES, HYDRANTS AND BENDS. THE DISTRICT WILL PROVIDE LOCATES TO ASSIST THE SURVEYOR IN LOCATING THE WATER MAIN BETWEEN APPURTENANCES AND LOCATING THE BENDS. THE DRAWING SHALL BE PROVIDED TO THE DISTRICT IN AUTOCAD FORMAT, R 2000 OR NEWER. IN ADDITION, ALL WATER EASEMENTS SHALL BE STAKED AND FLAGGED AT THEIR INTERSECTION WITH PROPERTY LINES AND AT 25–FOOT STATIONS ALONG THE EASEMENT LINES.

CONSTRUCTION:

11. THE WATER MAIN SHALL BE PLACED AS SHOWN ON PLAN.
12. A MINIMUM TEN (10) FOOT HORIZONTAL SEPARATION MUST BE MAINTAINED BETWEEN THE SANITARY SEWER LINE AND THE WATER MAIN.
13. A FIVE (5) FOOT HORIZONTAL SEPARATION SHALL BE MAINTAINED BETWEEN ALL WATER FACILITIES AND UNDERGROUND POWER AND TELEPHONE FACILITIES, UNLESS OTHERWISE APPROVED BY THE DISTRICT.
14. DISTRICT VALVES SHALL ONLY BE OPERATED BY DISTRICT PERSONNEL.

MATERIALS:

15. ALL WATER MAIN PIPING SHALL BE DUCTILE–IRON MINIMUM THICKNESS CLASS 52, CEMENT–MORTAR LINED AND TYTON JOINT. ALL WATER MAIN PIPING TO MEET THE REQUIREMENTS OF AWWA C–151.
16. ALL WATER MAIN FITTINGS SHALL BE CEMENT–MORTAR LINED AND MEET THE REQUIREMENTS OF AWWA C–153.
17. POLYETHYLENE ENCASEMENT TO MEET THE AWWA STANDARD C–105. ANY TEARS OR OPENINGS MADE FOR SERVICES OR TAPS SHALL BE REPAIRED WITH AN ADHESIVE TAPE.
18. ALL WATER MAIN PIPES AND SERVICES SHALL BE INSTALLED WITH A 14 (FOURTEEN) GAUGE, CONTINUOUS, SOLID–CORE, NEOPRENE COATED LOCATING WIRE. ANY CONNECTIONS OR SPLICES SHALL BE MADE WITH SPLIT–BOLT WIRE CONNECTORS.

PLACEMENT:

19. FIRE HYDRANT LOCATIONS TO BE APPROVED BY THE FIRE MARSHAL OF JURISDICTION.
20. WATER SERVICE LINE AND METER LOCATIONS WILL BE COORDINATED WITH THE DEVELOPER'S ENGINEER AFTER A THOROUGH REVIEW OF ALL UTILITY FACILITIES.
    A. THE METER LOCATION SHALL BE WITHIN THREE (3) FEET OF THE PROPERTY LINE THAT IS PERPENDICULAR TO THE RIGHT–OF–WAY AND WITHIN ONE (1) FOOT OF THE EDGE OF PROPERTY ON THE RIGHT–OF–WAY SIDE UNLESS OTHERWISE APPROVED IN WRITING BY THE DISTRICT.
    B. AFTER INSTALLATION OF THE METER AND BOX, A 2X4 BOARD PAINTED WHITE WITH "WATER SERVICE" STENCILED ONTO IT WILL BE DRIVEN INTO THE GROUND BEHIND THE METER BOX.

811 CALL 2 BUSINESS DAYS BEFORE YOU DIG 811 OR 1-800-424-5555

THESE DRAWINGS ARE NOT TO BE USED FOR CONSTRUCTION UNLESS SIGNED BY THE REVIEWING AGENCY

Integrity Works
Consulting Engineers, LLC
170 W. Dayton St. Suite 204 Edmonds WA 98020
O: 425.967.7913 C: 206.920.9410

JOSEPH B. MOON, STATE OF WASHINGTON, 36922, REGISTERED PROFESSIONAL ENGINEER
4/13/20

P:\PROJECTS\17106\CAD\17106-CV-24X36.DWG 4/5/2020 11:35 AM RBELL1

Northshore School District
Inglemoor High School Concert Hall + Music Building
15500 Simonds Rd. N.E. Kenmore WA 98028

PROJECT NO	17106
FILE	17106-CV-24x36
DRAWN	RB
CHECKED	JBM
DATE:	01-06-20

ISSUE/REVISION	DATE

SHEET NAME
LEGENDS, SYMBOLS AND NOTES

SHEET NUMBER
WS1.01

HUTTEBALL +OREMUS architecture
4010 LAKE WASHINGTON BLVD NE
SUITE 320
KIRKLAND, WA 98033
425.828.8948
HOARCH.COM

ARCHITECT STAMP

CONSULTANT STAMP

JOSEPH B. MOON, STATE OF WASHINGTON, 36922, REGISTERED PROFESSIONAL ENGINEER
4/13/20

PROJECT INFORMATION

Inglemoor High School Concert Hall + Music Building

15500 Simonds Rd NE
Kenmore, WA 98028

NORTHSHORE SCHOOL DISTRICT No. 417

SCHOOL DISTRICT LOGO

Northshore School District

02.13.2019 SCHEMATIC DESIGN
04.08.2019 VALUE ENGINEERING
09.16.2019 SITE PLAN REVIEW
10.18.2019 DESIGN DEVELOPMENT
01.13.2020 CONSTRUCTABILITY REVIEW
03.23.2020 HEALTH DEPARTMENT PERMIT SUBMITTAL
04.13.2020 BID DOCUMENTS

BID DOCUMENTS

04.13.2020

PROJECT NUMBER: 1711

SHEET NAME

LEGENDS, SYMBOLS AND NOTES

SHEET NUMBER

WS1.01

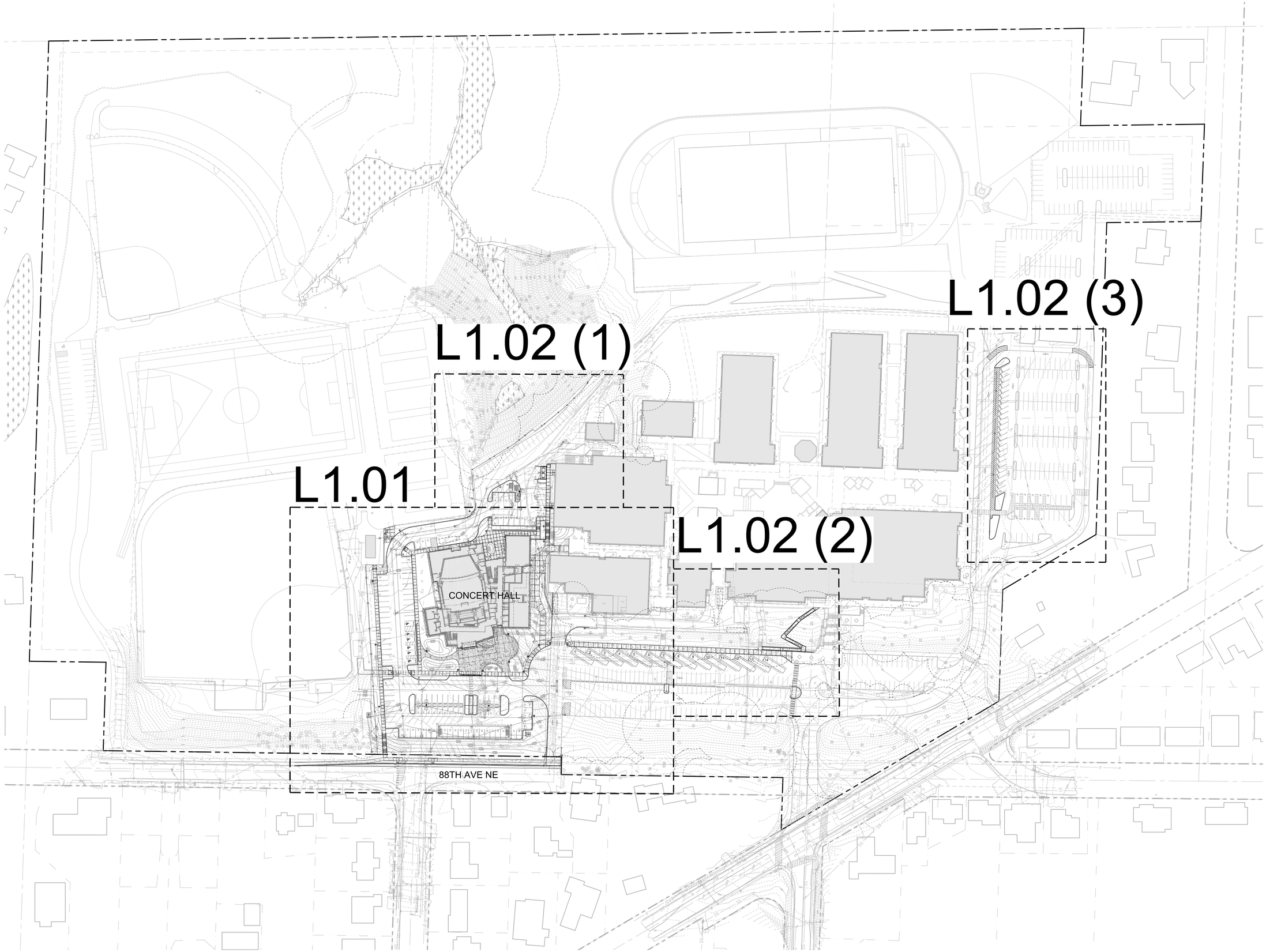

SCALE: 1"=60'-0"

0' 30' 60' 120' 240'

N

WEISMANDESIGNGROUP

LANDSCAPE CONSULTANT

2329 E MADISON ST
SEATTLE WA 98112

206-322-1732
WWW.WDGINC.COM

HUTTEBALL + OREMUS architecture

4010 LAKE WASHINGTON BLVD NE
SUITE 320
KIRKLAND, WA 98033

425.828.8948

HOARCH.COM

ARCHITECT STAMP

CONSULTANT STAMP

STATE OF WASHINGTON
NICHOLAS P HAGAN
NO. 753 EXP. 4/17/2020
LANDSCAPE ARCHITECT

PROJECT INFORMATION

Inglemoor High School Concert Hall + Music Building

15500 Simonds Rd NE
Kenmore, WA 98028

NORTHSHORE SCHOOL DISTRICT No. 417

SCHOOL DISTRICT LOGO

Northshore School District

02.13.2019	SCHEMATIC DESIGN
04.08.2019	VALUE ENGINEERING
09.16.2019	SITE PLAN REVIEW
10.18.2019	DESIGN DEVELOPMENT
01.13.2020	CONSTRUCTABILITY REVIEW
03.23.2020	HEALTH DEPARTMENT PERMIT SUBMITTAL
04.13.2020	BID DOCUMENTS

BID DOCUMENTS

04.13.2020

PROJECT NUMBER: 1711.00

SHEET NAME

Overall Site Plan

SHEET NUMBER

L1.00

MATCHLINE - SEE SHEET L1.02 (1)

MATCHLINE - SEE SHEET L1.01

MATCHLINE - SEE SHEET L1.01

MATCHLINE - SEE SHEET L1.02 (2)

SITE IMPROVEMENTS LEGEND

(Symbols shown at 1" = 20'-0")

SYMBOL	ITEM	DESCRIPTION
SCORE JOINT / EXPANSION JOINT	CONCRETE PAVING	SEE SITE PLAN FOR LAYOUT AND PATTERN. REFER TO CIVIL FOR RIGHT-OF-WAY IMPROVEMENTS. SEE CIVIL AND SPECIFICATIONS FOR ADDITONAL REQUIREMENTS.
	CONCRETE BENCH	SEE SITE PLAN FOR LOCATIONS, SEE SPECIFICATIONS. INSTALL PER MANUFACTURER INFORMATION AND INSTALLATION REQUIREMENTS.
	LITTER RECEPTACLE	SEE SITE PLAN FOR LOCATIONS, FIELD LOCATION TO AVOID CONFLICTS, SEE SPECIFICATIONS. INSTALL PER MANUFACTURER INFORMATION AND INSTALLATION REQUIREMENTS.
	ART FEATURE (TBD)	SEE SITE PLAN FOR LOCATIONS, SEE SPECIFICATIONS. INSTALL PER MANUFACTURER INFORMATION AND INSTALLATION REQUIREMENTS.
	BIKE RACKS	SEE SITE PLAN FOR LOCATIONS, SEE SPECIFICATIONS. INSTALL PER MANUFACTURER INFORMATION AND INSTALLATION REQUIREMENTS.
	CHAIN LINK FENCE	SEE SITE PLAN FOR LOCATIONS AND HEIGHTS, SEE SPECIFICATIONS. INSTALL PER MANUFACTURER INFORMATION AND INSTALLATION REQUIREMENTS.
	TACTILE WARNING PAVERS AND BOLLARDS	SEE SITE PLAN FOR LOCATIONS, SEE SPECIFICATIONS. INSTALL PER MANUFACTURER INFORMATION AND INSTALLATION REQUIREMENTS.
	LIGHT POLES	REFER TO ELECTRICAL.
	EXISTING TREES TO PRESERVE	SAVE AND PROTECT, SEE CIVIL FOR EXACT LIMITS OF CLEARING.

EXISTING BUILDING

CONCERT HALL BUILDING

EXISTING BUILDING

REPLACE EXISTING FENCE WITH 6 FT HT CHAIN LINK FENCE

DOUBLE SWING CHAIN LINK GATE

CHAIN LINK GATE

REPLACE EXISTING FENCE WITH 6 FT HT CHAIN LINK FENCE

CHAIN LINK GATE

CONCRETE STAIRS WITH HANDRAILS

CONCRETE RAMP WITH HANDRAILS

8" THICK CONCRETE WALL

8" THICK CONCRETE WALL WITH HANDRAIL

CONCRETE STAIRS WITH HANDRAILS, TYP

11" THICKCONCRETE WALL WITH GUARDRAIL

10" THICK CONCRETE WALL WITH GUARDRAIL

1'-6" MOW STRIP

LITTER RECEPTACLE, FIELD LOCATE TO AVOID CONFLICTS

CONCRETE BENCH, TYP, FIELD LOCATE WITH LANDSCAPE ARCHITECT

LITTER RECEPTACLE, FIELD LOCATE TO AVOID CONFLICTS

BIKE RACK (X5)

CONCRETE BENCH, TYP, FIELD LOCATE WITH LANDSCAPE ARCHITECT

CONCRETE SEAT WALL

MONUMENT STAIRS

2'-0" MOW STRIP

LITTER RECEPTACLE, FIELD LOCATE TO AVOID CONFLICTS

VEHICULAR PIPE GATE AND HOLD OPEN POSTS (SEE A1.10)

WHEEL STOP, TYP, SEE CIVIL

CHAIN LINK GATE

6 FT HT CHAIN LINK FENCE

LIGHT POLE MOW STRIP, TYP

LIGHT POLE, TYP, SEE ELECTRICAL

ART FEATURE (TBD)

TYPE A FIXED BOLLARD, TYP OF (4)

TACTILE PAVING

WHEEL STOP, TYP, SEE CIVIL

LIGHT POLE, TYP, SEE ELECTRICAL

CONCRETE STAIRS WITH HANDRAILS, TYP

GUARD RAIL, SEE CIVIL

VEHICULAR PIPE GATE AND HOLD OPEN POSTS (SEE A1.10)

88TH AVE NE

KEY PLAN

SCALE: 1"=20'-0"

0' 10' 20' 40' 80' N

WEISMANDESIGNGROUP

LANDSCAPE CONSULTANT

2329 E MADISON ST SEATTLE WA 98112

206-322-1732 WWW.WDGINC.COM

HUTTEBALL +OREMUS architecture

4010 LAKE WASHINGTON BLVD NE
SUITE 320
KIRKLAND, WA 98033

425.828.8948

HOARCH.COM

ARCHITECT STAMP

CONSULTANT STAMP

STATE OF WASHINGTON NICHOLAS P HAGAN NO. 3575 EXP. 4/17/2020 LANDSCAPE ARCHITECT

PROJECT INFORMATION

Inglemoor High School Concert Hall + Music Building

15500 Simonds Rd NE
Kenmore, WA 98028

NORTHSHORE SCHOOL DISTRICT No. 417

SCHOOL DISTRICT LOGO

Northshore School District

02.13.2019	SCHEMATIC DESIGN
04.08.2019	VALUE ENGINEERING
09.16.2019	SITE PLAN REVIEW
10.18.2019	DESIGN DEVELOPMENT
01.13.2020	CONSTRUCTABILITY REVIEW
03.23.2020	HEALTH DEPARTMENT PERMIT SUBMITTAL
04.13.2020	BID DOCUMENTS

BID DOCUMENTS

04.13.2020

PROJECT NUMBER: 1711.00

SHEET NAME

Enlarged Site Plan

SHEET NUMBER

L1.01

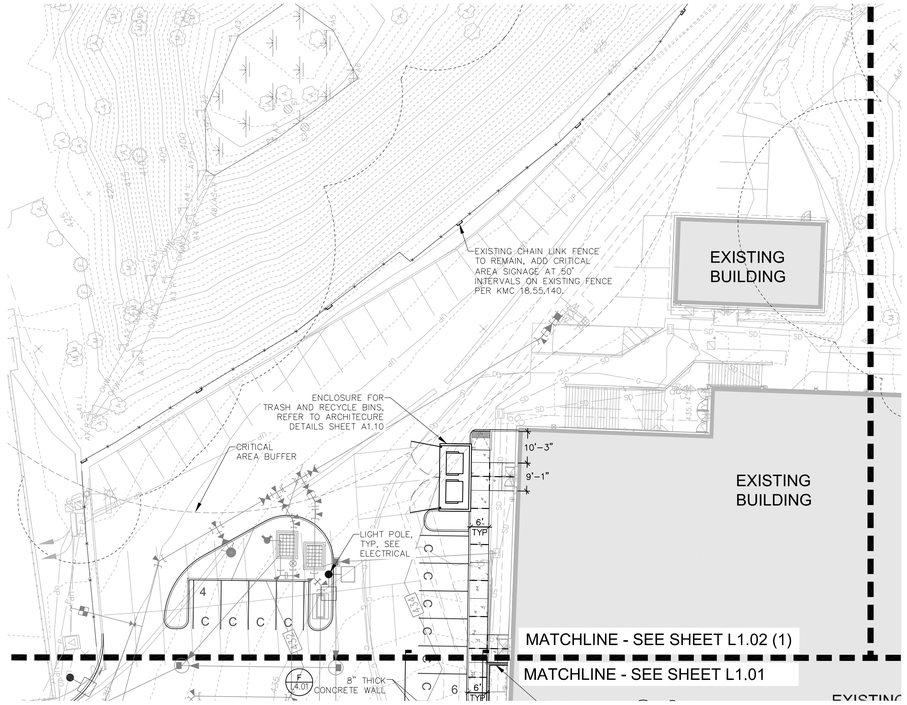

1 EAST PARKING

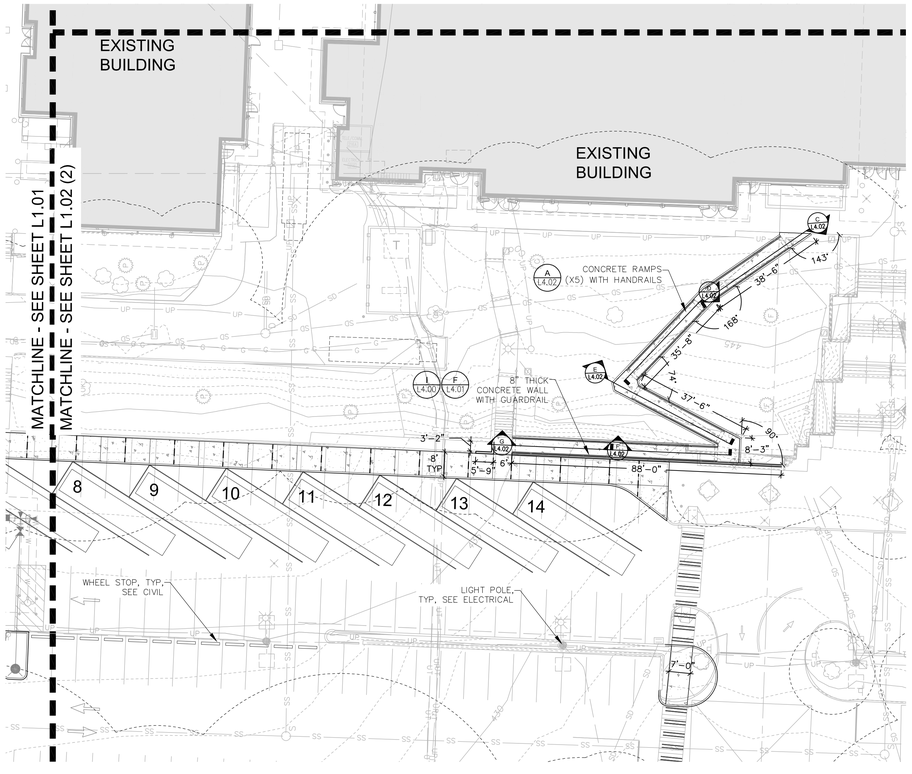

2 SOUTH RAMPS

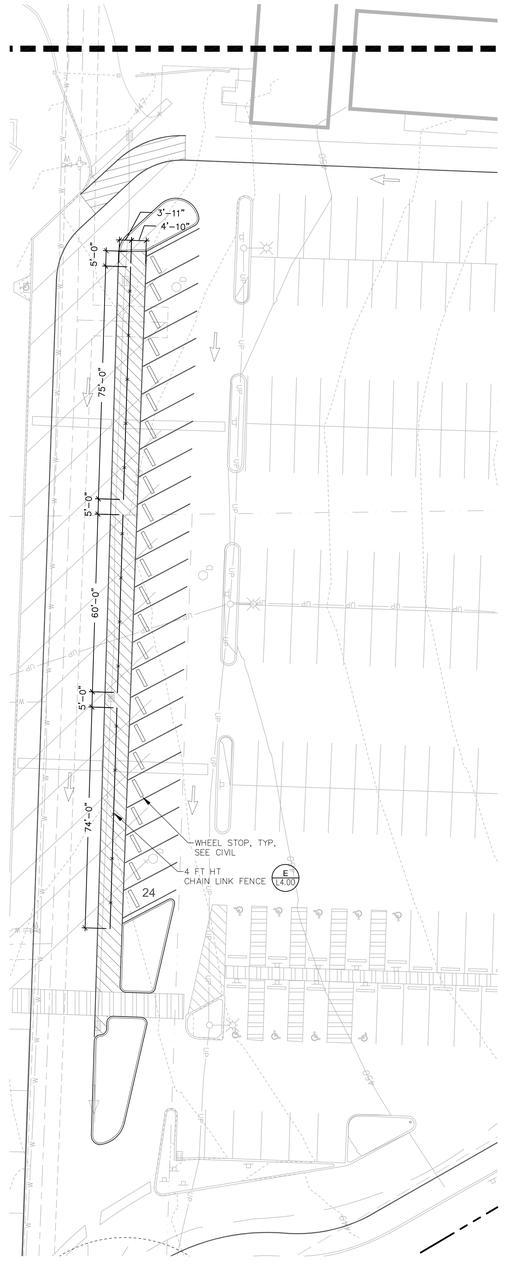

3 SOUTH PARKING

SITE IMPROVEMENTS LEGEND

(Symbols shown at 1" = 20'-0")

SYMBOL	ITEM	DESCRIPTION
SCORE JOINT / EXPANSION JOINT	CONCRETE PAVING	SEE SITE PLAN FOR LAYOUT AND PATTERN. REFER TO CIVIL FOR RIGHT-OF-WAY IMPROVEMENTS. SEE CIVIL AND SPECIFICATIONS FOR ADDITONAL REQUIREMENTS.
	CONCRETE BENCH	SEE SITE PLAN FOR LOCATIONS, SEE SPECIFICATIONS. INSTALL PER MANUFACTURER INFORMATION AND INSTALLATION REQUIREMENTS.
	LITTER RECEPTACLE	SEE SITE PLAN FOR LOCATIONS, FIELD LOCATION TO AVOID CONFLICTS, SEE SPECIFICATIONS. INSTALL PER MANUFACTURER INFORMATION AND INSTALLATION REQUIREMENTS.
	ART FEATURE (TBD)	SEE SITE PLAN FOR LOCATIONS, SEE SPECIFICATIONS. INSTALL PER MANUFACTURER INFORMATION AND INSTALLATION REQUIREMENTS.
	BIKE RACKS	SEE SITE PLAN FOR LOCATIONS, SEE SPECIFICATIONS. INSTALL PER MANUFACTURER INFORMATION AND INSTALLATION REQUIREMENTS.
	CHAIN LINK FENCE	SEE SITE PLAN FOR LOCATIONS AND HEIGHTS, SEE SPECIFICATIONS. INSTALL PER MANUFACTURER INFORMATION AND INSTALLATION REQUIREMENTS.
	TACTILE WARNING PAVERS AND BOLLARDS	SEE SITE PLAN FOR LOCATIONS, SEE SPECIFICATIONS. INSTALL PER MANUFACTURER INFORMATION AND INSTALLATION REQUIREMENTS.
	LIGHT POLES	REFER TO ELECTRICAL.
	EXISTING TREES TO PRESERVE	SAVE AND PROTECT, SEE CIVIL FOR EXACT LIMITS OF CLEARING.

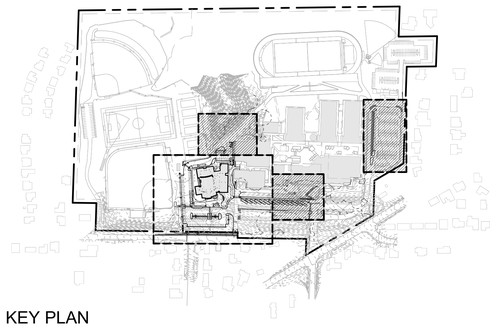

KEY PLAN

SCALE: 1"=20'-0"

0' 10' 20' 40' 80'

N

WEISMANDESIGNGROUP

LANDSCAPE CONSULTANT | 2329 E MADISON ST SEATTLE WA 98112 | 206-322-1732 WWW.WDGINC.COM

HUTTEBALL + OREMUS architecture

4010 LAKE WASHINGTON BLVD NE
SUITE 320
KIRKLAND, WA 98033

425.828.8948

HOARCH.COM

ARCHITECT STAMP

CONSULTANT STAMP

STATE OF WASHINGTON
NICHOLAS P HAGAN
No. 753 EXP. 4/17/2020
LANDSCAPE ARCHITECT

PROJECT INFORMATION

Inglemoor High School Concert Hall + Music Building

15500 Simonds Rd NE
Kenmore, WA 98028

NORTHSHORE SCHOOL DISTRICT No. 417

SCHOOL DISTRICT LOGO

Northshore School District

02.13.2019	SCHEMATIC DESIGN
04.08.2019	VALUE ENGINEERING
09.16.2019	SITE PLAN REVIEW
10.18.2019	DESIGN DEVELOPMENT
01.13.2020	CONSTRUCTABILITY REVIEW
03.23.2020	HEALTH DEPARTMENT PERMIT SUBMITTAL
04.13.2020	BID DOCUMENTS

BID DOCUMENTS
04.13.2020

PROJECT NUMBER: 1711.00

SHEET NAME

Enlarged Site Plans

SHEET NUMBER

L1.02

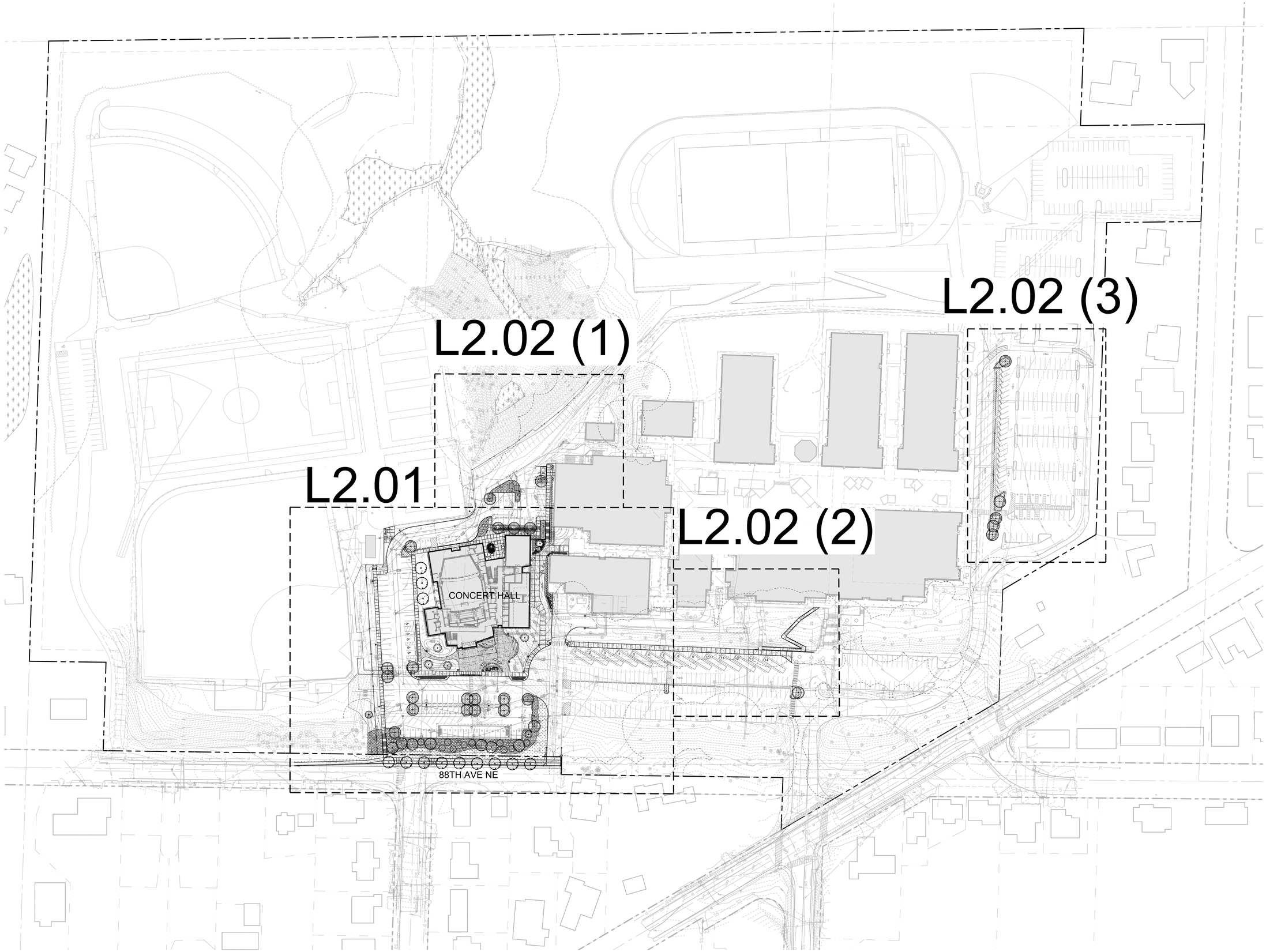

SCALE: 1"=60'-0"

0' 30' 60' 120' 240'

N

WEISMANDESIGNGROUP

LANDSCAPE CONSULTANT

2329 E MADISON ST
SEATTLE WA 98112

206-322-1732
WWW.WDGINC.COM

HUTTEBALL + OREMUS architecture

4010 LAKE WASHINGTON BLVD NE
SUITE 320
KIRKLAND, WA 98033

425.828.8948

HOARCH.COM

ARCHITECT STAMP

CONSULTANT STAMP

STATE OF WASHINGTON
NICHOLAS P HAGAN
NO. 753 EXP. 4/17/2020
LANDSCAPE ARCHITECT

PROJECT INFORMATION

Inglemoor High School Concert Hall + Music Building

15500 Simonds Rd NE
Kenmore, WA 98028

NORTHSHORE SCHOOL DISTRICT No. 417

SCHOOL DISTRICT LOGO

Northshore School District

02.13.2019	SCHEMATIC DESIGN
04.08.2019	VALUE ENGINEERING
09.16.2019	SITE PLAN REVIEW
10.18.2019	DESIGN DEVELOPMENT
01.13.2020	CONSTRUCTABILITY REVIEW
03.23.2020	HEALTH DEPARTMENT PERMIT SUBMITTAL
04.13.2020	BID DOCUMENTS

BID DOCUMENTS

04.13.2020

PROJECT NUMBER: 1711.00

SHEET NAME

Overall Planting Plan

SHEET NUMBER

L2.00

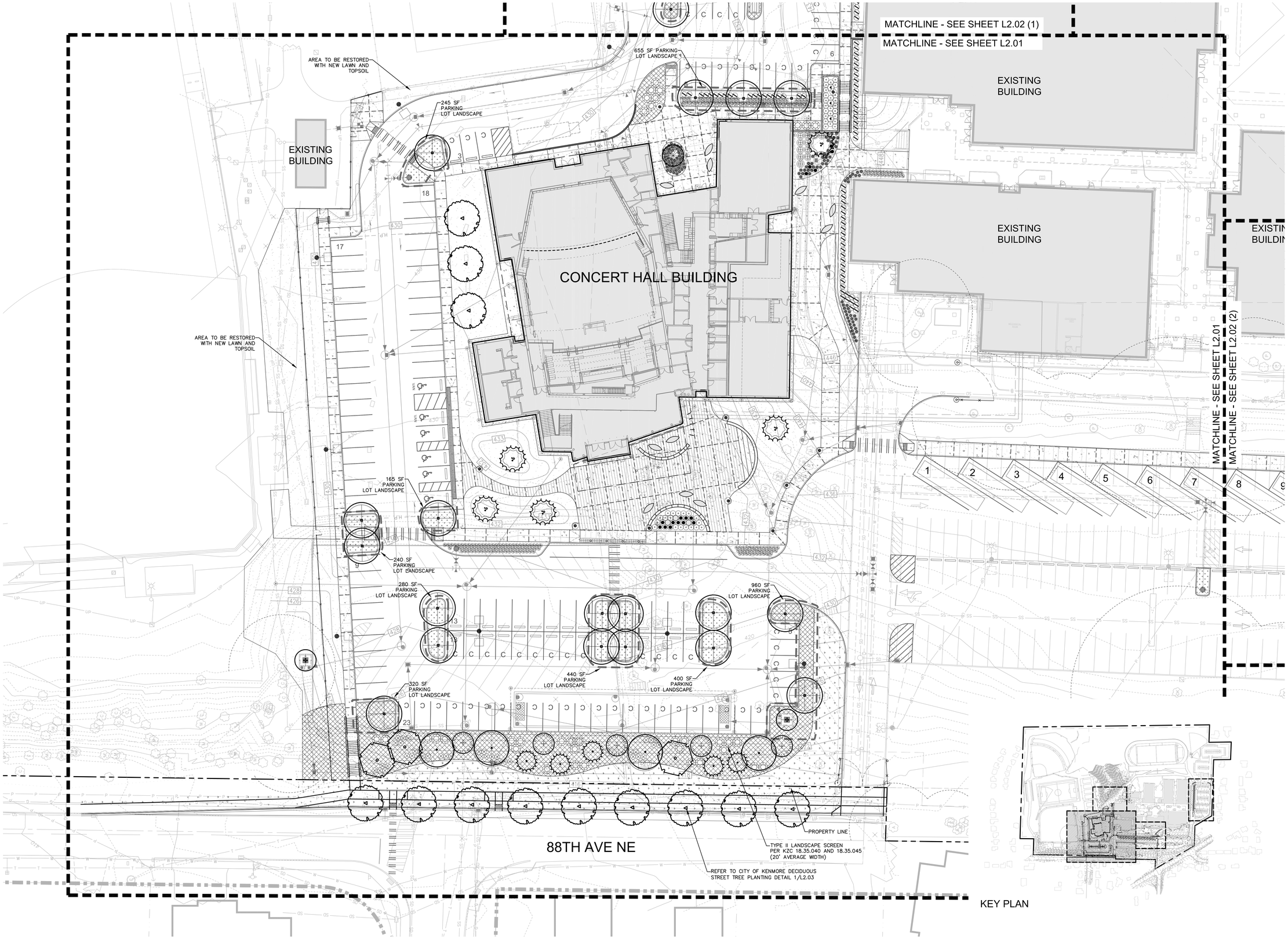

WEISMANDESIGNGROUP

LANDSCAPE CONSULTANT | 2329 E MADISON ST SEATTLE WA 98112 | 206-322-1732 WWW.WDGINC.COM

HUTTEBALL + OREMUS architecture

4010 LAKE WASHINGTON BLVD NE
SUITE 320
KIRKLAND, WA 98033

425.828.8948

HOARCH.COM

ARCHITECT STAMP

CONSULTANT STAMP

STATE OF WASHINGTON
NICHOLAS P HAGAN
NO. 753 EXP. 4/17/2020
LANDSCAPE ARCHITECT

PROJECT INFORMATION

Inglemoor High School Concert Hall + Music Building

15500 Simonds Rd NE
Kenmore, WA 98028

NORTHSHORE SCHOOL DISTRICT No. 417

SCHOOL DISTRICT LOGO

Northshore School District

02.13.2019	SCHEMATIC DESIGN
04.08.2019	VALUE ENGINEERING
09.16.2019	SITE PLAN REVIEW
10.18.2019	DESIGN DEVELOPMENT
01.13.2020	CONSTRUCTABILITY REVIEW
03.23.2020	HEALTH DEPARTMENT PERMIT SUBMITTAL
04.13.2020	BID DOCUMENTS

BID DOCUMENTS

04.13.2020

PROJECT NUMBER: 1711.00

SHEET NAME

Enlarged Planting Plan

SHEET NUMBER

L2.01

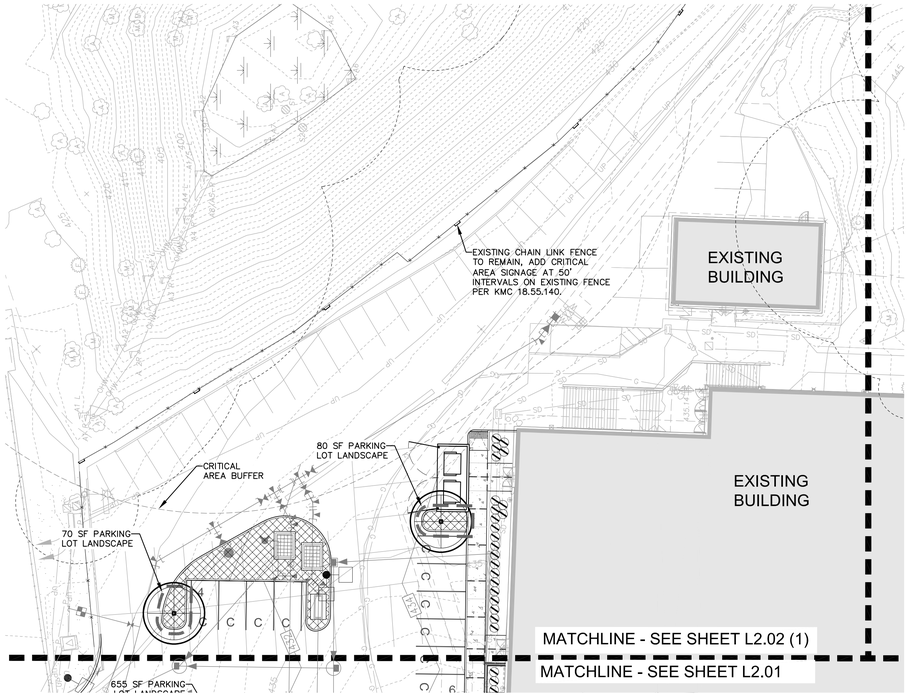

1 EAST PARKING

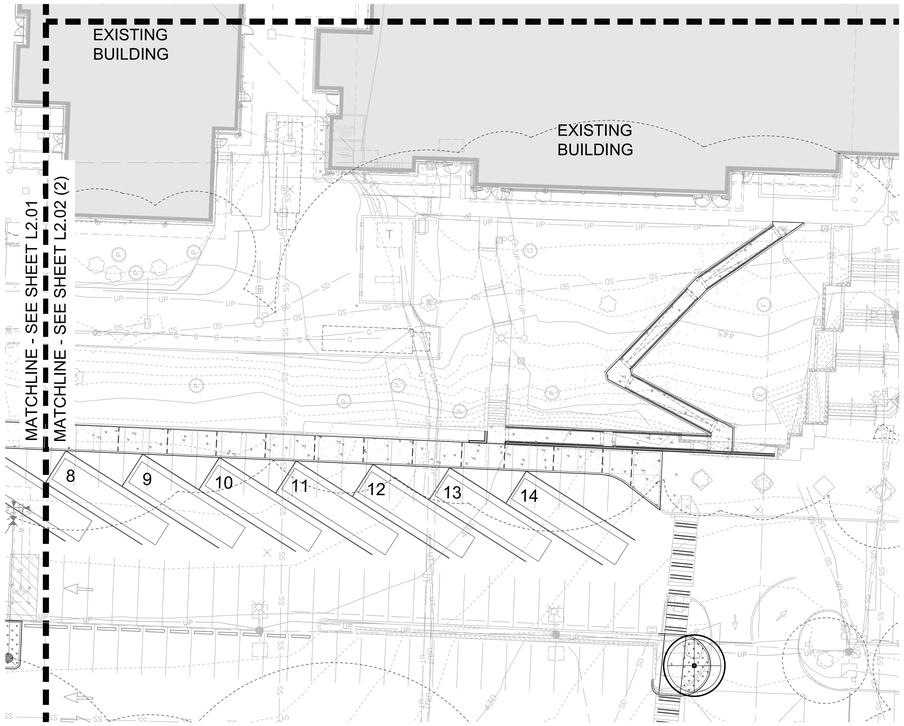

2 SOUTH RAMPS

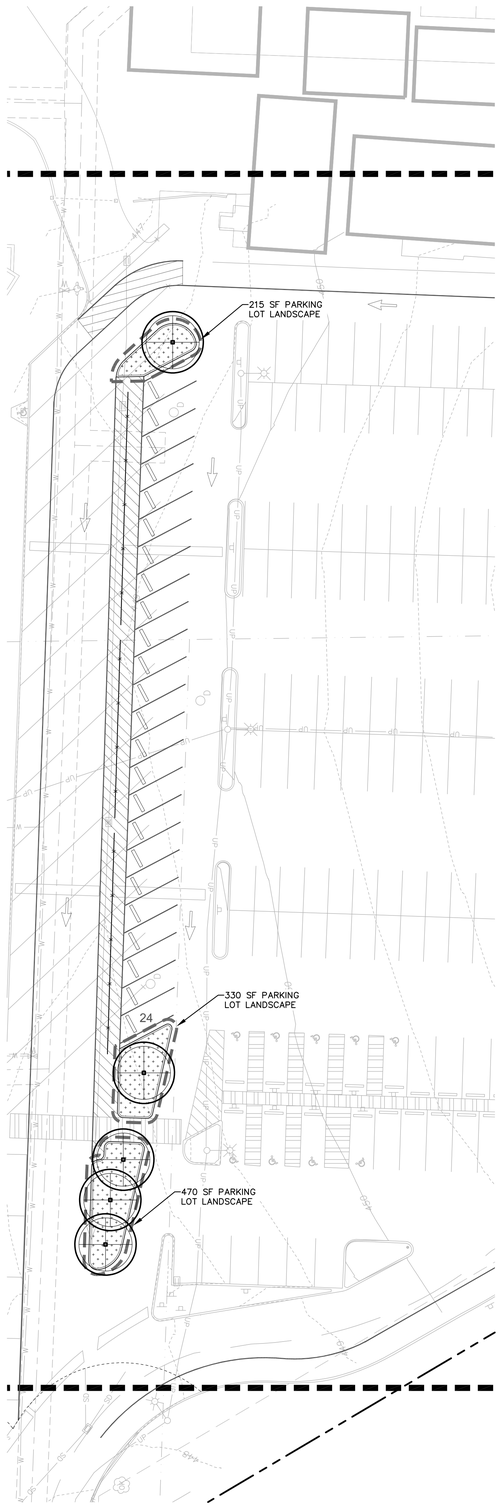

3 SOUTH PARKING

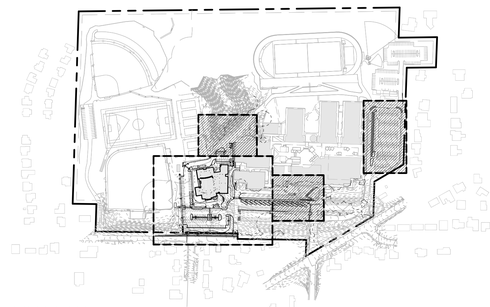

KEY PLAN

SCALE: 1"=20'-0"

0' 10' 20' 40' 80'

N

WEISMANDESIGNGROUP

LANDSCAPE CONSULTANT

2329 E MADISON ST SEATTLE WA 98112

206-322-1732 WWW.WDGINC.COM

HUTTEBALL + OREMUS architecture

4010 LAKE WASHINGTON BLVD NE
SUITE 320
KIRKLAND, WA 98033

425.828.8948

HOARCH.COM

ARCHITECT STAMP

CONSULTANT STAMP

STATE OF WASHINGTON NICHOLAS P HAGAN NO. 753 EXP. 4/17/2020 LANDSCAPE ARCHITECT

PROJECT INFORMATION

Inglemoor High School Concert Hall + Music Building

15500 Simonds Rd NE
Kenmore, WA 98028

NORTHSHORE SCHOOL DISTRICT No. 417

SCHOOL DISTRICT LOGO

Northshore School District

02.13.2019	SCHEMATIC DESIGN
04.08.2019	VALUE ENGINEERING
09.16.2019	SITE PLAN REVIEW
10.18.2019	DESIGN DEVELOPMENT
01.13.2020	CONSTRUCTABILITY REVIEW
03.23.2020	HEALTH DEPARTMENT PERMIT SUBMITTAL
04.13.2020	BID DOCUMENTS

BID DOCUMENTS

04.13.2020

PROJECT NUMBER: 1711.00

SHEET NAME

Enlarged Planting Plans

SHEET NUMBER

L2.02

PARKING LOT LANDSCAPE CALCULATIONS SUMMARY

		REQUIREMENT	PROVIDED
1)	NORTH PARKING LOTS (119 PROPOSED/ALTERED PARKING STALLS):	25 SF / STALL (25 X 119 STALLS = 2,975 SF)	32 SF / STALL (3,855 SF)
	NEW PARKING LOT TREES	1 TREE / 5 STALL (119 STALLS / 5 = 24 TREES)	24 TREES
	NEW PARKING LOT TREE SPECIES	70% MIN. DECIDUOUS (24 TREES X 0.7 = 17 DECIDUOUS)	79% DECIDUOUS 19 DECIDUOUS
2)	SOUTH PARKING LOT (24 PROPOSED/ALTERED PARKING STALLS):	25 SF / STALL (25 X 24 STALLS = 600 SF)	42 SF / STALL (1,015 SF)
	NEW SURFACE PARKING LOTS (119 PROPOSED PARKING STALLS)	1 TREE / 5 STALL (24 STALLS / 5 = 5 TREES)	5 TREES
	NEW PARKING LOT TREE SPECIES	70% MIN. DECIDUOUS (5 TREES X 0.7 = 5 DECIDUOUS)	100% DECIDUOUS 5 DECIDUOUS

GENERAL PLANTING NOTES

1. ALL PLANT MATERIALS SHALL BE ADAPTABLE TO THE SITE CONDITIONS AND SHALL MEET THE MOST RECENT AMERICAN STANDARDS FOR NURSERY STOCK (ANSI Z60.1).
2. A TOTAL OF 8 IN. DEPTH OF SPECIFIED TOPSOIL RICH IN ORGANIC MATERIAL SHALL BE INSTALLED IN ALL NEW LANDSCAPE AREAS.
3. A TOTAL OF 3 IN. DEPTH OF SPECIFIED MULCH SHALL BE INSTALLED IN ALL NEW TREE, SHRUB AND GROUNDCOVER AREAS.
4. ALL LANDSCAPE AREAS SHALL HAVE ADEQUATE DRAINAGE.
5. ALL TREE STAKES MUST BE REMOVED BY THE CONTRACTOR BY THE END OF THE FIRST FULL GROWING SEASON.
6. REFER TO CITY OF KENMORE STANDARD PLANTING DETAIL FOR STREET TREES AS SHOWN.
7. REFER TO KENMORE MUNICIPAL CODE CHAPTER 18.35 FOR MORE INFORMATION ON LANDSCAPE DEVELOPMENT STANDARDS.

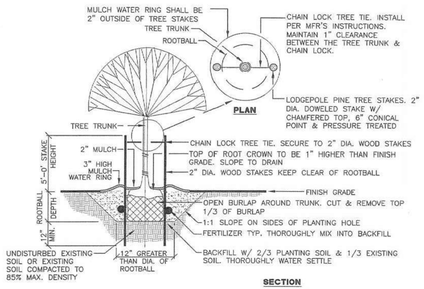

1 DECIDUOUS STREET TREE PLANTING EXHIBIT
NOT TO SCALE

NOTES:
1. ALL GROUNDCOVER TO BE PLANTED AT = SPACING (TRIANGULAR) PER O.C. SPACING ON PLANS

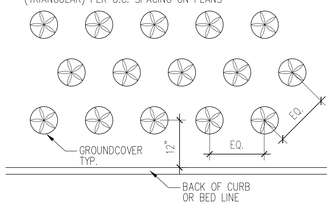

2 GROUNDCOVER PLANTING
Scale: NTS

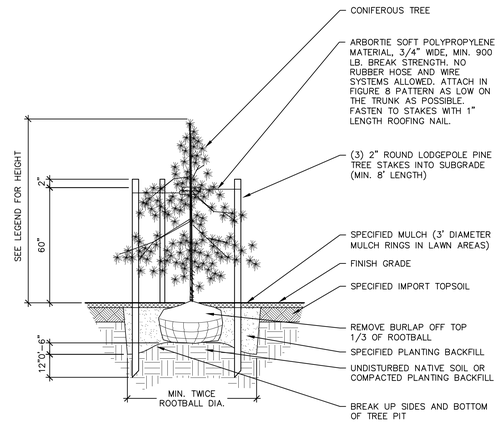

3 CONIFEROUS TREE PLANTING
Scale: 3/8"=1'-0"

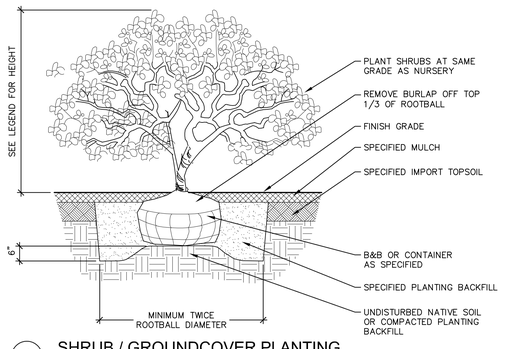

4 SHRUB / GROUNDCOVER PLANTING
Scale: 1 1/2"=1'-0"

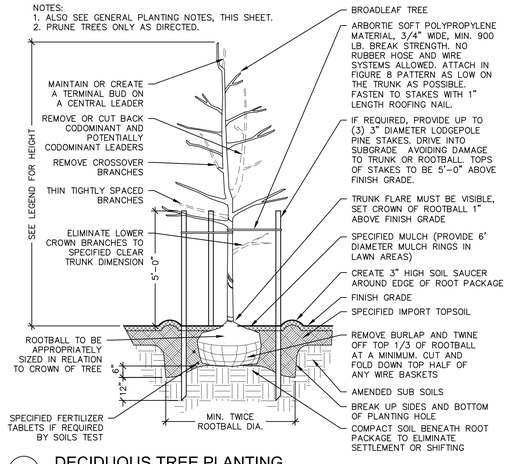

5 DECIDUOUS TREE PLANTING
Scale: 3/8"=1'-0"

PLANT SCHEDULE

	BOTANICAL / COMMON NAME	SIZE	CONDITION/REMARKS	QTY
DECIDUOUS TREES				
	ACER SACCHARUM SUGAR MAPLE	MIN. 2" CAL., 10'–12' MIN. HT.	MATCHED, B&B., WELL BRANCHED	4
	CERCIDIPHYLLUM JAPONICUM KATSURA TREE	MIN. 2" CAL., 10'–12' MIN. HT.	MATCHED, B&B., WELL BRANCHED	12
	GINKGO BILOBA 'AUTUMN GOLD' TM MAIDENHAIR TREE	MIN. 2" CAL., 10'–12' MIN. HT.	MATCHED, B&B., WELL BRANCHED	26
	LIQUIDAMBAR STYRACIFLUA 'ROTUNDILOBA' ROUND–LOBED SWEET GUM	MIN. 2" CAL., 10'–12' MIN. HT.	MATCHED, B&B., WELL BRANCHED	3
EVERGREEN TREES				
	ABIES PINSAPO SPANISH FIR	MIN. 7'–8' HT.	FULL AND BUSHY TO BASE, B&B OR CONT.	5
	PSEUDOTSUGA MENZIESII DOUGLAS FIR	MIN. 7'–8' HT.	FULL AND BUSHY TO BASE, B&B OR CONT.	5
	THUJA PLICATA WESTERN RED CEDAR	MIN. 7'–8' HT.	FULL AND BUSHY TO BASE, B&B OR CONT.	5
SMALL ACCENT TREES				
	ACER SHIRASAWANUM 'AUREUM' GOLDEN FULLMOON MAPLE	MULTI–STEMMED, (3) MIN. 3/4" CAL., 8'–10' MIN. HT.	MATCHED, B&B., WELL BRANCHED	1
	CORNUS FLORIDA 'EDDIES WHITE WONDER' FLOWERING DOGWOOD	MIN. 2" CAL., 10'–12' MIN. HT.	MATCHED, B&B., WELL BRANCHED	2
SHRUBS				
	CORNUS STOLONIFERA 'ARCTIC FIRE' ARCTIC FIRE DOGWOOD	MIN. 5 GAL. CONTAINER	FULL & BUSHY, SPACING AS SHOWN ON PLAN	36
	HELLEBORUS ARGUTIFOLIUS CORSICAN HELLEBORE	MIN. 2 GAL. CONTAINER	FULL & BUSHY, SPACING AS SHOWN ON PLAN	12
	HYDRANGEA QUERCIFOLIA 'PEE WEE' OAKLEAF HYDRANGEA	MIN. 5 GAL. CONTAINER	FULL & BUSHY, SPACING AS SHOWN ON PLAN	16
	POLYSTICHUM MUNITUM WESTERN SWORD FERN	MIN. 2 GAL. CONTAINER	FULL & BUSHY, SPACING AS SHOWN ON PLAN	112
	PRUNUS LAUROCERASUS 'ZABELIANA' ZABEL LAUREL	MIN. 5 GAL. CONTAINER	FULL & BUSHY, SPACING AS SHOWN ON PLAN	91
	SPIRAEA BETULIFOLIA 'TOR' BIRCHLEAF SPIREA	MIN. 2 GAL. CONTAINER	FULL & BUSHY, SPACING AS SHOWN ON PLAN	201
	TAXUS BACCATA 'REPANDENS' SPREADING ENGLISH YEW	MIN. 2 GAL. CONTAINER	FULL & BUSHY, SPACING AS SHOWN ON PLAN	44
	VACCINIUM OVATUM EVERGREEN HUCKLEBERRY	MIN. 5 GAL. CONTAINER	FULL & BUSHY, SPACING AS SHOWN ON PLAN	39
	VIBURNUM DAVIDII DAVID VIBURNUM	MIN. 2 GAL. CONTAINER	FULL & BUSHY, SPACING AS SHOWN ON PLAN	11
	VIBURNUM PLICATUM TOMENTOSUM DOUBLEFILE VIBURNUM	MIN. 3–4' HT.	FULL & BUSHY, SPACING AS SHOWN ON PLAN	3
GROUND COVERS	BOTANICAL / COMMON NAME	SIZE	CONDITION/REMARKS	QTY
	NATIVE GROUNDCOVER MIX			8,580 SF
	25% MAHONIA NERVOSA LOW OREGON GRAPE	MIN. 1 GAL. CONTAINER	24" O.C. TRIANG. SPAC., START FIRST ROW 12" FROM EDGE, FULL & BUSHY	558
	25% POLYSTICHUM MUNITUM WESTERN SWORD FERN	MIN. 2 GAL. CONTAINER	24" O.C. TRIANG. SPAC., START FIRST ROW 12" FROM EDGE, FULL & BUSHY	558
	50% GAULTHERIA SHALLON SALAL	MIN. 1 GAL. CONTAINER	24" O.C. TRIANG. SPAC., START FIRST ROW 12" FROM EDGE, FULL & BUSHY	1,115
GROUND COVER AREAS	BOTANICAL / COMMON NAME	SIZE	CONDITION/REMARKS	QTY
	MAHONIA REPENS CREEPING MAHONIA	MIN. 2 GAL. CONTAINER	18" O.C. TRIANG. SPAC., START FIRST ROW 12" FROM EDGE, FULL & BUSHY	1,404
LAWN	BOTANICAL / COMMON NAME	SIZE	CONDITION/REMARKS	QTY
	MEADOW SEED MIX	HYDROSEED	SEE SPECIFICATIONS FOR SEED MIX AND APPLICATION	6,993 SF
	SEEDED LAWN	HYDROSEED	SEE SPECIFICATIONS FOR SEED MIX AND APPLICATION	24,308 SF

OTHER

	EXISTING TREES TO REMAIN, SAVE AND PROTECT.	SEE SECTION 01 56 39 AND REFER TO CIVIL PLANS

HUTTEBALL +OREMUS architecture
4010 LAKE WASHINGTON BLVD NE
SUITE 320
KIRKLAND, WA 98033
425.828.8948
HOARCH.COM

ARCHITECT STAMP

CONSULTANT STAMP

STATE OF WASHINGTON NICHOLAS P. HAGAN NO. 7575 EXP. 4/17/2020 LANDSCAPE ARCHITECT

PROJECT INFORMATION

Inglemoor High School Concert Hall + Music Building

15500 Simonds Rd NE
Kenmore, WA 98028

NORTHSHORE SCHOOL DISTRICT No. 417

SCHOOL DISTRICT LOGO

Northshore School District

02.13.2019	SCHEMATIC DESIGN
04.08.2019	VALUE ENGINEERING
09.16.2019	SITE PLAN REVIEW
10.18.2019	DESIGN DEVELOPMENT
01.13.2020	CONSTRUCTABILITY REVIEW
03.23.2020	HEALTH DEPARTMENT PERMIT SUBMITTAL
04.13.2020	BID DOCUMENTS

BID DOCUMENTS
04.13.2020

PROJECT NUMBER: 1711.00

SHEET NAME

Plant Schedule & Details

SHEET NUMBER

L2.03

WEISMANDESIGNGROUP
LANDSCAPE CONSULTANT
2339 E MADISON ST SEATTLE WA 98112
206-322-1732 WWW.WDGINC.COM

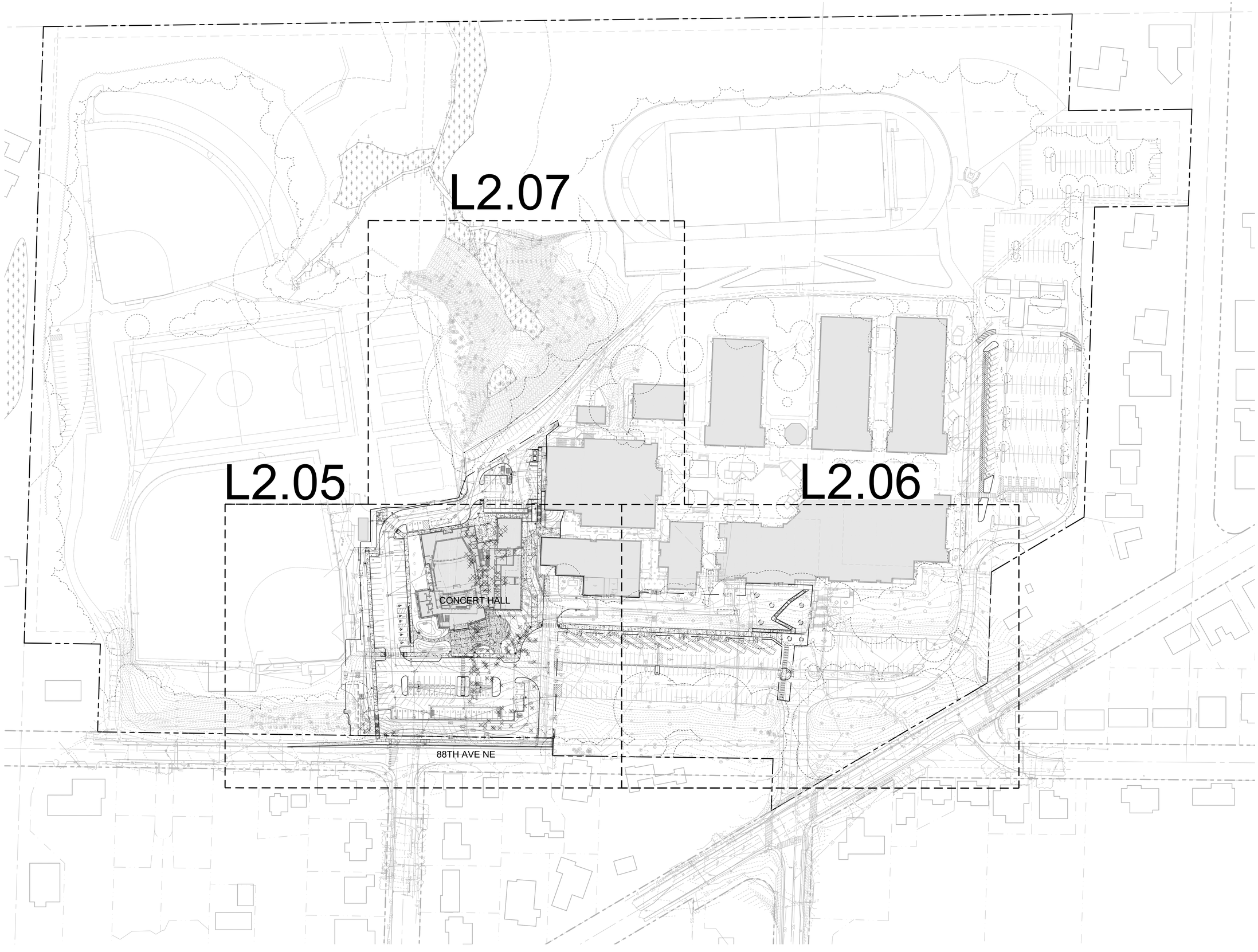

SCALE: 1"=60'-0"

0' 30' 60' 120' 240' N

WEISMANDESIGNGROUP
LANDSCAPE CONSULTANT
2329 E MADISON ST SEATTLE WA 98112
206-322-1732 WWW.WDGINC.COM

HUTTEBALL +OREMUS architecture
4010 LAKE WASHINGTON BLVD NE
SUITE 320
KIRKLAND, WA 98033
425.828.8948
HOARCH.COM

ARCHITECT STAMP

CONSULTANT STAMP

STATE OF WASHINGTON NICHOLAS P HAGAN LANDSCAPE ARCHITECT NO 3705 EXP. 4/17/2020

PROJECT INFORMATION

Inglemoor High School Concert Hall + Music Building

15500 Simonds Rd NE
Kenmore, WA 98028

NORTHSHORE SCHOOL DISTRICT No. 417

SCHOOL DISTRICT LOGO

Northshore School District

02.13.2019	SCHEMATIC DESIGN
04.08.2019	VALUE ENGINEERING
09.16.2019	SITE PLAN REVIEW
10.18.2019	DESIGN DEVELOPMENT
01.13.2020	CONSTRUCTABILITY REVIEW
03.23.2020	HEALTH DEPARTMENT PERMIT SUBMITTAL
04.13.2020	BID DOCUMENTS

BID DOCUMENTS
04.13.2020

PROJECT NUMBER: 1711.00

SHEET NAME

Overall Tree Protection Plan

SHEET NUMBER

L2.04

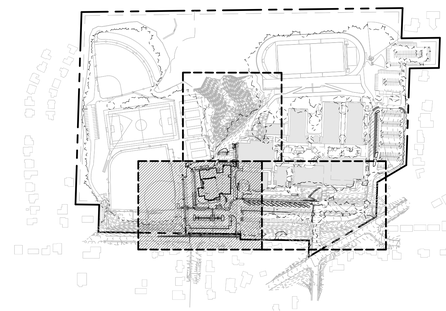

KEY PLAN

SCALE: 1"=20'-0"

0' 10' 20' 40' 80' N

HUTTEBALL +OREMUS architecture

4010 LAKE WASHINGTON BLVD NE
SUITE 320
KIRKLAND, WA 98033

425.828.8948

HOARCH.COM

ARCHITECT STAMP

CONSULTANT STAMP

STATE OF WASHINGTON
NICHOLAS P HAGAN
#21705
REGISTERED LANDSCAPE ARCHITECT
MY SIGN EXP. 4/17/2020

PROJECT INFORMATION

Inglemoor High School Concert Hall + Music Building

15500 Simonds Rd NE
Kenmore, WA 98028

NORTHSHORE SCHOOL DISTRICT No. 417

SCHOOL DISTRICT LOGO

Northshore School District

02.13.2019	SCHEMATIC DESIGN
04.08.2019	VALUE ENGINEERING
09.16.2019	SITE PLAN REVIEW
10.18.2019	DESIGN DEVELOPMENT
01.13.2020	CONSTRUCTABILITY REVIEW
03.23.2020	HEALTH DEPARTMENT PERMIT SUBMITTAL
04.13.2020	BID DOCUMENTS

BID DOCUMENTS
04.13.2020

PROJECT NUMBER: 1711.00

SHEET NAME

Enlarged Tree Protection Plan

SHEET NUMBER

L2.05

WEISMANDESIGNGROUP

LANDSCAPE CONSULTANT

2329 E MADISON ST
SEATTLE WA 98112

206-322-1732
WWW.WDGINC.COM

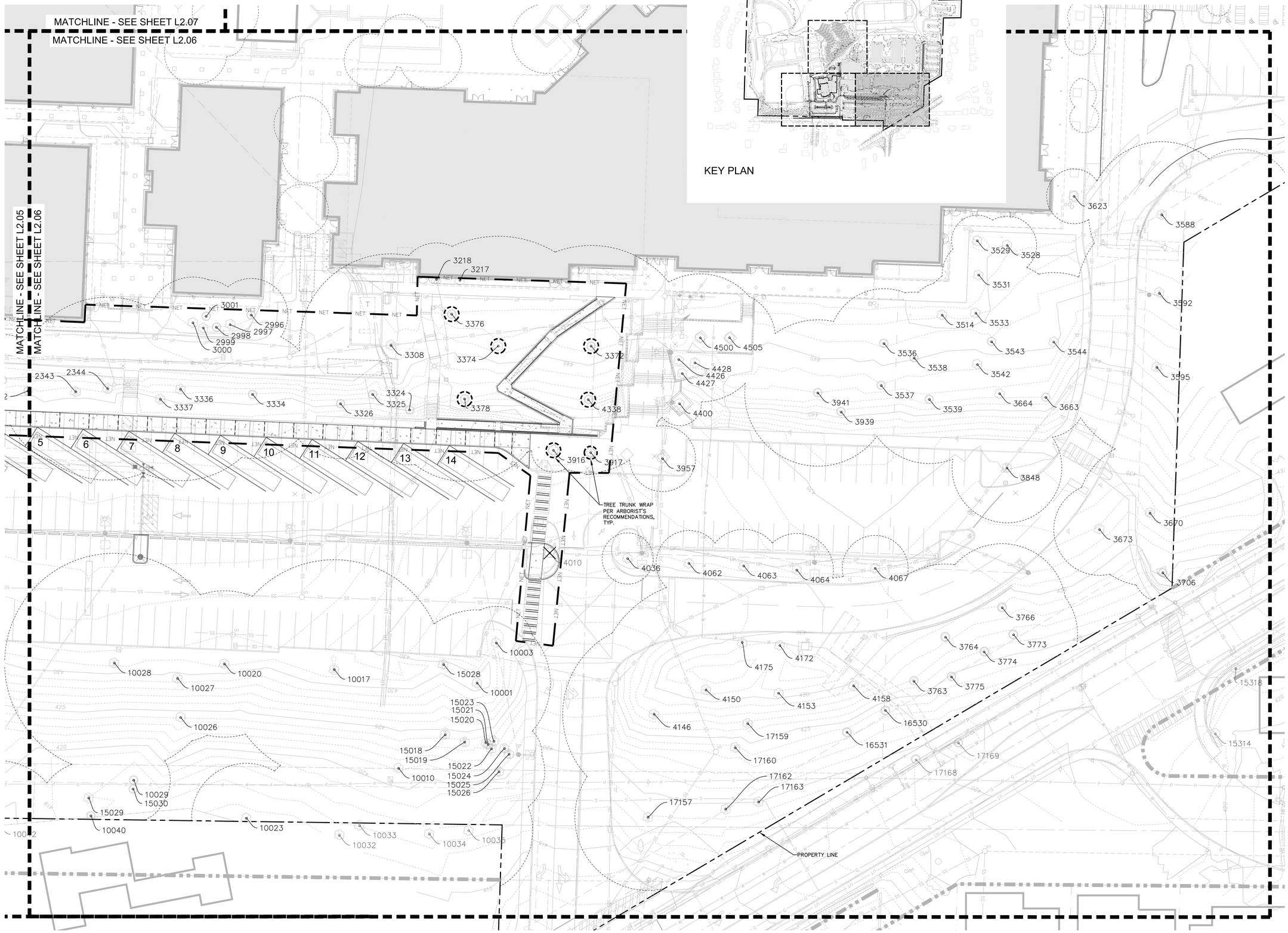

SCALE: 1"=20'-0"

0' 10' 20' 40' 80'

N

WEISMANDESIGNGROUP

LANDSCAPE CONSULTANT

2329 E MADISON ST SEATTLE WA 98112

206-322-1732 WWW.WDGINC.COM

HUTTEBALL + OREMUS architecture

4010 LAKE WASHINGTON BLVD NE
SUITE 320
KIRKLAND, WA 98033

425.828.8948

HOARCH.COM

ARCHITECT STAMP

CONSULTANT STAMP

STATE OF WASHINGTON NICHOLAS P HAGAN NO. 753 EXP. 4/17/2020 LANDSCAPE ARCHITECT

PROJECT INFORMATION

Inglemoor High School Concert Hall + Music Building

15500 Simonds Rd NE
Kenmore, WA 98028

NORTHSHORE SCHOOL DISTRICT No. 417

SCHOOL DISTRICT LOGO

Northshore School District

02.13.2019	SCHEMATIC DESIGN
04.08.2019	VALUE ENGINEERING
09.16.2019	SITE PLAN REVIEW
10.18.2019	DESIGN DEVELOPMENT
01.13.2020	CONSTRUCTABILITY REVIEW
03.23.2020	HEALTH DEPARTMENT PERMIT SUBMITTAL
04.13.2020	BID DOCUMENTS

BID DOCUMENTS

04.13.2020

PROJECT NUMBER: 1711.00

SHEET NAME

Enlarged Tree Protection Plan

SHEET NUMBER

L2.06

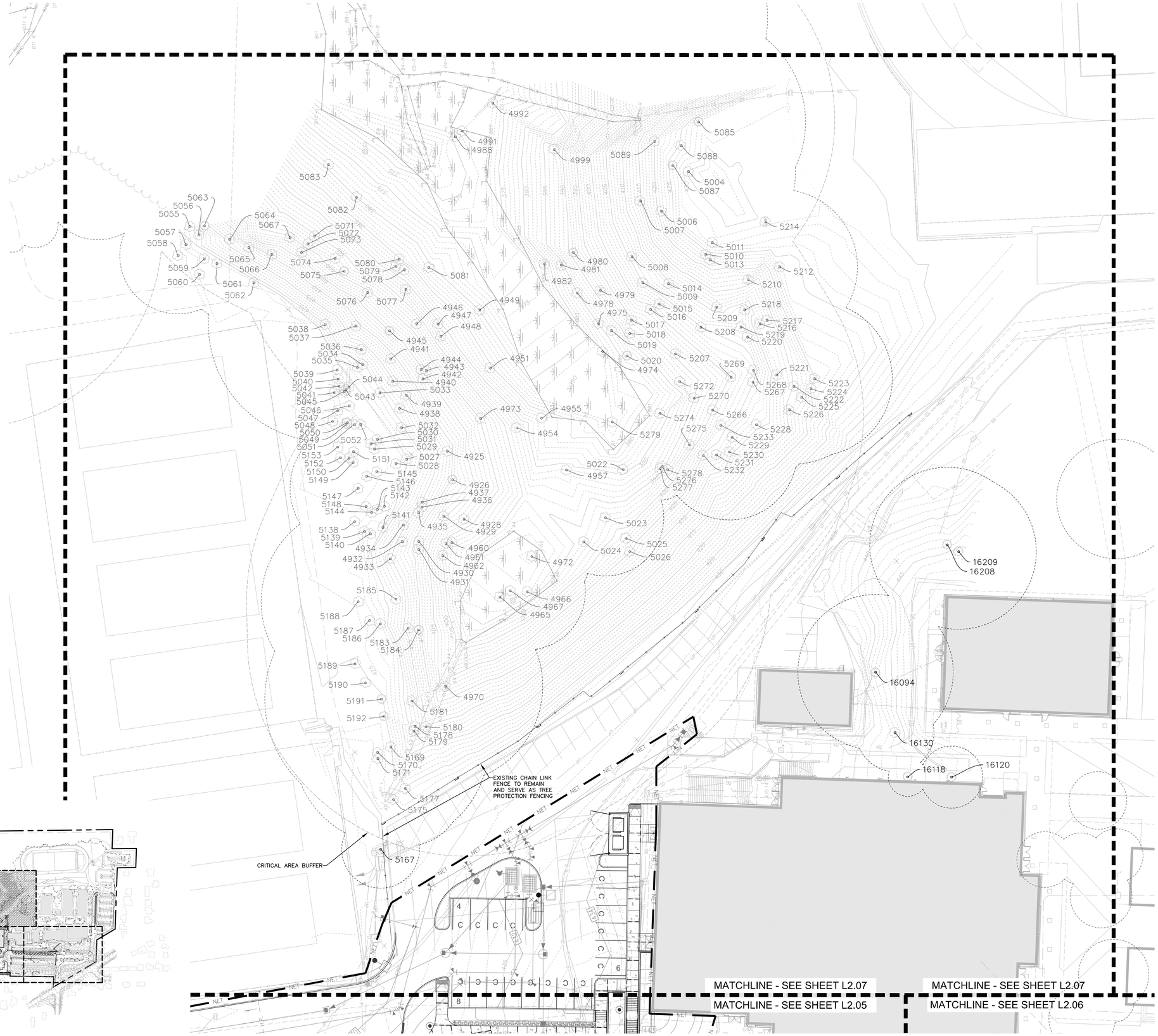

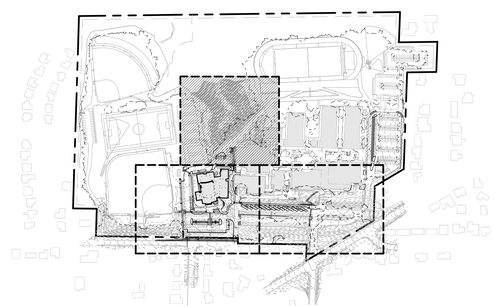

KEY PLAN

SCALE: 1"=20'-0"

0' 10' 20' 40' 80'

N

WEISMANDESIGNGROUP

LANDSCAPE CONSULTANT

2329 E MADISON ST SEATTLE WA 98112

206-322-1732 WWW.WDGINC.COM

HUTTEBALL + OREMUS architecture

4010 LAKE WASHINGTON BLVD NE
SUITE 320
KIRKLAND, WA 98033

425.828.8948

HOARCH.COM

ARCHITECT STAMP

CONSULTANT STAMP

STATE OF WASHINGTON
NICHOLAS P HAGAN
NO. 753 EXP. 4/17/2020
LANDSCAPE ARCHITECT

PROJECT INFORMATION

Inglemoor High School Concert Hall + Music Building

15500 Simonds Rd NE
Kenmore, WA 98028

NORTHSHORE SCHOOL DISTRICT No. 417

SCHOOL DISTRICT LOGO

Northshore School District

02.13.2019	SCHEMATIC DESIGN
04.08.2019	VALUE ENGINEERING
09.16.2019	SITE PLAN REVIEW
10.18.2019	DESIGN DEVELOPMENT
01.13.2020	CONSTRUCTABILITY REVIEW
03.23.2020	HEALTH DEPARTMENT PERMIT SUBMITTAL
04.13.2020	BID DOCUMENTS

BID DOCUMENTS

04.13.2020

PROJECT NUMBER: 1711.00

SHEET NAME

Enlarged Tree Protection Plan

SHEET NUMBER

L2.07

EXISTING TREE DENSITY (ED)

I.D.	COMMON NAME	BOTANICAL NAME	SIZE (DBH)	RETAIN (Y/N)	TREE UNITS
2338	PINE	Pinus	20	Yes	4.2
2339	PINE	Pinus	26	Yes	6.6
2341	PINE	Pinus	10	Yes	1.2
2342	PINE	Pinus	6	Yes	1.2
2343	OAK	Quercus	20	Yes	4.2
2344	OAK	Quercus	30	Yes	8.2
2696	MAPLE	Acer	12	No	
2744	PINE	Pinus	10	Yes	1.2
2745	PINE	Pinus	14	Yes	2.3
2996	PINE	Pinus	16	Yes	2.9
2997	DECIDUOUS		12	Yes	1.8
2998	PINE	Pinus	12	Yes	1.8
2999	DECIDUOUS		8 10	Yes	3.5
3000	DECIDUOUS		8 6	Yes	2.3
3001	PINE	Pinus	14	Yes	2.3
3217	DECIDUOUS		6	Yes	1.2
3218	DECIDUOUS		4 4	Yes	1.2
3308	OAK	Quercus	24	Yes	5.8
3324	PINE	Pinus	20	Yes	4.2
3325	PINE	Pinus	26	Yes	6.6
3326	PINE	Pinus	22	Yes	5.0
3334	PINE	Pinus	26	Yes	6.6
3336	OAK	Quercus	30	Yes	8.2
3337	OAK	Quercus	24	Yes	5.8
3372	DOUGLAS FIR	Pseudotsuga menziesii	44	Yes	15.0
3916	DECIDUOUS		6	Yes	1.2
3917	DECIDUOUS		4	Yes	1.0
4010	DECIDUOUS		5	No	
4240	COTTONWOOD	Populus balsamifera	12 14	Yes	6.6
4241	COTTONWOOD	Populus balsamifera	6	Yes	1.2
4242	COTTONWOOD	Populus balsamifera	4 4	Yes	1.2
4243	COTTONWOOD	Populus balsamifera	4	Yes	1.0
4244	COTTONWOOD	Populus balsamifera	8	Yes	1.2
4245	COTTONWOOD	Populus balsamifera	10	Yes	1.2
4246	COTTONWOOD	Populus balsamifera	6	Yes	1.2
4247	WILLOW	Salix	4	Yes	1.0
4248	MAPLE	Acer	14	Yes	2.3
4250	WILLOW	Salix	12	Yes	1.8
4251	WILLOW	Salix	6	Yes	1.2
4252	WILLOW	Salix	8	No	
4253	WILLOW	Salix	7x4-12	No	
4254	WILLOW	Salix	5x2-4	No	
4255	MAPLE	Acer	6	No	
4256	COTTONWOOD	Populus balsamifera	4x12-22	No	
4257	WILLOW	Salix	8	No	
4258	WILLOW	Salix	4x4-10	No	
4260	WILLOW	Salix	10	No	
4261	WILLOW	Salix	10	No	
4268	WILLOW	Salix	4 4	No	
4269	WILLOW	Salix	6 6	No	
4270	COTTONWOOD	Populus balsamifera	6	No	
4271	COTTONWOOD	Populus balsamifera	6	No	
4272	COTTONWOOD	Populus balsamifera	6	No	
4273	WILLOW	Salix	6	No	
4274	CHERRY	Prunus	4 6	No	
4275	MAPLE	Acer	4x4-6	No	
4276	COTTONWOOD	Populus balsamifera	6	No	
4277	MAPLE	Acer	6	No	
4278	COTTONWOOD	Populus balsamifera	12 14	No	
4279	CHERRY	Prunus	6 6 6	No	
4280	CHERRY	Prunus	4 6 6	No	
4281	COTTONWOOD	Populus balsamifera	14 14	No	
4282	WILLOW	Salix	8	No	
4283	MAPLE	Acer	6	No	
4284	WILLOW	Salix	6	No	
4285	MAPLE	Acer	6	No	
4286	MAPLE	Acer	2 6 6	No	
4287	MAPLE	Acer	4 4	No	
4288	WILLOW	Salix	4 4 6	No	
4289	COTTONWOOD	Populus balsamifera	14	No	
4290	MAPLE	Acer	2 2 4	No	
4291	WILLOW	Salix	6	No	
4292	MAPLE	Acer	46	No	
4293	MAPLE	Acer	24	No	
4294	WILLOW	Salix	8	No	
4295	COTTONWOOD	Populus balsamifera	22	No	
4296	WILLOW	Salix	20	No	
4297	MAPLE	Acer	4	No	
4298	MAPLE	Acer	6	No	
4299	MAPLE	Acer	46	No	
4300	MAPLE	Acer	6	No	
4301	MAPLE	Acer	6	No	
4302	WILLOW	Salix	22	No	
4303	MAPLE	Acer	8	No	
4304	CHERRY	Prunus	8	No	
4305	MAPLE	Acer	6	No	
4306	MAPLE	Acer	6	No	
4307	WILLOW	Salix	48	No	
4338	DOUGLAS FIR	Pseudotsuga menziesii	34	Yes	10.0
4542	DECIDUOUS		12	No	
4628	COTTONWOOD	Populus balsamifera	14 16 18	No	
4629	COTTONWOOD	Populus balsamifera	22	No	
4630	COTTONWOOD	Populus balsamifera	8	No	
4631	COTTONWOOD	Populus balsamifera	8	No	
4632	WILLOW	Salix	10	No	
4633	WILLOW	Salix	6	No	
4634	MAPLE	Acer	4	No	
4635	VINE MAPLE	Acer circinatum	6x2-6	No	
4636	MAPLE	Acer	12	No	
4637	MAPLE	Acer	32	No	
4884	MAPLE	Acer	4	No	
4885	MAPLE	Acer	6	No	
4886	MAPLE	Acer	6	No	
4887	MAPLE	Acer	4	No	
4888	MAPLE	Acer	6	No	
4889	DECIDUOUS		12	No	
4890	MAPLE	Acer	6 6 4	No	
4891	MAPLE	Acer	4	No	
4892	MAPLE	Acer	6	No	
4893	DECIDUOUS		6	No	
4894	MAPLE	Acer	4	No	
4896	CHERRY	Prunus	6	No	
4897	MAPLE	Acer	8	No	
4898	MAPLE	Acer	10	No	
4899	MAPLE	Acer	8	No	
4900	MAPLE	Acer	6	No	
4901	MAPLE	Acer	4	No	
4902	DECIDUOUS		6	No	
4903	MAPLE	Acer	6	No	
4904	WILLOW	Salix	14	No	
4905	RED ALDER	Alnus rubra	6	No	
4906	MAPLE	Acer	10	No	
4907	DECIDUOUS		4	No	
4908	MAPLE	Acer	8	No	
4909	MAPLE	Acer	8	No	
4910	WILLOW	Salix	8 4	No	
4911	DECIDUOUS		4	No	
4912	MAPLE	Acer	8	No	
4913	MAPLE	Acer	8	No	
4914	WILLOW	Salix	20	No	
4915	CHERRY	Prunus	14	No	
4916	MAPLE	Acer	12	No	
4917	MAPLE	Acer	20	No	
4918	WILLOW	Salix	4	No	
4919	WILLOW	Salix	4	No	
4920	WILLOW	Salix	10	No	
4921	WILLOW	Salix	10	No	
4922	DECIDUOUS		10	No	
10054	OAK	Quercus	24	No	
10056	COTTONWOOD	Populus balsamifera	66	No	
10057	OAK	Quercus	16	No	
10058	OAK	Quercus	22	No	
10059	COTTONWOOD	Populus balsamifera	40	No	
10060	COTTONWOOD	Populus balsamifera	56	No	
10061	WILLOW	Salix	6 6x8	No	
10062	WILLOW	Salix	8 10	No	
14925	OAK	Quercus	26	No	
14926	MAPLE	Acer	10	No	
14927	DECIDUOUS		4	No	
14928	MAPLE	Acer	6	No	
14929	MAPLE	Acer	4	No	
14930	MAPLE	Acer	4	No	
14931	MAPLE	Acer	6	No	
14932	MAPLE	Acer	6	No	
14933	MAPLE	Acer	16	No	
14934	MAPLE	Acer	6	No	
14935	MAPLE	Acer	8	No	
14936	MAPLE	Acer	4	No	
14937	MAPLE	Acer	4	No	
14938	MAPLE	Acer	4	No	
14939	MAPLE	Acer	4	No	
14940	MAPLE	Acer	4	No	
14941	MAPLE	Acer	6	No	
14942	MAPLE	Acer	6	No	
14943	MAPLE	Acer	6	No	
14944	MAPLE	Acer	6	No	
14945	MAPLE	Acer	4	No	
14946	MAPLE	Acer	4	No	
14947	CHERRY	Prunus	4	No	
14948	MAPLE	Acer	8	No	
14949	MAPLE	Acer	8 20 24	No	
14951	MAPLE	Acer	6 4 8	No	
14952	CHERRY	Prunus	6	No	
14953	MAPLE	Acer	4	No	
14954	MAPLE	Acer	6	No	
14955	MAPLE	Acer	4	No	
14956	CHERRY	Prunus	6	No	
14957	RED ALDER	Alnus rubra	4	No	
14958	MAPLE	Acer	26	No	
14959	CHERRY	Prunus	4	No	
14960	RED ALDER	Alnus rubra	10	No	
14961	RED ALDER	Alnus rubra	4	No	
14962	COTTONWOOD	Populus balsamifera	4	No	
14963	MAPLE	Acer	8 8	No	
14964	MAPLE	Acer	6 8	No	
14965	MAPLE	Acer	10	No	
14966	MAPLE	Acer	4	No	
14967	MAPLE	Acer	6	No	
14968	OAK	Quercus	26	No	
14969	DECIDUOUS		14	No	
14970	MAPLE	Acer	8X4-26	No	
14973	MAPLE	Acer	4 6 8	No	
14974	WILLOW	Salix	4	No	
14975	MAPLE	Acer	4 6	No	
14976	COTTONWOOD	Populus balsamifera	28	No	
14977	COTTONWOOD	Populus balsamifera	26	No	
14978	MAPLE	Acer	10	No	
14979	MAPLE	Acer	6	No	
14980	COTTONWOOD	Populus balsamifera	14	No	
14981	COTTONWOOD	Populus balsamifera	14	No	
14982	MAPLE	Acer	4	No	
14983	MAPLE	Acer	4	No	
14984	MAPLE	Acer	6	No	
14985	MAPLE	Acer	6	No	
14986	MAPLE	Acer	6	No	
14987	HAW		4	No	
14988	MAPLE	Acer	12	No	
14989	WILLOW	Salix	4 6	No	
14990	WILLOW	Salix	8	No	
14991	MAPLE	Acer	7X3-4	No	
14992	WILLOW	Salix	4 6	No	
14993	COTTONWOOD	Populus balsamifera	5X3-4	No	
14994	MAPLE	Acer	9X3-4	No	
14995	WILLOW	Salix	4X4-8	No	
14996	WILLOW	Salix	10	No	
14997	VINE MAPLE	Acer circinatum	16X3	No	
14999	CHERRY	Prunus	6	No	
15000	WILLOW	Salix	6 6 8	No	
15001	VINE MAPLE	Acer circinatum	10X3-4	No	
15002	VINE MAPLE	Acer circinatum	12X3-4	No	
15003	VINE MAPLE	Acer circinatum	7X3	No	
15004	VINE MAPLE	Acer circinatum	10X2-3	No	
15005	CHERRY	Prunus	6	No	
15008	MAPLE	Acer	16 18	No	
15009	MAPLE	Acer	26 28	No	
15011	CHERRY	Prunus	4	No	
15012	CHERRY	Prunus	4	No	
15013	CHERRY	Prunus	4 4 6	No	
15014	CHERRY	Prunus	4 4 4	No	
15015	CHERRY	Prunus	4	No	
15016	CHERRY	Prunus	4	No	
				TOTAL UNITS	**135.4**

LEGEND

SYMBOL	DESCRIPTIONS/REMARKS
	EXISTING TREES TO REMAIN – SAVE AND PROTECT SEE TREE PROTECTION FENCING DETAIL AND CIVIL FOR ADDITIONAL REQUIREMENTS.
	EXISTING TREES TO BE REMOVED SEE CIVIL FOR DEMOLITION PLANS.
	CONIFEROUS TREES
	DECIDUOUS TREES
	EXISTING TREE CRITICAL ROOT ZONE – NO DISTURBANCE
	TREE PROTECTION FENCING – 3' BEYOND CRITICAL ROOT ZONE SEE TREE PROTECTION FENCING DETAIL AND CIVIL FOR ADDITIONAL REQUIREMENTS.
— NET —	NET BUILDABLE AREA LIMITS

TREE DENSITY CALCULATIONS

TREE DENSITY TABLE (SATISFIED)

TREE UNITS/ACRE REQUIRED	NUMBER OF ACRES	TOTAL TREE UNITS REQUIRED	TOTAL TREE UNITS PROVIDED (ED)
30	4.21	126	135

NOTES

1. TREE PROTECTION PLAN IS BASED ON SURVEY PROVIDED BY HARMSEN LLC, DATED 07.26,2019. TREE DRIP LINES LOCATED BEYOND THE SCOPE OF THE SURVEY WERE ESTIMATED BASED ON AERIAL PHOTOGRAPHY.
2. DAMAGE TO TREES BY WINDTHROW POTENTIAL HAS BEEN MINIMIZED BY: LIMITING CONSTRUCTION IN CRITICAL ROOT ZONES AND INSTALLING TREE PROTECTION FENCING TO PREVENT ROOT DISTURBANCE, PRESERVING EXISTING GRADES AROUND RETAINED TREES, AND SAVING GROVES WHERE APPLICABLE.
3. IDENTIFY, FLAG, AND PROTECT TREES INTENDED TO REMAIN BEFORE THE START OF AND DURING CONSTRUCTION. SEE TREE PROTECTION FENCING DETAIL.
4. NO REPLACEMENT TREES ARE REQUIRED (SEE TREE DENSITY TABLE). HOWEVER, REFER TO THE LANDSCAPE PLAN FOR PROPOSED TREE LOCATIONS, COMMON NAME, BOTANICAL NAME, AND CALIPER.
5. REFER TO KENMORE MUNICIPAL CODE CHAPTER 18.57 FOR MORE INFORMATION ON TREE MANAGEMENT AND PROTECTION.
6. REFER TO EVALUATION OF TREES, TREE RETENTION, AND TREE PROTECTION AT INGLEMOOR HIGH SCHOOL REPORT PREPARED BY GILLES CONSULTING, DATED 10.31.2019, FOR MORE INFORMATION.

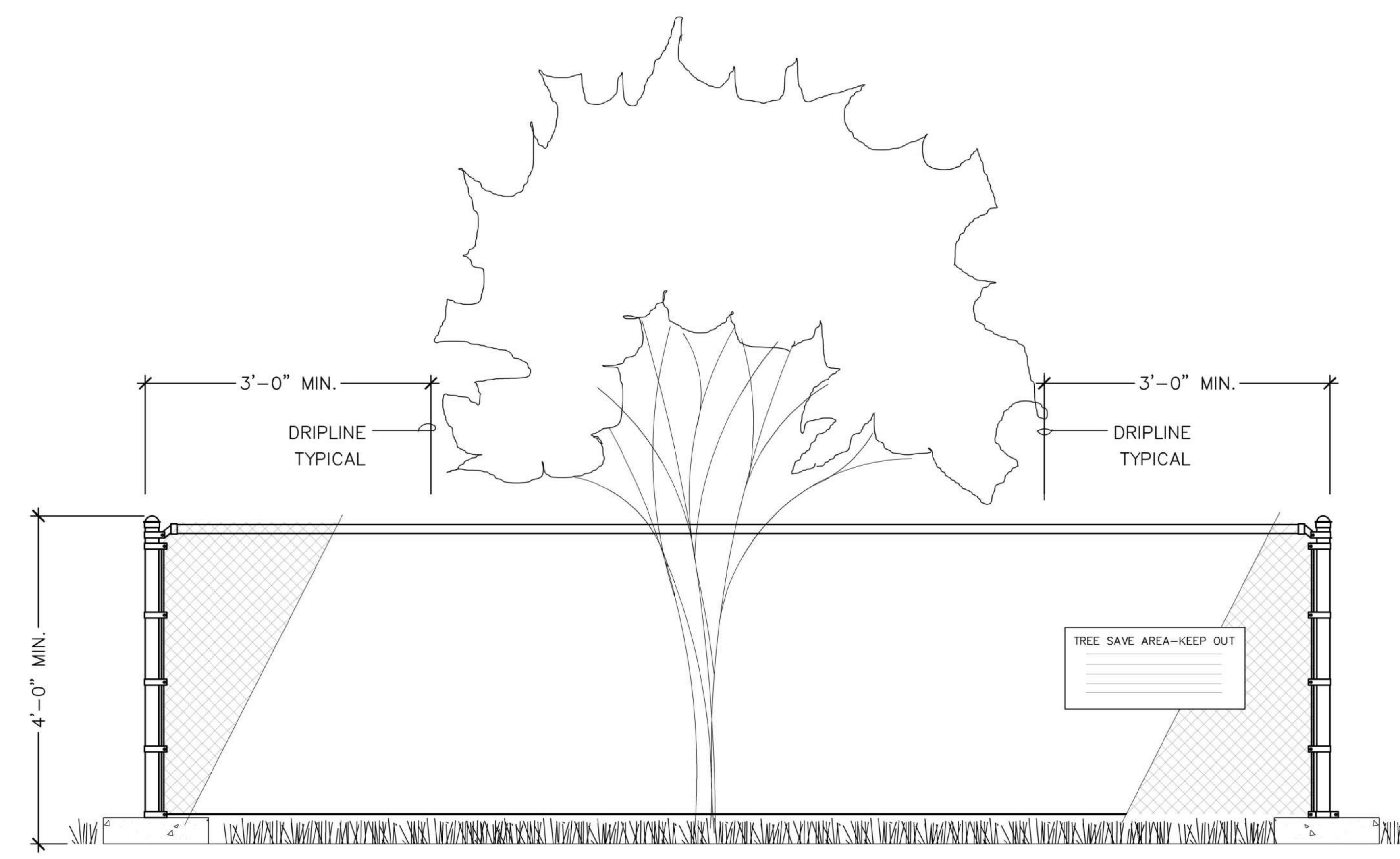

NOTES:

1. A 4–FOOT HIGH MINIMUM TEMPORARY CHAIN LINK FENCE, OR ORANGE PLASTIC FENCE FASTENED TO STEEL STAKES DRIVEN SECURELY INTO THE GROUND, MUST BE INSTALLED AT LEAST 3–FEET BEYOND THE DRIPLINE OF PROTECTED TREES FOUR BUSINESS DAYS PRIOR TO THE COMMENCEMENT OF DEMO & EARTHWORK. NOTIFY THE CLEARING AND GRADING INSPECTOR TO GET BOTH THE INSPECTION AND WRITTEN APPROVAL OF FLAGGED TREES AND TEMPORARY PROTECTION FENCING AROUND TREES TO BE SAVED PER THE APPROVED CLEARING AND GRADING PLAN. KEEP PROTECTIVE FENCING IN PLACE UNTIL CITY AUTHORIZES REMOVAL.
2. PLACE 3 INCHES OF COMPOSTED WOODCHIPS OVER THE CRITICAL ROOT ZONE OF ALL RETAINED TREES BEFORE CONSTRUCTION.
3. SIGNAGE NOTING THAT TREES WITHIN THE FENCING ARE TO BE SAVED, AND THAT NO MATERIAL STORAGE IS ALLOWED WITHIN THE FENCING, SHALL BE PLACED ON THE FENCE IN A CONSPICUOUS LOCATION.
4. NO STOCKPILING OF MATERIAL AND NO VEHICULAR TRAFFIC ARE ALLOWED WITHIN THE LIMITS OF THE TEMPORARY FENCING. ONLY LIMITED INTRUSION INTO TREE DRIPZONES WILL BE ALLOWED AS SHOWN ON THE APPROVED PLANS. FILLING, EXCAVATING, AND CLEARING MUST BE ACCOMPLISHED BY HAND METHODS ONLY.
5. ROOTS OF TREES TO BE SAVED WHICH ARE DAMAGED DURING CONSTRUCTION WILL BE TREATED IN THE FOLLOWING WAY: FOR DAMAGED ROOTS OVER 1" IN DIAMETER, MAKE A CLEAN, STRAIGHT CUT TO REMOVE THE DAMAGED PORTION OF THE ROOT. ALL EXPOSED ROOTS WILL BE TEMPORARILY COVERED WITH DAMP BURLAP OR WOOD SHAVINGS TO PREVENT DRYING AND COVERED WITH EARTH AS SOON AS POSSIBLE.
6. SEE PLAN FOR LOCATION OF EXISTING TREES TO RECEIVE TEMPORARY FENCING.

1 TREE PROTECTION FENCING
NTS

WEISMANDESIGNGROUP
LANDSCAPE CONSULTANT
2329 E MADISON ST
SEATTLE WA 98112
206-322-1732
WWW.WDGINC.COM

HUTTEBALL +OREMUS architecture
4010 LAKE WASHINGTON BLVD NE
SUITE 320
KIRKLAND, WA 98033
425.828.8948
HOARCH.COM

ARCHITECT STAMP

CONSULTANT STAMP

STATE OF WASHINGTON · NICHOLAS P HAGAN · NO. 753 EXP. 4/17/2020 · LANDSCAPE ARCHITECT

PROJECT INFORMATION

Inglemoor High School Concert Hall + Music Building

15500 Simonds Rd NE
Kenmore, WA 98028

NORTHSHORE SCHOOL DISTRICT No. 417

SCHOOL DISTRICT LOGO

Northshore School District

02.13.2019	SCHEMATIC DESIGN
04.08.2019	VALUE ENGINEERING
09.16.2019	SITE PLAN REVIEW
10.18.2019	DESIGN DEVELOPMENT
01.13.2020	CONSTRUCTABILITY REVIEW
03.23.2020	HEALTH DEPARTMENT PERMIT SUBMITTAL
04.13.2020	BID DOCUMENTS

BID DOCUMENTS
04.13.2020

PROJECT NUMBER: 1711.00

SHEET NAME

Tree Protection Legend & Tree Density Calculations

SHEET NUMBER

L2.08

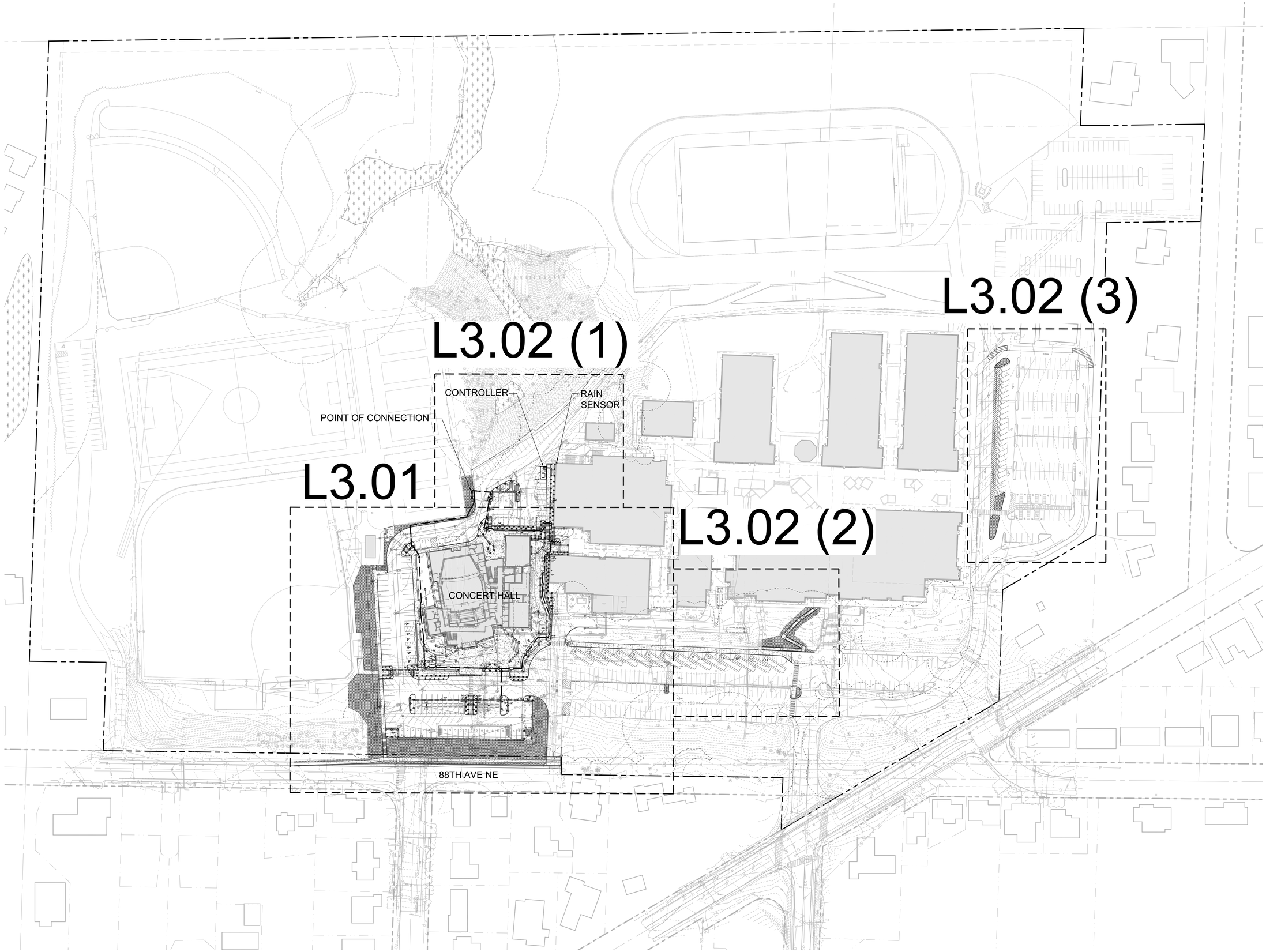

SCALE: 1"=60'-0"

0' 30' 60' 120' 240' N

WEISMANDESIGNGROUP

LANDSCAPE CONSULTANT | 2329 E MADISON ST SEATTLE WA 98112 | 206-322-1732 WWW.WDGINC.COM

HUTTEBALL +OREMUS architecture

4010 LAKE WASHINGTON BLVD NE
SUITE 320
KIRKLAND, WA 98033

425.828.8948

HOARCH.COM

ARCHITECT STAMP

CONSULTANT STAMP

STATE OF WASHINGTON NICHOLAS P HAGAN LANDSCAPE ARCHITECT NO. 3705 EXP. 4/17/2020

PROJECT INFORMATION

Inglemoor High School Concert Hall + Music Building

15500 Simonds Rd NE
Kenmore, WA 98028

NORTHSHORE SCHOOL DISTRICT No. 417

SCHOOL DISTRICT LOGO

Northshore School District

02.13.2019	SCHEMATIC DESIGN
04.08.2019	VALUE ENGINEERING
09.16.2019	SITE PLAN REVIEW
10.18.2019	DESIGN DEVELOPMENT
01.13.2020	CONSTRUCTABILITY REVIEW
03.23.2020	HEALTH DEPARTMENT PERMIT SUBMITTAL
04.13.2020	BID DOCUMENTS

BID DOCUMENTS
04.13.2020

PROJECT NUMBER: 1711.00

SHEET NAME

Overall Irrigation Plan

SHEET NUMBER

L3.00

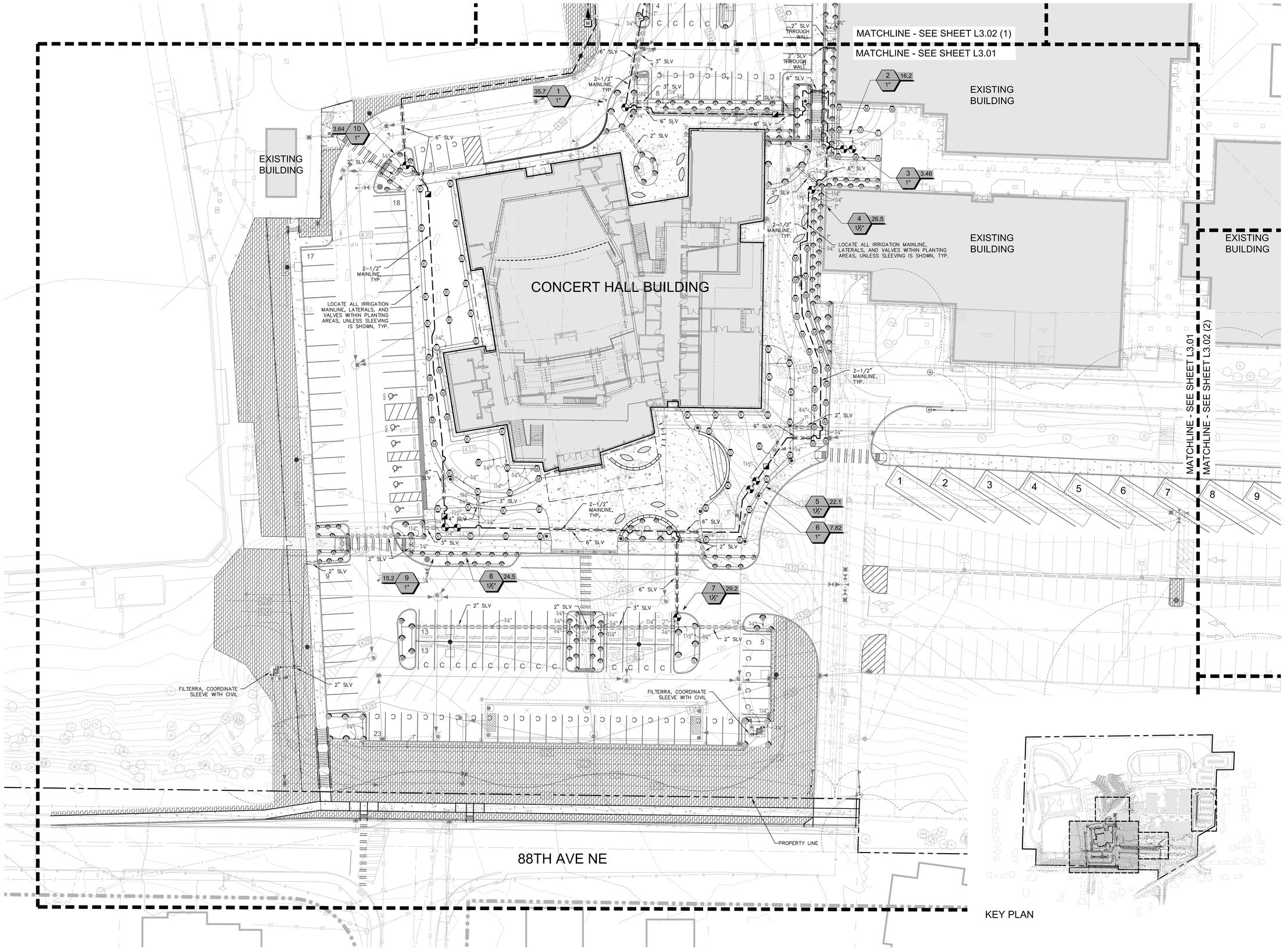

SCALE: 1"=20'-0"

0' 10' 20' 40' 80'

N

WEISMANDESIGNGROUP

LANDSCAPE CONSULTANT

2329 E MADISON ST SEATTLE WA 98112

206-322-1732 WWW.WDGINC.COM

HUTTEBALL + OREMUS architecture

4010 LAKE WASHINGTON BLVD NE
SUITE 320
KIRKLAND, WA 98033

425.828.8948

HOARCH.COM

ARCHITECT STAMP

CONSULTANT STAMP

STATE OF WASHINGTON NICHOLAS P HAGAN NO. 753 EXP. 4/17/2020 LANDSCAPE ARCHITECT

PROJECT INFORMATION

Inglemoor High School Concert Hall + Music Building

15500 Simonds Rd NE
Kenmore, WA 98028

NORTHSHORE SCHOOL DISTRICT No. 417

SCHOOL DISTRICT LOGO

Northshore School District

02.13.2019	SCHEMATIC DESIGN
04.08.2019	VALUE ENGINEERING
09.16.2019	SITE PLAN REVIEW
10.18.2019	DESIGN DEVELOPMENT
01.13.2020	CONSTRUCTABILITY REVIEW
03.23.2020	HEALTH DEPARTMENT PERMIT SUBMITTAL
04.13.2020	BID DOCUMENTS

BID DOCUMENTS

04.13.2020

PROJECT NUMBER: 1711.00

SHEET NAME

Enlarged Irrigation Plan

SHEET NUMBER

L3.01

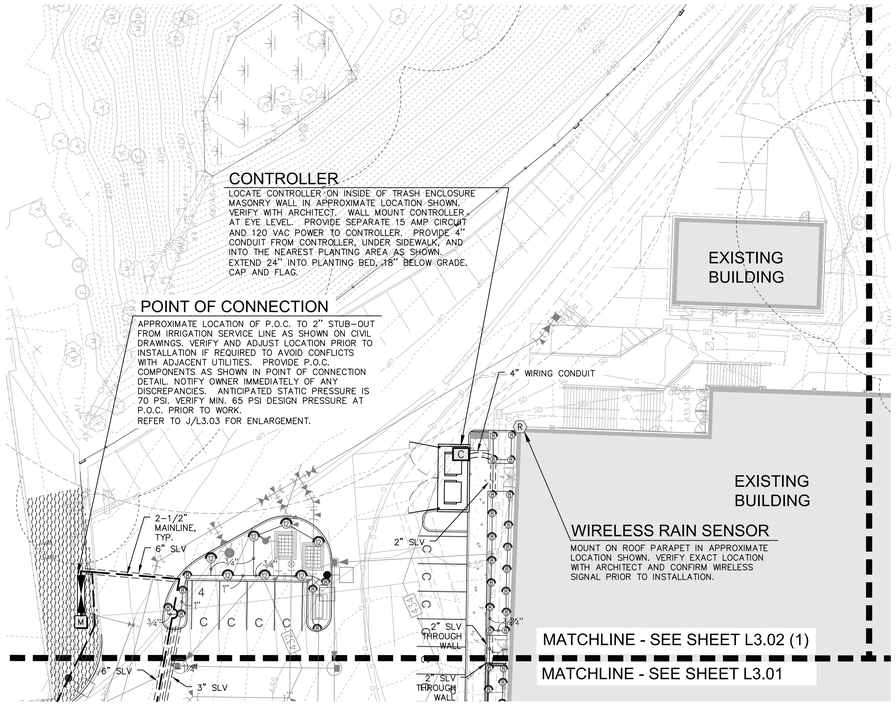

1 EAST PARKING

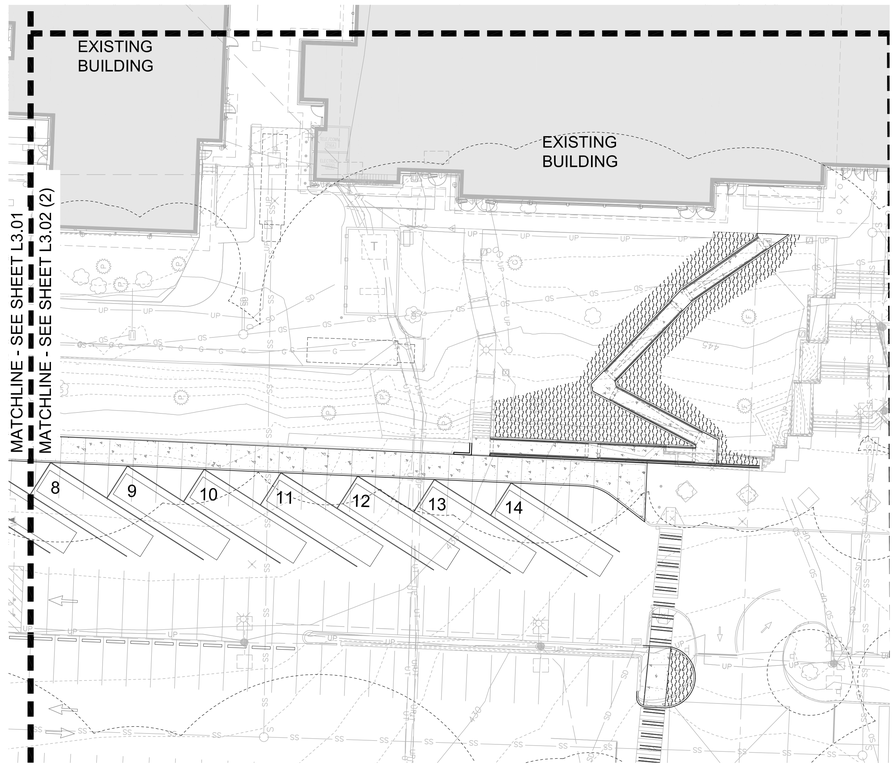

2 SOUTH RAMPS

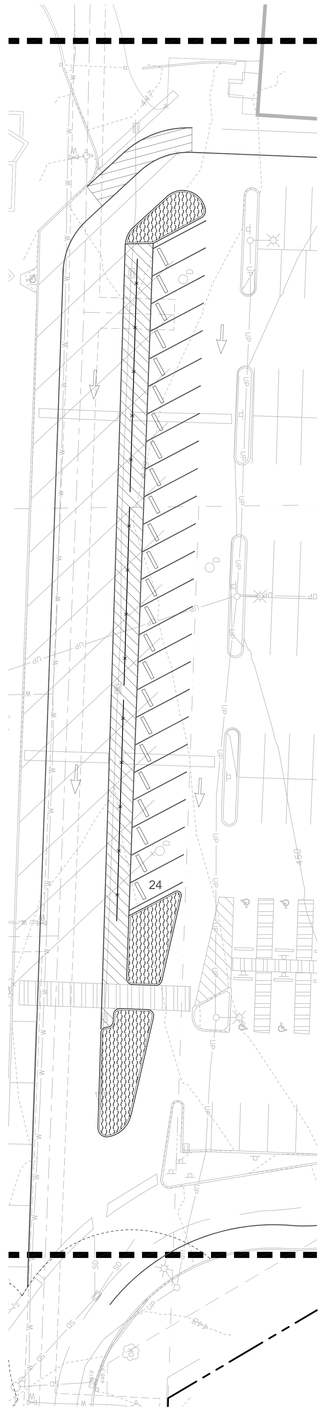

3 SOUTH PARKING

IRRIGATION LEGEND (SYMBOLS SHOWN AT 1"=20'-0")

SYMBOL	ITEM	MANUFACTURER / CAT NO.	DESCRIPTION-REMARKS
C	CONTROLLER	RAINBIRD ESP12LXMEF – 12 STA. CONTROLLER	12 STATION CONTROLLER WITH FLOW SMART MODULE, WALL MOUNT INSIDE TRASH ENCLOSURE WHERE SHOWN ON PLANS. VERIFY WITH ARCHITECT. INSTALL PER DETAIL 'H', SHEET L3.03.
R	AUTOMATIC RAIN SHUTOFF	RAINBIRD WR2-RFC	WIRELESS RAIN/FREEZE SENSOR WITH MOUNTING BRACKET, MOUNT ON ROOF IN LOCATION SHOWN ON PLAN. VERIFY WITH ARCHITECT. OPERATION WLL BE TESTED AT PUNCH LIST REVIEW.
NO SYMBOL	CONTROL WIRES		SEE SPECIFICATIONS FOR DETAILED REQUIREMENTS.
M	IRRIGATION METER AND STUB-OUT		APPROXIMATE LOCATION, SEE CIVIL DRAWINGS.
	POINT OF CONNECTION		SEE PLAN ENLARGEMENT DETAIL 'J', SHEET L3.03
	GATE / SHUTOFF VALVE	NIBCO T-113-K GATE VALVE (2"), OR APPROVED EQUAL.	200 PSI THREADED ENDS, BRONZE, SCREW IN BONNET, NON-RISING STEM, SOLID WEDGE, INSTALL PER DETAIL 'A', SHEET L3.03.
BF	BACKFLOW PREVENTER	FEBCO 850U (2")	DOUBLE CHECK VALVE. INSTALL PER DETAIL 'A', SHEET L3.03.
Y	STRAINER	WILKINS SXL CAST BRONZE 'Y' STRAINER (2")	INSTALL AT POINT OF CONNECTION AS PER DETAIL 'A', SHEET L3.03.
D	MANUAL DRAIN	CHAMPION 300RS-200 ANGLE VALVE (2")	INSTALL AT POINT OF CONNECTION AND ELSEWHERE AS SHOWN ON PLAN, AS PER DETAILS 'A' AND 'C', SHEET L3.03.
	QUICK COUPLER	RAINBIRD #5RC 55K-1 KEY SH-2 SWIVEL HOSE ELL	INSTALL AT P.O.C. AND ELSEWHERE AS SHOWN ON PLAN, PER DETAILS 'A' AND 'C', SHEET L3.03. PROVIDE (2) KEYS AND (2) ELLS.
M	MASTER VALVE	RAINBIRD 200-EFB-CP SERIES VALVE (2")	BRASS NORMALLY CLOSED MASTER CONTROL VALVE. INSTALL AT P.O.C. ASSEMBLY PER DETAIL 'A', SHEET L3.03.
NO SYMBOL	FLOW SENSOR	RAINBIRD FS-150-P (1-1/2")	PLASTIC FLOW SENSOR. FOR DECODER SYSTEM, INSTALL AND CONNECT TO CONTROL WIRE WITH SD210TURF SENSOR DECODER. INSTALL AT P.O.C. PER DETAIL 'D', SHEET L3.03.
	ISOLATION VALVE	BALL VALVE (2"), NIBCO T-580-A, OR APPROVED EQUAL.	BRASS BALL VALVE, INSTALL PER DETAIL 'K', SHEET L3.03, SEE SPECIFICATIONS, SIZE TO MATCH MAINLINE SIZE.
	CONTROL VALVE	RAINBIRD XXX-PEB-PRS-D 100- (1"), 150- (1-1/2")	PLASTIC CONTROL VALVE WITH PRESSURE REGULATING DIAL, INSTALL PER DETAIL 'B', SHEET L3.03.
NO SYMBOL	VALVE BOXES	SPECIFICATION GRADE (COMMERCIAL GRADE) VALVE BOXES AND EXTENSIONS.	SEE SPECIFICATIONS FOR DETAILED REQUIREMENTS.
	MAINLINE	PVC-SCHEDULE 40	2-1/2" MINIMUM SIZE UNLESS NOTED OTHERWISE, SEE SPECIFICATIONS FOR MINIMUM BURIAL DEPTH. SEE DETAIL 'F', SHEET L3.03.
	LATERALS	PVC-SCHEDULE 40	SIZE AS PER PLAN, 3/4" MINIMUM. UNLABELED PIPE SECTIONS TO MATCH THE LARGEST OF THE ADJACENT PIPES. UNLABELED PIPE AT THE END OF LATERAL RUNS TO BE 3/4". SEE SPECIFICATIONS FOR MINIMUM BURIAL DEPTH. SEE DETAIL 'F', SHEET L3.03.
	SLEEVES	PVC-SCHEDULE 40	UNDERPAVEMENT SLEEVING, MIN. SIZES AS SHOWN ON PLANS. TO BE INSTALLED BY LANDSCAPE CONTRACTOR AT DEPTHS SPECIFIED. SEE DETAIL 'F', SHEET L3.03.
K M R	MP ROTATOR	HUNTER MP2000 PROS-06-PRS40-CV K=BLACK ADJ ARC 90-210, G=GREEN 210-270 ARC, R=RED 360 ARC (15'-19' RADIUS)	40 PSI, ADJUST RADIUS AS REQUIRED, INSTALL PER DETAIL 'I', SHEET L3.03.
M L R	MP ROTATOR	HUNTER MP1000 PROS-06-PRS40-CV M=MAROON ADJ ARC 90-210, L=LIGHT BLUE 210-270 ARC, O=OLIVE 360 ARC (11'-15' RADIUS)	40 PSI, ADJUST RADIUS AS REQUIRED, INSTALL PER DETAIL 'I', SHEET L3.03.
Q T H TQ F	SPRAY HEAD	RAINBIRD 180X-SAM-PRS-15 SERIES HE-VAN (1804 – LAWN, 1806 – SHRUB)	30 PSI ADJUST RADIUS AS REQUIRED, INSTALL PER DETAIL 'I', SHEET L3.03.
Q T H TQ F	SPRAY HEAD	RAINBIRD 180x-SAM-PRS-12 SERIES HE-VAN (1804 – LAWN, 1806 – SHRUB)	30 PSI ADJUST RADIUS AS REQUIRED, INSTALL PER DETAIL 'I', SHEET L3.03.
Q T H F	SPRAY HEAD	RAINBIRD 180x-SAM-PRS-10 SERIES HE-VAN (1804 – LAWN, 1806 – SHRUB)	30 PSI ADJUST RADIUS AS REQUIRED, INSTALL PER DETAIL 'I', SHEET L3.03.
Q T H F	SPRAY HEAD	RAINBIRD 180X-SAM-PRS-8 SERIES HE-VAN (1804 – LAWN, 1806 – SHRUB)	30 PSI ADJUST RADIUS AS REQUIRED, INSTALL PER DETAIL 'I', SHEET L3.03.
1401 1402 1404 1408	FLOOD BUBBLER	RAINBIRD RWS-B-C-SOCK (1402 – 0.5 GPM)	30 PSI ADJUST AS REQUIRED, INSTALL PER DETAIL L, SHEET L3.03.
	TEMPORARY IRRIGATED AREAS	CONTRACTOR TO PROVIDE TEMPORARY IRRIGATION IN AREAS WHERE NO PERMANENT IRRIGATION IS PROVIDED, TO ENSURE ESTABLISHMENT OF NEW PLANTS AND LAWN SEED. ALL TEMP IRRIGATION SHALL BE REMOVED PRIOR TO STUDENTS OCCUPYING THE SITE. SUBMIT METHOD FOR TEMPORARILY WATERING PLANTS FOR APPROVAL BY DISTRICT PRIOR TO START OF WORK.	

IRRIGATION NOTES:

1. ADJUST ALL IRRIGATION HEADS TO PROVIDE MAXIMUM COVERAGE, MINIMUM OVERSPRAY, AND NO FOGGING. SET ALL HEADS BACK FROM CURBS, PAVING, AND WALLS.
2. LOCATION OF IRRIGATION MAINLINE, LATERALS, AND SLEEVING ARE SCHEMATIC ONLY, AND SHALL OCCUR IN PLANTING AREAS UNLESS SLEEVING IS SHOWN. IF SLEEVES ARE SHOWN THEY ARE TO BE STRAIGHT RUNS, TYP. MAKE MINOR CHANGES TO COORDINATE WITH ACTUAL AS-BUILT DIMENSIONS AND CONDITIONS.
3. VALVE BOXES SHALL BE LOCATED IN SHRUB PLANTING AREAS ONLY. LOCATE IN APPROXIMATE LOCATIONS AS SHOWN ON PLAN.
4. SEE CIVIL PLANS FOR LOCATION OF IRRIGATION STUB-OUT FROM 2" METER.
5. ANTICIPATED AVAILABLE STATIC WATER PRESSURE IS 70 PSI. VERIFY EXACT PRESSURE AT POINT OF CONNECTION PRIOR TO START OF WORK.
6. THE IRRIGATION SYSTEM HAS BEEN DESIGNED WITH SEPARATE HYDROZONES ACCORDING TO THE NEEDS OF THE PLANT MATERIAL. THE IRRIGATION SYSTEM HAS BEEN DESIGNED TO PROVIDE A MINIMUM AVERAGE DISTRIBUTION UNIFORMITY OF 0.625. THE IRRIGATION SYSTEM HAS BEEN DESIGNED TO AVOID RUNOFF, LOW HEAD DRAINAGE, AND OVERSPRAY. AVOID IRRIGATION DURING TIMES OF HIGH WINDS, WHEN RAINING, OR DURING THE MIDDLE OF THE DAY.
7. WHERE IRRIGATION PIPING IS SHOWN ADJACENT OR UNDER EXISTING TREES, MAKE MINOR ROUTE ADJUSTMENTS TO AVOID TRENCHING THROUGH LARGE TREE ROOTS. REFER TO SPECIFICATION SECTION 02810 FOR FURTHER INSTRUCTIONS.
8. REFER TO IRRIGATION SPECIFICATION FOR ADDITIONAL REQUIREMENTS.

VALVE SCHEDULE

NUMBER	MODEL	SIZE	TYPE	GPM	PSI
1	RAIN BIRD PEB-PRS-D	1"	SHRUB SPRAY	35.70	40.72
2	RAIN BIRD PEB-PRS-D	1"	SHRUB SPRAY	16.21	34.86
3	RAIN BIRD PEB-PRS-D	1"	TURF ROTARY	3.46	41.80
4	RAIN BIRD PEB-PRS-D	1-1/2"	SHRUB SPRAY	26.54	35.65
5	RAIN BIRD PEB-PRS-D	1-1/2"	TURF ROTARY	22.14	47.77
6	RAIN BIRD PEB-PRS-D	1"	SHRUB SPRAY	7.82	33.17
7	RAIN BIRD PEB-PRS-D	1-1/2"	SHRUB SPRAY	29.24	36.97
8	RAIN BIRD PEB-PRS-D	1-1/2"	TURF ROTARY	24.48	48.05
9	RAIN BIRD PEB-PRS-D	1"	SHRUB SPRAY	15.19	34.32
10	RAIN BIRD PEB-PRS-D	1"	SHRUB SPRAY	3.64	31.70

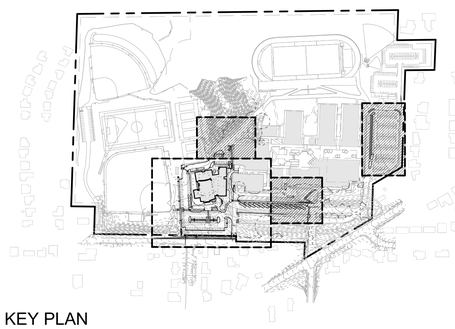

KEY PLAN

SCALE: 1"=20'-0"

0' 10' 20' 40' 80' N

WEISMANDESIGNGROUP
LANDSCAPE CONSULTANT
2339 E MADISON ST SEATTLE WA 98112
206-322-1732 WWW.WDGINC.COM

HUTTEBALL +OREMUS architecture
4010 LAKE WASHINGTON BLVD NE
SUITE 320
KIRKLAND, WA 98033
425.828.8948
HOARCH.COM

ARCHITECT STAMP

CONSULTANT STAMP

STATE OF WASHINGTON NICHOLAS P HANSEN LANDSCAPE ARCHITECT

PROJECT INFORMATION

Inglemoor High School Concert Hall + Music Building

15500 Simonds Rd NE
Kenmore, WA 98028

NORTHSHORE SCHOOL DISTRICT No. 417

SCHOOL DISTRICT LOGO

Northshore School District

02.13.2019	SCHEMATIC DESIGN
04.08.2019	VALUE ENGINEERING
09.16.2019	SITE PLAN REVIEW
10.18.2019	DESIGN DEVELOPMENT
01.13.2020	CONSTRUCTABILITY REVIEW
03.23.2020	HEALTH DEPARTMENT PERMIT SUBMITTAL
04.13.2020	BID DOCUMENTS

BID DOCUMENTS
04.13.2020

PROJECT NUMBER: 1711.00

SHEET NAME

Irrigation Schedule & Enlarged Irrigation Plans

SHEET NUMBER

L3.02

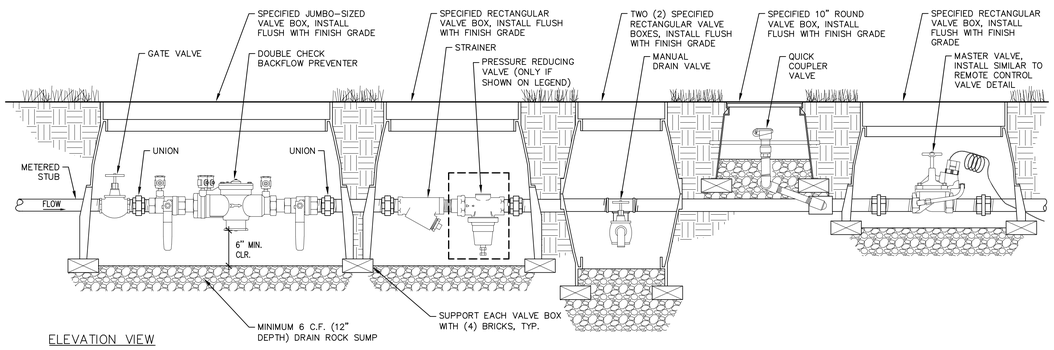

ELEVATION VIEW

NOTES:
1. PROVIDE ONE QUICK COUPLER AT P.O.C. AND ELSEWHERE AS SHOWN ON PLAN.
2. INSURE POSITIVE DRAINAGE FROM P.O.C. COMPONENTS. PROVIDE DAYLIGHT DRAIN AS NECESSARY.
3. PROVIDE SIZE & QUANTITY OF VALVE BOXES AS NECESSARY TO ACCOMMODATE ALL COMPONENTS.

A POINT OF CONNECTION (WITH DOUBLE CHECK VALVE)

Scale: 1 1/2"=1'-0"

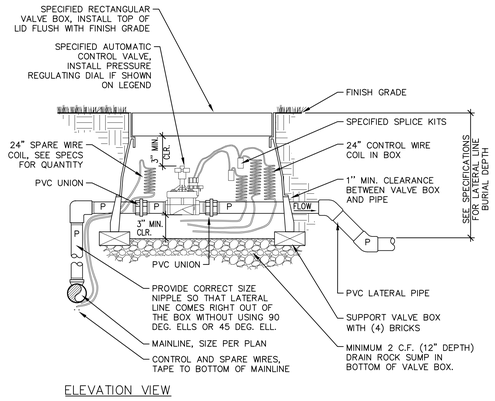

ELEVATION VIEW

NOTE:
PROVIDE VALVE BOX EXTENSIONS AS REQUIRED.

B REMOTE CONTROL VALVE

Scale: 1 1/2"=1'-0"

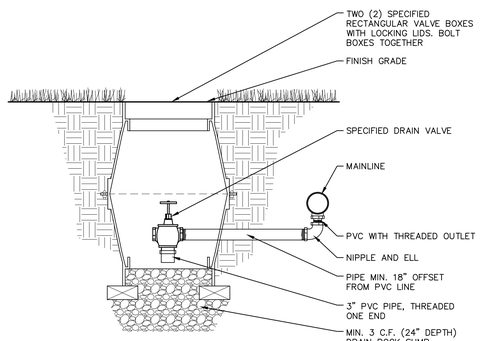

ELEVATION VIEW

NOTES:
1. ALL PIPE AND FITTINGS TO BE SAME DIA. AS I.P.S. FEMALE CONNECTION TO DRAIN VALVE.
2. INSTALL ONE MANUAL DRAIN VALVE AT LOWEST POINT OF MAINLINE ON SITE, SUBJECT TO REVIEW AND APPROVAL BY LANDSCAPE ARCHITECT PRIOR TO INSTALLATION.

C MANUAL DRAIN VALVE

Scale: 1 1/2"=1'-0"

ELEVATION VIEW

NOTES:
1. INSTALL FLOW SENSOR AS PER THE MANUFACTURER'S RECOMMENDATIONS.
2. PROVIDE VALVE BOX EXTENSION AS REQUIRED.
3. INSTALL FLOW SENSOR PERFECTLY PLUMB.

D FLOW SENSOR

Scale: 1 1/2"=1'-0"

NOTES:
1. THRUST BLOCKS SHALL BE INSTALLED WHERE THE IRRIGATION MAIN AND LATERAL (2-1/2" AND LARGER) CHANGES DIRECTION, AS AT ELLS AND TEES AND THE IRRIGATION MAIN TERMINATES.
2. PRESSURE TESTS SHALL NOT BE MADE FOR A PERIOD OF 36 TO 48 HOURS FOLLOWING THE COMPLETION OF POURING OF THE THRUST BLOCKS.
3. CONCRETE THRUST BLOCKS FOR THESE LINES SHALL BE SIZED AND PLACED AND SECURED IN STRICT ACCORDANCE WITH THE PIPE MANUFACTURER'S SPECIFICATIONS, AND SHALL BE OF AN ADEQUATE SIZE AND SO PLACED TO TAKE ALL THRUST CREATED BY THE MAXIMUM INTERNAL WATER PRESSURE.
4. THRUST BLOCKS SHALL BE MIN. 1 CUBIC FT OF CONCRETE. PIPE SHALL NOT BE ENCASED IN CONCRETE.

E THRUST BLOCKING

NTS

SECTION VIEW

NOTES:
1. NO OTHER TRADES (ELECT, LIGHTING) ALLOWED TO USE SAME TRENCH AS IRRIGATION PIPE.
2. PROVIDE 24" COVER FOR DIRECT BURIAL CABLE.
3. PROVIDE PVC SCH. 40 SLEEVES FOR ALL WIRING AND PIPING UNDER PAVING.
4. NO STACKING (VERTICALLY) OF PIPES IN SAME TRENCH.

F PIPE TRENCHING AND BACKFILL

SEE SPECIFICATIONS FOR PIPE DEPTHS IN TEMPORARY IRRIGATION AREAS

Scale: 1 1/2"=1'-0"

ELEVATION VIEW

NOTES:
1. ALL THE FITTINGS AND PIPE TO BE SAME DIA. AS IPS FEMALE CONNECTION OF QUICK COUPLER.
2. QUICK COUPLER KEY MUST CLEAR VALVE BOX.

G QUICK COUPLER VALVE

Scale: 1 1/2"=1'-0"

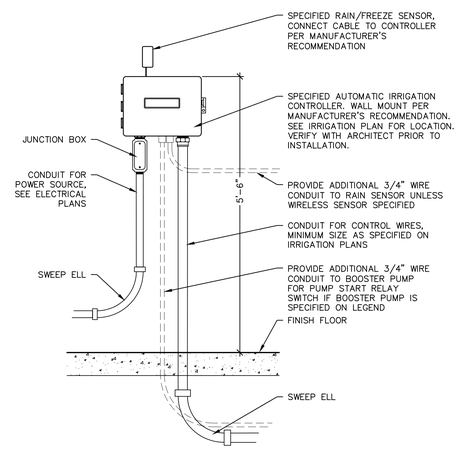

H IRRIGATION CONTROLLER (INTERIOR WALL MOUNT)

Scale: 3/4"=1'-0"

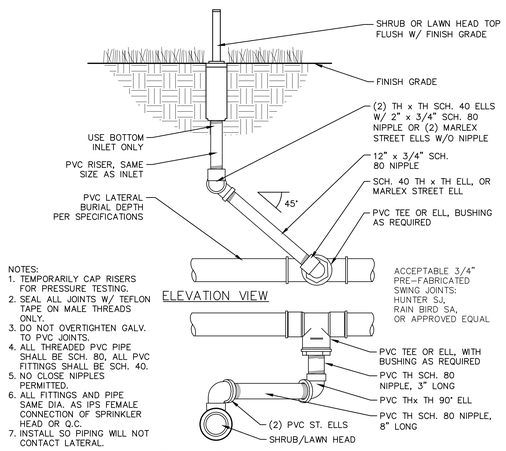

NOTES:
1. TEMPORARILY CAP RISERS FOR PRESSURE TESTING.
2. SEAL ALL JOINTS W/ TEFLON TAPE ON MALE THREADS ONLY.
3. DO NOT OVERTIGHTEN GALV. TO PVC JOINTS.
4. ALL THREADED PVC PIPE SHALL BE SCH. 80, ALL PVC FITTINGS SHALL BE SCH. 40.
5. NO CLOSE NIPPLES PERMITTED.
6. ALL FITTINGS AND PIPE SAME DIA. AS IPS FEMALE CONNECTION OF SPRINKLER HEAD OR Q.C.
7. INSTALL SO PIPING WILL NOT CONTACT LATERAL.

ELEVATION VIEW

PLAN VIEW

I IRRIGATION HEAD

Scale: 3"=1'-0"

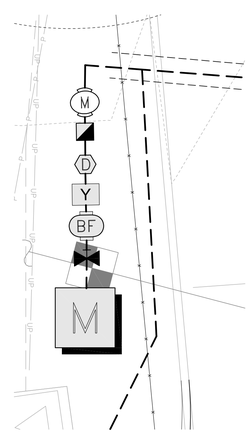

J P.O.C. ENLARGEMENT

Scale: 1/4"=1'-0"

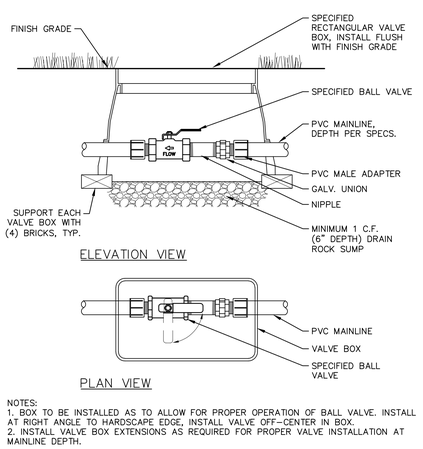

NOTES:
1. BOX TO BE INSTALLED AS TO ALLOW FOR PROPER OPERATION OF BALL VALVE. INSTALL AT RIGHT ANGLE TO HARDSCAPE EDGE, INSTALL VALVE OFF-CENTER IN BOX.
2. INSTALL VALVE BOX EXTENSIONS AS REQUIRED FOR PROPER VALVE INSTALLATION AT MAINLINE DEPTH.

K ISOLATION / SHUT-OFF VALVE

Scale: 1 1/2"=1'-0"

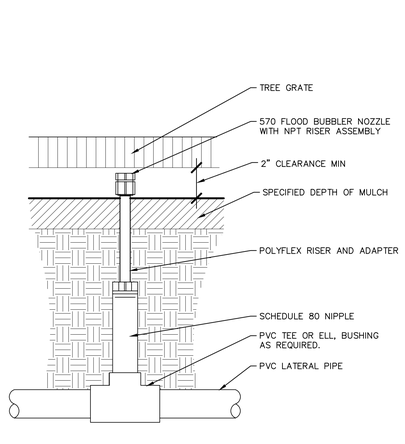

L BUBBLER HEAD

Scale: 3"=1'-0"

WEISMANDESIGNGROUP
LANDSCAPE CONSULTANT
2329 E MADISON ST SEATTLE WA 98112
206-322-1732
WWW.WDGINC.COM

HUTTEBALL +OREMUS architecture
4010 LAKE WASHINGTON BLVD NE
SUITE 320
KIRKLAND, WA 98033
425.828.8948
HOARCH.COM

ARCHITECT STAMP

CONSULTANT STAMP

STATE OF WASHINGTON NICHOLAS P. HAGAN NO. 7575 EXP. 4/17/2020 LANDSCAPE ARCHITECT

PROJECT INFORMATION

Inglemoor High School Concert Hall + Music Building

15500 Simonds Rd NE
Kenmore, WA 98028

NORTHSHORE SCHOOL DISTRICT No. 417

SCHOOL DISTRICT LOGO

Northshore School District

02.13.2019	SCHEMATIC DESIGN
04.08.2019	VALUE ENGINEERING
09.16.2019	SITE PLAN REVIEW
10.18.2019	DESIGN DEVELOPMENT
01.13.2020	CONSTRUCTABILITY REVIEW
03.23.2020	HEALTH DEPARTMENT PERMIT SUBMITTAL
04.13.2020	BID DOCUMENTS

BID DOCUMENTS
04.13.2020

PROJECT NUMBER: 1711.00

SHEET NAME

Irrigation Details

SHEET NUMBER

L3.03

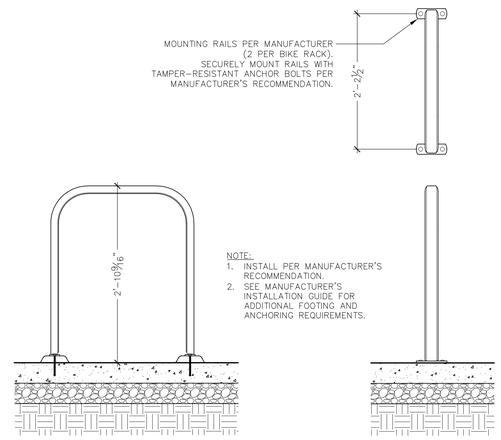

A BIKE RACK

Scale: 1"=1'-0"

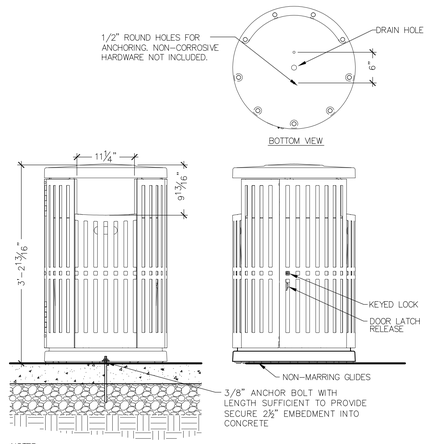

NOTES:
1. LANDSCAPEFORMS "CHASE PARK" SIDE OPENING LITTLER RECEPTACLE. www.landscapeforms.com
2. INSTALLATION TO BE COMPLETED IN ACCORDANCE WITH MANUFACTURE'S SPECIFICATIONS.

B LITTER RECEPTACLE

Scale: 1"=1'-0"

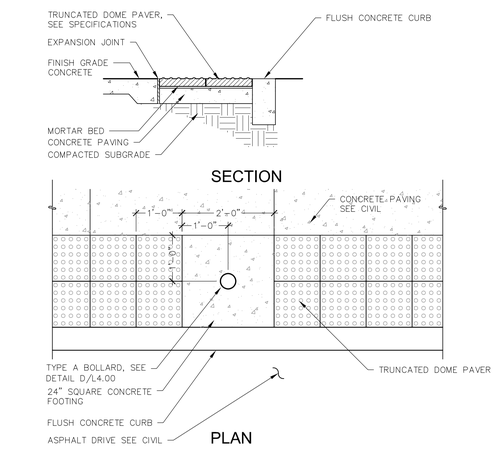

C TACTILE PAVING AND BOLLARD

Scale: 3/4"=1'-0"

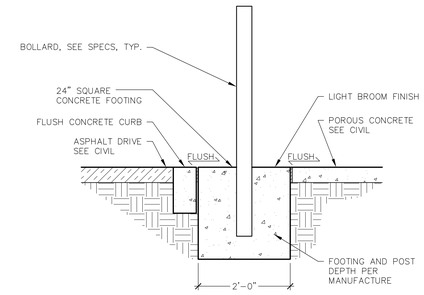

D TYPE A FIXED BOLLARD

Scale: 3/4"=1'-0"

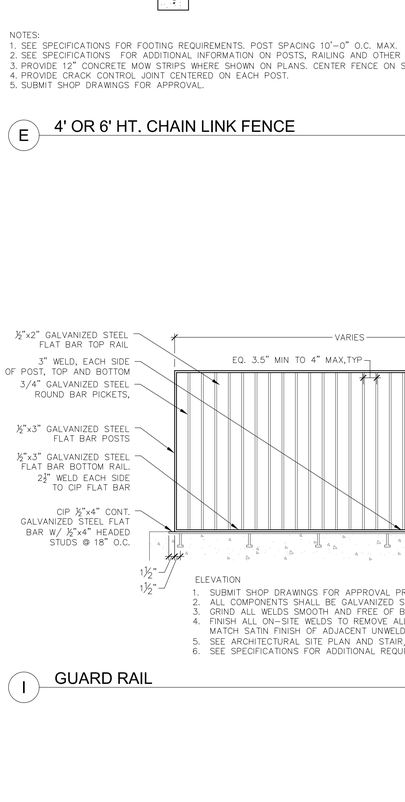

NOTES:
1. SEE SPECIFICATIONS FOR FOOTING REQUIREMENTS. POST SPACING 10'-0" O.C. MAX.
2. SEE SPECIFICATIONS FOR ADDITIONAL INFORMATION ON POSTS, RAILING AND OTHER COMPONENTS.
3. PROVIDE 12" CONCRETE MOW STRIPS WHERE SHOWN ON PLANS. CENTER FENCE ON STRIP.
4. PROVIDE CRACK CONTROL JOINT CENTERED ON EACH POST.
5. SUBMIT SHOP DRAWINGS FOR APPROVAL.

E 4' OR 6' HT. CHAIN LINK FENCE

Scale: 1/2"=1'-0"

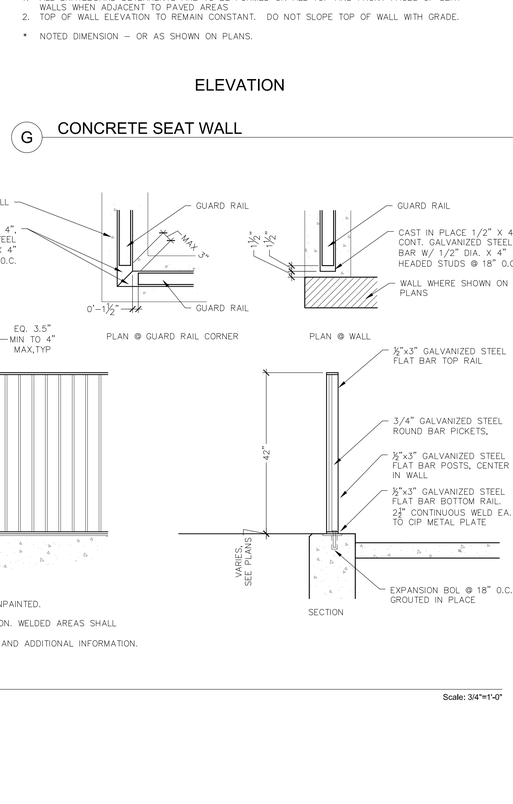

NOTE:
1. ALL SKATEBOARD DETERRENTS ARE TO BE FORMED ON ALL TOP AND FRONT FACES OF SEAT WALLS WHEN ADJACENT TO PAVED AREAS.
2. TOP OF WALL ELEVATION TO REMAIN CONSTANT. DO NOT SLOPE TOP OF WALL WITH GRADE.

* NOTED DIMENSION – OR AS SHOWN ON PLANS.

ELEVATION

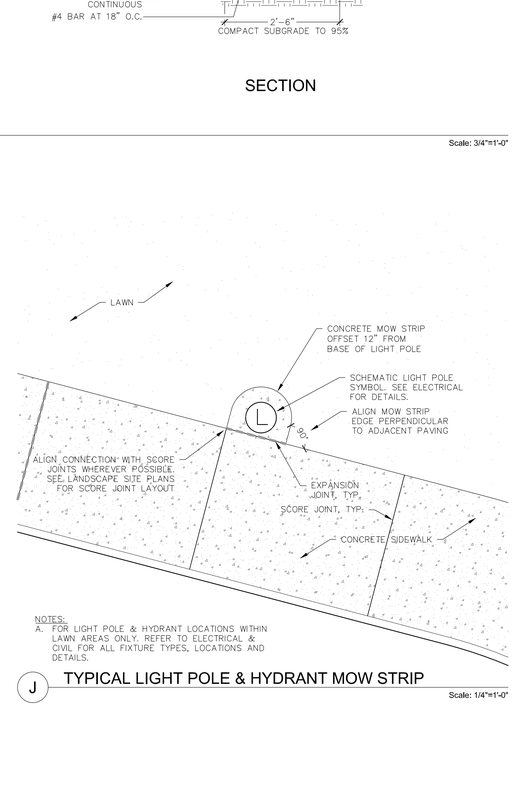

SECTION

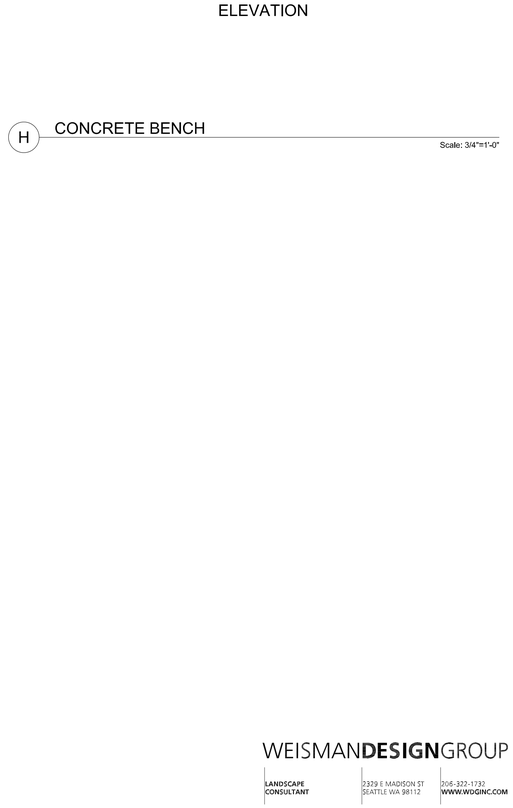

ELEVATION

G CONCRETE SEAT WALL

Scale: 3/4"=1'-0"

H CONCRETE BENCH

Scale: 3/4"=1'-0"

1. SUBMIT SHOP DRAWINGS FOR APPROVAL PRIOR TO INSTALLATION.
2. ALL COMPONENTS SHALL BE GALVANIZED STEEL WITH SATIN FINISH AND UNPAINTED.
3. GRIND ALL WELDS SMOOTH AND FREE OF BURRS.
4. FINISH ALL ON-SITE WELDS TO REMOVE ALL SCRATCHES AND DISCOLORATION. WELDED AREAS SHALL MATCH SATIN FINISH OF ADJACENT UNWELDED SURFACE AFTER FINISHING.
5. SEE ARCHITECTURAL SITE PLAN AND STAIR/WALL PROFILES FOR LOCATION AND ADDITIONAL INFORMATION.
6. SEE SPECIFICATIONS FOR ADDITIONAL REQUIREMENTS.

I GUARD RAIL

Scale: 3/4"=1'-0"

NOTES:
A. FOR LIGHT POLE & HYDRANT LOCATIONS WITHIN LAWN AREAS ONLY, REFER TO ELECTRICAL & CIVIL FOR ALL FIXTURE TYPES, LOCATIONS AND DETAILS.

J TYPICAL LIGHT POLE & HYDRANT MOW STRIP

Scale: 1/4"=1'-0"

HUTTEBALL +OREMUS architecture
4010 LAKE WASHINGTON BLVD NE
SUITE 320
KIRKLAND, WA 98033
425.828.8948
HOARCH.COM

ARCHITECT STAMP

CONSULTANT STAMP



PROJECT INFORMATION

Inglemoor High School Concert Hall + Music Building

15500 Simonds Rd NE
Kenmore, WA 98028

NORTHSHORE SCHOOL DISTRICT No. 417

SCHOOL DISTRICT LOGO

Northshore School District

02.13.2019	SCHEMATIC DESIGN
04.08.2019	VALUE ENGINEERING
09.16.2019	SITE PLAN REVIEW
10.18.2019	DESIGN DEVELOPMENT
01.13.2020	CONSTRUCTABILITY REVIEW
03.23.2020	HEALTH DEPARTMENT PERMIT SUBMITTAL
04.13.2020	BID DOCUMENTS

BID DOCUMENTS
04.13.2020

PROJECT NUMBER: 1711.00

SHEET NAME

Site Details

SHEET NUMBER

L4.00

WEISMANDESIGNGROUP
LANDSCAPE CONSULTANT
2379 E MADISON ST SEATTLE WA 98112
206-322-1732 WWW.WDGINC.COM

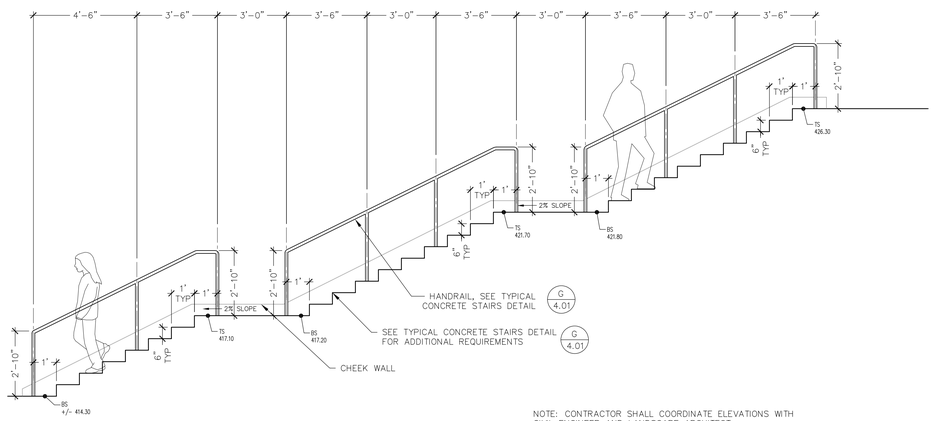

NOTE: CONTRACTOR SHALL COORDINATE ELEVATIONS WITH CIVIL ENGINEER AND LANDSCAPE ARCHITECT.

A NORTHWEST LARGE STAIR PROFILE - LOOKING NORTH

Scale: 3/8"=1'-0"

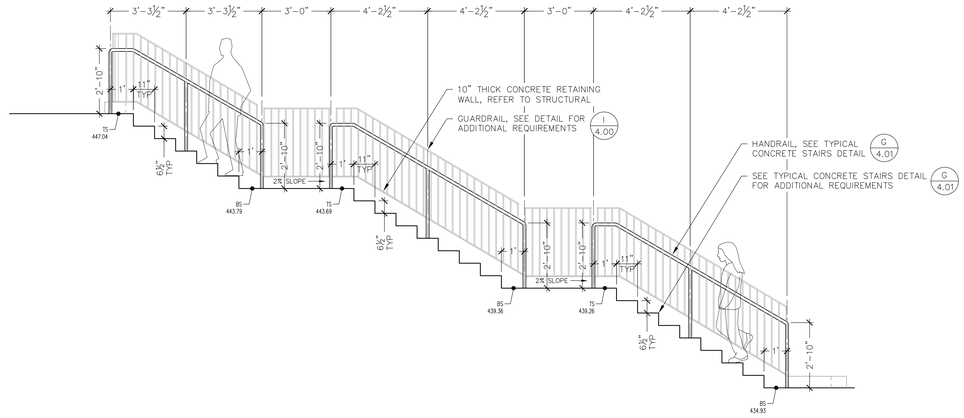

B SOUTHEAST LARGE STAIR PROFILE - LOOKING NORTH

Scale: 3/8"=1'-0"

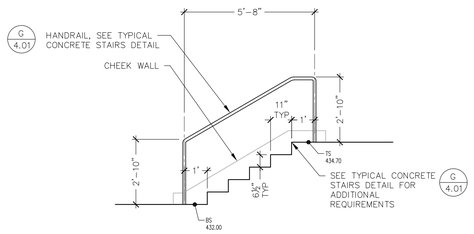

C SOUTHEAST SMALL STAIR PROFILE - LOOKING NORTH

Scale: 3/8"=1'-0"

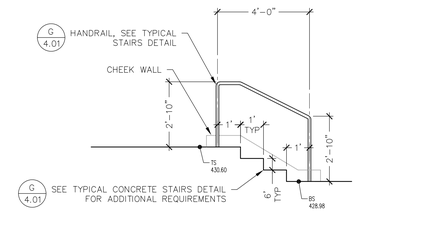

D NORTHEAST STAIR PROFILE - LOOKING NORTH

Scale: 3/8"=1'-0"

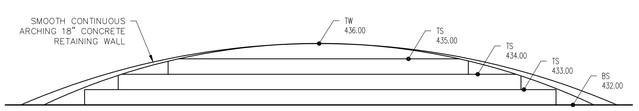

ELEVATION

Scale: 1/4"=1'-0"

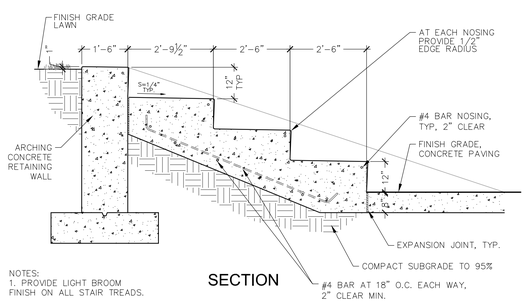

NOTES:
1. PROVIDE LIGHT BROOM FINISH ON ALL STAIR TREADS.

SECTION

E MONUMENT STAIRS

Scale: 1/2"=1'-0"

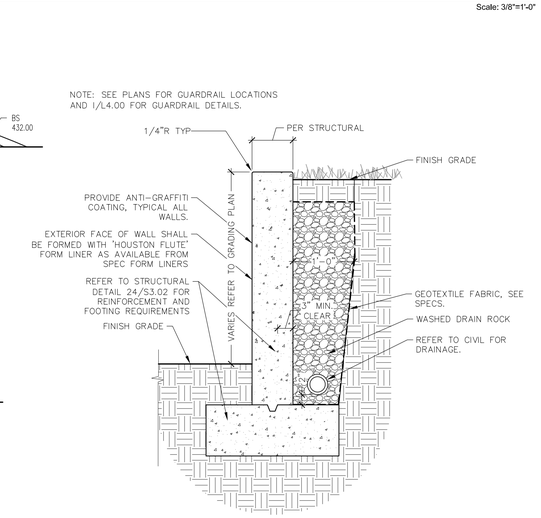

F CONCRETE WALL

Scale: 1"=1'-0"

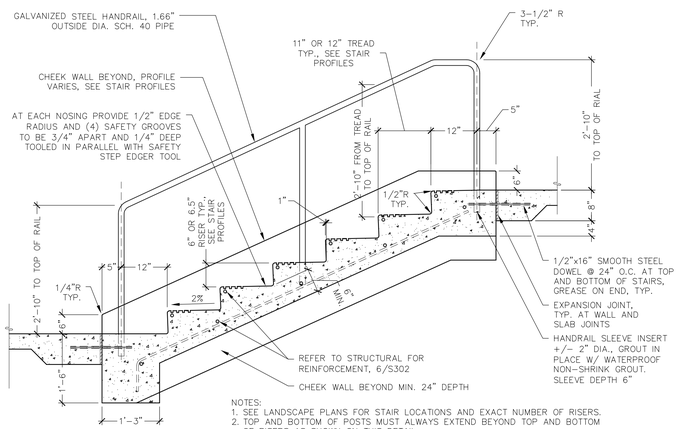

NOTES:
1. SEE LANDSCAPE PLANS FOR STAIR LOCATIONS AND EXACT NUMBER OF RISERS.
2. TOP AND BOTTOM OF POSTS MUST ALWAYS EXTEND BEYOND TOP AND BOTTOM OF RISERS AS SHOWN ON THIS DETAIL.
3. PROVIDE INTERMEDIATE HANDRAIL POSTS AS SHOWN ON STAIR PROFILES.
4. PROVIDE LIGHT BROOM FINISH ON ALL STAIR TREADS.
7. PROVIDE SHOP DRAWINGS OF STEEL HANRAILS FOR APPROVAL.
8. SEE SPECIFICATIONS FOR ADDITIONAL REQUIREMENTS.

SECTION

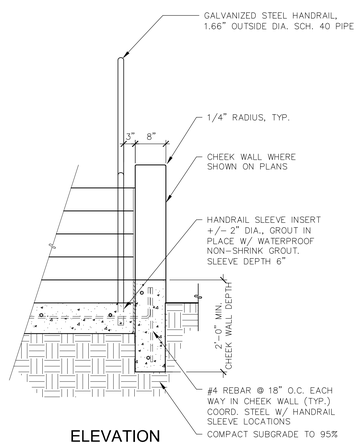

ELEVATION

G TYP. CONCRETE STAIRS & HANDRAILS

Scale: 3/4"=1'-0"

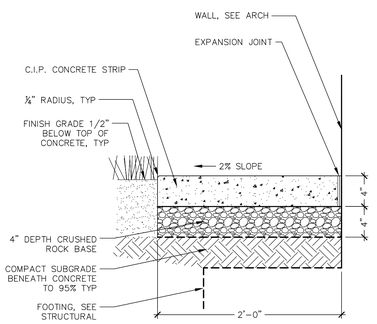

NOTE: PROVIDE EXPANSION JOINTS AT 20' O.C. AND AT ALL DOWNSPOUTS

H CONCRETE MOW STRIP AT BUILDING

Scale: 1 1/2"=1'-0"

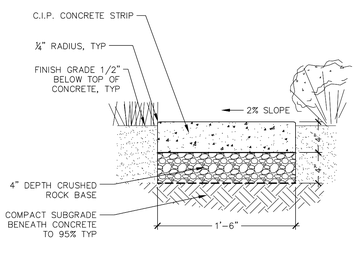

I CONCRETE MOW STRIP IN PLANTING

Scale: 1 1/2"=1'-0"

HUTTEBALL +OREMUS architecture

4010 LAKE WASHINGTON BLVD NE
SUITE 320
KIRKLAND, WA 98033

425.828.8948

HOARCH.COM

ARCHITECT STAMP

CONSULTANT STAMP

STATE OF WASHINGTON NICHOLAS P HAGAN NO. 2575 EXP. 4/17/2020 LANDSCAPE ARCHITECT

PROJECT INFORMATION

Inglemoor High School Concert Hall + Music Building

15500 Simonds Rd NE
Kenmore, WA 98028

NORTHSHORE SCHOOL DISTRICT No. 417

SCHOOL DISTRICT LOGO

Northshore School District

02.13.2019	SCHEMATIC DESIGN
04.08.2019	VALUE ENGINEERING
09.16.2019	SITE PLAN REVIEW
10.18.2019	DESIGN DEVELOPMENT
01.13.2020	CONSTRUCTABILITY REVIEW
03.23.2020	HEALTH DEPARTMENT PERMIT SUBMITTAL
04.13.2020	BID DOCUMENTS

BID DOCUMENTS
04.13.2020

PROJECT NUMBER: 1711.00

SHEET NAME

Site Details

SHEET NUMBER

L4.01

WEISMANDESIGNGROUP
LANDSCAPE CONSULTANT
2329 E MADISON ST SEATTLE WA 98112
206-322-1732 WWW.WDGINC.COM

NOTES:
1. SEE PLANS FOR RAMP LOCATIONS AND EXACT SLOPES.
2. TOP AND BOTTOM OF POSTS MUST ALWAYS EXTEND BEYOND TOP AND BOTTOM OF RAMP.
3. PROVIDE INTERMEDIATE POSTS AS SHOWN ON RAMP PROFILES.
4. PROVIDE LIGHT BROOM FINISH.
5. SEE SPECIFICATIONS FOR ADDITIONAL REQUIREMENTS.
6. PROVIDE SHOP DRAWINGS FOR HANDRAILS. GRIND ALL WELDS SMOOTH AND FREE OF BURRS. EASE EDGES.

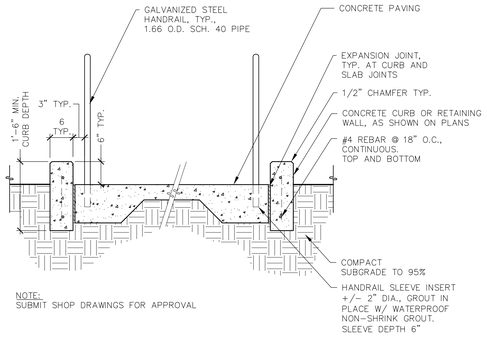

NOTE:
SUBMIT SHOP DRAWINGS FOR APPROVAL

A TYP. CONCRETE RAMP & HANDRAILS
Scale: 3/4"=1'-0"

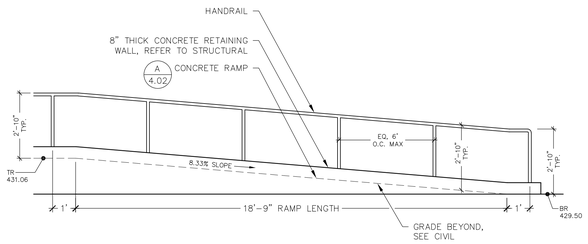

B NORTHEAST RAMP PROFILE - LOOKING WEST
Scale: 3/8"=1'-0"

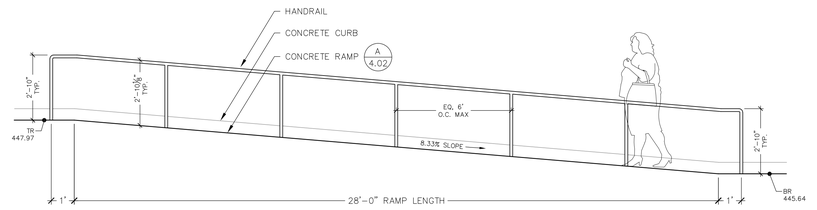

C SOUTH RAMP PROFILE A
Scale: 3/8"=1'-0"

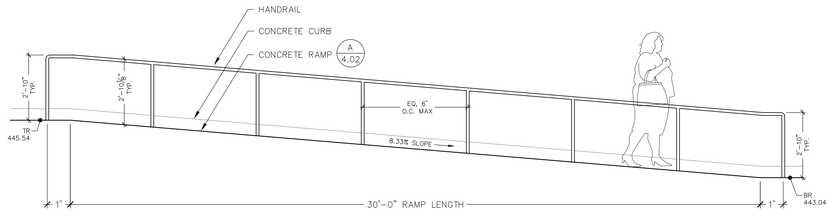

D SOUTH RAMP PROFILE B
Scale: 3/8"=1'-0"

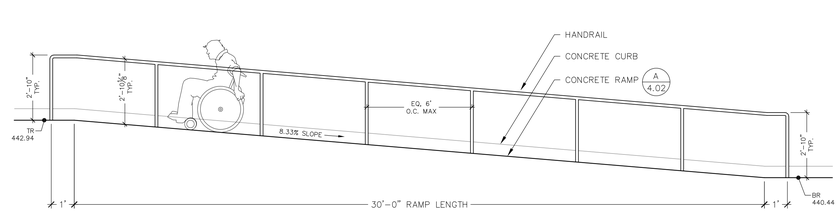

E SOUTH RAMP PROFILE C
Scale: 3/8"=1'-0"

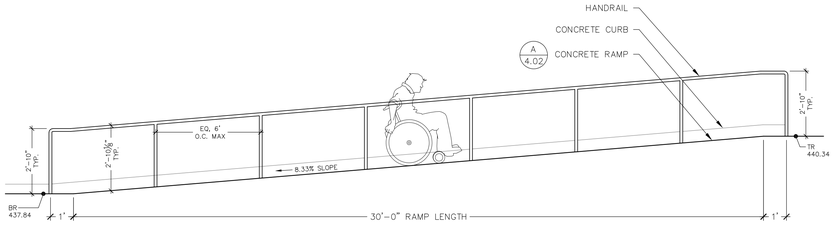

F SOUTH RAMP PROFILE D
Scale: 3/8"=1'-0"

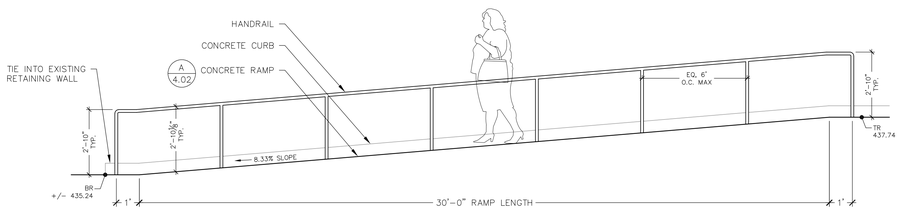

NOTE: CONTRACTOR SHALL COORDINATE ELEVATIONS WITH CIVIL ENGINEER AND LANDSCAPE ARCHITECT.

G SOUTH RAMP PROFILE E
Scale: 3/8"=1'-0"

HUTTEBALL +OREMUS architecture
4010 LAKE WASHINGTON BLVD NE
SUITE 320
KIRKLAND, WA 98033
425.828.8948
HOARCH.COM

ARCHITECT STAMP

CONSULTANT STAMP



PROJECT INFORMATION

Inglemoor High School Concert Hall + Music Building

15500 Simonds Rd NE
Kenmore, WA 98028

NORTHSHORE SCHOOL DISTRICT No. 417

SCHOOL DISTRICT LOGO

Northshore School District

02.13.2019	SCHEMATIC DESIGN
04.08.2019	VALUE ENGINEERING
09.16.2019	SITE PLAN REVIEW
10.18.2019	DESIGN DEVELOPMENT
01.13.2020	CONSTRUCTABILITY REVIEW
03.23.2020	HEALTH DEPARTMENT PERMIT SUBMITTAL
04.13.2020	BID DOCUMENTS

BID DOCUMENTS
04.13.2020

PROJECT NUMBER: 1711.00

SHEET NAME

Site Details

SHEET NUMBER

L4.02

WEISMANDESIGNGROUP
LANDSCAPE CONSULTANT
2329 E MADISON ST SEATTLE WA 98112
206.322.1732 WWW.WDGINC.COM

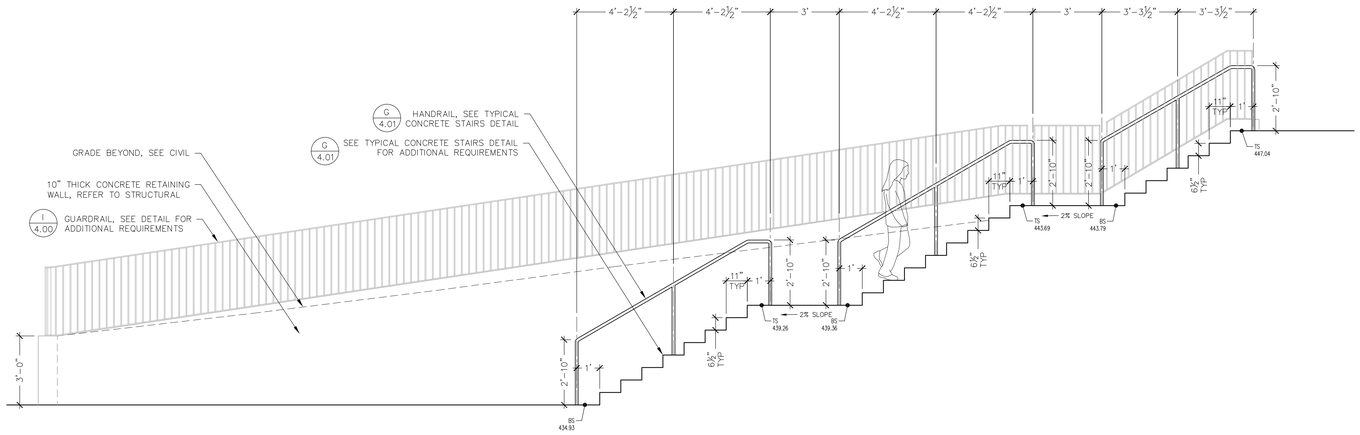

A SOUTHEAST LARGE STAIR PROFILE - LOOKING SOUTH

Scale: 3/8"=1'-0"

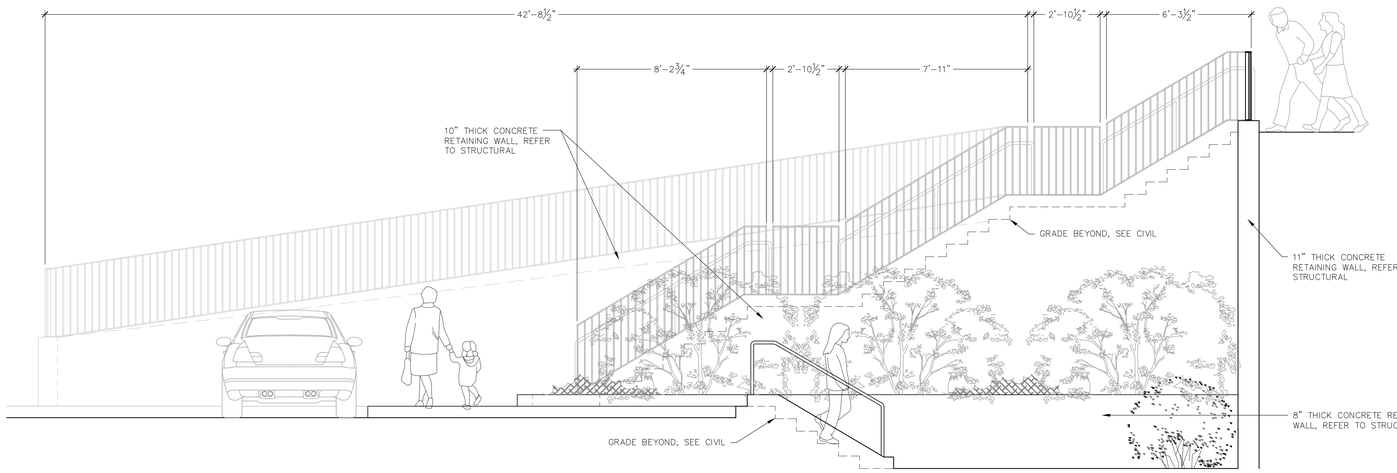

B SOUTHEAST LARGE STAIR ELEVATION- LOOKING SOUTH

Scale: 3/8"=1'-0"

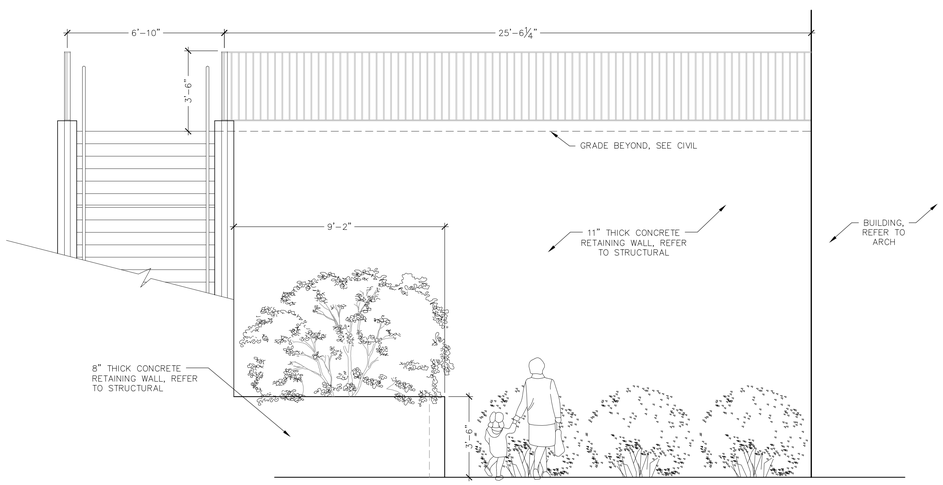

C SOUTHEAST LARGE STAIR ELEVATION- LOOKING WEST

Scale: 3/8"=1'-0"

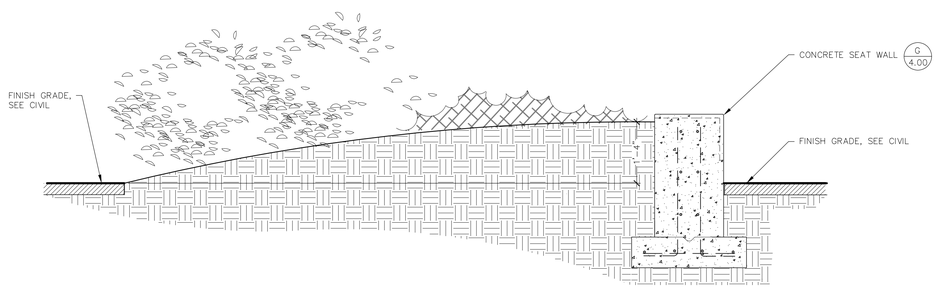

D WEST ENTRY PLAZA PLANTER SECTION - LOOKING NORTH

Scale: 3/4"=1'-0"

WEISMANDESIGNGROUP

LANDSCAPE CONSULTANT | 2329 E MADISON ST SEATTLE WA 98112 | 206-322-1732 WWW.WDGINC.COM

HUTTEBALL + OREMUS architecture

4010 LAKE WASHINGTON BLVD NE
SUITE 320
KIRKLAND, WA 98033

425.828.8948

HOARCH.COM

ARCHITECT STAMP

CONSULTANT STAMP

STATE OF WASHINGTON NICHOLAS P HAGAN NO. 753 EXP. 4/17/2020 LANDSCAPE ARCHITECT

PROJECT INFORMATION

Inglemoor High School Concert Hall + Music Building

15500 Simonds Rd NE
Kenmore, WA 98028

NORTHSHORE SCHOOL DISTRICT No. 417

SCHOOL DISTRICT LOGO

Northshore School District

02.13.2019	SCHEMATIC DESIGN
04.08.2019	VALUE ENGINEERING
09.16.2019	SITE PLAN REVIEW
10.18.2019	DESIGN DEVELOPMENT
01.13.2020	CONSTRUCTABILITY REVIEW
03.23.2020	HEALTH DEPARTMENT PERMIT SUBMITTAL
04.13.2020	BID DOCUMENTS

BID DOCUMENTS
04.13.2020

PROJECT NUMBER: 1711.00

SHEET NAME

Site Details

SHEET NUMBER

L4.03

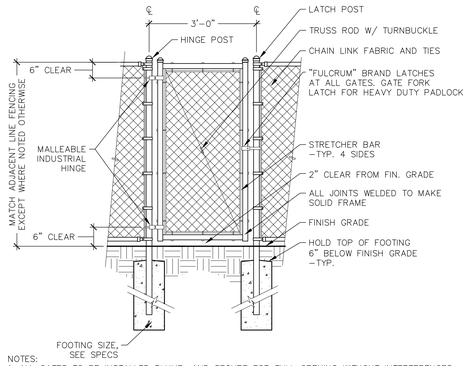

NOTES:
1. ALL GATES TO BE INSTALLED PLUMB, AND SECURE FOR FULL OPENING WITHOUT INTERFERENCES.
2. ATTACH HARDWARE BY MEANS WHICH WILL PREVENT UNAUTHORIZED REMOVAL.
3. ADJUST HARDWARE FOR SMOOTH OPERATION.
4. ALL GATE COMPONENTS TO BE BLACK VINYL COATED.
5. SEE SPECIFICATIONS FOR ADDITIONAL REQUIREMENTS.
6. ALL MESH OPENING TO BE 2" OR OTHERWISE NOTED ON PLAN.
7. PROVIDE SHOP DRAWINGS OF EACH GATE FOR APPROVAL

A CHAIN LINK GATE

Scale: 1/2"=1'-0"

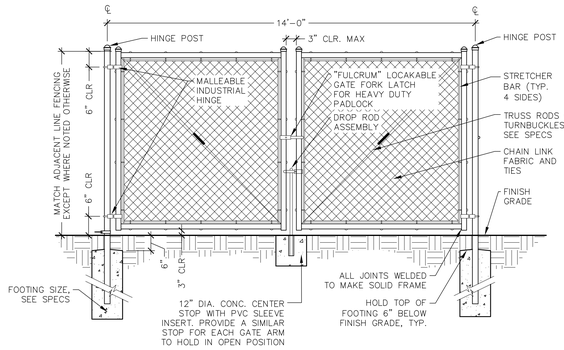

NOTES:
1. ALL GATES TO BE INSTALLED PLUMB AND SECURE FOR FULL OPENING WITHOUT INTERFERENCES.
2. ATTACH HARDWARE BY MEANS WHICH WILL PREVENT UNAUTHORIZED REMOVAL. TACK WELD ALL GATE HARDWARE AFTER ADJUSTMENT.
3. ADJUST HARDWARE FOR SMOOTH OPERATION.
4. PROVIDE CANE BOLT AND RECEPTACLE IN PAVEMENT TO SECURE EACH SIDE IN FULLY OPEN POSITION.
5. ALL GATE COMPONENTS TO BE BLACK VINYL COATED.
6. SEE SPECIFICATIONS SECTION 323113 FOR ADDITIONAL REQUIREMENTS.
7. ALL MESH OPENING TO BE 2" OR OTHERWISE NOTED ON PLAN.
8. PROVIDE SHOP DRAWINGS OF EACH GATE FOR APPROVAL

B DOUBLE SWING CHAIN LINK GATE

Scale: 1/2"=1'-0"

HUTTEBALL +OREMUS architecture
4010 LAKE WASHINGTON BLVD NE
SUITE 320
KIRKLAND, WA 98033
425.828.8948
HOARCH.COM

ARCHITECT STAMP

CONSULTANT STAMP



PROJECT INFORMATION

Inglemoor High School Concert Hall + Music Building

15500 Simonds Rd NE
Kenmore, WA 98028

NORTHSHORE SCHOOL DISTRICT No. 417

SCHOOL DISTRICT LOGO

Northshore School District

02.13.2019	SCHEMATIC DESIGN
04.08.2019	VALUE ENGINEERING
09.16.2019	SITE PLAN REVIEW
10.18.2019	DESIGN DEVELOPMENT
01.13.2020	CONSTRUCTABILITY REVIEW
03.23.2020	HEALTH DEPARTMENT PERMIT SUBMITTAL
04.13.2020	BID DOCUMENTS

BID DOCUMENTS
04.13.2020

PROJECT NUMBER: 1711.00

SHEET NAME

Site Details

SHEET NUMBER

L4.04

WEISMANDESIGNGROUP
LANDSCAPE CONSULTANT
2329 E MADISON ST SEATTLE WA 98112
206-322-1732 WWW.WDGINC.COM

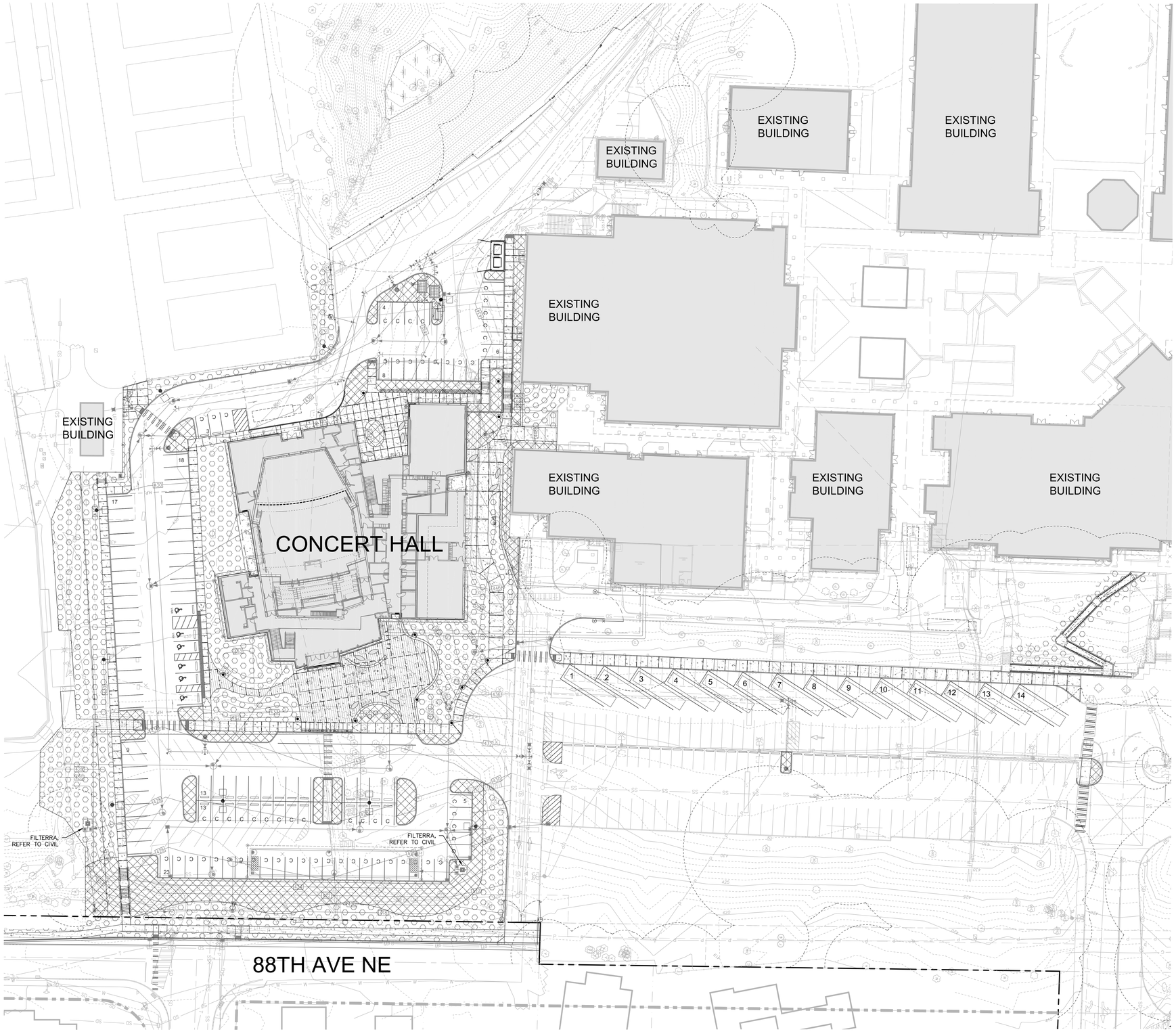

1 CONCERT HALL AND SOUTH RAMPS

SOIL PLAN LEGEND

SYMBOL	SOIL REQUIREMENTS (DEPTH, TYPE, ETC.)
	8" DEPTH IMPORT TOPSOIL + 3" DEPTH MULCH
	8" DEPTH IMPORT TOPSOIL

NOTES

1. SOIL EXTENTS SHOWN REPRESENT ANTICIPATED LIMITS OF DISTURBANCE. PROVIDE IMPROVEMENTS TO ACTUAL LIMITS OF DISTURBANCE.
2. SEE LANDSCAPE PLANS AND SPECIFICATIONS FOR ADDITIONAL REQUIREMENTS.
3. REFER TO TREE PLANTING DETAILS FOR SOIL DEPTH AT TREE ROOT BALLS.

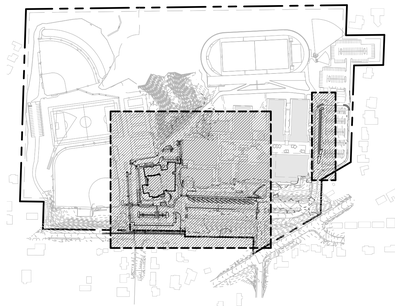

KEY PLAN

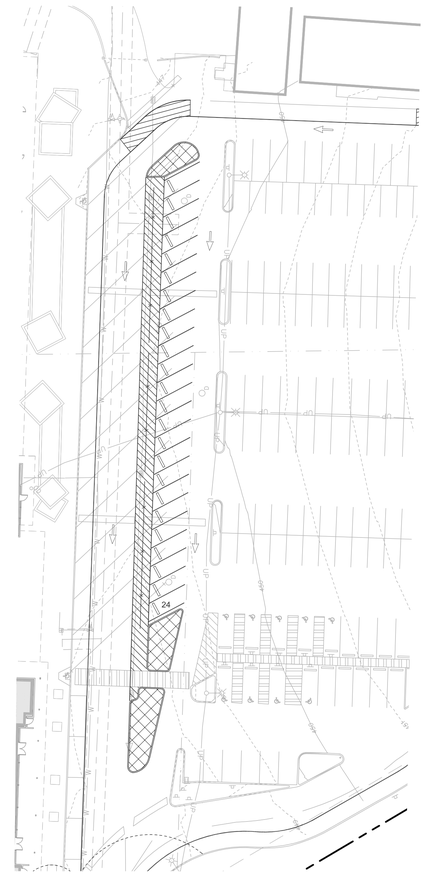

2 SOUTH PARKING

SCALE: 1"=30'-0"

0' 15' 30' 60' 120'

N

WEISMANDESIGNGROUP

LANDSCAPE CONSULTANT | 2329 E MADISON ST SEATTLE WA 98112 | 206-322-1732 WWW.WDGINC.COM

HUTTEBALL + OREMUS architecture

4010 LAKE WASHINGTON BLVD NE
SUITE 320
KIRKLAND, WA 98033

425.828.8948

HOARCH.COM

ARCHITECT STAMP

CONSULTANT STAMP

STATE OF WASHINGTON
NICHOLAS P HAGAN
NO. 753 EXP. 4/17/2020
LANDSCAPE ARCHITECT

PROJECT INFORMATION

Inglemoor High School Concert Hall + Music Building

15500 Simonds Rd NE
Kenmore, WA 98028

NORTHSHORE SCHOOL DISTRICT No. 417

SCHOOL DISTRICT LOGO

Northshore School District

02.13.2019	SCHEMATIC DESIGN
04.08.2019	VALUE ENGINEERING
09.16.2019	SITE PLAN REVIEW
10.18.2019	DESIGN DEVELOPMENT
01.13.2020	CONSTRUCTABILITY REVIEW
03.23.2020	HEALTH DEPARTMENT PERMIT SUBMITTAL
04.13.2020	BID DOCUMENTS

BID DOCUMENTS

04.13.2020

PROJECT NUMBER: 1711.00

SHEET NAME

Overall Soil Plan

SHEET NUMBER

L5.00