LAWRENCE ELEMENTARY SCHOOL

721 Calaveras St, Lodi, CA 95242

FIRE ALARM REPLACEMENT PROJECT

CODE INFORMATION

THE INTENT OF THE CONSTRUCTION DOCUMENTS IS REPLACE EQUIPMENT IN ACCORDANCE WITH THE CBC 2016. SHOULD ANY CONDITION DEVELOP NOT COVERED BY THE CONSTRUCTION DOCUMENTS WHEREIN THE FINISHED WORK WILL NOT COMPLY WITH THE CBC 2016, A CHANGE ORDER DETAILING AND SPECIFYING THE REQUIRED WORK SHALL BE SUBMITTED TO AND APPROVED BY DSA BEFORE PROCEEDING WITH THE WORK.

ANCHORAGE AND SUPPORTS OF ALL EQUIPMENT TO BE INSTALLED, AS A PART OF THIS PROJECT SHALL BE DETAILED ON CONSTRUCTION DOCUMENTS, EXCEPT THOSE EXEMPT BY 2016 CBC SECTION 1616A.1.18. EQUIPMENT SUPPORTS AND ANCHORAGE SHALL BE APPROVED BY THE APPROPRIATE DESIGN PROFESSIONAL OF RECORD AND DSA AS A PART OF FIELD REVIEWS/OBSERVATIONS. THE INSPECTOR OF RECORD (IOR) SHALL ASSURE THAT THE ABOVE REQUIREMENTS ARE ENFORCED.

ALL WORK SHALL BE PERFORMED IN ACCORDANCE WITH THE APPLICABLE REGULATIONS, INCLUDING BUT NOT LIMITED TO THE FOLLOWING:

2016 CALIFORNIA ADMINISTRATIVE CODE (CAC)
PART 1, TITLE 24, CALIFORNIA CODE OF REGULATIONS (CCR)

2016 CALIFORNIA BUILDING CODE (CBC)
PART 2, TITLE 24, CCR
BASED ON THE 2015 INTERNATIONAL BUILDING CODE (IBC)

2016 CALIFORNIA ELECTRICAL CODE (CEC)
PART 3, TITLE 24, CCR
BASED ON THE 2014 NATIONAL ELECTRICAL CODE (NEC)

2016 CALIFORNIA MECHANICAL CODE (CMC)
PART 4, TITLE 24, CCR
BASED ON THE 2015 UNIFORM MECHANICAL CODE (UMC)

2016 CALIFORNIA PLUMBING CODE (CPC)
PART 5, TITLE 24, CCR
BASED ON THE 2015 UNIFORM PLUMBING CODE (UPC)

2016 CALIFORNIA FIRE CODE (CFC)
PART 9, TITLE 24, CCR
BASED ON THE 2015 INTERNATIONAL FIRE CODE (IFC)

2016 NFPA 72, NATIONAL FIRE ALARM AND SIGNALING CODE

COMPLIANCE WITH 2016 CALIFORNIA FIRE CODE, CHAPTER 33 - FIRE SAFETY DURING CONSTRUCTION AND DEMOLITION.

FIRE ALARM SCOPE OF WORK

PROVIDE A MANUALLY AND AUTOMATICALLY ACTIVATED FIRE ALARM SYSTEM INCLUDING FACP, VOICE AMPLIFIERS, POWER SUPPLIES, ANNOUNCING MICROPHONE, INITIATION, NOTIFICATION, CONTROL AND MONITORING DEVICES AS SHOWN ON PLANS AND SPECIFICATIONS.

FIRE ALARM DESCRIPTION

THIS PROJECT IS TO REPLACE THE EXISTING FIRE ALARM PANELS, INITIATING DEVICES, NOTIFICATION DEVICES, MODULES, POWER SUPPLIES AND REMOTE ANNUNCIATOR PANEL WITH A NEW GAMEWELL E3 FIRE ALARM SYSTEM WITH EMERGENCY VOICE EVACUATION.

ALL EXISTING PATHWAY WILL BE RE-USED WHERE POSSIBLE AND NEW WHERE REQUIRED. NEW PATHWAY WILL BE PROVIDED IN AREAS WHERE CABLE CAN NOT BE CONCEALED ABOVE CEILING.

CABLE ABOVE CEILING WHEN NOT IN EXISTING CONDUIT WILL BE FREE AIR AND SUPPORTED EVERY 48" WITH J-HOOKS, PAINTED RED.

NEW DEVICE BOXES WILL BE REQUIRED AT ALL NEW DEVICES. WHERE EXISTING DEVICE BOXES ARE LOCATED AND A DEVICE IS NOT REQUIRED, THEN PROVIDE COVER PLATES. REMOVE EXISTING DEVICE BOXES WHEN ADDING A NEW DEVICE.

DEMOLISH ALL OLD CABLE, FIRE ALARM COMPONENTS AND BACK BOXES FROM SITE.

ALL CABLE AND COMPONENTS WILL BE NEW.

THIS PROJECT IS TO REPLACE EXISTING FIRE ALARM HEAD END UNIT AND ALL ASSOCIATED DEVICES.

FIRE ALARM SYSTEM: CLASS B
IDC: CLASS B
SLC CIRCUIT: CLASS B
NOTIFICATION CIRCUIT: CLASS B

PROJECT TEAM

OWNER

LODI UNIFIED SCHOOL DISTRICT
1305 E. VINE ST.
LODI, CA 95240

CONTACT: LEONARD KAHN (209)331-7225
E-MAIL CONTACT: VBRUM@LODIUSD.NET

ELECTRICAL ENGINEER:

THE ENGINEERING ENTERPRISE
1125 HIGH ST.
AUBURN, CA 95603

CONTACT: SCOTT WHEELER: 530-305-927-5784
FAX: 530-886-8557
EMAIL: SCOTT@ENGENT.COM

CONTACT: JESSE WHEELER: 530-927-5630
FAX: 530-886-8557
EMAIL: JESSE.WHEELER@ENGENT.COM

DRAWING INDEX

SHEET NO.	SHEET NAME	SCHEMATIC DESIGN	DESIGN DEVELOPMENT	DSA SUBMITTAL
G0.0	COVER SHEET			•
E0.00	FIRE ALARM SYMBOLS, NOTES, AND MATRIX			•
E0.01	FIRE ALARM MATRIX, SCHEDULE & NOTES			•
E1.00	SITE PLAN			•
E2.00	FIRE ALARM PLAN - A, B, C & D			•
E2.01	FIRE ALARM PLAN - E & F			•
E2.02	FIRE ALARM PLAN - P1, P2, & P3			•
E3.00	FIRE ALARM RISER			•
E4.01	FIRE ALARM CALCULATIONS			•
ED1.00	FIRE ALARM DEMO PLAN - SITE PLAN			•
ED1.01	FIRE ALARM DEMO PLAN - A, B, C & D			•
ED1.02	FIRE ALARM DEMO PLAN - E & F			•

DSA ANCHORAGE AND BRACING NOTES

DEFERRED APPROVALS

N/A

NOTES

1. THE FIRE ALARM SYSTEM SHALL CONFORM TO 2016 CALIFORNIA ELECTRICAL CODE (CEC) ARTICLE 760 AND 2016 CALIFORNIA FIRE CODE (CFC) SECTION 907.
2. PROVIDE CALIFORNIA STATE FIRE MARSHAL LISTING NUMBERS FOR EACH COMPONENT OF THE SYSTEM INCLUDING MANUFACTURER CUT SHEETS FOR REVIEW.
3. BEFORE REQUESTING FINAL APPROVAL OF THE INSTALLATION THE INSTALLING CONTRACTOR SHALL FURNISH A WRITTEN STATEMENT TO THE DSA PROJECT INSPECTOR TO THE EFFECT THAT THE SYSTEM HAS BEEN INSTALLED AND TESTED IN ACCORDANCE WITH THE (2016) NFPA 72 SECTION 14.4.1.
4. UPON COMPLETION OF THE INSTALLATION OF THE FIRE ALARM SYSTEM, A SATISFACTORY TEST OF THE SYSTEM SHALL BE MADE IN THE PRESENCE OF THE DSA PROJECT INSPECTOR.
5. PROVIDE A RECORD OF COMPLETION PER CBC 907.7.2.
6. AUTOMATIC FIRE ALARM SYSTEMS SHALL TRANSMIT THE ALARM, SUPERVISORY AND TROUBLE SIGNALS TO AN APPROVED SUPERVISING STATION AS REQUIRED BY NFPA 72 AND CBC 907.6.5.2. THE SUPERVISING STATION SHALL BE LISTED AS EITHER UUFX OR UUIS BY UL OR SHALL MEET THE REQUIREMENTS OF FM STANDARD 3011.
7. TEST, INSPECTION AND MAINTENANCE SHALL COMPLY WITH NFPA 72 CHAPTER 14 REQUIREMENTS.
8. EACH BUILDING TO BE A SEPARATE SPEAKER ZONE. (CFC, 907.6.3).
9. THE EXISTING SYSTEM SHALL REMAIN IN SERVICE UNTIL THE NEW SYSTEM IS INSTALLED OR THAT A FIRE WATCH IN COMPLIANCE WITH THE CALIFORNIA FIRE CODE WILL BE PROVIDED.

EXISTING BUILDING DATA

CAMPUS BUILDING SQUARE FOOTAGE:	55,728
OCCUPANCY GROUP:	E: K-6
FIRE SPRINKLER:	BLDGS. NONE
YEAR CONSTRUCTED:	1960
FLOOR AREAS:	NO PROPOSED CHANGE

IDENTIFICATION STAMP
DIV. OF THE STATE ARCHITECT
APP. 02-118026 INC:
REVIEWED FOR
SS ☐ FLS ☑ ACS ☐
DATE: 02/27/2020

IDENTIFIC
DIV. OF THE S
APPL. # 02-1
REVIVEWED FOR
SS_____ FLS_____ ACS_____
DATE:_____

The Engineering Enterprise
CONSULTING ENGINEERS
1125 HIGH STREET
AUBURN, CA 95603
(530) 886-8556

REGISTERED PROFESSIONAL ENGINEER
SCOTT WHEELER
No. E015497
Exp. 06/30/21
ELECTRICAL
STATE OF CALIFORNIA

Lawrence Elementary School
721 Calaveras St, Lodi, CA 95240

REVISIONS

#	DESCRIPTION	DATE

DESIGNER:

SCALE: 12" = 1'-0"

DATE: 2019.12.20

TITLE:
COVER SHEET

DRAWING NO.
G0.0

SYMBOLS LIST

FIRE ALARM

- SMOKE DETECTOR INITIATING DEVICE, CEILING MOUNTED IN FLUSH OR SURFACE JUNCTION BOX.
- SMOKE DETECTOR INITIATING DEVICE, WALL MOUNTED IN FLUSH JUNCTION BOX, MAXIMUM 6" BELOW CEILING.
- SMOKE DETECTOR INITIATING DEVICE, MOUNTED TO STRUCTURE ABOVE SUSPENDED CEILING IN SURFACE JUNCTION BOX OR SUSPENDED IN JUNCTION BOX IN FRONT OF RETURN AIR FIRE/SMOKE DAMPERS.
- SMOKE DETECTOR INITIATING DEVICE, DUCT-MOUNTED TYPE WITH SAMPLING TUBE, LOCATED AT SUPPLY AIR FANS 2000cfm AND LARGER.
- SMOKE DETECTOR INITIATING DEVICE, IN-DUCT MOUNTED TYPE AT DUCTED SUPPLY AIR FIRE/SMOKE DAMPERS.
- PROJECTED BEAM SMOKE DETECTOR INITIATING DEVICES TO INCLUDE TRANSMITTER, RECEIVER AND REMOTE INDICATOR STATION, WALL MOUNTED IN FLUSH JUNCTION BOX BELOW BEAM DETECTOR AT +42" AFF. BEAM DETECTORS ARE EITHER CEILING OR WALL MOUNTED 6" BELOW CEILING.
- HEAT DETECTOR INITIATING DEVICE, CEILING MOUNTED IN FLUSH OR SURFACE JUNCTION BOX.
- HEAT DETECTOR INITIATING DEVICE, WALL MOUNTED IN FLUSH JUNCTION BOX, MAXIMUM 6" BELOW CEILING.
- HEAT DETECTOR INITIATING DEVICE, MOUNTED TO STRUCTURE ABOVE SUSPENDED CEILING IN SURFACE JUNCTION BOX.
- MANUAL PULL STATION INITIATING DEVICE, WALL MOUNTED AT +48" UON.
- SPRINKLER SYSTEM WATER FLOW SWITCH, NIEC. SYMBOL DENOTES INTERFACE FOR MONITORING CONNECTION FROM FIRE ALARM SYSTEM.
- SPRINKLER SYSTEM TAMPER SWITCH, NIEC. SYMBOL DENOTES INTERFACE FOR MONITORING CONNECTION FROM FIRE ALARM SYSTEM.
- SPRINKLER SYSTEM POST INDICATING VALVE 'PIV', NIEC. SYMBOL DENOTES INTERFACE FOR MONITORING CONNECTION FROM FIRE ALARM SYSTEM. INCLUDE A REMOTE MOUNTED ADDRESSABLE MONITORING MODULE AT PIV.
- SM — REMOTE MOUNTED SINGLE INPUT, ADDRESSABLE, MONITORING MODULE FOR INITIATING CIRCUIT CONNECTION.
- DM — REMOTE MOUNTED DUAL INPUT, ADDRESSABLE, MONITORING MODULE FOR INITIATING CIRCUIT CONNECTION.
- CR — REMOTE MOUNTED PROGRAMMABLE CONTROL RELAY MODULE FOR ADDRESSABLE CONTROL.
- DPS — DIFFERENTIAL PRESSURE SWITCH, NIEC. SYMBOLS DENOTES INTERFACE FOR MONITORING CONNECTION FROM FIRE ALARM SYSTEM TO ANNUNCIATE FAN OPERATION. INCLUDE A REMOTE MOUNTED ADDRESSABLE MONITORING MODULE AT EACH LOCATION.
- EOL — END-OF-LINE RESISTOR.
- CT — CURRENT TRANSFORMER FOR MONITORING AVAILABLE POWER.
- FRAP — FIREMANS REMOTE ANNUNCIATOR PANEL FRAP, FLUSH WALL MOUNTED, +42" UON.
- MAGNETIC TYPE DOOR HOLD OPEN/RELEASE DEVICE, WALL MOUNTED, NIEC. SYMBOL DENOTES INTERFACE FOR POWER AND CONTROL CONNECTIONS FROM FIRE ALARM SYSTEM.
- DOOR HOLD OPEN/RELEASE DEVICE INTEGRATED IN DOOR HARDWARE CLOSURE EQUIPMENT, NIEC. SYMBOL DENOTES INTERFACE FOR POWER AND CONTROL CONNECTIONS FROM FIRE ALARM SYSTEM.
- AUDIBLE NOTIFICATION APPLIANCE, WALL MOUNTED, 6" BELOW CEILING OR +80" AFF, WHICHEVER IS LOWER.
- VISIBLE NOTIFICATION APPLIANCE, WALL MOUNTED, 6" BELOW CEILING OR +80" AFF, WHICHEVER IS LOWER. NUMBER ASSOCIATED WITH 'cd' REPRESENTS CANDELA RATING OF STROBE.
- AUDIBLE/VISIBLE NOTIFICATION APPLIANCE, WALL MOUNTED, 6" BELOW CEILING OR +80" AFF, WHICHEVER IS LOWER. NUMBER ASSOCIATED WITH 'cd' REPRESENTS CANDELA RATING OF STROBE.
- AUDIBLE NOTIFICATION APPLIANCE, CEILING MOUNTED IN FLUSH BACK BOX.
- VISIBLE NOTIFICATION APPLIANCE, CEILING MOUNTED IN FLUSH BACK BOX. NUMBER ASSOCIATED WITH 'cd' REPRESENTS CANDELA RATING OF STROBE.
- AUDIBLE/VISIBLE NOTIFICATION APPLIANCE, CEILING MOUNTED IN FLUSH BACK BOX. NUMBER ASSOCIATED WITH 'cd' REPRESENTS CANDELA RATING OF STROBE.
- FIRE ALARM BELL FOR SPRINKLER FLOW ANNUNCIATOR, NIEC, POWERED AND INSTALLED BY ELECTRICAL, WALL MOUNTED ON EXTERIOR OF BUILDING.
- THERMISTOR SENSOR DEVICE IN FSAE LOBBIES FOR TEMPERATURE MONITORING, WALL MOUNTED 6" BELOW CEILING.
- SMOKE ALARM FOR RESIDENTIAL DWELLING UNITS, NON-ADDRESSABLE, 120V DEVICE WITH BATTERY BACK-UP, CEILING MOUNTED IN FLUSH OR SURFACE JUNCTION BOX.
- SMOKE ALARM FOR RESIDENTIAL DWELLING UNITS, NON-ADDRESSABLE, 120V DEVICE WITH BATTERY BACK-UP, WALL MOUNTED MAXIMUM 6" BELOW CEILING IN FLUSH JUNCTION BOX.
- C — COMBINATION SMOKE AND CARBON MONOXIDE ALARM FOR RESIDENTIAL DWELLING UNITS, NON-ADDRESSABLE, 120V DEVICE WITH BATTERY BACK-UP, CEILING MOUNTED IN FLUSH OR SURFACE JUNCTION BOX.
- C — COMBINATION SMOKE AND CARBON MONOXIDE ALARM FOR RESIDENTIAL DWELLING UNITS, NON-ADDRESSABLE, 120V DEVICE WITH BATTERY BACK-UP, WALL MOUNTED MAXIMUM 6" BELOW CEILING IN FLUSH JUNCTION BOX.
- REMOTE 2-WAY COMMUNICATION STATION, WALL MOUNTED, +42" AFF.

CONVENTIONS

- (1) — NUMBERED NOTE, APPLIES TO ALL DRAWINGS.
- [1] — NUMBERED SHEET NOTE, APPLIES TO DRAWING CONTAINING NOTES ONLY.
- (1) — OVERCURRENT PROTECTIVE DEVICE SPACE IDENTIFICATION TAG. REFERS TO LOCATION OF PROTECTIVE OR CONTROL DEVICE WITHIN SWITCHBOARDS, DISTRIBUTION BOARDS, MOTOR CONTROL CENTERS, ETC.
- (NAME) — EQUIPMENT IDENTIFICATION TAG: ITEM FURNISHED AND INSTALLED UNDER ANOTHER SECTION AND WIRED UNDER THIS SECTION.
- [2004] — FEEDER SIZE. REFER TO FEEDER SCHEDULE.
- (1 / E-801) — DETAIL REFERENCE:
  - DETAIL DESIGNATION
  - SHEET NUMBER
- 2 - F3 — FIXTURE IDENTIFICATION TAG:
  - FIXTURE TYPE
  - QUANTITY

FIRE ALARM SYSTEM DESCRIPTION

SCOPE OF THIS PROJECT IS TO REPLACE THE EXISTING FIRE ALARM SYSTEM WITH A NEW GAMEWELL VOICE EVACUATION SYSTEM. ALL EXISTING PATHWAY, AND DEVICE BOXES SHALL BE REUSED WHERE POSSIBLE. NEW PATHWAY WILL BE PROVIDED IN AREAS WHERE CABLE CAN NOT BE CONCEALED ABOVE CEILING. CABLE ABOVE CEILING WHEN NOT IN EXISTING CONDUIT WILL BE FREE AIR. NEW DEVICE BOXES WILL BE PROVIDED WHERE THE EXISTING BACK BOXES CAN NOT BE RE-USED OR ARE NOT LOCATED IN THE PROPER LOCATION OF THE NEW DEVICE. ALL SPEAKER CABLE AND COMPONENTS WILL BE NEW.TX THIS PROJECT IS TO REPLACE EXISTING FIRE ALARM CONTROL UNIT AND DEVICES AS SHOWN ON PLANS.

FIRE ALARM SYSTEM: CLASS B
IDC: CLASS B
SLC CIRCUIT: CLASS B
NOTIFICATION CIRCUIT: CLASS B

ABBREVIATIONS

A	AMPERES	LCP	LIGHTING CONTROL PANEL
AFI	ARC FAULT CIRCUIT INTERRUPTER	MBGB	MAIN BUILDING GROUND BUS
AF	AMPERE OVERCURRENT FRAME SIZE (WHEN APPLIED TO CIRCUIT BREAKERS) OR AMPERE FUSE SIZE (WHEN APPLIED TO FUSES)	MCB	MAIN CIRCUIT BREAKER
		MCC	MOTOR CONTROL CENTER
		MLO	MAIN LUGS ONLY
AFF	ABOVE FINISHED FLOOR	MT	EMPTY
AIC	ASYMMETRIC INTERRUPTING CURRENT	MTS	MANUAL TRANSFER SWITCH
AL	ALUMINUM	(N)	NEW
AT	AMPERE OVERCURRENT TRIP (WHEN APPLIED TO CIRCUIT BREAKERS)	NC	NORMALLY CLOSED
ATS	AUTOMATIC TRANSFER SWITCH	NF	NON-FUSED
BAS	BUILDING AUTOMATION SYSTEM	NIEC	NOT IN ELECTRICAL CONTRACT
BPS	BOLTED PRESSURE CONTACT SWITCH	NO	NORMALLY OPEN
C	CONDUIT	NTS	NOT TO SCALE
CCTV	CLOSED CIRCUIT TELEVISION	OC	ON CENTER
CEC	CALIFORNIA ELECTRICAL CODE	OFCI	OWNER FURNISHED CONTRACTOR INSTALLED
CL	CURRENT LIMITING CIRCUIT BREAKER OR FUSE	PDZ	PRIMARY DAYLIGHT ZONE
CP	CIRCULATION PUMP	PNL	PANEL
CT	CURRENT TRANSFORMER	PQM	POWER QUALITY METER
CU	COPPER	PT	POTENTIAL TRANSFORMER
DF	DRINKING FOUNTAIN	PVC	POLYVINYL CHLORIDE
(E)	EXISTING TO REMAIN	(R)	EXISTING TO BE REMOVED
EC	ELECTRICAL CONTRACTOR	(RR)	REMOVE AND RELOCATE
EF	EXHAUST FAN	SAD	SEE ARCHITECTURAL DRAWINGS
EP	EXPLOSION PROOF	TC	TIME CLOCK
EPO	EMERGENCY POWER OFF	TP	TWISTED-PAIR
EMT	ELECTRICAL METALLIC TUBING	SDZ	SECONDARY DAYLIGHT ZONE
EWH	ELECTRIC WATER HEATER	SPD	SURGE PROTECTION DEVICE
F	FUSED	TX	TRANSFORMER
(F)	FUTURE	TYP	TYPICAL
FACP	FIRE ALARM CONTROL PANEL	UON	UNLESS OTHERWISE NOTED
FFCP	FIREMAN'S FAN CONTROL PANEL	UPS	UNINTERRUPTIBLE POWER SUPPLY
FLA	FULL LOAD AMPERES	V	VOLTS
FMC	FLEXIBLE METAL CONDUIT	VA	VOLTS-AMPS
FSD	FIRE/SMOKE DAMPER	VFD	VARIABLE FREQUENCY DRIVE
FRAP	FIREMAN'S REMOTE ANNUNCIATOR PANEL	VM	VENDING MACHINE
		WAP	WIRELESS ACCESS POINT
G	GROUND	WP	WEATHERPROOF
GB	GROUND BUS	2SP	TWO SPEED
GFCI	GROUND FAULT CIRCUIT INTERRUPTER	1Ø	1-PHASE
GND	GROUND	3Ø	3-PHASE
GRAP	GENERATOR REMOTE ANNUNCIATOR PANEL	1P	1-POLE
GRC	GALVANIZED RIGID CONDUIT	2P	2-POLE
HNC	HOME NETWORK CABINET	3P	3-POLE
HPC	HIGH PRESSURE CONTACT SWITCH	3W	3-WIRE
IG	ISOLATED GROUND	4W	4-WIRE
IMC	INTERMEDIATE METAL CONDUIT		

APPLIANCES

DO	DOUBLE OVEN	MW	MICROWAVE
DW	DISHWASHER	RF	REFRIGERATOR
ED	ELECTRIC DRYER	RH	RANGE HOOD
EO	ELECTRIC OVEN/RANGE	UR	UNDERCOUNTER REFRIGERATOR
GD	GARBAGE DISPOSER	WC	WINE COOLER
GR	GAS RANGE	WM	WASHING MACHINE

RACEWAYS

- CONDUIT RUN EXPOSED ON WALL OR CEILING.
- CONDUIT RUN CONCEALED IN SLAB, UNDER SLAB OR UNDERGROUND.
- CONDUIT RUN CONCEALED IN WALL OR ABOVE CEILING.
- CONDUIT HOMERUN, CONTINUOUS RUN TO PANEL OR EQUIPMENT CABINET. HOMERUN CAN OCCUR ON ANY OF THE ABOVE ROUTING CONDITIONS.
- CONDUIT TURNED UP, CAN OCCUR ON ANY OF THE ABOVE ROUTING CONDITIONS.
- CONDUIT TURNED DOWN, CAN OCCUR ON ANY OF THE ABOVE ROUTING CONDITIONS.
- CONDUIT CAPPED OR STUBBED WITH INSULATED BUSHINGS, CAN OCCUR ON ANY OF THE ABOVE ROUTING CONDITIONS.
- CONDUIT SLEEVE, WITH INSULATING BUSHINGS.
- FLEXIBLE METALLIC CONDUIT, EQUIPMENT CONNECTION.
- CROSSMARKS ON BRANCH CIRCUIT CONDUIT RUNS INDICATE THE QUANTITY OF CONDUCTORS AS FOLLOWS (GROUND CONDUCTORS ARE NOT NOTED, BUT SHOULD BE INCLUDED IN EVERY CONDUIT WITH POWER CONDUCTORS):
  1. NO CROSSMARKS INDICATES TWO #12 AWG CONDUCTORS, UON.
  2. THREE TO SIX CROSSMARKS INDICATES THE QUANTITY OF #12 AWG CONDUCTORS, UON.
  3. SEVEN OR MORE CROSSMARKS INDICATES THE QUANTITY OF #10 AWG CONDUCTORS, UON.
- TWO PIECE SURFACE RACEWAY; TYPE, DEVICE SPACING AND MOUNTING AS NOTED ON PLANS.
- CABLE TRAY, CABLE RUNWAY OR LADDER RACK SUSPENDED FROM STRUCTURE ABOVE. REFER TO PLANS FOR SIZE AND MOUNTING.

IDENTIFICATION STAMP
DIV. OF THE STATE ARCHITECT
APP. 02-118026 INC:
REVIEWED FOR
SS ☐ FLS ☑ ACS ☐
DATE: 02/27/2020

IDENTIFIC
DIV. OF THE S
APPL. # 02-1
REVIVEWED FOR
SS_____ FLS_____ ACS_____
DATE:_____

The Engineering Enterprise
CONSULTING ENGINEERS
1125 HIGH STREET
AUBURN, CA 95603
(530) 886-8556

REGISTERED PROFESSIONAL ENGINEER
SCOTT WHEELER
No. E015497
Exp. 06/30/21
ELECTRICAL
STATE OF CALIFORNIA

Lawrence Elementary School
721 Calaveras St, Lodi, CA 95240

REVISIONS

#	DESCRIPTION	DATE

DESIGNER: Designer

SCALE:

DATE: 2019.12.20

TITLE:

FIRE ALARM SYMBOLS, NOTES, AND MATRIX

DRAWING NO.

E0.00

FIRE ALARM SYSTEM MATRIX

RESULT OF OPERATION	SMOKE DETECTOR	CO SMOKE DETECTOR	HEAT DETECTOR	DUCT DETECTOR	PULL STATION	ANSUL	SYSTEM RESET	SIGNAL SILENCE	OPEN/SHORT	POWER LOSS
FACP ALARM	X		X		X	X				
ANNUNCIATE ALARM	X		X		X	X				
OFF SITE REPORTING ALARM	X		X		X	X				
FACP TROUBLE									X	X
ANNUNCIATE TROUBLE									X	X
OFF SITE REPORTING TROUBLE									X	X
AUDIBLE ALARM	X		X		X	X				
VISUAL ALARM	X		X		X	X				
FACP SUPERVISORY		X		X						
ANNUNCIATE SUPERVISORY		X		X						
OFF SITE REPORTING SUPERVISORY		X		X						
SOUNDER BASE		X								
DEACTIVATE VISUALS								X		
DEACTIVATE AUDIBLES								X		
HVAC SHUTDOWN				X						
SYSTEM NORMAL							X			
DAMPER CLOSURE				X						
ROLL DOWN DOOR	X		X		X	X				

FIRE ALARM SYSTEM CABLE SCHEDULE

REQUIRED CABLES	CABLE TAG	CABLE	NO. OF CONDUCTORS	COLOR	AWG	CABLE USE
X	A	GENESIS	2(1PR)	RED/BLACK	#18	BUILDING INITIATION (SLC)
X	B	GENESIS	2(1PR)	RED/BLACK	#12	NOTIFICATION (NAC)
X	S	GENESIS	2(1PR)	RED/BLACK	#16	VOICE NOTIFICATION
X	F	GENESIS	2(1PR)	RED/BLACK	#12	24 VDC POWER
N/A	C	AQUA SEAL	2(1PR)	RED/BLACK	#18	UG BUILDING INITIATION (SLC)
N/A	D	AQUA SEAL	2(1PR)	RED/BLACK	#12	UG NOTIFICATION (NAC)
N/A	E	AQUA SEAL	2(1PR)	RED/BLACK	#16	UG VOICE NOTIFICATION
N/A	G	AQUA SEAL	2(1PR)	RED/BLACK	#12	UG 24 VDC POWER

NUMBERED SHEET NOTES

1. MOUNT DOOR HOLDER SMOKE DETECTOR MAXIMUM 3' FROM DOOR AND A MINIMUM OF 1'.
2. MAXIMUM DISTANCE BETWEEN SMOKE DETECTORS IS 30' AND 15' FROM WALLS, MAXIMUM DISTANCE FROM A CORNER IS 21' WITH CEILING LESS 10' OR LESS.
3. MOUNT SMOKE DETECTOR MINIMUM OF 3' AWAY FROM DIFFUSER VENT.
4. MOUNT SMOKE DETECTOR FOR FIRE SMOKE DAMPER (FSD) WITHIN 3' OF SUPPLY VENT.
5. DUCT SMOKE DETECTOR SHALL BE MOUNTED 6 TO 10 TIMES THE DIAMETER OF DUCT FROM BEND OR OBSTRUCTION.
6. WHERE DUCT SMOKE DETECTORS ARE INSTALLED IN CONCEALED LOCATIONS OR GREATER THAN 10' AFF, DETECTORS SHALL BE PROVIDED WITH A REMOTE INDICATOR OR SUPERVISORY INDICATION ACCEPTABLE WITH AUTHORITY HAVING JURISDICTION (AHJ). ALL HVAC GREATER THAN 2000cfm SHALL HAVE A DUCT DETECTOR IN THE SUPPLY AIR DUCT. GREATER THAN 15,000cfm SHALL HAVE ONE IN BOTH SUPPLY AND RETURN AIR DUCTS. HOWEVER SHALL NOT BE REQUIRED WHERE THE ENTIRE SPACE SERVED BY THE AIR DISTRIBUTION SYSTEM IS PROTECTED BY SMOKE DETECTORS THAT TRIGGER HVAC SGUT-DOWN
7. BEAM POCKET SPOT DETECTOR ARE REQUIRED FOR BEAMS GREATER THAN 18" BELOW CEILING AND SPACED MORE THAN 8' ON CENTER. EACH BAY FORMED BY BEAM SHALL BE TREATED AS A SEPARATE AREA. BEAMS LESS THAN 12" IN DEPTH AND SPACED LESS THAN 8' ON CENTER SHALL HAVE DETECTORS INSTALLED ON THE BOTTOM OF THE BEAM.
   - 7.1. OR, CEILINGS WITH BEAM DEPTHS LESS THAN 10 PERCENT OF THE CEILING HEIGHT, SMOOTH CEILING SPACING IS PERMITTED AND DETECTORS PLACED ON THE BOTTOM OF THE BEAM.
   - 7.2. BEAMS EQUAL TO OR GREATER THAN 10 PERCENT OF CEILING HEIGHT WITH BEAM SPACING GREATER THAN 40 PERCENT OF CEILING HEIGHT, SPOT DETECTORS SHALL BE LOCATED IN EACH CELL. NFPA 72 17.7.3.2.4.2
8. BEAMS PROJECTING LESS THAN 4" SHALL BE TREATED AS A SMOOTH CEILING.
9. SMOKE DETECTORS SHALL BE MOUNTED ON THE CEILING MINIMUM 4" FROM WALL, AND 4" MINIMUM TO 12" MAXIMUM FROM CEILING MOUNTED ON WALL.
10. MOUNT MANUAL PULL STATIONS AT 48" TO TOP OF BOX AFF, AND NO GREATER THAN 5' FROM DOOR.
11. MOUNT EXTERNAL HORN AT 90" MINIMUM AND 100" MAXIMUM TO THE TOP OF THE DEVICE.
12. FOR APPLICATIONS WHERE THE STRUCTURE IS BELOW 90", MOUNT HORN AS HIGH AS WITH A MINIMUM OF 6" CLEARANCE TOT HE TOP OF THE DEVICE.
13. MOUNT HORN / SPEAKER STROBE AND STROBE ONLY THE THE ENTIRE LENS IS WITHIN 80" AND 96" AFF.
14. MOUNT FIRE ALARM CONTROL PANELS AND ANNUNCIATORS AT A MAXIMUM OF 60" TO THE TOP OF THE CONTROL PANEL OR KEY BOARDS. CBC 11B-308
15. CEILING MOUNTED HORN / SPEAKER STROBE
16. MONITOR MODULE
17. RATE ANTICIPATOR HEAT DETECTOR, MOUNTED IN ABOVE CEILING / ATTIC SPACE.
18. APPROVED WIRE MANAGEMENT, ie J-HOOK OR D-RING.
19. ABOVE CEILING CIRCUITS ROUTING IN AN ACCESSIBLE ATTIC SPACE.
20. NON-ACCESSIBLE CEILINGS MUST USE EITHER EMT OR APPROVED WIREMOLD RACEWAY, AS SHOWN ON PLANS.
21. MULTI-CRITERIA PHOTOELECTRIC SMOKE / CO DETECTOR WITH SOUNDER BASE. MOUNT IN AREAS WHERE FOSSIL FUEL IS USED.
22. SMOKE / HEAT DETECTION COVERAGE IS REQUIRED IN ALL COMBUSTIBLE AREAS, UNLESS:
   - 22.1. CEILING IS ATTACHED DIRECTLY TO T HE UNDERSIDE OF THE SUPPORTING BEAM OR ROOF DECK.
   - 22.2. CONCEALED SPACE IS ENTIRELY FILLED WITH NON-COMBUSTIBLE INSULATION.
   - 22.3. THE SMALL CONCEALED SPACE OVER ROOMS THAT DO NOT EXCEED 50 SQ. FT. IN AREA.
   - 22.4. SPACES FORMED BY FACING STUDS OR SOLID JOISTS IN WALLS, FLOORS, OR CEILINGS WHERE THE FACING STUD OR SOLID JOIST IS LESS THAN 6".

   INACCESSIBLE SPACES THAT DO NOT MEET THIS CRITERIA MUST BE MADE ACCESSIBLE AND DETECTION MUST BE INSTALLED. NFPA72 17.5.3.1.1
23. DETECTION FOR CONCEALED ACCESSIBLE SPACES ABOVE SUSPENDED CEILING USED AS A RETURN PLENUM SHALL BE PROVIDED AT EACH CONNECTION FROM RETURN AIR PLENUM AT CENTRAL AIR HANDLING UNIT. NFPA 72 17.5.3.1.4
24. WITH EVERY NEW FIRE ALARM SYSTEM A DOCUMENTATION CABINET SHALL BE INSTALLED AT THE FIRE ALARM CONTROL PANEL OR AT ANOTHER LOCATION APPROVED BY AHJ. THE CABINET SHALL BE PROMINENTLY LABELED "SYSTEM RECORD DOCUMENTS".

FIRE ALARM SYSTEM COMPONENT SCHEDULE

REQUIRED COMPONENTS	SYMBOL	EQUIPMENT/DEVICE	MANUFACTURER	MODEL / PART #	CSFM LISTING YEAR	CSFM LISTING NO.
X	FACP	FIRE ALARM CONTROL PANEL	GAMEWELL	E-3	6/30/2020	7165-1703:0125
X	AMP	AMPLIFIER	GAMEWELL	AM-50	6/30/2020	7165-1703:0125
X	BP-X	REMOTE POWER BOOSTER	GAMEWELL	HPF24-S8	6/30/2020	7315-1637:0102
X		INTELLIGENT DUCT DETECTOR	GAMEWELL	XP95	6/30/2020	7272-1703:0155
N/A		INTELLIGENT HEAT DETECTOR	GAMEWELL	ATD-L2F	6/30/2020	7270-1703:0115
X	AH	ATTIC HEAT DETECTOR	GAMEWELL	5622	6/30/2020	7270-1653:0167
X		PHOTO SMOKE DETECTOR	GAMEWELL	ASD-PL3	6/30/2020	7272-1703:0501
X	CO	FIRE/CO DETECTOR WITH SOUNDER BASE	GAMEWELL SYSTEM SENSOR	MCS-COF B200S	6/30/2020 6/30/2020	7275-1703:0175 7300-1653:0213
N/A	DM	DUAL MONITOR MODULE	GAMEWELL	AMM-2IF	6/30/2020	7300-1703:0107
X	SM	MONITOR MODULE	GAMEWELL	AMM-4F	6/30/2020	7300-1703:0102
X	IM	ISOLATION MODULE	GAMEWELL	M500X	6/30/2020	7300-1653:0103
X	CR	CONTROL RELAY	GAMEWELL	AOM-2RF	6/30/2020	7300-1703:0102
X	F	PULL STATION	GAMEWELL	MS-7	6/30/2020	7150-1703:0119
X		SPEAKER STROBE (CEILING)	SYSTEM SENSOR	SPSCWL	6/30/2020	7320-1653:0505
X		STROBE (CEILING)	SYSTEM SENSOR	SCWL	6/30/2020	7125-1653:0504
X		OUTDOOR SPEAKER	SYSTEM SENSOR	SPWK	6/30/2020	7320-1653:0201
N/A		SPEAKER STROBE (WALL)	SYSTEM SENSOR	SPSW	6/30/2020	7320-1653:0201
N/A		STROBE (WALL)	SYSTEM SENSOR	SW	6/30/2020	7125-1653:0156
X	EOLR	END-OF-LINE RELAY	SYSTEM SENSOR	EOLR-1	6/30/2020	7300-1653:0103
X	DOC	DOCUMENT BOX	SPACE AGE TECH	SRD-ACE-11	6/30/2020	7300-0553:0110
X	LOC	LOCAL OPERATING CONSOLE	GAMEWELL	E-3 SERIES	6/30/2020	7165-1703:0125

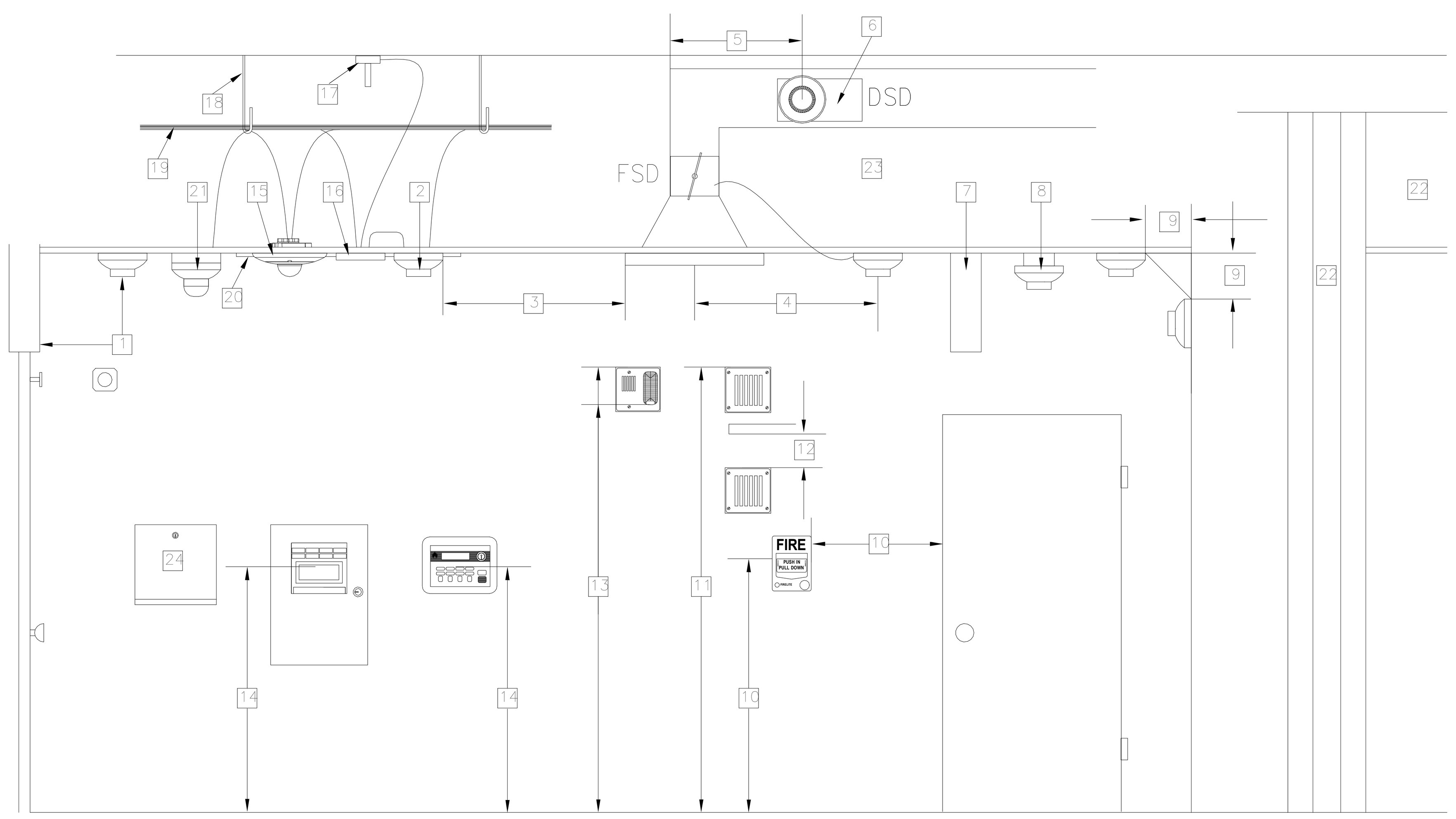

1. PLASTIC WARNING TAPE
2. LAST 12" AB MATERIAL AT 95% COMPACTION FOR ASPHALT AND CONCRETE, 90% FOR PLANTED AREAS
3. EXISTING SURFACE
4. REPLACE TO MATCH EXISTING SURFACE
5. SAND AT 90% COMPACTION
6. 2-1" SIGNAL SYSTEMS CONDUITS
7. 10 AWG WIRE OR METAL TRACING TAPE PLACED ON TOP OF CONDUITS AND CONTINUOUS THROUGHOUT ENTIRE TRENCH LENGTH AND TERMINATING ON RISER UNISTRUT OR GROUNDING BAR IN GROUND BOX.

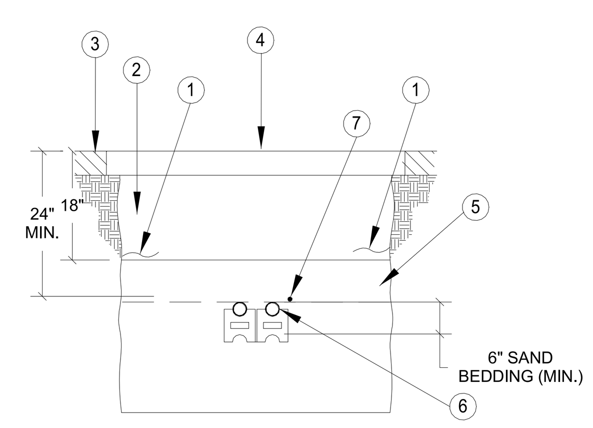

TRENCH DETAILS
SCALE: NTS
AHN# 0010

B / E0.01 TYPICAL FIRE ALARM TRENCH DETAIL

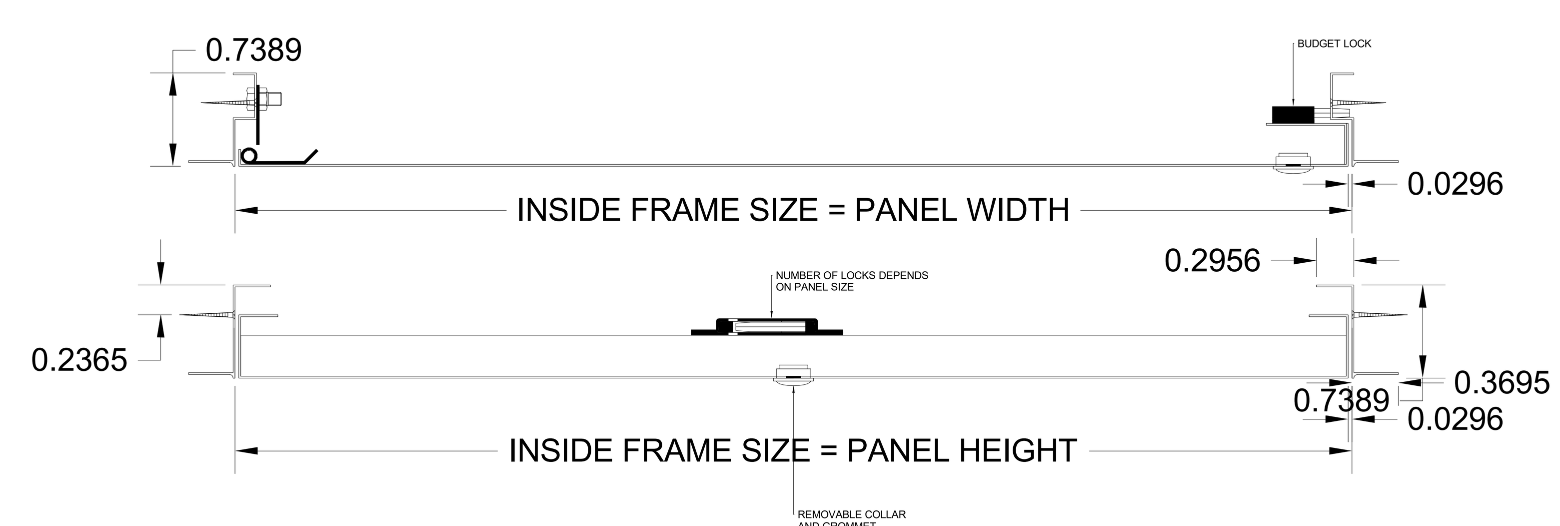

A / E0.01 TYPICAL FIRE ALARM ACCESS DOOR DETAIL

FIRE ALARM NOTES

1. WORK SHALL BE PERFORMED IN ACCORDANCE WITH THE APPLICABLE REGULATIONS,INCLUDING BUT NOT LIMITED TO THE FOLLOWING:

STATE CALIFORNIA CODE OF REGULATIONS (CCR) 201 6 TITLE 24 CALIFORNIA BUILDING CODE
PART 2, 2016 CALIFORNIA BUILDING CODE (CBC), 201 5 IBC.
PART 3, 2016 CALIFORNIA ELECTRICAL CODE (CEC), 201 5 NEC.
PART 4, 2016 CALIFORNIA MECHANICAL CONDE (CMC), 201 5 UMC.
PART 5, 2016 CALIFORNIA PLUMBING CODE (CPC), 201 5 UPC.
PART 9, 2016 CALIFORNIA FIRE CODE (CFC) BASED 0N 201 5 IFC.
2016 NATIONAL FIRE PROTECTION ASSOCIATION (NFPA) 13, 72, 80, 90A, 99, AND 101.

2. INSTALLATION OF THE SYSTEMS SHALL NOT BE STARTED UNTIL DETAILED DESIGN DOCUMENTATION AND SPECIFICATIONS, INCLUDING STATE FIRE MARSHALL LISTING SHEETS FOR EACH COMPONENT OF THE SYSTEM HAS BEEN APPROVED BY DSA.
3. UPON COMPLETION OF INSTALLATION OF THE SYSTEMS, A SATISFACTORY TEST OF THE ENTIRE SYSTEM SHALL BE MADE IN THE PRESENCE OF A DSA PROJECT INSPECTOR.
4. A STAMPED SET OF APPROVED FIRE ALARM DESIGN DOCUMENTS SHALL BE ON THE JOB SITE AND USED FOR INSTALLATION.
5. ANY DISCREPANCIES BETWEEN THE DRAWINGS AND THE CODE OR RECOGNIZED STANDARDS SHALL BE BROUGHT TO THE ATTENTION OF DSA AND THE ARCHITECT/ENGINEER OF RECORD.
6. DSA, ARCHITECT/ENGINEER AND OWNER SHALL BE NOTIFIED A MINIMUM OF 48 HOURS PRIOR TO THE FINAL INSPECTION AND/ OR TESTING.
7. ALL PENETRATIONS THROUGH RATED ASSEMBLIES, REQUIRING OPENING PROTECTION SHALL BE PROVIDED WITHIN THE SPECIFICATION WITHIN THE FIRE ALARM SECTION.
8. AUDIBLE DEVICES SHALL PROVIDE A SOUND PRESSURE LEVEL OF 15DECIBLES (Dba) ABOVE THE AVERAGE AMBIENT SOUND LEVEL OR 5 Dba ABOVE THE MAXIMUM SOUND LEVEL HAVING A DURATION AT LEAST 60 SECONDS, WHICHEVER IS GREATER, IN EVERY OCCUPIED SPACE WITHIN THE BUILDING.
9. AUDIBLE DEVICES SHALL BE SYNCHRONIZED TEMPORAL CODE 3 PATTERN.
10. THE CONTRACTOR SHALL ADJUST/INSTALL DEVICES TO MAXIMIZE PERFORMANCE AND TO MINIMIZE FALSE ALARMS.
11. VISUAL DEVICES SHOULD NOT EXCEED 2 FLASHES PER SECOND AND SHOULD NOT BE SLOWER THAN 1 FLASH EVERY SECOND. THE DEVICE SHALL HAVE A PULSING LIGHT SOURCE NOT LESS THAN 15 CANDELLA. VISUAL DEVICES WITHIN 55' FROM EACH OTHER SHALL BE SYNCHRONIZED.
12. UNDERGROUND AND EXTERIOR CONDUIT TO HAVE WATERTIGHT FITTINGS AND WIRE TO BE APPROVED FOR WET LOCATIONS.
13. ALL FIRE ALARM WIRING SHALL BE FLP OR FPLP (FIRE POWER LIMITED OR FIRE POWER LIMITED PLENUM) AS REQUIRED FOR APPLICATION. WIRING IN CONDUIT ABOVE GROUND MAY BE THHN OR THWN.
14. PER CEC STANDARDS, ALL WIRING IS TO BE PULLED THROUGH EACH JUNCTION BOX AND CONNECTED DIRECTLY TO EACH FIRE DEVICE. DO NOT SPLICE THE WIRE. ALL BOXES TO BE SIZED PER CEC.
15. SMOKE DETECTORS SHALL BE NOT CLOSER THAN 1' FROM SPRINKLERS OR 3' FROM ANY SUPPLY DIFFUSER. IN AREA OF CONSTRUCTION OR POSSIBLE DAMAGE/CONTAMINATION OF NEWLY INSTALLED FIRE ALARM DEVICES SHALL BE COVERED UNTIL AREA IS READY TO BE TURNED OVER TO THE OWNER.
16. ALL FIRE ALARM CIRCUITS ARE TO BE IN CONDUIT, SURFACE RACEWAY OR OPEN RUN ABOVE THE CEILINGS, UNDER FLOORS AND IN WALLS IN A NEAT AND PROTECTED MANNER AS INDICATED ON THE DESIGN DOCUMENTS. EXPOSED CIRCUITS ARE ONLY PERMITTED WHEN NOTED AS EXPOSED ON DESIGN DOCUMENTS.
17. FIRE ALARM PANEL, REMOTES, AND COMPONENTS SHALL BE SECURED TO MOUNTING SURFACES PER MANUFACTURERS SPECIFICATIONS. NO DEVICE SHALL EXCEED THE WEIGHT OF 20 LBS. WITHOUT SPECIAL MOUNTING DETAILS.
18. A DEDICATED BRANCH CIRCUIT SHALL BE PROVIDED FOR FIRE ALARM EQUIPMENT. THIS CIRCUIT SHALL BE ENERGIZED FROM A COMMON USE AREA PANEL AND SHALL HAVE OTHER OUTLETS. THE BREAKER SHALL HAVE A RED LOCKING DEVICE TO BLOCK THE HANDLE IN THE "ON" POSITION. THE CIRCUIT BREAKER SHALL BE LABELED "FIRE ALARM CIRCUIT CONTROL". CIRCUIT ID TO BE LABELED AT FIRE PANEL/EXPANDERS.
19. THE INSTALLER CONTRACTOR SHALL PROVIDE A RECORD OF COMPLETION PER NFPA 72, FIGURE 10.18.2.1.1.
20. THE INSTALLING CONTRACTOR SHALL PROVIDE SYSTEM PROGRAMMING FOR SUPERVISORY MONITORING PER CBC SECTION 901.6.2.
21. SUPERVISORY MONITORING SHALL BE TESTED AND VERIFIED AS SENDING CORRECT SIGNALS IN CONJUNCTION WITH FINAL ACCEPTANCE TEST.
22. OWNER SHALL BE RESPONSIBLE FOR ESTABLISHING A FIRE SYSTEM MONITORING CONTRACT OR PROVISIONS. AUTOMATIC FIRE ALARM SYSTEMS SHALL TRANSMIT THE ALARM, SUPERVISORY AND TROUBLE SIGNALS TO AN APPROVED SUPERVISING STATION AS REQUIRED BY NFPA 72 AND CBC 907.6.5.2. THE SUPERVISING STATION SHALL BE LISTED AS EITHER UUFX OR UUIS BY UL OR SHALL MEET THE REQUIREMENTS OF FM STANDARD 3011.
23. BEFORE REQUESTING FINAL APPROVAL OF THE INSTALLATION THE INSTALLING CONTRACTOR SHALL FURNISH A WRITTEN STATEMENT TO THE DSA PROJECT INSPECTOR TO THE EFFECT THAT THE SYSTEM HAS BEEN INSTALLED AND TESTED IN ACCORDANCE WITH THE 6)(20 NFPA 72 SECTION 14.4.1.
24. TEST, INSPECTION AND MAINTENANCE SHALL COMPLY WITH NFPA 72 CHAPTER 14 REQUIREMENTS.
25. ALL DUCT SMOKE DETECTORS SHALL HAVE A KEYED TEST SWITCH MOUNTED AT 42" A.F.F.. FIELD VERIFY LOCATION.

FIRE ALARM SYSTEM DESCRIPTION

SCOPE OF THIS PROJECT IS TO PROVIDE A NEW FIRE ALARM PANEL WITH NEW VOICE EVACUATION PANEL, INCLUDING FACP, VOICE AMPLIFIERS, POWER SUPPLIES, MICROPHONE, INITIATION, NOTIFICATION AND CONTROL DEVICES AS SHOWN ON PLANS AND SPECIFICATIONS. PROVIDE ALL NEW CABLING; CABLING SHALL BE INSTALLED IN CONDUIT OR SURFACE RACEWAY, OR EXPOSED IN ACCESSIBLE CEILING SPACE.

FIRE ALARM SYSTEM: CLASS B
IDC: CLASS B
SLC CIRCUIT: CLASS B
NOTIFICATION CIRCUIT: CLASS B

IDENTIFICATION STAMP
DIV. OF THE STATE ARCHITECT
APP. 02-118026 INC:
REVIEWED FOR
SS ☐ FLS ☑ ACS ☐
DATE: 02/27/2020

IDENTIFICATION STAMP
DIV. OF THE STATE ARCHITECT
APPL. # 02-1
REVIEWED FOR
SS_____ FLS_____ ACS_____
DATE:_______________

The Engineering Enterprise
CONSULTING ENGINEERS
1125 HIGH STREET
AUBURN, CA 95603
(530) 886-8556

REGISTERED PROFESSIONAL ENGINEER
SCOTT WHEELER
No. E015491
Exp. 06/30/21
ELECTRICAL
STATE OF CALIFORNIA

Lawrence Elementary Sbool
721 Calaveras St, bdi, CA 95240

REVISIONS

#	DESCRIPTION	DATE

DESIGNER: Designer

SCALE: 12" = 1'-0"

DATE: 2019.12.20

TITLE:
FIRE ALARM MATRIX, SCHEDULE & NOTES

DRAWING NO.
E0.01

NUMBERED SHEET NOTES

1. TRENCHING REQUIRED- PROVIDE TWO 1" CONDUIT (UG) FROM BLDG. A TO BLDG. C.
2. EXISTING PATHWAYS.
3. EXISTING OVERHEAD CONDUIT.

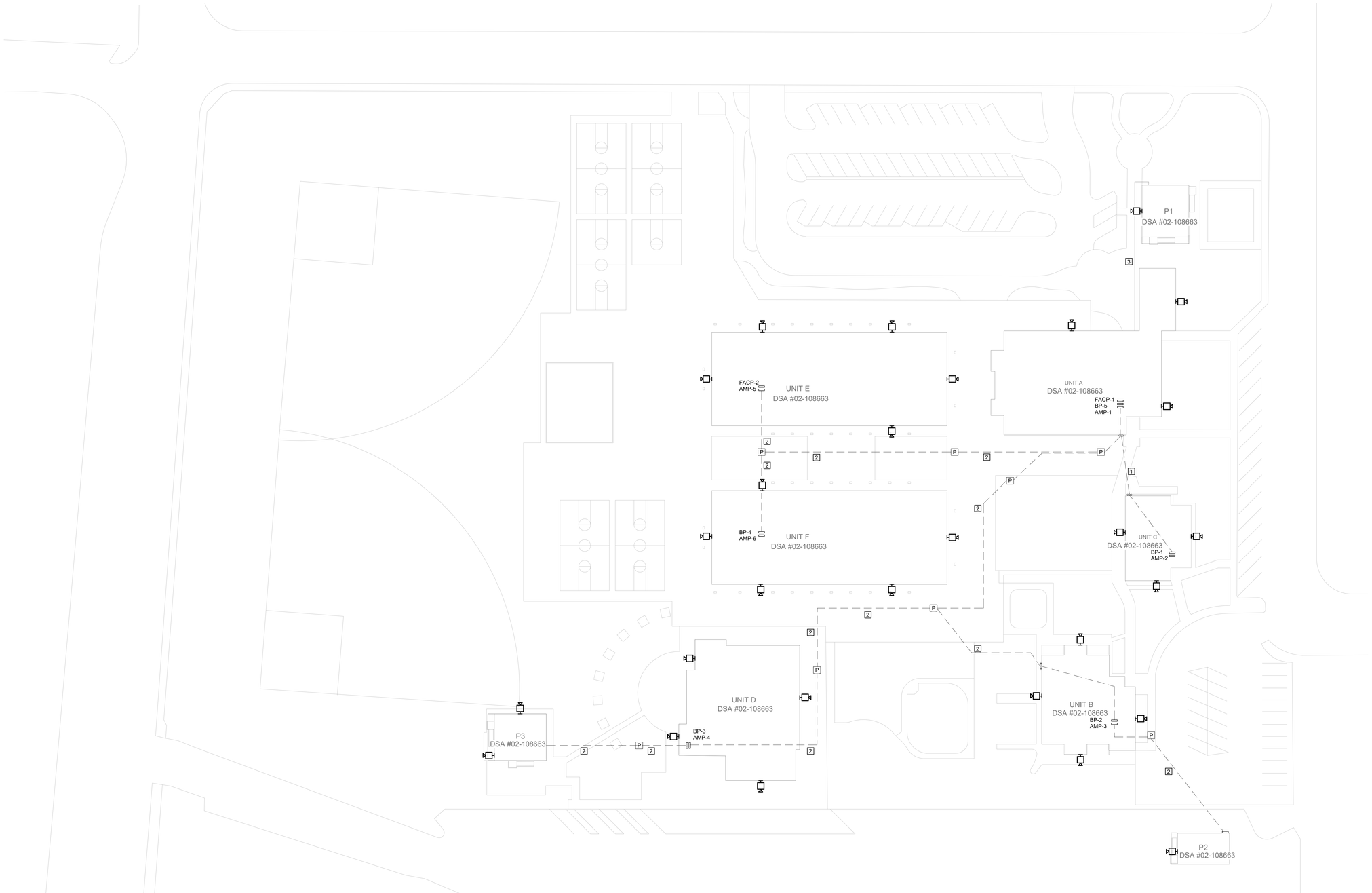

1 01_Fire Alarm_Site_Plan

SCALE: 1/32" = 1'-0"

IDENTIFICATION STAMP
DIV. OF THE STATE ARCHITECT
APP. 02-118026 INC:
REVIEWED FOR
SS ☐ FLS ☑ ACS ☐
DATE: 02/27/2020

IDENTIFIC
DIV. OF THE S
APPL. # 02-1
REVIVEWED FOR
SS_____ FLS_____ ACS_____
DATE:_____

The Engineering Enterprise
CONSULTING ENGINEERS
1125 HIGH STREET
AUBURN, CA 95603
(530) 886-8556

REGISTERED PROFESSIONAL ENGINEER
SCOTT WHEELER
No. E015497
Exp. 06/30/21
ELECTRICAL
STATE OF CALIFORNIA

Lawrence Elementary School
721 Calaveras St, Lodi, CA 95240

REVISIONS

#	DESCRIPTION	DATE

DESIGNER:

SCALE: 1/32" = 1'-0"

DATE: 2019.12.20

TITLE: SITE PLAN

DRAWING NO. E1.00

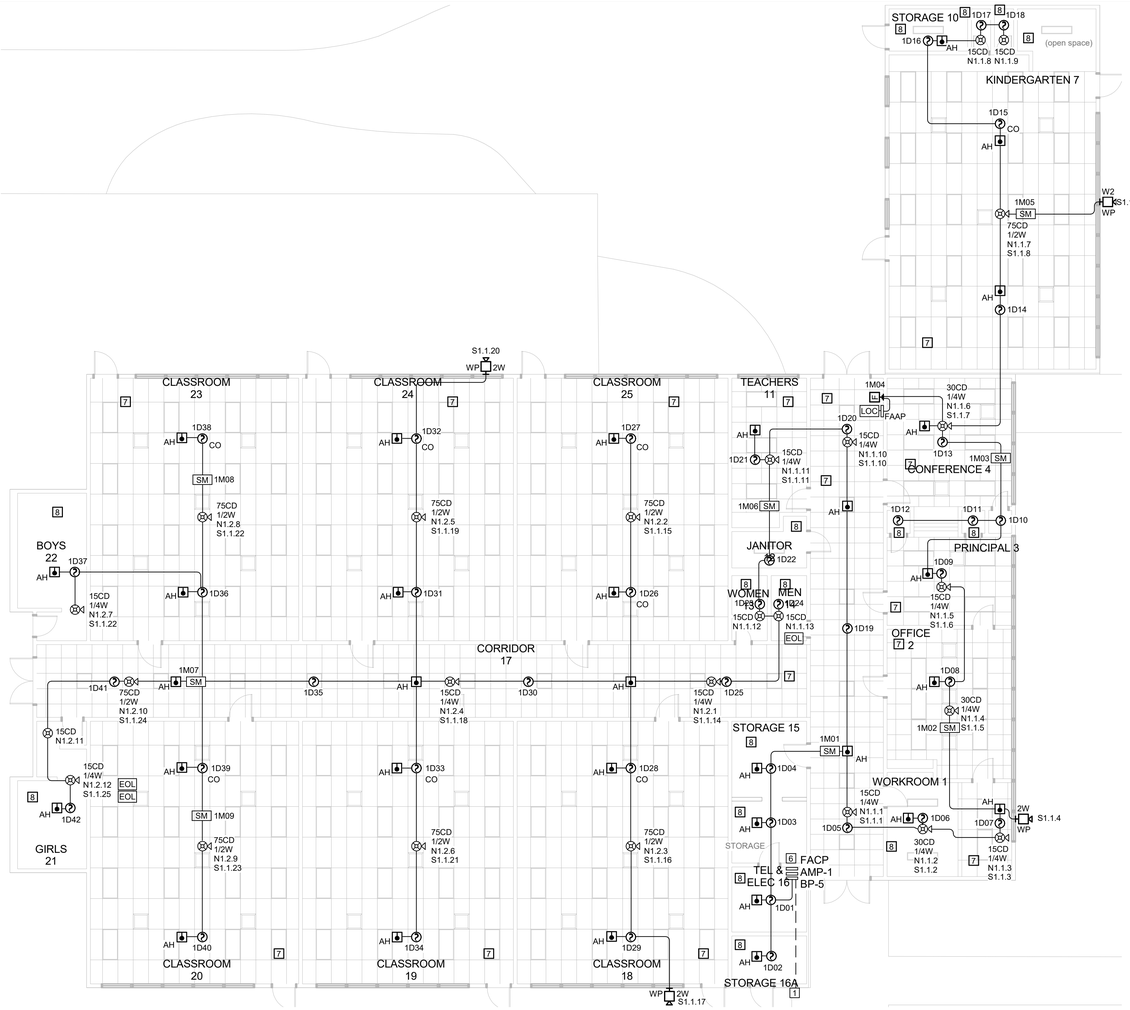

1 Building A Fire Alarm Plan

SCALE: 1/8" = 1'-0"

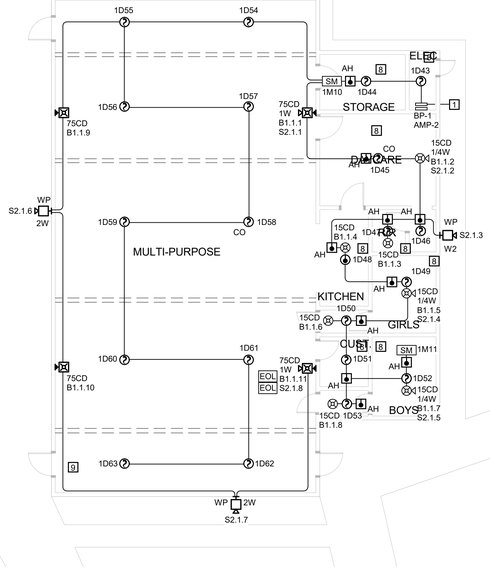

3 Building C Fire Alarm Plan

SCALE: 1/8" = 1'-0"

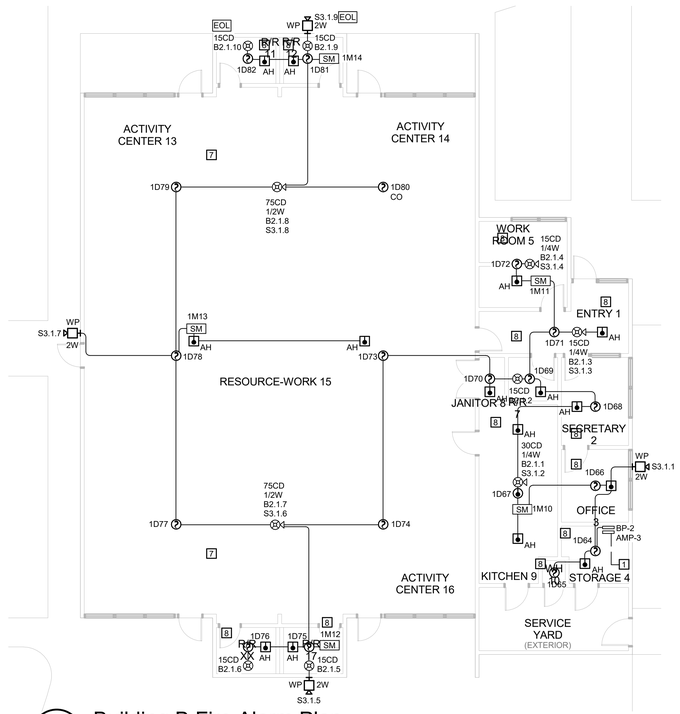

2 Building B Fire Alarm Plan

SCALE: 1/8" = 1'-0"

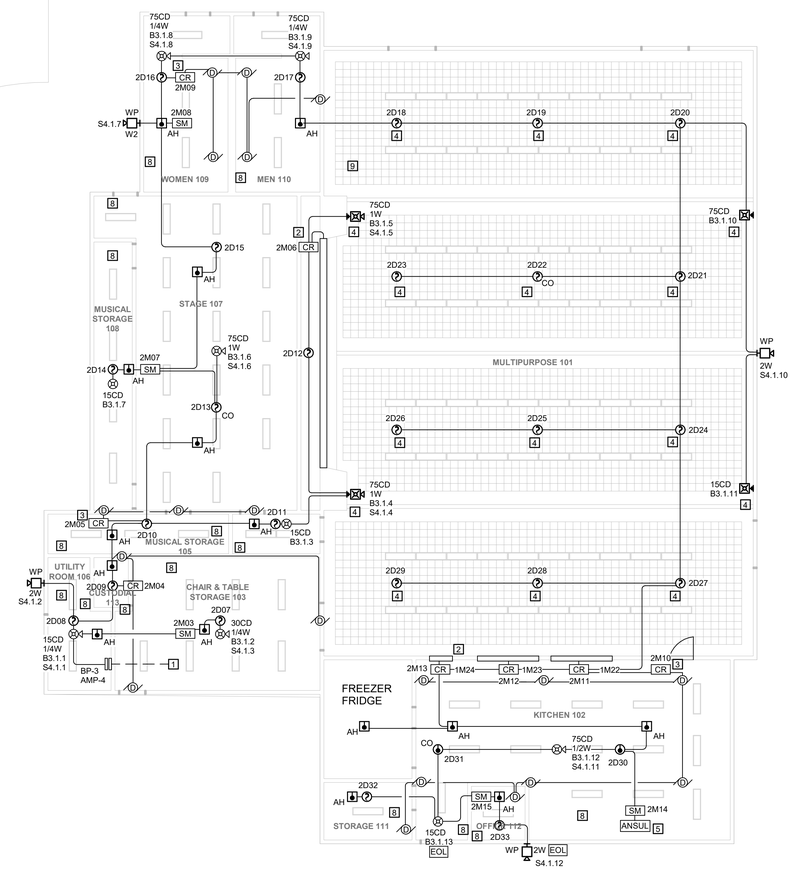

4 Building D Fire Alarm Plan

SCALE: 1/8" = 1'-0"

GENERAL SHEET NOTES

A. FIRE ALARM SYSTEM INSTALLATION SHALL COMPLY WITH ALL REQUIREMENTS OF APPLICABLE CODES, STANDARDS AND STATE REGULATIONS.

B. FIRE ALARM CIRCUITS AND CIRCUIT ROUTING ARE SHOWN SCHEMATICALLY FOR CLARITY ILLUSTRATING THE WIRING CONFIGURATION NECESSARY FOR PROPER CIRCUIT SUPERVISION.

C. COORDINATE CEILING MOUNTED FIRE ALARM DEVICE LOCATIONS WITH NEW LIGHT FIXTURES TO AVOID CONFLICTS.

D. DO NOT INSTALL FIRE ALARM DEVICES BACK TO BACK IN STUD WALLS.

E. INSTALL FIRE ALARM CONDUCTORS IN CONDUIT OR METAL SURFACE RACEWAY WHEN IN EXPOSED SPACES. MINIMUM SIZE OF CONDUIT SHALL BE 0.75". UTILIZE WIREMOLD 700 SERIES SURFACE RACEWAY (IN LIEU OF CONDUIT) FOR AREA WHERE CONDUIT CANNOT BE INSTALLED CONCEALED. CABLE ABOVE ACCESSIBLE CEILING CAN BE INSTALLED FREE AIR WHEN USING APPLICABLE CABLE. SUPPORT ALL FREE AIR CABLE EVERY 48" WITH J-HOOKS.

F. ALL SPEAKER, SPEAKER/STROBES SHALL HAVE MINIMUM 0.75" CONDUIT PATHWAYS. USE OF EXISTING 0.5" CONDUIT PATHWAY IS NOT ACCEPTABLE.

G. ENSURE THAT SPEAKER/STROBES ARE MOUNTED IN 5" SQ. X 2 7/8" DEEP BOX, FOR SURFACE MOUNTED DEVICES. FLUSH MOUNTED DEVICES SHALL BE MOUNTED IN THE MANUFACTURES DESIGNATED BACK BOXES, COLOR TO MATCH DEVICE.

H. REFER TO E3.00 FOR RISER DIAGRAMS.

I. CONTRACTOR SHALL PROVIDE 120V DEDICATED RED LOCKING CIRCUIT BREAKER PER FIRE ALARM SYSTEM PANELS PER LOCATION.

J. THE FIRE ALARM SYSTEM WILL BE DEMOLISHED AND REPLACED TO THE CURRENT 2016 CFC. THE SYSTEM WILL BE A FULLY AUTOMATIC SYSTEM WITH EMERGENCY VOICE ANNUNCIATION. FULL COVERAGE IN EACH BUILDING SHALL BE PROVIDED. COMMUNICATION WILL BE PROVIDED TO A CENTRAL MONITORING STATION.

K. PROVIDE ISOLATION MODULES FOR EACH SLC RUN TO SEPRATE BUILINGS.

L. REMOVE AND REUSE PROTECTIVE CAGES ON FA DETECTORS IN MULTI-PURPOSE BUILDINGS C AND D.

M. USE EXISTING SURFACE RACEWAY WHEN POSSIBLE.

NUMBERED SHEET NOTES

1. SEE SITE SHEET E1.0 AND RISER DIAGRAM SHEET E3.0 FOR CONDUIT PATHWAYS.
2. ROOF TOP HVAC UNIT- DUCT SMOKE DETECTOR TO ACTIVATE HVAC SHUT DOWN.
3. AREA DETECTOR SHALL INITIATE (CR) CONTROL RELAY TO ACTIVATE (FSD) FIRE SMOKE DAMPER CLOSURE.
4. CONTRACTOR SHALL PROVIDE A PROTECTIVE CAGE/COVER.
5. (SM) MONITOR MODULE TO MONITOR ANSUL SYSTEM.
6. DACT WILL TRASMIT SIGNALS TO OFF SITE MONITORING VIA PHONE LAND LINE WITH A CELLULAR BACK UP.
7. T-BAR CEILING WITH ATTIC SPACE ABOVE. AH HEAT COVERAGE REQUIRED.
8. HARD LID CEILING WITH ATTIC SPACE ABOVE. AH HEAT DETECTORS REQUIRED.
9. EXPOSED RAISED CEILING, NO AH HEATS REQUIRED.

IDENTIFICATION STAMP
DIV. OF THE STATE ARCHITECT
APP. 02-118026 INC:
REVIEWED FOR
SS☐ FLS☑ ACS☐
DATE: 02/27/2020

IDENTIFICATION STAMP
DIV. OF THE STATE ARCHITECT
APPL. # 02-118026 INC: #
REVIEWED FOR
SS_____ FLS_____ ACS_____
DATE:_____

The Engineering Enterprise
CONSULTING ENGINEERS
1125 HIGH STREET
AUBURN, CA 95603
(530) 886-8556

REGISTERED PROFESSIONAL ENGINEER
SCOTT WHEELER
No. E015497
Exp. 06/30/21
ELECTRICAL
STATE OF CALIFORNIA

Lawrence Elementary Sbool
721 Calaveras St, bdi, CA 95240

REVISIONS

#	DESCRIPTION	DATE

DESIGNER: Designer

SCALE: 1/8" = 1'-0"

DATE: 2019.12.20

TITLE:
FIRE ALARM PLAN - A, B, C & D

DRAWING NO.
E2.00

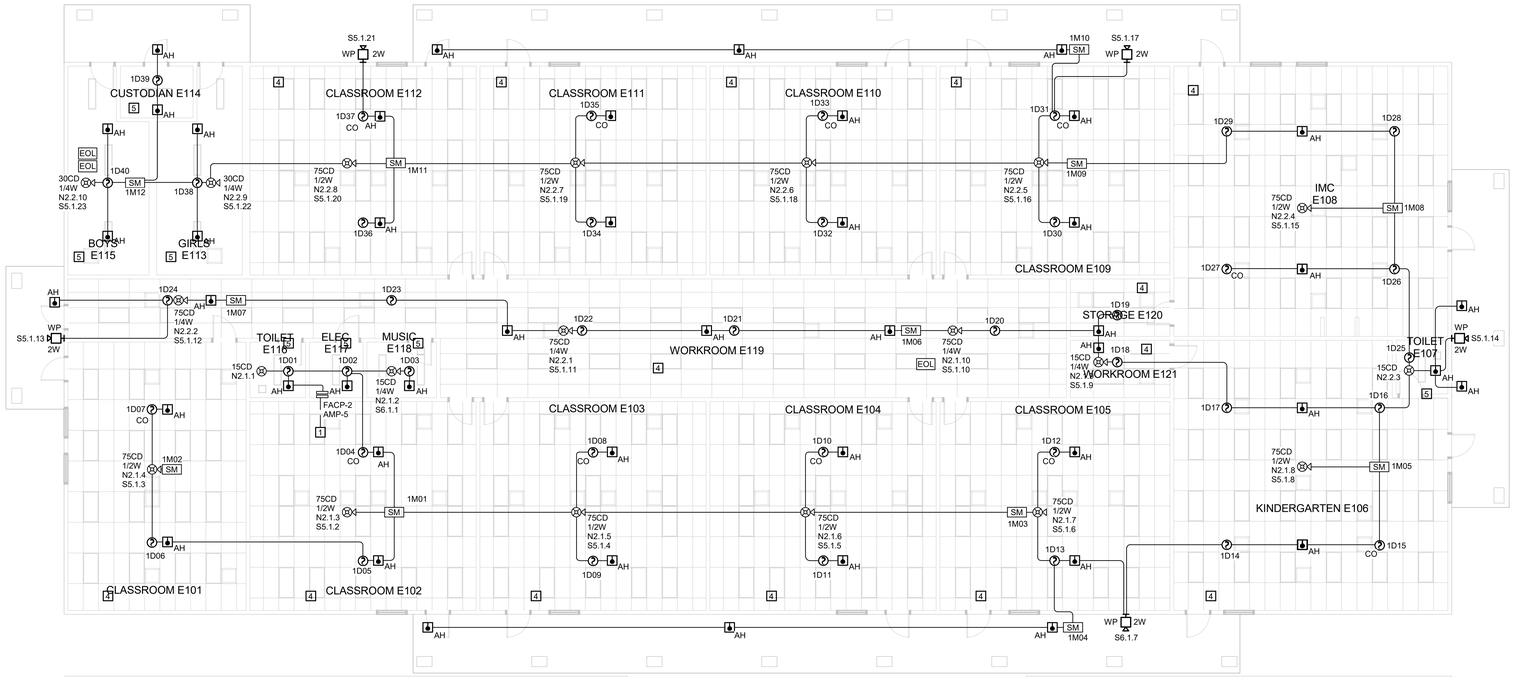

1 Building E Fire Alarm Plan

SCALE: 1/8" = 1'-0"

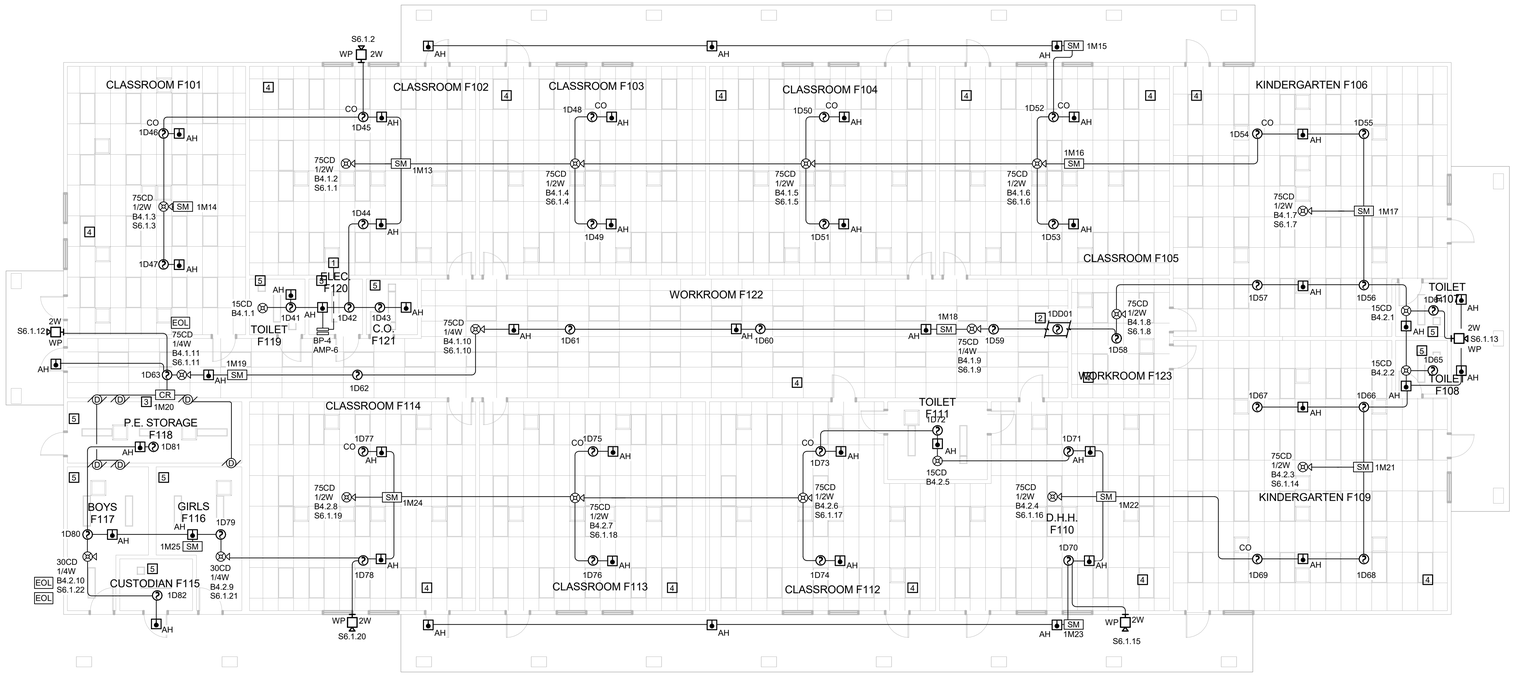

2 Building F Fire Alarm Plan

SCALE: 1/8" = 1'-0"

GENERAL SHEET NOTES

A. FIRE ALARM SYSTEM INSTALLATION SHALL COMPLY WITH ALL REQUIREMENTS OF APPLICABLE CODES, STANDARDS AND STATE REGULATIONS.

B. FIRE ALARM CIRCUITS AND CIRCUIT ROUTING ARE SHOWN SCHEMATICALLY FOR CLARITY ILLUSTRATING THE WIRING CONFIGURATION NECESSARY FOR PROPER CIRCUIT SUPERVISION.

C. COORDINATE CEILING MOUNTED FIRE ALARM DEVICE LOCATIONS WITH NEW LIGHT FIXTURES TO AVOID CONFLICTS.

D. DO NOT INSTALL FIRE ALARM DEVICES BACK TO BACK IN STUD WALLS.

E. INSTALL FIRE ALARM CONDUCTORS IN CONDUIT OR METAL SURFACE RACEWAY WHEN IN EXPOSED SPACES. MINIMUM SIZE OF CONDUIT SHALL BE 0.75". UTILIZE WIREMOLD 700 SERIES SURFACE RACEWAY (IN LIEU OF CONDUIT) FOR AREA WHERE CONDUIT CANNOT BE INSTALLED CONCEALED. CABLE ABOVE ACCESSIBLE CEILING CAN BE INSTALLED FREE AIR WHEN USING APPLICABLE CABLE. SUPPORT ALL FREE AIR CABLE EVERY 48" WITH J-HOOKS.

F. ALL SPEAKER, SPEAKER/STROBES SHALL HAVE MINIMUM 0.75" CONDUIT PATHWAYS. USE OF EXISTING 0.5" CONDUIT PATHWAY IS NOT ACCEPTABLE.

G. ENSURE THAT SPEAKER/STROBES ARE MOUNTED IN 5" SQ. X 2 7/8" DEEP BOX, FOR SURFACE MOUNTED DEVICES. FLUSH MOUNTED DEVICES SHALL BE MOUNTED IN THE MANUFACTURES DESIGNATED BACK BOXES, COLOR TO MATCH DEVICE.

H. REFER TO E3.00 FOR RISER DIAGRAMS.

I. CONTRACTOR SHALL PROVIDE 120V DEDICATED RED LOCKING CIRCUIT BREAKER PER FIRE ALARM SYSTEM PANELS PER LOCATION.

J. THE FIRE ALARM SYSTEM WILL BE DEMOLISHED AND REPLACED TO THE CURRENT 2016 CFC. THE SYSTEM WILL BE A FULLY AUTOMATIC SYSTEM WITH EMERGENCY VOICE ANNUNCIATION. FULL COVERAGE IN EACH BUILDING SHALL BE PROVIDED. COMMUNICATION WILL BE PROVIDED TO A CENTRAL MONITORING STATION.

NUMBERED SHEET NOTES

1. SEE SITE SHEET E1.0 AND RISER DIAGRAM SHEET E3.0 FOR CONDUIT PATHWAYS.
2. ROOF TOP HVAC UNIT- DUCT SMOKE DETECTOR TO ACTIVATE HVAC SHUT DOWN.
3. AREA DETECTOR SHALL INITIATE (CR) CONTROL RELAY TO ACTIVATE (FSD) FIRE SMOKE DAMPER CLOSURE.
4. T-BAR CEILING WITH ATTIC SPACE ABOVE. AH HEAT DETECTORS REQUIRED.
5. HARD LID CEILING WITH ATTIC SPACE ABOVE. AH HEAT DETECTORS REQUIRED.

IDENTIFICATION STAMP
DIV. OF THE STATE ARCHITECT
APP. 02-118026 INC:
REVIEWED FOR
SS☐ FLS☑ ACS☐
DATE: 02/27/2020

IDENTIFICATION STAMP
DIV. OF THE STATE ARCHITECT
APPL. # 02-118026 INC: #
REVIEWED FOR
SS_____ FLS_____ ACS_____
DATE:_____

The Engineering Enterprise
CONSULTING ENGINEERS
1125 HIGH STREET
AUBURN, CA 95603
(530) 886-8556

REGISTERED PROFESSIONAL ENGINEER
SCOTT WHEELER
No. E015497
Exp. 06/30/21
ELECTRICAL
STATE OF CALIFORNIA

Lawrence Elementary School
721 Calaveras St, Lodi, CA 95240

REVISIONS

#	DESCRIPTION	DATE

DESIGNER: Designer

SCALE: 1/8" = 1'-0"

DATE: 2019.12.20

TITLE:
FIRE ALARM PLAN - E & F

DRAWING NO.
E2.01

GENERAL SHEET NOTES

A. FIRE ALARM SYSTEM INSTALLATION SHALL COMPLY WITH ALL REQUIREMENTS OF APPLICABLE CODES, STANDARDS AND STATE REGULATIONS.

B. FIRE ALARM CIRCUITS AND CIRCUIT ROUTING ARE SHOWN SCHEMATICALLY FOR CLARITY ILLUSTRATING THE WIRING CONFIGURATION NECESSARY FOR PROPER CIRCUIT SUPERVISION.

C. COORDINATE CEILING MOUNTED FIRE ALARM DEVICE LOCATIONS WITH NEW LIGHT FIXTURES TO AVOID CONFLICTS.

D. DO NOT INSTALL FIRE ALARM DEVICES BACK TO BACK IN STUD WALLS.

E. INSTALL FIRE ALARM CONDUCTORS IN CONDUIT OR METAL SURFACE RACEWAY WHEN IN EXPOSED SPACES. MINIMUM SIZE OF CONDUIT SHALL BE 0.75". UTILIZE WIREMOLD 700 SERIES SURFACE RACEWAY (IN LIEU OF CONDUIT) FOR AREA WHERE CONDUIT CANNOT BE INSTALLED CONCEALED. CABLE ABOVE ACCESSIBLE CEILING CAN BE INSTALLED FREE AIR WHEN USING APPLICABLE CABLE. SUPPORT ALL FREE AIR CABLE EVERY 48" WITH J-HOOKS.

F. ALL SPEAKER, SPEAKER/STROBES SHALL HAVE MINIMUM 0.75" CONDUIT PATHWAYS. USE OF EXISTING 0.5" CONDUIT PATHWAY IS NOT ACCEPTABLE.

G. ENSURE THAT SPEAKER/STROBES ARE MOUNTED IN 5" SQ. X 2 7/8" DEEP BOX, FOR SURFACE MOUNTED DEVICES. FLUSH MOUNTED DEVICES SHALL BE MOUNTED IN THE MANUFACTURES DESIGNATED BACK BOXES, COLOR TO MATCH DEVICE.

H. REFER TO E3.00 FOR RISER DIAGRAMS.

I. CONTRACTOR SHALL PROVIDE 120V DEDICATED RED LOCKING CIRCUIT BREAKER PER FIRE ALARM SYSTEM PANELS PER LOCATION.

J. THE FIRE ALARM SYSTEM WILL BE DEMOLISHED AND REPLACED TO THE CURRENT 2016 CFC. THE SYSTEM WILL BE A FULLY AUTOMATIC SYSTEM WITH EMERGENCY VOICE ANNUNCIATION. FULL COVERAGE IN EACH BUILDING SHALL BE PROVIDED. COMMUNICATION WILL BE PROVIDED TO A CENTRAL MONITORING STATION.

NUMBERED SHEET NOTES

1. SEE SITE SHEET E1.0 AND RISER DIAGRAM SHEET E3.0 FOR CONDUIT PATHWAYS.
2. T-BAR CEILING WITH ATTIC SPACE ABOVE. AH HEAT DETECTORS REQUIRED.

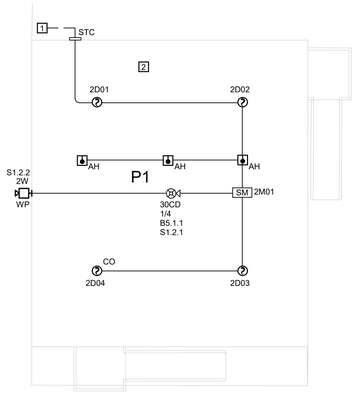

1 P1 Fire Alarm Plan
SCALE: 1/8" = 1'-0"

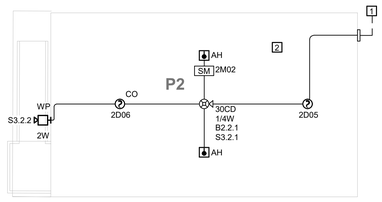

2 P2 Fire Alarm Plan
SCALE: 1/8" = 1'-0"

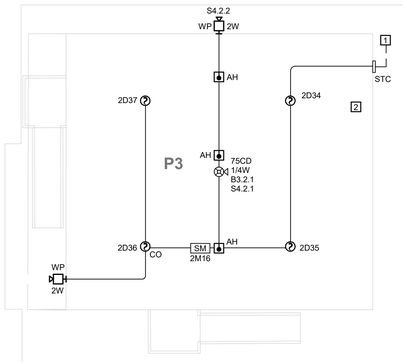

3 P3 Fire Alarm Plan
SCALE: 1/8" = 1'-0"

IDENTIFICATION STAMP
DIV. OF THE STATE ARCHITECT
APP. 02-118026 INC:
REVIEWED FOR
SS ☐ FLS ☑ ACS ☐
DATE: 02/27/2020

IDENTIFIC
DIV. OF THE S
APPL. # 02-1
REVIVEWED FOR
____ FLS____ ACS____

The Engineering Enterprise
CONSULTING ENGINEERS
1125 HIGH STREET
AUBURN, CA 95603
(530) 886-8556

REGISTERED PROFESSIONAL ENGINEER
SCOTT WHEELER
No. E015497
Exp. 06/30/21
ELECTRICAL
STATE OF CALIFORNIA

Lawrence Elementary School
721 Calaveras St, Lodi, CA 95240

REVISIONS

#	DESCRIPTION	DATE

DESIGNER:

SCALE: 1/8" = 1'-0"

DATE: 2019.12.20

TITLE:
FIRE ALARM PLAN - P1, P2, & P3

DRAWING NO.
E2.02

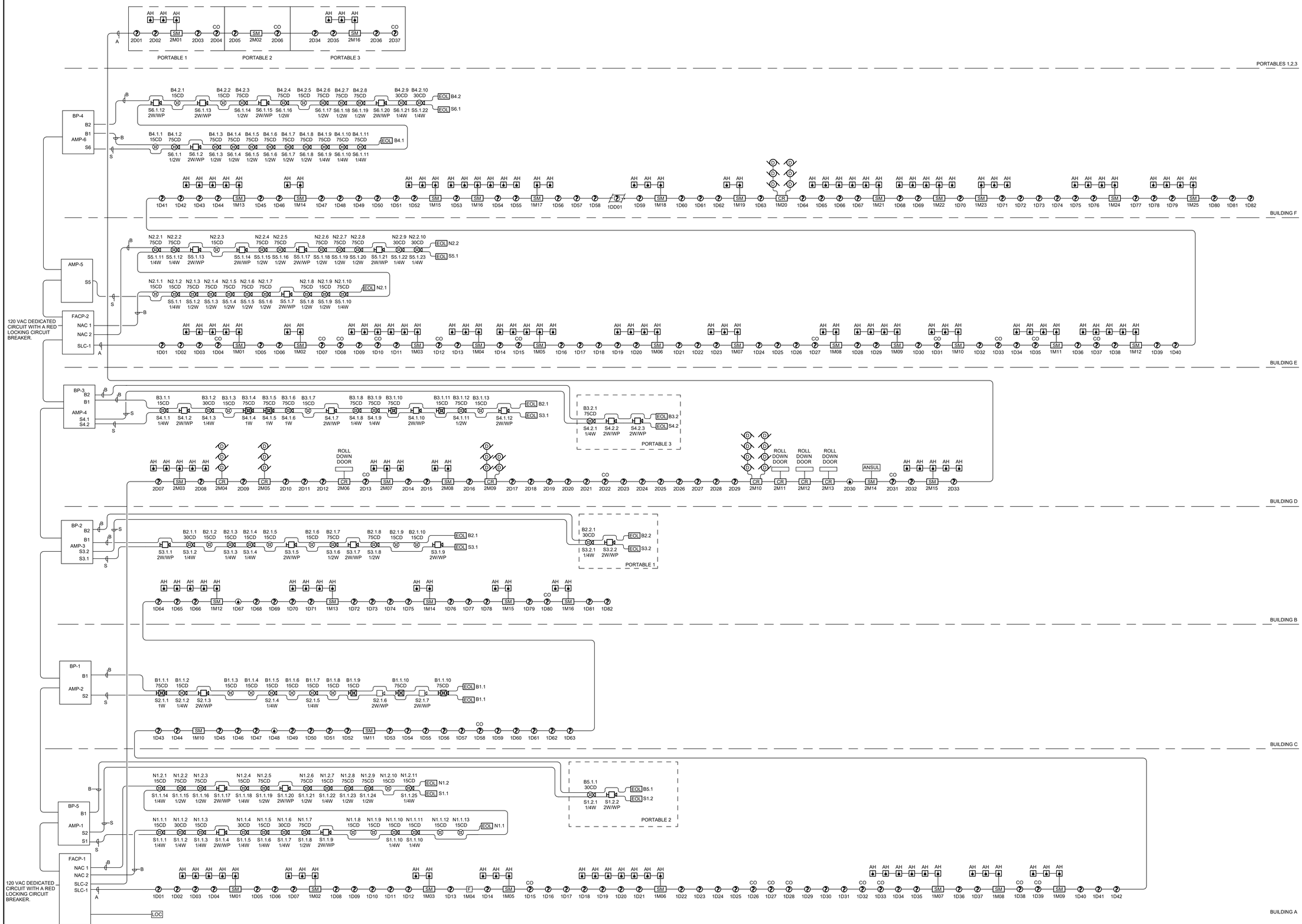

1 FIRE ALARM RISER

SCALE:NTS

IDENTIFICATION STAMP
DIV. OF THE STATE ARCHITECT
APP. 02-118026 INC:
REVIEWED FOR
SS☑ FLS☑ ACS☐
DATE: 02/27/2020

IDENTIFICATION STAMP
DIV. OF THE STATE ARCHITECT
APPL. # 02-118026 INC: #
REVIEWED FOR
SS_____ FLS_____ ACS_____
DATE:_____

The Engineering Enterprise
CONSULTING ENGINEERS
1125 HIGH STREET
AUBURN, CA 95603
(530) 886-8556

REGISTERED PROFESSIONAL ENGINEER
SCOTT WHEELER
No. E015497
Exp. 06/30/21
ELECTRICAL
STATE OF CALIFORNIA

Lawrence Elementary School
721 Calaveras St, Lodi, CA 95240

REVISIONS

#	DESCRIPTION	DATE

DESIGNER: Designer

SCALE: NTS

DATE: 2019.12.20

TITLE:
FIRE ALARM RISER

DRAWING NO.
E3.00

System Current Draw

E3 Series Control Panel with Broadband

	Total Standby	0.444 A	Total Alarm	7.469 A

Device	Standby Current Qty	Draw	Standby	Alarm Current Qty	Draw	Alarm
1. System Device						
Intel. Loop Interface, Main Board (IL1-MB-E3)	1 x	0.08100	0.08100	1 x	0.15000	0.15000
Intel. Loop Interface Supplement Board (IL1S-E3)	0 x	0.08100		0 x	0.15000	
Intel. Loop Interface Main Board - Apollo (IL9S-MB-E3)	0 x	0.05000		0 x	0.09100	
Intel. Loop Interface Supplement Board - Apollo (IL9S-S-E3)	0 x	0.05000		0 x	0.09100	
7100 Panel, 1 SLC	1 x	0.05600	0.05600	1 x	0.07600	0.07600
7100 Panel, 1 SLC with DACT	0 x	0.07500		0 x	0.09500	
7100 Panel, 2 SLC	0 x	0.06500		0 x	0.08500	
7100 Panel, 2 SLC with DACT	0 x	0.08500		0 x	0.10500	
2. E3 Optional Modules						
120V Power Supply Sub-Assembly (PM-9)	0 x	0.05000		0 x	0.05000	
240V Power Supply Sub-Assembly (PM-9G)	0 x	0.02700		0 x	0.05000	
LCD Display & Switch Control (LCD-E3)	0 x	0.02400		0 x	0.02600	
ARCNET Repeater (RPT-E3)	0 x	0.01300		0 x	0.01300	
Digital Communicator (DACT-E3)	1 x	0.01800	0.01800	1 x	0.01800	0.01800
Optional Remote Serial Annunciator (LCD-7100)	0 x	0.05000		0 x	0.07500	
Network LCD Annunciator (NGA)	0 x	0.20000		0 x	0.20000	
Auxiliary Switch Sub-Assembly (ASM-16)	0 x	0.01100		0 x	0.01100	
Remote LED Driver Module (ANU-48)	0 x	0.01100		0 x	0.01100	
Addressable Node Expander (ANX)	0 x	0.06500		0 x	0.06500	
3. 7100 Optional Modules						
Intelligent Network Interface Module (IN-7100)	0 x	0.04000		0 x	0.04000	
Printer Transient Module (PTRM)	0 x	0.02000		0 x	0.02000	
Remote LED Driver Module (LRM-7100)	0 x	0.03500		0 x	0.20000	
Class A Option Module (CAOM)	0 x	0.00150		0 x	0.00150	
Multiplex Fiber Optic Module (MOOM)	0 x	0.00150		0 x	0.00150	
4. IN-VGX Command Center						
Intel. Network Command Center (INI-VGC)	0 x	0.15000		0 x	0.15000	
Addressable Switch Sub-assembly (ASM-16)	0 x	0.01100		0 x	0.01100	
Voice Paging Microphone (Microphone)	1 x	0.00150		0 x	0.00150	
Firefighter's Telephone (Handset)	0 x	0.02000		0 x	0.02000	
Addressable Output Module-Telephone (AOM-TEL)	0 x	0.00200		0 x	0.00650	
5. IN-VGX Voice Gateway						
Intel. Network Voice Gateway (INI-VGX)	0 x	0.15000		0 x	0.15000	
120V Power Supply Sub-Assembly (PM-9)	0 x	0.05000		0 x	0.05000	
240V Power Supply Sub-Assembly (PM-9G)	0 x	0.02700		0 x	0.05000	
Amplifier Sub-assembly, 50 watt 25V (AM-50)	3 x	0.08600	0.25800	3 x	2.20600	6.61800
Amplifier Sub-assembly, 50 watt 70V (AM-50-70)	0 x	0.04900		0 x	2.30000	
Addressable Output Module-Signal (AOM-26F)	0 x	0.00200		0 x	0.00650	
Addressable Output Module-Telephone (AOM-TEL)	0 x	0.00200		0 x	0.00650	
Addressable Output Module-Audio (AOM-MUX)	0 x	0.00200		0 x	0.00650	
6. IN-VGE Command Center Voice Gateway						
Intel. Network Command Voice Gateway (INI-VGE)	0 x	0.15000		0 x	0.15000	
Addressable Switch Sub-assembly (ASM-16)	0 x	0.01100		0 x	0.01100	
Voice Paging Microphone (Microphone)	1 x	0.00100	0.00100	1 x	0.00100	0.00100
Firefighter's Telephone (Handset)	0 x	0.02000		0 x	0.02000	
Addressable Output Module-Signal (AOM-26F)	0 x	0.00200		0 x	0.00650	
Addressable Output Module-Telephone (AOM-TEL)	0 x	0.00200		0 x	0.00650	
Addressable Output Module-Audio (AOM-MUX)	0 x	0.00200		0 x	0.00650	
7. Smoke Detectors/Modules						
ATD-2F HEAT DETECTOR	0 x	0.00030		0 x	0.00650	
ADB-2F BEAM DETECTOR	0 x	0.00200		0 x	0.08500	
XP95 duct DETECTOR	0 x	0.00400		0 x	0.20000	
MCS-COF CO/SMOKE DETECTOR	6 x	0.00030	0.00180	6 x	0.00650	0.03900
AMM2F DUAL MONITOR MODULE	0 x	0.00750		0 x	0.00575	
AMM-4F MONITOR MODULE	14 x	0.00038	0.00525	14 x	0.00650	0.07000
MS0X ISOLATION MODULE	0 x	0.00568		0 x	0.00520	
AOM-2RF RELAY MODULE	0 x	0.00038		0 x	0.00650	
MS7 PULL STATION	1 x	0.00030	0.00030	1 x	0.00300	0.00300
ASD-PL3 PHOTO SMOKE DETECTOR	76 x	0.00030	0.02280	76 x	0.00650	0.49400
8. Notification Appliances						
	0 x	0.00000		0 x	0.00000	
	0 x	0.00000		0 x	0.00000	
	0 x	0.00000		0 x	0.00000	
	0 x	0.00000		0 x	0.00000	
	0 x	0.00000		0 x	0.00000	
	0 x	0.00000		0 x	0.00000	
	0 x	0.00000		0 x	0.00000	
	0 x	0.00000		0 x	0.00000	
	0 x	0.00000		0 x	0.00000	
		Total Standby Load	0.444 A		Total Alarm Load	7.469 A

LAWRENCE AMPLIFIER1

Device Type	QTY	Standby Current (amps) Watts		Current Draw		Total	Alarm Current (amps) Qty		Current Draw		Total
1. System											
HONEYWELL DAA2	1	50	X	0.0860	=	0.0860	0	X	2.2060	=	2.2060
			X		=		0	X		=	0.0000
			X		=		0	X		=	0.0000
2. Speakers											
Total Speaker Watts @ 25Vrms		0							0.0000	=	0.0000
Total Speaker Watts @ 70.7Vrms		14.75							0.2086	=	0.2086
						Total Standby Load	0.0860		Total Alarm Load		2.4146

0

		Required Standby Time in Hours		
Standby Load Current (Amps)	0.0860 Amps	X	24	= 2.064 AH
		Required Alarm Time in Hours		
Alarm Load Current (Amps)	2.4146 Amps	X	15	= 0.604 AH
			Total Current Load	2.67 AH
			*Multiply by the Derating Factor	= x 1.20
			Total Ampere Hours Required	3.20 AH
			Recommended Batteries:	7AH BATTERIES

*Derating Factor required to compensate for the non-linear discharge characteristic of a battery.

LAWRENCE AMPLIFIER 2

Device Type	QTY	Standby Current (amps) Watts		Current Draw		Total	Alarm Current (amps) Qty		Current Draw		Total
1. System											
HONEYWELL DAA2	1	50	X	0.0860	=	0.0860	0	X	2.2060	=	2.2060
			X		=		0	X		=	0.0000
			X		=		0	X		=	0.0000
2. Speakers											
Total Speaker Watts @ 25Vrms		0							0.0000	=	0.0000
Total Speaker Watts @ 70.7Vrms		7.75							0.1096	=	0.1096
						Total Standby Load	0.0860		Total Alarm Load		2.3156

0

		Required Standby Time in Hours		
Standby Load Current (Amps)	0.0860 Amps	X	24	= 2.064 AH
		Required Alarm Time in Hours		
Alarm Load Current (Amps)	2.3156 Amps	X	15	= 0.579 AH
			Total Current Load	2.64 AH
			*Multiply by the Derating Factor	= x 1.20
			Total Ampere Hours Required	3.17 AH
			Recommended Batteries:	7AH BATTERIES

*Derating Factor required to compensate for the non-linear discharge characteristic of a battery.

LAWRENCE AMPLIFIER 3

Device Type	QTY	Standby Current (amps) Watts		Current Draw		Total	Alarm Current (amps) Qty		Current Draw		Total
1. System											
HONEYWELL DAA2	1	50	X	0.0860	=	0.0860	0	X	2.2060	=	2.2060
			X		=		0	X		=	0.0000
			X		=		0	X		=	0.0000
2. Speakers											
Total Speaker Watts @ 25Vrms		0							0.0000	=	0.0000
Total Speaker Watts @ 70.7Vrms		9.75							0.1379	=	0.1379
						Total Standby Load	0.0860		Total Alarm Load		2.3439

0

		Required Standby Time in Hours		
Standby Load Current (Amps)	0.0860 Amps	X	24	= 2.064 AH
		Required Alarm Time in Hours		
Alarm Load Current (Amps)	2.3439 Amps	X	15	= 0.586 AH
			Total Current Load	2.65 AH
			*Multiply by the Derating Factor	= x 1.20
			Total Ampere Hours Required	3.18 AH
			Recommended Batteries:	7AH BATTERIES

*Derating Factor required to compensate for the non-linear discharge characteristic of a battery.

LAWRENCE AMPLIFIER 4

Device Type	QTY	Standby Current (amps) Watts		Current Draw		Total	Alarm Current (amps) Qty		Current Draw		Total
1. System											
HONEYWELL DAA2	1	50	X	0.0860	=	0.0860	0	X	2.2060	=	2.2060
			X		=		0	X		=	0.0000
			X		=		0	X		=	0.0000
2. Speakers											
Total Speaker Watts @ 25Vrms		0							0.0000	=	0.0000
Total Speaker Watts @ 70.7Vrms		12.5							0.1768	=	0.1768
						Total Standby Load	0.0860		Total Alarm Load		2.3828

0

		Required Standby Time in Hours		
Standby Load Current (Amps)	0.0860 Amps	X	24	= 2.064 AH
		Required Alarm Time in Hours		
Alarm Load Current (Amps)	2.3828 Amps	X	15	= 0.596 AH
			Total Current Load	2.66 AH
			*Multiply by the Derating Factor	= x 1.20
			Total Ampere Hours Required	3.19 AH
			Recommended Batteries:	7AH BATTERIES

*Derating Factor required to compensate for the non-linear discharge characteristic of a battery.

LAWRENCE AMPLIFIER 5

Device Type	QTY	Standby Current (amps) Watts		Current Draw		Total	Alarm Current (amps) Qty		Current Draw		Total
1. System											
HONEYWELL DAA2	1	50	X	0.0860	=	0.0860	0	X	2.2060	=	2.2060
			X		=		0	X		=	0.0000
			X		=		0	X		=	0.0000
2. Speakers											
Total Speaker Watts @ 25Vrms		0							0.0000	=	0.0000
Total Speaker Watts @ 70.7Vrms		17.25							0.2440	=	0.2440
						Total Standby Load	0.0860		Total Alarm Load		2.4500

0

		Required Standby Time in Hours		
Standby Load Current (Amps)	0.0860 Amps	X	24	= 2.064 AH
		Required Alarm Time in Hours		
Alarm Load Current (Amps)	2.4500 Amps	X	15	= 0.612 AH
			Total Current Load	2.68 AH
			*Multiply by the Derating Factor	= x 1.20
			Total Ampere Hours Required	3.21 AH
			Recommended Batteries:	7AH BATTERIES

*Derating Factor required to compensate for the non-linear discharge characteristic of a battery.

LAWRENCE AMPLIFIER 6

Device Type	QTY	Standby Current (amps) Watts		Current Draw		Total	Alarm Current (amps) Qty		Current Draw		Total
1. System											
HONEYWELL DAA2	1	50	X	0.0860	=	0.0860	0	X	2.2060	=	2.2060
			X		=		0	X		=	0.0000
			X		=		0	X		=	0.0000
2. Speakers											
Total Speaker Watts @ 25Vrms		0							0.0000	=	0.0000
Total Speaker Watts @ 70.7Vrms		17.25							0.2440	=	0.2440
						Total Standby Load	0.0860		Total Alarm Load		2.4500

0

		Required Standby Time in Hours		
Standby Load Current (Amps)	0.0860 Amps	X	24	= 2.064 AH
		Required Alarm Time in Hours		
Alarm Load Current (Amps)	2.4500 Amps	X	15	= 0.612 AH
			Total Current Load	2.68 AH
			*Multiply by the Derating Factor	= x 1.20
			Total Ampere Hours Required	3.21 AH
			Recommended Batteries:	7AH BATTERIES

*Derating Factor required to compensate for the non-linear discharge characteristic of a battery.

LAWRENCE AMPLIFIER 7

Device Type	QTY	Standby Current (amps) Watts		Current Draw		Total	Alarm Current (amps) Qty		Current Draw		Total
1. System											
HONEYWELL DAA2	1	50	X	0.0860	=	0.0860	0	X	2.2060	=	2.2060
			X		=		0	X		=	0.0000
			X		=		0	X		=	0.0000
2. Speakers											
Total Speaker Watts @ 25Vrms		0							0.0000	=	0.0000
Total Speaker Watts @ 70.7Vrms		8.75							0.1238	=	0.1238
						Total Standby Load	0.0860		Total Alarm Load		2.3298

0

		Required Standby Time in Hours		
Standby Load Current (Amps)	0.0860 Amps	X	24	= 2.064 AH
		Required Alarm Time in Hours		
Alarm Load Current (Amps)	2.3298 Amps	X	15	= 0.582 AH
			Total Current Load	2.65 AH
			*Multiply by the Derating Factor	= x 1.20
			Total Ampere Hours Required	3.18 AH
			Recommended Batteries:	7AH BATTERIES

*Derating Factor required to compensate for the non-linear discharge characteristic of a battery.

Voltage Drop Calculations

CIRCUIT NAME: NAC Circuit 1
POWER SOURCE: BPS-1
MODEL NUMBER: HPF24S8
BRAND: HPP
VOLTS: 20.4 CLASS: CLASS B
AWG: 12 TOTAL DEVICES: 11
POWER: DC 30.9 % (0.927) AMPS USED
AMPS: 3 2.49 % (0.508) VOLTAGE DROP

#	MODEL	CANDELA	PATTERN	VOLUME	TONE	CURRENT (	DISTANCE	12 AWG	14 AWG	16 AWG	18 AWG
1	SPSW (Strc	75				0.158	25	20.307	20.252	20.165	20.025
2	SPSW (Strc	75				0.158	25	20.230	20.129	19.970	19.714
3	SCW	15				0.066	25	20.169	20.032	19.815	19.467
4	SCW	15				0.066	25	20.114	19.945	19.677	19.247
5	SCW	15				0.066	25	20.066	19.869	19.555	19.053
6	SCW	15				0.066	25	20.024	19.803	19.450	18.886
7	SPSCWL	15				0.041	25	19.989	19.748	19.362	18.746
8	SPSCWL	15				0.041	25	19.958	19.699	19.284	18.622
9	SPSCWL	15				0.041	25	19.931	19.657	19.217	18.515
10	SW	15				0.066	25	19.908	19.621	19.160	18.425
11	SW	75				0.158	25	19.892	19.596	19.120	18.361
							VOLTAGE D	0.508	0.804	1.280	2.039

Voltage Drop Calculations

CIRCUIT NAME: NAC Circuit 1
POWER SOURCE: BPS-2
MODEL NUMBER: HPF24S8
BRAND: HPP
VOLTS: 20.4 CLASS: CLASS B
AWG: 12 TOTAL DEVICES: 10
POWER: DC 23.23 % (0.697) AMPS USED
AMPS: 3 1.95 % (0.397) VOLTAGE DROP

#	MODEL	CANDELA	PATTERN	VOLUME	TONE	CURRENT (	DISTANCE	12 AWG	14 AWG	16 AWG	18 AWG
1	SPSCWL	15				0.041	25	20.330	20.289	20.223	20.118
2	SPSCWL	15				0.041	25	20.264	20.184	20.056	19.853
3	SPSCWL	30				0.063	25	20.202	20.086	19.900	19.605
4	SPSCWL	75				0.111	25	20.147	19.998	19.760	19.382
5	SPSCWL	75				0.111	25	20.103	19.928	19.648	19.204
6	SCW	15				0.066	25	20.070	19.875	19.564	19.071
7	SCW	15				0.066	25	20.043	19.833	19.497	18.964
8	SCW	15				0.066	25	20.023	19.801	19.447	18.884
9	SCW	15				0.066	25	20.010	19.780	19.413	18.831
10	SCW	15				0.066	25	20.003	19.769	19.396	18.804
							VOLTAGE D	0.397	0.631	1.004	1.596

Voltage Drop Calculations

CIRCUIT NAME: NAC Circuit 1
POWER SOURCE: BPS-3
MODEL NUMBER: HPF24S8
BRAND: HPP
VOLTS: 20.4 CLASS: CLASS B
AWG: 12 TOTAL DEVICES: 13
POWER: DC 42.87 % (1.286) AMPS USED
AMPS: 3 4.66 % (0.950) VOLTAGE DROP

#	MODEL	CANDELA	PATTERN	VOLUME	TONE	CURRENT (	DISTANCE	12 AWG	14 AWG	16 AWG	18 AWG
1	SPSCWL	75				0.111	25	20.271	20.195	20.073	19.880
2	SPSCWL	75				0.111	25	20.153	20.008	19.775	19.405
3	SPSCWL	75				0.111	25	20.046	19.838	19.505	18.975
4	SPSCWL	75				0.111	25	19.950	19.686	19.263	18.590
5	SPSCWL	15				0.041	25	19.865	19.552	19.049	18.250
6	SCW	15				0.066	25	19.784	19.424	18.846	17.926
7	SPSCWL	30				0.063	25	19.710	19.307	18.659	17.629
8	SCW	15				0.066	25	19.642	19.200	18.488	17.358
9	SCW	15				0.066	25	19.581	19.103	18.334	17.113
10	SPSW (Strc	75				0.158	25	19.527	19.017	18.197	16.895
11	SPSW (Strc	75				0.158	25	19.489	18.956	18.100	16.741
12	SW	15				0.066	25	19.466	18.920	18.043	16.651
13	SW	75				0.158	25	19.450	18.895	18.003	16.587
							VOLTAGE D	0.950	1.505	2.397	3.813

Voltage Drop Calculations

CIRCUIT NAME: NAC Circuit 1
POWER SOURCE: BPS-4
MODEL NUMBER: HPF24S8
BRAND: HPP
VOLTS: 20.4 CLASS: CLASS B
AWG: 12 TOTAL DEVICES: 11
POWER: DC 39.2 % (1.176) AMPS USED
AMPS: 3 3.37 % (0.687) VOLTAGE DROP

#	MODEL	CANDELA	PATTERN	VOLUME	TONE	CURRENT (	DISTANCE	12 AWG	14 AWG	16 AWG	18 AWG
1	SPSCWL	75				0.111	25	20.282	20.212	20.101	19.925
2	SPSCWL	75				0.111	25	20.175	20.042	19.830	19.495
3	SPSCWL	75				0.111	25	20.079	19.890	19.588	19.110
4	SPSCWL	75				0.111	25	19.994	19.756	19.374	18.769
5	SPSCWL	75				0.111	25	19.920	19.639	19.188	18.473
6	SPSCWL	75				0.111	25	19.858	19.540	19.030	18.222
7	SPSCWL	75				0.111	25	19.807	19.459	18.900	18.016
8	SPSCWL	75				0.111	25	19.767	19.395	18.799	17.855
9	SPSCWL	75				0.111	25	19.738	19.349	18.726	17.739
10	SPSCWL	75				0.111	25	19.720	19.321	18.681	17.667
11	SCW	15				0.066	25	19.713	19.310	18.664	17.640
							VOLTAGE D	0.687	1.090	1.736	2.760

CIRCUIT NAME: NAC Circuit 2
POWER SOURCE: BPS-4
MODEL NUMBER: HPF24S8
BRAND: HPP
VOLTS: 20.4 CLASS: CLASS B
AWG: 12 TOTAL DEVICES: 10
POWER: DC 29.3 % (0.879) AMPS USED
AMPS: 3 2.56 % (0.522) VOLTAGE DROP

#	MODEL	CANDELA	PATTERN	VOLUME	TONE	CURRENT (	DISTANCE	12 AWG	14 AWG	16 AWG	18 AWG
1	SCW	15				0.066	25	20.312	20.260	20.177	20.045
2	SCW	15				0.066	25	20.230	20.130	19.970	19.717
3	SCW	15				0.066	25	20.155	20.011	19.780	19.415
4	SPSCWL	75				0.111	25	20.087	19.902	19.607	19.140
5	SPSCWL	75				0.111	25	20.030	19.811	19.462	18.910
6	SPSCWL	30				0.063	25	19.984	19.738	19.345	18.725
7	SPSCWL	30				0.063	25	19.944	19.675	19.244	18.565
8	SPSCWL	75				0.111	25	19.911	19.622	19.159	18.430
9	SPSCWL	75				0.111	25	19.889	19.587	19.103	18.340
10	SPSCWL	75				0.111	25	19.878	19.569	19.075	18.295
							VOLTAGE D	0.522	0.831	1.325	2.105

Voltage Drop Calculations

CIRCUIT NAME: NAC Circuit 1
POWER SOURCE: BPS-5
MODEL NUMBER: HPF24S8
BRAND: HPP
VOLTS: 20.4 CLASS: CLASS B
AWG: 12 TOTAL DEVICES: 3
POWER: DC 7.9 % (0.237) AMPS USED
AMPS: 3 .25 % (0.052) VOLTAGE DROP

#	MODEL	CANDELA	PATTERN	VOLUME	TONE	CURRENT (	DISTANCE	12 AWG	14 AWG	16 AWG	18 AWG
1	SPSCWL	30				0.063	25	20.376	20.362	20.340	20.304
2	SPSCWL	30				0.063	25	20.359	20.334	20.296	20.234
3	SPSCWL	75				0.111	25	20.348	20.316	20.268	20.189
							VOLTAGE D	0.052	0.084	0.132	0.211

IDENTIFICATION STAMP
DIV. OF THE STATE ARCHITECT
APP. 02-118026 INC:
REVIEWED FOR
SS ☐ FLS ☑ ACS ☐
DATE: 02/27/2020

IDENTIFICATION STAMP
DIV. OF THE STATE ARCHITECT
APPL. # 02-118026
REVIEWED FOR
FLS_____ ACS_____

The Engineering Enterprise
CONSULTING ENGINEERS
1125 HIGH STREET
AUBURN, CA 95603
(530) 886-8556

REGISTERED PROFESSIONAL ENGINEER
SCOTT WHEELER
No. E015497
Exp. 06/30/21
ELECTRICAL
STATE OF CALIFORNIA

Lawrence Elementary School
721 Calaveras St, Lodi, CA 95240

REVISIONS

#	DESCRIPTION	DATE

DESIGNER: Designer

SCALE:

DATE: 2019.12.20

TITLE:
FIRE ALARM CALCULATIONS

DRAWING NO.
E4.01

1 01_Fire Alarm_Site_Demo

SCALE: 1/32" = 1'-0"

IDENTIFICATION STAMP
DIV. OF THE STATE ARCHITECT
APP. 02-118026 INC:
REVIEWED FOR
SS ☐ FLS ☑ ACS ☐
DATE: 02/27/2020

IDENTIFIC
DIV. OF THE S
APPL. # 02-1
REVIVEWED FOR
SS_____ FLS_____ ACS_____
DATE:_____

The Engineering Enterprise
CONSULTING ENGINEERS
1125 HIGH STREET
AUBURN, CA 95603
(530) 886-8556

REGISTERED PROFESSIONAL ENGINEER
SCOTT WHEELER
No. E015497
Exp. 06/30/21
ELECTRICAL
STATE OF CALIFORNIA

Lawrence Elementary School
721 Calaveras St, Lodi, CA 95240

REVISIONS

#	DESCRIPTION	DATE

DESIGNER:

SCALE: 1/32" = 1'-0"

DATE: 2019.12.20

TITLE:
FIRE ALARM DEMO PLAN - SITE PLAN

DRAWING NO.
ED1.00

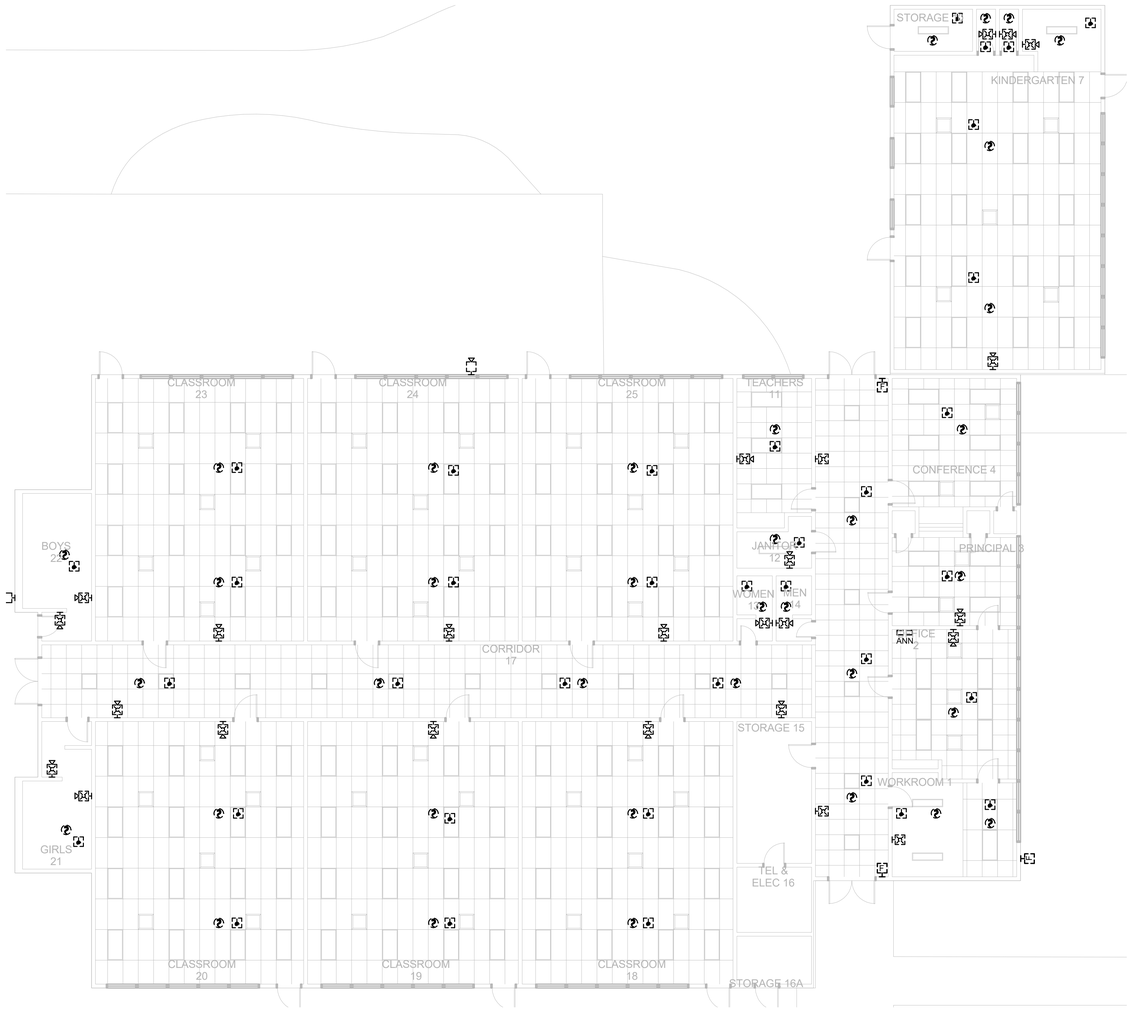

1 Building A Fire Alarm Demolition Plan

SCALE: 1/8" = 1'-0"

2' 4' 8' 16'

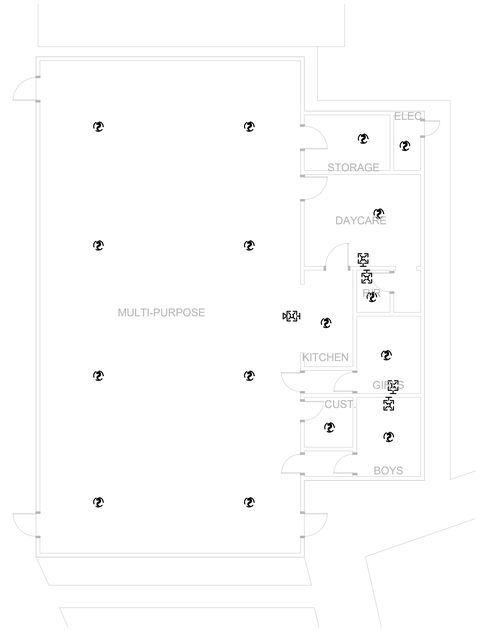

3 Building C Fire Alarm Demolition Plan

SCALE: 1/8" = 1'-0"

2' 4' 8' 16'

GENERAL SHEET NOTES

A. TO REMOVE ALL UNUSED DEVICES, CIRCUITRY AND CONDUIT BACK TO SOURCE.

B. WHEN A DEVICE IS REMOVED FROM AN EXISTING WALL WHICH WILL REMAIN, PATCH WALL TO MATCH EXISTING OR NEW FINISH.

C. WHERE EXISTING FIRE ALARM DEVICES ARE TO BE REMOVED, THE CONTRACTOR SHALL ALSO REMOVE ALL CONDUCTORS SERVING THE DEVICE. ABANDONED CONDUITS AND BOXES CAN BE RE-USED TO PULL NEW CONDUCTORS THROUGH FOR SERVICE DEVICES DOWN STREAM. DO NOT SPLICE IN ABANDONED DEVICE BOXES.

D. REMOVE ALL UNUSED FIRE ALARM CONTROL PANELS, BOOSTER PANELS AND REMOTE ANNUNCIATORS.

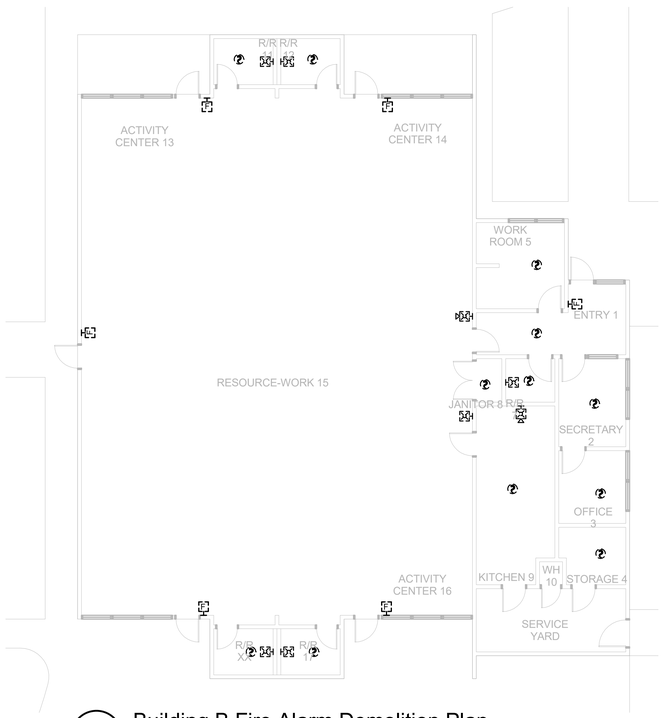

2 Building B Fire Alarm Demolition Plan

SCALE: 1/8" = 1'-0"

2' 4' 8' 16'

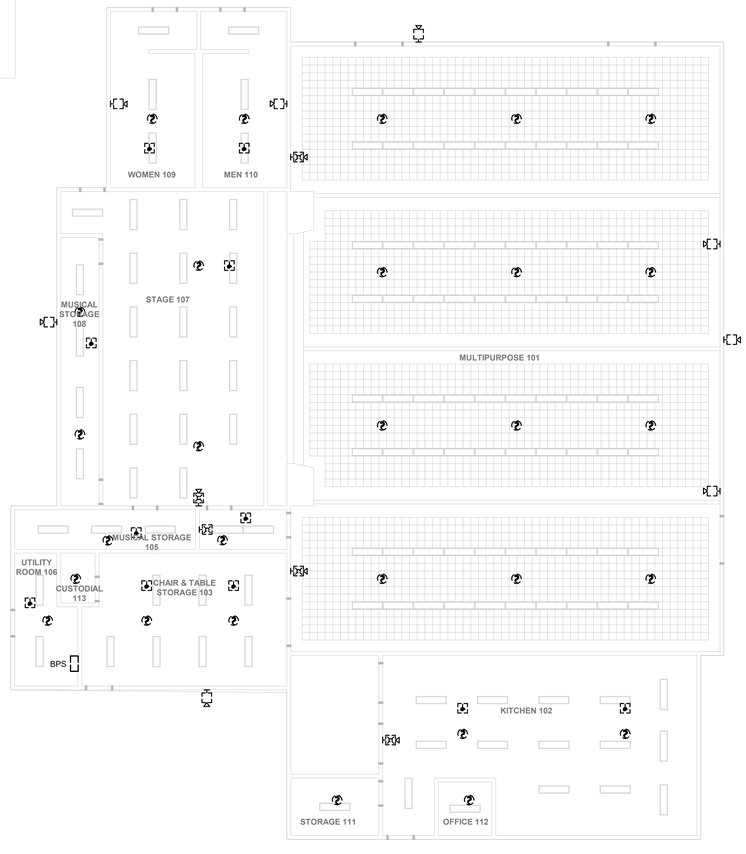

4 Building D Fire Alarm Demolition Plan

SCALE: 1/8" = 1'-0"

2' 4' 8' 16'

IDENTIFICATION STAMP
DIV. OF THE STATE ARCHITECT
APP. 02-118026 INC:
REVIEWED FOR
SS☐ FLS☑ ACS☐
DATE: 02/27/2020

IDENTIFICATION STAMP
DIV. OF THE STATE ARCHITECT
APPL. # 02-118026 INC: #
REVIVEWED FOR
SS_____ FLS_____ ACS_____
DATE:_____

The Engineering Enterprise
CONSULTING ENGINEERS
1125 HIGH STREET
AUBURN, CA 95603
(530) 886-8556

REGISTERED PROFESSIONAL ENGINEER
SCOTT WHEELER
No. E015497
Exp. 06/30/21
ELECTRICAL
STATE OF CALIFORNIA

Lawrence Elementary School
721 Calaveras St, Lodi, CA 95240

REVISIONS

#	DESCRIPTION	DATE

DESIGNER: Designer

SCALE: 1/8" = 1'-0"

DATE: 2019.12.20

TITLE:
FIRE ALARM DEMO PLAN - A, B, C & D

DRAWING NO.
ED1.01

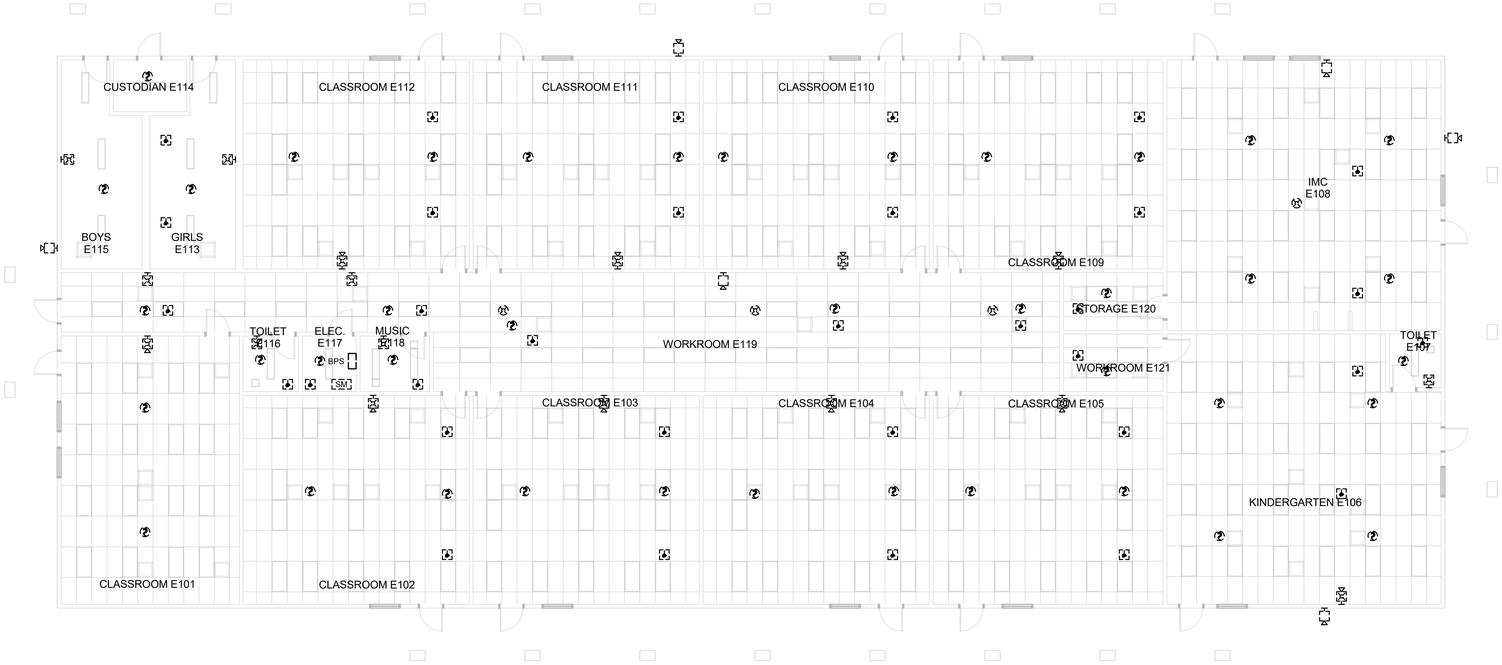

1 Building E Fire Alarm Demolition Plan

SCALE: 1/8" = 1'-0"

2' 4' 8' 16'

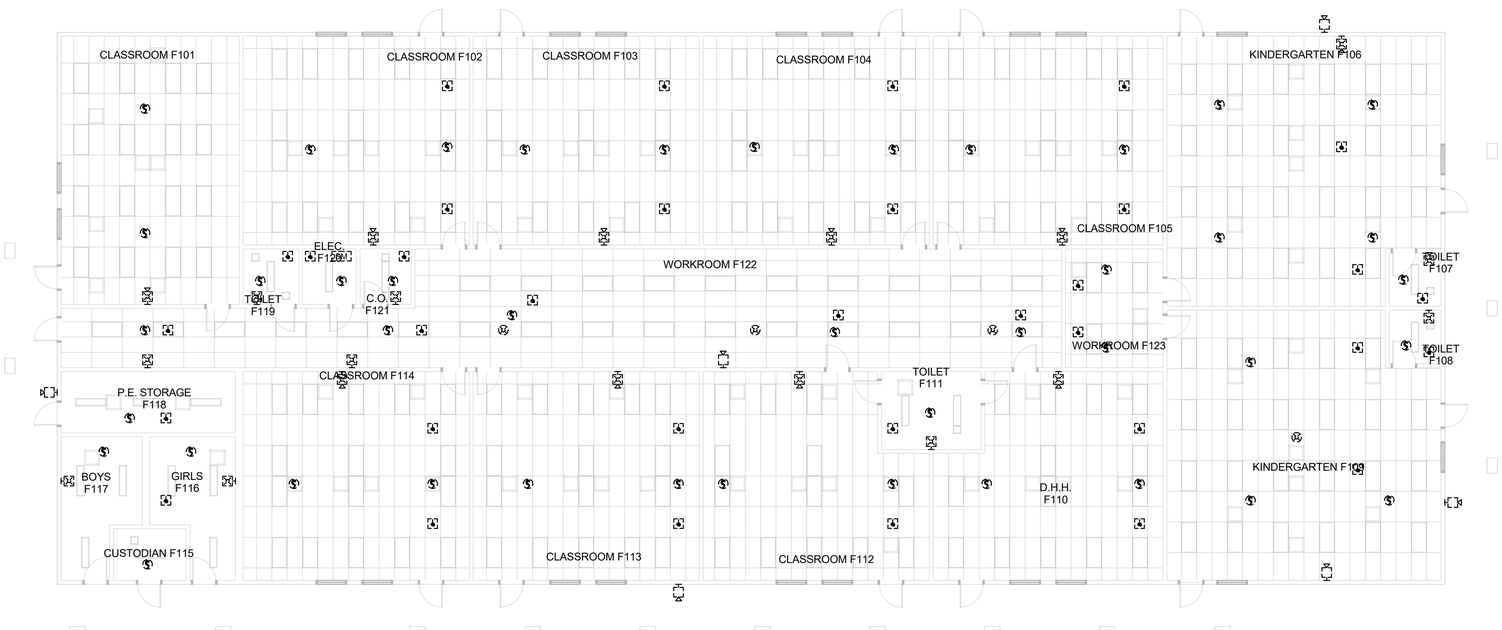

2 Building F Fire Alarm Demolition Plan

SCALE: 1/8" = 1'-0"

2' 4' 8' 16'

GENERAL SHEET NOTES

A. TO REMOVE ALL UNUSED DEVICES, CIRCUITRY AND CONDUIT BACK TO SOURCE.

B. WHEN A DEVICE IS REMOVED FROM AN EXISTING WALL WHICH WILL REMAIN, PATCH WALL TO MATCH EXISTING OR NEW FINISH.

C. WHERE EXISTING FIRE ALARM DEVICES ARE TO BE REMOVED, THE CONTRACTOR SHALL ALSO REMOVE ALL CONDUCTORS SERVING THE DEVICE. ABANDONED CONDUITS AND BOXES CAN BE RE-USED TO PULL NEW CONDUCTORS THROUGH FOR SERVICE DEVICES DOWN STREAM. DO NOT SPLICE IN ABANDONED DEVICE BOXES.

D. REMOVE ALL UNUSED FIRE ALARM CONTROL PANELS, BOOSTER PANELS AND REMOTE ANNUNCIATORS.

IDENTIFICATION STAMP
DIV. OF THE STATE ARCHITECT
APP. 02-118026 INC:
REVIEWED FOR
SS☐ FLS☐ ACS☐
DATE: 02/27/2020

IDENTIFICATION STAMP
DIV. OF THE STATE ARCHITECT
APPL. # 02-118026 INC: #
REVIVEWED FOR
SS_____ FLS_____ ACS_____
DATE:_____

The Engineering Enterprise
CONSULTING ENGINEERS
1125 HIGH STREET
AUBURN, CA 95603
(530) 886-8556

REGISTERED PROFESSIONAL ENGINEER
SCOTT WHEELER
No. E015497
Exp. 06/30/21
ELECTRICAL
STATE OF CALIFORNIA

Lawrence Elementary School
721 Calaveras St, Lodi, CA 95240

REVISIONS

#	DESCRIPTION	DATE

DESIGNER: Designer

SCALE: 1/8" = 1'-0"

DATE: 2019.12.20

TITLE:
FIRE ALARM DEMO PLAN - E & F

DRAWING NO.
ED1.02