HERITAGE ELEMENTARY SCHOOL
PAVING PHASE II
LODI USD

509 EDEN STREET
LODI, CA 95240

ABBREVIATIONS

NOTE: NOT ALL ABBREVIATIONS MAY BE USED ON THESE PLANS.

AB	AGGREGATE BASE	JP	JOINT UTILITY POLE
AC	ASPHALTIC CONCRETE	LF	LINEAL FEET
AD	AREA DRAIN	LIP	LIP OF GUTTER
APN	ASSESSOR'S PARCEL NUMBER	LT	LEFT
ARV	AIR RELEASE VALVE	MS	MOWSTRIP
ASB	AGGREGATE SUB-BASE	NTS	NOT TO SCALE
BO	BLOW-OFF VALVE	OH	OVERHEAD
BV	BUTTERFLY VALVE	PCC	PORTLAND CEMENT CONCRETE
BW	BACK OF WALK	PD	PLANTER DRAIN
C/L	CENTERLINE	PIV	POST INDICATOR VALVE
CB	CATCH BASIN	P/L	PROPERTY LINE
CL	CLASS	PP	POWER POLE
CMP	CORRUGATED METAL PIPE	PUE	PUBLIC UTILITY EASEMENT
CATV	CABLE TELEVISION	PVC	POLYVINYL CHLORIDE
CO	CLEANOUT	RCP	REINFORCED CONCRETE PIPE
COMM	COMMUNICATION	r	RADIUS
CONC.	CONCRETE	RIM	MANHOLE RIM ELEVATION
CONST.	CONSTRUCT	RP	REDUCED PRESSURE BACKFLOW PREVENTER
CR	CURB RETURN		
CS	CONCRETE SURFACE	RW	RIGHT OF WAY
DC	DOUBLE CHECK VALVE	SCH	SCHEDULE
DDC	DOUBLE DETECTOR CHECK VALVE	SD	STORM DRAIN
DG	DECOMPOSED GRANITE	SDMH	STORM DRAIN MANHOLE
DI	DROP INLET	SG	SUBGRADE ELEVATION
DIA	DIAMETER	si	SIDE INLET
DIP	DUCTILE IRON PIPE	SS	SANITARY SEWER
DWG	DRAWING	SSMH	SANITARY SEWER MANHOLE
DS	DOWNSPOUT	STD	STANDARD
E	ELECTRIC	S/W	SIDEWALK
EP	EDGE OF PAVEMENT	T	TELEPHONE
ESMT	EASEMENT	TC	TOP OF CURB
EX	EXISTING	TD	TRENCH DRAIN
FS	FIRE SERVICE LINE	TDCB	TRENCH DRAIN CATCH BASIN
FDC	FIRE DEPARTMENT CONNECTION	TP	TELEPHONE POLE
FL	FLOWLINE	TRW	TOP OF RETAINING WALL
FM	SANITARY SEWER FORCE MAIN	TSW	TOP OF SEAT WALK
FF	FINISHED FLOOR ELEVATION	TW	TOP OF WALK ELEVATION
FH	FIRE HYDRANT	U	UTILITY
G	GAS	UG	UNDERGROUND
GR	GRATE ELEVATION	UON	UNLESS OTHERWISE NOTED
GRD	GRADE ELEVATION	VCP	VITRIFIED CLAY PIPE
GV	GATE VALVE	W	WATER
HB	HOSE BIBB	W/	WITH
HBD	HEADER BOARD	W/O	WITHOUT
HDPE	HIGH DENSITY POLYETHYLENE PIPE	WV	WATER VALVE
HP	HIGH POINT		
INV	PIPE INVERT ELEVATION		

SYMBOLS LEGEND

NOTE: NOT ALL SYMBOLS MAY BE USED ON THESE PLANS.

PROPOSED GRADING & DRAINAGE SYMBOLS:

- 8" SD — STORM DRAIN LINE (SIZE AND FLOW SHOWN)
- STORM DRAIN MANHOLE (SDMH)
- CATCH BASIN (CB)
- DROP INLET (DI)
- AREA DRAIN (AD)
- PLANTER DRAIN (PD) OR FLOOR DRAIN (FD)
- CO — STORM DRAIN CLEANOUT
- 99.99 — ELEVATION
- FF=100.00 — FINISHED FLOOR ELEVATION
- PAD=99.33 — BUILDING PAD ELEVATION
- CONCRETE SIDEWALK
- GRADED DIRECTION FOR DRAINAGE FLOW
- SWALE
- SLOPE
- TREE TO BE REMOVED
- SAVE — TREE TO REMAIN
- RETAINING WALL
- O.R. — OVERLAND RELEASE PATH

PROPOSED WATER SYMBOLS:

NONE – N/A

PROPOSED SANITARY SEWER SYMBOLS:

NONE – N/A

VICINITY MAP

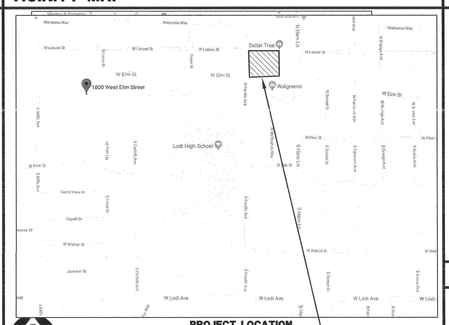

NORTH — NOT TO SCALE

PROJECT LOCATION
509 EDEN STREET
LODI, CA 95240

SITE MAP

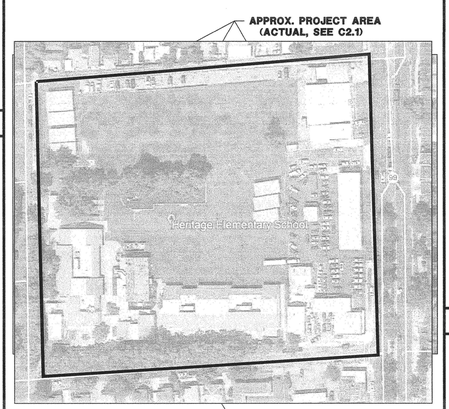

NORTH — NOT TO SCALE

APPLICABLE CODES & STANDARDS

BUILDING STANDARDS ADMINISTRATIVE CODE, PART 1, TITLE 24 C.C.R.

2016 CALIFORNIA BUILDING CODE (CBC), PART 2, TITLE 24 C.C.R.
(2012 INTERNATIONAL BUILDING CODE VOLUME 1–2 AND 2013 CALIFORNIA AMENDMENTS)

2016 CALIFORNIA PLUMBING CODE (CBC), PART 5, TITLE 24 C.C.R.
(2012 UNIFORM PLUMBING CODE AND 2013 CALIFORNIA AMENDMENTS)

2016 CALIFORNIA FIRE CODE (CFC), PART 9, TITLE 24 C.C.R.
(2012 INTERNATIONAL FIRE CODE AND 2013 CALIFORNIA AMENDMENTS)

2016 GREEN CALIFORNIA BUILDING STANDARDS, CALGREEN CODE, TITLE 24, PART 11

2016 CALIFORNIA REFERENCE STANDARDS, PART 12, TITLE 24 C.C.R.

TITLE 19 C.C.R., PUBLIC SAFETY, STATE FIRE MARSHALL REGULATIONS

PROJECT NARRATIVE

THE PROJECT CONSISTS OF:

1. CONSTRUCTION OF NEW PARKING LOT, DRIVEWAYS
2. ACCESSIBLE PATH OF TRAVEL UPGRADES HAVE BEEN PROVIDED AS REQUIRED BY CBC 2016, 11B–202.4.

THERE ARE NO NEW OR EXISTING BUILDINGS, BUILT, UPGRADED OR MODERNIZED BY THIS SET OF PLANS, ONLY PAVEMENT REPLACEMENT AND ACCESSIBILITY UPGRADES TO COMPONENTS OF THE EXISTING PATHS OF TRAVEL FOR THE CAMPUS.

APPLICABLE REGULATIONS

A. ADDENDA AND CHANGE ORDER PER SECTION 4–338.

B. INSPECTOR APPROVAL BY D.S.A. INSPECTOR AND CONTINUOUS INSPECTION OF WORK PER SECTION 4–333(B) AND 4–342, DUTIES OF PROJECT INSPECTOR.

C. TESTS AND TESTING LABORATORY PER SECTION 4–335 (DISTRICT SHALL PAY FOR THE TESTING LABORATORY).

D. SPECIAL INSPECTIONS PER SECTION 4–333(C).

E. CONTRACTOR SHALL SUBMIT VERIFIED REPORTS PER SECTION 4–336 AND 4–343(C), DUTIES OF THE CONTRACTOR.

F. DUTIES OF THE PROFESSIONAL ENGINEER (P.E.) SECTION 4–333(A) AND 4–341.

G. GOVERNING CODES TITLES 24, C.C.R.

H. A COPY OF TITLE 24 PART 1 AND PART 2 SHALL BE KEPT ON SITE AND AVAILABLE AT ALL TIME DURING CONSTRUCTION.

I. D.S.A. SHALL BE NOTIFIED OF START OF CONSTRUCTION PER SECTION 4–331.

J. SUPERVISION BY THE DIVISION OF STATE ARCHITECTS (D.S.A.) PER SECTION 4–334.

K. THE INTENT OF THE DRAWINGS AND SPECIFICATIONS ARE TO GIVE DIRECTION TO CONSTRUCT THE IMPROVEMENTS SHOWN HEREIN FOR ACCESSIBILITY IN ACCORDANCE WITH TITLE 24, CALIFORNIA CODE OF REGULATIONS. SHOULD ANY CONDITIONS DEVELOP WHICH ARE NOT COVERED BY THE CONTRACT DOCUMENTS, SUCH THAT THE FINISHED WORK WILL NOT COMPLY WITH SAID TITLE 24, CALIFORNIA CODE OF REGULATIONS, A CHANGE ORDER DETAILING AND SPECIFYING THE REQUIRED WORK SHALL BE SUBMITTED TOO, AND APPROVED BY D.S.A. BEFORE PROCEEDING WITH WORK.

DEFERRED APPROVALS

NONE

STATEMENTS:

NONE

GENERAL NOTES

1. THE TYPES, LOCATIONS, SIZES, AND/OR DEPTHS OF EXISTING UNDERGROUND UTILITIES AS SHOWN ON THESE PLANS WERE OBTAINED FROM SOURCES OF VARYING RELIABILITY. THE CONTRACTOR IS CAUTIONED THAT ONLY ACTUAL EXCAVATION WILL REVEAL THE TYPES, EXTENT, SIZES, LOCATIONS AND DEPTHS OF SUCH UNDERGROUND UTILITIES. A REASONABLE EFFORT HAS BEEN MADE TO LOCATE AND DELINEATE ALL KNOWN UNDERGROUND UTILITIES. HOWEVER, WARREN CONSULTING ENGINEERS CAN ASSUME NO RESPONSIBILITY FOR THE COMPLETENESS OR ACCURACY OF ITS DELINEATION OF SUCH UNDERGROUND UTILITIES, NOR FOR THE EXISTENCE OF OTHER BURIED OBJECTS OR UTILITIES WHICH MAY BE ENCOUNTERED BUT WHICH ARE NOT SHOWN ON THESE PLANS. THE CONTRACTOR OR ANY SUBCONTRACTOR FOR THIS CONTRACT SHALL NOTIFY MEMBERS OF UNDERGROUND SERVICE ALERT (USA) TWO (2) WORKING DAYS IN ADVANCE OF PERFORMING ANY EXCAVATION WORK BY CALLING TOLL FREE 1–800–227–2600, OR 811.
2. WARREN CONSULTING ENGINEERS, INC. (WCE) ASSUMES NO RESPONSIBILITY FOR ERRORS IN PHYSICAL LOCATION OF IMPROVEMENTS, HORIZONTAL OR VERTICAL, IF STAKED BY OTHERS. IN ADDITION, ANY SUCH ERRORS IN PHYSICAL LOCATION MAY AFFECT THE INTENDED DESIGN OF SUCH IMPROVEMENTS AND WCE CANNOT BE HELD RESPONSIBLE FOR SUCH CONDITIONS WHICH ARE A RESULT OF ERRORS IN SURVEYING, OR IMPROPER CONSTRUCTION.
3. IF SUBSURFACE CULTURAL RESOURCES, REMAINS, AND/OR ARTIFACTS ARE UNCOVERED DURING PROJECT CONSTRUCTION, ALL WORK IN THE VICINITY SHALL BE STOPPED UNTIL SUCH ITEMS CAN BE ASSESSED BY AN APPROPRIATE MEMBER OF THE COUNTY ENVIRONMENTAL IMPACT SECTION STAFF.
4. CONTRACTOR AGREES THAT HE/SHE SHALL ASSUME SOLE AND COMPLETE RESPONSIBILITY FOR JOB SITE CONDITIONS DURING THE COURSE OF CONSTRUCTION OF THIS PROJECT, INCLUDING SAFETY OF ALL PERSONS AND PROPERTY: THAT THIS REQUIREMENT SHALL APPLY CONTINUOUSLY AND SHALL NOT BE LIMITED TO NORMAL WORKING HOURS: AND THAT THE CONTRACTOR SHALL DEFEND, INDEMNIFY AND HOLD THE OWNER AND ENGINEER HARMLESS FROM ANY AND ALL LIABILITY, REAL OR ALLEGED, IN CONNECTION WITH THE PERFORMANCE OF WORK ON THIS PROJECT, EXCEPTING FOR LIABILITY ARISING FROM THE SOLE NEGLIGENCE OF THE OWNER OR ENGINEER.
5. THE CONTRACTOR SHALL OBTAIN AN EXCAVATION PERMIT FROM THE STATE OF CALIFORNIA DEPARTMENT OF INDUSTRIAL SAFETY FOR ALL EXCAVATIONS OF 5 FEET OR MORE IN DEPTH.
6. IT SHALL BE THE CONTRACTOR'S RESPONSIBILITY TO MAKE ALL NECESSARY PRE–BID AND PRE–CONSTRUCTION SITE INSPECTION, AND/OR OBSERVATIONS ON THE SITE TO PRE–DETERMINE ALL HIS/HER MEANS AND METHODS NECESSARY TO COMPLETE THE IMPROVEMENTS SHOWN ON THESE PLANS AND PER THE PROJECT SPECIFICATIONS. IT IS THE CONTRACTORS RESPONSIBILITY TO DETERMINE, AND INCLUDE IN HIS/HER CONTRACT, ALL MEANS AND METHODS NECESSARY TO PERFORM A COMPLETE AND ACCEPTABLE JOB.
7. WHERE IMPROVEMENTS LIE WITHIN AN EXISTING DEVELOPED AREA, CONTRACTOR SHALL USE CAUTION WHEN ACCESSING THE SITE THROUGH THESE EXISTING IMPROVEMENTS. IT IS THE CONTRACTORS RESPONSIBILITY TO PROTECT ANY SUCH EXISTING IMPROVEMENTS OUTSIDE THE PROJECT BOUNDARY, OR EXISTING IMPROVEMENTS WITHIN THE BOUNDARY WHICH ARE TO REMAIN. PROPER PRECAUTIONS SHALL BE PROVIDED AND MAINTAINED THROUGHOUT CONSTRUCTION. ANY DAMAGE SHALL BE REPAIRED OR REPLACED TO THE SATISFACTION OF THE OWNER.
8. IT IS THE RESPONSIBILITY OF THE CONTRACTOR TO KEEP DETAILED RECORDS OF MINOR CHANGES OR ADJUSTMENTS MADE DURING CONSTRUCTION (WHICH WERE NOT FORMALLY ISSUED). UPON PROJECT COMPLETION, THESE RECORDS AND/OR INFORMATION SHALL BE PROVIDED TO THE OWNER AND WARREN CONSULTING ENGINEERS, INC. UNLESS AN OFFICIAL "AS–BUILT" SET OF PLANS IS A REQUIREMENT OF THE CONTRACT. IF AS–BUILT PLANS ARE A REQUIREMENT OF THE CONTRACT, REFER TO SPECIFICATIONS FOR AS–BUILT DELIVERABLE REQUIREMENTS.
9. IN VEHICULAR PATHWAYS, EXISTING ASPHALTIC AND/OR CONCRETE SURFACES SHALL BE CUT TO A NEAT AND STRAIGHT LINE, PARALLEL OR PERPENDICULAR TO THE VEHICULAR TRAVELED PATH. THIS IS TYPICALLY THE ROADWAY CENTERLINE, BUT MAY VARY. THAT SAWCUT EDGE SHALL BE PROTECTED FROM DAMAGE DURING CONSTRUCTION SO A CLEAN EDGE REMAINS FOR PATCH BACK.. IF EDGE IS DAMAGED, A NEW SAW CUT WILL BE REQUIRED. THE EXPOSED EDGE SHALL BE "TACKED" WITH EMULSION PRIOR TO PAVING.
10. NO BURNING OR BLASTING SHALL BE ALLOWED ONSITE UNLESS SPECIFICALLY ADDRESSED ON PLANS, OR SPECIFICALLY APPROVED AND COORDINATED WITH THE ARCHITECT, ENGINEER, AND LOCAL AGENCY OR OTHER ADMINISTRATIVE AUTHORITY.
11. SUBGRADE AND RESULTING FINISHED GRADE SHALL BE CONSTRUCTED SMOOTH AND UNIFORM BETWEEN SPOT ELEVATIONS, CONTOURS OR OTHER STRUCTURE ELEVATIONS SHOWN ON GRADING OR OTHER PLANS. NO MOUNDS, RUTS, DEPRESSIONS OR OTHER GRADING DEFICIENCIES WILL BE ALLOWED UNLESS SPECIFICALLY SHOWN ON PLANS.
12. ON NEW WATER SYSTEMS, SERVICE LATERALS SHALL BE MADE USING APPROPRIATE "TEE" AND "WYE" FITTINGS. SADDLE TAPS WILL ONLY BE ALLOWED WHEN MAKING CONNECTIONS TO EXISTING WATER MAINS.
13. CURING COMPOUND SHALL BE APPLIED IN A CONTINUOUS SOLID WET FLOWING COAT. ANY "SPOTTY" APPLICATIONS SHALL BE RECOATED IMMEDIATELY. APPLICATION SHALL BE INSPECTED BY PROJECT INSPECTOR DURING
14. EMBEDMENT OF FEATURES IN CONCRETE PAVING, CURBS, OR WALLS, SUCH AS SQUARE OR ROUND TUBING, POSTS, OR COLUMNS, STEEL BOLTED PLATES, OR OTHER STRUCTURES, SHALL REQUIRE ADDITIONAL SCORE OR EXPANSION JOINTS TO PREVENT UNCONTROLLED CRACKING. THOSE ADDITIONAL JOINTS MAY OR MAY NOT BE SPECIFICALLY SHOWN ON PLANS BUT SHALL BE PROVIDED BY THE CONTRACTOR.
15. EMBEDMENT OF FEATURES IN CONCRETE PAVING, CURBS, OR WALLS, SUCH AS SQUARE OR ROUND TUBING, POSTS, OR COLUMNS, STEEL BOLTED PLATES, OR OTHER STRUCTURES, SHALL REQUIRE A MINOR ADJUSTMENT OF REBAR WITHIN CONCRETE TO ALLOW FOR SUCH STRUCTURE. THAT REBAR ADJUSTMENT MAY NOT BE SPECIFICALLY SHOWN ON PLANS.
16. NO MORE THAN 1 GALLON OF WATER PER YARD OF CONCRETE CAN BE ADDED TO THE TRUCK AFTER ARRIVAL TO PROJECT SITE. THE ADDITION OF WATER CAN ONLY BE ADDED UNDER THE SUPERVISION OF THE CONCRETE INSPECTOR OR LABORATORY TECHNICIAN.
17. WHEN PUMPING CONCRETE FOR PLACEMENT, ABSOLUTELY NO WATER IS TO BE ADDED TO PUMP HOPPER. ANY WATER ADDED TO HOPPER WILL BE REASON FOR CONCRETE REJECTION AT THE CONTRACTORS EXPENSE.
18. ALL CONTRACTION/CONSTRUCTION JOINTS "CJ" SHALL BE 1/4 THE SLAB THICKNESS DEEP, BUT NO LESS THAN 1" FOR CONTROLLING OF CRACKING. CONTRACTOR SHALL EXERCISE CAUTION WHEN FINAL TROWELING OF CONCRETE SO AS NOT TO FILL IN THESE JOINTS WITH CONCRETE CREAM. ANY CRACKS OUTSIDE OF JOINTS WHICH WERE CONSTRUCTED LESS THAN 1" DEEP, SHALL BE CAUSE FOR CONCRETE SLAB(S) TO BE REMOVED AND REPLACE AT CONTRACTORS EXPENSE.
19. ANY SCREED BOARDS SET WITHIN CONCRETE SLABS SHALL BE AN "OVERHEAD SCREED" SO THERE IS NO INTERFERENCE WITH THE PLACEMENT AND ALIGNMENT OF SLAB REINFORCING.
20. 3–1/2" FELT JOINTS WILL NOT BE ACCEPTED. PROVIDE A FULL 4" FELT JOINT FOR 4" SLAB CONSTRUCTION, AND A 6" FELT JOINT FOR A 6" SLAB SLAB CONSTRUCTION.
21. SHOULD ANY SHRINKAGE CRACKS OCCUR OUTSIDE OF EITHER THE EXPANSION JOINTS OR CRACK CONTROL JOINTS, THEN THE CONCRETE SLAB SHALL BE SAWCUT AT THE NEAREST JOINTS ON EACH SIDE OF THE CRACK AND THE CONCRETE SECTION SHALL BE, REMOVED AND REPLACED. NEW CONCRETE SHALL BE DOWELED INTO EXISTING CONCRETE PER DRAWING DETAIL.
22. ALL AREAS DISTURBED BY GRADING OPERATIONS WHETHER SHOWN ON THE DRAWINGS OR NOT SHALL BE HYDRO SEEDED UNLESS OTHERWISE NOTED. HYDRO SEEDING SHALL CONFORM TO LOCAL CITY/COUNTY STANDARDS.
23. REPAIR OR PATCHING OF GALVANIZED METALS, SUCH AS AFTER WELDING GALVANIZED COMPONENTS, SHALL BE MADE USING A ZINC COMPOSITION "HOT STICK" APPLICATION PER ASTM A 780–01. GALVANIZING PAINTS WILL NOT BE ALLOWED.

811 Know what's below. Call before you dig.

GENERAL PAVING SURFACE NOTES:

1. PROVIDE EQUIVALENT OF MEDIUM BROOM FINISH AT SLOPES UP TO 5.99%, TYPICAL. PROVIDE EQUIVALENT OF HEAVY BROOM FINISH AT SLOPES 6% AND GREATER. REFER TO SPECIFICATIONS.
2. ALL NEW PEDESTRIAN WALKWAYS (NON–RAMP) SHALL BE SLOPED NO GREATER THAN 2.0%, AND NO LESS THAN 0.75% IN ANY DIRECTION, UNLESS SPECIFICALLY LABELED OTHERWISE. ALL CONCRETE SHALL MEET THE FOLLOWING SLOPE REQUIREMENTS:
   - NO GREATER THAN 5% SLOPE IN THE DIRECTION OF TRAVEL.
   - NO GREATER THAN 2% SLOPE CROSSING THE DIRECTION OF TRAVEL.
   - NO GREATER THAN 2% SLOPE IN ANY DIRECTION IN COURTYARD OR PLAZA AREAS.

ENCROACHMENT PERMIT REQUIRED FOR ALL WORK INSIDE THE PUBLIC RIGHT OF WAY OR PUBLIC UTILITY EASEMENT.

SHEET INDEX

NO.	SHEET DESCRIPTION
CIVIL	
C0.0	COVER SHEET
C0.1	TOPOGRAPHIC SURVEY
C1.0	OVERALL SITE PLAN
C1.1	DEMOLITION PLAN
C2.1	GRADING PLAN
C3.1	PAVING PLAN
C4.1	STRIPING AND SIGNAGE PLAN
C5.1	DETAILS

OWNER/USER

Elevating Students for Success — Lodi Unified School District

OWNER: LODI UNIFIED SCHOOL DISTRICT
1305 E. VINE STREET
LODI, CA 95240
PHONE: (209) 331–7000

CONTACT: VICKIE BRUM

PROJECT TEAM

CIVIL: WARREN CONSULTING ENGINEERS, INC.
1117 MINDFIELD WAY, SUITE 110
EL DORADO HILLS, CA 95762
PHONE: (916) 985–1870
FAX: (916) 985–1877

CONSTRUCTION MANAGER: CAPITAL PROGRAM MANAGEMENT
1851 HERITAGE LANE, SUITE 210
SACRAMENTO, CA 95815
PHONE: (916) 553–4400

IDENTIFICATION STAMP
DIV. OF THE STATE ARCHITECT
02 118112
AC FLS SS
DATE DEC 19 2019

A.P.N. _____ ELEV. _____
BENCHMARK NO. _____

HORIZONTAL SCALE: AS NOTED
VERTICAL SCALE: AS NOTED
JOB NO.: 19–092

REVISIONS			AGENCY APPROVAL		
NO.	DESCRIPTION	DATE	BY	DATE	

DESIGNED: TF
DRAWN: ML
CHECKED: TF
DATE: 12–20–19

REGISTERED PROFESSIONAL ENGINEER — THOMAS E. FASSBENDER — NO. C46254 — CIVIL — STATE OF CALIFORNIA — 12/18/2019

WCE — WARREN CONSULTING ENGINEERS, INC.
1117 MINDFIELD WAY, SUITE 110
EL DORADO HILLS, CA 95762 (916) 985–1870

TITLE: COVER SHEET
PROJECT: HERITAGE ELEMENTARY SCHOOL PAVING PHASE II LODI USD
SAN JOAQUIN CO., CALIFORNIA

SHEET NO.
C0.0

FILENAME: L:\19–092\CIVIL\DWG\19–092–C0.0.DWG PLOTTED: Wednesday, December 18, 2019

EXISTING TOPOGRAPHY

- PROPERTY LINE
- CENTERLINE
- EASEMENT
- PROPERTY CORNER FOUND AS NOTED
- PROPERTY CORNER NOTHING FOUND OR SET
- TEMPORARY BENCHMARK (SEE TBM LIST FOR INFO)
- SWALE OR DRAINAGE FLOW
- DRAINAGE FLOW
- FENCE (TYPE NOTED)
- TREE (SIZE/TYPE INDICATED)
- SLOPE
- CONTOUR
- CONCRETE SURFACE
- EDGE OF ASPHALT
- EDGE OF BUILDING
- SIGN
- POST OR BOLLARD
- GROUND ELEVATION
- HARD SURFACE ELEVATION

EXISTING UTILITIES

- STORM DRAIN LINE (SIZE + DIRECTION OF FLOW)
- STORM DRAIN LINE (RECORD INFORMATION)
- STORM DRAIN LINE (UNDERGROUND LOCATING)
- STORM DRAIN MANHOLE
- STORM DRAIN CLEANOUT
- DROP INLET
- AREA DRAIN
- RAIN WATER LEADER
- DOWNSPOUT
- SANITARY SEWER LINE (SIZE + DIRECTION OF FLOW)
- SANITARY SEWER LINE (RECORD INFORMATION)
- SANITARY SEWER LINE (UNDERGROUND LOCATING)
- SANITARY SEWER MANHOLE
- SANITARY SEWER CLEANOUT
- WATER LINE (SIZE INDICATED)
- WATER LINE (RECORD INFORMATION)
- WATER LINE (UNDERGROUND LOCATING)
- WATER MANHOLE
- WATER VALVE
- WATER METER
- WATER BOX
- IRRIGATION CONTROL VALVE
- FIRE HYDRANT
- BACKFLOW PREVENTER
- SPRINKLER
- HOSE BIBB
- OVERHEAD ELECTRIC LINE
- UNDERGROUND ELECTRIC LINE
- UNDERGROUND ELECTRIC LINE (RECORD INFORMATION)
- UNDERGROUND ELECTRIC LINE (UNDERGROUND LOCATING)
- ELECTRIC MANHOLE
- UTILITY POLE (WITH GUY WIRE)
- ELECTRIC METER
- ELECTRIC BOX
- STREET LIGHTING BOX
- LIGHT STANDARD
- SIGNAL LIGHT
- FLOOD LIGHT
- ELECTRICAL OUTLET
- GAS LINE (SIZE INDICATED)
- GAS LINE (RECORD INFORMATION)
- GAS LINE (UNDERGROUND LOCATING)
- GAS MANHOLE
- GAS VALVE
- GAS METER
- TELEPHONE LINE
- TELEPHONE LINE (RECORD INFORMATION)
- TELEPHONE LINE (UNDERGROUND LOCATING)
- STORM DRAIN BOX
- TRAFFIC SIGNAL BOX

ABBREVIATIONS

NOTE: NOT ALL ABBREVIATIONS MAY BE USED ON THESE PLANS.

AC	ASPHALTIC CONCRETE
ACC	ACCESSIBLE
ACU	AIR CONDITIONING UNIT
AD	AREA DRAIN
APN	ASSESSOR'S PARCEL NUMBER
ARV	AIR RELEASE VALVE
BBALL	BASKETBALL POLE
BCM	BRASS CAP MONUMENT
BFP	BACK FLOW PREVENTER
BL	BLOCK
BLDG	BUILDING
BOL	BOLLARD
BOV	BLOW-OFF VALVE
BR	BRICK
BWF	BARBED WIRE FENCE
C	COMMUNICATION
CAB	CABINET
CATV	CABLE TELEVISION
CIP	CAPPED IRON PIPE
CLF	CHAIN LINK FENCE
CMP	CORRUGATED METAL PIPE
CO	CLEANOUT
COL	COLUMN
CONC	CONCRETE
COND	CONDENSATE
CPF	CONTROL POINT FOUND
CPS	CONTROL POINT SET
CS	CONCRETE SURFACE
D	DEPTH
DDC	DOUBLE DETECTOR CHECK VALVE
DF	DRINKING FOUNTAIN
DG	DECOMPOSED GRANITE
DI	DROP INLET
DIA	DIAMETER
DRWY	DRIVEWAY
DS	DOWNSPOUT
DWG	DRAWING
E	ELECTRIC
EP	EDGE OF PAVEMENT
ESMT	EASEMENT
EX	EXISTING
FA	FIRE ALARM
FDC	FIRE DEPARTMENT CONNECTION
FFE	FINISHED FLOOR ELEVATION
FH	FIRE HYDRANT
FL	FLOWLINE
FO	FIBER OPTIC
FS	FIRE SERVICE
G	GAS
GB	GRADE BREAK
GR	GRATE
GRB	GROUND ROD BOX
GROD	GROUND ROD
GV	GAS VALVE
HB	HOSE BIBB
HBD	HEADER BOARD
HP	HIGH PRESSURE
HR	HANDRAIL
HVE	HIGH VOLTAGE ELECTRIC
HWF	HOG WIRE FENCE
IC	IN CONCRETE
ICV	IRRIGATION CONTROL VALVE
INV	PIPE INVERT ELEVATION
IRR	IRRIGATION
JP	JOINT UTILITY POLE
JT	JOINT TRENCH
LNDG	LANDING
LVE	LOW VOLTAGE ELECTRIC
M	METAL
MH	MANHOLE
MP	METAL POLE
MS	MOW STRIP
MSC	METAL STORAGE CONTAINER
OH	OVERHEAD
OHANG	OVERHANG
OIP	OPEN IRON PIPE
OSPH	OLD STEEL POST HOLE
P/L	PROPERTY LINE
PA	PLANTER AREA
PB	PARKING BUMPER
PH	POSTHOLE
PIV	POST INDICATOR VALVE
PP	POWER POLE
PRKG	PARKING
PUE	PUBLIC UTILITY EASEMENT
PV	PAVERS
R	RUBBER
RG	ROLLING GATE
RIM	MANHOLE RIM ELEVATION
ROW	RIGHT OF WAY
RWALL	RETAINING WALL
RWD	REDWOOD
RWL	RAIN WATER LEADER
SD	STORM DRAIN
SDMH	STORM DRAIN MANHOLE
SIG	SIGNAL
SL	STREET LIGHT
SLB	STREET LIGHT BOX
SS	SANITARY SEWER
SSCO	SANITARY SEWER CLEANOUT
SSMH	SANITARY SEWER MANHOLE
STL	STEEL
SW	SEATWALL
T	TELEPHONE
TBALL	TETHER BALL POLE
TBM	TEMPORARY BENCHMARK
TC	TOP OF CURB
TOW	TOP OF WALL
TRW	TOP OF RETAINING WALL
UNK	UNKNOWN
VBALL	VOLLEYBALL
W	WATER
W/	WITH
W/O	WITHOUT
WD	WOOD
W.I.F.	WROUGHT IRON FENCE
W.R.F.	WOOD RAIL FENCE
XF	TRANSFORMER
XWALK	CROSSWALK

BASIS OF BEARINGS:
ASSUMED

NOTE:
EXISTING UTILITIES BASED ON VISIBLE SURFACE STRUCTURES ONLY.

TBM LIST

NUMBER	DESCRIPTION	NORTHING	EASTING	ELEVATION
1	CPS CHISELED "+"	9996.05	10008.72	100.00
2	CPS CHISELED "+"	9441.82	9999.90	99.23
3	CPS CHISELED "+"	9568.06	9996.05	101.00
4	CPS CHISELED "+"	9609.47	10595.52	100.91
5	CPS CHISELED "+"	9813.59	10084.15	100.26
6	CPS CHISELED "+"	9763.97	10000.39	101.25
7	CPS CHISELED "+"	9729.51	9902.10	100.64
8	CPS CHISELED "+"	9641.67	9899.62	100.98
9	CPS CHISELED "+"	9834.50	9853.98	100.06
10	CPS CHISELED "+"	9729.45	9737.75	99.44
11	CPS CHISELED "+"	9368.87	9737.52	99.52
12	CPS CHISELED "+"	10009.90	10221.04	99.95
13	CPS CHISELED "+"	10039.28	10375.73	100.29
14	CPS CHISELED "+"	9841.50	10235.96	100.76
15	CPF RR SPIKE	9480.09	9756.80	99.09
16	CPF PK AT ALLEY	9629.34	9753.52	99.59
17	CPF PK CL INTERSEC	9809.22	9755.30	99.56
18	CPF PK AT ALLEY	9990.93	9755.50	99.84
19	CPF PK AT INKTERSEC	10171.60	9756.10	99.44
20	CPF PK CL INTERSEC	9449.90	9756.10	99.16
21	CPF PK CL INTERSEC	9407.42	9097.59	98.29

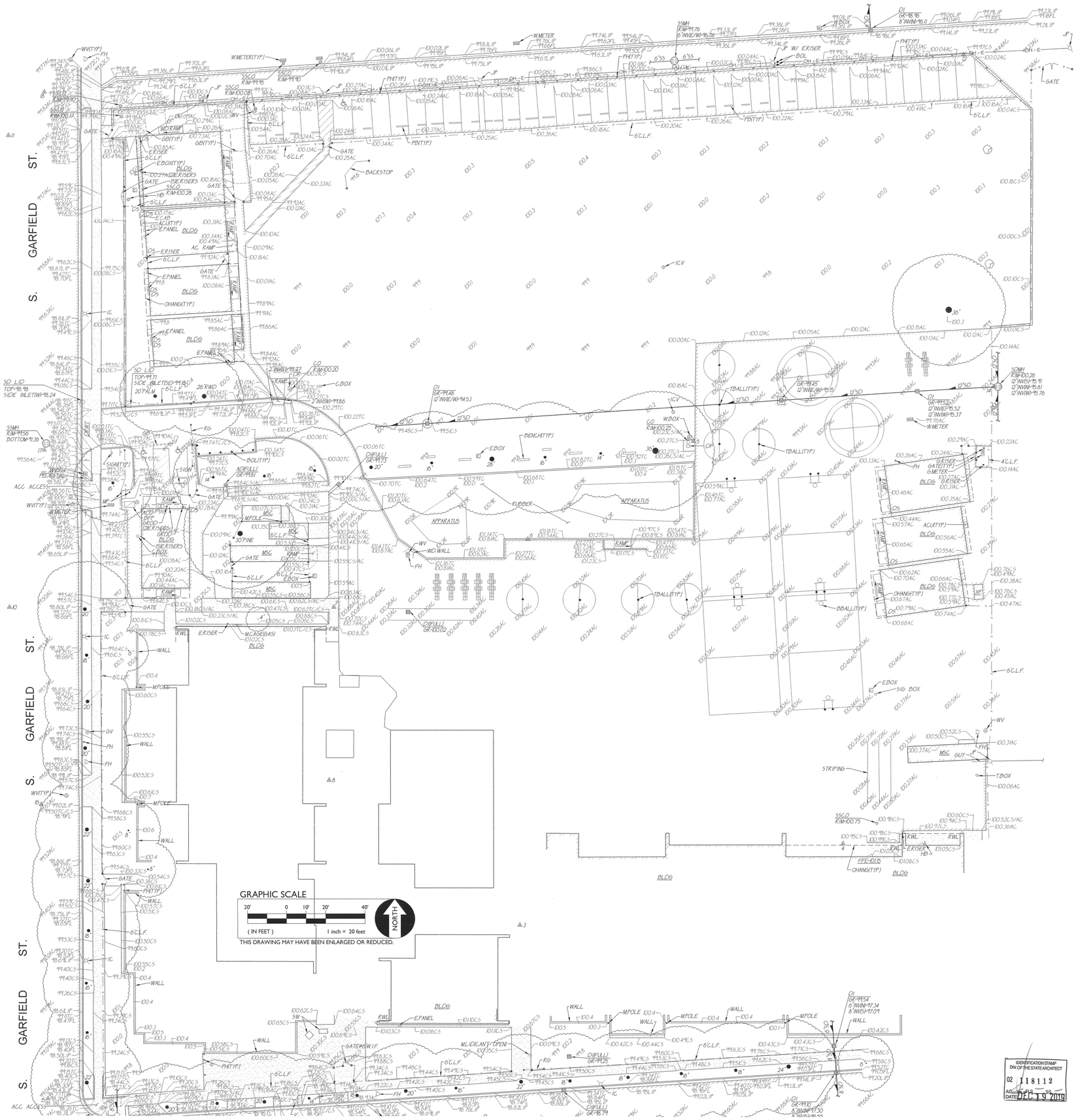

IDENTIFICATION STAMP ON OF THE STATE ARCHITECT
02 118112
AC 95-418 88
DATE DEC 19 2019

A.P.N.	
BENCHMARK NO.	ELEV.
HORIZONTAL SCALE:	AS NOTED
VERTICAL SCALE:	AS NOTED
JOB NO.:	19-092

AGENCY APPROVAL

NO.	DESCRIPTION	DATE	BY	DATE
REVISIONS				

DESIGNED: TF
DRAWN: ML
CHECKED: TF
DATE: 12-10-19

PROFESSIONAL ENGINEER THOMAS E. FASSBINDER NO. C46254 CIVIL STATE OF CALIFORNIA 12/19/2019

WCE
WARREN CONSULTING ENGINEERS, INC.
2180 W. CROSSROADS BLVD., SUITE B-300
EL DORADO HILLS, CA 95762 (916) 933-1870

TITLE: TOPOGRAPHIC SURVEY
HERITAGE ELEMENTARY SCHOOL
PAVING PHASE II
LODI USD

PROJECT: SAN JOAQUIN CO. CALIFORNIA

SHEET NO.
C0.1

FILENAME: L:\19-092\CIVIL\DWG\19-092-C0.1.DWG PLOTTED: Wednesday, December 18, 2019

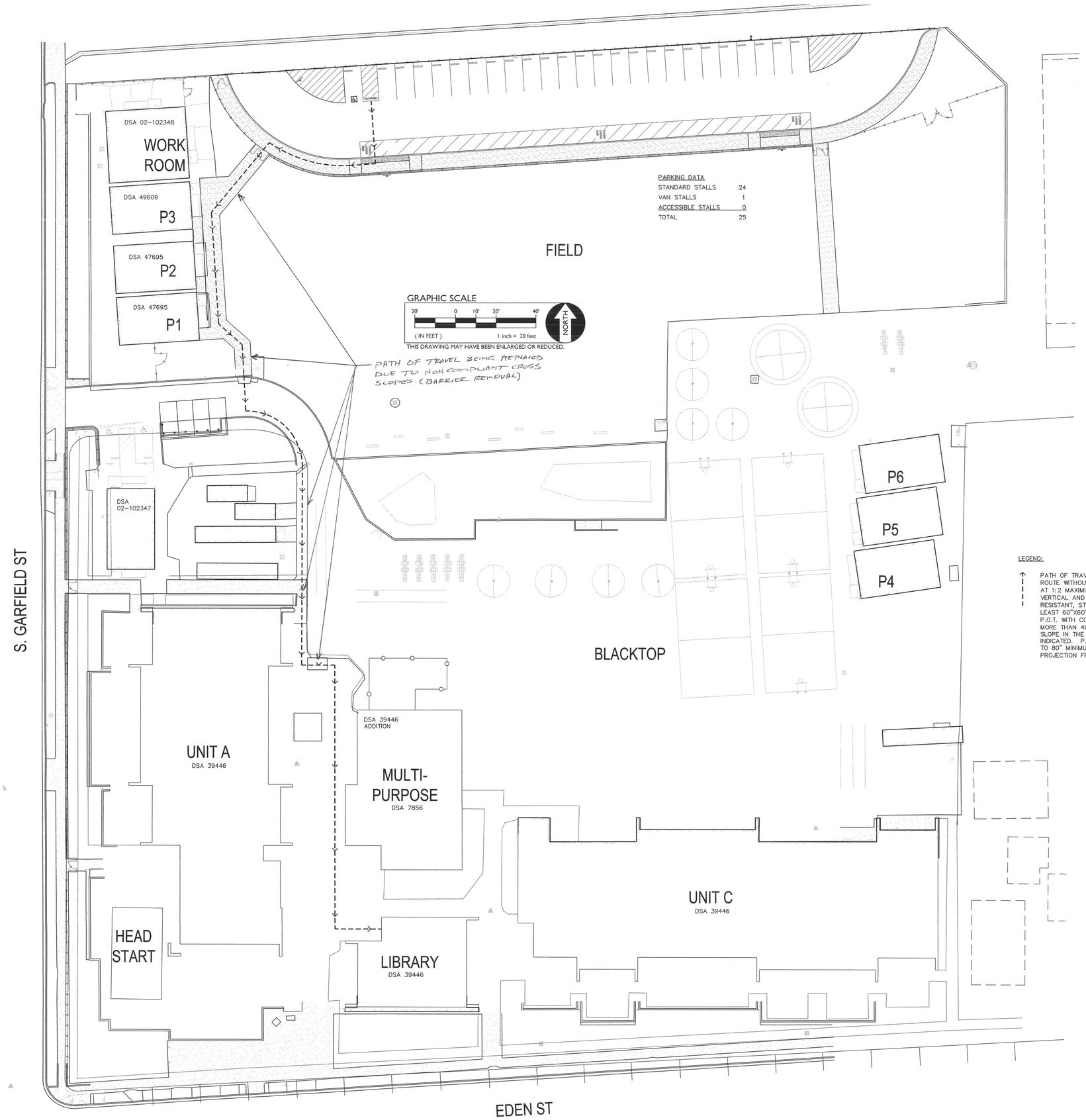

LEGEND:

PATH OF TRAVEL (P.O.T.) AS INDICATED, IS A COMMON BARRIER FREE ACCESS ROUTE WITHOUT ANY ABRUPT VERTICAL CHANGES EXCEEDING 1/2" BEVELED AT 1:2 MAXIMUM SLOPE, EXCEPT THAT LEVEL CHANGES DO NOT EXCEED 1/4" VERTICAL AND IS AT LEAST 48" WIDE. THE PATH SURFACE IS SLIP RESISTANT, STABLE, FIRM AND SMOOTH. PASSING SPACES (11B-403.5.3) AT LEAST 60"x60" ARE LOCATED NOT MORE THAN 200' APART. PARTS OF P.O.T. WITH CONTINUOUS GRADIENTS HAVE 60" LEVEL AREAS (11B-403.7) NOT MORE THAN 400' APART. THE CROSS SLOPE DOES NOT EXCEED 2% AND SLOPE IN THE DIRECTION OF TRAVEL IS LESS THAN 5% UNLESS OTHERWISE INDICATED. P.O.T. SHALL BE MAINTAINED FREE OF OVERHANGS OBSTRUCTIONS TO 80" MINIMUM (11B-307.2) AND PROTRUDING OBJECTS GREATER THAN 4" PROJECTION FROM WALL AND ABOVE 27" AND LESS THAN 80" (11B-307.2).

IDENTIFICATION STAMP
DIV. OF THE STATE ARCHITECT
02 118112
AC
DATE DEC 10 2019

A.P.N.
BENCHMARK NO. ELEV.
HORIZONTAL SCALE: AS NOTED
VERTICAL SCALE: AS NOTED
JOB NO.: 19-092

AGENCY APPROVAL

BY	DATE

REVISIONS

NO.	DESCRIPTION	DATE

DESIGNED: TF
DRAWN: ML
CHECKED: TF
DATE: 12-20-19

REGISTERED PROFESSIONAL ENGINEER THOMAS E. FRIDGEN NO. C46354 CIVIL STATE OF CALIFORNIA 12/19/2019

WCE
WARREN CONSULTING ENGINEERS, INC.
1317 WINGFIELD WAY, SUITE 110
EL DORADO HILLS, CA 95762 (916) 933-9970

TITLE: OVERALL SITE PLAN
PROJECT: HERITAGE ELEMENTARY SCHOOL PAVING PHASE II LODI USD
SAN JOAQUIN CO., CALIFORNIA

SHEET NO.
C1.0

FILENAME:I:\19-092\DWG\DWG\19-092-C1.0.DWG PLOTTED:Wednesday, December 18, 2019

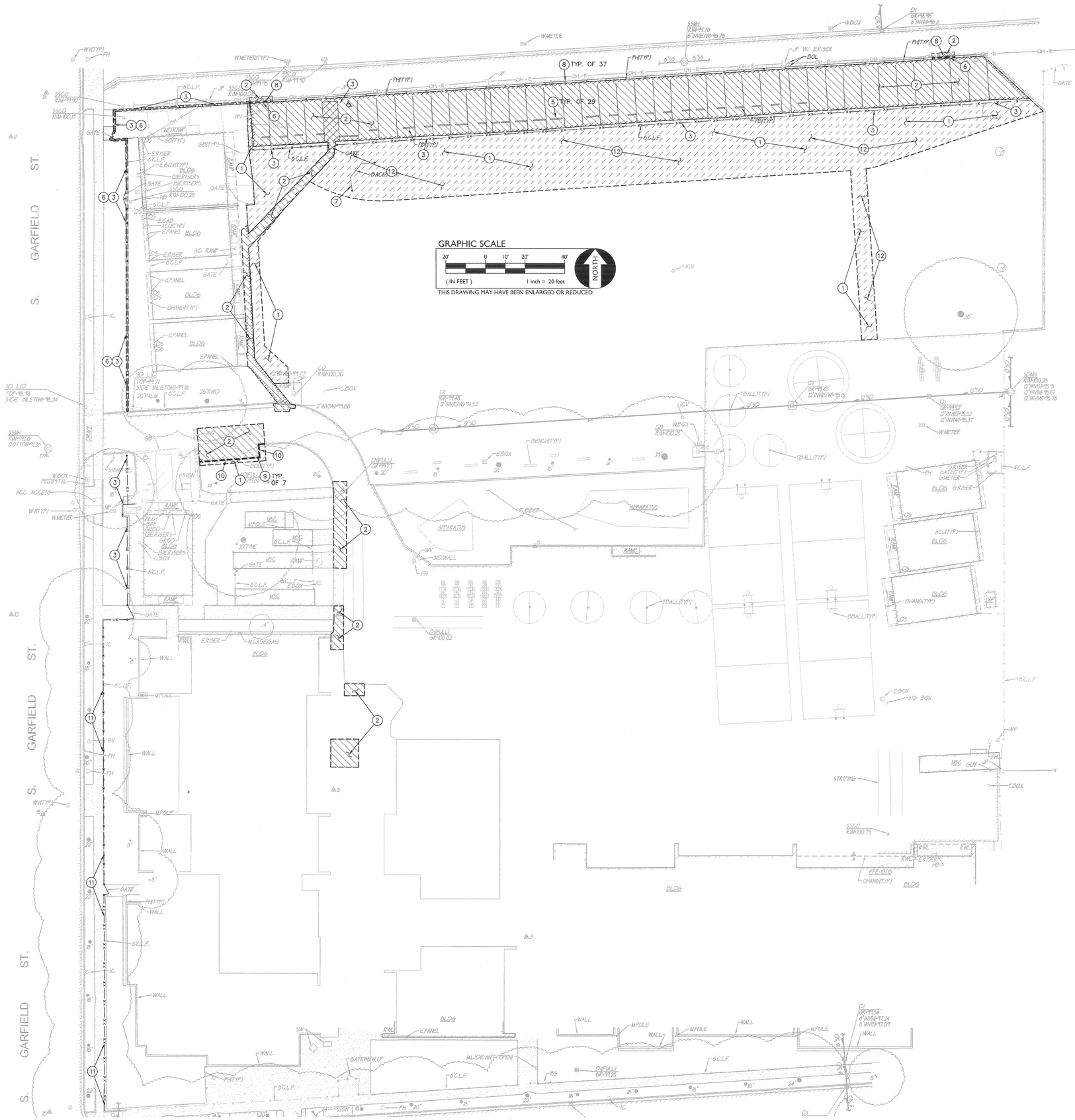

DEMOLITION NOTES

1. CLEAR AND GRUB TO EXTENTS SHOWN.
2. REMOVE EXISTING ASPHALT/CONCRETE PAVING AND AGGREGATE BASE. WHERE SAWCUT EDGES ARE SHOWN, THEY SHALL BE A NEAT STRAIGHT LINE. MAINTAIN CLEAN STRAIGHT CUT EDGE UNTIL NEW PAVING PLACED.
3. REMOVE EXISTING CHAIN LINK FENCE, GATES, POSTS AND ASSOCIATED FOOTINGS.
4. REMOVE EXISTING SIGN, POST HOLE AND FOOTING.
5. REMOVE EXISTING CONCRETE PARKING BUMPER.
6. REMOVE EXISTING CONCRETE MOW STRIP TO EXTENT SHOWN.
7. REMOVE EXISTING BACK STOP.
8. REMOVE EXISTING POST HOLE AND FOOTING.
9. REMOVE EXISTING BOLLARD.
10. REMOVE EXISTING CURB.
11. REMOVE EXISTING FENCE FABRIC. POLES TO REMAIN TO BE SLEEVED. REMOVE TOP RAIL.
12. ADJUST IRRIGATION HEADS AND PIPING TO ACCOMMODATE NEW PAVING.

ELEV. –

A.P.N. –

BENCHMARK NO. –

HORIZONTAL SCALE: AS NOTED

VERTICAL SCALE: AS NOTED

JOB NO.: 19-092

AGENCY APPROVAL

BY	DATE

REVISIONS

NO.	DESCRIPTION	DATE

DESIGNED: TF
DRAWN: ML
CHECKED: TF
DATE: 12-20-19

REGISTERED PROFESSIONAL ENGINEER THOMAS E. FINSNES III No. C46254 CIVIL STATE OF CALIFORNIA 12/19/2019

WCE
WARREN CONSULTING ENGINEERS, INC.
2777 WHITE LAKE WAY, SUITE 110
EL DORADO HILLS, CA 95762 (916) 985-1870

TITLE: DEMOLITION PLAN

PROJECT: HERITAGE ELEMENTARY SCHOOL PAVING PHASE II LODI USD

SAN JOAQUIN CO., CALIFORNIA

SHEET NO. C1.1

IDENTIFICATION STAMP
DIV. OF THE STATE ARCHITECT
02 118112
AC FLS SS
DATE DEC 19 2019

FILENAME:L:\19-092\CIVIL\DWG\19-092-C1.1.DWG PLOTTED:Wednesday, December 18, 2019

GRADING NOTES

1. MATCH EXISTING GRADE/ELEVATION.
2. SLOPE WITHIN ACCESSIBLE PARKING STALL AND LOADING AREA SHALL NOT EXCEED 2.0% IN ANY DIRECTION.
3. SLOPE WITHIN REPAVED AREAS SHALL NOT EXCEED 2.0% IN ANY DIRECTION.

GRAPHIC SCALE

20' 0 10' 20' 40'

(IN FEET) 1 inch = 20 feet

NORTH

THIS DRAWING MAY HAVE BEEN ENLARGED OR REDUCED.

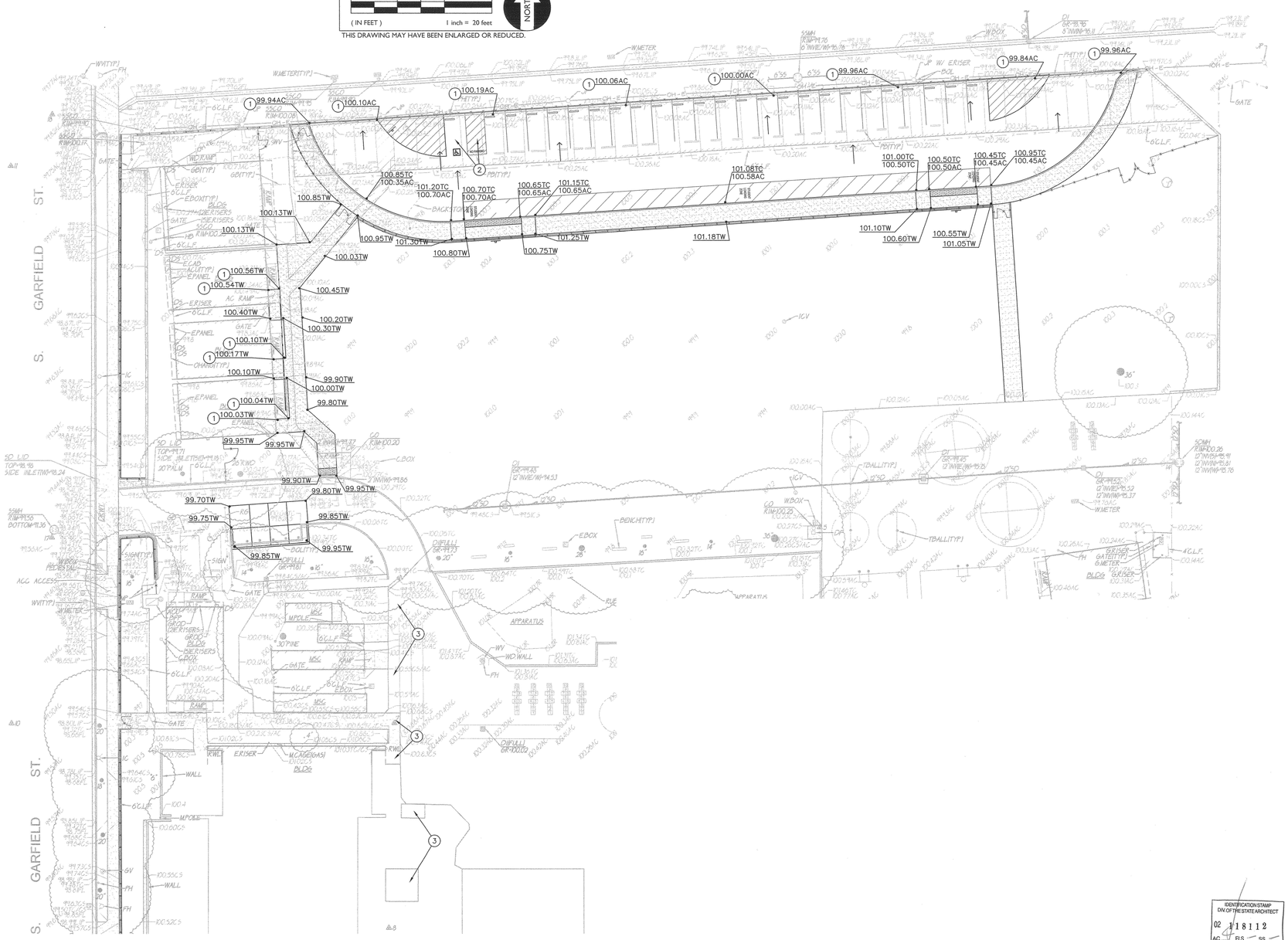

IDENTIFICATION STAMP
DIV. OF THE STATE ARCHITECT
02 118112
AC ___ FLS ___ SS ___
DATE DEC 19 2019

NO.	DESCRIPTION	DATE	BY	DATE

REVISIONS

AGENCY APPROVAL

A.P.N.

BENCHMARK NO. ___ ELEV. ___

HORIZONTAL SCALE: AS NOTED

VERTICAL SCALE: AS NOTED

JOB NO.: 19-092

DESIGNED: TF
DRAWN: ML
CHECKED: TF
DATE: 12-20-19

REGISTERED PROFESSIONAL ENGINEER ★ WARREN J. FASSBENDER ★ STATE OF CALIFORNIA ★ CIVIL ★ NO. C46354 ★ 12/19/2019

WCE
WARREN CONSULTING ENGINEERS, INC.
1470 E. BIDWELL ST. STE. 100
EL DORADO HILLS, CA 95762 | (916) 985-1870

TITLE: GRADING PLAN

PROJECT: HERITAGE ELEMENTARY SCHOOL
PAVING PHASE II
LODI USD

SAN JOAQUIN CO., CALIFORNIA

SHEET NO.

C2.1

FILENAME=I:\19-092\CIVIL\DWG\19-092-C2.1.DWG PLOTTED: Wednesday, December 18, 2019

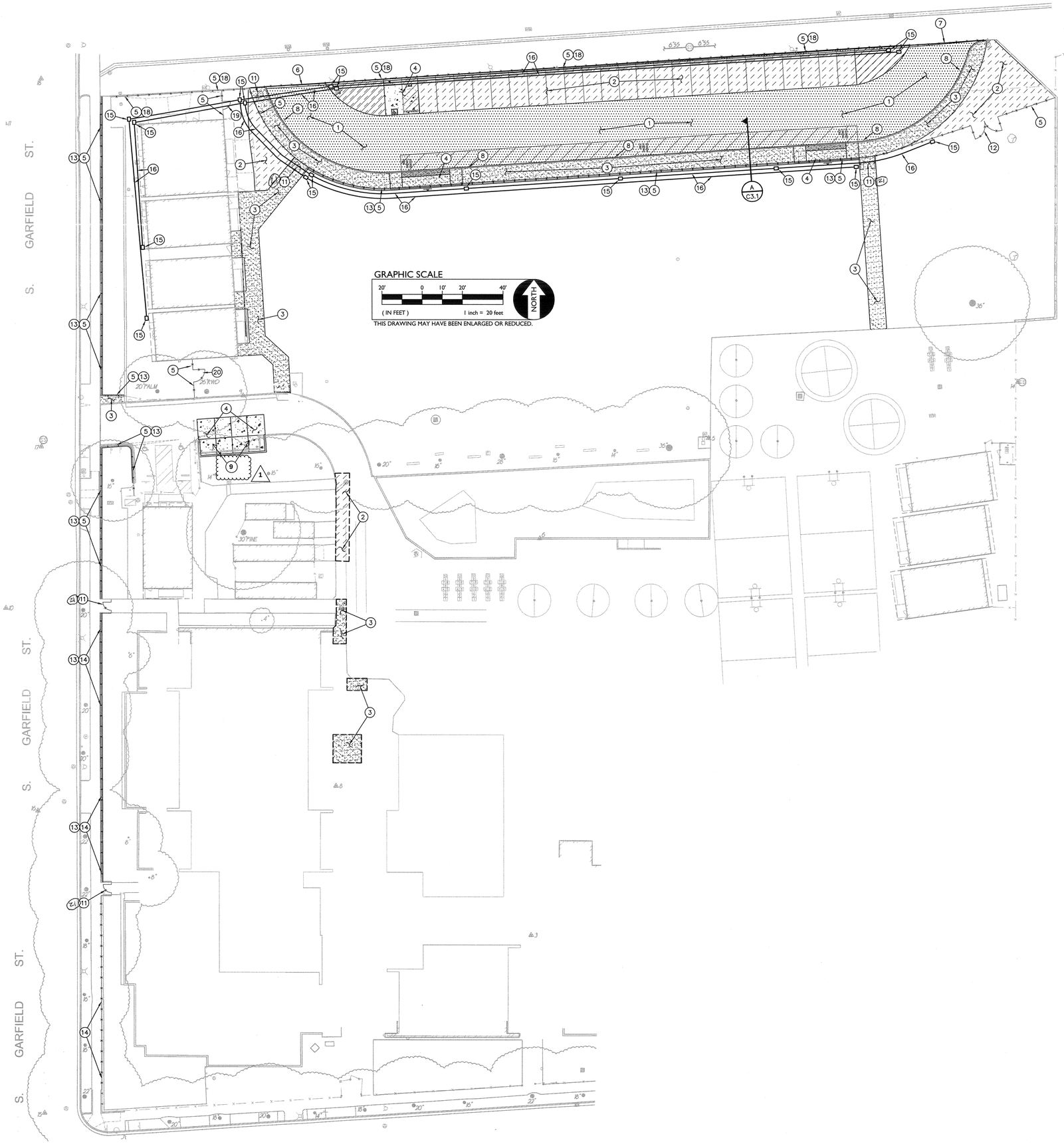

PAVING GENERAL NOTES:

1. ASPHALT MIX SHALL MEET CALTRANS SPECIFICATIONS FOR TYPE B ASPHALTIC CONCRETE. REFERENCE CALTRANS S AND PROJECT SPECIFICATIONS.
2. AGGREGATE BASE SHALL MEET CALTRANS SPECIFICATIONS FOR CLASS II AGGREGATE BASE.
3. ALL AGGREGATE BASE SHALL BE MOISTURE CONDITIONED TO, OR SLIGHTLY ABOVE, OPTIMUM MOISTURE CONTENT AND COMPACTED TO 95% RELATIVE COMPACTION.
4. RECYCLED ASPHALT MAY BE USED AS CONCRETE AND ASPHALT BASE MATERIAL PROVIDED IT MEETS CITY OF SACRAMENTO SPECIFICATIONS FOR CLASS II AB.
5. PAVEMENT SUBGRADE PREPARATION, I.E. SCARIFICATION, MOISTURE CONDITIONING, AND COMPACTION SHALL BE PERFORMED AFTER;
   A. POT HOLING ALL EXISTING UTILITIES.
   B. THE INSTALLATION OF UNDERGROUND UTILITIES AND TRENCHES BACKFILLED IN ACCORDANCE WITH THESE PLANS.
6. ALL AREAS DISTURBED BY GRADING, DEMOLITION, OR CONSTRUCTION ACCESS, WHICH ARE NOT SURFACED BY THIS SET OF PLANS, OR LANDSCAPE PLANS, SHALL BE RESTORED.
7. REFER TO GRADING PLANS FOR CURBS, CURB GUTTERS, VALLEY GUTTERS, AND OTHER CONCRETE STRUCTURES AND PAVING FEATURES NOT SPECIFICALLY NOTED ON THIS PLAN.
8. ADJUST TO FINISH GRADE ALL BOXES, FRAMES, COVERS SLEEVES, POST HOLES, GRATES, ETC. FOUND IN NEW ASPHALT OR CONCRETE PAVING AREAS, WHICH ARE NOT NOTED FOR REMOVAL. CLEAN/OR REPLACE AS NECESSARY TO ENSURE PROPER SEATING.

PAVING LEGEND

1. TYPE 1 PAVING
   PLACE 3" AC OVER 4" CLASS II AB ON COMPACTED SUBGRADE
2. TYPE 2 PAVING
   PLACE 3" AC OVER 4" CLASS II AB ON COMPACTED SUBGRADE
3. TYPE 3 PAVING
   PLACE 5" PCC WITH #4 REBAR @ 18" O.C.E.W. ON COMPACTED SUBGRADE (7 / C5.1)
4. TYPE 4 PAVING
   PLACE 6" PCC WITH #4 REBAR @ 18" O.C.E.W. OVER 6" CLASS II AB ON COMPACTED SUBGRADE (7 / C5.1)

CONSTRUCTION NOTES

4. CONSTRUCT ACCESSIBLE LOADING (5 / C5.1)
5. CONSTRUCT 7' CHAIN LINK FENCE W/1" MESH (A / C3.1) (1)
6. CONSTRUCT 30' WIDE CHAIN LINK ROLLING GATE PER WITH LIFTMASTER CSL24U SLIDE GATE OPERATOR MOTOR (13 / C5.1) (8 / C5.1)
7. CONSTRUCT 36' WIDE CHAIN LINK ROLLING GATE PER WITH LIFTMASTER CSL24U SLIDE GATE OPERATOR MOTOR (13 / C5.1) (8 / C5.1)
8. CONSTRUCT CONCRETE CURB (6 / C5.1)
9. CONSTRUCT TRASH ENCLOSURE (1 / C5.1) (2 / C5.1) (3 / C5.1)
10. PLACE TRUNCATED DOMES IN TYPE 3 PAVING PER (4 / C5.1)
11. CONSTRUCT 4' CHAIN LINK GATE PER (10 / C5.1)
12. CONSTRUCT 14' CHAIN LINK GATE PER (17 / C5.1)
13. CONSTRUCT 12" WIDE CONCRETE MOWSTRIP PER (16 / C5.1) (A / C3.1) (1)
14. SLEEVE EXISTING FENCE POSTS AND CONSTRUCT 7' CHAIN LINK FENCE W/1" MESH. PROVIDE NEW TOP RAIL.
15. PROVIDE CHRISTY N30 PULL BOX.
16. INSTALL 2– 2" DIA. CONDUITS.
17. INSTALL 3– 2" DIA. CONDUITS.
18. PROVIDE 4" CONCRETE FILLED POSTS @ 6' O.C. FOR ALLEY FENCE.
19. CONST. 4' MAINTENANCE GATE
20. CONST. 6' MAINTENANCE GATE
21. THERE SHALL BE A LEVEL LANDING EXTENDING 60" MIN. FROM BOTH SIDES OF GATE AND 24" MIN. FROM STRIKE SIDE OF GATE.

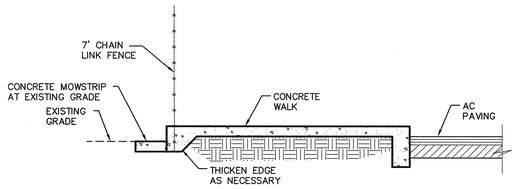

A / C3.1 SECTION
NO SCALE

IDENTIFICATION STAMP
DIV. OF THE STATE ARCHITECT
02 118112
AC PLS SS
DATE DEC 19 2019

NO.	DESCRIPTION	DATE	BY	DATE
1	QC COMMENTS			

REVISIONS

AGENCY APPROVAL

HORIZONTAL SCALE: AS NOTED
VERTICAL SCALE: AS NOTED
JOB NO.: 19-092
A.P.N.
BENCHMARK NO. – ELEV. –

DESIGNED: TF
DRAWN: ML
CHECKED: TF
DATE: 12-20-19

REGISTERED PROFESSIONAL ENGINEER THOMAS E. FASSBENDER NO. C46254 CIVIL STATE OF CALIFORNIA 12/19/2019

WCE
WARREN CONSULTING ENGINEERS, INC.
2777 CLAIRMONT DRIVE, SUITE 115
EL DORADO HILLS, CA 95762 | (916) 935-1870

TITLE: PAVING PLAN
PROJECT: HERITAGE ELEMENTARY SCHOOL
PAVING PHASE II
LODI USD
SAN JOAQUIN CO., CALIFORNIA

SHEET NO.
C3.1

FILENAME:I:\19-092\CIVIL\DWG\19-092-C3.1.DWG PLOTTED:Thursday, December 19, 2019

NOTE:
CONTRACTOR SHALL PROVIDE A ONE COAT TEMPORARY STRIPING AFTER PAVING TO ALLOW FOR CURE TIME PRIOR TO SEAL COAT AND FINAL STRIPING.

STRIPING NOTES

1. PROVIDE 4" WIDE WHITE PARKING STALL STRIPING.
2. PROVIDE LOADING ZONE PARKING STRIPING DIAGONAL @ 3' O.C.
3. PROVIDE "NO PARKING" STRIPING, DIAGONAL @ 3' O.C.
4. PROVIDE ACCESSIBLE PARKING STRIPING PER (1/C4.1) (2/C4.1) (3/C4.1)
5. PROVIDE CONCRETE WHEEL STOP PER (2/C4.1)
6. PROVIDE LOADING ZONE SIGN PER (4/C4.1)
7. PROVIDE ACCESSIBLE PARKING LOT SIGN PER (5/C4.1)

GRAPHIC SCALE

20' 0 10' 20' 40'

(IN FEET) 1 inch = 20 feet

NORTH

THIS DRAWING MAY HAVE BEEN ENLARGED OR REDUCED.

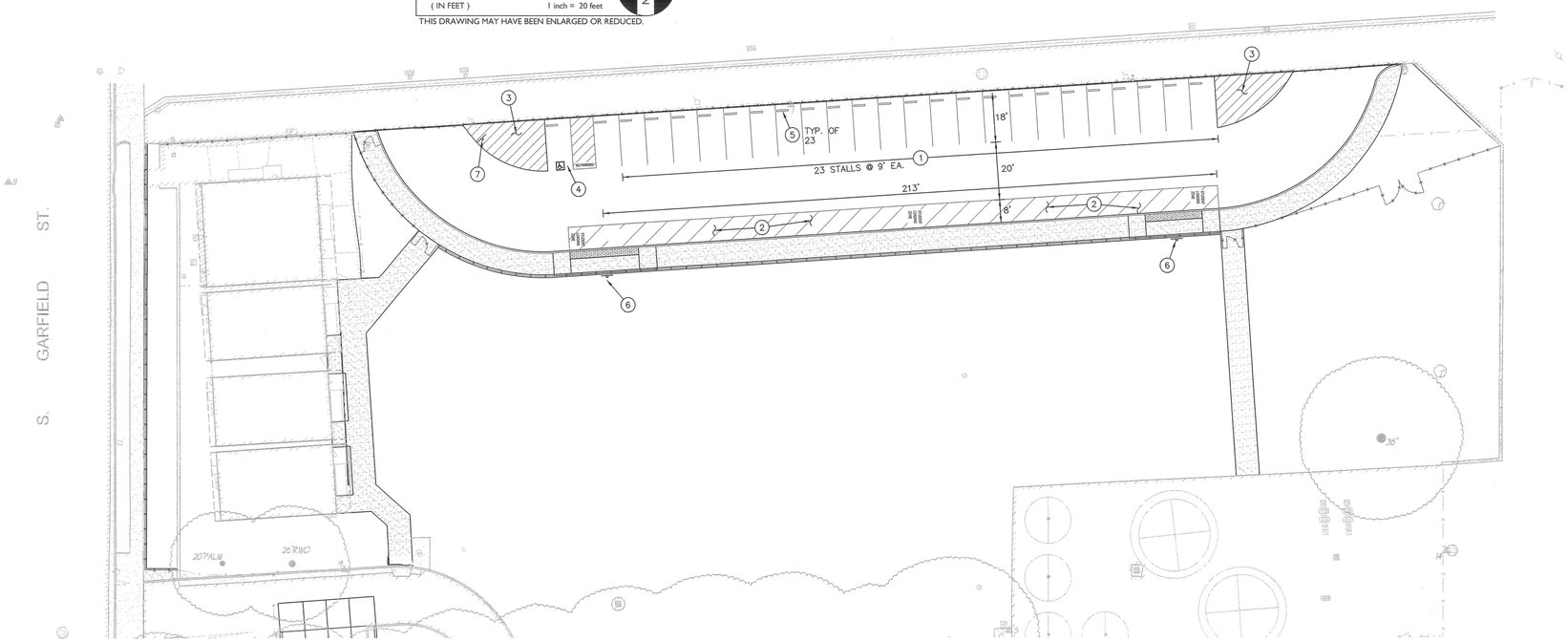

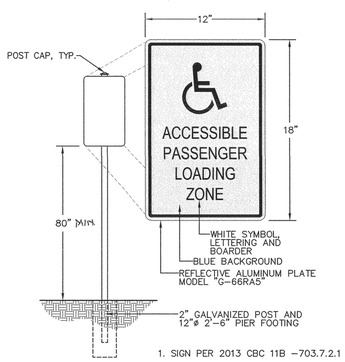

5 C4.1 ACCESSIBLE LOADING ZONE SIGN
G-66RA5 NO SCALE

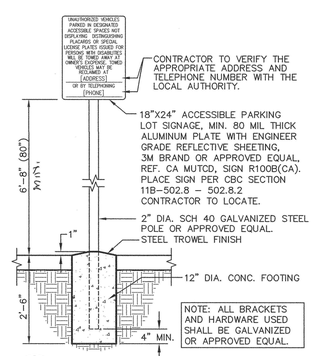

4 C4.1 PARKING AREA SIGN
(CALIFORNIA ONLY) NO SCALE

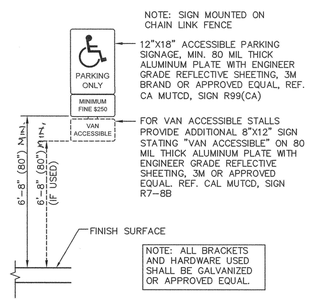

3 C4.1 PARKING SIGNAGE
ACCESSIBLE STALLS (CALIFORNIA ONLY) NO SCALE

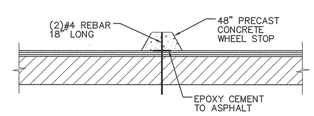

2 C4.1 CONCRETE WHEEL STOP
NO SCALE

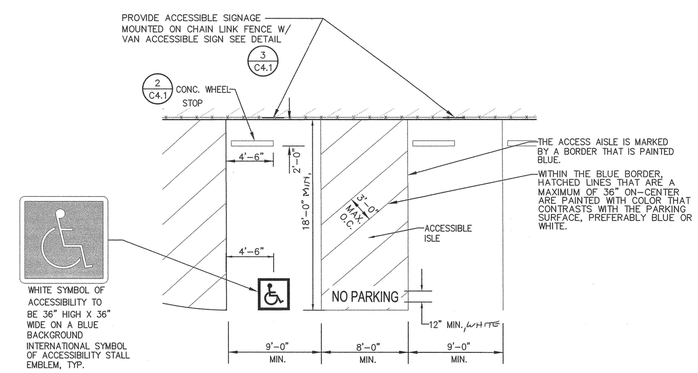

1 C4.1 ACCESSIBLE PARKING
NO SCALE

IDENTIFICATION STAMP
DIV OF THE STATE ARCHITECT
02 118112
AC FLS SS
DATE DEC 10 2019

A.P.N. –
BENCHMARK NO. –
ELEV. –

HORIZONTAL SCALE: AS NOTED
VERTICAL SCALE: AS NOTED
JOB NO.: 19-092

AGENCY APPROVAL

BY	DATE

REVISIONS

NO.	DESCRIPTION	DATE

DESIGNED: TF
DRAWN: ML
CHECKED: TF
DATE: 12-10-19

REGISTERED PROFESSIONAL ENGINEER THOMAS E. FRANSEN III No. C48254 CIVIL STATE OF CALIFORNIA 12/18/2019

WCE
WARREN CONSULTING ENGINEERS, INC.
1777 WINGFIELD WAY, SUITE 110
EL DORADO HILLS, CA 95762 (916) 985-1870

TITLE: STRIPING AND SIGNAGE PLAN PLAN

PROJECT: HERITAGE ELEMENTARY SCHOOL
PAVING PHASE II
LODI USD
SAN JOAQUIN CO., CALIFORNIA

SHEET NO.
C4.1

FILENAME:I:\19-092\CIVIL\DWG\19-092-C4.1.DWG PLOTTED: Wednesday, December 18, 2019

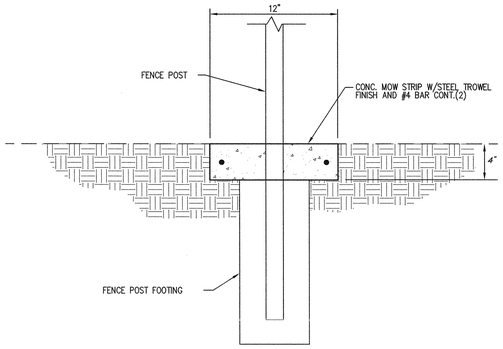

16 / C5.1 MOW STRIP DETAIL
NO SCALE

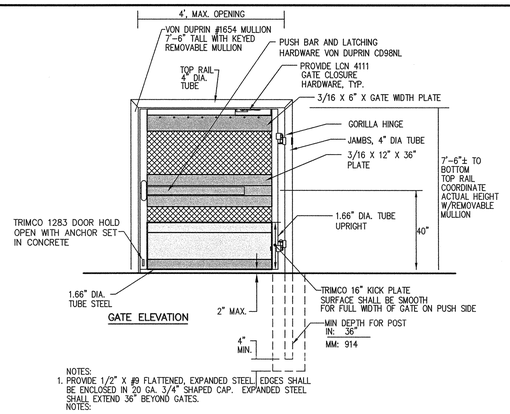

NOTES:
1. PROVIDE 1/2" X #9 FLATTENED, EXPANDED STEEL. EDGES SHALL BE ENCLOSED IN 20 GA. 3/4" SHAPED CAP. EXPANDED STEEL SHALL EXTEND 36" BEYOND GATES.
NOTES:
2. FOOTING WIDTH TO BE (4)X POST WIDTH.

10 / C5.1 4' SWING CHAIN LINK GATE
NO SCALE

NOTES:
1. PROVIDE FELT EXPANSION JOINTS (E.J.) AT 60 FEET O.C. PROVIDE CONTROL JOINTS AT 10 FEET O.C.
2. AT E.J. USE 1/2"X24" SMOOTH DOWELS, ALIGN WITH REBAR, GREASE 1/2 THE LENGTH BEFORE CONCRETE PLACEMENT.

6 / C3.1 CONCRETE CURB
NO SCALE

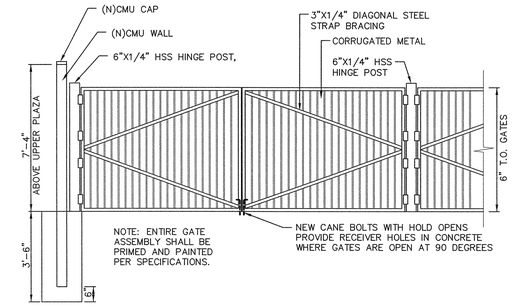

1 / C3.1 NEW TRASH ENCLOSURE GATES
NO SCALE

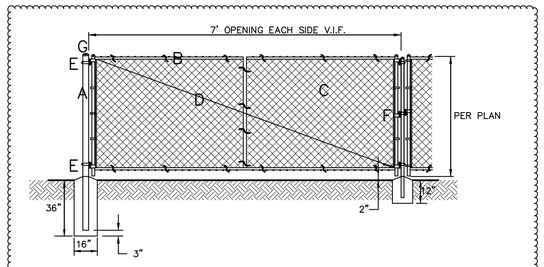

A – 4" OD SCH. 40 GALV. STEEL POST.
B – 1 5/8" OD SCH. 40 WELDED GALV. STEEL FRAME.
C – FABRIC TO MATCH FENCE.
D – 3/8" OD ADJUSTABLE INDUSTRIAL TRUSS ROD.
E – 180 DEGREE PRESSED STEEL INDUSTRIAL HINGE.
F – 1 5/8" OD LOCKABLE INDUSTRIAL GALV. DROP ROD ASSEMBLY.
G – ALL CAPS AND FITTINGS HEAVY INDUSTRIAL GALV. GRADE,

17 / C5.1 14' DOUBLE SWING CHAIN LINK GATE
NO SCALE

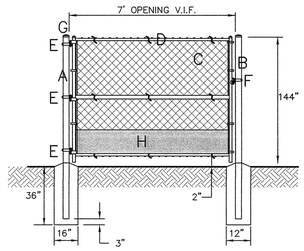

A – 4" OD SCH. 40 GALV. STEEL POST, POWDER COATED BLACK.
B – 2 7/8" OD SCH. 40 GALV. STEEL POST, POWDER COATED BLACK.
C – FABRIC TO MATCH FENCE.
D – 1 5/8" OD SCH. 40 WELDED GALV. STEEL FRAME, POWDER COATED BLACK.
E – 180 DEGREE PRESSED STEEL INDUSTRIAL HINGE.
F – MALLEABLE IRON (LOCKABLE) GATE FORK LATCH, SEE 9/C3.1.
G – ALL CAPS AND FITTINGS HEAVY INDUSTRIAL GALV. GRADE, POWDER COATED BLACK.
H – KICK PLATE PER 12/C3.1.

11 / C5.1 7' SWING CHAIN LINK GATE
NO SCALE

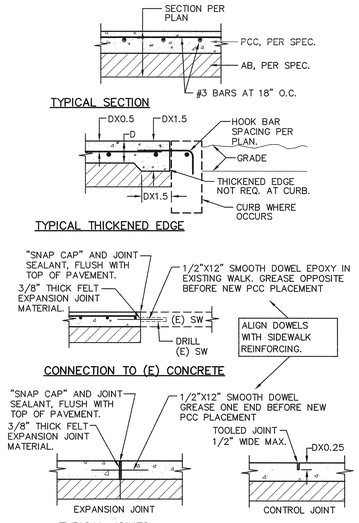

NOTES:
1. PROVIDE FELT EXPANSION JOINTS AT 20 FEET O.C. MIN.
2. PROVIDE CONTROL JOINTS AT 10 FEET O.C. MIN.
3. EXPANSION OR CONTROL JOINTS SHALL NOT EXCEED 1/2" IN SURFACE WIDTH.

7 / C5.1 CONCRETE SIDEWALK
NO SCALE

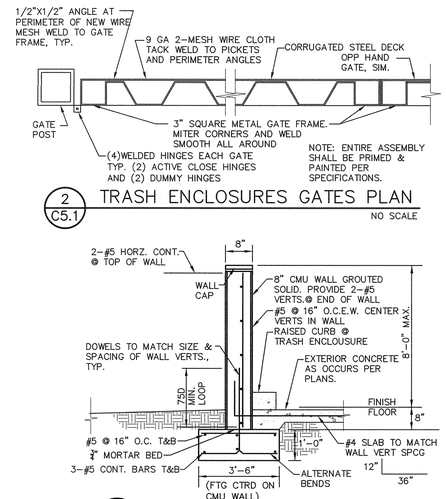

2 / C5.1 TRASH ENCLOSURES GATES PLAN
NO SCALE

3 / C5.1 TRASH ENCLOSURE CMU WALL
NO SCALE

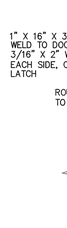

12 / C5.1 SECTION; SINGLE GATE
DOOR LATCHING; HARDWARE
NO SCALE

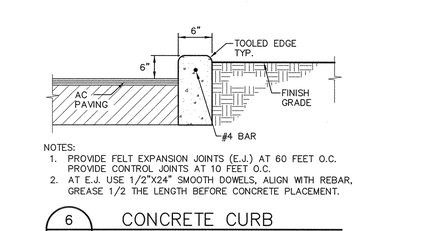

8 / C5.1 ROLL GATE TRACK ASSEMBLY
NO SCALE

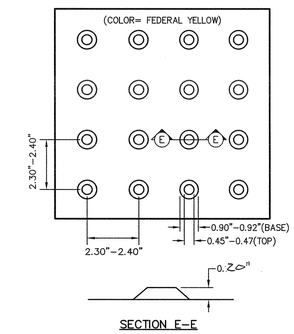

4 / C5.1 TRUNCATED DOMES
NO SCALE

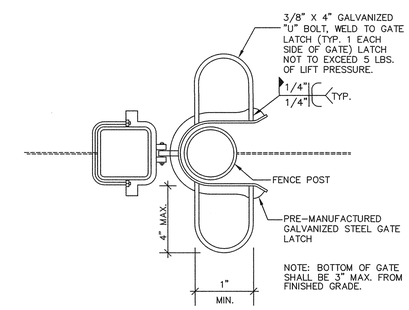

9 / C5.1 ACCESSIBLE GATE LATCH
NO SCALE

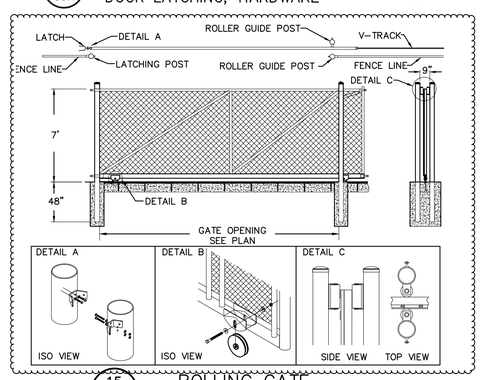

15 / C3.1 ROLLING GATE
NO SCALE

LEGEND
1. PAVEMENT.
2. TOP FACE OF CURB, STANDARD 6" HIGH.
3. 8.3% (1:12) MAXIMUM SLOPE.
4. SCORE MARK, 6" BACK OF CURB.
5. TRANSITION SHALL BE FLUSH AND FREE OF ABRUPT CHANGE PER CALIFORNIA BUILDING CODE, TITLE 24, SECTION 11B-406.5.8.
6. 6" WIDE RETAINING CURB, HEIGHT TO BE DETERMINED BY PROJECTED BACK OF WALK GRADE AT EACH END OF CURB RETURN AND BACK OF LANDING SURFACE.
7. PLACE 36" WIDE PREFABRICATED CAST IN PLACE DETECTABLE WARNING TILE BY ARMOR-TILE OR APPROVED EQUAL. (4 / C5.1)

IDENTIFICATION STAMP
DIV. OF THE STATE ARCHITECT
02 118112
AR DS 26
DATE DEC 19 2019

5 / C5.1 ACCESSIBLE LOADING
NO SCALE

ELEV. –
BENCHMARK NO. –
A.P.N. –
HORIZONTAL SCALE: AS NOTED
VERTICAL SCALE: AS NOTED
JOB NO.: 19-092

AGENCY APPROVAL		
	BY	DATE

REVISIONS			
NO.	DESCRIPTION	DATE	
	OC COMMENTS		

DESIGNED: TF
DRAWN: ML
CHECKED: TF
DATE: 12-20-19

REGISTERED PROFESSIONAL ENGINEER
THOMAS F. FASSBENDER
NO. C48554
CIVIL
STATE OF CALIFORNIA
12/19/2019

WCE
WARREN CONSULTING ENGINEERS, INC.
1000 CORPORATE CENTRE DRIVE, SUITE 115
EL DORADO HILLS, CA 95762 (916) 985-1870

TITLE: DETAILS
PROJECT: HERITAGE ELEMENTARY SCHOOL PAVING PHASE II LODI USD
SAN JOAQUIN CO., CALIFORNIA

SHEET NO.
C5.1

FILENAME:L:\19-092\CIVIL\DWG\19-092-C5.1.DWG PLOTTED: Wednesday, December 18, 2019